COGNEX®

DataMan® 50

Quick Reference Guide

DATAMAN

ID Readers

1 **Getting Started** — About DataMan 50 • For More Information • DataMan 50 Systems and Imager Specifications • DataMan 50 Accessories • Reader Layout — ***Page 4***

2 **Setting Up Your DataMan** — Setting the Focus Position • Dimensions • Field of View and Reading Distances — ***Page 12***

3 **DataMan Software** — Installing DataMan Software and Connecting the Reader • Triggering — ***Page 19***

4 **Connections, Optics, and Lighting** — I/O Cable • USB/RS-232 & Flying Leads I/O Cable • Digital Input and Output Wiring Diagrams • Illumination Strobe Output • Multi-Port Connections — ***Page 22***

5 **Compliance Information, Warnings and Notices** — DataMan 50 Specifications • Compliance Statements • Warnings and Notices — ***Page 40***

About DataMan 50

DataMan 50 is a compact fixed-mount ID reader that among others offers the following advanced features:

- Smallest high-performance fixed mount reader
- Highest read rates for 1-D and 2-D codes
- Reliability and image feedback



The DataMan 50 reader supports RS-232 and USB interface connections in addition to discrete I/O.

The DataMan 50 reader is packaged in a rugged, IP65-rated housing.

For More Information...

This document provides basic information about how to configure and use the DataMan 50 reader. Additional information is available through the Windows **Start** menu or the

Help menu after you install the DataMan software on your PC:

DataMan Communications & Programming Guide shows how to integrate your DataMan reader with your automation software and factory network.

Cognex->DataMan Software v x.x->Documentation->Communications & Programming

DataMan Reader Configuration Codes provides printable 2-D codes that you can use to configure the DataMan reader.

Cognex->DataMan Software v x.x->Documentation->English->Reader Configuration Codes

DataMan Fixed Mount Readers Reference is a complete online hardware reference for the DataMan reader.

Cognex->DataMan Software v x.x->Documentation->English->DM50->Fixed Mount Reference Manual

DataMan Questions and Answers provides context-sensitive information. You can view this help inside the Setup Tool or as a stand-alone help file.

Cognex->DataMan Software v x.x->Documentation->English->DM50->Questions and Answers

Release Notes list detailed system requirements and additional information about this DataMan software release.

Cognex->DataMan Software v x.x->Documentation->DataMan v x.y.z Release Notes

DataMan 50 Systems

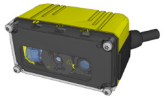	Omni-directional 1-D Code Reading	IDQuick™ — Well marked 2-D Code Reading	1DMax+™ with HOTBARS™
DataMan 50L (DMR-50L-00)			√
DataMan 50QL (DMR-50QL-00)	√		√
DataMan 50S* (DMR-50S-00)	√	√	√

*S model limitations: Maximum decode rate of 5 codes / sec; maximum 2 reads / sec; maximum 2 frames / sec; in all trigger modes (no work-around in read setups or scripting)

DataMan 50 Imager Specifications

Specification	DataMan 50 Imager
Image Sensor	1/3 inch CMOS
Image Sensor Properties	4.51 mm x 2.88 mm (H x V), 6.0 µm square pixels
Image Resolution (pixels)	752 x 480
Electronic Shutter Speed	18 µs to 25 ms exposure
Image Acquisition	up to 60 fps at full resolution
Lens Type	3 focal position M12 lens

DataMan 50 Accessories

CABLES

1. USB Cable, 1.5 m (DM100-USB-000)
2. USB Cable, 3 m (DM100-USB-030)
3. USB & Flying Leads I/O Cable, 2.0 m (DM-USBIO-00)
4. RS-232 Cable, 1.5 m (DM100-RS232-000)
5. Extension Cable, 5 m (DM100-EXTCBL-000)
6. RS-232 & Flying Leads I/O Cable, 2.5 m (DM-RS232IO-00)
7. Flying Leads Connection Cable, 5 m (DM50-PWRIO-05)
8. RS-232/USB adapter connector (DM100-PATCH-000)

LENS COVERS

9. ESD-safe Front Cover (DM50-CLCOV-ESD)

NOTE: The ESD-safe front cover has to be mounted without the screw washers to ensure proper electrical connection to the housing.

POWER SUPPLY

10. Power Supply, 6V (DM100-PWR-000)

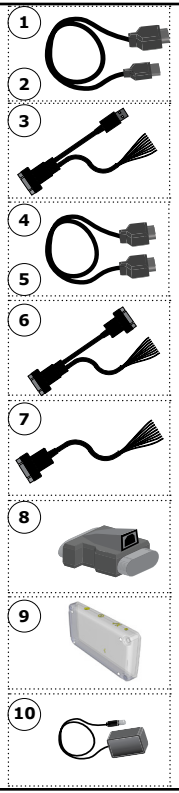

MOUNTING BRACKETS

11. Pivot Mounting Bracket (DM100-PIVOTM-00)
12. Universal Mounting Bracket (DM50-UBRK-000)



CONTROL BOX

13. Control Box (DM-CTRLBOX-00)

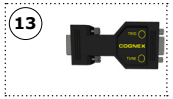

Reader Layout

The following image shows the characteristics of the DataMan 50 reader.

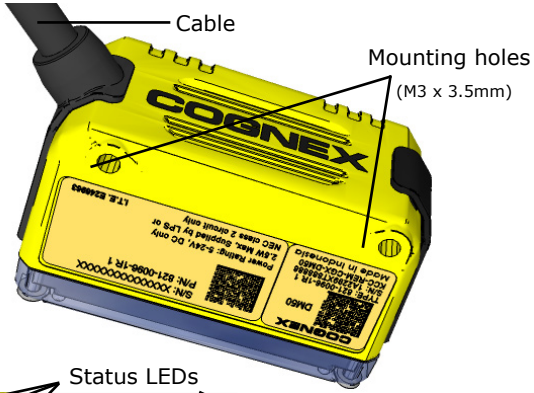

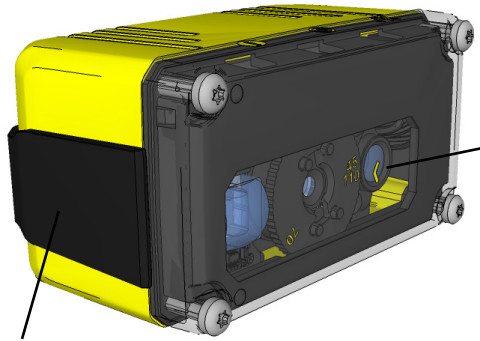

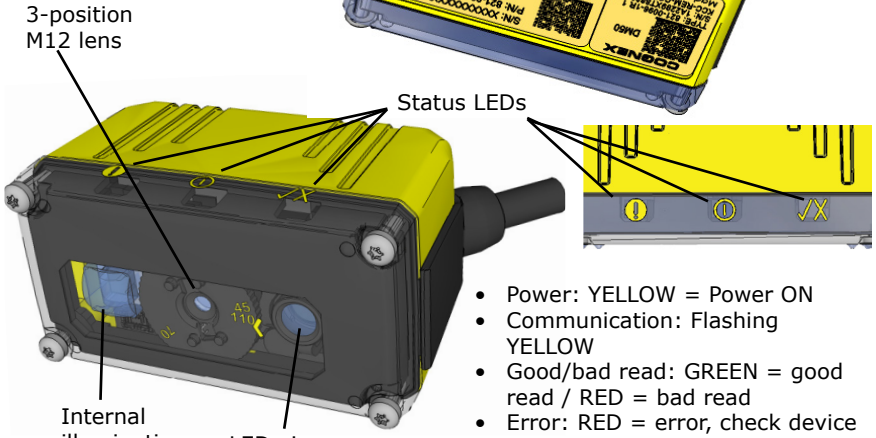

- Power: YELLOW = Power ON
- Communication: Flashing YELLOW
- Good/bad read: GREEN = good read / RED = bad read
- Error: RED = error, check device log

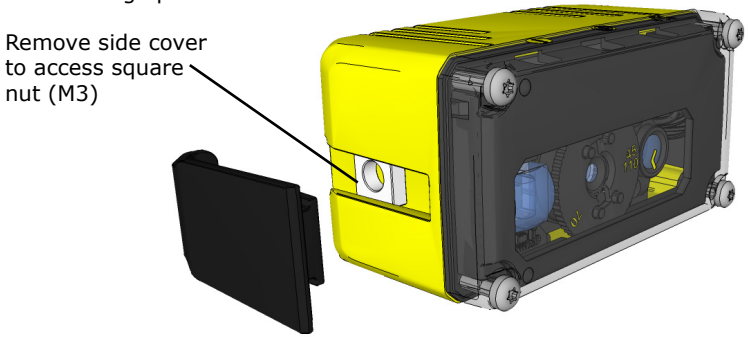

Setting the Focus Position

DataMan 50 can operate in one of three distance ranges. To set the focus position:

1 Remove the screws, washers, lens cover, and rubber part.

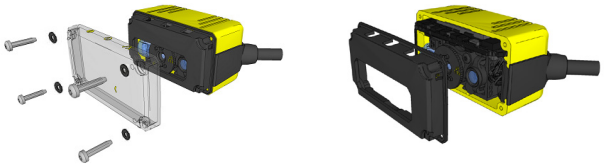

PHILLIPS PAN HEAD M1.6 X 8 MM

2 Set focus by positioning a coin into the lens cap slit and turning the coin. Do not use a coin thicker than 2 mm. If no coin is available, use the edge of the back cover.

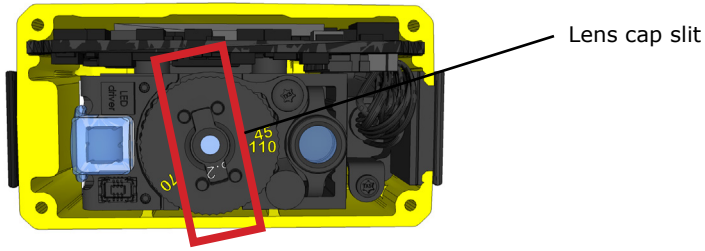

3 Make sure that the sealing and the sealing surface are clean before reassembling the lens cover.

4 Line up the holes with the icons, and attach the rubber part to the front window.

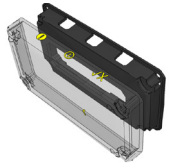

5 Attach both to the housing and add the washers and screws.



PHILLIPS PAN HEAD M1.6 X 8 MM

6 Tighten screws in order shown. Maximum torque for the cover screws is 5 N-cm (0.4 pound-inch). The yellow arrow on the cover indicates the selected focus position.

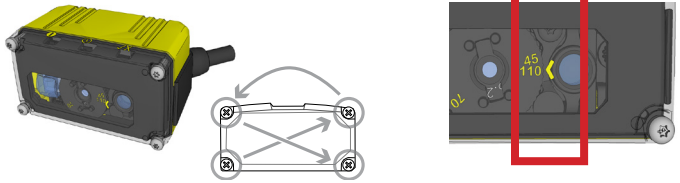

Dimensions

Observe the following DataMan 50 reader dimensions when installing your reader.

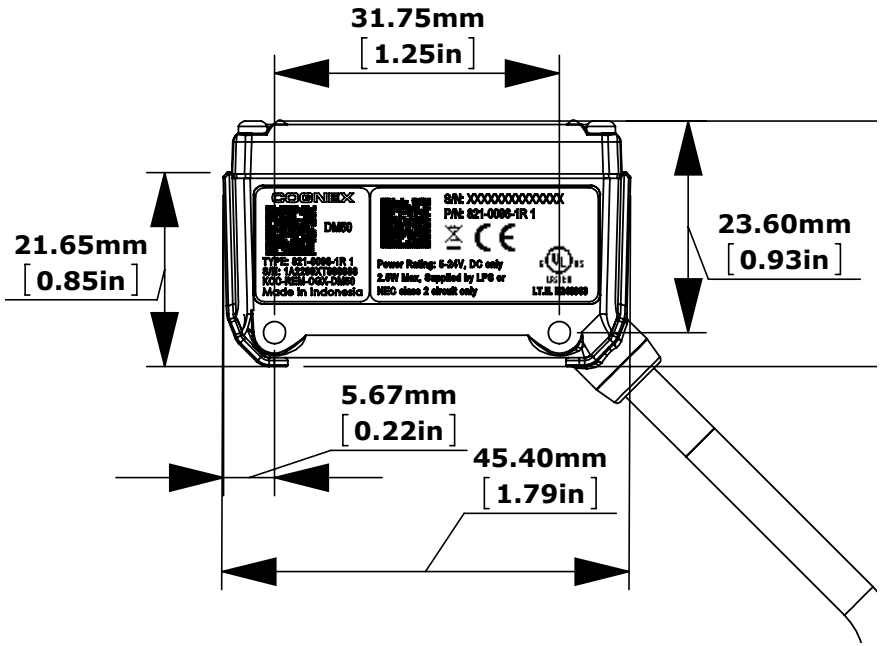

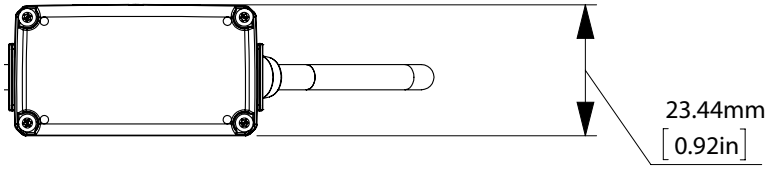

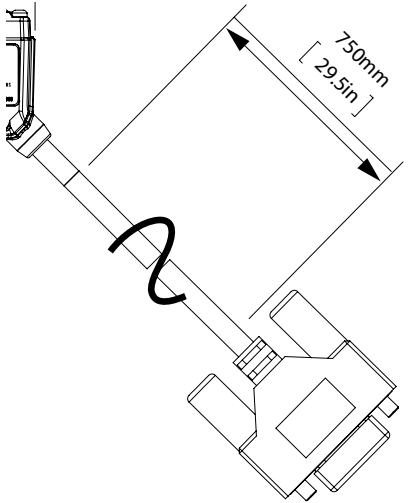

Field of View and Reading Distances

This chart shows the horizontal field of view for the DataMan 50 at a range of working distances, together with the supported range of reading distances at **45 mm** focus position.

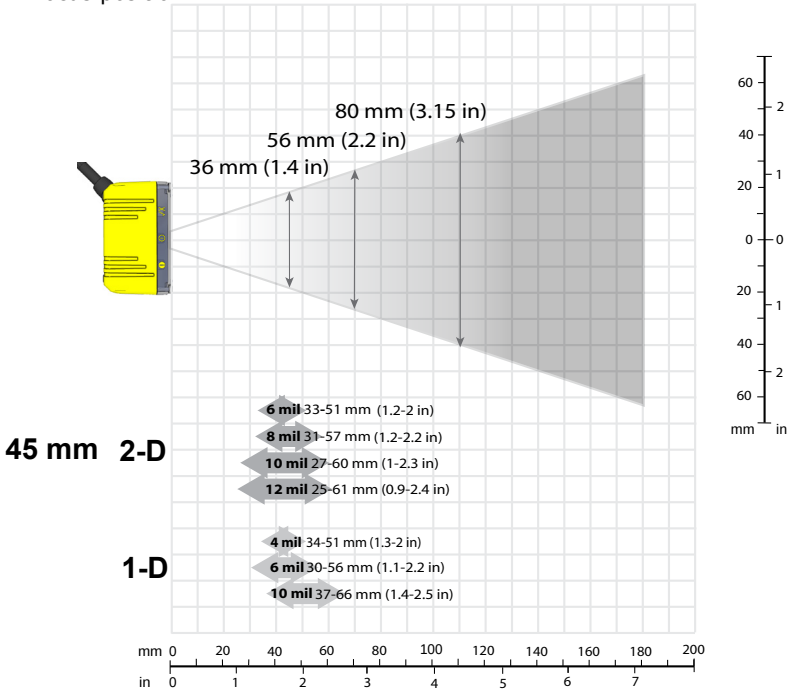

This chart shows the supported range of reading distances at **70 mm** focus position.

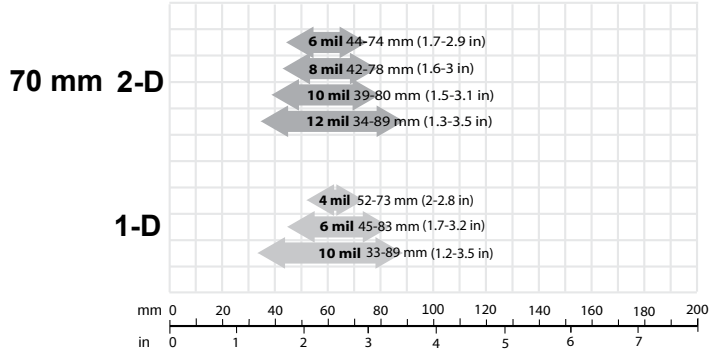

Field of View and Reading Distances (Cont.)

This chart shows the supported range of reading distances at **110 mm** focus position.

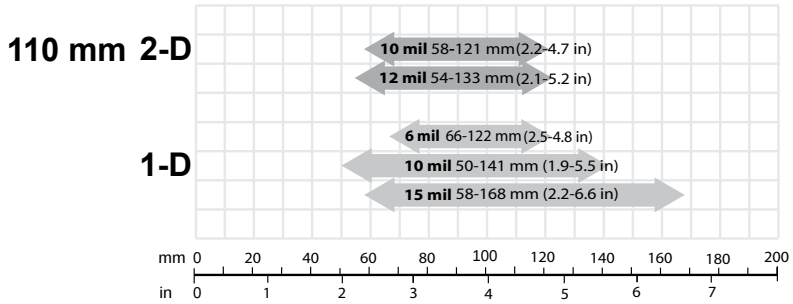

The following table shows the Field of View widths in mm at various distances.

distances in mm	DM50
45	36
70	56
110	80

Installing DataMan Software and Connecting the Reader

INSTALL DATAMAN SOFTWARE AND CONNECT

1. Check the DataMan Release Notes for a full list of system requirements.
2. Download the DataMan Setup Tool from http://www.cognex.com/support/dataman and follow the on-screen steps.
3. Connect the DataMan 50 reader to your PC.
4. Launch the Setup Tool and click **Refresh**.

   Detected readers will appear under **COM ports**.
5. Select a reader from the list and click **Connect**.

CONNECT YOUR READER

1. Connect the cable on the back of the device to either an USB adapter cable with power tap or to an RS-232 adapter cable with power tab.
2. Connect either the USB or the RS-232 connector to your PC.
3. Connect a 6V power supply.

DataMan 50 Triggering

DataMan 50 readers support the following trigger modes:

- Self: At an interval you configure, the reader automatically detects and decodes codes in its field of view. If you set a higher re-read delay than the trigger interval, there is a code output only once until the code is out of the field of view for the duration of the re-read delay.
- Single (external trigger): Acquires a single image and attempts to decode any symbol it contains, or more than one symbol in cases where multicode is enabled. The reader relies on an external trigger source.
- Presentation: Scans, decodes and reports a single code in the field of view. The reader relies on an internal timing mechanism to acquire images.
- Manual: Begins acquiring images when you send an external trigger, and continues acquiring images until a symbol is found and decoded or you stop the external triggering.
- Burst: Performs multiple image acquisitions based on an external trigger and decodes any symbol appearing in a single image or within a sequence of images, or multiple symbols in a single image or within a sequence of images when multicode is enabled. You can control the number of images within each burst and the interval between image acquisitions.
- Continuous: Begins acquiring images based on a single external trigger and continues to acquire and decode images until a symbol is found and decoded, or until multiple images containing as many codes as specified in multicode mode are located, or until the trigger is released. You can configure your reader to acquire images based on the start and stop signal from separate digital IO pulses.

External Triggers

If you are using external triggering you can use any of these methods to trigger your DataMan 50 series reader:

- Send a pulse on the I/O cable:
  - Input 0 (white)
  - Input 1 (white/black)
- Send a serial trigger command over the RS-232 connection.
- Press <CTRL>-T on the keyboard while the Setup Tool has the input focus.
- Click the Trigger button in the Setup Tool:

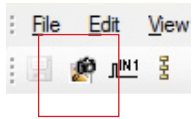

I/O Cable

The I/O cable provides access to trigger and high-speed outputs. Unused wires can be clipped short or tied back using a tie made of non-conductive material.

For RS-232, use the Power Supply return path for ground.

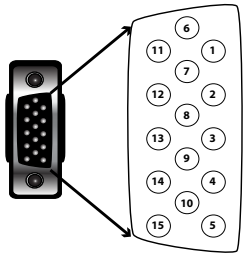

This is a male connector/plug.

PIN	Color	Signal
1	Brown	Reserved
2	Green	TxD
3	Green/Black	RxD
4	Red	GND
5	Brown/White	DC+ (system power, 5-24 VDC)
6	Blue	RTS
7	Blue/White	Output-0
8	White	Input-0
9	White/Black	Input-1
10	Light Blue	CTS
11	Light Blue/Black	Output-1
12	Light Blue/Yellow	Output-Common
13	Light Blue/Green	Output-Strobe
14	Yellow	Reserved
15	Yellow/Black	Reserved

USB & Flying Leads I/O Cable

You can connect a cable with USB & flying leads to the cable that is attached to the device. The following table shows the pinout and color description of the flying leads.

NOTE: GND (Pin 4) is connected to the reader housing, cable shield, and DB15 shell.

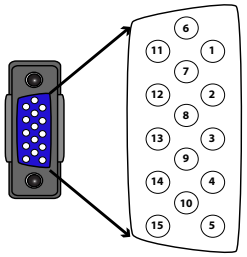

This is a female connector/socket.

PIN	Color	Signal
4	Black	GND
7	Blue/White	Output-0
8	White	Input-0
9	White/Black	Input-1
11	Light Blue/Black	Output-1
12	Light Blue/Yellow	Output-Common
13	Light Blue/Green	Output-Strobe

RS-232 & Flying Leads I/O Cable

You can connect a cable with RS-232 & flying leads to the cable that is attached to the device. The following table shows the pinout and color description of the flying leads.

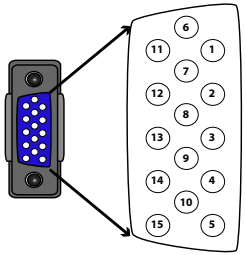

This is a female connector/socket.

PIN	Color	Signal
4	Black	GND
5	Brown/White	VDC
7	Blue/White	Output-0
8	White	Input-0
9	White/Black	Input-1
11	Light Blue/Black	Output-1
12	Light Blue/Yellow	Output-Common
13	Light Blue/Green	Output-Strobe

Flying Leads Cable

You can connect a cable with flying leads to the cable that is attached to the device. The following table shows the pinout and color description of the flying leads.

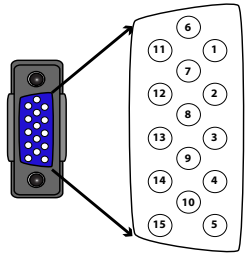

This is a female connector/socket.

PIN	Color	Signal
2	Green	TxD
3	Green/Black	RxD
4	Red	GND
5	Brown/White	DC+ (system power, 5-24 VDC)
6	Blue	RTS
7	Blue/White	Output-0
8	White	Input-0
9	White/Black	Input-1
10	Light Blue	CTS
11	Light Blue/Black	Output-1
12	Light Blue/Yellow	Output-Common
13	Light Blue/Green	Output-Strobe

Digital Input Lines

Inputs are not galvanic isolated but need to be referenced to ground.

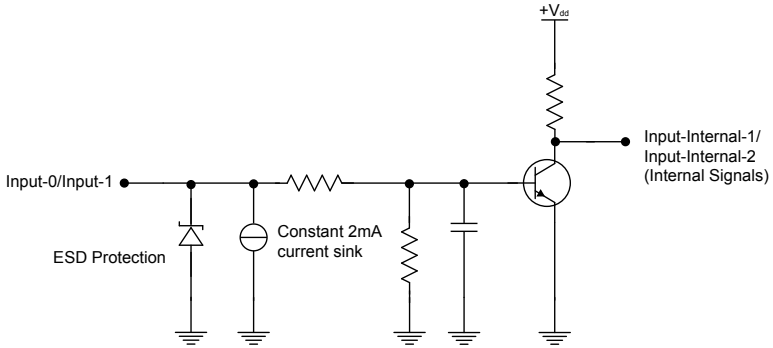

External Wiring Examples: Digital Input Lines

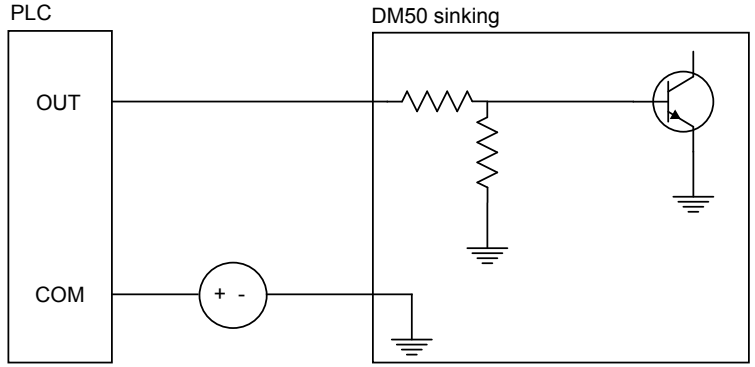

External Wiring Examples: Digital Input Lines (Continued)

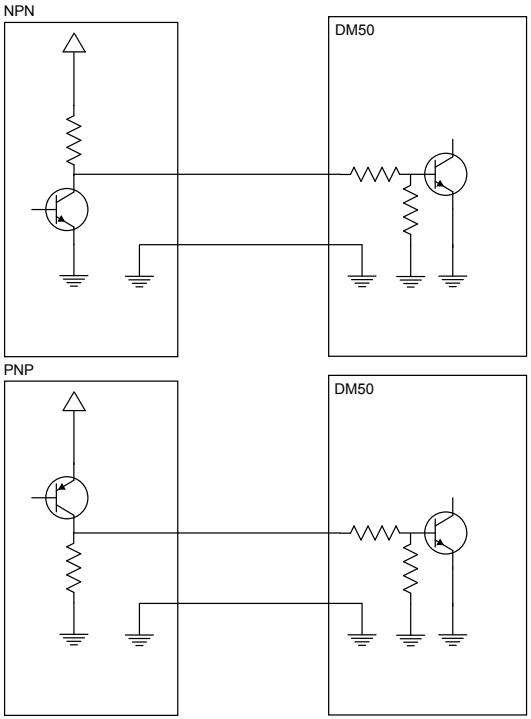

Digital Output Lines

The digital outputs can be used as either NPN (pull-down) or PNP (pull-up) lines. For NPN lines, the external load should be connected between the output and the positive supply voltage (<26V). The outputs pull down to less than 3V when ON, which causes current to flow through the load. When the outputs are OFF, no current flows through the load. Outputs are not galvanic isolated but need to be referenced to ground.

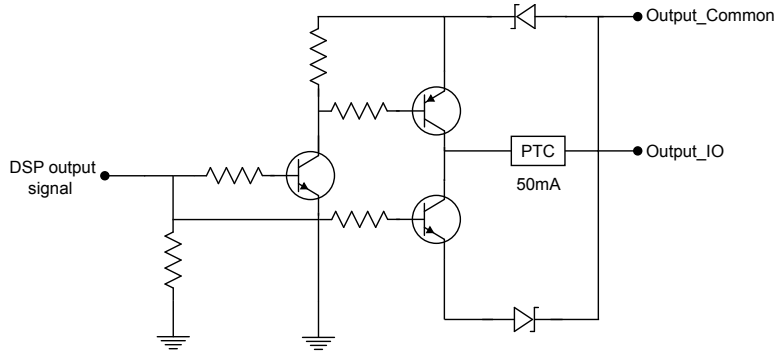

NPN (pull down) output type characteristics are the following:

Applied voltage	26 VDC or less
Residual voltage	0.85V or less
Maximum sink current	25mA
Short-circuit current	100mA or less
Short-circuit protection	multifuse - 50mA

Digital Output Lines (Continued)

PNP (pull up) output type characteristics are the following:

Output voltage range	26V or less
Residual voltage	0.8V or less
Maximum source current	25mA
Short-circuit current	50mA or less
Short-circuit protection	multifuse - 50mA

External Wiring Examples: Digital Output Lines

NPN

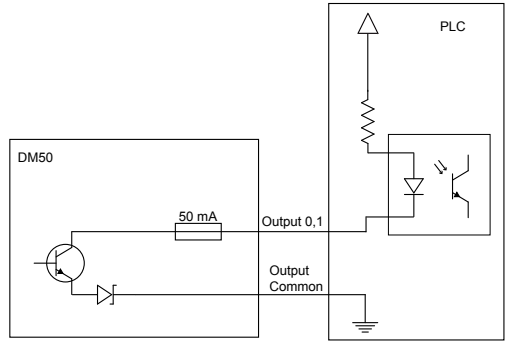

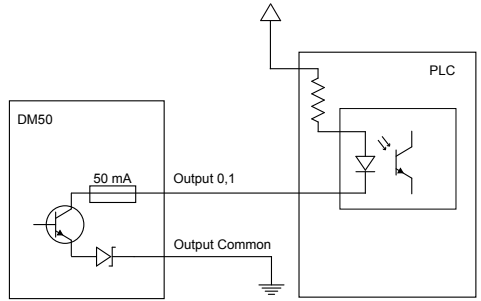

External Wiring Examples: Digital Output Lines (Continued)

PNP

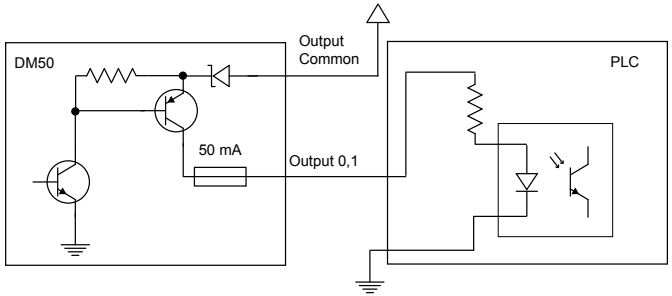

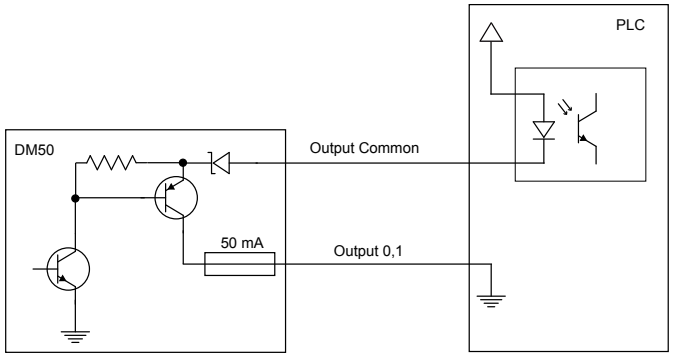

Illumination Strobe Output

The strobe output is provided by a diode that is added to the push-pull circuit, with series to the pull-up transistor. This diode blocks the higher voltage when the output is pulled up when used as open-collector type driving, but enables the driving of high level in TTL mode.

TTL output type characteristics are the following:

High level	4.0-5.0V
Low level	0-0.4V
Output current	25mA
Short-circuit current	125mA
Short-circuit protection	multifuse - 50mA

Open-collector output type characteristics are the following:

Output voltage range	0-26V
Low level	0-0.4V
Output current	25mA max
Short-circuit current	125mA
Short-circuit protection	multifuse - 50mA

Illumination Strobe Output (Continued)

The following figure shows the wiring diagram of the illumination strobe output.

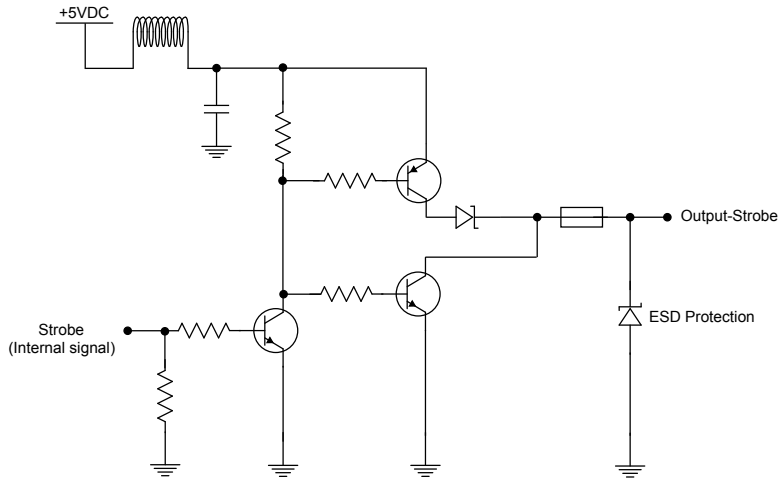

External Load Strobe Output

NPN

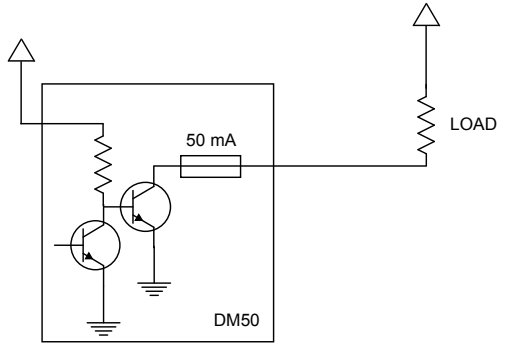

PNP

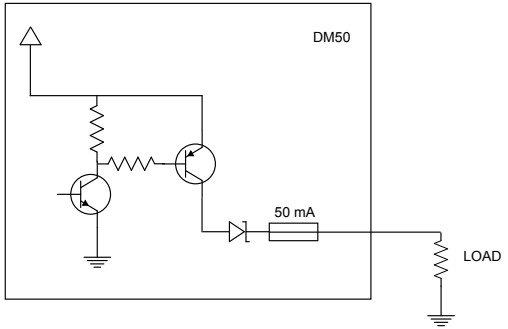

Multi-Port Connections

You can connect multiple DataMan 50 readers to a single PC (or other device equipped with a serial port) using a multi-port connection.

A multi-port connection creates a daisy-chain of readers. Each reader receives serial data from the previous reader and transmits it to the next reader. When a reader transmits data, it is passed through each of the readers in the chain between it and the PC.

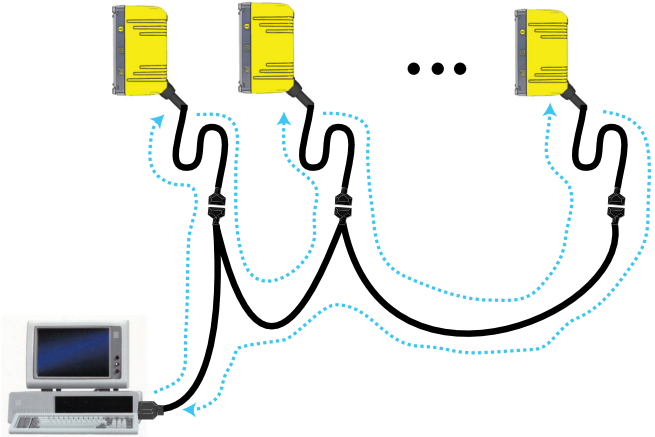

Because of the large number of possible configurations, Cognex does not supply cabling for multi-port DataMan 50 connections. Instead, you must construct your own cable that meets the requirements of your system configuration.

The cable must provide a DB-9 connector for each DataMan 50 serial cable and a DB-9 connector for the PC serial port. Each DB-9 connector must provide Tx Data, Rx Data, and ground. The Tx Data and Rx Data pins on adjacent connectors must be connected to provide the multi-port connection.

The following diagram shows how to create a multi-port cable for a 3-reader system:

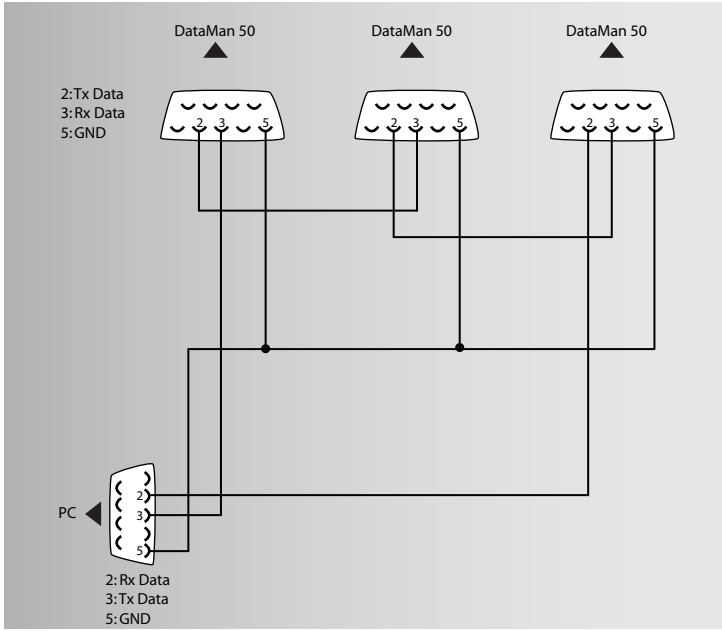

Configuring for Multi-Port Operation

You must connect the Setup Tool to each DataMan 50 in turn and enable multi-port operation. Click the **Communication Settings** task and check the **Enable Multi-Port (RS-232 Sharing)** check box.

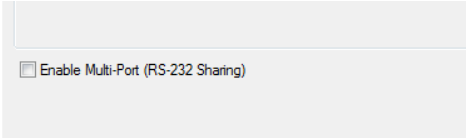

There is no guaranteed delivery order when multiple readers transmit data using a multi-port connection; read results may arrive at the PC in any order. You can configure each DataMan 50 reader in a multi-port connection to add identifying data to each read result. Your PC application can then determine which reader produced a specific read result.

To do this, click on the **Data Formatting** task, click the appropriate **Standard** box (for each symbology that you are using), go to the **Standard Formatting** pane, and enter text in the **Leading Text** field. (You can also add trailing text by entering text in the **Terminating Text** field.)

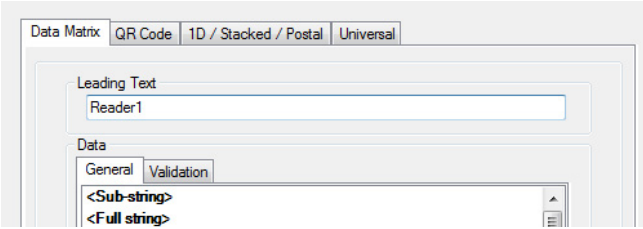

Multi-Port Usage Notes

You can obtain the best results when using multi-port connections by keeping the following usage guidelines in mind as you design your system:

- The maximum cable length between any two DataMan readers or between the PC and any DataMan reader should be no greater than 15 meters.
- There is no fixed limit to the number of DataMan readers that you can connect to a single PC. Each reader introduces a delay of about 100 msec when it retransmits received serial data. If you have 5 readers, this means that there will be a 400 msec delay between the time the first reader in the chain transmits data and the PC receives it.
- Each DataMan reader must receive a hardware trigger signal on its Input 0 line. You can wire the input ports to a common trigger signal or you can provide individual triggers for each reader.
- If *any* reader in the multi-port chain loses power or becomes disconnected, then no data from any other reader will be transmitted.
- If a DataMan is transmitting its own read result, it will buffer any data received from another reader until it has finished its own data transmission. If a DataMan reader is transmitting another reader's data, it will buffer its own data if it receives a trigger signal while it is processing the other reader's data.
- If you use a single power supply for multiple readers, make sure that the power supply can provide enough power for all of the readers.
- You cannot connect a reader to the Setup Tool over RS-232 once multiport is enabled. You must first scan the Disable Multi-Port code from the Reader Configuration Codes, available from the **Start** menu.

DataMan 50 Specifications

Weight	76 g (including cable)			
Operating Temperature	0ºC — 40ºC (32ºF — 104ºF)			
Storage Temperature	-10ºC — 60ºC (-14ºF — 140ºF)			
Maximum Humidity	95% (non-condensing)			
Environmental	IP65 if sealing is installed properly			
Vibration	EN61373 including IEC 60068-2-6,60068-2-64 6.4, and 60068-2-27			
Codes	Data Matrix™ (IDMax: ECC 0, 50, 80, 100, 140, and 200; IDQuick: ECC200) QR Code and microQR Code, MaxiCode UPC/EAN/JAN Codabar, Interleaved 2 of 5, Code 39, Code 128, and Code 93, Pharma, Postal, RSS/CS, PDF 417, MicroPDF 417			
Discrete I/O operating limits	Output 0,1	I_{MAX} @ 24 VDC mA V_{MAX}	25 26	 V
	Output 2	Source V_{TYP}	4	V
		Sink V_{IH} V_{IL}	4 - V_{PSU} 0 — 2	V V
	Input 0 (Trigger) Input 1	V_{IH} V_{IL} I_{TYP}	4 — 26 0 — 2 3	V V mA
Power Supply Requirements	V_{PSU} 4,5 — 26 VDC 2.5 W maximum LPS or NEC class 2 power supply			

Compliance Statements

DataMan 50 readers meet or exceed the requirements of all applicable standards organizations for safe operation. However, as with any electrical equipment, the best way to ensure safe operation is to operate them according to the agency guidelines that follow. Please read these guidelines carefully before using your device.

Regulator	Specification
USA	FCC Part 15, Subpart B, Class A
Canada	ICES-003, Class A
European Community	EN55022:2006 +A1:2007, Class A
	EN55024:1998 +A1:2001 +A2: 2003
Australia	C-TICK, AS/NZS CISPR 22 / EN 55022 for Class A Equipment
Japan	J55022, Class A

FCC Class A Compliance Statement

This equipment has been tested and found to comply with the limits for a Class A digital device, pursuant to Part 15 of the FCC rules. These limits are designed to provide reasonable protection against harmful interference when the equipment is operated in a commercial environment. This equipment generates, uses, and can radiate radio frequency energy and, if not installed and used in accordance with the instructions, may cause harmful interference to radio communications. Operation of this equipment in a residential area is likely to cause harmful interference, in which case the user will be required to correct the interference at personal expense.

Canadian Compliance

This Class A digital apparatus complies with Canadian ICES-003.
Cet appareil numérique de la classe A est conforme à la norme NMB-003 du Canada.

C-Tick Statement

Conforms to AS/NZS CISPR 22/ EN 55022 for Class A Equipment.

European Compliance

The CE mark on the product indicates that the system has been tested to and conforms to the provisions noted within the 2004/108/EEC Electromagnetic Compatibility Directive.

For further information please contact:

Cognex Corporation
One Vision Drive
Natick, MA 01760
USA

Cognex Corporation shall not be liable for

Compliance Statements (Continued)

use of our product with equipment (i.e., power supplies, personal computers, etc.) that is not CE marked and does not comply with the Low Voltage Directive.

For European Community Users
Cognex complies with Directive 2002/96/EC OF THE EUROPEAN PARLIAMENT AND OF THE COUNCIL of 27 January 2003 on waste electrical and electronic equipment (WEEE).

This product has required the extraction and use of natural resources for its production. It may contain hazardous substances that could impact health and the environment, if not properly disposed.

In order to avoid the dissemination of those substances in our environment and to diminish the pressure on the natural resources, we encourage you to use the appropriate take-back systems for product disposal. Those systems will reuse or recycle most of the materials of the product you are disposing in a sound way.



The crossed out wheeled bin symbol informs you that the product should not be disposed of along with municipal waste and invites you to use the appropriate separate take-back systems for product disposal.

If you need more information on the collection, reuse, and recycling systems, please contact your local or regional waste administration.

You may also contact your supplier for more information on the environmental performance of this product.

Warnings and Notices

NOTE: For product support, contact http://support.cognex.com

CAUTION: IP protection is ensured only when all connectors are attached to cables or shielded by a sealing cap.

Reader Programming Codes

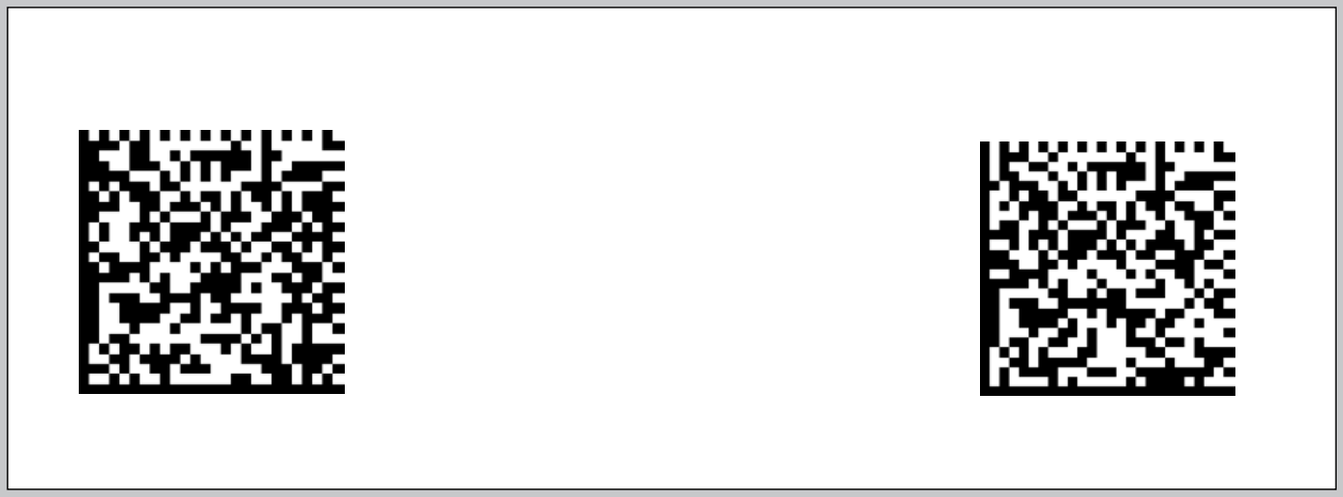

Reset Scanner to
Factory Defaults

Reboot Scanner

Copyright © 2015 Cognex Corporation All Rights Reserved. This document may not be copied in whole or in part, nor transferred to any other media or language, without the written permission of Cognex Corporation. The hardware and portions of the software described in this document may be covered by one or more of the U.S. patents listed on the Cognex web site http://www.cognex.com/patents.asp. Other U.S. and foreign patents are pending. Cognex, the Cognex logo, and DataMan are trademarks, or registered trademarks, of Cognex Corporation.