Fi2000®
23801 E. La Palma Ave., Yorba Linda, Ca 92887 Ph. 714.692.8180, Fax. 714.692.5016
www.cobrausa.com

Items Supplied >

1 – Powrpro Black Fuel Injection Module
5 – Zip Ties 6”
1 – Velcro Stripe

Application(s) >

HARLEY SOFTAIL	2016

Instruction Manual > **692-1624B**

Read all instructions carefully and completely before installing your new POWRPRO module. It is recommended that a qualified mechanic or technician install this product.

1. Remove the seat and air cleaner assembly, remove both front and rear gas tank mounting bolts. Prop the rear of the gas tank up approximately 2”.
2. Locate the factory connector on each fuel injector. Depress the clip on the connector and pull the connector free and move it out of the way, see Figure 1. **Note:** A pair of needle nose pliers and a long flat blade screwdriver helps with this job.
3. Lay the Powrpro module in the area underneath the seat, do not attach it to the motorcycle, route the injector wire harness forward up the right side of the frame backbone, see Figure 2. The harness can be secured using the existing zinc colored harness retainer. Place the injector harness in the plastic loom tray along the right side of the frame backbone. Route the forward set of connectors to the front injector.
4. Attach the pair of Powrpro module’s injector plugs labeled "FRONT" to the front injector. Take the original H.D. connector and insert the corresponding Powrpro connector into it, refer to Figure 1.
5. Attach the Powrpro module’s remaining injector plugs labeled "REAR" onto the rear injector. Then take the original H.D. connector and insert the corresponding Powrpro connector into it, refer to Figure 1.
6. It is now time to install the oxygen (O_2) sensor harnesses. Disconnect ground lead first and then positive lead from battery. Remove the battery for access to the area underneath it and to aid in harness installation. Route the longer O_2 sensor harness down through the front of the battery box opening and out the front right side, Figure 3. Continue to route it to the right rear frame next to the swing arm mount and down past the rear of the transmission, then forward along the lower right frame rail to the voltage regulator.
7. Remove the 2 Allen bolts that secure the voltage regulator bracket to the engine case. Ease the voltage regulator forward just enough to access the front O_2 connector, it is located on the backside of this bracket, see Figure 4. Unplug the connector and then plug the Powrpro female connector into the original HD male connector as well as the other mating pair of connectors. Reinstall this connection on to the voltage regulator bracket and zip tie the other mating pair to it. Be sure the O_2 sensor harness exits the right side, when securing the voltage regulator back on to the engine case. Secure the Powrpro O_2 harness to the lower right frame rail in the locations shown in Figure 5.
8. Route the shorter Powrpro O_2 sensor harness to the front side of the battery box. Locate the stock rear O_2 sensor connectors and disconnect them, see Figure 3. Mate the corresponding male and female connectors with the Powrpro O_2 connectors. Secure this harness to an existing harness along the top of the right frame member using one of the supplied zip ties.
9. Reinstall the battery, attach the positive lead, and then the negative along with the black ground wire from the Powrpro tuner, see Figure 2.

DISCLAIMER: NOT LEGAL FOR SALE OR USE IN CALIFORNIA ON ANY POLLUTION CONTROLLED MOTOR VEHICLES.

10. Verify that the module has power and connections have been made correctly; watch the clear window on the FI housing and turn "ON" the key ignition and set the handlebar run switch to "ON", confirm that the Red LED turns on. On some models the Red light will turn off after 4-5 seconds as the fuel pump cycles off, which is OK. If you do not see a Red light, it may be necessary to wait for the alarm to reset (if applicable) and try again. Also confirm the side stand is up, bike is in neutral, and clutch is in. Start the bike and confirm the LED remains on solid Red. **NOTE**: Make sure ignition is turned off before attempting to change any Fi2000 harness connections if no Red light is seen. For access to the Blue Tooth Tuning App on the module, please download the PowrPro Black App to your smart device, Android 4.3 & later or Apple iOS 5.0 & later operating systems. Once the app is installed, make sure the motorcycle is in neutral and start the engine, use the connect button within the app and the Blue light on the Fi module window will light up during pairing connection and remain solid Blue while paired and connected with respective Android or Apple Device. Once the app has been used and settings saved and disconnected through the app, the Blue light will turn off, and the PowrPro Black will be ready for continued service on the motorcycle.
11. Remove the backing from the Velcro and attach the Powrpro as shown in Figure 2.
12. Re-install the fuel tank mount bolts, seat and air cleaner assembly. Tighten all bolts to factory specifications.

TROUBLE SHOOTING: If you have any problems refer to Step 10 in the main body of the instructions.

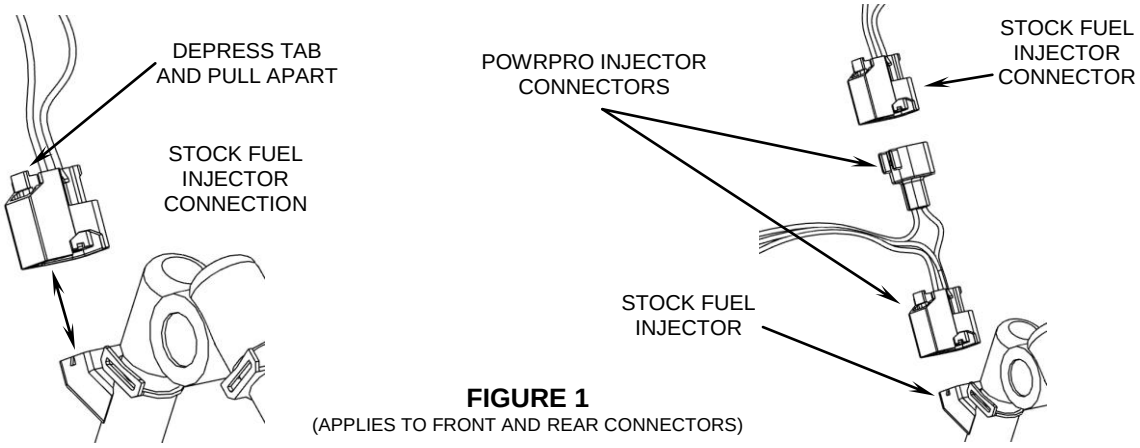

FIGURE 1
(APPLIES TO FRONT AND REAR CONNECTORS)

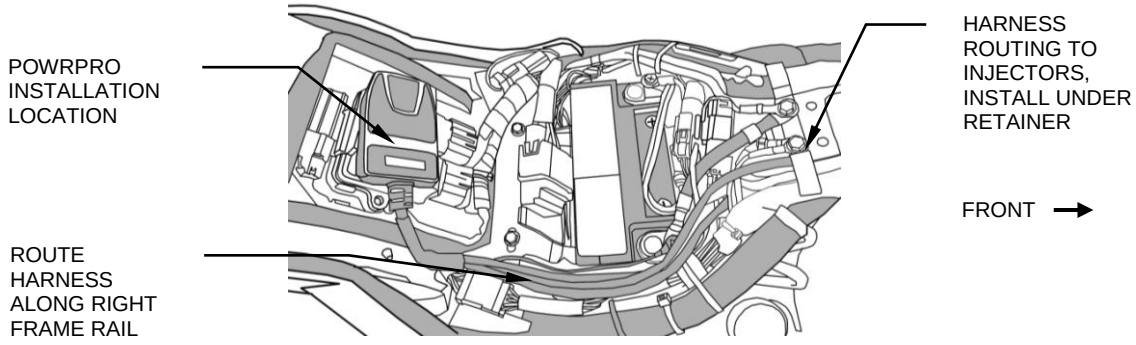

FIGURE 2

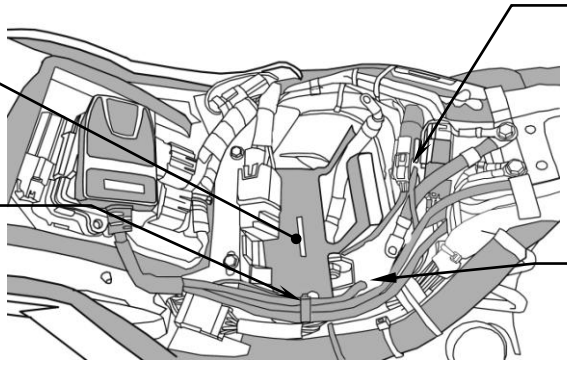

FIGURE 3

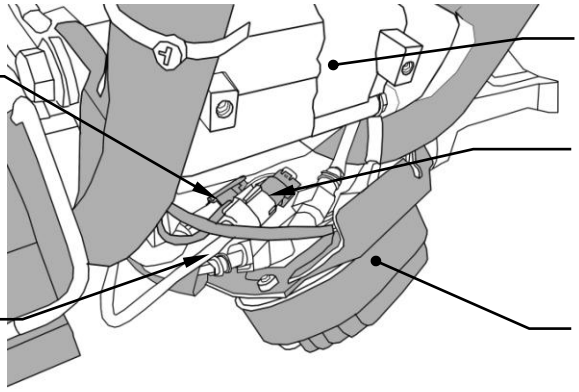

FIGURE 4

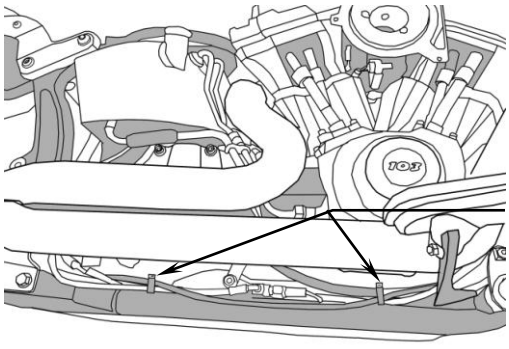

FIGURE 5

DISCLAIMER: NOT LEGAL FOR SALE OR USE IN CALIFORNIA ON ANY POLLUTION CONTROLLED MOTOR VEHICLES.