Parts Manual

Model Sheet-Sav™ Push/Pull

Catalog Number 45E-PAS-363

cascade® corporation

For Technical Assistance call: 800-227-2233, Fax: 888-329-8207
To Order Parts call: 888-227-2233, Fax: 888-329-0234
OR
Write: Cascade Corporation, P.O. Box 20187, Portland, OR 97220
Internet: www.cascorp.com

Decals
35E/45E Sheet–Sav

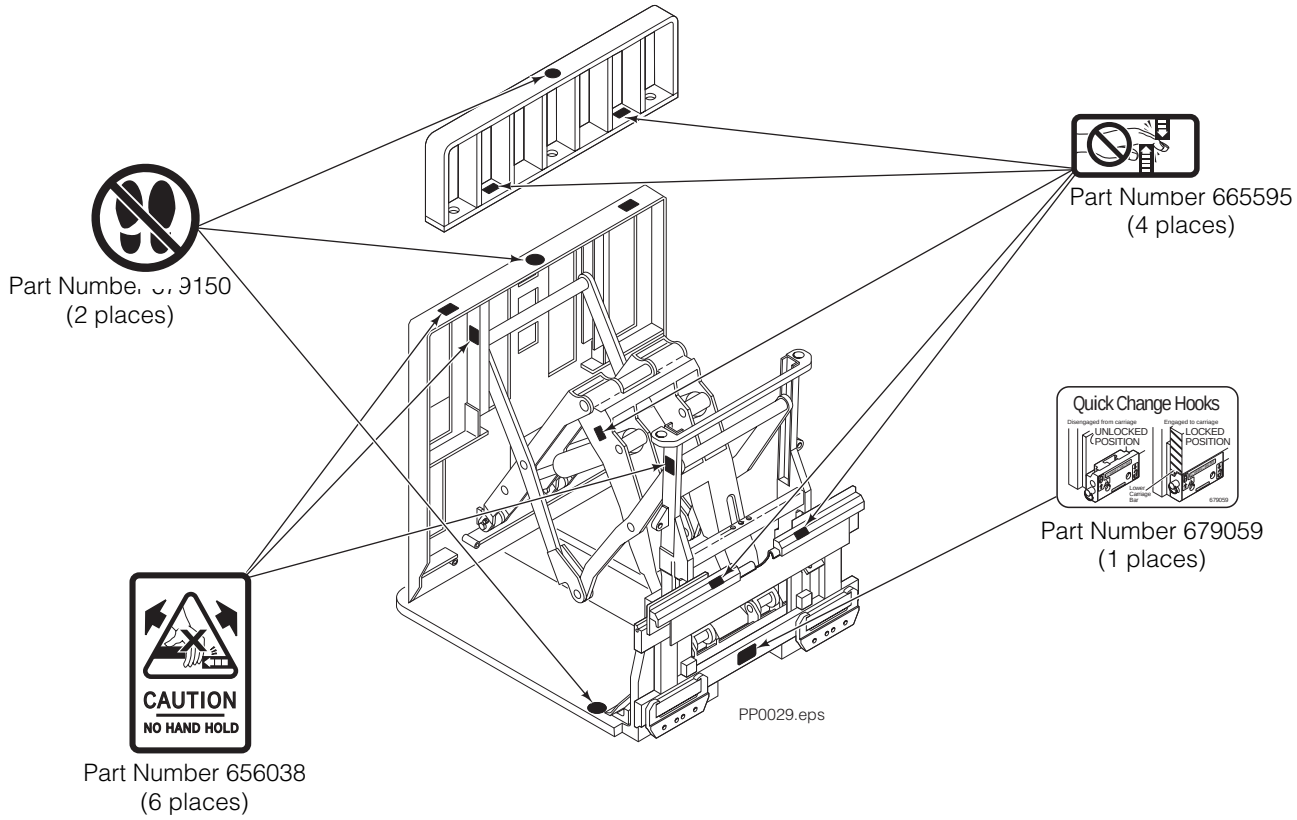

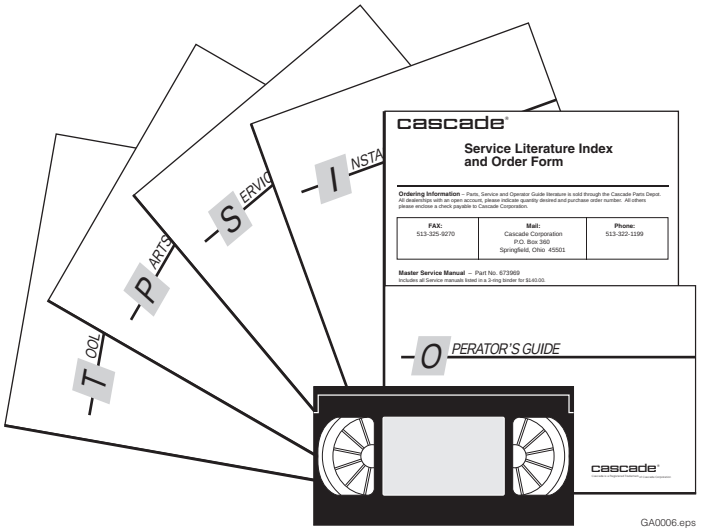

PART NO.	DESCRIPTION
	Parts Manual
686455	Service Manual
684945	Operators Guide
685531	Operators Pocket Guide
684944	Installation Instructions
680664	Servicing Cascade Cylinders-VHS
679929	Tool Catalog
673964	Literature Index Order Form

One Piece Fork Group

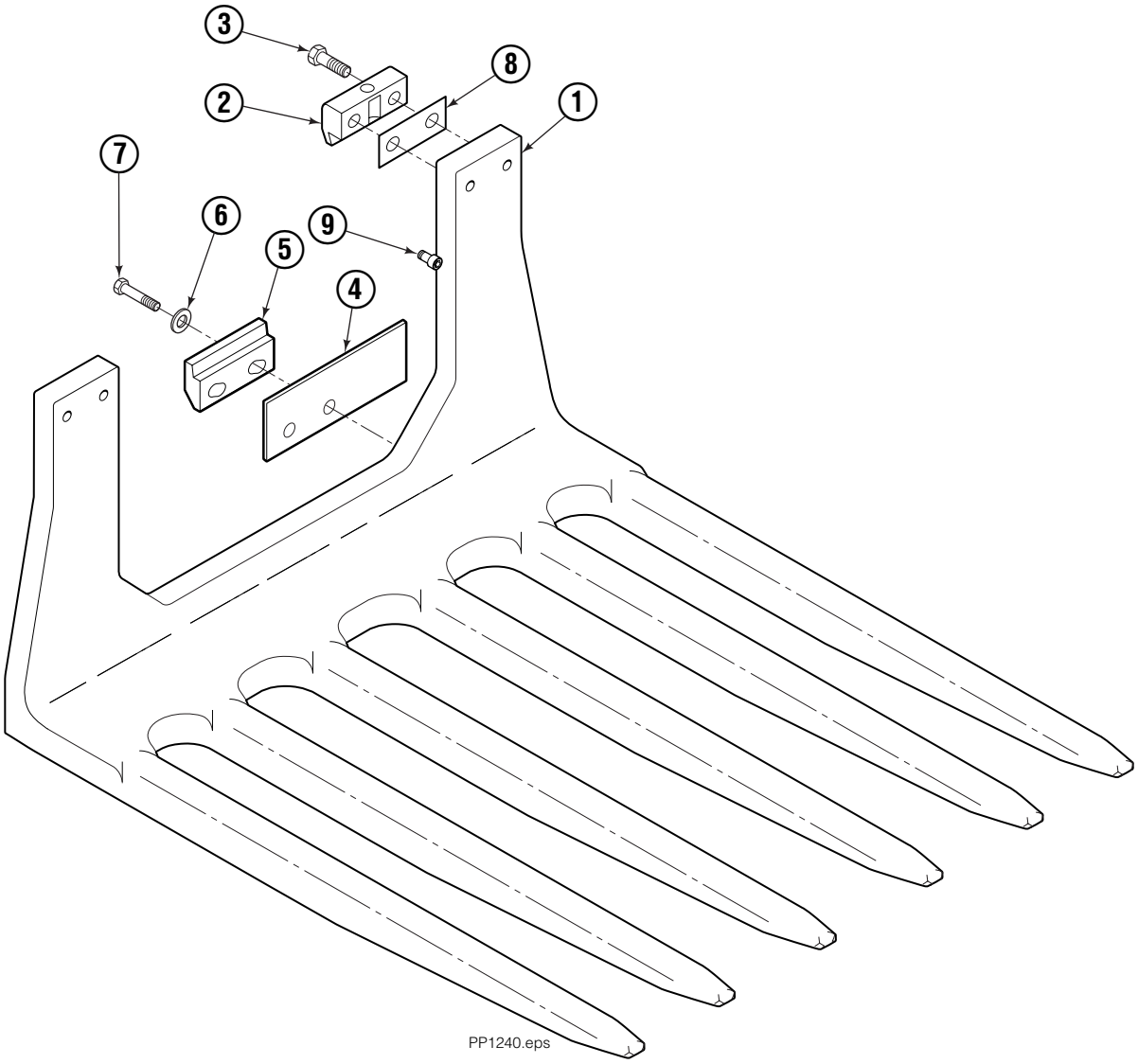

45E			
REF	**QTY**	**PART NO.**	**DESCRIPTION**
		6069404	One Piece Fork Group
1	1	6069407	Fork Weldment
2	2	685533	Upper Hook
3	4	685534	Capscrew, M16 x 50
4	■	685675	Shim (.030)
5	2	667370	Lower Hook
6	4	667225	Washer
7	4	779010	Capscrew, M16 x 35
8	●	688379	Shim (.060)
9	2	768825	Capscrew, M12 x 20

■ As required for proper adjustment.

● As required (2 maximum).

S/S Platen Carrier Group ITA III

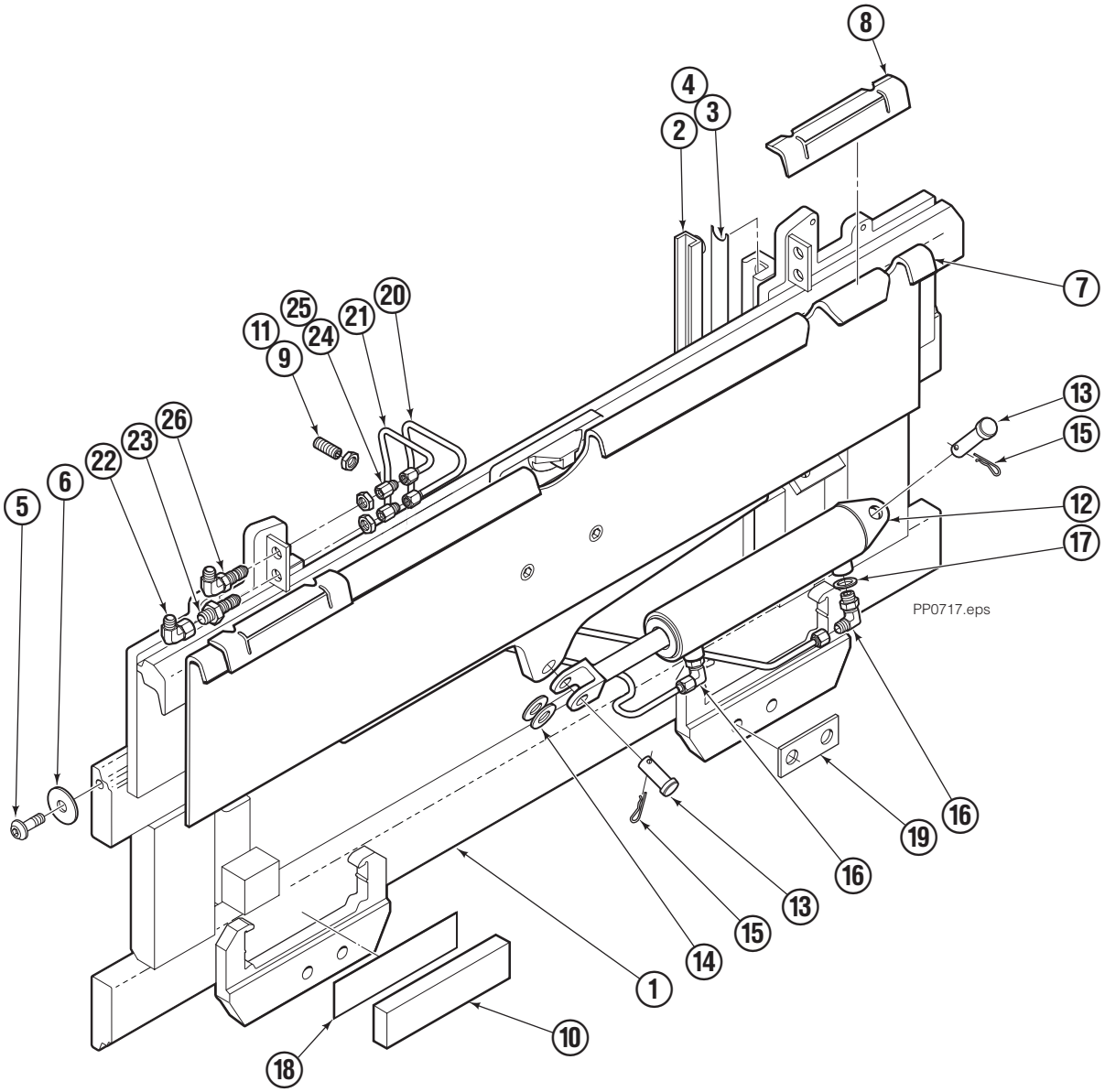

35E/45E							
REF	**QTY**	**PART NO.**	**DESCRIPTION**	**REF**	**QTY**	**PART NO.**	**DESCRIPTION**
		6091620	Platen Carrier Group	14	2	6234	Washer
1	1	6091970	Platen Carrier	15	2	6517	Cotter Pin
2	2	6079205	Bearing	16	2	666984	Fitting, 4-6
3	●	674298	Shim (.015)	17	1	675550	Washer
4	●	674299	Shim (.020)	18	2	683250	Strip
5	2	683142	Capscrew, M12 x 20	19	2	683218	Spacer
6	2	683001	Washer, M12	20	1	207047	Tube
7	1	682557	Anchor Bracket	21	1	207048	Tube
8	2	804065	Bearing	22	1	2680	Fitting, 6-6
9	2	768759	Setscrew	23	1	2375	Fitting, 6-6
10	2	682814	Bearing	24	2	2617	Fitting, 6
11	2	688387	Jam Nut	25	2	2669	Fitting, 4-6
12	1	675548	Cylinder Assembly ◆	26	1	2453	FItting, 6-6
13	2	214036	Clevis Pin				

◆ See Cylinder page for parts breakdown.

● As required for proper adjustment.

Reference: 6008229 Mounting Assembly, SK-5986.

Sideshift Cylinder

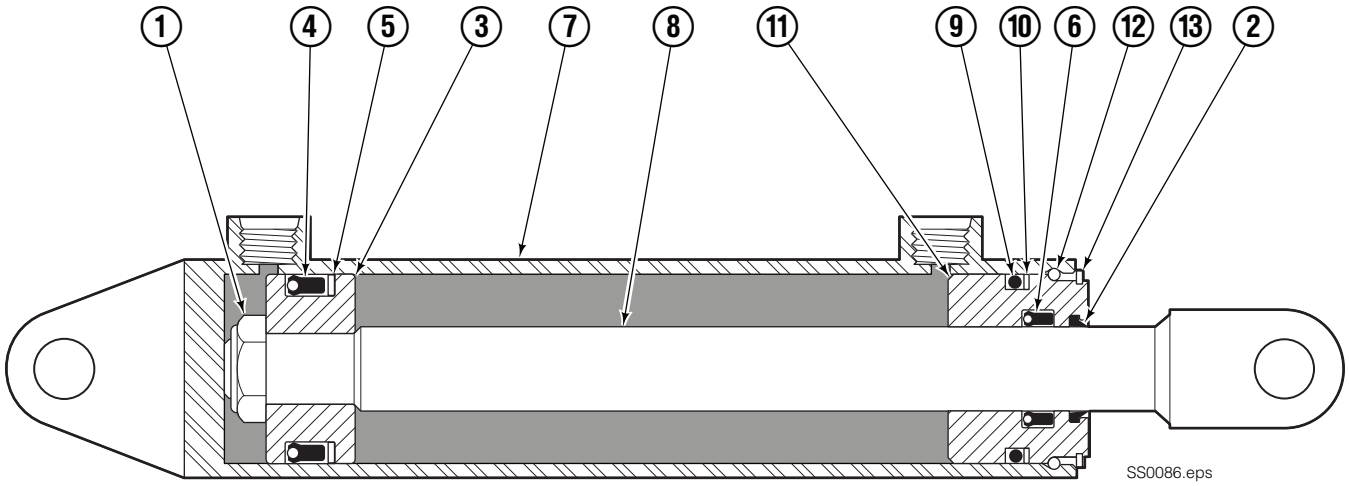

REF	QTY	PART NO.	DESCRIPTION
		675548	Cylinder Assembly
1	1	553857	Nut
2	1	636851	■ Wiper
3	1	553501	Piston
4	1	662452	■ Seal
5	1	638247	■ Back-up Ring
6	1	641835	■ Seal
7	1	675549	Shell
8	1	553499	Rod
9	1	2785	■ O-Ring
10	1	615128	■ Back-up Ring
11	1	553500	Retainer
12	1	553856	Retaining Ring
13	1	7202	Retaining Ring
		553861	Service Kit

■ Included in Service Kit 553861.

Frame Group

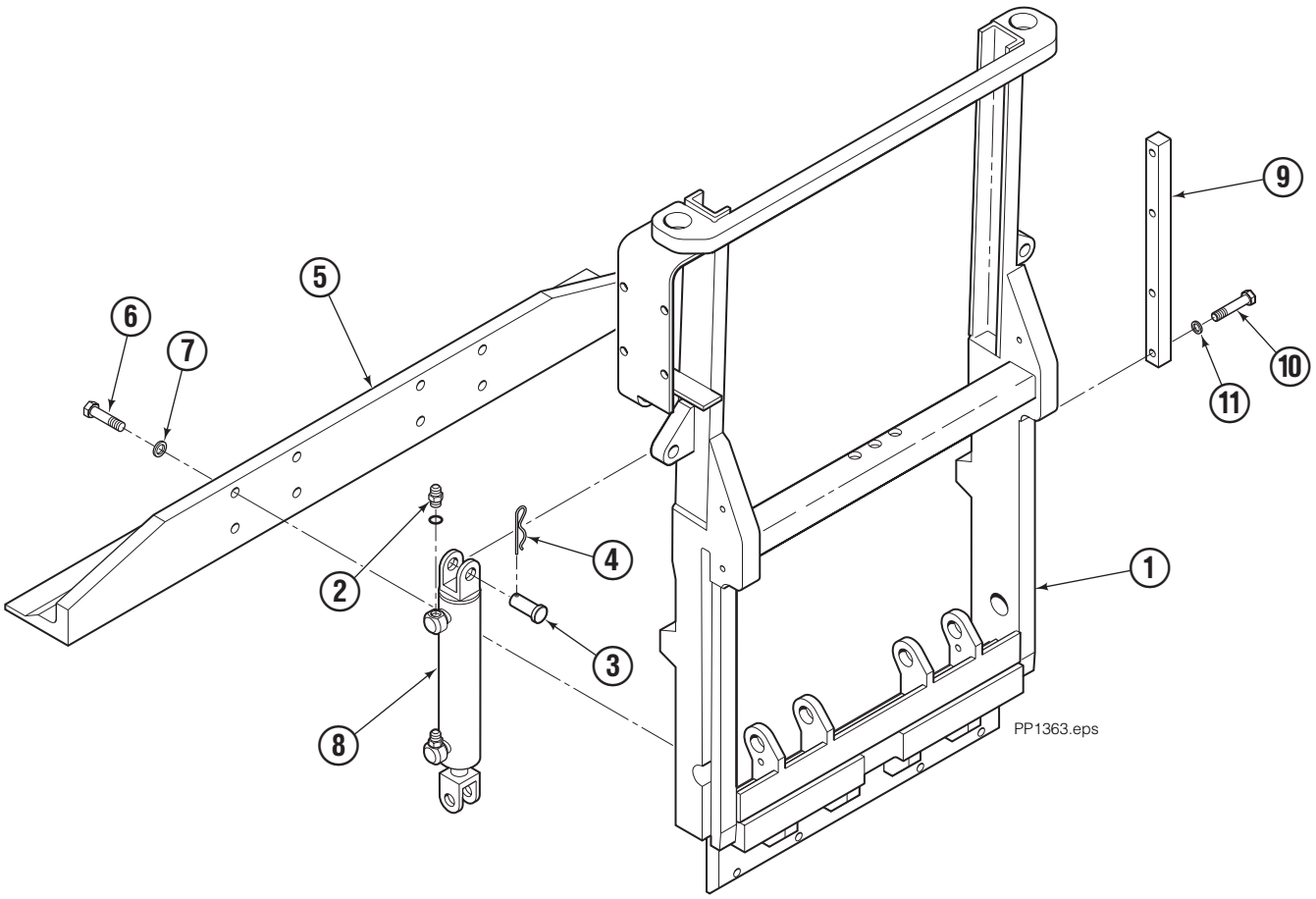

35E/45E			
REF	**QTY**	**PART NO.**	**DESCRIPTION**
		6061450	Frame Group
1	1	6063208	Frame
2	4	617915	Fitting, 4-4
3	4	678525	Clevis Pin
4	4	672726	Cotter Pin
5	1	206955	Foot
6	8	766929	Capscrew, M12 x 40
7	8	678991	Lockwasher, M12
8	2	583942	Cylinder ◆
9	1	206954	Bar
10	2	768525	Capscrew, M8 x 40
11	2	686119	Lockwasher, M8

◆ See Cylinder page for parts breakdown.

Reference: SK-5986, SK-8713.

Sheet-Sav Cylinder

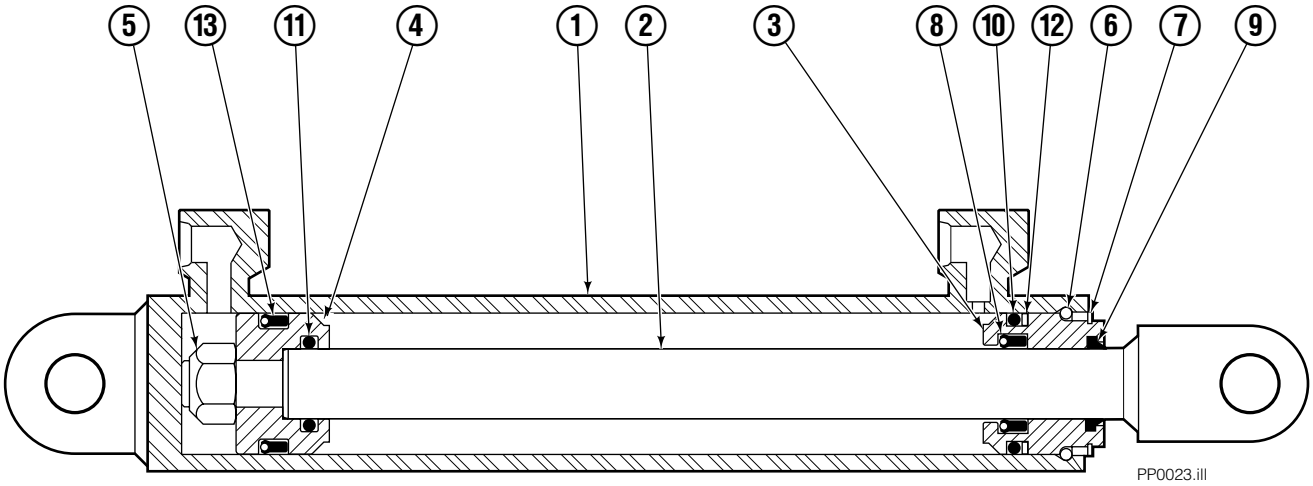

35E/45E			
REF	**QTY**	**PART NO.**	**DESCRIPTION**
		583942	Cylinder Assembly
1	1	564162	Shell
2	1	564165	Rod
3	1	685664	Retainer
4	1	685665	Piston
5	1	563462	Nut
6	1	563916	Seal
7	1	3137	Retaining Ring
8	1	646540	■ Seal
9	1	636850	■ Wiper
10	1	2718	■ O-Ring
11	1	2710	■ O-Ring
12	1	615122	■ Back-up Ring
13	1	663728	■ Seal

■ Included in Service Kit 684827.

Quick-Change Lower Hook Group – ITA III

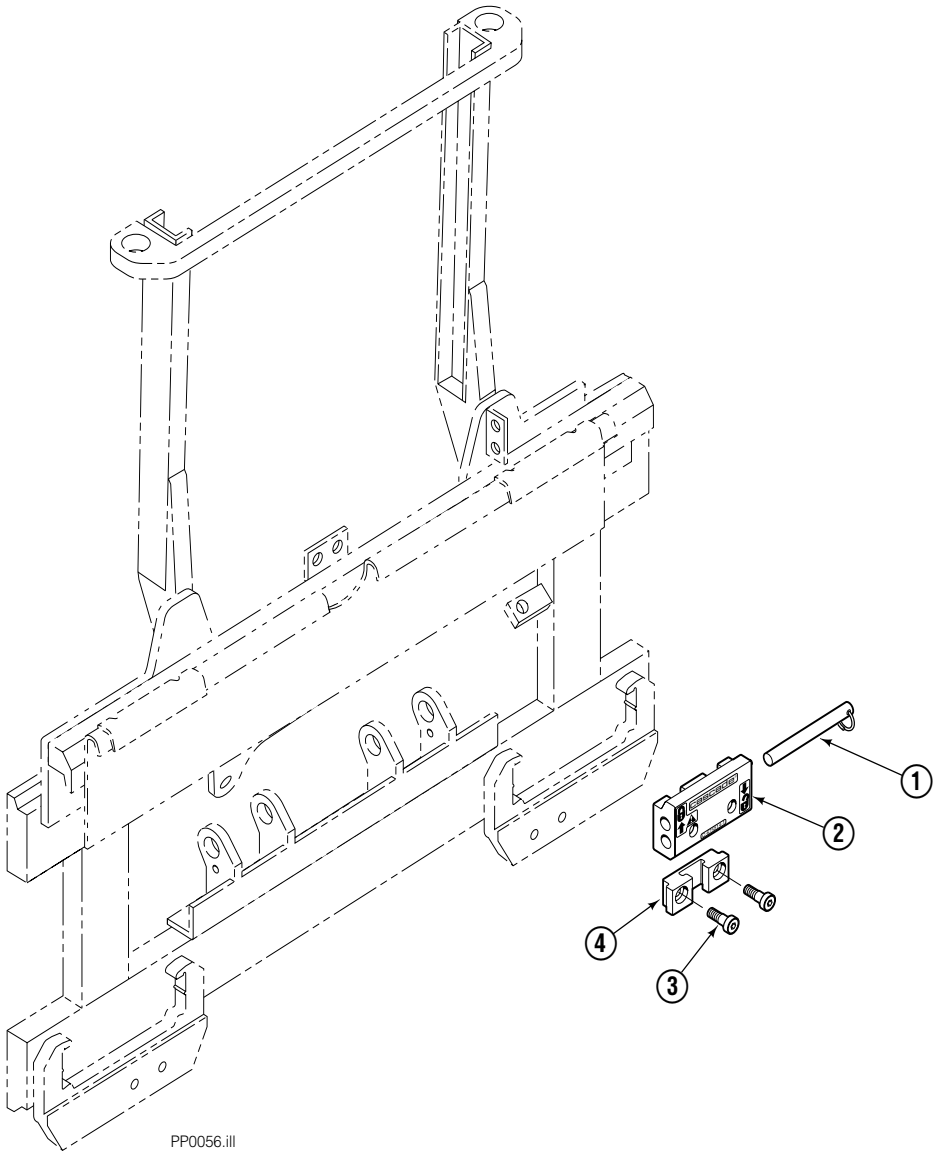

REF	QTY	PART NO.	DESCRIPTION
		683181	Lower Hook Group ITA III
1	2	678832	Pin
2	2	675957	Hook
3	4	779019	Capscrew, M16 x 35 Class 8.8
4	2	675958	Guide

Cylinder Assembly

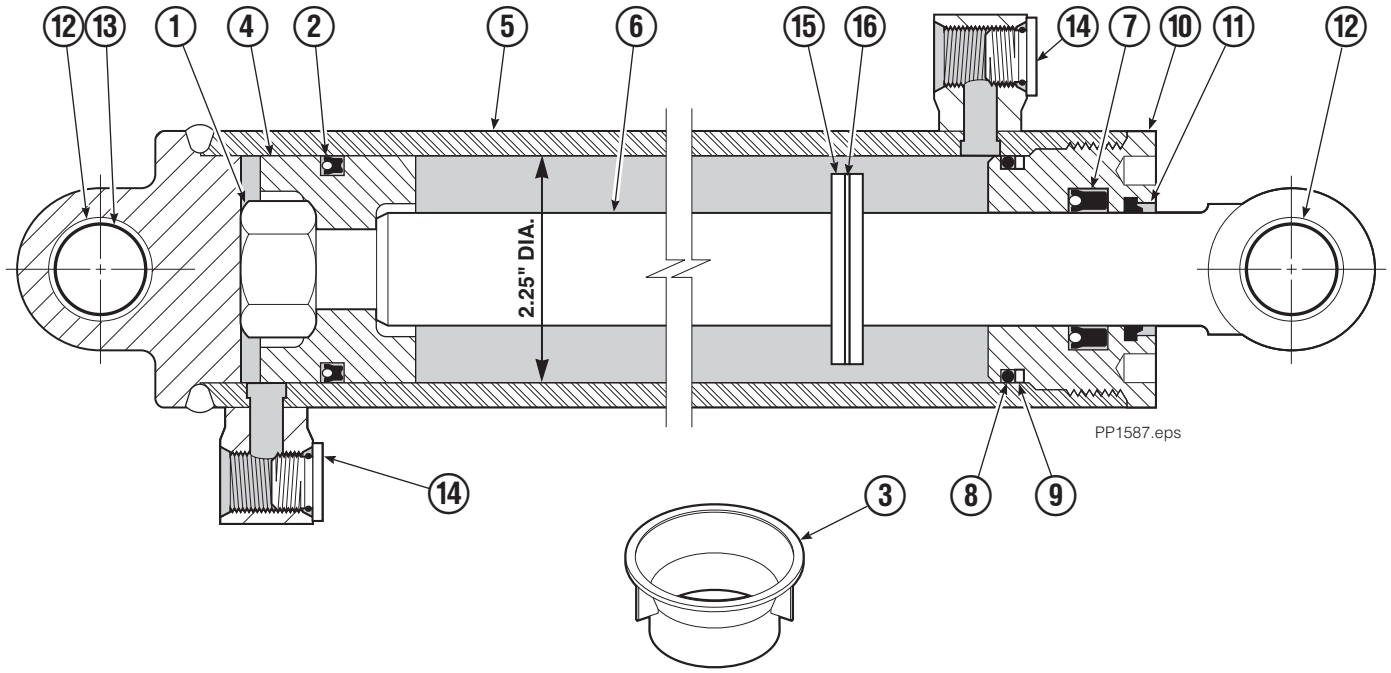

REF	QTY	PART NO.	DESCRIPTION
		200989	Cylinder Assembly
1	1	678019	Nut
2	1	564159	◆ Seal
3	1	671048	◆ Seal Loader
4	1	564161	Piston
5	1	562717	Shell
6	1	558626	Rod
7	1	662448	◆ Seal
8	1	2787	◆ O-Ring
9	1	615130	◆ Back-Up Ring
10	1	558628	Retainer
11	1	636853	◆ Wiper
12	4	559697	Bearing
13	1	559698	Spacer
14	2	604510	Fitting, 6
15	1	685382	Spacer
16	1	7348	Snap Ring
		562339	Service Kit

◆ Included in Service Kit 562339.

Reference: S-3424, S-8202, 582636 Cylinder Assembly.

Mechanism Group

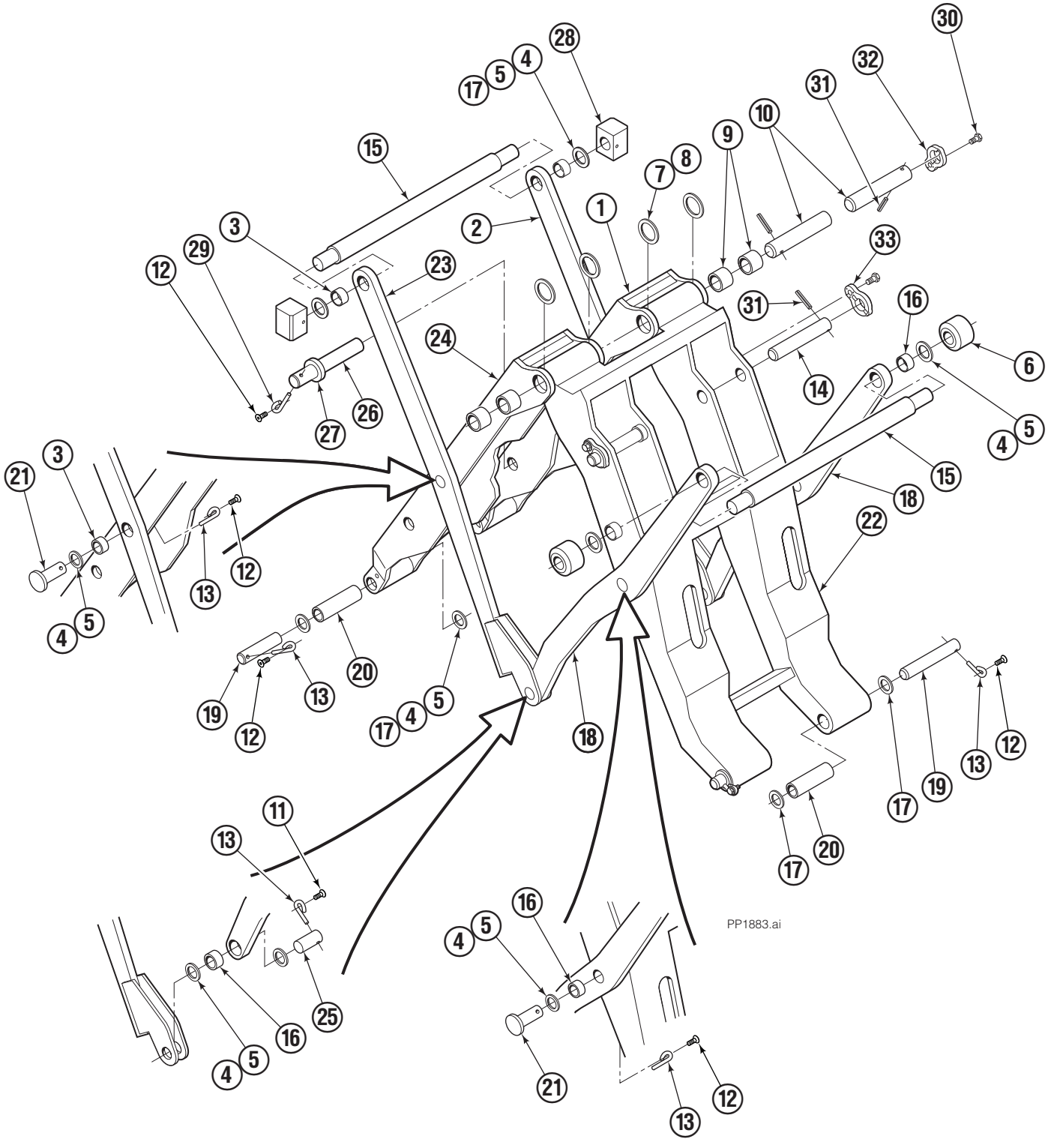

Mechanism Group

35E/45E			
REF	**QTY**	**PART NO.**	**DESCRIPTION**
		6061190	Mechanism Group
1	1	204691	Arm – Secondary Inner – RH
2	1	204692	Arm – Secondary Outer – RH
3	4	683154	◆ Bushing
4	●	683161	Shim (.030)
5	●	683162	Shim (.060)
6	2	205070	Roller
7	●	683163	Shim (.030)
8	●	683164	Shim (.060)
9	4	683155	◆ Bushing
10	2	6052034	Pin – Primary/Secondary Inner
11	2	6405877	Capscrew
12	10	220862	Capscrew, M8 x 16
13	10	6020429	Eye Pin
14	2	682822	Pin – Head
15	2	205065	Pin
16	6	683153	◆ Bushing
17	●	204532	Shim (.120)
18	2	204694	Arm – Outer Primary
19	4	204533	Pin – Frame
20	4	204535	◆ Bushing
21	4	204695	Pin – Primary Outer
22	1	204604	Arm – Inner Primary
23	1	204693	Arm – Secondary Outer – LH
24	1	6810367	Arm – Secondary Inner – LH
25	2	204696	Pin – Primary/Secondary Outer
26	2	682823	Pin – Rod
27	2	683165	Spacer
28	2	6061191	Block Roller
29	2	6020429	Eye Pin
30	4	6047151	Capscrew, M8 x 16
31	4	7913	Roll Pin
32	2	6047125	Retainer
33	2	6045015	Retainer

● Quantity as required.

◆ Included in Bushing Service Kit 205075.

Hydraulic Group

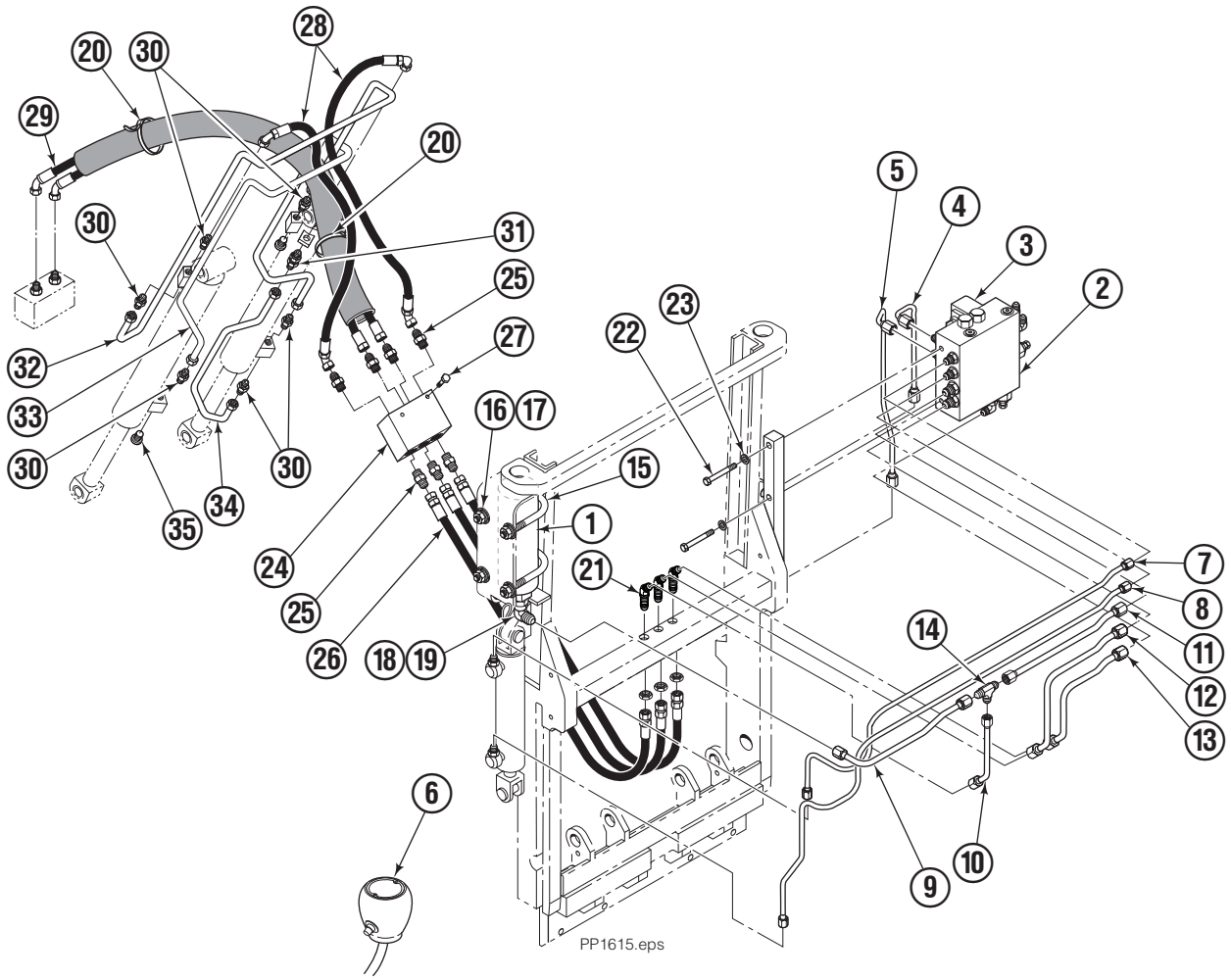

45E							
REF	**QTY**	**PART NO.**	**DESCRIPTION**	**REF**	**QTY**	**PART NO.**	**DESCRIPTION**
		6098231	Hydraulic Group	18	1	205855	Fitting, 12-6
1	1	6033052	Accumulator	19	1	2680	Fitting, 6-6
2	1	6098104	Valve ■	20	2	684956	Wire Tie
3	2	669432	Diode	21	3	2492	Fitting, 6-6
4	1	6063672	Tube	22	2	768525	Capscrew, M8 x 40
5	1	6063673	Tube	23	2	686119	Lockwasher, M8
6	1	206939	Control Knob ▲	24	1	206927	Junction Block
7	1	6063670	Tube	25	7	604511	● Fitting, 6-6
8	1	6063671	Tube	26	3	6051100	Hose, 21.00 in.
9	1	6033055	Tube	27	2	765329	◆ Capscrew, M8 x 20
10	1	6033054	Tube	28	2	209669	◆ Hose, 15.50 in.
11	1	6033053	Tube	29	1	6061018	Hose, 40.00 in.
12	1	206936	Tube	30	6	604511	◆ Fitting, 6-6
13	1	206935	Tube	31	1	2375	◆ Fitting, 6-6
14	1	2576	Fitting, 6	32	1	209668	◆ Tube
15	2	364099	U-Bolt	33	1	209667	◆ Tube
16	4	6288	Lockwasher	34	1	200647	◆ Tube
17	4	6230	Washer	35	2	604510	◆ Fitting, 6

■ See Valve page for parts breakdown.
▲ See Control Knob page for parts breakdown.
Reference: SK-9126.

● Included in Junction Block Assembly 206927.
◆ Included in Hydraulic Components 209672.

Junction Block Assembly

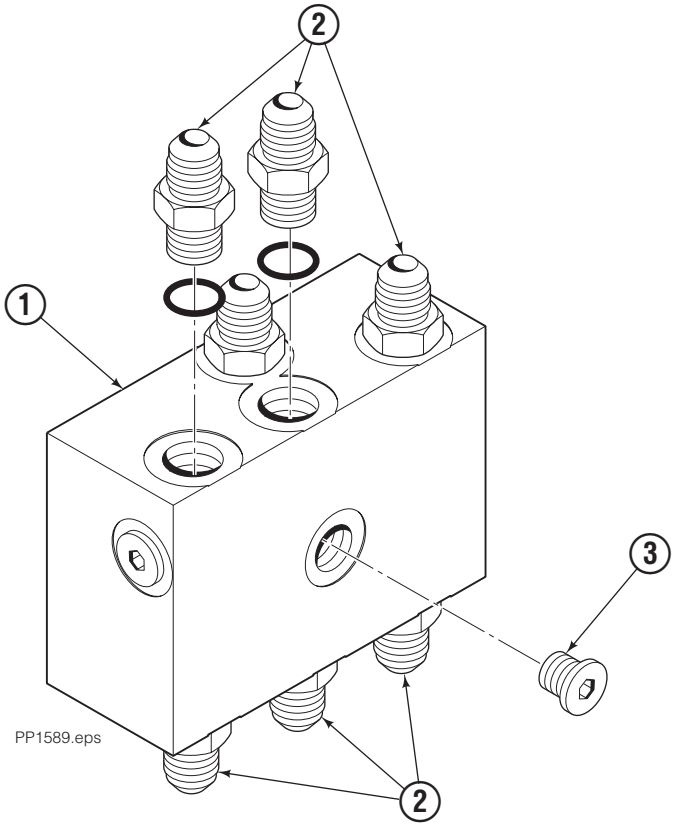

35E/45E			
REF	**QTY**	**PART NO.**	**DESCRIPTION**
		206927	Junction Block Assembly
1	1	206928	Junction Block
2	3	604511	Fitting, 6-6
3	2	609234	Plug, 4

Valve
Without Independent Gripper Control

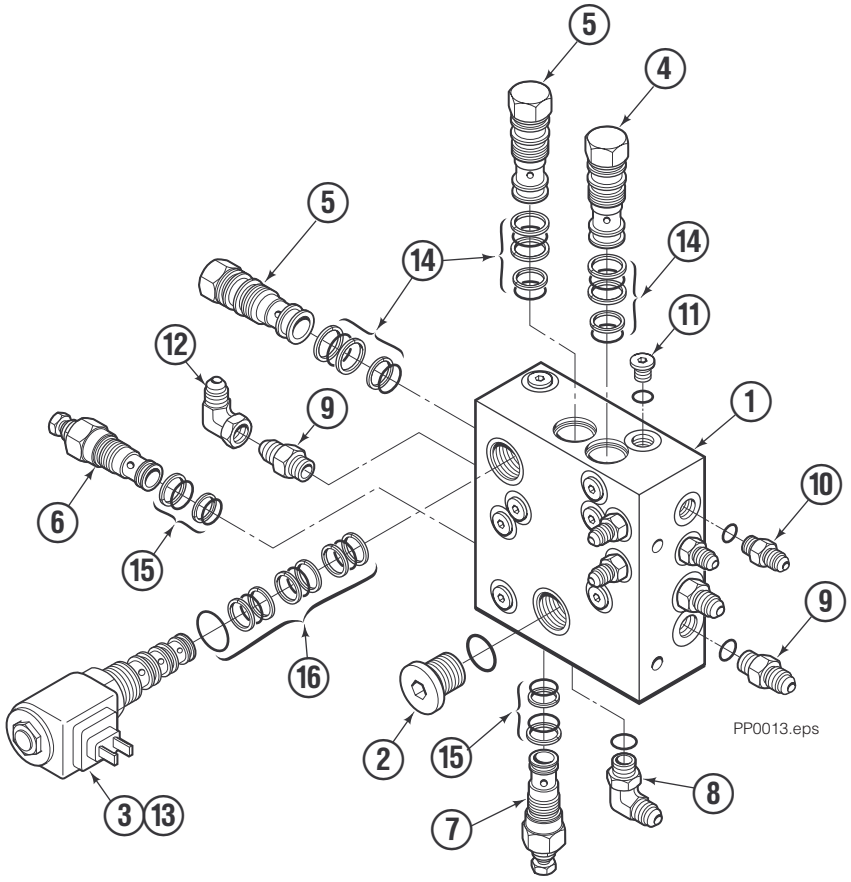

35E/45E			
REF	**QTY**	**PART NO.**	**DESCRIPTION**
		6098104	Valve Assembly
1	1	206943	Valve Body
2	1	609453	Fitting, 10
3	1	6020883	Solenoid Valve
4	1	206944	Check Valve
5	2	6038929	Check Valve
6	1	677125	Relief Valve
7	1	677125	Relief Valve
8	2	601676	Fitting, 6-6
9	3	604511	Fitting, 6-6
10	4	617915	Fitting, 4-4
11	12	609234	Fitting, 4
12	1	2680	Fitting, 6-6
13	1	221193	Coil - 12V ●
	1	**221968**	Coil - 24V ●
	1	221969	Coil - 36V ●
	1	221970	Coil - 48V ●
	1	6098156	Coil - 72V ●
14	3	667516	Service Kit
15	2	669597	Service Kit
16	1	667379	Service Kit

● Not included in Valve Assembly.

Control Knob
Without Gripper Control

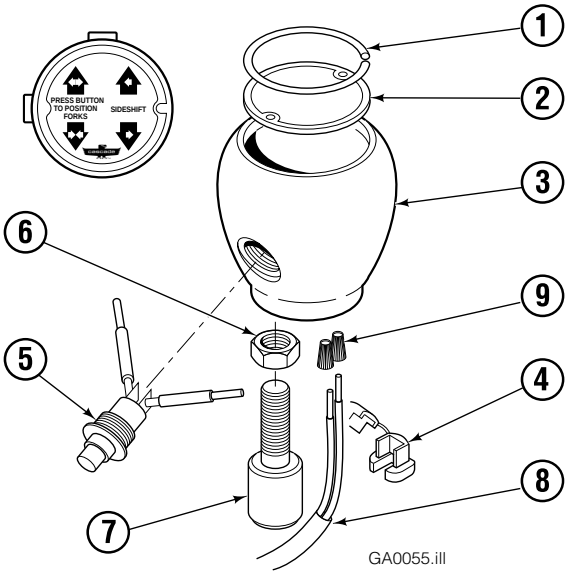

35E/45E			
REF	**QTY**	**PART NO.**	**DESCRIPTION**
		206939	Knob Group
1	1	665250	Snap Ring
2	1	206986	Cover
3	1	665012	Knob
4	1	665076	Strain Relief
5	1	677112	■ Switch
6	1	5902	Nut, 3/8 NC
7	1	665081	Adapter
8	1	667718	Cable Assembly
9	2	667752	Connector – Gray

■ This switch may be purchased without wires. Order part number 665004. Soldering is required.

Faceplate Group

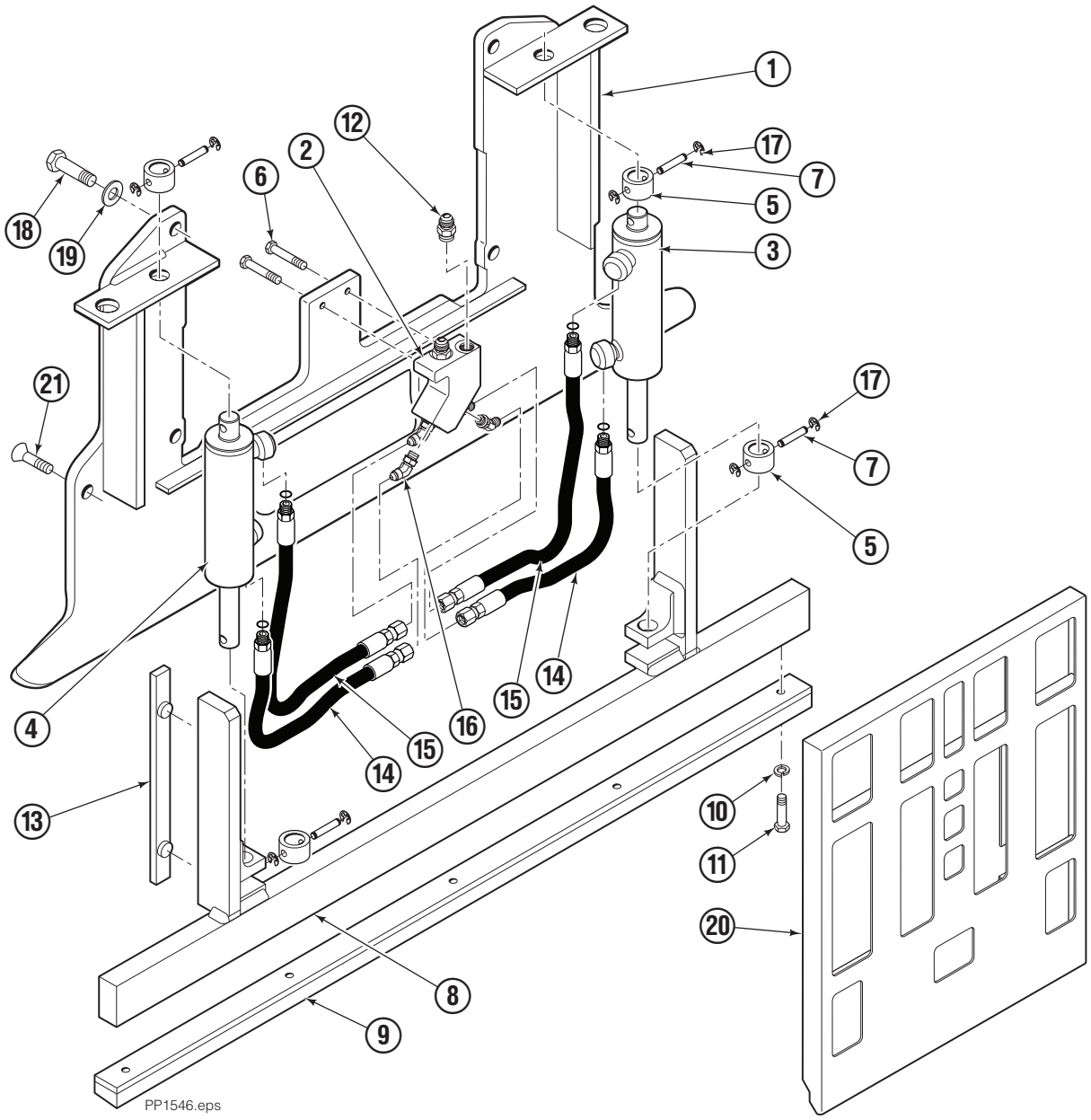

35E/45E							
REF	QTY	PART NO.	DESCRIPTION	REF	QTY	PART NO.	DESCRIPTION
		6019148	Faceplate Group-R3	11	5	787375	Capscrew, M8 x 20
		6020440	Gripper Jaw Assembly-R6 ●	12	2	604511	Fitting, 6-6
1	1	206396	Gripper Jaw	13	2	686573	Bearing
2	1	6002134	Valve	14	2	6002138	Hose, 315 mm
3	1	6020444	Gripper Cylinder, LH ◆	15	2	6002139	Hose, 450 mm
4	1	6020443	Gripper Cylinder, RH ◆	16	4	617918	Fitting, 4-4
5	4	6020462	Collar	17	8	669894	Retaining Ring
6	2	787373	Capscrew, M8 x 20	18	4	225346	Capscrew, M16 x 60
7	4	6014089	Pin	19	4	675620	Washer
8	1	6002135	Gripper Bar	20	1	6002144	Faceplate, 40 x 48 in. ■
9	1	672712	Gripper Pad	21	2	768714	Capscrew, M16 x 60
10	5	680253	Lockwasher, M8				

◆ See Gripper Cylinder page for parts breakdown.

■ Width x height.

● Includes items 1-17.

Gripper Cylinder
Left Hand

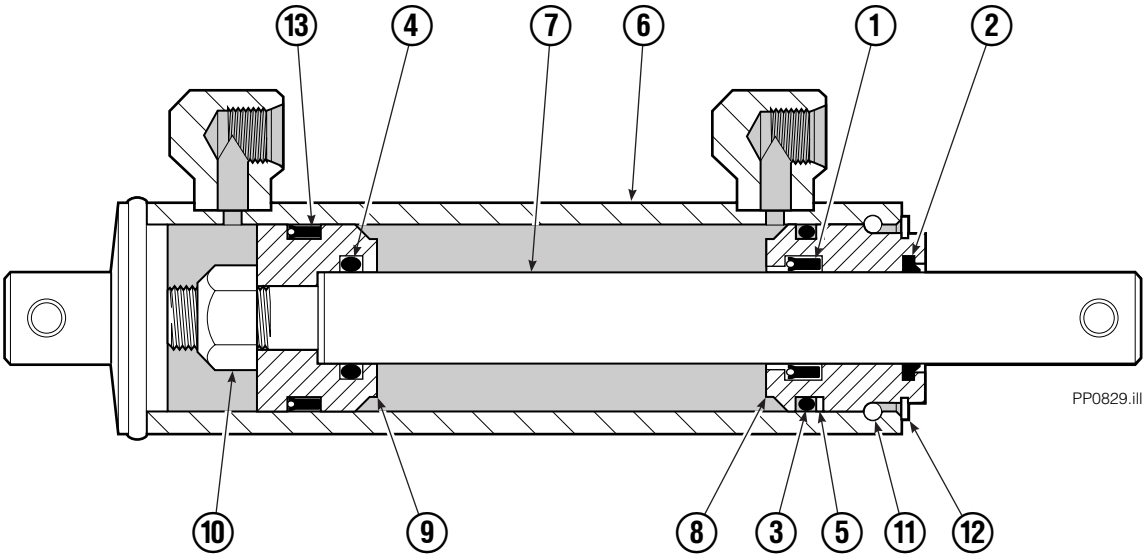

REF	QTY	PART NO.	DESCRIPTION
		6020444	Gripper Cylinder – LH
1	1	646540	▼ Seal
2	1	636850	▼ Wiper
3	1	2718	▼ O-Ring
4	1	2710	▼ O-Ring
5	1	615122	▼ Back-Up Ring
6	1	6020453	Shell
7	1	6020461	Rod
8	1	685664	Retainer
9	1	685665	Piston
10	1	563462	Nut
11	1	563916	Ring
12	1	3137	Ring
13	1	663728	▼ Piston Seal

▼ Included in Service Kit 684827.

Gripper Cylinder
Right Hand

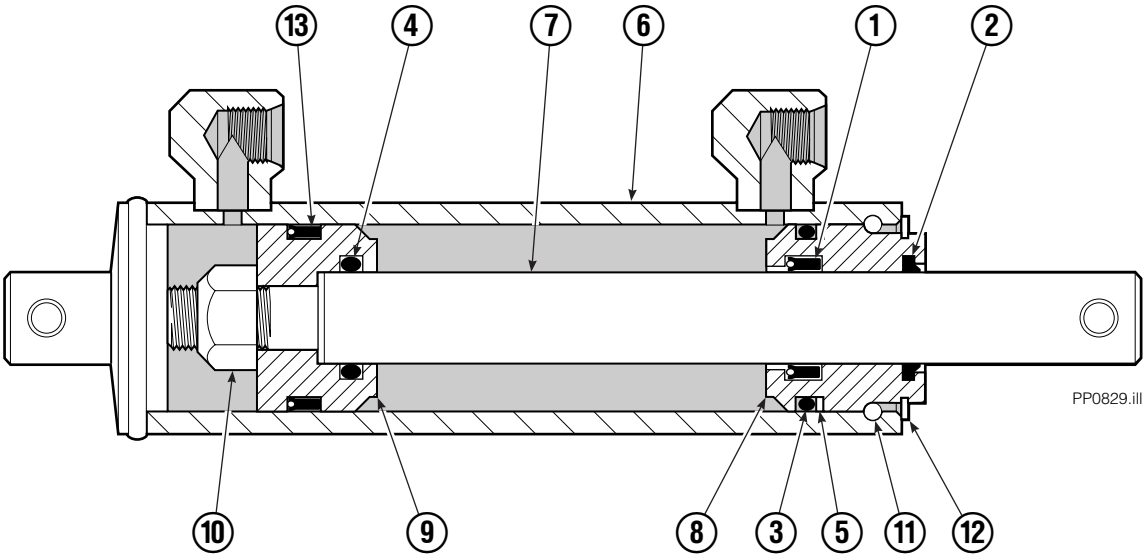

REF	QTY	PART NO.	DESCRIPTION
		6020443	Gripper Cylinder – RH
1	1	646540	▼ Seal
2	1	636850	▼ Wiper
3	1	2718	▼ O-Ring
4	1	2710	▼ O-Ring
5	1	615122	▼ Back-Up Ring
6	1	6020452	Shell
7	1	6020461	Rod
8	1	685664	Retainer
9	1	685665	Piston
10	1	563462	Nut
11	1	563916	Ring
12	1	3137	Ring
13	1	663728	▼ Piston Seal

▼ Included in Service Kit 684827.

PARTS ORDERING LOG

DATE	PURCHASE ORDER	SERIAL NUMBER	PAGE	REF NO.	QTY	CASCADE PART NO.	CUSTOMER PART NO.	DESCRIPTION	PRICE

Do you have questions you need answered right now?
Call your nearest Cascade Parts Department.
Visit us online at www.cascorp.com

AMERICAS

Cascade Corporation
Parts Sales
2501 Sheridan Ave.
Springfield, OH 45505
Tel: 888-CASCADE (227-2233)
Fax: 888-329-0234

Cascade Canada Inc.
5570 Timberlea Blvd.
Mississauga, Ontario
Canada L4W-4M6
Tel: 905-629-7777
Fax: 905-629-7785

Cascade do Brasil
Rua João Guerra, 134
Macuco, Santos - SP
Brasil 11015-130
Tel: 55-13-2105-8800
Fax: 55-13-2105-8899

EUROPE-AFRICA

Cascade Italia S.R.L.
European Headquarters
Via Dell'Artigianato 1
37030 Vago di Lavagno (VR)
Italy
Tel: 39-045-8989111
Fax: 39-045-8989160

Cascade (Africa) Pty. Ltd.
PO Box 625, Isando 1600
60A Steel Road
Sparton, Kempton Park
South Africa
Tel: 27-11-975-9240
Fax: 27-11-394-1147

ASIA-PACIFIC

Cascade Japan Ltd.
2-23, 2-Chome,
Kukuchi Nishimachi
Amagasaki, Hyogo
Japan, 661-0978
Tel: 81-6-6420-9771
Fax: 81-6-6420-9777

Cascade Korea
121B 9L Namdong Ind.
Complex, 691-8 Gojan-Dong
Namdong-Ku
Inchon, Korea
Tel: +82-32-821-2051
Fax: +82-32-821-2055

Cascade-Xiamen
No. 668 Yangguang Rd.
Xinyang Industrial Zone
Haicang, Xiamen City
Fujian Province
P.R. China 361026
Tel: 86-592-651-2500
Fax: 86-592-651-2571

Cascade India Material Handling Private Limited
No 34, Global Trade Centre
1/1 Rambaugh Colony
Lal Bahadur Shastri Road,
Navi Peth, Pune 411 030
(Maharashtra) India
Phone: +91 020 2432 5490
Fax: +91 020 2433 0881

Cascade Australia Pty. Ltd.
1445 Ipswich Road
Rocklea, QLD 4107
Australia
Tel: 1-800-227-223
Fax: +61 7 3373-7333

Cascade New Zealand
15 Ra Ora Drive
East Tamaki, Auckland
New Zealand
Tel: +64-9-273-9136
Fax: +64-9-273-9137

Sunstream Industries Pte. Ltd.
18 Tuas South Street 5
Singapore 637796
Tel: +65-6795-7555
Fax: +65-6863-1368

cascade™

© Cascade Corporation 2011