Allied Vision

Manta

G-917



- Versatile 9.2 megapixel camera
- 10.1 fps at full resolution
- Power over Ethernet option
- Video-iris lens control

9.2 megapixel GigE compliant machine vision camera

Manta G-917 is a 9.2 megapixel machine vision camera with a GigE compliant Gigabit Ethernet port and Hirose I/O port. Manta G-917 incorporates the high quality Type 1 (15.972 mm diagonal) Sony ICX814 CCD sensor with EXview HAD II technology. This sensor is distinguished by excellent image quality and a high resolution. At full resolution, this camera runs 10.1 frames per second. With a smaller region of interest, higher frame rates are possible.
Manta is one of Allied Vision's versatile GigE Vision cameras with a wide range of features. Particular highlights are the three look-up tables, sophisticated color correction capabilities, a robust metal housing, and many modular options. By default monochrome models ship with B 270 ASG protection glass and color models ship with a Type Hoya C-5000 IR cut filter.

Benefits and features

- Monochrome (G-917B) and color (G-917C) models
- GigE Vision interface with Power over Ethernet option
- Screw mount RJ45 Ethernet connector for secure operation in industrial environments
- Supports cable lengths up to 100 meters (CAT-6 recommended)
- Trigger over Ethernet Action Commands allow for a single cable solution to reduce system costs
- Comprehensive I/O functionality for simplified system integration
- Popular C-Mount lens mount
- Easy camera mounting via standard M3 threads on top and bottom of housing or optional tripod adapter
- Easy software integration with Allied Vision's Vimba SDK and compatibility to the most popular third party image-processing libraries.

Hardware options

- Various lens mounts: Select between C-Mount, CS-Mount, or M12-Mount (adapter)

- Various optical filters: Select between B 270 ASG protection glass and filter types: Jenofilt 217 IR cut filter, Hoya C-5000 IR cut filter, RG715 IR pass filter, or RG830 IR pass filter.
- Available with Power over Ethernet compliant interface
- Available with white medical design

See the Modular Concept for lens mount, optical filters, case design, and other modular options. See the Customization and OEM Solutions webpage for additional options.

Specifications

Manta	**G-917**
Interface	IEEE 802.3 1000BASE-T, IEEE 802.3af (PoE) optional
Resolution	3384 (H) × 2710 (V)
Sensor	Sony ICX814
Sensor type	CCD Progressive
Shutter mode	Global shutter
Sensor size	Type 1
Pixel size	3.69 µm × 3.69 µm
Lens mounts (available)	C-Mount, CS-Mount, S-Mount
Max. frame rate at full resolution	10.1 fps
ADC	14 Bit
Image buffer (RAM)	128 MByte
Imaging performance Imaging performance data is based on the evaluation methods in the EMVA 1288 Release 3.1 standard for characterization of image sensors and cameras. Measurements are typical values for monochrome models measured at full resolution without optical filter. Contact Sales or AE for more information.	
Quantum efficiency at 529 nm	69 %
Temporal dark noise	9.5 e^-
Saturation capacity	9900 e^-
Dynamic range	60.0 dB
Absolute sensitivity threshold	10.0 e^-
Output	
Bit depth	8/12/14 Bit
Monochrome pixel formats	Mono8, Mono12Packed, Mono12
YUV color pixel formats	YUV411Packed, YUV422Packed, YUV444Packed
RGB color pixel formats	RGB8Packed, BGR8Packed
Raw pixel formats	BayerRG8, BayerRG12, BayerRG12Packed
General purpose inputs/outputs (GPIOs)	
Opto-isolated I/Os	2 inputs, 2 outputs
RS232	1

Manta	G-917
Operating conditions/dimensions	
Operating temperature	+5 °C to +45 °C ambient (without condensation)
Power requirements (DC)	8 to 30 VDC AUX or IEEE 802.3af PoE
Power consumption	External power: 4.0 W at 12 VDC | Power over Ethernet: 4.7 W
Mass	190 g; 200 g (PoE)
Body dimensions (L × W × H in mm)	86.3 × 44 × 29 (including connectors)
Regulations	CE: 2014/30/EU (EMC), 2011/65/EU, including amendment 2015/863/EU (RoHS); FCC Class B; CAN ICES-3 (B)

Quantum efficiency

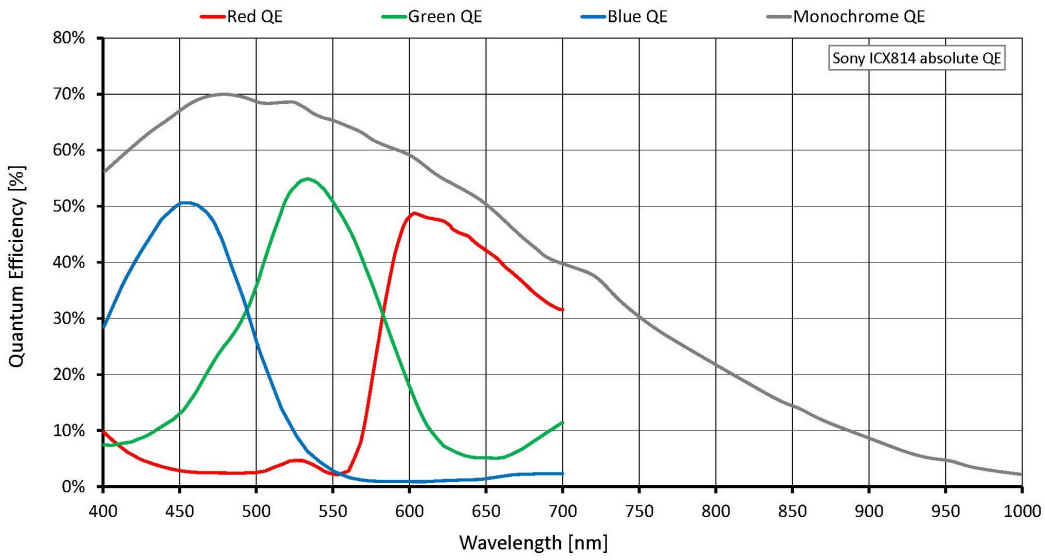

Features

Image optimization features:

- Auto gain (manual gain control: 0 to 32 dB; 1 dB increments)
- Auto exposure (42 µs to 38 s; 1 µs increments)
- Auto white balance (G-917C only)
- Binning
- Black level (offset)
- Color correction, hue, saturation (G-917C only)

- Decimation
- Gamma correction
- Three look-up tables
- Region of interest, separate region for auto features

Camera control features:

- Auto-iris (video type)
- Event channel
- Image chunk data
- IEEE 1588 Precision Time Protocol
- Storable user sets
- StreamBytesPerSecond (easy bandwidth control)
- Stream hold
- Sync out modes: Trigger ready, input, exposing, readout, imaging, strobe, GPO
- Tap mode switchable in Vimba Viewer 2.0 or later (two-tap, one-tap)
- Temperature monitoring (main board)
- Trigger over Ethernet Action Commands

Allied Vision

Technical drawing

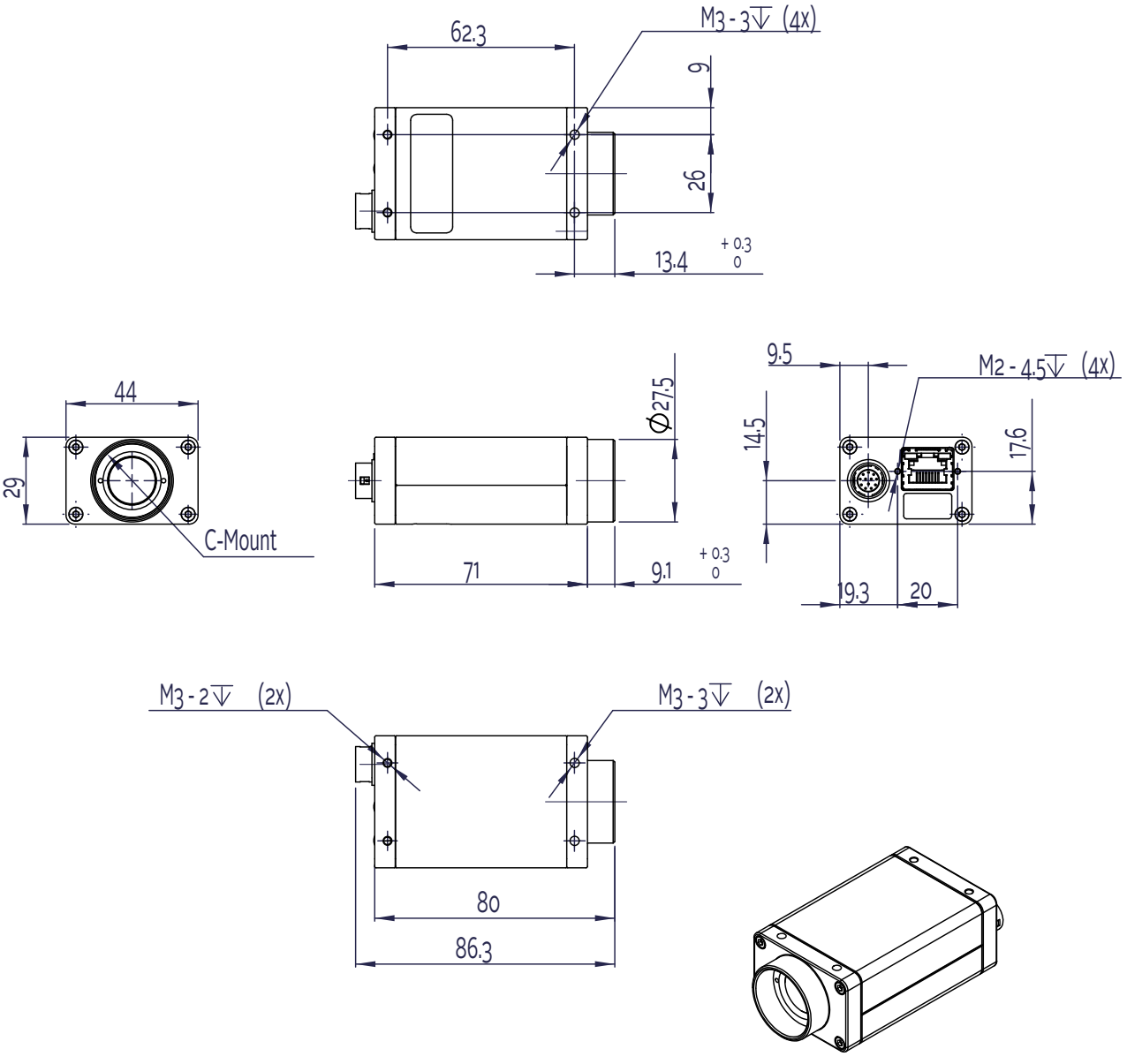

Applications

Manta G-917 is ideal for a wide range of applications including:

- Machine vision
- High-resolution surveillance
- High-resolution quality control
- Large area scan
- Aerial imaging
- Intelligent traffic solutions (ITS)