© Siemens AG 2011





MOTOX Geared Motors

Catalog D 87.1 · 2011

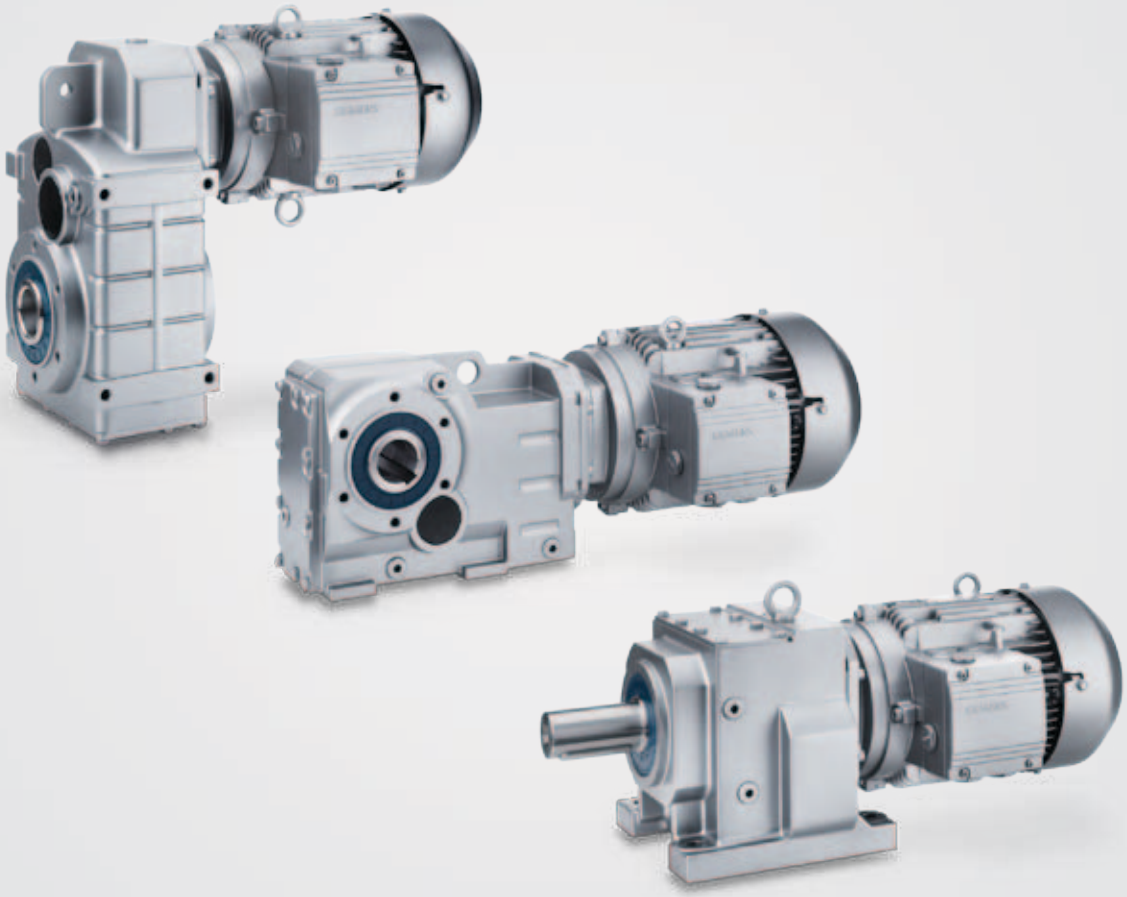

MOTOX

Answers for industry.

SIEMENS

© Siemens AG 2011

Related catalogs

Low-Voltage Motors D 81.1
IEC Squirrel-Cage Motors

E86060-K5581-A111-A3-7600



FLENDER MD 10.1
Standard Couplings

E86060-K5710-A111-A3-7600



SINAMICS G110, SINAMICS G120 D 11.1
Standard Inverters
SINAMICS G110D, SINAMICS G120D
Distributed Inverters

E86060-K5511-A111-A6-7600



SINAMICS G130 D 11
Drive Converter Chassis Units
SINAMICS G150
Drive Converter Cabinet Units

E86060-K5511-A101-A4-7600



MICROMASTER DA 51.2
MICROMASTER 420/430/440
Inverters
0.12 kW to 250 kW

E86060-K5151-A121-A6-7600



MICROMASTER/COMBIMASTER DA 51.3
MICROMASTER 411 Inverter
COMBIMASTER 411
Distributed Drive Solutions

E86060-K5251-A131-A2-7600



Industrial Communication IK PI
Part 5:
SIMATIC ET 200 Distributed I/O
ET 200S FC Frequency converter

E86060-K6710-A101-B6-7600



AC NEMA & IEC Motors D81.2
Further details available on the Internet at: U.S./Canada

Only PDF
http://www.sea.siemens.com/motors



MOTOX Konfigurator MOTOX
MOTOX Configurator
Information / Configuration
(CD)

E86060-D5203-A100-A5-X100



Additional documentation

You will find all information material, such as brochures, catalogs, manuals and operating instructions for standard drive systems up-to-date on the Internet at the address:

http://www.siemens.com/gearedmotors

You can order the listed documentation or download it in common file formats (PDF, ZIP).

© Siemens AG 2011

MOTOX
Geared Motors

Catalog D 87.1 · 2011



The products and systems described in this catalog are manufactured/distributed under application of a certified quality management system in accordance with DIN EN ISO 9001 (Certified Registration No. DE-409908 QM08). The certificate is recognized by all IQNet countries.

Supersedes:
Catalogs D 87.1 · 2008 and 2010

The products contained in this catalog can also be found in the electronic catalog MOTOX Configurator 7.4.
Order No.:
E86060-D5203-A100-A5-X100 (CD-ROM)

Please contact your local Siemens branch

© Siemens AG 2011

Introduction 1
Helical geared motors 2
Parallel shaft geared motors 3
Bevel helical geared motors 4
Helical worm geared motors 5
Worm geared motors 6
Input units 7
Motors 8
Appendix 9

© Siemens AG 2011

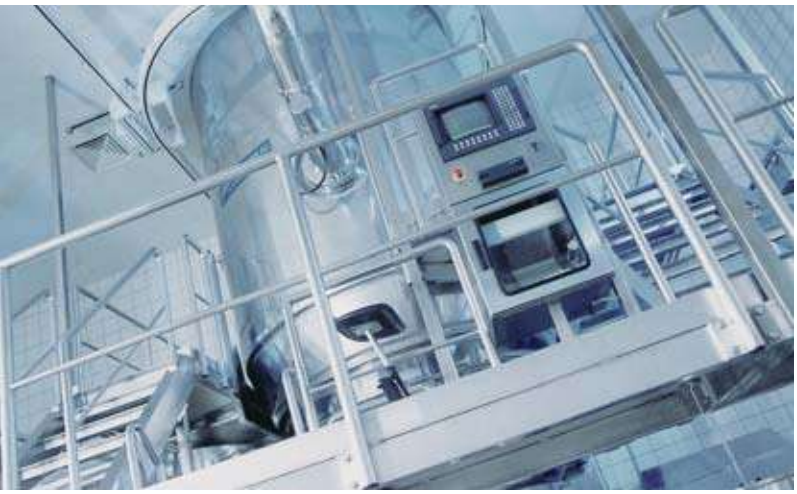

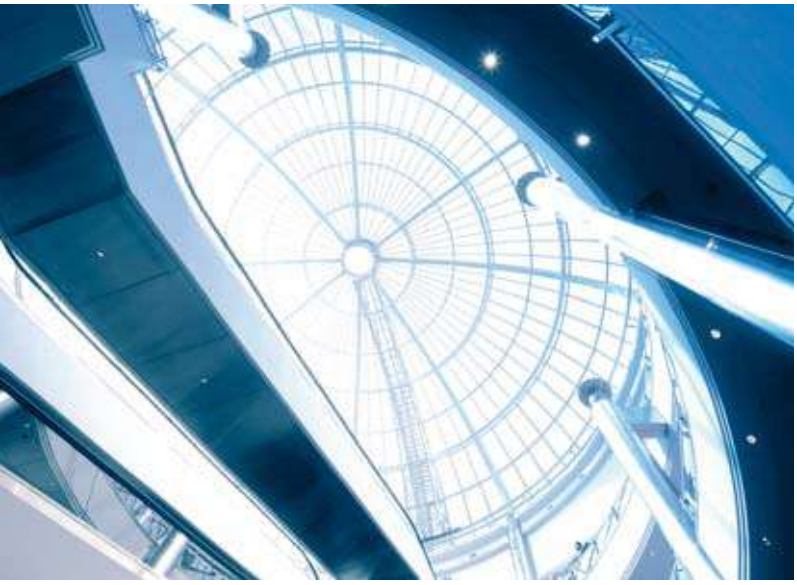



© Siemens AG 2011

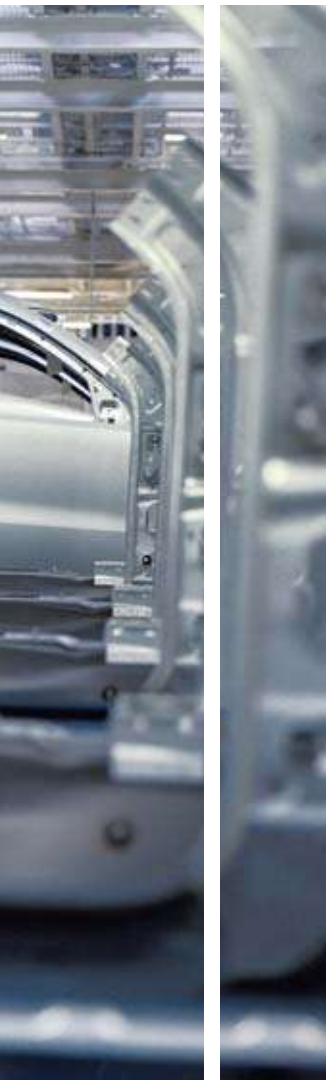

Answers for industry.

Siemens Industry answers the challenges in the manufacturing and the process industry as well as in the building automation business. Our drive and automation solutions based on Totally Integrated Automation (TIA) and Totally Integrated Power (TIP) are employed in all kinds of industry. In the manufacturing and the process industry. In industrial as well as in functional buildings.

Siemens offers automation, drive, and low-voltage switching technology as well as industrial software from standard products up to entire industry solutions. The industry software enables our industry customers to optimize the entire value chain – from product design and development through manufacture and sales up to after-sales service. Our electrical and mechanical components offer integrated technologies for the entire drive train – from couplings to gear units, from motors to control and drive solutions for all engineering industries. Our technology platform TIP offers robust solutions for power distribution.

The high quality of our products sets industry-wide benchmarks. High environmental aims are part of our eco-management, and we implement these aims consistently. Right from product design, possible effects on the environment are examined. Hence many of our products and systems are RoHS compliant (Restriction of Hazardous Substances). As a matter of course, our production sites are certified according to DIN EN ISO 14001, but to us, environmental protection also means most efficient utilization of valuable resources. The best example are our energy-efficient drives with energy savings up to 60 %.

Check out the opportunities our automation and drive solutions provide. And discover how you can sustainably enhance your competitive edge with us.

© Siemens AG 2011

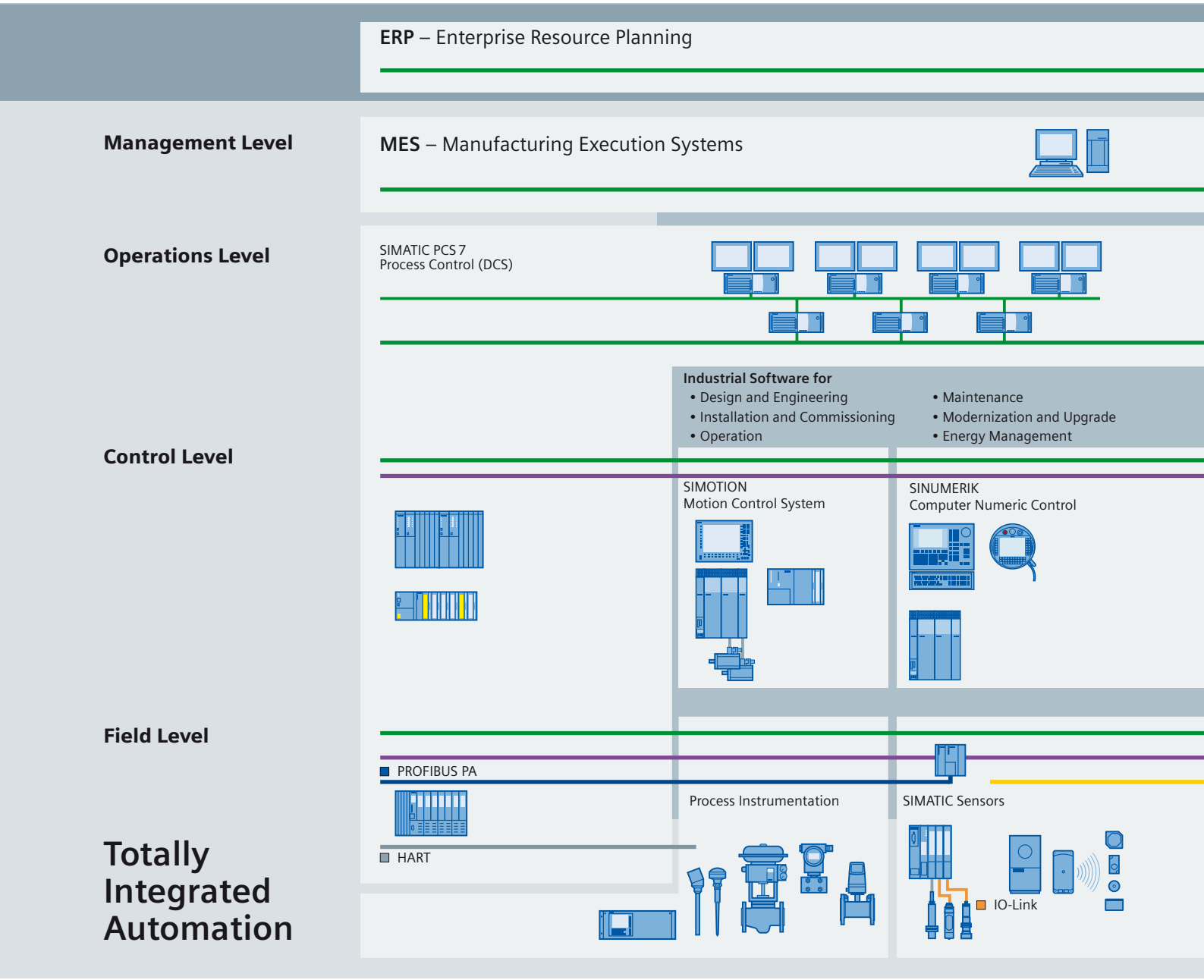

Setting standards in productivity and competitiveness.

Totally Integrated Automation.

Thanks to Totally Integrated Automation, Siemens is the only provider of an integrated basis for implementation of customized automation solutions – in all industries from inbound to outbound.

© Siemens AG 2011

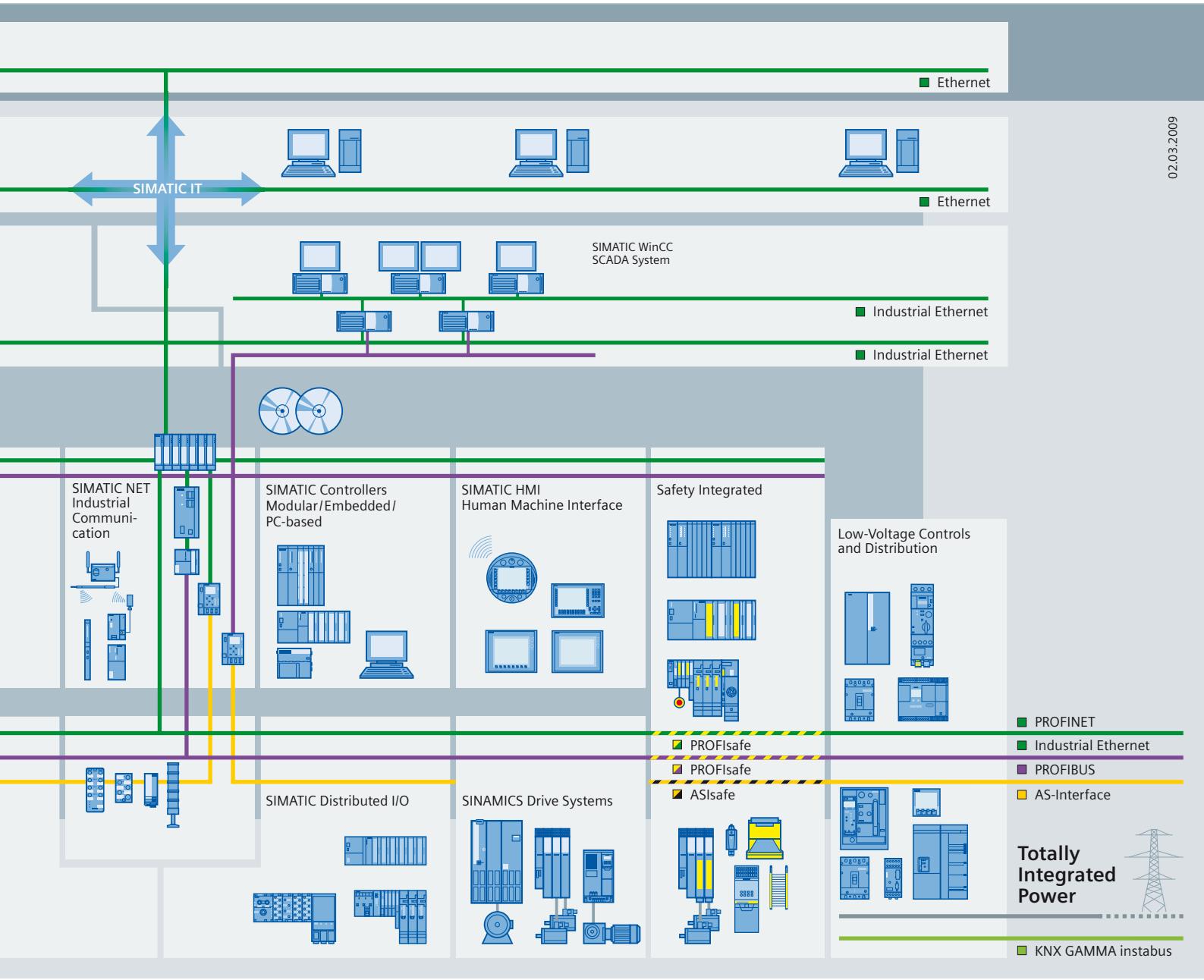

TIA is characterized by its unique continuity.

It provides maximum transparency at all levels with reduced interfacing requirements – covering the field level, production control level, up to the corporate management level. With TIA you also profit throughout the complete life cycle of your plant – starting with the initial planning steps through operation up to modernization, where we offer a high measure of investment security resulting from continuity in the further development of our products and from reducing the number of interfaces to a minimum.

The unique continuity is already a defined characteristic at the development stage of our products and systems.

The result: maximum interoperability – covering the controller, HMI, drives, up to the process control system. This reduces the complexity of the automation solution in your plant. You will experience this, for example, in the engineering phase of the automation solution in the form of reduced time requirements and cost, or during operation using the continuous diagnostics facilities of Totally Integrated Automation for increasing the availability of your plant.

© Siemens AG 2011



Integrated power distribution from one source.

Totally Integrated Power.

© Siemens AG 2011



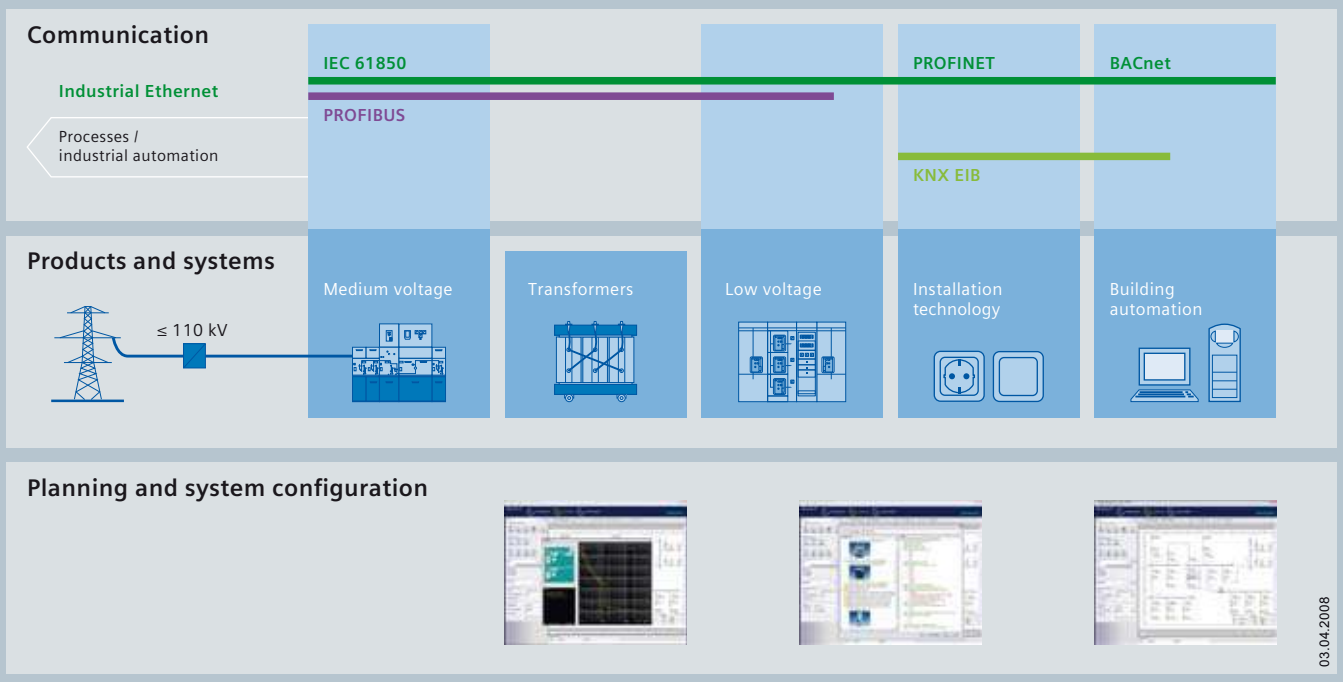

Electrical power distribution in buildings requires integrated solutions. Our response: Totally Integrated Power. This means innovative and integrated, interface-optimized products and systems which have been optimally coordinated and complemented with communication and software modules that link power distribution to building automation or industrial automation. Totally Integrated Power accompanies power distribution projects from one end to the other. From A to Z.
From the planning to the building's use: Totally Integrated Power offers significant advantages in every project stage and to everyone involved in the project – the investors, electrical planning engineers, electricians, users and building facility managers.

Our portfolio comprises everything from engineering tools to the matching hardware: from switchgear and distribution systems for medium voltage to transformers, from switching and circuit-protection devices to low-voltage switchgear and busbar trunking systems, as far as to the small distribution board and the wall outlet. It goes without saying that both the medium-voltage switchgear, which requires no maintenance, and the low-voltage switchgear are type-tested, and their busbar connections, too. Comprehensive protection systems ensure the safety of man and machine at any time.

© Siemens AG 2011

Much more than a catalog. The Industry Mall.

You have a catalog in your hands that will serve you well for selecting and ordering your products. But have you heard of the electronic online catalog (the Industry Mall) and all its benefits? Take a look around it sometime:

www.siemens.com/industrymall



Selecting

Find your products in the structure tree, in the new "Bread-crumb" navigation or with the integral search machine with expert functions. Electronic configurators are also integrated into the Mall. Enter the various characteristic values and the appropriate product will be displayed with the relevant order numbers. You can save configurations, load them and reset them to their initial status.

Ordering

You can load the products that you have selected in this way into the shopping basket at a click of the mouse. You can create your own templates and you will be informed about the availability of the products in your shopping cart. You can load the completed parts lists directly into Excel or Word.

Delivery status

When you have sent the order, you will receive a short e-mail confirmation which you can print out or save. With a click on "Carrier", you will be directly connected to the website of the carrier where you can easily track the delivery status.

Added value due to additional information

So you have found your product and want more information about it? In just a few clicks of the mouse, you will arrive at the image data base, manuals and operating instructions. Create your own user documentation with My Documentation Manager.
Also available are FAQs, software downloads, certificates and technical data sheets as well as our training programs. In the image database you will find, depending on the product, 2D/3Dgraphics, dimension drawings and exploded drawings, characteristic curves or circuit diagrams which you can download.

Convinced? We look forward to your visit!

© Siemens AG 2011

Introduction



Guide to selecting and ordering geared motors

1/2 Description of the range of geared motors
1/4 Guide to drive selection
1/5 Order number code
1/7 Determining the gearbox type in accordance with the power rating and output speed
1/10 Determining the gearbox type in accordance with the max. torque, transmission ratio and size
1/13 Overview of "special versions"

Configuring guide

1/18 Determining the drive data
1/19 Efficiency of the geared motor
1/20 Determining the required service factor
1/21 Required service factor
1/22 Maximum motor speed
1/22 Ambient temperature
1/22 Required output torque
1/22 Selection of the gearbox
1/23 Reduced-backlash gearbox version
1/23 Permissible radial force
1/25 Determining the operating mode
1/28 Coolant temperature and site altitude
1/28 Selecting the brake
1/29 Selecting the braking torque

Special versions

1/30 Motors for inverter-fed operation
1/31 Determining the permissible number of startings
1/32 Checking the input torque for mounted units

General technical data

1/33 Overview of drive sizing data
1/34 Important drive technology variables
1/36 Overview
1/36 Designs in accordance with standards and specifications
1/41 Explosion protection as per ATEX
1/42 Standards
1/42 Fits
1/43 Degrees of protection
1/43 Direction of rotation of geared motors
1/44 Power ratings and torques
1/44 Speeds
1/44 Noise
1/44 Weight of geared motors
1/44 Three-phase AC motors
1/44 Brakes
1/45 Lubricants
1/46 Long-term preservation
1/47 Surface treatment
1/48 Increased protection against humidity and tropical climate
1/48 Increased protection against acid and alkali
1/49 Rating plate
1/49 Documentation

© Siemens AG 2011

Guide to selecting and ordering geared motors

1

Description of the range of geared motors

MOTOX geared motors are available in an almost infinite number of combinations for adaptation to a wide range of drive scenarios.
All geared motors can be supplied with a mounted brake.
All the usual additional components and variants are also offered.

Made-to-measure solutions for all kinds of drive technology tasks are achieved with different gearbox types (helical, parallel shaft, bevel helical, helical worm, and worm).

Electronic catalog

MOTOX Configurator (CD)

The MOTOX Configurator makes it easy to select the right geared motor, providing you with the correct geared motor order numbers, prices and relevant documentation.

Data sheets and dimension drawings can be created for the different products.

Product range

The printed catalog contains the basic selection of standard MOTOX geared motors. The MOTOX Configurator, however, contains practically all combinations of MOTOX geared motors which are theoretically possible. It also contains additional sector-specific applications, such as:

- Monorail conveyor drives
- Extruder geared motors
- Cooling tower drives
- Mixer and agitator geared motors

You can also use the electronic catalog to configure explosion-proof ATEX geared motors for zones 1, 2, 21, and 22.

The MOTOX Configurator can also be accessed online at: www.siemens.com/gearedmotors.

© Siemens AG 2011

Description of the range of geared motors (continued)



Helical geared motor D/Z

Helical geared motors and gearboxes

Torque	20 000 Nm
Power rating (50 Hz)	200 kW
Output speed (50 Hz)	0.05 ... 1 085 / min



Parallel shaft geared motor FD/FZ

Parallel shaft geared motors and gearboxes

Torque	34 000 Nm
Power rating (50 Hz)	200 kW
Output speed (50 Hz)	0.05 ... 738 / min



Bevel helical geared motor K

Bevel helical geared motors and gearboxes

Torque	20 000 Nm
Power rating (50 Hz)	200 kW
Output speed (50 Hz)	0.05 ... 403 / min



Helical worm geared motor C

Helical worm geared motors and gearboxes

Torque	1 590 Nm
Power rating (50 Hz)	9.2 kW
Output speed (50 Hz)	0.21 ... 149 / min



Worm geared motor S

Worm geared motors and gearboxes

Torque	116 Nm
Power rating (50 Hz)	1.1 kW
Output speed (50 Hz)	8.5 ... 566 / min

© Siemens AG 2011

1

Guide to selecting and ordering geared motors

Guide to drive selection

This "guide to drive selection" takes you to the geared motor you require in easy-to-follow steps.

1st step	**Technical requirements of the geared motor -> see the "Configuring guide" section of this chapter**
Determine the required product profile, the following are required:	Gearbox type
	Power rating
	Output speed
	Service factor
	Radial force
	Ambient temperature
2nd step	**Preselection of the geared motor -> see subsequent pages**
Determine the range of possible geared motors	Size of the gearbox and the motor in accordance with the power rating and output speed
3rd step	**Detailed selection of the geared motor -> see the individual chapters for the different gearbox types**
Determine the basic order number	Define the order number in accordance with the power / torque and output speed
	Add more details to the order number in accordance with the mounting type, shaft, and mounting position of the geared motor
	Define the order code for the mounting type / mounting position
4th step	**Selection of motor options -> see chapter "Technical explanations and motor options"**
Complete the order number	Add more details to the order number in accordance with the voltage and frequency
	Define additional components and the associated order codes

© Siemens AG 2011

Order number code

The order number consists of a combination of digits and letters and is divided into three blocks linked with hyphens for a better overview,

e.g.:

2KJ1503-1CE13-1AE2-Z

+D06+M55

The first block (positions 1 to 7) identifies the gearbox type, the second (positions 8 to 12) codes the output shaft and the motor type and additional design characteristics are coded in the third block (positions 13 to 16).

Ordering data:

- Complete order number, with a **-Z** suffix, and order code(s) or plain text.
- If a quotation is available, please specify the quotation number in addition to the order number.
- When ordering a complete geared motor as a spare part, please specify the works serial number for the previously supplied geared motor as well as the order number.

Structure of the order number		Position	1	2	3	4	5	6	7	–	8	9	10	11	12	–	13	14	15	16	
MOTOX geared motors																					
1st to 5th positions: Digit, letter, letter, digit, digit	Helical gearbox E, 1-stage		**2**	**K**	**J**	**1**	**0**														
	Helical gearbox Z, 2-stage		**2**	**K**	**J**	**1**	**1**														
	Helical gearbox D, 3-stage		**2**	**K**	**J**	**1**	**2**														
	Parallel shaft gearbox FZ, 2-stage		**2**	**K**	**J**	**1**	**3**														
	Parallel shaft gearbox FD, 3-stage		**2**	**K**	**J**	**1**	**4**														
	Bevel helical gearboxes B and K		**2**	**K**	**J**	**1**	**5**														
	Helical worm gearbox C		**2**	**K**	**J**	**1**	**6**														
	Worm gearbox S		**2**	**K**	**J**	**1**	**7**														
6th and 7th positions: Digit, digit	Gearbox size																				
8th position: Digit	Output shaft																				
9th to 10th positions: Letter Letter	Motor size																				
11th position: Digit	Without motor													**0**							
	Standard motor													**1**							
12th position: Digit	Motor generation														**3**						
13th position: Digit	Frequency, voltage																				
14th position: Letter	Foot-mounted design																	**A**			
	Foot / flange-mounted design																	**B**			
	Torque arm																	**D**			
	Extruder flange																	**E**			
	Flange-mounted design (A-type)																	**F**			
	Housing flange (C-type)																	**H**			
	Mixer flange																	**M**			
	Agitator flange																	**R**			
15th to 16th positions: Letter, digit	Transmission ratio																				
	Special order versions: • Coded: order code also required • Non-coded: plain text also required																			–	**Z**

© Siemens AG 2011

Guide to selecting and ordering geared motors

1

Order number code (continued)

Ordering example:

A bevel helical geared motor is required:

- Gearbox type / gearbox size K48
- Motor 0.37 kW, 4-pole with 50 Hz line frequency
- Output speed 13, transmission ratio i = 107.47
- Solid shaft V 30 x 60
- Mounting type / mounting position B3-00-A
- Terminal box position 1A

This results in the order number and order codes below:

Selection criteria	Requirements	Structure of the order number
Gearbox type	Bevel helical gearbox K, size 48	**2KJ1503**-■■■■■- ■■■■
Output shaft	Solid shaft V 30 x 60	2KJ1503-**1**■■■■- ■■■■
Motor size	Size 71; 0.37 kW; 4-pole	2KJ1503-1**CE**■■- ■■■■
Motor type	Standard motor	2KJ1503-1CE**1**■- ■■■■
Motor generation	LA / LG	2KJ1503-1CE1**3**- ■■■■
Frequency, line voltage	50 Hz, 220 … 240 / 380 … 420 V, D/Y (S100)	2KJ1503-1CE13-**1**■■■
Mounting type	Foot-mounted design	2KJ1503-1CE13-1**A**■■
Transmission ratio	i = 107.47	2KJ1503-1CE13-1A**E2**
Mounting position	B3-00-A	2KJ1503-1CE13-1AE2**-Z+D06**
Terminal box position	1A	2KJ1503-1CE13-1AE2-Z+D06**+M55**

© Siemens AG 2011

Determining the gearbox type in accordance with the power rating and output speed

Power rating P_{Motor} kW (50 Hz)	Output speed n_2 (50 Hz) rpm	Torque T_2 Nm	Gearbox ratio i_{tot}	For further information, see page
	Helical geared motors E, D, and Z			
0.09	3.00 … 6.7	285 … 128.0	208.77 … 133.57	2/8
0.12	0.05 … 313.0	15 788 … 3.7	28 260.00 … 4.47	2/8 … 2/11
0.18	0.06 … 383.0	23 784 … 4.5	24 996.00 … 3.58	2/11 … 2/15
0.25	0.08 … 405.0	23 171 … 5.9	16 361.00 … 3.33	2/15 … 2/19
0.37	0.12 … 383.0	24 391 … 9.2	11 066.00 … 3.58	2/19 … 2/22
0.55	0.20 … 414.0	23 625 … 13.0	7 008.00 … 3.31	2/22 … 2/26
0.75	0.27 … 560.0	23 327 … 13.0	5 107.00 … 2.50	2/26 … 2/30
1.1	0.40 … 906.0	23 626 … 12.0	3 580.00 … 1.59	2/30 … 2/34
1.5	0.54 … 906.0	24 171 … 16.0	2 666.00 … 1.59	2/34 … 2/39
2.2	0.85 … 944.0	22 590 … 22.0	1 682.00 … 1.52	2/39 … 2/44
3	1.10 … 1 018.0	23 069 … 28.0	1 255.00 … 1.41	2/44 … 2/49
4	1.60 … 1 021.0	21 939 … 37.0	896.00 … 1.41	2/49 … 2/54
5.5	1.90 … 1 025.0	25 081 … 51.0	746.00 … 1.41	2/54 … 2/59
7.5	2.70 … 1 032.0	24 896 … 69.0	546.00 … 1.41	2/59 … 2/59
9.2	5.70 … 1 032.0	15 282 … 85.0	253.08 … 1.41	2/64 … 2/67
11	4.40 … 1 035.0	24 093 … 101.0	243.82 … 1.41	2/67 … 2/70
15	6.00 … 1 074.0	23 923 … 133.0	243.82 … 1.36	2/70 … 2/74
18.5	7.10 … 1 081.0	24 799 … 163.0	206.34 … 1.36	2/74 … 2/77
22	9.60 … 1 077.0	21 959 … 195.0	153.12 … 1.36	2/77 … 2/80
30	12.10 … 1 085.0	23 633 … 264.0	121.67 … 1.36	2/80 … 2/83
37	14.60 … 1 081.0	24 268 … 327.0	100.96 … 1.36	2/83 … 2/85
45	18.30 … 1 085.0	23 533 … 396.0	80.77 … 1.36	2/85 … 2/88
55	21.00 … 902.0	24 634 … 582.0	69.41 … 1.64	2/88 … 2/89
75	35.00 … 512.0	20 716 … 1 399.0	42.95 … 2.90	2/89 … 2/91
90	35.00 … 512.0	24 859 … 1 678.0	42.95 … 2.90	2/91 … 2/92
110	88.00 … 180.0	11 887 … 5 852.0	16.86 … 8.30	2/92
132	88.00 … 179.0	14 312 … 7 046.0	16.86 … 8.30	2/92
160	88.00 … 179.0	17 348 … 8 540.0	16.86 … 8.30	2/92
200	88.00 … 180.0	21 612 … 10 640.0	16.86 … 8.30	2/92
	Parallel shaft geared motors FZ and FD			
0.09	2.30 … 4.7	367 … 184.0	280.41 … 191.34	3/6
0.12	0.05 … 111	16 202 … 10.0	29 000.00 … 12.62	3/6 … 3/9
0.18	0.05 … 210	24 072 … 8.2	25 299.00 … 6.53	3/9 … 3/12
0.25	0.09 … 355	22 462 … 6.7	15 519.00 … 3.80	3/12 … 3/15
0.37	0.13 … 73	23 944 … 49.0	10 863.00 … 18.86	3/15 … 3/15
0.55	0.19 … 170	24 147 … 31.0	7 163.00 … 8.06	3/18 … 3/20
0.75	0.28 … 368	22 934 … 19.0	5 021.00 … 3.80	3/20 … 3/23
1.1	0.38 … 379	24 675 … 28.0	3 739.00 … 3.80	3/23 … 3/26
1.5	0.61 … 379	21 388 … 38.0	2 359.00 … 3.80	3/26 … 3/26
2.2	0.82 … 372	23 638 … 56.0	1 760.00 … 4.33	3/30 … 3/33
3	1.2 … 639	22 720 … 45.0	1 236.00 … 3.80	3/33 … 3/33
4	1.4 … 671	24 905 … 57.0	1 030.00 … 4.33	3/37 … 3/39
5.5	2.4 … 364	22 097 … 144.0	403.86 … 3.97	3/39 … 3/42
7.5	3.0 … 738	24 243 … 97.0	403.86 … 3.97	3/42 … 3/45
9.2	4.9 … 305	18 067 … 288.0	299.20 … 4.77	3/45 … 3/47
11	3.0 … 306	35 066 … 343.0	299.20 … 4.77	3/47 … 3/49
15	3.5 … 306	40 468 … 468	248.85 … 4.77	3/49 … 3/51
18.5	4.5 … 259	39 601 … 683	242.01 … 5.68	3/51 … 3/53
22	5.5 … 386	37 909 … 545	242.01 … 3.80	3/53 … 3/55
30	6.7 … 388	42 449 … 738	218.54 … 3.80	3/55 … 3/56

© Siemens AG 2011

Determining the gearbox type in accordance with the power rating and output speed (continued)

Power rating P_{Motor} kW (50 Hz)	Output speed n_2 (50 Hz) rpm			Torque T_2 Nm			Gearbox ratio i_{tot}			For further information, see page
	Parallel shaft geared motors FZ and FD									
37	8.4	…	387	42 287	…	913	175.92	…	3.80	3/56 … 3/58
45	11.0	…	388	39 088	…	1 106	134.16	…	3.80	3/58 … 3/59
55	14.8	…	280	35 564	…	1 874	100.21	…	5.28	3/59 … 3/59
75	18.5	…	281	38 668	…	2 547	80.17	…	5.28	3/61
90	22.0	…	281	39 878	…	3 056	68.90	…	5.28	3/61 … 3/62
110	28.0	…	179	37 832	…	5 880	53.66	…	8.34	3/62 … 3/63
132	35.0	…	178	36 188	…	7 080	42.63	…	8.34	3/63
160	38.0	…	178	39 965	…	8 581	38.84	…	8.34	3/63
200	49.0	…	179	38 777	…	10 691	30.25	…	8.34	3/63 … 3/63
	Bevel helical geared motors B and K									
0.09	3.70	…	7.2	231	…	120.0	179.13	…	124.78	4/6
0.12	0.05	…	187.0	16 836	…	6.1	30 135.00	…	7.49	4/6 … 4/9
0.18	0.06	…	277.0	23 014	…	6.2	24 187.00	…	4.94	4/9 … 4/12
0.25	0.08	…	378.0	24 007	…	6.3	16 951.00	…	3.57	4/12 … 4/15
0.37	0.12	…	93.0	24 723	…	38.0	11 463.00	…	14.75	4/15 … 4/18
0.55	0.19	…	300.0	24 353	…	18.0	7 224.00	…	4.56	4/18 … 4/21
0.75	0.26	…	392.0	24 688	…	18.0	5 405.00	…	3.57	4/21 … 4/25
1.1	0.42	…	403.0	22 504	…	26.0	3 410.00	…	3.57	4/25 … 4/25
1.5	0.55	…	403.0	23 582	…	36.0	2 601.00	…	3.57	4/29 … 4/32
2.2	0.77	…	374.0	25 008	…	56.0	1 862.00	…	3.84	4/32 … 4/35
3	1.10	…	402.0	23 639	…	71.0	1 286.00	…	3.57	4/35 … 4/38
4	1.50	…	255.0	23 702	…	142.0	968.00	…	5.36	4/38 … 4/41
5.5	2.20	…	270.0	22 492	…	195.0	669.00	…	5.36	4/41 … 4/43
7.5	2.70	…	271.0	24 988	…	264.0	548.00	…	5.36	4/43 … 4/45
9.2	3.40	…	263.0	24 013	…	335.0	429.00	…	5.54	4/45 … 4/47
11	4.20	…	264.0	25 035	…	399.0	191.34	…	5.54	4/47 … 4/49
15	6.00	…	264.0	23 790	…	544.0	191.34	…	5.54	4/49 … 4/50
18.5	7.70	…	207.0	22 997	…	853.0	191.34	…	7.10	4/50 … 4/52
22	8.50	…	303.0	24 779	…	693.0	172.78	…	4.83	4/52 … 4/53
30	12.30	…	305.0	23 340	…	938.0	120.16	…	4.83	4/53 … 4/54
37	15.40	…	304.0	22 951	…	1 161.0	95.48	…	4.83	4/54 … 4/54
45	18.60	…	305.0	23 084	…	1 407.0	79.23	…	4.83	4/56 … 4/57
55	23.00	…	306.0	22 493	…	1 714.0	63.38	…	4.83	4/57
75	35.00	…	225.0	20 465	…	3 188.0	42.43	…	6.61	4/58
90	35.00	…	225.0	24 558	…	3 826.0	42.43	…	6.61	4/58
110	76.00	…	123.0	13 790	…	8 531.0	19.56	…	12.10	4/59
132	76.00	…	123.0	16 604	…	10 272.0	19.56	…	12.10	4/59
160	76.00	…	123.0	20 126	…	12 450.0	19.56	…	12.10	4/59
200	76.00	…	123.0	25 074	…	15 511.0	19.56	…	12.10	4/59
	Helical worm geared motors C									
0.09	2.00	…	4	241	…	125	320.67	…	223.36	5/7
0.12	0.21	…	55	1 913	…	19	6 722.00	…	25.28	5/7… 5/9
0.18	0.37	…	54	1 885	…	29	3 719.00	…	25.28	5/9 … 5/10
0.25	0.60	…	53	1 782	…	41	2 256.00	…	25.28	5/10 … 5/12
0.37	0.91	…	54	1 918	…	60	1 510.00	…	25.28	5/12 … 5/14
0.55	1.7	…	68	1 870	…	68	440.70	…	20.31	5/14 … 5/14
0.75	2.4	…	145	1 969	…	44	440.70	…	9.67	5/15 … 5/16
1.1	3.7	…	149	1 983	…	62	390.00	…	9.67	5/16 … 5/18
1.5	5.8	…	149	1 779	…	85	247.00	…	9.67	5/18 … 5/20
2.2	11.4	…	148	1 355	…	125	126.18	…	9.67	5/20 … 5/21

© Siemens AG 2011

Determining the gearbox type in accordance with the power rating and output speed (continued)

Power rating	Output speed			Torque			Gearbox ratio			For further information,
P_{Motor}	n_2 (50 Hz)			T_2			i_{tot}			see page
kW (50 Hz)	rpm			Nm						
Helical worm geared motors C										
3	14.6	…	148	1 668	…	170	98.17	…	9.67	5/21 … 5/22
4	22.0	…	149	1 482	…	227	65.32	…	9.67	5/22 … 5/23
5.5	34.0	…	130	1 302	…	367	41.85	…	11.15	5/23 ... 5/24
7.5	62.0	…	130	992	…	497	23.56	…	11.15	5/24
9.2	109.0	…	130	732	…	609	13.39	…	11.15	5/24
11	109.0	…	131	872	…	726	13.39	…	11.15	5/24
Worm geared motors S										
0.09	8.5	…	21.2	46.2	…	23.5	100	…	40	6/5
0.12	13.5	…	270	40.3	…	3.8	100	…	5	6/5 ... 6/6
0.18	10.6	…	564	82.0	…	2.8	100	…	5	6/6 ... 6/7
0.25	14.3	…	566	94.9	…	3.8	80	…	5	6/7 ... 6/8
0.37	22.8	…	548	90.9	…	5.9	60	…	5	6/8
0.55	46.5	…	560	82.1	…	8.6	30	…	5	6/8
0.75	70.0	…	574	81.9	…	11.6	30	…	5	6/9
1.1	143.0	…	572	59.4	…	17.0	20	…	5	6/9

© Siemens AG 2011

1

Guide to selecting and ordering geared motors

Determining the gearbox type in accordance with the max. torque, transmission ratio, and size

Max. gearbox torque	Gearbox type	Order No.	Transmission ratio	For further information,
Nm				see page
	Helical gearbox E			
82	E38	**2KJ1001**	1.59 ... 9.33	2/93
170	E48	**2KJ1002**	1.52 ... 11.30	2/93
250	E68	**2KJ1003**	1.41 ... 12.40	2/94
450	E88	**2KJ1004**	1.71 ... 10.33	2/94
745	E108	**2KJ1005**	1.81 ... 5.46	2/95
1 000	E128	**2KJ1006**	1.36 ... 10.14	2/95
1 550	E148	**2KJ1007**	1.64 ... 13.67	2/95
	Helical gearbox Z			
90	Z18	**2KJ1100**	3.58 ... 43.15	2/96
140	Z28	**2KJ1101**	3.33 ... 51.35	2/97
220	Z38	**2KJ1102**	4.77 ... 44.12	2/99
450	Z48	**2KJ1103**	4.28 ... 51.28	2/101
800	Z68	**2KJ1104**	3.49 ... 48.09	2/103
1 680	Z88	**2KJ1105**	3.11 ... 50.73	2/105
3 100	Z108	**2KJ1106**	3.42 ... 59.05	2/107
5 100	Z128	**2KJ1107**	3.07 ... 44.19	2/109
8 000	Z148	**2KJ1108**	4.44 ... 57.50	2/111
14 000	Z168	**2KJ1110**	4.46 ... 46.61	2/113
20 000	Z188	**2KJ1111**	8.30 ... 52.35	2/115
220	Z38 - Z28	**2KJ1112**	207.00 ... 1 258.00	2/98
220	Z38 - D28	**2KJ1113**	1 343.00 ... 5 905.00	2/98
	Helical gearbox D			
90	D18	**2KJ1200**	32.26 ... 200.36	2/96
140	D28	**2KJ1201**	48.38 ... 241.05	2/97
220	D38	**2KJ1202**	30.74 ... 191.75	2/99
450	D48	**2KJ1203**	35.59 ... 208.77	2/101
800	D68	**2KJ1204**	37.80 ... 281.01	2/103
1 680	D88	**2KJ1205**	34.14 ... 300.41	2/105
3 100	D108	**2KJ1206**	42.61 ... 359.30	2/107
5 100	D128	**2KJ1207**	37.57 ... 268.16	2/109
8 000	D148	**2KJ1208**	34.15 ... 336.11	2/111
14 000	D168	**2KJ1210**	40.99 ... 341.61	2/113
20 000	D188	**2KJ1211**	42.95 ... 243.82	2/115
450	D48 - Z28	**2KJ1212**	223.00 ... 5 019.00	2/100
450	D48 - D28	**2KJ1213**	5 608.00 ... 27 940.00	2/100
800	D68 - Z28	**2KJ1214**	320.00 ... 7 548.00	2/102
800	D68 - D28	**2KJ1215**	8 422.00 ... 41 961.00	2/102
800	D88 - Z28	**2KJ1218**	341.00 ... 8 305.00	2/104
800	D88 - D28	**2KJ1220**	9 279.00 ... 46 233.00	2/104
3 100	D108 - Z38	**2KJ1223**	392.00 ... 15 853.00	2/106
3 100	D108 - D38	**2KJ1224**	15 280.00 ... 68 896.00	2/106
5 100	D128 - Z38	**2KJ1225**	1 280.00 ... 51 420.00	2/108
5 100	D128 - D38	**2KJ1226**	11 404.00 ... 51 420.00	2/108
5 100	D128 - Z48	**2KJ1227**	285.00 ... 1 271.00	2/108
8 000	D148 - Z38	**2KJ1228**	1 604.00 ... 14 830.00	2/110
8 000	D148 - D38	**2KJ1230**	14 294.00 ... 64 450.00	2/110
8 000	D148 - Z48	**2KJ1231**	398.00 ... 1 631.00	2/110
14 000	D168 - Z48	**2KJ1232**	1 463.00 ... 17 519.00	2/112
14 000	D168 - D48	**2KJ1233**	17 080 ... 71 317	2/112
14 000	D168 - Z68	**2KJ1234**	376 ... 1 226	2/112
20 000	D188 - Z48	**2KJ1235**	1 044 ... 12 504	2/114

© Siemens AG 2011

Determining the gearbox type in accordance with the max. torque, transmission ratio, and size (continued)

Max. gearbox torque	Gearbox type	Order No.	Transmission ratio	For further information,
Nm				see page
	Helical gearbox D			
20 000	D188 - D48	**2KJ1236**	12 191 ... 50 901	2/114
20 000	D188 - Z68	**2KJ1237**	322 ... 896	2/114
	Parallel shaft gearbox FZ			
150	FZ28	**2KJ1300**	56.20 ... 280.00	3/65
290	FZ38B	**2KJ1301**	4.52 ... 56.72	3/67
540	FZ48B	**2KJ1302**	4.33 ... 60.71	3/69
1 000	FZ68B	**2KJ1303**	3.97 ... 61.17	3/71
1 900	FZ88B	**2KJ1304**	4.77 ... 64.58	3/73
3 400	FZ108B	**2KJ1305**	5.68 ... 64.21	3/75
6 100	FZ128B	**2KJ1306**	3.80 ... 56.42	3/77
9 000	FZ148B	**2KJ1307**	5.39 ... 68.23	3/79
14 000	FZ168B	**2KJ1308**	5.28 ... 53.48	3/81
20 000	FZ188B	**2KJ1310**	8.34 ... 52.63	3/83
32 681	FZ208	**2KJ1311**	9.01 ... 20.06	3/85
290	FZ38B - Z28	**2KJ1313**	303.00 ... 1 617.00	3/66
290	FZ38B - D28	**2KJ1314**	1 726.00 ... 7 591.00	3/66
	Parallel shaft gearbox FD			
150	FD28	**2KJ1400**	3.80 ... 59.65	3/65
290	FD38B	**2KJ1401**	56.28 ... 280.41	3/67
540	FD48B	**2KJ1402**	43.09 ... 268.80	3/69
1 000	FD68B	**2KJ1403**	50.48 ... 296.18	3/71
1 900	FD88B	**2KJ1404**	54.47 ... 404.92	3/73
3 400	FD108B	**2KJ1405**	48.24 ... 424.49	3/75
6 100	FD128B	**2KJ1406**	53.13 ... 447.96	3/77
9 000	FD148B	**2KJ1407**	62.93 ... 449.21	3/79
14 000	FD168B	**2KJ1408**	41.85 ... 369.26	3/81
20 000	FD188B	**2KJ1410**	48.46 ... 403.86	3/83
34 000	FD208	**2KJ1411**	24.03 ... 242.01	3/85
540	FD48B - Z28	**2KJ1413**	299.00 ... 4 197.00	3/68
540	FD48B - D28	**2KJ1414**	4 480.00 ... 19 701.00	3/68
1 000	FD68B - Z28	**2KJ1417**	317.00 ... 4 454.00	3/70
1 000	FD68B - D28	**2KJ1418**	4 755.00 ... 39 638.00	3/70
1 900	FD88B - Z28	**2KJ1422**	461.00 ... 6 000.00	3/72
1 900	FD88B - D28	**2KJ1423**	6 703.00 ... 54 705.00	3/72
3 400	FD108B - Z38	**2KJ1426**	466.00 ... 15 230.00	3/74
3 400	FD108B - D38	**2KJ1427**	16 603.00 ... 66 190.00	3/74
6 100	FD128B - Z38	**2KJ1428**	1 970.00 ... 15 663.00	3/76
6 100	FD128B - D38	**2KJ1430**	17 075.00 ... 68 070.00	3/76
6 100	FD128B - Z48	**2KJ1431**	439.00 ... 1 504.00	3/76
9 000	FD148B - Z38	**2KJ1432**	1 757.00 ... 16 239.00	3/78
9 000	FD148B - D38	**2KJ1433**	17 704.00 ... 70 576.00	3/78
9 000	FD148B - Z48	**2KJ1434**	477.00 ... 1 634.00	3/78
14 000	FD168B - Z48	**2KJ1435**	1 337.00 ... 16 007.00	3/80
14 000	FD168B - D48	**2KJ1436**	17 454.00 ... 65 160.00	3/80
14 000	FD168B - Z68	**2KJ1437**	398.00 ... 1 298.00	3/82
20 000	FD188B - Z48	**2KJ1438**	1 465.00 ... 17 537.00	3/82
20 000	FD188B - D48	**2KJ1440**	19 122.00 ... 71 388.00	3/82
20 000	FD188B - Z68	**2KJ1441**	444.00 ... 1 449.00	3/82
34 000	FD208 - Z68	**2KJ1442**	766.00 ... 8 251.00	3/84
34 000	FD208 - D68	**2KJ1443**	9 924.00 ... 61 412.00	3/84
34 000	FD208 - Z88	**2KJ1444**	284.00 ... 694.00	3/84

© Siemens AG 2011

Determining the gearbox type in accordance with the max. torque, transmission ratio, and size (continued)

Max. gearbox torque	Gearbox type	Order No.	Transmission ratio	For further information,
Nm				see page
	Bevel helical gearbox B and K			
130	B28	**2KJ1500**	3.57 … 57.53	4/60
250	B38	**2KJ1501**	3.84 … 65.69	4/61
250	K38	**2KJ1502**	5.65 … 179.13	4/63
450	K48	**2KJ1503**	7.22 … 169.53	4/65
820	K68	**2KJ1504**	5.36 … 243.72	4/67
1 650	K88	**2KJ1505**	5.54 … 302.68	4/69
3 000	K108	**2KJ1506**	7.68 … 307.24	4/71
4 700	K128	**2KJ1507**	7.10 … 295.38	4/73
8 000	K148	**2KJ1508**	4.83 … 306.08	4/75
13 500	K168	**2KJ1510**	6.61 … 287.95	4/77
20 000	K188	**2KJ1511**	12.10 … 191.34	4/79
250	K38 - Z28	**2KJ1514**	181.00 … 2 797.00	4/62
250	K38 - D28	**2KJ1515**	2 986.00 … 13 129.00	4/62
450	K48 - Z28	**2KJ1516**	181.00 … 2 798.00	4/64
450	K48 - D28	**2KJ1517**	2 987.00 … 13 135.00	4/64
820	K68 - Z28	**2KJ1518**	277.00 … 4 282.00	4/66
820	K68 - D28	**2KJ1520**	4 572.00 … 20 103.00	4/66
1 650	K88 - Z28	**2KJ1523**	344.00 … 5 309.00	4/68
1 650	K88 - D28	**2KJ1524**	5 667.00 … 24 920.00	4/68
3 000	K108 - Z38	**2KJ1527**	1 466.00 … 13 556.00	4/70
3 000	K108 - D38	**2KJ1528**	13 066.00 … 58 914.00	4/70
3 000	K108 - Z48	**2KJ1530**	301.00 … 1 343.00	4/70
4 700	K128 - Z38	**2KJ1531**	1 410.00 … 13 032.00	4/72
4 700	K128 - D38	**2KJ1532**	12 562.00 … 56 640.00	4/72
4 700	K128 - Z48	**2KJ1533**	313.00 … 1 400.00	4/72
8 000	K148 - Z38	**2KJ1534**	1 466.00 … 13 505.00	4/74
8 000	K148 - D38	**2KJ1535**	13 017.00 … 58 692.00	4/74
8 000	K148 - Z68	**2KJ1536**	296.00 … 1 392.00	4/74
13 500	K168 - Z48	**2KJ1537**	1 233.00 … 14 767.00	4/76
13 500	K168 - D48	**2KJ1538**	14 397.00 … 60 115.00	4/76
13 500	K168 - Z68	**2KJ1540**	317.00 … 1 033.00	4/76
20 000	K188 - Z68	**2KJ1541**	669.00 … 9 201.00	4/78
20 000	K188 - D68	**2KJ1542**	8 689.00 … 53 767.00	4/78
20 000	K188 - Z88	**2KJ1543**	225.00 … 669.00	4/78
	Helical worm gearbox C			
118	C28	**2KJ1600**	25.28 … 372.00	5/25 … 5/26
243	C38	**2KJ1601**	9.67 … 320.67	5/28 … 5/30
387	C48	**2KJ1602**	9.67 … 320.67	5/32 … 5/34
687	C68	**2KJ1603**	11.67 … 364.00	5/36 … 5/38
1 590	C88	**2KJ1604**	11.15 … 440.70	5/40 … 5/42
225	C38 - Z28	**2KJ1605**	324.00 … 4 222.00	5/27
222	C38 - D28	**2KJ1606**	4 717.00 … 23 503.00	5/27
369	C48 - Z28	**2KJ1607**	324.00 … 4 222.00	5/31
364	C48 - D28	**2KJ1608**	4 717.00 … 23 503.00	5/31
680	C68 - Z28	**2KJ1610**	398.00 … 5 066.00	5/35
675	C68 - D28	**2KJ1611**	5 661.00 … 28 203.00	5/35
1 590	C88 - Z28	**2KJ1614**	6 722.00 … 33 491.00	5/39
1 590	C88 - D28	**2KJ1615**	462.00 … 6 016.00	5/39
	Worm gearbox S			
33	S08	**2KJ1730**	5 … 80	6/10 ... 6/10
64	S18	**2KJ1731**	5 … 80	6/10 ... 6/10
116	S28	**2KJ1732**	5 … 100	6/10 ... 6/10

© Siemens AG 2011

Overview of "special versions"

Order code	Special version Designation	For further information, see page
	Input units	
A00	Input unit A with free input shaft	7/3, 7/30
A03	Input unit K2 (coupling lantern) with flexible coupling for connecting an IEC motor	7/3, 7/20
A04	Input unit K4 (short coupling lantern) with clamp connection for connecting an IEC motor	7/3, 7/23
A07	Input unit KQ (lantern for servomotor) with zero-free, flexible coupling for connecting a servomotor (with feather key)	7/3, 7/28
A08	Input unit KQS attachment (lantern for servomotor) with zero-free, flexible coupling for connecting a servomotor (with plain shaft)	7/3, 7/28
A09	Input unit P with free input shaft and piggy back for connecting an IEC motor	7/3, 7/33
A10	Input unit PS with free input shaft, piggy back and protective belt cover	7/3
N61	Size index .2 for KQ/KQS coupling lantern for servomotor	7/3
N62	Size index .3 for KQ/KQS coupling lantern for servomotor	7/3
N63	Size index .4 for KQ/KQS coupling lantern for servomotor	7/3
	Backstop in the input unit	
A15	Backstop X	7/18
	Coupling types and input unit options	
A16	Flexible coupling	7/3
A17	Friction clutch	7/18
A18	Proximity switch	7/18
A19	Speed monitor	7/18
	Piggy back position	
A22	3h	7/33
A23	9h	7/33
A24	12h	7/33
	Brake type	
B00 to B66	Brake types according to size and braking torque	8/29 … 8/30
	Brake design	
C01	Enclosed brake	8/42
C02	Manual brake release lever	8/39
C03	Manual brake release lever with locking mechanism	8/39
C04	Microswitch for release monitoring	8/38
C06	Reduced-noise rotor-hub connection and wear-resistant friction lining	8/36
C09	Basic anti-corrosion protection	8/42
C10	Increased anti-corrosion protection	8/42
C11	Enclosed brake with condensation drain hole	8/42
	Manual brake release lever position	
C26	1	8/39
C27	2	8/39
C28	3	8/39
C29	4	8/39
	Brake control voltage	
C46 ... C70	Brake standard voltage	8/32
	Mounting types / mounting positions	
D00 to E17	Geared motor mounting types and mounting positions	2/119 ... 2/129, 3/92 ... 3/95, 4/87 ... 4/91, 5/47 ... 5/49, 6/15
	Torque arm figure	
G09	Figure 1	4/81, 5/44
G10	Figure 2	4/81, 5/44
	Output shaft bearings	
G20	Radially reinforced output shaft bearings	2/133, 3/99, 4/95, 5/53

© Siemens AG 2011

Overview of "special versions" (continued)

Order code	Special version Designation	For further information, see page
	Output sealing	
G22 + G31	Double radial shaft seal	2/132, 3/98, 4/94, 5/52
G23	Double sealing MSS1	2/132, 3/98, 4/94, 5/52
G24	Combination shaft sealing	2/132, 3/98, 4/94, 5/52
G25	High temperature resistant sealing	2/132, 3/98, 4/94, 5/52
	Oil level control	
G34	Oil sight glass	2/130, 3/96, 4/93, 5/50
	Gearbox ventilation	
G44	Vent filter	2/131, 3/97, 4/93, 5/51
G45	Pressure ventilation valve	2/131, 3/97, 4/93, 5/51
	Oil drain	
G53	Magnetic oil drain plug	2/131, 3/97, 4/94, 5/51
G54	Oil drain valve, straight	2/131, 3/97, 4/94, 5/51
	Hollow-shaft cover	
G60	Steel protection cover	3/99, 4/95, 5/52
G61	Steel protection cover (ATEX)	3/99, 4/95, 5/52
G62	Protection cover	3/99, 4/95, 5/52
G63	Protection cover (ATEX)	3/99, 4/95, 5/52
	Backstop for bevel helical gearbox	
G72	Backstop (gearbox)	4/96
	Options for gearbox output shafts	
G73	2nd shaft extension (output shaft on both sides)	4/96, 5/53, 6/16
	Dry-well options for mixer and agitator drives	
G89	Dry-well design with sight glass	2/133, 3/100, 4/97
G90	Dry-well design with sensor	2/133, 3/100, 4/97
	Reduced-backlash version	
G99	Reduced-backlash version	1/23, 2/93, 3/65, 4/62
	Flange diameter	
H01 to H06	Flange diameter	2/118, 3/91, 4/86, 5/46, 6/14
	Degree of protection	
K01	IP 55	8/8
K02	IP 56	8/8
K03	IP 65	8/8
	Lubricants	
K06	CLP ISO VG 220 - Mineral oil	1/46, 2/130, 3/94, 4/92
K07	CLP ISO PG VG 220 - Synthetic oil	1/46, 2/130, 3/96, 4/92
K08	CLP ISO PG VG 460 - Synthetic oil	1/46, 2/130, 3/96, 4/92, 5/50, 6/16
K10	CLP ISO E VG 220 - Biologically degradable oil	1/46, 2/130, 3/96, 4/92, 5/50
K11	CLP ISO H1 VG 460 - Oil for use in the food industry	1/46, 2/130, 3/96, 4/92, 5/50, 6/16
K12	CLP ISO PAO VG 220 - Oil for low temperature usage	1/46, 2/130, 3/96, 4/92, 5/50
K13	CLP ISO PAO VG 68 - Oil for lowest temperature usage	1/46, 2/130, 3/96, 4/92
	Long-term preservation	
K17	Long-term preservation up to 36 months	1/46
	Direction of rotation of the output shaft (required with backstop)	
K18	Clockwise	1/43, 4/96
K19	Counterclockwise	1/43, 4/96
	Rating plate and additional rating plates	
K26	Rating plate on stainless steel support plate	1/49
K41	2nd rating plate, enclosed separately	1/49
K68	2nd rating plate, mounted	1/49

© Siemens AG 2011

Overview of "special versions" (continued)

Order code	Special version Designation	For further information, see page
	Surface treatment	
L00	Unpainted	1/48
L01	Primed according to corrosion category C2 G	1/48
L02	Surface protection for normal environmental stress	1/47
L03	Surface protection for minimal environmental stress	1/47
L04	Surface protection for medium environmental stress	1/47
L05	Surface protection for extremely high environmental stress	1/47
L09	Primed according to corrosion category C4 G	1/48
L19	Special pre-treatment before painting	1/48
L20	Surface protection for high environmental stress	1/47
	RAL colors	
L50	RAL 5015 Sky blue	1/48
L51	RAL 7011 Steel gray	1/48
L53	RAL 7031 Blue gray	1/48
L54	RAL 7035 Light gray	1/48
L55	RAL 7030 Stone gray	1/48
	Other colors can be selected by entering order code Y80 and plain text	1/48
	Insulating material class	
M08	Temperature class 180 (H)	8/25
M09	Special insulation for inverter-fed operation up to 690 V	8/25
	Thermal motor protection	
M10	PTC thermistor for disconnection	8/23
M11	PTC thermistor for warning and disconnection	8/23
M12	Winding thermostat for disconnection (WT)	8/23
M13	Winding thermostat for warning and disconnection for sizes 71 to 200 (WT)	8/23
M16	KTY 84-130 temperature sensor	8/24
	Fan	
M21	Metal fan	8/9
M22	High inertia fan	8/9
M23	External fan	8/10
	Anti-condensation heating	
M40	115 V supply voltage	8/24
M41	230 V supply voltage	8/24
	Terminal box position	
M55 to M86	Location and position of the terminal box	8/11
	ECOFAST motor plugs	
N04	ECOFAST motor plug HAN 10E (single-bracket lock)	8/18
N05	ECOFAST motor plug HAN 10E with counterplug HAN 10B (single-bracket lock)	8/18
N06	ECOFAST motor plug HAN 10E, EMC design (single-bracket lock)	8/18
N07	ECOFAST motor plug HAN 10E with counterplug HAN 10B, EMC design (single-bracket lock)	8/18
	Canopy	
N22	Canopy	8/8
	Backstop on motor	
N23	Motor backstop	8/63
	2nd shaft extension on motor	
N39	2nd shaft extension	8/64
	Handwheel	
N40	Handwheel	8/65
	Motor side B, can be retrofitted	
N48	Motor side B, can be retrofitted	8/2

© Siemens AG 2011

Overview of "special versions" (continued)

Order code	Special version Designation	For further information, see page
	Additional feet	
N49	Additional feet	8/65
	Designs in accordance with standards and specifications	
N30	Design in accordance with GOST-R	1/40, 8/3
N36	Design in accordance with CSA	1/40, 8/3
N37	Design in accordance with UL-R	1/40, 8/3
N38	Design in accordance with UL-R and CSA	1/40, 8/3
N65	Design in accordance with NEMA (electrical)	1/39, 8/3
N67	Design in accordance with CCC	1/40, 8/3
N69	Design in accordance with China Energy Efficiency Label	1/40, 8/3
	Versions for special environmental conditions	
N41	Motor-internal anti-corrosion protection	8/19
	Protection against humidity and acid	
N43	Increased protection against humidity and tropical climate	1/48
N44	Increased protection against acid and alkali	1/48
N54	Motor winding protection against humidity and acid	8/26
	External earthing	
N53	External earthing	8/19
	Motors prepared for encoder mounting	
N50	Encoder mounting prepared	8/60
	Pole number of the motor	
P00	2-pole	8/68, 8/68, 8/96
P01	6-pole	8/70, 8/84, 8/70, 8/98, 8/102, 8/132, 8/136, 8/132, 8/136
P02	8-pole	8/72, 8/86, 8/104, 8/122, 8/128
P04	4/2-pole	8/74, 8/106
P08	8/4-pole	8/76, 8/78
P07	8/2-pole	8/80
	Gateways EnDAT for absolute encoders	
Q02	Gateway EnDAT Profibus DP	8/63
Q03	Gateway EnDAT CANopen	8/63
Q04	Gateway EnDAT DeviceNET	8/63
	Incremental encoder IN	
Q44	Rotary pulse encoder 1XP8032-20 (IN 1024 TTL with coupling socket)	8/51
Q45	Rotary pulse encoder 1XP8032-21 (IN 2048 TTL with coupling socket)	8/51
Q46	Rotary pulse encoder 1XP8032-22 (IN 512 TTL with coupling socket)	8/51
Q47	Rotary pulse encoder 1XP8032-10 (IN 1024 HTL with coupling socket)	8/51
Q48	Rotary pulse encoder 1XP8032-11 (IN 2048 HTL with coupling socket)	8/51
Q49	Rotary pulse encoder 1XP8032-12 (IN 512 HTL with coupling socket)	8/51
Q50	Rotary pulse encoder 1XP8012-20 (IN 1024 TTL with flange socket)	8/50
Q51	Rotary pulse encoder 1XP8012-21 (IN 2048 TTL with flange socket)	8/50
Q52	Rotary pulse encoder 1XP8012-22 (IN 512 TTL with flange socket)	8/50
Q53	Rotary pulse encoder 1XP8012-10 (IN 1024 HTL with flange socket)	8/50
Q54	Rotary pulse encoder 1XP8012-11 (IN 2048 HTL with flange socket)	8/50
Q55	Rotary pulse encoder 1XP8012-12 (IN 512 HTL with flange socket)	8/50
Q56	Rotary pulse encoder 1XP8022-20 (IN 1024 TTL with cable terminal box)	8/52
Q57	Rotary pulse encoder 1XP8022-21 (IN 2048 TTL with cable terminal box)	8/52
Q58	Rotary pulse encoder 1XP8022-22 (IN 512 TTL with cable terminal box)	8/52
Q59	Rotary pulse encoder 1XP8022-10 (IN 1024 HTL with cable terminal box)	8/52
Q60	Rotary pulse encoder 1XP8022-11 (IN 2048 HTL with cable terminal box)	8/52
Q61	Rotary pulse encoder 1XP8022-12 (IN 512 HTL with cable terminal box)	8/52

© Siemens AG 2011

Overview of "special versions" (continued)

Order code	Special version Designation	For further information, see page
	Cable terminal boxes for encoders 1XP8012, 1XP8032, 1XP8013, 1XP8023.1XP8014 and 1XP8024	
Q62	Connector	8/61
Q69	Cable with connector and ferrules, 2 m	8/61
Q70	Cable with connector and ferrules, 8 m	8/61
Q71	Cable with connector and ferrules, 15 m	8/61
Q72	Cable with coupling socket, 2 m	8/62
Q73	Cable with coupling socket, 8 m	8/62
Q74	Cable with coupling socket, 15 m	8/62
	Cable terminal boxes for encoders 1XP8022	
Q63	Cable with ferrules, 2 m	8/61
Q64	Cable with ferrules, 8 m	8/61
Q65	Cable with ferrules, 15 m	8/61
Q66	Cable with coupling socket, 2 m	8/62
Q67	Cable with coupling socket, 8 m	8/62
Q68	Cable with coupling socket, 15 m	8/62
	Absolute encoder IA	
Q80	Absolute encoder 1XP8014-20 (IA SSI protocol with flange socket)	8/55
Q81	Absolute encoder 1XP8024-20 (IA SSI protocol cable with coupling socket)	8/55
Q82	Absolute encoder 1XP8014-10 (IA EnDAT protocol with flange socket)	8/55
Q83	Absolute encoder 1XP8024-10 (IA EnDAT protocol cable with coupling socket)	8/55
	Resolver IR	
Q85	Resolver 1XP8013-10 (IR with flange socket)	8/54
Q86	Resolver 1XP8023-11 (IR cable with coupling socket)	8/54
Q87	Resolver 1XP8013-11 (IR with flange socket)	8/54
Q88	Resolver 1XP8023-10 (IR cable with coupling socket)	8/54
	Rugged encoder	
Q92	Rotary pulse encoder LL Leine & Linde	8/57
Q93	Rotary pulse encoder HOG 9	8/58
Q94	Rotary pulse encoder HOG 10	8/59
	Mechanical protection	
Q95	Encoder under cover	8/60

© Siemens AG 2011

Configuring guide

Determining the drive data

Data relating to the machine to be driven (machine type, mass, input speed, speed range, etc.) is required in order to size the machine correctly. This data is then used to determine the required power rating, torque, and input speed of the geared motor. The correct drive can be selected based on its calculated power rating and speed.

Data required for selection

The following data is required in order to select the correct gearbox:

1. Type of driven machine
2. Daily operating time h
3. Required input power kW or required torque Nm
4. Required output speed n_2 of the geared motor rpm or gearbox ratio i
5. Operating voltage V and frequency Hz
6. Operating mode, number of startings, inverter-fed operation, type of startup
7. Moment of inertia J_{Load} kgm^2 of the driving machine reduced to the motor shaft
8. Type of power transmission on gearbox shafts (direct, coupling, belt, chain, gear wheel)
9. Radial force F_r N at the input shaft and direction of force with distance from the shaft shoulder to the point of application and axial force F_{ax} [N] with direction of force
10. Ambient temperature °C
11. Degree of protection
12. Mounting position
13. Required braking torque Nm
14. Any regulations (CSA, VIK, etc.)

© Siemens AG 2011

Efficiency of the geared motor

The efficiency of the gearbox is determined by the gear teeth, rolling-contact bearing friction, and the shaft sealing rings, among other things. The starting efficiency also has to be taken into account, particularly as regards helical worm and worm gearboxes. Efficiency may be impaired at high input speeds, if a relatively large amount of oil is used (depending on mounting position), and during cold operation in low temperature ranges.

Helical, bevel helical, and parallel shaft gearboxes

MOTOX helical, parallel shaft, and bevel helical gearboxes are extremely efficient. As a rule, efficiencies of 98 % (1-stage), 96 % (2-stage), and 94 % (3-stage) can be assumed.

Helical worm and worm gearboxes

The gear teeth of the worm gearboxes lead to high sliding friction losses at high transmission ratios. Therefore, these gearboxes can be less efficient than other types. The efficiencies of the helical worm and worm gearboxes primarily depend on the transmission ratio in question.
With helical worm gearboxes, some of the transmission ratio is realized by the helical gear stage. In this way, higher degrees of efficiency can be achieved.
For further information see the chapter dealing with helical worm gearboxes.

Self-locking with worm gearboxes

In respect of restoring torques on worm gearboxes, the efficiency is considerably reduced in comparison to standard efficiency. The restoring efficiency can be calculated as follows: $\eta' = 2 - 1/\eta$. At a standard efficiency of $\eta \leq 0.5$, worm gearboxes are usually self-locking, which is determined by the particular lead angle of the worm gear teeth.
Self-locking only occurs with certain combinations of MOTOX gearboxes and is not always of benefit, as the associated loss of efficiency is then relatively high, which in turn requires increased motor power.

A worm gearbox is "self-locking while stationary" (static self-locking), if it is not possible to start from stationary when the worm wheel is driving.
A worm gearbox is "self-braking while running" (dynamic self-locking), if it is not possible to continue running when the worm wheel is driving while the gearbox is running – that is, if the running gearbox comes to a stop while the worm wheel is driving.

Shocks can neutralize self-locking.
A self-locking gearbox is, therefore, no substitute for a brake or backstop. If you want to use the self-locking braking effect for a technical purpose, please contact us.

Run-in phase for helical worm and worm gearboxes

The tooth flanks on new helical worm and worm gearboxes will not yet be fully smoothed, meaning that the friction angle will be greater and efficiency lower during initial operation. The higher the transmission ratio, the more pronounced the effect.

The run-in procedure should take approximately 24 hours of operation at full load. In most cases, the catalog values will then be reached.

Losses of splashing

With certain gearbox mounting positions, the first stage can become completely immersed in the gear lubricant. In the case of large gearboxes with a high input speed, particularly with vertical mounting positions, this may lead to increased losses of splashing, which must not be ignored. Please contact us if you want to use such gearboxes. If at all possible, you should choose horizontal mounting positions in order to keep losses of splashing to a minimum.

© Siemens AG 2011

Determining the required service factor

The operating conditions are crucial in determining the service factor and for selecting the geared motor. These conditions are taken into account with service factor f_B.

The gearbox size or rated gear torque and the resulting service factor are not standardized and depend on the manufacturer.

In standard operation, i.e. with a uniform load provided by the driving machine, small masses to be accelerated, and a low number of startings, the service factor of $f_B = 1$ can be selected.

For different operating conditions see the tables found under "Service factor". If the motor power and the gearbox output speed are known, a gearbox type is selected with a service factor that meets the following condition.

$$f_{Btot} \leq f_B$$

For drives operating under special conditions, e.g. frequent reversing, short-time or intermittent duty, abnormal temperature ratios, reversal braking, extreme or rotating transverse forces on the gear output shaft, etc. please contact us for advice on how to design the drive configuration.

The operating conditions can vary greatly.
To determine the service factor, empirical values can be derived from the configuration of other similar applications. The driving machines can be assigned to three load groups according to their shock load. These groups can be assessed by means of their mass acceleration factor (m_{AF}).

In the case of high mass acceleration factors (m_{AF} >10), a large amount of play in the transmission elements, or high transverse forces, unexpected additional loads may arise.
Please contact us in such an event.

The mass acceleration factor m_{AF} is calculated as follows:

$$m_{AF} = \frac{J_{Load}}{(J_M + J_B + J_{add})}$$

All external moments of inertia are moments of inertia of the driving machine and the gearbox, which are to be reduced to the motor speed. In most cases the moment of inertia of the gearbox has no effect and can be ignored.
The calculation is made using the following formula:

$$J_{Load} = J_2 \cdot \left(\frac{n_2}{n_1}\right)^2 = \frac{J_2}{i^2}$$

Code	Description	Unit
f_{Btot}	Service factor of the driving machine	–
f_B	Service factor of the geared motor	–
m_{AF}	Mass acceleration factor	–
J_{Load}	All external moments of inertia (based on the motor shaft)	kgm²
J_M	Moment of inertia of the motor	kgm²
J_B	Moment of inertia of the brake	kgm²
J_{add}	Additional moment of inertia (e.g. centrifugal mass or high inertia fan)	kgm²
J_2	Moment of inertia based on the output speed of the gearbox	kgm²
n_1	Input speed of the motor	rpm
n_2	Output speed of the gearbox	rpm
i	Gearbox ratio	–
DC	Relative duty cycle	%

© Siemens AG 2011

Required service factor

Service factor for helical, parallel shaft, and bevel helical gearboxes

The service factor of the driving machine f_{Btot} is determined from the tables by taking the load classification, number of startings, and duration of service per day into account.
Contact our drive experts to check drive sizing in the case of high shock loads and, for example, high motor and braking torques that are greater than 2.5x the rated motor torque.

$f_{Btot} = f_{B1}$

Load classification for driving machines

Shock load	Driving machine
I Light shock loads	Mass acceleration factor ≤ 0.3: Electric generators, belt conveyors, apron conveyors, screw conveyors, lightweight elevators, electric hoists, machine tool feed drives, turbo blowers, centrifugal compressors, mixers and agitators for uniform densities.
II Moderate shock loads	Mass acceleration factor ≤ 3: Machine tool main drives, heavyweight elevators, turning tools, cranes, shaft ventilators, mixers and agitators for non-uniform densities, piston pumps with multiple cylinders, metering pumps.
III Heavy shock loads	Mass acceleration factor ≤ 10: Punching presses, shears, rubber kneaders, machinery used in rolling mills and the iron and steel industry, mechanical shovels, heavyweight centrifuges, heavyweight metering pumps, rotary drilling rigs, briquetting presses, pug mills.

Service factors f_{B1}:

Daily operating duration		**4 hours**			**8 hours**			**16 hours**			**24 hours**		
Starts*) / h		< 10	10 … 200	> 200	< 10	10 … 200	> 200	< 10	10 … 200	> 200	< 10	10 … 200	> 200
Shock load	I	0.8	0.9	1.0	0.9	1.0	1.1	1.0	1.1	1.2	1.2	1.3	1.5
	II	1.0	1.1	1.3	1.1	1.2	1.3	1.2	1.4	1.5	1.4	1.5	1.6
	III	1.3	1.4	1.5	1.4	1.5	1.6	1.5	1.6	1.7	1.6	1.7	1.8

*) The number of startings is calculated from the sum of times it is switched on, braking operations, and changeovers.

Service factors for helical worm and worm gearboxes:

With worm gearboxes, two additional service factors are used, which take the duty cycle and ambient temperature into account. These additional factors can be determined from the graph opposite.

$f_{Btot} = f_{B1} \cdot f_{B2} \cdot f_{B3}$

In the standard version the gearboxes can operate at an ambient temperature of –20 °C to +40 °C.

In the case of a service factor $f_{B3} < 1$ for temperatures below 20 °C please contact us.

Service factor f_{B2} for short-time duty:

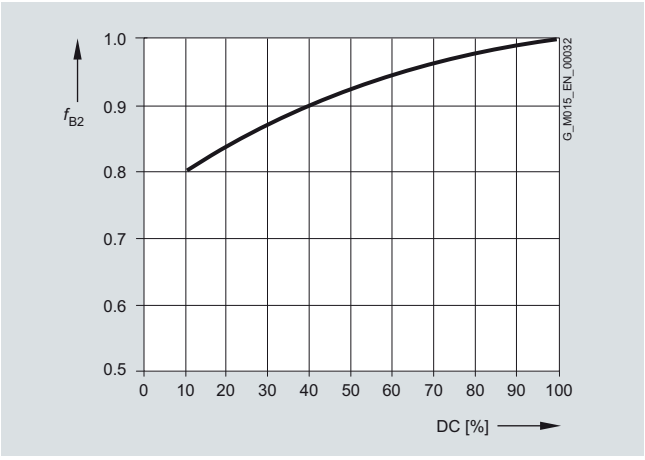

$$DC = \frac{\text{Loading time in min/h}}{60} \cdot 100$$

© Siemens AG 2011

Required service factor (continued)

Example worm gearbox:

Mass acceleration factor 2.5 (shock load II), runtime 15 hours per day (read off at 16 hours), and 70 starts / h gives a service factor of f_{B1} = 1.4 for service factor f_{B1} according to the table.

A load duration of 30 minutes per hour gives a duty cycle (*DC*) of 50 %. According to the diagram, this results in a service factor of f_B = 0.94 for service factor f_{B2}.

At an ambient temperature of ϑ_{amb} = 20 °C, the diagram gives a service factor of f_{B3} = 1.0 for service factor f_{B3}.

So, the required service factor is
$f_{Btot} = 1.4 \cdot 0.94 \cdot 1.0 = 1.32$.

Service facor f_{B3} for the ambient temperature:

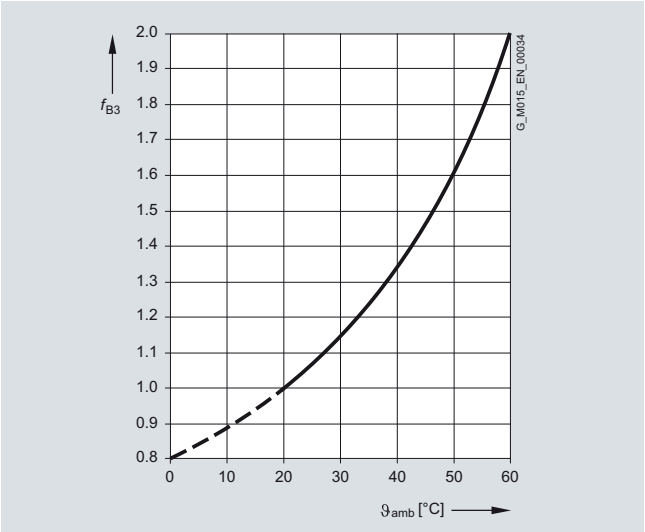

ϑ_{amb} = Ambient temperature

Maximum motor speed

At high motor speeds (>1.500 rpm) you will generally experience higher than average noise emissions and a lower than average bearing service life. This depends to a large extent on the transmission ratio and gearbox size in question. Furthermore, high speeds affect the thermal properties and service intervals of the gearbox.

The maximum input speed of the gearbox is usually 3.600 rpm. If you require higher speeds, please contact us.

Ambient temperature

In the standard version the gearboxes can operate at an ambient temperature of –20 °C to +40 °C, if the lubricant recommendations are kept. In the case of a few additional options the category temperatures must be checked.

Other temperature ranges -10 °C ... +50 °C on request.

Required torque T_{2req}

If the drive data and the service factor are selecetd, the required output torque can be determined.

$$T_{2req} = \frac{9550 \cdot P_1}{n_2} \cdot f_{Btot}$$

Selection of the gearbox

The following conditions need to be observed:

$P_1 > P_{req}$
$T_{2rated} > T_{2req}$
$f_B > f_{Btot}$
$T_2 > T_{req}$

Code	Description	Unit
f_{Btot}	Service factor of the driving machine	–
f_B	Service factor of the geared motor	–
P_{2m}	Input power of the motor	kW
P_{req}	Required input power	kW
T_{req}	Required torque	Nm
T_2	Output torque of the geared motor	Nm
T_{2rated}	Nominal output torque of the geared motor	Nm
T_{2req}	Required output torque of the driving machine	Nm

© Siemens AG 2011

Reduced-backlash gearbox version

Helical, parallel shaft and bevel-helical gearboxes are available on request in a reduced-backlash version. In the transmission table, the torsion angle (φ) is specified for the reduced-backlash version. If a value is not specified, this gearbox cannot be realized with reduced backlash.

A high degree of positioning accuracy is achieved with reduced-backlash gearboxes and the shock loads in the gearbox are reduced at load changeover. When a gearbox is used that has a certain amount of play, the relative position of the output shaft of the gearbox cannot be determined precisely because the controller cannot detect whether the right or left flank of the tooth is engaged.

- Accurate positioning and repeatability
- Maintain position information in the case of a change of direction of rotation
- Reduced shock loading of the tooth flanks

Order code:

Reduced-backlash version **G99**

Permissible radial force

Available radial force

The available radial force F_{Ravail} at the shaft journals results from the available output torque of the geared motor T and the diameter d and type of the output element (e.g. sprocket wheel).

The type of output element determines factor C (see table below), by which the available radial force is to be increased.

$$F_{Ravail} = 2000 \cdot \frac{T_2}{d} \cdot C$$

Code	Description	Unit
F_{Ravail}	Available radial force resulting from the output torque and the diameter of the output element	N
F_{Rperm}	Permissible radial force at the center of shaft extension	N
d	Diameter of the input element	mm
T_2	Output torque of the geared motor	Nm
F_{xperm1}	Permissible radial force, limited by the bearing service life, at a distance of x from the shaft shoulder	N
F_{xperm2}	Permissible radial force, limited by the shaft strength, at a distance of x from the shaft shoulder	N
C	Additional factor	–
b, d, l, y, z	Gearbox constants	mm
a	Gearbox constant	kNmm
F_{ax}	Axial force at d	N
α	Angle of action of the radial force	°

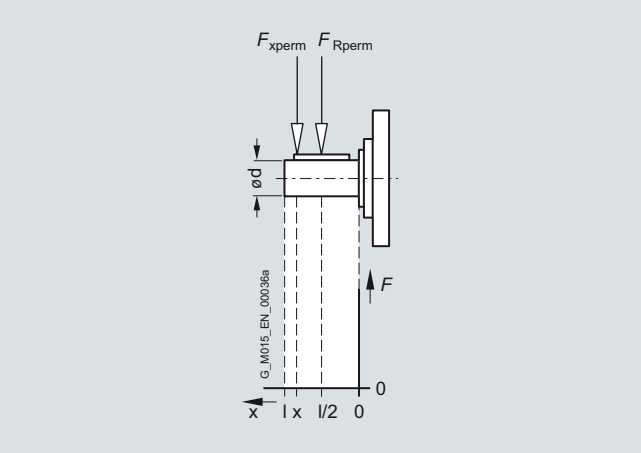

Factor C for the type of the transmission element

Transmission element	Design	C
Gear wheel	> 17 teeth	1.00
	≤ 17 teeth	1.15
Sprocket wheel	≥ 20 teeth	1.00
	14 – 19 teeth	1.25
	≤ 13 teeth	1.40
Toothed belt	Preload	1.50
V belt	Preload	2.00
Flat belt	Preload	2.50
Agitator / mixer	Rotating radial force	2.50

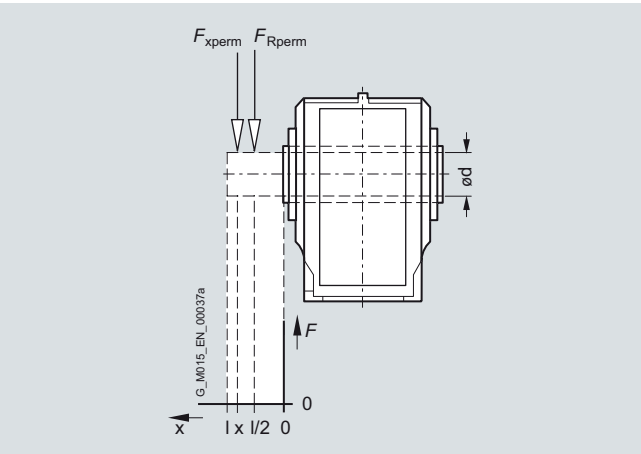

© Siemens AG 2011

Permissible radial force (continued)

Permissible radial force

The permissible radial force F_{Rperm} is determined by the required bearing service life, among other things. The nominal service life L_{h10} is determined in accordance with ISO 281. The bearing service life can be calculated for special operating conditions on request, based on the calculation procedure for the modified service life L_{na}.

Furthermore, the permissible radial force is determined by the housing and shaft strength of the gearbox. The selection tables specify the permissible radial force F_{Rperm} for the output shafts. These values refer to the point of load at the center of the shaft extension and are minimum values, which apply to the worst possible conditions in the gearbox (force angle, mounting position, direction of rotation).

If the point of load is not at the center of the shaft extension, the permissible radial force must be calculated as follows: the smaller value of F_{xperm1} (bearing service life) and F_{xperm2} (shaft strength) is the permissible radial force.
The calculation does not include additional axial forces.

If the direction of rotation of the output shaft and the additional axial forces are known, or the values in the table are insufficient, our drive experts have to perform the calculation. Our agitator and mixer drives allow you to achieve higher permissible radial forces. These drives are particularly well suited to large and rotating radial forces.

Permissible radial force in accordance with bearing service life for all gearbox types:

$$F_{xperm1} = F_{Rperm} \cdot \frac{y}{(z + x)}$$

Permissible radial force in accordance with shaft strength for bevel helical, parallel shaft, and helical worm gearboxes:

$$F_{xperm2} = \frac{a}{x}$$

Permissible radial force in accordance with shaft strength for helical and worm gearboxes:

$$F_{xperm2} = \frac{a}{(b + x)}$$

The shaft strength only has to be calculated for solid shafts, with hollow shafts this step can be omitted.

Higher permissible radial forces

The permissible radial force load can be increased, taking the angle of force action α and the direction of rotation into account. Installing reinforced bearings also means that higher loads are permitted on the input shaft.

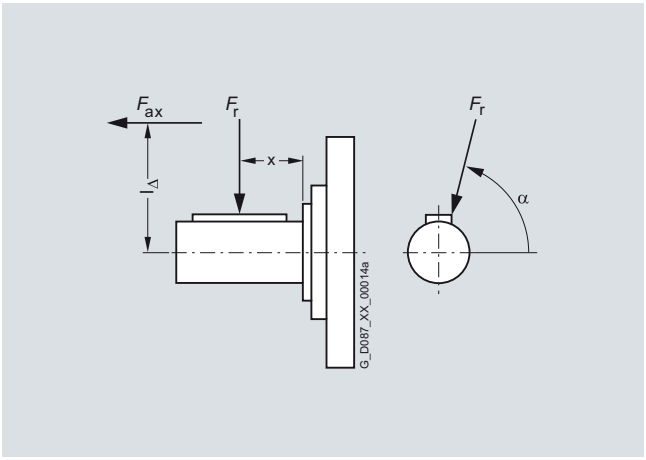

Permissible axial loads

If no transverse force load is present, an axial force F_{ax} (tension or compression) of around 50 % of the specified radial force with standard bearings can be achieved for gearbox sizes 18 to 148.

You can use our "Calculation of input shaft bearing arrangement" assistant in the MOTOX Configurator to calculate the permissible forces. Combined forces with an axial and a radial component can also be calculated. Please contact us in case of doubt.

The permissible radial forces are specified in the gearbox chapters.

© Siemens AG 2011

Determining the operating mode

If no specifications are made in the power tables, the power ratings specified in the power tables apply to the **S1 operating mode** (continuous duty with constant load) according to EN 60034-1. The same regulation defines the groups of operating modes specified below:

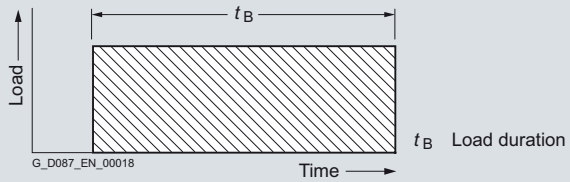

Operating mode S1 · Continuous duty

Operating modes in which starting and electrical braking **do not affect the overtemperature of the stator winding** of the motor:

Operating mode **S2**:

Short-time duty

Operating times of 10, 30, 60, and 90 min. are recommended. After each period of duty the motor remains at zero current until the winding has cooled down to the coolant temperature.

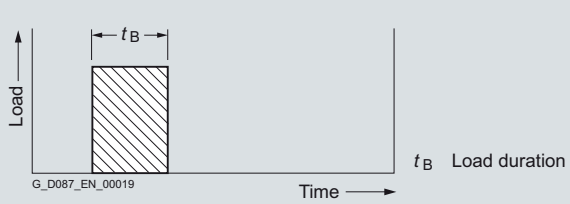

Operating mode S2 · Short-time duty

Operating mode **S3**:

Intermittent duty

Starting does not affect the temperature. Unless any agreement is made to the contrary, the cycle duration is 10 minutes. Values of 15 %, 25 %, 40 %, and 60 % are recommended for the cyclic duration factor.

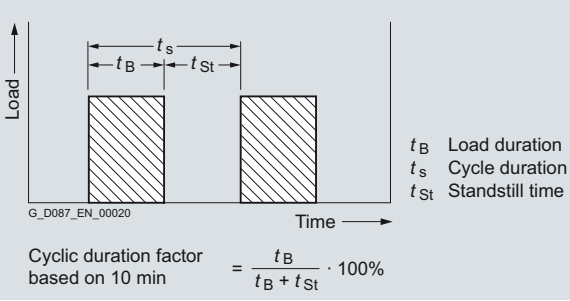

Operating mode S3 · Intermittent periodic duty

Operating mode **S6**:

Continuous duty with intermittent loading

Unless any agreement is made to the contrary, the cycle duration here is also 10 minutes. Values of 15 %, 25 %, 40 %, and 60 % are recommended for the load duration factor.

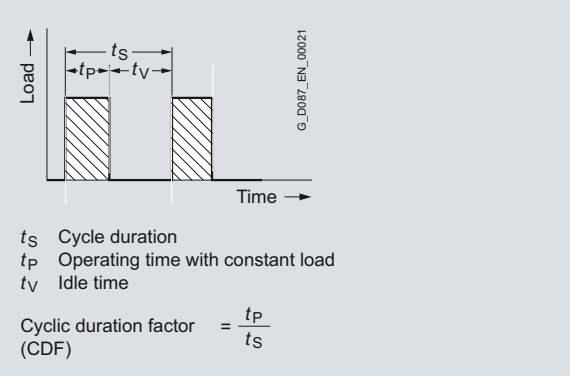

© Siemens AG 2011

Determining the operating mode (continued)

Operating mode **S10**:

Duty with discrete constant loads

In this mode a maximum of four discrete loads are available, of which each load achieves the thermal steady state.
A load of the same value as the one used in S1 operating mode should be selected for this operating mode.

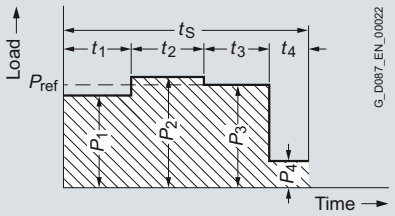

P_i Constant load within one load cycle
P_{ref} Reference load
t_S Cycle duration

Operating modes in which starting and braking have a corresponding **effect on the overtemperature of the stator winding** and of the rotor cage:

Operating mode **S4**:

Intermittent duty where starting affects the temperature

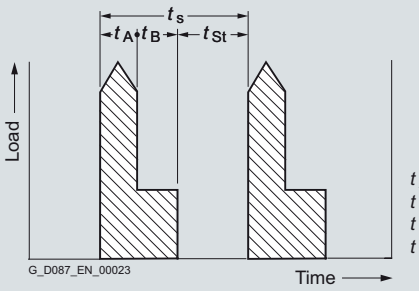

t_A Starting time
t_B Load duration
t_s Cycle duration
t_{St} Standstill time

Cyclic duration factor based on 10 min $= \frac{t_A + t_B}{t_A + t_B + t_{St}} \cdot 100\%$

Operating mode S4 · Intermittent periodic duty with starting

Operating mode **S5**:

Intermittent duty where starting and braking affects the temperature

For the **S4** and **S5 operating modes**, this code should be followed by the cyclic duration factor, the moment of inertia of the motor (J_M), and the moment of inertia of the load (J_{Load}), both based on the motor shaft.

Unless any agreement is made to the contrary, the cycle duration here is also 10 minutes. Values of 15 %, 25 %, 40 %, and 60 % are recommended for the cyclic duration factor.

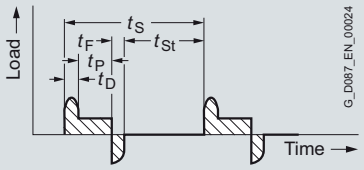

t_S Cycle duration
t_D Starting time
t_P Operating time with constant load
t_F Time with electrical braking
t_{St} Standstill time with windings at zero current

Cyclic duration factor (CDF) $= \frac{t_D + t_P + t_F}{t_S}$

Operating mode **S7**:

Continuous-operation periodic duty with starting and braking

For the S7 and S8 operating modes, the moment of inertia of the load (J_{Load}) based on the motor shaft must be known.

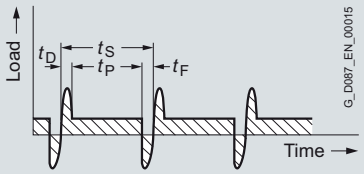

t_S Cycle duration
t_D Starting time
t_P Operating time with constant load
t_F Time with electrical braking

Cyclic duration factor = 1

© Siemens AG 2011

Determining the operating mode (continued)

Operating mode **S8**:

Continuous-operation duty with non-periodic load and speed variations (inverter-fed operation)

Most of the intermittent operating conditions which occur in real situations are a combination of the operating modes defined above. All operating conditions must be specified in order to accurately define a suitable motor.

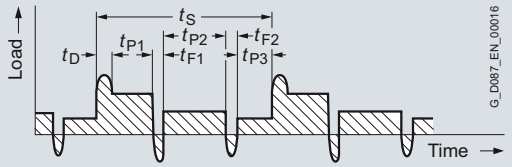

t_S Cycle duration
t_D Starting time
t_P Operating time with constant load (P1, P2, P3)
t_F Time with electrical braking (F1, F2)

Cyclic duration factor (CDF) $= \frac{t_D + t_{P1}}{t_S} \cdot \frac{t_{F1} + t_{P2}}{t_S} \cdot \frac{t_{F2} + t_{P3}}{t_S}$

Operating mode **S9**:

Continuous-operation duty with non-periodic load and speed variations (inverter-fed operation)

Most of the intermittent operating conditions which occur in real situations are a combination of the operating modes defined above. All operating conditions must be specified in order to accurately define a suitable motor.

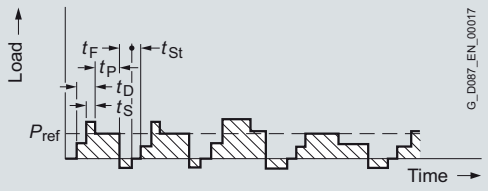

t_D Starting time
t_P Operating time with constant load
t_F Time with electrical braking
t_{St} Standstill time with windings at zero current
t_S Time with overload

Operating modes according to EN 60034 (IEC 60034-1)

Operating mode	Description	Information required		k_{DC}
S1	Continuous duty with 100 % DC	–		
S2	Constant load for brief period, e.g. S2 - 30 min	Load duration	60 min	1.10
			30 min	1.20
			10 min	1.40
S3	Intermittent periodic duty without starting (cyclic operation), e.g. S3 - 40 %	Cyclic duration factor DC in % (based on 10 min)	60 %	1.10
			40 %	1.15
			25 %	1.30
			15 %	1.40
S4 … S10	Intermittent periodic duty with starting	Cyclic duration factor DC in %, times switched on per hour, load torque, and moment of inertia The operating mode and motor power can be determined if the number of startings per hour, starting time, load duration, type of braking, braking time, idle time, cycle time, standstill time, and required power are specified.	On request	

According to the table below, the motor list powers can be converted to the lower duty cycle using the corresponding k_{DC} factors for the S1, S2, and S3 operating modes.

With enhanced performance, you should note that the breakdown torque ratio must not fall below 1.6.

$$\frac{T_{Bd}}{T_{DC}}$$

$$P_{DC} = P_{rated} \cdot k_{DC}$$
$$T_{DC} \sim T_{rated} \cdot k_{DC}$$

Code	Description	Unit
P_{DC}	Power rating for the new duty cycle	–
P_{rated}	Rated motor power	kW
k_{DC}	Factor for enhanced performance	kgm^2
T_{DC}	Torque for the new duty cycle	Nm
T_{Bd}	Breakdown torque	Nm
T_{rated}	Rated torque	Nm

© Siemens AG 2011

Coolant temperature and site altitude

The rated power specified in the selection tables in section 8 applies to continuous duty (S1) or inverter-fed operation (S9) according to IEC 60034-1 at the corresponding rated frequency, a coolant temperature of 40 °C and a site altitude of 1.000 m above sea level. Please contact us if higher coolant temperatures are to be used. The table containing correction factors provides a rough idea of derating if conditions are different.

This results in a permissible motor power of:

$$P_{perm} = P_{rated} \cdot k_{HT}$$

If the permissible motor power is no longer adequate for the drive, a check should be performed as to whether or not the motor with the next higher rated power fulfills the requirements.

Code	Description	Unit
P_{perm}	Permissible motor power	kW
P_{rated}	Rated motor power	kW
k_{HT}	Factor for abnormal coolant temperature and site altitude	–

Factor k_{HT} for different site altitudes and / or coolant temperatures

Site altitude (SA)	Coolant temperature (CT)					
m	< 30 °C	30… 40 °C	45 °C	50 °C	55 °C	60 °C
1 000	1.07	1.00	0.96	0.92	0.87	0.82
1 500	1.04	0.97	0.93	0.89	0.84	0.79
2 000	1.00	0.94	0.90	0.86	0.82	0.77
2 500	0.96	0.90	0.86	0.83	0.78	0.74
3 000	0.92	0.86	0.82	0.79	0.75	0.70
3 500	0.88	0.82	0.79	0.75	0.71	0.67
4 000	0.82	0.77	0.74	0.71	0.67	0.63

Selecting the brake

MOTOX geared motors can be supplied with fail-safe spring-operated disk brakes in order to reduce the motor's follow-on time or to hold loads, for example. Our MODULOG modular system can be used to assign / attach several brake sizes to one motor size. See Chapter 8 for information on assigning brake sizes to motor sizes, and on possible brake options.

The following information is required in order to select and check the brake:

- Speed
- Load torque
- Moments of inertia
- Number of startings

© Siemens AG 2011

Selecting the braking torque

The braking torque must be selected in accordance with the particular drive scenario. The following criteria are crucial when it comes to making this selection: static safety, required braking time, permissible deceleration rate, and possible braking distance and brake wear.

The ambient conditions and number of startings are also important. Our drive experts will be able to provide optimum brake sizing.

In principle the selection is made according to the formula:

$$T_{br} > T_x \cdot \frac{k}{\eta}$$

Where k = 1.0 - 2.5 is selected. As a general rule of thumb, the factor for horizontal motion is around 1.0 - 1.5 and for vertical motion around 2.0 - 2.5. However, the exact specification of the braking torque depends to a large extent on the particular operating conditions.

Operating time of the brake

The time it takes the motor to come to a standstill comprises the following components: the application time of the brake t_1 and the braking time t_{br}. The first is the time it takes the brake to reach 90 % of its braking torque. This time may be circuit- and actuation-dependent. This information is provided for each brake in Chapter 8. The braking time can be calculated as follows:

$$t_{br} = \frac{(J_M + J_{add} + J_x \cdot \eta) \cdot n_{br}}{9.55 \cdot (T_{br} \pm T_x \cdot \eta)} \quad [s]$$

If T_x supports the braking operation, T_x is positive, otherwise it is negative.

Braking distance and positioning accuracy

Braking distance s_{br} is the distance traveled by the driven machine during braking time t_{br} and application time t_1. The formula below applies to horizontal motion and upward vertical motion. With linear motion, a positioning accuracy of around ± 15 % can be assumed. However, this can be heavily influenced by the condition of the brake.

$$s_{br} = v \cdot 100 \cdot (t_1 + 0.5 \cdot t_{br}) \quad [mm]$$

Braking energy per braking operation

The braking energy W per braking operation comprises the energy of the moments of inertia to be braked and the energy which must be applied in order to brake against a load torque:

$$W = \frac{T_{br}}{T_{br} \pm T_x \cdot \eta} \cdot \frac{(J_M + J_{perm} + J_x \cdot \eta) \cdot n_{br}^2}{182.5}$$

T_x is positive if the load torque is working against the braking torque
(horizontal motion, upward vertical motion).

T_x is negative if it supports the braking operation
(downward vertical motion).

The permissible operating energy Q_{perm} must be checked against the relevant number of startings using the "Permissible operating energy" diagram (see Chapter 8). This is of particular importance for emergency-stop circuits.

$$W < Q_{perm}$$

Code	Description	Unit
T_{br}	Rated braking torque	Nm
T_x	Load torque	Nm
k	Factor for taking operating conditions into account	kgm²
η	Efficiency	%
t_{br}	Braking time	s
t_1	Application time of the brake	ms
J_{mot}	Moment of inertia of the motor	kgm²
J_{add}	Additional moment of inertia (e.g. centrifugal mass or high inertia fan)	kgm²
J_x	Reduced moment of inertia of the load	kgm²
n_{br}	Braking speed	rpm
s_{br}	Braking distance	mm
W	Friction energy per braking operation	J
Q_{perm}	Permissible operating energy	J
L_{rated}	Service life of the brake lining until readjustment	h
$L_{ratedmax}$	Service life of the brake lining until replacement = total service life	h
v	Conveying speed	m/s
W_V	Friction energy until the brake is adjusted	MJ
W_{tot}	Friction energy until the brake lining is replaced	MJ
Z	Number of startings	1/h

Brake service life

The brake lining wears due to friction, which increases the air gap and the application time of the brake. The air gap can be readjusted. The friction lining should be replaced after it has been readjusted a certain number of times.

Service life of the brake lining until readjustment:

$$L_{rated} = \frac{W_V}{W \cdot Z}$$

Service life of the brake lining until replacement:

$$L_{ratedmax} = \frac{W_{tot}}{W \cdot Z}$$

© Siemens AG 2011

Motors for inverter-fed operation

Selection of motors on the inverter

For selecting electrical drives on the inverter, the torque-speed response of the motors and the driving machine is important.

With inverter-fed operation, it is particularly important to pay attention to the torque limit curve. The torque of the driving machine must be smaller during continuous operation than the motor limit torque. The design of the motor depends to a large extent on the desired speed control range. In general, a range from 25 to 50 Hz is preferable.

The effectiveness of the self-ventilation is reduced with decreasing speed, which in turn also reduces the continuous output torque. Forced ventilation can be used to prevent the torque from decreasing.

The fan noise can increase at speeds that are higher than the rated speed of self-ventilated geared motors.
Above the frequency limit, the continuous output torque decreases (field weakening).

Bearings and bearing currents

With operation with inverters, additional bearing currents can occur. They are mainly caused by the steep voltage rises which occur during switching. Without output filters, significant voltage variations can occur on the winding terminals. This phenomenon mainly occurs with larger machines.

EMC-compliant installation of the drive system is a basic prerequisite for preventing premature bearing damage via bearing currents.

The most important measures for reducing bearing currents:

- Use of cables with a symmetrical cable cross-section,
- Use of grounding cables with low impedance in a large frequency range (0 Hz up to approximately 70 MHz), for example, plaited copper ribbon cables, HF litz wires,
- Separate HF equipotential-bonding cable between the motor housing and the driving machine,
- Separate HF equipotential-bonding cable between the motor housing and the inverter PE busbar,
- 360° HF contacting of the cable shield on the motor housing and the inverter PE busbar. This can be achieved using EMC cable glands at the motor end and EMC shield clips at the inverter end, for example,
- Use of motor reactors,
- Common-mode filters at the inverter output,
- Insulated motor bearing at the non-drive end.
  Motors from size 280 are delivered with bearing insulation for inverter-fed operation.

Mechanical stress and grease lifetime

High speeds that exceed the rated speed and the resulting increased vibrations alter the mechanical running smoothness and the bearings are subjected to increased mechanical stress. This reduces the grease lifetime and the bearing service life. More detailed information is available on request.

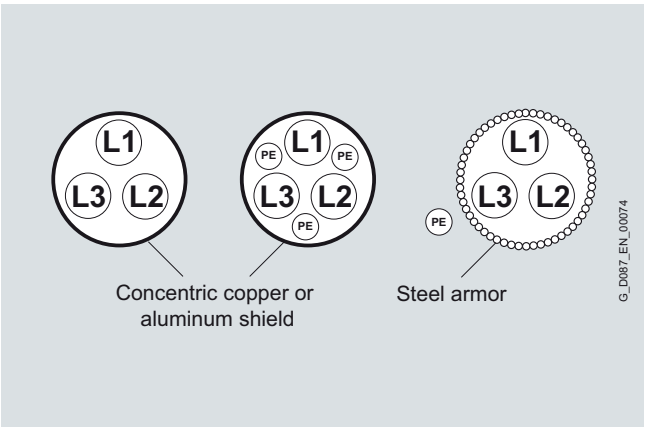

© Siemens AG 2011

Determining the permissible number of startings Z_{perm}

A high number of startings means that the motor winding will be subject to a thermal load. The permissible no-load operating Z_0 for brake motors is specified in the no-load operating tables. The permissible number of startings Z_{perm} has to be determined for different operating cases. This value is influenced by the corresponding load torque, any additional moment of inertia, the power requirement, and the cyclic duration factor. These can be evaluated using the factors k_M, k_{FI}, and k_P.

$$Z_{perm} = Z_0 \cdot k_M \cdot k_{FI} \cdot k_P$$

Code	Description	Unit
J_{mot}	Moment of inertia of the motor	kgm^2
J_{add}	Additional moment of inertia (e.g. centrifugal mass or high inertial fan)	kgm^2
k_M	Factor for taking the counter torque during acceleration into account	–
k_{FI}	Factor for taking the additional moment of inertia into account	–
k_P	Factor for taking the required power and duty cycle into account	–
T_{rated}	Rated torque of the motor	Nm
T_H	Acceleration torque of the motor	Nm
P_{rated}	Rated motor power	kW
Z_{perm}	Permissible number of startings	rph
Z_0	No-load operating from the list	rph

During operation at 60 Hz, the calculated permissible number of startings Z_{perm} must be reduced by 25 %. See the technical data for brakes found in Chapter 8 for the permissible number of startings during operation with function rectifiers.

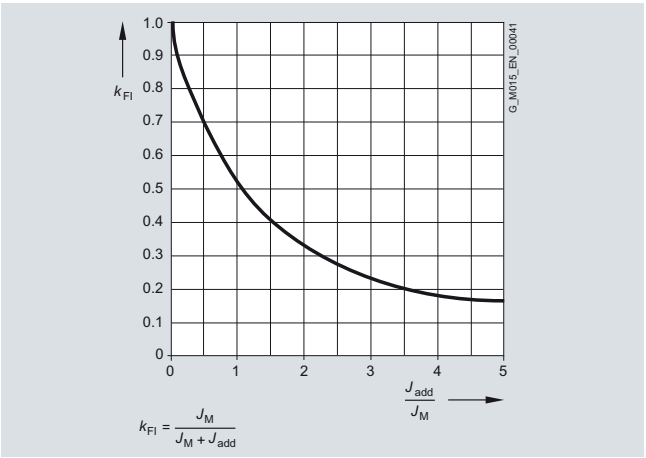

Additional moment of inertia

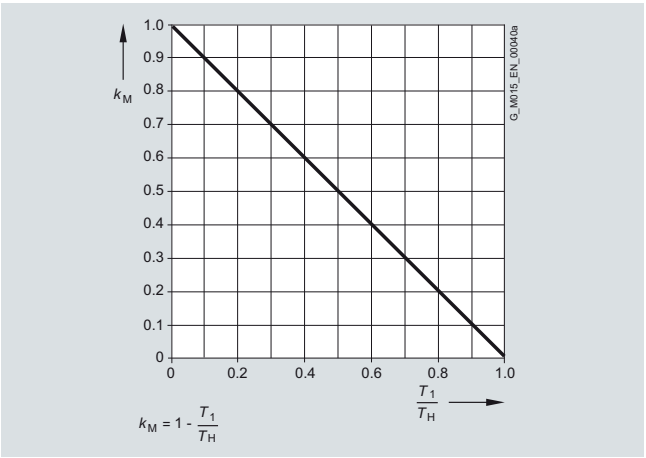

Torque during acceleration

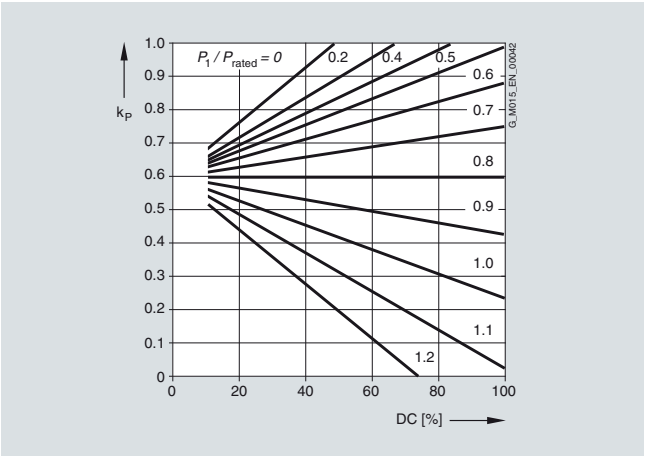

Required power and duty cycle

© Siemens AG 2011

Checking the input torque for mounted units

Geared motors are usually integrated, i.e. they are mounted on the gearbox directly and the products are supplied as complete drives. Alternatively, the gearboxes can also be supplied with various input units for motor mounting. The criteria below must be taken into account, particularly for special motors.

Maximum input speed

We recommend that four-pole motors are mounted in order to achieve optimum gearbox service life. Higher input speeds can have an effect on bearing service life and the thermal properties of the gearbox, among other things.
See the section titled "Maximum speed", page 1/22.

Permissible radial force of the input shaft

Input units A and P can be powered by a V belt drive, for example. This results in a radial load on the input shaft. The permissible radial forces are specified in the section titled "Input unit".

Maximum input torque

The input units are primarily designed for four-pole standard three-phase AC motors. Considerably higher motor torques, which are above the maximum permissible input torque, may occur with special motors.

First of all, the continuous torque T_{1mot} of the motor and the permissible input torque of the input unit T_1 must be checked, along with the maximum torques (starting, breakdown, and braking). The torques for input units are specified in the section titled "Input unit". Please contact us if you have any questions.

$$T_{1mot} < T_1 = \frac{P_1 \cdot 9550}{n_1}$$

$$T_{1max} < 2.5 \cdot T_1$$

Code	Description	Unit
T_1	Permissible input torque of the input unit	Nm
T_{rated}	Rated torque of the motor	Nm
T_{1max}	Temporarily permissible max. input torque of the input unit	Nm
n_1	Input speed of the motor	rpm
P_1	Input power of the motor	kW

© Siemens AG 2011

Overview of drive sizing data

Code	Description	Unit
a	Gearbox constant	kNmm
b, d, l, y, z	Gearbox constants	mm
C	Factor	–
d	Diameter of the input element	mm
DC	Cyclic duration factor (CDF)	%
f_{Btot}	Service factor of the driving machine	–
f_B	Service factor of the geared motor	–
F_{ax}	Axial force at d	N
F_r	Radial force at the output shaft	N
F_{Ravail}	Available radial force resulting from the output torque and the diameter of the output element	N
F_{Rperm}	Permissible radial force at the center of shaft extension (l/2)	N
F_{xperm1}	Permissible radial force, limited by the bearing service life, at a distance of x from the shaft shoulder	N
F_{xperm2}	Permissible radial force, limited by the shaft strength, at a distance of x from the shaft shoulder	N
i	Gearbox ratio	–
J_2	Moment of inertia based on the output speed of the gearbox	kgm^2
J_B	Moment of inertia of the brake	kgm^2
J_{Load}	All external moments of inertia (based on the motor shaft)	kgm^2
J_M	Moment of inertia of the motor	kgm^2
J_x	Reduced moment of inertia of the load	kgm^2
J_{add}	Additional moment of inertia (e.g. centrifugal mass or high inertia fan)	kgm^2
J_{Fan}	Centrifugal mass fan of handwheel	kgm^2
k	Factor for taking operating conditions into account	–
k_{DC}	Factor for enhanced performance	–
k_{FI}	Factor for taking the additional moment of inertia into account	–
k_{HT}	Factor for abnormal coolant temperature and site altitude	–
k_M	Factor for taking the counter torque during acceleration into account	–
k_P	Factor for taking the required power and duty cycle into account	–
L_{rated}	Service life of the brake lining until readjustment	h
$L_{ratedmax}$	Service life of the brake lining until replacement	h
m_{AF}	Mass acceleration factor	–
n_1	Input speed of the gearbox	rpm
n_2	Output speed of the gearbox	rpm
n_{br}	Braking speed	rpm

Code	Description	Unit
P_{2m}	Input power of the motor	kW
P_2	Output power of the gearbox	kW
P_{DC}	Power rating for the new duty cycle	kW
P_{req}	Required input power	kW
P_{rated}	Rated motor power	kW
P_{perm}	Permissible motor power	kW
Q_{perm}	Permissible operating energy	J
r	Radius of the output element	m
s_{br}	Braking distance	m
t_1	Application time of the brake	ms
t_{br}	Braking time	s
T_1	Permissible input torque of the input unit	Nm
T_{rated}	Rated torque of the motor	Nm
T_{1max}	Temporarily permissible max. input torque of the input unit	Nm
T_2	Output torque of the geared motor	Nm
T_{2req}	Required output torque of the driving machine	Nm
T_{2rated}	Nominal output torque of the geared motor	Nm
T_{br}	Rated braking torque	Nm
T_{DC}	Torque for the new duty cycle	Nm
T_{req}	Required torque	Nm
T_H	Acceleration torque of the motor	Nm
T_{Bd}	Breakdown torque	Nm
T_{rated}	Nominal torque	Nm
T_{avail}	Available torque of the geared motor	Nm
T_x	Load torque	Nm
v	Conveying speed	m/s
W	Friction energy per braking operation	J
W_{tot}	Friction energy until the brake lining is replaced	MJ
W_V	Friction energy until the brake is adjusted	MJ
Z	Number of startings	1/h
Z_{perm}	Permissible number of startings	1/h
Z_0	No-load operating from the list	1/h
α	Angle of action of the radial force	°
η	Efficiency	%
ϑ_{amb}	Ambient temperature	°C

© Siemens AG 2011

Important drive technology variables

SI unit Variable	Abbreviation		Unit abbreviation		Designation or conversion rate *)
	SI	Previously	SI	Previously	
Length (distance)	l	L, s	m	m	1 km = 1.000 m
Area	A	F	m^2	m^2	1 m^2 = 100 dm^2
Volume	V	V	m^3	m^3	1 m^3 = 1.000 dm^3 1 dm^3 = 1 l
Plane angle	α, β, γ	α, β, γ	rad	Degrees °	1 rad = 1 m/m 1 L = π/2 rad 1° = π/180 rad
Rotation angle	ϕ	φ		Degrees °	1' = 1°/60; 1'' = 1'/60
Time					1 min = 60 s 1 h = 60 min
Time range	t	t	s	s	1 d = 24 h
Duration					1 a = 24 h
Frequency	f	f	Hz	1/s	1 Hz = 1/s
Speed	n	n	rpm	rev/min	Revolutions per minute
Velocity	v	v	m/s	m/s	1 km/h = $\frac{1}{3.6}$ m/s
Acceleration Free-fall acceleration	a g	b g	m/s^2	m/s^2	g = 9.81 m/s^2
Angular velocity	ω	Ω	rad/s	1/s	
Angular acceleration	α	ξ	rad/s^2	$1/s^2$	
Mass	m	m	kg	kg	1
Density		d	kg/dm^3	kg/dm^3	10^3
Force Weight force	F G	P, K G	N	kp	9.81 1 N = 1 kg · 1 m/s^2
Pressure Mechanical tension	p σ	p σ	Pa N/m^2 N/mm^2	 kp/cm^2 kp/mm^2	1 Pa = 1 N/m^2 9.81 · 10^4 9.81
Work Energy Quantity of heat	W W Q	A E Q	 J 	kpm kcal 	9.81 4.187 1 J = 1 Nm = 1 Ws
Force torque Torque Bending torque	 T 	M_t M_d M_b	 Nm 	 kpm 	9.81 1 Nm = 1 J
Power rating	P	N	W	PS	735.5; 1 W = 1 J/s = 1 Nm/s = $\frac{kgm^2}{s^3}$
Moment of inertia	J	θ	kgm^2	kpm^2	9.81

*) The numerical value of a variable in previously used units multiplied by the conversion rate gives the numerical value of the variable in the SI unit.

Conversion between kW and hp:

1 kW = 1.34102 hp

1 hp = 0.745700 kW

1 hp = 1.01387 PS

hp = horse power (US)
PS = Pferdestärke

© Siemens AG 2011

Important drive technology variables (continued)

SI unit Variable	Abbreviation		Unit abbreviation		Designation or conversion rate *)
	SI	Previously	SI	Previously	
Dynamic viscosity	η	η	Pa · s	P	10^{-1}
Kinematic viscosity	υ	υ	m^2/s	St	10^{-4}
Electrical current intensity	I	I	A	A	1 A = 1 W/V = 1 V/Ω
Electrical voltage	U	U	V	V	1 V = 1 W/A
Electrical resistance	R	R	Ω	Ω	1 Ω = 1 V/A = 1/S
Electrical conductance	G	G	S	S	1 S = 1/Ω
Electrical capacitance	C	C	F	F	1 F = 1 C/V
Electric charge	Q	Q	C	C	1 C = 1 A · s
Inductance	L	L	H	H	1 H = 1 Vs/A
Magnetic flux density Induction	B	B	T	G	10^4 1 T = 1 Wb/m^2
Magnetic field strength	H	H	A/m	A/m	
Magnetic flux	ϕ	ϕ	Wb	M	10^8 1 Wb = 1 V · s
Temperature	T(ϑ)	t	K(°C)	°C	0 K = -273.15 °C

*) The numerical value of a variable in previously used units multiplied by the conversion rate gives the numerical value of the variable in the SI unit.

© Siemens AG 2011

Overview

MOTOX geared motors are available in an almost infinite number of combinations for adaptation to a wide range of drive scenarios. All the usual additional components and variants are also offered.

Made-to-measure solutions for all kinds of drive technology tasks are achieved with different gearbox types (helical, parallel shaft, bevel helical, helical worm, and worm), combined with motors by means of modular mounting technology.

Designs in accordance with standards and specifications

New efficiency classes and efficiences according to IEC 60034-30:2008 and IEC 60034-2-1:2007

New efficiency classes according to IEC 60034-30:2008

Different energy efficiency standards exist worldwide for asynchronous motors. To promote international harmonization, the international standard IEC 60034-30:2008 (Rotating electrical machines – Part 30: Efficiency classes of single-speed, three-phase, cage-induction motors (IE code)) was created. This groups low-voltage asynchronous motors into new efficiency classes (valid since October 2008). The efficiencies of IEC 60034-30:2008 are based on losses determined in accordance with the IEC 60034-2-1:2007 standard. This has been valid since November 2007 and will replace the previous standard IEC 60034-2:1996 as of November 2010. The supplementary losses are now measured and no longer added as a percentage.

New standard classes for efficiencies
A new nomenclature applies to the new efficiency classes (IE = International Efficiency):

- IE1 (Standard Efficiency)
- IE2 (High Efficiency)
- IE3 (Premium Efficiency)

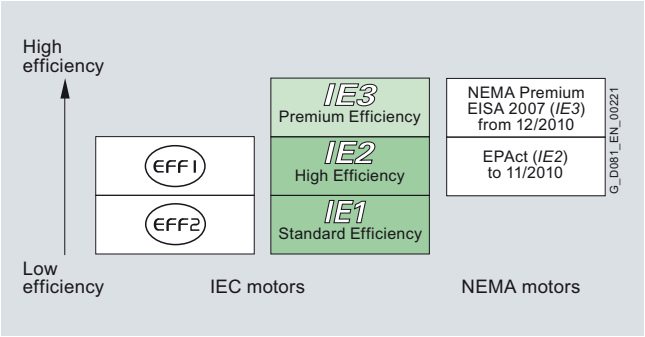

New efficiency classes

New measuring method according to IEC 60034-2-1:2007

With the new measuring method, the supplementary losses are no longer applied as a percentage (0.5 %), but instead they are determined with measurements (IEC 60034-2-1: 2007). The nominal efficiencies are therefore reduced from EFF1 to IE2 and from EFF2 to IE1, even though there have been no technical or physical changes to the motors.

Previously: P_{LL} = 0.5 % of *P* added

Now: P_{LL} = individual measurement

P_{LL} = load-dependent supplementary losses.

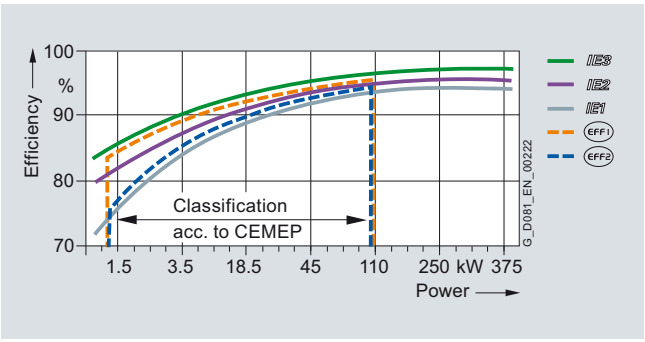

IE1 to IE3 efficiencies 4-pole 50 Hz

The following table shows examples of the efficiency values according to the new and old loss calculating methods.

	EFF measuring method (incl. percentage losses) EN / IEC 60034-2:1996 50 Hz	Losses determined according to IEC 60034-2:2007 50 Hz	Losses determined according to IEC 60034-2:2007 60 Hz
5.5 kW 4-pole	89.2 %	87.7 %	89.5 %
45 kW 4-pole	93.9 %	93.1 %	93.6 %
110 kW 4-pole	Not defined	94.5 %	95.0 %

Background information

The EuP directive (Energy Using Products) is implemented in the national laws of EU member countries. The framework conditions for the European directives have already been agreed. EU directive 2005/32/EC (= EuP directive) is based on IEC 60034-30:2008 with regard to the minimum efficiency values.

This directive is implemented in Germany in the form of the so-called "Energiebetriebene-Produkte-Gesetz" (EBPG - Energy Using Products Directive).

© Siemens AG 2011

Designs in accordance with standards and specifications (continued)

The most important changes at a glance:

	CEMEP voluntary EU agreement	NEMA	EuP directive based on IEC 60034-30:2008 standard EuP = Energy Using Products
Description	Voluntary agreement between the EU commission and the European sector committee of manufacturers of electrical machines (CEMEP)	The current legislature in USA/CAN/MX also governs efficiencies	The EuP directive must be implemented in national law in all EU countries. The determination of losses, and therefore of efficiency classes, is based on IEC 60034-2-1:2007
Number of poles	2, 4	2, 4, 6	2, 4, 6
Performance range	1.1 – 90 kW	0.75 – 150 kW	0.75 – 375 kW
Level	Standard – EFF3 Enhanced efficiency – EFF2 Highly efficient – EFF1	High Efficiency NEMA Premium	Standard Efficiency – IE1 High Efficiency – IE2 Premium Efficiency – IE3
Voltage	400 V, 50 Hz	230 / 460 V, 60 Hz	< 1000 V, 50 / 60 Hz
Degree of protection	IP5X	Open + closed motors	All
Motors with brake	NO	YES	In agreement
Geared motors	NO	NO	YES
Ex motors	NO	YES	EuP directive – NO IEC 60034-30 – YES (but explosion protection always has a higher priority)
Law	Voluntary agreement; will be replaced on implementation of the national measures.	Up to 11/2010 EPACT (IE2) From 12/2010 EISA 2007 Premium (IE3) minimum efficiency	IEC 600034-30 standard, valid since October 2008, EuP

For more information on EuP:

- Excluded: Explosion-proof motors according to ATEX, brake motors, smoke-extraction motors
- Deadline 16 June 2011: IE2 minimum efficiency for motors from 0.75 kW to 375 kW
- Deadline 01 January 2015: IE3 minimum efficiency for motors from 7.5 kW to 375 kW or a combination of IE2 motor and frequency converter
- Deadline 01 January 2017: IE3 minimum efficiency for all motors from 0.75 kW to 375 kW or a combination of IE2 motor and frequency converter

Abbreviations

CEMEP – Comité Européen de Constructeurs de Machines Électriques et d'Électronique de Puissance (European sector committee of manufacturers of electrical machines)

EISA 2007 – Energy Independence and Security Act of 2007

EPACT – Energy Policy Act

NEMA – National Electrical Manufacturers Association

IEC – International Electrotechnical Commission

IE – International Efficiency

What will change?

The rating plates of the motors will be adapted to the new technical data and their clarity and readability will be enhanced (for examples, see page 1/38).

For motors up to frame size 315 L, this means:

- Nominal efficiencies in accordance with the IEC 60034-30 standard are specified regardless of the actual efficiency, i.e. in accordance with the standardized performance classes such as 7.5 kW, 11 kW and 15 kW, nominal efficiencies only will be offered in accordance with efficiency class IE1 and IE2.
- The rated currents have been adapted in accordance with the new efficiencies. The motor rated currents will increase minimally (by up to 3 %).
- There is no need for a voltage range to be specified on the new rating plates. The rated voltages only are specified.

  Note: The transition period for adjustment of mains voltages with increased tolerances within the EU expired on January 1, 2008. Since then the permissible mains tolerances are 230 / 400 V ±10 %, 50 Hz and 400 / 690 V ±10 %, 50 Hz.

Summary

The standard motor series LA and LG will be converted to the new efficiency designations "IE1" and "IE2" in accordance with IEC 60034-30:2008. The order numbers will remain unchanged.

This affects all motors that were previously designated with "EFF2" and "EFF1" as well as the motor types that have been added due to the IEC 60034-30:2008 efficiency standard:

- 2-pole, 4-pole and 6-pole motors (only "single-speed motors", not pole-changing motors and not 8-pole motors)
- Output range from 0.75 kW to 375 kW

A detailed presentation of the affected motors, including their frame sizes, can be found in the overview tables in the separate catalog parts under "Orientation" in the "Selection and ordering data". The changed technical data is also listed here.

© Siemens AG 2011

Designs in accordance with standards and specifications (continued)

Example of rating plate

Due to the IE changeover, the affected motors will be equipped with new rating plates complete with the new technical data.

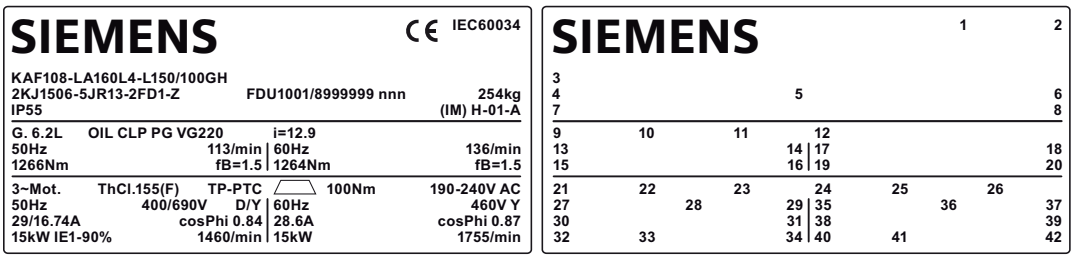

1 CE marking or, if required, other marking
2 Standard taken as a basis
3 Type - Type of construction - Size
4 Order No.
5 Serial No.
6 Weight m [kg]
7 Degree of protection acc. to IEC 60034-5 and IEC 60529
8 Mounting position (IM)
9 Oil quantity [l] main gearbox / intermediate gearbox + extruder flange
10 Kind of oil
11 Oil viscosity ISO VG Class acc. to DIN 51519 / ISO 3448
12 Total transmission ratio *i*

Frequency 1
13 Rated frequency *f* [Hz]
14 Speed at the output n_2 [rpm]
15 Torque at the output T_2 [Nm]
16 Service factor f_B

Frequency 2
17 Rated frequency *f* [Hz]
18 Speed at the output n_2 [rpm]
19 Torque at the output T_2 [Nm]
20 Service factor f_B

Motor data
21 Phase number and kind of current of the motor
22 Temperature class Th.Cl.
23 Motor protection (TP)
24 Symbols (IEC 60617-2): = Brake
25 Braking torque T_{br} [Nm]
26 Brake supply voltage *U* [V]

Frequency 1
27 Rated frequency *f* [Hz]
28 Rated voltage / rated voltage range *U* [V]
29 Circuit, graphical symbol acc. to DIN EN 60617 T6 / IEC 60617-6
30 Rated current *I* [A]
31 Power factor cos φ
32 Rated power *P* [kW], operating mode (if ≠ S1)
33 Designation of the efficiency class acc. to IEC 60034-30
34 Rated speed n_1 [rpm]

Frequency 2
35 Rated frequency *f* [Hz]
36 Rated voltage / rated voltage range *U* [V]
37 Rated current *I* [A]
38 Power factor cos φ
39 Circuit, graphical symbol acc. to DIN EN 60617 T6 / IEC 60617-6
40 Rated power *P* [kW], operating mode (if ≠ S1)
41 Designation of the efficiency class
42 Rated speed n_1 [rpm]

© Siemens AG 2011

Designs in accordance with standards and specifications (continued)

Minimum efficiencies required by law

In 1997, an act was passed in the USA to define minimum efficiencies for low-voltage three-phase AC motors (EPACT = Energy Policy Act). An act is in force in Canada that is largely identical, although it is based on different verification methods. The efficiency is verified for these motors for the USA using IEEE 112, Test Method B and for Canada using CSA-C390. Apart from a few exceptions, all low-voltage three-phase AC motors exported to the USA or Canada must comply with the legal efficiency requirements.

The law demands minimum efficiency levels for motors with a voltage of 230 and 460 V at 60 Hz, in the power range 1 to 200 hp (0.75 to 160 kW) with 2, 4, and 6 poles. Explosion-proof motors must also be included. The EPACT efficiency requirements exclude, for example:

- Motors whose size power classification does not correspond with the standard series according to NEMA MG1-12.
- Flange-mounting motors without feet
- Brake motors
- Inverter-fed motors
- Motors with design letter C and higher.

For more information on EPACT:

www.eren.doe.gov/

Special requirements for the USA: Energy Policy Act

The act lays down that the nominal efficiency at full load and a "CC" number (Compliance Certification) must be included on the rating plate.
The "CC" number is issued by the US Department of Energy (DOE).
The following information is stamped on the rating plate of EPACT motors which must be marked by law:
Nominal efficiency (service factor SF 1.15), design letter, code letter, CONT, CC no. CC 032A (Siemens), and NEMA MG1-12.

Special requirements for Canada: CSA – Energy Efficiency Verification

These motors fulfill the minimum efficiency requirements laid down by the CSA standard C390. These motors can be ordered and feature the CSA-E mark on their rating plates.

NEMA – National Electrical Manufacturing Association

Data on the rating plate:

Rated voltage range, design letter, code letter, CONT, and NEMA MG1-12.

Order code:
Design in accordance with NEMA **N65**

UL-R – Underwriters Laboratories Inc. listing

The motors are listed for up to 600 V by Underwriters Laboratories Inc. ("Recognition Mark" = R/C).

Motor voltages up to 600 V are certified in accordance with UL.

"UL Recognition Mark" is included on the rating plate of the motor.

In addition, the motor is designed to meet the NEMA MG1-12 electrical standard and includes the following data on the rating plate:
Rated voltage, nominal efficiency, design letter, code letter, CONT, and NEMA MG1-12.

Externally or internally mounted components such as:

- Motor protection
- Heating element
- External fan unit
- Brake
- Encoder
- Plug connection

are UL-R/C, CSA, or C-US listed or used by manufacturers in accordance with regulations.

UL-R/C cable glands must be used for cable entry.

Order code:
Design in accordance with UL-R **N37**

© Siemens AG 2011

Designs in accordance with standards and specifications (continued)

CSA – Canadian Standard Association

Motors are approved for up to 690 V in accordance with the Canadian regulations of the "Canadian Standard Association" (CSA). Externally or internally mounted components which are used are listed by CSA or are used by manufacturers in accordance with regulations. The CSA mark and the rated voltage are included on the rating plate.

When energy-saving motors are ordered, they also include the CSA-E mark on the rating plate.

Order code:
Design in accordance with CSA **N36**

UL-R and CSA approval

UL-R approval and CSA approval can also be ordered together for the motors.

Order code:
Design in accordance with UL-R and CSA **N38**

CCC – China Compulsory Certification

"Small power motors" which are exported to China must be certified up to a rated power of:

2-pole: ≤ 2.2 kW

4-pole: ≤ 1.1 kW

6-pole: ≤ 0.75 kW

8-pole: ≤ 0.55 kW

The **LA motors which must be certified** are certified by the CQC (China Quality Cert. Center). When one of these motors is ordered, the logo "CCC (Safety Mark)" is included on the rating plate and the packaging.

Notes:

Chinese customs checks the need for certification of imported products by means of the commodity code.

The following do not need to be certified:

- Motors imported to China which have already been installed in a machine
- Repair parts

Order code:
Design in accordance with CCC **N67**

CEEL – China Energy Efficiency Label

In June 2008 China introduced mandatory energy efficiency labeling for electric motors.

Since September 1, 2008, when the transition period expired, the applicable electrical motors could only be imported and sold in China with a valid "China Energy Efficiency Label".

The motor must be labeled with the "China Energy Efficiency Label" sticker, which states the efficiency class.

Apart from the Energy Label sticker (dimensions 80 x 54 mm) the efficiency must also be stated on the rating plate.

The labeling requirements apply to 2, 4 and 6-pole motors with a line frequency of 50 Hz and rated voltages of up to 690 V.

Efficiency classes 2 and 3 apply here to motors with a rated power of 0.55 kW to 315 kW and efficiency class 1 applies to motors with a rated power from 3 kW to 315 kW.

Order code:
Design in accordance with China Energy Efficiency Label **K69**

GOST-R conformity

The following gearboxes can be supplied, certified according to GOST-R:

- Helical gearboxes
- Bevel helical gearboxes
- Parallel shaft gearboxes
- Helical worm gearboxes
- Worm gearboxes
- CAVEX worm gearboxes

Order code:
Design in accordance with GOST **N30**

VIK version

For a VIK version, select an IEC motor from Catalog D 81.1 that can be mounted on gearboxes with an input unit K2 or K4.

© Siemens AG 2011

Explosion protection as per ATEX

In the European market ATEX Directive 94/9/EC applies to all types of equipment used in potentially explosive atmospheres - which include geared motors. It became mandatory on July 1, 2003 and has unrestricted validity for the use of all geared motors within the European Union. Other countries too have now complied with this regulation.

Helical gearboxes, parallel shaft gearboxes, bevel helical gearboxes, and helical worm gearboxes are available to comply with this Directive. A wide range of gearbox and motor designs and sizes are approved for zones 1, 2 (gases) and zones 21 and 22 (dusts).

Ex-atmosphere / Zone		Category	Frequency
G (gas and steam)	D (dust)		
0	20	1	Continuously or long-term
1	21	2	Intermittent
2	22	3	Rarely or briefly

MOTOX geared motors can be provided for categories 2 and 3.

Use in explosive atmospheres caused by gases is permissible for temperature classes T1 to T4. With use in explosive atmospheres caused by dust, the maximum temperature of 120 °C must be taken into consideration for the gearbox. An oil level sensor can be integrated for monitoring in inaccessible areas.

Motors are available in the following protection types: flameproof enclosure (Exd), flameproof enclosure and terminal box with increased safety (Exde), increased safety (Exe), and non sparking (ExnA) as well as motors for dust explosion protection.

The motors are mounted on the gearbox with an input unit K4 or K2.

© Siemens AG 2011

General technical data

Standards

The motors comply with all applicable international (IEC), European (EN, CENELEC), and national (DIN/VDE) standards:

IEC	EN / HD	DIN / VDE	Title
IEC 60027-4	EN 60027-4	DIN EN 60027-4	Letter symbols for electrical engineering, part 4: Rotating electrical machines
IEC 60034-1	EN 60034-1	DIN EN 60034-1 VDE 0530-1	Rotating electrical machines: - Rating and performance
IEC 60034-2-1	EN 60034-2-1	DIN EN 60034-2-1 VDE 0530-2-1	- Standard methods for determining losses and efficiency from tests (excluding machines for traction vehicles) (IEC 60034-2-1:2007); German version EN 60034-2-1:2007
IEC 60034-5	EN 60034-5	DIN EN 60034-5 VDE 0530-5	- Degrees of protection provided by integral design of rotating electrical machines (IP code) - Classification
IEC 60034-6	EN 60034-6	DIN EN 60034-6 VDE 0530-6	- Methods of cooling (IC code)
IEC 60034-7	EN 60034-7	DIN EN 60034-7 VDE 0530-7	- Classification of types of construction, mounting arrangements and terminal box position (IM code)
IEC 60034-8	EN 60034-8	DIN EN 60034-8 VDE 0530-8	- Terminal markings and direction of rotation
IEC 60034-9	EN 60034-9	DIN EN 60034-9 VDE 0530-9	- Noise limits
IEC 60034-12	EN 60034-12	DIN EN 60034-12 VDE 0530-12	- Starting performance of three-phase cage induction motors except for pole-changing motors
IEC 60034-14	EN 60034-14	DIN EN 60034-14 VDE 0530-14	- Mechanical vibration of certain machines with shaft heights 56 mm and higher
IEC TS 60034-17	–	DIN VDE 0530-17	- Cage induction motors when fed from converters - Application guide
IEC 60038	HD 472	DIN IEC 60038	IEC standard voltages
–	EN 50347	DIN EN 50347	General purpose three-phase induction motors having standard dimensions and outputs - Sizes 56 to 315 and flange sizes 65 to 740
IEC 60085	EN 60085	DIN EN 60085	Electrical insulation, thermal evaluation and designation
IEC 60445	EN 60445	DIN EN 60445 VDE 0197	Identification of equipment terminals and conductor terminations
IEC 60529	EN 60529	DIN EN 60529 VDE 0470-1	Degrees of protection provided by enclosures (IP code)
–	EN 50262	DIN EN 50262 VDE 0619	Cable glands for electrical installations
–	–	DIN 42925	Terminal box cable entries for three-phase cage induction motors at rated voltages from 400 V to 690 V

The main dimensions of all gearboxes comply with the following DIN standards:

DIN 747	Shaft heights for machines
DIN 748-1	Cylindrical shaft extensions; dimensions, nominal torques
DIN 42955	Concentricity of shaft extensions, concentricity and axial eccentricity of mounting flange
DIN 6885-1	Drive-type fastenings without taper action; feather key, slots, high format
DIN 332-2	Center holes in shaft ends

Fits

Flange form A, C:

b1 ≤ ø 230 = j6

b1 > ø 230 = h6

Drive-side shaft extension:

d1 < ø 55 = k6

d1 ≥ ø 55 = m6

See the dimension drawings for other fits.

© Siemens AG 2011

Degrees of protection

The geared motors are supplied with IP55 to standard IEC 60034-5. For higher degrees of protection for motors, see Chapter 8 "Motor degrees of protection".

Direction of rotation of geared motors

The geared motors are configured so the motor shaft rotates clockwise (IEC 60034-8).

The direction of rotation of the gearbox output shaft can be reversed by swapping two external connection wires on the motor.

Specifying the direction of rotation for geared motors and gearboxes with backstop

It is necessary to specify the desired direction of rotation of the output shaft when ordering a gearbox with backstop. The direction of rotation is determined by the front view of the output shaft (shaft end face). With parallel shaft, bevel helical, and helical worm gearboxes, it is again necessary to specify the side on which the output shaft is located, i.e. either "Output side A" or "Output side B". The output side is defined by specifying the mounting position.

Direction of rotation of the geared motor when viewing the output shaft

Output shaft direction of rotation order codes:

Clockwise **K18**

Counterclockwise **K19**

Clockwise

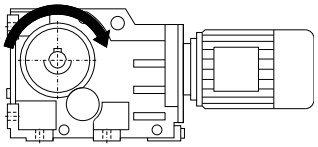

Output side A

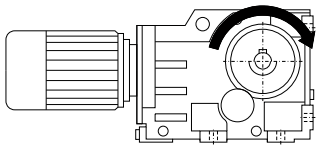

Output side B

Counterclockwise

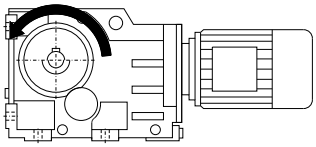

Output side A

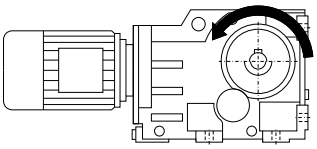

Output side B

Gearbox	Size	Gear stages	Front view	Output shaft direction of rotation	Input shaft direction of rotation
Z	38 ... 188	2	Output shaft	Clockwise	Clockwise
				Counterclockwise	Counterclockwise
D	38 ... 188	3	Output shaft	Clockwise	Counterclockwise
				Counterclockwise	Clockwise
FZ	38B ... 188B, 208	2	Drive end of output shaft	Clockwise	Clockwise
				Counterclockwise	Counterclockwise
FD	38B ... 188B, 208	3	Drive end of output shaft	Clockwise	Counterclockwise
				Counterclockwise	Clockwise
C	38 ... 88	2	Drive end of output shaft	Clockwise	Clockwise
				Counterclockwise	Counterclockwise
B	28 ... 38	2	Drive end of output shaft	Clockwise	Clockwise
				Counterclockwise	Counterclockwise
K	38 ... 88	3	Drive end of output shaft	Clockwise	Counterclockwise
				Counterclockwise	Clockwise
K	108 ... 188	3	Drive end of output shaft	Clockwise	Clockwise
				Counterclockwise	Counterclockwise
K	38 ... 188	3	Non-drive end of output shaft	Clockwise	Counterclockwise
				Counterclockwise	Clockwise

© Siemens AG 2011

1

General technical data

Power ratings and torques

The specified power ratings and torques refer to standard versions, mounting positions B3../ B5../H01 and other comparable mounting positions, whereby the first stage is not completely immersed in oil. Normal ambient conditions and standard lubrication are also required.

Speeds

The specified output speeds are guide values, rounded to the first decimal place. You can use the rated motor speed and the gearbox speed to calculate the rated drive speed.

Please note that the actual output speed will depend on the motor load and the power supply conditions.

Noise

Noise emitted by the motors during mains operation

Noise is measured in accordance with ISO 1680 in a dead room. The noise level is specified as A-weighted measuring surface sound pressure level L_{pfA} in dB (A). This value is the spatial average value of the sound pressure levels measured at the measuring surface. The measuring surface is a cube 1 m away from the surface of the motor. The sound power level is also specified as L_{WA} in dB (A).

The values specified in the motor selection tables apply to the motor without gearbox at 50 Hz (see the selection and ordering data in the corresponding sections of the catalog).
The tolerance is +3 dB. At 60 Hz, the values are approximately 4 dB (A) higher. Please enquire about noise levels for pole-changing motors, geared motors, and inverter-fed motors.

Noise emitted by the geared motors

The geared motors do not exceed the permissible noise levels defined for gearboxes in VDI guideline 2159 and for motors in IEC 60034-9.
The values L_{pA} and L_S increase in each case by a general average of 3-5 dB (A) for geared motors as compared to motors without gears.

However, there is a strong correlation between noise level and:
- gear design
- speed and transmission ratios
- mounting positions
- other influencing factors

Precise data is available on request.

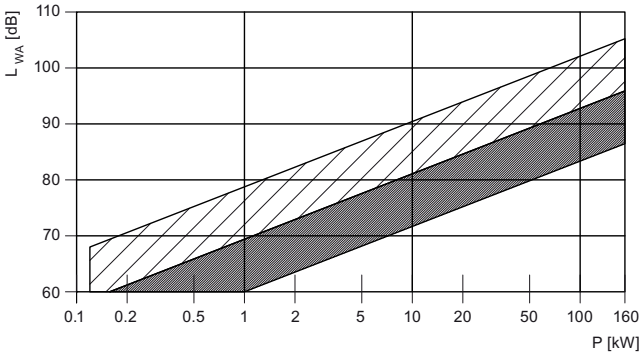

Weight of geared motors

The weight data contained in the dimension drawings are averaged values and do not take account of oil. The weights vary according to the gearbox design and size. The oil quantity depends on the mounting position.

The exact weight of the drive will be specified on the order confirmation.

Three-phase AC motors

Three-phase AC motors are designed to be perfectly coordinated with the gearbox system and can be supplied with or without a brake.

The motor series covers sizes 63 to 315.

The power ratings of the 2-, 4-, 6-, 8-, 8/2-, 8/4-, and 4/2-pole motors are classified in accordance with IEC. Pole-changing design with pole number 6/4 is available on request.
The housings of motors up to size 160 are made from high-quality aluminum alloy. Housings for sizes 180 and above are made from gray cast iron.

Brakes

The motors can be supplied with spring-operated disk brakes. These are double-disk brakes, which are spring-operated at zero current. (Safety brake)

The torque can be set within certain limits for every brake size.

© Siemens AG 2011

Lubricants

All gearboxes are filled with lubricant at the factory. The lubricants used meet the requirements of DIN 51502. The gearboxes are filled with varying oil quantities (see operating instructions and rating plate) depending on their mounting position.
If no specifications are made to the contrary, the standard lubricant is used.

Required quality of gear lubricants

The oils used in the MOTOX gearboxes are subject to stringent quality control. For MOTOX gearboxes, only CLP-quality oils are approved which contain ingredients to DIN 51517-3 for improvement of corrosion protection, resistance to ageing, and which reduce wear in mixed-friction areas. The scuffing resistance in the FZG test to DIN 51354-2 must comply with stage 12 or higher under A/8.3/90 test conditions. In the FE-8 rolling bearing test to DIN 51817 rolling element wear must be under 30 mg and cage wear under 100 mg under D-7.5/80-80 test conditions.

In addition, the lubricants must meet the following quality requirements demanded by FLENDER:

- Sufficiently high gray-staining resistance in accordance with FVA 54 gray-staining test
- Low degree of foaming with less than 15 % foam formation in the FLENDER foam test
- Suitable for the elastomer material used in the radial shaft sealing of gearboxes
- Compatible with residues of corrosion-protection agent and run-in oils
- Compatible with the paints used by Siemens in the gearbox interiors
- Compatible with liquid sealing between bolted-joint surfaces.

For a list of approved oils from different manufacturers please refer to the Operating Instructions BA 7300.

Furthermore, for use in worm gearboxes:

Low wear, high pitting resistance, and high efficiency (low temperature) in the cylindrical worm gearbox test.

For a list of approved oils from different manufacturers please refer to the Operating Instructions BA 7303.

© Siemens AG 2011

Lubricants (continued)

Lubricants for helical gearboxes E / D / Z, parallel shaft gearbox F, bevel helical gearbox K:

Area of application	Ambient temperature [1]	DIN 51 502 designation	Order code
Standard oils			
Standard temperature	-10 … +40 °C	CLP ISO VG220	**K06**
Improved oil service life	-20 … +50 °C	CLP ISO PG VG220	**K07**
High temperature usage	0 … +60 °C	CLP ISO PG VG460	**K08**
Low temperature usage	-40 … +40 °C	CLP ISO PAO VG220	[2]
Lowest temperature usage	-40 … +10 °C	CLP ISO PAO VG68	[2]
Physiologically safe oils (for use in the food industry) in acc. with NSF (USDA)-H1			
Standard temperature	-30 … +40 °C	CLP ISO H1 VG460	**K11**
Biologically degradable oils			
Standard temperature	-20 … +40 °C	CLP ISO E VG220	**K10**

[1] Recommended
[2] On request

Lubricants for bevel helical gearbox B and helical worm gearbox C:

Area of application	Ambient temperature [1]	DIN 51 502 designation	Order code
Standard oils			
Standard temperature	0 … +60 °C	CLP ISO PG VG460	**K08**
Low temperature usage	-20 … +50 °C	CLP ISO PG VG220	**K07**
Lowest temperature usage	-40 … +40 °C	CLP ISO PAO VG220	[2]
Physiologically safe oils (for use in the food industry) in acc. with NSF (USDA)-H1			
Standard temperature	-30 … +40 °C	CLP ISO H1 VG460	**K11**
Biologically degradable oils			
Standard temperature	-20 … +40 °C	CLP ISO E VG220	**K10**

[1] Recommended
[2] On request

Lubricants for worm gearbox S:

Area of application	Ambient temperature [1]	DIN 51 502 designation	Order code
Standard oils			
Standard temperature	0 … +60 °C	CLP ISO PG VG460	**K08**
Lowest temperature usage	-40 … +40 °C	CLP ISO PAO VG 220	[2]
Physiologically safe oils (for use in the food industry) in acc. with NSF (USDA)-H1			
Standard temperature	-30 … +50 °C	CLP ISO H1 VG460	**K11**

[1] Recommended
[2] On request

The ambient temperatures are applicable for gearboxes in standard operation. The data is based on our experience with standard applications. The oil sump temperature is a decisive factor for the service life of the lubricant and depends to a large extent on the gearbox type, gearbox size, transmission ratio, mounting position, input speed, and operating mode.

The standard gearbox version can be used in the range -20 °C to +40°C. Operation outside this range requires a variety of measures. Please contact us.

The data on usage in high, low, and lowest temperature ranges only refers to the lubricant.

It may be necessary to take other design measures. Please contact us.

With low ambient temperatures, critical startup characteristics need to be taken into account.

With higher ambient temperatures (> 40 °C), the permissible oil sump temperature must not be exceeded. Please contact us if you require your drive to be thermally tested.

Long-term preservation

Helical gearboxes, parallel shaft gearboxes, bevel helical gearboxes, and helical worm gearboxes can be delivered with a long-term preservation of up to 36 months. The free shaft extensions, sealing elements, and flanges are coated with a protective layer of grease. The gearbox is completely filled with oil for long-term preservation.

See the operating instructions for information on storage and commissioning.

Order code:
Long-term preservation up to 36 months **K17**

© Siemens AG 2011

Surface treatment

We offer 5 high-quality paint systems in different hues to protect drives against corrosion and external influences.

Our corrosion protection range is available in accordance with the corrosion categories of the DIN EN ISO 12944-2 standard.

Geared motors of size 38 and above are painted in RAL 5015 (sky blue) as standard according to corrosion category C1. This ensures that they are protected against corrosion for installation in interior areas. Gearboxes of size 08,18 and 28 with an aluminum housing are supplied unpainted as standard.

For transport, the bare parts are coated with anti-corrosion paint which will last for a limited amount of time.

Overview of surface treatment

Corrosion category	Order code	Paint system	Hue	Description
Surface protection for normal environmental stress				
C1	**L02**	1-component water-based coating	Standard: 5015 On request: RAL 1003, 1007, 1012, 1018, 1023, 2000, 2004, 3000, 5007, 5009, 5010, 5012, 6011, 6018, 7001, 7011, 7016, 7030, 7031, 7032, 7035, 9005, 9006, 9010	• Indoor installation • Heated buildings with neutral atmospheres • Resistance to greases and some resistance to mineral oils, aliphatic solvents • Standard paint finish
Surface protection for minimal environmental stress				
C2	**L03**	2-component polyurethane primer 2-component polyurethane top coat	Standard: RAL 7031 On request: RAL 1003, 1012, 1018, 1023, 2004, 3000, 5002, 5007, 5009, 5010, 5012, 5015, 6011, 6018, 7000, 7001, 7011, 7030, 7032, 7035, 9005, 9006, 9010, 9011, 9016	• Indoor and outdoor installation • Unheated buildings with condensation, production areas with low humidity, e. g. warehouses and sports facilities • Atmospheres with little contamination, mostly rural areas • Resistant to greases, mineral oils and sulfuric acid (10 %), caustic soda (10 %) and some resistance to aliphatic solvents
Surface protection for medium environmental stress				
C3	**L04**	2-component polyurethane primer 2-component polyurethane top coat	Standard: RAL 7031 On request: RAL 1003, 1012, 1018, 1023, 2004, 3000, 5002, 5007, 5009, 5010, 5012, 5015, 6011, 6018, 7000, 7001, 7011, 7016, 7030, 7031, 7032, 7035, 9005, 9006, 9010, 9011, 9016	• Indoor and outdoor installation • Production areas with high levels of humidity and some air pollution, e. g. plants for food manufacturing, dairies, laundries and breweries • Urban and industrial atmospheres, moderate contamination from sulfur dioxide, coastal areas with low salt levels • Resistant to greases, mineral oils, aliphatic solvents, sulfuric acid (10 %), caustic soda (10 %)
Surface protection for high environmental stress				
C4	**L20**	2-component epoxy zinc phosphate primer 2-component polyurethane top coat	Standard: RAL 7031 On request: RAL 1003, 1012, 1018, 1023, 2004, 3000, 5002, 5007, 5009, 5010, 5012, 5015, 6011, 6018, 7000, 7001, 7011, 7016, 7030, 7031, 7032, 7035, 9005, 9006, 9010, 9011, 9016	• Indoor and outdoor installation • Chemical plants, swimming pools, wastewater treatment plants, electroplating shops, and boathouses above seawater • Industrial areas and coastal areas with moderate salt levels • Resistant to greases, mineral oils, aliphatic solvents, sulfuric acid (10 %), caustic soda (10 %)
Surface protection for extremely high environmental stress				
C5	**L05**	2-component epoxy zinc phosphate primer 2-component epoxy iron mica 2-component polyurethane top coat	Standard: RAL 7031 On request: RAL 1003, 1012, 1018, 1023, 2004, 3000, 5002, 5007, 5009, 5010, 5012, 5015, 6011, 6018, 7000, 7001, 7011, 7016, 7030, 7031, 7032, 7035, 9005, 9006, 9010, 9011, 9016	• Indoor and outdoor installation • Buildings and areas with almost constant condensation and with heavy pollution, e. g. malt factories and aseptic areas • Industrial areas with high humidity and aggressive atmosphere, coastal areas and offshore environments with high salt levels • Resistant to greases, mineral oils, aliphatic solvents, sulfuric acid (10 %), caustic soda (20 %)

© Siemens AG 2011

Surface treatment (continued)

Corrosion category	Order code	Paint system	Hue	Description
Primed according to corrosion category C2 G				**Repaintability with *)**
C2 G	**L01**	2-component polyurethane primer		• 2-component polyurethane paint, 2-component epoxide paint and acid hardening paint, 2-component acrylic paint
Primed according to corrosion category C4 G				**Repaintability with *)**
C4 G	**L09**	2-component epoxy zinc phosphate primer		• 2-component polyurethane paint, 2-component epoxide paint and acid hardening paint, 2-component acrylic paint
Unpainted				**Repaintability with *)**
C1 G	**L00**			• Plastic paint, synthetic resin paint, oil paint, 2-component polyurethane paint, 2-component epoxide paint
Special pre-treatment before painting				
	L19			• For special requirements for the surface treatment and priming of drives, especially as a primer and intermediate coating for surface protection under severe environmental stress

* Note:
Information about repaintability is not a guarantee of the quality of the paint product purchased from your supplier. Only the paint manufacturer is liable for the quality and compatibility.

Order codes for RAL colors:

5015 Sky blue (standard)	**L50**
7011 Steel gray	**L51**
7031 Blue gray	**L53**
7035 Light gray	**L54**
7030 Stone gray	**L55**

The colors listed above can be specified using order code Y80 and the RAL color code in plain text.

Example: Reseda green (RAL6011)

Order code: **Y80**

Plain text: **Y80*RAL @ 6011***

Increased protection against humidity and tropical climate

Increased protection against humidity and tropical climate can be supplied as an option for (geared) motors of frame sizes 71 to 200L. This version is designed for humidity in the range from 30 to 60 g water per m^3 air depending on the temperature (see page 8/26). This version comprises a surface treatment for corrosion category C2 (**L03**), increased humidity and acid protection for the winding (**N54**), motor-internal corrosion protection (**N41**) and temperature class (155) F.

Combination with increased acid and alkali protection is not possible.

If function expansions (brakes, backstop, encoder systems) are required on the motor, consultation with the manufacturer is necessary beforehand.

Increased protection against humidity and tropical climate is not possible together with worm geared motors S.

Order code:

Increased protection against humidity and tropical climate **N43**

Increased protection against acid and alkali

Increased protection against acid and alkali can be supplied as an option for (geared) motors of frame sizes 71 to 200L. This version is suitable for city and industrial atmospheres with moderate pollution with sulfur dioxide, coastal areas with low salt levels and aggressive atmospheres with up to 1 % concentrations of acids or alkalis. This version comprises a surface treatment for corrosion category C3 (**L04**), increased humidity and acid protection for the winding (**N54**), motor-internal corrosion protection (**N41**), temperature class (155) F and pressure ventilation in the gearbox (**G45**).

Combination with increased humidity and tropical climate protection is not possible.

If function expansions (brakes, backstop, encoder systems) are required on the motor, consultation with the manufacturer is necessary beforehand.

Increased protection against acid and alkali is not possible together with worm geared motors S.

Order code:

Increased protection against acid and alkali **N44**

© Siemens AG 2011

Rating plate

The rating plates of the gearboxes or geared motors are made of coated aluminum foil. They are covered by a special adhesive foil which gives them permanent resistance to ultraviolet rays and a variety of other substances (oils, greases, salt water, cleaning agents, etc.).

The adhesives and materials have been specially selected to ensure reliable adhesion and good legibility for the service life of the product, even when it is operated at the boundaries of the permissible temperature range (-40 °C ... +155 °C).

In accordance with DIN EN 60034-1, the total weight (as of approximately 30 kg) is specified on the rating plate for all geared motors.

The rating plate is labeled in international format as standard.

For geared motors with motors up to and including size 200, the rating plate is mounted on an aluminum support plate which is attached to the motor.

In the case of gearboxes without motor and geared motors with motor of size 225 to 315, the rating plate is attached to the gearbox housing.

Motors of ≥ size 225 also have a rating plate with the motor data.

Rating plate on stainless steel support plate

For geared motors with motors up to and including size 200, the rating plate can also be attached to a stainless steel support plate.

Order code:

Rating plate on stainless steel support plate **K26**

2nd rating plate enclosed separately

An additional rating plate can be supplied as a separately enclosed item for all gearboxes and geared motors.

Order code:

2nd rating plate, enclosed separately **K41**

2nd rating plate mounted

On request, the 2nd rating plate can be supplied mounted to the motor for geared motors with motors up to and including size 200.

Order code:

2nd rating plate, mounted **K68**

Example of a rating plate:

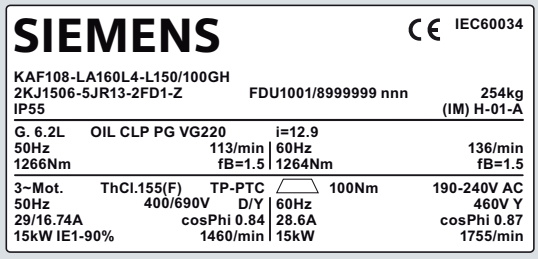

Documentation

The geared motors are supplied with the following documentation as standard:

- Commissioning guide (paper) English/German
- Manual Collection (on CD) with all operating instructions in Czech, Dutch, English, French, German, Italian, Russian, Spanish, and Swedish.

The following documents are optionally available:

- Circuit diagram of motor
- Certificate of compliance with the order EN 10204-2.1 and works test certificate EN 10204-2.2 for the geared motor on request
- Works test certificate EN 10204-2.2 for the material on request
- Works test certificate EN 10204-3.1 for the gearbox, tests carried out on:
  - Output shaft diameter
  - The concentricity of the output shaft
  - The concentricity of input shaft (for solo gearboxes only, input units A and P)
  - The input shaft diameter (for solo gearboxes only, input units A and P)
  - Noise (subjective evaluation) The concentricity of the input shaft (for solo gearboxes only)
- Works test certificate EN 10204-3.1 for motors, tests carried out on:
  - The 3 no-load currents of the 3 phases
  - The power loss during no-load operation
  - The no-load speed.

© Siemens AG 2011

1

Notes

© Siemens AG 2011

Helical geared motors

2



Orientation
2/2 Overview
2/4 Modular system

General technical data
2/5 Permissible radial force

Geared motors up to 200 kW
2/8 Selection and ordering data

Transmission ratios and maximum torques
2/93 Selection and ordering data

Mounting types
2/116 Selection and ordering data

Shaft designs
2/117 Selection and ordering data

Flange-mounted designs
2/118 Selection and ordering data

Mounting types and mounting positions
2/119 Selection and ordering data

Special versions
2/130 Lubricants
2/130 Oil level control
2/131 Gearbox ventilation
2/131 Oil drain
2/132 Sealing
2/133 Radially reinforced output shaft bearings
2/133 Agitator flange in dry-well design

Dimensions
2/134 Dimension drawing overview
2/136 Dimension drawings

© Siemens AG 2011

Orientation

Overview



Helical gearbox E



Helical gearbox D/Z

MOTOX helical gearboxes are part of the MOTOX modular system. With bevel helical, parallel shaft, helical worm or variable speed gearboxes, three-phase motors with and without brakes, this system covers all possible drive combinations, right up to the electronic variable speed drive.

MOTOX helical gearboxes are designed for continuous duty. The gearbox housings made of gray cast iron or aluminium are developed in 3D CAD and have an optimized structure in terms of rigidity and vibration absorption. Radial shaft seals with dust-protection lips prevent oil from leaking out of the housing, dust and water from entering it. All the gear wheels are milled and their surfaces hardened. The tooth flanks are ground or honed so that they are convex and corrected in terms of the profile.

MOTOX helical gearboxes are of 1-stage, 2-stage and 3-stage design. The MOTOX helical gearbox series can be supplied in foot-mounted or flange-mounted design for mounting in any position. Flange housings can be supplied with an integrated housing flange (C type). Combined foot / flange-mounted design or foot-mounted housings with housing flange are available on request.

© Siemens AG 2011

Overview (continued)

The helical gearboxes are designated as follows:

Gearbox type:

(-) Helical gearboxes

Transmission stage
- **E** 1-stage
- **Z** 2-stage
- **D** 3-stage

Type:

Shaft
- (-) Solid shaft

Mounting
- (-) Foot-mounted design
- **F** Flange-mounted design (A-type)
- **Z** Housing flange (C-type)
- **R** Agitator flange
- **K** Cooling tower flange [1)]

Connections
- (-) Feather key

Special features
- **W** Reduced-backlash version

Type of intermediate gearbox

(-) Helical gearboxes

Transmission stage
- **Z** 2-stage
- **D** 3-stage

Input unit

- **K2** Coupling lantern with flexible coupling for connecting an IEC motor
- **K2TC** Coupling lantern with flexible coupling for connecting a NEMA motor [1)]
- **K4** Short coupling lantern with clamp connection for connecting an IEC motor
- **K5** Short coupling lantern with clamp connection for connecting a NEMA motor [1)]
- **KQ** Lantern for servomotor with feather key and zero-backlash flexible coupling for connecting a servomotor
- **KQS** Lantern for servomotor without feather key and zero-backlash flexible coupling for connecting a servomotor
- **A** Input unit with free input shaft
- **A5** Input unit with free input shaft (NEMA design) [1)]
- **P** Input unit with free input shaft and piggy back for connecting an IEC motor
- **P5** Input unit with free input shaft and piggy back for connecting a NEMA motor [1)]
- **PS** Input unit with free input shaft and piggy back with protection cover

Example:

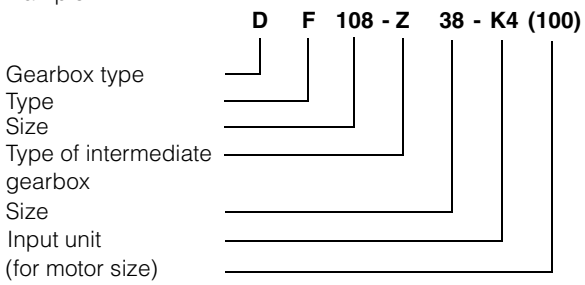

The series currently comprises 11 sizes for D and Z gearboxes and 7 sizes for E gearboxes.

E gearboxes are available as 1-stage, Z gearboxes as 2-stage and D gearboxes as 3-stage.

[1)] These designs can be selected from our MOTOX Configurator electronic catalog.

© Siemens AG 2011

Orientation

Modular system

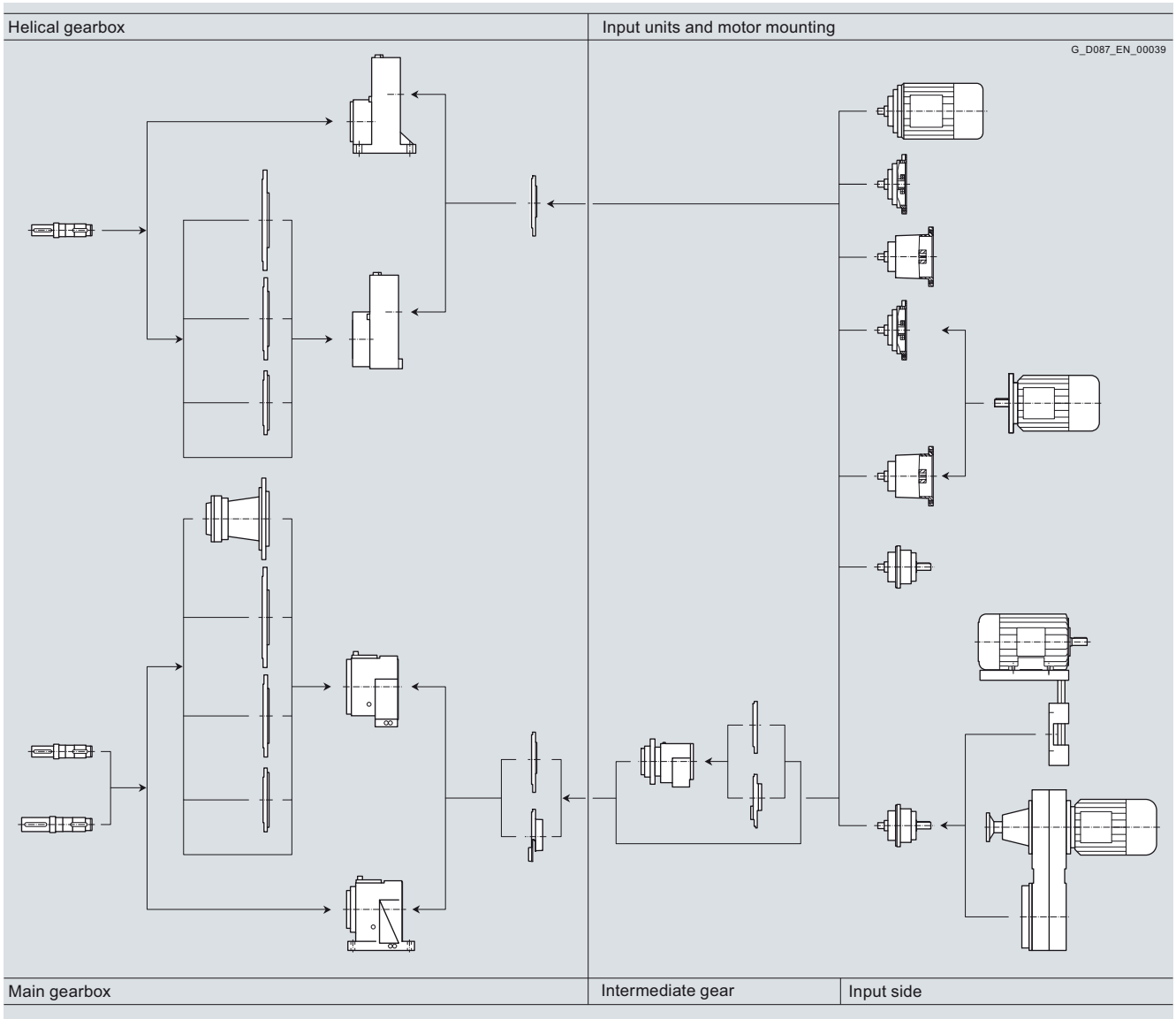

Use

MOTOX helical geared motors have a high efficiency and are characterized by their very low noise emission.

The geared motors offer high economical efficiency with their favorable price and low maintenance expenses.

The housings offer a wide range of mounting options due to their flange-mounted or foot-mounted designs.

Oil quantities

The oil quantities corresponding to the applicable mounting positions are specified in the operating instructions and on the rating plate.

© Siemens AG 2011

Permissible radial force F_{Rperm}

1-stage helical gearboxes – standard bearing arrangement

Gearbox type	d mm	l mm	y mm	z mm	a kNmm	b mm	F_{Rperm} in N with x = l/2 for output speeds n_2 in rpm: Direction of rotation when viewing the output shaft	≤ 183	≤ 229	≤ 287	≤ 358	≤ 448	≤ 502
E.38	20	40	105	85	70.9	24.0	Left	4 070	3 722	3 209	2 978	2 358	1 918
					93.3		Right	4 227	3 805	2 603	2 423	1 657	1 152
E.48	25	50	114	89	45.7	24.0	Left	3 687	3 174	2 823	2 283	1 992	1 744
					93.9		Right	3 888	3 437	2 801	1 352	854	441
E.68	30	60	155	125	165.0	29.5	Left	7 175	6 052	4 468	3 606	2 441	2 055
					257.0		Right	6 098	4 813	2 931	2 021	713	327
E.88	40	80	171	131	668.0	32.5	Left	8 403	7 543	6 430	5 764	4 886	4 645
					755.0		Right	8 778	7 976	6 850	5 635	3 496	3 080
E.108	50	100	194	144	904.0	36.5	Left	11 241	9 759	7 901	7 118	5 017	4 933
					1 063.0		Right	9 104	7 169	4 979	4 356	1 797	1 944
E.128	60	120	228	168	2 064.0	36.5	Left	15 781	13 912	12 554	11 239	10 100	9 566
					2 277.0		Right	16 567	14 537	12 052	9 416	7 235	6 307
E.148	70	140	260	190	2 344.0	46.5	Left	19 286	17 125	15 100	13 777	10 937	10 977
					2 688.0		Right	19 631	15 610	11 864	10 015	5 915	6 451

Gearbox type	d mm	l mm	y mm	z mm	a kNmm	b mm	F_{Rperm} in N with x = l/2 for output speeds n_2 in rpm: Direction of rotation when viewing the output shaft	≤ 562	≤ 629	≤ 705	≤ 789	≤ 884	≤ 990
E.38	20	40	105	85	70.9	24.0	Left	1 900	1 641	1 233	991	–	–
					93.3		Right	1 199	942	455	221	–	–
E.48	25	50	114	89	45.7	24.0	Left	1 688	1 663	1 712	1 752	1 666	–
					93.9		Right	475	554	719	869	846	–
E.68	30	60	155	125	165.0	29.5	Left	1 948	1 787	1 662	1 799	1 811	1 736
					257.0		Right	304	232	211	495	627	656
E.88	40	80	171	131	668.0	32.5	Left	4 424	4 113	3 911	3 891	–	–
					755.0		Right	2 756	2 175	1 879	2 055	–	–
E.108	50	100	194	144	904.0	36.5	Left	4 350	3 950	3 921	–	–	–
					1 063.0		Right	1 331	1 007	1 213	–	–	–
E.128	60	120	228	168	2 064.0	36.5	Left	9 171	8 876	8 586	8 298	7 980	7 623
					2 277.0		Right	5 696	5 443	5 283	5 191	4 950	4 681
E.148	70	140	260	190	2 344.0	46.5	Left	10 977	10 156	9 758	9 587	–	–
					2 688.0		Right	6 874	6 079	5 883	6 028	–	–

The values in the table apply to the worst-case scenario.
The output shaft bearing arrangement can be calculated using our MOTOX Configurator electronic catalog.
See Chapter 1 "Configuring guide" for more information on calculating the permissible radial force.

© Siemens AG 2011

Permissible radial force F_{Rperm} (continued)

2-stage and 3-stage helical gearboxes – standard bearing arrangement

Gearbox type	d mm	l mm	y mm	z mm	a kNmm	b mm	F_{Rperm} in N with x = l/2 for output speeds n_2 in rpm: Direction of rotation when viewing the output shaft	≤ 16	≤ 25	≤ 40	≤ 63	≤ 100	≤ 160	≤ 250	≤ 400
D./Z.18	20	40	91.0	71.0	51.2	12	Left	1 600	1 600	1 600	1 600	1 600	1 600	1 550	1 420
							Right	1 600	1 600	1 600	1 600	1 600	1 600	1 480	1 370
D./Z.F18	20	40	99.0	79.0	57.2	20	Left	1 430	1 430	1 430	1 430	1 430	1 430	1 420	1 310
							Right	1 430	1 430	1 430	1 430	1 430	1 430	1 360	1 260
D./Z.28	25	50	104.0	79.0	129.5	12	Left	2 890	2 890	2 890	2 890	1 650	960	1 130	1 070
							Right	3 420	3 420	3 420	3 420	2 190	1 500	1 620	1 490
D./Z.F28	25	50	110.0	85.0	129.5	18	Left	2 540	2 540	2 540	2 540	1 450	850	990	940
							Right	3 012	3 012	3 012	3 012	1 930	1 320	1 430	1 310
D./Z.38	30	60	111.0	81.0	210.0	16	Left	4 565	4 565	4 560	3 230	1 990	1 580	1 110	1 020
							Right	4 565	4 565	4 565	3 880	2 630	2 200	1 730	1 560
	25	50	106.0	81.0	169.0	0	Left	6 760	6 310	5 010	3 570	2 180	1 740	1 230	1 110
							Right	6 760	6 010	5 080	4 140	2 890	2 430	1 910	1 710
D./Z.48	40	80	145.0	105.0	499.0	19	Left	8 457	8 457	7 480	5 470	4 150	3 400	3 020	2 350
							Right	8 457	8 457	7 600	6 300	5 130	4 280	3 690	2 950
	30	60	135.0	105.0	265.0	0	Left	8 833	8 833	8 670	6 450	4 850	3 970	3 520	2 740
							Right	8 833	8 833	8 170	6 760	5 630	4 860	4 310	3 460
D./Z.68	50	100	179.5	129.5	943.0	23	Left	12 917	12 917	10 820	7 690	4 970	3 670	3 380	3 010
							Right	12 917	12 917	12 520	9 380	6 710	5 270	4 760	3 880
	40	80	170.0	129.5	564.0	0	Left	14 100	14 100	12 230	8 650	5 630	4 180	3 810	3 390
							Right	14 100	14 100	14 100	10 600	7 580	5 960	5 400	4 380
D./Z.88	60	120	219.0	159.0	1 533.0	21	Left	18 925	18 925	18 925	18 925	16 330	14 060	11 770	11 300
							Right	18 925	18 925	18 925	18 710	15 100	12 960	11 310	10 630
	50	100	209.0	159.0	1 150.0	0	Left	23 000	23 000	23 000	21 010	17 110	14 700	12 830	12 000
							Right	23 000	23 000	23 000	19 630	15 850	13 600	11 880	11 140
D./Z.108	70	140	259.0	189.0	2 328.0	29	Left	23 515	23 515	23 515	23 515	20 860	15 920	13 780	14 760
							Right	23 515	23 515	23 515	22 340	18 830	14 350	13 280	13 690
	60	120	249.0	189.0	2 113.0	0	Left	35 216	35 216	30 120	25 340	21 740	16 980	15 170	15 400
							Right	35 216	33 940	28 090	23 210	19 610	14 940	13 820	14 220
D./Z.128	90	170	320.5	235.5	5 181.0	30	Left	45 052	45 052	36 770	31 220	26 070	22 270	18 010	19 340
							Right	45 052	44 170	34 000	28 490	23 260	19 750	15 860	18 050
	70	140	305.5	235.5	3 120.0	0	Left	44 571	44 571	38 510	32 740	27 300	23 360	18 880	20 280
							Right	44 571	44 571	35 740	29 790	24 420	20 690	16 680	18 920
D./Z.148	100	210	361.0	256.0	6 900.0	33	Left	50 000	50 000	45 040	38 930	31 140	27 200	23 760	21 590
							Right	50 000	50 000	41 490	35 280	27 600	23 660	20 600	19 330
	90	170	341.0	256.0	6 359.0	0	Left	67 600	61 030	47 700	41 090	32 920	28 780	25 140	22 870
							Right	63 750	58 650	43 850	37 450	29 170	25 030	21 780	20 410
D./Z.168	120	210	420.5	315.5	11 652	30	Left	86 311	86 311	86 311	86 311	86 311	86 311	86 311	86 311
							Right	86 311	86 311	86 311	86 311	86 311	86 311	86 311	86 311
	100	210	420.5	315.5	7 958.0	0	Left	75 790	75 790	75 790	75 790	75 790	75 790	75 790	75 790
							Right	75 790	75 790	75 790	75 790	75 790	75 790	75 790	75 790
D./Z.188	120	210	445.5	340.5	16 920	36	Left	120 000	120 000	120 000	120 000	87 920	101 570	114 610	–
							Right	120 000	120 000	120 000	120 000	106 270	116 020	120 000	–

The values in the table apply to the worst-case scenario.
The output shaft bearing arrangement can be calculated using our MOTOX Configurator electronic catalog.
See Chapter 1 "Configuring guide" for more information on calculating the permissible radial force.

© Siemens AG 2011

Permissible radial force F_{Rperm} (continued)

2-stage and 3-stage helical gearboxes – radially reinforced bearing arrangement

Gearbox type	d mm	l mm	y mm	z mm	a kNmm	b mm	F_{Rperm} in N with x = l/2 for output speeds n_2 in rpm: Direction of rotation when viewing the output shaft	≤ 16	≤ 25	≤ 40	≤ 63	≤ 100	≤ 160	≤ 250	≤ 400
D./Z.68	50	100	179.5	129.5	943	23	Left	12 917	12 917	12 917	12 917	12 917	12 917	12 917	12 917
							Right	12 917	12 917	12 917	12 917	12 917	12 917	12 917	12 917
	40	80	170.0	129.5	564	0	Left	14 100	14 100	14 100	14 100	14 100	14 100	14 100	14 100
							Right	14 100	14 100	14 100	14 100	14 100	14 100	14 100	14 100
D./Z.88	60	120	219.0	159.0	1 533	21	Left	18 925	18 925	18 925	18 925	18 820	16 250	12 320	13 710
							Right	18 925	18 925	18 925	18 925	18 925	18 925	14 570	15 540
	50	100	209.0	159.0	1 150	0	Left	23 000	23 000	23 000	23 000	20 990	18 130	13 740	15 290
							Right	23 000	23 000	23 000	23 000	23 000	21 180	16 250	17 330
D./Z.108	70	140	259.0	189.0	2 328	29	Left	23 515	23 515	23 515	23 515	23 515	15 970	13 870	21 240
							Right	23 515	23 515	23 515	23 515	23 515	20 780	18 680	23 515
	60	120	249.0	189.0	2 113	0	Left	35 216	35 216	35 216	34 530	27 240	17 390	15 080	23 240
							Right	35 216	35 216	35 216	35 216	32 630	22 790	20 530	26 160
D./Z.128	90	170	320.5	235.5	5 181	30	Left	45 052	45 052	45 052	45 052	45 052	45 052	42 010	45 052
							Right	45 052	45 052	45 052	45 052	45 052	45 052	44 110	45 052
	70	140	305.5	235.5	3 120	0	Left	44 571	44 571	44 571	44 571	44 571	44 571	44 571	44 571
							Right	44 571	44 571	44 571	44 571	44 571	44 571	44 571	44 571
D./Z.148	100	210	361.0	256.0	6 900	33	Left	50 000	50 000	50 000	50 000	50 000	50 000	50 000	50 000
							Right	50 000	50 000	50 000	50 000	50 000	50 000	50 000	50 000
	90	170	341.0	256.0	6 359	0	Left	74 811	74 811	74 811	74 811	74 811	74 811	66 220	60 710
							Right	74 811	74 811	74 811	74 811	74 811	71 170	62 530	58 280
D./Z.168	120	210	420.5	315.5	11 652	30	Left	86 311	86 311	86 311	86 311	86 311	86 311	86 311	86 311
							Right	86 311	86 311	86 311	86 311	86 311	86 311	86 311	86 311
	100	210	420.5	315.5	7 958	0	Left	75 790	75 790	75 790	75 790	75 790	75 790	75 790	75 790
							Right	75 790	75 790	75 790	75 790	75 790	75 790	75 790	75 790
D./Z.188	120	210	445.5	340.5	16 920	36	Left	120 000	120 000	120 000	120 000	87 920	101 570	114 610	–
							Right	120 000	120 000	120 000	120 000	106 270	116 020	120 000	–

The values in the table apply to the worst-case scenario.
The output shaft bearing arrangement can be calculated using our MOTOX Configurator electronic catalog.
See Chapter 1 "Configuring guide" for more information on calculating the permissible radial force.

© Siemens AG 2011

Geared motors up to 200 kW

Selection and ordering data

The selection tables show the most common variants and combinations. Other combinations can be selected using our MOTOX Configurator or made available on request.

At an identical power rating and output speed, priority is given in the selection tables to 4-pole geared motors.

At the available transmission ratios, they cover the majority of output speeds.

Due to their prevalence, 4-pole geared motors are easily available, with short delivery times and at a low cost. They also feature a favorable size / power ratio.

Power rating P_{Motor} kW (50 Hz)	Output speed n_2 (50 Hz) rpm	Output torque T_2 Nm	Service factor f_B	Gearbox ratio i_{tot}		Order No.	Order code (No. of poles)	Weight *) kg
0.09	**D.48-LA71M8**							
	3.0	285	1.6	208.77	★	**2KJ1203 - ■CE13 - ■■S1**	**P02**	27
	3.4	253	1.8	185.66		**2KJ1203 - ■CE13 - ■■R1**	**P02**	27
	3.9	220	2.0	161.05	★	**2KJ1203 - ■CE13 - ■■Q1**	**P02**	27
	D.38-LA71M8							
	3.3	262	0.84	191.75	★	**2KJ1202 - ■CE13 - ■■S1**	**P02**	18
	3.7	232	0.95	170.24		**2KJ1202 - ■CE13 - ■■R1**	**P02**	18
	4.2	204	1.1	149.26	★	**2KJ1202 - ■CE13 - ■■Q1**	**P02**	18
	D.38-LA71B6							
	4.7	184	1.2	191.75	★	**2KJ1202 - ■CB13 - ■■S1**	**P01**	18
	5.3	163	1.3	170.24		**2KJ1202 - ■CB13 - ■■R1**	**P01**	18
	6.0	143	1.5	149.26	★	**2KJ1202 - ■CB13 - ■■Q1**	**P01**	18
	6.7	128	1.7	133.57		**2KJ1202 - ■CB13 - ■■P1**	**P01**	18
0.12	**D.188-D48-LA71B4**							
	0.05	15 788	1.3	28 260		**2KJ1236 - ■CB13 - ■■J1**		604
	0.06	12 656	1.6	22 654		**2KJ1236 - ■CB13 - ■■G1**		604
	0.06	13 965	1.4	24 996	★	**2KJ1236 - ■CB13 - ■■H1**		604
	0.07	11 172	1.8	19 997	★	**2KJ1236 - ■CB13 - ■■F1**		604
	0.08	10 078	2.0	18 039		**2KJ1236 - ■CB13 - ■■E1**		604
	D.168-D48-LA71B4							
	0.05	15 652	0.89	28 017	★	**2KJ1234 - ■CB13 - ■■F1**		460
	0.06	12 807	1.1	22 923	★	**2KJ1234 - ■CB13 - ■■D1**		460
	0.06	14 120	0.99	25 274		**2KJ1234 - ■CB13 - ■■E1**		460
	0.07	11 668	1.2	20 886		**2KJ1234 - ■CB13 - ■■C1**		460
	D.168-Z48-LA71B4							
	0.08	10 003	1.4	17 519		**2KJ1232 - ■CB13 - ■■A2**		459
	0.09	8 852	1.6	15 504	★	**2KJ1232 - ■CB13 - ■■X1**		459
	0.10	8 047	1.7	14 094		**2KJ1232 - ■CB13 - ■■W1**		459
	0.11	7 229	1.9	12 661	★	**2KJ1232 - ■CB13 - ■■V1**		459
	D.148-D38-LA71B4							
	0.08	9 926	0.81	17 767		**2KJ1230 - ■CB13 - ■■C1**		284
	D.148-Z38-LA71B4							
	0.09	8 467	0.94	14 830		**2KJ1228 - ■CB13 - ■■X1**		283
	0.11	7 530	1.1	13 188		**2KJ1228 - ■CB13 - ■■W1**		283
	0.12	6 532	1.2	11 440		**2KJ1228 - ■CB13 - ■■V1**		283
	0.13	6 103	1.3	10 689		**2KJ1228 - ■CB13 - ■■U1**		283
	0.15	5 368	1.5	9 401		**2KJ1228 - ■CB13 - ■■T1**		283
	0.17	4 701	1.7	8 233		**2KJ1228 - ■CB13 - ■■S1**		283
	0.19	4 158	1.9	7 282		**2KJ1228 - ■CB13 - ■■R1**		283

★ Preferred transmission ratio

Shaft designs, see page 2/117 — **1, 2 or 9**

Frequency and voltage, see page 8/20 — **1 to 9**

Gearbox housing mounting position, see page 2/119 — **A, F, H or R**

*) For mounting type B3

© Siemens AG 2011

Selection and ordering data (continued)

Power rating P_{Motor} kW	Output speed n_2 (50 Hz) rpm	Output torque T_2 Nm	Service factor f_B	Gearbox ratio i_{tot}		Order No.	Order code (No. of poles)	Weight *) kg
0.12	**D.128-Z38-LA71B4**							
	0.13	6 007	0.85	10 521		**2KJ1225 - ■CB13 - ■■W1**		198
	0.15	5 211	0.98	9 127	★	**2KJ1225 - ■CB13 - ■■V1**		198
	0.16	4 869	1.0	8 528		**2KJ1225 - ■CB13 - ■■U1**		198
	0.19	4 282	1.2	7 500	★	**2KJ1225 - ■CB13 - ■■T1**		198
	0.21	3 751	1.4	6 569		**2KJ1225 - ■CB13 - ■■S1**		198
	0.24	3 317	1.5	5 810	★	**2KJ1225 - ■CB13 - ■■R1**		198
	0.27	3 007	1.7	5 266		**2KJ1225 - ■CB13 - ■■Q1**		198
	0.30	2 654	1.9	4 648	★	**2KJ1225 - ■CB13 - ■■P1**		198
	D.108-Z38-LA71B4							
	0.22	3 556	0.87	6 228		**2KJ1223 - ■CB13 - ■■F2**		127
	0.25	3 208	0.97	5 618		**2KJ1223 - ■CB13 - ■■E2**		127
	0.28	2 910	1.1	5 096		**2KJ1223 - ■CB13 - ■■D2**		127
	0.30	2 651	1.2	4 643		**2KJ1223 - ■CB13 - ■■C2**		127
	0.33	2 424	1.3	4 246		**2KJ1223 - ■CB13 - ■■B2**		127
	0.37	2 168	1.4	3 797		**2KJ1223 - ■CB13 - ■■A2**		127
	0.39	2 069	1.5	3 624		**2KJ1223 - ■CB13 - ■■X1**		127
	0.43	1 840	1.7	3 223		**2KJ1223 - ■CB13 - ■■W1**		127
	0.50	1 596	1.9	2 796		**2KJ1223 - ■CB13 - ■■V1**		127
	D.88-Z28-LA71B4							
	0.39	2 041	0.82	3 574		**2KJ1218 - ■CB13 - ■■A2**		76
	0.45	1 778	0.94	3 114	★	**2KJ1218 - ■CB13 - ■■X1**		76
	0.50	1 597	1.1	2 797		**2KJ1218 - ■CB13 - ■■W1**		76
	0.55	1 442	1.2	2 525	★	**2KJ1218 - ■CB13 - ■■V1**		76
	0.61	1 307	1.3	2 290		**2KJ1218 - ■CB13 - ■■U1**		76
	0.67	1 190	1.4	2 084	★	**2KJ1218 - ■CB13 - ■■T1**		76
	0.76	1 052	1.6	1 842		**2KJ1218 - ■CB13 - ■■S1**		76
	0.82	971	1.7	1 701	★	**2KJ1218 - ■CB13 - ■■R1**		76
	0.96	836	2.0	1 465		**2KJ1218 - ■CB13 - ■■Q1**		76
	D.68-Z28-LA71B4							
	0.84	955	0.84	1 672		**2KJ1214 - ■CB13 - ■■S1**		46
	0.91	882	0.91	1 544	★	**2KJ1214 - ■CB13 - ■■R1**		46
	1.1	759	1.1	1 329		**2KJ1214 - ■CB13 - ■■Q1**		46
	1.2	690	1.2	1 208	★	**2KJ1214 - ■CB13 - ■■P1**		46
	1.3	627	1.3	1 098	★	**2KJ1214 - ■CB13 - ■■N1**		46
	1.4	569	1.4	996		**2KJ1214 - ■CB13 - ■■M1**		46
	1.5	517	1.5	906	★	**2KJ1214 - ■CB13 - ■■L1**		46
	1.7	457	1.7	801		**2KJ1214 - ■CB13 - ■■K1**		46
	1.9	423	1.9	740	★	**2KJ1214 - ■CB13 - ■■J1**		46
	D.68-LA71MB8							
	2.3	499	1.6	281.01		**2KJ1204 - ■CF13 - ■■U1**	**P02**	46
	2.6	442	1.8	248.68	★	**2KJ1204 - ■CF13 - ■■T1**	**P02**	46
	2.9	402	2.0	226.07		**2KJ1204 - ■CF13 - ■■S1**	**P02**	46

★ Preferred transmission ratio

Shaft designs, see page 2/117 — **1, 2 or 9**

Frequency and voltage, see page 8/20 — **1 to 9**

Gearbox housing mounting position, see page 2/119 — **A, F, H or R**

*) For mounting type B3

© Siemens AG 2011

2

Selection and ordering data (continued)

Power rating P_{Motor} kW	Output speed n_2 (50 Hz) rpm	Output torque T_2 Nm	Service factor f_B	Gearbox ratio i_{tot}		Order No.	Order code (No. of poles)	Weight *) kg
0.12	**D.48-Z28-LA71B4**							
	1.6	505	0.89	885		**2KJ1212 - ■CB13 - ■■Q1**		29
	1.7	460	0.98	805	★	**2KJ1212 - ■CB13 - ■■P1**		29
	1.9	417	1.1	731	★	**2KJ1212 - ■CB13 - ■■N1**		29
	2.1	379	1.2	663		**2KJ1212 - ■CB13 - ■■M1**		29
	2.3	344	1.3	603	★	**2KJ1212 - ■CB13 - ■■L1**		29
	2.6	305	1.5	534		**2KJ1212 - ■CB13 - ■■K1**		29
	2.8	281	1.6	493	★	**2KJ1212 - ■CB13 - ■■J1**		29
	D.48-LA71MB8							
	3.1	371	1.2	208.77	★	**2KJ1203 - ■CF13 - ■■S1**	**P02**	27
	3.5	330	1.4	185.66		**2KJ1203 - ■CF13 - ■■R1**	**P02**	27
	D.48-LA71C6							
	4.1	278	1.6	208.77	★	**2KJ1203 - ■CC13 - ■■S1**	**P01**	27
	4.6	247	1.8	185.66		**2KJ1203 - ■CC13 - ■■R1**	**P01**	27
	5.3	215	2.1	161.05	★	**2KJ1203 - ■CC13 - ■■Q1**	**P01**	27
	Z.38-Z28-LA71B4							
	3.0	268	0.82	464	★	**2KJ1112 - ■CB13 - ■■H1**		20
	D.38-LA71MB8							
	4.3	265	0.83	149.26	★	**2KJ1202 - ■CF13 - ■■Q1**	**P02**	18
	D.38-LA71C6							
	4.5	256	0.86	191.75	★	**2KJ1202 - ■CC13 - ■■S1**	**P01**	18
	5.1	227	0.97	170.24		**2KJ1202 - ■CC13 - ■■R1**	**P01**	18
	5.8	199	1.1	149.26	★	**2KJ1202 - ■CC13 - ■■Q1**	**P01**	18
	6.4	178	1.2	133.57		**2KJ1202 - ■CC13 - ■■P1**	**P01**	18
	D.38-LA71B4							
	7.3	157	1.4	191.75	★	**2KJ1202 - ■CB13 - ■■S1**		18
	8.2	139	1.6	170.24		**2KJ1202 - ■CB13 - ■■R1**		18
	9.4	122	1.8	149.26	★	**2KJ1202 - ■CB13 - ■■Q1**		18
	10.5	109	2.0	133.57		**2KJ1202 - ■CB13 - ■■P1**		18
	D.28-LA71B4							
	6.7	170	0.82	207.96	★	**2KJ1201 - ■CB13 - ■■M1**		10
	7.8	146	0.96	178.66		**2KJ1201 - ■CB13 - ■■L1**		10
	8.5	135	1.0	164.48	★	**2KJ1201 - ■CB13 - ■■K1**		10
	9.4	122	1.1	149.53		**2KJ1201 - ■CB13 - ■■J1**		10
	10.6	108	1.3	132.35	★	**2KJ1201 - ■CB13 - ■■H1**		10
	12.6	91	1.5	110.86		**2KJ1201 - ■CB13 - ■■G1**		10
	14.8	77	1.8	94.52	★	**2KJ1201 - ■CB13 - ■■F1**		10
	17.4	66	2.1	80.34	★	**2KJ1201 - ■CB13 - ■■E1**		10
	20	57	2.4	69.82		**2KJ1201 - ■CB13 - ■■D1**		10
	23	50	2.8	60.77	★	**2KJ1201 - ■CB13 - ■■C1**		10
	Z.28-LA71B4							
	27	42	3.3	51.35		**2KJ1101 - ■CB13 - ■■C2**		10
	32	35	3.9	43.3	★	**2KJ1101 - ■CB13 - ■■B2**		10
	36	32	4.4	38.45		**2KJ1101 - ■CB13 - ■■A2**		10

★ Preferred transmission ratio

Shaft designs, see page 2/117 — **1, 2 or 9**

Frequency and voltage, see page 8/20 — **1 to 9**

Gearbox housing mounting position, see page 2/119 — **A, F, H or R**

*) For mounting type B3

© Siemens AG 2011

Selection and ordering data (continued)

Power rating P_{Motor} kW	Output speed n_2 (50 Hz) rpm	Output torque T_2 Nm	Service factor f_B	Gearbox ratio i_{tot}		Order No.	Order code (No. of poles)	Weight *) kg
0.12	**Z.28-LA71B4**							
	42	28	5.1	33.71	★	**2KJ1101 - ■CB13 - ■■X1**		10
	46	25	5.7	30.16		**2KJ1101 - ■CB13 - ■■W1**		10
	52	22	6.4	26.77	★	**2KJ1101 - ■CB13 - ■■V1**		10
	60	19	7.3	23.46		**2KJ1101 - ■CB13 - ■■U1**		10
	68	17	8.3	20.63	★	**2KJ1101 - ■CB13 - ■■T1**		10
	75	15	9.2	18.63		**2KJ1101 - ■CB13 - ■■S1**		10
	86	13	10.5	16.24	★	**2KJ1101 - ■CB13 - ■■R1**		10
	96	12	11.7	14.58		**2KJ1101 - ■CB13 - ■■Q1**		10
	106	11	13.0	13.17	★	**2KJ1101 - ■CB13 - ■■P1**		10
	117	9.8	14.3	11.94		**2KJ1101 - ■CB13 - ■■N1**		10
	D.18-LA71B4							
	10.2	112	0.8	136.71	★	**2KJ1200 - ■CB13 - ■■L1**		9
	11.3	102	0.88	124.29		**2KJ1200 - ■CB13 - ■■K1**		9
	12.7	90	1.0	110.01	★	**2KJ1200 - ■CB13 - ■■J1**		9
	15.2	75	1.2	92.14		**2KJ1200 - ■CB13 - ■■H1**		9
	17.8	64	1.4	78.56	★	**2KJ1200 - ■CB13 - ■■G1**		9
	21	55	1.6	66.78	★	**2KJ1200 - ■CB13 - ■■F1**		9
	24	48	1.9	58.03		**2KJ1200 - ■CB13 - ■■E1**		9
	28	41	2.2	50.51	★	**2KJ1200 - ■CB13 - ■■D1**		9
	Z.18-LA71B4							
	32	35	2.5	43.15		**2KJ1100 - ■CB13 - ■■U1**		9
	38	30	3.0	37.23	★	**2KJ1100 - ■CB13 - ■■T1**		9
	44	26	3.4	31.98		**2KJ1100 - ■CB13 - ■■S1**		9
	48	24	3.7	29.45	★	**2KJ1100 - ■CB13 - ■■R1**		9
	52	22	4.1	26.77		**2KJ1100 - ■CB13 - ■■Q1**		9
	59	19	4.6	23.69	★	**2KJ1100 - ■CB13 - ■■P1**		9
	70	16	5.5	19.85		**2KJ1100 - ■CB13 - ■■N1**		9
	83	14	6.5	16.92	★	**2KJ1100 - ■CB13 - ■■M1**		9
	97	12	7.6	14.38	★	**2KJ1100 - ■CB13 - ■■L1**		9
	112	10	8.8	12.5		**2KJ1100 - ■CB13 - ■■K1**		9
	129	8.9	9.8	10.88	★	**2KJ1100 - ■CB13 - ■■J1**		9
	143	8	10.3	9.81		**2KJ1100 - ■CB13 - ■■H1**		9
	162	7.1	11.3	8.66		**2KJ1100 - ■CB13 - ■■G1**		9
	189	6.1	9.1	7.42	★	**2KJ1100 - ■CB13 - ■■F1**		9
	217	5.3	10.0	6.45		**2KJ1100 - ■CB13 - ■■E1**		9
	250	4.6	11.1	5.61	★	**2KJ1100 - ■CB13 - ■■D1**		9
	277	4.1	11.8	5.06		**2KJ1100 - ■CB13 - ■■C1**		9
	313	3.7	13.4	4.47		**2KJ1100 - ■CB13 - ■■B1**		9
0.18	**D.188-D48-LA71C4**							
	0.06	21 556	0.93	22 654		**2KJ1236 - ■CC13 - ■■G1**		604
	0.06	23 784	0.84	24 996	★	**2KJ1236 - ■CC13 - ■■H1**		604
	0.07	19 027	1.1	19 997	★	**2KJ1236 - ■CC13 - ■■F1**		604
	0.08	15 568	1.3	16 361	★	**2KJ1236 - ■CC13 - ■■D1**		604

★ Preferred transmission ratio

Shaft designs, see page 2/117 — **1, 2 or 9**

Frequency and voltage, see page 8/20 — **1 to 9**

Gearbox housing mounting position, see page 2/119 — **A, F, H or R**

*) For mounting type B3

© Siemens AG 2011

2

Selection and ordering data (continued)

Power rating P_{Motor} kW	Output speed n_2 (50 Hz) rpm	Output torque T_2 Nm	Service factor f_B	Gearbox ratio i_{tot}		Order No.	Order code (No. of poles)	Weight *) kg
0.18	**D.188-D48-LA71C4**							
	0.08	17 164	1.2	18 039		**2KJ1236 - ■CC13 - ■■E1**		604
	0.09	14 184	1.4	14 907		**2KJ1236 - ■CC13 - ■■C1**		604
	D.188-Z48-LA71C4							
	0.11	12 159	1.6	12 504		**2KJ1235 - ■CC13 - ■■X1**		603
	0.12	10 761	1.9	11 066	★	**2KJ1235 - ■CC13 - ■■W1**		603
	D.168-Z48-LA71C4							
	0.08	17 036	0.82	17 519		**2KJ1232 - ■CC13 - ■■A2**		459
	0.09	15 077	0.93	15 504	★	**2KJ1232 - ■CC13 - ■■X1**		459
	0.10	13 705	1.0	14 094		**2KJ1232 - ■CC13 - ■■W1**		459
	0.11	12 312	1.1	12 661	★	**2KJ1232 - ■CC13 - ■■V1**		459
	0.13	10 554	1.3	10 853		**2KJ1232 - ■CC13 - ■■U1**		459
	0.14	9 548	1.5	9 819	★	**2KJ1232 - ■CC13 - ■■T1**		459
	0.15	8 814	1.6	9 064		**2KJ1232 - ■CC13 - ■■S1**		459
	0.17	7 664	1.8	7 881	★	**2KJ1232 - ■CC13 - ■■R1**		459
	0.19	6 959	2.0	7 156		**2KJ1232 - ■CC13 - ■■Q1**		459
	D.148-Z38-LA71C4							
	0.15	9 142	0.88	9 401		**2KJ1228 - ■CC13 - ■■T1**		283
	0.17	8 006	1.0	8 233		**2KJ1228 - ■CC13 - ■■S1**		283
	0.19	7 081	1.1	7 282		**2KJ1228 - ■CC13 - ■■R1**		283
	0.21	6 418	1.2	6 600		**2KJ1228 - ■CC13 - ■■Q1**		283
	0.24	5 665	1.4	5 826		**2KJ1228 - ■CC13 - ■■P1**		283
	0.26	5 111	1.6	5 256		**2KJ1228 - ■CC13 - ■■N1**		283
	0.29	4 636	1.7	4 767		**2KJ1228 - ■CC13 - ■■M1**		283
	0.32	4 223	1.9	4 343		**2KJ1228 - ■CC13 - ■■L1**		283
	D.128-Z38-LA71C4							
	0.21	6 388	0.8	6 569		**2KJ1225 - ■CC13 - ■■S1**		198
	0.24	5 650	0.9	5 810	★	**2KJ1225 - ■CC13 - ■■R1**		198
	0.26	5 121	1.0	5 266		**2KJ1225 - ■CC13 - ■■Q1**		198
	0.30	4 520	1.1	4 648	★	**2KJ1225 - ■CC13 - ■■P1**		198
	0.33	4 077	1.3	4 193		**2KJ1225 - ■CC13 - ■■N1**		198
	0.36	3 698	1.4	3 803	★	**2KJ1225 - ■CC13 - ■■M1**		198
	0.40	3 369	1.5	3 465		**2KJ1225 - ■CC13 - ■■L1**		198
	0.43	3 082	1.7	3 169	★	**2KJ1225 - ■CC13 - ■■K1**		198
	0.48	2 756	1.9	2 834		**2KJ1225 - ■CC13 - ■■J1**		198
	0.53	2 530	2.0	2 602	★	**2KJ1225 - ■CC13 - ■■H1**		198
	D.108-Z38-LA71C4							
	0.36	3 692	0.84	3 797		**2KJ1223 - ■CC13 - ■■A2**		127
	0.38	3 524	0.88	3 624		**2KJ1223 - ■CC13 - ■■X1**		127
	0.42	3 134	0.99	3 223		**2KJ1223 - ■CC13 - ■■W1**		127
	0.49	2 719	1.1	2 796		**2KJ1223 - ■CC13 - ■■V1**		127
	0.52	2 540	1.2	2 612		**2KJ1223 - ■CC13 - ■■U1**		127
	0.60	2 234	1.4	2 297		**2KJ1223 - ■CC13 - ■■T1**		127
	0.68	1 957	1.6	2 012		**2KJ1223 - ■CC13 - ■■S1**		127

★ Preferred transmission ratio

Shaft designs, see page 2/117 — **1, 2 or 9**

Frequency and voltage, see page 8/20 — **1 to 9**

Gearbox housing mounting position, see page 2/119 — **A, F, H or R**

*) For mounting type B3

© Siemens AG 2011

Selection and ordering data (continued)

Power rating P_{Motor} kW	Output speed n_2 (50 Hz) rpm	Output torque T_2 Nm	Service factor f_B	Gearbox ratio i_{tot}		Order No.	Order code (No. of poles)	Weight *) kg
0.18	**D.108-Z38-LA71C4**							
	0.77	1 731	1.8	1 780		**2KJ1223 - ■CC13 - ■■R1**		127
	0.85	1 569	2.0	1 613		**2KJ1223 - ■CC13 - ■■Q1**		127
	D.88-Z28-LA71C4							
	0.66	2 027	0.83	2 084	★	**2KJ1218 - ■CC13 - ■■T1**		76
	0.74	1 791	0.94	1 842		**2KJ1218 - ■CC13 - ■■S1**		76
	0.8	1 654	1.0	1 701	★	**2KJ1218 - ■CC13 - ■■R1**		76
	0.94	1 425	1.2	1 465		**2KJ1218 - ■CC13 - ■■Q1**		76
	1.0	1 294	1.3	1 331	★	**2KJ1218 - ■CC13 - ■■P1**		76
	1.1	1 177	1.4	1 210	★	**2KJ1218 - ■CC13 - ■■N1**		76
	1.2	1 067	1.6	1 097		**2KJ1218 - ■CC13 - ■■M1**		76
	1.4	971	1.7	999	★	**2KJ1218 - ■CC13 - ■■L1**		76
	1.6	859	2.0	883		**2KJ1218 - ■CC13 - ■■K1**		76
	D.68-Z28-LA71C4							
	1.4	969	0.83	996		**2KJ1214 - ■CC13 - ■■M1**		46
	1.5	881	0.91	906	★	**2KJ1214 - ■CC13 - ■■L1**		46
	1.7	779	1.0	801		**2KJ1214 - ■CC13 - ■■K1**		46
	1.9	720	1.1	740	★	**2KJ1214 - ■CC13 - ■■J1**		46
	2.2	619	1.3	637		**2KJ1214 - ■CC13 - ■■H1**		46
	D.68-LA80S8							
	2.4	716	1.1	281.01		**2KJ1204 - ■DB13 - ■■U1**	**P02**	50
	2.7	633	1.3	248.68	★	**2KJ1204 - ■DB13 - ■■T1**	**P02**	50
	D.68-LA71S6							
	3.0	568	1.4	281.01		**2KJ1204 - ■CD13 - ■■U1**	**P01**	46
	3.4	503	1.6	248.68	★	**2KJ1204 - ■CD13 - ■■T1**	**P01**	46
	3.8	457	1.7	226.07		**2KJ1204 - ■CD13 - ■■S1**	**P01**	46
	4.2	411	1.9	203.09	★	**2KJ1204 - ■CD13 - ■■R1**	**P01**	46
	D.48-Z28-LA71C4							
	2.6	519	0.87	534		**2KJ1212 - ■CC13 - ■■K1**		29
	2.8	479	0.94	493	★	**2KJ1212 - ■CC13 - ■■J1**		29
	D.48-LA80S8							
	3.2	532	0.85	208.77	★	**2KJ1203 - ■DB13 - ■■S1**	**P02**	31
	3.6	473	0.95	185.66		**2KJ1203 - ■DB13 - ■■R1**	**P02**	31
	D.48-LA71S6							
	4.1	422	1.1	208.77	★	**2KJ1203 - ■CD13 - ■■S1**	**P01**	27
	4.6	375	1.2	185.66		**2KJ1203 - ■CD13 - ■■R1**	**P01**	27
	5.3	326	1.4	161.05	★	**2KJ1203 - ■CD13 - ■■Q1**	**P01**	27
	5.6	304	1.5	150.48		**2KJ1203 - ■CD13 - ■■P1**	**P01**	27
	D.48-LA71C4							
	6.6	262	1.7	208.77	★	**2KJ1203 - ■CC13 - ■■S1**		27
	7.4	233	1.9	185.66		**2KJ1203 - ■CC13 - ■■R1**		27
	D.38-LA71S6							
	6.4	270	0.81	133.57		**2KJ1202 - ■CD13 - ■■P1**	**P01**	18

★ Preferred transmission ratio

Shaft designs, see page 2/117 — **1, 2 or 9**

Frequency and voltage, see page 8/20 — **1 to 9**

Gearbox housing mounting position, see page 2/119 — **A, F, H or R**

*) For mounting type B3

© Siemens AG 2011

2

Selection and ordering data (continued)

Power rating P_{Motor} kW	Output speed n_2 (50 Hz) rpm	Output torque T_2 Nm	Service factor f_B	Gearbox ratio i_{tot}		Order No.	Order code (No. of poles)	Weight *) kg
0.18	**D.38-LA71C4**							
	7.1	241	0.91	191.75	★	**2KJ1202 - ■CC13 - ■■S1**		18
	8.0	214	1.0	170.24		**2KJ1202 - ■CC13 - ■■R1**		18
	9.2	187	1.2	149.26	★	**2KJ1202 - ■CC13 - ■■Q1**		18
	10.3	168	1.3	133.57		**2KJ1202 - ■CC13 - ■■P1**		18
	11.6	149	1.5	118.55	★	**2KJ1202 - ■CC13 - ■■N1**		18
	13.2	130	1.7	103.89		**2KJ1202 - ■CC13 - ■■M1**		18
	15.0	115	1.9	91.34	★	**2KJ1202 - ■CC13 - ■■L1**		18
	16.6	104	2.1	82.52		**2KJ1202 - ■CC13 - ■■K1**		18
	D.28-LA71C4							
	10.4	166	0.84	132.35	★	**2KJ1201 - ■CC13 - ■■H1**		10
	12.4	139	1.0	110.86		**2KJ1201 - ■CC13 - ■■G1**		10
	14.5	119	1.2	94.52	★	**2KJ1201 - ■CC13 - ■■F1**		10
	17.1	101	1.4	80.34	★	**2KJ1201 - ■CC13 - ■■E1**		10
	19.6	88	1.6	69.82		**2KJ1201 - ■CC13 - ■■D1**		10
	22	76	1.8	60.77	★	**2KJ1201 - ■CC13 - ■■C1**		10
	Z.28-LA71C4							
	27	64	2.2	51.35		**2KJ1101 - ■CC13 - ■■C2**		10
	32	54	2.6	43.3	★	**2KJ1101 - ■CC13 - ■■B2**		10
	36	48	2.9	38.45		**2KJ1101 - ■CC13 - ■■A2**		10
	41	42	3.3	33.71	★	**2KJ1101 - ■CC13 - ■■X1**		10
	45	38	3.7	30.16		**2KJ1101 - ■CC13 - ■■W1**		10
	51	34	4.2	26.77	★	**2KJ1101 - ■CC13 - ■■V1**		10
	58	29	4.8	23.46		**2KJ1101 - ■CC13 - ■■U1**		10
	66	26	5.4	20.63	★	**2KJ1101 - ■CC13 - ■■T1**		10
	74	23	6.0	18.63		**2KJ1101 - ■CC13 - ■■S1**		10
	84	20	6.9	16.24	★	**2KJ1101 - ■CC13 - ■■R1**		10
	94	18	7.7	14.58		**2KJ1101 - ■CC13 - ■■Q1**		10
	104	16	8.5	13.17	★	**2KJ1101 - ■CC13 - ■■P1**		10
	115	15	9.3	11.94		**2KJ1101 - ■CC13 - ■■N1**		10
	126	14	10.3	10.87	★	**2KJ1101 - ■CC13 - ■■M1**		10
	143	12	11.6	9.61		**2KJ1101 - ■CC13 - ■■L1**		10
	154	11	12.6	8.87	★	**2KJ1101 - ■CC13 - ■■K1**		10
	179	9.6	14.2	7.64		**2KJ1101 - ■CC13 - ■■J1**		10
	217	7.9	12.0	6.31	★	**2KJ1101 - ■CC13 - ■■G1**		10
	240	7.2	13.0	5.72		**2KJ1101 - ■CC13 - ■■F1**		10
	263	6.5	14.1	5.21	★	**2KJ1101 - ■CC13 - ■■E1**		10
	D.18-LA71C4							
	17.4	99	0.91	78.56	★	**2KJ1200 - ■CC13 - ■■G1**		9
	20	84	1.1	66.78	★	**2KJ1200 - ■CC13 - ■■F1**		9
	24	73	1.2	58.03		**2KJ1200 - ■CC13 - ■■E1**		9
	27	63	1.4	50.51	★	**2KJ1200 - ■CC13 - ■■D1**		9

★ Preferred transmission ratio

Shaft designs, see page 2/117 — **1, 2 or 9**

Frequency and voltage, see page 8/20 — **1 to 9**

Gearbox housing mounting position, see page 2/119 — **A, F, H or R**

*) For mounting type B3

© Siemens AG 2011

Selection and ordering data (continued)

Power rating P_{Motor} kW	Output speed n_2 (50 Hz) rpm	Output torque T_2 Nm	Service factor f_B	Gearbox ratio i_{tot}		Order No.	Order code (No. of poles)	Weight *) kg
0.18	**Z.18-LA71C4**							
	32	54	1.7	43.15		**2KJ1100 - ■CC13 - ■■U1**		9
	37	47	1.9	37.23	★	**2KJ1100 - ■CC13 - ■■T1**		9
	43	40	2.2	31.98		**2KJ1100 - ■CC13 - ■■S1**		9
	46	37	2.4	29.45	★	**2KJ1100 - ■CC13 - ■■R1**		9
	51	34	2.7	26.77		**2KJ1100 - ■CC13 - ■■Q1**		9
	58	30	3.0	23.69	★	**2KJ1100 - ■CC13 - ■■P1**		9
	69	25	3.6	19.85		**2KJ1100 - ■CC13 - ■■N1**		9
	81	21	4.2	16.92	★	**2KJ1100 - ■CC13 - ■■M1**		9
	95	18	5.0	14.38	★	**2KJ1100 - ■CC13 - ■■L1**		9
	110	16	5.7	12.5		**2KJ1100 - ■CC13 - ■■K1**		9
	126	14	6.4	10.88	★	**2KJ1100 - ■CC13 - ■■J1**		9
	140	12	6.7	9.81		**2KJ1100 - ■CC13 - ■■H1**		9
	158	11	7.4	8.66		**2KJ1100 - ■CC13 - ■■G1**		9
	185	9.3	5.9	7.42	★	**2KJ1100 - ■CC13 - ■■F1**		9
	212	8.1	6.5	6.45		**2KJ1100 - ■CC13 - ■■E1**		9
	244	7	7.2	5.61	★	**2KJ1100 - ■CC13 - ■■D1**		9
	271	6.3	7.7	5.06		**2KJ1100 - ■CC13 - ■■C1**		9
	306	5.6	8.7	4.47		**2KJ1100 - ■CC13 - ■■B1**		9
	383	4.5	10.2	3.58	★	**2KJ1100 - ■CC13 - ■■A1**		9
	E.38-LA71C4							
	147	12	2.7	9.33	★	**2KJ1001 - ■CC13 - ■■S1**		13
	165	10	3.1	8.3		**2KJ1001 - ■CC13 - ■■R1**		13
	190	9	4.2	7.2	★	**2KJ1001 - ■CC13 - ■■Q1**		13
0.25	**D.188-D48-LA71S4**							
	0.08	23 171	0.86	16 361	★	**2KJ1236 - ■CD13 - ■■D1**		604
	0.09	21 112	0.95	14 907		**2KJ1236 - ■CD13 - ■■C1**		604
	D.188-Z48-LA71S4							
	0.11	18 098	1.1	12 504		**2KJ1235 - ■CD13 - ■■X1**		603
	0.12	16 016	1.2	11 066	★	**2KJ1235 - ■CD13 - ■■W1**		603
	0.15	13 080	1.5	9 037	★	**2KJ1235 - ■CD13 - ■■V1**		603
	0.17	11 211	1.8	7 746		**2KJ1235 - ■CD13 - ■■U1**		603
	0.19	10 143	2.0	7 008	★	**2KJ1235 - ■CD13 - ■■T1**		603
	D.168-Z48-LA71S4							
	0.12	15 708	0.89	10 853		**2KJ1232 - ■CD13 - ■■U1**		459
	0.14	14 212	0.99	9 819	★	**2KJ1232 - ■CD13 - ■■T1**		459
	0.15	13 119	1.1	9 064		**2KJ1232 - ■CD13 - ■■S1**		459
	0.17	11 407	1.2	7 881	★	**2KJ1232 - ■CD13 - ■■R1**		459
	0.19	10 357	1.4	7 156		**2KJ1232 - ■CD13 - ■■Q1**		459
	0.21	9 457	1.5	6 534	★	**2KJ1232 - ■CD13 - ■■P1**		459
	0.22	8 677	1.6	5 995		**2KJ1232 - ■CD13 - ■■N1**		459
	0.24	7 994	1.8	5 523	★	**2KJ1232 - ■CD13 - ■■M1**		459
	0.27	7 260	1.9	5 016		**2KJ1232 - ■CD13 - ■■L1**		459

★ Preferred transmission ratio

Shaft designs, see page 2/117 — **1, 2 or 9**

Frequency and voltage, see page 8/20 — **1 to 9**

Gearbox housing mounting position, see page 2/119 — **A, F, H or R**

*) For mounting type B3

© Siemens AG 2011

2

Selection and ordering data (continued)

Power rating P_{Motor} kW	Output speed n_2 (50 Hz) rpm	Output torque T_2 Nm	Service factor f_B	Gearbox ratio i_{tot}		Order No.	Order code (No. of poles)	Weight *) kg
0.25	**D.148-Z38-LA71S4**							
	0.20	9 553	0.84	6 600		**2KJ1228 - ■CD13 - ■■Q1**		283
	0.23	8 432	0.95	5 826		**2KJ1228 - ■CD13 - ■■P1**		283
	0.26	7 607	1.1	5 256		**2KJ1228 - ■CD13 - ■■N1**		283
	0.28	6 900	1.2	4 767		**2KJ1228 - ■CD13 - ■■M1**		283
	0.31	6 286	1.3	4 343		**2KJ1228 - ■CD13 - ■■L1**		283
	0.34	5 749	1.4	3 972		**2KJ1228 - ■CD13 - ■■K1**		283
	0.38	5 141	1.6	3 552		**2KJ1228 - ■CD13 - ■■J1**		283
	0.41	4 720	1.7	3 261		**2KJ1228 - ■CD13 - ■■H1**		283
	0.46	4 254	1.9	2 939		**2KJ1228 - ■CD13 - ■■G1**		283
	D.128-Z38-LA71S4							
	0.32	6 069	0.84	4 193		**2KJ1225 - ■CD13 - ■■N1**		198
	0.36	5 504	0.93	3 803	★	**2KJ1225 - ■CD13 - ■■M1**		198
	0.39	5 015	1.0	3 465		**2KJ1225 - ■CD13 - ■■L1**		198
	0.43	4 587	1.1	3 169	★	**2KJ1225 - ■CD13 - ■■K1**		198
	0.48	4 102	1.2	2 834		**2KJ1225 - ■CD13 - ■■J1**		198
	0.52	3 766	1.4	2 602	★	**2KJ1225 - ■CD13 - ■■H1**		198
	0.58	3 394	1.5	2 345		**2KJ1225 - ■CD13 - ■■G1**		198
	0.67	2 911	1.8	2 011	★	**2KJ1225 - ■CD13 - ■■E1**		198
	0.67	2 919	1.7	2 017	★	**2KJ1225 - ■CD13 - ■■F1**		198
	0.75	2 602	2.0	1 798		**2KJ1225 - ■CD13 - ■■D1**		198
	D.108-Z38-LA71S4							
	0.52	3 780	0.82	2 612		**2KJ1223 - ■CD13 - ■■U1**		127
	0.59	3 325	0.93	2 297		**2KJ1223 - ■CD13 - ■■T1**		127
	0.67	2 912	1.1	2 012		**2KJ1223 - ■CD13 - ■■S1**		127
	0.76	2 576	1.2	1 780		**2KJ1223 - ■CD13 - ■■R1**		127
	0.84	2 335	1.3	1 613		**2KJ1223 - ■CD13 - ■■Q1**		127
	0.95	2 061	1.5	1 424		**2KJ1223 - ■CD13 - ■■P1**		127
	1.1	1 858	1.7	1 284		**2KJ1223 - ■CD13 - ■■N1**		127
	1.2	1 686	1.8	1 165		**2KJ1223 - ■CD13 - ■■M1**		127
	1.3	1 536	2.0	1 061		**2KJ1223 - ■CD13 - ■■L1**		127
	D.88-Z28-LA71S4							
	1.0	1 926	0.87	1 331	★	**2KJ1218 - ■CD13 - ■■P1**		76
	1.1	1 751	0.96	1 210	★	**2KJ1218 - ■CD13 - ■■N1**		76
	1.2	1 588	1.1	1 097		**2KJ1218 - ■CD13 - ■■M1**		76
	1.4	1 446	1.2	999	★	**2KJ1218 - ■CD13 - ■■L1**		76
	1.5	1 278	1.3	883		**2KJ1218 - ■CD13 - ■■K1**		76
	1.7	1 180	1.4	815	★	**2KJ1218 - ■CD13 - ■■J1**		76
	1.9	1 016	1.7	702		**2KJ1218 - ■CD13 - ■■H1**		76
	2.1	936	1.8	647	★	**2KJ1218 - ■CD13 - ■■G1**		76
	D.88-LA80M8							
	2.3	1 047	1.6	300.41	★	**2KJ1205 - ■DC13 - ■■V1**	**P02**	82
	2.5	944	1.8	270.9		**2KJ1205 - ■DC13 - ■■U1**	**P02**	82
	2.8	851	2.0	244.29	★	**2KJ1205 - ■DC13 - ■■T1**	**P02**	82

★ Preferred transmission ratio

Shaft designs, see page 2/117 — **1, 2 or 9**

Frequency and voltage, see page 8/20 — **1 to 9**

Gearbox housing mounting position, see page 2/119 — **A, F, H or R**

*) For mounting type B3

© Siemens AG 2011

Selection and ordering data (continued)

Power rating P_{Motor} kW	Output speed n_2 (50 Hz) rpm	Output torque T_2 Nm	Service factor f_B	Gearbox ratio i_{tot}		Order No.	Order code (No. of poles)	Weight *) kg
0.25	**D.88-LA71M6**							
	2.9	834	2.0	300.41	★	**2KJ1205 - ■CE13 - ■■V1**	**P01**	78
	D.68-Z28-LA71S4							
	2.1	922	0.87	637		**2KJ1214 - ■CD13 - ■■H1**		46
	2.2	879	0.91	607	★	**2KJ1214 - ■CD13 - ■■G1**		46
	D.68-LA80M8							
	2.4	979	0.82	281.01		**2KJ1204 - ■DC13 - ■■U1**	**P02**	50
	2.8	867	0.92	248.68	★	**2KJ1204 - ■DC13 - ■■T1**	**P02**	50
	D.68-LA71M6							
	3.1	780	1.0	281.01		**2KJ1204 - ■CE13 - ■■U1**	**P01**	46
	3.5	690	1.2	248.68	★	**2KJ1204 - ■CE13 - ■■T1**	**P01**	46
	3.8	628	1.3	226.07		**2KJ1204 - ■CE13 - ■■S1**	**P01**	46
	4.2	564	1.4	203.09	★	**2KJ1204 - ■CE13 - ■■R1**	**P01**	46
	D.68-LA71S4							
	4.8	497	1.6	281.01		**2KJ1204 - ■CD13 - ■■U1**		46
	5.4	440	1.8	248.68	★	**2KJ1204 - ■CD13 - ■■T1**		46
	6.0	400	2.0	226.07		**2KJ1204 - ■CD13 - ■■S1**		46
	D.48-LA71M6							
	4.6	515	0.87	185.66		**2KJ1203 - ■CE13 - ■■R1**	**P01**	27
	5.3	447	1.0	161.05	★	**2KJ1203 - ■CE13 - ■■Q1**	**P01**	27
	5.7	418	1.1	150.48		**2KJ1203 - ■CE13 - ■■P1**	**P01**	27
	D.48-LA71S4							
	6.5	369	1.2	208.77	★	**2KJ1203 - ■CD13 - ■■S1**		27
	7.3	328	1.4	185.66		**2KJ1203 - ■CD13 - ■■R1**		27
	8.4	285	1.6	161.05	★	**2KJ1203 - ■CD13 - ■■Q1**		27
	9.0	266	1.7	150.48		**2KJ1203 - ■CD13 - ■■P1**		27
	10.2	234	1.9	132.34	★	**2KJ1203 - ■CD13 - ■■N1**		27
	11.6	205	2.2	115.91		**2KJ1203 - ■CD13 - ■■M1**		27
	D.38-LA71S4							
	9.0	264	0.83	149.26	★	**2KJ1202 - ■CD13 - ■■Q1**		18
	10.1	236	0.93	133.57		**2KJ1202 - ■CD13 - ■■P1**		18
	11.4	210	1.0	118.55	★	**2KJ1202 - ■CD13 - ■■N1**		18
	13.0	184	1.2	103.89		**2KJ1202 - ■CD13 - ■■M1**		18
	14.8	162	1.4	91.34	★	**2KJ1202 - ■CD13 - ■■L1**		18
	16.4	146	1.5	82.52		**2KJ1202 - ■CD13 - ■■K1**		18
	18.8	127	1.7	71.91	★	**2KJ1202 - ■CD13 - ■■J1**		18
	21	114	1.9	64.58		**2KJ1202 - ■CD13 - ■■H1**		18
	23	103	2.1	58.3	★	**2KJ1202 - ■CD13 - ■■G1**		18
	26	94	2.4	52.86		**2KJ1202 - ■CD13 - ■■F1**		18
	D.28-LA71S4							
	14.3	167	0.84	94.52	★	**2KJ1201 - ■CD13 - ■■F1**		10
	16.8	142	0.99	80.34	★	**2KJ1201 - ■CD13 - ■■E1**		10
	19.3	123	1.1	69.82		**2KJ1201 - ■CD13 - ■■D1**		10
	22	107	1.3	60.77	★	**2KJ1201 - ■CD13 - ■■C1**		10

★ Preferred transmission ratio

Shaft designs, see page 2/117 — **1, 2 or 9**

Frequency and voltage, see page 8/20 — **1 to 9**

Gearbox housing mounting position, see page 2/119 — **A, F, H or R**

*) For mounting type B3

© Siemens AG 2011

2

Selection and ordering data (continued)

Power rating P_{Motor} kW	Output speed n_2 (50 Hz) rpm	Output torque T_2 Nm	Service factor f_B	Gearbox ratio i_{tot}		Order No.	Order code (No. of poles)	Weight *) kg
0.25	**Z.28-LA71S4**							
	26	91	1.5	51.35		**2KJ1101 - ■CD13 - ■■C2**		10
	31	77	1.8	43.3	★	**2KJ1101 - ■CD13 - ■■B2**		10
	35	68	2.1	38.45		**2KJ1101 - ■CD13 - ■■A2**		10
	40	60	2.3	33.71	★	**2KJ1101 - ■CD13 - ■■X1**		10
	45	53	2.6	30.16		**2KJ1101 - ■CD13 - ■■W1**		10
	50	47	3.0	26.77	★	**2KJ1101 - ■CD13 - ■■V1**		10
	58	42	3.4	23.46		**2KJ1101 - ■CD13 - ■■U1**		10
	65	36	3.8	20.63	★	**2KJ1101 - ■CD13 - ■■T1**		10
	72	33	4.2	18.63		**2KJ1101 - ■CD13 - ■■S1**		10
	83	29	4.9	16.24	★	**2KJ1101 - ■CD13 - ■■R1**		10
	93	26	5.4	14.58		**2KJ1101 - ■CD13 - ■■Q1**		10
	103	23	6.0	13.17	★	**2KJ1101 - ■CD13 - ■■P1**		10
	113	21	6.6	11.94		**2KJ1101 - ■CD13 - ■■N1**		10
	124	19	7.3	10.87	★	**2KJ1101 - ■CD13 - ■■M1**		10
	140	17	8.2	9.61		**2KJ1101 - ■CD13 - ■■L1**		10
	152	16	8.9	8.87	★	**2KJ1101 - ■CD13 - ■■K1**		10
	177	14	10.1	7.64		**2KJ1101 - ■CD13 - ■■J1**		10
	195	12	10.8	6.94	★	**2KJ1101 - ■CD13 - ■■H1**		10
	214	11	8.5	6.31	★	**2KJ1101 - ■CD13 - ■■G1**		10
	236	10	9.2	5.72		**2KJ1101 - ■CD13 - ■■F1**		10
	259	9.2	10.0	5.21	★	**2KJ1101 - ■CD13 - ■■E1**		10
	293	8.1	10.8	4.6		**2KJ1101 - ■CD13 - ■■D1**		10
	318	7.5	12.0	4.25	★	**2KJ1101 - ■CD13 - ■■C1**		10
	369	6.5	12.4	3.66		**2KJ1101 - ■CD13 - ■■B1**		10
	405	5.9	13.1	3.33	★	**2KJ1101 - ■CD13 - ■■A1**		10
	D.18-LA71S4							
	23	103	0.88	58.03		**2KJ1200 - ■CD13 - ■■E1**		9
	27	89	1.0	50.51	★	**2KJ1200 - ■CD13 - ■■D1**		9
	Z.18-LA71S4							
	31	76	1.2	43.15		**2KJ1100 - ■CD13 - ■■U1**		9
	36	66	1.4	37.23	★	**2KJ1100 - ■CD13 - ■■T1**		9
	42	57	1.6	31.98		**2KJ1100 - ■CD13 - ■■S1**		9
	46	52	1.7	29.45	★	**2KJ1100 - ■CD13 - ■■R1**		9
	50	47	1.9	26.77		**2KJ1100 - ■CD13 - ■■Q1**		9
	57	42	2.1	23.69	★	**2KJ1100 - ■CD13 - ■■P1**		9
	68	35	2.6	19.85		**2KJ1100 - ■CD13 - ■■N1**		9
	80	30	3.0	16.92	★	**2KJ1100 - ■CD13 - ■■M1**		9
	94	25	3.5	14.38	★	**2KJ1100 - ■CD13 - ■■L1**		9
	108	22	4.1	12.5		**2KJ1100 - ■CD13 - ■■K1**		9
	124	19	4.5	10.88	★	**2KJ1100 - ■CD13 - ■■J1**		9
	138	17	4.8	9.81		**2KJ1100 - ■CD13 - ■■H1**		9
	156	15	5.2	8.66		**2KJ1100 - ■CD13 - ■■G1**		9
	182	13	4.2	7.42	★	**2KJ1100 - ■CD13 - ■■F1**		9

★ Preferred transmission ratio

Shaft designs, see page 2/117 — **1, 2 or 9**

Frequency and voltage, see page 8/20 — **1 to 9**

Gearbox housing mounting position, see page 2/119 — **A, F, H or R**

*) For mounting type B3

© Siemens AG 2011

Selection and ordering data (continued)

Power rating P_{Motor} kW	Output speed n_2 (50 Hz) rpm	Output torque T_2 Nm	Service factor f_B	Gearbox ratio i_{tot}		Order No.	Order code (No. of poles)	Weight *) kg
0.25	**Z.18-LA71S4**							
	209	11	4.6	6.45		**2KJ1100 - ■CD13 - ■■E1**		9
	241	9.9	5.1	5.61	★	**2KJ1100 - ■CD13 - ■■D1**		9
	267	8.9	5.5	5.06		**2KJ1100 - ■CD13 - ■■C1**		9
	302	7.9	6.2	4.47		**2KJ1100 - ■CD13 - ■■B1**		9
	377	6.3	7.3	3.58	★	**2KJ1100 - ■CD13 - ■■A1**		9
	E.48-LA71S4							
	119	20	2.8	11.3		**2KJ1002 - ■CD13 - ■■U1**		16
	149	16	4.0	9.09		**2KJ1002 - ■CD13 - ■■S1**		16
	E.38-LA71S4							
	145	16	1.9	9.33	★	**2KJ1001 - ■CD13 - ■■S1**		13
	163	15	2.2	8.3		**2KJ1001 - ■CD13 - ■■R1**		13
	188	13	3.0	7.2	★	**2KJ1001 - ■CD13 - ■■Q1**		13
	201	12	4.0	6.73		**2KJ1001 - ■CD13 - ■■P1**		13
0.37	**D.188-Z48-LA71M4**							
	0.12	24 391	0.82	11 066	★	**2KJ1235 - ■CE13 - ■■W1**		603
	0.15	19 919	1.0	9 037	★	**2KJ1235 - ■CE13 - ■■V1**		603
	0.18	17 073	1.2	7 746		**2KJ1235 - ■CE13 - ■■U1**		603
	0.20	15 447	1.3	7 008	★	**2KJ1235 - ■CE13 - ■■T1**		603
	0.21	14 259	1.4	6 469		**2KJ1235 - ■CE13 - ■■S1**		603
	0.24	12 398	1.6	5 625	★	**2KJ1235 - ■CE13 - ■■R1**		603
	0.27	11 257	1.8	5 107		**2KJ1235 - ■CE13 - ■■Q1**		603
	0.29	10 278	1.9	4 663	★	**2KJ1235 - ■CE13 - ■■P1**		603
	D.168-Z48-LA71M4							
	0.17	17 371	0.81	7 881	★	**2KJ1232 - ■CE13 - ■■R1**		459
	0.19	15 773	0.89	7 156		**2KJ1232 - ■CE13 - ■■Q1**		459
	0.21	14 402	0.97	6 534	★	**2KJ1232 - ■CE13 - ■■P1**		459
	0.23	13 214	1.1	5 995		**2KJ1232 - ■CE13 - ■■N1**		459
	0.25	12 174	1.2	5 523	★	**2KJ1232 - ■CE13 - ■■M1**		459
	0.27	11 056	1.3	5 016		**2KJ1232 - ■CE13 - ■■L1**		459
	0.3	10 071	1.4	4 569	★	**2KJ1232 - ■CE13 - ■■K1**		459
	0.33	9 227	1.5	4 186		**2KJ1232 - ■CE13 - ■■J1**		459
	0.37	8 233	1.7	3 735	★	**2KJ1232 - ■CE13 - ■■H1**		459
	D.148-Z38-LA71M4							
	0.32	9 573	0.84	4 343		**2KJ1228 - ■CE13 - ■■L1**		283
	0.34	8 755	0.91	3 972		**2KJ1228 - ■CE13 - ■■K1**		283
	0.39	7 829	1.0	3 552		**2KJ1228 - ■CE13 - ■■J1**		283
	0.42	7 188	1.1	3 261		**2KJ1228 - ■CE13 - ■■H1**		283
	0.47	6 478	1.2	2 939		**2KJ1228 - ■CE13 - ■■G1**		283
	0.54	5 557	1.4	2 521		**2KJ1228 - ■CE13 - ■■E1**		283
	0.54	5 572	1.4	2 528		**2KJ1228 - ■CE13 - ■■F1**		283
	0.61	4 968	1.6	2 254		**2KJ1228 - ■CE13 - ■■D1**		283
	0.66	4 563	1.8	2 070		**2KJ1228 - ■CE13 - ■■C1**		283
	0.74	4 111	1.9	1 865		**2KJ1228 - ■CE13 - ■■B1**		283

★ Preferred transmission ratio

Shaft designs, see page 2/117 — **1, 2 or 9**

Frequency and voltage, see page 8/20 — **1 to 9**

Gearbox housing mounting position, see page 2/119 — **A, F, H or R**

*) For mounting type B3

© Siemens AG 2011

2

Selection and ordering data (continued)

Power rating P_{Motor} kW	Output speed n_2 (50 Hz) rpm	Output torque T_2 Nm	Service factor f_B	Gearbox ratio i_{tot}		Order No.	Order code (No. of poles)	Weight *) kg
0.37	**D.128-Z48-LA71M4**							
	1.1	2 801	1.8	1 271		**2KJ1227 - ■CE13 - ■■P1**		208
	1.2	2 570	2.0	1 166		**2KJ1227 - ■CE13 - ■■N1**		208
	D.128-Z38-LA71M4							
	0.48	6 247	0.82	2 834		**2KJ1225 - ■CE13 - ■■J1**		198
	0.53	5 735	0.89	2 602	★	**2KJ1225 - ■CE13 - ■■H1**		198
	0.58	5 169	0.99	2 345		**2KJ1225 - ■CE13 - ■■G1**		198
	0.68	4 433	1.2	2 011	★	**2KJ1225 - ■CE13 - ■■E1**		198
	0.68	4 446	1.1	2 017	★	**2KJ1225 - ■CE13 - ■■F1**		198
	0.76	3 963	1.3	1 798		**2KJ1225 - ■CE13 - ■■D1**		198
	0.83	3 639	1.4	1 651	★	**2KJ1225 - ■CE13 - ■■C1**		198
	0.92	3 280	1.6	1 488		**2KJ1225 - ■CE13 - ■■B1**		198
	1.1	2 821	1.8	1 280	★	**2KJ1225 - ■CE13 - ■■A1**		198
	D.108-Z38-LA71M4							
	0.85	3 555	0.87	1 613		**2KJ1223 - ■CE13 - ■■Q1**		127
	0.96	3 139	0.99	1 424		**2KJ1223 - ■CE13 - ■■P1**		127
	1.1	2 830	1.1	1 284		**2KJ1223 - ■CE13 - ■■N1**		127
	1.2	2 568	1.2	1 165		**2KJ1223 - ■CE13 - ■■M1**		127
	1.3	2 339	1.3	1 061		**2KJ1223 - ■CE13 - ■■L1**		127
	1.4	2 140	1.4	971		**2KJ1223 - ■CE13 - ■■K1**		127
	1.6	1 913	1.6	868		**2KJ1223 - ■CE13 - ■■J1**		127
	1.7	1 757	1.8	797		**2KJ1223 - ■CE13 - ■■H1**		127
	D.108-LA90SA8							
	1.9	1 881	1.6	359.3		**2KJ1206 - ■EB13 - ■■V1**	**P02**	133
	2.1	1 702	1.8	325.21	★	**2KJ1206 - ■EB13 - ■■U1**	**P02**	133
	D.88-Z28-LA71M4							
	1.6	1 946	0.86	883		**2KJ1218 - ■CE13 - ■■K1**		76
	1.7	1 796	0.94	815	★	**2KJ1218 - ■CE13 - ■■J1**		76
	2.0	1 547	1.1	702		**2KJ1218 - ■CE13 - ■■H1**		76
	2.1	1 426	1.2	647	★	**2KJ1218 - ■CE13 - ■■G1**		76
	D.88-LA90SA8							
	2.2	1 573	1.1	300.41	★	**2KJ1205 - ■EB13 - ■■V1**	**P02**	85
	2.5	1 418	1.2	270.9		**2KJ1205 - ■EB13 - ■■U1**	**P02**	85
	2.8	1 279	1.3	244.29	★	**2KJ1205 - ■EB13 - ■■T1**	**P02**	85
	D.88-LA80S6							
	3.1	1 154	1.5	300.41	★	**2KJ1205 - ■DB13 - ■■V1**	**P01**	82
	3.4	1 040	1.6	270.9		**2KJ1205 - ■DB13 - ■■U1**	**P01**	82
	3.8	938	1.8	244.29	★	**2KJ1205 - ■DB13 - ■■T1**	**P01**	82
	4.3	821	2.0	213.64		**2KJ1205 - ■DB13 - ■■S1**	**P01**	82
	D.68-LA80S6							
	3.7	955	0.84	248.68	★	**2KJ1204 - ■DB13 - ■■T1**	**P01**	50
	4.1	868	0.92	226.07		**2KJ1204 - ■DB13 - ■■S1**	**P01**	50
	4.5	780	1.0	203.09	★	**2KJ1204 - ■DB13 - ■■R1**	**P01**	50

★ Preferred transmission ratio

Shaft designs, see page 2/117 — **1, 2 or 9**

Frequency and voltage, see page 8/20 — **1 to 9**

Gearbox housing mounting position, see page 2/119 — **A, F, H or R**

*) For mounting type B3

© Siemens AG 2011

Selection and ordering data (continued)

Power rating P_{Motor} kW	Output speed n_2 (50 Hz) rpm	Output torque T_2 Nm	Service factor f_B	Gearbox ratio i_{tot}		Order No.	Order code (No. of poles)	Weight *) kg
0.37	**D.68-LA71M4**							
	4.9	725	1.1	281.01		**2KJ1204 - ■CE13 - ■■U1**		46
	5.5	641	1.2	248.68	★	**2KJ1204 - ■CE13 - ■■T1**		46
	6.1	583	1.4	226.07		**2KJ1204 - ■CE13 - ■■S1**		46
	6.7	524	1.5	203.09	★	**2KJ1204 - ■CE13 - ■■R1**		46
	7.9	449	1.8	174.08		**2KJ1204 - ■CE13 - ■■Q1**		46
	8.7	406	2.0	157.5	★	**2KJ1204 - ■CE13 - ■■P1**		46
	9.4	375	2.1	145.38		**2KJ1204 - ■CE13 - ■■N1**		46
	D.48-LA71M4							
	6.6	538	0.84	208.77	★	**2KJ1203 - ■CE13 - ■■S1**		27
	7.4	479	0.94	185.66		**2KJ1203 - ■CE13 - ■■R1**		27
	8.5	415	1.1	161.05	★	**2KJ1203 - ■CE13 - ■■Q1**		27
	9.1	388	1.2	150.48		**2KJ1203 - ■CE13 - ■■P1**		27
	10.4	341	1.3	132.34	★	**2KJ1203 - ■CE13 - ■■N1**		27
	11.8	299	1.5	115.91		**2KJ1203 - ■CE13 - ■■M1**		27
	13.4	264	1.7	102.52	★	**2KJ1203 - ■CE13 - ■■L1**		27
	14.7	240	1.9	92.91		**2KJ1203 - ■CE13 - ■■K1**		27
	16.7	212	2.1	82.02	★	**2KJ1203 - ■CE13 - ■■J1**		27
	Z.48-LA71M4							
	27	132	2.2	51.28		**2KJ1103 - ■CE13 - ■■A2**		27
	D.38-LA71M4							
	13.2	268	0.82	103.89		**2KJ1202 - ■CE13 - ■■M1**		18
	15.0	236	0.93	91.34	★	**2KJ1202 - ■CE13 - ■■L1**		18
	16.6	213	1.0	82.52		**2KJ1202 - ■CE13 - ■■K1**		18
	19.1	185	1.2	71.91	★	**2KJ1202 - ■CE13 - ■■J1**		18
	21	167	1.3	64.58		**2KJ1202 - ■CE13 - ■■H1**		18
	24	150	1.5	58.3	★	**2KJ1202 - ■CE13 - ■■G1**		18
	26	136	1.6	52.86		**2KJ1202 - ■CE13 - ■■F1**		18
	Z.38-LA71M4							
	31	114	1.9	44.12	★	**2KJ1102 - ■CE13 - ■■A2**		17
	35	101	2.1	39.24		**2KJ1102 - ■CE13 - ■■X1**		17
	40	88	2.5	34.04	★	**2KJ1102 - ■CE13 - ■■W1**		17
	43	82	2.7	31.8		**2KJ1102 - ■CE13 - ■■V1**		17
	D.28-LA71M4							
	22	157	0.89	60.77	★	**2KJ1201 - ■CE13 - ■■C1**		10
	Z.28-LA71M4							
	27	132	1.1	51.35		**2KJ1101 - ■CE13 - ■■C2**		10
	32	112	1.3	43.3	★	**2KJ1101 - ■CE13 - ■■B2**		10
	36	99	1.4	38.45		**2KJ1101 - ■CE13 - ■■A2**		10
	41	87	1.6	33.71	★	**2KJ1101 - ■CE13 - ■■X1**		10
	45	78	1.8	30.16		**2KJ1101 - ■CE13 - ■■W1**		10
	51	69	2.0	26.77	★	**2KJ1101 - ■CE13 - ■■V1**		10
	58	60	2.3	23.46		**2KJ1101 - ■CE13 - ■■U1**		10
	66	53	2.6	20.63	★	**2KJ1101 - ■CE13 - ■■T1**		10

★ Preferred transmission ratio

Shaft designs, see page 2/117 — **1, 2 or 9**

Frequency and voltage, see page 8/20 — **1 to 9**

Gearbox housing mounting position, see page 2/119 — **A, F, H or R**

*) For mounting type B3

© Siemens AG 2011

2

Selection and ordering data (continued)

Power rating P_{Motor} kW	Output speed n_2 (50 Hz) rpm	Output torque T_2 Nm	Service factor f_B	Gearbox ratio i_{tot}		Order No.	Order code (No. of poles)	Weight *) kg
0.37	**Z.28-LA71M4**							
	74	48	2.9	18.63		**2KJ1101 - ■CE13 - ■■S1**		10
	84	42	3.3	16.24	★	**2KJ1101 - ■CE13 - ■■R1**		10
	Z.18-LA71M4							
	32	111	0.81	43.15		**2KJ1100 - ■CE13 - ■■U1**		9
	37	96	0.94	37.23	★	**2KJ1100 - ■CE13 - ■■T1**		9
	43	82	1.1	31.98		**2KJ1100 - ■CE13 - ■■S1**		9
	46	76	1.2	29.45	★	**2KJ1100 - ■CE13 - ■■R1**		9
	51	69	1.3	26.77		**2KJ1100 - ■CE13 - ■■Q1**		9
	58	61	1.5	23.69	★	**2KJ1100 - ■CE13 - ■■P1**		9
	69	51	1.8	19.85		**2KJ1100 - ■CE13 - ■■N1**		9
	81	44	2.1	16.92	★	**2KJ1100 - ■CE13 - ■■M1**		9
	95	37	2.4	14.38	★	**2KJ1100 - ■CE13 - ■■L1**		9
	110	32	2.8	12.5		**2KJ1100 - ■CE13 - ■■K1**		9
	126	28	3.1	10.88	★	**2KJ1100 - ■CE13 - ■■J1**		9
	140	25	3.3	9.81		**2KJ1100 - ■CE13 - ■■H1**		9
	158	22	3.6	8.66		**2KJ1100 - ■CE13 - ■■G1**		9
	185	19	2.9	7.42	★	**2KJ1100 - ■CE13 - ■■F1**		9
	212	17	3.2	6.45		**2KJ1100 - ■CE13 - ■■E1**		9
	244	14	3.5	5.61	★	**2KJ1100 - ■CE13 - ■■D1**		9
	271	13	3.8	5.06		**2KJ1100 - ■CE13 - ■■C1**		9
	306	12	4.3	4.47		**2KJ1100 - ■CE13 - ■■B1**		9
	383	9.2	5.0	3.58	★	**2KJ1100 - ■CE13 - ■■A1**		9
	E.68-LA71M4							
	110	32	2.5	12.4	★	**2KJ1003 - ■CE13 - ■■W1**		26
	123	29	3.2	11.18		**2KJ1003 - ■CE13 - ■■V1**		26
	136	26	3.7	10.08	★	**2KJ1003 - ■CE13 - ■■U1**		26
	E.48-LA71M4							
	121	29	1.9	11.3		**2KJ1002 - ■CE13 - ■■U1**		16
	137	26	3.1	10	★	**2KJ1002 - ■CE13 - ■■T1**		16
	151	23	2.7	9.09		**2KJ1002 - ■CE13 - ■■S1**		16
	168	21	4.0	8.17	★	**2KJ1002 - ■CE13 - ■■R1**		16
	E.38-LA71M4							
	147	24	1.3	9.33	★	**2KJ1001 - ■CE13 - ■■S1**		13
	165	21	1.5	8.3		**2KJ1001 - ■CE13 - ■■R1**		13
	190	19	2.0	7.2	★	**2KJ1001 - ■CE13 - ■■Q1**		13
	204	17	2.8	6.73		**2KJ1001 - ■CE13 - ■■P1**		13
	231	15	3.5	5.92	★	**2KJ1001 - ■CE13 - ■■N1**		13
0.55	**D.188-Z48-LA71ZMP4**							
	0.20	23 625	0.85	7 008	★	**2KJ1235 - ■CG13 - ■■T1**		603
	0.21	21 808	0.92	6 469		**2KJ1235 - ■CG13 - ■■S1**		603
	0.24	18 962	1.1	5 625	★	**2KJ1235 - ■CG13 - ■■R1**		603
	0.27	17 216	1.2	5 107		**2KJ1235 - ■CG13 - ■■Q1**		603
	0.29	15 719	1.3	4 663	★	**2KJ1235 - ■CG13 - ■■P1**		603

★ Preferred transmission ratio

Shaft designs, see page 2/117 — **1, 2 or 9**

Frequency and voltage, see page 8/20 — **1 to 9**

Gearbox housing mounting position, see page 2/119 — **A, F, H or R**

*) For mounting type B3

© Siemens AG 2011

Selection and ordering data (continued)

Power rating P_{Motor} kW	Output speed n_2 (50 Hz) rpm	Output torque T_2 Nm	Service factor f_B	Gearbox ratio i_{tot}		Order No.	Order code (No. of poles)	Weight *) kg
0.55	**D.188-Z48-LA71ZMP4**							
	0.32	14 425	1.4	4 279		**2KJ1235 - ■CG13 - ■■N1**		603
	0.35	13 289	1.5	3 942	★	**2KJ1235 - ■CG13 - ■■M1**		603
	0.38	12 068	1.7	3 580		**2KJ1235 - ■CG13 - ■■L1**		603
	0.42	10 993	1.8	3 261	★	**2KJ1235 - ■CG13 - ■■K1**		603
	0.46	10 073	2.0	2 988		**2KJ1235 - ■CG13 - ■■J1**		603
	D.168-Z48-LA71ZMP4							
	0.27	16 909	0.83	5 016		**2KJ1232 - ■CG13 - ■■L1**		459
	0.30	15 402	0.91	4 569	★	**2KJ1232 - ■CG13 - ■■K1**		459
	0.33	14 111	0.99	4 186		**2KJ1232 - ■CG13 - ■■J1**		459
	0.37	12 591	1.1	3 735	★	**2KJ1232 - ■CG13 - ■■H1**		459
	0.59	7 818	1.8	2 319	★	**2KJ1232 - ■CG13 - ■■D1**		459
	D.148-Z48-LA71ZMP4							
	0.84	5 498	1.5	1 631		**2KJ1231 - ■CG13 - ■■N1**		292
	0.91	5 063	1.6	1 502		**2KJ1231 - ■CG13 - ■■M1**		292
	1	4 598	1.7	1 364		**2KJ1231 - ■CG13 - ■■L1**		292
	1.1	4 190	1.9	1 243		**2KJ1231 - ■CG13 - ■■K1**		292
	D.148-Z38-LA71ZMP4							
	0.47	9 908	0.81	2 939		**2KJ1228 - ■CG13 - ■■G1**		283
	0.54	8 498	0.94	2 521		**2KJ1228 - ■CG13 - ■■E1**		283
	0.54	8 522	0.94	2 528		**2KJ1228 - ■CG13 - ■■F1**		283
	0.61	7 598	1.1	2 254		**2KJ1228 - ■CG13 - ■■D1**		283
	0.66	6 978	1.1	2 070		**2KJ1228 - ■CG13 - ■■C1**		283
	0.74	6 287	1.3	1 865		**2KJ1228 - ■CG13 - ■■B1**		283
	0.85	5 407	1.5	1 604		**2KJ1228 - ■CG13 - ■■A1**		283
	D.128-Z38-LA71ZMP4							
	0.76	6 061	0.84	1 798		**2KJ1225 - ■CG13 - ■■D1**		198
	0.83	5 566	0.92	1 651	★	**2KJ1225 - ■CG13 - ■■C1**		198
	0.92	5 016	1.0	1 488		**2KJ1225 - ■CG13 - ■■B1**		198
	1.1	4 315	1.2	1 280	★	**2KJ1225 - ■CG13 - ■■A1**		198
	D.128-Z48-LA71ZMP4							
	1.1	4 285	1.2	1 271		**2KJ1227 - ■CG13 - ■■P1**		208
	1.2	3 931	1.3	1 166		**2KJ1227 - ■CG13 - ■■N1**		208
	1.3	3 621	1.4	1 074		**2KJ1227 - ■CG13 - ■■M1**		208
	1.4	3 287	1.6	975		**2KJ1227 - ■CG13 - ■■L1**		208
	1.5	2 997	1.7	889		**2KJ1227 - ■CG13 - ■■K1**		208
	1.7	2 744	1.9	814		**2KJ1227 - ■CG13 - ■■J1**		208
	D.108-Z38-LA71ZMP4							
	1.3	3 577	0.87	1 061		**2KJ1223 - ■CG13 - ■■L1**		127
	1.4	3 273	0.95	971		**2KJ1223 - ■CG13 - ■■K1**		127
	1.6	2 926	1.1	868		**2KJ1223 - ■CG13 - ■■J1**		127
	1.7	2 687	1.2	797		**2KJ1223 - ■CG13 - ■■H1**		127

★ Preferred transmission ratio

Shaft designs, see page 2/117 — **1, 2 or 9**

Frequency and voltage, see page 8/20 — **1 to 9**

Gearbox housing mounting position, see page 2/119 — **A, F, H or R**

*) For mounting type B3

© Siemens AG 2011

2

Selection and ordering data (continued)

Power rating P_{Motor} kW	Output speed n_2 (50 Hz) rpm	Output torque T_2 Nm	Service factor f_B	Gearbox ratio i_{tot}		Order No.	Order code (No. of poles)	Weight *) kg
0.55	**D.108-LA90LA8**							
	1.9	2 796	1.1	359.3		**2KJ1206 - ■EE13 - ■■V1**	**P02**	136
	2.1	2 531	1.2	325.21	★	**2KJ1206 - ■EE13 - ■■U1**	**P02**	136
	2.4	2 216	1.4	284.73		**2KJ1206 - ■EE13 - ■■T1**	**P02**	136
	D.108-LA80M6							
	2.5	2 074	1.5	359.3		**2KJ1206 - ■DC13 - ■■V1**	**P01**	130
	2.8	1 877	1.7	325.21	★	**2KJ1206 - ■DC13 - ■■U1**	**P01**	130
	3.2	1 643	1.9	284.73		**2KJ1206 - ■DC13 - ■■T1**	**P01**	130
	D.88-LA90LA8							
	2.5	2 108	0.8	270.9		**2KJ1205 - ■EE13 - ■■U1**	**P02**	88
	2.8	1 901	0.88	244.29	★	**2KJ1205 - ■EE13 - ■■T1**	**P02**	88
	D.88-LA80M6							
	3.0	1 734	0.97	300.41	★	**2KJ1205 - ■DC13 - ■■V1**	**P01**	82
	3.4	1 564	1.1	270.9		**2KJ1205 - ■DC13 - ■■U1**	**P01**	82
	3.7	1 410	1.2	244.29	★	**2KJ1205 - ■DC13 - ■■T1**	**P01**	82
	4.3	1 233	1.4	213.64		**2KJ1205 - ■DC13 - ■■S1**	**P01**	82
	D.88-LA71ZMP4							
	4.6	1 152	1.5	300.41	★	**2KJ1205 - ■CG13 - ■■V1**		78
	5.1	1 039	1.6	270.9		**2KJ1205 - ■CG13 - ■■U1**		78
	5.6	937	1.8	244.29	★	**2KJ1205 - ■CG13 - ■■T1**		78
	6.4	819	2.1	213.64		**2KJ1205 - ■CG13 - ■■S1**		78
	D.68-LA71ZMP4							
	5.5	953	0.84	248.68	★	**2KJ1204 - ■CG13 - ■■T1**		46
	6.1	867	0.92	226.07		**2KJ1204 - ■CG13 - ■■S1**		46
	6.7	779	1	203.09	★	**2KJ1204 - ■CG13 - ■■R1**		46
	7.9	667	1.2	174.08		**2KJ1204 - ■CG13 - ■■Q1**		46
	8.7	604	1.3	157.5	★	**2KJ1204 - ■CG13 - ■■P1**		46
	9.4	557	1.4	145.38		**2KJ1204 - ■CG13 - ■■N1**		46
	10.8	485	1.7	126.41	★	**2KJ1204 - ■CG13 - ■■M1**		46
	11.9	440	1.8	114.78		**2KJ1204 - ■CG13 - ■■L1**		46
	13.1	402	2.0	104.8	★	**2KJ1204 - ■CG13 - ■■K1**		46
	14.2	369	2.2	96.16		**2KJ1204 - ■CG13 - ■■J1**		46
	D.48-LA71ZMP4							
	10.4	507	0.89	132.34	★	**2KJ1203 - ■CG13 - ■■N1**		27
	11.8	444	1.0	115.91		**2KJ1203 - ■CG13 - ■■M1**		27
	13.4	393	1.1	102.52	★	**2KJ1203 - ■CG13 - ■■L1**		27
	14.7	356	1.3	92.91		**2KJ1203 - ■CG13 - ■■K1**		27
	16.7	314	1.4	82.02	★	**2KJ1203 - ■CG13 - ■■J1**		27
	18.5	284	1.6	73.99		**2KJ1203 - ■CG13 - ■■H1**		27
	20	257	1.7	67.1	★	**2KJ1203 - ■CG13 - ■■G1**		27
	22	234	1.9	61.14		**2KJ1203 - ■CG13 - ■■F1**		27
	27	192	2.3	50		**2KJ1203 - ■CG13 - ■■D1**		27
	Z.48-LA71ZMP4							
	27	197	1.5	51.28		**2KJ1103 - ■CG13 - ■■A2**		27

★ Preferred transmission ratio

Shaft designs, see page 2/117 — **1, 2 or 9**

Frequency and voltage, see page 8/20 — **1 to 9**

Gearbox housing mounting position, see page 2/119 — **A, F, H or R**

*) For mounting type B3

© Siemens AG 2011

Selection and ordering data (continued)

Power rating P_{Motor} kW	Output speed n_2 (50 Hz) rpm	Output torque T_2 Nm	Service factor f_B	Gearbox ratio i_{tot}		Order No.	Order code (No. of poles)	Weight *) kg
0.55	**D.38-LA71ZMP4**							
	19.1	276	0.8	71.91	★	**2KJ1202 - ■CG13 - ■■J1**		18
	21	248	0.89	64.58		**2KJ1202 - ■CG13 - ■■H1**		18
	24	224	0.98	58.3	★	**2KJ1202 - ■CG13 - ■■G1**		18
	26	203	1.1	52.86		**2KJ1202 - ■CG13 - ■■F1**		18
	Z.38-LA71ZMP4							
	31	169	1.3	44.12	★	**2KJ1102 - ■CG13 - ■■A2**		17
	35	150	1.4	39.24		**2KJ1102 - ■CG13 - ■■X1**		17
	40	131	1.7	34.04	★	**2KJ1102 - ■CG13 - ■■W1**		17
	43	122	1.8	31.8		**2KJ1102 - ■CG13 - ■■V1**		17
	49	107	2.1	27.97	★	**2KJ1102 - ■CG13 - ■■U1**		17
	56	94	2.3	24.5		**2KJ1102 - ■CG13 - ■■T1**		17
	63	83	2.6	21.67	★	**2KJ1102 - ■CG13 - ■■S1**		17
	70	75	2.9	19.64		**2KJ1102 - ■CG13 - ■■R1**		17
	Z.28-LA71ZMP4							
	32	166	0.84	43.3	★	**2KJ1101 - ■CG13 - ■■B2**		10
	36	147	0.95	38.45		**2KJ1101 - ■CG13 - ■■A2**		10
	41	129	1.1	33.71	★	**2KJ1101 - ■CG13 - ■■X1**		10
	45	116	1.2	30.16		**2KJ1101 - ■CG13 - ■■W1**		10
	51	103	1.4	26.77	★	**2KJ1101 - ■CG13 - ■■V1**		10
	58	90	1.6	23.46		**2KJ1101 - ■CG13 - ■■U1**		10
	66	79	1.8	20.63	★	**2KJ1101 - ■CG13 - ■■T1**		10
	74	71	2.0	18.63		**2KJ1101 - ■CG13 - ■■S1**		10
	84	62	2.2	16.24	★	**2KJ1101 - ■CG13 - ■■R1**		10
	94	56	2.5	14.58		**2KJ1101 - ■CG13 - ■■Q1**		10
	104	50	2.8	13.17	★	**2KJ1101 - ■CG13 - ■■P1**		10
	115	46	3.1	11.94		**2KJ1101 - ■CG13 - ■■N1**		10
	126	42	3.4	10.87	★	**2KJ1101 - ■CG13 - ■■M1**		10
	143	37	3.8	9.61		**2KJ1101 - ■CG13 - ■■L1**		10
	217	24	3.9	6.31	★	**2KJ1101 - ■CG13 - ■■G1**		10
	240	22	4.2	5.72		**2KJ1101 - ■CG13 - ■■F1**		10
	263	20	4.6	5.21	★	**2KJ1101 - ■CG13 - ■■E1**		10
	298	18	5	4.6		**2KJ1101 - ■CG13 - ■■D1**		10
	Z.18-LA71ZMP4							
	46	113	0.8	29.45	★	**2KJ1100 - ■CG13 - ■■R1**		9
	51	103	0.88	26.77		**2KJ1100 - ■CG13 - ■■Q1**		9
	58	91	0.99	23.69	★	**2KJ1100 - ■CG13 - ■■P1**		9
	69	76	1.2	19.85		**2KJ1100 - ■CG13 - ■■N1**		9
	81	65	1.4	16.92	★	**2KJ1100 - ■CG13 - ■■M1**		9
	95	55	1.6	14.38	★	**2KJ1100 - ■CG13 - ■■L1**		9
	110	48	1.9	12.5		**2KJ1100 - ■CG13 - ■■K1**		9
	126	42	2.1	10.88	★	**2KJ1100 - ■CG13 - ■■J1**		9
	140	38	2.2	9.81		**2KJ1100 - ■CG13 - ■■H1**		9
	158	33	2.4	8.66		**2KJ1100 - ■CG13 - ■■G1**		9

★ Preferred transmission ratio

Shaft designs, see page 2/117 — **1, 2 or 9**

Frequency and voltage, see page 8/20 — **1 to 9**

Gearbox housing mounting position, see page 2/119 — **A, F, H or R**

*) For mounting type B3

© Siemens AG 2011

Selection and ordering data (continued)

Power rating P_{Motor} kW	Output speed n_2 (50 Hz) rpm	Output torque T_2 Nm	Service factor f_B	Gearbox ratio i_{tot}		Order No.	Order code (No. of poles)	Weight *) kg
0.55	**Z.18-LA71ZMP4**							
	185	28	1.9	7.42	★	**2KJ1100 - ■CG13 - ■■F1**		9
	212	25	2.1	6.45		**2KJ1100 - ■CG13 - ■■E1**		9
	244	22	2.4	5.61	★	**2KJ1100 - ■CG13 - ■■D1**		9
	271	19	2.5	5.06		**2KJ1100 - ■CG13 - ■■C1**		9
	306	17	2.9	4.47		**2KJ1100 - ■CG13 - ■■B1**		9
	383	14	3.4	3.58	★	**2KJ1100 - ■CG13 - ■■A1**		9
	E.68-LA71ZMP4							
	110	48	1.7	12.4	★	**2KJ1003 - ■CG13 - ■■W1**		26
	123	43	2.1	11.18		**2KJ1003 - ■CG13 - ■■V1**		26
	136	39	2.5	10.08	★	**2KJ1003 - ■CG13 - ■■U1**		26
	E.48-LA71ZMP4							
	121	43	1.3	11.3		**2KJ1002 - ■CG13 - ■■U1**		16
	137	38	2.1	10	★	**2KJ1002 - ■CG13 - ■■T1**		16
	151	35	1.8	9.09		**2KJ1002 - ■CG13 - ■■S1**		16
	168	31	2.7	8.17	★	**2KJ1002 - ■CG13 - ■■R1**		16
	196	27	3.6	7		**2KJ1002 - ■CG13 - ■■Q1**		16
	E.38-LA71ZMP4							
	147	36	0.89	9.33	★	**2KJ1001 - ■CG13 - ■■S1**		13
	165	32	1.0	8.3		**2KJ1001 - ■CG13 - ■■R1**		13
	190	28	1.4	7.2	★	**2KJ1001 - ■CG13 - ■■Q1**		13
	204	26	1.9	6.73		**2KJ1001 - ■CG13 - ■■P1**		13
	231	23	2.3	5.92	★	**2KJ1001 - ■CG13 - ■■N1**		13
	264	20	3.5	5.18		**2KJ1001 - ■CG13 - ■■M1**		13
	299	18	4.4	4.58	★	**2KJ1001 - ■CG13 - ■■L1**		13
	330	16	3.9	4.15		**2KJ1001 - ■CG13 - ■■K1**		13
	373	14	5.0	3.67	★	**2KJ1001 - ■CG13 - ■■J1**		13
	414	13	5.1	3.31		**2KJ1001 - ■CG13 - ■■H1**		13
0.75	**D.188-Z48-LA80ZMB4E**							
	0.27	23 327	0.86	5 107		**2KJ1235 - ■DE13 - ■■Q1**		607
	0.30	21 299	0.94	4 663	★	**2KJ1235 - ■DE13 - ■■P1**		607
	0.33	19 545	1.0	4 279		**2KJ1235 - ■DE13 - ■■N1**		607
	0.36	18 006	1.1	3 942	★	**2KJ1235 - ■DE13 - ■■M1**		607
	0.39	16 352	1.2	3 580		**2KJ1235 - ■DE13 - ■■L1**		607
	0.43	14 895	1.3	3 261	★	**2KJ1235 - ■DE13 - ■■K1**		607
	0.47	13 648	1.5	2 988		**2KJ1235 - ■DE13 - ■■J1**		607
	0.52	12 177	1.6	2 666	★	**2KJ1235 - ■DE13 - ■■H1**		607
	0.59	10 866	1.8	2 379		**2KJ1235 - ■DE13 - ■■G1**		607
	D.168-Z48-LA80ZMB4E							
	0.38	17 060	0.82	3 735	★	**2KJ1232 - ■DE13 - ■■H1**		463
	0.42	15 224	0.92	3 333		**2KJ1232 - ■DE13 - ■■G1**		463
	0.50	12 931	1.1	2 831		**2KJ1232 - ■DE13 - ■■F1**		463
	0.59	10 766	1.3	2 357	★	**2KJ1232 - ■DE13 - ■■E1**		463
	0.60	10 592	1.3	2 319	★	**2KJ1232 - ■DE13 - ■■D1**		463

★ Preferred transmission ratio

Shaft designs, see page 2/117 — **1, 2 or 9**

Frequency and voltage, see page 8/20 — **1 to 9**

Gearbox housing mounting position, see page 2/119 — **A, F, H or R**

*) For mounting type B3

© Siemens AG 2011

Selection and ordering data (continued)

Power rating P_{Motor} kW	Output speed n_2 (50 Hz) rpm	Output torque T_2 Nm	Service factor f_B	Gearbox ratio i_{tot}		Order No.	Order code (No. of poles)	Weight *) kg
0.75	**D.168-Z48-LA80ZMB4E**							
	0.68	9 455	1.5	2 070		**2KJ1232 - ■DE13 - ■■C1**		463
	0.80	8 030	1.7	1 758		**2KJ1232 - ■DE13 - ■■B1**		463
	D.148-Z48-LA80ZMB4E							
	0.86	7 450	1.1	1 631		**2KJ1231 - ■DE13 - ■■N1**		296
	0.93	6 861	1.2	1 502		**2KJ1231 - ■DE13 - ■■M1**		296
	1.0	6 230	1.3	1 364		**2KJ1231 - ■DE13 - ■■L1**		296
	1.1	5 678	1.4	1 243		**2KJ1231 - ■DE13 - ■■K1**		296
	1.2	5 203	1.5	1 139		**2KJ1231 - ■DE13 - ■■J1**		296
	1.4	4 641	1.7	1 016		**2KJ1231 - ■DE13 - ■■H1**		296
	1.5	4 143	1.9	907		**2KJ1231 - ■DE13 - ■■G1**		296
	D.148-Z38-LA80ZMB4E							
	0.68	9 455	0.85	2 070		**2KJ1228 - ■DE13 - ■■C1**		287
	0.75	8 519	0.94	1 865		**2KJ1228 - ■DE13 - ■■B1**		287
	0.87	7 326	1.1	1 604		**2KJ1228 - ■DE13 - ■■A1**		287
	D.128-Z48-LA80ZMB4E							
	1.1	5 805	0.88	1 271		**2KJ1227 - ■DE13 - ■■P1**		212
	1.2	5 326	0.96	1 166		**2KJ1227 - ■DE13 - ■■N1**		212
	1.3	4 906	1.0	1 074		**2KJ1227 - ■DE13 - ■■M1**		212
	1.4	4 453	1.1	975		**2KJ1227 - ■DE13 - ■■L1**		212
	1.6	4 061	1.3	889		**2KJ1227 - ■DE13 - ■■K1**		212
	1.7	3 718	1.4	814		**2KJ1227 - ■DE13 - ■■J1**		212
	1.9	3 316	1.5	726		**2KJ1227 - ■DE13 - ■■H1**		212
	2.2	2 960	1.7	648		**2KJ1227 - ■DE13 - ■■G1**		212
	D.128-Z38-LA80ZMB4E							
	1.1	5 847	0.87	1 280	★	**2KJ1225 - ■DE13 - ■■A1**		202
	D.128-LA100LA8							
	2.5	2 825	1.8	268.16	★	**2KJ1207 - ■FB13 - ■■U1**	**P02**	221
	2.8	2 590	2.0	245.93		**2KJ1207 - ■FB13 - ■■T1**	**P02**	221
	D.108-Z38-LA80ZMB4E							
	1.8	3 640	0.85	797		**2KJ1223 - ■DE13 - ■■H1**		131
	D.108-LA100LA8							
	2.4	2 999	1.0	284.73		**2KJ1206 - ■FB13 - ■■T1**	**P02**	144
	D.108-LA90SB6E							
	2.6	2 782	1.1	359.3		**2KJ1206 - ■ED13 - ■■V1**	**P01**	133
	2.8	2 518	1.2	325.21	★	**2KJ1206 - ■ED13 - ■■U1**	**P01**	133
	3.2	2 205	1.4	284.73		**2KJ1206 - ■ED13 - ■■T1**	**P01**	133
	3.6	1 989	1.6	256.86	★	**2KJ1206 - ■ED13 - ■■S1**	**P01**	133
	D.108-LA80ZMB4E							
	3.9	1 838	1.7	359.3		**2KJ1206 - ■DE13 - ■■V1**		130
	4.3	1 664	1.9	325.21	★	**2KJ1206 - ■DE13 - ■■U1**		130
	D.88-LA90SB6E							
	3.4	2 098	0.80	270.9		**2KJ1205 - ■ED13 - ■■U1**	**P01**	85
	3.8	1 892	0.89	244.29	★	**2KJ1205 - ■ED13 - ■■T1**	**P01**	85

★ Preferred transmission ratio

Shaft designs, see page 2/117 — **1, 2 or 9**

Frequency and voltage, see page 8/20 — **1 to 9**

Gearbox housing mounting position, see page 2/119 — **A, F, H or R**

*) For mounting type B3

© Siemens AG 2011

2

Selection and ordering data (continued)

Power rating P_{Motor} kW	Output speed n_2 (50 Hz) rpm	Output torque T_2 Nm	Service factor f_B	Gearbox ratio i_{tot}		Order No.	Order code (No. of poles)	Weight *) kg
0.75	**D.88-LA90SB6E**							
	4.3	1 654	1.0	213.64		**2KJ1205 - ■ED13 - ■■S1**	**P01**	85
	D.88-LA80ZMB4E							
	4.7	1 537	1.1	300.41	★	**2KJ1205 - ■DE13 - ■■V1**		82
	5.2	1 386	1.2	270.9		**2KJ1205 - ■DE13 - ■■U1**		82
	5.7	1 250	1.3	244.29	★	**2KJ1205 - ■DE13 - ■■T1**		82
	6.6	1 093	1.5	213.64		**2KJ1205 - ■DE13 - ■■S1**		82
	7.3	981	1.7	191.8	★	**2KJ1205 - ■DE13 - ■■R1**		82
	8.0	896	1.9	175.18		**2KJ1205 - ■DE13 - ■■Q1**		82
	9.0	795	2.1	155.46	★	**2KJ1205 - ■DE13 - ■■P1**		82
	D.68-LA80ZMB4E							
	8.0	891	0.90	174.08		**2KJ1204 - ■DE13 - ■■Q1**		50
	8.9	806	0.99	157.5	★	**2KJ1204 - ■DE13 - ■■P1**		50
	9.6	744	1.1	145.38		**2KJ1204 - ■DE13 - ■■N1**		50
	11.1	647	1.2	126.41	★	**2KJ1204 - ■DE13 - ■■M1**		50
	12.2	587	1.4	114.78		**2KJ1204 - ■DE13 - ■■L1**		50
	13.4	536	1.5	104.8	★	**2KJ1204 - ■DE13 - ■■K1**		50
	14.6	492	1.6	96.16		**2KJ1204 - ■DE13 - ■■J1**		50
	15.8	453	1.8	88.59	★	**2KJ1204 - ■DE13 - ■■H1**		50
	17.4	412	1.9	80.46		**2KJ1204 - ■DE13 - ■■G1**		50
	19.1	375	2.1	73.3	★	**2KJ1204 - ■DE13 - ■■F1**		50
	21	343	2.3	67.14		**2KJ1204 - ■DE13 - ■■E1**		50
	Z.68-LA80ZMB4E							
	29	246	2.2	48.09	★	**2KJ1104 - ■DE13 - ■■X1**		48
	D.48-LA80ZMB4E							
	13.7	524	0.86	102.52	★	**2KJ1203 - ■DE13 - ■■L1**		31
	15.1	475	0.95	92.91		**2KJ1203 - ■DE13 - ■■K1**		31
	17.1	420	1.1	82.02	★	**2KJ1203 - ■DE13 - ■■J1**		31
	18.9	379	1.2	73.99		**2KJ1203 - ■DE13 - ■■H1**		31
	21	343	1.3	67.1	★	**2KJ1203 - ■DE13 - ■■G1**		31
	23	313	1.4	61.14		**2KJ1203 - ■DE13 - ■■F1**		31
	25	286	1.6	55.92	★	**2KJ1203 - ■DE13 - ■■E1**		31
	28	256	1.8	50		**2KJ1203 - ■DE13 - ■■D1**		31
	Z.48-LA80ZMB4E							
	27	262	1.1	51.28		**2KJ1103 - ■DE13 - ■■A2**		31
	31	232	1.9	45.38	★	**2KJ1103 - ■DE13 - ■■X1**		31
	34	211	2.1	41.26		**2KJ1103 - ■DE13 - ■■W1**		31
	38	190	2.4	37.06	★	**2KJ1103 - ■DE13 - ■■V1**		31
	D.38-LA80ZMB4E							
	26	270	0.81	52.86		**2KJ1202 - ■DE13 - ■■F1**		22
	Z.38-LA80ZMB4E							
	32	226	0.97	44.12	★	**2KJ1102 - ■DE13 - ■■A2**		21
	36	201	1.0	39.24		**2KJ1102 - ■DE13 - ■■X1**		21
	41	174	1.3	34.04	★	**2KJ1102 - ■DE13 - ■■W1**		21

★ Preferred transmission ratio

Shaft designs, see page 2/117 — **1, 2 or 9**

Frequency and voltage, see page 8/20 — **1 to 9**

Gearbox housing mounting position, see page 2/119 — **A, F, H or R**

*) For mounting type B3

© Siemens AG 2011

Selection and ordering data (continued)

Power rating P_{Motor} kW	Output speed n_2 (50 Hz) rpm	Output torque T_2 Nm	Service factor f_B	Gearbox ratio i_{tot}		Order No.	Order code (No. of poles)	Weight *) kg
0.75	**Z.38-LA80ZMB4E**							
	44	163	1.4	31.8		**2KJ1102 - ■DE13 - ■■V1**		21
	50	143	1.5	27.97	★	**2KJ1102 - ■DE13 - ■■U1**		21
	57	125	1.8	24.5		**2KJ1102 - ■DE13 - ■■T1**		21
	65	111	2.0	21.67	★	**2KJ1102 - ■DE13 - ■■S1**		21
	71	100	2.2	19.64		**2KJ1102 - ■DE13 - ■■R1**		21
	81	89	2.5	17.33	★	**2KJ1102 - ■DE13 - ■■Q1**		21
	90	80	2.7	15.64		**2KJ1102 - ■DE13 - ■■P1**		21
	99	72	3.0	14.18	★	**2KJ1102 - ■DE13 - ■■N1**		21
	108	66	3.3	12.92		**2KJ1102 - ■DE13 - ■■M1**		21
	118	60	3.6	11.82	★	**2KJ1102 - ■DE13 - ■■L1**		21
	Z.28-LA80ZMB4E							
	42	172	0.81	33.71	★	**2KJ1101 - ■DE13 - ■■X1**		14
	46	154	0.91	30.16		**2KJ1101 - ■DE13 - ■■W1**		14
	52	137	1.0	26.77	★	**2KJ1101 - ■DE13 - ■■V1**		14
	60	120	1.2	23.46		**2KJ1101 - ■DE13 - ■■U1**		14
	68	106	1.3	20.63	★	**2KJ1101 - ■DE13 - ■■T1**		14
	75	95	1.5	18.63		**2KJ1101 - ■DE13 - ■■S1**		14
	86	83	1.7	16.24	★	**2KJ1101 - ■DE13 - ■■R1**		14
	96	75	1.9	14.58		**2KJ1101 - ■DE13 - ■■Q1**		14
	106	67	2.1	13.17	★	**2KJ1101 - ■DE13 - ■■P1**		14
	117	61	2.3	11.94		**2KJ1101 - ■DE13 - ■■N1**		14
	129	56	2.5	10.87	★	**2KJ1101 - ■DE13 - ■■M1**		14
	146	49	2.8	9.61		**2KJ1101 - ■DE13 - ■■L1**		14
	158	45	3.1	8.87	★	**2KJ1101 - ■DE13 - ■■K1**		14
	183	39	3.5	7.64		**2KJ1101 - ■DE13 - ■■J1**		14
	202	36	3.7	6.94	★	**2KJ1101 - ■DE13 - ■■H1**		14
	222	32	2.9	6.31	★	**2KJ1101 - ■DE13 - ■■G1**		14
	245	29	3.2	5.72		**2KJ1101 - ■DE13 - ■■F1**		14
	269	27	3.5	5.21	★	**2KJ1101 - ■DE13 - ■■E1**		14
	304	24	3.7	4.6		**2KJ1101 - ■DE13 - ■■D1**		14
	329	22	4.1	4.25	★	**2KJ1101 - ■DE13 - ■■C1**		14
	383	19	4.3	3.66		**2KJ1101 - ■DE13 - ■■B1**		14
	420	17	4.5	3.33	★	**2KJ1101 - ■DE13 - ■■A1**		14
	E.68-LA80ZMB4E							
	113	63	1.3	12.4	★	**2KJ1003 - ■DE13 - ■■W1**		30
	125	57	1.6	11.18		**2KJ1003 - ■DE13 - ■■V1**		30
	139	52	1.8	10.08	★	**2KJ1003 - ■DE13 - ■■U1**		30
	159	45	3.3	8.82		**2KJ1003 - ■DE13 - ■■T1**		30
	177	40	4.2	7.92	★	**2KJ1003 - ■DE13 - ■■S1**		30
	194	37	4.1	7.23		**2KJ1003 - ■DE13 - ■■R1**		30
	E.48-LA80ZMB4E							
	124	58	0.95	11.3		**2KJ1002 - ■DE13 - ■■U1**		20
	140	51	1.6	10	★	**2KJ1002 - ■DE13 - ■■T1**		20

★ Preferred transmission ratio

Shaft designs, see page 2/117 — **1, 2 or 9**

Frequency and voltage, see page 8/20 — **1 to 9**

Gearbox housing mounting position, see page 2/119 — **A, F, H or R**

*) For mounting type B3

© Siemens AG 2011

2

Selection and ordering data (continued)

Power rating P_{Motor} kW	Output speed n_2 (50 Hz) rpm	Output torque T_2 Nm	Service factor f_B	Gearbox ratio i_{tot}		Order No.	Order code (No. of poles)	Weight *) kg
0.75	**E.48-LA80ZMB4E**							
	154	46	1.4	9.09		**2KJ1002 - ■DE13 - ■■S1**		20
	171	42	2.0	8.17	★	**2KJ1002 - ■DE13 - ■■R1**		20
	200	36	2.7	7		**2KJ1002 - ■DE13 - ■■Q1**		20
	221	32	3.6	6.33	★	**2KJ1002 - ■DE13 - ■■P1**		20
	239	30	4.0	5.85		**2KJ1002 - ■DE13 - ■■N1**		20
	276	26	4.6	5.08	★	**2KJ1002 - ■DE13 - ■■M1**		20
	E.38-LA80ZMB4E							
	194	37	1.0	7.2	★	**2KJ1001 - ■DE13 - ■■Q1**		17
	208	34	1.4	6.73		**2KJ1001 - ■DE13 - ■■P1**		17
	236	30	1.7	5.92	★	**2KJ1001 - ■DE13 - ■■N1**		17
	270	26	2.6	5.18		**2KJ1001 - ■DE13 - ■■M1**		17
	306	23	3.3	4.58	★	**2KJ1001 - ■DE13 - ■■L1**		17
	337	21	2.9	4.15		**2KJ1001 - ■DE13 - ■■K1**		17
	381	19	3.7	3.67	★	**2KJ1001 - ■DE13 - ■■J1**		17
	423	17	3.8	3.31		**2KJ1001 - ■DE13 - ■■H1**		17
	467	15	5.2	3	★	**2KJ1001 - ■DE13 - ■■G1**		17
	513	14	5.7	2.73		**2KJ1001 - ■DE13 - ■■F1**		17
	560	13	5.7	2.5	★	**2KJ1001 - ■DE13 - ■■E1**		17
1.1	**D.188-Z48-LA90SB4E**							
	0.40	23 626	0.85	3 580		**2KJ1235 - ■EM13 - ■■L1**		610
	0.44	21 521	0.93	3 261	★	**2KJ1235 - ■EM13 - ■■K1**		610
	0.48	19 719	1.0	2 988		**2KJ1235 - ■EM13 - ■■J1**		610
	0.54	17 594	1.1	2 666	★	**2KJ1235 - ■EM13 - ■■H1**		610
	0.60	15 700	1.3	2 379		**2KJ1235 - ■EM13 - ■■G1**		610
	0.71	13 337	1.5	2 021		**2KJ1235 - ■EM13 - ■■F1**		610
	0.86	11 100	1.8	1 682	★	**2KJ1235 - ■EM13 - ■■E1**		610
	0.87	10 922	1.8	1 655	★	**2KJ1235 - ■EM13 - ■■D1**		610
	D.168-Z48-LA90SB4E							
	0.61	15 555	0.90	2 357	★	**2KJ1232 - ■EM13 - ■■E1**		466
	0.62	15 304	0.91	2 319	★	**2KJ1232 - ■EM13 - ■■D1**		466
	0.70	13 661	1.0	2 070		**2KJ1232 - ■EM13 - ■■C1**		466
	0.82	11 602	1.2	1 758		**2KJ1232 - ■EM13 - ■■B1**		466
	0.98	9 655	1.5	1 463	★	**2KJ1232 - ■EM13 - ■■A1**		466
	D.168-Z68-LA90SB4E							
	0.99	9 642	1.5	1 461		**2KJ1233 - ■EM13 - ■■J1**		483
	1.2	8 091	1.7	1 226		**2KJ1233 - ■EM13 - ■■H1**		483
	1.4	6 903	2.0	1 046		**2KJ1233 - ■EM13 - ■■G1**		483
	D.148-Z48-LA90SB4E							
	0.96	9 912	0.81	1 502		**2KJ1231 - ■EM13 - ■■M1**		299
	1.1	9 002	0.89	1 364		**2KJ1231 - ■EM13 - ■■L1**		299
	1.2	8 203	0.98	1 243		**2KJ1231 - ■EM13 - ■■K1**		299
	1.3	7 517	1.1	1 139		**2KJ1231 - ■EM13 - ■■J1**		299
	1.4	6 705	1.2	1 016		**2KJ1231 - ■EM13 - ■■H1**		299

★ Preferred transmission ratio

Shaft designs, see page 2/117 — **1, 2 or 9**

Frequency and voltage, see page 8/20 — **1 to 9**

Gearbox housing mounting position, see page 2/119 — **A, F, H or R**

*) For mounting type B3

© Siemens AG 2011

Selection and ordering data (continued)

Power rating P_{Motor} kW	Output speed n_2 (50 Hz) rpm	Output torque T_2 Nm	Service factor f_B	Gearbox ratio i_{tot}		Order No.	Order code (No. of poles)	Weight *) kg
1.1	**D.148-Z48-LA90SB4E**							
	1.6	5 986	1.3	907		**2KJ1231 - ■EM13 - ■■G1**		299
	1.9	5 082	1.6	770		**2KJ1231 - ■EM13 - ■■F1**		299
	D.148-LA100L8							
	2.0	5 192	1.5	336.11		**2KJ1208 - ■FL13 - ■■W1**	**P02**	311
	2.3	4 655	1.7	301.34	★	**2KJ1208 - ■FL13 - ■■V1**	**P02**	311
	2.5	4 267	1.9	276.23		**2KJ1208 - ■FL13 - ■■U1**	**P02**	311
	2.7	3 935	2.0	254.7	★	**2KJ1208 - ■FL13 - ■■T1**	**P02**	311
	D.128-Z48-LA90SB4E							
	1.6	5 867	0.87	889		**2KJ1227 - ■EM13 - ■■K1**		215
	1.8	5 372	0.95	814		**2KJ1227 - ■EM13 - ■■J1**		215
	2.0	4 791	1.1	726		**2KJ1227 - ■EM13 - ■■H1**		215
	2.2	4 276	1.2	648		**2KJ1227 - ■EM13 - ■■G1**		215
	D.128-LA100L8							
	2.5	4 143	1.2	268.16	★	**2KJ1207 - ■FL13 - ■■U1**	**P02**	221
	2.8	3 799	1.3	245.93		**2KJ1207 - ■FL13 - ■■T1**	**P02**	221
	3.1	3 394	1.5	219.72	★	**2KJ1207 - ■FL13 - ■■S1**	**P02**	221
	D.128-LA90ZLD6E							
	3.5	2 997	1.7	268.16	★	**2KJ1207 - ■EQ13 - ■■U1**	**P01**	213
	3.8	2 748	1.9	245.93		**2KJ1207 - ■EQ13 - ■■T1**	**P01**	213
	D.108-LA90ZLD6E							
	2.9	3 634	0.85	325.21	★	**2KJ1206 - ■EQ13 - ■■U1**	**P01**	136
	3.3	3 182	0.97	284.73		**2KJ1206 - ■EQ13 - ■■T1**	**P01**	136
	3.7	2 871	1.1	256.86	★	**2KJ1206 - ■EQ13 - ■■S1**	**P01**	136
	D.108-LA90SB4E							
	4.0	2 621	1.2	359.3		**2KJ1206 - ■EM13 - ■■V1**		133
	4.4	2 372	1.3	325.21	★	**2KJ1206 - ■EM13 - ■■U1**		133
	5.1	2 077	1.5	284.73		**2KJ1206 - ■EM13 - ■■T1**		133
	5.6	1 874	1.7	256.86	★	**2KJ1206 - ■EM13 - ■■S1**		133
	6.1	1 716	1.8	235.19		**2KJ1206 - ■EM13 - ■■R1**		133
	6.9	1 526	2.0	209.21	★	**2KJ1206 - ■EM13 - ■■Q1**		133
	D.88-LA90SB4E							
	5.3	1 976	0.85	270.9		**2KJ1205 - ■EM13 - ■■U1**		85
	5.9	1 782	0.94	244.29	★	**2KJ1205 - ■EM13 - ■■T1**		85
	6.7	1 559	1.1	213.64		**2KJ1205 - ■EM13 - ■■S1**		85
	7.5	1 399	1.2	191.8	★	**2KJ1205 - ■EM13 - ■■R1**		85
	8.2	1 278	1.3	175.18		**2KJ1205 - ■EM13 - ■■Q1**		85
	9.3	1 134	1.5	155.46	★	**2KJ1205 - ■EM13 - ■■P1**		85
	10.0	1 047	1.6	143.5		**2KJ1205 - ■EM13 - ■■N1**		85
	11.1	947	1.8	129.79	★	**2KJ1205 - ■EM13 - ■■M1**		85
	12.0	872	1.9	119.52		**2KJ1205 - ■EM13 - ■■L1**		85
	13.0	806	2.1	110.54	★	**2KJ1205 - ■EM13 - ■■K1**		85
	14.0	749	2.2	102.61		**2KJ1205 - ■EM13 - ■■J1**		85

★ Preferred transmission ratio

Shaft designs, see page 2/117 — **1, 2 or 9**

Frequency and voltage, see page 8/20 — **1 to 9**

Gearbox housing mounting position, see page 2/119 — **A, F, H or R**

*) For mounting type B3

© Siemens AG 2011

2

Selection and ordering data (continued)

Power rating P_{Motor} kW	Output speed n_2 (50 Hz) rpm	Output torque T_2 Nm	Service factor f_B	Gearbox ratio i_{tot}		Order No.	Order code (No. of poles)	Weight *) kg
1.1	**D.68-LA90SB4E**							
	11.4	922	0.87	126.41	★	**2KJ1204 - ■EM13 - ■■M1**		53
	12.5	837	0.96	114.78		**2KJ1204 - ■EM13 - ■■L1**		53
	13.7	765	1.0	104.8	★	**2KJ1204 - ■EM13 - ■■K1**		53
	15	702	1.1	96.16		**2KJ1204 - ■EM13 - ■■J1**		53
	16.3	646	1.2	88.59	★	**2KJ1204 - ■EM13 - ■■H1**		53
	17.9	587	1.4	80.46		**2KJ1204 - ■EM13 - ■■G1**		53
	19.6	535	1.5	73.3	★	**2KJ1204 - ■EM13 - ■■F1**		53
	21	490	1.6	67.14		**2KJ1204 - ■EM13 - ■■E1**		53
	24	437	1.8	59.91	★	**2KJ1204 - ■EM13 - ■■D1**		53
	27	390	2.1	53.47		**2KJ1204 - ■EM13 - ■■C1**		53
	Z.68-LA90SB4E							
	30	351	1.5	48.09	★	**2KJ1104 - ■EM13 - ■■X1**		51
	34	307	2.6	42.06		**2KJ1104 - ■EM13 - ■■W1**		51
	D.48-LA90SB4E							
	19.5	540	0.83	73.99		**2KJ1203 - ■EM13 - ■■H1**		34
	22	490	0.92	67.1	★	**2KJ1203 - ■EM13 - ■■G1**		34
	24	446	1.0	61.14		**2KJ1203 - ■EM13 - ■■F1**		34
	26	408	1.1	55.92	★	**2KJ1203 - ■EM13 - ■■E1**		34
	29	365	1.2	50		**2KJ1203 - ■EM13 - ■■D1**		34
	Z.48-LA90SB4E							
	32	331	1.4	45.38	★	**2KJ1103 - ■EM13 - ■■X1**		34
	35	301	1.5	41.26		**2KJ1103 - ■EM13 - ■■W1**		34
	39	270	1.7	37.06	★	**2KJ1103 - ■EM13 - ■■V1**		34
	45	232	1.9	31.77		**2KJ1103 - ■EM13 - ■■U1**		34
	50	210	2.1	28.74	★	**2KJ1103 - ■EM13 - ■■T1**		34
	54	194	2.3	26.53		**2KJ1103 - ■EM13 - ■■S1**		34
	62	168	2.7	23.07	★	**2KJ1103 - ■EM13 - ■■R1**		34
	69	153	2.9	20.95		**2KJ1103 - ■EM13 - ■■Q1**		34
	75	140	3.2	19.13	★	**2KJ1103 - ■EM13 - ■■P1**		34
	Z.38-LA90SB4E							
	42	248	0.89	34.04	★	**2KJ1102 - ■EM13 - ■■W1**		24
	45	232	0.95	31.8		**2KJ1102 - ■EM13 - ■■V1**		24
	52	204	1.1	27.97	★	**2KJ1102 - ■EM13 - ■■U1**		24
	59	179	1.2	24.5		**2KJ1102 - ■EM13 - ■■T1**		24
	66	158	1.4	21.67	★	**2KJ1102 - ■EM13 - ■■S1**		24
	73	143	1.5	19.64		**2KJ1102 - ■EM13 - ■■R1**		24
	83	126	1.7	17.33	★	**2KJ1102 - ■EM13 - ■■Q1**		24
	92	114	1.9	15.64		**2KJ1102 - ■EM13 - ■■P1**		24
	102	103	2.1	14.18	★	**2KJ1102 - ■EM13 - ■■N1**		24
	111	94	2.3	12.92		**2KJ1102 - ■EM13 - ■■M1**		24
	122	86	2.6	11.82	★	**2KJ1102 - ■EM13 - ■■L1**		24
	136	77	2.7	10.57		**2KJ1102 - ■EM13 - ■■K1**		24
	148	71	2.8	9.7	★	**2KJ1102 - ■EM13 - ■■J1**		24

★ Preferred transmission ratio

Shaft designs, see page 2/117 — **1, 2 or 9**

Frequency and voltage, see page 8/20 — **1 to 9**

Gearbox housing mounting position, see page 2/119 — **A, F, H or R**

*) For mounting type B3

© Siemens AG 2011

Selection and ordering data (continued)

Power rating P_{Motor} kW	Output speed n_2 (50 Hz) rpm	Output torque T_2 Nm	Service factor f_B	Gearbox ratio i_{tot}		Order No.	Order code (No. of poles)	Weight *) kg
1.1	**Z.38-LA90SB4E**							
	165	64	3.1	8.75		**2KJ1102 - ■EM13 - ■■H1**		24
	191	55	3.5	7.52	★	**2KJ1102 - ■EM13 - ■■G1**		24
	192	55	3.4	7.5	★	**2KJ1102 - ■EM13 - ■■F1**		24
	215	49	3.7	6.71		**2KJ1102 - ■EM13 - ■■D1**		24
	234	45	3.8	6.16	★	**2KJ1102 - ■EM13 - ■■C1**		24
	259	40	4.1	5.55		**2KJ1102 - ■EM13 - ■■B1**		24
	302	35	4.6	4.77	★	**2KJ1102 - ■EM13 - ■■A1**		24
	Z.38-LA80ZMB2E							
	165	64	3.5	17.33	★	**2KJ1102 - ■DN13 - ■■Q1**	**P00**	21
	183	57	3.8	15.64		**2KJ1102 - ■DN13 - ■■P1**	**P00**	21
	202	52	4.2	14.18	★	**2KJ1102 - ■DN13 - ■■N1**	**P00**	21
	Z.28-LA90SB4E							
	61	171	0.82	23.46		**2KJ1101 - ■EM13 - ■■U1**		17
	70	150	0.93	20.63	★	**2KJ1101 - ■EM13 - ■■T1**		17
	77	136	1.0	18.63		**2KJ1101 - ■EM13 - ■■S1**		17
	89	118	1.2	16.24	★	**2KJ1101 - ■EM13 - ■■R1**		17
	99	106	1.3	14.58		**2KJ1101 - ■EM13 - ■■Q1**		17
	109	96	1.5	13.17	★	**2KJ1101 - ■EM13 - ■■P1**		17
	121	87	1.6	11.94		**2KJ1101 - ■EM13 - ■■N1**		17
	132	79	1.8	10.87	★	**2KJ1101 - ■EM13 - ■■M1**		17
	150	70	2.0	9.61		**2KJ1101 - ■EM13 - ■■L1**		17
	162	65	2.2	8.87	★	**2KJ1101 - ■EM13 - ■■K1**		17
	188	56	2.4	7.64		**2KJ1101 - ■EM13 - ■■J1**		17
	207	51	2.6	6.94	★	**2KJ1101 - ■EM13 - ■■H1**		17
	228	46	2.1	6.31	★	**2KJ1101 - ■EM13 - ■■G1**		17
	252	42	2.2	5.72		**2KJ1101 - ■EM13 - ■■F1**		17
	276	38	2.4	5.21	★	**2KJ1101 - ■EM13 - ■■E1**		17
	313	34	2.6	4.6		**2KJ1101 - ■EM13 - ■■D1**		17
	339	31	2.9	4.25	★	**2KJ1101 - ■EM13 - ■■C1**		17
	393	27	3.0	3.66		**2KJ1101 - ■EM13 - ■■B1**		17
	432	24	3.2	3.33	★	**2KJ1101 - ■EM13 - ■■A1**		17
	E.88-LA90SB4E							
	139	75	3.1	10.33	★	**2KJ1004 - ■EM13 - ■■S1**		50
	152	69	3.0	9.46		**2KJ1004 - ■EM13 - ■■R1**		50
	171	61	4.0	8.42	★	**2KJ1004 - ■EM13 - ■■Q1**		50
	E.68-LA90SB4E							
	116	90	0.9	12.4	★	**2KJ1003 - ■EM13 - ■■W1**		33
	129	82	1.1	11.18		**2KJ1003 - ■EM13 - ■■V1**		33
	143	74	1.3	10.08	★	**2KJ1003 - ■EM13 - ■■U1**		33
	163	64	2.3	8.82		**2KJ1003 - ■EM13 - ■■T1**		33
	182	58	2.9	7.92	★	**2KJ1003 - ■EM13 - ■■S1**		33
	199	53	2.8	7.23		**2KJ1003 - ■EM13 - ■■R1**		33
	224	47	3.6	6.42	★	**2KJ1003 - ■EM13 - ■■P1**		33

★ Preferred transmission ratio

Shaft designs, see page 2/117 — **1, 2 or 9**

Frequency and voltage, see page 8/20 — **1 to 9**

Gearbox housing mounting position, see page 2/119 — **A, F, H or R**

*) For mounting type B3

© Siemens AG 2011

2

Selection and ordering data (continued)

Power rating P_{Motor} kW	Output speed n_2 (50 Hz) rpm	Output torque T_2 Nm	Service factor f_B	Gearbox ratio i_{tot}		Order No.	Order code (No. of poles)	Weight *) kg
1.1	**E.68-LA90SB4E**							
	243	43	4.4	5.92		**2KJ1003 - ■EM13 - ■■N1**		33
	E.48-LA90SB4E							
	144	73	1.1	10	★	**2KJ1002 - ■EM13 - ■■T1**		23
	158	66	0.97	9.09		**2KJ1002 - ■EM13 - ■■S1**		23
	176	60	1.4	8.17	★	**2KJ1002 - ■EM13 - ■■R1**		23
	206	51	1.9	7		**2KJ1002 - ■EM13 - ■■Q1**		23
	227	46	2.5	6.33	★	**2KJ1002 - ■EM13 - ■■P1**		23
	246	43	2.8	5.85		**2KJ1002 - ■EM13 - ■■N1**		23
	283	37	3.2	5.08	★	**2KJ1002 - ■EM13 - ■■M1**		23
	312	34	3.9	4.62		**2KJ1002 - ■EM13 - ■■L1**		23
	342	31	4.9	4.21	★	**2KJ1002 - ■EM13 - ■■K1**		23
	404	26	5.4	3.56	★	**2KJ1002 - ■EM13 - ■■H1**		23
	E.38-LA90SB4E							
	214	49	0.98	6.73		**2KJ1001 - ■EM13 - ■■P1**		20
	243	43	1.2	5.92	★	**2KJ1001 - ■EM13 - ■■N1**		20
	278	38	1.9	5.18		**2KJ1001 - ■EM13 - ■■M1**		20
	314	33	2.3	4.58	★	**2KJ1001 - ■EM13 - ■■L1**		20
	347	30	2.0	4.15		**2KJ1001 - ■EM13 - ■■K1**		20
	392	27	2.6	3.67	★	**2KJ1001 - ■EM13 - ■■J1**		20
	435	24	2.7	3.31		**2KJ1001 - ■EM13 - ■■H1**		20
	480	22	3.7	3	★	**2KJ1001 - ■EM13 - ■■G1**		20
	527	20	4.0	2.73		**2KJ1001 - ■EM13 - ■■F1**		20
	576	18	4.0	2.5	★	**2KJ1001 - ■EM13 - ■■E1**		20
	643	16	4.4	2.24		**2KJ1001 - ■EM13 - ■■D1**		20
	702	15	5.3	2.05	★	**2KJ1001 - ■EM13 - ■■C1**		20
	778	14	6.1	1.85		**2KJ1001 - ■EM13 - ■■B1**		20
	906	12	6.2	1.59	★	**2KJ1001 - ■EM13 - ■■A1**		20
1.5	**D.188-Z68-LA90ZLB4E**							
	1.2	11 342	1.8	1 251		**2KJ1237 - ■EQ13 - ■■J1**		630
	D.188-Z48-LA90ZLB4E							
	0.54	24 171	0.83	2 666	★	**2KJ1235 - ■EQ13 - ■■H1**		613
	0.60	21 569	0.93	2 379		**2KJ1235 - ■EQ13 - ■■G1**		613
	0.71	18 323	1.1	2 021		**2KJ1235 - ■EQ13 - ■■F1**		613
	0.86	15 250	1.3	1 682	★	**2KJ1235 - ■EQ13 - ■■E1**		613
	0.87	15 005	1.3	1 655	★	**2KJ1235 - ■EQ13 - ■■D1**		613
	0.98	13 391	1.5	1 477		**2KJ1235 - ■EQ13 - ■■C1**		613
	1.1	11 378	1.8	1 255		**2KJ1235 - ■EQ13 - ■■B1**		613
	D.168-Z48-LA90ZLB4E							
	0.82	15 939	0.88	1 758		**2KJ1232 - ■EQ13 - ■■B1**		469
	0.98	13 264	1.1	1 463	★	**2KJ1232 - ■EQ13 - ■■A1**		469
	D.168-Z68-LA90ZLB4E							
	0.99	13 246	1.1	1 461		**2KJ1233 - ■EQ13 - ■■J1**		486
	1.2	11 116	1.3	1 226		**2KJ1233 - ■EQ13 - ■■H1**		486

★ Preferred transmission ratio

Shaft designs, see page 2/117 — **1, 2 or 9**

Frequency and voltage, see page 8/20 — **1 to 9**

Gearbox housing mounting position, see page 2/119 — **A, F, H or R**

*) For mounting type B3

© Siemens AG 2011

Selection and ordering data (continued)

Power rating P_{Motor} kW	Output speed n_2 (50 Hz) rpm	Output torque T_2 Nm	Service factor f_B	Gearbox ratio i_{tot}		Order No.	Order code (No. of poles)	Weight *) kg
1.5	**D.168-Z68-LA90ZLB4E**							
	1.4	9 484	1.5	1 046		**2KJ1233 - ■EQ13 - ■■G1**		486
	D.148-Z48-LA90ZLB4E							
	1.4	9 212	0.87	1 016		**2KJ1231 - ■EQ13 - ■■H1**		302
	1.6	8 223	0.97	907		**2KJ1231 - ■EQ13 - ■■G1**		302
	1.9	6 981	1.1	770		**2KJ1231 - ■EQ13 - ■■F1**		302
	D.148-LA112M8							
	2.1	6 829	1.2	336.11		**2KJ1208 - ■GG13 - ■■W1**	**P02**	318
	2.3	6 123	1.3	301.34	★	**2KJ1208 - ■GG13 - ■■V1**	**P02**	318
	2.6	5 613	1.4	276.23		**2KJ1208 - ■GG13 - ■■U1**	**P02**	318
	D.148-LA100ZLP6E							
	2.8	5 149	1.6	336.11		**2KJ1208 - ■FM13 - ■■W1**	**P01**	311
	3.1	4 617	1.7	301.34	★	**2KJ1208 - ■FM13 - ■■V1**	**P01**	311
	3.4	4 232	1.9	276.23		**2KJ1208 - ■FM13 - ■■U1**	**P01**	311
	D.128-Z48-LA90ZLB4E							
	2.2	5 875	0.87	648		**2KJ1227 - ■EQ13 - ■■G1**		218
	D.128-LA112M8							
	2.6	5 449	0.94	268.16	★	**2KJ1207 - ■GG13 - ■■U1**	**P02**	228
	2.9	4 997	1.0	245.93		**2KJ1207 - ■GG13 - ■■T1**	**P02**	228
	3.2	4 465	1.1	219.72	★	**2KJ1207 - ■GG13 - ■■S1**	**P02**	228
	D.128-LA100ZLP6E							
	3.5	4 108	1.2	268.16	★	**2KJ1207 - ■FM13 - ■■U1**	**P01**	221
	3.8	3 768	1.4	245.93		**2KJ1207 - ■FM13 - ■■T1**	**P01**	221
	4.3	3 366	1.5	219.72	★	**2KJ1207 - ■FM13 - ■■S1**	**P01**	221
	4.6	3 083	1.7	201.22		**2KJ1207 - ■FM13 - ■■R1**	**P01**	221
	5.0	2 840	1.8	185.36	★	**2KJ1207 - ■FM13 - ■■Q1**	**P01**	221
	D.128-LA90ZLB4E							
	5.4	2 668	1.9	268.16	★	**2KJ1207 - ■EQ13 - ■■U1**		213
	5.9	2 446	2.1	245.93		**2KJ1207 - ■EQ13 - ■■T1**		213
	D.108-LA90ZLB4E							
	4.0	3 574	0.87	359.3		**2KJ1206 - ■EQ13 - ■■V1**		136
	4.4	3 235	0.96	325.21	★	**2KJ1206 - ■EQ13 - ■■U1**		136
	5.1	2 832	1.1	284.73		**2KJ1206 - ■EQ13 - ■■T1**		136
	5.6	2 555	1.2	256.86	★	**2KJ1206 - ■EQ13 - ■■S1**		136
	6.1	2 340	1.3	235.19		**2KJ1206 - ■EQ13 - ■■R1**		136
	6.9	2 081	1.5	209.21	★	**2KJ1206 - ■EQ13 - ■■Q1**		136
	7.5	1 902	1.6	191.21		**2KJ1206 - ■EQ13 - ■■P1**		136
	8.2	1 749	1.8	175.78	★	**2KJ1206 - ■EQ13 - ■■N1**		136
	8.9	1 616	1.9	162.4		**2KJ1206 - ■EQ13 - ■■M1**		136
	9.6	1 499	2.1	150.7	★	**2KJ1206 - ■EQ13 - ■■L1**		136
	10.3	1 396	2.2	140.37		**2KJ1206 - ■EQ13 - ■■K1**		136
	D.88-LA90ZLB4E							
	7.5	1 908	0.88	191.8	★	**2KJ1205 - ■EQ13 - ■■R1**		88
	8.2	1 743	0.96	175.18		**2KJ1205 - ■EQ13 - ■■Q1**		88

★ Preferred transmission ratio

Shaft designs, see page 2/117 — **1, 2 or 9**

Frequency and voltage, see page 8/20 — **1 to 9**

Gearbox housing mounting position, see page 2/119 — **A, F, H or R**

*) For mounting type B3

© Siemens AG 2011

2

Selection and ordering data (continued)

Power rating P_{Motor} kW	Output speed n_2 (50 Hz) rpm	Output torque T_2 Nm	Service factor f_B	Gearbox ratio i_{tot}		Order No.	Order code (No. of poles)	Weight *) kg
1.5	**D.88-LA90ZLB4E**							
	9.3	1 547	1.1	155.46	★	**2KJ1205 - ■EQ13 - ■■P1**		88
	10.0	1 428	1.2	143.5		**2KJ1205 - ■EQ13 - ■■N1**		88
	11.1	1 291	1.3	129.79	★	**2KJ1205 - ■EQ13 - ■■M1**		88
	12.0	1 189	1.4	119.52		**2KJ1205 - ■EQ13 - ■■L1**		88
	13.0	1 100	1.5	110.54	★	**2KJ1205 - ■EQ13 - ■■K1**		88
	14.0	1 021	1.6	102.61		**2KJ1205 - ■EQ13 - ■■J1**		88
	15.9	901	1.9	90.53	★	**2KJ1205 - ■EQ13 - ■■H1**		88
	17.2	831	2.0	83.58		**2KJ1205 - ■EQ13 - ■■G1**		88
	19.2	745	2.3	74.88	★	**2KJ1205 - ■EQ13 - ■■F1**		88
	21	687	2.4	69.05		**2KJ1205 - ■EQ13 - ■■E1**		88
	D.68-LA90ZLB4E							
	15.0	957	0.84	96.16		**2KJ1204 - ■EQ13 - ■■J1**		56
	16.3	881	0.91	88.59	★	**2KJ1204 - ■EQ13 - ■■H1**		56
	17.9	800	1.0	80.46		**2KJ1204 - ■EQ13 - ■■G1**		56
	19.6	729	1.1	73.3	★	**2KJ1204 - ■EQ13 - ■■F1**		56
	21	668	1.2	67.14		**2KJ1204 - ■EQ13 - ■■E1**		56
	24	596	1.3	59.91	★	**2KJ1204 - ■EQ13 - ■■D1**		56
	27	532	1.5	53.47		**2KJ1204 - ■EQ13 - ■■C1**		56
	Z.68-LA90ZLB4E							
	30	478	1.1	48.09	★	**2KJ1104 - ■EQ13 - ■■X1**		54
	34	418	1.9	42.06		**2KJ1104 - ■EQ13 - ■■W1**		54
	38	376	2.1	37.76	★	**2KJ1104 - ■EQ13 - ■■V1**		54
	42	343	2.3	34.49		**2KJ1104 - ■EQ13 - ■■U1**		54
	47	304	2.6	30.6	★	**2KJ1104 - ■EQ13 - ■■T1**		54
	51	281	2.8	28.25		**2KJ1104 - ■EQ13 - ■■S1**		54
	D.48-LA90ZLB4E							
	26	556	0.81	55.92	★	**2KJ1203 - ■EQ13 - ■■E1**		37
	29	497	0.90	50		**2KJ1203 - ■EQ13 - ■■D1**		37
	Z.48-LA90ZLB4E							
	32	451	1.0	45.38	★	**2KJ1103 - ■EQ13 - ■■X1**		37
	35	410	1.1	41.26		**2KJ1103 - ■EQ13 - ■■W1**		37
	39	369	1.2	37.06	★	**2KJ1103 - ■EQ13 - ■■V1**		37
	45	316	1.4	31.77		**2KJ1103 - ■EQ13 - ■■U1**		37
	50	286	1.6	28.74	★	**2KJ1103 - ■EQ13 - ■■T1**		37
	54	264	1.7	26.53		**2KJ1103 - ■EQ13 - ■■S1**		37
	62	229	2.0	23.07	★	**2KJ1103 - ■EQ13 - ■■R1**		37
	69	208	2.2	20.95		**2KJ1103 - ■EQ13 - ■■Q1**		37
	75	190	2.4	19.13	★	**2KJ1103 - ■EQ13 - ■■P1**		37
	82	175	2.6	17.55		**2KJ1103 - ■EQ13 - ■■N1**		37
	89	161	2.7	16.17	★	**2KJ1103 - ■EQ13 - ■■M1**		37
	98	146	2.9	14.68		**2KJ1103 - ■EQ13 - ■■L1**		37
	108	133	3.1	13.38	★	**2KJ1103 - ■EQ13 - ■■K1**		37
	118	122	3.3	12.25		**2KJ1103 - ■EQ13 - ■■J1**		37

★ Preferred transmission ratio

Shaft designs, see page 2/117 — **1, 2 or 9**

Frequency and voltage, see page 8/20 — **1 to 9**

Gearbox housing mounting position, see page 2/119 — **A, F, H or R**

*) For mounting type B3

© Siemens AG 2011

Selection and ordering data (continued)

Power rating P_{Motor} kW	Output speed n_2 (50 Hz) rpm	Output torque T_2 Nm	Service factor f_B	Gearbox ratio i_{tot}		Order No.	Order code (No. of poles)	Weight *) kg
1.5	**Z.48-LA90ZLB4E**							
	132	109	3.6	10.93	★	**2KJ1103 - ■EQ13 - ■■H1**		37
	148	97	3.9	9.76		**2KJ1103 - ■EQ13 - ■■G1**		37
	212	68	4.0	6.79	★	**2KJ1103 - ■EQ13 - ■■D1**		37
	238	60	4.5	6.06		**2KJ1103 - ■EQ13 - ■■C1**		37
	Z.38-LA90ZLB4E							
	59	244	0.9	24.5		**2KJ1102 - ■EQ13 - ■■T1**		27
	66	216	1.0	21.67	★	**2KJ1102 - ■EQ13 - ■■S1**		27
	73	195	1.1	19.64		**2KJ1102 - ■EQ13 - ■■R1**		27
	83	172	1.3	17.33	★	**2KJ1102 - ■EQ13 - ■■Q1**		27
	92	156	1.4	15.64		**2KJ1102 - ■EQ13 - ■■P1**		27
	102	141	1.6	14.18	★	**2KJ1102 - ■EQ13 - ■■N1**		27
	111	129	1.7	12.92		**2KJ1102 - ■EQ13 - ■■M1**		27
	122	118	1.9	11.82	★	**2KJ1102 - ■EQ13 - ■■L1**		27
	136	105	2.0	10.57		**2KJ1102 - ■EQ13 - ■■K1**		27
	148	96	2.1	9.7	★	**2KJ1102 - ■EQ13 - ■■J1**		27
	165	87	2.2	8.75		**2KJ1102 - ■EQ13 - ■■H1**		27
	191	75	2.5	7.52	★	**2KJ1102 - ■EQ13 - ■■G1**		27
	192	75	2.5	7.5	★	**2KJ1102 - ■EQ13 - ■■F1**		27
	215	67	2.7	6.71		**2KJ1102 - ■EQ13 - ■■D1**		27
	234	61	2.8	6.16	★	**2KJ1102 - ■EQ13 - ■■C1**		27
	259	55	3.0	5.55		**2KJ1102 - ■EQ13 - ■■B1**		27
	302	48	3.4	4.77	★	**2KJ1102 - ■EQ13 - ■■A1**		27
	Z.38-LA90SB2E							
	167	86	2.6	17.33	★	**2KJ1102 - ■EM13 - ■■Q1**	**P00**	24
	185	78	2.8	15.64		**2KJ1102 - ■EM13 - ■■P1**	**P00**	24
	204	70	3.1	14.18	★	**2KJ1102 - ■EM13 - ■■N1**	**P00**	24
	224	64	3.4	12.92		**2KJ1102 - ■EM13 - ■■M1**	**P00**	24
	245	59	3.8	11.82	★	**2KJ1102 - ■EM13 - ■■L1**	**P00**	24
	273	52	4.0	10.57		**2KJ1102 - ■EM13 - ■■K1**	**P00**	24
	298	48	4.2	9.7	★	**2KJ1102 - ■EM13 - ■■J1**	**P00**	24
	330	43	4.5	8.75		**2KJ1102 - ■EM13 - ■■H1**	**P00**	24
	384	37	5.1	7.52	★	**2KJ1102 - ■EM13 - ■■G1**	**P00**	24
	385	37	5.0	7.5	★	**2KJ1102 - ■EM13 - ■■F1**	**P00**	24
	431	33	5.4	6.71		**2KJ1102 - ■EM13 - ■■D1**	**P00**	24
	469	30	5.6	6.16	★	**2KJ1102 - ■EM13 - ■■C1**	**P00**	24
	Z.28-LA90ZLB4E							
	89	162	0.87	16.24	★	**2KJ1101 - ■EQ13 - ■■R1**		20
	99	145	0.97	14.58		**2KJ1101 - ■EQ13 - ■■Q1**		20
	109	131	1.1	13.17	★	**2KJ1101 - ■EQ13 - ■■P1**		20
	121	119	1.2	11.94		**2KJ1101 - ■EQ13 - ■■N1**		20
	132	108	1.3	10.87	★	**2KJ1101 - ■EQ13 - ■■M1**		20
	150	96	1.5	9.61		**2KJ1101 - ■EQ13 - ■■L1**		20
	162	88	1.6	8.87	★	**2KJ1101 - ■EQ13 - ■■K1**		20

★ Preferred transmission ratio

Shaft designs, see page 2/117 — **1, 2 or 9**

Frequency and voltage, see page 8/20 — **1 to 9**

Gearbox housing mounting position, see page 2/119 — **A, F, H or R**

*) For mounting type B3

© Siemens AG 2011

Selection and ordering data (continued)

Power rating P_{Motor} kW	Output speed n_2 (50 Hz) rpm	Output torque T_2 Nm	Service factor f_B	Gearbox ratio i_{tot}		Order No.	Order code (No. of poles)	Weight *) kg
1.5	**Z.28-LA90ZLB4E**							
	188	76	1.8	7.64		**2KJ1101 - ■EQ13 - ■■J1**		20
	207	69	1.9	6.94	★	**2KJ1101 - ■EQ13 - ■■H1**		20
	228	63	1.5	6.31	★	**2KJ1101 - ■EQ13 - ■■G1**		20
	252	57	1.6	5.72		**2KJ1101 - ■EQ13 - ■■F1**		20
	276	52	1.8	5.21	★	**2KJ1101 - ■EQ13 - ■■E1**		20
	313	46	1.9	4.6		**2KJ1101 - ■EQ13 - ■■D1**		20
	339	42	2.1	4.25	★	**2KJ1101 - ■EQ13 - ■■C1**		20
	393	36	2.2	3.66		**2KJ1101 - ■EQ13 - ■■B1**		20
	432	33	2.3	3.33	★	**2KJ1101 - ■EQ13 - ■■A1**		20
	E.88-LA90ZLB4E							
	139	103	2.2	10.33	★	**2KJ1004 - ■EQ13 - ■■S1**		53
	152	94	2.2	9.46		**2KJ1004 - ■EQ13 - ■■R1**		53
	171	84	2.9	8.42	★	**2KJ1004 - ■EQ13 - ■■Q1**		53
	187	76	3.2	7.69		**2KJ1004 - ■EQ13 - ■■P1**		53
	204	70	4.1	7.07	★	**2KJ1004 - ■EQ13 - ■■N1**		53
	238	60	4.6	6.06	★	**2KJ1004 - ■EQ13 - ■■L1**		53
	E.68-LA90ZLB4E							
	129	111	0.83	11.18		**2KJ1003 - ■EQ13 - ■■V1**		36
	143	100	0.95	10.08	★	**2KJ1003 - ■EQ13 - ■■U1**		36
	163	88	1.7	8.82		**2KJ1003 - ■EQ13 - ■■T1**		36
	182	79	2.2	7.92	★	**2KJ1003 - ■EQ13 - ■■S1**		36
	199	72	2.1	7.23		**2KJ1003 - ■EQ13 - ■■R1**		36
	224	64	2.7	6.42	★	**2KJ1003 - ■EQ13 - ■■P1**		36
	243	59	3.2	5.92		**2KJ1003 - ■EQ13 - ■■N1**		36
	269	53	4.1	5.36	★	**2KJ1003 - ■EQ13 - ■■M1**		36
	292	49	4.6	4.93		**2KJ1003 - ■EQ13 - ■■L1**		36
	316	45	4.8	4.56	★	**2KJ1003 - ■EQ13 - ■■K1**		36
	E.48-LA90ZLB4E							
	144	100	0.8	10	★	**2KJ1002 - ■EQ13 - ■■T1**		26
	176	81	1.0	8.17	★	**2KJ1002 - ■EQ13 - ■■R1**		26
	206	70	1.4	7		**2KJ1002 - ■EQ13 - ■■Q1**		26
	227	63	1.8	6.33	★	**2KJ1002 - ■EQ13 - ■■P1**		26
	246	58	2.1	5.85		**2KJ1002 - ■EQ13 - ■■N1**		26
	283	50	2.4	5.08	★	**2KJ1002 - ■EQ13 - ■■M1**		26
	312	46	2.8	4.62		**2KJ1002 - ■EQ13 - ■■L1**		26
	342	42	3.6	4.21	★	**2KJ1002 - ■EQ13 - ■■K1**		26
	372	38	4.2	3.87		**2KJ1002 - ■EQ13 - ■■J1**		26
	404	35	4.0	3.56	★	**2KJ1002 - ■EQ13 - ■■H1**		26
	444	32	4.7	3.24		**2KJ1002 - ■EQ13 - ■■G1**		26
	787	18	6.3	1.83		**2KJ1002 - ■EQ13 - ■■B1**		26
	E.38-LA90ZLB4E							
	243	59	0.9	5.92	★	**2KJ1001 - ■EQ13 - ■■N1**		23
	278	52	1.4	5.18		**2KJ1001 - ■EQ13 - ■■M1**		23

★ Preferred transmission ratio

Shaft designs, see page 2/117 — **1, 2 or 9**

Frequency and voltage, see page 8/20 — **1 to 9**

Gearbox housing mounting position, see page 2/119 — **A, F, H or R**

*) For mounting type B3

© Siemens AG 2011

Selection and ordering data (continued)

Power rating P_{Motor} kW	Output speed n_2 (50 Hz) rpm	Output torque T_2 Nm	Service factor f_B	Gearbox ratio i_{tot}		Order No.	Order code (No. of poles)	Weight *) kg
1.5	**E.38-LA90ZLB4E**							
	314	46	1.7	4.58	★	**2KJ1001 - ■EQ13 - ■■L1**		23
	347	41	1.5	4.15		**2KJ1001 - ■EQ13 - ■■K1**		23
	392	36	1.9	3.67	★	**2KJ1001 - ■EQ13 - ■■J1**		23
	435	33	2.0	3.31		**2KJ1001 - ■EQ13 - ■■H1**		23
	480	30	2.7	3	★	**2KJ1001 - ■EQ13 - ■■G1**		23
	527	27	2.9	2.73		**2KJ1001 - ■EQ13 - ■■F1**		23
	576	25	2.9	2.5	★	**2KJ1001 - ■EQ13 - ■■E1**		23
	643	22	3.2	2.24		**2KJ1001 - ■EQ13 - ■■D1**		23
	702	20	3.9	2.05	★	**2KJ1001 - ■EQ13 - ■■C1**		23
	778	18	4.5	1.85		**2KJ1001 - ■EQ13 - ■■B1**		23
	906	16	4.6	1.59	★	**2KJ1001 - ■EQ13 - ■■A1**		23
2.2	**D.188-Z48-LA100ZLP4E**							
	0.85	22 590	0.89	1 682	★	**2KJ1235 - ■FM13 - ■■E1**		621
	0.87	22 228	0.9	1 655	★	**2KJ1235 - ■FM13 - ■■D1**		621
	0.97	19 837	1.0	1 477		**2KJ1235 - ■FM13 - ■■C1**		621
	1.1	16 855	1.2	1 255		**2KJ1235 - ■FM13 - ■■B1**		621
	1.4	14 022	1.4	1 044	★	**2KJ1235 - ■FM13 - ■■A1**		621
	D.188-Z68-LA100ZLP4E							
	1.1	16 802	1.2	1 251		**2KJ1237 - ■FM13 - ■■J1**		638
	1.4	14 102	1.4	1 050		**2KJ1237 - ■FM13 - ■■H1**		638
	1.6	12 034	1.7	896	★	**2KJ1237 - ■FM13 - ■■G1**		638
	1.9	10 019	2.0	746		**2KJ1237 - ■FM13 - ■■F1**		638
	D.168-Z68-LA100ZLP4E							
	1.2	16 466	0.85	1 226		**2KJ1233 - ■FM13 - ■■H1**		494
	1.4	14 048	1.0	1 046		**2KJ1233 - ■FM13 - ■■G1**		494
	1.6	11 698	1.2	871		**2KJ1233 - ■FM13 - ■■F1**		494
	D.168-LA132S8							
	2.0	10 253	1.4	341.61	★	**2KJ1210 - ■HE13 - ■■U1**	**P02**	499
	2.2	9 407	1.5	313.41		**2KJ1210 - ■HE13 - ■■T1**	**P02**	499
	2.4	8 681	1.6	289.23	★	**2KJ1210 - ■HE13 - ■■S1**	**P02**	499
	2.6	8 053	1.7	268.29		**2KJ1210 - ■HE13 - ■■R1**	**P02**	499
	D.148-LA132S8							
	2.3	9 045	0.88	301.34	★	**2KJ1208 - ■HE13 - ■■V1**	**P02**	328
	2.5	8 291	0.96	276.23		**2KJ1208 - ■HE13 - ■■U1**	**P02**	328
	2.7	7 645	1.0	254.7	★	**2KJ1208 - ■HE13 - ■■T1**	**P02**	328
	D.148-LA112ZMP6E							
	2.8	7 394	1.1	336.11		**2KJ1208 - ■GJ13 - ■■W1**	**P01**	318
	3.2	6 629	1.2	301.34	★	**2KJ1208 - ■GJ13 - ■■V1**	**P01**	318
	3.5	6 077	1.3	276.23		**2KJ1208 - ■GJ13 - ■■U1**	**P01**	318
	3.7	5 603	1.4	254.7	★	**2KJ1208 - ■GJ13 - ■■T1**	**P01**	318
	4.0	5 193	1.5	236.05		**2KJ1208 - ■GJ13 - ■■S1**	**P01**	318

★ Preferred transmission ratio

Shaft designs, see page 2/117 — **1, 2 or 9**

Frequency and voltage, see page 8/20 — **1 to 9**

Gearbox housing mounting position, see page 2/119 — **A, F, H or R**

*) For mounting type B3

© Siemens AG 2011

2

Selection and ordering data (continued)

Power rating P_{Motor} kW	Output speed n_2 (50 Hz) rpm	Output torque T_2 Nm	Service factor f_B	Gearbox ratio i_{tot}		Order No.	Order code (No. of poles)	Weight *) kg
2.2	**D.148-LA100ZLP4E**							
	4.3	4 921	1.6	336.11		**2KJ1208 - ■FM13 - ■■W1**		311
	4.8	4 412	1.8	301.34	★	**2KJ1208 - ■FM13 - ■■V1**		311
	5.2	4 044	2.0	276.23		**2KJ1208 - ■FM13 - ■■U1**		311
	5.6	3 729	2.1	254.7	★	**2KJ1208 - ■FM13 - ■■T1**		311
	D.128-LA112ZMP6E							
	3.6	5 900	0.86	268.16	★	**2KJ1207 - ■GJ13 - ■■U1**	**P01**	228
	3.9	5 410	0.94	245.93		**2KJ1207 - ■GJ13 - ■■T1**	**P01**	228
	4.3	4 834	1.1	219.72	★	**2KJ1207 - ■GJ13 - ■■S1**	**P01**	228
	4.7	4 427	1.2	201.22		**2KJ1207 - ■GJ13 - ■■R1**	**P01**	228
	5.2	4 078	1.3	185.36	★	**2KJ1207 - ■GJ13 - ■■Q1**	**P01**	228
	D.128-LA100ZLP4E							
	5.4	3 926	1.3	268.16	★	**2KJ1207 - ■FM13 - ■■U1**		221
	5.8	3 601	1.4	245.93		**2KJ1207 - ■FM13 - ■■T1**		221
	6.5	3 217	1.6	219.72	★	**2KJ1207 - ■FM13 - ■■S1**		221
	7.1	2 946	1.7	201.22		**2KJ1207 - ■FM13 - ■■R1**		221
	7.7	2 714	1.9	185.36	★	**2KJ1207 - ■FM13 - ■■Q1**		221
	8.4	2 513	2.0	171.62		**2KJ1207 - ■FM13 - ■■P1**		221
	D.108-LA100ZLP4E							
	5.6	3 761	0.82	256.86	★	**2KJ1206 - ■FM13 - ■■S1**		144
	6.1	3 443	0.90	235.19		**2KJ1206 - ■FM13 - ■■R1**		144
	6.9	3 063	1.0	209.21	★	**2KJ1206 - ■FM13 - ■■Q1**		144
	7.5	2 800	1.1	191.21		**2KJ1206 - ■FM13 - ■■P1**		144
	8.2	2 574	1.2	175.78	★	**2KJ1206 - ■FM13 - ■■N1**		144
	8.8	2 378	1.3	162.4		**2KJ1206 - ■FM13 - ■■M1**		144
	9.5	2 206	1.4	150.7	★	**2KJ1206 - ■FM13 - ■■L1**		144
	10.2	2 055	1.5	140.37		**2KJ1206 - ■FM13 - ■■K1**		144
	11.3	1 858	1.7	126.9	★	**2KJ1206 - ■FM13 - ■■J1**		144
	12.3	1 711	1.8	116.83		**2KJ1206 - ■FM13 - ■■H1**		144
	13.7	1 538	2.0	105.08	★	**2KJ1206 - ■FM13 - ■■G1**		144
	14.8	1 419	2.2	96.94		**2KJ1206 - ■FM13 - ■■F1**		144
	D.88-LA100ZLP4E							
	10.0	2 101	0.80	143.5		**2KJ1205 - ■FM13 - ■■N1**		96
	11.1	1 900	0.88	129.79	★	**2KJ1205 - ■FM13 - ■■M1**		96
	12.0	1 750	0.96	119.52		**2KJ1205 - ■FM13 - ■■L1**		96
	13.0	1 618	1.0	110.54	★	**2KJ1205 - ■FM13 - ■■K1**		96
	14.0	1 502	1.1	102.61		**2KJ1205 - ■FM13 - ■■J1**		96
	15.9	1 325	1.3	90.53	★	**2KJ1205 - ■FM13 - ■■H1**		96
	17.2	1 224	1.4	83.58		**2KJ1205 - ■FM13 - ■■G1**		96
	19.2	1 096	1.5	74.88	★	**2KJ1205 - ■FM13 - ■■F1**		96
	21	1 011	1.7	69.05		**2KJ1205 - ■FM13 - ■■E1**		96
	25	848	2.0	57.93		**2KJ1205 - ■FM13 - ■■D1**		96

★ Preferred transmission ratio

Shaft designs, see page 2/117 — **1, 2 or 9**

Frequency and voltage, see page 8/20 — **1 to 9**

Gearbox housing mounting position, see page 2/119 — **A, F, H or R**

*) For mounting type B3

© Siemens AG 2011

Selection and ordering data (continued)

Power rating P_{Motor} kW	Output speed n_2 (50 Hz) rpm	Output torque T_2 Nm	Service factor f_B	Gearbox ratio i_{tot}		Order No.	Order code (No. of poles)	Weight *) kg
2.2	**Z.88-LA100ZLP4E**							
	28	743	2.0	50.73		**2KJ1105 - ■FM13 - ■■B2**		94
	31	670	2.5	45.76	★	**2KJ1105 - ■FM13 - ■■A2**		94
	D.68-LA100ZLP4E							
	21	983	0.81	67.14		**2KJ1204 - ■FM13 - ■■E1**		64
	24	877	0.91	59.91	★	**2KJ1204 - ■FM13 - ■■D1**		64
	27	783	1.0	53.47		**2KJ1204 - ■FM13 - ■■C1**		64
	Z.68-LA100ZLP4E							
	34	616	1.3	42.06		**2KJ1104 - ■FM13 - ■■W1**		62
	38	553	1.4	37.76	★	**2KJ1104 - ■FM13 - ■■V1**		62
	42	505	1.6	34.49		**2KJ1104 - ■FM13 - ■■U1**		62
	47	448	1.8	30.6	★	**2KJ1104 - ■FM13 - ■■T1**		62
	51	414	1.9	28.25		**2KJ1104 - ■FM13 - ■■S1**		62
	56	374	2.1	25.55	★	**2KJ1104 - ■FM13 - ■■R1**		62
	61	345	2.3	23.53		**2KJ1104 - ■FM13 - ■■Q1**		62
	66	319	2.5	21.76	★	**2KJ1104 - ■FM13 - ■■P1**		62
	71	296	2.7	20.2		**2KJ1104 - ■FM13 - ■■N1**		62
	80	261	3.1	17.82	★	**2KJ1104 - ■FM13 - ■■M1**		62
	87	241	3.3	16.45		**2KJ1104 - ■FM13 - ■■L1**		62
	D.48-LA100ZLP4E							
	40	521	0.86	35.59		**2KJ1203 - ■FM13 - ■■A1**		45
	Z.48-LA100ZLP4E							
	45	465	0.97	31.77		**2KJ1103 - ■FM13 - ■■U1**		45
	50	421	1.1	28.74	★	**2KJ1103 - ■FM13 - ■■T1**		45
	54	388	1.2	26.53		**2KJ1103 - ■FM13 - ■■S1**		45
	62	338	1.3	23.07	★	**2KJ1103 - ■FM13 - ■■R1**		45
	68	307	1.5	20.95		**2KJ1103 - ■FM13 - ■■Q1**		45
	75	280	1.6	19.13	★	**2KJ1103 - ■FM13 - ■■P1**		45
	82	257	1.8	17.55		**2KJ1103 - ■FM13 - ■■N1**		45
	89	237	1.8	16.17	★	**2KJ1103 - ■FM13 - ■■M1**		45
	98	215	2.0	14.68		**2KJ1103 - ■FM13 - ■■L1**		45
	107	196	2.1	13.38	★	**2KJ1103 - ■FM13 - ■■K1**		45
	117	179	2.2	12.25		**2KJ1103 - ■FM13 - ■■J1**		45
	131	160	2.4	10.93	★	**2KJ1103 - ■FM13 - ■■H1**		45
	147	143	2.7	9.76		**2KJ1103 - ■FM13 - ■■G1**		45
	173	121	3.0	8.29		**2KJ1103 - ■FM13 - ■■F1**		45
	208	101	3.4	6.9	★	**2KJ1103 - ■FM13 - ■■E1**		45
	211	99	2.7	6.79	★	**2KJ1103 - ■FM13 - ■■D1**		45
	237	89	3.0	6.06		**2KJ1103 - ■FM13 - ■■C1**		45
	279	75	3.6	5.15		**2KJ1103 - ■FM13 - ■■B1**		45
	335	63	4.1	4.28	★	**2KJ1103 - ■FM13 - ■■A1**		45
	Z.48-LA90ZLB2E							
	151	139	3.2	19.13	★	**2KJ1103 - ■EQ13 - ■■P1**	**P00**	37
	165	128	3.5	17.55		**2KJ1103 - ■EQ13 - ■■N1**	**P00**	37

★ Preferred transmission ratio

Shaft designs, see page 2/117 — **1, 2 or 9**

Frequency and voltage, see page 8/20 — **1 to 9**

Gearbox housing mounting position, see page 2/119 — **A, F, H or R**

*) For mounting type B3

© Siemens AG 2011

2

Selection and ordering data (continued)

Power rating P_{Motor} kW	Output speed n_2 (50 Hz) rpm	Output torque T_2 Nm	Service factor f_B	Gearbox ratio i_{tot}		Order No.	Order code (No. of poles)	Weight *) kg
2.2	**Z.48-LA90ZLB2E**							
	179	118	3.7	16.17	★	**2KJ1103 - ■EQ13 - ■■M1**	**P00**	37
	197	107	3.9	14.68		**2KJ1103 - ■EQ13 - ■■L1**	**P00**	37
	216	97	4.2	13.38	★	**2KJ1103 - ■EQ13 - ■■K1**	**P00**	37
	236	89	4.5	12.25		**2KJ1103 - ■EQ13 - ■■J1**	**P00**	37
	426	49	5.5	6.79	★	**2KJ1103 - ■EQ13 - ■■D1**	**P00**	37
	Z.38-LA100ZLP4E							
	83	254	0.87	17.33	★	**2KJ1102 - ■FM13 - ■■Q1**		35
	92	229	0.96	15.64		**2KJ1102 - ■FM13 - ■■P1**		35
	101	208	1.1	14.18	★	**2KJ1102 - ■FM13 - ■■N1**		35
	111	189	1.2	12.92		**2KJ1102 - ■FM13 - ■■M1**		35
	121	173	1.3	11.82	★	**2KJ1102 - ■FM13 - ■■L1**		35
	136	155	1.4	10.57		**2KJ1102 - ■FM13 - ■■K1**		35
	148	142	1.4	9.7	★	**2KJ1102 - ■FM13 - ■■J1**		35
	164	128	1.5	8.75		**2KJ1102 - ■FM13 - ■■H1**		35
	191	110	1.7	7.5	★	**2KJ1102 - ■FM13 - ■■F1**		35
	191	110	1.7	7.52	★	**2KJ1102 - ■FM13 - ■■G1**		35
	214	98	1.8	6.71		**2KJ1102 - ■FM13 - ■■D1**		35
	233	90	1.9	6.16	★	**2KJ1102 - ■FM13 - ■■C1**		35
	259	81	2.0	5.55		**2KJ1102 - ■FM13 - ■■B1**		35
	301	70	2.3	4.77	★	**2KJ1102 - ■FM13 - ■■A1**		35
	Z.38-LA90ZLB2E							
	167	126	1.7	17.33	★	**2KJ1102 - ■EQ13 - ■■Q1**	**P00**	27
	185	114	1.9	15.64		**2KJ1102 - ■EQ13 - ■■P1**	**P00**	27
	204	103	2.1	14.18	★	**2KJ1102 - ■EQ13 - ■■N1**	**P00**	27
	224	94	2.3	12.92		**2KJ1102 - ■EQ13 - ■■M1**	**P00**	27
	245	86	2.6	11.82	★	**2KJ1102 - ■EQ13 - ■■L1**	**P00**	27
	273	77	2.7	10.57		**2KJ1102 - ■EQ13 - ■■K1**	**P00**	27
	298	70	2.8	9.7	★	**2KJ1102 - ■EQ13 - ■■J1**	**P00**	27
	330	64	3.1	8.75		**2KJ1102 - ■EQ13 - ■■H1**	**P00**	27
	384	55	3.5	7.52	★	**2KJ1102 - ■EQ13 - ■■G1**	**P00**	27
	385	54	3.4	7.5	★	**2KJ1102 - ■EQ13 - ■■F1**	**P00**	27
	431	49	3.7	6.71		**2KJ1102 - ■EQ13 - ■■D1**	**P00**	27
	469	45	3.8	6.16	★	**2KJ1102 - ■EQ13 - ■■C1**	**P00**	27
	521	40	4.1	5.55		**2KJ1102 - ■EQ13 - ■■B1**	**P00**	27
	606	35	4.6	4.77	★	**2KJ1102 - ■EQ13 - ■■A1**	**P00**	27
	E.128-LA100ZLP4E							
	142	148	3.7	10.14	★	**2KJ1006 - ■FM13 - ■■T1**		119
	E.88-LA100ZLP4E							
	139	151	1.5	10.33	★	**2KJ1004 - ■FM13 - ■■S1**		61
	152	139	1.5	9.46		**2KJ1004 - ■FM13 - ■■R1**		61
	170	123	2.0	8.42	★	**2KJ1004 - ■FM13 - ■■Q1**		61
	187	113	2.2	7.69		**2KJ1004 - ■FM13 - ■■P1**		61
	203	104	2.8	7.07	★	**2KJ1004 - ■FM13 - ■■N1**		61

★ Preferred transmission ratio

Shaft designs, see page 2/117 — **1, 2 or 9**

Frequency and voltage, see page 8/20 — **1 to 9**

Gearbox housing mounting position, see page 2/119 — **A, F, H or R**

*) For mounting type B3

© Siemens AG 2011

Selection and ordering data (continued)

Power rating P_{Motor} kW	Output speed n_2 (50 Hz) rpm	Output torque T_2 Nm	Service factor f_B	Gearbox ratio i_{tot}		Order No.	Order code (No. of poles)	Weight *) kg
2.2	**E.88-LA100ZLP4E**							
	220	96	3.1	6.53		**2KJ1004 - ■FM13 - ■■M1**		61
	237	89	3.2	6.06	★	**2KJ1004 - ■FM13 - ■■L1**		61
	254	83	3.9	5.65		**2KJ1004 - ■FM13 - ■■K1**		61
	281	75	4.9	5.11	★	**2KJ1004 - ■FM13 - ■■J1**		61
	E.68-LA100ZLP4E							
	163	129	1.2	8.82		**2KJ1003 - ■FM13 - ■■T1**		44
	181	116	1.5	7.92	★	**2KJ1003 - ■FM13 - ■■S1**		44
	198	106	1.4	7.23		**2KJ1003 - ■FM13 - ■■R1**		44
	224	94	1.8	6.42	★	**2KJ1003 - ■FM13 - ■■P1**		44
	242	87	2.2	5.92		**2KJ1003 - ■FM13 - ■■N1**		44
	268	78	2.8	5.36	★	**2KJ1003 - ■FM13 - ■■M1**		44
	291	72	3.1	4.93		**2KJ1003 - ■FM13 - ■■L1**		44
	315	67	3.3	4.56	★	**2KJ1003 - ■FM13 - ■■K1**		44
	338	62	3.7	4.24		**2KJ1003 - ■FM13 - ■■J1**		44
	384	55	4.2	3.74	★	**2KJ1003 - ■FM13 - ■■H1**		44
	416	50	4.8	3.45		**2KJ1003 - ■FM13 - ■■G1**		44
	464	45	5.5	3.09	★	**2KJ1003 - ■FM13 - ■■F1**		44
	E.48-LA100ZLP4E							
	205	102	0.95	7		**2KJ1002 - ■FM13 - ■■Q1**		34
	227	93	1.2	6.33	★	**2KJ1002 - ■FM13 - ■■P1**		34
	245	86	1.4	5.85		**2KJ1002 - ■FM13 - ■■N1**		34
	282	74	1.6	5.08	★	**2KJ1002 - ■FM13 - ■■M1**		34
	311	68	1.9	4.62		**2KJ1002 - ■FM13 - ■■L1**		34
	341	62	2.4	4.21	★	**2KJ1002 - ■FM13 - ■■K1**		34
	371	57	2.8	3.87		**2KJ1002 - ■FM13 - ■■J1**		34
	403	52	2.7	3.56	★	**2KJ1002 - ■FM13 - ■■H1**		34
	443	47	3.2	3.24		**2KJ1002 - ■FM13 - ■■G1**		34
	486	43	3.9	2.95	★	**2KJ1002 - ■FM13 - ■■F1**		34
	531	40	4.0	2.7		**2KJ1002 - ■FM13 - ■■E1**		34
	595	35	4.3	2.41	★	**2KJ1002 - ■FM13 - ■■D1**		34
	667	32	4.3	2.15		**2KJ1002 - ■FM13 - ■■C1**		34
	784	27	4.3	1.83		**2KJ1002 - ■FM13 - ■■B1**		34
	944	22	4.5	1.52	★	**2KJ1002 - ■FM13 - ■■A1**		34
	E.38-LA100ZLP4E							
	277	76	0.92	5.18		**2KJ1001 - ■FM13 - ■■M1**		31
	313	67	1.2	4.58	★	**2KJ1001 - ■FM13 - ■■L1**		31
	346	61	1.0	4.15		**2KJ1001 - ■FM13 - ■■K1**		31
	391	54	1.3	3.67	★	**2KJ1001 - ■FM13 - ■■J1**		31
	434	48	1.3	3.31		**2KJ1001 - ■FM13 - ■■H1**		31
	478	44	1.8	3	★	**2KJ1001 - ■FM13 - ■■G1**		31
	526	40	2.0	2.73		**2KJ1001 - ■FM13 - ■■F1**		31
	574	37	2.0	2.5	★	**2KJ1001 - ■FM13 - ■■E1**		31
	641	33	2.2	2.24		**2KJ1001 - ■FM13 - ■■D1**		31

★ Preferred transmission ratio

Shaft designs, see page 2/117 — **1, 2 or 9**

Frequency and voltage, see page 8/20 — **1 to 9**

Gearbox housing mounting position, see page 2/119 — **A, F, H or R**

*) For mounting type B3

© Siemens AG 2011

2

Selection and ordering data (continued)

Power rating P_{Motor} kW	Output speed n_2 (50 Hz) rpm	Output torque T_2 Nm	Service factor f_B	Gearbox ratio i_{tot}		Order No.	Order code (No. of poles)	Weight *) kg
2.2	**E.38-LA100ZLP4E**							
	700	30	2.7	2.05	★	**2KJ1001 - ■FM13 - ■■C1**		31
	776	27	3.0	1.85		**2KJ1001 - ■FM13 - ■■B1**		31
	903	23	3.1	1.59	★	**2KJ1001 - ■FM13 - ■■A1**		31
3	**D.188-Z68-LA100ZLD4E**							
	1.1	22 996	0.87	1 251		**2KJ1237 - ■FP13 - ■■J1**		638
	1.4	19 301	1.0	1 050		**2KJ1237 - ■FP13 - ■■H1**		638
	1.6	16 470	1.2	896	★	**2KJ1237 - ■FP13 - ■■G1**		638
	1.9	13 713	1.5	746		**2KJ1237 - ■FP13 - ■■F1**		638
	2.3	11 378	1.8	619	★	**2KJ1237 - ■FP13 - ■■E1**		638
	2.6	10 037	2.0	546		**2KJ1237 - ■FP13 - ■■D1**		638
	D.188-Z48-LA100ZLD4E							
	1.1	23 069	0.87	1 255		**2KJ1235 - ■FP13 - ■■B1**		621
	1.4	19 191	1.0	1 044	★	**2KJ1235 - ■FP13 - ■■A1**		621
	D.188-LA132MA8							
	2.9	9 979	2.0	243.82		**2KJ1211 - ■HG13 - ■■N1**	**P02**	652
	D.168-Z68-LA100ZLD4E							
	1.6	16 011	0.87	871		**2KJ1233 - ■FP13 - ■■F1**		494
	D.168-LA132MA8							
	2.0	13 982	1.0	341.61	★	**2KJ1210 - ■HG13 - ■■U1**	**P02**	507
	2.2	12 827	1.1	313.41		**2KJ1210 - ■HG13 - ■■T1**	**P02**	507
	2.4	11 838	1.2	289.23	★	**2KJ1210 - ■HG13 - ■■S1**	**P02**	507
	2.6	10 981	1.3	268.29		**2KJ1210 - ■HG13 - ■■R1**	**P02**	507
	D.168-LA132SB6E							
	2.8	10 302	1.4	341.61	★	**2KJ1210 - ■HF13 - ■■U1**	**P01**	507
	3.0	9 452	1.5	313.41		**2KJ1210 - ■HF13 - ■■T1**	**P01**	507
	3.3	8 723	1.6	289.23	★	**2KJ1210 - ■HF13 - ■■S1**	**P01**	507
	3.5	8 091	1.7	268.29		**2KJ1210 - ■HF13 - ■■R1**	**P01**	507
	3.8	7 632	1.8	253.08	★	**2KJ1210 - ■HF13 - ■■Q1**	**P01**	507
	4.0	7 139	2.0	236.72		**2KJ1210 - ■HF13 - ■■P1**	**P01**	507
	D.148-LA132SB6E							
	3.2	9 088	0.88	301.34	★	**2KJ1208 - ■HF13 - ■■V1**	**P01**	336
	3.4	8 331	0.96	276.23		**2KJ1208 - ■HF13 - ■■U1**	**P01**	336
	3.7	7 681	1.0	254.7	★	**2KJ1208 - ■HF13 - ■■T1**	**P01**	336
	4.0	7 119	1.1	236.05		**2KJ1208 - ■HF13 - ■■S1**	**P01**	336
	D.148-LA100ZLD4E							
	4.3	6 710	1.2	336.11		**2KJ1208 - ■FP13 - ■■W1**		311
	4.8	6 016	1.3	301.34	★	**2KJ1208 - ■FP13 - ■■V1**		311
	5.2	5 515	1.5	276.23		**2KJ1208 - ■FP13 - ■■U1**		311
	5.6	5 085	1.6	254.7	★	**2KJ1208 - ■FP13 - ■■T1**		311
	6.1	4 713	1.7	236.05		**2KJ1208 - ■FP13 - ■■S1**		311
	6.4	4 481	1.8	224.43	★	**2KJ1208 - ■FP13 - ■■R1**		311
	6.8	4 188	1.9	209.76		**2KJ1208 - ■FP13 - ■■Q1**		311

★ Preferred transmission ratio

Shaft designs, see page 2/117 — **1, 2 or 9**

Frequency and voltage, see page 8/20 — **1 to 9**

Gearbox housing mounting position, see page 2/119 — **A, F, H or R**

*) For mounting type B3

© Siemens AG 2011

Selection and ordering data (continued)

Power rating P_{Motor} kW	Output speed n_2 (50 Hz) rpm	Output torque T_2 Nm	Service factor f_B	Gearbox ratio i_{tot}		Order No.	Order code (No. of poles)	Weight *) kg
3	**D.128-LA132SB6E**							
	4.7	6 068	0.84	201.22		**2KJ1207 - ■HF13 - ■■R1**	**P01**	246
	5.1	5 590	0.91	185.36	★	**2KJ1207 - ■HF13 - ■■Q1**	**P01**	246
	D.128-LA100ZLD4E							
	5.4	5 354	0.95	268.16	★	**2KJ1207 - ■FP13 - ■■U1**		221
	5.8	4 910	1.0	245.93		**2KJ1207 - ■FP13 - ■■T1**		221
	6.5	4 387	1.2	219.72	★	**2KJ1207 - ■FP13 - ■■S1**		221
	7.1	4 017	1.3	201.22		**2KJ1207 - ■FP13 - ■■R1**		221
	7.7	3 701	1.4	185.36	★	**2KJ1207 - ■FP13 - ■■Q1**		221
	8.4	3 426	1.5	171.62		**2KJ1207 - ■FP13 - ■■P1**		221
	9.0	3 186	1.6	159.6	★	**2KJ1207 - ■FP13 - ■■N1**		221
	9.6	2 975	1.7	148.99		**2KJ1207 - ■FP13 - ■■M1**		221
	10.8	2 661	1.9	133.3	★	**2KJ1207 - ■FP13 - ■■L1**		221
	11.6	2 466	2.1	123.53		**2KJ1207 - ■FP13 - ■■K1**		221
	D.108-LA100ZLD4E							
	7.5	3 818	0.81	191.21		**2KJ1206 - ■FP13 - ■■P1**		144
	8.2	3 509	0.88	175.78	★	**2KJ1206 - ■FP13 - ■■N1**		144
	8.8	3 242	0.96	162.4		**2KJ1206 - ■FP13 - ■■M1**		144
	9.5	3 009	1.0	150.7	★	**2KJ1206 - ■FP13 - ■■L1**		144
	10.2	2 803	1.1	140.37		**2KJ1206 - ■FP13 - ■■K1**		144
	11.3	2 534	1.2	126.9	★	**2KJ1206 - ■FP13 - ■■J1**		144
	12.3	2 333	1.3	116.83		**2KJ1206 - ■FP13 - ■■H1**		144
	13.7	2 098	1.5	105.08	★	**2KJ1206 - ■FP13 - ■■G1**		144
	14.8	1 935	1.6	96.94		**2KJ1206 - ■FP13 - ■■F1**		144
	17.5	1 640	1.9	82.14		**2KJ1206 - ■FP13 - ■■E1**		144
	20	1 429	2.2	71.59	★	**2KJ1206 - ■FP13 - ■■D1**		144
	Z.108-LA100ZLD4E							
	24	1 179	2	59.05	★	**2KJ1106 - ■FP13 - ■■E2**		140
	26	1 081	2.1	54.15		**2KJ1106 - ■FP13 - ■■D2**		140
	D.88-LA100ZLD4E							
	14.0	2 049	0.82	102.61		**2KJ1205 - ■FP13 - ■■J1**		96
	15.9	1 807	0.93	90.53	★	**2KJ1205 - ■FP13 - ■■H1**		96
	17.2	1 669	1.0	83.58		**2KJ1205 - ■FP13 - ■■G1**		96
	19.2	1 495	1.1	74.88	★	**2KJ1205 - ■FP13 - ■■F1**		96
	21	1 379	1.2	69.05		**2KJ1205 - ■FP13 - ■■E1**		96
	25	1 157	1.5	57.93		**2KJ1205 - ■FP13 - ■■D1**		96
	Z.88-LA100ZLD4E							
	28	1 013	1.4	50.73		**2KJ1105 - ■FP13 - ■■B2**		94
	31	914	1.8	45.76	★	**2KJ1105 - ■FP13 - ■■A2**		94
	34	837	2.0	41.9		**2KJ1105 - ■FP13 - ■■X1**		94
	38	744	2.3	37.27	★	**2KJ1105 - ■FP13 - ■■W1**		94
	42	680	2.5	34.07		**2KJ1105 - ■FP13 - ■■V1**		94
	46	625	2.7	31.32	★	**2KJ1105 - ■FP13 - ■■U1**		94

★ Preferred transmission ratio

Shaft designs, see page 2/117 — **1, 2 or 9**

Frequency and voltage, see page 8/20 — **1 to 9**

Gearbox housing mounting position, see page 2/119 — **A, F, H or R**

*) For mounting type B3

© Siemens AG 2011

Selection and ordering data (continued)

Power rating P_{Motor} kW	Output speed n_2 (50 Hz) rpm	Output torque T_2 Nm	Service factor f_B	Gearbox ratio i_{tot}		Order No.	Order code (No. of poles)	Weight *) kg
3	**Z.68-LA100ZLD4E**							
	34	840	0.95	42.06		**2KJ1104 - ■FP13 - ■■W1**		62
	38	754	1.1	37.76	★	**2KJ1104 - ■FP13 - ■■V1**		62
	42	689	1.2	34.49		**2KJ1104 - ■FP13 - ■■U1**		62
	47	611	1.3	30.6	★	**2KJ1104 - ■FP13 - ■■T1**		62
	51	564	1.4	28.25		**2KJ1104 - ■FP13 - ■■S1**		62
	56	510	1.6	25.55	★	**2KJ1104 - ■FP13 - ■■R1**		62
	61	470	1.7	23.53		**2KJ1104 - ■FP13 - ■■Q1**		62
	66	434	1.8	21.76	★	**2KJ1104 - ■FP13 - ■■P1**		62
	71	403	2.0	20.2		**2KJ1104 - ■FP13 - ■■N1**		62
	80	356	2.2	17.82	★	**2KJ1104 - ■FP13 - ■■M1**		62
	87	328	2.4	16.45		**2KJ1104 - ■FP13 - ■■L1**		62
	97	294	2.7	14.74	★	**2KJ1104 - ■FP13 - ■■K1**		62
	106	271	2.9	13.59		**2KJ1104 - ■FP13 - ■■J1**		62
	126	228	3.4	11.4		**2KJ1104 - ■FP13 - ■■H1**		62
	147	194	3.8	9.73	★	**2KJ1104 - ■FP13 - ■■G1**		62
	242	118	4.1	5.93		**2KJ1104 - ■FP13 - ■■D1**		62
	284	101	4.8	5.06	★	**2KJ1104 - ■FP13 - ■■C1**		62
	Z.48-LA100ZLD4E							
	54	530	0.85	26.53		**2KJ1103 - ■FP13 - ■■S1**		45
	62	461	0.98	23.07	★	**2KJ1103 - ■FP13 - ■■R1**		45
	68	418	1.1	20.95		**2KJ1103 - ■FP13 - ■■Q1**		45
	75	382	1.2	19.13	★	**2KJ1103 - ■FP13 - ■■P1**		45
	82	350	1.3	17.55		**2KJ1103 - ■FP13 - ■■N1**		45
	89	323	1.3	16.17	★	**2KJ1103 - ■FP13 - ■■M1**		45
	98	293	1.4	14.68		**2KJ1103 - ■FP13 - ■■L1**		45
	107	267	1.5	13.38	★	**2KJ1103 - ■FP13 - ■■K1**		45
	117	245	1.6	12.25		**2KJ1103 - ■FP13 - ■■J1**		45
	131	218	1.8	10.93	★	**2KJ1103 - ■FP13 - ■■H1**		45
	147	195	2.0	9.76		**2KJ1103 - ■FP13 - ■■G1**		45
	173	166	2.2	8.29		**2KJ1103 - ■FP13 - ■■F1**		45
	208	138	2.5	6.9	★	**2KJ1103 - ■FP13 - ■■E1**		45
	211	136	2.0	6.79	★	**2KJ1103 - ■FP13 - ■■D1**		45
	237	121	2.2	6.06		**2KJ1103 - ■FP13 - ■■C1**		45
	279	103	2.6	5.15		**2KJ1103 - ■FP13 - ■■B1**		45
	335	86	3.0	4.28	★	**2KJ1103 - ■FP13 - ■■A1**		45
	Z.48-LA100ZLB2E							
	151	190	2.4	19.13	★	**2KJ1103 - ■FM13 - ■■P1**		45
	165	174	2.6	17.55		**2KJ1103 - ■FM13 - ■■N1**		45
	179	160	2.7	16.17	★	**2KJ1103 - ■FM13 - ■■M1**		45
	197	146	2.9	14.68		**2KJ1103 - ■FM13 - ■■L1**		45
	216	133	3.1	13.38	★	**2KJ1103 - ■FM13 - ■■K1**		45
	236	121	3.3	12.25		**2KJ1103 - ■FM13 - ■■J1**		45
	264	108	3.6	10.93	★	**2KJ1103 - ■FM13 - ■■H1**		45

★ Preferred transmission ratio

Shaft designs, see page 2/117 — **1, 2 or 9**

Frequency and voltage, see page 8/20 — **1 to 9**

Gearbox housing mounting position, see page 2/119 — **A, F, H or R**

*) For mounting type B3

© Siemens AG 2011

Selection and ordering data (continued)

Power rating P_{Motor} kW	Output speed n_2 (50 Hz) rpm	Output torque T_2 Nm	Service factor f_B	Gearbox ratio i_{tot}		Order No.	Order code (No. of poles)	Weight *) kg
3	**Z.48-LA100ZLB2E**							
	296	97	3.9	9.76		**2KJ1103 - ■FM13 - ■■G1**	**P00**	45
	349	82	4.4	8.29		**2KJ1103 - ■FM13 - ■■F1**	**P00**	45
	419	68	5.0	6.9	★	**2KJ1103 - ■FM13 - ■■E1**	**P00**	45
	426	67	4.0	6.79	★	**2KJ1103 - ■FM13 - ■■D1**	**P00**	45
	477	60	4.5	6.06		**2KJ1103 - ■FM13 - ■■C1**	**P00**	45
	561	51	5.3	5.15		**2KJ1103 - ■FM13 - ■■B1**	**P00**	45
	675	42	6.1	4.28	★	**2KJ1103 - ■FM13 - ■■A1**	**P00**	45
	Z.38-LA100ZLD4E							
	111	258	0.85	12.92		**2KJ1102 - ■FP13 - ■■M1**		35
	121	236	0.93	11.82	★	**2KJ1102 - ■FP13 - ■■L1**		35
	136	211	1.0	10.57		**2KJ1102 - ■FP13 - ■■K1**		35
	148	194	1.0	9.7	★	**2KJ1102 - ■FP13 - ■■J1**		35
	164	175	1.1	8.75		**2KJ1102 - ■FP13 - ■■H1**		35
	191	150	1.2	7.5	★	**2KJ1102 - ■FP13 - ■■F1**		35
	191	150	1.3	7.52	★	**2KJ1102 - ■FP13 - ■■G1**		35
	214	134	1.3	6.71		**2KJ1102 - ■FP13 - ■■D1**		35
	233	123	1.4	6.16	★	**2KJ1102 - ■FP13 - ■■C1**		35
	259	111	1.5	5.55		**2KJ1102 - ■FP13 - ■■B1**		35
	301	95	1.7	4.77	★	**2KJ1102 - ■FP13 - ■■A1**		35
	Z.38-LA100ZLB2E							
	167	172	1.3	17.33	★	**2KJ1102 - ■FM13 - ■■Q1**	**P00**	35
	185	155	1.4	15.64		**2KJ1102 - ■FM13 - ■■P1**	**P00**	35
	204	141	1.6	14.18	★	**2KJ1102 - ■FM13 - ■■N1**	**P00**	35
	224	128	1.7	12.92		**2KJ1102 - ■FM13 - ■■M1**	**P00**	35
	245	117	1.9	11.82	★	**2KJ1102 - ■FM13 - ■■L1**	**P00**	35
	273	105	2.0	10.57		**2KJ1102 - ■FM13 - ■■K1**	**P00**	35
	298	96	2.1	9.7	★	**2KJ1102 - ■FM13 - ■■J1**	**P00**	35
	330	87	2.2	8.75		**2KJ1102 - ■FM13 - ■■H1**	**P00**	35
	384	74	2.5	7.52	★	**2KJ1102 - ■FM13 - ■■G1**	**P00**	35
	385	74	2.5	7.5	★	**2KJ1102 - ■FM13 - ■■F1**	**P00**	35
	431	66	2.7	6.71		**2KJ1102 - ■FM13 - ■■D1**	**P00**	35
	469	61	2.8	6.16	★	**2KJ1102 - ■FM13 - ■■C1**	**P00**	35
	521	55	3.0	5.55		**2KJ1102 - ■FM13 - ■■B1**	**P00**	35
	606	47	3.4	4.77	★	**2KJ1102 - ■FM13 - ■■A1**	**P00**	35
	Z.28-LA100ZLD4E							
	188	153	0.89	7.64		**2KJ1101 - ■FP13 - ■■J1**		28
	207	139	0.95	6.94	★	**2KJ1101 - ■FP13 - ■■H1**		28
	251	114	0.81	5.72		**2KJ1101 - ■FP13 - ■■F1**		28
	275	104	0.88	5.21	★	**2KJ1101 - ■FP13 - ■■E1**		28
	312	92	0.96	4.6		**2KJ1101 - ■FP13 - ■■D1**		28
	338	85	1.1	4.25	★	**2KJ1101 - ■FP13 - ■■C1**		28
	392	73	1.1	3.66		**2KJ1101 - ■FP13 - ■■B1**		28
	431	66	1.2	3.33	★	**2KJ1101 - ■FP13 - ■■A1**		28

★ Preferred transmission ratio

Shaft designs, see page 2/117 — **1, 2 or 9**

Frequency and voltage, see page 8/20 — **1 to 9**

Gearbox housing mounting position, see page 2/119 — **A, F, H or R**

*) For mounting type B3

© Siemens AG 2011

2

Selection and ordering data (continued)

Power rating P_{Motor} kW	Output speed n_2 (50 Hz) rpm	Output torque T_2 Nm	Service factor f_B	Gearbox ratio i_{tot}		Order No.	Order code (No. of poles)	Weight *) kg
3	**E.128-LA100ZLD4E**							
	142	202	2.7	10.14	★	**2KJ1006 - ■FP13 - ■■T1**		119
	153	188	3.1	9.4		**2KJ1006 - ■FP13 - ■■S1**		119
	161	178	3.6	8.94	★	**2KJ1006 - ■FP13 - ■■R1**		119
	E.88-LA100ZLD4E							
	139	206	1.1	10.33	★	**2KJ1004 - ■FP13 - ■■S1**		61
	152	189	1.1	9.46		**2KJ1004 - ■FP13 - ■■R1**		61
	170	168	1.5	8.42	★	**2KJ1004 - ■FP13 - ■■Q1**		61
	187	154	1.6	7.69		**2KJ1004 - ■FP13 - ■■P1**		61
	203	141	2.1	7.07	★	**2KJ1004 - ■FP13 - ■■N1**		61
	220	130	2.3	6.53		**2KJ1004 - ■FP13 - ■■M1**		61
	237	121	2.3	6.06	★	**2KJ1004 - ■FP13 - ■■L1**		61
	254	113	2.8	5.65		**2KJ1004 - ■FP13 - ■■K1**		61
	281	102	3.6	5.11	★	**2KJ1004 - ■FP13 - ■■J1**		61
	305	94	4.1	4.7		**2KJ1004 - ■FP13 - ■■H1**		61
	339	84	4.7	4.23	★	**2KJ1004 - ■FP13 - ■■G1**		61
	368	78	4.9	3.9		**2KJ1004 - ■FP13 - ■■F1**		61
	E.68-LA100ZLD4E							
	163	176	0.85	8.82		**2KJ1003 - ■FP13 - ■■T1**		44
	181	158	1.1	7.92	★	**2KJ1003 - ■FP13 - ■■S1**		44
	198	144	1.0	7.23		**2KJ1003 - ■FP13 - ■■R1**		44
	224	128	1.3	6.42	★	**2KJ1003 - ■FP13 - ■■P1**		44
	242	118	1.6	5.92		**2KJ1003 - ■FP13 - ■■N1**		44
	268	107	2.1	5.36	★	**2KJ1003 - ■FP13 - ■■M1**		44
	291	98	2.3	4.93		**2KJ1003 - ■FP13 - ■■L1**		44
	315	91	2.4	4.56	★	**2KJ1003 - ■FP13 - ■■K1**		44
	338	85	2.7	4.24		**2KJ1003 - ■FP13 - ■■J1**		44
	384	75	3.1	3.74	★	**2KJ1003 - ■FP13 - ■■H1**		44
	416	69	3.5	3.45		**2KJ1003 - ■FP13 - ■■G1**		44
	464	62	4.1	3.09	★	**2KJ1003 - ■FP13 - ■■F1**		44
	504	57	4.4	2.85		**2KJ1003 - ■FP13 - ■■E1**		44
	600	48	4.8	2.39		**2KJ1003 - ■FP13 - ■■D1**		44
	703	41	5.2	2.04	★	**2KJ1003 - ■FP13 - ■■C1**		44
	844	34	5.2	1.7		**2KJ1003 - ■FP13 - ■■B1**		44
	1 018	28	5.3	1.41	★	**2KJ1003 - ■FP13 - ■■A1**		44
	E.48-LA100ZLD4E							
	227	126	0.91	6.33	★	**2KJ1002 - ■FP13 - ■■P1**		34
	245	117	1.0	5.85		**2KJ1002 - ■FP13 - ■■N1**		34
	282	101	1.2	5.08	★	**2KJ1002 - ■FP13 - ■■M1**		34
	311	92	1.4	4.62		**2KJ1002 - ■FP13 - ■■L1**		34
	341	84	1.8	4.21	★	**2KJ1002 - ■FP13 - ■■K1**		34
	371	77	2.1	3.87		**2KJ1002 - ■FP13 - ■■J1**		34
	403	71	2.0	3.56	★	**2KJ1002 - ■FP13 - ■■H1**		34
	443	65	2.3	3.24		**2KJ1002 - ■FP13 - ■■G1**		34

★ Preferred transmission ratio

Shaft designs, see page 2/117 — **1, 2 or 9**

Frequency and voltage, see page 8/20 — **1 to 9**

Gearbox housing mounting position, see page 2/119 — **A, F, H or R**

*) For mounting type B3

© Siemens AG 2011

Selection and ordering data (continued)

Power rating P_{Motor} kW	Output speed n_2 (50 Hz) rpm	Output torque T_2 Nm	Service factor f_B	Gearbox ratio i_{tot}		Order No.	Order code (No. of poles)	Weight *) kg
3	**E.48-LA100ZLD4E**							
	486	59	2.9	2.95	★	**2KJ1002 - ■FP13 - ■■F1**		34
	531	54	3.0	2.7		**2KJ1002 - ■FP13 - ■■E1**		34
	595	48	3.1	2.41	★	**2KJ1002 - ■FP13 - ■■D1**		34
	667	43	3.1	2.15		**2KJ1002 - ■FP13 - ■■C1**		34
	784	36	3.1	1.83		**2KJ1002 - ■FP13 - ■■B1**		34
	944	30	3.3	1.52	★	**2KJ1002 - ■FP13 - ■■A1**		34
	E.38-LA100ZLD4E							
	313	91	0.85	4.58	★	**2KJ1001 - ■FP13 - ■■L1**		31
	391	73	0.96	3.67	★	**2KJ1001 - ■FP13 - ■■J1**		31
	434	66	0.98	3.31		**2KJ1001 - ■FP13 - ■■H1**		31
	478	60	1.3	3	★	**2KJ1001 - ■FP13 - ■■G1**		31
	526	54	1.5	2.73		**2KJ1001 - ■FP13 - ■■F1**		31
	574	50	1.5	2.5	★	**2KJ1001 - ■FP13 - ■■E1**		31
	641	45	1.6	2.24		**2KJ1001 - ■FP13 - ■■D1**		31
	700	41	2.0	2.05	★	**2KJ1001 - ■FP13 - ■■C1**		31
	776	37	2.2	1.85		**2KJ1001 - ■FP13 - ■■B1**		31
	903	32	2.3	1.59	★	**2KJ1001 - ■FP13 - ■■A1**		31
4	**D.188-Z68-LA112ZMP4E**							
	1.6	21 939	0.91	896	★	**2KJ1237 - ■GJ13 - ■■G1**		645
	1.9	18 266	1.1	746		**2KJ1237 - ■GJ13 - ■■F1**		645
	2.3	15 157	1.3	619	★	**2KJ1237 - ■GJ13 - ■■E1**		645
	2.6	13 369	1.5	546		**2KJ1237 - ■GJ13 - ■■D1**		645
	D.188-LA160M8							
	2.9	13 026	1.5	243.82		**2KJ1211 - ■JE13 - ■■N1**	**P02**	676
	3.2	11 763	1.7	220.17		**2KJ1211 - ■JE13 - ■■M1**	**P02**	676
	3.5	11 024	1.8	206.34		**2KJ1211 - ■JE13 - ■■L1**	**P02**	676
	D.188-LA132ZMB6E							
	3.9	9 804	2.0	243.82		**2KJ1211 - ■HJ13 - ■■N1**	**P01**	652
	D.168-LA132ZMB6E							
	2.8	13 736	1.0	341.61	★	**2KJ1210 - ■HJ13 - ■■U1**	**P01**	507
	3.0	12 602	1.1	313.41		**2KJ1210 - ■HJ13 - ■■T1**	**P01**	507
	3.3	11 630	1.2	289.23	★	**2KJ1210 - ■HJ13 - ■■S1**	**P01**	507
	3.5	10 788	1.3	268.29		**2KJ1210 - ■HJ13 - ■■R1**	**P01**	507
	3.8	10 176	1.4	253.08	★	**2KJ1210 - ■HJ13 - ■■Q1**	**P01**	507
	4.0	9 519	1.5	236.72		**2KJ1210 - ■HJ13 - ■■P1**	**P01**	507
	D.148-LA132ZMB6E							
	4.0	9 492	0.84	236.05		**2KJ1208 - ■HJ13 - ■■S1**	**P01**	336
	D.148-LA112ZMP4E							
	4.3	8 916	0.9	336.11		**2KJ1208 - ■GJ13 - ■■W1**		318
	4.8	7 994	1.0	301.34	★	**2KJ1208 - ■GJ13 - ■■V1**		318
	5.2	7 328	1.1	276.23		**2KJ1208 - ■GJ13 - ■■U1**		318
	5.7	6 757	1.2	254.7	★	**2KJ1208 - ■GJ13 - ■■T1**		318
	6.1	6 262	1.3	236.05		**2KJ1208 - ■GJ13 - ■■S1**		318

★ Preferred transmission ratio

Shaft designs, see page 2/117 — **1, 2 or 9**

Frequency and voltage, see page 8/20 — **1 to 9**

Gearbox housing mounting position, see page 2/119 — **A, F, H or R**

*) For mounting type B3

© Siemens AG 2011

2

Selection and ordering data (continued)

Power rating P_{Motor} kW	Output speed n_2 (50 Hz) rpm	Output torque T_2 Nm	Service factor f_B	Gearbox ratio i_{tot}		Order No.	Order code (No. of poles)	Weight *) kg
4	**D.148-LA112ZMP4E**							
	6.4	5 954	1.3	224.43	★	**2KJ1208 - ■GJ13 - ■■R1**		318
	6.9	5 564	1.4	209.76		**2KJ1208 - ■GJ13 - ■■Q1**		318
	7.8	4 908	1.6	185.03	★	**2KJ1208 - ■GJ13 - ■■P1**		318
	8.3	4 630	1.7	174.53		**2KJ1208 - ■GJ13 - ■■N1**		318
	9.2	4 148	1.9	156.38	★	**2KJ1208 - ■GJ13 - ■■M1**		318
	10.0	3 830	2.1	144.39		**2KJ1208 - ■GJ13 - ■■L1**		318
	D.128-LA112ZMP4E							
	6.6	5 829	0.87	219.72	★	**2KJ1207 - ■GJ13 - ■■S1**		228
	7.2	5 338	0.96	201.22		**2KJ1207 - ■GJ13 - ■■R1**		228
	7.8	4 917	1.0	185.36	★	**2KJ1207 - ■GJ13 - ■■Q1**		228
	8.4	4 553	1.1	171.62		**2KJ1207 - ■GJ13 - ■■P1**		228
	9.0	4 234	1.2	159.6	★	**2KJ1207 - ■GJ13 - ■■N1**		228
	9.7	3 952	1.3	148.99		**2KJ1207 - ■GJ13 - ■■M1**		228
	10.8	3 536	1.4	133.3	★	**2KJ1207 - ■GJ13 - ■■L1**		228
	11.7	3 277	1.6	123.53		**2KJ1207 - ■GJ13 - ■■K1**		228
	12.7	3 004	1.7	113.24	★	**2KJ1207 - ■GJ13 - ■■J1**		228
	13.9	2 754	1.9	103.8		**2KJ1207 - ■GJ13 - ■■H1**		228
	16.3	2 347	2.2	88.46		**2KJ1207 - ■GJ13 - ■■G1**		228
	D.108-LA112ZMP4E							
	10.3	3 724	0.83	140.37		**2KJ1206 - ■GJ13 - ■■K1**		151
	11.3	3 366	0.92	126.9	★	**2KJ1206 - ■GJ13 - ■■J1**		151
	12.3	3 099	1.0	116.83		**2KJ1206 - ■GJ13 - ■■H1**		151
	13.7	2 788	1.1	105.08	★	**2KJ1206 - ■GJ13 - ■■G1**		151
	14.9	2 572	1.2	96.94		**2KJ1206 - ■GJ13 - ■■F1**		151
	17.5	2 179	1.4	82.14		**2KJ1206 - ■GJ13 - ■■E1**		151
	20	1 899	1.6	71.59	★	**2KJ1206 - ■GJ13 - ■■D1**		151
	24	1 616	1.9	60.9		**2KJ1206 - ■GJ13 - ■■C1**		151
	Z.108-LA112ZMP4E							
	24	1 566	1.5	59.05	★	**2KJ1106 - ■GJ13 - ■■E2**		147
	27	1 436	1.6	54.15		**2KJ1106 - ■GJ13 - ■■D2**		147
	30	1 283	2.4	48.38	★	**2KJ1106 - ■GJ13 - ■■C2**		147
	D.88-LA112ZMP4E							
	19.2	1 986	0.85	74.88	★	**2KJ1205 - ■GJ13 - ■■F1**		103
	21	1 832	0.92	69.05		**2KJ1205 - ■GJ13 - ■■E1**		103
	25	1 537	1.1	57.93		**2KJ1205 - ■GJ13 - ■■D1**		103
	Z.88-LA112ZMP4E							
	32	1 214	1.4	45.76	★	**2KJ1105 - ■GJ13 - ■■A2**		101
	34	1 112	1.5	41.9		**2KJ1105 - ■GJ13 - ■■X1**		101
	39	989	1.7	37.27	★	**2KJ1105 - ■GJ13 - ■■W1**		101
	42	904	1.9	34.07		**2KJ1105 - ■GJ13 - ■■V1**		101
	46	831	2.0	31.32	★	**2KJ1105 - ■GJ13 - ■■U1**		101
	50	767	2.2	28.93		**2KJ1105 - ■GJ13 - ■■T1**		101
	54	712	2.4	26.85	★	**2KJ1105 - ■GJ13 - ■■S1**		101

★ Preferred transmission ratio

Shaft designs, see page 2/117 — **1, 2 or 9**

Frequency and voltage, see page 8/20 — **1 to 9**

Gearbox housing mounting position, see page 2/119 — **A, F, H or R**

*) For mounting type B3

© Siemens AG 2011

Selection and ordering data (continued)

Power rating P_{Motor} kW	Output speed n_2 (50 Hz) rpm	Output torque T_2 Nm	Service factor f_B	Gearbox ratio i_{tot}		Order No.	Order code (No. of poles)	Weight *) kg
4	**Z.88-LA112ZMP4E**							
	58	663	2.5	25.01		**2KJ1105 - ■GJ13 - ■■R1**		101
	64	600	2.8	22.61	★	**2KJ1105 - ■GJ13 - ■■Q1**		101
	69	552	3.0	20.81		**2KJ1105 - ■GJ13 - ■■P1**		101
	Z.68-LA112ZMP4E							
	38	1 002	0.80	37.76	★	**2KJ1104 - ■GJ13 - ■■V1**		69
	42	915	0.87	34.49		**2KJ1104 - ■GJ13 - ■■U1**		69
	47	812	0.99	30.6	★	**2KJ1104 - ■GJ13 - ■■T1**		69
	51	749	1.1	28.25		**2KJ1104 - ■GJ13 - ■■S1**		69
	56	678	1.2	25.55	★	**2KJ1104 - ■GJ13 - ■■R1**		69
	61	624	1.3	23.53		**2KJ1104 - ■GJ13 - ■■Q1**		69
	66	577	1.4	21.76	★	**2KJ1104 - ■GJ13 - ■■P1**		69
	71	536	1.5	20.2		**2KJ1104 - ■GJ13 - ■■N1**		69
	81	473	1.7	17.82	★	**2KJ1104 - ■GJ13 - ■■M1**		69
	88	436	1.8	16.45		**2KJ1104 - ■GJ13 - ■■L1**		69
	98	391	2.0	14.74	★	**2KJ1104 - ■GJ13 - ■■K1**		69
	106	361	2.2	13.59		**2KJ1104 - ■GJ13 - ■■J1**		69
	126	302	2.6	11.4		**2KJ1104 - ■GJ13 - ■■H1**		69
	148	258	2.9	9.73	★	**2KJ1104 - ■GJ13 - ■■G1**		69
	178	215	3.3	8.11		**2KJ1104 - ■GJ13 - ■■F1**		69
	214	178	3.6	6.72	★	**2KJ1104 - ■GJ13 - ■■E1**		69
	243	157	3.1	5.93		**2KJ1104 - ■GJ13 - ■■D1**		69
	285	134	3.6	5.06	★	**2KJ1104 - ■GJ13 - ■■C1**		69
	341	112	4.2	4.22		**2KJ1104 - ■GJ13 - ■■B1**		69
	413	93	4.5	3.49	★	**2KJ1104 - ■GJ13 - ■■A1**		69
	Z.68-LA112ZMP2E							
	163	234	3.4	17.82	★	**2KJ1104 - ■GJ13 - ■■M1**	**P00**	69
	177	216	3.7	16.45		**2KJ1104 - ■GJ13 - ■■L1**	**P00**	69
	197	194	4.1	14.74	★	**2KJ1104 - ■GJ13 - ■■K1**	**P00**	69
	214	179	4.5	13.59		**2KJ1104 - ■GJ13 - ■■J1**	**P00**	69
	Z.48-LA112ZMP4E							
	69	556	0.81	20.95		**2KJ1103 - ■GJ13 - ■■Q1**		52
	75	507	0.89	19.13	★	**2KJ1103 - ■GJ13 - ■■P1**		52
	82	466	0.97	17.55		**2KJ1103 - ■GJ13 - ■■N1**		52
	89	429	1.0	16.17	★	**2KJ1103 - ■GJ13 - ■■M1**		52
	98	389	1.1	14.68		**2KJ1103 - ■GJ13 - ■■L1**		52
	108	355	1.2	13.38	★	**2KJ1103 - ■GJ13 - ■■K1**		52
	118	325	1.2	12.25		**2KJ1103 - ■GJ13 - ■■J1**		52
	132	290	1.3	10.93	★	**2KJ1103 - ■GJ13 - ■■H1**		52
	148	259	1.5	9.76		**2KJ1103 - ■GJ13 - ■■G1**		52
	174	220	1.6	8.29		**2KJ1103 - ■GJ13 - ■■F1**		52
	209	183	1.9	6.9	★	**2KJ1103 - ■GJ13 - ■■E1**		52
	212	180	1.5	6.79	★	**2KJ1103 - ■GJ13 - ■■D1**		52
	238	161	1.7	6.06		**2KJ1103 - ■GJ13 - ■■C1**		52

★ Preferred transmission ratio

Shaft designs, see page 2/117 — **1, 2 or 9**

Frequency and voltage, see page 8/20 — **1 to 9**

Gearbox housing mounting position, see page 2/119 — **A, F, H or R**

*) For mounting type B3

© Siemens AG 2011

2

Selection and ordering data (continued)

Power rating P_{Motor} kW	Output speed n_2 (50 Hz) rpm	Output torque T_2 Nm	Service factor f_B	Gearbox ratio i_{tot}		Order No.	Order code (No. of poles)	Weight *) kg
4	**Z.48-LA112ZMP4E**							
	280	137	2.0	5.15		**2KJ1103 - ■GJ13 - ■■B1**		52
	336	114	2.3	4.28	★	**2KJ1103 - ■GJ13 - ■■A1**		52
	Z.48-LA112ZMP2E							
	152	252	1.8	19.13	★	**2KJ1103 - ■GJ13 - ■■P1**	**P00**	52
	166	231	1.9	17.55		**2KJ1103 - ■GJ13 - ■■N1**	**P00**	52
	180	213	2.0	16.17	★	**2KJ1103 - ■GJ13 - ■■M1**	**P00**	52
	198	193	2.2	14.68		**2KJ1103 - ■GJ13 - ■■L1**	**P00**	52
	217	176	2.3	13.38	★	**2KJ1103 - ■GJ13 - ■■K1**	**P00**	52
	237	161	2.5	12.25		**2KJ1103 - ■GJ13 - ■■J1**	**P00**	52
	266	144	2.7	10.93	★	**2KJ1103 - ■GJ13 - ■■H1**	**P00**	52
	298	128	3.0	9.76		**2KJ1103 - ■GJ13 - ■■G1**	**P00**	52
	350	109	3.3	8.29		**2KJ1103 - ■GJ13 - ■■F1**	**P00**	52
	421	91	3.7	6.9	★	**2KJ1103 - ■GJ13 - ■■E1**	**P00**	52
	428	89	3.0	6.79	★	**2KJ1103 - ■GJ13 - ■■D1**	**P00**	52
	479	80	3.4	6.06		**2KJ1103 - ■GJ13 - ■■C1**	**P00**	52
	564	68	4.0	5.15		**2KJ1103 - ■GJ13 - ■■B1**	**P00**	52
	679	56	4.6	4.28	★	**2KJ1103 - ■GJ13 - ■■A1**	**P00**	52
	Z.38-LA112ZMP4E							
	165	232	0.84	8.75		**2KJ1102 - ■GJ13 - ■■H1**		42
	191	199	0.95	7.52	★	**2KJ1102 - ■GJ13 - ■■G1**		42
	192	199	0.93	7.5	★	**2KJ1102 - ■GJ13 - ■■F1**		42
	215	178	1.0	6.71		**2KJ1102 - ■GJ13 - ■■D1**		42
	234	163	1.0	6.16	★	**2KJ1102 - ■GJ13 - ■■C1**		42
	259	147	1.1	5.55		**2KJ1102 - ■GJ13 - ■■B1**		42
	302	127	1.3	4.77	★	**2KJ1102 - ■GJ13 - ■■A1**		42
	Z.38-LA112ZMP2E							
	168	228	0.97	17.33	★	**2KJ1102 - ■GJ13 - ■■Q1**	**P00**	42
	186	206	1.1	15.64		**2KJ1102 - ■GJ13 - ■■P1**	**P00**	42
	205	186	1.2	14.18	★	**2KJ1102 - ■GJ13 - ■■N1**	**P00**	42
	225	170	1.3	12.92		**2KJ1102 - ■GJ13 - ■■M1**	**P00**	42
	246	155	1.4	11.82	★	**2KJ1102 - ■GJ13 - ■■L1**	**P00**	42
	275	139	1.5	10.57		**2KJ1102 - ■GJ13 - ■■K1**	**P00**	42
	299	128	1.6	9.7	★	**2KJ1102 - ■GJ13 - ■■J1**	**P00**	42
	332	115	1.7	8.75		**2KJ1102 - ■GJ13 - ■■H1**	**P00**	42
	386	99	1.9	7.52	★	**2KJ1102 - ■GJ13 - ■■G1**	**P00**	42
	387	99	1.9	7.5	★	**2KJ1102 - ■GJ13 - ■■F1**	**P00**	42
	433	88	2.0	6.71		**2KJ1102 - ■GJ13 - ■■D1**	**P00**	42
	472	81	2.1	6.16	★	**2KJ1102 - ■GJ13 - ■■C1**	**P00**	42
	523	73	2.3	5.55		**2KJ1102 - ■GJ13 - ■■B1**	**P00**	42
	609	63	2.6	4.77	★	**2KJ1102 - ■GJ13 - ■■A1**	**P00**	42
	E.128-LA112ZMP4E							
	142	269	2.0	10.14	★	**2KJ1006 - ■GJ13 - ■■T1**		126
	153	249	2.3	9.4		**2KJ1006 - ■GJ13 - ■■S1**		126

★ Preferred transmission ratio

Shaft designs, see page 2/117 — **1, 2 or 9**

Frequency and voltage, see page 8/20 — **1 to 9**

Gearbox housing mounting position, see page 2/119 — **A, F, H or R**

*) For mounting type B3

© Siemens AG 2011

Selection and ordering data (continued)

Power rating P_{Motor} kW	Output speed n_2 (50 Hz) rpm	Output torque T_2 Nm	Service factor f_B	Gearbox ratio i_{tot}		Order No.	Order code (No. of poles)	Weight *) kg
4	**E.128-LA112ZMP4E**							
	161	237	2.7	8.94	★	**2KJ1006 - ■GJ13 - ■■R1**		126
	172	222	3.2	8.35		**2KJ1006 - ■GJ13 - ■■Q1**		126
	195	196	4.2	7.37	★	**2KJ1006 - ■GJ13 - ■■P1**		126
	E.108-LA112ZMP4E							
	264	145	4.6	5.46	★	**2KJ1005 - ■GJ13 - ■■K1**		89
	E.88-LA112ZMP4E							
	139	274	0.84	10.33	★	**2KJ1004 - ■GJ13 - ■■S1**		68
	152	251	0.84	9.46		**2KJ1004 - ■GJ13 - ■■R1**		68
	171	223	1.1	8.42	★	**2KJ1004 - ■GJ13 - ■■Q1**		68
	187	204	1.2	7.69		**2KJ1004 - ■GJ13 - ■■P1**		68
	204	188	1.5	7.07	★	**2KJ1004 - ■GJ13 - ■■N1**		68
	221	173	1.7	6.53		**2KJ1004 - ■GJ13 - ■■M1**		68
	238	161	1.7	6.06	★	**2KJ1004 - ■GJ13 - ■■L1**		68
	255	150	2.1	5.65		**2KJ1004 - ■GJ13 - ■■K1**		68
	282	136	2.7	5.11	★	**2KJ1004 - ■GJ13 - ■■J1**		68
	306	125	3.1	4.7		**2KJ1004 - ■GJ13 - ■■H1**		68
	340	112	3.6	4.23	★	**2KJ1004 - ■GJ13 - ■■G1**		68
	369	103	3.7	3.9		**2KJ1004 - ■GJ13 - ■■F1**		68
	436	88	5.1	3.3		**2KJ1004 - ■GJ13 - ■■E1**		68
	500	76	5.7	2.88	★	**2KJ1004 - ■GJ13 - ■■D1**		68
	E.68-LA112ZMP4E							
	182	210	0.81	7.92	★	**2KJ1003 - ■GJ13 - ■■S1**		51
	224	170	1.0	6.42	★	**2KJ1003 - ■GJ13 - ■■P1**		51
	243	157	1.2	5.92		**2KJ1003 - ■GJ13 - ■■N1**		51
	269	142	1.5	5.36	★	**2KJ1003 - ■GJ13 - ■■M1**		51
	292	131	1.7	4.93		**2KJ1003 - ■GJ13 - ■■L1**		51
	316	121	1.8	4.56	★	**2KJ1003 - ■GJ13 - ■■K1**		51
	340	112	2.0	4.24		**2KJ1003 - ■GJ13 - ■■J1**		51
	385	99	2.3	3.74	★	**2KJ1003 - ■GJ13 - ■■H1**		51
	417	92	2.6	3.45		**2KJ1003 - ■GJ13 - ■■G1**		51
	466	82	3.0	3.09	★	**2KJ1003 - ■GJ13 - ■■F1**		51
	505	76	3.3	2.85		**2KJ1003 - ■GJ13 - ■■E1**		51
	603	63	3.6	2.39		**2KJ1003 - ■GJ13 - ■■D1**		51
	706	54	3.9	2.04	★	**2KJ1003 - ■GJ13 - ■■C1**		51
	847	45	3.9	1.7		**2KJ1003 - ■GJ13 - ■■B1**		51
	1 021	37	4.0	1.41	★	**2KJ1003 - ■GJ13 - ■■A1**		51
	E.48-LA112ZMP4E							
	283	135	0.89	5.08	★	**2KJ1002 - ■GJ13 - ■■M1**		41
	312	123	1.1	4.62		**2KJ1002 - ■GJ13 - ■■L1**		41
	342	112	1.3	4.21	★	**2KJ1002 - ■GJ13 - ■■K1**		41
	372	103	1.6	3.87		**2KJ1002 - ■GJ13 - ■■J1**		41
	404	94	1.5	3.56	★	**2KJ1002 - ■GJ13 - ■■H1**		41
	444	86	1.7	3.24		**2KJ1002 - ■GJ13 - ■■G1**		41

★ Preferred transmission ratio

Shaft designs, see page 2/117 — **1, 2 or 9**

Frequency and voltage, see page 8/20 — **1 to 9**

Gearbox housing mounting position, see page 2/119 — **A, F, H or R**

*) For mounting type B3

© Siemens AG 2011

2

Selection and ordering data (continued)

Power rating P_{Motor} kW	Output speed n_2 (50 Hz) rpm	Output torque T_2 Nm	Service factor f_B	Gearbox ratio i_{tot}		Order No.	Order code (No. of poles)	Weight *) kg
4	**E.48-LA112ZMP4E**							
	488	78	2.2	2.95	★	**2KJ1002 - ■GJ13 - ■■F1**		41
	533	72	2.2	2.7		**2KJ1002 - ■GJ13 - ■■E1**		41
	598	64	2.3	2.41	★	**2KJ1002 - ■GJ13 - ■■D1**		41
	670	57	2.4	2.15		**2KJ1002 - ■GJ13 - ■■C1**		41
	787	48	2.4	1.83		**2KJ1002 - ■GJ13 - ■■B1**		41
	947	40	2.5	1.52	★	**2KJ1002 - ■GJ13 - ■■A1**		41
	E.38-LA112ZMP4E							
	480	80	1.0	3	★	**2KJ1001 - ■GJ13 - ■■G1**		38
	527	72	1.1	2.73		**2KJ1001 - ■GJ13 - ■■F1**		38
	702	54	1.5	2.05	★	**2KJ1001 - ■GJ13 - ■■C1**		38
	778	49	1.7	1.85		**2KJ1001 - ■GJ13 - ■■B1**		38
	906	42	1.7	1.59	★	**2KJ1001 - ■GJ13 - ■■A1**		38
5.5	**D.188-Z68-LA132SP4E**							
	1.9	25 081	0.8	746		**2KJ1237 - ■HG13 - ■■F1**		663
	2.3	20 811	0.96	619	★	**2KJ1237 - ■HG13 - ■■E1**		663
	2.6	18 357	1.1	546		**2KJ1237 - ■HG13 - ■■D1**		663
	D.188-LA160MB8							
	2.9	18 038	1.1	243.82		**2KJ1211 - ■JF13 - ■■N1**	**P02**	676
	3.2	16 288	1.2	220.17		**2KJ1211 - ■JF13 - ■■M1**	**P02**	676
	3.4	15 265	1.3	206.34		**2KJ1211 - ■JF13 - ■■L1**	**P02**	676
	D.188-LA132ZMD6E							
	3.9	13 340	1.5	243.82		**2KJ1211 - ■HK13 - ■■N1**	**P01**	652
	4.4	12 046	1.7	220.17		**2KJ1211 - ■HK13 - ■■M1**	**P01**	652
	4.7	11 290	1.8	206.34		**2KJ1211 - ■HK13 - ■■L1**	**P01**	652
	5.4	9 697	2.1	177.23	★	**2KJ1211 - ■HK13 - ■■K1**	**P01**	652
	D.168-LA132ZMD6E							
	3.1	17 148	0.82	313.41		**2KJ1210 - ■HK13 - ■■T1**	**P01**	507
	3.3	15 825	0.88	289.23	★	**2KJ1210 - ■HK13 - ■■S1**	**P01**	507
	3.6	14 679	0.95	268.29		**2KJ1210 - ■HK13 - ■■R1**	**P01**	507
	3.8	13 847	1.0	253.08	★	**2KJ1210 - ■HK13 - ■■Q1**	**P01**	507
	D.168-LA132SP4E							
	4.2	12 417	1.1	341.61	★	**2KJ1210 - ■HG13 - ■■U1**		507
	4.6	11 392	1.2	313.41		**2KJ1210 - ■HG13 - ■■T1**		507
	5.0	10 513	1.3	289.23	★	**2KJ1210 - ■HG13 - ■■S1**		507
	5.4	9 752	1.4	268.29		**2KJ1210 - ■HG13 - ■■R1**		507
	5.7	9 199	1.5	253.08	★	**2KJ1210 - ■HG13 - ■■Q1**		507
	6.1	8 605	1.6	236.72		**2KJ1210 - ■HG13 - ■■P1**		507
	6.9	7 651	1.8	210.49	★	**2KJ1210 - ■HG13 - ■■N1**		507
	7.3	7 223	1.9	198.71		**2KJ1210 - ■HG13 - ■■M1**		507
	D.148-LA132SP4E							
	5.2	10 041	0.80	276.23		**2KJ1208 - ■HG13 - ■■U1**		336
	5.7	9 258	0.86	254.7	★	**2KJ1208 - ■HG13 - ■■T1**		336
	6.1	8 580	0.93	236.05		**2KJ1208 - ■HG13 - ■■S1**		336

★ Preferred transmission ratio

Shaft designs, see page 2/117 — **1, 2 or 9**

Frequency and voltage, see page 8/20 — **1 to 9**

Gearbox housing mounting position, see page 2/119 — **A, F, H or R**

*) For mounting type B3

© Siemens AG 2011

Selection and ordering data (continued)

Power rating P_{Motor} kW	Output speed n_2 (50 Hz) rpm	Output torque T_2 Nm	Service factor f_B	Gearbox ratio i_{tot}		Order No.	Order code (No. of poles)	Weight *) kg
5.5	**D.148-LA132SP4E**							
	6.4	8 158	0.98	224.43	★	**2KJ1208 - ■HG13 - ■■R1**		336
	6.9	7 625	1.0	209.76		**2KJ1208 - ■HG13 - ■■Q1**		336
	7.8	6 726	1.2	185.03	★	**2KJ1208 - ■HG13 - ■■P1**		336
	8.3	6 344	1.3	174.53		**2KJ1208 - ■HG13 - ■■N1**		336
	9.2	5 684	1.4	156.38	★	**2KJ1208 - ■HG13 - ■■M1**		336
	10.0	5 249	1.5	144.39		**2KJ1208 - ■HG13 - ■■L1**		336
	11.7	4 484	1.8	123.37		**2KJ1208 - ■HG13 - ■■K1**		336
	13.0	4 053	2.0	111.5	★	**2KJ1208 - ■HG13 - ■■J1**		336
	13.5	3 905	2.0	107.42		**2KJ1208 - ■HG13 - ■■H1**		336
	Z.148-LA132SP4E							
	25	2 090	2.2	57.5		**2KJ1108 - ■HG13 - ■■B2**		324
	D.128-LA132SP4E							
	8.4	6 238	0.82	171.62		**2KJ1207 - ■HG13 - ■■P1**		246
	9.1	5 801	0.88	159.6	★	**2KJ1207 - ■HG13 - ■■N1**		246
	9.7	5 416	0.94	148.99		**2KJ1207 - ■HG13 - ■■M1**		246
	10.8	4 845	1.1	133.3	★	**2KJ1207 - ■HG13 - ■■L1**		246
	11.7	4 490	1.1	123.53		**2KJ1207 - ■HG13 - ■■K1**		246
	12.8	4 116	1.2	113.24	★	**2KJ1207 - ■HG13 - ■■J1**		246
	13.9	3 773	1.4	103.8		**2KJ1207 - ■HG13 - ■■H1**		246
	16.3	3 215	1.6	88.46		**2KJ1207 - ■HG13 - ■■G1**		246
	18.5	2 837	1.8	78.06	★	**2KJ1207 - ■HG13 - ■■F1**		246
	22	2 415	2.1	66.43		**2KJ1207 - ■HG13 - ■■E1**		246
	25	2 092	2.4	57.56	★	**2KJ1207 - ■HG13 - ■■D1**		246
	Z.128-LA132SP4E							
	33	1 606	2.0	44.19	★	**2KJ1107 - ■HG13 - ■■D2**		237
	35	1 489	2.1	40.96		**2KJ1107 - ■HG13 - ■■C2**		237
	D.108-LA132SP4E							
	13.8	3 820	0.81	105.08	★	**2KJ1206 - ■HG13 - ■■G1**		169
	14.9	3 524	0.88	96.94		**2KJ1206 - ■HG13 - ■■F1**		169
	17.6	2 986	1.0	82.14		**2KJ1206 - ■HG13 - ■■E1**		169
	20	2 602	1.2	71.59	★	**2KJ1206 - ■HG13 - ■■D1**		169
	24	2 214	1.4	60.9		**2KJ1206 - ■HG13 - ■■C1**		169
	Z.108-LA132SP4E							
	30	1 759	1.8	48.38	★	**2KJ1106 - ■HG13 - ■■C2**		165
	33	1 611	1.9	44.31		**2KJ1106 - ■HG13 - ■■B2**		165
	35	1 484	2.1	40.82	★	**2KJ1106 - ■HG13 - ■■A2**		165
	38	1 374	2.3	37.79		**2KJ1106 - ■HG13 - ■■X1**		165
	41	1 277	2.4	35.14	★	**2KJ1106 - ■HG13 - ■■W1**		165
	44	1 193	2.6	32.81		**2KJ1106 - ■HG13 - ■■V1**		165
	D.88-LA132SP4E							
	25	2 106	0.80	57.93		**2KJ1205 - ■HG13 - ■■D1**		121
	29	1 796	0.94	49.42	★	**2KJ1205 - ■HG13 - ■■C1**		121
	35	1 497	1.1	41.19		**2KJ1205 - ■HG13 - ■■B1**		121

★ Preferred transmission ratio

Shaft designs, see page 2/117 — **1, 2 or 9**

Frequency and voltage, see page 8/20 — **1 to 9**

Gearbox housing mounting position, see page 2/119 — **A, F, H or R**

*) For mounting type B3

© Siemens AG 2011

2

Selection and ordering data (continued)

Power rating P_{Motor} kW	Output speed n_2 (50 Hz) rpm	Output torque T_2 Nm	Service factor f_B	Gearbox ratio i_{tot}		Order No.	Order code (No. of poles)	Weight *) kg
5.5	**Z.88-LA132SP4E**							
	39	1 355	1.2	37.27	★	**2KJ1105 - ■HG13 - ■■W1**		119
	42	1 238	1.4	34.07		**2KJ1105 - ■HG13 - ■■V1**		119
	46	1 138	1.5	31.32	★	**2KJ1105 - ■HG13 - ■■U1**		119
	50	1 052	1.6	28.93		**2KJ1105 - ■HG13 - ■■T1**		119
	54	976	1.7	26.85	★	**2KJ1105 - ■HG13 - ■■S1**		119
	58	909	1.8	25.01		**2KJ1105 - ■HG13 - ■■R1**		119
	64	822	2.0	22.61	★	**2KJ1105 - ■HG13 - ■■Q1**		119
	69	756	2.2	20.81		**2KJ1105 - ■HG13 - ■■P1**		119
	77	680	2.5	18.72	★	**2KJ1105 - ■HG13 - ■■N1**		119
	84	628	2.7	17.27		**2KJ1105 - ■HG13 - ■■M1**		119
	99	532	3.0	14.63		**2KJ1105 - ■HG13 - ■■L1**		119
	113	463	3.3	12.75	★	**2KJ1105 - ■HG13 - ■■K1**		119
	133	394	3.7	10.85		**2KJ1105 - ■HG13 - ■■J1**		119
	325	162	4.9	4.45	★	**2KJ1105 - ■HG13 - ■■C1**		119
	381	138	5.4	3.79	★	**2KJ1105 - ■HG13 - ■■B1**		119
	Z.68-LA132SP4E							
	57	929	0.86	25.55	★	**2KJ1104 - ■HG13 - ■■R1**		87
	61	855	0.94	23.53		**2KJ1104 - ■HG13 - ■■Q1**		87
	66	791	1.0	21.76	★	**2KJ1104 - ■HG13 - ■■P1**		87
	72	734	1.1	20.2		**2KJ1104 - ■HG13 - ■■N1**		87
	81	648	1.2	17.82	★	**2KJ1104 - ■HG13 - ■■M1**		87
	88	598	1.3	16.45		**2KJ1104 - ■HG13 - ■■L1**		87
	98	536	1.5	14.74	★	**2KJ1104 - ■HG13 - ■■K1**		87
	106	494	1.6	13.59		**2KJ1104 - ■HG13 - ■■J1**		87
	127	414	1.9	11.4		**2KJ1104 - ■HG13 - ■■H1**		87
	149	354	2.1	9.73	★	**2KJ1104 - ■HG13 - ■■G1**		87
	178	295	2.4	8.11		**2KJ1104 - ■HG13 - ■■F1**		87
	215	244	2.7	6.72	★	**2KJ1104 - ■HG13 - ■■E1**		87
	244	216	2.3	5.93		**2KJ1104 - ■HG13 - ■■D1**		87
	286	184	2.6	5.06	★	**2KJ1104 - ■HG13 - ■■C1**		87
	342	153	3.1	4.22		**2KJ1104 - ■HG13 - ■■B1**		87
	414	127	3.3	3.49	★	**2KJ1104 - ■HG13 - ■■A1**		87
	Z.68-LA132SB2E							
	164	319	2.5	17.82	★	**2KJ1104 - ■HF13 - ■■M1**	**P00**	79
	178	295	2.7	16.45		**2KJ1104 - ■HF13 - ■■L1**	**P00**	79
	199	264	3.0	14.74	★	**2KJ1104 - ■HF13 - ■■K1**	**P00**	79
	216	244	3.3	13.59		**2KJ1104 - ■HF13 - ■■J1**	**P00**	79
	257	204	3.8	11.4		**2KJ1104 - ■HF13 - ■■H1**	**P00**	79
	301	174	4.3	9.73	★	**2KJ1104 - ■HF13 - ■■G1**	**P00**	79
	361	145	4.8	8.11		**2KJ1104 - ■HF13 - ■■F1**	**P00**	79
	436	120	5.4	6.72	★	**2KJ1104 - ■HF13 - ■■E1**	**P00**	79
	494	106	4.6	5.93		**2KJ1104 - ■HF13 - ■■D1**	**P00**	79
	579	91	5.3	5.06	★	**2KJ1104 - ■HF13 - ■■C1**	**P00**	79

★ Preferred transmission ratio

Shaft designs, see page 2/117 — **1, 2 or 9**

Frequency and voltage, see page 8/20 — **1 to 9**

Gearbox housing mounting position, see page 2/119 — **A, F, H or R**

*) For mounting type B3

© Siemens AG 2011

Selection and ordering data (continued)

Power rating P_{Motor} kW	Output speed n_2 (50 Hz) rpm	Output torque T_2 Nm	Service factor f_B	Gearbox ratio i_{tot}		Order No.	Order code (No. of poles)	Weight *) kg
5.5	**Z.68-LA132SB2E**							
	694	76	6.2	4.22		**2KJ1104 - ■HF13 - ■■B1**	**P00**	79
	Z.48-LA132SP4E							
	108	486	0.84	13.38	★	**2KJ1103 - ■HG13 - ■■K1**		70
	118	445	0.90	12.25		**2KJ1103 - ■HG13 - ■■J1**		70
	132	397	0.98	10.93	★	**2KJ1103 - ■HG13 - ■■H1**		70
	148	355	1.1	9.76		**2KJ1103 - ■HG13 - ■■G1**		70
	174	301	1.2	8.29		**2KJ1103 - ■HG13 - ■■F1**		70
	209	251	1.4	6.9	★	**2KJ1103 - ■HG13 - ■■E1**		70
	213	247	1.1	6.79	★	**2KJ1103 - ■HG13 - ■■D1**		70
	238	220	1.2	6.06		**2KJ1103 - ■HG13 - ■■C1**		70
	281	187	1.4	5.15		**2KJ1103 - ■HG13 - ■■B1**		70
	338	156	1.7	4.28	★	**2KJ1103 - ■HG13 - ■■A1**		70
	Z.48-LA132SB2E							
	153	343	1.3	19.13	★	**2KJ1103 - ■HF13 - ■■P1**	**P00**	62
	167	315	1.4	17.55		**2KJ1103 - ■HF13 - ■■N1**	**P00**	62
	181	290	1.5	16.17	★	**2KJ1103 - ■HF13 - ■■M1**	**P00**	62
	200	263	1.6	14.68		**2KJ1103 - ■HF13 - ■■L1**	**P00**	62
	219	240	1.7	13.38	★	**2KJ1103 - ■HF13 - ■■K1**	**P00**	62
	239	220	1.8	12.25		**2KJ1103 - ■HF13 - ■■J1**	**P00**	62
	268	196	2.0	10.93	★	**2KJ1103 - ■HF13 - ■■H1**	**P00**	62
	300	175	2.2	9.76		**2KJ1103 - ■HF13 - ■■G1**	**P00**	62
	353	149	2.4	8.29		**2KJ1103 - ■HF13 - ■■F1**	**P00**	62
	425	124	2.7	6.9	★	**2KJ1103 - ■HF13 - ■■E1**	**P00**	62
	432	122	2.2	6.79	★	**2KJ1103 - ■HF13 - ■■D1**	**P00**	62
	483	109	2.5	6.06		**2KJ1103 - ■HF13 - ■■C1**	**P00**	62
	569	92	2.9	5.15		**2KJ1103 - ■HF13 - ■■B1**	**P00**	62
	685	77	3.4	4.28	★	**2KJ1103 - ■HF13 - ■■A1**	**P00**	62
	E.148-LA132SP4E							
	106	497	1.2	13.67	★	**2KJ1007 - ■HG13 - ■■U1**		168
	115	456	1.3	12.54		**2KJ1007 - ■HG13 - ■■T1**		168
	125	421	1.6	11.57	★	**2KJ1007 - ■HG13 - ■■S1**		168
	135	390	1.9	10.73		**2KJ1007 - ■HG13 - ■■R1**		168
	143	368	2.2	10.13	★	**2KJ1007 - ■HG13 - ■■Q1**		168
	153	344	2.7	9.47		**2KJ1007 - ■HG13 - ■■P1**		168
	172	306	3.3	8.42	★	**2KJ1007 - ■HG13 - ■■N1**		168
	182	289	3.7	7.95		**2KJ1007 - ■HG13 - ■■M1**		168
	202	260	4.3	7.14	★	**2KJ1007 - ■HG13 - ■■L1**		168
	E.128-LA132SP4E							
	143	369	1.5	10.14	★	**2KJ1006 - ■HG13 - ■■T1**		144
	154	342	1.7	9.4		**2KJ1006 - ■HG13 - ■■S1**		144
	162	325	2.0	8.94	★	**2KJ1006 - ■HG13 - ■■R1**		144
	173	304	2.3	8.35		**2KJ1006 - ■HG13 - ■■Q1**		144
	196	268	3.0	7.37	★	**2KJ1006 - ■HG13 - ■■P1**		144

★ Preferred transmission ratio

Shaft designs, see page 2/117 — **1, 2 or 9**

Frequency and voltage, see page 8/20 — **1 to 9**

Gearbox housing mounting position, see page 2/119 — **A, F, H or R**

*) For mounting type B3

© Siemens AG 2011

Selection and ordering data (continued)

Power rating P_{Motor} kW	Output speed n_2 (50 Hz) rpm	Output torque T_2 Nm	Service factor f_B	Gearbox ratio i_{tot}		Order No.	Order code (No. of poles)	Weight *) kg
5.5	**E.128-LA132SP4E**							
	208	253	3.5	6.95		**2KJ1006 - ■HG13 - ■■N1**		144
	232	226	4.1	6.23	★	**2KJ1006 - ■HG13 - ■■M1**		144
	251	209	4.6	5.75		**2KJ1006 - ■HG13 - ■■L1**		144
	E.108-LA132SP4E							
	265	198	3.3	5.46	★	**2KJ1005 - ■HG13 - ■■K1**		107
	289	182	3.7	5		**2KJ1005 - ■HG13 - ■■J1**		107
	339	155	4.6	4.26		**2KJ1005 - ■HG13 - ■■H1**		107
	384	137	4.4	3.76	★	**2KJ1005 - ■HG13 - ■■G1**		107
	E.88-LA132SP4E							
	172	306	0.80	8.42	★	**2KJ1004 - ■HG13 - ■■Q1**		86
	188	280	0.88	7.69		**2KJ1004 - ■HG13 - ■■P1**		86
	204	257	1.1	7.07	★	**2KJ1004 - ■HG13 - ■■N1**		86
	221	237	1.3	6.53		**2KJ1004 - ■HG13 - ■■M1**		86
	238	220	1.3	6.06	★	**2KJ1004 - ■HG13 - ■■L1**		86
	256	205	1.6	5.65		**2KJ1004 - ■HG13 - ■■K1**		86
	283	186	2.0	5.11	★	**2KJ1004 - ■HG13 - ■■J1**		86
	307	171	2.3	4.7		**2KJ1004 - ■HG13 - ■■H1**		86
	342	154	2.6	4.23	★	**2KJ1004 - ■HG13 - ■■G1**		86
	371	142	2.7	3.9		**2KJ1004 - ■HG13 - ■■F1**		86
	438	120	3.8	3.3		**2KJ1004 - ■HG13 - ■■E1**		86
	502	105	4.2	2.88	★	**2KJ1004 - ■HG13 - ■■D1**		86
	590	89	4.7	2.45		**2KJ1004 - ■HG13 - ■■C1**		86
	691	76	5.5	2.09	★	**2KJ1004 - ■HG13 - ■■B1**		86
	845	62	5.7	1.71	★	**2KJ1004 - ■HG13 - ■■A1**		86
	E.68-LA132SP4E							
	244	215	0.88	5.92		**2KJ1003 - ■HG13 - ■■N1**		69
	270	195	1.1	5.36	★	**2KJ1003 - ■HG13 - ■■M1**		69
	293	179	1.3	4.93		**2KJ1003 - ■HG13 - ■■L1**		69
	317	166	1.3	4.56	★	**2KJ1003 - ■HG13 - ■■K1**		69
	341	154	1.5	4.24		**2KJ1003 - ■HG13 - ■■J1**		69
	386	136	1.7	3.74	★	**2KJ1003 - ■HG13 - ■■H1**		69
	419	125	1.9	3.45		**2KJ1003 - ■HG13 - ■■G1**		69
	468	112	2.2	3.09	★	**2KJ1003 - ■HG13 - ■■F1**		69
	507	104	2.4	2.85		**2KJ1003 - ■HG13 - ■■E1**		69
	605	87	2.6	2.39		**2KJ1003 - ■HG13 - ■■D1**		69
	708	74	2.8	2.04	★	**2KJ1003 - ■HG13 - ■■C1**		69
	850	62	2.8	1.7		**2KJ1003 - ■HG13 - ■■B1**		69
	1 025	51	2.9	1.41	★	**2KJ1003 - ■HG13 - ■■A1**		69
	E.48-LA132SP4E							
	343	153	0.98	4.21	★	**2KJ1002 - ■HG13 - ■■K1**		59
	373	141	1.1	3.87		**2KJ1002 - ■HG13 - ■■J1**		59
	406	129	1.1	3.56	★	**2KJ1002 - ■HG13 - ■■H1**		59
	446	118	1.3	3.24		**2KJ1002 - ■HG13 - ■■G1**		59

★ Preferred transmission ratio

Shaft designs, see page 2/117 — **1, 2 or 9**

Frequency and voltage, see page 8/20 — **1 to 9**

Gearbox housing mounting position, see page 2/119 — **A, F, H or R**

*) For mounting type B3

© Siemens AG 2011

Selection and ordering data (continued)

Power rating P_{Motor} kW	Output speed n_2 (50 Hz) rpm	Output torque T_2 Nm	Service factor f_B	Gearbox ratio i_{tot}		Order No.	Order code (No. of poles)	Weight *) kg
5.5	**E.48-LA132SP4E**							
	490	107	1.6	2.95	★	**2KJ1002 - ■HG13 - ■■F1**		59
	535	98	1.6	2.7		**2KJ1002 - ■HG13 - ■■E1**		59
	600	88	1.7	2.41	★	**2KJ1002 - ■HG13 - ■■D1**		59
	672	78	1.7	2.15		**2KJ1002 - ■HG13 - ■■C1**		59
	790	66	1.7	1.83		**2KJ1002 - ■HG13 - ■■B1**		59
	951	55	1.8	1.52	★	**2KJ1002 - ■HG13 - ■■A1**		59
7.5	**D.188-Z68-LA132ZMP4E**							
	2.7	24 896	0.80	546		**2KJ1237 - ■HK13 - ■■D1**		663
	D.188-LA160LB8							
	2.9	24 425	0.82	243.82		**2KJ1211 - ■JJ13 - ■■N1**	**P02**	688
	3.2	22 055	0.91	220.17		**2KJ1211 - ■JJ13 - ■■M1**	**P02**	688
	3.5	20 670	0.97	206.34		**2KJ1211 - ■JJ13 - ■■L1**	**P02**	688
	D.188-LA160MD6E							
	4.0	18 097	1.1	243.82		**2KJ1211 - ■JJ13 - ■■N1**	**P01**	688
	4.4	16 342	1.2	220.17		**2KJ1211 - ■JJ13 - ■■M1**	**P01**	688
	4.7	15 315	1.3	206.34		**2KJ1211 - ■JJ13 - ■■L1**	**P01**	688
	5.4	13 155	1.5	177.23	★	**2KJ1211 - ■JJ13 - ■■K1**	**P01**	688
	D.188-LA132ZMP4E							
	6.0	12 002	1.7	243.82		**2KJ1211 - ■HK13 - ■■N1**		652
	6.6	10 838	1.8	220.17		**2KJ1211 - ■HK13 - ■■M1**		652
	7.1	10 157	2.0	206.34		**2KJ1211 - ■HK13 - ■■L1**		652
	D.168-LA132ZMP4E							
	4.3	16 816	0.83	341.61	★	**2KJ1210 - ■HK13 - ■■U1**		507
	4.6	15 428	0.91	313.41		**2KJ1210 - ■HK13 - ■■T1**		507
	5.0	14 238	0.98	289.23	★	**2KJ1210 - ■HK13 - ■■S1**		507
	5.4	13 207	1.1	268.29		**2KJ1210 - ■HK13 - ■■R1**		507
	5.7	12 458	1.1	253.08	★	**2KJ1210 - ■HK13 - ■■Q1**		507
	6.1	11 653	1.2	236.72		**2KJ1210 - ■HK13 - ■■P1**		507
	6.9	10 362	1.4	210.49	★	**2KJ1210 - ■HK13 - ■■N1**		507
	7.3	9 782	1.4	198.71		**2KJ1210 - ■HK13 - ■■M1**		507
	8.2	8 781	1.6	178.38	★	**2KJ1210 - ■HK13 - ■■L1**		507
	8.9	8 059	1.7	163.72		**2KJ1210 - ■HK13 - ■■K1**		507
	10.3	6 955	2	141.28		**2KJ1210 - ■HK13 - ■■J1**		507
	D.148-LA132ZMP4E							
	7.9	9 108	0.88	185.03	★	**2KJ1208 - ■HK13 - ■■P1**		336
	8.3	8 592	0.93	174.53		**2KJ1208 - ■HK13 - ■■N1**		336
	9.3	7 698	1.0	156.38	★	**2KJ1208 - ■HK13 - ■■M1**		336
	10.1	7 108	1.1	144.39		**2KJ1208 - ■HK13 - ■■L1**		336
	11.8	6 073	1.3	123.37		**2KJ1208 - ■HK13 - ■■K1**		336
	13.0	5 489	1.5	111.5	★	**2KJ1208 - ■HK13 - ■■J1**		336
	13.5	5 288	1.5	107.42		**2KJ1208 - ■HK13 - ■■H1**		336
	15.7	4 574	1.7	92.91		**2KJ1208 - ■HK13 - ■■G1**		336
	18.0	3 989	2.0	81.04	★	**2KJ1208 - ■HK13 - ■■F1**		336

★ Preferred transmission ratio

Shaft designs, see page 2/117 — **1, 2 or 9**

Frequency and voltage, see page 8/20 — **1 to 9**

Gearbox housing mounting position, see page 2/119 — **A, F, H or R**

*) For mounting type B3

© Siemens AG 2011

2

Selection and ordering data (continued)

Power rating P_{Motor} kW	Output speed n_2 (50 Hz) rpm	Output torque T_2 Nm	Service factor f_B	Gearbox ratio i_{tot}		Order No.	Order code (No. of poles)	Weight *) kg
7.5	**D.148-LA132ZMP4E**							
	21	3 414	2.3	69.36	★	**2KJ1208 - ■HK13 - ■■E1**		336
	Z.148-LA132ZMP4E							
	25	2 831	1.6	57.5		**2KJ1108 - ■HK13 - ■■B2**		324
	D.128-LA132ZMP4E							
	11.8	6 081	0.84	123.53		**2KJ1207 - ■HK13 - ■■K1**		246
	12.8	5 574	0.91	113.24	★	**2KJ1207 - ■HK13 - ■■J1**		246
	14.0	5 110	1.0	103.8		**2KJ1207 - ■HK13 - ■■H1**		246
	16.4	4 355	1.2	88.46		**2KJ1207 - ■HK13 - ■■G1**		246
	18.6	3 843	1.3	78.06	★	**2KJ1207 - ■HK13 - ■■F1**		246
	22	3 270	1.6	66.43		**2KJ1207 - ■HK13 - ■■E1**		246
	25	2 833	1.8	57.56	★	**2KJ1207 - ■HK13 - ■■D1**		246
	30	2 385	2.1	48.44	★	**2KJ1207 - ■HK13 - ■■C1**		246
	33	2 152	2.4	43.71		**2KJ1207 - ■HK13 - ■■B1**		246
	Z.128-LA132ZMP4E							
	33	2 175	1.5	44.19	★	**2KJ1107 - ■HK13 - ■■D2**		237
	36	2 016	1.6	40.96		**2KJ1107 - ■HK13 - ■■C2**		237
	D.108-LA132ZMP4E							
	20	3 524	0.88	71.59	★	**2KJ1206 - ■HK13 - ■■D1**		169
	24	2 998	1.0	60.9		**2KJ1206 - ■HK13 - ■■C1**		169
	Z.108-LA132ZMP4E							
	30	2 382	1.3	48.38	★	**2KJ1106 - ■HK13 - ■■C2**		165
	33	2 181	1.4	44.31		**2KJ1106 - ■HK13 - ■■B2**		165
	36	2 009	1.5	40.82	★	**2KJ1106 - ■HK13 - ■■A2**		165
	38	1 860	1.7	37.79		**2KJ1106 - ■HK13 - ■■X1**		165
	41	1 730	1.8	35.14	★	**2KJ1106 - ■HK13 - ■■W1**		165
	44	1 615	1.9	32.81		**2KJ1106 - ■HK13 - ■■V1**		165
	50	1 445	2.1	29.35	★	**2KJ1106 - ■HK13 - ■■U1**		165
	54	1 339	2.3	27.2		**2KJ1106 - ■HK13 - ■■T1**		165
	58	1 228	2.5	24.94	★	**2KJ1106 - ■HK13 - ■■S1**		165
	64	1 125	2.8	22.86		**2KJ1106 - ■HK13 - ■■R1**		165
	75	959	3.2	19.48		**2KJ1106 - ■HK13 - ■■Q1**		165
	278	258	4.4	5.24	★	**2KJ1106 - ■HK13 - ■■D1**		165
	D.88-LA132ZMP4E							
	35	2 028	0.83	41.19		**2KJ1205 - ■HK13 - ■■B1**		121
	Z.88-LA132ZMP4E							
	39	1 835	0.92	37.27	★	**2KJ1105 - ■HK13 - ■■W1**		119
	43	1 677	1.0	34.07		**2KJ1105 - ■HK13 - ■■V1**		119
	46	1 542	1.1	31.32	★	**2KJ1105 - ■HK13 - ■■U1**		119
	50	1 424	1.2	28.93		**2KJ1105 - ■HK13 - ■■T1**		119
	54	1 322	1.3	26.85	★	**2KJ1105 - ■HK13 - ■■S1**		119
	58	1 231	1.4	25.01		**2KJ1105 - ■HK13 - ■■R1**		119
	64	1 113	1.5	22.61	★	**2KJ1105 - ■HK13 - ■■Q1**		119
	70	1 024	1.6	20.81		**2KJ1105 - ■HK13 - ■■P1**		119

★ Preferred transmission ratio

Shaft designs, see page 2/117 — **1, 2 or 9**

Frequency and voltage, see page 8/20 — **1 to 9**

Gearbox housing mounting position, see page 2/119 — **A, F, H or R**

*) For mounting type B3

© Siemens AG 2011

Selection and ordering data (continued)

Power rating P_{Motor} kW	Output speed n_2 (50 Hz) rpm	Output torque T_2 Nm	Service factor f_B	Gearbox ratio i_{tot}		Order No.	Order code (No. of poles)	Weight *) kg
7.5	**Z.88-LA132ZMP4E**							
	78	922	1.8	18.72	★	**2KJ1105 - ■HK13 - ■■N1**		119
	84	850	2.0	17.27		**2KJ1105 - ■HK13 - ■■M1**		119
	100	720	2.2	14.63		**2KJ1105 - ■HK13 - ■■L1**		119
	114	628	2.5	12.75	★	**2KJ1105 - ■HK13 - ■■K1**		119
	134	534	2.8	10.85		**2KJ1105 - ■HK13 - ■■J1**		119
	157	456	3.0	9.26	★	**2KJ1105 - ■HK13 - ■■H1**		119
	192	374	3.5	7.59	★	**2KJ1105 - ■HK13 - ■■G1**		119
	209	343	3.7	6.96		**2KJ1105 - ■HK13 - ■■F1**		119
	245	292	4.1	5.94	★	**2KJ1105 - ■HK13 - ■■E1**		119
	299	240	4.6	4.87	★	**2KJ1105 - ■HK13 - ■■D1**		119
	327	219	3.7	4.45	★	**2KJ1105 - ■HK13 - ■■C1**		119
	384	187	4.0	3.79	★	**2KJ1105 - ■HK13 - ■■B1**		119
	468	153	4.3	3.11	★	**2KJ1105 - ■HK13 - ■■A1**		119
	Z.88-LA132ZSD2E							
	157	458	3.7	18.72	★	**2KJ1105 - ■HJ13 - ■■N1**	**P00**	119
	170	422	4.0	17.27		**2KJ1105 - ■HJ13 - ■■M1**	**P00**	119
	Z.68-LA132ZMP4E							
	72	994	0.80	20.2		**2KJ1104 - ■HK13 - ■■N1**		87
	82	877	0.91	17.82	★	**2KJ1104 - ■HK13 - ■■M1**		87
	88	810	0.99	16.45		**2KJ1104 - ■HK13 - ■■L1**		87
	99	726	1.1	14.74	★	**2KJ1104 - ■HK13 - ■■K1**		87
	107	669	1.2	13.59		**2KJ1104 - ■HK13 - ■■J1**		87
	128	561	1.4	11.4		**2KJ1104 - ■HK13 - ■■H1**		87
	150	479	1.6	9.73	★	**2KJ1104 - ■HK13 - ■■G1**		87
	179	399	1.8	8.11		**2KJ1104 - ■HK13 - ■■F1**		87
	217	331	2.0	6.72	★	**2KJ1104 - ■HK13 - ■■E1**		87
	245	292	1.7	5.93		**2KJ1104 - ■HK13 - ■■D1**		87
	288	249	1.9	5.06	★	**2KJ1104 - ■HK13 - ■■C1**		87
	345	208	2.3	4.22		**2KJ1104 - ■HK13 - ■■B1**		87
	417	172	2.4	3.49	★	**2KJ1104 - ■HK13 - ■■A1**		87
	Z.68-LA132ZSD2E							
	164	436	1.8	17.82	★	**2KJ1104 - ■HJ13 - ■■M1**	**P00**	87
	178	402	2.0	16.45		**2KJ1104 - ■HJ13 - ■■L1**	**P00**	87
	199	360	2.2	14.74	★	**2KJ1104 - ■HJ13 - ■■K1**	**P00**	87
	216	332	2.4	13.59		**2KJ1104 - ■HJ13 - ■■J1**	**P00**	87
	257	279	2.8	11.4		**2KJ1104 - ■HJ13 - ■■H1**	**P00**	87
	301	238	3.1	9.73	★	**2KJ1104 - ■HJ13 - ■■G1**	**P00**	87
	361	198	3.5	8.11		**2KJ1104 - ■HJ13 - ■■F1**	**P00**	87
	436	164	4.0	6.72	★	**2KJ1104 - ■HJ13 - ■■E1**	**P00**	87
	494	145	3.4	5.93		**2KJ1104 - ■HJ13 - ■■D1**	**P00**	87
	579	124	3.9	5.06	★	**2KJ1104 - ■HJ13 - ■■C1**	**P00**	87
	694	103	4.6	4.22		**2KJ1104 - ■HJ13 - ■■B1**	**P00**	87
	840	85	4.9	3.49	★	**2KJ1104 - ■HJ13 - ■■A1**	**P00**	87

★ Preferred transmission ratio

Shaft designs, see page 2/117 — **1, 2 or 9**

Frequency and voltage, see page 8/20 — **1 to 9**

Gearbox housing mounting position, see page 2/119 — **A, F, H or R**

*) For mounting type B3

© Siemens AG 2011

2

Selection and ordering data (continued)

Power rating P_{Motor} kW	Output speed n_2 (50 Hz) rpm	Output torque T_2 Nm	Service factor f_B	Gearbox ratio i_{tot}		Order No.	Order code (No. of poles)	Weight *) kg
7.5	**Z.48-LA132ZMP4E**							
	176	408	0.88	8.29		**2KJ1103 - ■HK13 - ■■F1**		70
	211	340	1.0	6.9	★	**2KJ1103 - ■HK13 - ■■E1**		70
	214	334	0.81	6.79	★	**2KJ1103 - ■HK13 - ■■D1**		70
	240	298	0.91	6.06		**2KJ1103 - ■HK13 - ■■C1**		70
	283	254	1.1	5.15		**2KJ1103 - ■HK13 - ■■B1**		70
	340	211	1.2	4.28	★	**2KJ1103 - ■HK13 - ■■A1**		70
	Z.48-LA132ZSD2E							
	153	468	0.96	19.13	★	**2KJ1103 - ■HJ13 - ■■P1**	**P00**	70
	167	429	1.0	17.55		**2KJ1103 - ■HJ13 - ■■N1**	**P00**	70
	181	395	1.1	16.17	★	**2KJ1103 - ■HJ13 - ■■M1**	**P00**	70
	200	359	1.2	14.68		**2KJ1103 - ■HJ13 - ■■L1**	**P00**	70
	219	327	1.3	13.38	★	**2KJ1103 - ■HJ13 - ■■K1**	**P00**	70
	239	299	1.3	12.25		**2KJ1103 - ■HJ13 - ■■J1**	**P00**	70
	268	267	1.5	10.93	★	**2KJ1103 - ■HJ13 - ■■H1**	**P00**	70
	300	239	1.6	9.76		**2KJ1103 - ■HJ13 - ■■G1**	**P00**	70
	353	203	1.8	8.29		**2KJ1103 - ■HJ13 - ■■F1**	**P00**	70
	425	169	2.0	6.9	★	**2KJ1103 - ■HJ13 - ■■E1**	**P00**	70
	432	166	1.6	6.79	★	**2KJ1103 - ■HJ13 - ■■D1**	**P00**	70
	483	148	1.8	6.06		**2KJ1103 - ■HJ13 - ■■C1**	**P00**	70
	569	126	2.1	5.15		**2KJ1103 - ■HJ13 - ■■B1**	**P00**	70
	685	105	2.5	4.28	★	**2KJ1103 - ■HJ13 - ■■A1**	**P00**	70
	E.148-LA132ZMP4E							
	106	673	0.89	13.67	★	**2KJ1007 - ■HK13 - ■■U1**		168
	116	617	0.97	12.54		**2KJ1007 - ■HK13 - ■■T1**		168
	126	570	1.2	11.57	★	**2KJ1007 - ■HK13 - ■■S1**		168
	136	528	1.4	10.73		**2KJ1007 - ■HK13 - ■■R1**		168
	144	499	1.6	10.13	★	**2KJ1007 - ■HK13 - ■■Q1**		168
	154	466	2.0	9.47		**2KJ1007 - ■HK13 - ■■P1**		168
	173	414	2.4	8.42	★	**2KJ1007 - ■HK13 - ■■N1**		168
	183	391	2.7	7.95		**2KJ1007 - ■HK13 - ■■M1**		168
	204	351	3.2	7.14	★	**2KJ1007 - ■HK13 - ■■L1**		168
	222	322	3.6	6.55		**2KJ1007 - ■HK13 - ■■K1**		168
	E.128-LA132ZMP4E							
	143	499	1.1	10.14	★	**2KJ1006 - ■HK13 - ■■T1**		144
	155	463	1.3	9.4		**2KJ1006 - ■HK13 - ■■S1**		144
	163	440	1.5	8.94	★	**2KJ1006 - ■HK13 - ■■R1**		144
	174	411	1.7	8.35		**2KJ1006 - ■HK13 - ■■Q1**		144
	197	363	2.2	7.37	★	**2KJ1006 - ■HK13 - ■■P1**		144
	209	342	2.6	6.95		**2KJ1006 - ■HK13 - ■■N1**		144
	234	307	3.0	6.23	★	**2KJ1006 - ■HK13 - ■■M1**		144
	253	283	3.4	5.75		**2KJ1006 - ■HK13 - ■■L1**		144
	296	242	4.0	4.91		**2KJ1006 - ■HK13 - ■■K1**		144
	328	219	4.6	4.44	★	**2KJ1006 - ■HK13 - ■■J1**		144

★ Preferred transmission ratio

Shaft designs, see page 2/117 — **1, 2 or 9**

Frequency and voltage, see page 8/20 — **1 to 9**

Gearbox housing mounting position, see page 2/119 — **A, F, H or R**

*) For mounting type B3

© Siemens AG 2011

Selection and ordering data (continued)

Power rating P_{Motor} kW	Output speed n_2 (50 Hz) rpm	Output torque T_2 Nm	Service factor f_B	Gearbox ratio i_{tot}		Order No.	Order code (No. of poles)	Weight *) kg
7.5	**E.128-LA132ZMP4E**							
	340	211	4.7	4.28		**2KJ1006 - ■HK13 - ■■H1**		144
	E.108-LA132ZMP4E							
	266	269	2.5	5.46	★	**2KJ1005 - ■HK13 - ■■K1**		107
	291	246	2.8	5		**2KJ1005 - ■HK13 - ■■J1**		107
	342	210	3.4	4.26		**2KJ1005 - ■HK13 - ■■H1**		107
	387	185	3.2	3.76	★	**2KJ1005 - ■HK13 - ■■G1**		107
	455	158	4.7	3.2		**2KJ1005 - ■HK13 - ■■F1**		107
	525	136	4.9	2.77	★	**2KJ1005 - ■HK13 - ■■E1**		107
	624	115	5.9	2.33	★	**2KJ1005 - ■HK13 - ■■C1**		107
	690	104	6.0	2.11		**2KJ1005 - ■HK13 - ■■B1**		107
	804	89	6.2	1.81	★	**2KJ1005 - ■HK13 - ■■A1**		107
	E.88-LA132ZMP4E							
	206	348	0.83	7.07	★	**2KJ1004 - ■HK13 - ■■N1**		86
	223	321	0.93	6.53		**2KJ1004 - ■HK13 - ■■M1**		86
	240	298	0.94	6.06	★	**2KJ1004 - ■HK13 - ■■L1**		86
	258	278	1.2	5.65		**2KJ1004 - ■HK13 - ■■K1**		86
	285	252	1.5	5.11	★	**2KJ1004 - ■HK13 - ■■J1**		86
	310	231	1.7	4.7		**2KJ1004 - ■HK13 - ■■H1**		86
	344	208	1.9	4.23	★	**2KJ1004 - ■HK13 - ■■G1**		86
	373	192	2.0	3.9		**2KJ1004 - ■HK13 - ■■F1**		86
	441	162	2.8	3.3		**2KJ1004 - ■HK13 - ■■E1**		86
	505	142	3.1	2.88	★	**2KJ1004 - ■HK13 - ■■D1**		86
	594	121	3.5	2.45		**2KJ1004 - ■HK13 - ■■C1**		86
	696	103	4.1	2.09	★	**2KJ1004 - ■HK13 - ■■B1**		86
	851	84	4.2	1.71	★	**2KJ1004 - ■HK13 - ■■A1**		86
	E.68-LA132ZMP4E							
	271	264	0.83	5.36	★	**2KJ1003 - ■HK13 - ■■M1**		69
	295	243	0.93	4.93		**2KJ1003 - ■HK13 - ■■L1**		69
	319	224	0.98	4.56	★	**2KJ1003 - ■HK13 - ■■K1**		69
	343	209	1.1	4.24		**2KJ1003 - ■HK13 - ■■J1**		69
	389	184	1.2	3.74	★	**2KJ1003 - ■HK13 - ■■H1**		69
	422	170	1.4	3.45		**2KJ1003 - ■HK13 - ■■G1**		69
	471	152	1.6	3.09	★	**2KJ1003 - ■HK13 - ■■F1**		69
	511	140	1.8	2.85		**2KJ1003 - ■HK13 - ■■E1**		69
	609	118	2.0	2.39		**2KJ1003 - ■HK13 - ■■D1**		69
	713	100	2.1	2.04	★	**2KJ1003 - ■HK13 - ■■C1**		69
	856	84	2.1	1.7		**2KJ1003 - ■HK13 - ■■B1**		69
	1 032	69	2.2	1.41	★	**2KJ1003 - ■HK13 - ■■A1**		69
	E.48-LA132ZMP4E							
	376	191	0.84	3.87		**2KJ1002 - ■HK13 - ■■J1**		59
	409	175	0.80	3.56	★	**2KJ1002 - ■HK13 - ■■H1**		59
	449	159	0.94	3.24		**2KJ1002 - ■HK13 - ■■G1**		59
	493	145	1.2	2.95	★	**2KJ1002 - ■HK13 - ■■F1**		59
	539	133	1.2	2.7		**2KJ1002 - ■HK13 - ■■E1**		59

★ Preferred transmission ratio

Shaft designs, see page 2/117 — **1, 2 or 9**

Frequency and voltage, see page 8/20 — **1 to 9**

Gearbox housing mounting position, see page 2/119 — **A, F, H or R**

*) For mounting type B3

© Siemens AG 2011

2

Selection and ordering data (continued)

Power rating P_{Motor} kW	Output speed n_2 (50 Hz) rpm	Output torque T_2 Nm	Service factor f_B	Gearbox ratio i_{tot}		Order No.	Order code (No. of poles)	Weight *) kg
9.2	**D.188-LA160MB4E**							
	6.0	14 723	1.4	243.82		**2KJ1211 - ■JP13 - ■■N1**		676
	6.6	13 295	1.5	220.17		**2KJ1211 - ■JP13 - ■■M1**		676
	7.1	12 460	1.6	206.34		**2KJ1211 - ■JP13 - ■■L1**		676
	8.2	10 702	1.9	177.23	★	**2KJ1211 - ■JP13 - ■■K1**		676
	D.168-LA160MB4E							
	5.7	15 282	0.92	253.08	★	**2KJ1210 - ■JP13 - ■■Q1**		531
	6.1	14 294	0.98	236.72		**2KJ1210 - ■JP13 - ■■P1**		531
	6.9	12 710	1.1	210.49	★	**2KJ1210 - ■JP13 - ■■N1**		531
	7.3	11 999	1.2	198.71		**2KJ1210 - ■JP13 - ■■M1**		531
	8.2	10 771	1.3	178.38	★	**2KJ1210 - ■JP13 - ■■L1**		531
	8.9	9 886	1.4	163.72		**2KJ1210 - ■JP13 - ■■K1**		531
	10.3	8 531	1.6	141.28		**2KJ1210 - ■JP13 - ■■J1**		531
	11.8	7 463	1.9	123.59		**2KJ1210 - ■JP13 - ■■H1**		531
	13.5	6 490	2.2	107.48		**2KJ1210 - ■JP13 - ■■G1**		531
	D.148-LA160MB4E							
	9.3	9 443	0.85	156.38	★	**2KJ1208 - ■JP13 - ■■M1**		360
	10.1	8 719	0.92	144.39		**2KJ1208 - ■JP13 - ■■L1**		360
	11.8	7 450	1.1	123.37		**2KJ1208 - ■JP13 - ■■K1**		360
	13.0	6 733	1.2	111.5	★	**2KJ1208 - ■JP13 - ■■J1**		360
	13.5	6 487	1.2	107.42		**2KJ1208 - ■JP13 - ■■H1**		360
	15.7	5 610	1.4	92.91		**2KJ1208 - ■JP13 - ■■G1**		360
	18.0	4 894	1.6	81.04	★	**2KJ1208 - ■JP13 - ■■F1**		360
	21	4 188	1.9	69.36	★	**2KJ1208 - ■JP13 - ■■E1**		360
	23	3 751	2.1	62.12		**2KJ1208 - ■JP13 - ■■D1**		360
	Z.148-LA160MB4E							
	27	3 275	2.4	54.24	★	**2KJ1108 - ■JP13 - ■■A2**		348
	D.128-LA160MB4E							
	14.0	6 268	0.81	103.8		**2KJ1207 - ■JP13 - ■■H1**		270
	16.4	5 342	0.95	88.46		**2KJ1207 - ■JP13 - ■■G1**		270
	18.6	4 714	1.1	78.06	★	**2KJ1207 - ■JP13 - ■■F1**		270
	22	4 011	1.3	66.43		**2KJ1207 - ■JP13 - ■■E1**		270
	25	3 476	1.5	57.56	★	**2KJ1207 - ■JP13 - ■■D1**		270
	30	2 925	1.7	48.44	★	**2KJ1207 - ■JP13 - ■■C1**		270
	33	2 639	1.9	43.71		**2KJ1207 - ■JP13 - ■■B1**		270
	Z.128-LA160MB4E							
	37	2 351	2.2	38.94	★	**2KJ1107 - ■JP13 - ■■B2**		261
	40	2 197	2.3	36.39		**2KJ1107 - ■JP13 - ■■A2**		261
	45	1 939	2.6	32.11	★	**2KJ1107 - ■JP13 - ■■X1**		261
	48	1 828	2.8	30.28		**2KJ1107 - ■JP13 - ■■W1**		261
	D.108-LA160MB4E							
	24	3 677	0.84	60.9		**2KJ1206 - ■JP13 - ■■C1**		193
	28	3 138	0.99	51.97	★	**2KJ1206 - ■JP13 - ■■B1**		193
	34	2 573	1.2	42.61	★	**2KJ1206 - ■JP13 - ■■A1**		193

★ Preferred transmission ratio

Shaft designs, see page 2/117 — **1, 2 or 9**

Frequency and voltage, see page 8/20 — **1 to 9**

Gearbox housing mounting position, see page 2/119 — **A, F, H or R**

*) For mounting type B3

© Siemens AG 2011

Selection and ordering data (continued)

Power rating P_{Motor} kW	Output speed n_2 (50 Hz) rpm	Output torque T_2 Nm	Service factor f_B	Gearbox ratio i_{tot}		Order No.	Order code (No. of poles)	Weight *) kg
9.2	**Z.108-LA160MB4E**							
	41	2 122	1.5	35.14	★	**2KJ1106 - ■JP13 - ■■W1**		189
	44	1 981	1.6	32.81		**2KJ1106 - ■JP13 - ■■V1**		189
	50	1 772	1.7	29.35	★	**2KJ1106 - ■JP13 - ■■U1**		189
	54	1 642	1.9	27.2		**2KJ1106 - ■JP13 - ■■T1**		189
	58	1 506	2.1	24.94	★	**2KJ1106 - ■JP13 - ■■S1**		189
	64	1 380	2.2	22.86		**2KJ1106 - ■JP13 - ■■R1**		189
	75	1 176	2.6	19.48		**2KJ1106 - ■JP13 - ■■Q1**		189
	85	1 038	3.0	17.19	★	**2KJ1106 - ■JP13 - ■■P1**		189
	100	883	3.5	14.63		**2KJ1106 - ■JP13 - ■■N1**		189
	205	429	4.2	7.1	★	**2KJ1106 - ■JP13 - ■■H1**		189
	227	387	4.5	6.41		**2KJ1106 - ■JP13 - ■■G1**		189
	278	316	3.6	5.24	★	**2KJ1106 - ■JP13 - ■■D1**		189
	330	266	4.3	4.41	★	**2KJ1106 - ■JP13 - ■■C1**		189
	366	240	4.7	3.98		**2KJ1106 - ■JP13 - ■■B1**		189
	425	207	5.2	3.42	★	**2KJ1106 - ■JP13 - ■■A1**		189
	Z.88-LA160MB4E							
	54	1 621	1.0	26.85	★	**2KJ1105 - ■JP13 - ■■S1**		143
	58	1 510	1.1	25.01		**2KJ1105 - ■JP13 - ■■R1**		143
	64	1 365	1.2	22.61	★	**2KJ1105 - ■JP13 - ■■Q1**		143
	70	1 257	1.3	20.81		**2KJ1105 - ■JP13 - ■■P1**		143
	78	1 130	1.5	18.72	★	**2KJ1105 - ■JP13 - ■■N1**		143
	84	1 043	1.6	17.27		**2KJ1105 - ■JP13 - ■■M1**		143
	100	883	1.8	14.63		**2KJ1105 - ■JP13 - ■■L1**		143
	114	770	2.0	12.75	★	**2KJ1105 - ■JP13 - ■■K1**		143
	134	655	2.2	10.85		**2KJ1105 - ■JP13 - ■■J1**		143
	157	559	2.5	9.26	★	**2KJ1105 - ■JP13 - ■■H1**		143
	192	458	2.8	7.59	★	**2KJ1105 - ■JP13 - ■■G1**		143
	209	420	3.0	6.96		**2KJ1105 - ■JP13 - ■■F1**		143
	245	359	3.3	5.94	★	**2KJ1105 - ■JP13 - ■■E1**		143
	299	294	3.8	4.87	★	**2KJ1105 - ■JP13 - ■■D1**		143
	327	269	3.0	4.45	★	**2KJ1105 - ■JP13 - ■■C1**		143
	384	229	3.2	3.79	★	**2KJ1105 - ■JP13 - ■■B1**		143
	468	188	3.5	3.11	★	**2KJ1105 - ■JP13 - ■■A1**		143
	Z.68-LA160MB4E							
	88	993	0.81	16.45		**2KJ1104 - ■JP13 - ■■L1**		111
	99	890	0.90	14.74	★	**2KJ1104 - ■JP13 - ■■K1**		111
	107	821	0.97	13.59		**2KJ1104 - ■JP13 - ■■J1**		111
	128	688	1.1	11.4		**2KJ1104 - ■JP13 - ■■H1**		111
	150	588	1.3	9.73	★	**2KJ1104 - ■JP13 - ■■G1**		111
	179	490	1.4	8.11		**2KJ1104 - ■JP13 - ■■F1**		111
	217	406	1.6	6.72	★	**2KJ1104 - ■JP13 - ■■E1**		111
	245	358	1.4	5.93		**2KJ1104 - ■JP13 - ■■D1**		111
	288	306	1.6	5.06	★	**2KJ1104 - ■JP13 - ■■C1**		111

★ Preferred transmission ratio

Shaft designs, see page 2/117 — **1, 2 or 9**

Frequency and voltage, see page 8/20 — **1 to 9**

Gearbox housing mounting position, see page 2/119 — **A, F, H or R**

*) For mounting type B3

© Siemens AG 2011

2

Selection and ordering data (continued)

Power rating P_{Motor} kW	Output speed n_2 (50 Hz) rpm	Output torque T_2 Nm	Service factor f_B	Gearbox ratio i_{tot}		Order No.	Order code (No. of poles)	Weight *) kg
9.2	**Z.68-LA160MB4E**							
	345	255	1.8	4.22		**2KJ1104 - ■JP13 - ■■B1**		111
	417	211	2.0	3.49	★	**2KJ1104 - ■JP13 - ■■A1**		111
	E.148-LA160MB4E							
	144	612	1.3	10.13	★	**2KJ1007 - ■JP13 - ■■Q1**		192
	154	572	1.6	9.47		**2KJ1007 - ■JP13 - ■■P1**		192
	173	508	2.0	8.42	★	**2KJ1007 - ■JP13 - ■■N1**		192
	183	480	2.2	7.95		**2KJ1007 - ■JP13 - ■■M1**		192
	204	431	2.6	7.14	★	**2KJ1007 - ■JP13 - ■■L1**		192
	222	396	2.9	6.55		**2KJ1007 - ■JP13 - ■■K1**		192
	258	341	4.0	5.65		**2KJ1007 - ■JP13 - ■■J1**		192
	295	298	4.7	4.94		**2KJ1007 - ■JP13 - ■■H1**		192
	338	260	5.1	4.3		**2KJ1007 - ■JP13 - ■■G1**		192
	E.128-LA160MB4E							
	163	540	1.2	8.94	★	**2KJ1006 - ■JP13 - ■■R1**		168
	174	504	1.4	8.35		**2KJ1006 - ■JP13 - ■■Q1**		168
	197	445	1.8	7.37	★	**2KJ1006 - ■JP13 - ■■P1**		168
	209	420	2.1	6.95		**2KJ1006 - ■JP13 - ■■N1**		168
	234	376	2.5	6.23	★	**2KJ1006 - ■JP13 - ■■M1**		168
	253	347	2.8	5.75		**2KJ1006 - ■JP13 - ■■L1**		168
	296	296	3.2	4.91		**2KJ1006 - ■JP13 - ■■K1**		168
	328	268	3.7	4.44	★	**2KJ1006 - ■JP13 - ■■J1**		168
	340	258	3.9	4.28		**2KJ1006 - ■JP13 - ■■H1**		168
	393	223	4.5	3.7		**2KJ1006 - ■JP13 - ■■G1**		168
	450	195	5.1	3.23	★	**2KJ1006 - ■JP13 - ■■F1**		168
	E.108-LA160MB4E							
	266	330	2.0	5.46	★	**2KJ1005 - ■JP13 - ■■K1**		131
	291	302	2.3	5		**2KJ1005 - ■JP13 - ■■J1**		131
	342	257	2.8	4.26		**2KJ1005 - ■JP13 - ■■H1**		131
	387	227	2.6	3.76	★	**2KJ1005 - ■JP13 - ■■G1**		131
	455	193	3.9	3.2		**2KJ1005 - ■JP13 - ■■F1**		131
	525	167	4.0	2.77	★	**2KJ1005 - ■JP13 - ■■E1**		131
	624	141	4.8	2.33	★	**2KJ1005 - ■JP13 - ■■C1**		131
	690	127	4.9	2.11		**2KJ1005 - ■JP13 - ■■B1**		131
	804	109	5.0	1.81	★	**2KJ1005 - ■JP13 - ■■A1**		131
	E.88-LA160MB4E							
	258	341	0.94	5.65		**2KJ1004 - ■JP13 - ■■K1**		110
	285	309	1.2	5.11	★	**2KJ1004 - ■JP13 - ■■J1**		110
	310	284	1.4	4.7		**2KJ1004 - ■JP13 - ■■H1**		110
	344	255	1.6	4.23	★	**2KJ1004 - ■JP13 - ■■G1**		110
	373	236	1.6	3.9		**2KJ1004 - ■JP13 - ■■F1**		110
	441	199	2.3	3.3		**2KJ1004 - ■JP13 - ■■E1**		110
	505	174	2.5	2.88	★	**2KJ1004 - ■JP13 - ■■D1**		110
	594	148	2.8	2.45		**2KJ1004 - ■JP13 - ■■C1**		110

★ Preferred transmission ratio

Shaft designs, see page 2/117 — **1, 2 or 9**

Frequency and voltage, see page 8/20 — **1 to 9**

Gearbox housing mounting position, see page 2/119 — **A, F, H or R**

*) For mounting type B3

© Siemens AG 2011

Selection and ordering data (continued)

Power rating P_{Motor} kW	Output speed n_2 (50 Hz) rpm	Output torque T_2 Nm	Service factor f_B	Gearbox ratio i_{tot}		Order No.	Order code (No. of poles)	Weight *) kg
9.2	**E.88-LA160MB4E**							
	696	126	3.3	2.09	★	**2KJ1004 - ■JP13 - ■■B1**		110
	851	103	3.4	1.71	★	**2KJ1004 - ■JP13 - ■■A1**		110
	E.68-LA160MB4E							
	319	275	0.8	4.56	★	**2KJ1003 - ■JP13 - ■■K1**		93
	343	256	0.9	4.24		**2KJ1003 - ■JP13 - ■■J1**		93
	389	226	1.0	3.74	★	**2KJ1003 - ■JP13 - ■■H1**		93
	422	208	1.2	3.45		**2KJ1003 - ■JP13 - ■■G1**		93
	471	187	1.3	3.09	★	**2KJ1003 - ■JP13 - ■■F1**		93
	511	172	1.5	2.85		**2KJ1003 - ■JP13 - ■■E1**		93
	609	144	1.6	2.39		**2KJ1003 - ■JP13 - ■■D1**		93
	713	123	1.7	2.04	★	**2KJ1003 - ■JP13 - ■■C1**		93
	856	103	1.7	1.7		**2KJ1003 - ■JP13 - ■■B1**		93
	1 032	85	1.8	1.41	★	**2KJ1003 - ■JP13 - ■■A1**		93
11	**D.188-LA160ZLP6E**							
	4.4	24 093	0.83	220.17		**2KJ1211 - ■JT13 - ■■M1**	**P01**	688
	4.7	22 579	0.89	206.34		**2KJ1211 - ■JT13 - ■■L1**	**P01**	688
	5.4	19 394	1.0	177.23	★	**2KJ1211 - ■JT13 - ■■K1**	**P01**	688
	D.188-LA160MP4E							
	6.0	17 543	1.1	243.82		**2KJ1211 - ■JQ13 - ■■N1**		676
	6.6	15 842	1.3	220.17		**2KJ1211 - ■JQ13 - ■■M1**		676
	7.1	14 847	1.3	206.34		**2KJ1211 - ■JQ13 - ■■L1**		676
	8.2	12 752	1.6	177.23	★	**2KJ1211 - ■JQ13 - ■■K1**		676
	9.5	11 017	1.8	153.12		**2KJ1211 - ■JQ13 - ■■J1**		676
	10.8	9 725	2.1	135.16		**2KJ1211 - ■JQ13 - ■■H1**		676
	D.168-LA160MP4E							
	6.2	17 032	0.82	236.72		**2KJ1210 - ■JQ13 - ■■P1**		531
	6.9	15 145	0.92	210.49	★	**2KJ1210 - ■JQ13 - ■■N1**		531
	7.3	14 298	0.98	198.71		**2KJ1210 - ■JQ13 - ■■M1**		531
	8.2	12 835	1.1	178.38	★	**2KJ1210 - ■JQ13 - ■■L1**		531
	8.9	11 780	1.2	163.72		**2KJ1210 - ■JQ13 - ■■K1**		531
	10.3	10 165	1.4	141.28		**2KJ1210 - ■JQ13 - ■■J1**		531
	11.8	8 893	1.6	123.59		**2KJ1210 - ■JQ13 - ■■H1**		531
	13.6	7 733	1.8	107.48		**2KJ1210 - ■JQ13 - ■■G1**		531
	15.5	6 785	2.1	94.3	★	**2KJ1210 - ■JQ13 - ■■F1**		531
	D.148-LA160MP4E							
	11.8	8 877	0.9	123.37		**2KJ1208 - ■JQ13 - ■■K1**		360
	13.1	8 023	1.0	111.5	★	**2KJ1208 - ■JQ13 - ■■J1**		360
	13.6	7 729	1.0	107.42		**2KJ1208 - ■JQ13 - ■■H1**		360
	15.7	6 685	1.2	92.91		**2KJ1208 - ■JQ13 - ■■G1**		360
	18.0	5 831	1.4	81.04	★	**2KJ1208 - ■JQ13 - ■■F1**		360
	21	4 991	1.6	69.36	★	**2KJ1208 - ■JQ13 - ■■E1**		360
	24	4 470	1.8	62.12		**2KJ1208 - ■JQ13 - ■■D1**		360

★ Preferred transmission ratio

Shaft designs, see page 2/117 — **1, 2 or 9**

Frequency and voltage, see page 8/20 — **1 to 9**

Gearbox housing mounting position, see page 2/119 — **A, F, H or R**

*) For mounting type B3

© Siemens AG 2011

Selection and ordering data (continued)

Power rating P_{Motor} kW	Output speed n_2 (50 Hz) rpm	Output torque T_2 Nm	Service factor f_B	Gearbox ratio i_{tot}		Order No.	Order code (No. of poles)	Weight *) kg
11	**Z.148-LA160MP4E**							
	27	3 903	2.0	54.24	★	**2KJ1108 - ■JQ13 - ■■A2**		348
	29	3 651	2.2	50.74		**2KJ1108 - ■JQ13 - ■■X1**		348
	32	3 246	2.5	45.11	★	**2KJ1108 - ■JQ13 - ■■W1**		348
	34	3 064	2.6	42.59		**2KJ1108 - ■JQ13 - ■■V1**		348
	D.128-LA160MP4E							
	16.5	6 365	0.80	88.46		**2KJ1207 - ■JQ13 - ■■G1**		270
	18.7	5 617	0.91	78.06	★	**2KJ1207 - ■JQ13 - ■■F1**		270
	22	4 780	1.1	66.43		**2KJ1207 - ■JQ13 - ■■E1**		270
	25	4 142	1.2	57.56	★	**2KJ1207 - ■JQ13 - ■■D1**		270
	30	3 485	1.5	48.44	★	**2KJ1207 - ■JQ13 - ■■C1**		270
	33	3 145	1.6	43.71		**2KJ1207 - ■JQ13 - ■■B1**		270
	Z.128-LA160MP4E							
	38	2 802	1.8	38.94	★	**2KJ1107 - ■JQ13 - ■■B2**		261
	40	2 618	1.9	36.39		**2KJ1107 - ■JQ13 - ■■A2**		261
	46	2 310	2.2	32.11	★	**2KJ1107 - ■JQ13 - ■■X1**		261
	48	2 179	2.3	30.28		**2KJ1107 - ■JQ13 - ■■W1**		261
	54	1 952	2.6	27.13	★	**2KJ1107 - ■JQ13 - ■■V1**		261
	58	1 802	2.8	25.05		**2KJ1107 - ■JQ13 - ■■U1**		261
	D.108-LA160MP4E							
	28	3 739	0.83	51.97	★	**2KJ1206 - ■JQ13 - ■■B1**		193
	34	3 066	1.0	42.61	★	**2KJ1206 - ■JQ13 - ■■A1**		193
	Z.108-LA160MP4E							
	42	2 528	1.2	35.14	★	**2KJ1106 - ■JQ13 - ■■W1**		189
	44	2 361	1.3	32.81		**2KJ1106 - ■JQ13 - ■■V1**		189
	50	2 112	1.5	29.35	★	**2KJ1106 - ■JQ13 - ■■U1**		189
	54	1 957	1.6	27.2		**2KJ1106 - ■JQ13 - ■■T1**		189
	58	1 794	1.7	24.94	★	**2KJ1106 - ■JQ13 - ■■S1**		189
	64	1 645	1.9	22.86		**2KJ1106 - ■JQ13 - ■■R1**		189
	75	1 402	2.2	19.48		**2KJ1106 - ■JQ13 - ■■Q1**		189
	85	1 237	2.5	17.19	★	**2KJ1106 - ■JQ13 - ■■P1**		189
	100	1 053	2.9	14.63		**2KJ1106 - ■JQ13 - ■■N1**		189
	115	912	3.4	12.68	★	**2KJ1106 - ■JQ13 - ■■M1**		189
	206	511	3.5	7.1	★	**2KJ1106 - ■JQ13 - ■■H1**		189
	228	461	3.8	6.41		**2KJ1106 - ■JQ13 - ■■G1**		189
	265	396	4.3	5.51	★	**2KJ1106 - ■JQ13 - ■■E1**		189
	279	377	3.0	5.24	★	**2KJ1106 - ■JQ13 - ■■D1**		189
	331	317	3.6	4.41	★	**2KJ1106 - ■JQ13 - ■■C1**		189
	367	286	3.9	3.98		**2KJ1106 - ■JQ13 - ■■B1**		189
	427	246	4.4	3.42	★	**2KJ1106 - ■JQ13 - ■■A1**		189
	Z.88-LA160MP4E							
	54	1 932	0.87	26.85	★	**2KJ1105 - ■JQ13 - ■■S1**		143
	58	1 800	0.93	25.01		**2KJ1105 - ■JQ13 - ■■R1**		143
	65	1 627	1.0	22.61	★	**2KJ1105 - ■JQ13 - ■■Q1**		143

★ Preferred transmission ratio

Shaft designs, see page 2/117 — **1, 2 or 9**

Frequency and voltage, see page 8/20 — **1 to 9**

Gearbox housing mounting position, see page 2/119 — **A, F, H or R**

*) For mounting type B3

© Siemens AG 2011

Selection and ordering data (continued)

Power rating P_{Motor} kW	Output speed n_2 (50 Hz) rpm	Output torque T_2 Nm	Service factor f_B	Gearbox ratio i_{tot}		Order No.	Order code (No. of poles)	Weight *) kg
11	**Z.88-LA160MP4E**							
	70	1 497	1.1	20.81		**2KJ1105 - ■JQ13 - ■■P1**		143
	78	1 347	1.2	18.72	★	**2KJ1105 - ■JQ13 - ■■N1**		143
	84	1 243	1.4	17.27		**2KJ1105 - ■JQ13 - ■■M1**		143
	100	1 053	1.5	14.63		**2KJ1105 - ■JQ13 - ■■L1**		143
	115	917	1.7	12.75	★	**2KJ1105 - ■JQ13 - ■■K1**		143
	135	781	1.9	10.85		**2KJ1105 - ■JQ13 - ■■J1**		143
	158	666	2.1	9.26	★	**2KJ1105 - ■JQ13 - ■■H1**		143
	192	546	2.4	7.59	★	**2KJ1105 - ■JQ13 - ■■G1**		143
	210	501	2.5	6.96		**2KJ1105 - ■JQ13 - ■■F1**		143
	246	427	2.8	5.94	★	**2KJ1105 - ■JQ13 - ■■E1**		143
	300	350	3.2	4.87	★	**2KJ1105 - ■JQ13 - ■■D1**		143
	328	320	2.5	4.45	★	**2KJ1105 - ■JQ13 - ■■C1**		143
	385	273	2.7	3.79	★	**2KJ1105 - ■JQ13 - ■■B1**		143
	469	224	2.9	3.11	★	**2KJ1105 - ■JQ13 - ■■A1**		143
	Z.68-LA160MP4E							
	107	978	0.82	13.59		**2KJ1104 - ■JQ13 - ■■J1**		111
	128	820	0.96	11.4		**2KJ1104 - ■JQ13 - ■■H1**		111
	150	700	1.1	9.73	★	**2KJ1104 - ■JQ13 - ■■G1**		111
	180	584	1.2	8.11		**2KJ1104 - ■JQ13 - ■■F1**		111
	217	484	1.3	6.72	★	**2KJ1104 - ■JQ13 - ■■E1**		111
	246	427	1.1	5.93		**2KJ1104 - ■JQ13 - ■■D1**		111
	289	364	1.3	5.06	★	**2KJ1104 - ■JQ13 - ■■C1**		111
	346	304	1.5	4.22		**2KJ1104 - ■JQ13 - ■■B1**		111
	418	251	1.7	3.49	★	**2KJ1104 - ■JQ13 - ■■A1**		111
	E.148-LA160MP4E							
	144	729	1.1	10.13	★	**2KJ1007 - ■JQ13 - ■■Q1**		192
	154	681	1.4	9.47		**2KJ1007 - ■JQ13 - ■■P1**		192
	173	606	1.7	8.42	★	**2KJ1007 - ■JQ13 - ■■N1**		192
	184	572	1.9	7.95		**2KJ1007 - ■JQ13 - ■■M1**		192
	204	514	2.2	7.14	★	**2KJ1007 - ■JQ13 - ■■L1**		192
	223	471	2.4	6.55		**2KJ1007 - ■JQ13 - ■■K1**		192
	258	407	3.3	5.65		**2KJ1007 - ■JQ13 - ■■J1**		192
	296	355	3.9	4.94		**2KJ1007 - ■JQ13 - ■■H1**		192
	340	309	4.3	4.3		**2KJ1007 - ■JQ13 - ■■G1**		192
	387	271	5.0	3.77	★	**2KJ1007 - ■JQ13 - ■■F1**		192
	E.128-LA160MP4E							
	163	643	0.99	8.94	★	**2KJ1006 - ■JQ13 - ■■R1**		168
	175	601	1.2	8.35		**2KJ1006 - ■JQ13 - ■■Q1**		168
	198	530	1.5	7.37	★	**2KJ1006 - ■JQ13 - ■■P1**		168
	210	500	1.8	6.95		**2KJ1006 - ■JQ13 - ■■N1**		168
	234	448	2.1	6.23	★	**2KJ1006 - ■JQ13 - ■■M1**		168
	254	414	2.3	5.75		**2KJ1006 - ■JQ13 - ■■L1**		168
	297	353	2.7	4.91		**2KJ1006 - ■JQ13 - ■■K1**		168

★ Preferred transmission ratio

Shaft designs, see page 2/117 — **1, 2 or 9**

Frequency and voltage, see page 8/20 — **1 to 9**

Gearbox housing mounting position, see page 2/119 — **A, F, H or R**

*) For mounting type B3

© Siemens AG 2011

Selection and ordering data (continued)

Power rating P_{Motor} kW	Output speed n_2 (50 Hz) rpm	Output torque T_2 Nm	Service factor f_B	Gearbox ratio i_{tot}		Order No.	Order code (No. of poles)	Weight *) kg
11	**E.128-LA160MP4E**							
	329	319	3.1	4.44	★	**2KJ1006 - ■JQ13 - ■■J1**		168
	341	308	3.2	4.28		**2KJ1006 - ■JQ13 - ■■H1**		168
	395	266	3.8	3.7		**2KJ1006 - ■JQ13 - ■■G1**		168
	452	232	4.3	3.23	★	**2KJ1006 - ■JQ13 - ■■F1**		168
	529	199	5.0	2.76	★	**2KJ1006 - ■JQ13 - ■■E1**		168
	591	178	5.3	2.47		**2KJ1006 - ■JQ13 - ■■D1**		168
	695	151	5.7	2.1	★	**2KJ1006 - ■JQ13 - ■■C1**		168
	807	130	6.1	1.81		**2KJ1006 - ■JQ13 - ■■B1**		168
	E.108-LA160MP4E							
	267	393	1.7	5.46	★	**2KJ1005 - ■JQ13 - ■■K1**		131
	292	360	1.9	5		**2KJ1005 - ■JQ13 - ■■J1**		131
	343	307	2.3	4.26		**2KJ1005 - ■JQ13 - ■■H1**		131
	388	271	2.2	3.76	★	**2KJ1005 - ■JQ13 - ■■G1**		131
	456	230	3.2	3.2		**2KJ1005 - ■JQ13 - ■■F1**		131
	527	199	3.4	2.77	★	**2KJ1005 - ■JQ13 - ■■E1**		131
	627	168	4.1	2.33	★	**2KJ1005 - ■JQ13 - ■■C1**		131
	692	152	4.1	2.11		**2KJ1005 - ■JQ13 - ■■B1**		131
	807	130	4.2	1.81	★	**2KJ1005 - ■JQ13 - ■■A1**		131
	E.88-LA160MP4E							
	286	368	1.0	5.11	★	**2KJ1004 - ■JQ13 - ■■J1**		110
	311	338	1.1	4.7		**2KJ1004 - ■JQ13 - ■■H1**		110
	345	304	1.3	4.23	★	**2KJ1004 - ■JQ13 - ■■G1**		110
	374	281	1.4	3.9		**2KJ1004 - ■JQ13 - ■■F1**		110
	442	237	1.9	3.3		**2KJ1004 - ■JQ13 - ■■E1**		110
	507	207	2.1	2.88	★	**2KJ1004 - ■JQ13 - ■■D1**		110
	596	176	2.4	2.45		**2KJ1004 - ■JQ13 - ■■C1**		110
	699	150	2.8	2.09	★	**2KJ1004 - ■JQ13 - ■■B1**		110
	854	123	2.9	1.71	★	**2KJ1004 - ■JQ13 - ■■A1**		110
	E.68-LA160MP4E							
	390	269	0.85	3.74	★	**2KJ1003 - ■JQ13 - ■■H1**		93
	423	248	0.97	3.45		**2KJ1003 - ■JQ13 - ■■G1**		93
	472	222	1.1	3.09	★	**2KJ1003 - ■JQ13 - ■■F1**		93
	512	205	1.2	2.85		**2KJ1003 - ■JQ13 - ■■E1**		93
	1 035	101	1.5	1.41	★	**2KJ1003 - ■JQ13 - ■■A1**		93
15	**D.188-LA160ZLP4E**							
	6.0	23 923	0.84	243.82		**2KJ1211 - ■JT13 - ■■N1**		688
	6.6	21 602	0.93	220.17		**2KJ1211 - ■JT13 - ■■M1**		688
	7.1	20 245	0.99	206.34		**2KJ1211 - ■JT13 - ■■L1**		688
	8.2	17 389	1.2	177.23	★	**2KJ1211 - ■JT13 - ■■K1**		688
	9.5	15 024	1.3	153.12		**2KJ1211 - ■JT13 - ■■J1**		688
	10.8	13 261	1.5	135.16		**2KJ1211 - ■JT13 - ■■H1**		688
	12.0	11 938	1.7	121.67	★	**2KJ1211 - ■JT13 - ■■G1**		688
	14.5	9 906	2.0	100.96	★	**2KJ1211 - ■JT13 - ■■F1**		688

★ Preferred transmission ratio

Shaft designs, see page 2/117 — **1, 2 or 9**

Frequency and voltage, see page 8/20 — **1 to 9**

Gearbox housing mounting position, see page 2/119 — **A, F, H or R**

*) For mounting type B3

© Siemens AG 2011

Selection and ordering data (continued)

Power rating P_{Motor} kW	Output speed n_2 (50 Hz) rpm	Output torque T_2 Nm	Service factor f_B	Gearbox ratio i_{tot}		Order No.	Order code (No. of poles)	Weight *) kg
15	**D.188-LA160ZLP4E**							
	15.9	9 033	2.2	92.06		**2KJ1211 - ■JT13 - ■■E1**		688
	D.168-LA160ZLP4E							
	8.2	17 502	0.8	178.38	★	**2KJ1210 - ■JT13 - ■■L1**		543
	8.9	16 064	0.87	163.72		**2KJ1210 - ■JT13 - ■■K1**		543
	10.3	13 862	1.0	141.28		**2KJ1210 - ■JT13 - ■■J1**		543
	11.8	12 126	1.2	123.59		**2KJ1210 - ■JT13 - ■■H1**		543
	13.6	10 546	1.3	107.48		**2KJ1210 - ■JT13 - ■■G1**		543
	15.5	9 252	1.5	94.3	★	**2KJ1210 - ■JT13 - ■■F1**		543
	18.3	7 825	1.8	79.75	★	**2KJ1210 - ■JT13 - ■■E1**		543
	20	7 100	2.0	72.36		**2KJ1210 - ■JT13 - ■■D1**		543
	23	6 189	2.3	63.08	★	**2KJ1210 - ■JT13 - ■■C1**		543
	Z.168-LA160ZLP4E							
	31	4 573	2.2	46.61		**2KJ1110 - ■JT13 - ■■V1**		524
	D.148-LA160ZLP4E							
	15.7	9 116	0.88	92.91		**2KJ1208 - ■JT13 - ■■G1**		372
	18	7 951	1.0	81.04	★	**2KJ1208 - ■JT13 - ■■F1**		372
	21	6 805	1.2	69.36	★	**2KJ1208 - ■JT13 - ■■E1**		372
	24	6 095	1.3	62.12		**2KJ1208 - ■JT13 - ■■D1**		372
	Z.148-LA160ZLP4E							
	27	5 322	1.5	54.24	★	**2KJ1108 - ■JT13 - ■■A2**		360
	29	4 978	1.6	50.74		**2KJ1108 - ■JT13 - ■■X1**		360
	32	4 426	1.8	45.11	★	**2KJ1108 - ■JT13 - ■■W1**		360
	34	4 179	1.9	42.59		**2KJ1108 - ■JT13 - ■■V1**		360
	38	3 751	2.1	38.23	★	**2KJ1108 - ■JT13 - ■■U1**		360
	42	3 443	2.3	35.09		**2KJ1108 - ■JT13 - ■■T1**		360
	48	2 971	2.7	30.28		**2KJ1108 - ■JT13 - ■■S1**		360
	D.128-LA160ZLP4E							
	25	5 648	0.9	57.56	★	**2KJ1207 - ■JT13 - ■■D1**		282
	30	4 753	1.1	48.44	★	**2KJ1207 - ■JT13 - ■■C1**		282
	33	4 289	1.2	43.71		**2KJ1207 - ■JT13 - ■■B1**		282
	Z.128-LA160ZLP4E							
	38	3 821	1.3	38.94	★	**2KJ1107 - ■JT13 - ■■B2**		273
	40	3 570	1.4	36.39		**2KJ1107 - ■JT13 - ■■A2**		273
	46	3 151	1.6	32.11	★	**2KJ1107 - ■JT13 - ■■X1**		273
	48	2 971	1.7	30.28		**2KJ1107 - ■JT13 - ■■W1**		273
	54	2 662	1.9	27.13	★	**2KJ1107 - ■JT13 - ■■V1**		273
	58	2 458	2.1	25.05		**2KJ1107 - ■JT13 - ■■U1**		273
	68	2 101	2.4	21.41		**2KJ1107 - ■JT13 - ■■T1**		273
	76	1 899	2.7	19.35	★	**2KJ1107 - ■JT13 - ■■S1**		273
	78	1 829	2.8	18.64		**2KJ1107 - ■JT13 - ■■R1**		273
	91	1 582	3.2	16.12		**2KJ1107 - ■JT13 - ■■Q1**		273
	104	1 380	3.5	14.06	★	**2KJ1107 - ■JT13 - ■■P1**		273
	200	715	3.6	7.29	★	**2KJ1107 - ■JT13 - ■■J1**		273

★ Preferred transmission ratio

Shaft designs, see page 2/117 — **1, 2 or 9**

Frequency and voltage, see page 8/20 — **1 to 9**

Gearbox housing mounting position, see page 2/119 — **A, F, H or R**

*) For mounting type B3

© Siemens AG 2011

Selection and ordering data (continued)

Power rating P_{Motor} kW	Output speed n_2 (50 Hz) rpm	Output torque T_2 Nm	Service factor f_B	Gearbox ratio i_{tot}		Order No.	Order code (No. of poles)	Weight *) kg
15	**Z.128-LA160ZLP4E**							
	234	612	4.1	6.24	★	**2KJ1107 - ■JT13 - ■■H1**		273
	261	548	4.8	5.59	★	**2KJ1107 - ■JT13 - ■■F1**		273
	Z.108-LA160ZLP4E							
	42	3 448	0.90	35.14	★	**2KJ1106 - ■JT13 - ■■W1**		201
	44	3 219	0.96	32.81		**2KJ1106 - ■JT13 - ■■V1**		201
	50	2 880	1.1	29.35	★	**2KJ1106 - ■JT13 - ■■U1**		201
	54	2 669	1.2	27.2		**2KJ1106 - ■JT13 - ■■T1**		201
	58	2 447	1.3	24.94	★	**2KJ1106 - ■JT13 - ■■S1**		201
	64	2 243	1.4	22.86		**2KJ1106 - ■JT13 - ■■R1**		201
	75	1 911	1.6	19.48		**2KJ1106 - ■JT13 - ■■Q1**		201
	85	1 687	1.8	17.19	★	**2KJ1106 - ■JT13 - ■■P1**		201
	100	1 435	2.2	14.63		**2KJ1106 - ■JT13 - ■■N1**		201
	115	1 244	2.5	12.68	★	**2KJ1106 - ■JT13 - ■■M1**		201
	137	1 047	3.0	10.67	★	**2KJ1106 - ■JT13 - ■■L1**		201
	152	944	3.3	9.62		**2KJ1106 - ■JT13 - ■■K1**		201
	177	811	3.8	8.27	★	**2KJ1106 - ■JT13 - ■■J1**		201
	206	697	2.6	7.1	★	**2KJ1106 - ■JT13 - ■■H1**		201
	228	629	2.8	6.41		**2KJ1106 - ■JT13 - ■■G1**		201
	265	541	3.1	5.51	★	**2KJ1106 - ■JT13 - ■■E1**		201
	279	514	2.2	5.24	★	**2KJ1106 - ■JT13 - ■■D1**		201
	331	433	2.6	4.41	★	**2KJ1106 - ■JT13 - ■■C1**		201
	367	391	2.9	3.98		**2KJ1106 - ■JT13 - ■■B1**		201
	427	336	3.2	3.42	★	**2KJ1106 - ■JT13 - ■■A1**		201
	Z.88-LA160ZLP4E							
	70	2 042	0.82	20.81		**2KJ1105 - ■JT13 - ■■P1**		155
	78	1 837	0.91	18.72	★	**2KJ1105 - ■JT13 - ■■N1**		155
	84	1 694	0.99	17.27		**2KJ1105 - ■JT13 - ■■M1**		155
	100	1 435	1.1	14.63		**2KJ1105 - ■JT13 - ■■L1**		155
	115	1 251	1.2	12.75	★	**2KJ1105 - ■JT13 - ■■K1**		155
	135	1 065	1.4	10.85		**2KJ1105 - ■JT13 - ■■J1**		155
	158	909	1.5	9.26	★	**2KJ1105 - ■JT13 - ■■H1**		155
	192	745	1.7	7.59	★	**2KJ1105 - ■JT13 - ■■G1**		155
	210	683	1.8	6.96		**2KJ1105 - ■JT13 - ■■F1**		155
	246	583	2.0	5.94	★	**2KJ1105 - ■JT13 - ■■E1**		155
	300	478	2.3	4.87	★	**2KJ1105 - ■JT13 - ■■D1**		155
	328	437	1.8	4.45	★	**2KJ1105 - ■JT13 - ■■C1**		155
	385	372	2.0	3.79	★	**2KJ1105 - ■JT13 - ■■B1**		155
	469	305	2.2	3.11	★	**2KJ1105 - ■JT13 - ■■A1**		155
	Z.68-LA160ZLP4E							
	180	796	0.88	8.11		**2KJ1104 - ■JT13 - ■■F1**		123
	217	659	0.99	6.72	★	**2KJ1104 - ■JT13 - ■■E1**		123
	246	582	0.84	5.93		**2KJ1104 - ■JT13 - ■■D1**		123
	289	496	0.97	5.06	★	**2KJ1104 - ■JT13 - ■■C1**		123

★ Preferred transmission ratio

Shaft designs, see page 2/117 — **1, 2 or 9**

Frequency and voltage, see page 8/20 — **1 to 9**

Gearbox housing mounting position, see page 2/119 — **A, F, H or R**

*) For mounting type B3

© Siemens AG 2011

Selection and ordering data (continued)

Power rating P_{Motor} kW	Output speed n_2 (50 Hz) rpm	Output torque T_2 Nm	Service factor f_B	Gearbox ratio i_{tot}		Order No.	Order code (No. of poles)	Weight *) kg
15	**Z.68-LA160ZLP4E**							
	346	414	1.1	4.22		**2KJ1104 - ■JT13 - ■■B1**		123
	418	342	1.2	3.49	★	**2KJ1104 - ■JT13 - ■■A1**		123
	E.148-LA160ZLP4E							
	144	994	0.80	10.13	★	**2KJ1007 - ■JT13 - ■■Q1**		204
	154	929	0.99	9.47		**2KJ1007 - ■JT13 - ■■P1**		204
	173	826	1.2	8.42	★	**2KJ1007 - ■JT13 - ■■N1**		204
	184	780	1.4	7.95		**2KJ1007 - ■JT13 - ■■M1**		204
	204	701	1.6	7.14	★	**2KJ1007 - ■JT13 - ■■L1**		204
	223	643	1.8	6.55		**2KJ1007 - ■JT13 - ■■K1**		204
	258	554	2.5	5.65		**2KJ1007 - ■JT13 - ■■J1**		204
	296	485	2.9	4.94		**2KJ1007 - ■JT13 - ■■H1**		204
	340	422	3.2	4.3		**2KJ1007 - ■JT13 - ■■G1**		204
	387	370	3.6	3.77	★	**2KJ1007 - ■JT13 - ■■F1**		204
	458	313	5.0	3.19	★	**2KJ1007 - ■JT13 - ■■E1**		204
	503	285	4.9	2.9		**2KJ1007 - ■JT13 - ■■D1**		204
	579	247	4.9	2.52	★	**2KJ1007 - ■JT13 - ■■C1**		204
	682	210	5.7	2.14		**2KJ1007 - ■JT13 - ■■B1**		204
	890	161	6.0	1.64	★	**2KJ1007 - ■JT13 - ■■A1**		204
	E.128-LA160ZLP4E							
	175	819	0.87	8.35		**2KJ1006 - ■JT13 - ■■Q1**		180
	198	723	1.1	7.37	★	**2KJ1006 - ■JT13 - ■■P1**		180
	210	682	1.3	6.95		**2KJ1006 - ■JT13 - ■■N1**		180
	234	611	1.5	6.23	★	**2KJ1006 - ■JT13 - ■■M1**		180
	254	564	1.7	5.75		**2KJ1006 - ■JT13 - ■■L1**		180
	297	482	2.0	4.91		**2KJ1006 - ■JT13 - ■■K1**		180
	329	436	2.3	4.44	★	**2KJ1006 - ■JT13 - ■■J1**		180
	341	420	2.4	4.28		**2KJ1006 - ■JT13 - ■■H1**		180
	395	363	2.8	3.7		**2KJ1006 - ■JT13 - ■■G1**		180
	452	317	3.2	3.23	★	**2KJ1006 - ■JT13 - ■■F1**		180
	529	271	3.7	2.76	★	**2KJ1006 - ■JT13 - ■■E1**		180
	591	242	3.9	2.47		**2KJ1006 - ■JT13 - ■■D1**		180
	695	206	4.2	2.1	★	**2KJ1006 - ■JT13 - ■■C1**		180
	807	178	4.5	1.81		**2KJ1006 - ■JT13 - ■■B1**		180
	1 074	133	5.1	1.36	★	**2KJ1006 - ■JT13 - ■■A1**		180
	E.108-LA160ZLP4E							
	267	536	1.2	5.46	★	**2KJ1005 - ■JT13 - ■■K1**		143
	292	491	1.4	5		**2KJ1005 - ■JT13 - ■■J1**		143
	343	418	1.7	4.26		**2KJ1005 - ■JT13 - ■■H1**		143
	388	369	1.6	3.76	★	**2KJ1005 - ■JT13 - ■■G1**		143
	456	314	2.4	3.2		**2KJ1005 - ■JT13 - ■■F1**		143
	527	272	2.5	2.77	★	**2KJ1005 - ■JT13 - ■■E1**		143
	627	229	3.0	2.33	★	**2KJ1005 - ■JT13 - ■■C1**		143
	692	207	3.0	2.11		**2KJ1005 - ■JT13 - ■■B1**		143

★ Preferred transmission ratio

Shaft designs, see page 2/117 — **1, 2 or 9**

Frequency and voltage, see page 8/20 — **1 to 9**

Gearbox housing mounting position, see page 2/119 — **A, F, H or R**

*) For mounting type B3

© Siemens AG 2011

2

Selection and ordering data (continued)

Power rating P_{Motor} kW	Output speed n_2 (50 Hz) rpm	Output torque T_2 Nm	Service factor f_B	Gearbox ratio i_{tot}		Order No.	Order code (No. of poles)	Weight *) kg
15	**E.108-LA160ZLP4E**							
	807	178	3.1	1.81	★	**2KJ1005 - ■JT13 - ■■A1**		143
	E.88-LA160ZLP4E							
	311	461	0.83	4.7		**2KJ1004 - ■JT13 - ■■H1**		122
	345	415	0.96	4.23	★	**2KJ1004 - ■JT13 - ■■G1**		122
	374	383	1.0	3.9		**2KJ1004 - ■JT13 - ■■F1**		122
	442	324	1.4	3.3		**2KJ1004 - ■JT13 - ■■E1**		122
	507	283	1.5	2.88	★	**2KJ1004 - ■JT13 - ■■D1**		122
	596	240	1.7	2.45		**2KJ1004 - ■JT13 - ■■C1**		122
	699	205	2.0	2.09	★	**2KJ1004 - ■JT13 - ■■B1**		122
	854	168	2.1	1.71	★	**2KJ1004 - ■JT13 - ■■A1**		122
	E.68-LA160ZLP4E							
	472	303	0.82	3.09	★	**2KJ1003 - ■JT13 - ■■F1**		105
	512	280	0.89	2.85		**2KJ1003 - ■JT13 - ■■E1**		105
18.5	**D.188-LG180ZMB4E**							
	7.1	24 799	0.81	206.34		**2KJ1211 - ■KL13 - ■■L1**		743
	8.3	21 301	0.94	177.23	★	**2KJ1211 - ■KL13 - ■■K1**		743
	9.6	18 403	1.1	153.12		**2KJ1211 - ■KL13 - ■■J1**		743
	10.9	16 244	1.2	135.16		**2KJ1211 - ■KL13 - ■■H1**		743
	12.1	14 623	1.4	121.67	★	**2KJ1211 - ■KL13 - ■■G1**		743
	14.6	12 134	1.6	100.96	★	**2KJ1211 - ■KL13 - ■■F1**		743
	16.0	11 064	1.8	92.06		**2KJ1211 - ■KL13 - ■■E1**		743
	18.2	9 708	2.1	80.77	★	**2KJ1211 - ■KL13 - ■■D1**		743
	21	8 342	2.4	69.41		**2KJ1211 - ■KL13 - ■■C1**		743
	Z.188-LG180ZMB4E							
	28	6 292	2.5	52.35		**2KJ1111 - ■KL13 - ■■P1**		709
	D.168-LG180ZMB4E							
	10.4	16 980	0.82	141.28		**2KJ1210 - ■KL13 - ■■J1**		598
	11.9	14 854	0.94	123.59		**2KJ1210 - ■KL13 - ■■H1**		598
	13.7	12 918	1.1	107.48		**2KJ1210 - ■KL13 - ■■G1**		598
	15.6	11 334	1.2	94.3	★	**2KJ1210 - ■KL13 - ■■F1**		598
	18.4	9 585	1.5	79.75	★	**2KJ1210 - ■KL13 - ■■E1**		598
	20	8 697	1.6	72.36		**2KJ1210 - ■KL13 - ■■D1**		598
	23	7 581	1.8	63.08	★	**2KJ1210 - ■KL13 - ■■C1**		598
	27	6 437	2.2	53.56		**2KJ1210 - ■KL13 - ■■B1**		598
	Z.168-LG180ZMB4E							
	32	5 602	1.8	46.61		**2KJ1110 - ■KL13 - ■■V1**		579
	D.148-LG180ZMB4E							
	18.1	9 740	0.82	81.04	★	**2KJ1208 - ■KL13 - ■■F1**		427
	21	8 336	0.96	69.36	★	**2KJ1208 - ■KL13 - ■■E1**		427
	24	7 466	1.1	62.12		**2KJ1208 - ■KL13 - ■■D1**		427
	28	6 323	1.3	52.61	★	**2KJ1208 - ■KL13 - ■■C1**		427
	Z.148-LG180ZMB4E							
	33	5 422	1.5	45.11	★	**2KJ1108 - ■KL13 - ■■W1**		415

★ Preferred transmission ratio

Shaft designs, see page 2/117 — **1, 2 or 9**

Frequency and voltage, see page 8/20 — **1 to 9**

Gearbox housing mounting position, see page 2/119 — **A, F, H or R**

*) For mounting type B3

© Siemens AG 2011

Selection and ordering data (continued)

Power rating P_{Motor} kW	Output speed n_2 (50 Hz) rpm	Output torque T_2 Nm	Service factor f_B	Gearbox ratio i_{tot}		Order No.	Order code (No. of poles)	Weight *) kg
18.5	**Z.148-LG180ZMB4E**							
	34	5 119	1.6	42.59		**2KJ1108 - ■KL13 - ■■V1**		415
	38	4 595	1.7	38.23	★	**2KJ1108 - ■KL13 - ■■U1**		415
	42	4 217	1.9	35.09		**2KJ1108 - ■KL13 - ■■T1**		415
	48	3 639	2.2	30.28		**2KJ1108 - ■KL13 - ■■S1**		415
	56	3 184	2.5	26.49		**2KJ1108 - ■KL13 - ■■R1**		415
	64	2 769	2.9	23.04		**2KJ1108 - ■KL13 - ■■Q1**		415
	D.128-LG180ZMB4E							
	30	5 822	0.88	48.44	★	**2KJ1207 - ■KL13 - ■■C1**		337
	34	5 253	0.97	43.71		**2KJ1207 - ■KL13 - ■■B1**		337
	39	4 515	1.1	37.57	★	**2KJ1207 - ■KL13 - ■■A1**		337
	Z.128-LG180ZMB4E							
	46	3 859	1.3	32.11	★	**2KJ1107 - ■KL13 - ■■X1**		328
	48	3 639	1.4	30.28		**2KJ1107 - ■KL13 - ■■W1**		328
	54	3 261	1.6	27.13	★	**2KJ1107 - ■KL13 - ■■V1**		328
	59	3 011	1.7	25.05		**2KJ1107 - ■KL13 - ■■U1**		328
	69	2 573	2.0	21.41		**2KJ1107 - ■KL13 - ■■T1**		328
	76	2 326	2.2	19.35	★	**2KJ1107 - ■KL13 - ■■S1**		328
	79	2 240	2.3	18.64		**2KJ1107 - ■KL13 - ■■R1**		328
	91	1 937	2.6	16.12		**2KJ1107 - ■KL13 - ■■Q1**		328
	105	1 690	2.9	14.06	★	**2KJ1107 - ■KL13 - ■■P1**		328
	122	1 446	3.3	12.03	★	**2KJ1107 - ■KL13 - ■■N1**		328
	136	1 296	3.6	10.78		**2KJ1107 - ■KL13 - ■■M1**		328
	161	1 097	4.0	9.13	★	**2KJ1107 - ■KL13 - ■■L1**		328
	202	876	2.9	7.29	★	**2KJ1107 - ■KL13 - ■■J1**		328
	236	750	3.4	6.24	★	**2KJ1107 - ■KL13 - ■■H1**		328
	263	672	3.9	5.59	★	**2KJ1107 - ■KL13 - ■■F1**		328
	304	581	4.3	4.83		**2KJ1107 - ■KL13 - ■■E1**		328
	311	568	4.2	4.73	★	**2KJ1107 - ■KL13 - ■■D1**		328
	359	492	4.8	4.09	★	**2KJ1107 - ■KL13 - ■■C1**		328
	405	436	5.3	3.63	★	**2KJ1107 - ■KL13 - ■■B1**		328
	Z.108-LG180ZMB4E							
	50	3 527	0.88	29.35	★	**2KJ1106 - ■KL13 - ■■U1**		256
	54	3 269	0.95	27.2		**2KJ1106 - ■KL13 - ■■T1**		256
	59	2 997	1.0	24.94	★	**2KJ1106 - ■KL13 - ■■S1**		256
	64	2 747	1.1	22.86		**2KJ1106 - ■KL13 - ■■R1**		256
	76	2 341	1.3	19.48		**2KJ1106 - ■KL13 - ■■Q1**		256
	86	2 066	1.5	17.19	★	**2KJ1106 - ■KL13 - ■■P1**		256
	100	1 758	1.8	14.63		**2KJ1106 - ■KL13 - ■■N1**		256
	116	1 524	2.0	12.68	★	**2KJ1106 - ■KL13 - ■■M1**		256
	138	1 282	2.4	10.67	★	**2KJ1106 - ■KL13 - ■■L1**		256
	153	1 156	2.7	9.62		**2KJ1106 - ■KL13 - ■■K1**		256
	178	994	3.1	8.27	★	**2KJ1106 - ■KL13 - ■■J1**		256
	207	853	2.1	7.1	★	**2KJ1106 - ■KL13 - ■■H1**		256
	229	770	2.3	6.41		**2KJ1106 - ■KL13 - ■■G1**		256

★ Preferred transmission ratio

Shaft designs, see page 2/117 — **1, 2 or 9**

Frequency and voltage, see page 8/20 — **1 to 9**

Gearbox housing mounting position, see page 2/119 — **A, F, H or R**

*) For mounting type B3

© Siemens AG 2011

2

Selection and ordering data (continued)

Power rating P_{Motor} kW	Output speed n_2 (50 Hz) rpm	Output torque T_2 Nm	Service factor f_B	Gearbox ratio i_{tot}		Order No.	Order code (No. of poles)	Weight *) kg
18.5	**Z.108-LG180ZMB4E**							
	267	662	2.6	5.51	★	**2KJ1106 - ■KL13 - ■■E1**		256
	281	630	1.8	5.24	★	**2KJ1106 - ■KL13 - ■■D1**		256
	333	530	2.2	4.41	★	**2KJ1106 - ■KL13 - ■■C1**		256
	369	478	2.3	3.98		**2KJ1106 - ■KL13 - ■■B1**		256
	430	411	2.6	3.42	★	**2KJ1106 - ■KL13 - ■■A1**		256
	Z.88-LG180ZMB4E							
	85	2 076	0.81	17.27		**2KJ1105 - ■KL13 - ■■M1**		210
	100	1 758	0.92	14.63		**2KJ1105 - ■KL13 - ■■L1**		210
	115	1 532	1.0	12.75	★	**2KJ1105 - ■KL13 - ■■K1**		210
	135	1 304	1.1	10.85		**2KJ1105 - ■KL13 - ■■J1**		210
	159	1 113	1.2	9.26	★	**2KJ1105 - ■KL13 - ■■H1**		210
	194	912	1.4	7.59	★	**2KJ1105 - ■KL13 - ■■G1**		210
	211	837	1.5	6.96		**2KJ1105 - ■KL13 - ■■F1**		210
	247	714	1.7	5.94	★	**2KJ1105 - ■KL13 - ■■E1**		210
	302	585	1.9	4.87	★	**2KJ1105 - ■KL13 - ■■D1**		210
	330	535	1.5	4.45	★	**2KJ1105 - ■KL13 - ■■C1**		210
	388	456	1.6	3.79	★	**2KJ1105 - ■KL13 - ■■B1**		210
	473	374	1.8	3.11	★	**2KJ1105 - ■KL13 - ■■A1**		210
	E.148-LG180ZMB4E							
	175	1 012	0.99	8.42	★	**2KJ1007 - ■KL13 - ■■N1**		259
	185	955	1.1	7.95		**2KJ1007 - ■KL13 - ■■M1**		259
	206	858	1.3	7.14	★	**2KJ1007 - ■KL13 - ■■L1**		259
	224	787	1.5	6.55		**2KJ1007 - ■KL13 - ■■K1**		259
	260	679	2.0	5.65		**2KJ1007 - ■KL13 - ■■J1**		259
	298	594	2.4	4.94		**2KJ1007 - ■KL13 - ■■H1**		259
	342	517	2.6	4.3		**2KJ1007 - ■KL13 - ■■G1**		259
	390	453	3.0	3.77	★	**2KJ1007 - ■KL13 - ■■F1**		259
	461	383	4.0	3.19	★	**2KJ1007 - ■KL13 - ■■E1**		259
	507	349	4.0	2.9		**2KJ1007 - ■KL13 - ■■D1**		259
	583	303	4.0	2.52	★	**2KJ1007 - ■KL13 - ■■C1**		259
	687	257	4.7	2.14		**2KJ1007 - ■KL13 - ■■B1**		259
	896	197	4.9	1.64	★	**2KJ1007 - ■KL13 - ■■A1**		259
	E.128-LG180ZMB4E							
	199	886	0.92	7.37	★	**2KJ1006 - ■KL13 - ■■P1**		235
	212	835	1.1	6.95		**2KJ1006 - ■KL13 - ■■N1**		235
	236	749	1.2	6.23	★	**2KJ1006 - ■KL13 - ■■M1**		235
	256	691	1.4	5.75		**2KJ1006 - ■KL13 - ■■L1**		235
	299	590	1.6	4.91		**2KJ1006 - ■KL13 - ■■K1**		235
	331	534	1.9	4.44	★	**2KJ1006 - ■KL13 - ■■J1**		235
	343	514	1.9	4.28		**2KJ1006 - ■KL13 - ■■H1**		235
	397	445	2.2	3.7		**2KJ1006 - ■KL13 - ■■G1**		235
	455	388	2.6	3.23	★	**2KJ1006 - ■KL13 - ■■F1**		235
	533	332	3.0	2.76	★	**2KJ1006 - ■KL13 - ■■E1**		235

★ Preferred transmission ratio

Shaft designs, see page 2/117 — **1, 2 or 9**

Frequency and voltage, see page 8/20 — **1 to 9**

Gearbox housing mounting position, see page 2/119 — **A, F, H or R**

*) For mounting type B3

© Siemens AG 2011

Selection and ordering data (continued)

Power rating P_{Motor} kW	Output speed n_2 (50 Hz) rpm	Output torque T_2 Nm	Service factor f_B	Gearbox ratio i_{tot}		Order No.	Order code (No. of poles)	Weight *) kg
18.5	**E.128-LG180ZMB4E**							
	595	297	3.2	2.47		**2KJ1006 - ■KL13 - ■■D1**		235
	700	252	3.4	2.1	★	**2KJ1006 - ■KL13 - ■■C1**		235
	812	218	3.7	1.81		**2KJ1006 - ■KL13 - ■■B1**		235
	1 081	163	4.2	1.36	★	**2KJ1006 - ■KL13 - ■■A1**		235
	E.108-LG180ZMB4E							
	269	656	1.0	5.46	★	**2KJ1005 - ■KL13 - ■■K1**		198
	294	601	1.1	5		**2KJ1005 - ■KL13 - ■■J1**		198
	345	512	1.4	4.26		**2KJ1005 - ■KL13 - ■■H1**		198
	391	452	1.3	3.76	★	**2KJ1005 - ■KL13 - ■■G1**		198
	459	385	1.9	3.2		**2KJ1005 - ■KL13 - ■■F1**		198
	531	333	2.0	2.77	★	**2KJ1005 - ■KL13 - ■■E1**		198
	631	280	2.4	2.33	★	**2KJ1005 - ■KL13 - ■■C1**		198
	697	254	2.4	2.11		**2KJ1005 - ■KL13 - ■■B1**		198
	812	218	2.5	1.81	★	**2KJ1005 - ■KL13 - ■■A1**		198
	E.88-LG180ZMB4E							
	377	469	0.82	3.9		**2KJ1004 - ■KL13 - ■■F1**		177
	445	397	1.1	3.3		**2KJ1004 - ■KL13 - ■■E1**		177
	510	346	1.3	2.88	★	**2KJ1004 - ■KL13 - ■■D1**		177
	703	251	1.7	2.09	★	**2KJ1004 - ■KL13 - ■■B1**		177
	860	206	1.7	1.71	★	**2KJ1004 - ■KL13 - ■■A1**		177
22	**D.188-LG180ZLB4E**							
	9.6	21 959	0.91	153.12		**2KJ1211 - ■KP13 - ■■J1**		758
	10.8	19 384	1.0	135.16		**2KJ1211 - ■KP13 - ■■H1**		758
	12.0	17 449	1.1	121.67	★	**2KJ1211 - ■KP13 - ■■G1**		758
	14.5	14 479	1.4	100.96	★	**2KJ1211 - ■KP13 - ■■F1**		758
	15.9	13 203	1.5	92.06		**2KJ1211 - ■KP13 - ■■E1**		758
	18.1	11 583	1.7	80.77	★	**2KJ1211 - ■KP13 - ■■D1**		758
	21	9 954	2.0	69.41		**2KJ1211 - ■KP13 - ■■C1**		758
	Z.188-LG180ZLB4E							
	28	7 508	2.1	52.35		**2KJ1111 - ■KP13 - ■■P1**		724
	30	6 915	2.3	48.22		**2KJ1111 - ■KP13 - ■■N1**		724
	D.168-LG180ZLB4E							
	13.6	15 414	0.91	107.48		**2KJ1210 - ■KP13 - ■■G1**		613
	15.5	13 524	1.0	94.3	★	**2KJ1210 - ■KP13 - ■■F1**		613
	18.4	11 437	1.2	79.75	★	**2KJ1210 - ■KP13 - ■■E1**		613
	20	10 377	1.3	72.36		**2KJ1210 - ■KP13 - ■■D1**		613
	23	9 046	1.5	63.08	★	**2KJ1210 - ■KP13 - ■■C1**		613
	27	7 681	1.8	53.56		**2KJ1210 - ■KP13 - ■■B1**		613
	Z.168-LG180ZLB4E							
	31	6 684	1.5	46.61		**2KJ1110 - ■KP13 - ■■V1**		594
	35	6 036	2.3	42.09		**2KJ1110 - ■KP13 - ■■U1**		594
	37	5 658	2.5	39.45		**2KJ1110 - ■KP13 - ■■T1**		594

★ Preferred transmission ratio

Shaft designs, see page 2/117 — **1, 2 or 9**

Frequency and voltage, see page 8/20 — **1 to 9**

Gearbox housing mounting position, see page 2/119 — **A, F, H or R**

*) For mounting type B3

© Siemens AG 2011

2

Selection and ordering data (continued)

Power rating P_{Motor} kW	Output speed n_2 (50 Hz) rpm	Output torque T_2 Nm	Service factor f_B	Gearbox ratio i_{tot}		Order No.	Order code (No. of poles)	Weight *) kg
22	**D.148-LG180ZLB4E**							
	21	9 947	0.80	69.36	★	**2KJ1208 - ■KP13 - ■■E1**		442
	24	8 909	0.90	62.12		**2KJ1208 - ■KP13 - ■■D1**		442
	28	7 545	1.1	52.61	★	**2KJ1208 - ■KP13 - ■■C1**		442
	Z.148-LG180ZLB4E							
	32	6 469	1.2	45.11	★	**2KJ1108 - ■KP13 - ■■W1**		430
	34	6 108	1.3	42.59		**2KJ1108 - ■KP13 - ■■V1**		430
	38	5 483	1.5	38.23	★	**2KJ1108 - ■KP13 - ■■U1**		430
	42	5 032	1.6	35.09		**2KJ1108 - ■KP13 - ■■T1**		430
	48	4 343	1.8	30.28		**2KJ1108 - ■KP13 - ■■S1**		430
	55	3 799	2.1	26.49		**2KJ1108 - ■KP13 - ■■R1**		430
	64	3 304	2.4	23.04		**2KJ1108 - ■KP13 - ■■Q1**		430
	72	2 898	2.8	20.21	★	**2KJ1108 - ■KP13 - ■■P1**		430
	86	2 451	3.3	17.09	★	**2KJ1108 - ■KP13 - ■■N1**		430
	170	1 239	3.9	8.64	★	**2KJ1108 - ■KP13 - ■■H1**		430
	187	1 124	4.3	7.84		**2KJ1108 - ■KP13 - ■■G1**		430
	D.128-LG180ZLB4E							
	34	6 269	0.81	43.71		**2KJ1207 - ■KP13 - ■■B1**		352
	39	5 388	0.95	37.57	★	**2KJ1207 - ■KP13 - ■■A1**		352
	Z.128-LG180ZLB4E							
	46	4 605	1.1	32.11	★	**2KJ1107 - ■KP13 - ■■X1**		343
	48	4 343	1.2	30.28		**2KJ1107 - ■KP13 - ■■W1**		343
	54	3 891	1.3	27.13	★	**2KJ1107 - ■KP13 - ■■V1**		343
	58	3 592	1.4	25.05		**2KJ1107 - ■KP13 - ■■U1**		343
	68	3 070	1.7	21.41		**2KJ1107 - ■KP13 - ■■T1**		343
	76	2 775	1.8	19.35	★	**2KJ1107 - ■KP13 - ■■S1**		343
	79	2 673	1.9	18.64		**2KJ1107 - ■KP13 - ■■R1**		343
	91	2 312	2.2	16.12		**2KJ1107 - ■KP13 - ■■Q1**		343
	104	2 016	2.4	14.06	★	**2KJ1107 - ■KP13 - ■■P1**		343
	122	1 725	2.7	12.03	★	**2KJ1107 - ■KP13 - ■■N1**		343
	136	1 546	3.0	10.78		**2KJ1107 - ■KP13 - ■■M1**		343
	160	1 309	3.4	9.13	★	**2KJ1107 - ■KP13 - ■■L1**		343
	186	1 130	3.8	7.88		**2KJ1107 - ■KP13 - ■■K1**		343
	201	1 045	2.4	7.29	★	**2KJ1107 - ■KP13 - ■■J1**		343
	235	895	2.8	6.24	★	**2KJ1107 - ■KP13 - ■■H1**		343
	247	850	4.6	5.93	★	**2KJ1107 - ■KP13 - ■■G1**		343
	262	802	3.3	5.59	★	**2KJ1107 - ■KP13 - ■■F1**		343
	303	693	3.6	4.83		**2KJ1107 - ■KP13 - ■■E1**		343
	310	678	3.5	4.73	★	**2KJ1107 - ■KP13 - ■■D1**		343
	358	587	4.0	4.09	★	**2KJ1107 - ■KP13 - ■■C1**		343
	404	521	4.4	3.63	★	**2KJ1107 - ■KP13 - ■■B1**		343
	477	440	5.0	3.07	★	**2KJ1107 - ■KP13 - ■■A1**		343

★ Preferred transmission ratio

Shaft designs, see page 2/117 — **1, 2 or 9**

Frequency and voltage, see page 8/20 — **1 to 9**

Gearbox housing mounting position, see page 2/119 — **A, F, H or R**

*) For mounting type B3

© Siemens AG 2011

Selection and ordering data (continued)

Power rating P_{Motor} kW	Output speed n_2 (50 Hz) rpm	Output torque T_2 Nm	Service factor f_B	Gearbox ratio i_{tot}		Order No.	Order code (No. of poles)	Weight *) kg
22	**Z.108-LG180ZLB4E**							
	59	3 577	0.87	24.94	★	**2KJ1106 - ■KP13 - ■■S1**		271
	64	3 278	0.95	22.86		**2KJ1106 - ■KP13 - ■■R1**		271
	75	2 794	1.1	19.48		**2KJ1106 - ■KP13 - ■■Q1**		271
	85	2 465	1.3	17.19	★	**2KJ1106 - ■KP13 - ■■P1**		271
	100	2 098	1.5	14.63		**2KJ1106 - ■KP13 - ■■N1**		271
	116	1 818	1.7	12.68	★	**2KJ1106 - ■KP13 - ■■M1**		271
	137	1 530	2.0	10.67	★	**2KJ1106 - ■KP13 - ■■L1**		271
	152	1 380	2.2	9.62		**2KJ1106 - ■KP13 - ■■K1**		271
	177	1 186	2.6	8.27	★	**2KJ1106 - ■KP13 - ■■J1**		271
	206	1 018	1.8	7.1	★	**2KJ1106 - ■KP13 - ■■H1**		271
	229	919	1.9	6.41		**2KJ1106 - ■KP13 - ■■G1**		271
	266	790	2.2	5.51	★	**2KJ1106 - ■KP13 - ■■E1**		271
	280	751	1.5	5.24	★	**2KJ1106 - ■KP13 - ■■D1**		271
	332	632	1.8	4.41	★	**2KJ1106 - ■KP13 - ■■C1**		271
	368	571	2.0	3.98		**2KJ1106 - ■KP13 - ■■B1**		271
	428	490	2.2	3.42	★	**2KJ1106 - ■KP13 - ■■A1**		271
	Z.88-LG180ZLB4E							
	115	1 829	0.85	12.75	★	**2KJ1105 - ■KP13 - ■■K1**		225
	135	1 556	0.94	10.85		**2KJ1105 - ■KP13 - ■■J1**		225
	158	1 328	1.0	9.26	★	**2KJ1105 - ■KP13 - ■■H1**		225
	193	1 089	1.2	7.59	★	**2KJ1105 - ■KP13 - ■■G1**		225
	210	998	1.3	6.96		**2KJ1105 - ■KP13 - ■■F1**		225
	247	852	1.4	5.94	★	**2KJ1105 - ■KP13 - ■■E1**		225
	301	698	1.6	4.87	★	**2KJ1105 - ■KP13 - ■■D1**		225
	329	638	1.3	4.45	★	**2KJ1105 - ■KP13 - ■■C1**		225
	387	544	1.4	3.79	★	**2KJ1105 - ■KP13 - ■■B1**		225
	471	446	1.5	3.11	★	**2KJ1105 - ■KP13 - ■■A1**		225
	E.148-LG180ZLB4E							
	174	1 208	0.83	8.42	★	**2KJ1007 - ■KP13 - ■■N1**		274
	184	1 140	0.93	7.95		**2KJ1007 - ■KP13 - ■■M1**		274
	205	1 024	1.1	7.14	★	**2KJ1007 - ■KP13 - ■■L1**		274
	224	939	1.2	6.55		**2KJ1007 - ■KP13 - ■■K1**		274
	259	810	1.7	5.65		**2KJ1007 - ■KP13 - ■■J1**		274
	297	708	2.0	4.94		**2KJ1007 - ■KP13 - ■■H1**		274
	341	617	2.2	4.3		**2KJ1007 - ■KP13 - ■■G1**		274
	389	541	2.5	3.77	★	**2KJ1007 - ■KP13 - ■■F1**		274
	459	457	3.4	3.19	★	**2KJ1007 - ■KP13 - ■■E1**		274
	505	416	3.4	2.9		**2KJ1007 - ■KP13 - ■■D1**		274
	581	361	3.4	2.52	★	**2KJ1007 - ■KP13 - ■■C1**		274
	685	307	3.9	2.14		**2KJ1007 - ■KP13 - ■■B1**		274
	893	235	4.1	1.64	★	**2KJ1007 - ■KP13 - ■■A1**		274

★ Preferred transmission ratio

Shaft designs, see page 2/117 — **1, 2 or 9**

Frequency and voltage, see page 8/20 — **1 to 9**

Gearbox housing mounting position, see page 2/119 — **A, F, H or R**

*) For mounting type B3

© Siemens AG 2011

Selection and ordering data (continued)

Power rating P_{Motor} kW	Output speed n_2 (50 Hz) rpm	Output torque T_2 Nm	Service factor f_B	Gearbox ratio i_{tot}		Order No.	Order code (No. of poles)	Weight *) kg
22	**E.128-LG180ZLB4E**							
	211	997	0.88	6.95		**2KJ1006 - ■KP13 - ■■N1**		250
	235	893	1.0	6.23	★	**2KJ1006 - ■KP13 - ■■M1**		250
	255	825	1.2	5.75		**2KJ1006 - ■KP13 - ■■L1**		250
	298	704	1.4	4.91		**2KJ1006 - ■KP13 - ■■K1**		250
	330	637	1.6	4.44	★	**2KJ1006 - ■KP13 - ■■J1**		250
	342	614	1.6	4.28		**2KJ1006 - ■KP13 - ■■H1**		250
	396	531	1.9	3.7		**2KJ1006 - ■KP13 - ■■G1**		250
	454	463	2.2	3.23	★	**2KJ1006 - ■KP13 - ■■F1**		250
	531	396	2.5	2.76	★	**2KJ1006 - ■KP13 - ■■E1**		250
	593	354	2.7	2.47		**2KJ1006 - ■KP13 - ■■D1**		250
	698	301	2.9	2.1	★	**2KJ1006 - ■KP13 - ■■C1**		250
	809	260	3.1	1.81		**2KJ1006 - ■KP13 - ■■B1**		250
	1 077	195	3.5	1.36	★	**2KJ1006 - ■KP13 - ■■A1**		250
	E.108-LG180ZLB4E							
	268	783	0.84	5.46	★	**2KJ1005 - ■KP13 - ■■K1**		213
	293	717	0.95	5		**2KJ1005 - ■KP13 - ■■J1**		213
	344	611	1.2	4.26		**2KJ1005 - ■KP13 - ■■H1**		213
	390	539	1.1	3.76	★	**2KJ1005 - ■KP13 - ■■G1**		213
	458	459	1.6	3.2		**2KJ1005 - ■KP13 - ■■F1**		213
	529	397	1.7	2.77	★	**2KJ1005 - ■KP13 - ■■E1**		213
	629	334	2.0	2.33	★	**2KJ1005 - ■KP13 - ■■C1**		213
	694	303	2.0	2.11		**2KJ1005 - ■KP13 - ■■B1**		213
	809	260	2.1	1.81	★	**2KJ1005 - ■KP13 - ■■A1**		213
	E.88-LG180ZLB4E							
	444	473	0.95	3.3		**2KJ1004 - ■KP13 - ■■E1**		192
	509	413	1.1	2.88	★	**2KJ1004 - ■KP13 - ■■D1**		192
30	**D.188-LG200LB4E**							
	12.1	23 633	0.85	121.67	★	**2KJ1211 - ■LM13 - ■■G1**		808
	14.6	19 610	1.0	100.96	★	**2KJ1211 - ■LM13 - ■■F1**		808
	16.0	17 881	1.1	92.06		**2KJ1211 - ■LM13 - ■■E1**		808
	18.3	15 689	1.3	80.77	★	**2KJ1211 - ■LM13 - ■■D1**		808
	21	13 482	1.5	69.41		**2KJ1211 - ■LM13 - ■■C1**		808
	27	10 500	1.9	54.06	★	**2KJ1211 - ■LM13 - ■■B1**		808
	34	8 342	2.4	42.95	★	**2KJ1211 - ■LM13 - ■■A1**		808
	Z.188-LG200LB4E							
	28	10 168	1.5	52.35		**2KJ1111 - ■LM13 - ■■P1**		774
	31	9 366	1.7	48.22		**2KJ1111 - ■LM13 - ■■N1**		774
	35	8 129	2.0	41.85	★	**2KJ1111 - ■LM13 - ■■M1**		774
	40	7 165	2.3	36.89		**2KJ1111 - ■LM13 - ■■L1**		774
	D.168-LG200LB4E							
	18.5	15 490	0.90	79.75	★	**2KJ1210 - ■LM13 - ■■E1**		663
	20	14 055	1.0	72.36		**2KJ1210 - ■LM13 - ■■D1**		663
	23	12 252	1.1	63.08	★	**2KJ1210 - ■LM13 - ■■C1**		663

★ Preferred transmission ratio

Shaft designs, see page 2/117 — **1, 2 or 9**

Frequency and voltage, see page 8/20 — **1 to 9**

Gearbox housing mounting position, see page 2/119 — **A, F, H or R**

*) For mounting type B3

© Siemens AG 2011

Selection and ordering data (continued)

Power rating P_{Motor} kW	Output speed n_2 (50 Hz) rpm	Output torque T_2 Nm	Service factor f_B	Gearbox ratio i_{tot}		Order No.	Order code (No. of poles)	Weight *) kg
30	**D.168-LG200LB4E**							
	28	10 403	1.3	53.56		**2KJ1210 - ■LM13 - ■■B1**		663
	Z.168-LG200LB4E							
	32	9 053	1.1	46.61		**2KJ1110 - ■LM13 - ■■V1**		644
	35	8 175	1.7	42.09		**2KJ1110 - ■LM13 - ■■U1**		644
	37	7 663	1.8	39.45		**2KJ1110 - ■LM13 - ■■T1**		644
	44	6 581	2.1	33.88	★	**2KJ1110 - ■LM13 - ■■S1**		644
	50	5 685	2.5	29.27		**2KJ1110 - ■LM13 - ■■Q1**		644
	57	5 019	2.8	25.84		**2KJ1110 - ■LM13 - ■■P1**		644
	Z.148-LG200LB4E							
	33	8 762	0.91	45.11	★	**2KJ1108 - ■LM13 - ■■W1**		480
	35	8 273	0.97	42.59		**2KJ1108 - ■LM13 - ■■V1**		480
	39	7 426	1.1	38.23	★	**2KJ1108 - ■LM13 - ■■U1**		480
	42	6 816	1.2	35.09		**2KJ1108 - ■LM13 - ■■T1**		480
	49	5 882	1.4	30.28		**2KJ1108 - ■LM13 - ■■S1**		480
	56	5 145	1.6	26.49		**2KJ1108 - ■LM13 - ■■R1**		480
	64	4 475	1.8	23.04		**2KJ1108 - ■LM13 - ■■Q1**		480
	73	3 926	2.0	20.21	★	**2KJ1108 - ■LM13 - ■■P1**		480
	86	3 320	2.4	17.09	★	**2KJ1108 - ■LM13 - ■■N1**		480
	95	3 013	2.7	15.51		**2KJ1108 - ■LM13 - ■■M1**		480
	109	2 626	3.0	13.52	★	**2KJ1108 - ■LM13 - ■■L1**		480
	128	2 230	3.6	11.48		**2KJ1108 - ■LM13 - ■■K1**		480
	171	1 678	2.9	8.64	★	**2KJ1108 - ■LM13 - ■■H1**		480
	188	1 523	3.2	7.84		**2KJ1108 - ■LM13 - ■■G1**		480
	195	1 470	3.8	7.57	★	**2KJ1108 - ■LM13 - ■■F1**		480
	216	1 329	3.6	6.84	★	**2KJ1108 - ■LM13 - ■■E1**		480
	229	1 249	4.3	6.43		**2KJ1108 - ■LM13 - ■■D1**		480
	254	1 127	3.7	5.8		**2KJ1108 - ■LM13 - ■■C1**		480
	332	862	4.5	4.44	★	**2KJ1108 - ■LM13 - ■■A1**		480
	Z.128-LG200LB4E							
	46	6 237	0.82	32.11	★	**2KJ1107 - ■LM13 - ■■X1**		393
	49	5 882	0.87	30.28		**2KJ1107 - ■LM13 - ■■W1**		393
	54	5 270	0.97	27.13	★	**2KJ1107 - ■LM13 - ■■V1**		393
	59	4 866	1.0	25.05		**2KJ1107 - ■LM13 - ■■U1**		393
	69	4 159	1.2	21.41		**2KJ1107 - ■LM13 - ■■T1**		393
	76	3 758	1.4	19.35	★	**2KJ1107 - ■LM13 - ■■S1**		393
	79	3 621	1.4	18.64		**2KJ1107 - ■LM13 - ■■R1**		393
	92	3 131	1.6	16.12		**2KJ1107 - ■LM13 - ■■Q1**		393
	105	2 731	1.8	14.06	★	**2KJ1107 - ■LM13 - ■■P1**		393
	123	2 337	2.0	12.03	★	**2KJ1107 - ■LM13 - ■■N1**		393
	137	2 094	2.2	10.78		**2KJ1107 - ■LM13 - ■■M1**		393
	162	1 773	2.5	9.13	★	**2KJ1107 - ■LM13 - ■■L1**		393
	187	1 531	2.8	7.88		**2KJ1107 - ■LM13 - ■■K1**		393
	202	1 416	1.8	7.29	★	**2KJ1107 - ■LM13 - ■■J1**		393

★ Preferred transmission ratio

Shaft designs, see page 2/117 — **1, 2 or 9**

Frequency and voltage, see page 8/20 — **1 to 9**

Gearbox housing mounting position, see page 2/119 — **A, F, H or R**

*) For mounting type B3

© Siemens AG 2011

Selection and ordering data (continued)

Power rating P_{Motor} kW	Output speed n_2 (50 Hz) rpm	Output torque T_2 Nm	Service factor f_B	Gearbox ratio i_{tot}		Order No.	Order code (No. of poles)	Weight *) kg
30	**Z.128-LG200LB4E**							
	236	1 212	2.1	6.24	★	**2KJ1107 - ■LM13 - ■■H1**		393
	249	1 152	3.4	5.93	★	**2KJ1107 - ■LM13 - ■■G1**		393
	264	1 086	2.4	5.59	★	**2KJ1107 - ■LM13 - ■■F1**		393
	305	938	2.7	4.83		**2KJ1107 - ■LM13 - ■■E1**		393
	312	919	2.6	4.73	★	**2KJ1107 - ■LM13 - ■■D1**		393
	361	794	3.0	4.09	★	**2KJ1107 - ■LM13 - ■■C1**		393
	406	705	3.3	3.63	★	**2KJ1107 - ■LM13 - ■■B1**		393
	480	596	3.7	3.07	★	**2KJ1107 - ■LM13 - ■■A1**		393
	Z.108-LG200LB4E							
	76	3 784	0.82	19.48		**2KJ1106 - ■LM13 - ■■Q1**		321
	86	3 339	0.93	17.19	★	**2KJ1106 - ■LM13 - ■■P1**		321
	101	2 842	1.1	14.63		**2KJ1106 - ■LM13 - ■■N1**		321
	116	2 463	1.3	12.68	★	**2KJ1106 - ■LM13 - ■■M1**		321
	138	2 073	1.5	10.67	★	**2KJ1106 - ■LM13 - ■■L1**		321
	153	1 869	1.7	9.62		**2KJ1106 - ■LM13 - ■■K1**		321
	178	1 606	1.9	8.27	★	**2KJ1106 - ■LM13 - ■■J1**		321
	208	1 379	1.3	7.1	★	**2KJ1106 - ■LM13 - ■■H1**		321
	230	1 245	1.4	6.41		**2KJ1106 - ■LM13 - ■■G1**		321
	268	1 070	1.6	5.51	★	**2KJ1106 - ■LM13 - ■■E1**		321
	281	1 018	1.1	5.24	★	**2KJ1106 - ■LM13 - ■■D1**		321
	334	857	1.3	4.41	★	**2KJ1106 - ■LM13 - ■■C1**		321
	371	773	1.4	3.98		**2KJ1106 - ■LM13 - ■■B1**		321
	431	664	1.6	3.42	★	**2KJ1106 - ■LM13 - ■■A1**		321
	E.148-LG200LB4E							
	207	1 387	0.81	7.14	★	**2KJ1007 - ■LM13 - ■■L1**		324
	225	1 272	0.90	6.55		**2KJ1007 - ■LM13 - ■■K1**		324
	261	1 097	1.2	5.65		**2KJ1007 - ■LM13 - ■■J1**		324
	299	960	1.5	4.94		**2KJ1007 - ■LM13 - ■■H1**		324
	343	835	1.6	4.3		**2KJ1007 - ■LM13 - ■■G1**		324
	391	732	1.8	3.77	★	**2KJ1007 - ■LM13 - ■■F1**		324
	462	620	2.5	3.19	★	**2KJ1007 - ■LM13 - ■■E1**		324
	509	563	2.5	2.9		**2KJ1007 - ■LM13 - ■■D1**		324
	585	489	2.5	2.52	★	**2KJ1007 - ■LM13 - ■■C1**		324
	689	416	2.9	2.14		**2KJ1007 - ■LM13 - ■■B1**		324
	899	319	3.0	1.64	★	**2KJ1007 - ■LM13 - ■■A1**		324
	E.128-LG200LB4E							
	257	1 117	0.86	5.75		**2KJ1006 - ■LM13 - ■■L1**		300
	300	954	1.0	4.91		**2KJ1006 - ■LM13 - ■■K1**		300
	332	862	1.2	4.44	★	**2KJ1006 - ■LM13 - ■■J1**		300
	345	831	1.2	4.28		**2KJ1006 - ■LM13 - ■■H1**		300
	399	719	1.4	3.7		**2KJ1006 - ■LM13 - ■■G1**		300
	457	627	1.6	3.23	★	**2KJ1006 - ■LM13 - ■■F1**		300
	534	536	1.9	2.76	★	**2KJ1006 - ■LM13 - ■■E1**		300

★ Preferred transmission ratio

Shaft designs, see page 2/117 — **1, 2 or 9**

Frequency and voltage, see page 8/20 — **1 to 9**

Gearbox housing mounting position, see page 2/119 — **A, F, H or R**

*) For mounting type B3

© Siemens AG 2011

Selection and ordering data (continued)

Power rating P_{Motor} kW	Output speed n_2 (50 Hz) rpm	Output torque T_2 Nm	Service factor f_B	Gearbox ratio i_{tot}		Order No.	Order code (No. of poles)	Weight *) kg
30	**E.128-LG200LB4E**							
	597	480	2.0	2.47		**2KJ1006 - ■LM13 - ■■D1**		300
	702	408	2.1	2.1	★	**2KJ1006 - ■LM13 - ■■C1**		300
	815	352	2.3	1.81		**2KJ1006 - ■LM13 - ■■B1**		300
	1 085	264	2.6	1.36	★	**2KJ1006 - ■LM13 - ■■A1**		300
	E.108-LG200LB4E							
	346	827	0.87	4.26		**2KJ1005 - ■LM13 - ■■H1**		263
	392	730	0.82	3.76	★	**2KJ1005 - ■LM13 - ■■G1**		263
	461	622	1.2	3.2		**2KJ1005 - ■LM13 - ■■F1**		263
	532	538	1.2	2.77	★	**2KJ1005 - ■LM13 - ■■E1**		263
	633	453	1.5	2.33	★	**2KJ1005 - ■LM13 - ■■C1**		263
	699	410	1.5	2.11		**2KJ1005 - ■LM13 - ■■B1**		263
	815	352	1.6	1.81	★	**2KJ1005 - ■LM13 - ■■A1**		263
37	**D.188-LG225S4E**							
	14.6	24 268	0.82	100.96	★	**2KJ1211 - ■ME13 - ■■F1**		888
	16.0	22 129	0.90	92.06		**2KJ1211 - ■ME13 - ■■E1**		888
	18.2	19 415	1.0	80.77	★	**2KJ1211 - ■ME13 - ■■D1**		888
	21	16 684	1.2	69.41		**2KJ1211 - ■ME13 - ■■C1**		888
	27	12 995	1.5	54.06	★	**2KJ1211 - ■ME13 - ■■B1**		888
	34	10 324	1.9	42.95	★	**2KJ1211 - ■ME13 - ■■A1**		888
	Z.188-LG225S4E							
	28	12 584	1.2	52.35		**2KJ1111 - ■ME13 - ■■P1**		854
	30	11 591	1.4	48.22		**2KJ1111 - ■ME13 - ■■N1**		854
	35	10 060	1.6	41.85	★	**2KJ1111 - ■ME13 - ■■M1**		854
	40	8 867	1.9	36.89		**2KJ1111 - ■ME13 - ■■L1**		854
	45	7 781	2.4	32.37		**2KJ1111 - ■ME13 - ■■K1**		854
	D.168-LG225S4E							
	20	17 393	0.80	72.36		**2KJ1210 - ■ME13 - ■■D1**		743
	23	15 163	0.92	63.08	★	**2KJ1210 - ■ME13 - ■■C1**		743
	27	12 874	1.1	53.56		**2KJ1210 - ■ME13 - ■■B1**		743
	Z.168-LG225S4E							
	35	10 117	1.4	42.09		**2KJ1110 - ■ME13 - ■■U1**		724
	37	9 483	1.5	39.45		**2KJ1110 - ■ME13 - ■■T1**		724
	43	8 144	1.7	33.88	★	**2KJ1110 - ■ME13 - ■■S1**		724
	50	7 036	2.0	29.27		**2KJ1110 - ■ME13 - ■■Q1**		724
	57	6 211	2.3	25.84		**2KJ1110 - ■ME13 - ■■P1**		724
	63	5 591	2.5	23.26	★	**2KJ1110 - ■ME13 - ■■N1**		724
	76	4 639	3.0	19.3	★	**2KJ1110 - ■ME13 - ■■M1**		724
	84	4 231	3.3	17.6		**2KJ1110 - ■ME13 - ■■L1**		724
	159	2 226	3.5	9.26	★	**2KJ1110 - ■ME13 - ■■G1**		724
	204	1 731	4.1	7.2	★	**2KJ1110 - ■ME13 - ■■E1**		724
	Z.148-LG225S4E							
	38	9 190	0.87	38.23	★	**2KJ1108 - ■ME13 - ■■U1**		560
	42	8 435	0.95	35.09		**2KJ1108 - ■ME13 - ■■T1**		560

★ Preferred transmission ratio

Shaft designs, see page 2/117 — **1, 2 or 9**

Frequency and voltage, see page 8/20 — **1 to 9**

Gearbox housing mounting position, see page 2/119 — **A, F, H or R**

*) For mounting type B3

© Siemens AG 2011

2

Selection and ordering data (continued)

Power rating P_{Motor} kW	Output speed n_2 (50 Hz) rpm	Output torque T_2 Nm	Service factor f_B	Gearbox ratio i_{tot}		Order No.	Order code (No. of poles)	Weight *) kg
37	**Z.148-LG225S4E**							
	48	7 279	1.1	30.28		**2KJ1108 - ■ME13 - ■■S1**		560
	56	6 368	1.3	26.49		**2KJ1108 - ■ME13 - ■■R1**		560
	64	5 538	1.4	23.04		**2KJ1108 - ■ME13 - ■■Q1**		560
	73	4 858	1.6	20.21	★	**2KJ1108 - ■ME13 - ■■P1**		560
	86	4 108	1.9	17.09	★	**2KJ1108 - ■ME13 - ■■N1**		560
	95	3 728	2.1	15.51		**2KJ1108 - ■ME13 - ■■M1**		560
	109	3 250	2.5	13.52	★	**2KJ1108 - ■ME13 - ■■L1**		560
	128	2 759	2.9	11.48		**2KJ1108 - ■ME13 - ■■K1**		560
	167	2 113	3.8	8.79	★	**2KJ1108 - ■ME13 - ■■J1**		560
	170	2 077	2.3	8.64	★	**2KJ1108 - ■ME13 - ■■H1**		560
	188	1 885	2.5	7.84		**2KJ1108 - ■ME13 - ■■G1**		560
	194	1 820	3.1	7.57	★	**2KJ1108 - ■ME13 - ■■F1**		560
	215	1 644	2.9	6.84	★	**2KJ1108 - ■ME13 - ■■E1**		560
	229	1 546	3.5	6.43		**2KJ1108 - ■ME13 - ■■D1**		560
	253	1 394	3.0	5.8		**2KJ1108 - ■ME13 - ■■C1**		560
	299	1 183	4.3	4.92	★	**2KJ1108 - ■ME13 - ■■B1**		560
	331	1 067	3.6	4.44	★	**2KJ1108 - ■ME13 - ■■A1**		560
	Z.128-LG225S4E							
	59	6 021	0.85	25.05		**2KJ1107 - ■ME13 - ■■U1**		473
	69	5 146	0.99	21.41		**2KJ1107 - ■ME13 - ■■T1**		473
	76	4 651	1.1	19.35	★	**2KJ1107 - ■ME13 - ■■S1**		473
	79	4 481	1.1	18.64		**2KJ1107 - ■ME13 - ■■R1**		473
	91	3 875	1.3	16.12		**2KJ1107 - ■ME13 - ■■Q1**		473
	105	3 380	1.4	14.06	★	**2KJ1107 - ■ME13 - ■■P1**		473
	122	2 892	1.6	12.03	★	**2KJ1107 - ■ME13 - ■■N1**		473
	136	2 591	1.8	10.78		**2KJ1107 - ■ME13 - ■■M1**		473
	161	2 195	2.0	9.13	★	**2KJ1107 - ■ME13 - ■■L1**		473
	187	1 894	2.2	7.88		**2KJ1107 - ■ME13 - ■■K1**		473
	202	1 752	1.4	7.29	★	**2KJ1107 - ■ME13 - ■■J1**		473
	236	1 500	1.7	6.24	★	**2KJ1107 - ■ME13 - ■■H1**		473
	248	1 425	2.7	5.93	★	**2KJ1107 - ■ME13 - ■■G1**		473
	263	1 344	1.9	5.59	★	**2KJ1107 - ■ME13 - ■■F1**		473
	304	1 161	2.2	4.83		**2KJ1107 - ■ME13 - ■■E1**		473
	311	1 137	2.1	4.73	★	**2KJ1107 - ■ME13 - ■■D1**		473
	359	983	2.4	4.09	★	**2KJ1107 - ■ME13 - ■■C1**		473
	405	873	2.6	3.63	★	**2KJ1107 - ■ME13 - ■■B1**		473
	479	738	3.0	3.07	★	**2KJ1107 - ■ME13 - ■■A1**		473
	Z.108-K4-LGI225S4E							
	100	3 517	0.88	14.63		**2KJ1106 - ■ME13 - ■■N1**		401
	116	3 048	1.0	12.68	★	**2KJ1106 - ■ME13 - ■■M1**		401
	138	2 565	1.2	10.67	★	**2KJ1106 - ■ME13 - ■■L1**		401
	153	2 312	1.3	9.62		**2KJ1106 - ■ME13 - ■■K1**		401
	178	1 988	1.6	8.27	★	**2KJ1106 - ■ME13 - ■■J1**		401

★ Preferred transmission ratio

Shaft designs, see page 2/117 — **1, 2 or 9**

Frequency and voltage, see page 8/20 — **1 to 9**

Gearbox housing mounting position, see page 2/119 — **A, F, H or R**

*) For mounting type B3

© Siemens AG 2011

Selection and ordering data (continued)

Power rating P_{Motor} kW	Output speed n_2 (50 Hz) rpm	Output torque T_2 Nm	Service factor f_B	Gearbox ratio i_{tot}		Order No.	Order code (No. of poles)	Weight *) kg
37	**Z.108-K4-LGI225S4E**							
	207	1 707	1.1	7.1	★	**2KJ1106 - ■ME13 - ■■H1**		401
	229	1 541	1.1	6.41		**2KJ1106 - ■ME13 - ■■G1**		401
	267	1 324	1.3	5.51	★	**2KJ1106 - ■ME13 - ■■E1**		401
	281	1 260	0.91	5.24	★	**2KJ1106 - ■ME13 - ■■D1**		401
	333	1 060	1.1	4.41	★	**2KJ1106 - ■ME13 - ■■C1**		401
	369	957	1.2	3.98		**2KJ1106 - ■ME13 - ■■B1**		401
	430	822	1.3	3.42	★	**2KJ1106 - ■ME13 - ■■A1**		401
	E.148-LG225S4E							
	260	1 358	1.0	5.65		**2KJ1007 - ■ME13 - ■■J1**		404
	298	1 187	1.2	4.94		**2KJ1007 - ■ME13 - ■■H1**		404
	342	1 034	1.3	4.3		**2KJ1007 - ■ME13 - ■■G1**		404
	390	906	1.5	3.77	★	**2KJ1007 - ■ME13 - ■■F1**		404
	461	767	2.0	3.19	★	**2KJ1007 - ■ME13 - ■■E1**		404
	507	697	2.0	2.9		**2KJ1007 - ■ME13 - ■■D1**		404
	583	606	2.0	2.52	★	**2KJ1007 - ■ME13 - ■■C1**		404
	687	514	2.3	2.14		**2KJ1007 - ■ME13 - ■■B1**		404
	896	394	2.4	1.64	★	**2KJ1007 - ■ME13 - ■■A1**		404
	E.128-LG225S4E							
	299	1 180	0.81	4.91		**2KJ1006 - ■ME13 - ■■K1**		380
	331	1 067	0.94	4.44	★	**2KJ1006 - ■ME13 - ■■J1**		380
	343	1 029	0.97	4.28		**2KJ1006 - ■ME13 - ■■H1**		380
	397	889	1.1	3.7		**2KJ1006 - ■ME13 - ■■G1**		380
	455	776	1.3	3.23	★	**2KJ1006 - ■ME13 - ■■F1**		380
	533	663	1.5	2.76	★	**2KJ1006 - ■ME13 - ■■E1**		380
	595	594	1.6	2.47		**2KJ1006 - ■ME13 - ■■D1**		380
	700	505	1.7	2.1	★	**2KJ1006 - ■ME13 - ■■C1**		380
	812	435	1.8	1.81		**2KJ1006 - ■ME13 - ■■B1**		380
	1 081	327	2.1	1.36	★	**2KJ1006 - ■ME13 - ■■A1**		380
	E.108-K4-LGI225S4E							
	459	769	0.97	3.2		**2KJ1005 - ■ME13 - ■■F1**		343
	531	666	1.0	2.77	★	**2KJ1005 - ■ME13 - ■■E1**		343
45	**D.188-LG225ZM4E**							
	18.3	23 533	0.85	80.77	★	**2KJ1211 - ■MU13 - ■■D1**		888
	21	20 223	0.99	69.41		**2KJ1211 - ■MU13 - ■■C1**		888
	27	15 751	1.3	54.06	★	**2KJ1211 - ■MU13 - ■■B1**		888
	34	12 514	1.6	42.95	★	**2KJ1211 - ■MU13 - ■■A1**		888
	Z.188-LG225ZM4E							
	28	15 252	1.0	52.35		**2KJ1111 - ■MU13 - ■■P1**		854
	31	14 049	1.1	48.22		**2KJ1111 - ■MU13 - ■■N1**		854
	35	12 193	1.3	41.85	★	**2KJ1111 - ■MU13 - ■■M1**		854
	40	10 748	1.5	36.89		**2KJ1111 - ■MU13 - ■■L1**		854
	46	9 431	2.0	32.37		**2KJ1111 - ■MU13 - ■■K1**		854
	50	8 502	2.4	29.18	★	**2KJ1111 - ■MU13 - ■■J1**		854

★ Preferred transmission ratio

Shaft designs, see page 2/117 — **1, 2 or 9**

Frequency and voltage, see page 8/20 — **1 to 9**

Gearbox housing mounting position, see page 2/119 — **A, F, H or R**

*) For mounting type B3

© Siemens AG 2011

2

Selection and ordering data (continued)

Power rating P_{Motor} kW	Output speed n_2 (50 Hz) rpm	Output torque T_2 Nm	Service factor f_B	Gearbox ratio i_{tot}		Order No.	Order code (No. of poles)	Weight *) kg
45	**Z.188-LG225ZM4E**							
	60	7 217	2.8	24.77	★	**2KJ1111 - ■MU13 - ■■H1**		854
	64	6 704	3.0	23.01		**2KJ1111 - ■MU13 - ■■G1**		854
	D.168-LG225ZM4E							
	28	15 605	0.90	53.56		**2KJ1210 - ■MU13 - ■■B1**		743
	Z.168-LG225ZM4E							
	35	12 263	1.1	42.09		**2KJ1110 - ■MU13 - ■■U1**		724
	37	11 494	1.2	39.45		**2KJ1110 - ■MU13 - ■■T1**		724
	44	9 871	1.4	33.88	★	**2KJ1110 - ■MU13 - ■■S1**		724
	50	8 528	1.6	29.27		**2KJ1110 - ■MU13 - ■■Q1**		724
	57	7 529	1.9	25.84		**2KJ1110 - ■MU13 - ■■P1**		724
	63	6 777	2.1	23.26	★	**2KJ1110 - ■MU13 - ■■N1**		724
	76	5 623	2.5	19.3	★	**2KJ1110 - ■MU13 - ■■M1**		724
	84	5 128	2.7	17.6		**2KJ1110 - ■MU13 - ■■L1**		724
	96	4 499	3.0	15.44	★	**2KJ1110 - ■MU13 - ■■K1**		724
	111	3 866	3.4	13.27		**2KJ1110 - ■MU13 - ■■J1**		724
	159	2 698	2.9	9.26	★	**2KJ1110 - ■MU13 - ■■G1**		724
	205	2 098	3.4	7.2	★	**2KJ1110 - ■MU13 - ■■E1**		724
	238	1 806	4.2	6.2	★	**2KJ1110 - ■MU13 - ■■D1**		724
	263	1 635	4.1	5.61	★	**2KJ1110 - ■MU13 - ■■C1**		724
	299	1 436	4.9	4.93	★	**2KJ1110 - ■MU13 - ■■B1**		724
	331	1 299	5.0	4.46	★	**2KJ1110 - ■MU13 - ■■A1**		724
	D.148-LG225ZM4E							
	43	9 950	0.80	34.15	★	**2KJ1208 - ■MU13 - ■■A1**		572
	Z.148-LG225ZM4E							
	49	8 822	0.91	30.28		**2KJ1108 - ■MU13 - ■■S1**		560
	56	7 718	1.0	26.49		**2KJ1108 - ■MU13 - ■■R1**		560
	64	6 713	1.2	23.04		**2KJ1108 - ■MU13 - ■■Q1**		560
	73	5 888	1.4	20.21	★	**2KJ1108 - ■MU13 - ■■P1**		560
	86	4 979	1.6	17.09	★	**2KJ1108 - ■MU13 - ■■N1**		560
	95	4 519	1.8	15.51		**2KJ1108 - ■MU13 - ■■M1**		560
	109	3 939	2.0	13.52	★	**2KJ1108 - ■MU13 - ■■L1**		560
	128	3 345	2.4	11.48		**2KJ1108 - ■MU13 - ■■K1**		560
	168	2 561	3.1	8.79	★	**2KJ1108 - ■MU13 - ■■J1**		560
	171	2 517	1.9	8.64	★	**2KJ1108 - ■MU13 - ■■H1**		560
	188	2 284	2.1	7.84		**2KJ1108 - ■MU13 - ■■G1**		560
	195	2 206	2.5	7.57	★	**2KJ1108 - ■MU13 - ■■F1**		560
	216	1 993	2.4	6.84	★	**2KJ1108 - ■MU13 - ■■E1**		560
	229	1 873	2.9	6.43		**2KJ1108 - ■MU13 - ■■D1**		560
	254	1 690	2.5	5.8		**2KJ1108 - ■MU13 - ■■C1**		560
	300	1 433	3.5	4.92	★	**2KJ1108 - ■MU13 - ■■B1**		560
	332	1 294	3.0	4.44	★	**2KJ1108 - ■MU13 - ■■A1**		560

★ Preferred transmission ratio

Shaft designs, see page 2/117 — **1, 2 or 9**

Frequency and voltage, see page 8/20 — **1 to 9**

Gearbox housing mounting position, see page 2/119 — **A, F, H or R**

*) For mounting type B3

© Siemens AG 2011

Selection and ordering data (continued)

Power rating P_{Motor} kW	Output speed n_2 (50 Hz) rpm	Output torque T_2 Nm	Service factor f_B	Gearbox ratio i_{tot}		Order No.	Order code (No. of poles)	Weight *) kg
45	**Z.128-LG225ZM4E**							
	69	6 238	0.82	21.41		**2KJ1107 - ■MU13 - ■■T1**		473
	76	5 638	0.90	19.35	★	**2KJ1107 - ■MU13 - ■■S1**		473
	79	5 431	0.94	18.64		**2KJ1107 - ■MU13 - ■■R1**		473
	92	4 697	1.1	16.12		**2KJ1107 - ■MU13 - ■■Q1**		473
	105	4 096	1.2	14.06	★	**2KJ1107 - ■MU13 - ■■P1**		473
	123	3 505	1.3	12.03	★	**2KJ1107 - ■MU13 - ■■N1**		473
	137	3 141	1.5	10.78		**2KJ1107 - ■MU13 - ■■M1**		473
	162	2 660	1.7	9.13	★	**2KJ1107 - ■MU13 - ■■L1**		473
	187	2 296	1.9	7.88		**2KJ1107 - ■MU13 - ■■K1**		473
	202	2 124	1.2	7.29	★	**2KJ1107 - ■MU13 - ■■J1**		473
	236	1 818	1.4	6.24	★	**2KJ1107 - ■MU13 - ■■H1**		473
	249	1 728	2.3	5.93	★	**2KJ1107 - ■MU13 - ■■G1**		473
	264	1 629	1.6	5.59	★	**2KJ1107 - ■MU13 - ■■F1**		473
	305	1 407	1.8	4.83		**2KJ1107 - ■MU13 - ■■E1**		473
	312	1 378	1.7	4.73	★	**2KJ1107 - ■MU13 - ■■D1**		473
	361	1 192	2.0	4.09	★	**2KJ1107 - ■MU13 - ■■C1**		473
	406	1 058	2.2	3.63	★	**2KJ1107 - ■MU13 - ■■B1**		473
	480	894	2.5	3.07	★	**2KJ1107 - ■MU13 - ■■A1**		473
	Z.108-K4-LGI225ZM4E							
	116	3 690	0.84	12.68	★	**2KJ1106 - ■MU13 - ■■M1**		401
	138	3 105	1.0	10.67	★	**2KJ1106 - ■MU13 - ■■L1**		401
	153	2 799	1.1	9.62		**2KJ1106 - ■MU13 - ■■K1**		401
	178	2 407	1.3	8.27	★	**2KJ1106 - ■MU13 - ■■J1**		401
	208	2 066	0.87	7.1	★	**2KJ1106 - ■MU13 - ■■H1**		401
	230	1 865	0.94	6.41		**2KJ1106 - ■MU13 - ■■G1**		401
	268	1 603	1.1	5.51	★	**2KJ1106 - ■MU13 - ■■E1**		401
	334	1 283	0.89	4.41	★	**2KJ1106 - ■MU13 - ■■C1**		401
	371	1 158	0.97	3.98		**2KJ1106 - ■MU13 - ■■B1**		401
	431	995	1.1	3.42	★	**2KJ1106 - ■MU13 - ■■A1**		401
	E.148-LG225ZM4E							
	261	1 646	0.83	5.65		**2KJ1007 - ■MU13 - ■■J1**		404
	299	1 439	0.97	4.94		**2KJ1007 - ■MU13 - ■■H1**		404
	343	1 253	1.1	4.3		**2KJ1007 - ■MU13 - ■■G1**		404
	391	1 098	1.2	3.77	★	**2KJ1007 - ■MU13 - ■■F1**		404
	462	929	1.7	3.19	★	**2KJ1007 - ■MU13 - ■■E1**		404
	509	845	1.7	2.9		**2KJ1007 - ■MU13 - ■■D1**		404
	585	734	1.7	2.52	★	**2KJ1007 - ■MU13 - ■■C1**		404
	689	624	1.9	2.14		**2KJ1007 - ■MU13 - ■■B1**		404
	899	478	2.0	1.64	★	**2KJ1007 - ■MU13 - ■■A1**		404
	E.128-LG225ZM4E							
	345	1 247	0.80	4.28		**2KJ1006 - ■MU13 - ■■H1**		380
	399	1 078	0.93	3.7		**2KJ1006 - ■MU13 - ■■G1**		380
	457	941	1.1	3.23	★	**2KJ1006 - ■MU13 - ■■F1**		380

★ Preferred transmission ratio

Shaft designs, see page 2/117 — **1, 2 or 9**

Frequency and voltage, see page 8/20 — **1 to 9**

Gearbox housing mounting position, see page 2/119 — **A, F, H or R**

*) For mounting type B3

© Siemens AG 2011

Selection and ordering data (continued)

Power rating P_{Motor} kW	Output speed n_2 (50 Hz) rpm	Output torque T_2 Nm	Service factor f_B	Gearbox ratio i_{tot}		Order No.	Order code (No. of poles)	Weight *) kg
45	**E.128-LG225ZM4E**							
	534	804	1.2	2.76	★	**2KJ1006 - ■MU13 - ■■E1**		380
	815	527	1.5	1.81		**2KJ1006 - ■MU13 - ■■B1**		380
	1 085	396	1.7	1.36	★	**2KJ1006 - ■MU13 - ■■A1**		380
	E.108-K4-LGI225ZM4E							
	461	931	0.80	3.2		**2KJ1005 - ■MU13 - ■■F1**		343
	532	806	0.83	2.77	★	**2KJ1005 - ■MU13 - ■■E1**		343
55	**D.188-LG250ZM4E**							
	21	24 634	0.81	69.41		**2KJ1211 - ■NN13 - ■■C1**		978
	27	19 186	1.0	54.06	★	**2KJ1211 - ■NN13 - ■■B1**		978
	34	15 243	1.3	42.95	★	**2KJ1211 - ■NN13 - ■■A1**		978
	Z.188-LG250ZM4E							
	31	17 113	0.93	48.22		**2KJ1111 - ■NN13 - ■■N1**		944
	35	14 853	1.1	41.85	★	**2KJ1111 - ■NN13 - ■■M1**		944
	40	13 092	1.3	36.89		**2KJ1111 - ■NN13 - ■■L1**		944
	46	11 488	1.6	32.37		**2KJ1111 - ■NN13 - ■■K1**		944
	51	10 356	1.9	29.18	★	**2KJ1111 - ■NN13 - ■■J1**		944
	60	8 791	2.3	24.77	★	**2KJ1111 - ■NN13 - ■■H1**		944
	64	8 166	2.4	23.01		**2KJ1111 - ■NN13 - ■■G1**		944
	75	7 013	2.9	19.76	★	**2KJ1111 - ■NN13 - ■■F1**		944
	88	5 984	3.3	16.86		**2KJ1111 - ■NN13 - ■■E1**		944
	178	2 946	3.6	8.3		**2KJ1111 - ■NN13 - ■■A1**		944
	Z.168-LG250ZM4E							
	38	14 001	1.0	39.45		**2KJ1110 - ■NN13 - ■■T1**		814
	44	12 024	1.2	33.88	★	**2KJ1110 - ■NN13 - ■■S1**		814
	51	10 388	1.3	29.27		**2KJ1110 - ■NN13 - ■■Q1**		814
	57	9 171	1.5	25.84		**2KJ1110 - ■NN13 - ■■P1**		814
	64	8 255	1.7	23.26	★	**2KJ1110 - ■NN13 - ■■N1**		814
	77	6 850	2.0	19.3	★	**2KJ1110 - ■NN13 - ■■M1**		814
	84	6 246	2.2	17.6		**2KJ1110 - ■NN13 - ■■L1**		814
	96	5 480	2.5	15.44	★	**2KJ1110 - ■NN13 - ■■K1**		814
	112	4 710	2.8	13.27		**2KJ1110 - ■NN13 - ■■J1**		814
	143	3 670	3.4	10.34	★	**2KJ1110 - ■NN13 - ■■H1**		814
	160	3 286	2.4	9.26	★	**2KJ1110 - ■NN13 - ■■G1**		814
	180	2 914	4.0	8.21	★	**2KJ1110 - ■NN13 - ■■F1**		814
	206	2 555	2.8	7.2	★	**2KJ1110 - ■NN13 - ■■E1**		814
	239	2 200	3.4	6.2	★	**2KJ1110 - ■NN13 - ■■D1**		814
	264	1 991	3.4	5.61	★	**2KJ1110 - ■NN13 - ■■C1**		814
	300	1 750	4.0	4.93	★	**2KJ1110 - ■NN13 - ■■B1**		814
	332	1 583	4.1	4.46	★	**2KJ1110 - ■NN13 - ■■A1**		814
	Z.148-LG250ZM4E							
	56	9 401	0.85	26.49		**2KJ1108 - ■NN13 - ■■R1**		650
	64	8 177	0.98	23.04		**2KJ1108 - ■NN13 - ■■Q1**		650
	73	7 173	1.1	20.21	★	**2KJ1108 - ■NN13 - ■■P1**		650

★ Preferred transmission ratio

Shaft designs, see page 2/117 — **1, 2 or 9**

Frequency and voltage, see page 8/20 — **1 to 9**

Gearbox housing mounting position, see page 2/119 — **A, F, H or R**

*) For mounting type B3

© Siemens AG 2011

Selection and ordering data (continued)

Power rating P_{Motor} kW	Output speed n_2 (50 Hz) rpm	Output torque T_2 Nm	Service factor f_B	Gearbox ratio i_{tot}		Order No.	Order code (No. of poles)	Weight *) kg
55	**Z.148-LG250ZM4E**							
	87	6 065	1.3	17.09	★	**2KJ1108 - ■NN13 - ■■N1**		650
	95	5 504	1.5	15.51		**2KJ1108 - ■NN13 - ■■M1**		650
	109	4 798	1.7	13.52	★	**2KJ1108 - ■NN13 - ■■L1**		650
	129	4 074	2.0	11.48		**2KJ1108 - ■NN13 - ■■K1**		650
	168	3 120	2.6	8.79	★	**2KJ1108 - ■NN13 - ■■J1**		650
	171	3 066	1.6	8.64	★	**2KJ1108 - ■NN13 - ■■H1**		650
	189	2 782	1.7	7.84		**2KJ1108 - ■NN13 - ■■G1**		650
	196	2 687	2.1	7.57	★	**2KJ1108 - ■NN13 - ■■F1**		650
	216	2 428	2.0	6.84	★	**2KJ1108 - ■NN13 - ■■E1**		650
	230	2 282	2.4	6.43		**2KJ1108 - ■NN13 - ■■D1**		650
	255	2 058	2.0	5.8		**2KJ1108 - ■NN13 - ■■C1**		650
	301	1 746	2.9	4.92	★	**2KJ1108 - ■NN13 - ■■B1**		650
	333	1 576	2.4	4.44	★	**2KJ1108 - ■NN13 - ■■A1**		650
	Z.128-K4-LGI250ZM4E							
	92	5 721	0.87	16.12		**2KJ1107 - ■NN13 - ■■Q1**		563
	105	4 990	0.98	14.06	★	**2KJ1107 - ■NN13 - ■■P1**		563
	123	4 269	1.1	12.03	★	**2KJ1107 - ■NN13 - ■■N1**		563
	137	3 826	1.2	10.78		**2KJ1107 - ■NN13 - ■■M1**		563
	162	3 240	1.4	9.13	★	**2KJ1107 - ■NN13 - ■■L1**		563
	188	2 797	1.5	7.88		**2KJ1107 - ■NN13 - ■■K1**		563
	203	2 587	0.98	7.29	★	**2KJ1107 - ■NN13 - ■■J1**		563
	237	2 215	1.1	6.24	★	**2KJ1107 - ■NN13 - ■■H1**		563
	250	2 105	1.9	5.93	★	**2KJ1107 - ■NN13 - ■■G1**		563
	265	1 984	1.3	5.59	★	**2KJ1107 - ■NN13 - ■■F1**		563
	306	1 714	1.5	4.83		**2KJ1107 - ■NN13 - ■■E1**		563
	313	1 679	1.4	4.73	★	**2KJ1107 - ■NN13 - ■■D1**		563
	362	1 452	1.6	4.09	★	**2KJ1107 - ■NN13 - ■■C1**		563
	408	1 288	1.8	3.63	★	**2KJ1107 - ■NN13 - ■■B1**		563
	482	1 090	2.0	3.07	★	**2KJ1107 - ■NN13 - ■■A1**		563
	E.148-LG250ZM4E							
	300	1 753	0.80	4.94		**2KJ1007 - ■NN13 - ■■H1**		494
	344	1 526	0.87	4.3		**2KJ1007 - ■NN13 - ■■G1**		494
	393	1 338	1.0	3.77	★	**2KJ1007 - ■NN13 - ■■F1**		494
	464	1 132	1.4	3.19	★	**2KJ1007 - ■NN13 - ■■E1**		494
	510	1 029	1.4	2.9		**2KJ1007 - ■NN13 - ■■D1**		494
	692	759	1.6	2.14		**2KJ1007 - ■NN13 - ■■B1**		494
	902	582	1.6	1.64	★	**2KJ1007 - ■NN13 - ■■A1**		494
	E.128-K4-LGI250ZM4E							
	458	1 146	0.87	3.23	★	**2KJ1006 - ■NN13 - ■■F1**		470
	536	980	1.0	2.76	★	**2KJ1006 - ■NN13 - ■■E1**		470
75	**D.188-K4-LGI280S4E**							
	35	20 716	0.97	42.95	★	**2KJ1211 - ■PG13 - ■■A1**		1 103

★ Preferred transmission ratio

Shaft designs, see page 2/117 — **1, 2 or 9**

Frequency and voltage, see page 8/20 — **1 to 9**

Gearbox housing mounting position, see page 2/119 — **A, F, H or R**

*) For mounting type B3

© Siemens AG 2011

2

Selection and ordering data (continued)

Power rating P_{Motor} kW	Output speed n_2 (50 Hz) rpm	Output torque T_2 Nm	Service factor f_B	Gearbox ratio i_{tot}		Order No.	Order code (No. of poles)	Weight *) kg
75	**Z.188-K4-LGI280S4E**							
	40	17 793	0.93	36.89		**2KJ1111 - ■PG13 - ■■L1**		1 069
	46	15 613	1.2	32.37		**2KJ1111 - ■PG13 - ■■K1**		1 069
	51	14 074	1.4	29.18	★	**2KJ1111 - ■PG13 - ■■J1**		1 069
	60	11 947	1.7	24.77	★	**2KJ1111 - ■PG13 - ■■H1**		1 069
	64	11 098	1.8	23.01		**2KJ1111 - ■PG13 - ■■G1**		1 069
	75	9 531	2.1	19.76	★	**2KJ1111 - ■PG13 - ■■F1**		1 069
	88	8 132	2.5	16.86		**2KJ1111 - ■PG13 - ■■E1**		1 069
	112	6 405	2.9	13.28	★	**2KJ1111 - ■PG13 - ■■D1**		1 069
	139	5 156	3.1	10.69	★	**2KJ1111 - ■PG13 - ■■C1**		1 069
	160	4 481	3.2	9.29		**2KJ1111 - ■PG13 - ■■B1**		1 069
	179	4 003	2.7	8.3		**2KJ1111 - ■PG13 - ■■A1**		1 069
	Z.168-K4-LGI280S4E							
	51	14 118	0.99	29.27		**2KJ1110 - ■PG13 - ■■Q1**		939
	58	12 463	1.1	25.84		**2KJ1110 - ■PG13 - ■■P1**		939
	64	11 219	1.2	23.26	★	**2KJ1110 - ■PG13 - ■■N1**		939
	77	9 309	1.5	19.3	★	**2KJ1110 - ■PG13 - ■■M1**		939
	84	8 489	1.6	17.6		**2KJ1110 - ■PG13 - ■■L1**		939
	96	7 447	1.8	15.44	★	**2KJ1110 - ■PG13 - ■■K1**		939
	112	6 400	2.0	13.27		**2KJ1110 - ■PG13 - ■■J1**		939
	144	4 987	2.5	10.34	★	**2KJ1110 - ■PG13 - ■■H1**		939
	160	4 466	1.8	9.26	★	**2KJ1110 - ■PG13 - ■■G1**		939
	181	3 960	2.9	8.21	★	**2KJ1110 - ■PG13 - ■■F1**		939
	206	3 473	2.0	7.2	★	**2KJ1110 - ■PG13 - ■■E1**		939
	240	2 990	2.5	6.2	★	**2KJ1110 - ■PG13 - ■■D1**		939
	265	2 706	2.5	5.61	★	**2KJ1110 - ■PG13 - ■■C1**		939
	301	2 378	3.0	4.93	★	**2KJ1110 - ■PG13 - ■■B1**		939
	333	2 151	3.0	4.46	★	**2KJ1110 - ■PG13 - ■■A1**		939
	Z.148-K4-LGI280S4E							
	74	9 748	0.82	20.21	★	**2KJ1108 - ■PG13 - ■■P1**		775
	87	8 243	0.97	17.09	★	**2KJ1108 - ■PG13 - ■■N1**		775
	96	7 481	1.1	15.51		**2KJ1108 - ■PG13 - ■■M1**		775
	110	6 521	1.2	13.52	★	**2KJ1108 - ■PG13 - ■■L1**		775
	129	5 537	1.4	11.48		**2KJ1108 - ■PG13 - ■■K1**		775
	169	4 240	1.9	8.79	★	**2KJ1108 - ■PG13 - ■■J1**		775
	172	4 167	1.2	8.64	★	**2KJ1108 - ■PG13 - ■■H1**		775
	189	3 781	1.3	7.84		**2KJ1108 - ■PG13 - ■■G1**		775
	196	3 651	1.5	7.57	★	**2KJ1108 - ■PG13 - ■■F1**		775
	217	3 299	1.5	6.84	★	**2KJ1108 - ■PG13 - ■■E1**		775
	231	3 101	1.7	6.43		**2KJ1108 - ■PG13 - ■■D1**		775
	256	2 797	1.5	5.8		**2KJ1108 - ■PG13 - ■■C1**		775
	302	2 373	2.1	4.92	★	**2KJ1108 - ■PG13 - ■■B1**		775
	334	2 142	1.8	4.44	★	**2KJ1108 - ■PG13 - ■■A1**		775

★ Preferred transmission ratio

Shaft designs, see page 2/117 — **1, 2 or 9**

Frequency and voltage, see page 8/20 — **1 to 9**

Gearbox housing mounting position, see page 2/119 — **A, F, H or R**

*) For mounting type B3

© Siemens AG 2011

Selection and ordering data (continued)

Power rating P_{Motor} kW	Output speed n_2 (50 Hz) rpm	Output torque T_2 Nm	Service factor f_B	Gearbox ratio i_{tot}		Order No.	Order code (No. of poles)	Weight *) kg
75	**E.148-K4-LGI280S4E**							
	466	1 539	1.0	3.19	★	**2KJ1007 - ■PG13 - ■■E1**		619
	512	1 399	1.0	2.9		**2KJ1007 - ■PG13 - ■■D1**		619
90	**D.188-K4-LGI280ZM4E**							
	35	24 859	0.80	42.95	★	**2KJ1211 - ■PW13 - ■■A1**		1 143
	Z.188-K4-LGI280ZM4E							
	46	18 735	0.98	32.37		**2KJ1111 - ■PW13 - ■■K1**		1 109
	51	16 889	1.2	29.18	★	**2KJ1111 - ■PW13 - ■■J1**		1 109
	60	14 337	1.4	24.77	★	**2KJ1111 - ■PW13 - ■■H1**		1 109
	64	13 318	1.5	23.01		**2KJ1111 - ■PW13 - ■■G1**		1 109
	75	11 437	1.7	19.76	★	**2KJ1111 - ■PW13 - ■■F1**		1 109
	88	9 758	2.0	16.86		**2KJ1111 - ■PW13 - ■■E1**		1 109
	112	7 686	2.4	13.28	★	**2KJ1111 - ■PW13 - ■■D1**		1 109
	139	6 187	2.6	10.69	★	**2KJ1111 - ■PW13 - ■■C1**		1 109
	160	5 377	2.7	9.29		**2KJ1111 - ■PW13 - ■■B1**		1 109
	179	4 804	2.2	8.3		**2KJ1111 - ■PW13 - ■■A1**		1 109
	Z.168-K4-LGI280ZM4E							
	51	16 941	0.83	29.27		**2KJ1110 - ■PW13 - ■■Q1**		979
	58	14 956	0.94	25.84		**2KJ1110 - ■PW13 - ■■P1**		979
	64	13 463	1.0	23.26	★	**2KJ1110 - ■PW13 - ■■N1**		979
	77	11 171	1.3	19.3	★	**2KJ1110 - ■PW13 - ■■M1**		979
	84	10 187	1.4	17.6		**2KJ1110 - ■PW13 - ■■L1**		979
	96	8 936	1.5	15.44	★	**2KJ1110 - ■PW13 - ■■K1**		979
	112	7 681	1.7	13.27		**2KJ1110 - ■PW13 - ■■J1**		979
	144	5 985	2.1	10.34	★	**2KJ1110 - ■PW13 - ■■H1**		979
	160	5 360	1.5	9.26	★	**2KJ1110 - ■PW13 - ■■G1**		979
	181	4 752	2.4	8.21	★	**2KJ1110 - ■PW13 - ■■F1**		979
	206	4 167	1.7	7.2	★	**2KJ1110 - ■PW13 - ■■E1**		979
	240	3 588	2.1	6.2	★	**2KJ1110 - ■PW13 - ■■D1**		979
	265	3 247	2.1	5.61	★	**2KJ1110 - ■PW13 - ■■C1**		979
	301	2 853	2.5	4.93	★	**2KJ1110 - ■PW13 - ■■B1**		979
	333	2 581	2.5	4.46	★	**2KJ1110 - ■PW13 - ■■A1**		979
	Z.148-K4-LGI280ZM4E							
	87	9 891	0.81	17.09	★	**2KJ1108 - ■PW13 - ■■N1**		815
	96	8 977	0.89	15.51		**2KJ1108 - ■PW13 - ■■M1**		815
	110	7 825	1.0	13.52	★	**2KJ1108 - ■PW13 - ■■L1**		815
	129	6 644	1.2	11.48		**2KJ1108 - ■PW13 - ■■K1**		815
	169	5 088	1.6	8.79	★	**2KJ1108 - ■PW13 - ■■J1**		815
	172	5 001	0.96	8.64	★	**2KJ1108 - ■PW13 - ■■H1**		815
	189	4 538	1.1	7.84		**2KJ1108 - ■PW13 - ■■G1**		815
	196	4 381	1.3	7.57	★	**2KJ1108 - ■PW13 - ■■F1**		815
	217	3 959	1.2	6.84	★	**2KJ1108 - ■PW13 - ■■E1**		815
	231	3 722	1.5	6.43		**2KJ1108 - ■PW13 - ■■D1**		815
	256	3 357	1.3	5.8		**2KJ1108 - ■PW13 - ■■C1**		815

★ Preferred transmission ratio

Shaft designs, see page 2/117 — **1, 2 or 9**

Frequency and voltage, see page 8/20 — **1 to 9**

Gearbox housing mounting position, see page 2/119 — **A, F, H or R**

*) For mounting type B3

© Siemens AG 2011

2

Selection and ordering data (continued)

Power rating P_{Motor} kW	Output speed n_2 (50 Hz) rpm	Output torque T_2 Nm	Service factor f_B	Gearbox ratio i_{tot}		Order No.	Order code (No. of poles)	Weight *) kg
90	**Z.148-K4-LGI280ZM4E**							
	302	2 848	1.8	4.92	★	**2KJ1108 - ■PW13 - ■■B1**		815
	334	2 570	1.5	4.44	★	**2KJ1108 - ■PW13 - ■■A1**		815
	E.148-K4-LGI280ZM4E							
	466	1 846	0.84	3.19	★	**2KJ1007 - ■PW13 - ■■E1**		659
	512	1 678	0.83	2.9		**2KJ1007 - ■PW13 - ■■D1**		659
110	**Z.188-K2-LGI315S4E**							
	88	11 887	1.7	16.86		**2KJ1111 - ■QQ13 - ■■E1**		1 289
	112	9 363	2.0	13.28	★	**2KJ1111 - ■QQ13 - ■■D1**		1 289
	139	7 537	2.1	10.69	★	**2KJ1111 - ■QQ13 - ■■C1**		1 289
	160	6 550	2.2	9.29		**2KJ1111 - ■QQ13 - ■■B1**		1 289
	180	5 852	1.8	8.3		**2KJ1111 - ■QQ13 - ■■A1**		1 289
132	**Z.188-K2-LGI315ZM4E**							
	88	14 312	1.4	16.86		**2KJ1111 - ■QS13 - ■■E1**		1 344
	112	11 273	1.7	13.28	★	**2KJ1111 - ■QS13 - ■■D1**		1 344
	139	9 075	1.8	10.69	★	**2KJ1111 - ■QS13 - ■■C1**		1 344
	160	7 886	1.8	9.29		**2KJ1111 - ■QS13 - ■■B1**		1 344
	179	7 046	1.5	8.3		**2KJ1111 - ■QS13 - ■■A1**		1 344
160	**Z.188-K2-LGI315L4E**							
	88	17 348	1.2	16.86		**2KJ1111 - ■QU13 - ■■E1**		1 469
	112	13 665	1.4	13.28	★	**2KJ1111 - ■QU13 - ■■D1**		1 469
	139	11 000	1.5	10.69	★	**2KJ1111 - ■QU13 - ■■C1**		1 469
	160	9 559	1.5	9.29		**2KJ1111 - ■QU13 - ■■B1**		1 469
	179	8 540	1.3	8.3		**2KJ1111 - ■QU13 - ■■A1**		1 469
200	**Z.188-K2-LGI315ZLB4E**							
	88	21 612	0.93	16.86		**2KJ1111 - ■QV13 - ■■E1**		1 584
	112	17 023	1.1	13.28	★	**2KJ1111 - ■QV13 - ■■D1**		1 584
	139	13 703	1.2	10.69	★	**2KJ1111 - ■QV13 - ■■C1**		1 584
	160	11 909	1.2	9.29		**2KJ1111 - ■QV13 - ■■B1**		1 584
	180	10 640	1.0	8.3		**2KJ1111 - ■QV13 - ■■A1**		1 584

★ Preferred transmission ratio

Shaft designs, see page 2/117 — **1, 2 or 9**

Frequency and voltage, see page 8/20 — **1 to 9**

Gearbox housing mounting position, see page 2/119 — **A, F, H or R**

*) For mounting type B3

© Siemens AG 2011

Selection and ordering data

Gearbox size	Ratio code	Transmis-sion ratio	Output speed	Twisting angle [2]	Nominal torque	Permissible input torque T_1 [Nm] 2.5x the value is permissible for a brief period (e.g. motor starting torque)												
Max. gearbox torque	Order No.					3	3	5	10	20	26	61	98	198	198	291	356	580	1290
	15th and 16th position	i_{tot}	n_2 (50 Hz)	φ	T_{2N} (f_B=1)	Motor size												
Nm			rpm	arcmin	Nm	63	71	80	90	100	112	132	160	180	200	225	250	280	315
1-stage helical gearbox with 4-pole motors																		
E.38	**S1**	9.33 ★	155	15	32	•	•											
32 … 82	**R1**	8.30	175	15	32	•	•	•										
	Q1	7.20 ★	201	16	38	•	•	•	•									
	P1	6.73	215	16	48	•	•	•	•									
	N1	5.92 ★	245	17	53	•	•	•	•									
	M1	5.18	280	17	70	•	•	•	•	•								
	L1	4.58 ★	317	17	78	•	•	•	•	•	• [1]							
	K1	4.15	349	18	62	•	•	•	•	•	• [1]							
	J1	3.67 ★	395	18	70	•	•	•	•	•	• [1]							
	H1	3.31	438	18	65	•	•	•	•	•	• [1]							
	G1	3.00 ★	483	19	80	•	•	•	•	•	• [1]							
	F1	2.73	531	20	80	•	•	•	•	•	• [1]							
	E1	2.50 ★	580	22	73	•	•	•	•	•	• [1]							
	D1	2.24	647	22	72	•	•	•	•	•	• [1]							
	C1	2.05 ★	707	22	80	•	•	•	•	•	• [1]							
	B1	1.85	784	22	82	•	•	•	•	•	• [1]							
	A1	1.59 ★	912	24	72	•	•	•	•	•	• [1]							
E.48	**U1**	11.30	128	12	55	•	•	•										
55 … 170	**T1**	10.00 ★	145	12	80	•	•	•	•									
	S1	9.09	160	13	64	•	•	•	•									
	R1	8.17 ★	177	13	85	•	•	•	•									
	Q1	7.00	207	13	97	•	•	•	•	•								
	P1	6.33 ★	229	13	115	•	•	•	•	•	•							
	N1	5.85	248	13	120	•	•	•	•	•	•							
	M1	5.08 ★	285	14	120	•	•	•	•	•	•	• [1]						
	L1	4.62	314	14	130	•	•	•	•	•	•	• [1]						
	K1	4.21 ★	344	14	150	•	•	•	•	•	•	• [1]						
	J1	3.87	375	15	160	•	•	•	•	•	•	• [1]						
	H1	3.56 ★	407	15	140	•	•	•	•	•	•	• [1]						
	G1	3.24	448	15	150	•	•	•	•	•	•	• [1]						
	F1	2.95 ★	492	15	170	•	•	•	•	•	•	• [1]						
	E1	2.70	537	15	160	•	•	•	•	•	•	• [1]						
	D1	2.41 ★	602	15	150	•	•	•	•	•	•	• [1]						
	C1	2.15	674	18	135			•	•	•	•	• [1]						
	B1	1.83	792	19	115			•	•	•	•	• [1]						
	A1	1.52 ★	954	22	100			•	•	•	•	• [1]						

★ Preferred transmission ratio

[1] Only possible with integrated adapter.

[2] Twisting angle applies to reduced-backlash gearboxes.

In the case of gearboxes of size 18 or 28, only possible with integrated motor or input unit KQ and KQS.

Calculation of maximum output torque T_{2max} for gearboxes with input units:

$T_{2max} = T_1 \times i_{tot}$, if $T_{2max} \leq T_{2N}$

If $T_{2max} \geq T_{2N}$ the max. output torque T_{2N} of the gearbox is the decisive factor.

© Siemens AG 2011

Transmission ratios and maximum torques

Selection and ordering data (continued)

Gearbox size	Ratio code	Transmission ratio	Output speed	Twisting angle [2]	Nominal torque	Permissible input torque T_1 [Nm] 2.5x the value is permissible for a brief period (e.g. motor starting torque)													
Max. gearbox torque	Order No.					3	3	5	10	20	26	61	98	198	198	291	356	580	1290
Nm	15th and 16th position	i_{tot}	n_2 (50 Hz) rpm	φ arcmin	T_{2N} (f_B=1) Nm	Motor size 63	71	80	90	100	112	132	160	180	200	225	250	280	315
E68	**W1**	12.40 ★	117	10	81	•	•	•	•										
81 … 250	**V1**	11.18	130	10	92	•	•	•	•										
	U1	10.08 ★	144	11	95	•	•	•	•										
	T1	8.82	164	11	150	•	•	•	•	•									
	S1	7.92 ★	183	11	170	•	•	•	•	•	•								
	R1	7.23	201	11	150	•	•	•	•	•	•								
	P1	6.42 ★	226	11	170	•	•	•	•	•	•	•							
	N1	5.92	245	11	190	•	•	•	•	•	•	•							
	M1	5.36 ★	271	11	220	•	•	•	•	•	•	•							
	L1	4.93	294	12	225	•	•	•	•	•	•	•							
	K1	4.56 ★	318	12	220	•	•	•	•	•	•	•	• [1]						
	J1	4.24	342	12	230	•	•	•	•	•	•	•	• [1]						
	H1	3.74 ★	388	12	230	•	•	•	•	•	•	•	• [1]						
	G1	3.45	420	13	240	•	•	•	•	•	•	•	• [1]						
	F1	3.09 ★	469	13	250	•	•	•	•	•	•	•	• [1]						
	E1	2.85	509	15	250			•	•	•	•	•	• [1]						
	D1	2.39	607	15	230			•	•	•	•	•	• [1]						
	C1	2.04 ★	711	17	210			•	•	•	•	•	• [1]						
	B1	1.70	853	17	175					•	•	•	• [1]						
	A1	1.41 ★	1 028	19	150					•	•	•	• [1]						
E88	**S1**	10.33 ★	140	8	230				•	•	•								
210 … 450	**R1**	9.46	153	8	210				•	•	•								
	Q1	8.42 ★	172	8	245				•	•	•	•							
	P1	7.69	189	8	245				•	•	•	•							
	N1	7.07 ★	205	9	290				•	•	•	•							
	M1	6.53	222	9	300				•	•	•	•							
	L1	6.06 ★	239	9	280				•	•	•	•	•						
	K1	5.65	257	9	320				•	•	•	•	•						
	J1	5.11 ★	284	9	370				•	•	•	•	•	• [1]					
	H1	4.70	309	9	385				•	•	•	•	•	• [1]					
	G1	4.23 ★	343	9	400				•	•	•	•	•	• [1]					
	F1	3.90	372	11	385				•	•	•	•	•	• [1]					
	E1	3.30	439	11	450				•	•	•	•	•	• [1]					
	D1	2.88 ★	503	12	435				•	•	•	•	•	• [1]					
	C1	2.45	592	13	420					•	•	•	•	• [1]					
	B1	2.09 ★	694	13	420					•	•	•	•	• [1]					
	A1	1.71 ★	848	14	355					•	•	•	•	• [1]					

★ Preferred transmission ratio

[1] Only possible with integrated adapter.

[2] Twisting angle applies to reduced-backlash gearboxes.

In the case of gearboxes of size 18 or 28, only possible with integrated motor or input unit KQ and KQS.

Calculation of maximum output torque T_{2max} for gearboxes with input units:

$T_{2max} = T_1 \times i_{tot}$, if $T_{2max} \leq T_{2N}$

If $T_{2max} \geq T_{2N}$ the max. output torque T_{2N} of the gearbox is the decisive factor.

© Siemens AG 2011

Selection and ordering data (continued)

Gearbox size	Ratio code	Transmission ratio	Output speed	Twisting angle [2]	Nominal torque	Permissible input torque T_1 [Nm] 2.5x the value is permissible for a brief period (e.g. motor starting torque)													
Max. gearbox torque	Order No.					3	3	5	10	20	26	61	98	198	198	291	356	580	1290
	15th and 16th position	i_{tot}	n_2 (50 Hz)	φ	T_{2N} (f_B=1)	Motor size													
Nm			rpm	arcmin	Nm	63	71	80	90	100	112	132	160	180	200	225	250	280	315
E108	**K1**	5.46 ★	266	8	660				•	•	•	•	•	•	•	• [1]			
550 … 745	**J1**	5.00	290	9	680				•	•	•	•	•	•	•	• [1]			
	H1	4.26	340	9	720				•	•	•	•	•	•	•	• [1]			
	G1	3.76 ★	386	9	600				•	•	•	•	•	•	•	• [1]			
	F1	3.20	453	10	745					•	•	•	•	•	•	• [1]			
	E1	2.77 ★	523	10	670					•	•	•	•	•	•	• [1]			
	C1	2.33 ★	622	10	680					•	•	•	•	•	•	• [1]			
	B1	2.11	687	11	620							•	•	•	•	• [1]			
	A1	1.81 ★	801	12	550							•	•	•	•	• [1]			
E128	**T1**	10.14 ★	143	6	544					•	•	•							
544 … 1000	**S1**	9.40	154	7	584					•	•	•							
	R1	8.94 ★	162	7	640					•	•	•	•						
	Q1	8.35	174	7	712					•	•	•	•						
	P1	7.37 ★	197	7	816					•	•	•	•	•	•				
	N1	6.95	209	7	880					•	•	•	•	•	•				
	M1	6.23 ★	233	7	928					•	•	•	•	•	•	•			
	L1	5.75	252	8	960					•	•	•	•	•	•	•			
	K1	4.91	295	8	960					•	•	•	•	•	•	•			
	J1	4.44 ★	327	8	1 000					•	•	•	•	•	•	•			
	H1	4.28	339	9	1 000						•	•	•	•	•	•	• [1]		
	G1	3.70	392	9	1 000					•	•	•	•	•	•	•	• [1]		
	F1	3.23 ★	449	9	1 000					•	•	•	•	•	•	•	• [1]		
	E1	2.76 ★	525	9	1 000					•	•	•	•	•	•	•	• [1]		
	D1	2.47	587	9	950							•	•	•	•	•	• [1]		
	C1	2.10 ★	690	10	860							•	•	•	•	•	• [1]		
	B1	1.81	801	10	800								•	•	•	•	• [1]		
	A1	1.36 ★	1 066	12	680								•	•	•	•	• [1]		
E148	**U1**	13.67 ★	106	5	600							•							
600 … 1550	**T1**	12.54	116	5	600							•							
	S1	11.57 ★	125	6	680							•							
	R1	10.73	135	6	760							•							
	Q1	10.13 ★	143	6	800							•	•						
	P1	9.47	153	6	920							•	•						
	N1	8.42 ★	172	6	1 000							•	•	•	•				
	M1	7.95	182	6	1 060							•	•	•	•				
	L1	7.14 ★	203	6	1 120							•	•	•	•	•			
	K1	6.55	221	7	1 150							•	•	•	•	•			
	J1	5.65	257	7	1 360							•	•	•	•	•	•		
	H1	4.94	294	7	1 400							•	•	•	•	•	•		
	G1	4.30	337	8	1 330							•	•	•	•	•	•	•	
	F1	3.77 ★	385	8	1 350							•	•	•	•	•	•	•	
	E1	3.19 ★	455	8	1 550							•	•	•	•	•	•	•	
	D1	2.90	500	9	1 400							•	•	•	•	•	•	•	
	C1	2.52 ★	575	9	1 220							•	•	•	•	•	•	•	
	B1	2.14	678	9	1 200								•	•	•	•	•	•	
	A1	1.64 ★	884	10	960								•	•	•	•	•	•	

★ Preferred transmission ratio

[1] Only possible with integrated adapter.

[2] Twisting angle applies to reduced-backlash gearboxes.

In the case of gearboxes of size 18 or 28, only possible with integrated motor or input unit KQ and KQS.

Calculation of maximum output torque T_{2max} for gearboxes with input units:

$T_{2max} = T_1 \times i_{tot}$, if $T_{2max} \leq T_{2N}$

If $T_{2max} \geq T_{2N}$ the max. output torque T_{2N} of the gearbox is the decisive factor.

© Siemens AG 2011

Transmission ratios and maximum torques

Selection and ordering data (continued)

Gearbox size	Ratio code	Transmission ratio	Output speed	Twisting angle [2]	Nominal torque	Permissible input torque T_1 [Nm] 2.5x the value is permissible for a brief period (e.g. motor starting torque)													
Max. gearbox torque	Order No.					3	3	5	10	20	26	61	98	198	198	291	356	580	1290
	15th and 16th position	i_{tot}	n_2 (50 Hz)	φ	T_{2N} (f_B=1)	Motor size													
Nm			rpm	arcmin	Nm	63	71	80	90	100	112	132	160	180	200	225	250	280	315
2-stage and 3-stage helical gearbox with 4-pole motors, 50 Hz (at service factor f_B =1 and ambient temperature of 20 °C)																			
D18	**P1**	200.36	7.2	31	90		•												
90	**N1**	172.85 ★	8.4	31	90		•												
	M1	148.50	9.8	31	90		•												
	L1	136.71 ★	10.6	31	90		•												
	K1	124.29	11.7	31	90		•												
	J1	110.01 ★	13.2	31	90		•												
	H1	92.14	15.7	31	90		•												
	G1	78.56 ★	18.5	31	90		•												
	F1	66.78 ★	22.0	31	90		•												
	E1	58.03	25.0	31	90		•												
	D1	50.51 ★	29.0	31	90		•												
	C1	45.56	32.0	31	90		•												
	B1	40.21	36.0	31	90		•												
	A1	32.26 ★	45.0	31	90		•												
Z18	**U1**	43.15	34	28	90		•												
46 ... 90	**T1**	37.23 ★	39	28	90		•												
	S1	31.98	45	29	90		•												
	R1	29.45 ★	49	29	90		•												
	Q1	26.77	54	29	90		•												
	P1	23.69 ★	61	29	90		•												
	N1	19.85	73	29	90		•												
	M1	16.92 ★	86	29	90		•												
	L1	14.38 ★	101	29	90		•												
	K1	12.50	116	30	90		•												
	J1	10.88 ★	133	30	87		•												
	H1	9.81	148	30	83		•												
	G1	8.66	167	30	80		•												
	F1	7.42 ★	195	38	55		•												
	E1	6.45	225	39	53		•												
	D1	5.61 ★	258	40	51		•												
	C1	5.06	286	40	49		•												
	B1	4.47	325	40	49		•												
	A1	3.58 ★	405	41	46		•												

★ Preferred transmission ratio

[1] Only possible with integrated adapter.

[2] Twisting angle applies to reduced-backlash gearboxes.

In the case of gearboxes of size 18 or 28, only possible with integrated motor or input unit KQ and KQS.

Calculation of maximum output torque T_{2max} for gearboxes with input units:

$T_{2max} = T_1 \times i_{tot}$, if $T_{2max} \leq T_{2N}$

If $T_{2max} \geq T_{2N}$ the max. output torque T_{2N} of the gearbox is the decisive factor.

© Siemens AG 2011

Selection and ordering data (continued)

Gearbox size	Ratio code	Transmission ratio	Output speed	Twisting angle [2]	Nominal torque	Permissible input torque T_1 [Nm] 2.5x the value is permissible for a brief period (e.g. motor starting torque)													
Max. gearbox torque	Order No.					3	3	5	10	20	26	61	98	198	198	291	356	580	1290
Nm	15th and 16th position	i_{tot}	n_2 (50 Hz) rpm	φ arcmin	T_{2N} (f_B=1) Nm	Motor size 63	71	80	90	100	112	132	160	180	200	225	250	280	315
D28	**N1**	241.05	6.0	26	140		•												
140	**M1**	207.96 ★	7.0	26	140		•	•											
	L1	178.66	8.1	26	140		•	•											
	K1	164.48 ★	8.8	26	140		•	•	•										
	J1	149.53	9.7	26	140		•	•	•										
	H1	132.35 ★	11.0	26	140		•	•	•										
	G1	110.86	13.1	26	140		•	•	•										
	F1	94.52 ★	15.3	26	140		•	•	•										
	E1	80.34 ★	18.0	26	140		•	•	•										
	D1	69.82	21.0	26	140		•	•	•										
	C1	60.77 ★	24.0	26	140		•	•	•										
	B1	54.82	26.0	26	140		•	•	•										
	A1	48.38	30.0	26	140		•	•	•										
Z28	**C2**	51.35	28	24	140		•												
77 … 140	**B2**	43.30 ★	33	24	140		•	•											
	A2	38.45	38	24	140		•	•											
	X1	33.71 ★	43	24	140		•	•	•										
	W1	30.16	48	24	140		•	•	•										
	V1	26.77 ★	54	24	140		•	•	•										
	U1	23.46	62	24	140		•	•	•										
	T1	20.63 ★	70	24	140		•	•	•										
	S1	18.63	78	25	140		•	•	•	•									
	R1	16.24 ★	89	25	140		•	•	•										
	Q1	14.58	99	25	140		•	•	•										
	P1	13.17 ★	110	25	140		•	•	•	•									
	N1	11.94	121	25	140		•	•	•	•									
	M1	10.87 ★	133	25	140		•	•	•	•									
	L1	9.61	151	26	140		•	•	•	•									
	K1	8.87 ★	163	26	140		•	•	•	•									
	J1	7.64	190	26	136		•	•	•	•									
	H1	6.94 ★	209	26	132		•	•	•	•									
	G1	6.31 ★	230	35	95		•	•	•	•									
	F1	5.72	253	35	93		•	•	•	•									
	E1	5.21 ★	278	36	92		•	•	•	•									
	D1	4.60	315	36	88		•	•	•	•									
	C1	4.25 ★	341	36	90		•	•	•	•									
	B1	3.66	396	37	80		•	•	•	•									
	A1	3.33 ★	436	37	77		•	•	•	•									

★ Preferred transmission ratio

[1] Only possible with integrated adapter.

[2] Twisting angle applies to reduced-backlash gearboxes.

In the case of gearboxes of size 18 or 28, only possible with integrated motor or input unit KQ and KQS.

Calculation of maximum output torque T_{2max} for gearboxes with input units:

$T_{2max} = T_1 \times i_{tot}$, if $T_{2max} \leq T_{2N}$

If $T_{2max} \geq T_{2N}$ the max. output torque T_{2N} of the gearbox is the decisive factor.

© Siemens AG 2011

Transmission ratios and maximum torques

Selection and ordering data (continued)

Gearbox size	Ratio code	Transmission ratio		Output speed	Twisting angle [2]	Nominal torque	Permissible input torque T_1 [Nm] 2.5x the value is permissible for a brief period (e.g. motor starting torque)													
Max. gearbox torque	Order No.						3	3	5	10	20	26	61	98	198	198	291	356	580	1290
	15th and 16th position	i_{tot}		n_2 (50 Hz)	φ	T_{2N} (f_B=1)	Motor size													
Nm				rpm	arcmin	Nm	63	71	80	90	100	112	132	160	180	200	225	250	280	315
Z.38-D28	**M1**	5 905		0.24	–	220		•												
220	**L1**	5 094	★	0.27	–	220		•	•											
	K1	4 376		0.32	–	220		•	•											
	J1	4 029	★	0.35	–	220		•	•	•										
	H1	3 663		0.38	–	220		•	•	•										
	G1	3 242	★	0.43	–	220		•	•	•										
	F1	2 715		0.52	–	220		•	•	•										
	E1	2 315	★	0.60	–	220		•	•	•										
	D1	1 968	★	0.71	–	220		•	•	•										
	C1	1 710		0.82	–	220		•	•	•										
	B1	1 489	★	0.94	–	220		•	•	•										
	A1	1 343		1.00	–	220		•	•	•										
Z38-Z28	**R1**	1 258		1.1	–	220		•												
220	**Q1**	1 061	★	1.3	–	220		•	•											
	P1	942		1.5	–	220		•	•											
	N1	890		1.6	–	220		•												
	M1	751	★	1.9	–	220		•	•											
	L1	666		2.1	–	220		•	•											
	K1	584	★	2.4	–	220		•	•	•										
	J1	523		2.7	–	220		•	•	•										
	H1	464	★	3.0	–	220		•	•	•										
	G1	407		3.4	–	220		•	•	•										
	F1	358	★	3.9	–	220		•	•	•										
	E1	323		4.3	–	220		•	•	•	•									
	D1	281	★	5.0	–	220		•	•	•										
	C1	253		5.5	–	220		•	•	•										
	B1	228	★	6.1	–	220		•	•	•	•									
	A1	207		6.8	–	220		•	•	•	•									

★ Preferred transmission ratio

[1] Only possible with integrated adapter.

[2] Twisting angle applies to reduced-backlash gearboxes.

In the case of gearboxes of size 18 or 28, only possible with integrated motor or input unit KQ and KQS.

Calculation of maximum output torque T_{2max} for gearboxes with input units:

$T_{2max} = T_1 \times i_{tot}$, if $T_{2max} \leq T_{2N}$

If $T_{2max} \geq T_{2N}$ the max. output torque T_{2N} of the gearbox is the decisive factor.

© Siemens AG 2011

Selection and ordering data (continued)

Gearbox size	Ratio code	Transmission ratio	Output speed	Twisting angle [2]	Nominal torque	Permissible input torque T_1 [Nm] 2.5x the value is permissible for a brief period (e.g. motor starting torque)													
Max. gearbox torque	Order No.					3	3	5	10	20	26	61	98	198	198	291	356	580	1290
	15th and 16th position	i_{tot}	n_2 (50 Hz)	φ	T_{2N} (f_B=1)	Motor size													
Nm			rpm	arcmin	Nm	63	71	80	90	100	112	132	160	180	200	225	250	280	315
D38	**S1**	191.75 ★	7.6	19	220	•	•	•											
220	**R1**	170.24	8.5	19	220	•	•	•											
	Q1	149.26 ★	9.7	19	220	•	•	•	•										
	P1	133.57	10.9	19	220	•	•	•	•										
	N1	118.55 ★	12.2	19	220	•	•	•	•										
	M1	103.89	14.0	19	220	•	•	•	•										
	L1	91.34 ★	15.9	19	220	•	•	•	•										
	K1	82.52	17.6	19	220	•	•	•	•										
	J1	71.91 ★	20.0	20	220	•	•	•	•										
	H1	64.58	22.0	20	220	•	•	•	•										
	G1	58.30 ★	25.0	20	220	•	•	•	•										
	F1	52.86	27.0	20	220	•	•	•	•										
	E1	48.10 ★	30.0	20	220	•	•	•	•										
	D1	42.53	34.0	20	220	•	•	•	•										
	C1	39.28 ★	37.0	20	220	•	•	•	•										
	B1	33.82	43.0	20	220	•	•	•	•										
	A1	30.74 ★	47.0	20	220	•	•	•	•										
Z38	**A2**	44.12 ★	33	18	220	•	•	•											
160 … 220	**X1**	39.24	37	18	208	•	•	•											
	W1	34.04 ★	43	19	220	•	•	•	•										
	V1	31.80	46	19	220	•	•	•	•										
	U1	27.97 ★	52	19	220	•	•	•	•										
	T1	24.50	59	19	220	•	•	•	•	•									
	S1	21.67 ★	67	19	220	•	•	•	•	•	• [1]								
	R1	19.64	74	19	220	•	•	•	•	•	• [1]								
	Q1	17.33 ★	84	19	220	•	•	•	•	•	• [1]								
	P1	15.64	93	19	220	•	•	•	•	•	• [1]								
	N1	14.18 ★	102	19	220	•	•	•	•	•	• [1]								
	M1	12.92	112	19	220	•	•	•	•	•	• [1]								
	L1	11.82 ★	123	20	220	•	•	•	•	•	• [1]								
	K1	10.57	137	20	210	•	•	•	•	•	• [1]								
	J1	9.70 ★	149	20	200	•	•	•	•	•	• [1]								
	H1	8.75	166	20	195	•	•	•	•	•	• [1]								
	G1	7.52 ★	193	20	190	•	•	•	•	•	• [1]								
	F1	7.50 ★	193	24	185	•	•	•	•	•	• [1]								
	D1	6.71	216	24	180	•	•	•	•	•	• [1]								
	C1	6.16 ★	235	24	170	•	•	•	•	•	• [1]								
	B1	5.55	261	24	165	•	•	•	•	•	• [1]								
	A1	4.77 ★	304	24	160	•	•	•	•	•	• [1]								

★ Preferred transmission ratio

[1] Only possible with integrated adapter.

[2] Twisting angle applies to reduced-backlash gearboxes.

In the case of gearboxes of size 18 or 28, only possible with integrated motor or input unit KQ and KQS.

Calculation of maximum output torque T_{2max} for gearboxes with input units:

$T_{2max} = T_1 \times i_{tot}$, if $T_{2max} \leq T_{2N}$

If $T_{2max} \geq T_{2N}$ the max. output torque T_{2N} of the gearbox is the decisive factor.

© Siemens AG 2011

Transmission ratios and maximum torques

Selection and ordering data (continued)

Gearbox size	Ratio code	Transmission ratio		Output speed	Twisting angle [2]	Nominal torque	Permissible input torque T_1 [Nm] 2.5x the value is permissible for a brief period (e.g. motor starting torque)													
Max. gearbox torque	Order No.						3	3	5	10	20	26	61	98	198	198	291	356	580	1290
Nm	15th and 16th position	i_{tot}		n_2 (50 Hz) rpm	φ arcmin	T_{2N} (f_B=1) Nm	Motor size 63	71	80	90	100	112	132	160	180	200	225	250	280	315
D48-D28	**N1**	27 940		0.05	–	450		•												
450	**M1**	24 104	★	0.06	–	450		•	•											
	L1	20 708		0.07	–	450		•	•											
	K1	19 065	★	0.07	–	450		•	•	•										
	J1	17 332		0.08	–	450		•	•	•										
	H1	15 341	★	0.09	–	450		•	•	•										
	G1	12 849		0.11	–	450		•	•	•										
	F1	10 956	★	0.13	–	450		•	•	•										
	E1	9 312	★	0.15	–	450		•	•	•										
	D1	8 093		0.17	–	450		•	•	•										
	C1	7 044	★	0.20	–	450		•	•	•										
	B1	6 354		0.22	–	450		•	•	•										
	A1	5 608		0.25	–	450		•	•	•										
D48-Z28	**H2**	5 019	★	0.28	–	450		•	•											
450	**G2**	4 456		0.31	–	450		•	•											
	F2	3 907	★	0.36	–	450		•	•	•										
	E2	3 496		0.40	–	450		•	•	•										
	D2	3 103	★	0.45	–	450		•	•	•										
	C2	2 720		0.51	–	450		•	•	•										
	B2	2 391		★0.59	–	450		•	•	•										
	A2	2 160		0.65	–	450		•	•	•	•									
	X1	1 882	★	0.74	–	450		•	•	•										
	W1	1 690		0.83	–	450		•	•	•										
	V1	1 526	★	0.92	–	450		•	•	•	•									
	U1	1 384		1.00	–	450		•	•	•	•									
	T1	1 259	★	1.10	–	450		•	•	•	•									
	S1	1 113		1.30	–	450		•	•	•	•									
	R1	1 028	★	1.40	–	450		•	•	•	•									
	Q1	885		1.60	–	450		•	•	•	•									
	P1	805	★	1.70	–	450		•	•	•	•									
	N1	731	★	1.90	–	450		•	•	•	•									
	M1	663		2.10	–	450		•	•	•	•									
	L1	603	★	2.30	–	450		•	•	•	•									
	K1	534		2.60	–	450		•	•	•	•									
	J1	493	★	2.80	–	450		•	•	•	•									
	H1	424		3.30	–	450		•	•	•	•									
	G1	423	★	3.30	–	450		•	•	•	•									
	F1	384		3.70	–	450		•	•	•	•									
	E1	349	★	4.00	–	450		•	•	•	•									
	D1	309		4.50	–	450		•	•	•	•									
	C1	285	★	4.90	–	450		•	•	•	•									
	B1	246		5.70	–	450		•	•	•	•									
	A1	223	★	6.30	–	450		•	•	•	•									

★ Preferred transmission ratio

[1] Only possible with integrated adapter.

[2] Twisting angle applies to reduced-backlash gearboxes.

In the case of gearboxes of size 18 or 28, only possible with integrated motor or input unit KQ and KQS.

Calculation of maximum output torque T_{2max} for gearboxes with input units:

$T_{2max} = T_1 \times i_{tot}$, if $T_{2max} \leq T_{2N}$

If $T_{2max} \geq T_{2N}$ the max. output torque T_{2N} of the gearbox is the decisive factor.

© Siemens AG 2011

Selection and ordering data (continued)

Gearbox size	Ratio code	Transmission ratio	Output speed	Twisting angle [2]	Nominal torque	Permissible input torque T_1 [Nm] 2.5x the value is permissible for a brief period (e.g. motor starting torque)													
Max. gearbox torque	Order No.					3	3	5	10	20	26	61	98	198	198	291	356	580	1290
	15th and 16th position	i_{tot}	n_2 (50 Hz)	φ	T_{2N} (f_B=1)	Motor size													
Nm			rpm	arcmin	Nm	63	71	80	90	100	112	132	160	180	200	225	250	280	315
D48	**S1**	208.77 ★	6.9	17	450	•	•	•											
450	**R1**	185.66	7.8	17	450	•	•	•											
	Q1	161.05 ★	9.0	17	450	•	•	•	•										
	P1	150.48	9.6	17	450	•	•	•	•										
	N1	132.34 ★	11.0	17	450	•	•	•	•										
	M1	115.91	12.5	17	450	•	•	•	•	•									
	L1	102.52 ★	14.1	17	450	•	•	•	•	•									
	K1	92.91	15.6	17	450	•	•	•	•	•									
	J1	82.02 ★	17.7	17	450	•	•	•	•	•									
	H1	73.99	19.6	18	450	•	•	•	•	•									
	G1	67.10 ★	22.0	18	450	•	•	•	•	•									
	F1	61.14	24.0	18	450	•	•	•	•	•									
	E1	55.92 ★	26.0	18	450	•	•	•	•	•									
	D1	50.00	29.0	18	450	•	•	•	•	•									
	C1	45.91 ★	32.0	18	450	•	•	•	•	•									
	B1	41.38	35.0	18	450	•	•	•	•	•									
	A1	35.59	41.0	18	450	•	•	•	•	•									
Z48	**A2**	51.28	28	16	292	•	•	•											
260 … 450	**X1**	45.38 ★	32	16	450	•	•	•	•										
	W1	41.26	35	16	450	•	•	•	•										
	V1	37.06 ★	39	17	450	•	•	•	•										
	U1	31.77	46	17	450	•	•	•	•	•									
	T1	28.74 ★	50	17	450	•	•	•	•	•	•								
	S1	26.53	55	17	450	•	•	•	•	•	•								
	R1	23.07 ★	63	17	450	•	•	•	•	•	•	• [1]							
	Q1	20.95	69	17	450	•	•	•	•	•	•	• [1]							
	P1	19.13 ★	76	17	450	•	•	•	•	•	•	• [1]							
	N1	17.55	83	17	450	•	•	•	•	•	•	• [1]							
	M1	16.17 ★	90	17	430	•	•	•	•	•	•	• [1]							
	L1	14.68	99	17	420	•	•	•	•	•	•	• [1]							
	K1	13.38 ★	108	17	410	•	•	•	•	•	•	• [1]							
	J1	12.25	118	17	400	•	•	•	•	•	•	• [1]							
	H1	10.93 ★	133	17	390	•	•	•	•	•	•	• [1]							
	G1	9.76	149	18	380			•	•	•	•	• [1]							
	F1	8.29	175	18	360			•	•	•	•	• [1]							
	E1	6.90 ★	210	19	340			•	•	•	•	• [1]							
	D1	6.79 ★	214	19	270	•	•	•	•	•	•	• [1]							
	C1	6.06	239	20	270			•	•	•	•	• [1]							
	B1	5.15	282	20	270			•	•	•	•	• [1]							
	A1	4.28 ★	339	21	260			•	•	•	•	• [1]							

★ Preferred transmission ratio

[1] Only possible with integrated adapter.

[2] Twisting angle applies to reduced-backlash gearboxes.

In the case of gearboxes of size 18 or 28, only possible with integrated motor or input unit KQ and KQS.

Calculation of maximum output torque T_{2max} for gearboxes with input units:

$T_{2max} = T_1 \times i_{tot}$, if $T_{2max} \leq T_{2N}$

If $T_{2max} \geq T_{2N}$ the max. output torque T_{2N} of the gearbox is the decisive factor.

© Siemens AG 2011

Transmission ratios and maximum torques

Selection and ordering data (continued)

Gearbox size	Ratio code	Transmission ratio		Output speed	Twisting angle [2]	Nominal torque	Permissible input torque T_1 [Nm] 2.5x the value is permissible for a brief period (e.g. motor starting torque)													
Max. gearbox torque	Order No.						3	3	5	10	20	26	61	98	198	198	291	356	580	1290
Nm	15th and 16th position	i_{tot}		n_2 (50 Hz) rpm	φ arcmin	T_{2N} (f_B=1) Nm	Motor size 63	71	80	90	100	112	132	160	180	200	225	250	280	315
D68-D28	**N1**	41 961		0.03	–	800		•												
800	**M1**	36 200	★	0.04	–	800		•	•											
	L1	31 101		0.05	–	800		•	•											
	K1	28 633	★	0.05	–	800		•	•	•										
	J1	26 030		0.05	–	800		•	•	•										
	H1	23 039	★	0.06	–	800		•	•	•										
	G1	19 297		0.07	–	800		•	•	•										
	F1	16 454	★	0.09	–	800		•	•	•										
	E1	13 986	★	0.10	–	800		•	•	•										
	D1	12 154		0.12	–	800		•	•	•										
	C1	10 579	★	0.13	–	800		•	•	•										
	B1	9 543		0.15	–	800		•	•	•										
	A1	8 422		0.17	–	800		•	•	•										
D68-Z28	**H2**	7 538	★	0.19	–	800		•	•											
800	**G2**	6 693		0.21	–	800		•	•											
	F2	5 868	★	0.24	–	800		•	•	•										
	E2	5 251		0.27	–	800		•	•	•										
	D2	4 660	★	0.30	–	800		•	•	•										
	C2	4 084		0.34	–	800		•	•	•										
	B2	3 591	★	0.39	–	800		•	•	•										
	A2	3 244		0.43	–	800		•	•	•	•									
	X1	2 827	★	0.50	–	800		•	•	•										
	W1	2 539		0.55	–	800		•	•	•										
	V1	2 292	★	0.61	–	800		•	•	•	•									
	U1	2 078		0.67	–	800		•	•	•	•									
	T1	1 891	★	0.74	–	800		•	•	•	•									
	S1	1 672		0.84	–	800		•	•	•	•									
	R1	1 544	★	0.91	–	800		•	•	•	•									
	Q1	1 329		1.10	–	800		•	•	•	•									
	P1	1 208	★	1.20	–	800		•	•	•	•									
	N1	1 098	★	1.30	–	800		•	•	•	•									
	M1	996		1.40	–	800		•	•	•	•									
	L1	906	★	1.50	–	800		•	•	•	•									
	K1	801		1.80	–	800		•	•	•	•									
	J1	740	★	1.90	–	800		•	•	•	•									
	H1	637		2.20	–	800		•	•	•	•									
	G1	607	★	2.30	–	800		•	•	•	•									
	F1	550		2.50	–	800		•	•	•	•									
	E1	501	★	2.80	–	800		•	•	•	•									
	D1	443		3.20	–	800		•	•	•	•									
	C1	409	★	3.40	–	800		•	•	•	•									
	B1	352		4.00	–	800		•	•	•	•									
	A1	320	★	4.40	–	800		•	•	•	•									

★ Preferred transmission ratio

[1] Only possible with integrated adapter.

[2] Twisting angle applies to reduced-backlash gearboxes.

In the case of gearboxes of size 18 or 28, only possible with integrated motor or input unit KQ and KQS.

Calculation of maximum output torque T_{2max} for gearboxes with input units:

$T_{2max} = T_1 \times i_{tot}$, if $T_{2max} \leq T_{2N}$

If $T_{2max} \geq T_{2N}$ the max. output torque T_{2N} of the gearbox is the decisive factor.

© Siemens AG 2011

Selection and ordering data (continued)

Gearbox size	Ratio code	Transmission ratio	Output speed	Twisting angle [2]	Nominal torque	Permissible input torque T_1 [Nm] 2.5x the value is permissible for a brief period (e.g. motor starting torque)													
Max. gearbox torque	Order No.					3	3	5	10	20	26	61	98	198	198	291	356	580	1290
Nm	15th and 16th position	i_{tot}	n_2 (50 Hz) rpm	φ arcmin	T_{2N} (f_B=1) Nm	Motor size 63	71	80	90	100	112	132	160	180	200	225	250	280	315
D68	**U1**	281.01	5.2	–	800	•	•	•											
800	**T1**	248.68 ★	5.8	15	800	•	•	•	•										
	S1	226.07	6.4	15	800	•	•	•	•										
	R1	203.09 ★	7.1	15	800	•	•	•	•										
	Q1	174.08	8.3	15	800	•	•	•	•	•									
	P1	157.50 ★	9.2	15	800	•	•	•	•	•									
	N1	145.38	10.0	15	800	•	•	•	•	•									
	M1	126.41 ★	11.5	15	800	•	•	•	•	•									
	L1	114.78	12.6	15	800	•	•	•	•	•									
	K1	104.80 ★	13.8	15	800	•	•	•	•	•									
	J1	96.16	15.1	15	800	•	•	•	•	•									
	H1	88.59 ★	16.4	15	800	•	•	•	•	•									
	G1	80.46	18.0	15	800	•	•	•	•	•									
	F1	73.30 ★	19.8	15	800	•	•	•	•	•									
	E1	67.14	22.0	15	800	•	•	•	•	•									
	D1	59.91 ★	24.0	15	800	•	•	•	•	•									
	C1	53.47	27.0	15	800			•	•	•									
	B1	45.41	32.0	15	800			•	•	•									
	A1	37.80	38.0	15	800			•	•	•									
Z68	**X1**	48.09 ★	30	14	535	•	•	•	•										
420 … 800	**W1**	42.06	34	14	800	•	•	•	•	•									
	V1	37.76 ★	38	14	800	•	•	•	•	•	•								
	U1	34.49	42	14	800	•	•	•	•	•	•								
	T1	30.60 ★	47	14	800	•	•	•	•	•	•	•							
	S1	28.25	51	14	800	•	•	•	•	•	•	•							
	R1	25.55 ★	57	14	800	•	•	•	•	•	•	•							
	Q1	23.53	62	14	800	•	•	•	•	•	•	•							
	P1	21.76 ★	67	14	800	•	•	•	•	•	•	•	• [1]						
	N1	20.20	72	14	800	•	•	•	•	•	•	•	• [1]						
	M1	17.82 ★	81	14	800	•	•	•	•	•	•	•	• [1]						
	L1	16.45	88	14	800	•	•	•	•	•	•	•	• [1]						
	K1	14.74 ★	98	14	800	•	•	•	•	•	•	•	• [1]						
	J1	13.59	107	15	800			•	•	•	•	•	• [1]						
	H1	11.40	127	15	785			•	•	•	•	•	• [1]						
	G1	9.73 ★	149	15	745			•	•	•	•	•	• [1]						
	F1	8.11	179	15	700					•	•	•	• [1]						
	E1	6.72 ★	216	16	650					•	•	•	• [1]						
	D1	5.93	245	19	490			•	•	•	•	•	• [1]						
	C1	5.06 ★	287	20	480			•	•	•	•	•	• [1]						
	B1	4.22	344	20	470					•	•	•	• [1]						
	A1	3.49 ★	415	21	420					•	•	•	• [1]						

★ Preferred transmission ratio

[1] Only possible with integrated adapter.

[2] Twisting angle applies to reduced-backlash gearboxes.

In the case of gearboxes of size 18 or 28, only possible with integrated motor or input unit KQ and KQS.

Calculation of maximum output torque T_{2max} for gearboxes with input units:

$T_{2max} = T_1 \times i_{tot}$, if $T_{2max} \leq T_{2N}$

If $T_{2max} \geq T_{2N}$ the max. output torque T_{2N} of the gearbox is the decisive factor.

© Siemens AG 2011

Transmission ratios and maximum torques

Selection and ordering data (continued)

Gearbox size	Ratio code	Transmission ratio		Output speed	Twisting angle [2]	Nominal torque	Permissible input torque T_1 [Nm] 2.5x the value is permissible for a brief period (e.g. motor starting torque)													
Max. gearbox torque	Order No.						3	3	5	10	20	26	61	98	198	198	291	356	580	1290
Nm	15th and 16th position	i_{tot}		n_2 (50 Hz) rpm	φ arcmin	T_{2N} (f_B=1) Nm	Motor size 63	71	80	90	100	112	132	160	180	200	225	250	280	315
D.88-D.28 800	N1	46 233		0.03	–	1 680		•												
	M1	39 885	★	0.04	–	1 680		•	•											
	L1	34 267		0.04	–	1 680		•	•											
	K1	31 547	★	0.04	–	1 680		•	•	•										
	J1	28 679		0.05	–	1 680		•	•	•										
	H1	25 384	★	0.06	–	1 680		•	•	•										
	G1	21 262		0.07	–	1 680		•	•	•										
	F1	18 129	★	0.08	–	1 680		•	•	•										
	E1	15 409	★	0.09	–	1 680		•	•	•										
	D1	13 391		0.10	–	1 680		•	•	•										
	C1	11 656	★	0.12	–	1 680		•	•	•										
	B1	10 514		0.13	–	1 680		•	•	•										
	A1	9 279		0.15	–	1 680		•	•	•										
D.88-Z.28 800	H2	8 305	★	0.17	–	1 680		•	•											
	G2	7 374		0.19	–	1 680		•	•											
	F2	6 465	★	0.22	–	1 680		•	•	•										
	E2	5 785		0.24	–	1 680		•	•	•										
	D2	5 134	★	0.27	–	1 680		•	•	•										
	C2	4 500		0.31	–	1 680		•	•	•										
	B2	3 957	★	0.35	–	1 680		•	•	•										
	A2	3 574		0.39	–	1 680		•	•	•	•									
	X1	3 114	★	0.45	–	1 680		•	•	•										
	W1	2 797		0.50	–	1 680		•	•	•										
	V1	2 525	★	0.55	–	1 680		•	•	•	•									
	U1	2 290		0.61	–	1 680		•	•	•	•									
	T1	2 084	★	0.67	–	1 680		•	•	•	•									
	S1	1 842		0.76	–	1 680		•	•	•	•									
	R1	1 701	★	0.82	–	1 680		•	•	•	•									
	Q1	1 465		0.96	–	1 680		•	•	•	•									
	P1	1 331	★	1.10	–	1 680		•	•	•	•									
	N1	1 210	★	1.20	–	1 680		•	•	•	•									
	M1	1 097		1.30	–	1 680		•	•	•	•									
	L1	999	★	1.40	–	1 680		•	•	•	•									
	K1	883		1.60	–	1 680		•	•	•	•									
	J1	815	★	1.70	–	1 680		•	•	•	•									
	H1	702		2.00	–	1 680		•	•	•	•									
	G1	647	★	2.20	–	1 680		•	•	•	•									
	F1	587		2.40	–	1 680		•	•	•	•									
	E1	534	★	2.60	–	1 680		•	•	•	•									
	D1	472		3.00	–	1 680		•	•	•	•									
	C1	436	★	3.20	–	1 680		•	•	•	•									
	B1	375		3.70	–	1 680		•	•	•	•									
	A1	341	★	4.10	–	1 680		•	•	•	•									

★ Preferred transmission ratio

[1] Only possible with integrated adapter.

[2] Twisting angle applies to reduced-backlash gearboxes.

In the case of gearboxes of size 18 or 28, only possible with integrated motor or input unit KQ and KQS.

Calculation of maximum output torque T_{2max} for gearboxes with input units:

$T_{2max} = T_1 \times i_{tot}$, if $T_{2max} \leq T_{2N}$

If $T_{2max} \geq T_{2N}$ the max. output torque T_{2N} of the gearbox is the decisive factor.

© Siemens AG 2011

Selection and ordering data (continued)

Gearbox size	Ratio code	Transmission ratio	Output speed	Twisting angle [2]	Nominal torque	Permissible input torque T_1 [Nm] 2.5x the value is permissible for a brief period (e.g. motor starting torque)													
Max. gearbox torque	Order No.					3	3	5	10	20	26	61	98	198	198	291	356	580	1290
	15th and 16th position	i_{tot}	n_2 (50 Hz)	φ	T_{2N} (f_B=1)	Motor size													
Nm			rpm	arcmin	Nm	63	71	80	90	100	112	132	160	180	200	225	250	280	315
D.88	**V1**	300.41 ★	4.8	12	1 680	•	•	•	•										
1 680	**U1**	270.90	5.4	12	1 680	•	•	•	•										
	T1	244.29 ★	5.9	12	1 680	•	•	•	•										
	S1	213.64	6.8	12	1 680	•	•	•	•	•									
	R1	191.80 ★	7.6	12	1 680	•	•	•	•	•	•								
	Q1	175.18	8.3	12	1 680	•	•	•	•	•	•								
	R1	155.46 ★	9.3	12	1 680	•	•	•	•	•	•	•							
	N1	143.50	10.1	12	1 680	•	•	•	•	•	•	•							
	M1	129.79 ★	11.2	12	1 680	•	•	•	•	•	•	•							
	L1	119.52	12.1	12	1 680	•	•	•	•	•	•	•							
	K1	110.54 ★	13.1	12	1 680	•	•	•	•	•	•	•							
	J1	102.61	14.1	12	1 680	•	•	•	•	•	•	•							
	H1	90.53 ★	16.0	12	1 680	•	•	•	•	•	•	•							
	G1	83.58	17.3	12	1 680	•	•	•	•	•	•	•							
	F1	74.88 ★	19.4	12	1 680	•	•	•	•	•	•	•							
	E1	69.05	21.0	12	1 680			•	•	•	•	•							
	D1	57.93	25.0	12	1 680			•	•	•	•	•							
	C1	49.42 ★	29.0	12	1 680			•	•	•	•	•							
	B1	41.19	35.0	12	1 680					•	•	•							
	A1	34.14 ★	42.0	12	1 680					•	•	•							
Z.88	**B2**	50.73	29	11	1 468				•	•									
660 … 1 680	**A2**	45.76 ★	32	11	1 680				•	•	•								
	X1	41.90	35	11	1 680				•	•	•								
	W1	37.27 ★	39	11	1 680				•	•	•	•							
	V1	34.07	43	11	1 680				•	•	•	•							
	U1	31.32 ★	46	11	1 680				•	•	•	•							
	T1	28.93	50	11	1 680				•	•	•	•							
	S1	26.85 ★	54	11	1 680				•	•	•	•	•						
	R1	25.01	58	11	1 680				•	•	•	•	•						
	Q1	22.61 ★	64	11	1 680				•	•	•	•	•	• [1]					
	P1	20.81	70	11	1 680				•	•	•	•	•	• [1]					
	N1	18.72 ★	77	11	1 680				•	•	•	•	•	• [1]					
	M1	17.27	84	12	1 680				•	•	•	•	•	• [1]					
	L1	14.63	99	12	1 620				•	•	•	•	•	• [1]					
	K1	12.75 ★	114	12	1 550				•	•	•	•	•	• [1]					
	J1	10.85	134	12	1 470					•	•	•	•	• [1]					
	H1	9.26 ★	157	12	1 390					•	•	•	•	• [1]					
	G1	7.59 ★	191	13	1 300					•	•	•	•	• [1]					
	F1	6.96	208	15	1 260					•	•	•	•	• [1]					
	E1	5.94 ★	244	16	1 190					•	•	•	•	• [1]					
	D1	4.87 ★	298	16	1 110					•	•	•	•	• [1]					
	C1	4.45 ★	326	19	800					•	•	•	•	• [1]					
	B1	3.79 ★	383	20	740					•	•	•	•	• [1]					
	A1	3.11 ★	466	20	660					•	•	•	•	• [1]					

★ Preferred transmission ratio

[1] Only possible with integrated adapter.

[2] Twisting angle applies to reduced-backlash gearboxes.

In the case of gearboxes of size 18 or 28, only possible with integrated motor or input unit KQ and KQS.

Calculation of maximum output torque T_{2max} for gearboxes with input units:

$T_{2max} = T_1 \times i_{tot}$, if $T_{2max} \leq T_{2N}$

If $T_{2max} \geq T_{2N}$ the max. output torque T_{2N} of the gearbox is the decisive factor.

© Siemens AG 2011

Transmission ratios and maximum torques

Selection and ordering data (continued)

Gearbox size	Ratio code	Transmission ratio	Output speed	Twisting angle [2]	Nominal torque	Permissible input torque T_1 [Nm] 2.5x the value is permissible for a brief period (e.g. motor starting torque)													
Max. gearbox torque	Order No.					3	3	5	10	20	26	61	98	198	198	291	356	580	1290
	15th and 16th position	i_{tot}	n_2 (50 Hz)	φ	T_{2N} (f_B=1)	Motor size													
Nm			rpm	arcmin	Nm	63	71	80	90	100	112	132	160	180	200	225	250	280	315
D.108-D38	**P1**	68 896	0.02	–	3 100	•	•	•											
3 100	**N1**	61 169	0.02	–	3 100	•	•	•											
	M1	53 627	0.03	–	3 100	•	•	•	•										
	L1	47 990	0.03	–	3 100	•	•	•	•										
	K1	42 595	0.03	–	3 100	•	•	•	•										
	J1	37 326	0.04	–	3 100	•	•	•	•										
	H1	32 819	0.04	–	3 100	•	•	•	•										
	G1	29 650	0.05	–	3 100	•	•	•	•										
	F1	25 836	0.06	–	3 100	•	•	•	•										
	E1	23 204	0.06	–	3 100	•	•	•	•										
	D1	20 948	0.07	–	3 100	•	•	•	•										
	C1	18 993	0.08	–	3 100	•	•	•	•										
	B1	17 282	0.08	–	3 100	•	•	•	•										
	A1	15 280	0.09	–	3 100	•	•	•	•										
D.108-Z38	**P2**	15 853	0.09	–	3 100	•	•	•											
3 100	**N2**	14 098	0.10	–	3 100	•	•	•											
	M2	12 229	0.12	–	3 100	•	•	•	•										
	L2	11 426	0.13	–	3 100	•	•	•	•										
	K2	10 049	0.14	–	3 100	•	•	•	•										
	J2	8 801	0.16	–	3 100	•	•	•	•	•									
	H2	7 785	0.19	–	3 100	•	•	•	•	•									
	G2	7 055	0.21	–	3 100	•	•	•	•	•									
	F2	6 228	0.23	–	3 100	•	•	•	•	•									
	E2	5 618	0.26	–	3 100	•	•	•	•	•									
	D2	5 096	0.28	–	3 100	•	•	•	•	•									
	C2	4 643	0.31	–	3 100	•	•	•	•	•									
	B2	4 246	0.34	–	3 100	•	•	•	•	•									
	A2	3 797	0.38	–	3 100	•	•	•	•	•									
	X1	3 624	0.40	–	3 100	•	•	•											
	W1	3 223	0.45	–	3 100	•	•	•											
	V1	2 796	0.52	–	3 100	•	•	•	•										
	U1	2 612	0.56	–	3 100	•	•	•	•										
	T1	2 297	0.63	–	3 100	•	•	•	•										
	S1	2 012	0.72	–	3 100	•	•	•	•	•									
	R1	1 780	0.81	–	3 100	•	•	•	•	•									
	Q1	1 613	0.90	–	3 100	•	•	•	•	•									
	P1	1 424	1.00	–	3 100	•	•	•	•	•									
	N1	1 284	1.10	–	3 100	•	•	•	•	•									
	M1	1 165	1.20	–	3 100	•	•	•	•	•									
	L1	1 061	1.40	–	3 100	•	•	•	•	•									
	K1	971	1.50	–	3 100	•	•	•	•	•									
	J1	868	1.70	–	3 100	•	•	•	•	•									
	H1	797	1.80	–	3 100	•	•	•	•	•									
	G1	718	2.00	–	3 100	•	•	•	•	•									
	F1	618	2.30	–	3 100	•	•	•	•	•									
	E1	616	2.40	–	3 100	•	•	•	•	•									
	D1	551	2.60	–	3 100	•	•	•	•	•									
	C1	506	2.90	–	3 100	•	•	•	•	•									
	B1	456	3.20	–	3 100	•	•	•	•	•									
	A1	392	3.70	–	3 100	•	•	•	•	•									

★ Preferred transmission ratio

[1] Only possible with integrated adapter.

[2] Twisting angle applies to reduced-backlash gearboxes.

In the case of gearboxes of size 18 or 28, only possible with integrated motor or input unit KQ and KQS.

Calculation of maximum output torque T_{2max} for gearboxes with input units:

$T_{2max} = T_1 \times i_{tot}$, if $T_{2max} \leq T_{2N}$

If $T_{2max} \geq T_{2N}$ the max. output torque T_{2N} of the gearbox is the decisive factor.

© Siemens AG 2011

Selection and ordering data (continued)

Gearbox size	Ratio code	Transmission ratio	Output speed	Twisting angle [2]	Nominal torque	Permissible input torque T_1 [Nm] 2.5x the value is permissible for a brief period (e.g. motor starting torque)													
Max. gearbox torque	Order No.					3	3	5	10	20	26	61	98	198	198	291	356	580	1290
	15th and 16th position	i_{tot}	n_2 (50 Hz)	φ	T_{2N} (f_B=1)	Motor size													
Nm			rpm	arcmin	Nm	63	71	80	90	100	112	132	160	180	200	225	250	280	315
D.108	**V1**	359.30	4.0	10	3 100			•	•										
3 100	**U1**	325.21 ★	4.5	10	3 100			•	•										
	T1	284.73	5.1	10	3 100			•	•	•									
	S1	256.86 ★	5.6	10	3 100			•	•	•	•								
	R1	235.19	6.2	10	3 100			•	•	•	•								
	Q1	209.21 ★	6.9	10	3 100			•	•	•	•	•							
	P1	191.21	7.6	10	3 100			•	•	•	•	•							
	N1	175.78 ★	8.2	10	3 100			•	•	•	•	•							
	M1	162.40	8.9	10	3 100			•	•	•	•	•							
	L1	150.70 ★	9.6	10	3 100			•	•	•	•	•	•						
	K1	140.37	10.3	10	3 100			•	•	•	•	•	•						
	J1	126.90 ★	11.4	10	3 100			•	•	•	•	•	•						
	H1	116.83	12.4	10	3 100			•	•	•	•	•	•						
	G1	105.08 ★	13.8	10	3 100			•	•	•	•	•	•						
	F1	96.94	15.0	10	3 100			•	•	•	•	•	•						
	E1	82.14	17.7	10	3 100			•	•	•	•	•	•						
	D1	71.59 ★	20.0	10	3 100			•	•	•	•	•	•						
	C1	60.90	24.0	10	3 100					•	•	•	•						
	B1	51.97 ★	28.0	10	3 100					•	•	•	•						
	A1	42.61 ★	34.0	10	3 100					•	•	•	•						
Z.108	**E2**	59.05 ★	25	9	2 368				•	•	•								
1 080 … 3 100	**D2**	54.15	27	9	2 306				•	•	•								
	C2	48.38 ★	30	9	3 100				•	•	•	•							
	B2	44.31	33	9	3 100				•	•	•	•							
	A2	40.82 ★	36	9	3 100				•	•	•	•							
	X1	37.79	38	9	3 100				•	•	•	•							
	W1	35.14 ★	41	9	3 100				•	•	•	•	•						
	V1	32.81	44	9	3 100				•	•	•	•	•						
	U1	29.35 ★	49	9	3 100				•	•	•	•	•	•	•				
	T1	27.20	53	9	3 100				•	•	•	•	•	•	•				
	S1	24.94 ★	58	9	3 100				•	•	•	•	•	•	•	• [1]			
	R1	22.86	63	9	3 100				•	•	•	•	•	•	•	• [1]			
	Q1	19.48	74	9	3 100				•	•	•	•	•	•	•	• [1]			
	P1	17.19 ★	84	10	3 100				•	•	•	•	•	•	•	• [1]			
	N1	14.63	99	10	3 100					•	•	•	•	•	•	• [1]			
	M1	12.68 ★	114	10	3 100					•	•	•	•	•	•	• [1]			
	L1	10.67 ★	136	10	3 100					•	•	•	•	•	•	• [1]			
	K1	9.62	151	10	3 100							•	•	•	•	• [1]			
	J1	8.27 ★	175	10	3 100							•	•	•	•	• [1]			
	H1	7.10 ★	204	12	1 800					•	•	•	•	•	•	• [1]			
	G1	6.41	226	12	1 760							•	•	•	•	• [1]			
	E1	5.51 ★	263	13	1 700							•	•	•	•	• [1]			
	D1	5.24 ★	277	15	1 140							•	•	•	•	• [1]			
	C1	4.41 ★	329	16	1 140							•	•	•	•	• [1]			
	B1	3.98 ★	364	16	1 120							•	•	•	•	• [1]			
	A1	3.42 ★	424	16	1 080							•	•	•	•	• [1]			

★ Preferred transmission ratio

[1] Only possible with integrated adapter.

[2] Twisting angle applies to reduced-backlash gearboxes.

In the case of gearboxes of size 18 or 28, only possible with integrated motor or input unit KQ and KQS.

Calculation of maximum output torque T_{2max} for gearboxes with input units:

$T_{2max} = T_1 \times i_{tot}$, if $T_{2max} \leq T_{2N}$

If $T_{2max} \geq T_{2N}$ the max. output torque T_{2N} of the gearbox is the decisive factor.

© Siemens AG 2011

Transmission ratios and maximum torques

Selection and ordering data (continued)

Gearbox size	Ratio code	Transmission ratio		Output speed	Twisting angle [2]	Nominal torque	Permissible input torque T_1 [Nm] 2.5x the value is permissible for a brief period (e.g. motor starting torque)													
Max. gearbox torque	Order No.						3	3	5	10	20	26	61	98	198	198	291	356	580	1290
	15th and 16th position	i_{tot}		n_2 (50 Hz)	φ	T_{2N} (f_B=1)	Motor size													
Nm				rpm	arcmin	Nm	63	71	80	90	100	112	132	160	180	200	225	250	280	315
D.128-D38	**P1**	51 420	★	0.03	–	5 100	•	•	•											
5 100	**N1**	45 652		0.03	–	5 100	•	•	•											
	M1	40 024	★	0.04	–	5 100	•	•	•	•										
	L1	35 817		0.04	–	5 100	•	•	•	•										
	K1	31 790	★	0.05	–	5 100	•	•	•	•										
	J1	27 858		0.05	–	5 100	•	•	•	•										
	H1	24 494	★	0.06	–	5 100	•	•	•	•										
	G1	22 129		0.07	–	5 100	•	•	•	•										
	F1	19 282	★	0.08	–	5 100	•	•	•	•										
	E1	17 318		0.08	–	5 100	•	•	•	•										
	D1	15 634	★	0.09	–	5 100	•	•	•	•										
	C1	14 175		0.10	–	5 100	•	•	•	•										
	B1	12 898	★	0.11	–	5 100	•	•	•	•										
	A1	11 404		0.13	–	5 100	•	•	•	•										
D.128-Z38	**X1**	11 831	★	0.12	–	5 100	•	•	•											
5 100	**W1**	10 521		0.14	–	5 100	•	•	•											
	V1	9 127	★	0.16	–	5 100	•	•	•	•										
	U1	8 528		0.17	–	5 100	•	•	•	•										
	T1	7 500	★	0.19	–	5 100	•	•	•	•										
	S1	6 569		0.22	–	5 100	•	•	•	•	•									
	R1	5 810	★	0.25	–	5 100	•	•	•	•	•									
	Q1	5 266		0.28	–	5 100	•	•	•	•	•									
	P1	4 648	★	0.31	–	5 100	•	•	•	•	•									
	N1	4 193		0.35	–	5 100	•	•	•	•	•									
	M1	3 803	★	0.38	–	5 100	•	•	•	•	•									
	L1	3 465		0.42	–	5 100	•	•	•	•	•									
	K1	3 169	★	0.46	–	5 100	•	•	•	•	•									
	J1	2 834		0.51	–	5 100	•	•	•	•	•									
	H1	2 602	★	0.56	–	5 100	•	•	•	•	•									
	G1	2 345		0.62	–	5 100	•	•	•	•	•									
	F1	2 017	★	0.72	–	5 100	•	•	•	•	•									
	E1	2 011	★	0.72	–	5 100	•	•	•	•	•									
	C1	1 798		0.81	–	5 100	•	•	•	•	•									
	D1	1 651	★	0.88	–	5 100	•	•	•	•	•									
	B1	1 488		0.97	–	5 100	•	•	•	•	•									
	A1	1 280	★	1.10	–	5 100	•	•	•	•	•									
D.128-Z48	**P1**	1 271		1.1	–	5 100	•	•	•	•	•	•								
5 100	**N1**	1 166		1.2	–	5 100	•	•	•	•	•	•								
	M1	1 074		1.4	–	5 100	•	•	•	•	•	•								
	L1	975		1.5	–	5 100	•	•	•	•	•	•								
	K1	889		1.6	–	5 100	•	•	•	•	•	•								
	J1	814		1.8	–	5 100	•	•	•	•	•	•								
	H1	726		2.0	–	5 100	•	•	•	•	•	•								
	G1	648		2.2	–	5 100			•	•	•	•								
	F1	551		2.6	–	5 100			•	•	•	•								
	E1	458		3.2	–	5 100			•	•	•	•								
	D1	451		3.2	–	5 100	•	•	•	•	•	•								
	C1	403		3.6	–	5 100			•	•	•	•								
	B1	342		4.2	–	5 100			•	•	•	•								
	A1	285		5.1	–	5 100			•	•	•	•								

★ Preferred transmission ratio

[1] Only possible with integrated adapter.

[2] Twisting angle applies to reduced-backlash gearboxes.

In the case of gearboxes of size 18 or 28, only possible with integrated motor or input unit KQ and KQS.

Calculation of maximum output torque T_{2max} for gearboxes with input units:

$T_{2max} = T_1 \times i_{tot}$, if $T_{2max} \leq T_{2N}$

If $T_{2max} \geq T_{2N}$ the max. output torque T_{2N} of the gearbox is the decisive factor.

© Siemens AG 2011

Selection and ordering data (continued)

Gearbox size	Ratio code	Transmission ratio	Output speed	Twisting angle [2]	Nominal torque	Permissible input torque T_1 [Nm] 2.5x the value is permissible for a brief period (e.g. motor starting torque)													
Max. gearbox torque	Order No.					3	3	5	10	20	26	61	98	198	198	291	356	580	1290
	15th and 16th position	i_{tot}	n_2 (50 Hz)	φ	T_{2N} (f_B=1)	Motor size													
Nm			rpm	arcmin	Nm	63	71	80	90	100	112	132	160	180	200	225	250	280	315
D.128	**K1**	268.16 ★	5.4	10	5 100				•	•	•								
5 100	**T1**	245.93	5.9	10	5 100				•	•	•								
	S1	219.72 ★	6.6	10	5 100				•	•	•	•							
	R1	201.22	7.2	10	5 100				•	•	•	•							
	Q1	185.36 ★	7.8	10	5 100				•	•	•	•							
	P1	171.62	8.4	10	5 100				•	•	•	•							
	N1	159.60 ★	9.1	10	5 100				•	•	•	•	•						
	M1	148.99	9.7	10	5 100				•	•	•	•	•						
	L1	133.30 ★	10.9	10	5 100				•	•	•	•	•	•	•				
	K1	123.53	11.7	10	5 100				•	•	•	•	•	•	•				
	J1	113.24 ★	12.8	10	5 100				•	•	•	•	•	•	•				
	H1	103.80	14.0	10	5 100				•	•	•	•	•	•	•				
	G1	88.46	16.4	10	5 100				•	•	•	•	•	•	•				
	F1	78.06 ★	18.6	10	5 100				•	•	•	•	•	•	•				
	E1	66.43	22.0	10	5 100					•	•	•	•	•	•				
	D1	57.56 ★	25.0	10	5 100					•	•	•	•	•	•				
	C1	48.44 ★	30.0	10	5 100					•	•	•	•	•	•				
	B1	43.71	33.0	10	5 100							•	•	•	•				
	A1	37.57 ★	39.0	10	5 100							•	•	•	•				
Z.128	**D2**	44.19 ★	33	9	3 275					•	•	•							
2 220 … 5 100	**C2**	40.96	35	9	3 196					•	•	•							
	B2	38.94 ★	37	9	5 100					•	•	•	•						
	A2	36.39	40	9	5 100					•	•	•	•						
	X1	32.11 ★	45	9	5 100					•	•	•	•	•	•				
	W1	30.28	48	9	5 100					•	•	•	•	•	•				
	V1	27.13 ★	53	9	5 100					•	•	•	•	•	•	•			
	U1	25.05	58	9	5 100					•	•	•	•	•	•	•			
	T1	21.41	68	9	5 100					•	•	•	•	•	•	•	• [1]		
	S1	19.35 ★	75	10	5 100					•	•	•	•	•	•	•	• [1]		
	R1	18.64	78	10	5 100						•	•	•	•	•	•	• [1]		
	Q1	16.12	90	10	4 993					•	•	•	•	•	•	•	• [1]		
	P1	14.06 ★	103	10	4 868					•	•	•	•	•	•	•	• [1]		
	N1	12.03 ★	121	10	4 716					•	•	•	•	•	•	•	• [1]		
	M1	10.78	135	10	4 603							•	•	•	•	•	• [1]		
	L1	9.13 ★	159	10	4 425							•	•	•	•	•	• [1]		
	K1	7.88	184	10	4 258								•	•	•	•	• [1]		
	J1	7.29 ★	199	12	2 540								•	•	•	•	• [1]		
	H1	6.24 ★	232	12	2 530								•	•	•	•	• [1]		
	G1	5.93 ★	245	12	3 908								•	•	•	•	• [1]		
	F1	5.59 ★	259	12	2 607								•	•	•	•	• [1]		
	E1	4.83	300	12	2 512								•	•	•	•	• [1]		
	D1	4.73 ★	307	13	2 375								•	•	•	•	• [1]		
	C1	4.09 ★	355	13	2 360								•	•	•	•	• [1]		
	B1	3.63 ★	399	13	2 310								•	•	•	•	• [1]		
	A1	3.07 ★	472	14	2 220								•	•	•	•	• [1]		

★ Preferred transmission ratio

[1] Only possible with integrated adapter.

[2] Twisting angle applies to reduced-backlash gearboxes.

In the case of gearboxes of size 18 or 28, only possible with integrated motor or input unit KQ and KQS.

Calculation of maximum output torque T_{2max} for gearboxes with input units:

$T_{2max} = T_1 \times i_{tot}$, if $T_{2max} \leq T_{2N}$

If $T_{2max} \geq T_{2N}$ the max. output torque T_{2N} of the gearbox is the decisive factor.

© Siemens AG 2011

Transmission ratios and maximum torques

Selection and ordering data (continued)

Gearbox size	Ratio code	Transmission ratio	Output speed	Twisting angle [2]	Nominal torque	Permissible input torque T_1 [Nm] 2.5x the value is permissible for a brief period (e.g. motor starting torque)													
Max. gearbox torque	Order No.					3	3	5	10	20	26	61	98	198	198	291	356	580	1290
Nm	15th and 16th position	i_{tot}	n_2 (50 Hz) rpm	φ arcmin	T_{2N} (f_B=1) Nm	Motor size 63	71	80	90	100	112	132	160	180	200	225	250	280	315
D.148-D38	**P1**	64 450	0.02	–	8 000	•	•	•											
8 000	**N1**	57 221	0.03	–	8 000	•	•	•											
	M1	50 166	0.03	–	8 000	•	•	•	•										
	L1	44 893	0.03	–	8 000	•	•	•	•										
	K1	39 846	0.04	–	8 000	•	•	•	•										
	J1	34 917	0.04	–	8 000	•	•	•	•										
	H1	30 701	0.05	–	8 000	•	•	•	•										
	G1	27 736	0.05	–	8 000	•	•	•	•										
	F1	24 169	0.06	–	8 000	•	•	•	•										
	E1	21 707	0.07	–	8 000	•	•	•	•										
	D1	19 596	0.07	–	8 000	•	•	•	•										
	C1	17 767	0.08	–	8 000	•	•	•	•										
	B1	16 167	0.09	–	8 000	•	•	•	•										
	A1	14 294	0.10	–	8 000	•	•	•	•										
D.148-Z38	**X1**	14 830	0.10	–	8 000	•	•	•											
8 000	**W1**	13 188	0.11	–	8 000	•	•	•											
	V1	11 440	0.13	–	8 000	•	•	•	•										
	U1	10 689	0.14	–	8 000	•	•	•	•										
	T1	9 401	0.15	–	8 000	•	•	•	•										
	S1	8 233	0.18	–	8 000	•	•	•	•	•									
	R1	7 282	0.20	–	8 000	•	•	•	•	•									
	Q1	6 600	0.22	–	8 000	•	•	•	•	•									
	P1	5 826	0.25	–	8 000	•	•	•	•	•									
	N1	5 256	0.28	–	8 000	•	•	•	•	•									
	M1	4 767	0.30	–	8 000	•	•	•	•	•									
	L1	4 343	0.33	–	8 000	•	•	•	•	•									
	K1	3 972	0.37	–	8 000	•	•	•	•	•									
	J1	3 552	0.41	–	8 000	•	•	•	•	•									
	H1	3 261	0.44	–	8 000	•	•	•	•	•									
	G1	2 939	0.49	–	8 000	•	•	•	•	•									
	F1	2 528	0.57	–	8 000	•	•	•	•	•									
	E1	2 521	0.58	–	8 000	•	•	•	•	•									
	D1	2 254	0.64	–	8 000	•	•	•	•	•									
	C1	2 070	0.70	–	8 000	•	•	•	•	•									
	B1	1 865	0.78	–	8 000	•	•	•	•	•									
	A1	1 604	0.90	–	8 000	•	•	•	•	•									
D.148-Z48	**N1**	1 631	0.89	–	8 000	•	•	•	•	•	•								
8 000	**M1**	1 502	0.97	–	8 000	•	•	•	•	•	•								
	L1	1 364	1.10	–	8 000	•	•	•	•	•	•								
	K1	1 243	1.20	–	8 000	•	•	•	•	•	•								
	J1	1 139	1.30	–	8 000	•	•	•	•	•	•								
	H1	1 016	1.40	–	8 000	•	•	•	•	•	•								
	G1	907	1.60	–	8 000			•	•	•	•								
	F1	770	1.90	–	8 000			•	•	•	•								
	E1	641	2.30	–	8 000			•	•	•	•								
	D1	631	2.30	–	8 000	•	•	•	•	•	•								
	C1	563	2.60	–	8 000			•	•	•	•								
	B1	478	3.00	–	8 000			•	•	•	•								
	A1	398	3.60	–	8 000			•	•	•	•								

★ Preferred transmission ratio
[1] Only possible with integrated adapter.
[2] Twisting angle applies to reduced-backlash gearboxes.
In the case of gearboxes of size 18 or 28, only possible with integrated motor or input unit KQ and KQS.
Calculation of maximum output torque T_{2max} for gearboxes with input units:
$T_{2max} = T_1 \times i_{tot}$, if $T_{2max} \leq T_{2N}$
If $T_{2max} \geq T_{2N}$ the max. output torque T_{2N} of the gearbox is the decisive factor.

© Siemens AG 2011

Selection and ordering data (continued)

Gearbox size	Ratio code	Transmission ratio	Output speed	Twisting angle [2]	Nominal torque	Permissible input torque T_1 [Nm] 2.5x the value is permissible for a brief period (e.g. motor starting torque)													
Max. gearbox torque	Order No.					3	3	5	10	20	26	61	98	198	198	291	356	580	1290
Nm	15th and 16th position	i_{tot}	n_2 (50 Hz) rpm	φ arcmin	T_{2N} (f_B=1) Nm	Motor size 63	71	80	90	100	112	132	160	180	200	225	250	280	315
D.148	**W1**	336.11	4.3	7	8 000					•	•								
8 000	**V1**	301.34 ★	4.8	7	8 000					•	•	•							
	U1	276.23	5.2	7	8 000					•	•	•							
	T1	254.70 ★	5.7	7	8 000					•	•	•							
	S1	236.05	6.1	7	8 000					•	•	•							
	R1	224.43 ★	6.5	7	8 000					•	•	•	•						
	Q1	209.76	6.9	7	8 000					•	•	•	•						
	P1	185.03 ★	7.8	7	8 000					•	•	•	•	•	•				
	N1	174.53	8.3	7	8 000					•	•	•	•	•	•				
	M1	156.38 ★	9.3	7	8 000					•	•	•	•	•	•	•			
	L1	144.39	10.0	7	8 000					•	•	•	•	•	•	•			
	K1	123.37	11.8	7	8 000					•	•	•	•	•	•	•			
	J1	111.50 ★	13.0	7	8 000					•	•	•	•	•	•	•			
	H1	107.42	13.5	7	8 000						•	•	•	•	•	•			
	G1	92.91	15.6	7	8 000					•	•	•	•	•	•	•			
	F1	81.04 ★	17.9	7	8 000					•	•	•	•	•	•	•			
	E1	69.36 ★	21.0	7	8 000					•	•	•	•	•	•	•			
	D1	62.12	23.0	7	8 000							•	•	•	•	•			
	C1	52.61 ★	28.0	7	8 000							•	•	•	•	•			
	B1	45.44	32.0	7	8 000								•	•	•	•			
	A1	34.15 ★	42.0	7	8 000								•	•	•	•			
Z.148	**B2**	57.50	25	7	4 664							•							
3 850 … 8 000	**A2**	54.24 ★	27	7	8 000							•	•						
	X1	50.74	29	7	8 000							•	•						
	W1	45.11 ★	32	7	8 000							•	•	•	•				
	V1	42.59	34	7	8 000							•	•	•	•				
	U1	38.23 ★	38	7	8 000							•	•	•	•	•			
	T1	35.09	41	7	8 000							•	•	•	•	•			
	S1	30.28	48	7	8 000							•	•	•	•	•	•		
	R1	26.49	55	7	8 000							•	•	•	•	•	•		
	Q1	23.04	63	7	8 000							•	•	•	•	•	•	•	
	P1	20.21 ★	72	7	8 000							•	•	•	•	•	•	•	
	N1	17.09 ★	85	7	8 000							•	•	•	•	•	•	•	
	M1	15.51	93	7	8 000							•	•	•	•	•	•	•	
	L1	13.52 ★	107	7	8 000							•	•	•	•	•	•	•	
	K1	11.48	126	7	8 000								•	•	•	•	•	•	
	J1	8.79 ★	165	9	8 000								•	•	•	•	•	•	
	H1	8.64 ★	168	9	4 800							•	•	•	•	•	•	•	
	G1	7.84 ★	185	9	4 800							•	•	•	•	•	•	•	
	F1	7.57 ★	192	10	5 600								•	•	•	•	•	•	
	E1	6.84 ★	212	10	4 800							•	•	•	•	•	•	•	
	D1	6.43	226	10	5 400								•	•	•	•	•	•	
	C1	5.80 ★	250	10	4 200								•	•	•	•	•	•	
	B1	4.92 ★	295	10	5 050								•	•	•	•	•	•	
	A1	4.44 ★	327	–	3 850								•	•	•	•	•	•	

★ Preferred transmission ratio

[1] Only possible with integrated adapter.

[2] Twisting angle applies to reduced-backlash gearboxes.

In the case of gearboxes of size 18 or 28, only possible with integrated motor or input unit KQ and KQS.

Calculation of maximum output torque T_{2max} for gearboxes with input units:

$T_{2max} = T_1 \times i_{tot}$, if $T_{2max} \leq T_{2N}$

If $T_{2max} \geq T_{2N}$ the max. output torque T_{2N} of the gearbox is the decisive factor.

© Siemens AG 2011

Transmission ratios and maximum torques

Selection and ordering data (continued)

Gearbox size	Ratio code	Transmission ratio		Output speed	Twisting angle [2]	Nominal torque	Permissible input torque T_1 [Nm] 2.5x the value is permissible for a brief period (e.g. motor starting torque)													
Max. gearbox torque	Order No.						3	3	5	10	20	26	61	98	198	198	291	356	580	1290
	15th and 16th position	i_{tot}		n_2 (50 Hz)	φ	T_{2N} (f_B=1)	Motor size													
Nm				rpm	arcmin	Nm	63	71	80	90	100	112	132	160	180	200	225	250	280	315
D.168-D48	**P1**	71 317	★	0.02	–	14 000	•	•	•											
14 000	**N1**	63 421		0.02	–	14 000	•	•	•											
	M1	55 016	★	0.03	–	14 000	•	•	•	•										
	L1	51 404		0.03	–	14 000	•	•	•	•										
	K1	45 210	★	0.03	–	14 000	•	•	•	•										
	J1	39 595		0.04	–	14 000	•	•	•	•	•									
	H1	35 022	★	0.04	–	14 000	•	•	•	•	•									
	G1	31 740		0.05	–	14 000	•	•	•	•	•									
	F1	28 017	★	0.05	–	14 000	•	•	•	•	•									
	E1	25 274		0.06	–	14 000	•	•	•	•	•									
	D1	22 923	★	0.06	–	14 000	•	•	•	•	•									
	C1	20 886		0.07	–	14 000	•	•	•	•	•									
	B1	19 103	★	0.08	–	14 000	•	•	•	•	•									
	A1	17 080		0.08	–	14 000	•	•	•	•	•									
D.168-Z48	**A2**	17 519		0.08	–	14 000	•	•	•											
14 000	**X1**	15 504	★	0.09	–	14 000	•	•	•	•										
	W1	14 094		0.10	–	14 000	•	•	•	•										
	V1	12 661	★	0.11	–	14 000	•	•	•	•										
	U1	10 853		0.13	–	14 000	•	•	•	•	•									
	T1	9 819	★	0.15	–	14 000	•	•	•	•	•	•								
	S1	9 064		0.16	–	14 000	•	•	•	•	•	•								
	R1	7 881	★	0.18	–	14 000	•	•	•	•	•	•								
	Q1	7 156		0.20	–	14 000	•	•	•	•	•	•								
	P1	6 534	★	0.22	–	14 000	•	•	•	•	•	•								
	N1	5 995		0.24	–	14 000	•	•	•	•	•	•								
	M1	5 523	★	0.26	–	14 000	•	•	•	•	•	•								
	L1	5 016		0.29	–	14 000	•	•	•	•	•	•								
	K1	4 569	★	0.32	–	14 000	•	•	•	•	•	•								
	J1	4 186		0.35	–	14 000	•	•	•	•	•	•								
	H1	3 735	★	0.39	–	14 000	•	•	•	•	•	•								
	G1	3 333		0.44	–	14 000			•	•	•	•								
	F1	2 831		0.51	–	14 000			•	•	•	•								
	E1	2 357	★	0.62	–	14 000			•	•	•	•								
	D1	2 319	★	0.63	–	14 000	•	•	•	•	•	•								
	C1	2 070		0.70	–	14 000			•	•	•	•								
	B1	1 758		0.82	–	14 000			•	•	•	•								
	A1	1 463	★	0.99	–	14 000			•	•	•	•								
D.168-Z68	**H1**	1 226		1.2	–	14 000			•	•	•	•	•							
14 000	**G1**	1 046		1.4	–	14 000			•	•	•	•	•							
	F1	871		1.7	–	14 000					•	•	•							
	E1	722		2.0	–	14 000					•	•	•							
	D1	637		2.3	–	14 000			•	•	•	•	•							
	C1	544		2.7	–	14 000			•	•	•	•	•							
	B1	453		3.2	–	14 000					•	•	•							
	A1	376		3.9	–	14 000					•	•	•							

★ Preferred transmission ratio
[1] Only possible with integrated adapter.
[2] Twisting angle applies to reduced-backlash gearboxes.
In the case of gearboxes of size 18 or 28, only possible with integrated motor or input unit KQ and KQS.
Calculation of maximum output torque T_{2max} for gearboxes with input units:
$T_{2max} = T_1 \times i_{tot}$, if $T_{2max} \leq T_{2N}$
If $T_{2max} \geq T_{2N}$ the max. output torque T_{2N} of the gearbox is the decisive factor.

© Siemens AG 2011

Selection and ordering data (continued)

Gearbox size	Ratio code	Transmission ratio	Output speed	Twisting angle [2]	Nominal torque	Permissible input torque T_1 [Nm] 2.5x the value is permissible for a brief period (e.g. motor starting torque)													
Max. gearbox torque	Order No.					3	3	5	10	20	26	61	98	198	198	291	356	580	1290
	15th and 16th position	i_{tot}	n_2 (50 Hz)	φ	T_{2N} (f_B=1)	Motor size													
Nm			rpm	arcmin	Nm	63	71	80	90	100	112	132	160	180	200	225	250	280	315
D.168	**U1**	341.61 ★	4.2	7	14 000							•							
14000	**T1**	313.41	4.6	7	14 000							•							
	S1	289.23 ★	5.0	7	14 000							•							
	R1	268.29	5.4	7	14 000							•							
	Q1	253.08 ★	5.7	7	14 000							•	•						
	P1	236.72	6.1	7	14 000							•	•						
	N1	210.49 ★	6.9	7	14 000							•	•	•	•				
	M1	198.71	7.3	7	14 000							•	•	•	•				
	L1	178.38 ★	8.1	7	14 000							•	•	•	•	•			
	K1	163.72	8.9	7	14 000							•	•	•	•	•			
	J1	141.28	10.3	7	14 000							•	•	•	•	•			
	H1	123.59	11.7	7	14 000							•	•	•	•	•			
	G1	107.48	13.5	7	14 000							•	•	•	•	•			
	F1	94.30 ★	15.4	7	14 000							•	•	•	•	•			
	E1	79.75 ★	18.2	7	14 000							•	•	•	•	•			
	D1	72.36	20.0	7	14 000							•	•	•	•	•			
	C1	63.08 ★	23.0	7	14 000							•	•	•	•	•			
	B1	53.56	27.0	7	14 000								•	•	•	•			
	A1	40.99 ★	35.0	7	14 000								•	•	•	•			
Z.168	**V1**	46.61	31	6	10 100							•	•	•	•				
6 470 …	**U1**	42.09	34	6	14 000							•	•	•	•	•			
14 000	**T1**	39.45	37	6	14 000							•	•	•	•	•	•		
	S1	33.88 ★	43	6	14 000							•	•	•	•	•	•		
	Q1	29.27	50	7	14 000							•	•	•	•	•	•	•	
	P1	25.84	56	7	14 000							•	•	•	•	•	•	•	
	N1	23.26 ★	62	7	14 000							•	•	•	•	•	•	•	
	M1	19.30 ★	75	7	14 000							•	•	•	•	•	•	•	
	L1	17.60	82	7	13 826							•	•	•	•	•	•	•	
	K1	15.44 ★	94	7	13 486							•	•	•	•	•	•	•	
	J1	13.27	109	7	13 081							•	•	•	•	•	•	•	
	H1	10.34 ★	140	7	12 345								•	•	•	•	•	•	
	G1	9.26 ★	157	-	7 850							•	•	•	•	•	•	•	
	F1	8.21 ★	177	7	11 622									•	•	•	•	•	
	E1	7.20 ★	201	9	7 100								•	•	•	•	•	•	
	D1	6.20 ★	234	9	7 507								•	•	•	•	•	•	
	C1	5.61 ★	258	10	6 780								•	•	•	•	•	•	
	B1	4.93 ★	294	10	7 064									•	•	•	•	•	
	A1	4.46 ★	325	10	6 470									•	•	•	•	•	

★ Preferred transmission ratio

[1] Only possible with integrated adapter.

[2] Twisting angle applies to reduced-backlash gearboxes.

In the case of gearboxes of size 18 or 28, only possible with integrated motor or input unit KQ and KQS.

Calculation of maximum output torque T_{2max} for gearboxes with input units:

$T_{2max} = T_1 \times i_{tot}$, if $T_{2max} \leq T_{2N}$

If $T_{2max} \geq T_{2N}$ the max. output torque T_{2N} of the gearbox is the decisive factor.

© Siemens AG 2011

Transmission ratios and maximum torques

Selection and ordering data (continued)

Gearbox size	Ratio code	Transmission ratio		Output speed	Twisting angle [2]	Nominal torque	Permissible input torque T_1 [Nm] 2.5x the value is permissible for a brief period (e.g. motor starting torque)													
Max. gearbox torque	Order No.						3	3	5	10	20	26	61	98	198	198	291	356	580	1290
	15th and 16th position	i_{tot}		n_2 (50 Hz)	φ	T_{2N} (f_B=1)	Motor size													
Nm				rpm	arcmin	Nm	63	71	80	90	100	112	132	160	180	200	225	250	280	315
D.188-D48	**P1**	50 901	★	0.03	–	20 000	•	•	•											
20 000	**N1**	45 266		0.03	–	20 000	•	•	•											
	M1	39 267	★	0.04	–	20 000	•	•	•	•										
	L1	36 689		0.04	–	20 000	•	•	•	•										
	K1	32 268	★	0.04	–	20 000	•	•	•	•										
	I1	28 260		0.05	–	20 000	•	•	•	•										
	H1	24 996	★	0.06	–	20 000	•	•	•	•	•									
	G1	22 654		0.06	–	20 000	•	•	•	•	•									
	F1	19 997	★	0.07	–	20 000	•	•	•	•	•									
	E1	18 039		0.08	–	20 000	•	•	•	•	•									
	D1	16 361	★	0.09	–	20 000	•	•	•	•	•									
	C1	14 907		0.10	–	20 000	•	•	•	•	•									
	B1	13 634	★	0.11	–	20 000	•	•	•	•	•									
	A1	12 191		0.12	–	20 000	•	•	•	•	•									
D.188-Z48	**X1**	12 504		0.12	–	20 000	•	•	•											
20 000	**W1**	11 066	★	0.13	–	20 000	•	•	•	•										
	V1	9 037	★	0.16	–	20 000	•	•	•	•										
	U1	7 746		0.19	–	20 000	•	•	•	•	•									
	T1	7 008	★	0.21	–	20 000	•	•	•	•	•	•								
	S1	6 469		0.22	–	20 000	•	•	•	•	•	•								
	R1	5 625	★	0.26	–	20 000	•	•	•	•	•	•								
	Q1	5 107		0.28	–	20 000	•	•	•	•	•	•								
	P1	4 663	★	0.31	–	20 000	•	•	•	•	•	•								
	N1	4 279		0.34	–	20 000	•	•	•	•	•	•								
	M1	3 942	★	0.37	–	20 000	•	•	•	•	•	•								
	L1	3 580		0.41	–	20 000	•	•	•	•	•	•								
	K1	3 261	★	0.44	–	20 000	•	•	•	•	•	•								
	J1	2 988		0.49	–	20 000	•	•	•	•	•	•								
	H1	2 666	★	0.54	–	20 000	•	•	•	•	•	•								
	G1	2 379		0.61	–	20 000			•	•	•	•								
	F1	2 021		0.72	–	20 000			•	•	•	•								
	E1	1 682	★	0.86	–	20 000			•	•	•	•								
	D1	1 655	★	0.88	–	20 000	•	•	•	•	•	•								
	C1	1 477		0.98	–	20 000			•	•	•	•								
	B1	1 255		1.20	–	20 000			•	•	•	•								
	A1	1 044	★	1.40	–	20 000			•	•	•	•								
D.188-Z68	**G1**	896	★	1.6	–	20 000			•	•	•	•	•							
20 000	**F1**	746		1.9	–	20 000					•	•	•							
	E1	619	★	2.3	–	20 000					•	•	•							
	D1	546		2.7	–	20 000			•	•	•	•	•							
	C1	466	★	3.1	–	20 000			•	•	•	•	•							
	B1	388		3.7	–	20 000					•	•	•							
	A1	322	★	4.5	–	20 000					•	•	•							

★ Preferred transmission ratio

[1] Only possible with integrated adapter.

[2] Twisting angle applies to reduced-backlash gearboxes.

In the case of gearboxes of size 18 or 28, only possible with integrated motor or input unit KQ and KQS.

Calculation of maximum output torque T_{2max} for gearboxes with input units:

$T_{2max} = T_1 \times i_{tot}$, if $T_{2max} \leq T_{2N}$

If $T_{2max} \geq T_{2N}$ the max. output torque T_{2N} of the gearbox is the decisive factor.

© Siemens AG 2011

Selection and ordering data (continued)

Gearbox size	Ratio code	Transmission ratio	Output speed	Twisting angle [2]	Nominal torque	Permissible input torque T_1 [Nm] 2.5x the value is permissible for a brief period (e.g. motor starting torque)													
Max. gearbox torque	Order No.					3	3	5	10	20	26	61	98	198	198	291	356	580	1290
	15th and 16th position	i_{tot}	n_2 (50 Hz)	φ	T_{2N} (f_B=1)	Motor size													
Nm			rpm	arcmin	Nm	63	71	80	90	100	112	132	160	180	200	225	250	280	315
D.188	**N1**	243.82	5.9	6	20 000					•	•	•	•						
20 000	**M1**	220.17	6.6	6	20 000					•	•	•	•	•					
	L1	206.34	7.0	6	20 000					•	•	•	•	•	•				
	K1	177.23 ★	8.2	6	20 000					•	•	•	•	•	•				
	J1	153.12	9.5	6	20 000					•	•	•	•	•	•	•			
	H1	135.16	10.7	6	20 000					•	•	•	•	•	•	•			
	G1	121.67 ★	11.9	6	20 000					•	•	•	•	•	•	•			
	F1	100.96 ★	14.4	6	20 000					•	•	•	•	•	•	•			
	E1	92.06	15.8	6	20 000					•	•	•	•	•	•	•			
	D1	80.77 ★	18.0	6	20 000					•	•	•	•	•	•	•			
	C1	69.41	21.0	6	20 000					•	•	•	•	•	•	•			
	B1	54.06 ★	27.0	6	20 000					•	•	•	•	•	•	•			
	A1	42.95 ★	34.0	–	20 000					•	•	•	•	•	•	•			
Z.188	**P1**	52.35	28	6	15 710								•	•	•	•			
13 040 …	**N1**	48.22	30	6	15 920								•	•	•	•	•		
20 000	**M1**	41.85 ★	35	6	16 110								•	•	•	•	•		
	L1	36.89	39	6	16 600								•	•	•	•	•	•	
	K1	32.37	45	6	18 450								•	•	•	•	•	•	
	J1	29.18 ★	50	6	20 000								•	•	•	•	•	•	
	H1	24.77 ★	59	6	20 000								•	•	•	•	•	•	
	G1	23.01	63	6	20 000								•	•	•	•	•	•	
	F1	19.76 ★	73	6	20 000								•	•	•	•	•	•	
	E1	16.86	86	6	20 000								•	•	•	•	•	•	•
	D1	13.28 ★	109	6	18 820								•	•	•	•	•	•	•
	C1	10.69 ★	136	6	16 170									•	•	•	•	•	•
	B1	9.29	156	6	14 310											•	•	•	•
	A1	8.30	175	6	13 040												•	•	•

★ Preferred transmission ratio

[1] Only possible with integrated adapter.

[2] Twisting angle applies to reduced-backlash gearboxes.

In the case of gearboxes of size 18 or 28, only possible with integrated motor or input unit KQ and KQS.

Calculation of maximum output torque T_{2max} for gearboxes with input units:

$T_{2max} = T_1 \times i_{tot}$, if $T_{2max} \leq T_{2N}$

If $T_{2max} \geq T_{2N}$ the max. output torque T_{2N} of the gearbox is the decisive factor.

© Siemens AG 2011

Mounting types

Selection and ordering data

Mounting type	Order No. 14th position	Code in type designation 2nd position	Representation
Foot-mounted design	**A**	–	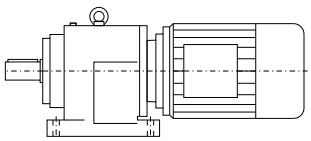
Flange-mounted design (A-type)	**F**	F	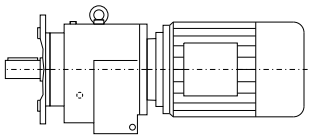
Housing flange (C-type)	**H**	Z	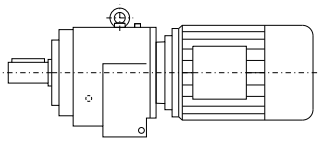
Agitator flange	**R**	R	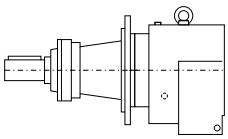

Helical gearbox with agitator flange, sizes 68 to168

The agitator flange is fitted with a heavy-duty spherical roller bearing with a sizable bearing span for absorbing large radial and axial forces.

The optimized design ensures that no axial forces are transferred.

Helical gearboxes with an agitator flange are particularly well suited to agitator applications with very high radial forces.

Bearing life can be calculated on request or using the MOTOX Configurator calculation program.

© Siemens AG 2011

Selection and ordering data

Shaft design	Order No. 8th position	Shaft dimensions					
1-stage helical gearbox E							
Size		**E38**	**E48**	**E68**	**E88**	**E108**	**E128**
Solid shaft with feather key	**1**	V20 x 40 *)	V25 x 50 *)	V30 x 60 *)	V40 x 80 *)	V50 x 100 *)	V60 x 120 *)
	2	V25 x 50	V30 x 60	V40 x 80	V45 x 90	V55 x 110	
Size		**E148**					
Solid shaft with feather key	**1**	V70 x 140 *)					
	2						
2-stage helical gearbox Z							
Size		**Z18**	**Z28**	**Z38**	**Z48**	**Z68**	**Z88**
Solid shaft with feather key	**1**	V16 x 28	V25 x 50 *)	V25 x 50 *)	V30 x 60 *)	V40 x 80 *)	V50 x 100 *)
	2	V20 x 40 *)		V30 x 60	V40 x 80	V50 x 100	V60 x 120
	3				V35 x 70	V35 x 70	
Size		**Z108**	**Z128**	**Z148**	**Z168**	**Z188**	
Solid shaft with feather key	**1**	V60 x 120 *)	V70 x 140 *)	V90 x 170 *)	V100 x 210 *)	V120 x 210 *)	
	2	V70 x 140	V90 x 170	V100 x 210	V120 x 210		
	3				V110 x 210		
3-stage helical gearbox D							
Size		**D18**	**D28**	**D38**	**D48**	**D68**	**D88**
Solid shaft with feather key	**1**	V16 x 28	V25 x 50 *)	V25 x 50 *)	V30 x 60 *)	V40 x 80 *)	V50 x 100 *)
	2	V20 x 40 *)		V30 x 60	V40 x 80	V50 x 100	V60 x 120
	3				V35 x 70	V35 x 70	
Size		**D108**	**D128**	**D148**	**D168**	**D188**	
Solid shaft with feather key	**1**	V60 x 120 *)	V70 x 140 *)	V90 x 170 *)	V100 x 210 *)	V120 x 210 *)	
	2	V70 x 140	V90 x 170	V100 x 210	V120 x 210		
	3				V110 x 210		

*) Preferred series

Shaft designs for helical gearbox with agitator flange

Shaft design	Order No. 8th position	Order No. suffix	Shaft dimensions					
2-stage helical gearbox ZR								
Size			**ZR68**	**ZR88**	**ZR108**	**ZR128**	**ZR148**	**ZR168**
Solid shaft with feather key	**2**		V50 x 100	V60 x 120	V70 x 140		V100 x 210	
	9	**H1A**				V80 x 170		V110 x 210
3-stage helical gearbox DR								
Size			**DR68**	**DR88**	**DR108**	**DR128**	**DR148**	**DR168**
Solid shaft with feather key	**2**		V50 x 100	V60 x 120	V70 x 140		V100 x 210	
	9	**H1A**				V80 x 170		V110 x 210

© Siemens AG 2011

Flange-mounted designs (A-type)

Selection and ordering data

Order code	Flange diameter										
Helical gearbox EF, 1-stage											
Size	**EF38**	**EF48**	**EF68**	**EF88**	**EF108**	**EF128**	**EF148**				
H01	120	120									
H02	140	140	200	250	300	350	350				
H03	160	160	250	300	350	450	450				
H04	200	200	300	350	450		550				
H05	250	250									
Helical gearbox ZF, 2-stage											
Size	**ZF18**	**ZF28**	**ZF38**	**ZF48**	**ZF68**	**ZF88**	**ZF108**	**ZF128**	**ZF148**	**ZF168**	**ZF188**
H02	120	120	120								550
H03	140	140	140	200	250	300	350	350	450	450	660
H04	160	160	160	250	300	350	450	450	550	550	
H05			200	300	350	450		550		660	
H06			250								
Helical gearbox DF, 3-stage											
Size	**DF18**	**DF28**	**DF38**	**DF48**	**DF68**	**DF88**	**DF108**	**DF128**	**DF148**	**DF168**	**DF188**
H02	120	120	120								550
H03	140	140	140	200	250	300	350	350	450	450	660
H04	160	160	160	250	300	350	450	450	550	550	
H05			200	300	350	450		550		660	
H06			250								

© Siemens AG 2011

Selection and ordering data

The mounting type / mounting position must be specified when, you place your order to ensure that the gearbox is supplied with the correct quantity of oil.

Please contact customer service if you wish to use a mounting position which is not shown here.

Position of the terminal box

The terminal box of the motor can be mounted in four different positions. See Chapter 8 for an accurate representation of the terminal box position and the corresponding order codes.

1-stage helical gearbox, foot-mounted design

Oil control valves:

- Size 38: V Oil inlet
- From size 48 up: Oil level, Ventilation, Oil drain, Oil dipstick, * On opposite side

1 ... 4 Position of the terminal box, see Chapter 8

1) Standard mounting type

B3 (IM B3)[1)]
Order code: **D04**

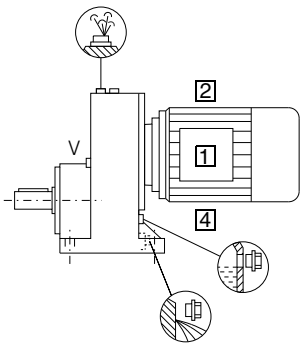

V5 (IM V5)
Order code: **E02**

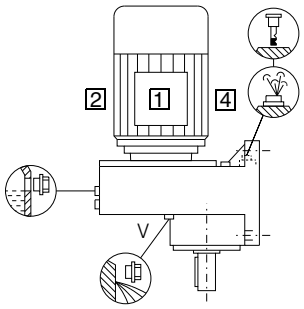

V6 (IM V6)
Order code: **E14**

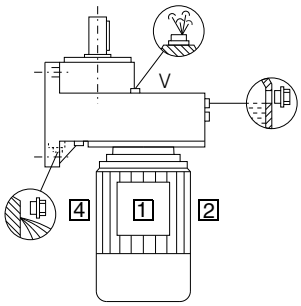

B8 (IM B8)
Order code: **D66**

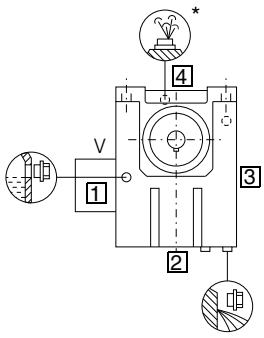

B7 (IM B7)
Order code: **D57**

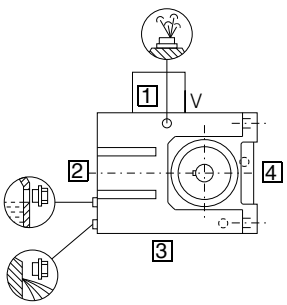

B6 (IM B6)
Order code: **D36**

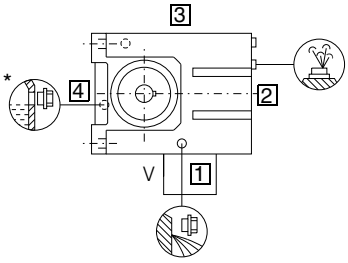

© Siemens AG 2011

Mounting types and mounting positions

Selection and ordering data (continued)

1-stage helical gearbox, flange-mounted design (EF) and with housing flange (EZ)

Oil control valves:

- Size 38: V Oil inlet
- From size 48 up: Oil level, Ventilation, Oil drain, Oil dipstick, * On opposite side

1 ... 4 Position of the terminal box, see Chapter 8

1) Standard mounting type

EF: B5 (IM B5)[1)]
Order code: **D16**
EZ: B14 (IM B14)
Order code: **D00**

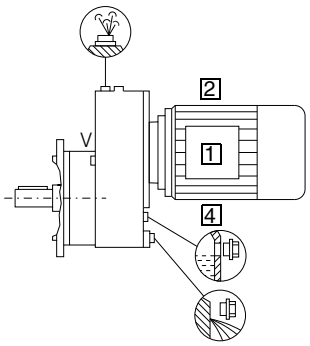

EF: V1 (IM V1)
Order code: **D88**
EZ: V18 (IM V18)
Order code: **D94**

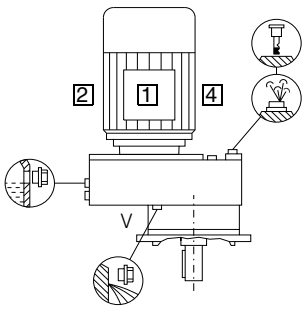

EF: V3 (IM V3)
Order code: **D96**
EZ: V19 (IM V19)
Order code: **D95**

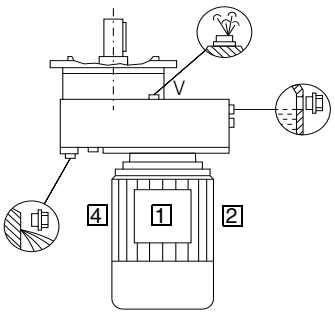

EF: B5-02 (IM B5-02)
Order code: **D26**
EZ: B14-02 (IM B14-02)
Order code: **D02**

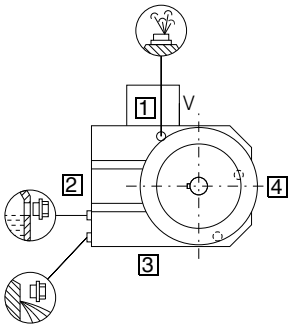

EF: B5-03 (IM B5-03)
Order code: **D31**
EZ: B14-03 (IM B14-03)
Order code: **D03**

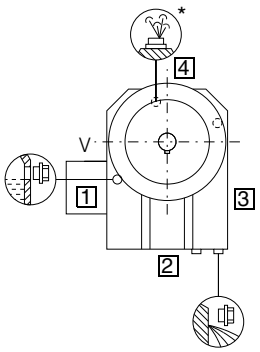

EF: B5-00 (IM B5-00)
Order code: **D17**
EZ: B14-00 (IM B14-00)
Order code: **D01**

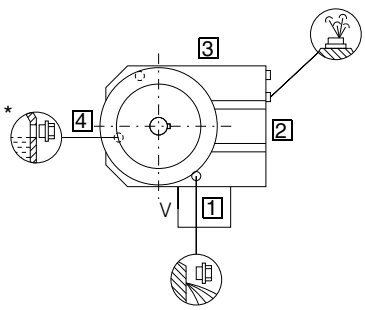

© Siemens AG 2011

Selection and ordering data (continued)

2- and 3-stage helical gearbox, foot-mounted design, sizes 18 - 88

Oil control valves:

- Size 18/28: These types are lubricated for life. No ventilation, oil level, or drain plugs are present.
- Size 38: V Oil inlet
- From size 48 up: Oil level, Ventilation, Oil drain, * On opposite side

② 2-stage gearbox ③ 3-stage gearbox

1 ... 4 Position of the terminal box, see Chapter 8

1) Standard mounting type

B3 (IM B3) 1)
Order code: **D04**

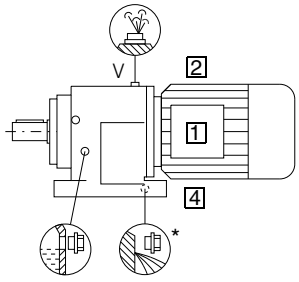

V5 (IM V5)
Order code: **E02**

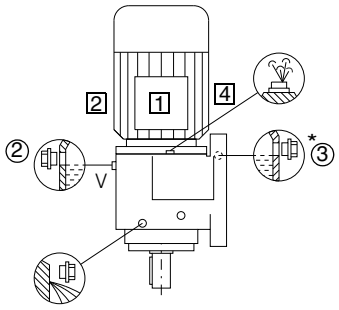

V6 (IM V6)
Order code: **E14**

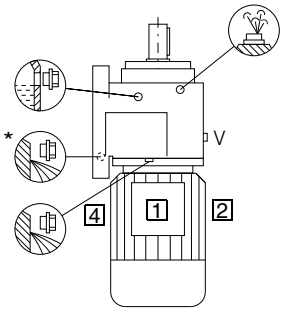

B8 (IM B8)
Order code: **D66**

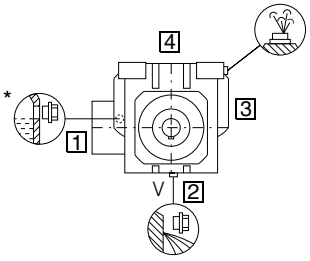

B7 (IM B7)
Order code: **D57**

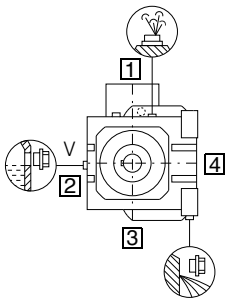

B6 (IM B6)
Order code: **D36**

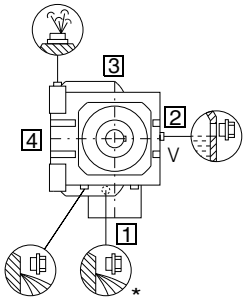

© Siemens AG 2011

Mounting types and mounting positions

Selection and ordering data (continued)

2- and 3-stage helical gearbox, foot-mounted design, sizes 108-168

Oil control valves:

Oil level Ventilation Oil drain * On opposite side

② 2-stage gearbox ③ 3-stage gearbox

1 ... 4 Position of the terminal box, see Chapter 8

1) Standard mounting type

B3 (IM B3) 1)
Order code: **D04**

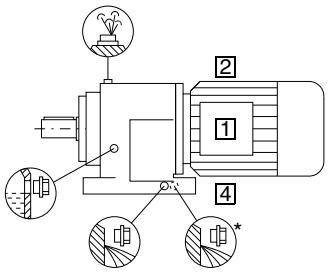

V5 (IM V5)
Order code: **E02**

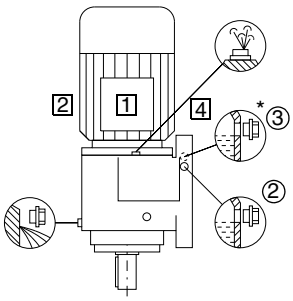

V6 (IM V6)
Order code: **E14**

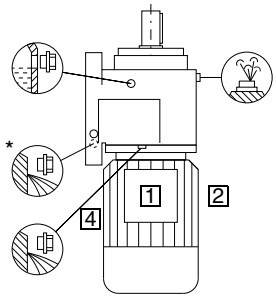

B8 (IM B8)
Order code: **D66**

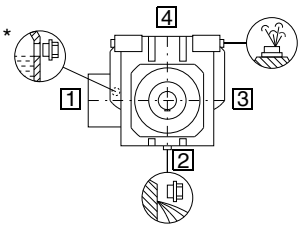

B7 (IM B7)
Order code: **D57**

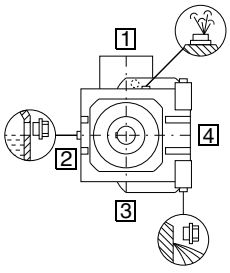

B6 (IM B6)
Order code: **D36**

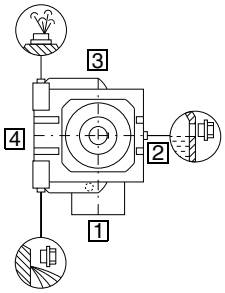

© Siemens AG 2011

Selection and ordering data (continued)

2- and 3-stage helical gearbox, foot-mounted design, size 188

Oil control valves:

Oil level Ventilation Oil drain * On opposite side

② 2-stage gearbox ③ 3-stage gearbox ④ Tandem gearbox

1 ... 4 Position of the terminal box, see Chapter 8

1) Standard mounting type

B3 (IM B3) 1)
Order code: **D04**

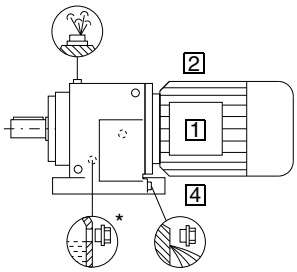

V5 (IM V5)
Order code: **E02**

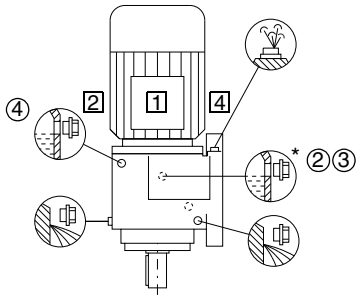

V6 (IM V6)
Order code: **E14**

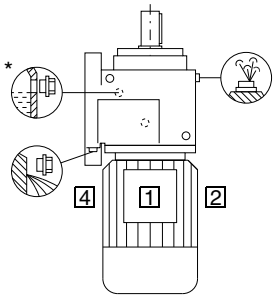

B8 (IM B8)
Order code: **D66**

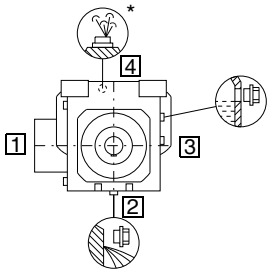

B7 (IM B7)
Order code: **D57**

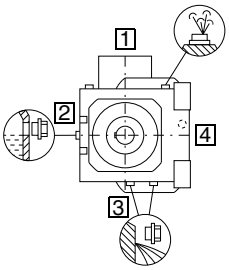

B6 (IM B6)
Order code: **D36**

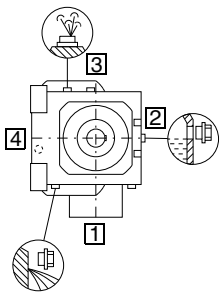

© Siemens AG 2011

Mounting types and mounting positions

Selection and ordering data (continued)

2- and 3-stage helical gearbox, flange-mounted design (DF/ZF) or with housing flange (DZ/ZZ), sizes 18 - 88

Oil control valves:

- Size 18/28: These types are lubricated for life. No ventilation, oil level, or drain plugs are present.
- Size 38: V Oil inlet
- From size 48 up: Oil level, Ventilation, Oil drain, Oil dipstick, * On opposite side

1 ... 4 Position of the terminal box, see Chapter 8

1) Standard mounting type

DF/ZF: B5 (IM B5) 1)
Order code: **D16**
DZ/ZZ: B14 (IM B14)
Order code: **D00**

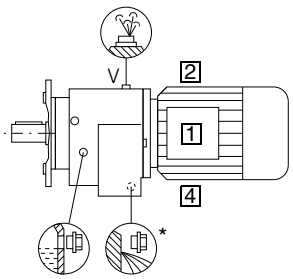

DF/ZF: V1 (IM V1)
Order code: **D88**
DZ/ZZ: V18 (IM V18
Order code: **D94**

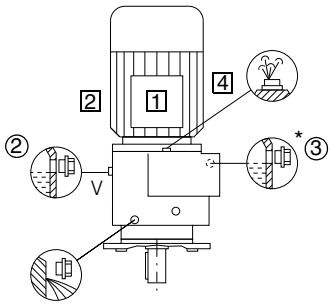

DF/ZF: V3 (IM V3)
Order code: **D96**
DZ/ZZ: V19 (IM V19)
Order code: **D95**

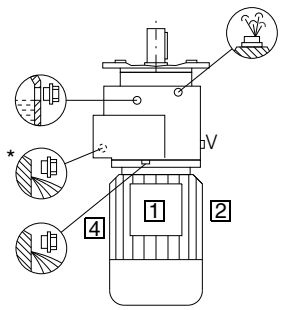

DF/ZF: B5-02(IM B5-02)
Order code: **D26**
DZ/ZZ: B14-02 (IM B14-02)
Order code: **D02**

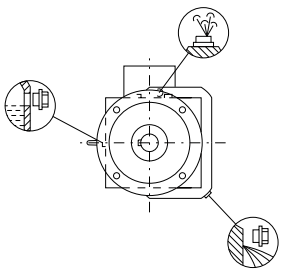

DF/ZF: B5-03(IM B5-03)
Order code: **D31**
DZ/ZZ: B14-03 (IM B14-03)
Order code: **D03**

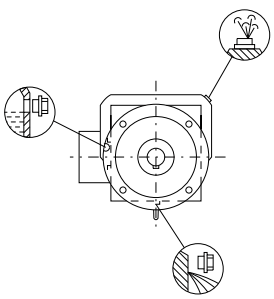

DF/ZF: B5-00 (IM B5-00)
Order code: **D17**
DZ/ZZ: B14-00 (IM B14-00)
Order code: **D01**

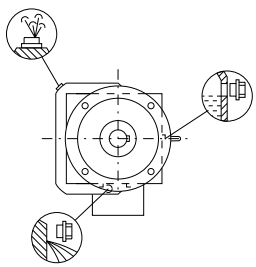

© Siemens AG 2011

Selection and ordering data (continued)

2- and 3-stage helical gearbox, flange-mounted design (DF/ZF) or with housing flange (DZ/ZZ), sizes 108 - 168

Oil control valves:

Oil level Ventilation Oil drain * On opposite side

② 2-stage gearbox ③ 3-stage gearbox

1 ... 4 Position of the terminal box, see Chapter 8

1) Standard mounting type

DF/ZF: B5 (IM B5) 1)
Order code: **D16**
DZ/ZZ: B14 (IM B14)
Order code: **D00**

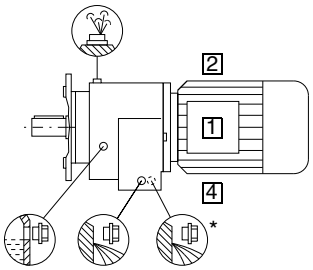

DF/ZF: V1 (IM V1)
Order code: **D88**
DZ/ZZ: V18 (IM V18)
Order code: **D94**

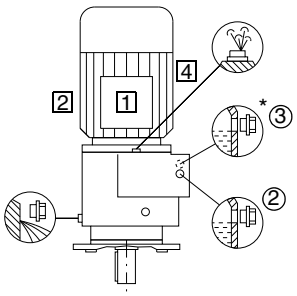

DF/ZF: V3 (IM V3)
Order code: **D96**
DZ/ZZ: V19 (IM V19)
Order code: **D95**

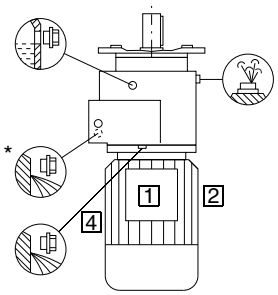

DF/ZF: B5-02(IM B5-02)
Order code: **D26**
DZ/ZZ: B14-02 (IM B14-02)
Order code: **D02**

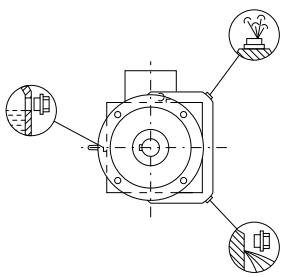

DF/ZF: B5-03(IM B5-03)
Order code: **D31**
DZ/ZZ: B14-03 (IM B14-03)
Order code: **D03**

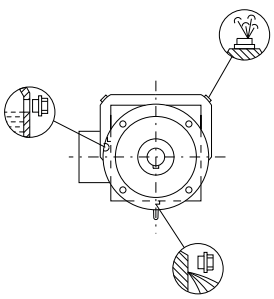

DF/ZF: B5-00 (IM B5-00)
Order code: **D17**
DZ/ZZ: B14-00 (IM B14-00)
Order code: **D01**

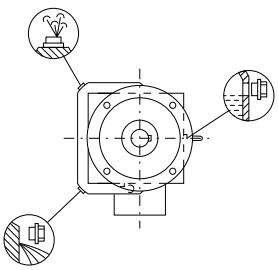

© Siemens AG 2011

Mounting types and mounting positions

Selection and ordering data (continued)

2- and 3-stage helical gearbox, flange-mounted design (DF/ZF) or with housing flange (DZ/ZZ), size 188

Oil control valves:

Oil level | Ventilation | Oil drain | * On opposite side

② 2-stage gearbox | ③ 3-stage gearbox | ④ Tandem gearbox

1 ... 4 Position of the terminal box, see Chapter 8

1) Standard mounting type

DF/ZF: B5 (IM B5) 1)
Order code: **D16**
DZ/ZZ: B14 (IM B14) 1)
Order code: **D00**

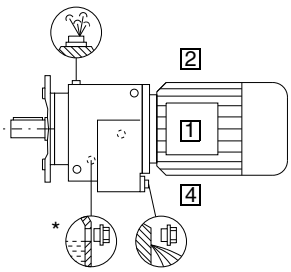

DF/ZF: V1 (IM V1)
Order code: **D88**
DZ/ZZ: V18 (IM V18)
Order code: **D94**

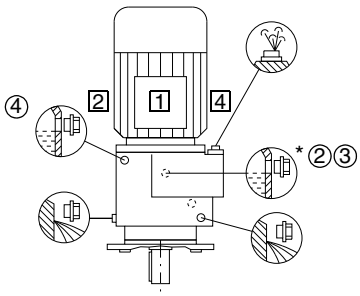

DF/ZF: V3 (IM V3)
Order code: **D96**
DZ/ZZ: V19 (IM V19)
Order code: **D95**

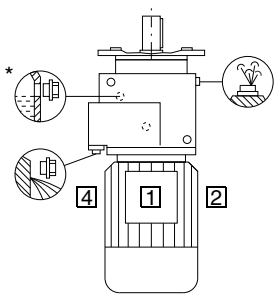

DF/ZF: B5-02(IM B5-02)
Order code: **D26**
DZ/ZZ: B14-02 (IM B14-02)
Order code: **D02**

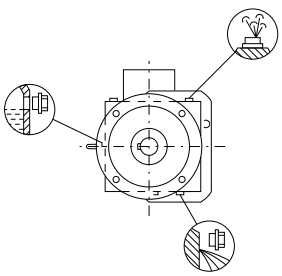

DF/ZF: B5-03(IM B5-03)
Order code: **D31**
DZ/ZZ: B14-03 (IM B14-03)
Order code: **D03**

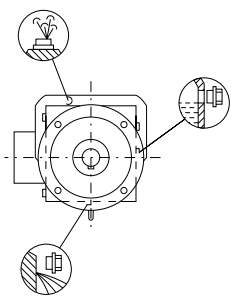

DF/ZF: B5-00 (IM B5-00)
Order code: **D17**
DZ/ZZ: B14-00 (IM B14-00)
Order code: **D01**

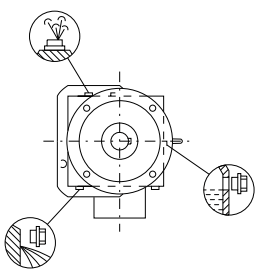

© Siemens AG 2011

Selection and ordering data (continued)

2- and 3-stage helical gearbox with agitator flange (DR/ZR), sizes 68 - 88

Oil control valves:

Oil level Ventilation Oil drain * On opposite side

② 2-stage gearbox ③ 3-stage gearbox

1 ... 4 Position of the terminal box, see Chapter 8

1) Standard mounting type

DR/ZR: B5 (IM B5) 1)
Order code: **D16**

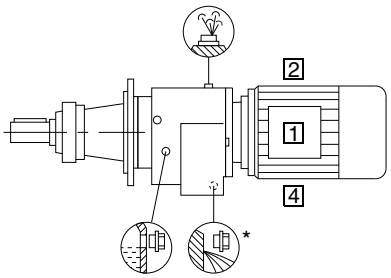

DR/ZR: V1 (IM V1)
Order code: **D88**

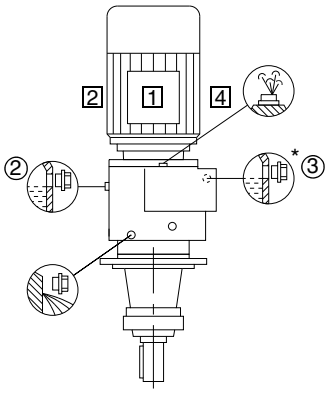

DR/ZR: V3 (IM V3)
Order code: **D96**

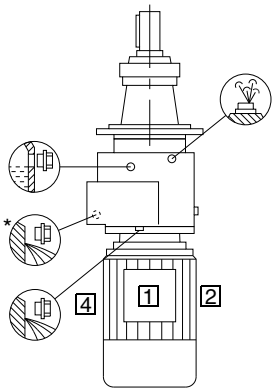

© Siemens AG 2011

2

Selection and ordering data (continued)

2- and 3-stage helical gearbox with agitator flange (DR/ZR), sizes 108 - 168

Oil control valves:

Oil level Ventilation Oil drain * On opposite side

② 2-stage gearbox ③ 3-stage gearbox

1 ... 4 Position of the terminal box, see Chapter 8

1) Standard mounting type

DR/ZR: B5 (IM B5) 1)
Order code: **D16**

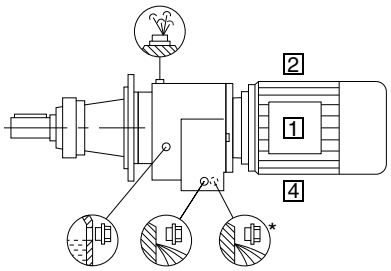

DR/ZR: V1 (IM V1)
Order code: **D88**

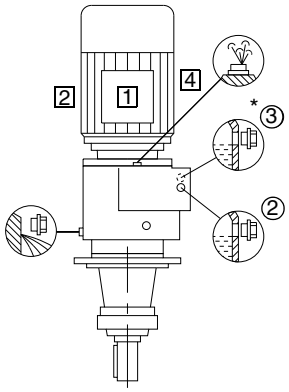

DR/ZR: V3 (IM V3)
Order code: **D96**

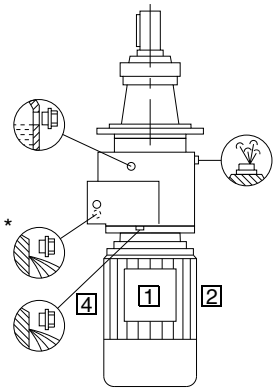

© Siemens AG 2011

Selection and ordering data (continued)

Helical tandem gearbox

The mounting type / mounting position of the tandem gearbox corresponds to that of the main gearbox.The figures below are only designed to show the position of the oil control valves of the 2nd gearbox.

Note:

In a horizontal operating position the bulging part of the housing of the 2nd gearbox generally faces vertically downwards.

Oil control valves:

- Size 28/38 (2nd gearbox): These types are lubricated for life. No ventilation, oil level, or drain plugs are present.
- From size 48 up: Oil level Ventilation Oil drain * On opposite side

② 2-stage gearbox ③ 3-stage gearbox

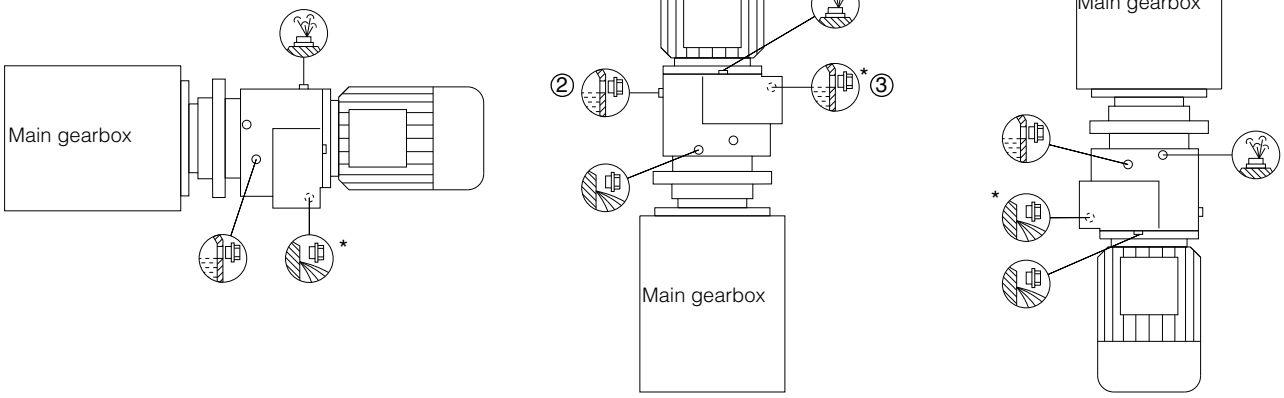

© Siemens AG 2011

Special versions

Lubricants

Helical gearboxes are filled with mineral oil and supplied ready for use as standard.

If the gearbox is to be used in an application with special requirements, the lubricants listed in the table below can be used.

Area of application	Ambient temperature [1]	DIN ISO designation	Order code
Standard oils			
Standard temperature	-10 … +40 °C	CLP ISO VG220	**K06**
Improved oil service life	-20 … +50 °C	CLP ISO PG VG220	**K07**
High temperature usage	0 … +60 °C	CLP ISO PG VG460	**K08**
Low temperature usage	-40 … +40 °C	CLP ISO PAO VG220	[2]
Lowest temperature usage	-40 … +10 °C	CLP ISO PAO VG68	[2]
Physiologically safe oils (for use in the food industry) in acc. with NSF (USDA)-H1			
Standard temperature	-30 … +40 °C	CLP ISO H1 VG460	**K11**
Biologically degradable oils			
Standard temperature	-20 … +40 °C	CLP ISO E VG220	**K10**

[1] Recommendation

[2] On request

Sizes 18 to 28 do not feature any ventilation, oil level, or drain plugs. The lubricant does not need to be changed, due to the low thermal load the gearbox is subjected to.

Helical gearboxes of size 38 have an oil screw; these gearboxes do not require ventilation or ventilation elements.

Gearboxes of sizes 48 to 188 are fitted with filler, oil level, and drain plugs as standard. The ventilation and vent filter, which is delivered loose, must be attached in place of the filler plug prior to startup.

Oil level control

Oil sight glass

For size 48 and above, gearboxes can be equipped with a visual oil level indicator (oil sight glass) for most mounting types and mounting positions.

Order code:
Oil sight glass **G34**

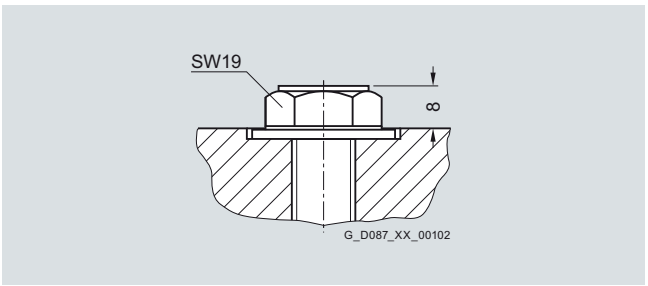

SW = Wrench width

Gearbox	Size
Helical gearbox	E.48 … E.128 D./Z.48 … D./Z.128

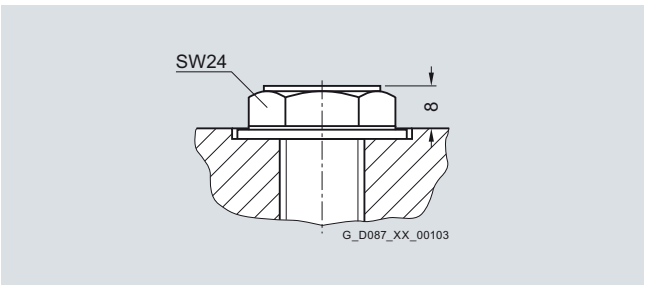

SW = Wrench width

Gearbox	Size
Helical gearbox	E.148 D./Z.148 … D./Z.188

Electrical oil level monitoring system

On request, the gearbox can be supplied with an electrical oil level monitoring system, which enables the oil level of the gearbox to be monitored remotely. The oil level is monitored by a capacitive sensor only when the gearbox starts up; it is not measured continuously during operation.

© Siemens AG 2011

Gearbox ventilation

The positions of the ventilation and ventilation elements can be seen on the mounting position diagrams.

If required, a pressure ventilation valve can be used for size 48 and above.

Order code	**E.48 … E.128** **D./Z.48 … D./Z.128**	**E.148** **D./Z.148 … D./Z.188**
Vent filter Order code: **G44**	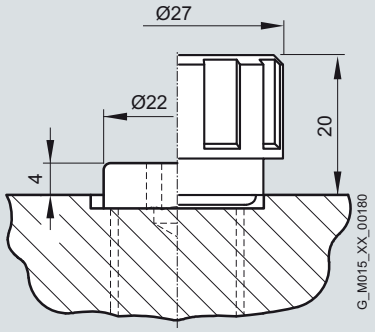	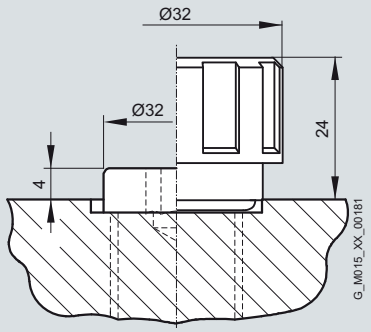
Pressure ventilation valve Order code: **G45**	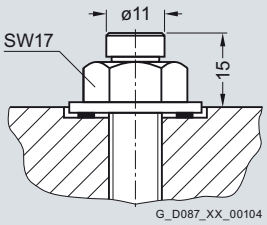	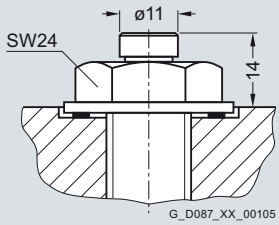

SW = Wrench width

Oil drain

Magnetic oil drain plug

A magnetic oil drain plug for inserting in the oil drainage hole is available for helical gearboxes of size 48 and above. This serves to collect any metal grit contained in the gear lubricant.

Order code:
Magnetic oil drain plug **G53**

Oil drain valve

An oil drain valve is available for helical gearboxes of size 48 and above.

The oil drain valve may be designed as a complete unit featuring a screw plug, depending on the corresponding mounting position.

Order code:
Oil drain valve, straight **G54**

An angled oil drain valve is also available on request.

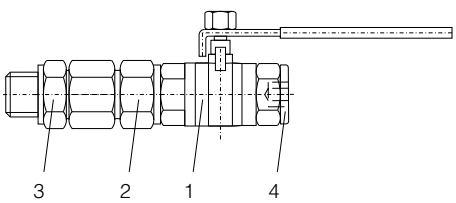

Pos.1 Oil drain valve
Pos.2 Screwed connection EGE
Pos.3 Screwed connection GE
Pos.4 Screw plug

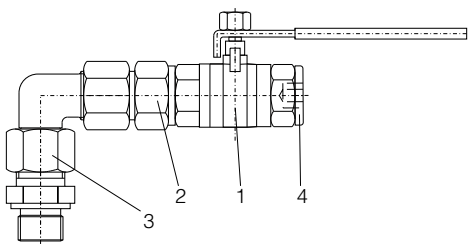

Pos.1 Oil drain valve
Pos.2 Screwed connection EGE
Pos.3 Screwed connection GE
Pos.4 Screw plug

© Siemens AG 2011

Sealing

Combination shaft sealing

A combination shaft sealing, which helps to prevent oil from leaking, is available for helical gearboxes of sizes 38 to 168.

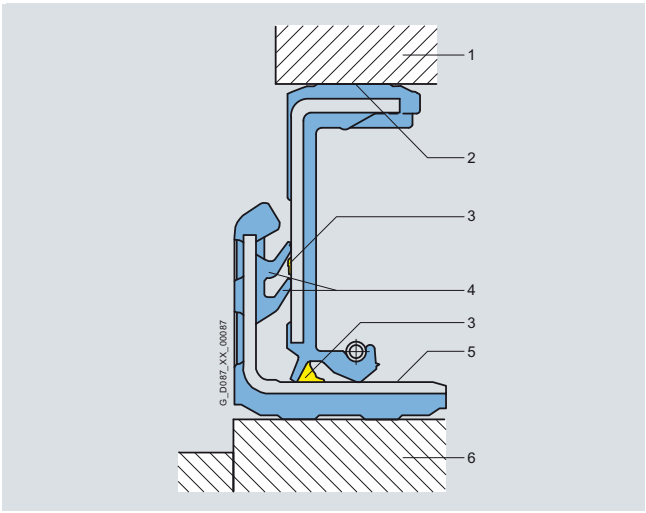

A combination shaft sealing is particulary well suited to external use.

Order code:

Combination shaft sealing **G24**

2 • Housing

3 • Rubberized inner and outer diameter

4 • Grease filling prevents dry running of the sealing lips

5 • Additional sealing lips to protect against dirt
• Decoupled sealing system prevents scoring of the shaft as a result of corrosion or dirt

6 • Protected running surface for radial shaft sealing ring
• No damage when mounting

7 • Shaft

Double sealing

Double sealing is possible for helical gearboxes of sizes 18, 28 and 188. Double sealing is particularly well suited to external use.

Order code:

Double sealing MSS1 (sizes 18, 28)	**G23**
Double radial shaft seal (size 188)	**G22+G31**

High temperature resistant sealing

High temperature resistant sealings (Viton/fluorinated rubber) for high operating and ambient temperatures of +60 °C and above are available for helical gearboxes.

Order code:

High temperature resistant sealing **G25**

© Siemens AG 2011

Radially reinforced output shaft bearings

If required, gearboxes are available with a radially reinforced output shaft bearing arrangement. The reinforced bearings allow higher radial forces to be transferred.

Order code:
Radially reinforced output shaft bearing **G20**

Axially reinforced output shaft bearings

The gearboxes can be fitted with axially reinforced output shaft bearings on request.

Order code:
Axially reinforced output shaft bearing **G21**

Agitator flange in dry-well design

The agitator flange can be fitted with an additional "V" ring (1) in mounting position V1 in order to drain off any leak oil to a safety chamber and protect the equipment against the effects of leakages.

The oil can either be viewed through a sight glass, or its presence indicated by an electrical sensor (2).

Order codes:
Design with sight glass **G89**
Design with sensor **G90**

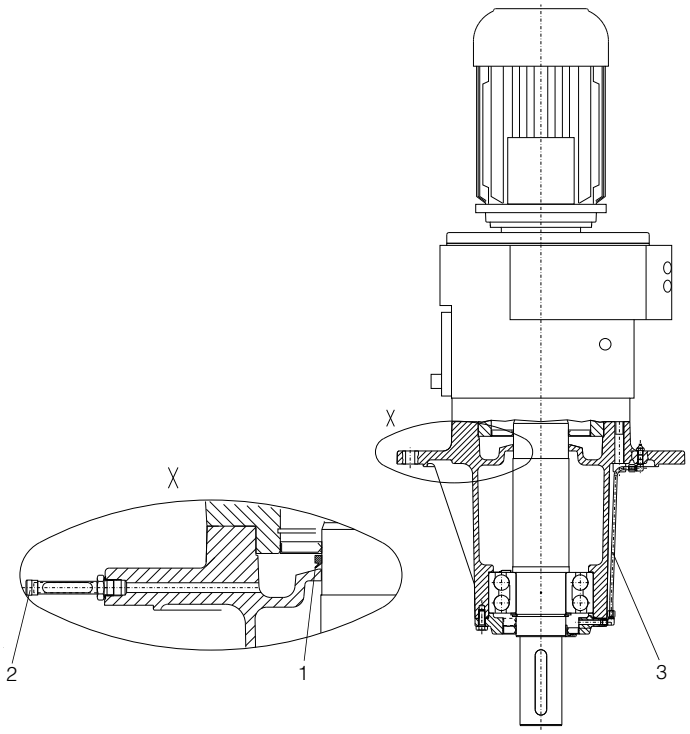

Regreasing device for the agitator flange (3)

The agitator flange gearbox can be fitted with a regreasing device on request.

© Siemens AG 2011

Dimensions

Dimension drawing overview

Representation	Gearbox type	Dimension drawing on page
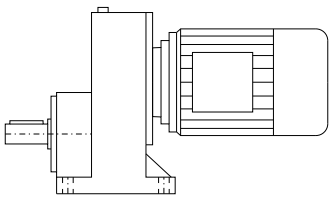	E38	2/136
	E48	2/139
	E68	2/142
	E88	2/145
	E108	2/148
	E128	2/151
	E148	2/154
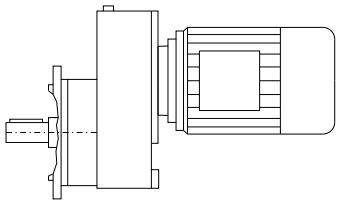	EF38	2/137
	EF48	2/140
	EF68	2/143
	EF88	2/146
	EF108	2/149
	EF128	2/152
	EF148	2/155
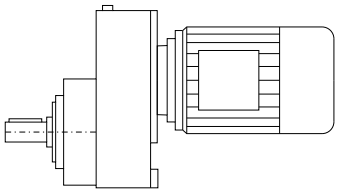	EZ38	2/138
	EZ48	2/141
	EZ68	2/144
	EZ88	2/147
	EZ108	2/150
	EZ128	2/153
	EZ148	2/156
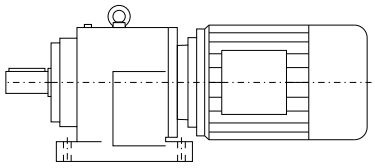	D/Z18	2/157
	D/Z28	2/159
	D/Z38	2/161
	D/Z48	2/164
	D/Z68	2/167
	D/Z88	2/170
	D/Z108	2/173
	D/Z128	2/176
	D/Z148	2/179
	D/Z168	2/182
	D/Z188	2/185
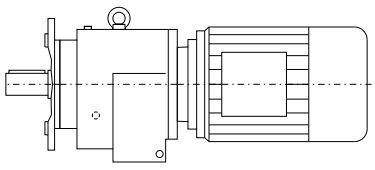	DF/ZF18	2/158
	DF/ZF28	2/160
	DF/ZF38	2/162
	DF/ZF48	2/165
	DF/ZF68	2/168
	DF/ZF88	2/171
	DF/ZF108	2/174
	DF/ZF128	2/177
	DF/ZF148	2/180
	DF/ZF168	2/183
	DF/ZF188	2/186

© Siemens AG 2011

Dimension drawing overview (continued)

Representation	Gearbox type	Dimension drawing on page
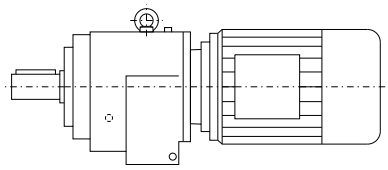	DZ/ZZ38	2/163
	DZ/ZZ48	2/166
	DZ/ZZ68	2/169
	DZ/ZZ88	2/172
	DZ/ZZ108	2/175
	DZ/ZZ128	2/178
	DZ/ZZ148	2/181
	DZ/ZZ168	2/184
	DZ/ZZ188	2/187
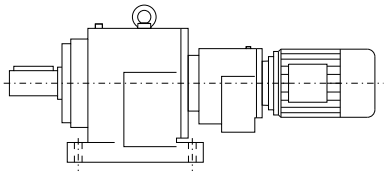	D./Z.38-Z28 ... D.188-Z68	2/188
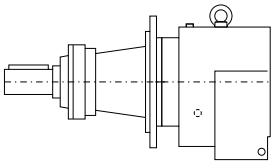	DR/ZR68 ... DR/ZR168	2/191
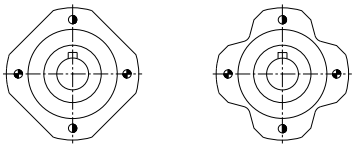	Pin holes	2/192

© Siemens AG 2011

Dimensions

Gearbox E38 (1-stage), foot-mounted design

E011

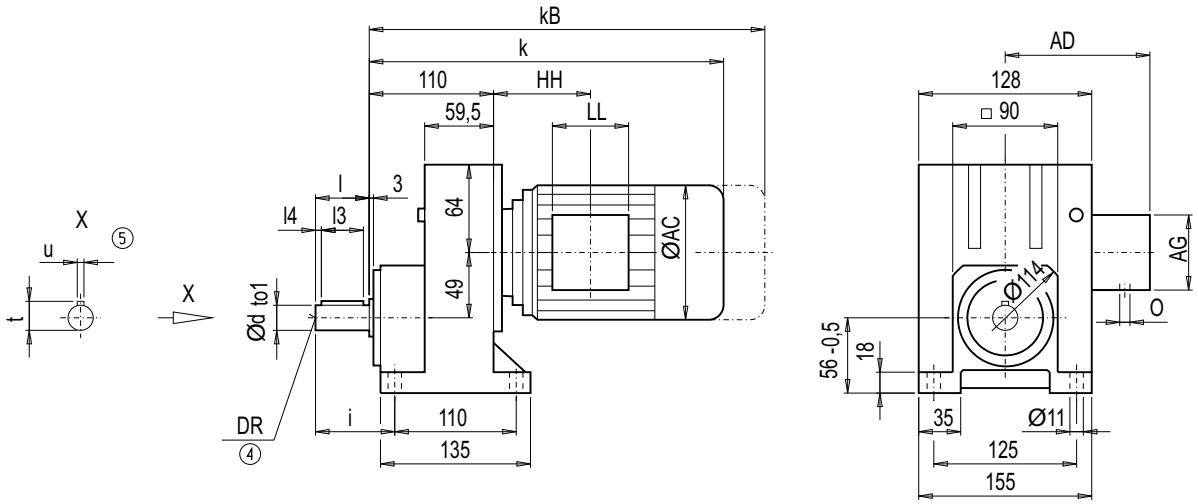

d	to1	l	l4	l3	t	u	i	DR
20 *)	k6	40	5	30	22.5	6	56	M6x16
25	k6	50	7	40	28.0	8	66	M10x22

*) Preferred series

	E38								Weight
Motor	**k**	**kB**	**AC**	**AD**	**AG**	**LL**	**HH**	**O**	**E38**
LA71	368.5	423.5	139.0	146	90	90	114.5	M20x1.5/M25x1.5	12
LA71Z	387.5	442.5	139.0	146	90	90	114.5	M20x1.5/M25x1.5	12
LA80	405.5	469.0	156.5	155	90	90	114.0	M20x1.5/M25x1.5	16
LA80Z	428.0	491.5	156.5	155	90	90	187.0	M20x1.5/M25x1.5	20
LA90S/L	436.5	507.5	174.0	163	90	90	114.0	M20x1.5/M25x1.5	21
LA90ZL	481.5	552.5	174.0	163	90	90	238.0	M20x1.5/M25x1.5	27
LA100L	482.5	563.5	195.0	168	120	120	154.5	2xM32x1.5	30
LA100ZL	552.5	633.5	195.0	168	120	120	286.5	2xM32x1.5	40
LA112M	512.5	593.5	219.0	181	120	120	160.5	2xM32x1.5	41
LA112ZM	540.5	621.5	219.0	181	120	120	264.5	2xM32x1.5	48

④ DIN 332

⑤ Feather key / keyway DIN 6885

© Siemens AG 2011

Gearbox EF38 (1-stage), flange-mounted design (A-type)

EF011

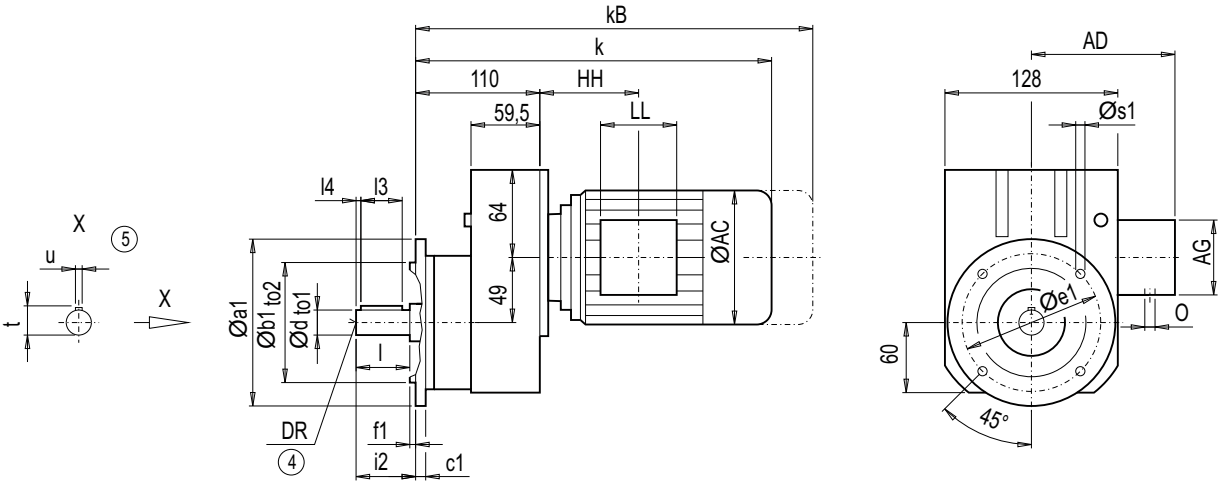

Flange	a1	b1	to2	c1	e1	f1	s1	d	to1	l	l4	l3	t	u	i2	DR
A120	120	80	j6	8	100	3.0	6.8	20 *)	k6	40	5	30	22.5	6	40	M6x16
								25	k6	50	7	40	28.0	8	50	M10x22
A140	140	95	j6	10	115	3.0	9.0	20 *)	k6	40	5	30	22.5	6	40	M6x16
								25	k6	50	7	40	28.0	8	50	M10x22
A160	160	110	j6	10	130	3.5	9.0	20 *)	k6	40	5	30	22.5	6	40	M6x16
								25	k6	50	7	40	28.0	8	50	M10x22
A200	200	130	j6	12	165	3.5	11.0	20 *)	k6	40	5	30	22.5	6	40	M6x16
								25	k6	50	7	40	28.0	8	50	M10x22
A250	250	180	j6	15	215	4.0	13.5	20 *)	k6	40	5	30	22.5	6	40	M6x16
								25	k6	50	7	40	28.0	8	50	M10x22

*) Preferred series

	EF38								Weight
Motor	**k**	**kB**	**AC**	**AD**	**AG**	**LL**	**HH**	**O**	**EF38**
LA71	368.5	423.5	139.0	146	90	90	114.5	M20x1.5/M25x1.5	14
LA71Z	387.5	442.5	139.0	146	90	90	114.5	M20x1.5/M25x1.5	14
LA80	405.5	469.0	156.5	155	90	90	114.0	M20x1.5/M25x1.5	19
LA80Z	428.0	491.5	156.5	155	90	90	187.0	M20x1.5/M25x1.5	23
LA90S/L	436.5	507.5	174.0	163	90	90	114.0	M20x1.5/M25x1.5	24
LA90ZL	481.5	552.5	174.0	163	90	90	238.0	M20x1.5/M25x1.5	30
LA100L	482.5	563.5	195.0	168	120	120	154.5	2xM32x1.5	33
LA100ZL	552.5	633.5	195.0	168	120	120	286.5	2xM32x1.5	43
LA112M	512.5	593.5	219.0	181	120	120	160.5	2xM32x1.5	43
LA112ZM	540.5	621.5	219.0	181	120	120	264.5	2xM32x1.5	50

④ DIN 332

⑤ Feather key / keyway DIN 6885

© Siemens AG 2011

Dimensions

Gearbox EZ38 (1-stage), housing-flange-mounted design (C-type)

EZ011

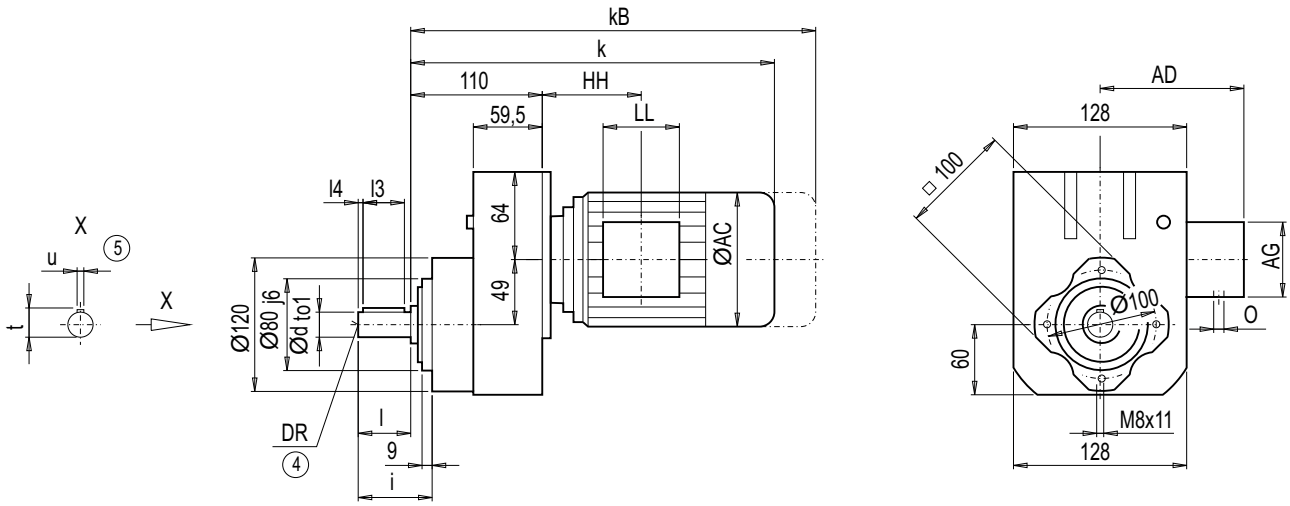

d	to1	l	l4	l3	t	u	i	DR
20 *)	k6	40	5	30	22.5	6	53	M6x16
25	k6	50	7	40	28.0	8	63	M10x22

*) Preferred series

	EZ38								Weight
Motor	**k**	**kB**	**AC**	**AD**	**AG**	**LL**	**HH**	**O**	**EZ38**
LA71	368.5	423.5	139.0	146	90	90	114.5	M20x1.5/M25x1.5	11
LA71Z	387.5	442.5	139.0	146	90	90	114.5	M20x1.5/M25x1.5	11
LA80	405.5	469.0	156.5	155	90	90	114.0	M20x1.5/M25x1.5	16
LA80Z	428.0	491.5	156.5	155	90	90	187.0	M20x1.5/M25x1.5	20
LA90S/L	436.5	507.5	174.0	163	90	90	114.0	M20x1.5/M25x1.5	20
LA90ZL	481.5	552.5	174.0	163	90	90	238.0	M20x1.5/M25x1.5	26
LA100L	482.5	563.5	195.0	168	120	120	154.5	2xM32x1.5	29
LA100ZL	552.5	633.5	195.0	168	120	120	286.5	2xM32x1.5	39
LA112M	512.5	593.5	219.0	181	120	120	160.5	2xM32x1.5	40
LA112ZM	540.5	621.5	219.0	181	120	120	264.5	2xM32x1.5	47

④ DIN 332

⑤ Feather key / keyway DIN 6885

© Siemens AG 2011

Gearbox E48 (1-stage), foot-mounted design

E011

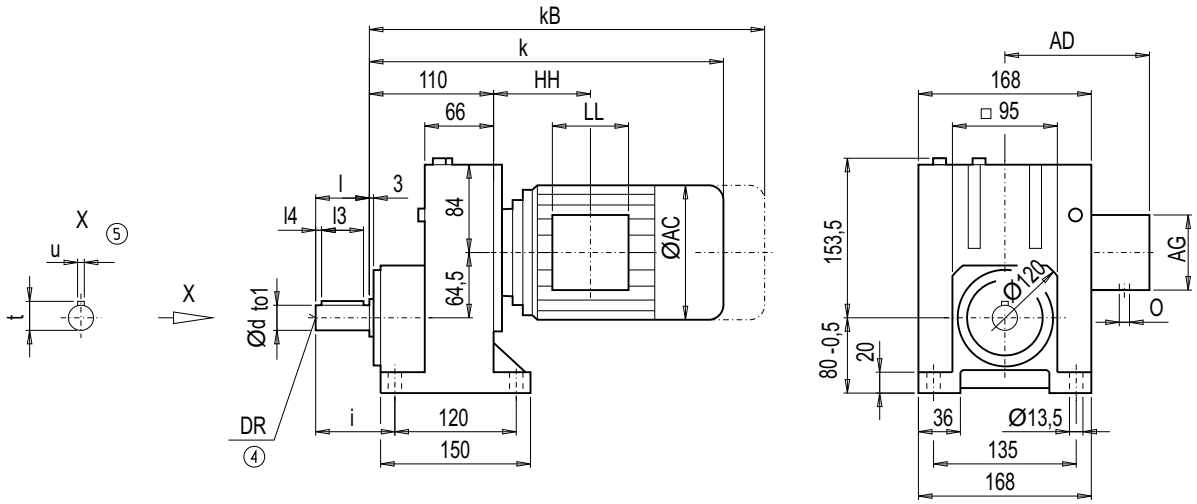

d	to1	l	l4	l3	t	u	i	DR
25 *)	k6	50	7	40	28	8	75	M10x22
30	k6	60	7	50	33	8	85	M10x22

*) Preferred series

	E48								Weight
Motor	**k**	**kB**	**AC**	**AD**	**AG**	**LL**	**HH**	**O**	**E48**
LA71	363.0	418.0	139.0	146	90	90	109.0	M20x1.5/M25x1.5	15
LA71Z	382.0	437.0	139.0	146	90	90	109.0	M20x1.5/M25x1.5	15
LA80	400.0	463.5	156.5	155	90	90	108.5	M20x1.5/M25x1.5	20
LA80Z	422.5	486.0	156.5	155	90	90	181.5	M20x1.5/M25x1.5	24
LA90S/L	431.0	502.0	174.0	163	90	90	108.5	M20x1.5/M25x1.5	25
LA90ZL	476.0	547.0	174.0	163	90	90	232.5	M20x1.5/M25x1.5	31
LA100L	477.0	558.0	195.0	168	120	120	149.0	2xM32x1.5	34
LA100ZL	547.0	628.0	195.0	168	120	120	281.0	2xM32x1.5	44
LA112M	506.0	587.0	219.0	181	120	120	154.0	2xM32x1.5	45
LA112ZM	534.0	615.0	219.0	181	120	120	258.0	2xM32x1.5	52
LA132S/M	568.5	670.5	259.0	195	140	140	197.0	2xM32x1.5	55
LA132ZM	614.5	716.5	259.0	195	140	140	305.0	2xM32x1.5	76

④ DIN 332

⑤ Feather key / keyway DIN 6885

© Siemens AG 2011

Dimensions

Gearbox EF48 (1-stage), flange-mounted design (A-type)

EF011

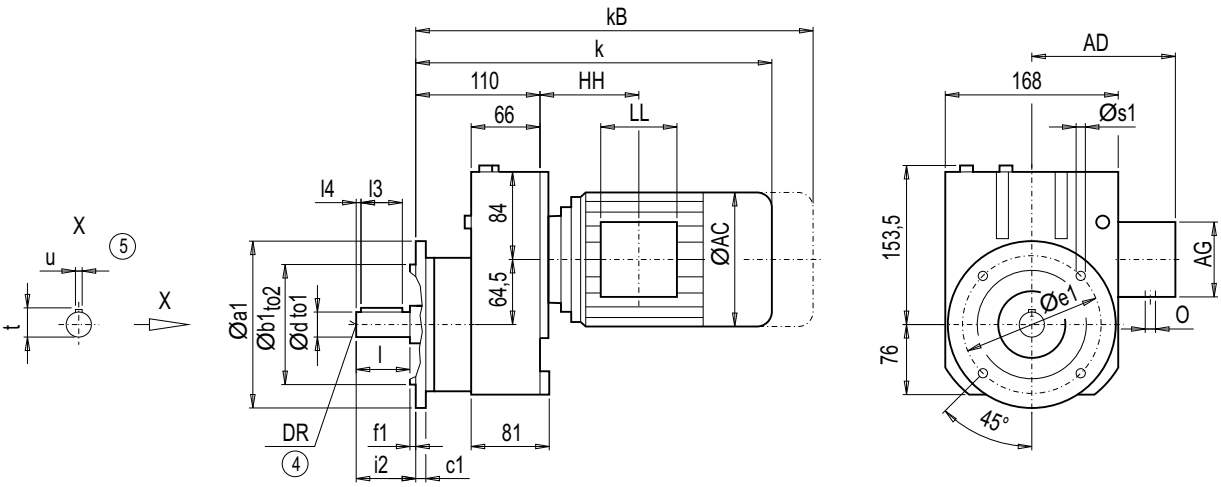

Flange	a1	b1	to2	c1	e1	f1	s1	d	to1	l	l3	l4	t	u	i2	DR
A120	120	80	j6	8	100	3.0	6.8	25 *)	k6	50	7	40	28	8	50	M10x22
								30	k6	60	7	50	33	8	60	M10x22
A140	140	95	j6	10	115	3.0	9.0	25 *)	k6	50	7	40	28	8	50	M10x22
								30	k6	60	7	50	33	8	60	M10x22
A160	160	110	j6	10	130	3.5	9.0	25 *)	k6	50	7	40	28	8	50	M10x22
								30	k6	60	7	50	33	8	60	M10x22
A200	200	130	j6	12	165	3.5	11.0	25 *)	k6	50	7	40	28	8	50	M10x22
								30	k6	60	7	50	33	8	60	M10x22
A250	250	180	j6	15	215	4.0	13.5	25 *)	k6	50	7	40	28	8	50	M10x22
								30	k6	60	7	50	33	8	60	M10x22

*) Preferred series

	EF48								Weight
Motor	**k**	**kB**	**AC**	**AD**	**AG**	**LL**	**HH**	**O**	**EF48**
LA71	363.0	418.0	139.0	146	90	90	109.0	M20x1.5/M25x1.5	17
LA71Z	382.0	437.0	139.0	146	90	90	109.0	M20x1.5/M25x1.5	17
LA80	400.0	463.5	156.5	155	90	90	108.5	M20x1.5/M25x1.5	22
LA80Z	422.5	486.0	156.5	155	90	90	181.5	M20x1.5/M25x1.5	26
LA90S/L	431.0	502.0	174.0	163	90	90	108.5	M20x1.5/M25x1.5	27
LA90ZL	476.0	547.0	174.0	163	90	90	232.5	M20x1.5/M25x1.5	33
LA100L	477.0	558.0	195.0	168	120	120	149.0	2xM32x1.5	36
LA100ZL	547.0	628.0	195.0	168	120	120	281.0	2xM32x1.5	46
LA112M	506.0	587.0	219.0	181	120	120	154.0	2xM32x1.5	47
LA112ZM	534.0	615.0	219.0	181	120	120	258.0	2xM32x1.5	54
LA132S/M	568.5	670.5	259.0	195	140	140	197.0	2xM32x1.5	57
LA132ZM	614.5	716.5	259.0	195	140	140	305.0	2xM32x1.5	78

④ DIN 332

⑤ Feather key / keyway DIN 6885

© Siemens AG 2011

Gearbox EZ48 (1-stage), housing-flange-mounted design (C-type)

EZ011

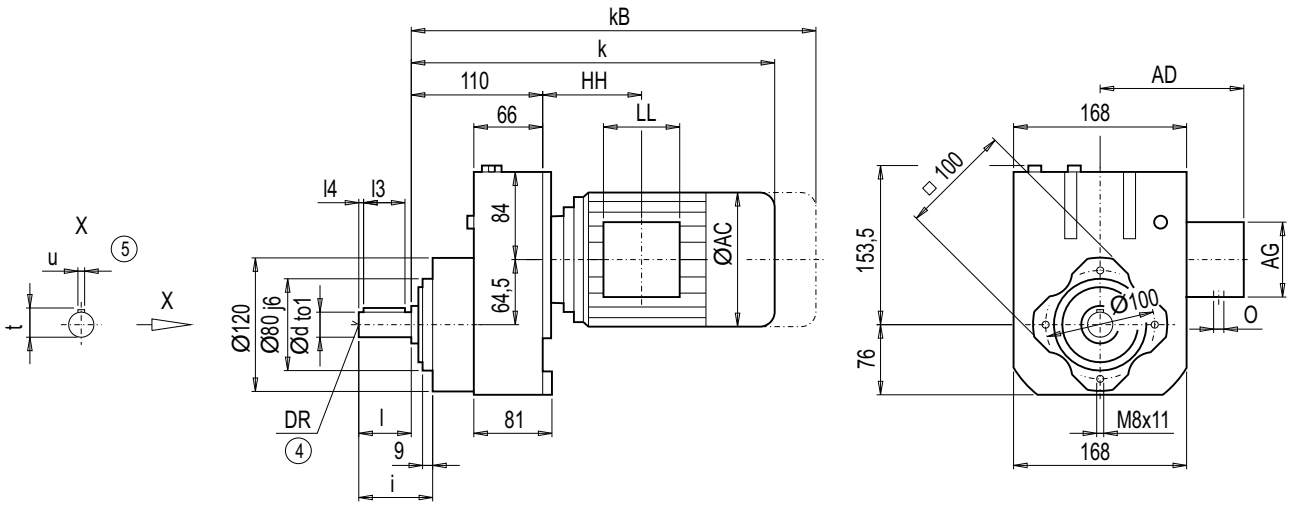

d	to1	l	l4	l3	t	u	i	DR
25 *)	k6	50	7	40	28	8	63	M10x22
30	k6	60	7	50	33	8	73	M10x22

*) Preferred series

	EZ48								Weight
Motor	**k**	**kB**	**AC**	**AD**	**AG**	**LL**	**HH**	**O**	**EZ48**
LA71	363.0	418.0	139.0	146	90	90	109.0	M20x1.5/M25x1.5	14
LA71Z	382.0	437.0	139.0	146	90	90	109.0	M20x1.5/M25x1.5	14
LA80	400.0	463.5	156.5	155	90	90	108.5	M20x1.5/M25x1.5	19
LA80Z	422.5	486.0	156.5	155	90	90	181.5	M20x1.5/M25x1.5	23
LA90S/L	431.0	502.0	174.0	163	90	90	108.5	M20x1.5/M25x1.5	23
LA90ZL	476.0	547.0	174.0	163	90	90	232.5	M20x1.5/M25x1.5	29
LA100L	477.0	558.0	195.0	168	120	120	149.0	2xM32x1.5	33
LA100ZL	547.0	628.0	195.0	168	120	120	281.0	2xM32x1.5	43
LA112M	506.0	587.0	219.0	181	120	120	154.0	2xM32x1.5	44
LA112ZM	534.0	615.0	219.0	181	120	120	258.0	2xM32x1.5	51
LA132S/M	568.5	670.5	259.0	195	140	140	197.0	2xM32x1.5	54
LA132ZM	614.5	716.5	259.0	195	140	140	305.0	2xM32x1.5	75

④ DIN 332

⑤ Feather key / keyway DIN 6885

© Siemens AG 2011

Dimensions

Gearbox E68 (1-stage), foot-mounted design

E011

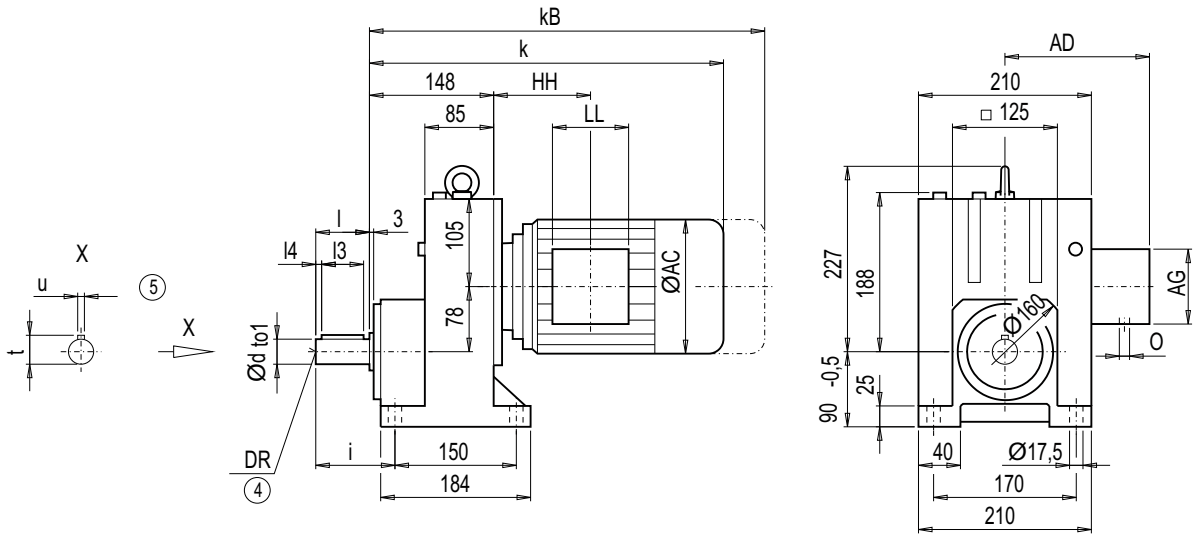

d	to1	l	l4	l3	t	u	i	DR
30 *)	k6	60	3.5	50	33	8	85	M10x22
40	k6	80	5	70	43	12	105	M16x36

*) Preferred series

	E68								Weight
Motor	**k**	**kB**	**AC**	**AD**	**AG**	**LL**	**HH**	**O**	**E68**
LA71	395.0	450.0	139.0	146	90	90	103.0	M20x1.5/M25x1.5	25
LA71Z	414.0	469.0	139.0	146	90	90	103.0	M20x1.5/M25x1.5	25
LA80	432.0	495.5	156.5	155	90	90	102.5	M20x1.5/M25x1.5	30
LA80Z	454.5	518.0	156.5	155	90	90	175.5	M20x1.5/M25x1.5	34
LA90S/L	463.0	534.0	174.0	163	90	90	102.5	M20x1.5/M25x1.5	40
LA90ZL	508.0	579.0	174.0	163	90	90	226.5	M20x1.5/M25x1.5	34
LA100L	509.0	590.0	195.0	168	120	120	143.0	2xM32x1.5	44
LA100ZL	579.0	660.0	195.0	168	120	120	275.0	2xM32x1.5	54
LA112M	536.0	617.0	219.0	181	120	120	146.0	2xM32x1.5	55
LA112ZM	564.0	645.0	219.0	181	120	120	250.0	2xM32x1.5	62
LA132S/M	596.0	698.0	259.0	195	140	140	186.5	2xM32x1.5	68
LA132ZM	642.0	744.0	259.0	195	140	140	294.5	2xM32x1.5	89
LA160M/L	699.0	817.5	313.5	227	165	165	212.5	2xM40x1.5	101
LA160ZL	747.0	865.5	313.5	227	165	165	365.5	2xM40x1.5	140

④ DIN 332

⑤ Feather key / keyway DIN 6885

© Siemens AG 2011

Gearbox EF68 (1-stage), flange-mounted design (A-type)

EF011

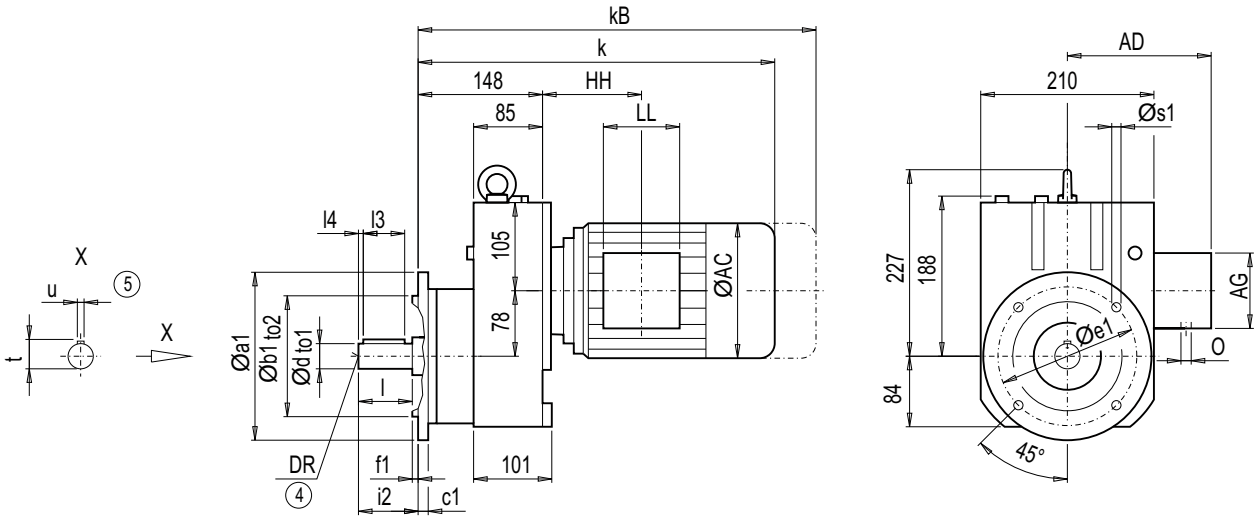

Flange	a1	b1	to2	c1	e1	f1	s1	d	to1	l	l4	l3	t	u	i2	DR
A200	200	130	j6	12	165	3.5	11.0	30 *)	k6	60	3.5	50	33	8	60	M10x22
								40	k6	80	5	70	43	12	80	M16x36
A250	250	180	j6	15	215	4.0	13.5	30 *)	k6	60	3.5	50	33	8	60	M10x22
								40	k6	80	5	70	43	12	80	M16x36
A300	300	230	j6	16	265	4.0	13.5	30 *)	k6	60	3.5	50	33	8	60	M10x22
								40	k6	80	5	70	43	12	80	M16x36

*) Preferred series

	EF68								Weight
Motor	**k**	**kB**	**AC**	**AD**	**AG**	**LL**	**HH**	**O**	**EF68**
LA71	395.0	450.0	139.0	146	90	90	103.0	M20x1.5/M25x1.5	27
LA71Z	414.0	469.0	139.0	146	90	90	103.0	M20x1.5/M25x1.5	27
LA80	432.0	495.5	156.5	155	90	90	102.5	M20x1.5/M25x1.5	32
LA80Z	454.5	518.0	156.5	155	90	90	175.5	M20x1.5/M25x1.5	36
LA90S/L	463.0	534.0	174.0	163	90	90	102.5	M20x1.5/M25x1.5	36
LA90ZL	508.0	579.0	174.0	163	90	90	226.5	M20x1.5/M25x1.5	42
LA100L	509.0	590.0	195.0	168	120	120	143.0	2xM32x1.5	46
LA100ZL	579.0	660.0	195.0	168	120	120	275.0	2xM32x1.5	56
LA112M	536.0	617.0	219.0	181	120	120	146.0	2xM32x1.5	57
LA112ZM	564.0	645.0	219.0	181	120	120	250.0	2xM32x1.5	64
LA132S/M	596.0	698.0	259.0	195	140	140	186.5	2xM32x1.5	70
LA132ZM	642.0	744.0	259.0	195	140	140	294.5	2xM32x1.5	91
LA160M/L	699.0	817.5	313.5	227	165	165	212.5	2xM40x1.5	103
LA160ZL	747.0	865.5	313.5	227	165	165	365.5	2xM40x1.5	142

④ DIN 332

⑤ Feather key / keyway DIN 6885

© Siemens AG 2011

Dimensions

Gearbox EZ68 (1-stage), housing-flange-mounted design (C-type)

EZ011

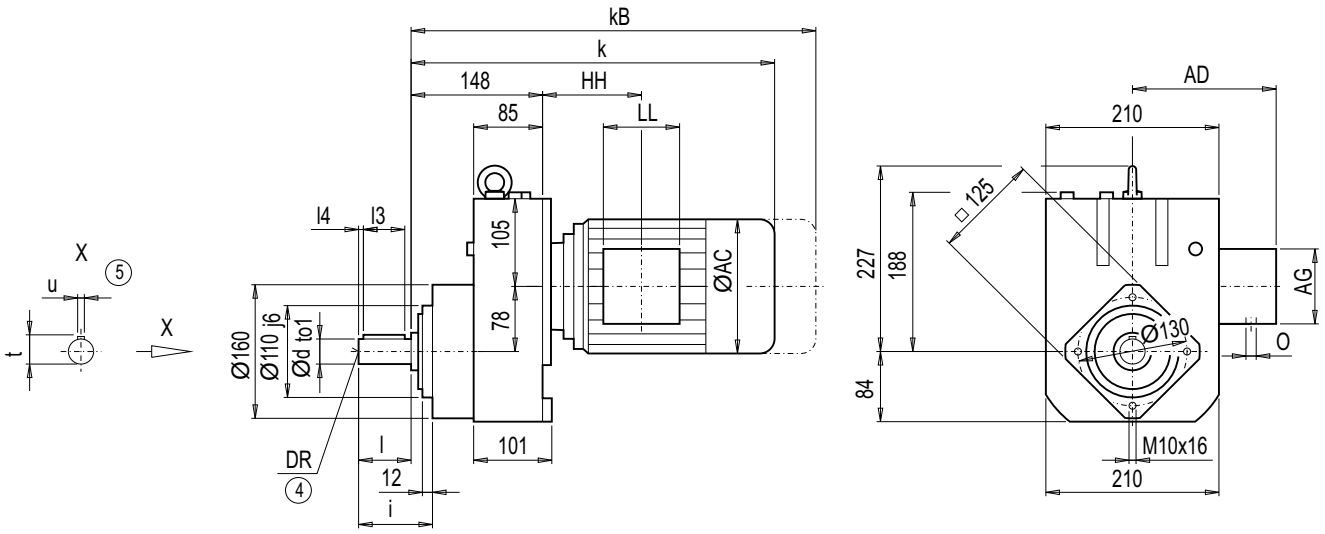

d	to1	l	l4	l3	t	u	i	DR
30 *)	k6	60	3.5	50	33	8	77	M10x22
40	k6	80	5	70	43	12	97	M16x36

*) Preferred series

	EZ68								Weight
Motor	**k**	**kB**	**AC**	**AD**	**AG**	**LL**	**HH**	**O**	**EZ68**
LA71	395.0	450.0	139.0	146	90	90	103.0	M20x1.5/M25x1.5	22
LA71Z	414.0	469.0	139.0	146	90	90	103.0	M20x1.5/M25x1.5	22
LA80	432.0	495.5	156.5	155	90	90	102.5	M20x1.5/M25x1.5	27
LA80Z	454.5	518.0	156.5	155	90	90	175.5	M20x1.5/M25x1.5	31
LA90S/L	463.0	534.0	174.0	163	90	90	102.5	M20x1.5/M25x1.5	32
LA90ZL	508.0	579.0	174.0	163	90	90	226.5	M20x1.5/M25x1.5	38
LA100L	509.0	590.0	195.0	168	120	120	143.0	2xM32x1.5	41
LA100ZL	579.0	660.0	195.0	168	120	120	275.0	2xM32x1.5	51
LA112M	536.0	617.0	219.0	181	120	120	146.0	2xM32x1.5	53
LA112ZM	564.0	645.0	219.0	181	120	120	250.0	2xM32x1.5	60
LA132S/M	596.0	698.0	259.0	195	140	140	186.5	2xM32x1.5	66
LA132ZM	642.0	744.0	259.0	195	140	140	294.5	2xM32x1.5	87
LA160M/L	699.0	817.5	313.5	227	165	165	212.5	2xM40x1.5	99
LA160ZL	747.0	865.5	313.5	227	165	165	365.5	2xM40x1.5	138

④ DIN 332

⑤ Feather key / keyway DIN 6885

© Siemens AG 2011

Gearbox E88 (1-stage), foot-mounted design

E011

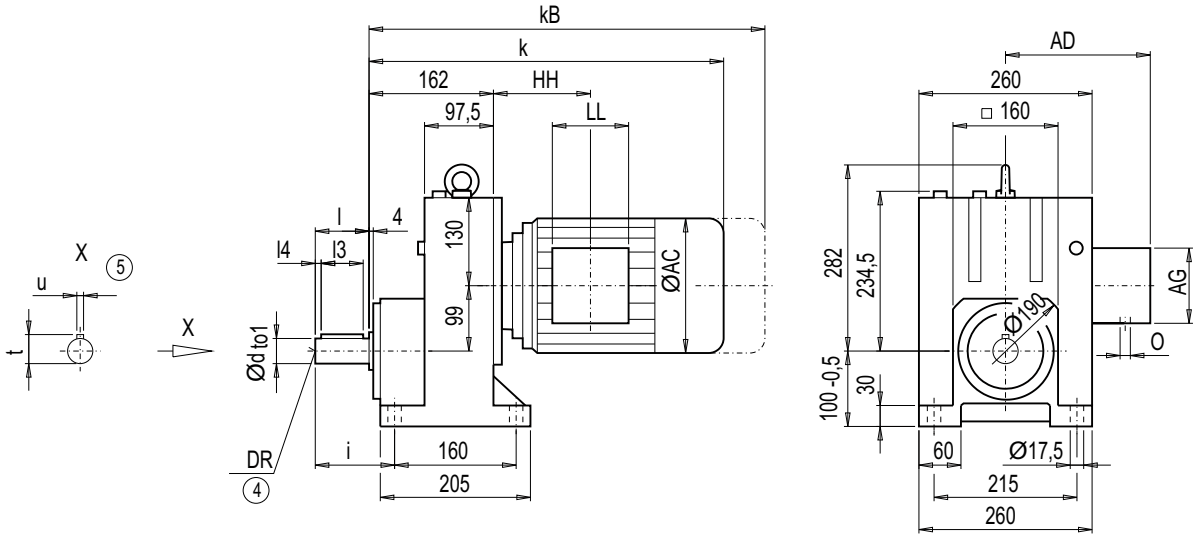

d	to1	l	l4	l3	t	u	i	DR
40 *)	k6	80	5	70	43	12	110	M16x36
45	k6	90	5	80	48.5	14	120	M16x36

*) Preferred series

	E88								Weight
Motor	**k**	**kB**	**AC**	**AD**	**AG**	**LL**	**HH**	**O**	**E88**
LA90S/L	462.0	533.0	174.0	163.0	90	90	87.5	M20x1.5/M25x1.5	52
LA90ZL	507.0	578.0	174.0	163.0	90	90	211.5	M20x1.5/M25x1.5	58
LA100L	505.5	586.5	195.0	168.0	120	120	125.5	2xM32x1.5	60
LA100ZL	575.5	656.5	195.0	168.0	120	120	257.5	2xM32x1.5	70
LA112M	531.5	612.5	219.0	181.0	120	120	127.5	2xM32x1.5	72
LA112ZM	559.5	640.5	219.0	181.0	120	120	231.5	2xM32x1.5	79
LA132S/M	591.5	693.5	259.0	195.0	140	140	168.0	2xM32x1.5	84
LA132ZM	637.5	739.5	259.0	195.0	140	140	276.0	2xM32x1.5	105
LA160M/L	696.0	814.5	313.5	227.0	165	165	195.5	2xM40x1.5	119
LA160ZL	744.0	862.5	313.5	227.0	165	165	348.5	2xM40x1.5	158
LG180M/L	756.0	878.0	348.0	322.5	260	192	213.0	2xM40x1.5	211
LG180ZM/ZL	807.0	929.0	348.0	322.5	260	192	213.0	2xM40x1.5	241

④ DIN 332

⑤ Feather key / keyway DIN 6885

© Siemens AG 2011

Dimensions

Gearbox EF88 (1-stage), flange-mounted design (A-type)

EF011

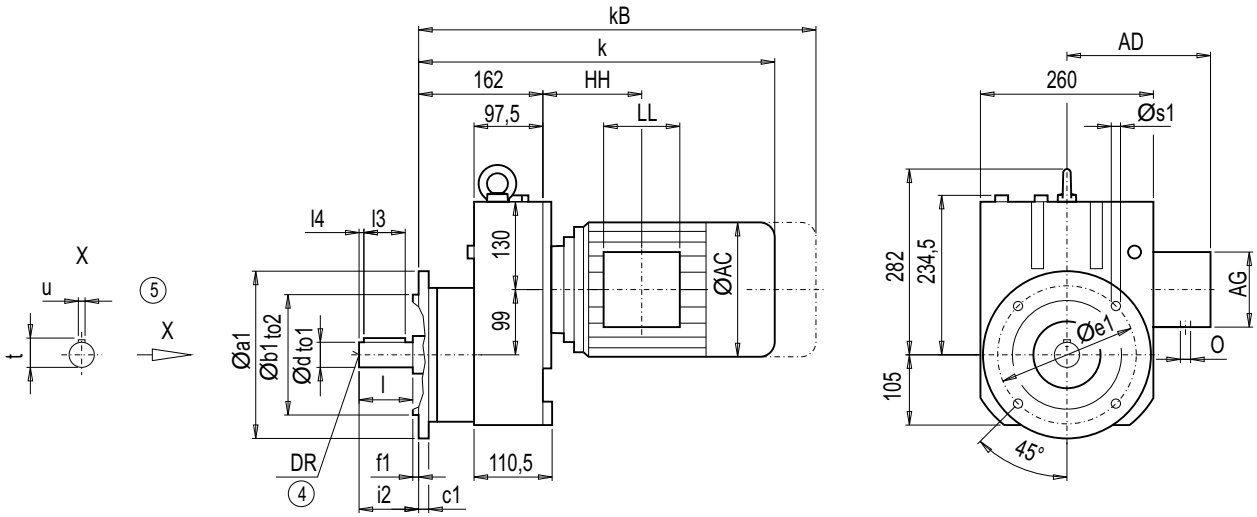

Flange	a1	b1	to2	c1	e1	f1	s1	d	to1	l	l4	l3	t	u	i2	DR
A250	250	180	j6	15	215	4	13.5	40 *)	k6	80	5	70	43	12	80	M16x36
								45	k6	90	5	80	48.5	14	90	M16x36
A300	300	230	j6	16	265	4	13.5	40 *)	k6	80	5	70	43	12	80	M16x36
								45	k6	90	5	80	48.5	14	90	M16x36
A350	350	250	h6	18	300	4	17.5	40 *)	k6	80	5	70	43	12	80	M16x36
								45	k6	90	5	80	48.5	14	90	M16x36

*) Preferred series

	EF88								Weight
Motor	**k**	**kB**	**AC**	**AD**	**AG**	**LL**	**HH**	**O**	**EF88**
LA90S/L	462.0	533.0	174.0	163.0	90	90	87.5	M20x1.5/M25x1.5	54
LA90ZL	507.0	578.0	174.0	163.0	90	90	211.5	M20x1.5/M25x1.5	60
LA100L	505.5	586.5	195.0	168.0	120	120	125.5	2xM32x1.5	62
LA100ZL	575.5	656.5	195.0	168.0	120	120	257.5	2xM32x1.5	72
LA112M	531.5	612.5	219.0	181.0	120	120	127.5	2xM32x1.5	74
LA112ZM	559.5	640.5	219.0	181.0	120	120	231.5	2xM32x1.5	81
LA132S/M	591.5	693.5	259.0	195.0	140	140	168.0	2xM32x1.5	85
LA132ZM	637.5	739.5	259.0	195.0	140	140	276.0	2xM32x1.5	107
LA160M/L	696.0	814.5	313.5	227.0	165	165	195.5	2xM40x1.5	120
LA160ZL	744.0	862.5	313.5	227.0	165	165	348.5	2xM40x1.5	159
LG180M/L	756.0	878.0	348.0	322.5	260	192	213.0	2xM40x1.5	212
LG180ZM/ZL	807.0	929.0	348.0	322.5	260	192	213.0	2xM40x1.5	242

④ DIN 332

⑤ Feather key / keyway DIN 6885

© Siemens AG 2011

Gearbox EZ88 (1-stage), housing-flange-mounted design (C-type)

EZ011

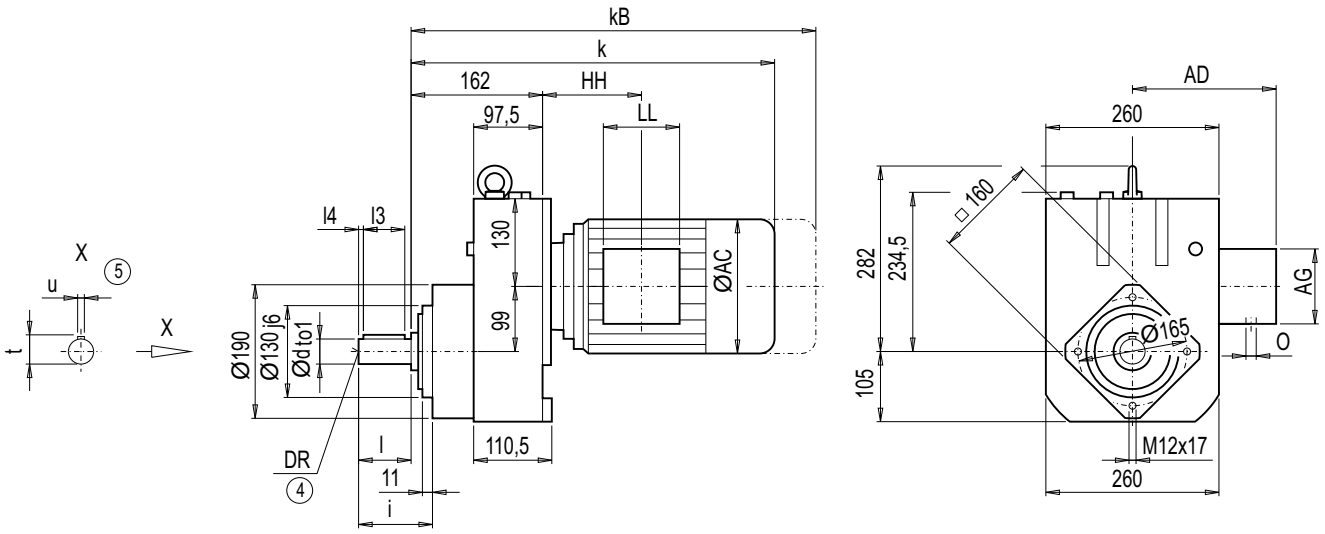

d	to1	l	l4	l3	t	u	i	DR
40 *)	k6	80	5	70	43	12	98	M16x36
45	k6	90	5	80	48.5	14	108	M16x36

*) Preferred series

	EZ88								Weight
Motor	**k**	**kB**	**AC**	**AD**	**AG**	**LL**	**HH**	**O**	**EZ88**
LA90S/L	462.0	533.0	174.0	163.0	90	90	87.5	M20x1.5/M25x1.5	47
LA90ZL	507.0	578.0	174.0	163.0	90	90	211.5	M20x1.5/M25x1.5	53
LA100L	505.5	586.5	195.0	168.0	120	120	125.5	2xM32x1.5	55
LA100ZL	575.5	656.5	195.0	168.0	120	120	257.5	2xM32x1.5	65
LA112M	531.5	612.5	219.0	181.0	120	120	127.5	2xM32x1.5	67
LA112ZM	559.5	640.5	219.0	181.0	120	120	231.5	2xM32x1.5	74
LA132S/M	591.5	693.5	259.0	195.0	140	140	168.0	2xM32x1.5	79
LA132ZM	637.5	739.5	259.0	195.0	140	140	276.0	2xM32x1.5	100
LA160M/L	696.0	814.5	313.5	227.0	165	165	195.5	2xM40x1.5	114
LA160ZL	744.0	862.5	313.5	227.0	165	165	348.5	2xM40x1.5	153
LG180M/L	756.0	878.0	348.0	322.5	260	192	213.0	2xM40x1.5	206
LG180ZM/ZL	807.0	929.0	348.0	322.5	260	192	213.0	2xM40x1.5	236

④ DIN 332

⑤ Feather key / keyway DIN 6885

© Siemens AG 2011

Dimensions

Gearbox E108 (1-stage), foot-mounted design

E011

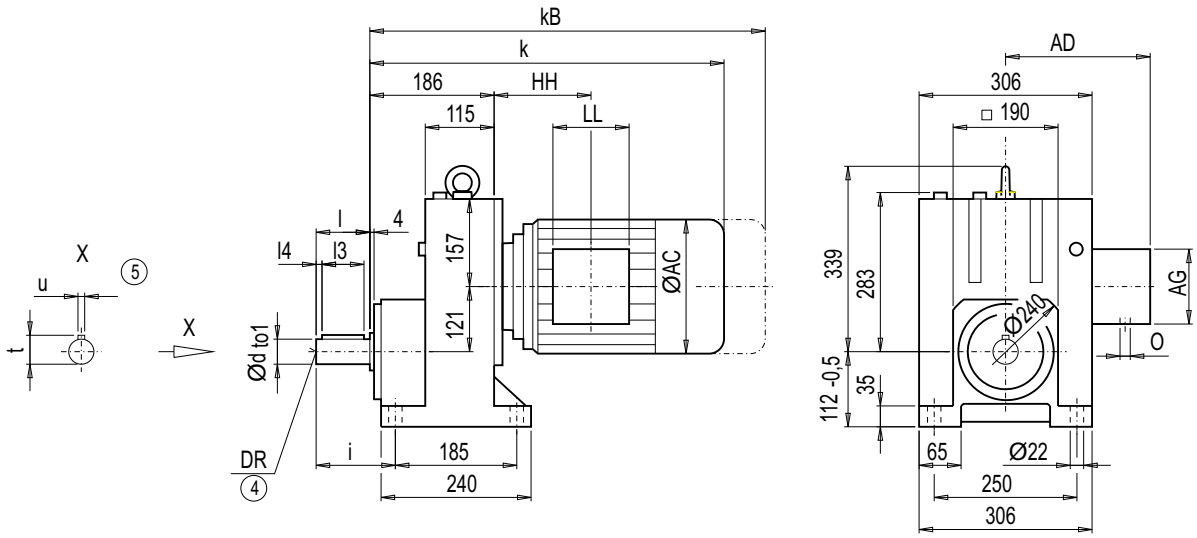

d	to1	l	l4	l3	t	u	i	DR
50 *)	k6	100	10	80	53.5	14	140	M16x36
55	k6	110	5	100	59.0	16	150	M20x42

*) Preferred series

	E108								Weight
Motor	**k**	**kB**	**AC**	**AD**	**AG**	**LL**	**HH**	**O**	**E108**
LA90S/L	474.5	545.5	174.0	163.0	90	90	76.0	M20x1.5/M25x1.5	74
LA90ZL	519.5	590.5	174.0	163.0	90	90	200.0	M20x1.5/M25x1.5	80
LA100L	517.5	598.5	195.0	168.0	120	120	113.5	2xM32x1.5	82
LA100ZL	587.5	668.5	195.0	168.0	120	120	245.5	2xM32x1.5	92
LA112M	544.0	625.0	219.0	181.0	120	120	116.0	2xM32x1.5	94
LA112ZM	572.0	653.0	219.0	181.0	120	120	220.0	2xM32x1.5	101
LA132S/M	603.0	705.0	259.0	195.0	140	140	155.5	2xM32x1.5	105
LA132ZM	649.0	751.0	259.0	195.0	140	140	263.5	2xM32x1.5	126
LA160M/L	708.5	827.0	313.5	227.0	165	165	184.0	2xM40x1.5	139
LA160ZL	756.5	875.0	313.5	227.0	165	165	337.0	2xM40x1.5	178
LG180M/L	765.0	887.0	348.0	322.5	260	192	198.0	2xM40x1.5	236
LG180ZM/ZL	816.0	938.0	348.0	322.5	260	192	198.0	2xM40x1.5	266
LG200L	821.0	947.0	385.0	301.0	260	192	228.0	2xM50x1.5	316
K4-LGI225S	1 082.0	1 321.0	442.0	325.0	260	192	443.0	2xM50x1.5	472
K4-LGI225M	1 082.0	1 321.0	442.0	325.0	260	192	443.0	2xM50x1.5	460
K4-LGI225ZM	1 142.0	1 381.0	442.0	325.0	260	192	443.0	2xM50x1.5	518

④ DIN 332

⑤ Feather key / keyway DIN 6885

© Siemens AG 2011

Gearbox EF108 (1-stage), flange-mounted design (A-type)

EF011

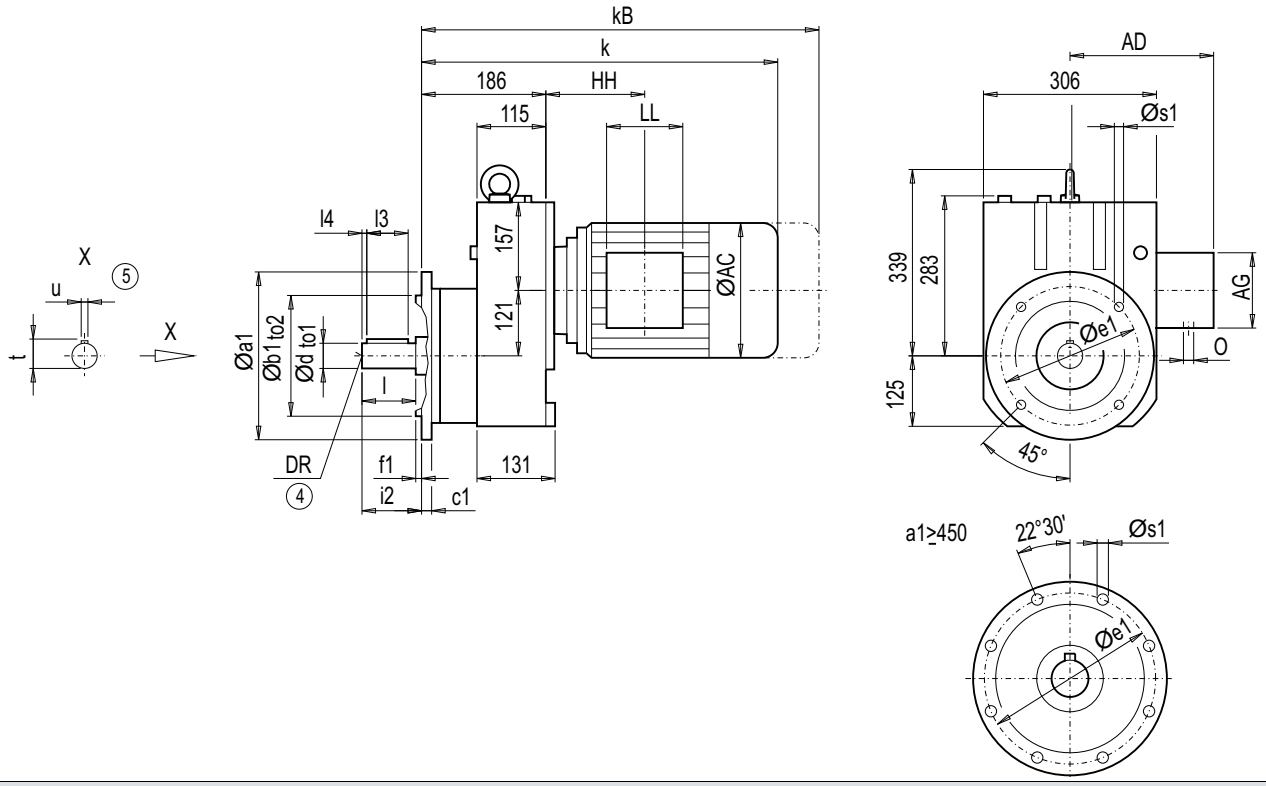

Flange	a1	b1	to2	c1	e1	f1	s1	d	to1	l	l4	l3	t	u	i2	DR
A300	300	230	j6	16	265	4	13.5	50*)	k6	100	10	80	53.5	14	100	M16x36
								55	k6	110	5	100	59.0	16	110	M20x42
A350	350	250	h6	18	300	5	17.5	50*)	k6	100	10	80	53.5	14	100	M16x36
								55	k6	110	5	100	59.0	16	110	M20x42
A450	450	350	h6	22	400	5	17.5	50*)	k6	100	10	80	53.5	14	100	M16x36
								55	k6	110	5	100	59.0	16	110	M20x42

*) Preferred series

	EF108								Weight
Motor	**k**	**kB**	**AC**	**AD**	**AG**	**LL**	**HH**	**O**	**EF108**
LA90S/L	474.5	545.5	174.0	163.0	90	90	76.0	M20x1.5/M25x1.5	84
LA90ZL	519.5	590.5	174.0	163.0	90	90	200.0	M20x1.5/M25x1.5	90
LA100L	517.5	598.5	195.0	168.0	120	120	113.5	2xM32x1.5	92
LA100ZL	587.5	668.5	195.0	168.0	120	120	245.5	2xM32x1.5	102
LA112M	544.0	625.0	219.0	181.0	120	120	116.0	2xM32x1.5	104
LA112ZM	572.0	653.0	219.0	181.0	120	120	220.0	2xM32x1.5	111
LA132S/M	603.0	705.0	259.0	195.0	140	140	155.5	2xM32x1.5	114
LA132ZM	649.0	751.0	259.0	195.0	140	140	263.5	2xM32x1.5	135
LA160M/L	708.5	827.0	313.5	227.0	165	165	184.0	2xM40x1.5	149
LA160ZL	756.5	875.0	313.5	227.0	165	165	337.0	2xM40x1.5	188
LG180M/L	765.0	887.0	348.0	322.5	260	192	198.0	2xM40x1.5	245
LG180ZM/ZL	816.0	938.0	348.0	322.5	260	192	198.0	2xM40x1.5	275
LG200L	821.0	947.0	385.0	301.0	260	192	228.0	2xM50x1.5	325
K4-LGI225S	1 082.0	1 321.0	442.0	325.0	260	192	443.0	2xM50x1.5	481
K4-LGI225M	1 082.0	1 321.0	442.0	325.0	260	192	443.0	2xM50x1.5	469
K4-LGI225ZM	1 142.0	1 381.0	442.0	325.0	260	192	443.0	2xM50x1.5	527

④ DIN 332

⑤ Feather key / keyway DIN 6885

© Siemens AG 2011

Dimensions

Gearbox EZ108 (1-stage), housing-flange-mounted design (C-type)

EZ011

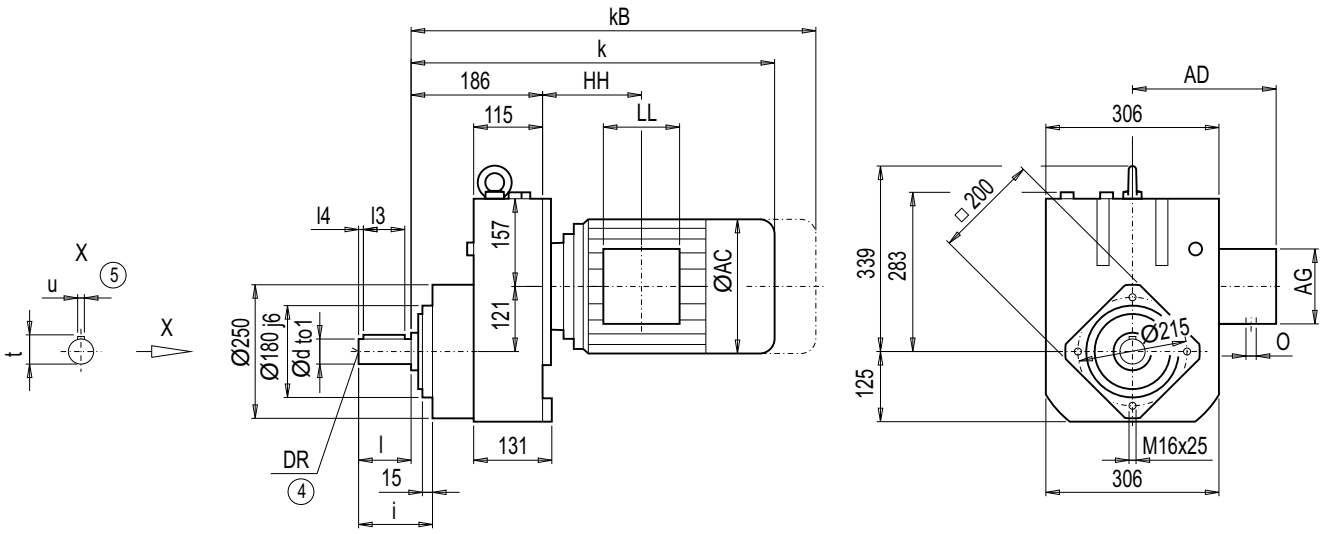

d	to1	l	l4	l3	t	u	i	DR
50 *)	k6	100	10	80	53.5	14	122	M16x36
55	k6	110	5	100	59.0	16	132	M20x42

*) Preferred series

	EZ108								Weight
Motor	**k**	**kB**	**AC**	**AD**	**AG**	**LL**	**HH**	**O**	**EZ108**
LA90S/L	474.5	545.5	174.0	163.0	90	90	76.0	M20x1.5/M25x1.5	67
LA90ZL	519.5	590.5	174.0	163.0	90	90	200.0	M20x1.5/M25x1.5	73
LA100L	517.5	598.5	195.0	168.0	120	120	113.5	2xM32x1.5	75
LA100ZL	587.5	668.5	195.0	168.0	120	120	245.5	2xM32x1.5	85
LA112M	544.0	625.0	219.0	181.0	120	120	116.0	2xM32x1.5	87
LA112ZM	572.0	653.0	219.0	181.0	120	120	220.0	2xM32x1.5	94
LA132S/M	603.0	705.0	259.0	195.0	140	140	155.5	2xM32x1.5	98
LA132ZM	649.0	751.0	259.0	195.0	140	140	263.5	2xM32x1.5	119
LA160M/L	708.5	827.0	313.5	227.0	165	165	184.0	2xM40x1.5	132
LA160ZL	756.5	875.0	313.5	227.0	165	165	337.0	2xM40x1.5	171
LG180M/L	765.0	887.0	348.0	322.5	260	192	198.0	2xM40x1.5	229
LG180ZM/ZL	816.0	938.0	348.0	322.5	260	192	198.0	2xM40x1.5	259
LG200L	821.0	947.0	385.0	301.0	260	192	228.0	2xM50x1.5	309
K4-LGI225S	1 082.0	1 321.0	442.0	325.0	260	192	443.0	2xM50x1.5	465
K4-LGI225M	1 082.0	1 321.0	442.0	325.0	260	192	443.0	2xM50x1.5	453
K4-LGI225ZM	1 142.0	1 381.0	442.0	325.0	260	192	443.0	2xM50x1.5	511

④ DIN 332

⑤ Feather key / keyway DIN 6885

© Siemens AG 2011

Gearbox E128 (1-stage), foot-mounted design

E011

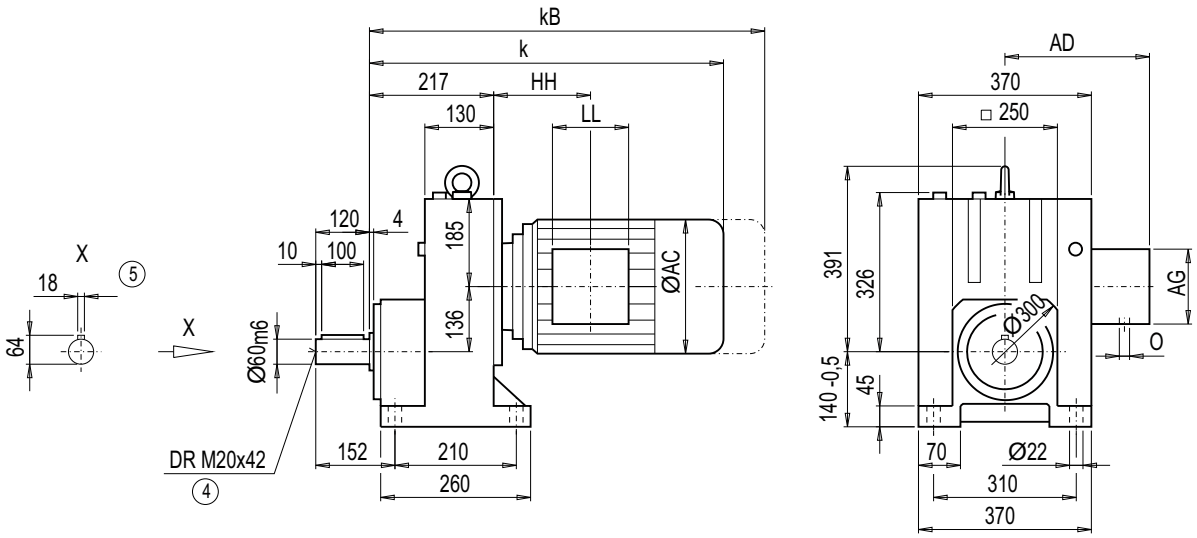

Motor	E128 k	kB	AC	AD	AG	LL	HH	O	Weight E128
LA100L	539.0	620.0	195.0	168.0	120	120	104.0	2xM32x1.5	121
LA100ZL	609.0	690.0	195.0	168.0	120	120	236.0	2xM32x1.5	131
LA112M	564.5	645.5	219.0	181.0	120	120	105.5	2xM32x1.5	132
LA112ZM	592.5	673.5	219.0	181.0	120	120	209.5	2xM32x1.5	139
LA132S/M	623.5	725.5	259.0	195.0	140	140	145.0	2xM32x1.5	142
LA132ZM	669.5	771.5	259.0	195.0	140	140	253.0	2xM32x1.5	163
LA160M/L	723.0	841.5	313.5	227.0	165	165	167.5	2xM40x1.5	181
LA160ZL	771.0	889.5	313.5	227.0	165	165	320.5	2xM40x1.5	220
LG180M/L	782.5	904.5	348.0	322.5	260	192	184.5	2xM40x1.5	272
LG180ZM/ZL	833.5	955.5	348.0	322.5	260	192	184.5	2xM40x1.5	302
LG200L	838.5	964.5	385.0	301.0	260	192	214.5	2xM50x1.5	352
LG225S	909.5	1 148.5	442.0	325.0	260	192	250.5	2xM50x1.5	428
LG225M	909.5	1 148.5	442.0	325.0	260	192	250.5	2xM50x1.5	416
LG225ZM	969.5	1 208.5	442.0	325.0	260	192	250.5	2xM50x1.5	474
K4-LGI250M	1 197.0	1 422.0	495.0	392.0	300	236	470.0	2xM63x1.5	596
K4-LGI250ZM	1 267.0	1 492.0	495.0	392.0	300	236	470.0	2xM63x1.5	699

④ DIN 332

⑤ Feather key / keyway DIN 6885

© Siemens AG 2011

Dimensions

Gearbox EF128 (1-stage), flange-mounted design (A-type)

EF011

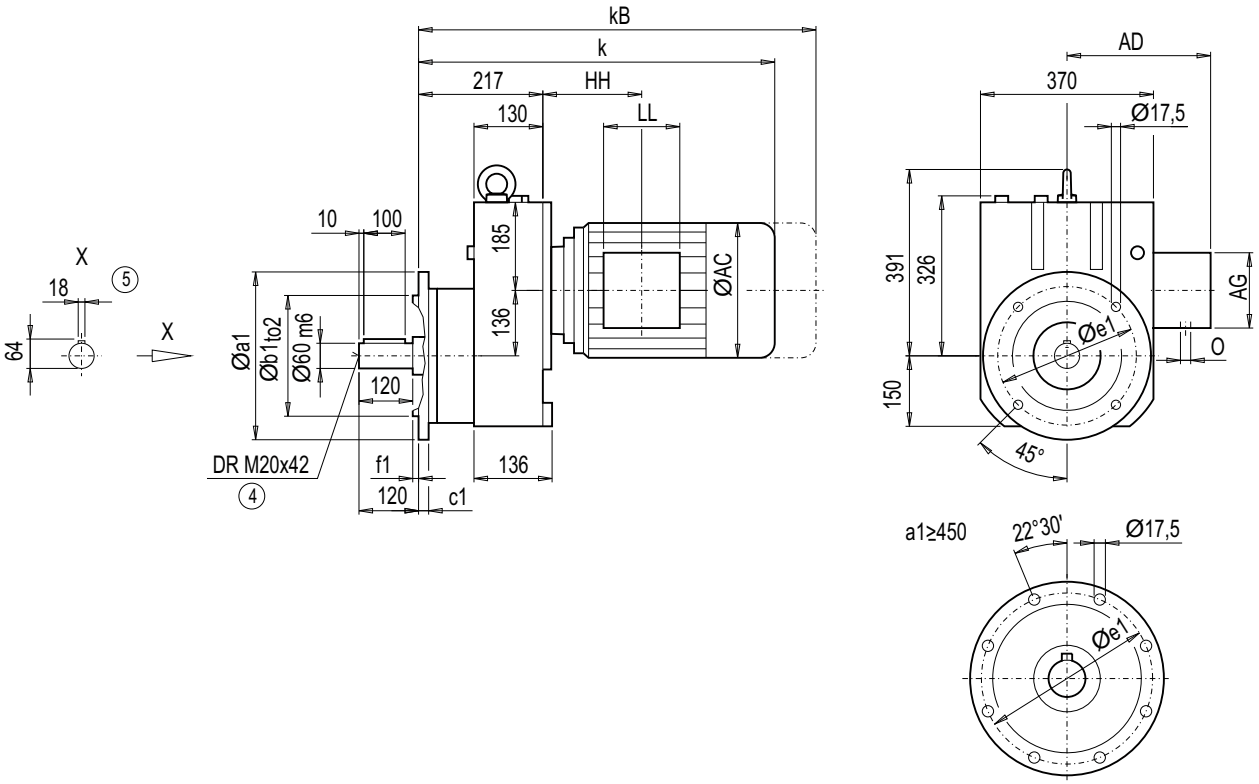

Flange	a1	b1	to2	c1	e1	f1	s1
A350	350	250	h6	18	300	5	17.5
A450	450	350	h6	20	400	5	17.5

	EF128								Weight
Motor	**k**	**kB**	**AC**	**AD**	**AG**	**LL**	**HH**	**O**	**EF128**
LA100L	539.0	620.0	195.0	168.0	120	120	104.0	2xM32x1.5	125
LA100ZL	609.0	690.0	195.0	168.0	120	120	236.0	2xM32x1.5	135
LA112M	564.5	645.5	219.0	181.0	120	120	105.5	2xM32x1.5	137
LA112ZM	592.5	673.5	219.0	181.0	120	120	209.5	2xM32x1.5	144
LA132S/M	623.5	725.5	259.0	195.0	140	140	145.0	2xM32x1.5	146
LA132ZM	669.5	771.5	259.0	195.0	140	140	253.0	2xM32x1.5	167
LA160M/L	723.0	841.5	313.5	227.0	165	165	167.5	2xM40x1.5	185
LA160ZL	771.0	889.5	313.5	227.0	165	165	320.5	2xM40x1.5	224
LG180M/L	782.5	904.5	348.0	322.5	260	192	184.5	2xM40x1.5	276
LG180ZM/ZL	833.5	955.5	348.0	322.5	260	192	184.5	2xM40x1.5	306
LG200L	838.5	964.5	385.0	301.0	260	192	214.5	2xM50x1.5	356
LG225S	909.5	1 148.5	442.0	325.0	260	192	250.5	2xM50x1.5	432
LG225M	909.5	1 148.5	442.0	325.0	260	192	250.5	2xM50x1.5	420
LG225ZM	969.5	1 208.5	442.0	325.0	260	192	250.5	2xM50x1.5	478
K4-LGI250M	1 197.0	1 422.0	495.0	392.0	300	236	470.0	2xM63x1.5	600
K4-LGI250ZM	1 267.0	1 492.0	495.0	392.0	300	236	470.0	2xM63x1.5	703

④ DIN 332

⑤ Feather key / keyway DIN 6885

© Siemens AG 2011

Gearbox EZ128 (1-stage), housing-flange-mounted design (C-type)

EZ011

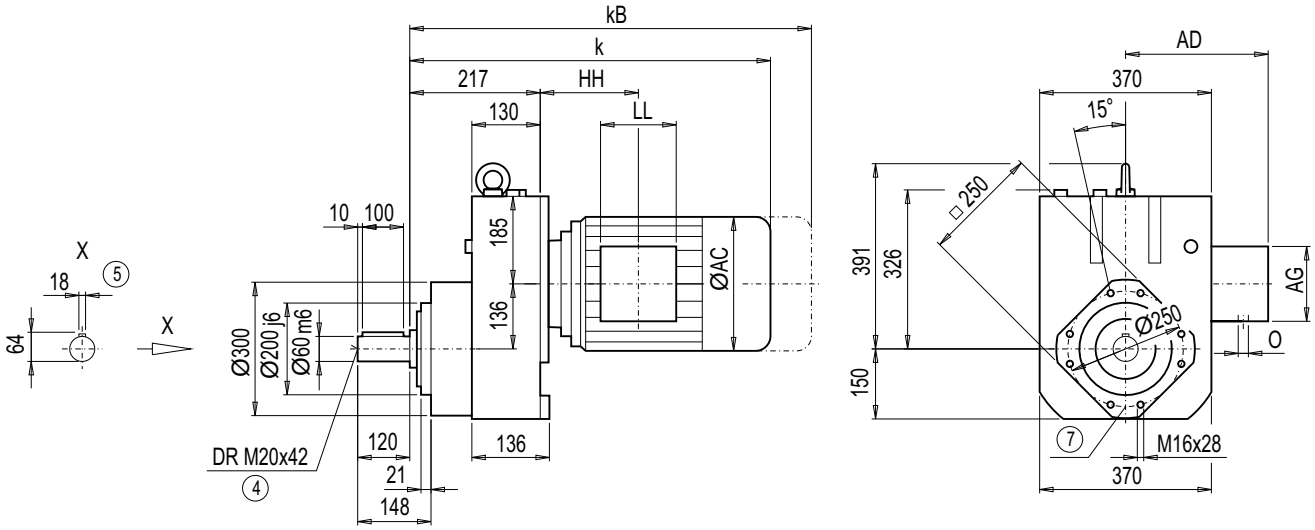

Motor	EZ128 k	kB	AC	AD	AG	LL	HH	O	Weight EZ128
LA100L	539.0	620.0	195.0	168.0	120	120	104.0	2xM32x1.5	108
LA100ZL	609.0	690.0	195.0	168.0	120	120	236.0	2xM32x1.5	118
LA112M	564.5	645.5	219.0	181.0	120	120	105.5	2xM32x1.5	119
LA112ZM	592.5	673.5	219.0	181.0	120	120	209.5	2xM32x1.5	126
LA132S/M	623.5	725.5	259.0	195.0	140	140	145.0	2xM32x1.5	129
LA132ZM	669.5	771.5	259.0	195.0	140	140	253.0	2xM32x1.5	150
LA160M/L	723.0	841.5	313.5	227.0	165	165	167.5	2xM40x1.5	168
LA160ZL	771.0	889.5	313.5	227.0	165	165	320.5	2xM40x1.5	207
LG180M/L	782.5	904.5	348.0	322.5	260	192	184.5	2xM40x1.5	259
LG180ZM/ZL	833.5	955.5	348.0	322.5	260	192	184.5	2xM40x1.5	289
LG200L	838.5	964.5	385.0	301.0	260	192	214.5	2xM50x1.5	339
LG225S	909.5	1 148.5	442.0	325.0	260	192	250.5	2xM50x1.5	415
LG225M	909.5	1 148.5	442.0	325.0	260	192	250.5	2xM50x1.5	403
LG225ZM	969.5	1 208.5	442.0	325.0	260	192	250.5	2xM50x1.5	461
K4-LGI250M	1 197.0	1 422.0	495.0	392.0	300	236	470.0	2xM63x1.5	583
K4-LGI250ZM	1 267.0	1 492.0	495.0	392.0	300	236	470.0	2xM63x1.5	686

④ DIN 332 ⑤ Feather key / keyway DIN 6885 ⑦ For note, see page 2/192

© Siemens AG 2011

Dimensions

Gearbox E148 (1-stage), foot-mounted design

E011

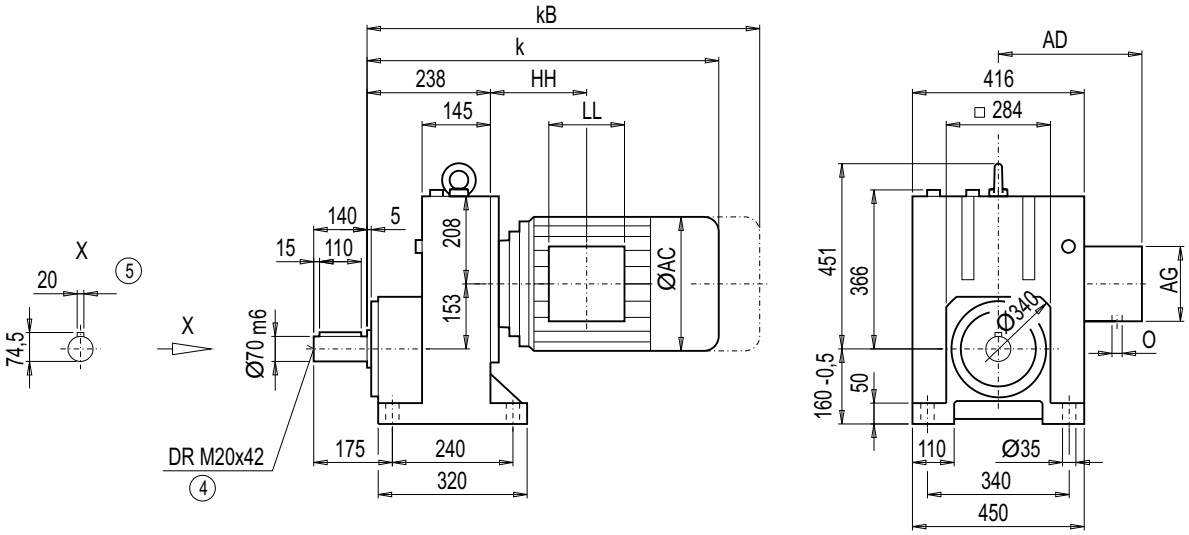

Motor	E148 k	kB	AC	AD	AG	LL	HH	O	Weight E148
LA132S/M	636.5	738.5	259.0	195.0	140	140	137.0	2xM32x1.5	169
LA132ZM	682.5	784.5	259.0	195.0	140	140	245.0	2xM32x1.5	190
LA160M/L	736.5	855.0	313.5	227.0	165	165	160.0	2xM40x1.5	203
LA160ZL	784.5	903	313.5	227.0	165	165	313.0	2xM40x1.5	242
LG180M/L	796.0	918.0	348.0	322.5	260	192	177.0	2xM40x1.5	298
LG180ZM/ZL	847.0	969.0	348.0	322.5	260	192	177.0	2xM40x1.5	328
LG200L	852.0	978.0	385.0	301.0	260	192	207.0	2xM50x1.5	378
LG225S	923.0	1 162.0	442.0	325.0	260	192	243.0	2xM50x1.5	452
LG225M	923.0	1 162.0	442.0	325.0	260	192	243.0	2xM50x1.5	440
LG225ZM	983.0	1 222.0	442.0	325.0	260	192	243.0	2xM50x1.5	498
LG250M	1 016.5	1 241.5	495.0	392.0	300	236	278.5	2xM63x1.5	542
LG250ZM	1 086.5	1 312.0	495.0	392.0	300	236	278.5	2xM63x1.5	645
K4-LGI280S	1 296.0	1 523.0	555.0	432.0	300	236	490.0	2xM63x1.5	774
K4-LGI280M	1 296.0	1 523.0	555.0	432.0	300	236	490.0	2xM63x1.5	785
K4-LGI280ZM	1 406.0	1 633.0	555.0	432.0	300	236	490.0	2xM63x1.5	874

④ DIN 332

⑤ Feather key / keyway DIN 6885

© Siemens AG 2011

Gearbox EF148 (1-stage), flange-mounted design (A-type)

EF011

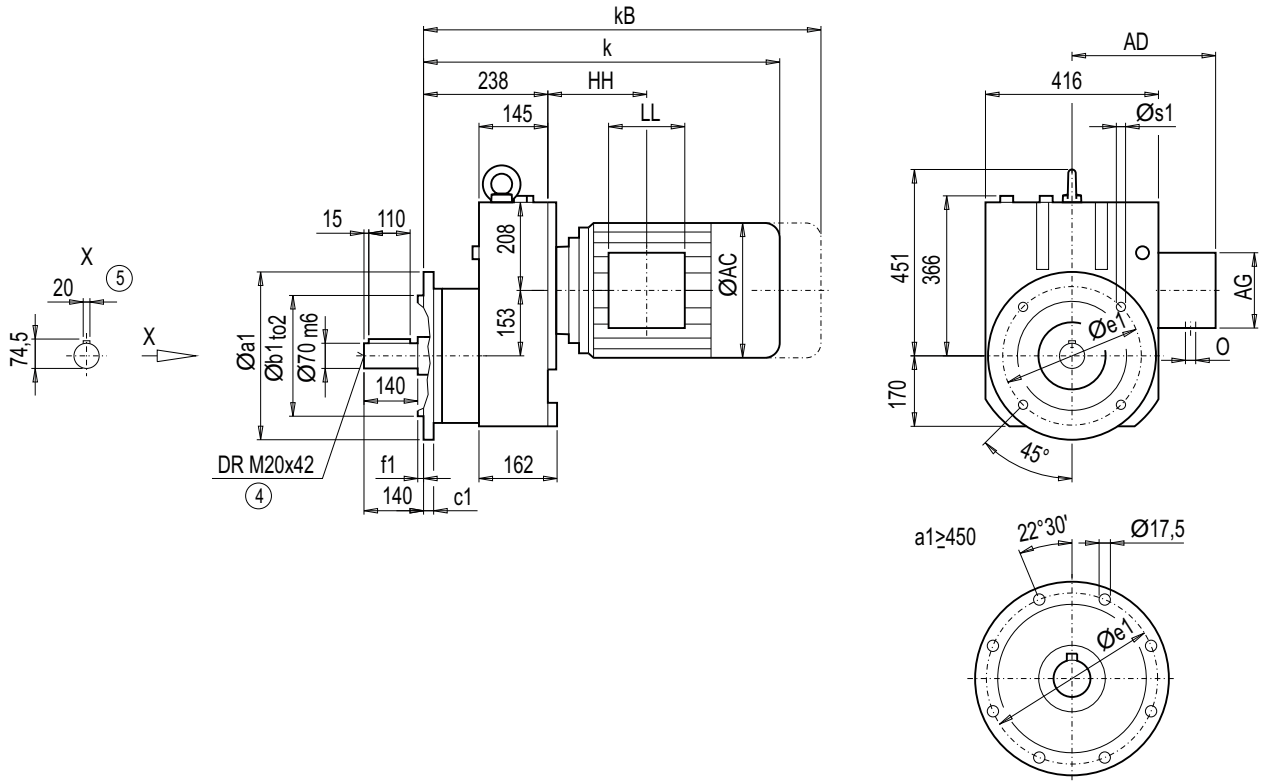

Flange	a1	b1	to2	c1	e1	f1	s1
A350	350	250	h6	18	300	5	17.5
A450	450	350	h6	22	400	5	17.5
A550	550	450	h6	25	500	5	17.5

	EF148								Weight
Motor	**k**	**kB**	**AC**	**AD**	**AG**	**LL**	**HH**	**O**	**EF148**
LA132S/M	636.5	738.5	259.0	195.0	140	140	137.0	2xM32x1.5	180
LA132ZM	682.5	784.5	259.0	195.0	140	140	245.0	2xM32x1.5	202
LA160M/L	736.5	855.0	313.5	227.0	165	165	160.0	2xM40x1.5	214
LA160ZL	784.5	903	313.5	227.0	165	165	313.0	2xM40x1.5	253
LG180M/L	796.0	918.0	348.0	322.5	260	192	177.0	2xM40x1.5	310
LG180ZM/ZL	847.0	969.0	348.0	322.5	260	192	177.0	2xM40x1.5	340
LG200L	852.0	978.0	385.0	301.0	260	192	207.0	2xM50x1.5	390
LG225S	923.0	1 162.0	442.0	325.0	260	192	243.0	2xM50x1.5	464
LG225M	923.0	1 162.0	442.0	325.0	260	192	243.0	2xM50x1.5	452
LG225ZM	983.0	1 222.0	442.0	325.0	260	192	243.0	2xM50x1.5	510
LG250M	1 016.5	1 241.5	495.0	392.0	300	236	278.5	2xM63x1.5	554
LG250ZM	1 086.5	1 312.0	495.0	392.0	300	236	278.5	2xM63x1.5	657
K4-LGI280S	1 296.0	1 523.0	555.0	432.0	300	236	490.0	2xM63x1.5	786
K4-LGI280M	1 296.0	1 523.0	555.0	432.0	300	236	490.0	2xM63x1.5	797
K4-LGI280ZM	1 406.0	1 633.0	555.0	432.0	300	236	490.0	2xM63x1.5	886

④ DIN 332

⑤ Feather key / keyway DIN 6885

© Siemens AG 2011

Dimensions

Gearbox EZ148 (1-stage), housing-flange-mounted design (C-type)

EZ011

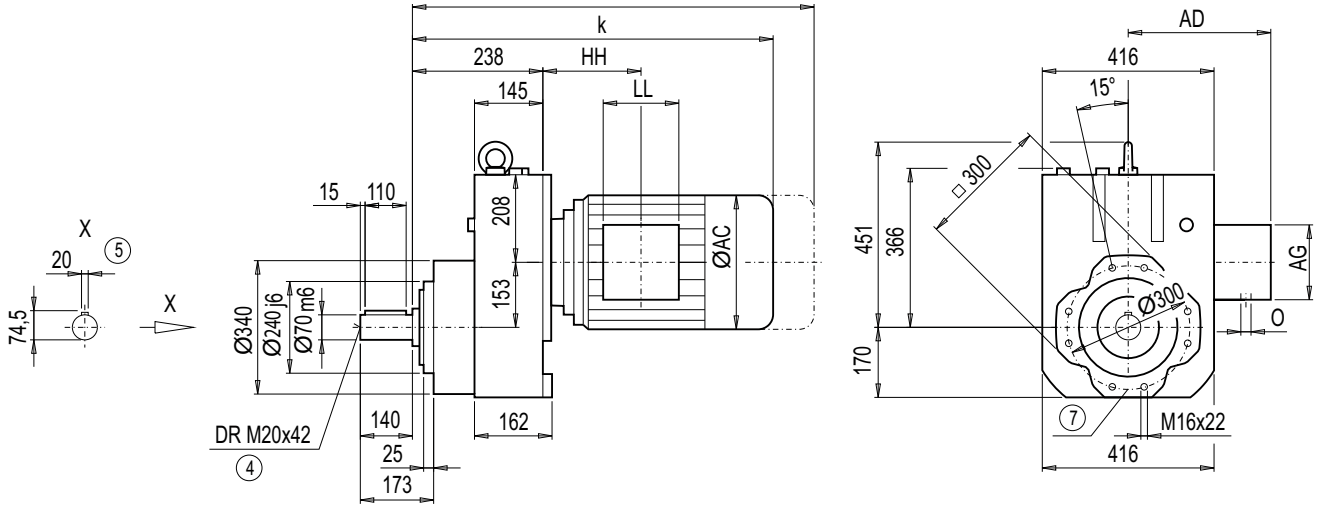

Motor	EZ148 k	kB	AC	AD	AG	LL	HH	O	Weight EZ148
LA132S/M	636.5	738.5	259.0	195.0	140	140	137.0	2xM32x1.5	154
LA132ZM	682.5	784.5	259.0	195.0	140	140	245.0	2xM32x1.5	175
LA160M/L	736.5	855.0	313.5	227.0	165	165	160.0	2xM40x1.5	188
LA160ZL	784.5	903	313.5	227.0	165	165	313.0	2xM40x1.5	227
LG180M/L	796.0	918.0	348.0	322.5	260	192	177.0	2xM40x1.5	283
LG180ZM/ZL	847.0	969.0	348.0	322.5	260	192	177.0	2xM40x1.5	313
LG200L	852.0	978.0	385.0	301.0	260	192	207.0	2xM50x1.5	363
LG225S	923.0	1 162.0	442.0	325.0	260	192	243.0	2xM50x1.5	437
LG225M	923.0	1 162.0	442.0	325.0	260	192	243.0	2xM50x1.5	425
LG225ZM	983.0	1 222.0	442.0	325.0	260	192	243.0	2xM50x1.5	483
LG250M	1 016.5	1 241.0	495.0	392.0	300	236	278.5	2xM63x1.5	527
LG250ZM	1 086.5	1 312.0	495.0	392.0	300	236	278.5	2xM63x1.5	630
K4-LGI280S	1 296.0	1 523.0	555.0	432.0	300	236	490.0	2xM63x1.5	759
K4-LGI280M	1 296.0	1 523.0	555.0	432.0	300	236	490.0	2xM63x1.5	770
K4-LGI280ZM	1 406.0	1 633.0	555.0	432.0	300	236	490.0	2xM63x1.5	859

④ DIN 332 ⑤ Feather key / keyway DIN 6885 ⑦ For note, see page 2/192

© Siemens AG 2011

Gearbox D/Z18 (3- / 2-stage), foot-mounted design

DZ011

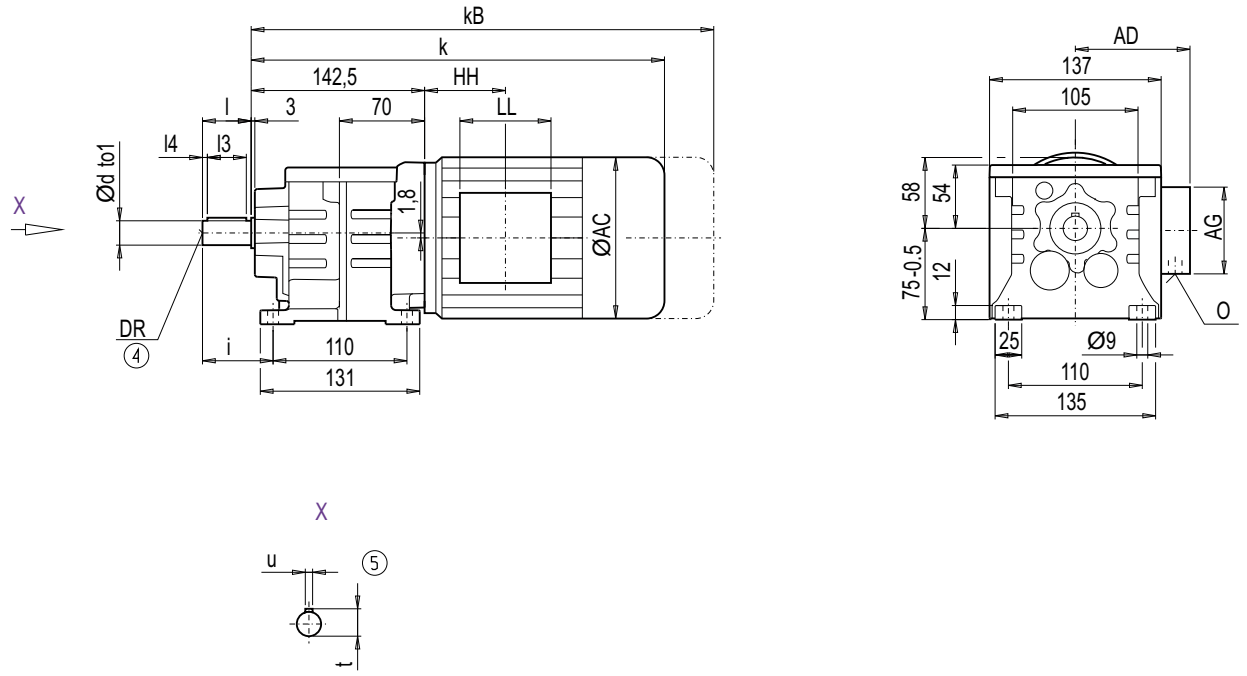

d	to1	l	l4	l3	t	u	i	DR
16	k6	28	3	22	18	5	46	M6x16
20*)	k6	40	4	32	22.5	6	58	M6x16

*) Preferred series

	Z18		D18								Weight	
Motor	**k**	**kB**	**k**	**kB**	**AC**	**AD**	**AG**	**LL**	**HH**	**O**	**Z18**	**D18**
LA71	327	382	327	382	139	146	90	90	40.5	M20x1.5/M25x1.5	8	8
LA71Z	346	401	346	401	139	146	90	90	40.5	M20x1.5/M25x1.5	8	8

④ DIN 332

⑤ Feather key / keyway DIN 6885

© Siemens AG 2011

Dimensions

Gearbox DF/ZF18 (3- / 2-stage), flange-mounted design (A-type)

DZF011

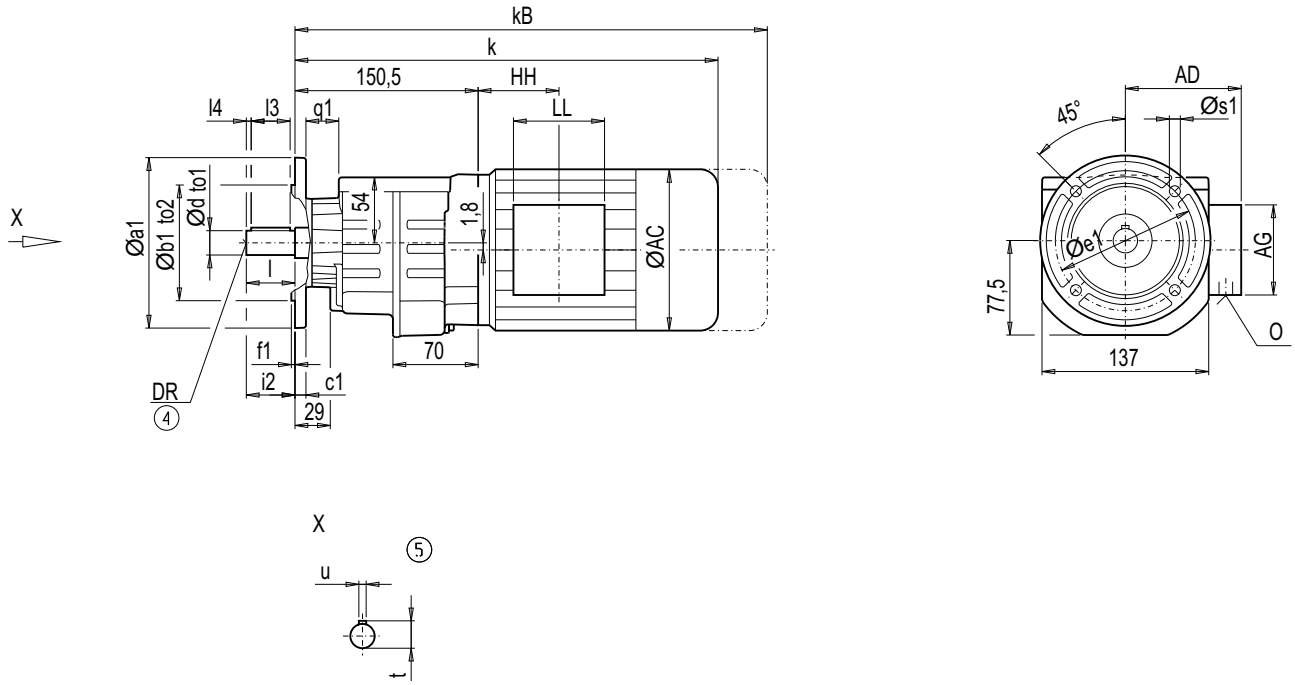

Flange	a1	b1	to2	c1	e1	f1	q1	s1	d	to1	l	l4	l3	t	u	i2	DR
A120	120	80	j6	8	100	3.0	28	6.6	16	k6	28	3	22	18	5	28	M6x16
									20*)	k6	40	4	32	22.5	6	40	M6x16
A140	140	95	j6	9	115	3.0	27	9.0	16	k6	28	3	22	18	5	28	M6x16
									20*)	k6	40	4	32	22.5	6	40	M6x16
A160	160	110	j6	9	130	3.5	27	9.0	16	k6	28	3	22	18	5	28	M6x16
									20*)	k6	40	4	32	22.5	6	40	M6x16

*) Preferred series

	ZF18		DF18								Weight	
Motor	**k**	**kB**	**k**	**kB**	**AC**	**AD**	**AG**	**LL**	**HH**	**O**	**ZF18**	**DF18**
LA71	335	390	335	390	139	146	90	90	40.5	M20x1.5/M25x1.5	8	9
LA71Z	354	409	354	409	139	146	90	90	40.5	M20x1.5/M25x1.5	8	9

④ DIN 332

⑤ Feather key / keyway DIN 6885

© Siemens AG 2011

Gearbox D/Z28 (3- / 2-stage), foot-mounted design

DZ011

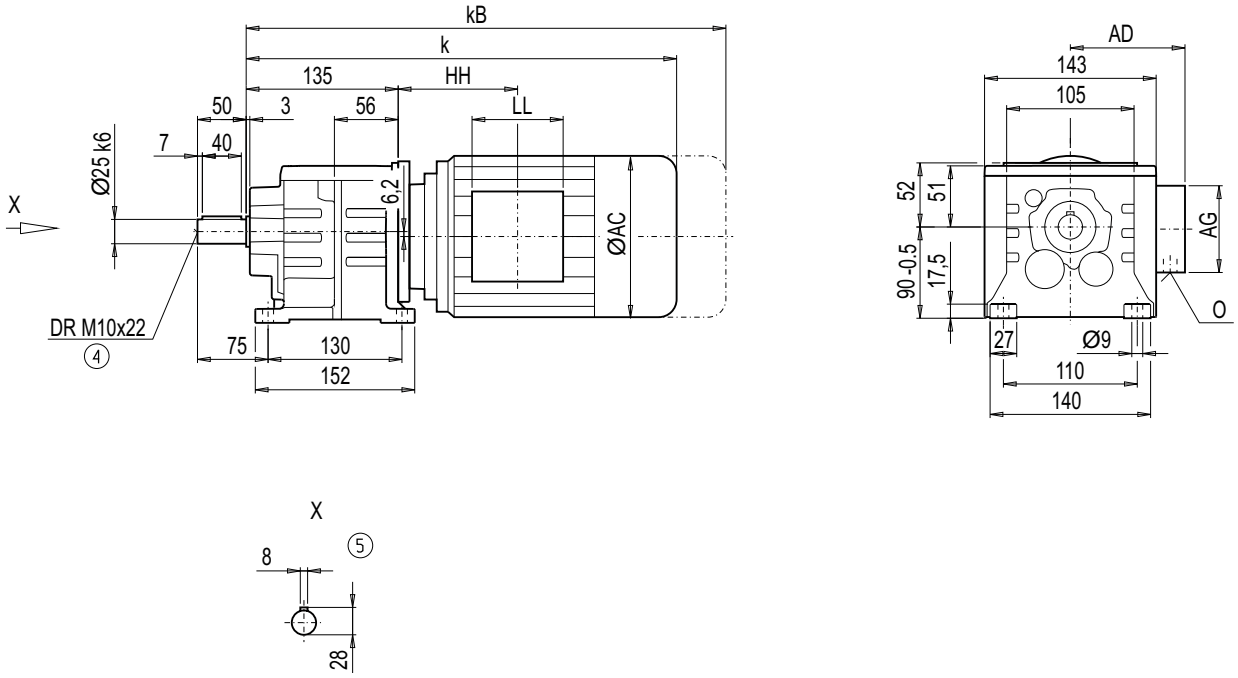

Motor	Z28 k	Z28 kB	D28 k	D28 kB	AC	AD	AG	LL	HH	O	Weight Z28	Weight D28
LA71	337.5	392.5	337.5	392.5	139	146	90	90	58.5	M20x1.5/M25x1.5	9	9
LA71Z	356.5	411.5	356.5	411.5	139	146	90	90	58.5	M20x1.5/M25x1.5	9	9
LA80	439.5	503.0	439.5	503.0	156.5	155	90	90	123.0	M20x1.5/M25x1.5	14	14
LA80Z	462.0	525.5	462.0	525.5	156.5	155	90	90	196.0	M20x1.5/M25x1.5	18	18
LA90S/L	434.5	505.5	434.5	505.5	174	163	90	90	87.0	M20x1.5/M25x1.5	18	19
LA90ZL	479.5	550.5	479.5	550.5	174	163	90	90	211.0	M20x1.5/M25x1.5	27	28
LA100L	516.5	597.5	–	–	195	168	120	120	163.5	2xM32x1.5	28	–
LA100ZL	586.5	667.5	–	–	195	168	120	120	295.5	2xM32x1.5	38	–

④ DIN 332

⑤ Feather key / keyway DIN 6885

© Siemens AG 2011

Dimensions

Gearbox DF/ZF28 (3- / 2-stage), flange-mounted design (A-type)

DZF011

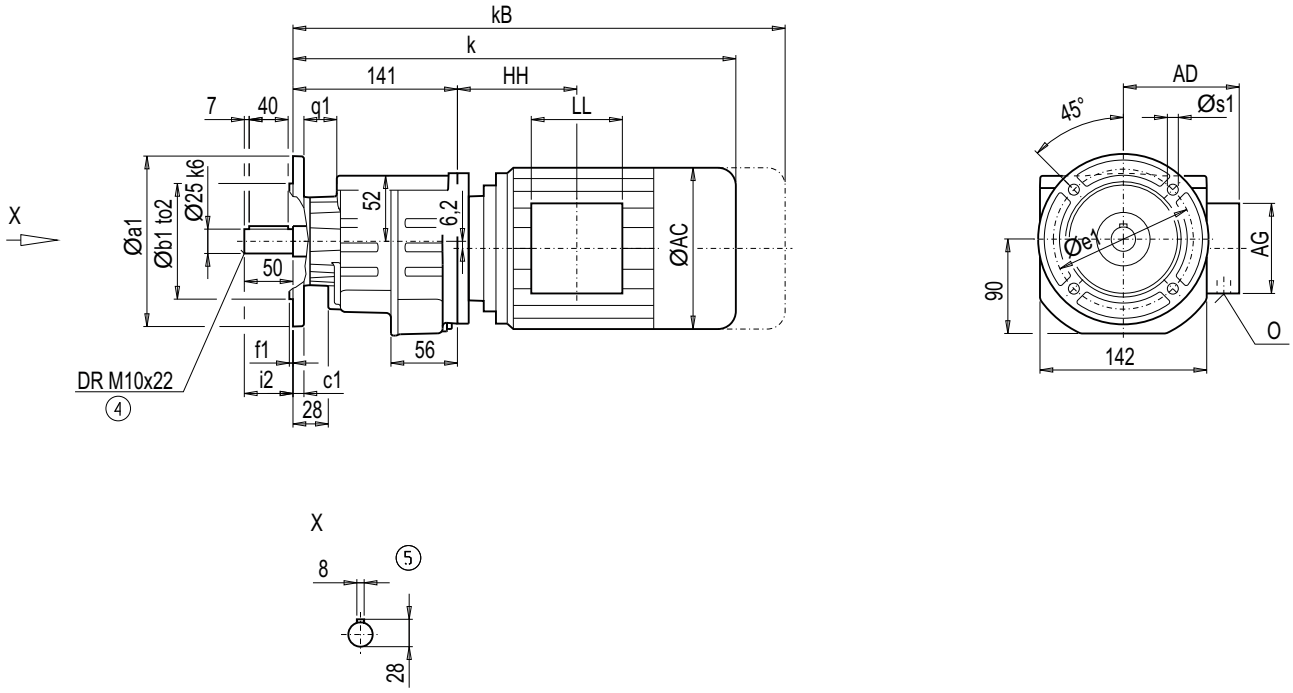

Flange	a1	b1	to2	c1	e1	f1	q1	s1	i2
A120	120	80	j6	8	100	3.0	28	6.6	50
A140	140	95	j6	9	115	3.0	27	9.0	50
A160	160	110	j6	9	130	3.5	27	9.0	50

	ZF28		DF28								Weight	
Motor	**k**	**kB**	**k**	**kB**	**AC**	**AD**	**AG**	**LL**	**HH**	**O**	**ZF28**	**DF28**
LA71	343.5	398.5	343.5	398.5	139	146	90	90	58.5	M20x1.5/M25x1.5	9	9
LA71Z	362.5	417.5	362.5	417.5	139	146	90	90	58.5	M20x1.5/M25x1.5	9	9
LA80	445.5	509.0	445.5	509.0	156.5	155	90	90	123.0	M20x1.5/M25x1.5	14	14
LA80Z	468.0	530.5	468.0	530.5	156.5	155	90	90	196.0	M20x1.5/M25x1.5	18	18
LA90S/L	440.5	511.5	440.5	511.5	174	163	90	90	87.0	M20x1.5/M25x1.5	18	19
LA90ZL	485.5	556.5	485.5	556.5	174	163	90	90	211.0	M20x1.5/M25x1.5	27	28
LA100L	522.5	603.5	–	–	195	168	120	120	163.5	2xM32x1.5	28	–
LA100ZL	592.5	673.5	–	–	195	168	120	120	295.5	2xM32x1.5	38	–

④ DIN 332

⑤ Feather key / keyway DIN 6885

© Siemens AG 2011

Gearbox D/Z38 (3- / 2-stage), foot-mounted design

DZ011

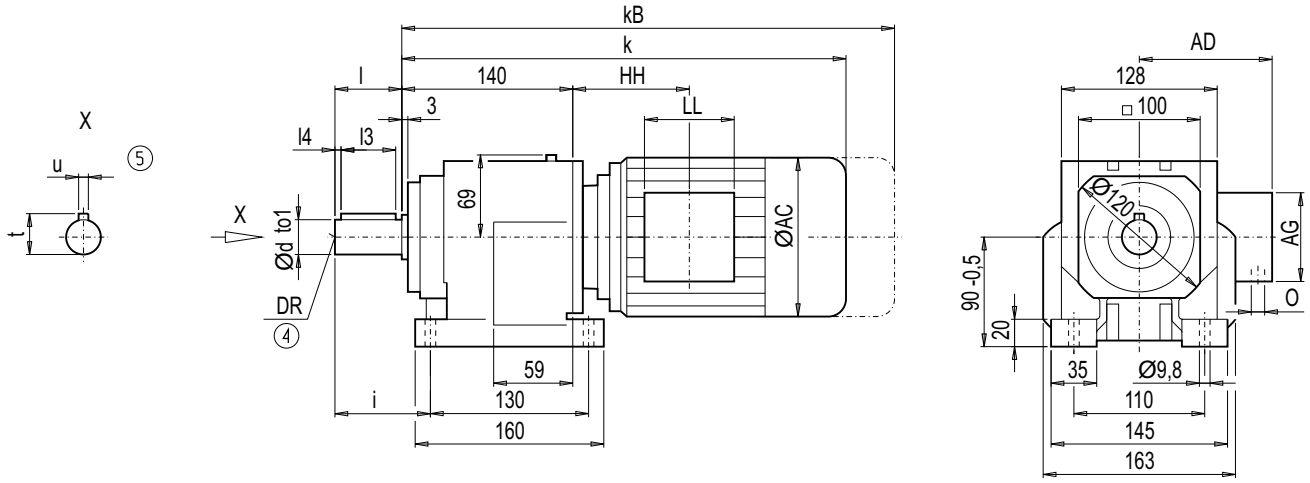

d	to1	l	l4	l3	t	u	i	DR
25 *)	k6	50	7	40	28	8	75	M10x22
30	k6	60	7	50	33	8	85	M10x22

*) Preferred series

	Z38		D38						Z38	D38		Weight	
Motor	**k**	**kB**	**k**	**kB**	**AC**	**AD**	**AG**	**LL**	**HH**	**HH**	**O**	**Z38**	**D38**
LA71	398.5	453.5	413.5	468.5	139.0	146	90	90	114.5	129.5	M20x1.5/M25x1.5	16	17
LA71Z	417.5	472.5	432.5	487.5	139.0	146	90	90	114.5	129.5	M20x1.5/M25x1.5	16	17
LA80	435.5	499.0	450.5	514.0	156.5	155	90	90	114.0	129.0	M20x1.5/M25x1.5	21	22
LA80Z	458.0	521.5	473.0	536.5	156.5	155	90	90	187.0	202.0	M20x1.5/M25x1.5	25	26
LA90S/L	466.5	537.5	481.5	552.5	174.0	163	90	90	114.0	129.0	M20x1.5/M25x1.5	26	27
LA90ZL	511.5	582.5	526.5	597.5	174.0	163	90	90	238.0	253.0	M20x1.5/M25x1.5	32	33
LA100L	512.5	593.5	–	–	195.0	168	120	120	154.5	–	2xM32x1.5	35	–
LA100ZL	582.5	663.5	–	–	195.0	168	120	120	286.5	–	2xM32x1.5	45	–
LA112M	542.0	623.0	–	–	219.0	181	120	120	160.0	–	2xM32x1.5	45	–
LA112ZM	570.0	651.0	–	–	219.0	181	120	120	264.0	–	2xM32x1.5	52	–

④ DIN 332

⑤ Feather key / keyway DIN 6885

© Siemens AG 2011

Dimensions

Gearbox DF/ZF38 (3- / 2-stage), flange-mounted design (A-type)

DZF011

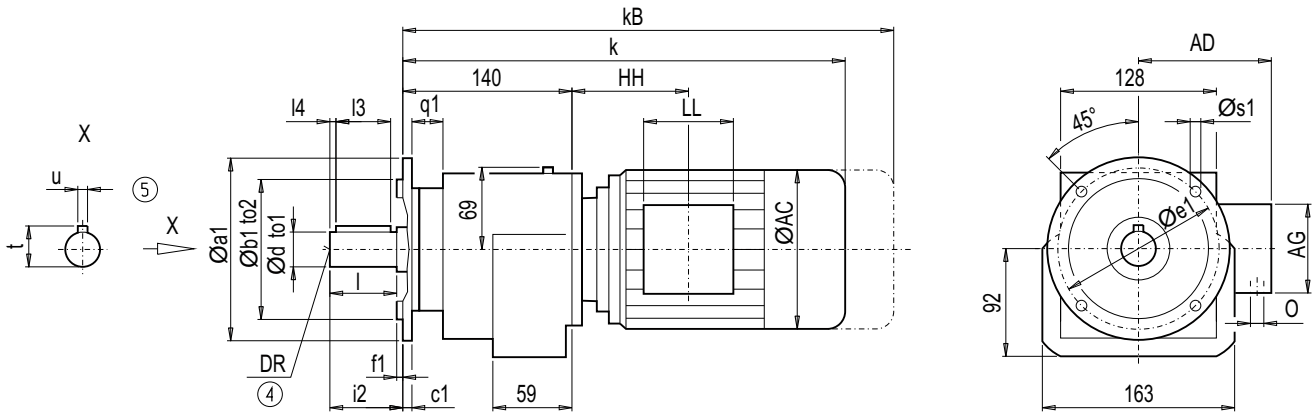

Flange	a1	b1	to2	c1	e1	f1	q1	s1	d	to1	l	l4	l3	t	u	i2	DR
A120	120	80	j6	8	100	3.0	23	6.8	25 *)	k6	50	7	40	28	8	50	M10x22
									30	k6	60	7	50	33	8	60	M10x22
A140	140	95	j6	7	115	3.0	26	9.0	25 *)	k6	50	7	40	28	8	50	M10x22
									30	k6	60	7	50	33	8	60	M10x22
A160	160	110	j6	10	130	3.5	26	9.0	25 *)	k6	50	7	40	28	8	50	M10x22
									30	k6	60	7	50	33	8	60	M10x22
A200 1)	200	130	j6	12	165	3.5	24	11.0	25 *)	k6	50	7	40	28	8	50	M10x22
									30	k6	60	7	50	33	8	60	M10x22
A250	250	180	j6	15	215	4.0	21	13.5	25 *)	k6	50	7	40	28	8	50	M10x22
									30	k6	60	7	50	33	8	60	M10x22

1) The A200 flange is connected to the machine using stud bolts.
*) Preferred series

	ZF38		DF38						ZF38	DF38		Weight	
Motor	**k**	**kB**	**k**	**kB**	**AC**	**AD**	**AG**	**LL**	**HH**	**HH**	**O**	**ZF38**	**DF38**
LA71	398.5	453.5	413.5	468.5	139.0	146	90	90	114.5	129.5	M20x1.5/M25x1.5	17	18
LA71Z	417.5	472.5	432.5	487.5	139.0	146	90	90	114.5	129.5	M20x1.5/M25x1.5	17	18
LA80	435.5	499.0	450.5	514.0	156.5	155	90	90	114.0	129.0	M20x1.5/M25x1.5	22	22
LA80Z	458.0	521.5	473.0	536.5	156.5	155	90	90	187.0	202.0	M20x1.5/M25x1.5	26	26
LA90S/L	466.5	537.5	481.5	552.5	174.0	163	90	90	114.0	129.0	M20x1.5/M25x1.5	26	27
LA90ZL	511.5	582.5	526.5	597.5	174.0	163	90	90	238.0	253.0	M20x1.5/M25x1.5	32	33
LA100L	512.5	593.5	–	–	195.0	168	120	120	154.5	–	2xM32x1.5	35	–
LA100ZL	582.5	663.5	–	–	195.0	168	120	120	286.5	–	2xM32x1.5	45	–
LA112M	542.0	623.0	–	–	219.0	181	120	120	160.0	–	2xM32x1.5	46	–
LA112ZM	570.0	651.0	–	–	219.0	181	120	120	264.0	–	2xM32x1.5	53	–

④ DIN 332 ⑤ Feather key / keyway DIN 6885 .

© Siemens AG 2011

Gearbox DZ/ZZ38 (3- / 2-stage), housing-flange-mounted design (C-type)

DZZ011

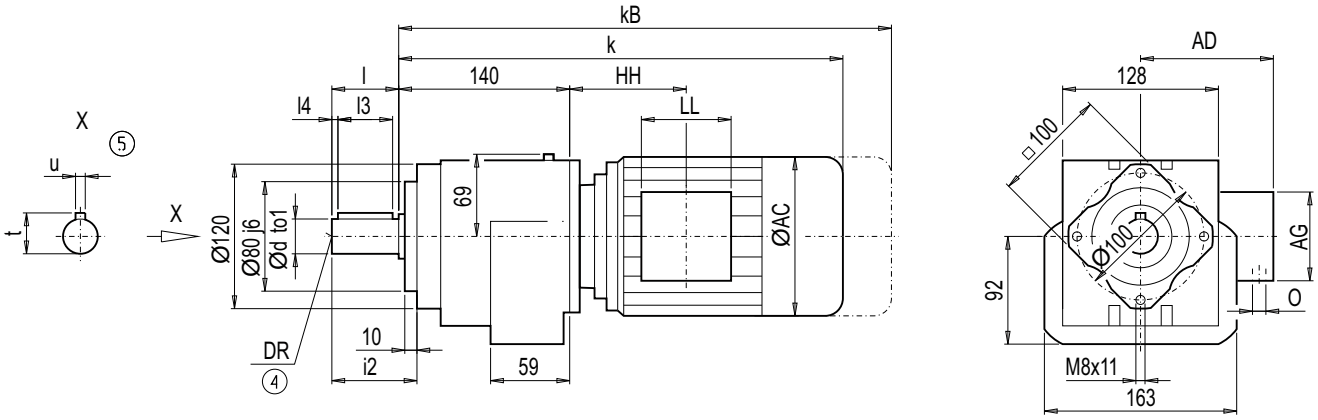

d	to1	l	l4	l3	t	u	i2	DR
25 *)	k6	50	7	40	28	8	63	M10x22
30	k6	60	7	50	33	8	73	M10x22

*) Preferred series

	ZZ38		DZ38						ZZ38	DZ38		Weight	
Motor	**k**	**kB**	**k**	**kB**	**AC**	**AD**	**AG**	**LL**	**HH**	**HH**	**O**	**ZZ38**	**DZ38**
LA71	398.5	453.5	413.5	468.5	139.0	146	90	90	114.5	129.5	M20x1.5/M25x1.5	15	16
LA71Z	417.5	472.5	432.5	487.5	139.0	146	90	90	114.5	129.5	M20x1.5/M25x1.5	15	16
LA80	435.5	499.0	450.5	514.0	156.5	155	90	90	114.0	129.0	M20x1.5/M25x1.5	20	21
LA80Z	458.0	521.5	473.0	536.5	156.5	155	90	90	187.0	202.0	M20x1.5/M25x1.5	24	25
LA90S/L	466.5	537.5	481.5	552.5	174.0	163	90	90	114.0	129.0	M20x1.5/M25x1.5	24	25
LA90ZL	511.5	582.5	526.5	597.5	174.0	163	90	90	238.0	253.0	M20x1.5/M25x1.5	30	31
LA100L	512.5	593.5	–	–	195.0	168	120	120	154.5	–	2xM32x1.5	33	–
LA100ZL	582.5	663.5	–	–	195.0	168	120	120	286.5	–	2xM32x1.5	43	–
LA112M	542.0	623.0	–	–	219.0	181	120	120	160.0	–	2xM32x1.5	44	–
LA112ZM	570.0	651.0	–	–	219.0	181	120	120	264.0	–	2xM32x1.5	51	–

④ DIN 332 ⑤ Feather key / keyway DIN 6885

© Siemens AG 2011

Dimensions

Gearbox D/Z48 (3- / 2-stage), foot-mounted design

DZ011

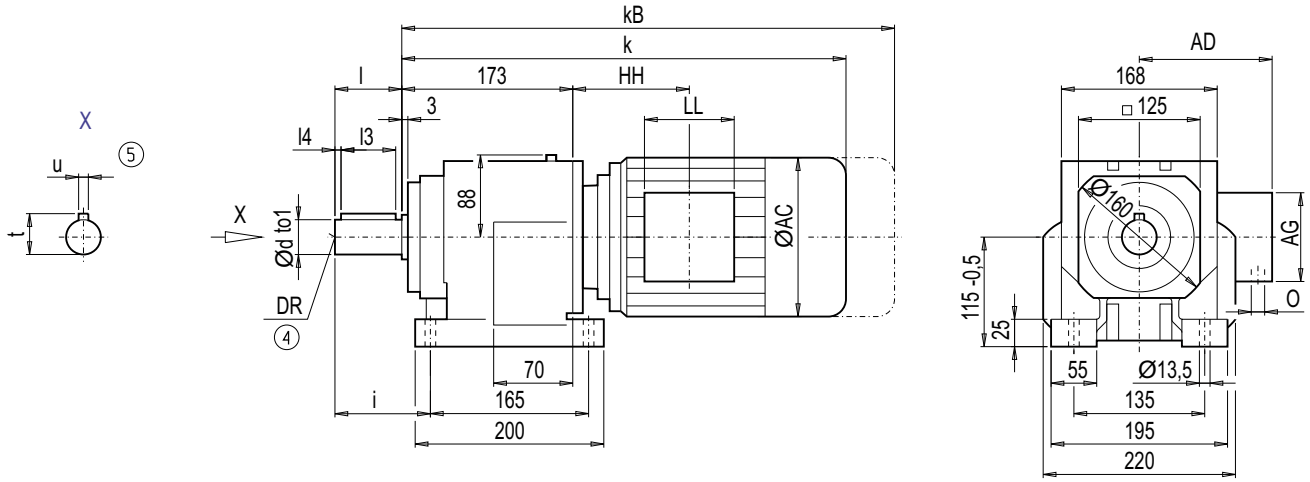

d	to1	l	l4	l3	t	u	i	DR
30 *)	k6	60	7	50	33	8	90	M10x22
35	k6	70	63	4	38	10	100	M10x22
40	k6	80	5	70	43	12	110	M16x36

*) Preferred series

	Z48		D48						Z48	D48		Weight	
Motor	**k**	**kB**	**k**	**kB**	**AC**	**AD**	**AG**	**LL**	**HH**	**HH**	**O**	**Z48**	**D48**
LA71	426.0	481.0	443.0	498.0	139.0	146	90	90	109.0	126.0	M20x1.5/M25x1.5	26	27
LA71Z	445.0	500.0	462.0	517.0	139.0	146	90	90	109.0	126.0	M20x1.5/M25x1.5	26	27
LA80	463.0	526.5	480.0	543.5	156.5	155	90	90	108.5	125.5	M20x1.5/M25x1.5	31	32
LA80Z	485.5	549.0	502.5	566.0	156.5	155	90	90	181.5	198.5	M20x1.5/M25x1.5	35	36
LA90S/L	494.0	565.0	511.0	582.0	174.0	163	90	90	108.5	125.5	M20x1.5/M25x1.5	35	36
LA90ZL	539.0	610.0	556.0	627.0	174.0	163	90	90	232.5	249.5	M20x1.5/M25x1.5	41	41
LA100L	540.0	621.0	557.0	638.0	195.0	168	120	120	149.0	166.0	2xM32x1.5	44	45
LA100ZL	610.0	691.0	627.0	708.0	195.0	168	120	120	281.0	298.0	2xM32x1.5	54	55
LA112M	569.0	650.0	–	–	219.0	181	120	120	154.0	–	2xM32x1.5	56	–
LA112ZM	597.0	678.0	–	–	219.0	181	120	120	258.0	–	2xM32x1.5	63	–
LA132S/M	631.0	733.0	–	–	259.0	195	140	140	196.5	–	2xM32x1.5	66	–
LA132ZM	677.0	779.0	–	–	259.0	195	140	140	304.5	–	2xM32x1.5	87	–

④ DIN 332

⑤ Feather key / keyway DIN 6885

© Siemens AG 2011

Gearbox DF/ZF48 (3- / 2-stage), flange-mounted design (A-type)

DZF011

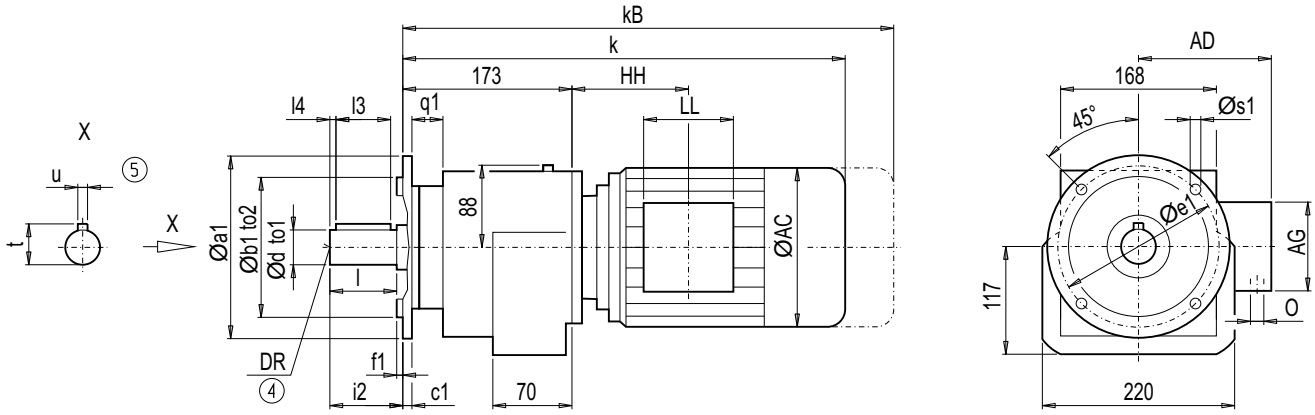

Flange	a1	b1	to2	c1	e1	f1	q1	s1	d	to1	l	l4	l3	t	u	i2	DR
A200	200	130	j6	12	165	3.5	29	11.0	30 *)	k6	60	7	50	33	8	60	M10x22
									35	k6	70	4	63	38	10	70	M10x22
									40	k6	80	5	70	43	12	80	M16x36
A250 1)	250	180	j6	15	215	4.0	26	13.5	30 *)	k6	60	7	50	33	8	60	M10x22
									35	k6	70	4	63	38	10	70	M10x22
									40	k6	80	5	70	43	12	80	M16x36
A300	300	230	j6	15	265	4.0	26	13.5	30 *)	k6	60	7	50	33	8	60	M10x22
									35	k6	70	4	63	38	10	70	M10x22
									40	k6	80	5	70	43	12	80	M16x36

1) The A250 flange is connected to the machine using stud bolts.
*) Preferred series

	ZF48		DF48						ZF48	DF48		Weight	
Motor	**k**	**kB**	**k**	**kB**	**AC**	**AD**	**AG**	**LL**	**HH**	**HH**	**O**	**ZF48**	**DF48**
LA71	426.0	481.0	443.0	498.0	139.0	146	90	90	109.0	126.0	M20x1.5/M25x1.5	27	28
LA71Z	445.0	500.0	462.0	517.0	139.0	146	90	90	109.0	126.0	M20x1.5/M25x1.5	27	28
LA80	463.0	526.5	480.0	543.5	156.5	155	90	90	108.5	125.5	M20x1.5/M25x1.5	32	33
LA80Z	485.5	549.0	502.5	566.0	156.5	155	90	90	181.5	198.5	M20x1.5/M25x1.5	36	37
LA90S/L	494.0	565.0	511.0	582.0	174.0	163	90	90	108.5	125.5	M20x1.5/M25x1.5	37	38
LA90ZL	539.0	610.0	556.0	627.0	174.0	163	90	90	232.5	249.5	M20x1.5/M25x1.5	43	44
LA100L	540.0	621.0	557.0	638.0	195.0	168	120	120	149.0	166.0	2xM32x1.5	46	47
LA100ZL	610.0	691.0	627.0	708.0	195.0	168	120	120	281.0	298.0	2xM32x1.5	56	57
LA112M	569.0	650.0	–	–	219.0	181	120	120	154.0	–	2xM32x1.5	57	–
LA112ZM	597.0	678.0	–	–	219.0	181	120	120	258.0	–	2xM32x1.5	64	–
LA132S/M	631.0	733.0	–	–	259.0	195	140	140	196.5	–	2xM32x1.5	67	–
LA132ZM	677.0	779.0	–	–	259.0	195	140	140	304.5	–	2xM32x1.5	88	–

④ DIN 332 ⑤ Feather key / keyway DIN 6885

© Siemens AG 2011

Dimensions

Gearbox DZ/ZZ48 (3- / 2-stage), housing-flange-mounted design (C-type)

DZZ011

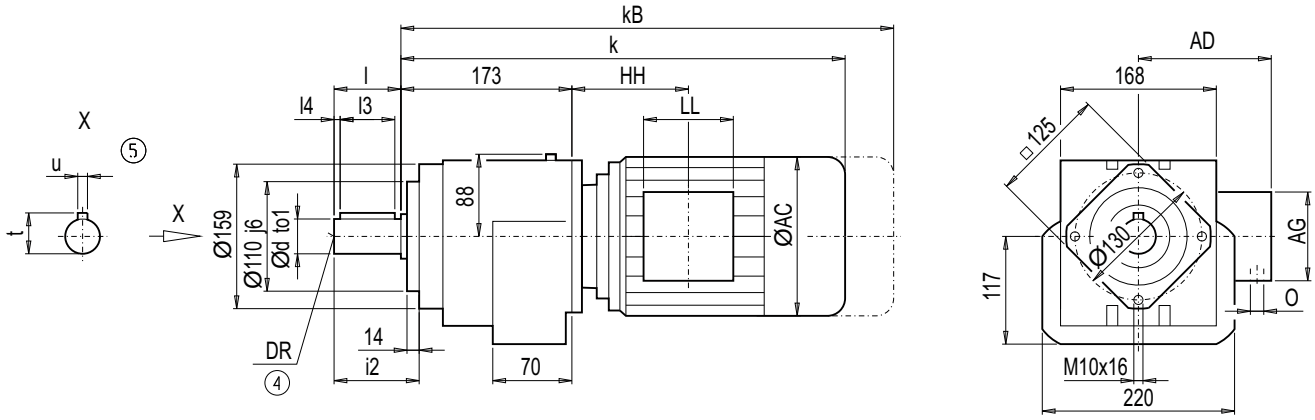

d	to1	l	l4	l3	t	u	i2	DR
30 *)	k6	60	7	50	33	8	77	M10x22
35	k6	70	4	63	38	10	87	M10x22
40	k6	80	5	70	43	12	97	M16x36

*) Preferred series

	ZZ48		DZ48						ZZ48	DZ48		Weight	
Motor	**k**	**kB**	**k**	**kB**	**AC**	**AD**	**AG**	**LL**	**HH**	**HH**	**O**	**ZZ48**	**DZ48**
LA71	426.0	481.0	443.0	498.0	139.0	146	90	90	109.0	126.0	M20x1.5/M25x1.5	24	25
LA71Z	445.0	500.0	462.0	517.0	139.0	146	90	90	109.0	126.0	M20x1.5/M25x1.5	24	25
LA80	463.0	526.5	480.0	543.5	156.5	155	90	90	108.5	125.5	M20x1.5/M25x1.5	29	30
LA80Z	485.5	549.0	502.5	566.0	156.5	155	90	90	181.5	198.5	M20x1.5/M25x1.5	33	34
LA90S/L	494.0	565.0	511.0	582.0	174.0	163	90	90	108.5	125.5	M20x1.5/M25x1.5	33	34
LA90ZL	539.0	610.0	556.0	627.0	174.0	163	90	90	232.5	249.5	M20x1.5/M25x1.5	39	40
LA100L	540.0	621.0	557.0	638.0	195.0	168	120	120	149.0	166.0	2xM32x1.5	42	43
LA100ZL	610.0	691.0	627.0	708.0	195.0	168	120	120	281.0	298.0	2xM32x1.5	52	53
LA112M	569.0	650.0	–	–	219.0	181	120	120	154.0	–	2xM32x1.5	54	–
LA112ZM	597.0	678.0	–	–	219.0	181	120	120	258.0	–	2xM32x1.5	61	–
LA132S/M	631.0	733.0	–	–	259.0	195	140	140	196.5	–	2xM32x1.5	64	–
LA132ZM	677.0	779.0	–	–	259.0	195	140	140	304.5	–	2xM32x1.5	85	–

④ DIN 332

⑤ Feather key / keyway DIN 6885

© Siemens AG 2011

Gearbox D/Z68 (3- / 2-stage), foot-mounted design

DZ011

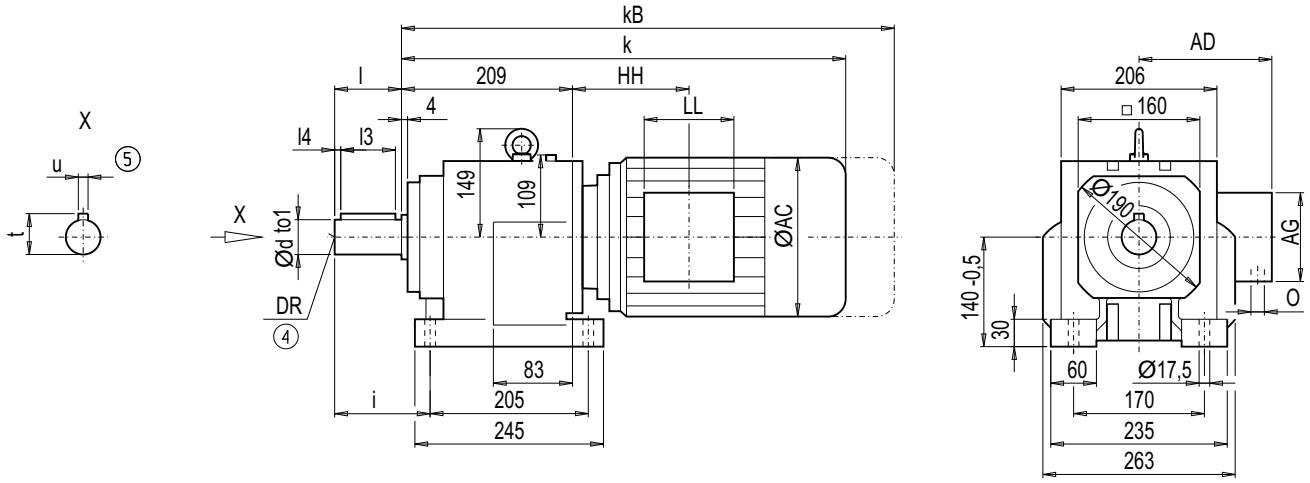

d	to1	l	l4	l3	t	u	i	DR
35	k6	70	5	56	38.0	10	105	M12x28
40 *)	k6	80	5	70	43.0	12	115	M16x36
50	k6	100	10	80	53.5	14	135	M16x36

*) Preferred series

	Z68		D68						Z68	D68		Weight	
Motor	**k**	**kB**	**k**	**kB**	**AC**	**AD**	**AG**	**LL**	**HH**	**HH**	**O**	**Z68**	**D68**
LA71	456.0	511.0	474.5	529.5	139.0	146	90	90	103.0	121.5	M20x1.5/M25x1.5	43	45
LA71Z	475.0	530.0	493.5	548.5	139.0	146	90	90	103.0	121.5	M20x1.5/M25x1.5	43	45
LA80	493.0	556.5	511.5	575.0	156.5	155	90	90	102.5	121.0	M20x1.5/M25x1.5	48	50
LA80Z	515.5	579.0	534.0	597.5	156.5	155	90	90	175.5	194.0	M20x1.5/M25x1.5	52	54
LA90S/L	524.0	595.0	542.5	613.5	174.0	163	90	90	102.5	121.0	M20x1.5/M25x1.5	52	55
LA90ZL	569.0	640.0	587.5	658.5	174.0	163	90	90	226.5	245.0	M20x1.5/M25x1.5	58	61
LA100L	570.0	651.0	588.5	669.5	195.0	168	120	120	143.0	161.5	2xM32x1.5	61	64
LA100ZL	640.0	721.0	658.5	739.5	195.0	168	120	120	275.0	293.5	2xM32x1.5	71	74
LA112M	597.0	678.0	–	–	219.0	181	120	120	146.0	–	2xM32x1.5	73	–
LA112ZM	625.0	706.0	–	–	219.0	181	120	120	250.0	–	2xM32x1.5	80	–
LA132S/M	657.0	759.0	–	–	259.0	195	140	140	186.5	–	2xM32x1.5	86	–
LA132ZM	703.0	805.0	–	–	259.0	195	140	140	294.5	–	2xM32x1.5	107	–
LA160M/L	759.5	878.0	–	–	313.5	227	165	165	212.0	–	2xM40x1.5	119	–
LA160ZL	807.5	926.0	–	–	313.5	227	165	165	365.0	–	2xM40x1.5	158	–

④ DIN 332

⑤ Feather key / keyway DIN 6885

© Siemens AG 2011

Dimensions

Gearbox DF/ZF68 (3- / 2-stage), flange-mounted design (A-type)

DZF011

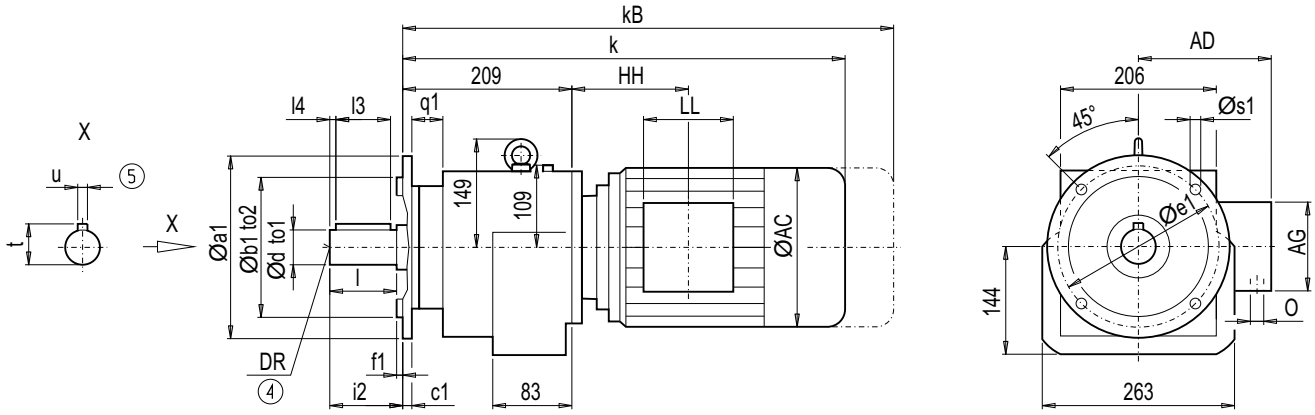

Flange	a1	b1	to2	c1	e1	f1	q1	s1	d	to1	l	l4	l3	t	u	i2	DR
A250	250	180	j6	15	215	4	40	13.5	35	k6	70	5	56	38.0	10	70	M12x28
									40 *)	k6	80	5	70	43.0	12	80	M16x36
									50	k6	100	10	80	53.5	14	100	M16x36
A300	300	230	j6	16	265	4	39	13.5	35	k6	70	5	56	38.0	10	70	M12x28
									40 *)	k6	80	5	70	43.0	12	80	M16x36
									50	k6	100	10	80	53.5	14	100	M16x36
A350	350	250	j6	18	300	4	39	17.5	35	k6	70	5	56	38.0	10	70	M12x28
									40 *)	k6	80	5	70	43.0	12	80	M16x36
									50	k6	100	10	80	53.5	14	100	M16x36

*) Preferred series

	ZF68		DF68						ZF68	DF68		Weight	
Motor	**k**	**kB**	**k**	**kB**	**AC**	**AD**	**AG**	**LL**	**HH**	**HH**	**O**	**ZF68**	**DF68**
LA71	456.0	511.0	474.5	529.5	139.0	146	90	90	103.0	121.5	M20x1.5/M25x1.5	45	47
LA71Z	475.0	530.0	493.5	548.5	139.0	146	90	90	103.0	121.5	M20x1.5/M25x1.5	45	47
LA80	493.0	556.5	511.5	575.0	156.5	155	90	90	102.5	121.0	M20x1.5/M25x1.5	49	52
LA80Z	515.5	579.0	534.0	597.5	156.5	155	90	90	175.5	194.0	M20x1.5/M25x1.5	53	56
LA90S/L	524.0	595.0	542.5	613.5	174.0	163	90	90	102.5	121.0	M20x1.5/M25x1.5	54	56
LA90ZL	569.0	640.0	587.5	658.5	174.0	163	90	90	226.5	245.0	M20x1.5/M25x1.5	60	62
LA100L	570.0	651.0	588.5	669.5	195.0	168	120	120	143.0	161.5	2xM32x1.5	63	65
LA100ZL	640.0	721.0	658.5	739.5	195.0	168	120	120	275.0	293.5	2xM32x1.5	73	75
LA112M	597.0	678.0	–	–	219.0	181	120	120	146.0	–	2xM32x1.5	75	–
LA112ZM	625.0	706.0	–	–	219.0	181	120	120	250.0	–	2xM32x1.5	82	–
LA132S/M	657.0	759.0	–	–	259.0	195	140	140	186.5	–	2xM32x1.5	88	–
LA132ZM	703.0	805.0	–	–	259.0	195	140	140	294.5	–	2xM32x1.5	109	–
LA160M/L	759.5	878.0	–	–	313.5	227	165	165	212.0	–	2xM40x1.5	121	–
LA160ZL	807.5	926.0	–	–	313.5	227	165	165	365.0	–	2xM40x1.5	160	–

④ DIN 332 ⑤ Feather key / keyway DIN 6885

© Siemens AG 2011

Gearbox DZ/ZZ68 (3- / 2-stage), housing-flange-mounted design (C-type)

DZZ011

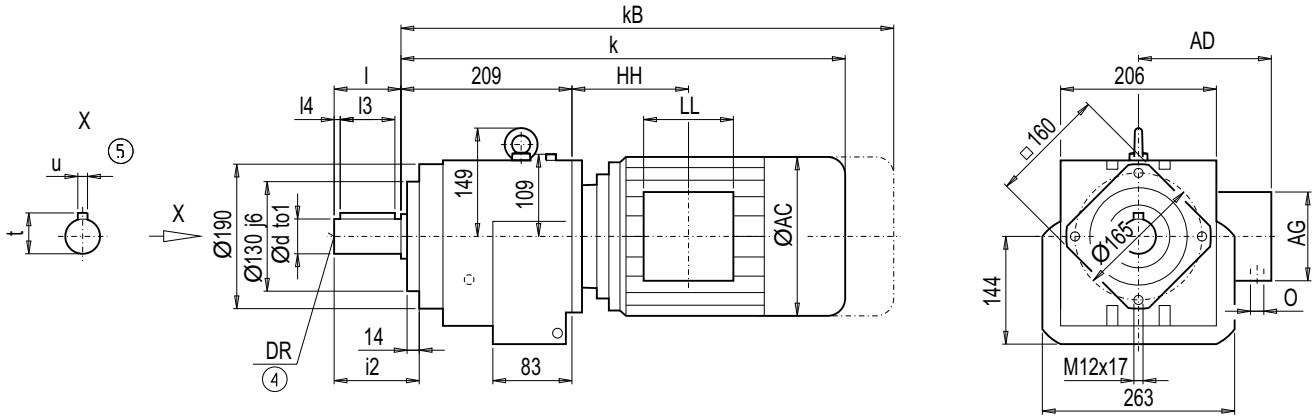

d	to1	l	l4	l3	t	u	i2	DR
35	k6	70	5	56	38.0	10	88	M12x28
40 *)	k6	80	5	70	43.0	12	98	M16x36
50	k6	100	10	80	53.5	14	118	M16x36

*) Preferred series

	ZZ68		DZ68						ZZ68	DZ68		Weight	
Motor	**k**	**kB**	**k**	**kB**	**AC**	**AD**	**AG**	**LL**	**HH**	**HH**	**O**	**ZZ68**	**DZ68**
LA71	456.0	511.0	474.5	529.5	139.0	146	90	90	103.0	121.5	M20x1.5/M25x1.5	39	41
LA71Z	475.0	530.0	493.5	548.5	139.0	146	90	90	103.0	121.5	M20x1.5/M25x1.5	39	41
LA80	493.0	556.5	511.5	575.0	156.5	155	90	90	102.5	121.0	M20x1.5/M25x1.5	44	46
LA80Z	515.5	579.0	534.0	597.5	156.5	155	90	90	175.5	194.0	M20x1.5/M25x1.5	48	50
LA90S/L	524.0	595.0	542.5	613.5	174.0	163	90	90	102.5	121.0	M20x1.5/M25x1.5	49	51
LA90ZL	569.0	640.0	587.5	658.5	174.0	163	90	90	226.5	245.0	M20x1.5/M25x1.5	55	57
LA100L	570.0	651.0	588.5	669.5	195.0	168	120	120	143.0	161.5	2xM32x1.5	58	60
LA100ZL	640.0	721.0	658.5	739.5	195.0	168	120	120	275.0	293.5	2xM32x1.5	68	70
LA112M	597.0	678.0	–	–	219.0	181	120	120	146.0	–	2xM32x1.5	69	–
LA112ZM	625.0	706.0	–	–	219.0	181	120	120	250.0	–	2xM32x1.5	76	–
LA132S/M	657.0	759.0	–	–	259.0	195	140	140	186.5	–	2xM32x1.5	82	–
LA132ZM	703.0	805.0	–	–	259.0	195	140	140	294.5	–	2xM32x1.5	104	–
LA160M/L	759.5	878.0	–	–	313.5	227	165	165	212.0	–	2xM40x1.5	115	–
LA160ZL	807.5	926.0	–	–	313.5	227	165	165	365.0	–	2xM40x1.5	154	–

④ DIN 332

⑤ Feather key / keyway DIN 6885

© Siemens AG 2011

Dimensions

Gearbox D/Z88 (3- / 2-stage), foot-mounted design

DZ011

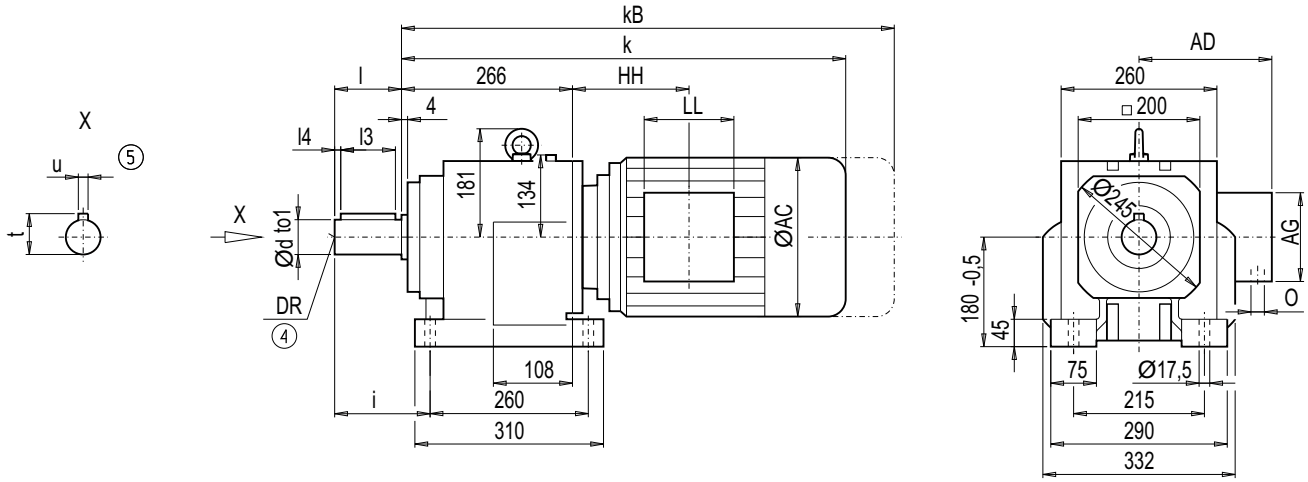

d	to1	l	l4	l3	t	u	i	DR
50 *)	k6	100	10	80	53.5	14	140	M16x36
60	m6	120	10	100	64.0	18	160	M20x42

*) Preferred series

	Z88		D88						Z88	D88		Weight	
Motor	**k**	**kB**	**k**	**kB**	**AC**	**AD**	**AG**	**LL**	**HH**	**HH**	**O**	**Z88**	**D88**
LA71	–	–	523.0	578.0	139.0	146.0	90	90	–	113.0	M20x1.5/M25x1.5	–	76
LA71Z	–	–	542.0	597.0	139.0	146.0	90	90	–	113.0	M20x1.5/M25x1.5	–	76
LA80	–	–	560.0	623.5	156.5	155.0	90	90	–	112.5	M20x1.5/M25x1.5	–	81
LA80Z	–	–	582.5	646.0	156.5	155.0	90	90	–	185.5	M20x1.5/M25x1.5	–	85
LA90S/L	566.0	637.0	591.0	662.0	174.0	163.0	90	90	87.5	112.5	M20x1.5/M25x1.5	85	86
LA90ZL	611.0	682.0	636.0	707.0	174.0	163.0	90	90	211.5	236.5	M20x1.5/M25x1.5	91	92
LA100L	609.5	690.5	637.0	718.0	195.0	168.0	120	120	125.5	153.0	2xM32x1.5	93	95
LA100ZL	679.5	760.5	707.0	788.0	195.0	168.0	120	120	257.5	285.0	2xM32x1.5	103	105
LA112M	635.5	716.5	664.5	745.5	219.0	181.0	120	120	127.5	156.5	2xM32x1.5	106	107
LA112ZM	663.5	744.6	692.5	773.5	219.0	181.0	120	120	231.5	260.5	2xM32x1.5	113	114
LA132S/M	695.5	797.5	723.5	825.5	259.0	195.0	140	140	168.0	196.0	2xM32x1.5	117	120
LA132ZM	741.5	843.5	769.5	871.5	259.0	195.0	140	140	276.0	304.0	2xM32x1.5	138	141
LA160M/L	800.0	918.5	–	–	313.5	227.0	165	165	195.5	–	2xM40x1.5	152	–
LA160ZL	848.0	966.5	–	–	313.5	227.0	165	165	348.5	–	2xM40x1.5	191	–
LG180M/L	859.5	981.5	–	–	348.0	322.5	260	192	212.5	–	2xM40x1.5	244	–
LG180ZM/ZL	910.5	1 032.5	–	–	348.0	322.5	260	192	212.5	–	2xM40x1.5	274	–

④ DIN 332

⑤ Feather key / keyway DIN 6885

© Siemens AG 2011

Gearbox DF/ZF88 (3- / 2-stage), flange-mounted design (A-type)

DZF011

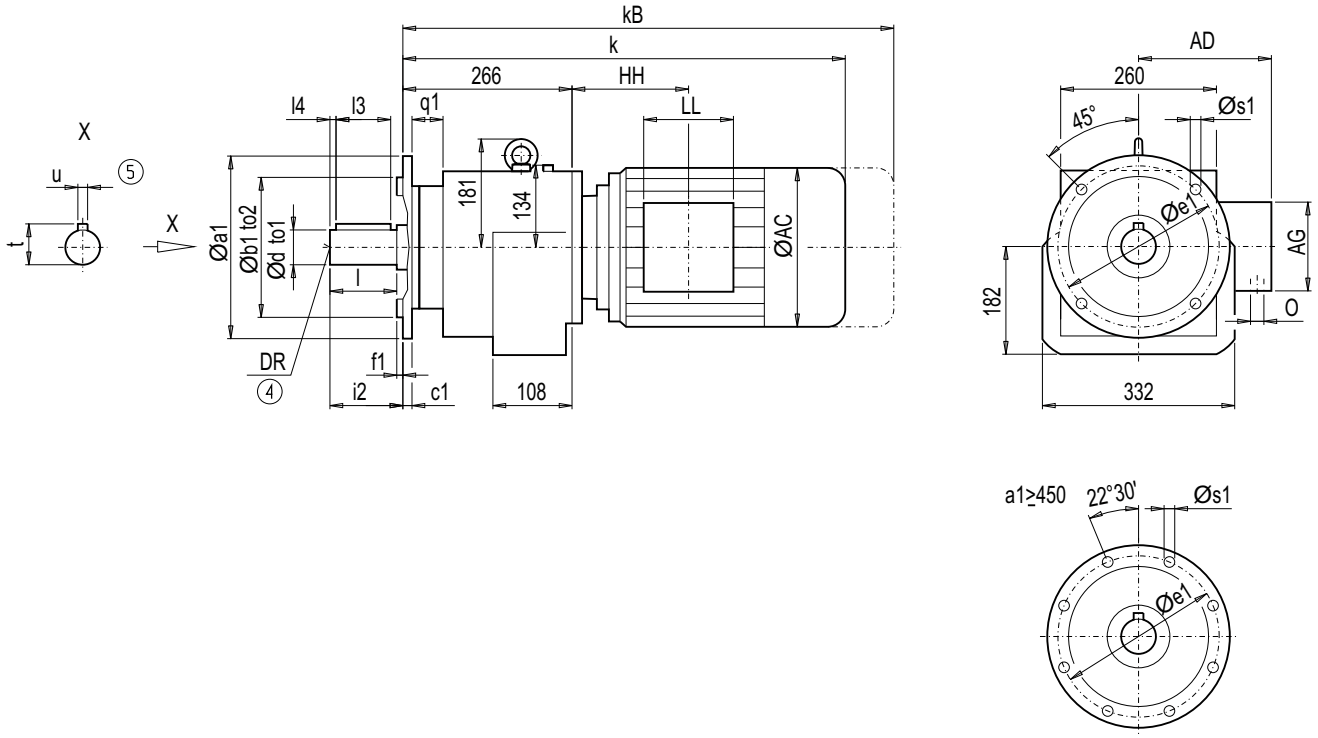

Flange	a1	b1	to2	c1	e1	f1	q1	s1	d	to1	l	l4	l3	t	u	i2	DR
A300	300	230	j6	16	265	4	54	13.5	50 *)	k6	100	10	80	53.5	14	100	M16x36
									60	m6	120	10	100	64.0	18	120	M20x42
A350	350	250	j6	18	300	5	52	17.5	50 *)	k6	100	10	80	53.5	14	100	M16x36
									60	m6	120	10	100	64.0	18	120	M20x42
A450	450	350	j6	18	400	5	52	17.5	50 *)	k6	100	10	80	53.5	14	100	M16x36
									60	m6	120	10	100	64.0	18	120	M20x42

*) Preferred series

	ZF88		DF88						ZF88	DF88		Weight	
Motor	**k**	**kB**	**k**	**kB**	**AC**	**AD**	**AG**	**LL**	**HH**	**HH**	**O**	**ZF88**	**DF88**
LA71	–	–	523.0	578.0	139.0	146.0	90	90	–	113.0	M20x1.5/M25x1.5	–	78
LA71Z	–	–	542.0	597.0	139.0	146.0	90	90	–	113.0	M20x1.5/M25x1.5	–	78
LA80	–	–	560.0	623.5	156.5	155.0	90	90	–	112.5	M20x1.5/M25x1.5	–	83
LA80Z	–	–	582.5	646.0	156.5	155.0	90	90	–	185.5	M20x1.5/M25x1.5	–	87
LA90S/L	566.0	637.0	591.0	662.0	174.0	163.0	90	90	87.5	112.5	M20x1.5/M25x1.5	87	88
LA90ZL	611.0	682.0	636.0	707.0	174.0	163.0	90	90	211.5	236.5	M20x1.5/M25x1.5	93	94
LA100L	609.5	690.5	637.0	718.0	195.0	168.0	120	120	125.5	153.0	2xM32x1.5	95	97
LA100ZL	679.5	760.5	707.0	788.0	195.0	168.0	120	120	257.5	285.0	2xM32x1.5	105	107
LA112M	635.5	716.5	664.5	745.5	219.0	181.0	120	120	127.5	156.5	2xM32x1.5	108	109
LA112ZM	663.5	744.6	692.5	773.5	219.0	181.0	120	120	231.5	260.5	2xM32x1.5	115	116
LA132S/M	695.5	797.5	723.5	825.5	259.0	195.0	140	140	168.0	196.0	2xM32x1.5	119	122
LA132ZM	741.5	843.5	769.5	871.5	259.0	195.0	140	140	276.0	304.0	2xM32x1.5	140	143
LA160M/L	800.0	918.5	–	–	313.5	227.0	165	165	195.5	–	2xM40x1.5	154	–
LA160ZL	848.0	966.5	–	–	313.5	227.0	165	165	348.5	–	2xM40x1.5	193	–
LG180M/L	859.5	981.5	–	–	348.0	322.5	260	192	212.5	–	2xM40x1.5	246	–
LG180ZM/ZL	910.5	1 032.5	–	–	348.0	322.5	260	192	212.5	–	2xM40x1.5	276	–

④ DIN 332

⑤ Feather key / keyway DIN 6885

© Siemens AG 2011

Dimensions

Gearbox DZ/ZZ88 (3- / 2-stage), housing-flange-mounted design (C-type)

DZZ011

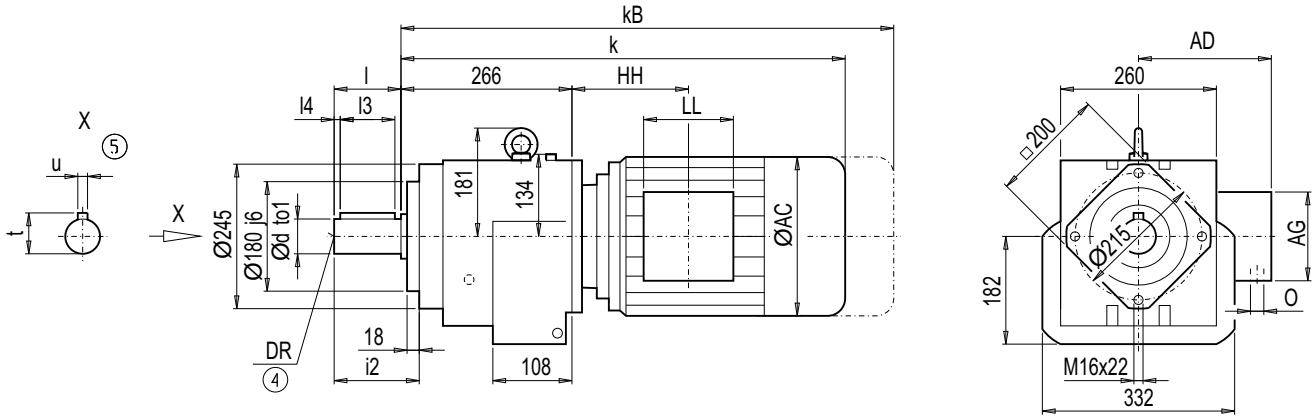

d	to1	l	l4	l3	t	u	i2	DR
50 *)	k6	100	10	80	53.5	14	122	M16x36
60	m6	120	10	100	64.0	18	142	M20x42

*) Preferred series

	ZZ88		DZ88						ZZ88	DZ88		Weight	
Motor	**k**	**kB**	**k**	**kB**	**AC**	**AD**	**AG**	**LL**	**HH**	**HH**	**O**	**ZZ88**	**DZ88**
LA71	–	–	523.0	578.0	139.0	146.0	90	90	–	113.0	M20x1.5/M25x1.5	–	69
LA71Z	–	–	542.0	597.0	139.0	146.0	90	90	–	113.0	M20x1.5/M25x1.5	–	69
LA80	–	–	560.0	623.5	156.5	155.0	90	90	–	112.5	M20x1.5/M25x1.5	–	74
LA80Z	–	–	582.5	646.0	156.5	155.0	90	90	–	185.5	M20x1.5/M25x1.5	–	78
LA90S/L	566.0	637.0	591.0	662.0	174.0	163.0	90	90	87.5	112.5	M20x1.5/M25x1.5	79	79
LA90ZL	611.0	682.0	636.0	707.0	174.0	163.0	90	90	211.5	236.5	M20x1.5/M25x1.5	85	85
LA100L	609.5	690.5	637.0	718.0	195.0	168.0	120	120	125.5	153.0	2xM32x1.5	87	88
LA100ZL	679.5	760.5	707.0	788.0	195.0	168.0	120	120	257.5	285.0	2xM32x1.5	97	98
LA112M	635.5	716.5	664.5	745.5	219.0	181.0	120	120	127.5	156.5	2xM32x1.5	99	101
LA112ZM	663.5	744.6	692.5	773.5	219.0	181.0	120	120	231.5	260.5	2xM32x1.5	106	108
LA132S/M	695.5	797.5	723.5	825.5	259.0	195.0	140	140	168.0	196.0	2xM32x1.5	110	113
LA132ZM	741.5	843.5	769.5	871.5	259.0	195.0	140	140	276.0	304.0	2xM32x1.5	132	134
LA160M/L	800.0	918.5	–	–	313.5	227.0	165	165	195.5	–	2xM40x1.5	145	–
LA160ZL	848.0	966.5	–	–	313.5	227.0	165	165	348.5	–	2xM40x1.5	184	–
LG180M/L	859.5	981.5	–	–	348.0	322.5	260	192	212.5	–	2xM40x1.5	237	–
LG180ZM/ZL	910.5	1 032.5	–	–	348.0	322.5	260	192	212.5	–	2xM40x1.5	267	–

④ DIN 332 ⑤ Feather key / keyway DIN 6885

© Siemens AG 2011

Gearbox D/Z108 (3- / 2-stage), foot-mounted design

DZ011

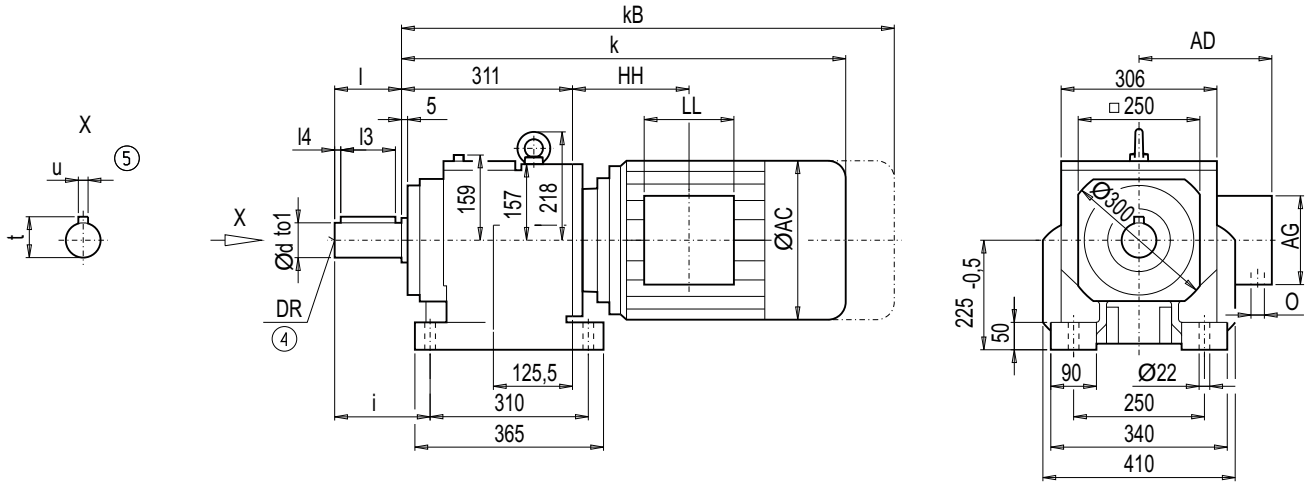

d	to1	l	l4	l3	t	u	i	DR
60 *)	m6	120	10	100	64.0	18	159.5	M20x42
70	m6	140	15	110	74.5	20	179.5	M20x42

*) Preferred series

	Z108		D108						Z108	D108		Weight	
Motor	**k**	**kB**	**k**	**kB**	**AC**	**AD**	**AG**	**LL**	**HH**	**HH**	**O**	**Z108**	**D108**
LA80	–	–	599.0	662.5	156.5	155.0	90	90	–	106.5	M20x1.5/M25x1.5	–	130
LA80Z	–	–	621.5	685.0	156.5	155.0	90	90	–	179.5	M20x1.5/M25x1.5	–	134
LA90S/L	599.5	670.5	630.0	701.0	174.0	163.0	90	90	76.0	106.5	M20x1.5/M25x1.5	133	135
LA90ZL	644.5	715.5	675.0	746.0	174.0	163.0	90	90	200.0	230.5	M20x1.5/M25x1.5	139	141
LA100L	642.5	723.5	676.0	757.0	195.0	168.0	120	120	113.5	147.0	2xM32x1.5	141	144
LA100ZL	712.5	793.5	746.0	827.0	195.0	168.0	120	120	245.5	279.0	2xM32x1.5	151	154
LA112M	669.0	750.0	700.5	781.5	219.0	181.0	120	120	116.0	147.5	2xM32x1.5	152	156
LA112ZM	697.0	778.0	728.5	809.5	219.0	181.0	120	120	220.0	251.5	2xM32x1.5	159	163
LA132S/M	728.0	830.0	760.5	862.5	259.0	195.0	140	140	155.5	188.0	2xM32x1.5	163	168
LA132ZM	774.0	876.0	806.5	908.5	259.0	195.0	140	140	263.5	296.0	2xM32x1.5	184	189
LA160M/L	833.5	952.0	863.0	981.5	313.5	227.0	165	165	184.0	213.5	2xM40x1.5	198	205
LA160ZL	881.5	1 000.0	911.0	1 029.5	313.5	227.0	165	165	337.0	366.5	2xM40x1.5	237	244
LG180M/L	890.0	1 012.0	–	–	348.0	322.5	260	192	198.0	–	2xM40x1.5	294	–
LG180ZM/ZL	941.0	1 063.0	–	–	348.0	322.5	260	192	198.0	–	2xM40x1.5	324	–
LG200L	946.0	1 072.0	–	–	385.0	301.0	260	192	228.0	–	2xM50x1.5	374	–
K4-LGI225S	1 206.5	1 445.5	–	–	442.0	325.0	260	192	443.0	–	2xM50x1.5	530	–
K4-LGI225M	1 206.5	1 445.5	–	–	442.0	325.0	260	192	443.0	–	2xM50x1.5	518	–
K4-LGI225ZM	1 266.5	1 505.5	–	–	442.0	325.0	260	192	443.0	–	2xM50x1.5	576	–

④ DIN 332

⑤ Feather key / keyway DIN 6885

© Siemens AG 2011

Dimensions

Gearbox DF/ZF108 (3- / 2-stage), flange-mounted design (A-type)

DZF011

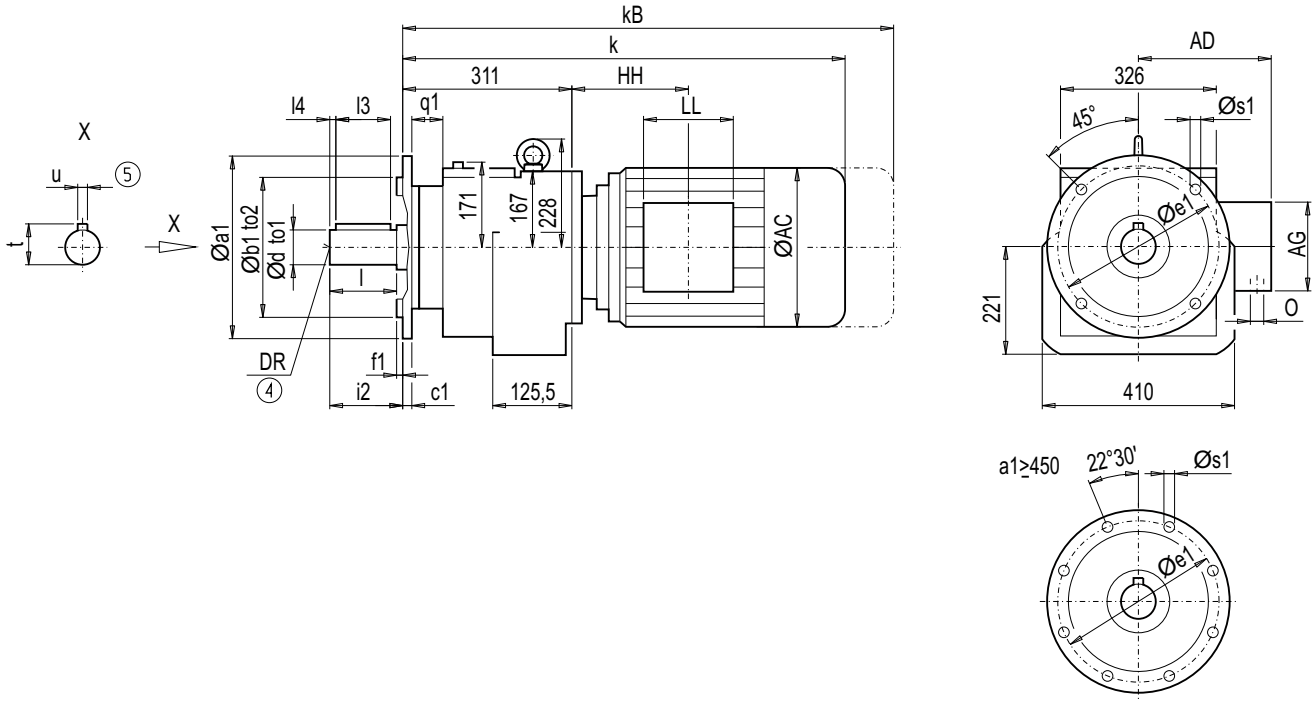

Flange	a1	b1	to2	c1	e1	f1	q1	s1	d	to1	l	l4	l3	t	u	i2	DR
A350	350	250	h6	18	300	5	41	17.5	60 *)	m6	120	10	100	64.0	18	120	M20x42
									70	m6	140	15	110	74.5	20	140	M20x42
A450	450	350	h6	20	400	5	39	17.5	60 *)	m6	120	10	100	64.0	18	120	M20x42
									70	m6	140	15	110	74.5	20	140	M20x42

*) Preferred series

	ZF108		DF108						ZF108	DF108		Weight	
Motor	**k**	**kB**	**k**	**kB**	**AC**	**AD**	**AG**	**LL**	**HH**	**HH**	**O**	**ZF108**	**DF108**
LA80	–	–	599.0	662.5	156.5	155.0	90	90	–	106.5	M20x1.5/M25x1.5	–	129
LA80Z	–	–	621.5	685.0	156.5	155.0	90	90	–	179.5	M20x1.5/M25x1.5	–	133
LA90S/L	599.5	670.5	630.0	701.0	174.0	163.0	90	90	76.0	106.5	M20x1.5/M25x1.5	131	134
LA90ZL	644.5	715.5	675.0	746.0	174.0	163.0	90	90	200.0	230.5	M20x1.5/M25x1.5	137	140
LA100L	642.5	723.5	676.0	757.0	195.0	168.0	120	120	113.5	147.0	2xM32x1.5	139	143
LA100ZL	712.5	793.5	746.0	827.0	195.0	168.0	120	120	245.5	279.0	2xM32x1.5	149	153
LA112M	669.0	750.0	700.5	781.5	219.0	181.0	120	120	116.0	147.5	2xM32x1.5	151	155
LA112ZM	697.0	778.0	728.5	809.5	219.0	181.0	120	120	220.0	251.5	2xM32x1.5	158	162
LA132S/M	728.0	830.0	760.5	862.5	259.0	195.0	140	140	155.5	188.0	2xM32x1.5	162	167
LA132ZM	774.0	876.0	806.5	908.5	259.0	195.0	140	140	263.5	296.0	2xM32x1.5	183	188
LA160M/L	833.5	952.0	863.0	981.5	313.5	227.0	165	165	184.0	213.5	2xM40x1.5	196	204
LA160ZL	881.5	1 000.0	911.0	1 029.5	313.5	227.0	165	165	337.0	366.5	2xM40x1.5	235	243
LG180M/L	890.0	1 012.0	–	–	348.0	322.5	260	192	198.0	–	2xM40x1.5	293	–
LG180ZM/ZL	941.0	1 063.0	–	–	348.0	322.5	260	192	198.0	–	2xM40x1.5	323	–
LG200L	946.0	1 072.0	–	–	385.0	301.0	260	192	228.0	–	2xM50x1.5	373	–
K4-LGI225S	1 206.5	1 445.5	–	–	442.0	325.0	260	192	443.0	–	2xM50x1.5	529	–
K4-LGI225M	1 206.5	1 445.5	–	–	442.0	325.0	260	192	443.0	–	2xM50x1.5	517	–
K4-LGI225ZM	1 266.5	1 505.5	–	–	442.0	325.0	260	192	443.0	–	2xM50x1.5	575	–

④ DIN 332

⑤ Feather key / keyway DIN 6885

© Siemens AG 2011

Gearbox DZ/ZZ108 (3- / 2-stage), housing-flange-mounted design (C-type)

DZZ011

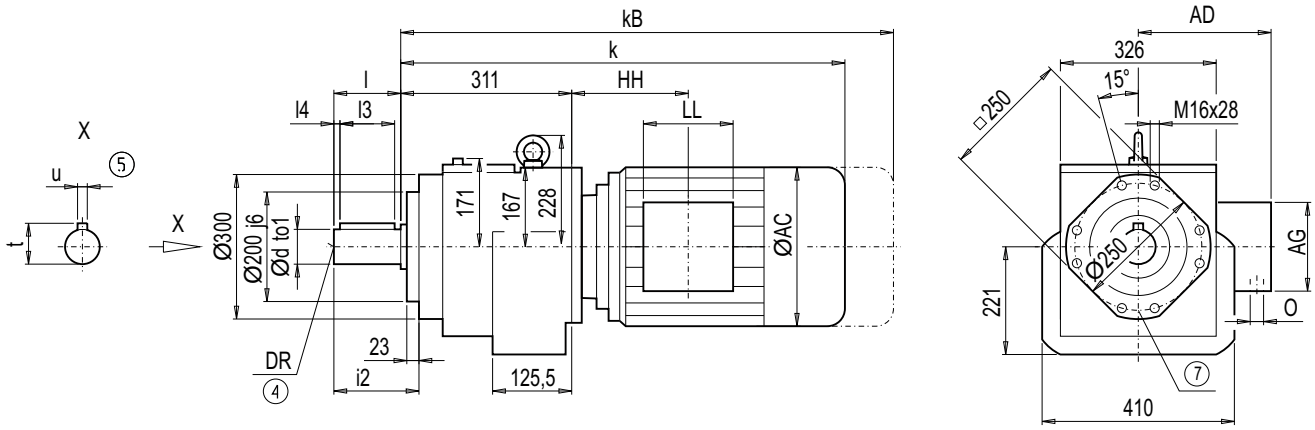

d	to1	l	l4	l3	t	u	i2	DR
60 *)	m6	120	10	100	64.0	18	148	M20x42
70	m6	140	15	110	74.5	20	168	M20x42

*) Preferred series

	ZZ108		DZ108						ZZ108	DZ108		Weight	
Motor	**k**	**kB**	**k**	**kB**	**AC**	**AD**	**AG**	**LL**	**HH**	**HH**	**O**	**ZZ108**	**DZ108**
LA80	–	–	599.0	662.5	156.5	155.0	90	90	–	106.5	M20x1.5/M25x1.5	–	121
LA80Z	–	–	621.5	685.0	156.5	155.0	90	90	–	179.5	M20x1.5/M25x1.5	–	125
LA90S/L	599.5	670.5	630.0	701.0	174.0	163.0	90	90	76.0	106.5	M20x1.5/M25x1.5	124	126
LA90ZL	644.5	715.5	675.0	746.0	174.0	163.0	90	90	200.0	230.5	M20x1.5/M25x1.5	130	132
LA100L	642.5	723.5	676.0	757.0	195.0	168.0	120	120	113.5	147.0	2xM32x1.5	132	135
LA100ZL	712.5	793.5	746.0	827.0	195.0	168.0	120	120	245.5	279.0	2xM32x1.5	142	145
LA112M	669.0	750.0	700.5	781.5	219.0	181.0	120	120	116.0	147.5	2xM32x1.5	144	147
LA112ZM	697.0	778.0	728.5	809.5	219.0	181.0	120	120	220.0	251.5	2xM32x1.5	151	154
LA132S/M	728.0	830.0	760.5	862.5	259.0	195.0	140	140	155.5	188.0	2xM32x1.5	154	159
LA132ZM	774.0	876.0	806.5	908.5	259.0	195.0	140	140	263.5	296.0	2xM32x1.5	175	180
LA160M/L	833.5	952.0	863.0	981.5	313.5	227.0	165	165	184.0	213.5	2xM40x1.5	189	196
LA160ZL	881.5	1 000.0	911.0	1 029.5	313.5	227.0	165	165	337.0	366.5	2xM40x1.5	228	235
LG180M/L	890.0	1 012.0	–	–	348.0	322.5	260	192	198.0	–	2xM40x1.5	285	–
LG180ZM/ZL	941.0	1 063.0	–	–	348.0	322.5	260	192	198.0	–	2xM40x1.5	315	–
LG200L	946.0	1 072.0	–	–	385.0	301.0	260	192	228.0	–	2xM50x1.5	365	–
K4-LGI225S	1 206.5	1 445.5	–	–	442.0	325.0	260	192	443.0	–	2xM50x1.5	521	–
K4-LGI225M	1 206.5	1 445.5	–	–	442.0	325.0	260	192	443.0	–	2xM50x1.5	509	–
K4-LGI225ZM	1 266.5	1 505.5	–	–	442.0	325.0	260	192	443.0	–	2xM50x1.5	567	–

④ DIN 332 ⑤ Feather key / keyway DIN 6885 ⑦ For note, see page 2/192

© Siemens AG 2011

Dimensions

Gearbox D/Z128 (3- / 2-stage), foot-mounted design

DZ011

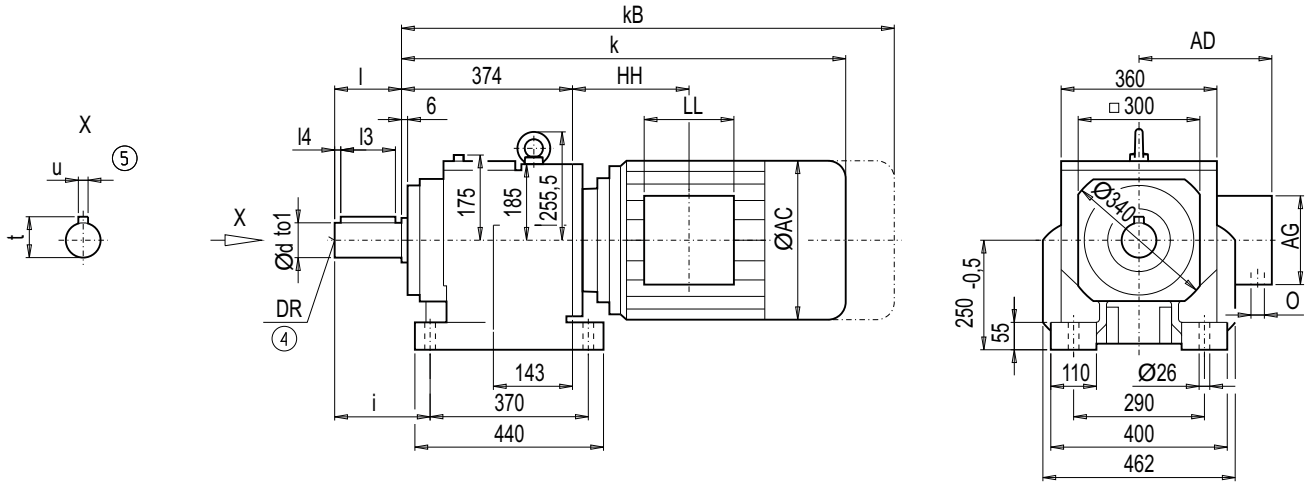

d	to1	l	l4	l3	t	u	i	DR
70 *)	m6	140	15	110	74.5	20	186	M20x42
90	m6	170	15	140	95.0	25	216	M24x50

*) Preferred series

	Z128		D128						Z128	D128		Weight	
Motor	**k**	**kB**	**k**	**kB**	**AC**	**AD**	**AG**	**LL**	**HH**	**HH**	**O**	**Z128**	**D128**
LA90S/L	–	–	686.0	757.0	174.0	163.0	90	90	–	99.5	M20x1.5/M25x1.5	–	212
LA90ZL	–	–	731.0	802.0	174.0	163.0	90	90	–	223.5	M20x1.5/M25x1.5	–	218
LA100L	696.0	777.0	732.0	813.0	195.0	168.0	120	120	104.0	140.0	2xM32x1.5	214	221
LA100ZL	766.0	847.0	802.0	883.0	195.0	168.0	120	120	236.0	272.0	2xM32x1.5	224	231
LA112M	721.5	802.5	755.5	836.5	219.0	181.0	120	120	105.5	139.5	2xM32x1.5	226	233
LA112ZM	749.5	830.5	783.5	864.5	219.0	181.0	120	120	209.5	243.5	2xM32x1.5	233	240
LA132S/M	780.5	882.5	814.5	916.5	259.0	195.0	140	140	145.0	179.0	2xM32x1.5	235	246
LA132ZM	826.5	928.5	860.5	962.5	259.0	195.0	140	140	253.0	287.0	2xM32x1.5	256	267
LA160M/L	880.0	998.5	917.0	1 035.5	313.5	227.0	165	165	167.5	204.5	2xM40x1.5	274	282
LA160ZL	928.0	1 046.5	965.0	1 083.5	313.5	227.0	165	165	320.5	357.5	2xM40x1.5	313	321
LG180M/L	939.5	1 061.5	976.5	1 098.5	348.0	322.5	260	192	184.5	221.5	2xM40x1.5	365	378
LG180ZM/ZL	990.5	1 112.5	1 027.5	1 149.5	348.0	322.5	260	192	184.5	221.5	2xM40x1.5	395	408
LG200L	995.5	1 121.5	1 032.5	1 158.5	385.0	301.0	260	192	214.5	251.5	2xM50x1.5	445	458
LG225S	1 066.5	1 305.5	–	–	442.0	325.0	260	192	250.5	–	2xM50x1.5	522	–
LG225M	1 066.5	1 305.5	–	–	442.0	325.0	260	192	250.5	–	2xM50x1.5	510	–
LG225ZM	1 126.5	1 365.5	–	–	442.0	325.0	260	192	250.5	–	2xM50x1.5	568	–
K4-LGI250M	1 353.5	1 578.5	–	–	495.0	392.0	300	236	469.5	–	2xM63x1.5	689	–
K4-LGI250ZM	1 423.5	1 648.5	–	–	495.0	392.0	300	236	469.5	–	2xM63x1.5	792	–

④ DIN 332

⑤ Feather key / keyway DIN 6885

© Siemens AG 2011

Gearbox DF/ZF128 (3- / 2-stage), flange-mounted design (A-type)

DZF011

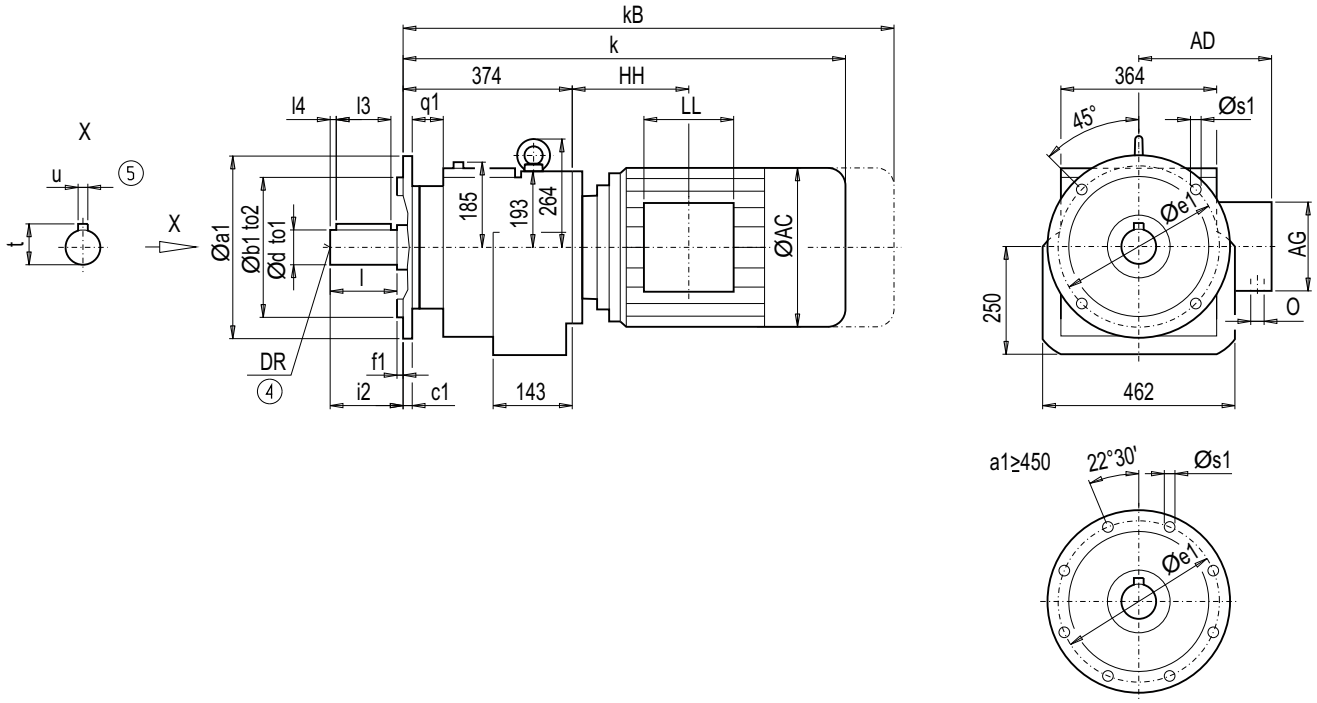

Flange	a1	b1	to2	c1	e1	f1	q1	s1	d	to1	l	l4	l3	t	u	i2	DR
A350 [1]	350	250	h6	18	300	5	60	17.5	70 *)	m6	140	15	110	74.5	20	140	M20x42
									90	m6	170	15	140	95.0	25	170	M24x50
A450	450	350	h6	22	400	5	56	17.5	70 *)	m6	140	15	110	74.5	20	140	M20x42
									90	m6	170	15	140	95.0	25	170	M24x50
A550	550	450	h6	22	500	5	56	17.5	70 *)	m6	140	15	110	74.5	20	140	M20x42
									90	m6	170	15	140	95.0	25	170	M24x50

[1] If torque > 3500 Nm, the flange must be pinned. We recommend you use 2 pins with a 12 mm diameter
*) Preferred series

	ZF128		DF128						ZF128	DF128		Weight	
Motor	**k**	**kB**	**k**	**kB**	**AC**	**AD**	**AG**	**LL**	**HH**	**HH**	**O**	**ZF128**	**DF128**
LA90S/L	–	–	686.0	757.0	174.0	163.0	90	90	–	99.5	M20x1.5/M25x1.5	–	206
LA90ZL	–	–	731.0	802.0	174.0	163.0	90	90	–	223.5	M20x1.5/M25x1.5	–	212
LA100L	696.0	777.0	732.0	813.0	195.0	168.0	120	120	104.0	140.0	2xM32x1.5	209	216
LA100ZL	766.0	847.0	802.0	883.0	195.0	168.0	120	120	236.0	272.0	2xM32x1.5	219	226
LA112M	721.5	802.5	755.5	836.5	219.0	181.0	120	120	105.5	139.5	2xM32x1.5	220	227
LA112ZM	749.5	830.5	783.5	864.5	219.0	181.0	120	120	209.5	243.5	2xM32x1.5	227	234
LA132S/M	780.5	882.5	814.5	916.5	259.0	195.0	140	140	145.0	179.0	2xM32x1.5	230	240
LA132ZM	826.5	928.5	860.5	962.5	259.0	195.0	140	140	253.0	287.0	2xM32x1.5	251	261
LA160M/L	880.0	998.5	917.0	1 035.5	313.5	227.0	165	165	167.5	204.5	2xM40x1.5	269	276
LA160ZL	928.0	1 046.5	965.0	1 083.5	313.5	227.0	165	165	320.5	357.5	2xM40x1.5	308	315
LG180M/L	939.5	1 061.5	976.5	1 098.5	348.0	322.5	260	192	184.5	221.5	2xM40x1.5	360	372
LG180ZM/ZL	990.5	1 112.5	1 027.5	1 149.5	348.0	322.5	260	192	184.5	221.5	2xM40x1.5	390	402
LG200L	995.5	1 121.5	1 032.5	1 158.5	385.0	301.0	260	192	214.5	251.5	2xM50x1.5	440	452
LG225S	1 066.5	1 305.5	–	–	442.0	325.0	260	192	250.5	–	2xM50x1.5	517	–
LG225M	1 066.5	1 305.5	–	–	442.0	325.0	260	192	250.5	–	2xM50x1.5	505	–
LG225ZM	1 126.5	1 365.5	–	–	442.0	325.0	260	192	250.5	–	2xM50x1.5	563	–
K4-LGI250M	1 353.5	1 578.5	–	–	495.0	392.0	300	236	469.5	–	2xM63x1.5	684	–
K4-LGI250ZM	1 423.5	1 648.5	–	–	495.0	392.0	300	236	469.5	–	2xM63x1.5	787	–

④ DIN 332

⑤ Feather key / keyway DIN 6885

© Siemens AG 2011

Dimensions

Gearbox DZ/ZZ128 (3- / 2-stage), housing-flange-mounted design (C-type)

DZZ011

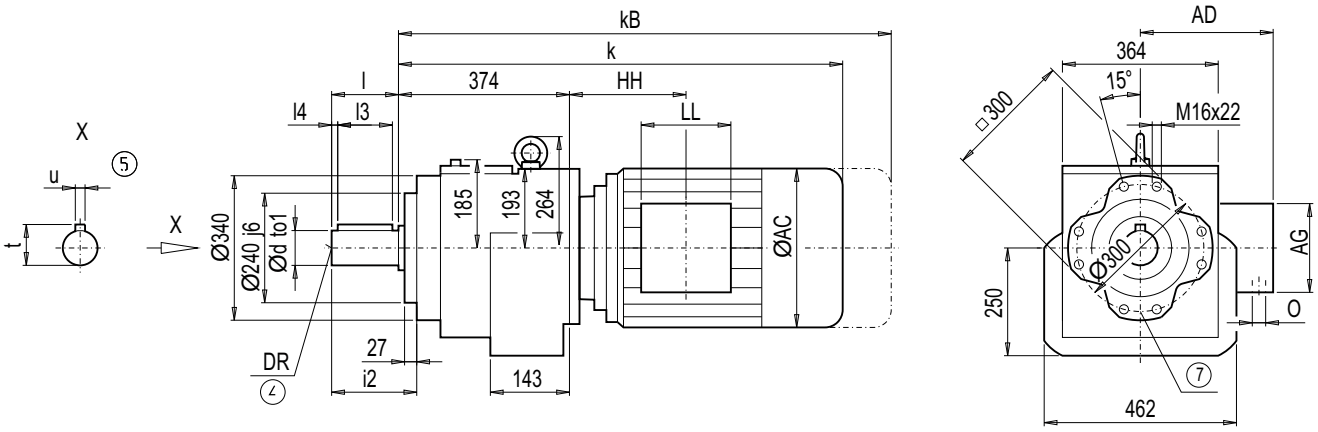

d	to1	l	l4	l3	t	u	i2	DR
70 *)	m6	140	15	110	74.5	20	173	M20x42
90	m6	170	15	140	95.0	25	203	M24x50

*) Preferred series

	ZZ128		DZ128						ZZ128	DZ128		Weight	
Motor	**k**	**kB**	**k**	**kB**	**AC**	**AD**	**AG**	**LL**	**HH**	**HH**	**O**	**ZZ128**	**DZ128**
LA90S/L	–	–	686.0	757.0	174.0	163.0	90	90	–	99.5	M20x1.5/M25x1.5	–	190
LA90ZL	–	–	731.0	802.0	174.0	163.0	90	90	–	223.5	M20x1.5/M25x1.5	–	196
LA100L	696.0	777.0	732.0	813.0	195.0	168.0	120	120	104.0	140.0	2xM32x1.5	192	199
LA100ZL	766.0	847.0	802.0	883.0	195.0	168.0	120	120	236.0	272.0	2xM32x1.5	202	209
LA112M	721.5	802.5	755.5	836.5	219.0	181.0	120	120	105.5	139.5	2xM32x1.5	203	210
LA112ZM	749.5	830.5	783.5	864.5	219.0	181.0	120	120	209.5	243.5	2xM32x1.5	210	217
LA132S/M	780.5	882.5	814.5	916.5	259.0	195.0	140	140	145.0	179.0	2xM32x1.5	213	223
LA132ZM	826.5	928.5	860.5	962.5	259.0	195.0	140	140	253.0	287.0	2xM32x1.5	234	245
LA160M/L	880.0	998.5	917.0	1 035.5	313.5	227.0	165	165	167.5	204.5	2xM40x1.5	252	259
LA160ZL	928.0	1 046.5	965.0	1 083.5	313.5	227.0	165	165	320.5	357.5	2xM40x1.5	291	298
LG180M/L	939.5	1 061.5	976.5	1 098.5	348.0	322.5	260	192	184.5	221.5	2xM40x1.5	343	355
LG180ZM/ZL	990.5	1 112.5	1 027.5	1 149.5	348.0	322.5	260	192	184.5	221.5	2xM40x1.5	373	385
LG200L	995.5	1 121.5	1 032.5	1 158.5	385.0	301.0	260	192	214.5	251.5	2xM50x1.5	423	435
LG225S	1 066.5	1 305.5	–	–	442.0	325.0	260	192	250.5	–	2xM50x1.5	500	–
LG225M	1 066.5	1 305.5	–	–	442.0	325.0	260	192	250.5	–	2xM50x1.5	488	–
LG225ZM	1 126.5	1 365.5	–	–	442.0	325.0	260	192	250.5	–	2xM50x1.5	546	–
K4-LGI250M	1 353.5	1 578.5	–	–	495.0	392.0	300	236	469.5	–	2xM63x1.5	667	–
K4-LGI250ZM	1 423.5	1 648.5	–	–	495.0	392.0	300	236	469.5	–	2xM63x1.5	770	–

④ DIN 332 ⑤ Feather key / keyway DIN 6885 ⑦ For note, see page 2/192

© Siemens AG 2011

Gearbox D/Z148 (3- / 2-stage), foot-mounted design

DZ011

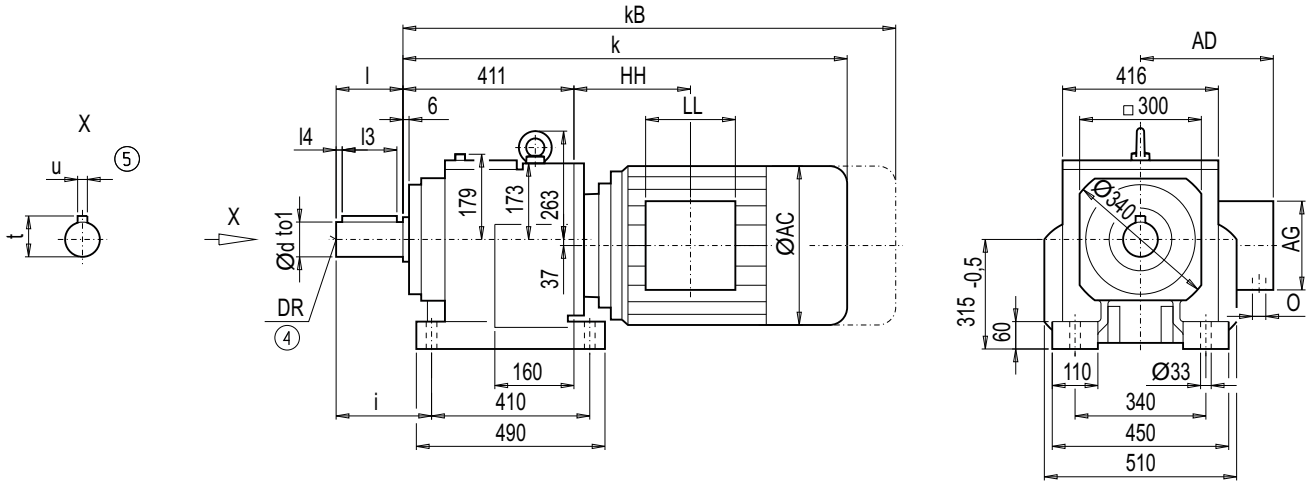

d	to1	l	l4	l3	t	u	i	DR
90 *)	m6	170	15	140	95	25	220	M24x50
100	m6	210	15	180	106	28	260	M24x50

*) Preferred series

	Z148		D148						Z148	D148		Weight	
Motor	**k**	**kB**	**k**	**kB**	**AC**	**AD**	**AG**	**LL**	**HH**	**HH**	**O**	**Z148**	**D148**
LA100L	–	–	764.0	845.0	195.0	168.0	120	120	–	135.0	2xM32x1.5	–	313
LA100ZL	–	–	834.0	915.0	195.0	168.0	120	120	–	267.0	2xM32x1.5	–	323
LA112M	–	–	789.5	870.5	219.0	181.0	120	120	–	136.5	2xM32x1.5	–	324
LA112ZM	–	–	817.5	898.5	219.0	181.0	120	120	–	240.5	2xM32x1.5	–	331
LA132S/M	809.5	911.5	847.5	949.5	259.0	195.0	140	140	137.0	175.0	2xM32x1.5	325	336
LA132ZM	855.5	957.5	893.5	995.5	259.0	195.0	140	140	245.0	283.0	2xM32x1.5	346	357
LA160M/L	909.5	1 028.0	947.5	1 066.0	313.5	227.0	165	165	160.0	198.0	2xM40x1.5	359	371
LA160ZL	957.5	1 076.0	995.5	1 114.0	313.5	227.0	165	165	313.0	351.0	2xM40x1.5	398	410
LG180M/L	969.0	1 091.0	1 007.0	1 129.0	348.0	322.5	260	192	177.0	215.0	2xM40x1.5	455	467
LG180ZM/ZL	1 020.0	1 142.0	1 058.0	1 180.0	348.0	322.5	260	192	177.0	215.0	2xM40x1.5	485	497
LG200L	1 025.0	1 151.0	1 063.0	1 189.0	385.0	301.0	260	192	207.0	245.0	2xM50x1.5	535	547
LG225S	1 096.0	1 335.0	1 134.0	1 373.0	442.0	325.0	260	192	243.0	281.0	2xM50x1.5	608	621
LG225M	1 096.0	1 335.0	1 134.0	1 373.0	442.0	325.0	260	192	243.0	281.0	2xM50x1.5	596	609
LG225ZM	1 156.0	1 395.0	1 194.0	1 433.0	442.0	325.0	260	192	243.0	281.0	2xM50x1.5	654	667
LG250M	1 189.5	1 414.5	–	–	495.0	392.0	300	236	278.5	–	2xM63x1.5	698	–
LG250ZM	1 259.5	1 485.0	–	–	495.0	392.0	300	236	278.5	–	2xM63x1.5	801	–
K4-LGI280S	1 468.5	1 695.5	–	–	555.0	432.0	300	236	489.5	–	2xM63x1.5	929	–
K4-LGI280M	1 468.5	1 695.5	–	–	555.0	432.0	300	236	489.5	–	2xM63x1.5	941	–
K4-LGI280ZM	1 578.5	1 805.5	–	–	555.0	432.0	300	236	489.5	–	2xM63x1.5	1 029	–

④ DIN 332

⑤ Feather key / keyway DIN 6885

© Siemens AG 2011

Dimensions

Gearbox DF/ZF148 (3- / 2-stage), flange-mounted design (A-type)

DZF011

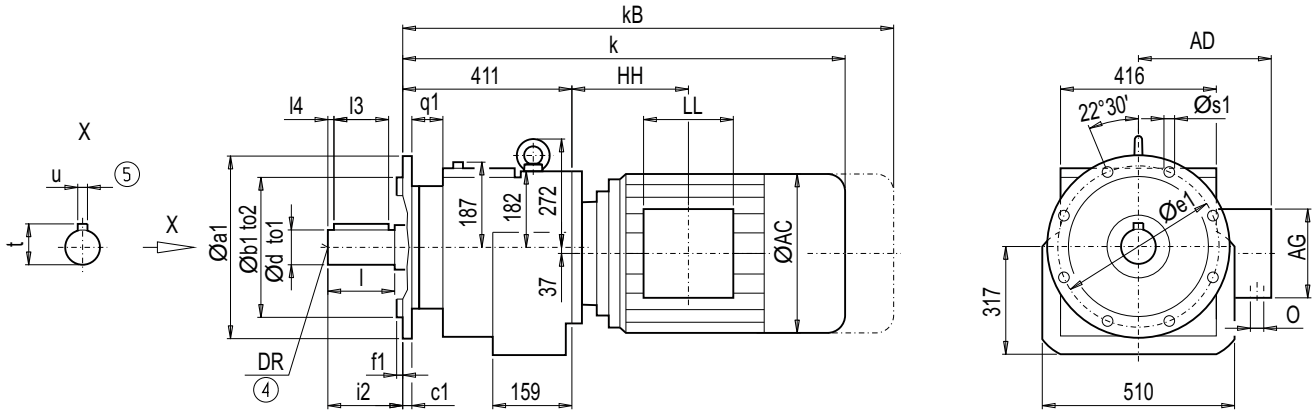

Flange	a1	b1	to2	c1	e1	f1	q1	s1	d	to1	l	l4	l3	t	u	i2	DR
A450	450	350	h6	22	400	5	68	17.5	90 *)	m6	170	15	140	95	25	170	M24x50
									100	m6	210	15	180	106	28	210	M24x50
A550	550	450	h6	25	500	5	65	17.5	90 *)	m6	170	15	140	95	25	170	M24x50
									100	m6	210	15	180	106	28	210	M24x50

*) Preferred series

	ZF148		DF148						ZF148	DF148		Weight	
Motor	**k**	**kB**	**k**	**kB**	**AC**	**AD**	**AG**	**LL**	**HH**	**HH**	**O**	**ZF148**	**DF148**
LA100L	–	–	764.0	845.0	195.0	168.0	120	120	–	135.0	2xM32x1.5	–	307
LA100ZL	–	–	834.0	915.0	195.0	168.0	120	120	–	267.0	2xM32x1.5	–	317
LA112M	–	–	789.5	870.5	219.0	181.0	120	120	–	136.5	2xM32x1.5	–	318
LA112ZM	–	–	817.5	898.5	219.0	181.0	120	120	–	240.5	2xM32x1.5	–	325
LA132S/M	809.5	911.5	847.5	949.5	259.0	195.0	140	140	137.0	175.0	2xM32x1.5	319	330
LA132ZM	855.5	957.5	893.5	995.5	259.0	195.0	140	140	245.0	283.0	2xM32x1.5	340	351
LA160M/L	909.5	1 028.0	947.5	1 066.0	313.5	227.0	165	165	160.0	198.0	2xM40x1.5	353	365
LA160ZL	957.5	1 076.0	995.5	1 114.0	313.5	227.0	165	165	313.0	351.0	2xM40x1.5	392	404
LG180M/L	969.0	1 091.0	1 007.0	1 129.0	348.0	322.5	260	192	177.0	215.0	2xM40x1.5	449	461
LG180ZM/ZL	1 020.0	1 142.0	1 058.0	1 180.0	348.0	322.5	260	192	177.0	215.0	2xM40x1.5	479	491
LG200L	1 025.0	1 151.0	1 063.0	1 189.0	385.0	301.0	260	192	207.0	245.0	2xM50x1.5	529	541
LG225S	1 096.0	1 335.0	1 134.0	1 373.0	442.0	325.0	260	192	243.0	281.0	2xM50x1.5	602	615
LG225M	1 096.0	1 335.0	1 134.0	1 373.0	442.0	325.0	260	192	243.0	281.0	2xM50x1.5	590	603
LG225ZM	1 156.0	1 395.0	1 194.0	1 433.0	442.0	325.0	260	192	243.0	281.0	2xM50x1.5	648	661
LG250M	1 189.5	1 414.5	–	–	495.0	392.0	300	236	278.5	–	2xM63x1.5	692	–
LG250ZM	1 259.5	1 485.0	–	–	495.0	392.0	300	236	278.5	–	2xM63x1.5	795	–
K4-LGI280S	1 468.5	1 695.5	–	–	555.0	432.0	300	236	489.5	–	2xM63x1.5	923	–
K4-LGI280M	1 468.5	1 695.5	–	–	555.0	432.0	300	236	489.5	–	2xM63x1.5	941	–
K4-LGI280ZM	1 578.5	1 805.5	–	–	555.0	432.0	300	236	489.5	–	2xM63x1.5	1 029	–

④ DIN 332

⑤ Feather key / keyway DIN 6885

© Siemens AG 2011

Gearbox DZ/ZZ148 (3- / 2-stage), housing-flange-mounted design (C-type)

DZZ011

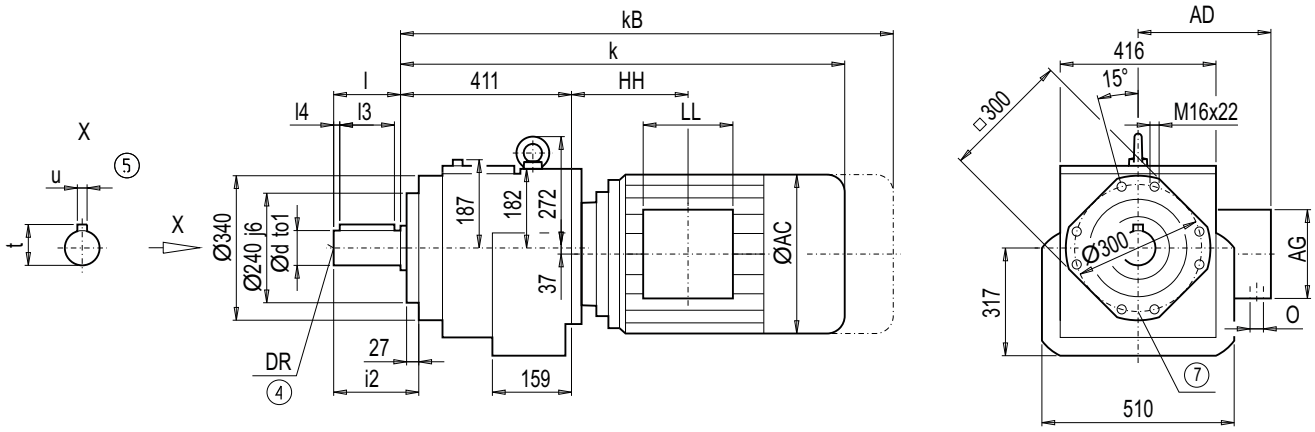

d	to1	l	l4	l3	t	u	i2	DR
90 *)	m6	170	15	140	95	25	203	M24x50
100	m6	210	15	180	106	28	243	M24x50

*) Preferred series

	ZZ148		DZ148						ZZ148	DZ148		Weight	
Motor	**k**	**kB**	**k**	**kB**	**AC**	**AD**	**AG**	**LL**	**HH**	**HH**	**O**	**ZZ148**	**DZ148**
LA100L	–	–	764.0	845.0	195.0	168.0	120	120	–	135.0	2xM32x1.5	–	283
LA100ZL	–	–	834.0	915.0	195.0	168.0	120	120	–	267.0	2xM32x1.5	–	293
LA112M	–	–	789.5	870.5	219.0	181.0	120	120	–	136.5	2xM32x1.5	–	294
LA112ZM	–	–	817.5	898.5	219.0	181.0	120	120	–	240.5	2xM32x1.5	–	301
LA132S/M	809.5	911.5	847.5	949.5	259.0	195.0	140	140	137.0	175.0	2xM32x1.5	302	306
LA132ZM	855.5	957.5	893.5	995.5	259.0	195.0	140	140	245.0	283.0	2xM32x1.5	323	327
LA160M/L	909.5	1 028.0	947.5	1 066.0	313.5	227.0	165	165	160.0	198.0	2xM40x1.5	336	341
LA160ZL	957.5	1 076.0	995.5	1 114.0	313.5	227.0	165	165	313.0	351.0	2xM40x1.5	375	380
LG180M/L	969.0	1 091.0	1 007.0	1 129.0	348.0	322.5	260	192	177.0	215.0	2xM40x1.5	432	437
LG180ZM/ZL	1 020.0	1 142.0	1 058.0	1 180.0	348.0	322.5	260	192	177.0	215.0	2xM40x1.5	462	467
LG200L	1 025.0	1 151.0	1 063.0	1 189.0	385.0	301.0	260	192	207.0	245.0	2xM50x1.5	512	517
LG225S	1 096.0	1 335.0	1 134.0	1 373.0	442.0	325.0	260	192	243.0	281.0	2xM50x1.5	585	547
LG225M	1 096.0	1 335.0	1 134.0	1 373.0	442.0	325.0	260	192	243.0	281.0	2xM50x1.5	573	591
LG225ZM	1 156.0	1 395.0	1 194.0	1 433.0	442.0	325.0	260	192	243.0	281.0	2xM50x1.5	631	637
LG250M	1 189.5	1 414.5	–	–	495.0	392.0	300	236	278.5	–	2xM63x1.5	675	–
LG250ZM	1 259.5	1 485.0	–	–	495.0	392.0	300	236	278.5	–	2xM63x1.5	778	–
K4-LGI280S	1 468.5	1 695.5	–	–	555.0	432.0	300	236	489.5	–	2xM63x1.5	906	–
K4-LGI280M	1 468.5	1 695.5	–	–	555.0	432.0	300	236	489.5	–	2xM63x1.5	918	–
K4-LGI280ZM	1 578.5	1 805.5	–	–	555.0	432.0	300	236	489.5	–	2xM63x1.5	1 006	–

④ DIN 332 ⑤ Feather key / keyway DIN 6885 ⑦ For note, see page 2/192

© Siemens AG 2011

Dimensions

Gearbox D/Z168 (3- / 2-stage), foot-mounted design

DZ011

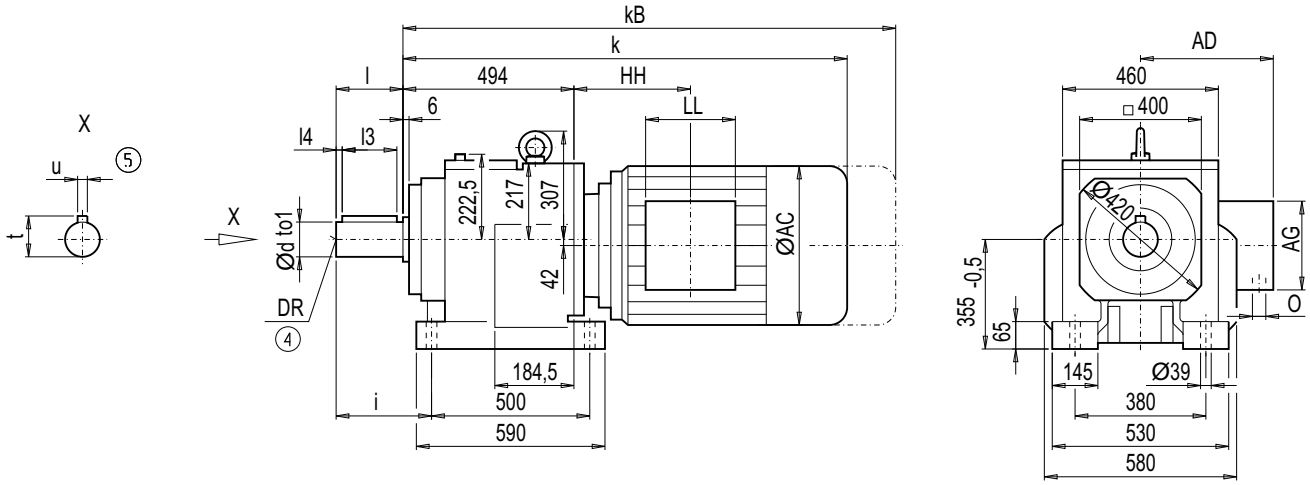

d	to1	l	l4	l3	t	u	i	DR
100 *)	m6	210	15	180	106	28	260	M24x50
110	m6	210	15	180	116	28	260	M24x50
120	m6	210	15	180	127	32	260	M24x50

*) Preferred series

	Z168		D168						Z168	D168		Weight	
Motor	**k**	**kB**	**k**	**kB**	**AC**	**AD**	**AG**	**LL**	**HH**	**HH**	**O**	**Z168**	**D168**
LA132S/M	878.0	980.0	919.0	1 021.0	259.0	195.0	140	140	122.5	163.5	2xM32x1.5	491	508
LA132ZM	924.0	1 026.0	965.0	1 067.0	259.0	195.0	140	140	230.5	271.5	2xM32x1.5	512	529
LA160M/L	978.0	1 096.5	1 019.0	1 137.5	313.5	227.0	165	165	145.5	186.5	2xM40x1.5	524	543
LA160ZL	1 026.0	1 144.5	1 067.0	1 185.5	313.5	227.0	165	165	298.5	339.5	2xM40x1.5	563	582
LG180M/L	1 037.5	1 159.5	1 078.5	1 200.5	348.0	322.5	260	192	162.5	203.5	2xM40x1.5	620	639
LG180ZM/ZL	1 088.5	1 210.5	1 129.5	1 251.5	348.0	322.5	260	192	162.5	203.5	2xM40x1.5	650	669
LG200L	1 093.5	1 219.5	1 134.5	1 260.5	385.0	301.0	260	192	192.5	233.5	2xM50x1.5	700	719
LG225S	1 164.5	1 403.5	1 205.5	1 444.5	442.0	325.0	260	192	228.5	269.5	2xM50x1.5	772	792
LG225M	1 164.5	1 403.5	1 205.5	1 444.5	442.0	325.0	260	192	228.5	269.5	2xM50x1.5	760	780
LG225ZM	1 224.5	1 463.5	1 265.5	1 504.5	442.0	325.0	260	192	228.5	269.5	2xM50x1.5	818	838
LG250M	1 258.0	1 483.0	–	–	495.0	392.0	300	236	264.0	–	2xM63x1.5	862	–
LG250ZM	1 328.0	1 553.5	–	–	495.0	392.0	300	236	264.0	–	2xM63x1.5	965	–
K4-LGI280S	1 537.5	1 764.5	–	–	555.0	432.0	300	236	475.5	–	2xM63x1.5	991	–
K4-LGI280M	1 537.5	1 764.5	–	–	555.0	432.0	300	236	475.5	–	2xM63x1.5	1 097	–
K4-LGI280ZM	1 647.5	1 874.5	–	–	555.0	432.0	300	236	475.5	–	2xM63x1.5	1 185	–

④ DIN 332

⑤ Feather key / keyway DIN 6885

© Siemens AG 2011

Gearbox DF/ZF168 (3- / 2-stage), flange-mounted design (A-type)

DZF011

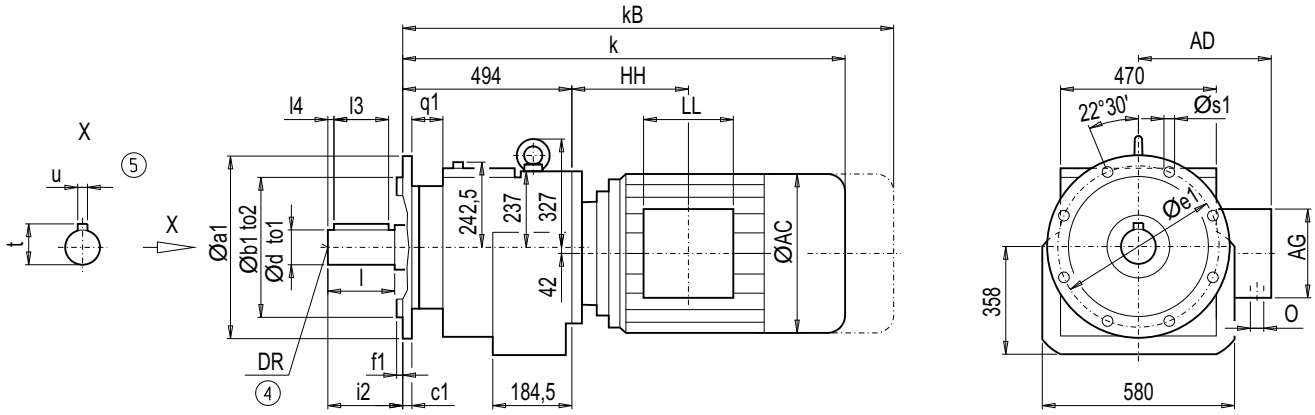

Flange	a1	b1	to2	c1	e1	f1	q1	s1	d	to1	l	l4	l3	t	u	i2	DR
A450	450	350	h6	31	400	5	65	17.5	100 *)	m6	210	15	180	106	28	210	M24x50
									110	m6	210	15	180	116	28	210	M24x50
									120	m6	210	15	180	127	32	210	M24x50
A550	550	450	h6	31	500	5	65	17.5	100 *)	m6	210	15	180	106	28	210	M24x50
									110	m6	210	15	180	116	28	210	M24x50
									120	m6	210	15	180	127	32	210	M24x50
A660	660	550	h6	31	600	5	65	22.0	100 *)	m6	210	15	180	106	28	210	M24x50
									110	m6	210	15	180	116	28	210	M24x50
									120	m6	210	15	180	127	32	210	M24x50

*) Preferred series

	ZF168		DF168						ZF168	DF168		Weight	
Motor	**k**	**kB**	**k**	**kB**	**AC**	**AD**	**AG**	**LL**	**HH**	**HH**	**O**	**ZF168**	**DF168**
LA132S/M	878.0	980.0	919.0	1 021.0	259.0	195.0	140	140	122.5	163.5	2xM32x1.5	466	484
LA132ZM	924.0	1 026.0	965.0	1 067.0	259.0	195.0	140	140	230.5	271.5	2xM32x1.5	487	505
LA160M/L	978.0	1 096.5	1 019.0	1 137.5	313.5	227.0	165	165	145.5	186.5	2xM40x1.5	500	518
LA160ZL	1 026.0	1 144.5	1 067.0	1 185.5	313.5	227.0	165	165	298.5	339.5	2xM40x1.5	539	557
LG180M/L	1 037.5	1 159.5	1 078.5	1 200.5	348.0	322.5	260	192	162.5	203.5	2xM40x1.5	595	614
LG180ZM/ZL	1 088.5	1 210.5	1 129.5	1 251.5	348.0	322.5	260	192	162.5	203.5	2xM40x1.5	625	644
LG200L	1 093.5	1 219.5	1 134.5	1 260.5	385.0	301.0	260	192	192.5	233.5	2xM50x1.5	675	694
LG225S	1 164.5	1 403.5	1 205.5	1 444.5	442.0	325.0	260	192	228.5	269.5	2xM50x1.5	747	767
LG225M	1 164.5	1 403.5	1 205.5	1 444.5	442.0	325.0	260	192	228.5	269.5	2xM50x1.5	735	755
LG225ZM	1 224.5	1 463.5	1 265.5	1 504.5	442.0	325.0	260	192	228.5	269.5	2xM50x1.5	793	813
LG250M	1 258.0	1 483.0	–	–	495.0	392.0	300	236	264.0	–	2xM63x1.5	837	–
LG250ZM	1 328.0	1 553.5	–	–	495.0	392.0	300	236	264.0	–	2xM63x1.5	940	–
K4-LGI280S	1 537.5	1 764.5	–	–	555.0	432.0	300	236	475.5	–	2xM63x1.5	966	–
K4-LGI280M	1 537.5	1 764.5	–	–	555.0	432.0	300	236	475.5	–	2xM63x1.5	1 072	–
K4-LGI280ZM	1 647.5	1 874.5	–	–	555.0	432.0	300	236	475.5	–	2xM63x1.5	1 160	–

④ DIN 332

⑤ Feather key / keyway DIN 6885

© Siemens AG 2011

Dimensions

Gearbox DZ/ZZ168 (3- / 2-stage), housing-flange-mounted design (C-type)

DZZ011

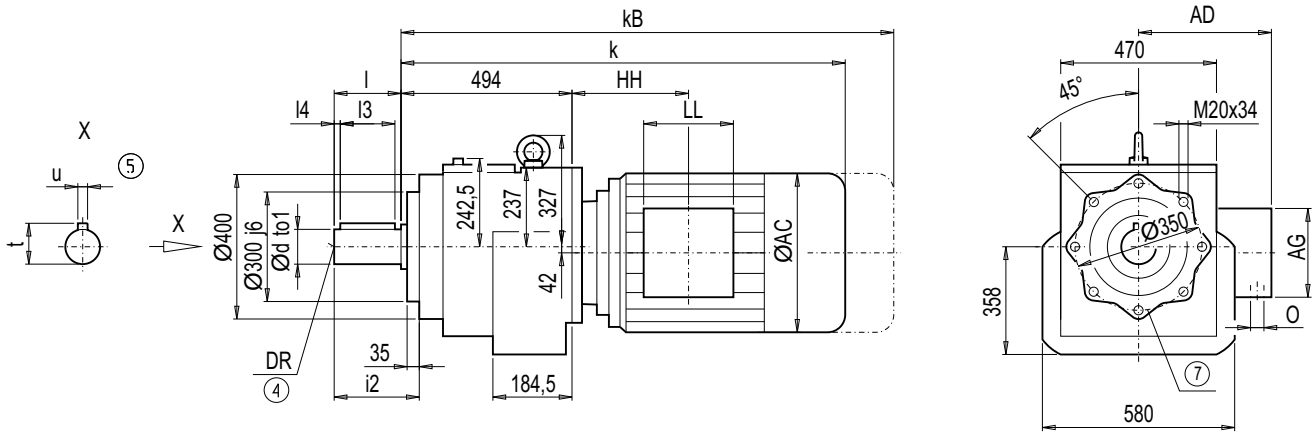

d	to1	l	l4	l3	t	u	i2	DR
100	m6	210	15	180	106	28	251	M24x50
110	m6	210	15	180	116	28	251	M24x50
120*)	m6	210	15	180	127	32	251	M24x50

*) Preferred series

	ZZ168		DZ168						ZZ168	DZ168		Weight	
Motor	**k**	**kB**	**k**	**kB**	**AC**	**AD**	**AG**	**LL**	**HH**	**HH**	**O**	**ZZ168**	**DZ168**
LA132S/M	878.0	980.0	919.0	1 021.0	259.0	195.0	140	140	122.5	163.5	2xM32x1.5	447	465
LA132ZM	924.0	1 026.0	965.0	1 067.0	259.0	195.0	140	140	230.5	271.5	2xM32x1.5	468	486
LA160M/L	978.0	1 096.5	1 019.0	1 137.5	313.5	227.0	165	165	145.5	186.5	2xM40x1.5	481	499
LA160ZL	1 026.0	1 144.5	1 067.0	1 185.5	313.5	227.0	165	165	298.5	339.5	2xM40x1.5	520	538
LG180M/L	1 037.5	1 159.5	1 078.5	1 200.5	348.0	322.5	260	192	162.5	203.5	2xM40x1.5	576	595
LG180ZM/ZL	1 088.5	1 210.5	1 129.5	1 251.5	348.0	322.5	260	192	162.5	203.5	2xM40x1.5	606	625
LG200L	1 093.5	1 219.5	1 134.5	1 260.5	385.0	301.0	260	192	192.5	233.5	2xM50x1.5	656	675
LG225S	1 164.5	1 403.5	1 205.5	1 444.5	442.0	325.0	260	192	228.5	269.5	2xM50x1.5	728	748
LG225M	1 164.5	1 403.5	1 205.5	1 444.5	442.0	325.0	260	192	228.5	269.5	2xM50x1.5	716	736
LG225ZM	1 224.5	1 463.5	1 265.5	1 504.5	442.0	325.0	260	192	228.5	269.5	2xM50x1.5	774	794
LG250M	1 258.0	1 483.0	–	–	495.0	392.0	300	236	264.0	–	2xM63x1.5	818	–
LG250ZM	1 328.0	1 553.5	–	–	495.0	392.0	300	236	264.0	–	2xM63x1.5	921	–
K4-LGI280S	1 537.5	1 764.5	–	–	555.0	432.0	300	236	475.5	–	2xM63x1.5	947	–
K4-LGI280M	1 537.5	1 764.5	–	–	555.0	432.0	300	236	475.5	–	2xM63x1.5	1 053	–
K4-LGI280ZM	1 647.5	1 874.5	–	–	555.0	432.0	300	236	475.5	–	2xM63x1.5	1 141	–

④ DIN 332 ⑤ Feather key / keyway DIN 6885 ⑦ For note, see page 2/192

© Siemens AG 2011

Gearbox D/Z188 (3- / 2-stage), foot-mounted design

DZ011

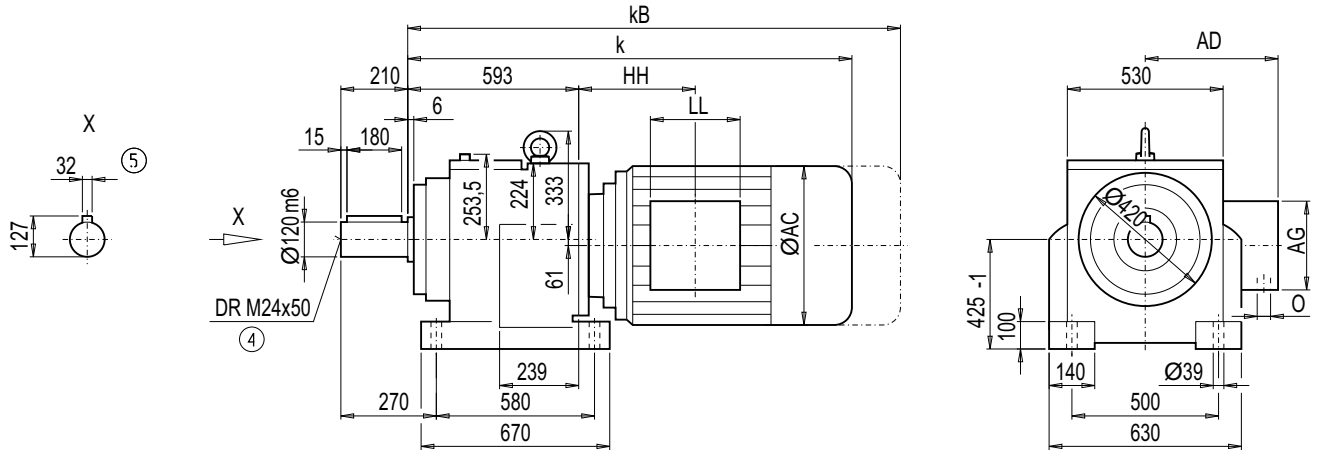

Motor	Z188 k	Z188 kB	D188 k	D188 kB	AC	AD	AG	LL	Z188 HH	D188 HH	O	Weight Z188	Weight D188
LA132S/M	–	–	977.0	1 079.0	259.0	195.0	140	140	–	122.5	2xM32x1.5	–	652
LA132ZM	–	–	1 023.0	1 125.0	259.0	195.0	140	140	–	230.5	2xM32x1.5	–	673
LA160M/L	1 077.0	1 195.5	1 077.0	1 195.5	313.5	227.0	165	165	145.5	145.5	2xM40x1.5	654	684
LA160ZL	1 125.0	1 243.5	1 125.0	1 243.5	313.5	227.0	165	165	298.5	298.5	2xM40x1.5	693	723
LG180M/L	1 136.5	1 258.5	1 136.5	1 258.5	348.0	322.5	260	192	162.5	162.5	2xM40x1.5	750	779
LG180ZM/ZL	1 187.5	1 309.5	1 187.5	1 309.5	348.0	322.5	260	192	162.5	162.5	2xM40x1.5	780	809
LG200L	1 192.5	1 318.5	1 192.5	1 318.5	385.0	301.0	260	192	192.5	192.5	2xM50x1.5	830	859
LG225S	1 263.5	1 502.5	1 263.5	1 502.5	442.0	325.0	260	192	228.5	228.5	2xM50x1.5	903	932
LG225M	1 263.5	1 502.5	1 263.5	1 502.5	442.0	325.0	260	192	228.5	228.5	2xM50x1.5	891	920
LG225ZM	1 323.5	1 562.5	1 323.5	1 562.5	442.0	325.0	260	192	228.5	228.5	2xM50x1.5	949	978
LG250M	1 357.0	1 582.0	1 357.0	1 582.0	495.0	392.0	300	236	264.0	264.0	2xM63x1.5	993	1022
LG250ZM	1 427.0	1 652.5	1 427.0	1 652.5	495.0	392.0	300	236	264.0	264.0	2xM63x1.5	1 096	1 125
K4-LGI280S	1 636.5	1 863.5	1 636.5	1 863.5	555.0	432.0	300	236	475.5	475.5	2xM63x1.5	1 121	1 151
K4-LGI280M	1 636.5	1 863.5	1 636.5	1 863.5	555.0	432.0	300	236	475.5	475.5	2xM63x1.5	1 227	1 256
K4-LGI280ZM	1 746.5	1 973.5	1 746.5	1 973.5	555.0	432.0	300	236	475.5	475.5	2xM63x1.5	1 315	1 344
K2-LGI315S/M	1 824.5	2 089.5	–	–	610.0	500.0	380	307	584.5	–	2xM63x1.5	1 356	–
K2-LGI315ZM	1 984.5	2 249.5	–	–	610.0	500.0	380	307	584.5	–	2xM63x1.5	1 511	–
K2-LGI315L	1 984.5	2 249.5	–	–	610.0	500.0	380	307	584.5	–	2xM63x1.5	1 651	–
K2-LGI315ZL	2 124.5	2 389.5	–	–	610.0	500.0	380	307	584.5	–	2xM63x1.5	1 851	–

④ DIN 332

⑤ Feather key / keyway DIN 6885

© Siemens AG 2011

Dimensions

Gearbox DF/ZF188 (3- / 2-stage), flange-mounted design (A-type)

DZF011

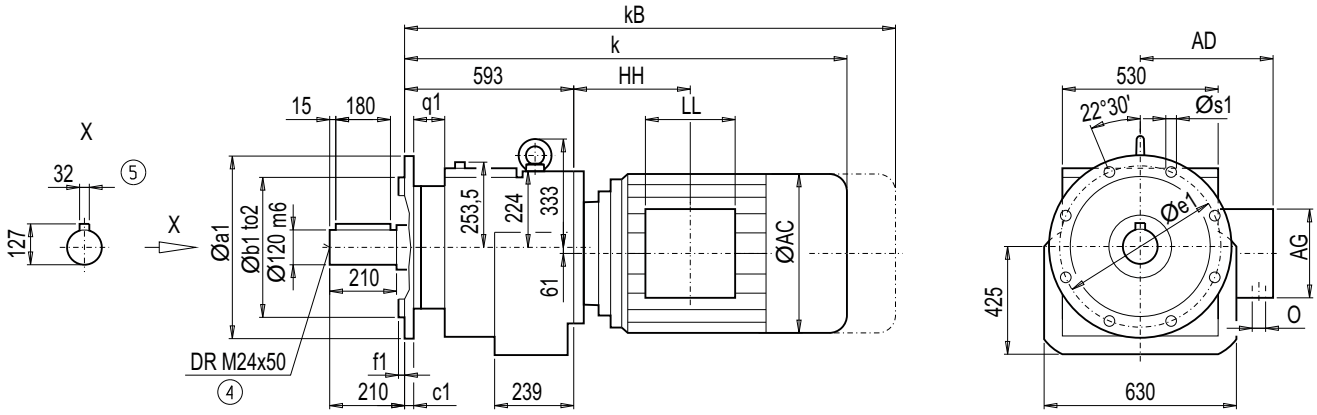

Flange	a1	b1	to2	c1	e1	f1	q1	s1
A550	550	450	h6	31	500	5	83	17.5
A660	660	550	h6	31	600	6	83	22.0

	ZF188		DF188						ZF188	DF188		Weight	
Motor	**k**	**kB**	**k**	**kB**	**AC**	**AD**	**AG**	**LL**	**HH**	**HH**	**O**	**ZF188**	**DF188**
LA132S/M	–	–	977.0	1 079.0	259.0	195.0	140	140	–	122.5	2xM32x1.5	–	600
LA132ZM	–	–	1 023.0	1 125.0	259.0	195.0	140	140	–	230.5	2xM32x1.5	–	609
LA160M/L	1 077.0	1 195.5	1 077.0	1 195.5	313.5	227.0	165	165	145.5	145.5	2xM40x1.5	602	632
LA160ZL	1 125.0	1 243.5	1 125.0	1 243.5	313.5	227.0	165	165	298.5	298.5	2xM40x1.5	602	632
LG180M/L	1 136.5	1 258.5	1 136.5	1 258.5	348.0	322.5	260	192	162.5	162.5	2xM40x1.5	698	727
LG180ZM/ZL	1 187.5	1 309.5	1 187.5	1 309.5	348.0	322.5	260	192	162.5	162.5	2xM40x1.5	728	757
LG200L	1 192.5	1 318.5	1 192.5	1 318.5	385.0	301.0	260	192	192.5	192.5	2xM50x1.5	778	807
LG225S	1 263.5	1 502.5	1 263.5	1 502.5	442.0	325.0	260	192	228.5	228.5	2xM50x1.5	851	880
LG225M	1 263.5	1 502.5	1 263.5	1 502.5	442.0	325.0	260	192	228.5	228.5	2xM50x1.5	839	868
LG225ZM	1 323.5	1 562.5	1 323.5	1 562.5	442.0	325.0	260	192	228.5	228.5	2xM50x1.5	897	926
LG250M	1 357.0	1 582.0	1 357.0	1 582.0	495.0	392.0	300	236	264.0	264.0	2xM63x1.5	941	970
LG250ZM	1 427.0	1 652.5	1 427.0	1 652.5	495.0	392.0	300	236	264.0	264.0	2xM63x1.5	1 044	1 073
K4-LGI280S	1 636.5	1 863.5	1 636.5	1 863.5	555.0	432.0	300	236	475.5	475.5	2xM63x1.5	1 069	1 099
K4-LGI280M	1 636.5	1 863.5	1 636.5	1 863.5	555.0	432.0	300	236	475.5	475.5	2xM63x1.5	1 175	1 204
K4-LGI280ZM	1 746.5	1 973.5	1 746.5	1 973.5	555.0	432.0	300	236	475.5	475.5	2xM63x1.5	1 263	1 292
K2-LGI315S/M	1 824.5	2 089.5	–	–	610.0	500.0	380	307	584.5	–	2xM63x1.5	1 304	–
K2-LGI315ZM	1 984.5	2 249.5	–	–	610.0	500.0	380	307	584.5	–	2xM63x1.5	1 459	–
K2-LGI315L	1 984.5	2 249.5	–	–	610.0	500.0	380	307	584.5	–	2xM63x1.5	1 599	–
K2-LGI315ZL	2 124.5	2 389.5	–	–	610.0	500.0	380	307	584.5	–	2xM63x1.5	1 801	–

④ DIN 332

⑤ Feather key / keyway DIN 6885

© Siemens AG 2011

Gearbox DZ/ZZ188 (3- / 2-stage), housing-flange-mounted design (C-type)

DZZ011

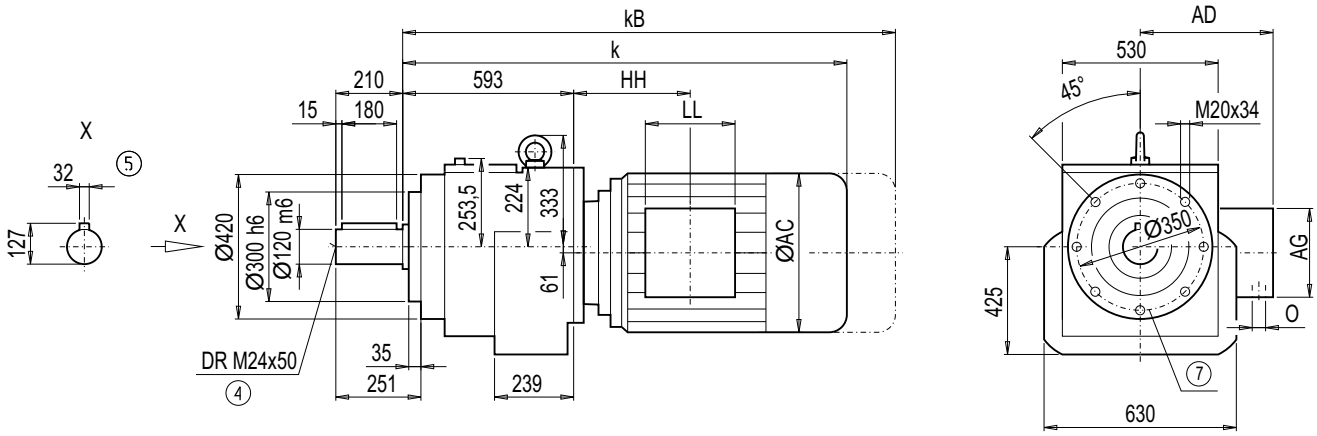

Motor	ZZ188 k	ZZ188 kB	DZ188 k	DZ188 kB	AC	AD	AG	LL	ZZ188 HH	DZ188 HH	O	Weight ZZ188	Weight DZ188
LA132S/M	–	–	977.0	1 079.0	259.0	195.0	140	140	–	122.5	2xM32x1.5	–	580
LA132ZM	–	–	1 023.0	1 125.0	259.0	195.0	140	140	–	230.5	2xM32x1.5	–	589
LA160M/L	1 077.0	1 195.5	1 077.0	1 195.5	313.5	227.0	165	165	145.5	145.5	2xM40x1.5	582	612
LA160ZL	1 125.0	1 243.5	1 125.0	1 243.5	313.5	227.0	165	165	298.5	298.5	2xM40x1.5	582	612
LG180M/L	1 136.5	1 258.5	1 136.5	1 258.5	348.0	322.5	260	192	162.5	162.5	2xM40x1.5	678	707
LG180ZM/ZL	1 187.5	1 309.5	1 187.5	1 309.5	348.0	322.5	260	192	162.5	162.5	2xM40x1.5	708	737
LG200L	1 192.5	1 318.5	1 192.5	1 318.5	385.0	301.0	260	192	192.5	192.5	2xM50x1.5	758	787
LG225S	1 263.5	1 502.5	1 263.5	1 502.5	442.0	325.0	260	192	228.5	228.5	2xM50x1.5	831	860
LG225M	1 263.5	1 502.5	1 263.5	1 502.5	442.0	325.0	260	192	228.5	228.5	2xM50x1.5	819	848
LG225ZM	1 323.5	1 562.5	1 323.5	1 562.5	442.0	325.0	260	192	228.5	228.5	2xM50x1.5	877	906
LG250M	1 357.0	1 582.0	1 357.0	1 582.0	495.0	392.0	300	236	264.0	264.0	2xM63x1.5	921	950
LG250ZM	1 427.0	1 652.5	1 427.0	1 652.5	495.0	392.0	300	236	264.0	264.0	2xM63x1.5	1 024	1 053
K4-LGI280S	1 636.5	1 863.5	1 636.5	1 863.5	555.0	432.0	300	236	475.5	475.5	2xM63x1.5	1 049	1 079
K4-LGI280M	1 636.5	1 863.5	1 636.5	1 863.5	555.0	432.0	300	236	475.5	475.5	2xM63x1.5	1 155	1 184
K4-LGI280ZM	1 746.5	1 973.5	1 746.5	1 973.5	555.0	432.0	300	236	475.5	475.5	2xM63x1.5	1 243	1 272
K2-LGI315S/M	1 824.5	2 089.5	–	–	610.0	500.0	380	307	584.5	–	2xM63x1.5	1 284	–
K2-LGI315ZM	1 984.5	2 249.5	–	–	610.0	500.0	380	307	584.5	–	2xM63x1.5	1 511	–
K2-LGI315L	1 984.5	2 249.5	–	–	610.0	500.0	380	307	584.5	–	2xM63x1.5	1 651	–
K2-LGI315ZL	2 124.5	2 389.5	–	–	610.0	500.0	380	307	584.5	–	2xM63x1.5	1 851	–

④ DIN 332 ⑤ Feather key / keyway DIN 6885 ⑦ For note, see page 2/192

© Siemens AG 2011

Dimensions

Helical tandem geared motors

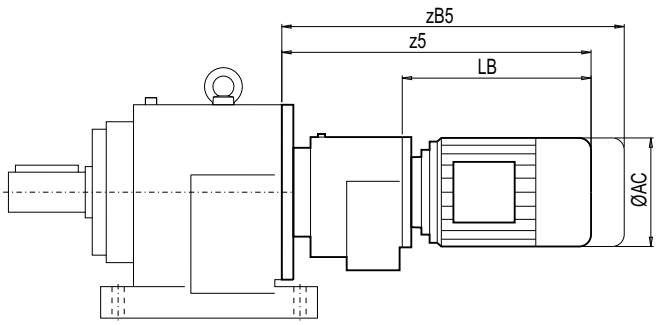

Gearbox	Motor	AC	z5	zB5	LB
Z.38-Z28	LA71	139.0	363.0	418.0	202.5
	LA71Z	139.0	382.0	437.0	221.5
	LA80	156.5	465.0	528.5	304.5
	LA80Z	156.5	487.5	551.0	327.0
	LA90S/L	174.0	460.0	531.0	299.5
	LA90ZL	174.0	505.0	576.0	344.5
	LA100L	195.0	542.0	623.0	381.5
	LA100ZL	195.0	612.0	693.0	451.5
Z.38-D28	LA71	139.0	363.0	418.0	202.5
	LA71Z	139.0	382.0	437.0	221.5
	LA80	156.5	465.0	528.5	304.5
	LA80Z	156.5	487.5	551.0	327.0
	LA90S/L	174.0	460.0	531.0	299.5
	LA90ZL	174.0	505.0	576.0	344.5
D.48-Z28	LA71	139.0	374.5	429.5	202.5
	LA71Z	139.0	393.5	448.5	221.5
	LA80	156.5	476.5	540.0	304.5
	LA80Z	156.5	499.0	562.5	327.0
	LA90S/L	174.0	471.5	542.5	299.5
	LA90ZL	174.0	516.5	587.5	344.5
	LA100L	195.0	553.5	634.5	381.5
	LA100ZL	195.0	623.5	704.5	451.5
D.48-D28	LA71	139.0	374.5	429.5	202.5
	LA71Z	139.0	393.5	448.5	221.5
	LA80	156.5	476.5	540.0	304.5
	LA80Z	156.5	499.0	562.5	327.0
	LA90S/L	174.0	471.5	542.5	299.5
	LA90ZL	174.0	516.5	587.5	344.5
D.68-Z28	LA71	139.0	370.0	425.0	202.5
	LA71Z	139.0	389.0	444.0	221.5
	LA80	156.5	472.0	535.5	304.5
	LA80Z	156.5	494.5	558.0	327.0
	LA90S/L	174.0	467.0	538.0	299.5
	LA90ZL	174.0	512.0	583.0	344.5
	LA100L	195.0	549.0	630.0	381.5
	LA100ZL	195.0	619.0	700.0	451.5

Gearbox	Motor	AC	z5	zB5	LB
D.68-D28	LA71	139.0	370.0	425.0	202.5
	LA71Z	139.0	389.0	444.0	221.5
	LA80	156.5	472.0	535.5	304.5
	LA80Z	156.5	494.5	558.0	327.0
	LA90S/L	174.0	467.0	538.0	299.5
	LA90ZL	174.0	512.0	583.0	344.5
D.88-Z28	LA71	139.0	361.5	416.5	202.5
	LA71Z	139.0	380.5	435.5	221.5
	LA80	156.5	463.5	527.0	304.5
	LA80Z	156.5	486.0	549.5	327.0
	LA90S/L	174.0	458.5	529.5	299.5
	LA90ZL	174.0	503.5	574.5	344.5
	LA100L	195.0	540.5	621.5	381.5
	LA100ZL	195.0	610.5	691.5	451.5
D.88-D28	LA71	139.0	361.5	416.5	202.5
	LA71Z	139.0	380.5	435.5	221.5
	LA80	156.5	463.5	527.0	304.5
	LA80Z	156.5	486.0	549.5	327.0
	LA90S/L	174.0	458.5	529.5	299.5
	LA90ZL	174.0	503.5	574.5	344.5
D.108-Z38	LA71 [1]	139.0	484.5	539.5	258.5
	LA71Z [1]	139.0	503.5	558.5	277.5
	LA80 [1]	156.5	521.5	585.0	295.5
	LA80Z [1]	156.5	544.0	607.5	318.0
	LA90S/L [1]	174.0	552.5	623.5	326.5
	LA90ZL [1]	174.0	597.5	668.5	371.5
	LA100L [1]	195.0	598.5	679.5	372.5
	LA100ZL [1]	195.0	668.5	749.5	442.5
	LA112M [1]	219.0	628.0	709.0	402.0
	LA112ZM [1]	219.0	656.0	737.0	430.0
	LA71 [2]	139.0	496.0	551.0	258.5
	LA71Z [2]	139.0	515.0	570.0	277.5
	LA80 [2]	156.5	533.0	596.5	295.5
	LA80Z [2]	156.5	555.5	619.0	318.0
	LA90S/L [2]	174.0	564.0	635.0	326.5
	LA90ZL [2]	174.0	609.0	680.0	371.5
	LA100L [2]	195.0	610.0	691.0	372.5
	LA100ZL [2]	195.0	680.0	761.0	442.5
	LA112M [2]	219.0	639.5	720.5	402.0
	LA112ZM [2]	219.0	667.5	748.5	430.0

1) $i_{tot} \geq 3797$ 2) $i_{tot} < 3797$

© Siemens AG 2011

Helical tandem geared motors (continued)

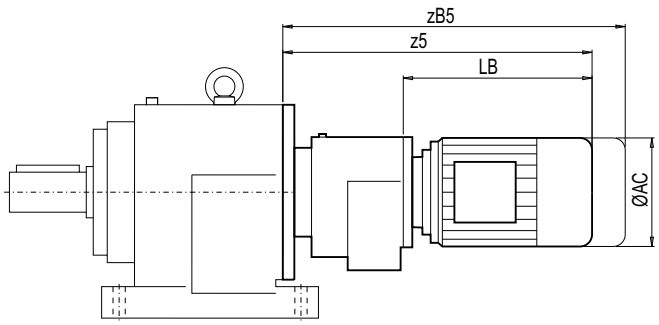

Gearbox	Motor	AC	z5	zB5	LB
D.108-D38	LA71	139.0	499.5	554.5	273.5
	LA71Z	139.0	518.5	573.5	292.5
	LA80	156.5	536.5	600.0	310.5
	LA80Z	156.5	559.0	622.5	333.0
	LA90S/L	174.0	567.5	638.5	341.5
	LA90ZL	174.0	612.5	683.5	386.5
D.128-Z38	LA71	139.0	488.0	543.0	258.5
	LA71Z	139.0	507.0	562.0	277.5
	LA80	156.5	525.0	588.5	295.5
	LA80Z	156.5	547.5	611.0	318.0
	LA90S/L	174.0	556.0	627.0	326.5
	LA90ZL	174.0	601.0	672.0	371.5
	LA100L	195.0	602.0	683.0	372.5
	LA100ZL	195.0	672.0	753.0	442.5
	LA112M	219.0	631.5	712.5	402.0
	LA112ZM	219.0	659.5	740.5	430.0
D.128-D38	LA71	139.0	503.0	558.0	273.5
	LA71Z	139.0	522.0	577.0	292.5
	LA80	156.5	540.0	603.5	310.5
	LA80Z	156.5	562.5	626.0	333.0
	LA90S/L	174.0	571.0	642.0	341.5
	LA90ZL	174.0	616.0	687.0	386.5
D.128-Z48	LA71	139.0	555.5	610.5	253.0
	LA71Z	139.0	574.5	629.5	272.0
	LA80	156.5	592.5	656.0	290.0
	LA80Z	156.5	615.0	678.5	312.5
	LA90S/L	174.0	623.5	694.5	321.0
	LA90ZL	174.0	668.5	739.5	366.0
	LA100L	195.0	669.5	750.5	367.0
	LA100ZL	195.0	739.5	820.5	437.0
	LA112M	219.0	698.5	779.5	396.0
	LA112ZM	219.0	726.5	807.5	424.0
	LA132S/M	259.0	760.5	862.5	458.0
	LA132ZM	259.0	806.5	908.5	504.0
D.148-Z38	LA71	139.0	485.0	540.0	258.5
	LA71Z	139.0	504.0	559.0	277.5
	LA80	156.5	522.0	585.5	295.5
	LA80Z	156.5	544.5	608.0	318.0

Gearbox	Motor	AC	z5	zB5	LB
D.148-Z38	LA90S/L	174.0	553.0	624.0	326.5
	LA90ZL	174.0	598.0	669.0	371.5
	LA100L	195.0	599.0	680.0	372.5
	LA100ZL	195.0	669.0	750.0	442.5
	LA112M	219.0	628.5	709.5	402.0
	LA112ZM	219.0	656.5	737.5	430.0
D.148-D38	LA71	139.0	500.0	555.0	273.5
	LA71Z	139.0	519.0	574.0	292.5
	LA80	156.5	537.0	600.5	310.5
	LA80Z	156.5	559.5	623.0	333.0
	LA90S/L	174.0	568.0	639.0	341.5
	LA90ZL	174.0	613.0	684.0	386.5
D.148-Z48	LA71	139.0	551.5	606.5	253.0
	LA71Z	139.0	570.5	625.5	272.0
	LA80	156.5	588.5	652.0	290.0
	LA80Z	156.5	611.0	674.5	312.5
	LA90S/L	174.0	619.5	690.5	321.0
	LA90ZL	174.0	664.5	735.5	366.0
	LA100L	195.0	665.5	746.5	367.0
	LA100ZL	195.0	735.5	816.5	437.0
	LA112M	219.0	694.5	775.5	396.0
	LA112ZM	219.0	722.5	803.5	424.0
	LA132S/M	259.0	756.5	858.5	458.0
	LA132ZM	259.0	802.5	904.5	504.0
D.168-Z48	LA71	139.0	540.0	595.0	253.0
	LA71Z	139.0	559.0	614.0	272.0
	LA80	156.5	577.0	640.5	290.0
	LA80Z	156.5	599.5	663.0	312.5
	LA90S/L	174.0	608.0	679.0	321.0
	LA90ZL	174.0	653.0	724.0	366.0
	LA100L	195.0	654.0	735.0	367.0
	LA100ZL	195.0	724.0	805.0	437.0
	LA112M	219.0	683.0	764.0	396.0
	LA112ZM	219.0	711.0	792.0	424.0
	LA132S/M	259.0	745.0	847.0	458.0
	LA132ZM	259.0	791.0	893.0	504.0

© Siemens AG 2011

Dimensions

Helical tandem geared motors (continued)

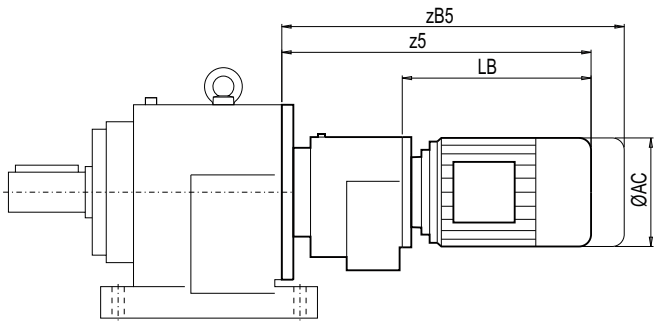

Gearbox	Motor	AC	z5	zB5	LB
D.168-D48	LA71	139.0	557.0	612.0	270.0
	LA71Z	139.0	576.0	631.0	289.0
	LA80	156.5	594.0	657.5	307.0
	LA80Z	156.5	616.5	680.0	329.5
	LA90S	174.0	625.0	696.0	338.0
	LA90L	174.0	625.0	696.0	338.0
	LA90ZL	174.0	670.0	741.0	383.0
	LA100L	195.0	671.0	752.0	384.0
	LA100ZL	195.0	741.0	822.0	454.0
D.168-Z68	LA71	139.0	626.0	681.0	247.0
	LA71Z	139.0	645.0	700.0	266.0
	LA80	156.5	663.0	726.5	284.0
	LA80Z	156.5	685.5	749.0	306.5
	LA90S/L	174.0	694.0	765.0	315.0
	LA90ZL	174.0	739.0	810.0	360.0
	LA100L	195.0	740.0	821.0	361.0
	LA100ZL	195.0	810.0	891.0	431.0
	LA132S/M	259.0	827.0	929.0	448.0
	LA132ZM	259.0	873.0	975.0	494.0
	LA160M/L	313.5	929.5	1 048.0	550.5
	LA160ZL	313.5	977.5	1 096.0	598.5
D.188-Z48	LA71	139.0	499.0	554.0	253.0
	LA71Z	139.0	518.0	573.0	272.0
	LA80	156.5	536.0	599.5	290.0
	LA80Z	156.5	558.5	622.0	312.5
	LA90S/L	174.0	567.0	638.0	321.0
	LA90ZL	174.0	612.0	683.0	366.0
	LA100L	195.0	613.0	694.0	367.0
	LA100ZL	195.0	683.0	764.0	437.0
	LA112M	219.0	642.0	723.0	396.0
	LA112ZM	219.0	670.0	751.0	424.0
	LA132S/M	259.0	704.0	806.0	458.0
	LA132ZM	259.0	750.0	852.0	504.0

Gearbox					
D.188-D48	LA71	139.0	516.0	571.0	270.0
	LA71Z	139.0	535.0	590.0	289.0
	LA80	156.5	553.0	616.5	307.0
	LA80Z	156.5	575.5	639.0	329.5
	LA90S/L	174.0	584.0	655.0	338.0
	LA90ZL	174.0	629.0	700.0	383.0
	LA100L	195.0	630.0	711.0	384.0
	LA100ZL	195.0	700.0	781.0	454.0
D.188-Z68	LA71	139.0	585.0	640.0	247.0
	LA71Z	139.0	604.0	659.0	266.0
	LA80	156.5	622.0	685.5	284.0
	LA80Z	156.5	644.5	708.0	306.5
	LA90S/L	174.0	653.0	724.0	315.0
	LA90ZL	174.0	698.0	769.0	360.0
	LA100L	195.0	699.0	780.0	361.0
	LA100ZL	195.0	769.0	850.0	431.0
	LA132S/M	259.0	786.0	888.0	448.0
	LA132ZM	259.0	832.0	934.0	494.0
	LA160M/L	313.5	888.5	1 007.0	550.5
	LA160ZL	313.5	936.5	1 055.0	598.5

© Siemens AG 2011

Gearbox DR/ZR68-168 (3- / 2-stage) with agitator flange

DZZ011

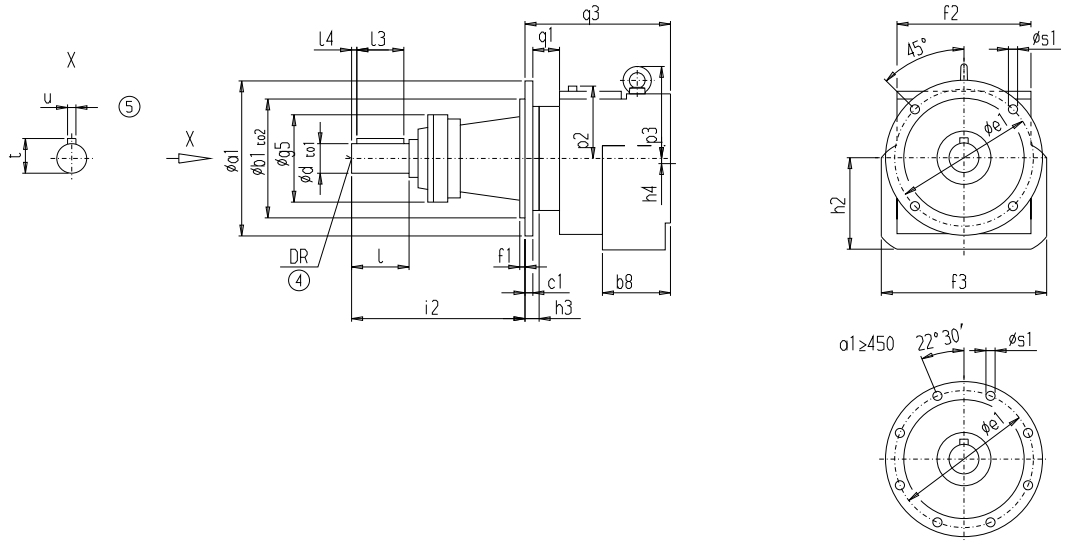

Gearbox	p2	p3	h2	b8	q3	f3	f2	h4	Additional weight[1)]
DR/ZR68	109.0	149	144.0	91.5	248	263	206	0	24
DR/ZR88	134.0	181	182.0	129.0	306	332	260	0	46
DR/ZR108	177.0	228	219.5	126.5	355	410	326	0	82
DR/ZR128	194.0	263	250.0	146.0	422	462	364	0	85
DR/ZR148	190.5	270	317.0	160.0	459	510	416	37	94
DR/ZR168	248.0	325	358.0	188.5	539	580	470	42	248

Gearbox	a1	b1	to2	c1	e1	f1	q1	s1	g5	h3	d	to1	l	l4	l3	t	u	DR	i2
DR/ZR68	350	250	h6	18	300	7	79	17.5	165	57	50	k6	100	10.0	80	53.5	14	M16x36	300
DR/ZR88	350	250	h6	18	300	7	92	17.5	185	62	60	m6	120	10.0	100	64.0	18	M20x42	360
DR/ZR108	450	350	h6	22	400	7	78	17.5	210	72	70	m6	140	7.5	125	74.5	20	M20x42	420
DR/ZR128	550	450	h6	25	500	8	101	17.5	252	81	80	m6	170	20.0	125	85.0	22	M20x42	500
DR/ZR148	550	450	h6	25	500	8	113	17.5	252	81	100	m6	210	15.0	180	106	28	M24x50	600
DR/ZR168	660	550	h6	28	600	8	113	22.0	270	86	110	m6	210	15.0	180	116	28	M24x50	660

1) To calculate the overall weight of the drive, add the additional weight to the weight of the DZ/ZZ gearbox, flange-mounted design.
For example: weight of DZ88-M112M (97 kg) + additional weight DR88 (46 kg) = total weight of DR88-M112M (143 kg).

④ DIN 332

⑤ Feather key / keyway DIN 6885

© Siemens AG 2011

Dimensions

Pin holes

The customer's interface can be pinned to the housing flange (C-type) for sizes EZ128 to EZ148 and DZ/ZZ108 to DZ/ZZ188.

The output flanges have been designed to ensure the reliable transmission of the permissible torques and radial forces by the bolt connections.

If an additional fuse, e. g. for high shock loads, is required, the existing pin holes can be used.

The gearbox and the machine can be drilled and pinned together. To do so, the provided dimensions must be observed.

EZ128, DZ/ZZ108

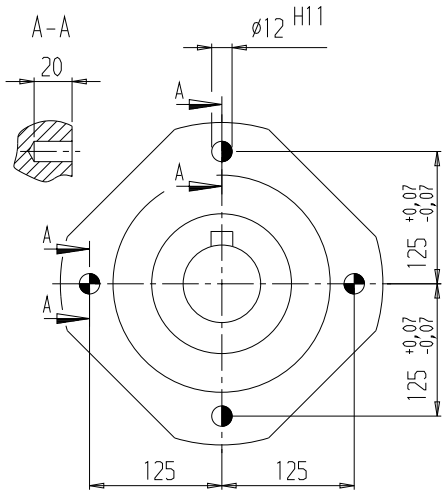

EZ148, DZ/ZZ128

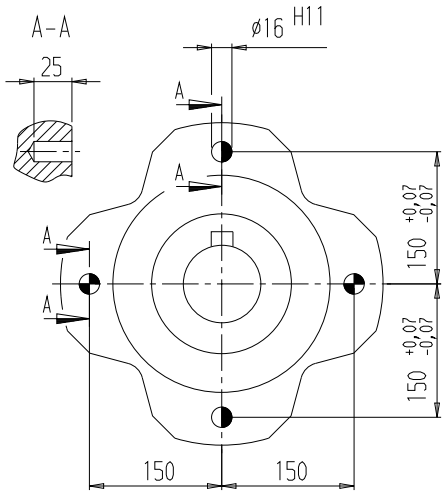

DZ/ZZ148

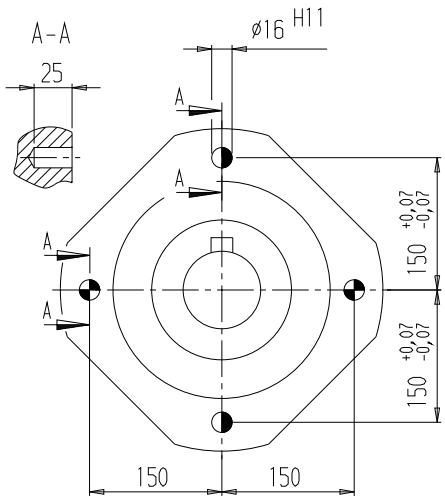

DZ/ZZ168, DZ/ZZ188

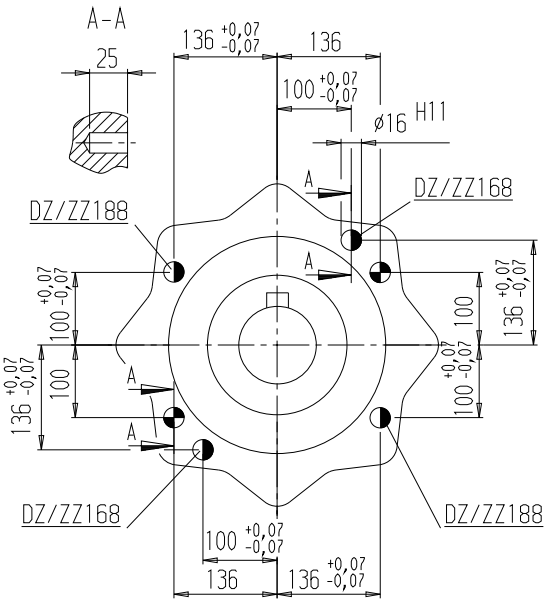

◑ Spring pins, heavy-duty design, to DIN 1481: Use pin holes provided in the housing flange.

◕ Grooved cylindrical pins with chamfer to DIN EN 28740 / ISO 8740: Drill connecting component together with housing.

© Siemens AG 2011

Parallel shaft geared motors

3



Orientation
3/2 Overview
3/4 Modular system

General technical data
3/5 Permissible radial force

Geared motors up to 200 kW
3/6 Selection and ordering data

Transmission ratios and maximum torques
3/65 Selection and ordering data

Mounting types
3/86 Selection and ordering data

Shaft designs
3/89 Selection and ordering data

Flange-mounted designs
3/91 Selection and ordering data

Mounting types and mounting positions
3/92 Selection and ordering data

Special versions
3/96 Lubricants
3/96 Oil level control
3/97 Gearbox ventilation
3/97 Oil drain
3/98 Sealing
3/99 Hollow shaft cover (protection cover)
3/99 Radially reinforced output shaft bearings
3/100 Mixer flange in dry-well design

Dimensions
3/101 Dimension drawing overview
3/104 Dimension drawings

© Siemens AG 2011

Orientation

Overview



MOTOX parallel shaft gearboxes are part of the MOTOX modular system. With helical, bevel helical, helical worm, or variable speed gearboxes and three-phase AC motors with or without brakes, this system covers all possible drive combinations, right up to electronic variable speed drives.

MOTOX parallel shaft gearboxes are designed for continuous duty. The gearbox housings made of gray cast iron or aluminium are developed in 3D CAD and have an optimized structure in terms of rigidity and vibration absorption. Radial shaft seals with dust-protection lips prevent oil from leaking out of the housing and dust and water from entering it. The tooth flanks are ground or honed so that they are convex and corrected in terms of the profile. Optimum running smoothness is achieved thanks to the gear wheels' helical teeth. The output shaft is parallel to the input shaft on 2-stage and 3-stage gearboxes.

MOTOX parallel shaft gearboxes are available in 2-stage and 3-stage designs. Standard series gearboxes can be supplied for attaching in any position. The gearboxes are available in a solid-shaft or hollow-shaft design with a feather key connection, shrink disk connection, or splined shaft.

© Siemens AG 2011

Overview (continued)

The parallel shaft gearboxes are designated as follows:

Gearbox type:

F Parallel shaft gearbox

Transmission stage
Z 2-stage
D 3-stage

Type:

Shaft
(-) Solid shaft
A Hollow shaft

Mounting
(-) Foot-mounted design
F Flange-mounted design (A-type)
Z Housing flange (C-type)
D Torque arm
M Mixer flange
E Extruder flange

Connections
(-) Feather key
S Shrink disk
T Hollow shaft with splined shaft

Special features
W Reduced-backlash version

Type of intermediate gearbox:

(-) Helical gearbox

Transmission stage
Z 2-stage
D 3-stage

Input unit:

K2 Coupling lantern with flexible coupling for connecting an IEC motor

K2TC Coupling lantern with flexible coupling for connecting a NEMA motor [1)]

K4 Short coupling lantern with clamp connection for connecting an IEC motor

K5 Short coupling lantern with clamp connection for connecting a NEMA motor [1)]

KQ Lantern for servomotor with feather key and zero-backlash flexible coupling for connecting a servomotor

KQS Lantern for servomotor without feather key and zero-backlash flexible coupling for connecting a servomotor

A Input unit with free input shaft

A5 Input unit with free input shaft (NEMA design) [1)]

P Input unit with free input shaft and piggy back for connecting an IEC motor

P5 Input unit with free input shaft and piggy back for connecting a NEMA motor [1)]

PS Input unit with free input shaft and piggy back with protection cover

Example: **F Z F 108 B - Z 38 - K4 (100)**

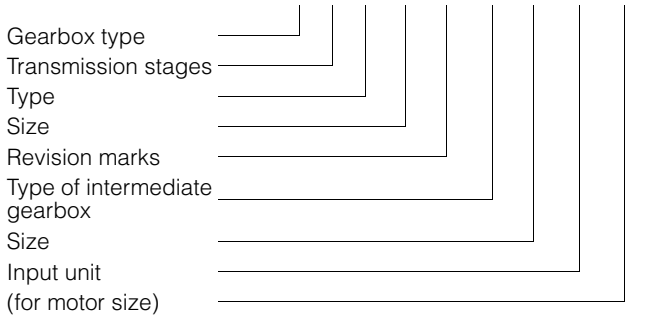

The series currently comprises 10 gearbox sizes.

The basic designs available are 2- and 3-stage gearboxes.

[1)] These designs can be selected from our MOTOX Configurator electronic catalog.

© Siemens AG 2011

Orientation

Modular system

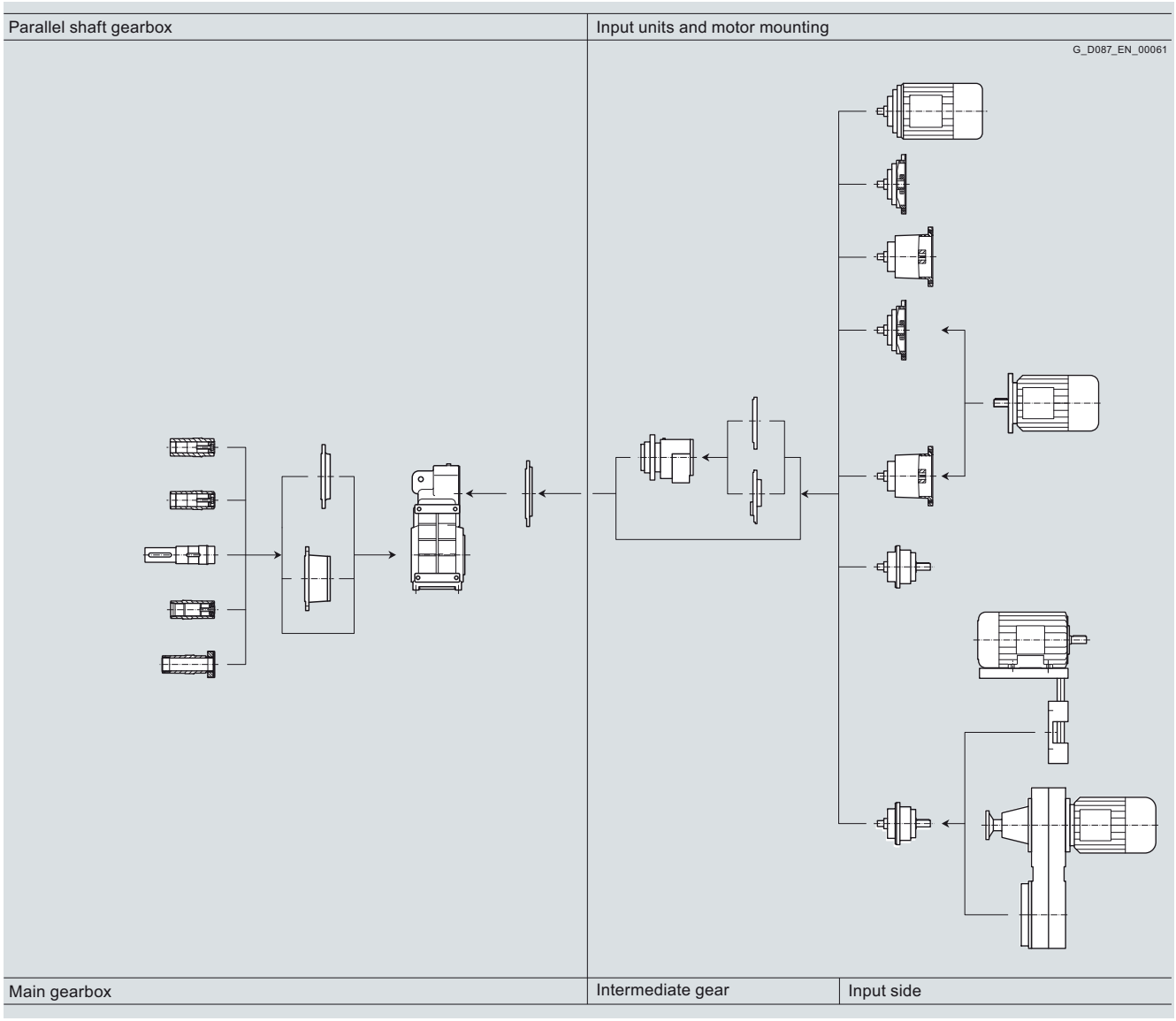

Use

MOTOX parallel shaft gearboxes are the ideal solution when space is at a premium, thanks to their compact, well-shaped structures.

The variety of output shafts – hollow or solid – and the range of mounting options available, which allow the device to be used as a shaft-mounted gearbox with a torque arm, or as a foot- or flange-mounted design, enable you to achieve exactly the right solution, at the right price.

Parallel shaft gearboxes are extremely efficient. They are very economical, thanks to their low price and low maintenance requirements.

Oil quantities

The oil quantities corresponding to the applicable mounting positions are specified in the operating instructions and on the rating plate.

© Siemens AG 2011

Permissible radial force F_{Rperm}

2-stage and 3-stage parallel shaft gearbox – standard bearing arrangement

Gearbox type	d mm	l mm	y mm	z mm	a kNmm	F_{Rperm} in N with x = l/2 for output speeds n_2 in rpm: Direction of rotation when viewing the output shaft	≤ 16	≤ 25	≤ 40	≤ 63	≤ 100	≤ 160	≤ 250	≤ 400
F.F28	25	50	128.5	104	115	Left	4 600	4 600	4 150	3 330	2 730	2 350	1 840	1 780
						Right	4 600	4 600	3 950	3 120	2 520	2 160	1 650	1 650
F.F38B	25	50	146.0	121	131	Left	5 246	5 246	4 810	4 020	2 980	2 870	2 590	2 480
						Right	5 246	5 246	4 360	3 610	2 500	2 480	2 450	2 370
F.F48B	30	60	176.0	146	245	Left	8 154	8 060	6 640	5 270	4 840	4 530	4 070	3 770
						Right	8 150	7 500	6 080	4 720	4 400	4 280	3 900	3 650
F.F68B	40	80	213.0	173	357	Left	8 927	7 680	6 160	5 050	3 710	3 930	3 710	3 650
						Right	8 927	6 830	5 310	4 200	2 860	3 290	3 300	3 440
F.F88B	50	100	262.0	212	741	Left	14 825	13 420	10 040	8 310	7 020	6 590	6 320	6 130
						Right	14 340	12 360	8 740	7 010	5 800	5 960	5 920	5 800
F.F108B	60	120	298.0	238	1 100	Left	17 930	13 620	10 750	8 190	6 070	6 610	6 840	7 080
						Right	15 860	11 550	8 680	6 120	4 040	4 960	5 780	6 390
F.F128B	70	140	371.5	302	1 786	Left	25 516	19 950	15 710	10 270	9 120	10 890	10 860	10 360
						Right	23 190	17 570	13 530	7 900	6 740	9 300	9 920	9 810
F.F148B	90	170	434.0	349	2 241	Left	23 390	17 850	13 190	8 530	9 840	11 680	11 800	11 660
						Right	20 390	14 850	10 180	5 620	7 380	10 030	10 530	10 830
F.F168B	110	210	517.5	413	4 814	Left	35 450	27 240	20 850	13 740	12 970	17 210	16 400	16 450
						Right	31 510	23 300	17 200	9 800	9 280	15 230	14 590	15 330
F.F188B	120	210	538.0	433	11 898	Left	113 314	113 314	113 314	106 120	88 810	78 120	76 850	–
						Right	113 314	113 314	113 314	102 690	84 350	75 050	74 100	–
F.F208	160	250	622.0	497	18 750	Left	150 000	150 000	150 000	150 000	143 760	127 130	121 290	–
			598.0	493		Right	150 000	150 000	150 000	150 000	135 990	120 310	114 800	–

2-stage and 3-stage parallel shaft gearbox – reinforced bearing arrangement

Gearbox type	d mm	l mm	y mm	z mm	a kNmm	F_{Rperm} in N with x = l/2 for output speeds n_2 in rpm: Direction of rotation when viewing the output shaft	≤ 16	≤ 25	≤ 40	≤ 63	≤ 100	≤ 160	≤ 250	≤ 400
F.F68B	40	80	213.0	173	546	Left	13 643	13 643	13 643	13 643	13 643	13 260	11 920	10 620
						Right	13 643	13 643	13 643	13 643	13 230	12 690	11 540	10 390
F.F88B	50	100	262.0	212	1 171	Left	23 411	23 411	23 411	23 411	23 411	21 180	19 050	18 130
						Right	23 411	23 411	23 411	23 411	22 960	20 520	18 620	17 790
F.F108B	60	120	298.0	238	1 723	Left	28 718	28 718	28 718	28 718	28 718	26 040	24 150	23 420
						Right	28 718	28 718	28 718	28 718	26 590	24 740	23 300	22 680
F.F128B	70	140	371.5	302	2 514	Left	35 921	35 921	35 921	35 921	35 921	35 921	35 921	34 420
						Right	35 921	35 921	35 921	35 921	35 921	35 921	35 921	33 830
F.F148B	90	170	434.0	349	5 737	Left	67 493	67 493	67 300	55 150	52 240	46 910	44 010	41 380
						Right	67 493	67 493	64 110	52 070	50 180	45 380	42 870	40 510
F.F168B	110	210	517.5	413	9 566	Left	91 102	91 102	91 102	87 720	78 620	71 650	65 350	62 000
						Right	91 102	91 102	91 102	83 520	75 920	69 990	63 850	60 810
F.F188B	120	210	538.0	433	11 898	Left	113 314	113 314	113 314	106 120	88 810	78 120	76 850	–
						Right	113 314	113 314	113 314	102 690	84 350	75 050	74 100	–
F.F208	160	250	622.0	497	18 750	Left	150 000	150 000	150 000	150 000	150 000	150 000	150 000	–
			598.0	493		Right	150 000	150 000	150 000	150 000	150 000	150 000	150 000	–

The values in the table apply to the worst-case scenario.
The output shaft bearing arrangement can be calculated using our MOTOX Configurator electronic catalog.

See Chapter 1 of the configuring guide for more information on calculating the permissible radial force.

© Siemens AG 2011

Geared motors up to 200 kW

Selection and ordering data

The selection tables show the most common variants and combinations. Other combinations can be selected using our MOTOX Configurator or made available on request.

At an identical power rating and output speed, priority is given in the selection tables to 4-pole geared motors.

At the available transmission ratios, they cover the majority of output speeds.

Due to their prevalence, 4-pole geared motors are easily available, with short delivery times and at a low cost.
They also feature a favorable size / power ratio.

Power rating P_{Motor} kW (50 Hz)	Output speed n_2 (50 Hz) rpm	Output torque T_2 Nm	Service factor f_B	Gearbox ratio i_{tot}		Order No.	Order code (No. of poles)	Weight *) kg
0.09	**FD.48B-LA71M8**							
	2.3	367	1.5	268.8	★	**2KJ1402 - ■CE13 - ■■S1**	**P02**	27
	2.6	326	1.7	238.65		**2KJ1402 - ■CE13 - ■■R1**	**P02**	27
	3.0	285	1.9	209.23	★	**2KJ1402 - ■CE13 - ■■Q1**	**P02**	27
	FD.38B-LA71M8							
	2.6	330	0.88	241.91	★	**2KJ1401 - ■CE13 - ■■M1**	**P02**	20
	3.0	284	1.0	207.83		**2KJ1401 - ■CE13 - ■■L1**	**P02**	20
	FD.38B-LA71B6							
	3.2	269	1.1	280.41		**2KJ1401 - ■CB13 - ■■N1**	**P01**	20
	3.7	232	1.2	241.91	★	**2KJ1401 - ■CB13 - ■■M1**	**P01**	20
	4.3	200	1.5	207.83		**2KJ1401 - ■CB13 - ■■L1**	**P01**	20
	4.7	184	1.6	191.34	★	**2KJ1401 - ■CB13 - ■■K1**	**P01**	20
0.12	**FD.188B-D48-LA71B4**							
	0.05	15 668	1.3	28 045	★	**2KJ1440 - ■CB13 - ■■E1**		638
	0.06	12 819	1.6	22 946	★	**2KJ1440 - ■CB13 - ■■C1**		638
	0.06	14 134	1.4	25 299		**2KJ1440 - ■CB13 - ■■D1**		638
	0.07	10 683	1.9	19 122	★	**2KJ1440 - ■CB13 - ■■A1**		638
	0.07	11 680	1.7	20 906		**2KJ1440 - ■CB13 - ■■B1**		638
	FD.188B-Z48-LA71B4							
	0.08	10 013	2.0	17 537		**2KJ1438 - ■CB13 - ■■A2**		638
	FD.168B-D48-LA71B4							
	0.05	16 202	0.86	29 000		**2KJ1436 - ■CB13 - ■■F1**		455
	0.06	12 901	1.1	23 093		**2KJ1436 - ■CB13 - ■■D1**		455
	0.06	14 302	0.98	25 599	★	**2KJ1436 - ■CB13 - ■■E1**		455
	0.07	10 661	1.3	19 083		**2KJ1436 - ■CB13 - ■■B1**		455
	0.07	11 701	1.2	20 944	★	**2KJ1436 - ■CB13 - ■■C1**		455
	0.08	9 751	1.4	17 454	★	**2KJ1436 - ■CB13 - ■■A1**		455
	FD.168B-Z48-LA71B4							
	0.09	9 139	1.5	16 007		**2KJ1435 - ■CB13 - ■■A2**		454
	0.10	8 088	1.7	14 165	★	**2KJ1435 - ■CB13 - ■■X1**		454
	0.11	7 353	1.9	12 878		**2KJ1435 - ■CB13 - ■■W1**		454
	FD.148B-D38-LA71B4							
	0.07	10 870	0.83	19 456		**2KJ1433 - ■CB13 - ■■B1**		288
	0.08	9 891	0.91	17 704	★	**2KJ1433 - ■CB13 - ■■A1**		288
	FD.148B-Z38-LA71B4							
	0.09	9 272	0.97	16 239	★	**2KJ1432 - ■CB13 - ■■W1**		287
	0.10	8 245	1.1	14 441		**2KJ1432 - ■CB13 - ■■V1**		287
	0.11	7 152	1.3	12 527	★	**2KJ1432 - ■CB13 - ■■U1**		287

★ Preferred transmission ratio

Shaft designs, see page 3/89 — **1, 2, 3, 5, 6 or 9**

Frequency and voltage, see page 8/20 — **1 to 9**

Gearbox housing mounting position, see page 3/92 — **A, D, E, F, H or M**

*) For mounting type B5-01

© Siemens AG 2011

Selection and ordering data (continued)

Power rating P_{Motor} kW	Output speed n_2 (50 Hz) rpm	Output torque T_2 Nm	Service factor f_B	Gearbox ratio i_{tot}		Order No.	Order code (No. of poles)	Weight *) kg
0.12	**FD.148B-Z38-LA71B4**							
	0.12	6 683	1.3	11 705		**2KJ1432 - ■CB13 - ■■T1**		287
	0.14	5 878	1.5	10 295	★	**2KJ1432 - ■CB13 - ■■S1**		287
	0.16	5 148	1.7	9 016		**2KJ1432 - ■CB13 - ■■R1**		287
	0.18	4 553	2.0	7 975	★	**2KJ1432 - ■CB13 - ■■Q1**		287
	FD.128B-Z38-LA71B4							
	0.12	6 445	0.95	11 289		**2KJ1428 - ■CB13 - ■■T1**		197
	0.12	6 899	0.88	12 083	★	**2KJ1428 - ■CB13 - ■■U1**		197
	0.14	5 669	1.1	9 929	★	**2KJ1428 - ■CB13 - ■■S1**		197
	0.16	4 965	1.2	8 696		**2KJ1428 - ■CB13 - ■■R1**		197
	0.18	4 391	1.4	7 691	★	**2KJ1428 - ■CB13 - ■■Q1**		197
	0.20	3 980	1.5	6 971		**2KJ1428 - ■CB13 - ■■P1**		197
	0.23	3 513	1.7	6 153	★	**2KJ1428 - ■CB13 - ■■N1**		197
	0.25	3 169	1.9	5 551		**2KJ1428 - ■CB13 - ■■M1**		197
	FD.108B-Z38-LA71B4							
	0.19	4 270	0.80	7 479	★	**2KJ1426 - ■CB13 - ■■F2**		122
	0.21	3 870	0.88	6 778		**2KJ1426 - ■CB13 - ■■E2**		122
	0.23	3 416	1.0	5 983	★	**2KJ1426 - ■CB13 - ■■D2**		122
	0.26	3 081	1.1	5 397		**2KJ1426 - ■CB13 - ■■C2**		122
	0.29	2 795	1.2	4 895	★	**2KJ1426 - ■CB13 - ■■B2**		122
	0.31	2 546	1.3	4 460		**2KJ1426 - ■CB13 - ■■A2**		122
	0.34	2 329	1.5	4 079	★	**2KJ1426 - ■CB13 - ■■X1**		122
	0.38	2 083	1.6	3 648		**2KJ1426 - ■CB13 - ■■W1**		122
	0.42	1 912	1.8	3 349	★	**2KJ1426 - ■CB13 - ■■V1**		122
	0.46	1 724	2.0	3 019		**2KJ1426 - ■CB13 - ■■U1**		122
	FD.88B-Z28-LA71B4							
	0.34	2 386	0.8	4 179		**2KJ1422 - ■CB13 - ■■W1**		73
	0.38	2 118	0.9	3 709	★	**2KJ1422 - ■CB13 - ■■V1**		73
	0.43	1 856	1.0	3 251		**2KJ1422 - ■CB13 - ■■U1**		73
	0.49	1 632	1.2	2 858	★	**2KJ1422 - ■CB13 - ■■T1**		73
	0.54	1 474	1.3	2 582		**2KJ1422 - ■CB13 - ■■S1**		73
	0.62	1 285	1.5	2 250	★	**2KJ1422 - ■CB13 - ■■R1**		73
	0.69	1 154	1.6	2 021		**2KJ1422 - ■CB13 - ■■Q1**		73
	0.77	1 041	1.8	1 824	★	**2KJ1422 - ■CB13 - ■■P1**		73
	0.85	944	2.0	1 654		**2KJ1422 - ■CB13 - ■■N1**		73
	FD.68B-Z28-LA71B4							
	0.69	1 162	0.86	2 035		**2KJ1417 - ■CB13 - ■■T1**		43
	0.78	1 021	0.98	1 789	★	**2KJ1417 - ■CB13 - ■■S1**		43
	0.87	923	1.1	1 616		**2KJ1417 - ■CB13 - ■■R1**		43
	0.99	804	1.2	1 408	★	**2KJ1417 - ■CB13 - ■■Q1**		43
	1.1	722	1.4	1 265		**2KJ1417 - ■CB13 - ■■P1**		43
	1.2	652	1.5	1 142	★	**2KJ1417 - ■CB13 - ■■N1**		43
	1.4	592	1.7	1 036		**2KJ1417 - ■CB13 - ■■M1**		43
	1.5	538	1.9	942	★	**2KJ1417 - ■CB13 - ■■L1**		43

★ Preferred transmission ratio

Shaft designs, see page 3/89 — **1, 2, 3, 5, 6 or 9**

Frequency and voltage, see page 8/20 — **1 to 9**

Gearbox housing mounting position, see page 3/92 — **A, D, E, F, H or M**

*) For mounting type B5-01

© Siemens AG 2011

Selection and ordering data (continued)

Power rating P_{Motor} kW	Output speed n_2 (50 Hz) rpm	Output torque T_2 Nm	Service factor f_B	Gearbox ratio i_{tot}		Order No.	Order code (No. of poles)	Weight *) kg
0.12	**FD.68B-LA71MB8**							
	2.2	526	1.9	296.18	★	**2KJ1403 - ■CF13 - ■■S1**	**P02**	43
	FD.48B-Z28-LA71B4							
	1.3	614	0.88	1 076	★	**2KJ1413 - ■CB13 - ■■N1**		29
	1.4	557	0.97	976		**2KJ1413 - ■CB13 - ■■M1**		29
	1.6	507	1.1	888	★	**2KJ1413 - ■CB13 - ■■L1**		29
	1.8	448	1.2	785		**2KJ1413 - ■CB13 - ■■K1**		29
	1.9	414	1.3	725	★	**2KJ1413 - ■CB13 - ■■J1**		29
	2.2	356	1.5	624		**2KJ1413 - ■CB13 - ■■H1**		29
	FD.48B-LA71MB8							
	2.4	478	1.1	268.8	★	**2KJ1402 - ■CF13 - ■■S1**	**P02**	27
	2.7	424	1.3	238.65		**2KJ1402 - ■CF13 - ■■R1**	**P02**	27
	3.1	372	1.5	209.23	★	**2KJ1402 - ■CF13 - ■■Q1**	**P02**	27
	FD.48B-LA71C6							
	3.2	358	1.5	268.8	★	**2KJ1402 - ■CC13 - ■■S1**	**P01**	27
	3.6	318	1.7	238.65		**2KJ1402 - ■CC13 - ■■R1**	**P01**	27
	4.1	279	1.9	209.23	★	**2KJ1402 - ■CC13 - ■■Q1**	**P01**	27
	FZ.38B-Z28-LA71B4							
	2.4	339	0.86	587		**2KJ1313 - ■CB13 - ■■G1**		22
	FD.38B-LA71C6							
	3.6	322	0.9	241.91	★	**2KJ1401 - ■CC13 - ■■M1**	**P01**	20
	4.1	277	1.0	207.83		**2KJ1401 - ■CC13 - ■■L1**	**P01**	20
	4.5	255	1.1	191.34	★	**2KJ1401 - ■CC13 - ■■K1**	**P01**	20
	FD.38B-LA71B4							
	5.0	230	1.3	280.41		**2KJ1401 - ■CB13 - ■■N1**		20
	5.8	198	1.5	241.91	★	**2KJ1401 - ■CB13 - ■■M1**		20
	6.7	170	1.7	207.83		**2KJ1401 - ■CB13 - ■■L1**		20
	7.3	157	1.9	191.34	★	**2KJ1401 - ■CB13 - ■■K1**		20
	8.0	142	2.0	173.94		**2KJ1401 - ■CB13 - ■■J1**		20
	FD.28-LA71B4							
	6.7	170	0.88	207.53		**2KJ1400 - ■CB13 - ■■L1**		11
	7.3	156	0.96	191.06	★	**2KJ1400 - ■CB13 - ■■K1**		11
	8.1	142	1.1	173.69		**2KJ1400 - ■CB13 - ■■J1**		11
	9.1	126	1.2	153.74	★	**2KJ1400 - ■CB13 - ■■H1**		11
	10.9	105	1.4	128.77		**2KJ1400 - ■CB13 - ■■G1**		11
	12.8	90	1.7	109.79	★	**2KJ1400 - ■CB13 - ■■F1**		11
	15.0	76	2.0	93.32	★	**2KJ1400 - ■CB13 - ■■E1**		11
	17.3	66	2.3	81.1		**2KJ1400 - ■CB13 - ■■D1**		11
	19.8	58	2.6	70.59	★	**2KJ1400 - ■CB13 - ■■C1**		11
	22	52	2.9	63.68		**2KJ1400 - ■CB13 - ■■B1**		11
	25	46	3.3	56.2		**2KJ1400 - ■CB13 - ■■A1**		11
	FZ.28-LA71B4							
	24	49	3.1	59.65		**2KJ1300 - ■CB13 - ■■C2**		11
	28	41	3.6	50.3	★	**2KJ1300 - ■CB13 - ■■B2**		11

★ Preferred transmission ratio

Shaft designs, see page 3/89 — **1, 2, 3, 5, 6 or 9**

Frequency and voltage, see page 8/20 — **1 to 9**

Gearbox housing mounting position, see page 3/92 — **A, D, E, F, H or M**

*) For mounting type B5-01

© Siemens AG 2011

Selection and ordering data (continued)

Power rating P_{Motor} kW	Output speed n_2 (50 Hz) rpm	Output torque T_2 Nm	Service factor f_B	Gearbox ratio i_{tot}		Order No.	Order code (No. of poles)	Weight *) kg
0.12	**FZ.28-LA71B4**							
	31	37	4.1	44.66		**2KJ1300 - ■CB13 - ■■A2**		11
	36	32	4.7	39.15	★	**2KJ1300 - ■CB13 - ■■X1**		11
	40	29	5.2	35.04		**2KJ1300 - ■CB13 - ■■W1**		11
	45	26	5.9	31.1	★	**2KJ1300 - ■CB13 - ■■V1**		11
	51	22	6.7	27.25		**2KJ1300 - ■CB13 - ■■U1**		11
	58	20	7.6	23.96	★	**2KJ1300 - ■CB13 - ■■T1**		11
	65	18	8.5	21.64		**2KJ1300 - ■CB13 - ■■S1**		11
	74	15	9.7	18.86	★	**2KJ1300 - ■CB13 - ■■R1**		11
	83	14	10.8	16.94		**2KJ1300 - ■CB13 - ■■Q1**		11
	92	12	12.0	15.29	★	**2KJ1300 - ■CB13 - ■■P1**		11
	101	11	13.2	13.87		**2KJ1300 - ■CB13 - ■■N1**		11
	111	10	14.3	12.62	★	**2KJ1300 - ■CB13 - ■■M1**		11
0.18	**FD.188B-D48-LA71C4**							
	0.05	24 072	0.83	25 299		**2KJ1440 - ■CC13 - ■■D1**		638
	0.06	21 833	0.92	22 946	★	**2KJ1440 - ■CC13 - ■■C1**		638
	0.07	18 195	1.1	19 122	★	**2KJ1440 - ■CC13 - ■■A1**		638
	0.07	19 892	1.0	20 906		**2KJ1440 - ■CC13 - ■■B1**		638
	FD.188B-Z48-LA71C4							
	0.08	17 053	1.2	17 537		**2KJ1438 - ■CC13 - ■■A2**		638
	0.09	15 091	1.3	15 519	★	**2KJ1438 - ■CC13 - ■■X1**		638
	0.10	13 719	1.5	14 108		**2KJ1438 - ■CC13 - ■■W1**		638
	0.11	12 325	1.6	12 674	★	**2KJ1438 - ■CC13 - ■■V1**		638
	0.13	10 563	1.9	10 863		**2KJ1438 - ■CC13 - ■■U1**		638
	FD.168B-D48-LA71C4							
	0.08	16 608	0.84	17 454	★	**2KJ1436 - ■CC13 - ■■A1**		455
	FD.168B-Z48-LA71C4							
	0.09	15 566	0.90	16 007		**2KJ1435 - ■CC13 - ■■A2**		454
	0.10	13 774	1.0	14 165	★	**2KJ1435 - ■CC13 - ■■X1**		454
	0.11	12 523	1.1	12 878		**2KJ1435 - ■CC13 - ■■W1**		454
	0.12	11 249	1.2	11 568	★	**2KJ1435 - ■CC13 - ■■V1**		454
	0.14	9 643	1.5	9 916		**2KJ1435 - ■CC13 - ■■U1**		454
	0.15	8 724	1.6	8 971	★	**2KJ1435 - ■CC13 - ■■T1**		454
	0.16	8 053	1.7	8 281		**2KJ1435 - ■CC13 - ■■S1**		454
	0.19	7 002	2.0	7 201	★	**2KJ1435 - ■CC13 - ■■R1**		454
	FD.148B-Z38-LA71C4							
	0.13	10 011	0.9	10 295	★	**2KJ1432 - ■CC13 - ■■S1**		287
	0.15	8 767	1.0	9 016		**2KJ1432 - ■CC13 - ■■R1**		287
	0.17	7 755	1.2	7 975	★	**2KJ1432 - ■CC13 - ■■Q1**		287
	0.19	7 028	1.3	7 227		**2KJ1432 - ■CC13 - ■■P1**		287
	0.22	6 204	1.5	6 380	★	**2KJ1432 - ■CC13 - ■■N1**		287
	0.24	5 596	1.6	5 755		**2KJ1432 - ■CC13 - ■■M1**		287
	0.26	5 076	1.8	5 220	★	**2KJ1432 - ■CC13 - ■■L1**		287
	0.29	4 25	1.9	4 756		**2KJ1432 - ■CC13 - ■■K1**		287

★ Preferred transmission ratio

Shaft designs, see page 3/89 — **1, 2, 3, 5, 6 or 9**

Frequency and voltage, see page 8/20 — **1 to 9**

Gearbox housing mounting position, see page 3/92 — **A, D, E, F, H or M**

*) For mounting type B5-01

© Siemens AG 2011

Selection and ordering data (continued)

Power rating P_{Motor} kW	Output speed n_2 (50 Hz) rpm	Output torque T_2 Nm	Service factor f_B	Gearbox ratio i_{tot}		Order No.	Order code (No. of poles)	Weight *) kg
0.18	**FD.128B-Z38-LA71C4**							
	0.18	7 479	0.82	7 691	★	**2KJ1428 - ■CC13 - ■■Q1**		197
	0.20	6 779	0.9	6 971		**2KJ1428 - ■CC13 - ■■P1**		197
	0.22	5 983	1.0	6 153	★	**2KJ1428 - ■CC13 - ■■N1**		197
	0.25	5 398	1.1	5 551		**2KJ1428 - ■CC13 - ■■M1**		197
	0.27	4 895	1.2	5 034	★	**2KJ1428 - ■CC13 - ■■L1**		197
	0.30	4 461	1.4	4 587		**2KJ1428 - ■CC13 - ■■K1**		197
	0.33	4 079	1.5	4 195	★	**2KJ1428 - ■CC13 - ■■J1**		197
	0.36	3 648	1.7	3 751		**2KJ1428 - ■CC13 - ■■H1**		197
	0.40	3 350	1.8	3 445	★	**2KJ1428 - ■CC13 - ■■G1**		197
	0.44	3 019	2.0	3 105		**2KJ1428 - ■CC13 - ■■F1**		197
	FD.108B-Z38-LA71C4							
	0.34	3 967	0.86	4 079	★	**2KJ1426 - ■CC13 - ■■X1**		122
	0.38	3 547	0.96	3 648		**2KJ1426 - ■CC13 - ■■W1**		122
	0.41	3 257	1.0	3 349	★	**2KJ1426 - ■CC13 - ■■V1**		122
	0.45	2 936	1.2	3 019		**2KJ1426 - ■CC13 - ■■U1**		122
	0.53	2 524	1.3	2 596	★	**2KJ1426 - ■CC13 - ■■T1**		122
	0.59	2 251	1.5	2 315		**2KJ1426 - ■CC13 - ■■S1**		122
	0.64	2 067	1.6	2 126	★	**2KJ1426 - ■CC13 - ■■R1**		122
	0.72	1 863	1.8	1 916		**2KJ1426 - ■CC13 - ■■Q1**		122
	FD.88B-Z28-LA71C4							
	0.61	2 188	0.87	2 250	★	**2KJ1422 - ■CC13 - ■■R1**		73
	0.68	1 965	0.97	2 021		**2KJ1422 - ■CC13 - ■■Q1**		73
	0.75	1 774	1.1	1 824	★	**2KJ1422 - ■CC13 - ■■P1**		73
	0.83	1 608	1.2	1 654		**2KJ1422 - ■CC13 - ■■N1**		73
	0.91	1 464	1.3	1 505	★	**2KJ1422 - ■CC13 - ■■M1**		73
	1.0	1 294	1.5	1 331		**2KJ1422 - ■CC13 - ■■L1**		73
	1.1	1 195	1.6	1 229	★	**2KJ1422 - ■CC13 - ■■K1**		73
	1.3	1 029	1.8	1 058		**2KJ1422 - ■CC13 - ■■J1**		73
	1.4	935	2.0	962	★	**2KJ1422 - ■CC13 - ■■H1**		73
	FD.88B-LA80S8							
	1.7	1 031	1.8	404.92		**2KJ1404 - ■DB13 - ■■V1**	**P02**	78
	FD.68B-Z28-LA71C4							
	1.1	1 230	0.81	1 265		**2KJ1417 - ■CC13 - ■■P1**		43
	1.2	1 111	0.90	1 142	★	**2KJ1417 - ■CC13 - ■■N1**		43
	1.3	1 007	0.99	1 036		**2KJ1417 - ■CC13 - ■■M1**		43
	1.5	916	1.1	942	★	**2KJ1417 - ■CC13 - ■■L1**		43
	1.6	810	1.2	833		**2KJ1417 - ■CC13 - ■■K1**		43
	1.8	748	1.3	769	★	**2KJ1417 - ■CC13 - ■■J1**		43
	2.1	644	1.6	662		**2KJ1417 - ■CC13 - ■■H1**		43
	FD.68B-LA80S8							
	2.3	754	1.3	296.18	★	**2KJ1403 - ■DB13 - ■■S1**	**P02**	47
	2.6	671	1.5	263.39		**2KJ1403 - ■DB13 - ■■R1**	**P02**	47

★ Preferred transmission ratio

Shaft designs, see page 3/89 — **1, 2, 3, 5, 6 or 9**

Frequency and voltage, see page 8/20 — **1 to 9**

Gearbox housing mounting position, see page 3/92 — **A, D, E, F, H or M**

*) For mounting type B5-01

© Siemens AG 2011

Selection and ordering data (continued)

Power rating P_{Motor} kW	Output speed n_2 (50 Hz) rpm	Output torque T_2 Nm	Service factor f_B	Gearbox ratio i_{tot}		Order No.	Order code (No. of poles)	Weight *) kg
0.18	**FD.68B-LA71S6**							
	2.9	599	1.7	296.18	★	**2KJ1403 - ■CD13 - ■■S1**	**P01**	43
	3.2	533	1.9	263.39		**2KJ1403 - ■CD13 - ■■R1**	**P01**	43
	FD.48B-Z28-LA71C4							
	2.2	607	0.89	624		**2KJ1413 - ■CC13 - ■■H1**		29
	FD.48B-LA80S8							
	2.8	608	0.89	238.65		**2KJ1402 - ■DB13 - ■■R1**	**P02**	31
	FD.48B-LA71S6							
	3.2	544	0.99	268.8	★	**2KJ1402 - ■CD13 - ■■S1**	**P01**	27
	3.6	483	1.1	238.65		**2KJ1402 - ■CD13 - ■■R1**	**P01**	27
	4.1	423	1.3	209.23	★	**2KJ1402 - ■CD13 - ■■Q1**	**P01**	27
	4.5	379	1.4	187.24		**2KJ1402 - ■CD13 - ■■P1**	**P01**	27
	FD.48B-LA71C4							
	5.1	337	1.6	268.8	★	**2KJ1402 - ■CC13 - ■■S1**		27
	5.7	299	1.8	238.65		**2KJ1402 - ■CC13 - ■■R1**		27
	6.5	263	2.1	209.23	★	**2KJ1402 - ■CC13 - ■■Q1**		27
	FD.38B-LA71C4							
	4.9	352	0.82	280.41		**2KJ1401 - ■CC13 - ■■N1**		20
	5.7	304	0.96	241.91	★	**2KJ1401 - ■CC13 - ■■M1**		20
	6.6	261	1.1	207.83		**2KJ1401 - ■CC13 - ■■L1**		20
	7.2	240	1.2	191.34	★	**2KJ1401 - ■CC13 - ■■K1**		20
	7.9	218	1.3	173.94		**2KJ1401 - ■CC13 - ■■J1**		20
	8.9	193	1.5	153.96	★	**2KJ1401 - ■CC13 - ■■H1**		20
	10.6	162	1.8	128.95		**2KJ1401 - ■CC13 - ■■G1**		20
	12.5	138	2.1	109.95	★	**2KJ1401 - ■CC13 - ■■F1**		20
	FD.28-LA71C4							
	10.6	162	0.93	128.77		**2KJ1400 - ■CC13 - ■■G1**		11
	12.5	138	1.1	109.79	★	**2KJ1400 - ■CC13 - ■■F1**		11
	14.7	117	1.3	93.32	★	**2KJ1400 - ■CC13 - ■■E1**		11
	16.9	102	1.5	81.1		**2KJ1400 - ■CC13 - ■■D1**		11
	19.4	89	1.7	70.59	★	**2KJ1400 - ■CC13 - ■■C1**		11
	22	80	1.9	63.68		**2KJ1400 - ■CC13 - ■■B1**		11
	24	70	2.1	56.2		**2KJ1400 - ■CC13 - ■■A1**		11
	FZ.28-LA71C4							
	23	75	2.0	59.65		**2KJ1300 - ■CC13 - ■■C2**		11
	27	63	2.4	50.3	★	**2KJ1300 - ■CC13 - ■■B2**		11
	31	56	2.7	44.66		**2KJ1300 - ■CC13 - ■■A2**		11
	35	49	3.1	39.15	★	**2KJ1300 - ■CC13 - ■■X1**		11
	39	44	3.4	35.04		**2KJ1300 - ■CC13 - ■■W1**		11
	44	39	3.8	31.1	★	**2KJ1300 - ■CC13 - ■■V1**		11
	50	34	4.4	27.25		**2KJ1300 - ■CC13 - ■■U1**		11
	57	30	5.0	23.96	★	**2KJ1300 - ■CC13 - ■■T1**		11
	63	27	5.5	21.64		**2KJ1300 - ■CC13 - ■■S1**		11
	73	24	6.3	18.86	★	**2KJ1300 - ■CC13 - ■■R1**		11

★ Preferred transmission ratio

Shaft designs, see page 3/89 — **1, 2, 3, 5, 6 or 9**

Frequency and voltage, see page 8/20 — **1 to 9**

Gearbox housing mounting position, see page 3/92 — **A, D, E, F, H or M**

*) For mounting type B5-01

© Siemens AG 2011

3

Selection and ordering data (continued)

Power rating P_{Motor} kW	Output speed n_2 (50 Hz) rpm	Output torque T_2 Nm	Service factor f_B	Gearbox ratio i_{tot}		Order No.	Order code (No. of poles)	Weight *) kg
0.18	**FZ.28-LA71C4**							
	81	21	7.1	16.94		**2KJ1300 - ■CC13 - ■■Q1**		11
	90	19	7.8	15.29	★	**2KJ1300 - ■CC13 - ■■P1**		11
	99	17	8.6	13.87		**2KJ1300 - ■CC13 - ■■N1**		11
	109	16	9.3	12.62	★	**2KJ1300 - ■CC13 - ■■M1**		11
	123	14	10.1	11.16		**2KJ1300 - ■CC13 - ■■L1**		11
	133	13	10.7	10.3	★	**2KJ1300 - ■CC13 - ■■K1**		11
	154	11	11.8	8.87		**2KJ1300 - ■CC13 - ■■J1**		11
	170	10	12.6	8.06	★	**2KJ1300 - ■CC13 - ■■H1**		11
	190	9	13.9	7.2	★	**2KJ1300 - ■CC13 - ■■G1**		11
	210	8.2	14.9	6.53		**2KJ1300 - ■CC13 - ■■F1**		11
0.25	**FD.188B-Z48-LA71S4**							
	0.09	22 462	0.89	15 519	★	**2KJ1438 - ■CD13 - ■■X1**		638
	0.10	20 419	0.98	14 108		**2KJ1438 - ■CD13 - ■■W1**		638
	0.11	18 344	1.1	12 674	★	**2KJ1438 - ■CD13 - ■■V1**		638
	0.12	15 723	1.3	10 863		**2KJ1438 - ■CD13 - ■■U1**		638
	0.14	14 226	1.4	9 829	★	**2KJ1438 - ■CD13 - ■■T1**		638
	0.15	13 132	1.5	9 073		**2KJ1438 - ■CD13 - ■■S1**		638
	0.17	11 418	1.8	7 889	★	**2KJ1438 - ■CD13 - ■■R1**		638
	0.19	10 367	1.9	7 163		**2KJ1438 - ■CD13 - ■■Q1**		638
	FD.168B-Z48-LA71S4							
	0.12	16 743	0.84	11 568	★	**2KJ1435 - ■CD13 - ■■V1**		454
	0.14	14 352	0.98	9 916		**2KJ1435 - ■CD13 - ■■U1**		454
	0.15	12 984	1.1	8 971	★	**2KJ1435 - ■CD13 - ■■T1**		454
	0.16	11 986	1.2	8 281		**2KJ1435 - ■CD13 - ■■S1**		454
	0.19	10 422	1.3	7 201	★	**2KJ1435 - ■CD13 - ■■R1**		454
	0.21	9 463	1.5	6 538		**2KJ1435 - ■CD13 - ■■Q1**		454
	0.23	8 641	1.6	5 970	★	**2KJ1435 - ■CD13 - ■■P1**		454
	0.25	7 927	1.8	5 477		**2KJ1435 - ■CD13 - ■■N1**		454
	0.27	7 303	1.9	5 046	★	**2KJ1435 - ■CD13 - ■■M1**		454
	FD.148B-Z38-LA71S4							
	0.19	10 460	0.86	7 227		**2KJ1432 - ■CD13 - ■■P1**		287
	0.21	9 234	0.97	6 380	★	**2KJ1432 - ■CD13 - ■■N1**		287
	0.24	8 330	1.1	5 755		**2KJ1432 - ■CD13 - ■■M1**		287
	0.26	7 555	1.2	5 220	★	**2KJ1432 - ■CD13 - ■■L1**		287
	0.28	6 884	1.3	4 756		**2KJ1432 - ■CD13 - ■■K1**		287
	0.31	6 296	1.4	4 350	★	**2KJ1432 - ■CD13 - ■■J1**		287
	0.35	5 629	1.6	3 889		**2KJ1432 - ■CD13 - ■■H1**		287
	0.38	5 169	1.7	3 571	★	**2KJ1432 - ■CD13 - ■■G1**		287
	0.42	4 659	1.9	3 219		**2KJ1432 - ■CD13 - ■■F1**		287
	FD.128B-Z38-LA71S4							
	0.27	7 286	0.84	5 034	★	**2KJ1428 - ■CD13 - ■■L1**		197
	0.29	6 639	0.92	4 587		**2KJ1428 - ■CD13 - ■■K1**		197
	0.32	6 072	1.0	4 195	★	**2KJ1428 - ■CD13 - ■■J1**		197

★ Preferred transmission ratio

Shaft designs, see page 3/89 — **1, 2, 3, 5, 6 or 9**

Frequency and voltage, see page 8/20 — **1 to 9**

Gearbox housing mounting position, see page 3/92 — **A, D, E, F, H or M**

*) For mounting type B5-01

© Siemens AG 2011

Selection and ordering data (continued)

Power rating P_{Motor} kW	Output speed n_2 (50 Hz) rpm	Output torque T_2 Nm	Service factor f_B	Gearbox ratio i_{tot}		Order No.	Order code (No. of poles)	Weight *) kg
0.25	**FD.128B-Z38-LA71S4**							
	0.36	5 429	1.1	3 751		**2KJ1428 - ■CD13 - ■■H1**		197
	0.39	4 986	1.2	3 445	★	**2KJ1428 - ■CD13 - ■■G1**		197
	0.44	4 494	1.4	3 105		**2KJ1428 - ■CD13 - ■■F1**		197
	0.51	3 864	1.6	2 670	★	**2KJ1428 - ■CD13 - ■■E1**		197
	0.57	3 446	1.8	2 381		**2KJ1428 - ■CD13 - ■■D1**		197
	0.62	3 164	1.9	2 186	★	**2KJ1428 - ■CD13 - ■■C1**		197
	FD.108B-Z38-LA71S4							
	0.52	3 757	0.9	2 596	★	**2KJ1426 - ■CD13 - ■■T1**		122
	0.58	3 351	1.0	2 315		**2KJ1426 - ■CD13 - ■■S1**		122
	0.64	3 077	1.1	2 126	★	**2KJ1426 - ■CD13 - ■■R1**		122
	0.70	2 773	1.2	1 916		**2KJ1426 - ■CD13 - ■■Q1**		122
	0.82	2 384	1.4	1 647	★	**2KJ1426 - ■CD13 - ■■P1**		122
	0.88	2 209	1.5	1 526		**2KJ1426 - ■CD13 - ■■N1**		122
	0.98	2 003	1.7	1 384	★	**2KJ1426 - ■CD13 - ■■M1**		122
	1.1	1 825	1.9	1 261		**2KJ1426 - ■CD13 - ■■L1**		122
	1.2	1 669	2.0	1 153	★	**2KJ1426 - ■CD13 - ■■K1**		122
	FD.88B-Z28-LA71S4							
	0.9	2 178	0.87	1 505	★	**2KJ1422 - ■CD13 - ■■M1**		73
	1.0	1 926	0.99	1 331		**2KJ1422 - ■CD13 - ■■L1**		73
	1.1	1 779	1.1	1 229	★	**2KJ1422 - ■CD13 - ■■K1**		73
	1.3	1 531	1.2	1 058		**2KJ1422 - ■CD13 - ■■J1**		73
	1.4	1 392	1.4	962	★	**2KJ1422 - ■CD13 - ■■H1**		73
	1.5	1 265	1.5	874	★	**2KJ1422 - ■CD13 - ■■G1**		73
	FD.88B-LA80M8							
	1.7	1 411	1.3	404.92		**2KJ1404 - ■DC13 - ■■V1**	**P02**	78
	1.9	1 249	1.5	358.33	★	**2KJ1404 - ■DC13 - ■■U1**	**P02**	78
	FD.88B-LA71M6							
	2.1	1 124	1.7	404.92		**2KJ1404 - ■CE13 - ■■V1**	**P01**	74
	2.4	995	1.9	358.33	★	**2KJ1404 - ■CE13 - ■■U1**	**P01**	74
	FD.68B-Z28-LA71S4							
	1.6	1 206	0.83	833		**2KJ1417 - ■CD13 - ■■K1**		43
	1.8	1 113	0.9	769	★	**2KJ1417 - ■CD13 - ■■J1**		43
	2.0	958	1.0	662		**2KJ1417 - ■CD13 - ■■H1**		43
	FD.68B-LA80M8							
	2.3	1 032	0.97	296.18	★	**2KJ1403 - ■DC13 - ■■S1**	**P02**	47
	2.6	918	1.1	263.39		**2KJ1403 - ■DC13 - ■■R1**	**P02**	47
	FD.68B-LA71M6							
	2.9	822	1.2	296.18	★	**2KJ1403 - ■CE13 - ■■S1**	**P01**	43
	3.3	731	1.4	263.39		**2KJ1403 - ■CE13 - ■■R1**	**P01**	43
	3.8	634	1.6	228.48	★	**2KJ1403 - ■CE13 - ■■Q1**	**P01**	43
	4.0	593	1.7	213.48		**2KJ1403 - ■CE13 - ■■P1**	**P01**	43

★ Preferred transmission ratio

Shaft designs, see page 3/89 — **1, 2, 3, 5, 6 or 9**

Frequency and voltage, see page 8/20 — **1 to 9**

Gearbox housing mounting position, see page 3/92 — **A, D, E, F, H or M**

*) For mounting type B5-01

© Siemens AG 2011

Selection and ordering data (continued)

Power rating P_{Motor} kW	Output speed n_2 (50 Hz) rpm	Output torque T_2 Nm	Service factor f_B	Gearbox ratio i_{tot}		Order No.	Order code (No. of poles)	Weight *) kg
0.25	**FD.68B-LA71S4**							
	4.6	524	1.9	296.18	★	**2KJ1403 - ■CD13 - ■■S1**		43
	5.1	466	2.1	263.39		**2KJ1403 - ■CD13 - ■■R1**		43
	FD.48B-LA71M6							
	3.6	663	0.82	238.65		**2KJ1402 - ■CE13 - ■■R1**	**P01**	27
	4.1	581	0.93	209.23	★	**2KJ1402 - ■CE13 - ■■Q1**	**P01**	27
	4.6	520	1.0	187.24		**2KJ1402 - ■CE13 - ■■P1**	**P01**	27
	FD.48B-LA71S4							
	5.0	475	1.1	268.8	★	**2KJ1402 - ■CD13 - ■■S1**		27
	5.7	422	1.3	238.65		**2KJ1402 - ■CD13 - ■■R1**		27
	6.5	370	1.5	209.23	★	**2KJ1402 - ■CD13 - ■■Q1**		27
	7.2	331	1.6	187.24		**2KJ1402 - ■CD13 - ■■P1**		27
	8.1	294	1.8	166.19	★	**2KJ1402 - ■CD13 - ■■N1**		27
	9.3	258	2.1	145.63		**2KJ1402 - ■CD13 - ■■M1**		27
	FD.38B-LA71S4							
	7.1	338	0.86	191.34	★	**2KJ1401 - ■CD13 - ■■K1**		20
	7.8	308	0.94	173.94		**2KJ1401 - ■CD13 - ■■J1**		20
	8.8	272	1.1	153.96	★	**2KJ1401 - ■CD13 - ■■H1**		20
	10.5	228	1.3	128.95		**2KJ1401 - ■CD13 - ■■G1**		20
	12.3	194	1.5	109.95	★	**2KJ1401 - ■CD13 - ■■F1**		20
	14.4	165	1.8	93.46		**2KJ1401 - ■CD13 - ■■E1**		20
	16.6	144	2.0	81.22	★	**2KJ1401 - ■CD13 - ■■D1**		20
	19.1	125	2.3	70.7		**2KJ1401 - ■CD13 - ■■C1**		20
	FZ.38B-LA71S4							
	24	100	2.1	56.72	★	**2KJ1301 - ■CD13 - ■■B2**		19
	FD.28-LA71S4							
	14.5	165	0.91	93.32	★	**2KJ1400 - ■CD13 - ■■E1**		11
	16.6	143	1.0	81.1		**2KJ1400 - ■CD13 - ■■D1**		11
	19.1	125	1.2	70.59	★	**2KJ1400 - ■CD13 - ■■C1**		11
	21	113	1.3	63.68		**2KJ1400 - ■CD13 - ■■B1**		11
	24	99	1.5	56.2		**2KJ1400 - ■CD13 - ■■A1**		11
	FZ.28-LA71S4							
	23	105	1.4	59.65		**2KJ1300 - ■CD13 - ■■C2**		11
	27	89	1.7	50.3	★	**2KJ1300 - ■CD13 - ■■B2**		11
	30	79	1.9	44.66		**2KJ1300 - ■CD13 - ■■A2**		11
	34	69	2.2	39.15	★	**2KJ1300 - ■CD13 - ■■X1**		11
	38	62	2.4	35.04		**2KJ1300 - ■CD13 - ■■W1**		11
	43	55	2.7	31.1	★	**2KJ1300 - ■CD13 - ■■V1**		11
	50	48	3.1	27.25		**2KJ1300 - ■CD13 - ■■U1**		11
	56	42	3.5	23.96	★	**2KJ1300 - ■CD13 - ■■T1**		11
	62	38	3.9	21.64		**2KJ1300 - ■CD13 - ■■S1**		11
	72	33	4.5	18.86	★	**2KJ1300 - ■CD13 - ■■R1**		11
	80	30	5.0	16.94		**2KJ1300 - ■CD13 - ■■Q1**		11
	88	27	5.5	15.29	★	**2KJ1300 - ■CD13 - ■■P1**		11

★ Preferred transmission ratio

Shaft designs, see page 3/89 — **1, 2, 3, 5, 6 or 9**

Frequency and voltage, see page 8/20 — **1 to 9**

Gearbox housing mounting position, see page 3/92 — **A, D, E, F, H or M**

*) For mounting type B5-01

© Siemens AG 2011

Selection and ordering data (continued)

Power rating P_{Motor} kW	Output speed n_2 (50 Hz) rpm	Output torque T_2 Nm	Service factor f_B	Gearbox ratio i_{tot}		Order No.	Order code (No. of poles)	Weight *) kg
0.25	**FZ.28-LA71S4**							
	97	24	6.1	13.87		**2KJ1300 - ■CD13 - ■■N1**		11
	107	22	6.6	12.62	★	**2KJ1300 - ■CD13 - ■■M1**		11
	121	20	7.2	11.16		**2KJ1300 - ■CD13 - ■■L1**		11
	131	18	7.6	10.3	★	**2KJ1300 - ■CD13 - ■■K1**		11
	152	16	8.4	8.87		**2KJ1300 - ■CD13 - ■■J1**		11
	167	14	8.9	8.06	★	**2KJ1300 - ■CD13 - ■■H1**		11
	188	13	9.9	7.2	★	**2KJ1300 - ■CD13 - ■■G1**		11
	207	12	10.6	6.53		**2KJ1300 - ■CD13 - ■■F1**		11
	227	10	11.2	5.94	★	**2KJ1300 - ■CD13 - ■■E1**		11
	257	9.3	12.0	5.25		**2KJ1300 - ■CD13 - ■■D1**		11
	278	8.6	12.8	4.85	★	**2KJ1300 - ■CD13 - ■■C1**		11
	323	7.4	13.4	4.18		**2KJ1300 - ■CD13 - ■■B1**		11
	355	6.7	14.3	3.8	★	**2KJ1300 - ■CD13 - ■■A1**		11
0.37	**FD.188B-Z48-LA71M4**							
	0.13	23 944	0.84	10 863		**2KJ1438 - ■CE13 - ■■U1**		638
	0.14	21 665	0.92	9 829	★	**2KJ1438 - ■CE13 - ■■T1**		638
	0.15	19 998	1.0	9 073		**2KJ1438 - ■CE13 - ■■S1**		638
	0.17	17 389	1.2	7 889	★	**2KJ1438 - ■CE13 - ■■R1**		638
	0.19	15 788	1.3	7 163		**2KJ1438 - ■CE13 - ■■Q1**		638
	0.21	14 415	1.4	6 540	★	**2KJ1438 - ■CE13 - ■■P1**		638
	0.23	13 227	1.5	6 001		**2KJ1438 - ■CE13 - ■■N1**		638
	0.25	12 187	1.6	5 529	★	**2KJ1438 - ■CE13 - ■■M1**		638
	0.27	11 067	1.8	5 021		**2KJ1438 - ■CE13 - ■■L1**		638
	0.30	10 082	2.0	4 574	★	**2KJ1438 - ■CE13 - ■■K1**		638
	FD.168B-Z48-LA71M4							
	0.19	15 872	0.88	7 201	★	**2KJ1435 - ■CE13 - ■■R1**		454
	0.21	14 411	0.97	6 538		**2KJ1435 - ■CE13 - ■■Q1**		454
	0.23	13 159	1.1	5 970	★	**2KJ1435 - ■CE13 - ■■P1**		454
	0.25	12 072	1.2	5 477		**2KJ1435 - ■CE13 - ■■N1**		454
	0.27	11 122	1.3	5 046	★	**2KJ1435 - ■CE13 - ■■M1**		454
	0.30	10 102	1.4	4 583		**2KJ1435 - ■CE13 - ■■L1**		454
	0.33	9 202	1.5	4 175	★	**2KJ1435 - ■CE13 - ■■K1**		454
	0.36	8 431	1.7	3 825		**2KJ1435 - ■CE13 - ■■J1**		454
	0.40	7 523	1.9	3 413	★	**2KJ1435 - ■CE13 - ■■H1**		454
	FD.148B-Z38-LA71M4							
	0.29	10 483	0.86	4 756		**2KJ1432 - ■CE13 - ■■K1**		287
	0.32	9 588	0.94	4 350	★	**2KJ1432 - ■CE13 - ■■J1**		287
	0.35	8 572	1.0	3 889		**2KJ1432 - ■CE13 - ■■H1**		287
	0.38	7 871	1.1	3 571	★	**2KJ1432 - ■CE13 - ■■G1**		287
	0.43	7 095	1.3	3 219		**2KJ1432 - ■CE13 - ■■F1**		287
	0.50	6 101	1.5	2 768	★	**2KJ1432 - ■CE13 - ■■E1**		287
	0.56	5 440	1.7	2 468		**2KJ1432 - ■CE13 - ■■D1**		287
	0.60	4 995	1.8	2 266	★	**2KJ1432 - ■CE13 - ■■C1**		287

★ Preferred transmission ratio

Shaft designs, see page 3/89 — **1, 2, 3, 5, 6 or 9**

Frequency and voltage, see page 8/20 — **1 to 9**

Gearbox housing mounting position, see page 3/92 — **A, D, E, F, H or M**

*) For mounting type B5-01

© Siemens AG 2011

3

Selection and ordering data (continued)

Power rating P_{Motor} kW	Output speed n_2 (50 Hz) rpm	Output torque T_2 Nm	Service factor f_B	Gearbox ratio i_{tot}		Order No.	Order code (No. of poles)	Weight *) kg
0.37	**FD.148B-Z38-LA71M4**							
	0.67	4 503	2.0	2 043		**2KJ1432 - ■CE13 - ■■B1**		287
	FD.128B-Z38-LA71M4							
	0.40	7 593	0.80	3 445	★	**2KJ1428 - ■CE13 - ■■G1**		197
	0.44	6 844	0.89	3 105		**2KJ1428 - ■CE13 - ■■F1**		197
	0.51	5 885	1.0	2 670	★	**2KJ1428 - ■CE13 - ■■E1**		197
	0.57	5 248	1.2	2 381		**2KJ1428 - ■CE13 - ■■D1**		197
	0.63	4 818	1.3	2 186	★	**2KJ1428 - ■CE13 - ■■C1**		197
	0.70	4 342	1.4	1 970		**2KJ1428 - ■CE13 - ■■B1**		197
	0.81	3 734	1.6	1 694	★	**2KJ1428 - ■CE13 - ■■A1**		197
	FD.128B-Z48-LA71M4							
	0.91	3 315	1.8	1 504		**2KJ1431 - ■CE13 - ■■L1**		206
	1.0	3 020	2.0	1 370	★	**2KJ1431 - ■CE13 - ■■K1**		206
	FD.108B-Z38-LA71M4							
	0.72	4 223	0.81	1 916		**2KJ1426 - ■CE13 - ■■Q1**		122
	0.83	3 630	0.94	1 647	★	**2KJ1426 - ■CE13 - ■■P1**		122
	0.90	3 364	1.0	1 526		**2KJ1426 - ■CE13 - ■■N1**		122
	0.99	3 051	1.1	1 384	★	**2KJ1426 - ■CE13 - ■■M1**		122
	1.1	2 779	1.2	1 261		**2KJ1426 - ■CE13 - ■■L1**		122
	1.2	2 541	1.3	1 153	★	**2KJ1426 - ■CE13 - ■■K1**		122
	1.3	2 272	1.5	1 031		**2KJ1426 - ■CE13 - ■■J1**		122
	1.4	2 087	1.6	947	★	**2KJ1426 - ■CE13 - ■■H1**		122
	FD.108B-LA90SA8							
	1.6	2 222	1.5	424.49	★	**2KJ1405 - ■EB13 - ■■V1**	**P02**	128
	1.8	2 004	1.7	382.79		**2KJ1405 - ■EB13 - ■■U1**	**P02**	128
	2.0	1 807	1.9	345.19	★	**2KJ1405 - ■EB13 - ■■T1**	**P02**	128
	FD.88B-Z28-LA71M4							
	1.3	2 332	0.81	1 058		**2KJ1422 - ■CE13 - ■■J1**		73
	1.4	2 120	0.90	962	★	**2KJ1422 - ■CE13 - ■■H1**		73
	1.6	1 926	0.99	874	★	**2KJ1422 - ■CE13 - ■■G1**		73
	FD.88B-LA90SA8							
	1.9	1 876	1.0	358.33	★	**2KJ1404 - ■EB13 - ■■U1**	**P02**	81
	FD.88B-LA80S6							
	2.3	1 555	1.2	404.92		**2KJ1404 - ■DB13 - ■■V1**	**P01**	78
	2.6	1 376	1.4	358.33	★	**2KJ1404 - ■DB13 - ■■U1**	**P01**	78
	2.8	1 251	1.5	325.76		**2KJ1404 - ■DB13 - ■■T1**	**P01**	78
	3.1	1 124	1.7	292.64	★	**2KJ1404 - ■DB13 - ■■S1**	**P01**	78
	FD.88B-LA71M4							
	3.4	1 044	1.8	404.92		**2KJ1404 - ■CE13 - ■■V1**		74
	FD.68B-LA80S6							
	3.1	1 138	0.88	296.18	★	**2KJ1403 - ■DB13 - ■■S1**	**P01**	47
	3.5	1 012	0.99	263.39		**2KJ1403 - ■DB13 - ■■R1**	**P01**	47
	4.0	878	1.1	228.48	★	**2KJ1403 - ■DB13 - ■■Q1**	**P01**	47
	4.3	820	1.2	213.48		**2KJ1403 - ■DB13 - ■■P1**	**P01**	47

★ Preferred transmission ratio

Shaft designs, see page 3/89 — **1, 2, 3, 5, 6 or 9**

Frequency and voltage, see page 8/20 — **1 to 9**

Gearbox housing mounting position, see page 3/92 — **A, D, E, F, H or M**

*) For mounting type B5-01

© Siemens AG 2011

Selection and ordering data (continued)

Power rating P_{Motor} kW	Output speed n_2 (50 Hz) rpm	Output torque T_2 Nm	Service factor f_B	Gearbox ratio i_{tot}		Order No.	Order code (No. of poles)	Weight *) kg
0.37	**FD.68B-LA71M4**							
	4.6	764	1.3	296.18	★	**2KJ1403 - ■CE13 - ■■S1**		43
	5.2	679	1.5	263.39		**2KJ1403 - ■CE13 - ■■R1**		43
	6.0	589	1.7	228.48	★	**2KJ1403 - ■CE13 - ■■Q1**		43
	6.4	551	1.8	213.48		**2KJ1403 - ■CE13 - ■■P1**		43
	7.3	484	2.1	187.76	★	**2KJ1403 - ■CE13 - ■■N1**		43
	FD.48B-LA71M4							
	5.7	616	0.88	238.65		**2KJ1402 - ■CE13 - ■■R1**		27
	6.5	540	1.0	209.23	★	**2KJ1402 - ■CE13 - ■■Q1**		27
	7.3	483	1.1	187.24		**2KJ1402 - ■CE13 - ■■P1**		27
	8.2	429	1.3	166.19	★	**2KJ1402 - ■CE13 - ■■N1**		27
	9.4	376	1.4	145.63		**2KJ1402 - ■CE13 - ■■M1**		27
	10.7	330	1.6	128.04	★	**2KJ1402 - ■CE13 - ■■L1**		27
	11.8	298	1.8	115.68		**2KJ1402 - ■CE13 - ■■K1**		27
	13.6	260	2.1	100.8	★	**2KJ1402 - ■CE13 - ■■J1**		27
	FD.38B-LA71M4							
	10.6	333	0.87	128.95		**2KJ1401 - ■CE13 - ■■G1**		20
	12.5	284	1.0	109.95	★	**2KJ1401 - ■CE13 - ■■F1**		20
	14.7	241	1.2	93.46	★	**2KJ1401 - ■CE13 - ■■E1**		20
	16.9	209	1.4	81.22		**2KJ1401 - ■CE13 - ■■D1**		20
	19.4	182	1.6	70.7	★	**2KJ1401 - ■CE13 - ■■C1**		20
	22	164	1.8	63.77		**2KJ1401 - ■CE13 - ■■B1**		20
	24	145	2.0	56.28		**2KJ1401 - ■CE13 - ■■A1**		20
	FZ.38B-LA71M4							
	24	146	1.4	56.72	★	**2KJ1301 - ■CE13 - ■■B2**		19
	27	130	1.8	50.44		**2KJ1301 - ■CE13 - ■■A2**		19
	31	113	2.2	43.75	★	**2KJ1301 - ■CE13 - ■■X1**		19
	34	105	2.6	40.88		**2KJ1301 - ■CE13 - ■■W1**		19
	FD.28-LA71M4							
	19.4	182	0.82	70.59	★	**2KJ1400 - ■CE13 - ■■C1**		11
	22	164	0.91	63.68		**2KJ1400 - ■CE13 - ■■B1**		11
	24	145	1.0	56.2		**2KJ1400 - ■CE13 - ■■A1**		11
	FZ.28-LA71M4							
	23	154	0.97	59.65		**2KJ1300 - ■CE13 - ■■C2**		11
	27	130	1.2	50.3	★	**2KJ1300 - ■CE13 - ■■B2**		11
	31	115	1.3	44.66		**2KJ1300 - ■CE13 - ■■A2**		11
	35	101	1.5	39.15	★	**2KJ1300 - ■CE13 - ■■X1**		11
	39	90	1.7	35.04		**2KJ1300 - ■CE13 - ■■W1**		11
	44	80	1.9	31.1	★	**2KJ1300 - ■CE13 - ■■V1**		11
	50	70	2.1	27.25		**2KJ1300 - ■CE13 - ■■U1**		11
	57	62	2.4	23.96	★	**2KJ1300 - ■CE13 - ■■T1**		11
	63	56	2.7	21.64		**2KJ1300 - ■CE13 - ■■S1**		11
	73	49	3.1	18.86	★	**2KJ1300 - ■CE13 - ■■R1**		11

★ Preferred transmission ratio

Shaft designs, see page 3/89 — **1, 2, 3, 5, 6 or 9**

Frequency and voltage, see page 8/20 — **1 to 9**

Gearbox housing mounting position, see page 3/92 — **A, D, E, F, H or M**

*) For mounting type B5-01

© Siemens AG 2011

Selection and ordering data (continued)

Power rating P_{Motor} kW	Output speed n_2 (50 Hz) rpm	Output torque T_2 Nm	Service factor f_B	Gearbox ratio i_{tot}		Order No.	Order code (No. of poles)	Weight *) kg
0.55	**FD.188B-Z48-LA71ZMP4**							
	0.19	24 147	0.83	7 163		**2KJ1438 - ■CG13 - ■■Q1**		638
	0.21	22 047	0.91	6 540	★	**2KJ1438 - ■CG13 - ■■P1**		638
	0.23	20 230	0.99	6 001		**2KJ1438 - ■CG13 - ■■N1**		638
	0.25	18 639	1.1	5 529	★	**2KJ1438 - ■CG13 - ■■M1**		638
	0.27	16 926	1.2	5 021		**2KJ1438 - ■CG13 - ■■L1**		638
	0.30	15 419	1.3	4 574	★	**2KJ1438 - ■CG13 - ■■K1**		638
	0.33	14 125	1.4	4 190		**2KJ1438 - ■CG13 - ■■J1**		638
	0.37	12 604	1.6	3 739	★	**2KJ1438 - ■CG13 - ■■H1**		638
	FD.168B-Z48-LA71ZMP4							
	0.27	17 010	0.82	5 046	★	**2KJ1435 - ■CG13 - ■■M1**		454
	0.30	15 450	0.91	4 583		**2KJ1435 - ■CG13 - ■■L1**		454
	0.33	14 074	0.99	4 175	★	**2KJ1435 - ■CG13 - ■■K1**		454
	0.36	12 894	1.1	3 825		**2KJ1435 - ■CG13 - ■■J1**		454
	0.40	11 505	1.2	3 413	★	**2KJ1435 - ■CG13 - ■■H1**		454
	0.65	7 143	2.0	2 119	★	**2KJ1435 - ■CG13 - ■■D1**		454
	FD.148B-Z48-LA71ZMP4							
	0.84	5 508	1.6	1 634		**2KJ1434 - ■CG13 - ■■K1**		296
	0.92	5 020	1.8	1 489	★	**2KJ1434 - ■CG13 - ■■J1**		296
	1.0	4 598	2.0	1 364		**2KJ1434 - ■CG13 - ■■H1**		296
	FD.148B-Z38-LA71ZMP4							
	0.43	10 852	0.83	3 219		**2KJ1432 - ■CG13 - ■■F1**		287
	0.50	9 331	0.96	2 768	★	**2KJ1432 - ■CG13 - ■■E1**		287
	0.56	8 320	1.1	2 468		**2KJ1432 - ■CG13 - ■■D1**		287
	0.60	7 639	1.2	2 266	★	**2KJ1432 - ■CG13 - ■■C1**		287
	0.67	6 887	1.3	2 043		**2KJ1432 - ■CG13 - ■■B1**		287
	0.78	5 923	1.5	1 757	★	**2KJ1432 - ■CG13 - ■■A1**		287
	FD.128B-Z48-LA71ZMP4							
	0.91	5 070	1.2	1 504		**2KJ1431 - ■CG13 - ■■L1**		206
	1.0	4 618	1.3	1 370	★	**2KJ1431 - ■CG13 - ■■K1**		206
	1.1	4 231	1.4	1 255		**2KJ1431 - ■CG13 - ■■J1**		206
	1.2	3 776	1.6	1 120	★	**2KJ1431 - ■CG13 - ■■H1**		206
	FD.128B-Z38-LA71ZMP4							
	0.63	7 369	0.83	2 186	★	**2KJ1428 - ■CG13 - ■■C1**		197
	0.70	6 641	0.92	1 970		**2KJ1428 - ■CG13 - ■■B1**		197
	0.81	5 711	1.1	1 694	★	**2KJ1428 - ■CG13 - ■■A1**		197
	FD.128B-LA90LA8							
	1.5	3 486	1.7	447.96		**2KJ1406 - ■EE13 - ■■V1**	**P02**	212
	1.7	3 155	1.9	405.47	★	**2KJ1406 - ■EE13 - ■■U1**	**P02**	212
	FD.108B-Z38-LA71ZMP4							
	1.1	4 251	0.80	1 261		**2KJ1426 - ■CG13 - ■■L1**		122
	1.2	3 887	0.87	1 153	★	**2KJ1426 - ■CG13 - ■■K1**		122
	1.3	3 476	0.98	1 031		**2KJ1426 - ■CG13 - ■■J1**		122
	1.4	3 192	1.1	947	★	**2KJ1426 - ■CG13 - ■■H1**		122

★ Preferred transmission ratio

Shaft designs, see page 3/89 — **1, 2, 3, 5, 6 or 9**

Frequency and voltage, see page 8/20 — **1 to 9**

Gearbox housing mounting position, see page 3/92 — **A, D, E, F, H or M**

*) For mounting type B5-01

© Siemens AG 2011

Selection and ordering data (continued)

Power rating P_{Motor} kW	Output speed n_2 (50 Hz) rpm	Output torque T_2 Nm	Service factor f_B	Gearbox ratio i_{tot}		Order No.	Order code (No. of poles)	Weight *) kg
0.55	**FD.108B-LA90LA8**							
	1.6	3 303	1.0	424.49	★	**2KJ1405 - ■EE13 - ■■V1**	**P02**	131
	1.8	2 979	1.1	382.79		**2KJ1405 - ■EE13 - ■■U1**	**P02**	131
	2.0	2 686	1.3	345.19	★	**2KJ1405 - ■EE13 - ■■T1**	**P02**	131
	FD.108B-LA80M6							
	2.1	2 450	1.4	424.49	★	**2KJ1405 - ■DC13 - ■■V1**	**P01**	125
	2.4	2 209	1.5	382.79		**2KJ1405 - ■DC13 - ■■U1**	**P01**	125
	2.6	1 992	1.7	345.19	★	**2KJ1405 - ■DC13 - ■■T1**	**P01**	125
	3.0	1 742	2.0	301.88		**2KJ1405 - ■DC13 - ■■S1**	**P01**	125
	FD.88B-LA80M6							
	2.2	2 337	0.81	404.92		**2KJ1404 - ■DC13 - ■■V1**	**P01**	78
	2.5	2 068	0.92	358.33	★	**2KJ1404 - ■DC13 - ■■U1**	**P01**	78
	2.8	1 880	1.0	325.76		**2KJ1404 - ■DC13 - ■■T1**	**P01**	78
	3.1	1 689	1.1	292.64	★	**2KJ1404 - ■DC13 - ■■S1**	**P01**	78
	FD.88B-LA71ZMP4							
	3.4	1 552	1.2	404.92		**2KJ1404 - ■CG13 - ■■V1**		74
	3.8	1 374	1.4	358.33	★	**2KJ1404 - ■CG13 - ■■U1**		74
	4.2	1 249	1.5	325.76		**2KJ1404 - ■CG13 - ■■T1**		74
	4.7	1 122	1.7	292.64	★	**2KJ1404 - ■CG13 - ■■S1**		74
	5.5	962	2.0	250.83		**2KJ1404 - ■CG13 - ■■R1**		74
	FD.68B-LA80M6							
	4.3	1 232	0.81	213.48		**2KJ1403 - ■DC13 - ■■P1**	**P01**	47
	FD.68B-LA71ZMP4							
	4.6	1 136	0.88	296.18	★	**2KJ1403 - ■CG13 - ■■S1**		43
	5.2	1 010	0.99	263.39		**2KJ1403 - ■CG13 - ■■R1**		43
	6.0	876	1.1	228.48	★	**2KJ1403 - ■CG13 - ■■Q1**		43
	6.4	818	1.2	213.48		**2KJ1403 - ■CG13 - ■■P1**		43
	7.3	720	1.4	187.76	★	**2KJ1403 - ■CG13 - ■■N1**		43
	8.3	630	1.6	164.44		**2KJ1403 - ■CG13 - ■■M1**		43
	9.4	558	1.8	145.44	★	**2KJ1403 - ■CG13 - ■■L1**		43
	10.4	505	2.0	131.82		**2KJ1403 - ■CG13 - ■■K1**		43
	11.8	446	2.2	116.36	★	**2KJ1403 - ■CG13 - ■■J1**		43
	FD.48B-LA71ZMP4							
	8.2	637	0.85	166.19	★	**2KJ1402 - ■CG13 - ■■N1**		27
	9.4	558	0.97	145.63		**2KJ1402 - ■CG13 - ■■M1**		27
	10.7	491	1.1	128.04	★	**2KJ1402 - ■CG13 - ■■L1**		27
	11.8	444	1.2	115.68		**2KJ1402 - ■CG13 - ■■K1**		27
	13.6	386	1.4	100.8	★	**2KJ1402 - ■CG13 - ■■J1**		27
	15.1	347	1.6	90.53		**2KJ1402 - ■CG13 - ■■H1**		27
	16.8	313	1.7	81.73	★	**2KJ1402 - ■CG13 - ■■G1**		27
	18.5	284	1.9	74.1		**2KJ1402 - ■CG13 - ■■F1**		27
	20	259	2.1	67.43	★	**2KJ1402 - ■CG13 - ■■E1**		27
	23	229	2.4	59.62		**2KJ1402 - ■CG13 - ■■D1**		27

★ Preferred transmission ratio

Shaft designs, see page 3/89 — **1, 2, 3, 5, 6 or 9**

Frequency and voltage, see page 8/20 — **1 to 9**

Gearbox housing mounting position, see page 3/92 — **A, D, E, F, H or M**

*) For mounting type B5-01

© Siemens AG 2011

Selection and ordering data (continued)

Power rating P_{Motor} kW	Output speed n_2 (50 Hz) rpm	Output torque T_2 Nm	Service factor f_B	Gearbox ratio i_{tot}		Order No.	Order code (No. of poles)	Weight *) kg
0.55	**FZ.48B-LA71ZMP4**							
	23	233	1.7	60.71	★	**2KJ1302 - ■CG13 - ■■B2**		27
	25	212	2.4	55.19		**2KJ1302 - ■CG13 - ■■A2**		27
	FD.38B-LA71ZMP4							
	14.7	358	0.81	93.46	★	**2KJ1401 - ■CG13 - ■■E1**		20
	16.9	311	0.93	81.22		**2KJ1401 - ■CG13 - ■■D1**		20
	19.4	271	1.1	70.7	★	**2KJ1401 - ■CG13 - ■■C1**		20
	22	244	1.2	63.77		**2KJ1401 - ■CG13 - ■■B1**		20
	24	216	1.3	56.28		**2KJ1401 - ■CG13 - ■■A1**		20
	FZ.38B-LA71ZMP4							
	24	217	0.97	56.72	★	**2KJ1301 - ■CG13 - ■■B2**		19
	27	193	1.2	50.44		**2KJ1301 - ■CG13 - ■■A2**		19
	31	168	1.5	43.75	★	**2KJ1301 - ■CG13 - ■■X1**		19
	34	157	1.8	40.88		**2KJ1301 - ■CG13 - ■■W1**		19
	38	138	2.1	35.96	★	**2KJ1301 - ■CG13 - ■■V1**		19
	44	121	2.4	31.49		**2KJ1301 - ■CG13 - ■■U1**		19
	49	107	2.7	27.85	★	**2KJ1301 - ■CG13 - ■■T1**		19
	FZ.28-LA71ZMP4							
	31	171	0.88	44.66		**2KJ1300 - ■CG13 - ■■A2**		11
	35	150	1.0	39.15	★	**2KJ1300 - ■CG13 - ■■X1**		11
	39	134	1.1	35.04		**2KJ1300 - ■CG13 - ■■W1**		11
	44	119	1.3	31.1	★	**2KJ1300 - ■CG13 - ■■V1**		11
	50	104	1.4	27.25		**2KJ1300 - ■CG13 - ■■U1**		11
	57	92	1.6	23.96	★	**2KJ1300 - ■CG13 - ■■T1**		11
	63	83	1.8	21.64		**2KJ1300 - ■CG13 - ■■S1**		11
	73	72	2.1	18.86	★	**2KJ1300 - ■CG13 - ■■R1**		11
	81	65	2.3	16.94		**2KJ1300 - ■CG13 - ■■Q1**		11
	90	59	2.6	15.29	★	**2KJ1300 - ■CG13 - ■■P1**		11
	99	53	2.8	13.87		**2KJ1300 - ■CG13 - ■■N1**		11
	109	48	3.1	12.62	★	**2KJ1300 - ■CG13 - ■■M1**		11
	123	43	3.3	11.16		**2KJ1300 - ■CG13 - ■■L1**		11
	133	40	3.5	10.3	★	**2KJ1300 - ■CG13 - ■■K1**		11
	154	34	3.9	8.87		**2KJ1300 - ■CG13 - ■■J1**		11
	170	31	4.1	8.06	★	**2KJ1300 - ■CG13 - ■■H1**		11
0.75	**FD.188B-Z48-LA80ZMB4E**							
	0.28	22 934	0.87	5 021		**2KJ1438 - ■DE13 - ■■L1**		642
	0.31	20 892	0.96	4 574	★	**2KJ1438 - ■DE13 - ■■K1**		642
	0.33	19 138	1.0	4 190		**2KJ1438 - ■DE13 - ■■J1**		642
	0.37	17 078	1.2	3 739	★	**2KJ1438 - ■DE13 - ■■H1**		642
	0.42	15 242	1.3	3 337		**2KJ1438 - ■DE13 - ■■G1**		642
	0.49	12 945	1.5	2 834		**2KJ1438 - ■DE13 - ■■F1**		642
	0.59	10 775	1.9	2 359	★	**2KJ1438 - ■DE13 - ■■E1**		642
	0.60	10 606	1.9	2 322	★	**2KJ1438 - ■DE13 - ■■D1**		642

★ Preferred transmission ratio

Shaft designs, see page 3/89 — **1, 2, 3, 5, 6 or 9**

Frequency and voltage, see page 8/20 — **1 to 9**

Gearbox housing mounting position, see page 3/92 — **A, D, E, F, H or M**

*) For mounting type B5-01

© Siemens AG 2011

Selection and ordering data (continued)

Power rating P_{Motor} kW	Output speed n_2 (50 Hz) rpm	Output torque T_2 Nm	Service factor f_B	Gearbox ratio i_{tot}		Order No.	Order code (No. of poles)	Weight *) kg
0.75	**FD.168B-Z48-LA80ZMB4E**							
	0.37	17 471	0.80	3 825		**2KJ1435 - ■DE13 - ■■J1**		458
	0.41	15 589	0.90	3 413	★	**2KJ1435 - ■DE13 - ■■H1**		458
	0.46	13 913	1.0	3 046		**2KJ1435 - ■DE13 - ■■G1**		458
	0.54	11 816	1.2	2 587		**2KJ1435 - ■DE13 - ■■F1**		458
	0.65	9 834	1.4	2 153	★	**2KJ1435 - ■DE13 - ■■E1**		458
	0.66	9 679	1.4	2 119	★	**2KJ1435 - ■DE13 - ■■D1**		458
	0.74	8 637	1.6	1 891		**2KJ1435 - ■DE13 - ■■C1**		458
	0.87	7 336	1.9	1 606		**2KJ1435 - ■DE13 - ■■B1**		458
	FD.148B-Z38-LA80ZMB4E							
	0.57	11 273	0.80	2 468		**2KJ1432 - ■DE13 - ■■D1**		291
	0.62	10 350	0.87	2 266	★	**2KJ1432 - ■DE13 - ■■C1**		291
	0.68	9 332	0.96	2 043		**2KJ1432 - ■DE13 - ■■B1**		291
	0.80	8 025	1.1	1 757	★	**2KJ1432 - ■DE13 - ■■A1**		291
	FD.148B-Z48-LA80ZMB4E							
	0.86	7 464	1.2	1 634		**2KJ1434 - ■DE13 - ■■K1**		300
	0.94	6 801	1.3	1 489	★	**2KJ1434 - ■DE13 - ■■J1**		300
	1.0	6 230	1.4	1 364		**2KJ1434 - ■DE13 - ■■H1**		300
	1.2	5 559	1.6	1 217	★	**2KJ1434 - ■DE13 - ■■G1**		300
	1.3	4 960	1.8	1 086		**2KJ1434 - ■DE13 - ■■F1**		300
	FD.148B-LA100LA8							
	1.5	4 732	1.9	449.21	★	**2KJ1407 - ■FB13 - ■■U1**	**P02**	316
	FD.128B-Z48-LA80ZMB4E							
	0.93	6 870	0.89	1 504		**2KJ1431 - ■DE13 - ■■L1**		210
	1.0	6 258	0.97	1 370	★	**2KJ1431 - ■DE13 - ■■K1**		210
	1.1	5 732	1.1	1 255		**2KJ1431 - ■DE13 - ■■J1**		210
	1.2	5 116	1.2	1 120	★	**2KJ1431 - ■DE13 - ■■H1**		210
	1.4	4 563	1.3	999		**2KJ1431 - ■DE13 - ■■G1**		210
	FD.128B-LA100LA8							
	1.9	3 739	1.6	354.99		**2KJ1406 - ■FB13 - ■■T1**	**P02**	220
	FD.128B-LA90SB6E							
	2.1	3 469	1.8	447.96		**2KJ1406 - ■ED13 - ■■V1**	**P01**	209
	2.3	3 140	1.9	405.47	★	**2KJ1406 - ■ED13 - ■■U1**	**P01**	209
	FD.108B-LA90SB6E							
	2.2	3 287	1.0	424.49	★	**2KJ1405 - ■ED13 - ■■V1**	**P01**	128
	2.4	2 964	1.1	382.79		**2KJ1405 - ■ED13 - ■■U1**	**P01**	128
	2.7	2 673	1.3	345.19	★	**2KJ1405 - ■ED13 - ■■T1**	**P01**	128
	3.1	2 338	1.5	301.88		**2KJ1405 - ■ED13 - ■■S1**	**P01**	128
	FD.108B-LA80ZMB4E							
	3.3	2 172	1.6	424.49	★	**2KJ1405 - ■DE13 - ■■V1**		125
	3.7	1 958	1.7	382.79		**2KJ1405 - ■DE13 - ■■U1**		125
	4.1	1 766	1.9	345.19	★	**2KJ1405 - ■DE13 - ■■T1**		125
	FD.88B-LA90SB6E							
	3.2	2 266	0.84	292.64	★	**2KJ1404 - ■ED13 - ■■S1**	**P01**	81

★ Preferred transmission ratio

Shaft designs, see page 3/89 — **1, 2, 3, 5, 6 or 9**

Frequency and voltage, see page 8/20 — **1 to 9**

Gearbox housing mounting position, see page 3/92 — **A, D, E, F, H or M**

*) For mounting type B5-01

© Siemens AG 2011

Selection and ordering data (continued)

Power rating P_{Motor} kW	Output speed n_2 (50 Hz) rpm	Output torque T_2 Nm	Service factor f_B	Gearbox ratio i_{tot}		Order No.	Order code (No. of poles)	Weight *) kg
0.75	**FD.88B-LA80ZMB4E**							
	3.5	2 072	0.92	404.92		**2KJ1404 - ■DE13 - ■■V1**		78
	3.9	1 833	1.0	358.33	★	**2KJ1404 - ■DE13 - ■■U1**		78
	4.3	1 667	1.1	325.76		**2KJ1404 - ■DE13 - ■■T1**		78
	4.8	1 497	1.3	292.64	★	**2KJ1404 - ■DE13 - ■■S1**		78
	5.6	1 283	1.5	250.83		**2KJ1404 - ■DE13 - ■■R1**		78
	6.2	1 161	1.6	226.94	★	**2KJ1404 - ■DE13 - ■■P1**		78
	6.7	1 072	1.8	209.49		**2KJ1404 - ■DE13 - ■■N1**		78
	7.7	932	2.0	182.15	★	**2KJ1404 - ■DE13 - ■■M1**		78
	FD.68B-LA80ZMB4E							
	6.1	1169	0.86	228.48	★	**2KJ1403 - ■DE13 - ■■Q1**		47
	6.6	1092	0.92	213.48		**2KJ1403 - ■DE13 - ■■P1**		47
	7.5	961	1.0	187.76	★	**2KJ1403 - ■DE13 - ■■N1**		47
	8.5	841	1.2	164.44		**2KJ1403 - ■DE13 - ■■M1**		47
	9.6	744	1.3	145.44	★	**2KJ1403 - ■DE13 - ■■L1**		47
	10.6	674	1.5	131.82		**2KJ1403 - ■DE13 - ■■K1**		47
	12.0	595	1.7	116.36	★	**2KJ1403 - ■DE13 - ■■J1**		47
	13.3	537	1.9	104.96		**2KJ1403 - ■DE13 - ■■H1**		47
	14.7	487	2.1	95.2	★	**2KJ1403 - ■DE13 - ■■G1**		47
	16.1	444	2.3	86.74		**2KJ1403 - ■DE13 - ■■F1**		47
	FD.48B-LA80ZMB4E							
	10.9	655	0.82	128.04	★	**2KJ1402 - ■DE13 - ■■L1**		31
	12.1	592	0.91	115.68		**2KJ1402 - ■DE13 - ■■K1**		31
	13.9	516	1.0	100.8	★	**2KJ1402 - ■DE13 - ■■J1**		31
	15.5	463	1.2	90.53		**2KJ1402 - ■DE13 - ■■H1**		31
	17.1	418	1.3	81.73	★	**2KJ1402 - ■DE13 - ■■G1**		31
	18.9	379	1.4	74.1		**2KJ1402 - ■DE13 - ■■F1**		31
	21	345	1.6	67.43	★	**2KJ1402 - ■DE13 - ■■E1**		31
	24	305	1.8	59.62		**2KJ1402 - ■DE13 - ■■D1**		31
	25	282	1.9	55.06	★	**2KJ1402 - ■DE13 - ■■C1**		31
	30	243	2.2	47.4		**2KJ1402 - ■DE13 - ■■B1**		31
	32	220	2.4	43.09	★	**2KJ1402 - ■DE13 - ■■A1**		31
	FZ.48B-LA80ZMB4E							
	23	311	1.3	60.71	★	**2KJ1302 - ■DE13 - ■■B2**		31
	25	282	1.8	55.19		**2KJ1302 - ■DE13 - ■■A2**		31
	28	254	2.1	49.58	★	**2KJ1302 - ■DE13 - ■■X1**		31
	33	217	2.5	42.5		**2KJ1302 - ■DE13 - ■■W1**		31
	FD.38B-LA80ZMB4E							
	19.8	362	0.80	70.7	★	**2KJ1401 - ■DE13 - ■■C1**		24
	22	326	0.89	63.77		**2KJ1401 - ■DE13 - ■■B1**		24
	25	288	1.0	56.28		**2KJ1401 - ■DE13 - ■■A1**		24
	FZ.38B-LA80ZMB4E							
	28	258	0.89	50.44		**2KJ1301 - ■DE13 - ■■A2**		23
	32	224	1.1	43.75	★	**2KJ1301 - ■DE13 - ■■X1**		23

★ Preferred transmission ratio

Shaft designs, see page 3/89 — **1, 2, 3, 5, 6 or 9**

Frequency and voltage, see page 8/20 — **1 to 9**

Gearbox housing mounting position, see page 3/92 — **A, D, E, F, H or M**

*) For mounting type B5-01

© Siemens AG 2011

Selection and ordering data (continued)

Power rating P_{Motor} kW	Output speed n_2 (50 Hz) rpm	Output torque T_2 Nm	Service factor f_B	Gearbox ratio i_{tot}		Order No.	Order code (No. of poles)	Weight *) kg
0.75	**FZ.38B-LA80ZMB4E**							
	34	209	1.3	40.88		**2KJ1301 - ■DE13 - ■■W1**		23
	39	184	1.6	35.96	★	**2KJ1301 - ■DE13 - ■■V1**		23
	44	161	1.8	31.49		**2KJ1301 - ■DE13 - ■■U1**		23
	50	142	2.0	27.85	★	**2KJ1301 - ■DE13 - ■■T1**		23
	56	129	2.2	25.24		**2KJ1301 - ■DE13 - ■■S1**		23
	63	114	2.5	22.28	★	**2KJ1301 - ■DE13 - ■■R1**		23
	70	103	2.8	20.1		**2KJ1301 - ■DE13 - ■■Q1**		23
	77	93	3.1	18.23	★	**2KJ1301 - ■DE13 - ■■P1**		23
	FZ.28-LA80ZMB4E							
	40	179	0.84	35.04		**2KJ1300 - ■DE13 - ■■W1**		15
	45	159	0.94	31.1	★	**2KJ1300 - ■DE13 - ■■V1**		15
	51	139	1.1	27.25		**2KJ1300 - ■DE13 - ■■U1**		15
	58	123	1.2	23.96	★	**2KJ1300 - ■DE13 - ■■T1**		15
	65	111	1.4	21.64		**2KJ1300 - ■DE13 - ■■S1**		15
	74	96	1.6	18.86	★	**2KJ1300 - ■DE13 - ■■R1**		15
	83	87	1.7	16.94		**2KJ1300 - ■DE13 - ■■Q1**		15
	92	78	1.9	15.29	★	**2KJ1300 - ■DE13 - ■■P1**		15
	101	71	2.1	13.87		**2KJ1300 - ■DE13 - ■■N1**		15
	111	65	2.3	12.62	★	**2KJ1300 - ■DE13 - ■■M1**		15
	125	57	2.5	11.16		**2KJ1300 - ■DE13 - ■■L1**		15
	136	53	2.6	10.3	★	**2KJ1300 - ■DE13 - ■■K1**		15
	158	45	2.9	8.87		**2KJ1300 - ■DE13 - ■■J1**		15
	174	41	3.1	8.06	★	**2KJ1300 - ■DE13 - ■■H1**		15
	194	37	3.4	7.2	★	**2KJ1300 - ■DE13 - ■■G1**		15
	214	33	3.7	6.53		**2KJ1300 - ■DE13 - ■■F1**		15
	236	30	3.9	5.94	★	**2KJ1300 - ■DE13 - ■■E1**		15
	267	27	4.1	5.25		**2KJ1300 - ■DE13 - ■■D1**		15
	289	25	4.4	4.85	★	**2KJ1300 - ■DE13 - ■■C1**		15
	335	21	4.6	4.18		**2KJ1300 - ■DE13 - ■■B1**		15
	368	19	4.9	3.8	★	**2KJ1300 - ■DE13 - ■■A1**		15
1.1	**FD.188B-Z48-LA90SB4E**							
	0.38	24 675	0.81	3 739	★	**2KJ1438 - ■EM13 - ■■H1**		645
	0.43	22 022	0.91	3 337		**2KJ1438 - ■EM13 - ■■G1**		645
	0.51	18 703	1.1	2 834		**2KJ1438 - ■EM13 - ■■F1**		645
	0.61	15 568	1.3	2 359	★	**2KJ1438 - ■EM13 - ■■E1**		645
	0.62	15 324	1.3	2 322	★	**2KJ1438 - ■EM13 - ■■D1**		645
	0.70	13 674	1.5	2 072		**2KJ1438 - ■EM13 - ■■C1**		645
	0.82	11 615	1.7	1 760		**2KJ1438 - ■EM13 - ■■B1**		645
	FD.168B-Z48-LA90SB4E							
	0.56	17 073	0.82	2 587		**2KJ1435 - ■EM13 - ■■F1**		461
	0.67	14 209	0.99	2 153	★	**2KJ1435 - ■EM13 - ■■E1**		461
	0.68	13 984	1.0	2 119	★	**2KJ1435 - ■EM13 - ■■D1**		461
	0.76	12 480	1.1	1 891		**2KJ1435 - ■EM13 - ■■C1**		461

★ Preferred transmission ratio

Shaft designs, see page 3/89 — **1, 2, 3, 5, 6 or 9**

Frequency and voltage, see page 8/20 — **1 to 9**

Gearbox housing mounting position, see page 3/92 — **A, D, E, F, H or M**

*) For mounting type B5-01

© Siemens AG 2011

Selection and ordering data (continued)

Power rating P_{Motor} kW	Output speed n_2 (50 Hz) rpm	Output torque T_2 Nm	Service factor f_B	Gearbox ratio i_{tot}		Order No.	Order code (No. of poles)	Weight *) kg
1.1	**FD.168B-Z48-LA90SB4E**							
	0.9	10 599	1.3	1 606		**2KJ1435 - ■EM13 - ■■B1**		461
	1.1	8 823	1.6	1 337	★	**2KJ1435 - ■EM13 - ■■A1**		461
	FD.168B-Z68-LA90SB4E							
	1.1	8 566	1.6	1 298		**2KJ1437 - ■EM13 - ■■H1**		478
	1.3	7 312	1.9	1 108	★	**2KJ1437 - ■EM13 - ■■G1**		478
	FD.148B-Z48-LA90SB4E							
	0.88	10 783	0.83	1 634		**2KJ1434 - ■EM13 - ■■K1**		303
	0.97	9 827	0.92	1 489	★	**2KJ1434 - ■EM13 - ■■J1**		303
	1.1	9 002	1.0	1 364		**2KJ1434 - ■EM13 - ■■H1**		303
	1.2	8 032	1.1	1 217	★	**2KJ1434 - ■EM13 - ■■G1**		303
	1.3	7 167	1.3	1 086		**2KJ1434 - ■EM13 - ■■F1**		303
	FD.148B-LA100L8							
	1.5	6 940	1.3	449.21	★	**2KJ1407 - ■FL13 - ■■U1**	**P02**	316
	1.7	6 364	1.4	411.98		**2KJ1407 - ■FL13 - ■■T1**	**P02**	316
	1.8	5 686	1.6	368.06	★	**2KJ1407 - ■FL13 - ■■S1**	**P02**	316
	2.0	5 207	1.7	337.07		**2KJ1407 - ■FL13 - ■■R1**	**P02**	316
	FD.128B-Z48-LA90SB4E							
	1.3	7 391	0.83	1 120	★	**2KJ1431 - ■EM13 - ■■H1**		213
	1.4	6 593	0.93	999		**2KJ1431 - ■EM13 - ■■G1**		213
	FD.128B-LA100L8							
	1.9	5 484	1.1	354.99		**2KJ1406 - ■FL13 - ■■T1**	**P02**	220
	FD.128B-LA90ZLD6E							
	2.1	5 006	1.2	447.96		**2KJ1406 - ■EQ13 - ■■V1**	**P01**	212
	2.3	4 531	1.3	405.47	★	**2KJ1406 - ■EQ13 - ■■U1**	**P01**	212
	2.6	3 967	1.5	354.99		**2KJ1406 - ■EQ13 - ■■T1**	**P01**	212
	2.9	3 579	1.7	320.24	★	**2KJ1406 - ■EQ13 - ■■S1**	**P01**	212
	FD.128B-LA90SB4E							
	3.2	3 268	1.9	447.96		**2KJ1406 - ■EM13 - ■■V1**		209
	FD.108B-LA90ZLD6E							
	2.7	3 858	0.88	345.19	★	**2KJ1405 - ■EQ13 - ■■T1**	**P01**	131
	3.1	3 374	1.0	301.88		**2KJ1405 - ■EQ13 - ■■S1**	**P01**	131
	FD.108B-LA90SB4E							
	3.4	3 097	1.1	424.49	★	**2KJ1405 - ■EM13 - ■■V1**		128
	3.8	2 793	1.2	382.79		**2KJ1405 - ■EM13 - ■■U1**		128
	4.2	2 518	1.4	345.19	★	**2KJ1405 - ■EM13 - ■■T1**		128
	4.8	2 202	1.5	301.88		**2KJ1405 - ■EM13 - ■■S1**		128
	5.3	1 977	1.7	271.01	★	**2KJ1405 - ■EM13 - ■■R1**		128
	5.8	1 806	1.9	247.53		**2KJ1405 - ■EM13 - ■■Q1**		128
	6.6	1 602	2.1	219.66	★	**2KJ1405 - ■EM13 - ■■P1**		128
	FD.88B-LA90SB4E							
	4.4	2 376	0.8	325.76		**2KJ1404 - ■EM13 - ■■T1**		81
	4.9	2 135	0.89	292.64	★	**2KJ1404 - ■EM13 - ■■S1**		81
	5.7	1 830	1.0	250.83		**2KJ1404 - ■EM13 - ■■R1**		81

★ Preferred transmission ratio

Shaft designs, see page 3/89 — **1, 2, 3, 5, 6 or 9**

Frequency and voltage, see page 8/20 — **1 to 9**

Gearbox housing mounting position, see page 3/92 — **A, D, E, F, H or M**

*) For mounting type B5-01

© Siemens AG 2011

Selection and ordering data (continued)

Power rating P_{Motor} kW	Output speed n_2 (50 Hz) rpm	Output torque T_2 Nm	Service factor f_B	Gearbox ratio i_{tot}		Order No.	Order code (No. of poles)	Weight *) kg
1.1	**FD.88B-LA90SB4E**							
	6.3	1 656	1.1	226.94	★	**2KJ1404 - ■EM13 - ■■P1**		81
	6.9	1 528	1.2	209.49		**2KJ1404 - ■EM13 - ■■N1**		81
	7.9	1 329	1.4	182.15	★	**2KJ1404 - ■EM13 - ■■M1**		81
	8.7	1 206	1.6	165.38		**2KJ1404 - ■EM13 - ■■L1**		81
	9.5	1 102	1.7	151.01	★	**2KJ1404 - ■EM13 - ■■K1**		81
	10.4	1 011	1.9	138.56		**2KJ1404 - ■EM13 - ■■J1**		81
	11.3	931	2.0	127.66	★	**2KJ1404 - ■EM13 - ■■H1**		81
	12.4	846	2.2	115.93		**2KJ1404 - ■EM13 - ■■G1**		81
	FD.68B-LA90SB4E							
	8.8	1 200	0.83	164.44		**2KJ1403 - ■EM13 - ■■M1**		50
	9.9	1 061	0.94	145.44	★	**2KJ1403 - ■EM13 - ■■L1**		50
	10.9	962	1.0	131.82		**2KJ1403 - ■EM13 - ■■K1**		50
	12.4	849	1.2	116.36	★	**2KJ1403 - ■EM13 - ■■J1**		50
	13.7	766	1.3	104.96		**2KJ1403 - ■EM13 - ■■H1**		50
	15.1	694	1.4	95.2	★	**2KJ1403 - ■EM13 - ■■G1**		50
	16.6	633	1.6	86.74		**2KJ1403 - ■EM13 - ■■F1**		50
	18.2	579	1.7	79.33	★	**2KJ1403 - ■EM13 - ■■E1**		50
	20	517	1.9	70.93		**2KJ1403 - ■EM13 - ■■D1**		50
	22	475	2.1	65.14	★	**2KJ1403 - ■EM13 - ■■C1**		50
	24	428	2.3	58.71		**2KJ1403 - ■EM13 - ■■B1**		50
	FZ.68B-LA90SB4E							
	24	446	1.9	61.17	★	**2KJ1303 - ■EM13 - ■■B2**		49
	FD.48B-LA90SB4E							
	15.9	660	0.82	90.53		**2KJ1402 - ■EM13 - ■■H1**		34
	17.6	596	0.91	81.73	★	**2KJ1402 - ■EM13 - ■■G1**		34
	19.4	541	1.0	74.1		**2KJ1402 - ■EM13 - ■■F1**		34
	21	492	1.1	67.43	★	**2KJ1402 - ■EM13 - ■■E1**		34
	24	435	1.2	59.62		**2KJ1402 - ■EM13 - ■■D1**		34
	26	402	1.3	55.06	★	**2KJ1402 - ■EM13 - ■■C1**		34
	30	346	1.6	47.4		**2KJ1402 - ■EM13 - ■■B1**		34
	33	314	1.7	43.09	★	**2KJ1402 - ■EM13 - ■■A1**		34
	FZ.48B-LA90SB4E							
	24	443	0.90	60.71	★	**2KJ1302 - ■EM13 - ■■B2**		34
	26	403	1.2	55.19		**2KJ1302 - ■EM13 - ■■A2**		34
	29	362	1.5	49.58	★	**2KJ1302 - ■EM13 - ■■X1**		34
	34	310	1.7	42.5		**2KJ1302 - ■EM13 - ■■W1**		34
	38	280	1.9	38.45	★	**2KJ1302 - ■EM13 - ■■V1**		34
	41	259	2.1	35.49		**2KJ1302 - ■EM13 - ■■U1**		34
	47	225	2.4	30.86	★	**2KJ1302 - ■EM13 - ■■T1**		34
	51	204	2.6	28.02		**2KJ1302 - ■EM13 - ■■S1**		34
	56	187	2.9	25.59	★	**2KJ1302 - ■EM13 - ■■R1**		34
	FZ.38B-LA90SB4E							
	35	298	0.92	40.88		**2KJ1301 - ■EM13 - ■■W1**		26

★ Preferred transmission ratio

Shaft designs, see page 3/89 — **1, 2, 3, 5, 6 or 9**

Frequency and voltage, see page 8/20 — **1 to 9**

Gearbox housing mounting position, see page 3/92 — **A, D, E, F, H or M**

*) For mounting type B5-01

© Siemens AG 2011

Selection and ordering data (continued)

Power rating P_{Motor} kW	Output speed n_2 (50 Hz) rpm	Output torque T_2 Nm	Service factor f_B	Gearbox ratio i_{tot}		Order No.	Order code (No. of poles)	Weight *) kg
1.1	**FZ.38B-LA90SB4E**							
	40	262	1.1	35.96	★	**2KJ1301 - ■EM13 - ■■V1**		26
	46	230	1.3	31.49		**2KJ1301 - ■EM13 - ■■U1**		26
	52	203	1.4	27.85	★	**2KJ1301 - ■EM13 - ■■T1**		26
	57	184	1.6	25.24		**2KJ1301 - ■EM13 - ■■S1**		26
	65	163	1.8	22.28	★	**2KJ1301 - ■EM13 - ■■R1**		26
	72	147	2.0	20.1		**2KJ1301 - ■EM13 - ■■Q1**		26
	79	133	2.2	18.23	★	**2KJ1301 - ■EM13 - ■■P1**		26
	87	121	2.4	16.61		**2KJ1301 - ■EM13 - ■■N1**		26
	95	111	2.6	15.19	★	**2KJ1301 - ■EM13 - ■■M1**		26
	106	99	2.9	13.58		**2KJ1301 - ■EM13 - ■■L1**		26
	115	91	3.2	12.47	★	**2KJ1301 - ■EM13 - ■■K1**		26
	128	82	3.5	11.24		**2KJ1301 - ■EM13 - ■■J1**		26
	FZ.28-LA90SB4E							
	60	175	0.86	23.96	★	**2KJ1300 - ■EM13 - ■■T1**		18
	66	158	0.95	21.64		**2KJ1300 - ■EM13 - ■■S1**		18
	76	138	1.1	18.86	★	**2KJ1300 - ■EM13 - ■■R1**		18
	85	124	1.2	16.94		**2KJ1300 - ■EM13 - ■■Q1**		18
	94	112	1.3	15.29	★	**2KJ1300 - ■EM13 - ■■P1**		18
	104	101	1.5	13.87		**2KJ1300 - ■EM13 - ■■N1**		18
	114	92	1.6	12.62	★	**2KJ1300 - ■EM13 - ■■M1**		18
	129	81	1.7	11.16		**2KJ1300 - ■EM13 - ■■L1**		18
	140	75	1.8	10.3	★	**2KJ1300 - ■EM13 - ■■K1**		18
	162	65	2.0	8.87		**2KJ1300 - ■EM13 - ■■J1**		18
	179	59	2.2	8.06	★	**2KJ1300 - ■EM13 - ■■H1**		18
	200	52	2.4	7.2	★	**2KJ1300 - ■EM13 - ■■G1**		18
	221	48	2.6	6.53		**2KJ1300 - ■EM13 - ■■F1**		18
	242	43	2.7	5.94	★	**2KJ1300 - ■EM13 - ■■E1**		18
	274	38	2.9	5.25		**2KJ1300 - ■EM13 - ■■D1**		18
	297	35	3.1	4.85	★	**2KJ1300 - ■EM13 - ■■C1**		18
	344	30	3.2	4.18		**2KJ1300 - ■EM13 - ■■B1**		18
	379	28	3.5	3.8	★	**2KJ1300 - ■EM13 - ■■A1**		18
1.5	**FD.188B-Z48-LA90ZLB4E**							
	0.61	21 388	0.94	2 359	★	**2KJ1438 - ■EQ13 - ■■E1**		648
	0.62	21 052	0.95	2 322	★	**2KJ1438 - ■EQ13 - ■■D1**		648
	0.70	18 786	1.1	2 072		**2KJ1438 - ■EQ13 - ■■C1**		648
	0.82	15 957	1.3	1 760		**2KJ1438 - ■EQ13 - ■■B1**		648
	0.98	13 282	1.5	1 465	★	**2KJ1438 - ■EQ13 - ■■A1**		648
	FD.188B-Z68-LA90ZLB4E							
	0.99	13 137	1.5	1 449		**2KJ1441 - ■EQ13 - ■■H1**		665
	1.2	11 206	1.8	1 236	★	**2KJ1441 - ■EQ13 - ■■G1**		665
	FD.168B-Z48-LA90ZLB4E							
	0.76	17 145	0.82	1 891		**2KJ1435 - ■EQ13 - ■■C1**		464
	0.90	14 561	0.96	1 606		**2KJ1435 - ■EQ13 - ■■B1**		464

★ Preferred transmission ratio

Shaft designs, see page 3/89 — **1, 2, 3, 5, 6 or 9**

Frequency and voltage, see page 8/20 — **1 to 9**

Gearbox housing mounting position, see page 3/92 — **A, D, E, F, H or M**

*) For mounting type B5-01

© Siemens AG 2011

Selection and ordering data (continued)

Power rating P_{Motor} kW	Output speed n_2 (50 Hz) rpm	Output torque T_2 Nm	Service factor f_B	Gearbox ratio i_{tot}		Order No.	Order code (No. of poles)	Weight *) kg
1.5	**FD.168B-Z48-LA90ZLB4E**							
	1.1	12 122	1.2	1 337	★	**2KJ1435 - ■EQ13 - ■■A1**		464
	FD.168B-Z68-LA90ZLB4E							
	1.1	11 768	1.2	1 298		**2KJ1437 - ■EQ13 - ■■H1**		481
	1.3	10 046	1.4	1 108	★	**2KJ1437 - ■EQ13 - ■■G1**		481
	FD.148B-Z48-LA90ZLB4E							
	1.2	11 034	0.82	1 217	★	**2KJ1434 - ■EQ13 - ■■G1**		306
	1.3	9 846	0.91	1 086		**2KJ1434 - ■EQ13 - ■■F1**		306
	FD.148B-LA112M8							
	1.6	9 128	0.99	449.21	★	**2KJ1407 - ■GG13 - ■■U1**	**P02**	323
	1.7	8 371	1.1	411.98		**2KJ1407 - ■GG13 - ■■T1**	**P02**	323
	1.9	7 479	1.2	368.06	★	**2KJ1407 - ■GG13 - ■■S1**	**P02**	323
	FD.148B-LA100ZLP6E							
	2.1	6 882	1.3	449.21	★	**2KJ1407 - ■FM13 - ■■U1**	**P01**	316
	2.3	6 312	1.4	411.98		**2KJ1407 - ■FM13 - ■■T1**	**P01**	316
	2.5	5 639	1.6	368.06	★	**2KJ1407 - ■FM13 - ■■S1**	**P01**	316
	2.8	5 164	1.7	337.07		**2KJ1407 - ■FM13 - ■■R1**	**P01**	316
	3.0	4 757	1.9	310.51	★	**2KJ1407 - ■FM13 - ■■Q1**	**P01**	316
	FD.128B-LA100ZLP6E							
	2.6	5 439	1.1	354.99		**2KJ1406 - ■FM13 - ■■T1**	**P01**	220
	2.9	4 906	1.2	320.24	★	**2KJ1406 - ■FM13 - ■■S1**	**P01**	220
	FD.128B-LA90ZLB4E							
	3.2	4 456	1.4	447.96		**2KJ1406 - ■EQ13 - ■■V1**		212
	3.6	4 034	1.5	405.47	★	**2KJ1406 - ■EQ13 - ■■U1**		212
	4.1	3 531	1.7	354.99		**2KJ1406 - ■EQ13 - ■■T1**		212
	4.5	3 186	1.9	320.24	★	**2KJ1406 - ■EQ13 - ■■S1**		212
	FD.108B-LA90ZLB4E							
	3.4	4 223	0.81	424.49	★	**2KJ1405 - ■EQ13 - ■■V1**		131
	3.8	3 808	0.89	382.79		**2KJ1405 - ■EQ13 - ■■U1**		131
	4.2	3 434	0.99	345.19	★	**2KJ1405 - ■EQ13 - ■■T1**		131
	4.8	3 003	1.1	301.88		**2KJ1405 - ■EQ13 - ■■S1**		131
	5.3	2 696	1.3	271.01	★	**2KJ1405 - ■EQ13 - ■■R1**		131
	5.8	2 462	1.4	247.53		**2KJ1405 - ■EQ13 - ■■Q1**		131
	6.6	2 185	1.6	219.66	★	**2KJ1405 - ■EQ13 - ■■P1**		131
	7.1	2 017	1.7	202.77		**2KJ1405 - ■EQ13 - ■■N1**		131
	7.9	1 824	1.9	183.39	★	**2KJ1405 - ■EQ13 - ■■M1**		131
	8.5	1 680	2.0	168.88		**2KJ1405 - ■EQ13 - ■■L1**		131
	FD.88B-LA90ZLB4E							
	6.3	2 258	0.84	226.94	★	**2KJ1404 - ■EQ13 - ■■P1**		84
	6.9	2 084	0.91	209.49		**2KJ1404 - ■EQ13 - ■■N1**		84
	7.9	1 812	1.0	182.15	★	**2KJ1404 - ■EQ13 - ■■M1**		84
	8.7	1 645	1.2	165.38		**2KJ1404 - ■EQ13 - ■■L1**		84
	9.5	1 502	1.3	151.01	★	**2KJ1404 - ■EQ13 - ■■K1**		84
	10.4	1 378	1.4	138.56		**2KJ1404 - ■EQ13 - ■■J1**		84

★ Preferred transmission ratio

Shaft designs, see page 3/89 — **1, 2, 3, 5, 6 or 9**

Frequency and voltage, see page 8/20 — **1 to 9**

Gearbox housing mounting position, see page 3/92 — **A, D, E, F, H or M**

*) For mounting type B5-01

© Siemens AG 2011

Selection and ordering data (continued)

Power rating P_{Motor} kW	Output speed n_2 (50 Hz) rpm	Output torque T_2 Nm	Service factor f_B	Gearbox ratio i_{tot}		Order No.	Order code (No. of poles)	Weight *) kg
1.5	**FD.88B-LA90ZLB4E**							
	11.3	1 270	1.5	127.66	★	**2KJ1404 - ■EQ13 - ■■H1**		84
	12.4	1 153	1.6	115.93		**2KJ1404 - ■EQ13 - ■■G1**		84
	13.6	1 051	1.8	105.61	★	**2KJ1404 - ■EQ13 - ■■F1**		84
	14.9	962	2.0	96.75		**2KJ1404 - ■EQ13 - ■■E1**		84
	16.7	859	2.2	86.33	★	**2KJ1404 - ■EQ13 - ■■D1**		84
	FD.68B-LA90ZLB4E							
	12.4	1 158	0.86	116.36	★	**2KJ1403 - ■EQ13 - ■■J1**		53
	13.7	1 044	0.96	104.96		**2KJ1403 - ■EQ13 - ■■H1**		53
	15.1	947	1.1	95.2	★	**2KJ1403 - ■EQ13 - ■■G1**		53
	16.6	863	1.2	86.74		**2KJ1403 - ■EQ13 - ■■F1**		53
	18.2	789	1.3	79.33	★	**2KJ1403 - ■EQ13 - ■■E1**		53
	20	706	1.4	70.93		**2KJ1403 - ■EQ13 - ■■D1**		53
	22	648	1.5	65.14	★	**2KJ1403 - ■EQ13 - ■■C1**		53
	24	584	1.7	58.71		**2KJ1403 - ■EQ13 - ■■B1**		53
	28	502	2.0	50.48	★	**2KJ1403 - ■EQ13 - ■■A1**		53
	FZ.68B-LA90ZLB4E							
	24	609	1.4	61.17	★	**2KJ1303 - ■EQ13 - ■■B2**		52
	27	532	1.9	53.5		**2KJ1303 - ■EQ13 - ■■A2**		52
	30	478	2.1	48.03	★	**2KJ1303 - ■EQ13 - ■■X1**		52
	33	436	2.3	43.87		**2KJ1303 - ■EQ13 - ■■V1**		52
	37	387	2.6	38.93	★	**2KJ1303 - ■EQ13 - ■■U1**		52
	FD.48B-LA90ZLB4E							
	21	671	0.81	67.43	★	**2KJ1402 - ■EQ13 - ■■E1**		37
	24	593	0.91	59.62		**2KJ1402 - ■EQ13 - ■■D1**		37
	26	548	0.99	55.06	★	**2KJ1402 - ■EQ13 - ■■C1**		37
	30	472	1.1	47.4		**2KJ1402 - ■EQ13 - ■■B1**		37
	33	429	1.3	43.09	★	**2KJ1402 - ■EQ13 - ■■A1**		37
	FZ.48B-LA90ZLB4E							
	26	549	0.91	55.19		**2KJ1302 - ■EQ13 - ■■A2**		37
	29	493	1.1	49.58	★	**2KJ1302 - ■EQ13 - ■■X1**		37
	34	423	1.3	42.5		**2KJ1302 - ■EQ13 - ■■W1**		37
	38	382	1.4	38.45	★	**2KJ1302 - ■EQ13 - ■■V1**		37
	41	353	1.5	35.49		**2KJ1302 - ■EQ13 - ■■U1**		37
	47	307	1.8	30.86	★	**2KJ1302 - ■EQ13 - ■■T1**		37
	51	279	1.9	28.02		**2KJ1302 - ■EQ13 - ■■S1**		37
	56	255	2.1	25.59	★	**2KJ1302 - ■EQ13 - ■■R1**		37
	61	234	2.3	23.48		**2KJ1302 - ■EQ13 - ■■Q1**		37
	67	215	2.5	21.63	★	**2KJ1302 - ■EQ13 - ■■P1**		37
	73	195	2.8	19.64		**2KJ1302 - ■EQ13 - ■■N1**		37
	80	178	3.0	17.89	★	**2KJ1302 - ■EQ13 - ■■M1**		37
	88	163	3.3	16.39		**2KJ1302 - ■EQ13 - ■■L1**		37

★ Preferred transmission ratio

Shaft designs, see page 3/89 — **1, 2, 3, 5, 6 or 9**

Frequency and voltage, see page 8/20 — **1 to 9**

Gearbox housing mounting position, see page 3/92 — **A, D, E, F, H or M**

*) For mounting type B5-01

© Siemens AG 2011

Selection and ordering data (continued)

Power rating P_{Motor} kW	Output speed n_2 (50 Hz) rpm	Output torque T_2 Nm	Service factor f_B	Gearbox ratio i_{tot}		Order No.	Order code (No. of poles)	Weight *) kg
1.5	**FZ.38B-LA90ZLB4E**							
	40	358	0.81	35.96	★	**2KJ1301 - ■EQ13 - ■■V1**		29
	46	313	0.93	31.49		**2KJ1301 - ■EQ13 - ■■U1**		29
	52	277	1.0	27.85	★	**2KJ1301 - ■EQ13 - ■■T1**		29
	57	251	1.2	25.24		**2KJ1301 - ■EQ13 - ■■S1**		29
	65	222	1.3	22.28	★	**2KJ1301 - ■EQ13 - ■■R1**		29
	72	200	1.5	20.1		**2KJ1301 - ■EQ13 - ■■Q1**		29
	79	181	1.6	18.23	★	**2KJ1301 - ■EQ13 - ■■P1**		29
	87	165	1.8	16.61		**2KJ1301 - ■EQ13 - ■■N1**		29
	95	151	1.9	15.19	★	**2KJ1301 - ■EQ13 - ■■M1**		29
	106	135	2.1	13.58		**2KJ1301 - ■EQ13 - ■■L1**		29
	115	124	2.3	12.47	★	**2KJ1301 - ■EQ13 - ■■K1**		29
	128	112	2.6	11.24		**2KJ1301 - ■EQ13 - ■■J1**		29
	149	96	3.0	9.67	★	**2KJ1301 - ■EQ13 - ■■H1**		29
	169	85	3.4	8.52	★	**2KJ1301 - ■EQ13 - ■■G1**		29
	186	77	3.8	7.76		**2KJ1301 - ■EQ13 - ■■F1**		29
	203	71	4.1	7.1	★	**2KJ1301 - ■EQ13 - ■■E1**		29
	227	63	4.4	6.35		**2KJ1301 - ■EQ13 - ■■D1**		29
	247	58	4.7	5.83	★	**2KJ1301 - ■EQ13 - ■■C1**		29
	274	52	4.8	5.25		**2KJ1301 - ■EQ13 - ■■B1**		29
	319	45	5.1	4.52	★	**2KJ1301 - ■EQ13 - ■■A1**		29
	FZ.38B-LA90SB2E							
	159	90	3.2	18.23	★	**2KJ1301 - ■EM13 - ■■P1**	**P00**	26
	174	82	3.5	16.61		**2KJ1301 - ■EM13 - ■■N1**	**P00**	26
	190	75	3.9	15.19	★	**2KJ1301 - ■EM13 - ■■M1**	**P00**	26
	213	67	4.3	13.58		**2KJ1301 - ■EM13 - ■■L1**	**P00**	26
	FZ.28-LA90ZLB4E							
	76	188	0.80	18.86	★	**2KJ1300 - ■EQ13 - ■■R1**		21
	85	169	0.89	16.94		**2KJ1300 - ■EQ13 - ■■Q1**		21
	94	152	0.99	15.29	★	**2KJ1300 - ■EQ13 - ■■P1**		21
	104	138	1.1	13.87		**2KJ1300 - ■EQ13 - ■■N1**		21
	114	126	1.2	12.62	★	**2KJ1300 - ■EQ13 - ■■M1**		21
	129	111	1.3	11.16		**2KJ1300 - ■EQ13 - ■■L1**		21
	140	102	1.3	10.3	★	**2KJ1300 - ■EQ13 - ■■K1**		21
	162	88	1.5	8.87		**2KJ1300 - ■EQ13 - ■■J1**		21
	179	80	1.6	8.06	★	**2KJ1300 - ■EQ13 - ■■H1**		21
	200	72	1.8	7.2	★	**2KJ1300 - ■EQ13 - ■■G1**		21
	221	65	1.9	6.53		**2KJ1300 - ■EQ13 - ■■F1**		21
	242	59	2.0	5.94	★	**2KJ1300 - ■EQ13 - ■■E1**		21
	274	52	2.1	5.25		**2KJ1300 - ■EQ13 - ■■D1**		21
	297	48	2.3	4.85	★	**2KJ1300 - ■EQ13 - ■■C1**		21
	344	42	2.4	4.18		**2KJ1300 - ■EQ13 - ■■B1**		21
	379	38	2.5	3.8	★	**2KJ1300 - ■EQ13 - ■■A1**		21

★ Preferred transmission ratio

Shaft designs, see page 3/89 — **1, 2, 3, 5, 6 or 9**

Frequency and voltage, see page 8/20 — **1 to 9**

Gearbox housing mounting position, see page 3/92 — **A, D, E, F, H or M**

*) For mounting type B5-01

© Siemens AG 2011

Selection and ordering data (continued)

Power rating P_{Motor} kW	Output speed n_2 (50 Hz) rpm	Output torque T_2 Nm	Service factor f_B	Gearbox ratio i_{tot}		Order No.	Order code (No. of poles)	Weight *) kg
2.2	**FD.188B-Z48-LA100ZLP4E**							
	0.82	23 638	0.85	1 760		**2KJ1438 - ■FM13 - ■■B1**		656
	0.98	19676	1.0	1 465	★	**2KJ1438 - ■FM13 - ■■A1**		656
	FD.188B-Z68-LA100ZLP4E							
	0.99	19 461	1.0	1 449		**2KJ1441 - ■FM13 - ■■H1**		673
	1.2	16 600	1.2	1 236	★	**2KJ1441 - ■FM13 - ■■G1**		673
	1.4	13 833	1.4	1 030		**2KJ1441 - ■FM13 - ■■F1**		673
	FD.188B-LA132S8							
	1.7	12 122	1.6	403.86	★	**2KJ1410 - ■HE13 - ■■U1**	**P02**	676
	1.9	11 121	1.8	370.52		**2KJ1410 - ■HE13 - ■■T1**	**P02**	676
	2.0	10 263	1.9	341.94	★	**2KJ1410 - ■HE13 - ■■S1**	**P02**	676
	FD.168B-Z68-LA100ZLP4E							
	1.1	17 433	0.80	1 298		**2KJ1437 - ■FM13 - ■■H1**		489
	1.3	14 881	0.94	1 108	★	**2KJ1437 - ■FM13 - ■■G1**		489
	1.6	12 396	1.1	923		**2KJ1437 - ■FM13 - ■■F1**		489
	FD.168B-LA132S8							
	1.9	11 083	1.3	369.26	★	**2KJ1408 - ■HE13 - ■■V1**	**P02**	495
	2.1	10 160	1.4	338.49		**2KJ1408 - ■HE13 - ■■U1**	**P02**	495
	2.2	9 368	1.5	312.12	★	**2KJ1408 - ■HE13 - ■■T1**	**P02**	495
	2.4	8 682	1.6	289.26		**2KJ1408 - ■HE13 - ■■S1**	**P02**	495
	2.5	8 255	1.7	275.03	★	**2KJ1408 - ■HE13 - ■■R1**	**P02**	495
	FD.148B-LA132S8							
	1.9	11 047	0.81	368.06	★	**2KJ1407 - ■HE13 - ■■S1**	**P02**	333
	FD.148B-LA112ZMP6E							
	2.1	9 883	0.91	449.21	★	**2KJ1407 - ■GJ13 - ■■U1**	**P01**	323
	2.3	9 064	0.99	411.98		**2KJ1407 - ■GJ13 - ■■T1**	**P01**	323
	2.6	8 097	1.1	368.06	★	**2KJ1407 - ■GJ13 - ■■S1**	**P01**	323
	2.8	7 416	1.2	337.07		**2KJ1407 - ■GJ13 - ■■R1**	**P01**	323
	3.1	6 831	1.3	310.51	★	**2KJ1407 - ■GJ13 - ■■Q1**	**P01**	323
	FD.148B-LA100ZLP4E							
	3.2	6 577	1.4	449.21	★	**2KJ1407 - ■FM13 - ■■U1**		316
	3.5	6 032	1.5	411.98		**2KJ1407 - ■FM13 - ■■T1**		316
	3.9	5 389	1.7	368.06	★	**2KJ1407 - ■FM13 - ■■S1**		316
	4.3	4 935	1.8	337.07		**2KJ1407 - ■FM13 - ■■R1**		316
	4.6	4 546	2.0	310.51	★	**2KJ1407 - ■FM13 - ■■Q1**		316
	5.0	4 209	2.1	287.49		**2KJ1407 - ■FM13 - ■■P1**		316
	FD.128B-LA112ZMP6E							
	3.0	7 045	0.87	320.24	★	**2KJ1406 - ■GJ13 - ■■S1**	**P01**	227
	FD.128B-LA100ZLP4E							
	4.0	5 197	1.2	354.99		**2KJ1406 - ■FM13 - ■■T1**		220
	4.5	4 689	1.3	320.24	★	**2KJ1406 - ■FM13 - ■■S1**		220
	4.9	4 293	1.4	293.22		**2KJ1406 - ■FM13 - ■■R1**		220
	5.5	3 819	1.6	260.84	★	**2KJ1406 - ■FM13 - ■■Q1**		220
	6	3 490	1.7	238.39		**2KJ1406 - ■FM13 - ■■P1**		220

★ Preferred transmission ratio

Shaft designs, see page 3/89 — **1, 2, 3, 5, 6 or 9**

Frequency and voltage, see page 8/20 — **1 to 9**

Gearbox housing mounting position, see page 3/92 — **A, D, E, F, H or M**

*) For mounting type B5-01

© Siemens AG 2011

Selection and ordering data (continued)

Power rating P_{Motor} kW	Output speed n_2 (50 Hz) rpm	Output torque T_2 Nm	Service factor f_B	Gearbox ratio i_{tot}		Order No.	Order code (No. of poles)	Weight *) kg
2.2	**FD.128B-LA100ZLP4E**							
	6.5	3 209	1.9	219.15	★	**2KJ1406 - ■FM13 - ■■N1**		220
	7.1	2 965	2.1	202.48		**2KJ1406 - ■FM13 - ■■M1**		220
	FD.108B-LA100ZLP4E							
	5.3	3 968	0.86	271.01	★	**2KJ1405 - ■FM13 - ■■R1**		139
	5.8	3 624	0.94	247.53		**2KJ1405 - ■FM13 - ■■Q1**		139
	6.5	3 216	1.1	219.66	★	**2KJ1405 - ■FM13 - ■■P1**		139
	7.1	2 969	1.1	202.77		**2KJ1405 - ■FM13 - ■■N1**		139
	7.8	2 685	1.3	183.39	★	**2KJ1405 - ■FM13 - ■■M1**		139
	8.5	2 473	1.4	168.88		**2KJ1405 - ■FM13 - ■■L1**		139
	9.2	2 287	1.5	156.19	★	**2KJ1405 - ■FM13 - ■■K1**		139
	9.9	2 123	1.6	144.99		**2KJ1405 - ■FM13 - ■■J1**		139
	11.2	1 873	1.8	127.92	★	**2KJ1405 - ■FM13 - ■■H1**		139
	12.1	1 729	2.0	118.11		**2KJ1405 - ■FM13 - ■■G1**		139
	13.6	1 549	2.2	105.81	★	**2KJ1405 - ■FM13 - ■■F1**		139
	FD.88B-LA100ZLP4E							
	9.5	2 211	0.86	151.01	★	**2KJ1404 - ■FM13 - ■■K1**		92
	10.4	2 029	0.94	138.56		**2KJ1404 - ■FM13 - ■■J1**		92
	11.2	1 869	1.0	127.66	★	**2KJ1404 - ■FM13 - ■■H1**		92
	12.4	1 697	1.1	115.93		**2KJ1404 - ■FM13 - ■■G1**		92
	13.6	1 546	1.2	105.61	★	**2KJ1404 - ■FM13 - ■■F1**		92
	14.8	1 417	1.3	96.75		**2KJ1404 - ■FM13 - ■■E1**		92
	16.6	1 264	1.5	86.33	★	**2KJ1404 - ■FM13 - ■■D1**		92
	18.6	1 128	1.7	77.04		**2KJ1404 - ■FM13 - ■■C1**		92
	22	958	2.0	65.43		**2KJ1404 - ■FM13 - ■■B1**		92
	26	798	2.4	54.47	★	**2KJ1404 - ■FM13 - ■■A1**		92
	FZ.88B-LA100ZLP4E							
	22	946	2.0	64.58	★	**2KJ1304 - ■FM13 - ■■X1**		91
	24	866	2.2	59.13		**2KJ1304 - ■FM13 - ■■W1**		91
	27	770	2.5	52.6	★	**2KJ1304 - ■FM13 - ■■V1**		91
	FD.68B-LA100ZLP4E							
	18.1	1 161	0.86	79.33	★	**2KJ1403 - ■FM13 - ■■E1**		61
	20	1 038	0.96	70.93		**2KJ1403 - ■FM13 - ■■D1**		61
	22	954	1.0	65.14	★	**2KJ1403 - ■FM13 - ■■C1**		61
	24	860	1.2	58.71		**2KJ1403 - ■FM13 - ■■B1**		61
	28	739	1.4	50.48	★	**2KJ1403 - ■FM13 - ■■A1**		61
	FZ.68B-LA100ZLP4E							
	27	783	1.3	53.5		**2KJ1303 - ■FM13 - ■■A2**		60
	30	703	1.4	48.03	★	**2KJ1303 - ■FM13 - ■■X1**		60
	33	642	1.6	43.87		**2KJ1303 - ■FM13 - ■■V1**		60
	37	570	1.8	38.93	★	**2KJ1303 - ■FM13 - ■■U1**		60
	40	526	1.9	35.93		**2KJ1303 - ■FM13 - ■■T1**		60
	44	476	2.1	32.5	★	**2KJ1303 - ■FM13 - ■■S1**		60
	48	438	2.3	29.93		**2KJ1303 - ■FM13 - ■■R1**		60

★ Preferred transmission ratio

Shaft designs, see page 3/89 — **1, 2, 3, 5, 6 or 9**

Frequency and voltage, see page 8/20 — **1 to 9**

Gearbox housing mounting position, see page 3/92 — **A, D, E, F, H or M**

*) For mounting type B5-01

© Siemens AG 2011

Selection and ordering data (continued)

Power rating P_{Motor} kW	Output speed n_2 (50 Hz) rpm	Output torque T_2 Nm	Service factor f_B	Gearbox ratio i_{tot}		Order No.	Order code (No. of poles)	Weight *) kg
2.2	**FZ.68B-LA100ZLP4E**							
	52	405	2.5	27.68	★	**2KJ1303 - ■FM13 - ■■Q1**		60
	56	376	2.7	25.69		**2KJ1303 - ■FM13 - ■■P1**		60
	63	332	3.0	22.67	★	**2KJ1303 - ■FM13 - ■■N1**		60
	FD.48B-LA100ZLP4E							
	33	631	0.86	43.09	★	**2KJ1402 - ■FM13 - ■■A1**		45
	FZ.48B-LA100ZLP4E							
	34	622	0.87	42.5		**2KJ1302 - ■FM13 - ■■W1**		45
	37	563	0.96	38.45	★	**2KJ1302 - ■FM13 - ■■V1**		45
	40	520	1.0	35.49		**2KJ1302 - ■FM13 - ■■U1**		45
	46	452	1.2	30.86	★	**2KJ1302 - ■FM13 - ■■T1**		45
	51	410	1.3	28.02		**2KJ1302 - ■FM13 - ■■S1**		45
	56	375	1.4	25.59	★	**2KJ1302 - ■FM13 - ■■R1**		45
	61	344	1.6	23.48		**2KJ1302 - ■FM13 - ■■Q1**		45
	66	317	1.7	21.63	★	**2KJ1302 - ■FM13 - ■■P1**		45
	73	288	1.9	19.64		**2KJ1302 - ■FM13 - ■■N1**		45
	80	262	2.1	17.89	★	**2KJ1302 - ■FM13 - ■■M1**		45
	88	240	2.3	16.39		**2KJ1302 - ■FM13 - ■■L1**		45
	98	214	2.5	14.63	★	**2KJ1302 - ■FM13 - ■■K1**		45
	110	191	2.8	13.05		**2KJ1302 - ■FM13 - ■■J1**		45
	129	162	3.3	11.09		**2KJ1302 - ■FM13 - ■■H1**		45
	155	135	3.9	9.23	★	**2KJ1302 - ■FM13 - ■■G1**		45
	171	123	4.2	8.39	★	**2KJ1302 - ■FM13 - ■■F1**		45
	187	112	4.2	7.68		**2KJ1302 - ■FM13 - ■■E1**		45
	209	100	4.4	6.86	★	**2KJ1302 - ■FM13 - ■■D1**		45
	234	90	4.5	6.12		**2KJ1302 - ■FM13 - ■■C1**		45
	331	63	5.1	4.33	★	**2KJ1302 - ■FM13 - ■■A1**		45
	FZ.38B-LA100ZLP4E							
	64	326	0.89	22.28	★	**2KJ1301 - ■FM13 - ■■R1**		37
	71	294	0.99	20.1		**2KJ1301 - ■FM13 - ■■Q1**		37
	79	267	1.1	18.23	★	**2KJ1301 - ■FM13 - ■■P1**		37
	86	243	1.2	16.61		**2KJ1301 - ■FM13 - ■■N1**		37
	94	222	1.3	15.19	★	**2KJ1301 - ■FM13 - ■■M1**		37
	106	199	1.5	13.58		**2KJ1301 - ■FM13 - ■■L1**		37
	115	183	1.6	12.47	★	**2KJ1301 - ■FM13 - ■■K1**		37
	128	165	1.8	11.24		**2KJ1301 - ■FM13 - ■■J1**		37
	148	142	2.0	9.67	★	**2KJ1301 - ■FM13 - ■■H1**		37
	168	125	2.3	8.52	★	**2KJ1301 - ■FM13 - ■■G1**		37
	185	114	2.6	7.76		**2KJ1301 - ■FM13 - ■■F1**		37
	202	104	2.8	7.1	★	**2KJ1301 - ■FM13 - ■■E1**		37
	226	93	3.0	6.35		**2KJ1301 - ■FM13 - ■■D1**		37
	246	85	3.2	5.83	★	**2KJ1301 - ■FM13 - ■■C1**		37
	273	77	3.3	5.25		**2KJ1301 - ■FM13 - ■■B1**		37
	317	66	3.4	4.52	★	**2KJ1301 - ■FM13 - ■■A1**		37

★ Preferred transmission ratio

Shaft designs, see page 3/89 — **1, 2, 3, 5, 6 or 9**

Frequency and voltage, see page 8/20 — **1 to 9**

Gearbox housing mounting position, see page 3/92 — **A, D, E, F, H or M**

*) For mounting type B5-01

© Siemens AG 2011

Selection and ordering data (continued)

Power rating P_{Motor} kW	Output speed n_2 (50 Hz) rpm	Output torque T_2 Nm	Service factor f_B	Gearbox ratio i_{tot}		Order No.	Order code (No. of poles)	Weight *) kg
2.2	**FZ.38B-LA90ZLB2E**							
	159	133	2.2	18.23	★	**2KJ1301 - ■EQ13 - ■■P1**	**P00**	29
	174	121	2.4	16.61		**2KJ1301 - ■EQ13 - ■■N1**	**P00**	29
	190	110	2.6	15.19	★	**2KJ1301 - ■EQ13 - ■■M1**	**P00**	29
	213	99	2.9	13.58		**2KJ1301 - ■EQ13 - ■■L1**	**P00**	29
	232	91	3.2	12.47	★	**2KJ1301 - ■EQ13 - ■■K1**	**P00**	29
	257	82	3.5	11.24		**2KJ1301 - ■EQ13 - ■■J1**	**P00**	29
	299	70	4.1	9.67	★	**2KJ1301 - ■EQ13 - ■■H1**	**P00**	29
	339	62	4.7	8.52	★	**2KJ1301 - ■EQ13 - ■■G1**	**P00**	29
	372	56	5.1	7.76		**2KJ1301 - ■EQ13 - ■■F1**	**P00**	29
3	**FD.188B-Z68-LA100ZLD4E**							
	1.2	22 720	0.88	1236	★	**2KJ1441 - ■FP13 - ■■G1**		673
	1.4	18 933	1.1	1030		**2KJ1441 - ■FP13 - ■■F1**		673
	FD.188B-LA132MA8							
	1.7	16 529	1.2	403.86	★	**2KJ1410 - ■HG13 - ■■U1**	**P02**	684
	1.9	15 165	1.3	370.52		**2KJ1410 - ■HG13 - ■■T1**	**P02**	684
	2.0	13 995	1.4	341.94	★	**2KJ1410 - ■HG13 - ■■S1**	**P02**	684
	2.2	12 982	1.5	317.18		**2KJ1410 - ■HG13 - ■■R1**	**P02**	684
	2.3	12 246	1.6	299.2	★	**2KJ1410 - ■HG13 - ■■Q1**	**P02**	684
	FD.188B-LA132SB6E							
	2.4	12 180	1.6	403.86	★	**2KJ1410 - ■HF13 - ■■U1**	**P01**	684
	2.6	11 174	1.8	370.52		**2KJ1410 - ■HF13 - ■■T1**	**P01**	684
	2.8	10 312	1.9	341.94	★	**2KJ1410 - ■HF13 - ■■S1**	**P01**	684
	FD.168B-Z68-LA100ZLD4E							
	1.6	16 967	0.83	923		**2KJ1437 - ■FP13 - ■■F1**		489
	FD.168B-LA132MA8							
	1.9	15 113	0.93	369.26	★	**2KJ1408 - ■HG13 - ■■V1**	**P02**	503
	2.1	13 854	1.0	338.49		**2KJ1408 - ■HG13 - ■■U1**	**P02**	503
	2.2	12 775	1.1	312.12	★	**2KJ1408 - ■HG13 - ■■T1**	**P02**	503
	2.4	11 839	1.2	289.26		**2KJ1408 - ■HG13 - ■■S1**	**P02**	503
	2.5	11 257	1.2	275.03	★	**2KJ1408 - ■HG13 - ■■R1**	**P02**	503
	FD.168B-LA132SB6E							
	2.6	11 136	1.3	369.26	★	**2KJ1408 - ■HF13 - ■■V1**	**P01**	503
	2.8	10 208	1.4	338.49		**2KJ1408 - ■HF13 - ■■U1**	**P01**	503
	3.0	9 413	1.5	312.12	★	**2KJ1408 - ■HF13 - ■■T1**	**P01**	503
	3.3	8 723	1.6	289.26		**2KJ1408 - ■HF13 - ■■S1**	**P01**	503
	3.5	8 294	1.7	275.03	★	**2KJ1408 - ■HF13 - ■■R1**	**P01**	503
	3.7	7 752	1.8	257.04		**2KJ1408 - ■HF13 - ■■Q1**	**P01**	503
	FD.148B-LA132SB6E							
	2.6	11 100	0.81	368.06	★	**2KJ1407 - ■HF13 - ■■S1**	**P01**	341
	2.8	10 165	0.89	337.07		**2KJ1407 - ■HF13 - ■■R1**	**P01**	341
	3.1	9 364	0.96	310.51	★	**2KJ1407 - ■HF13 - ■■Q1**	**P01**	341
	FD.148B-LA100ZLD4E							
	3.2	8 969	1.0	449.21	★	**2KJ1407 - ■FP13 - ■■U1**		316

★ Preferred transmission ratio

Shaft designs, see page 3/89 — **1, 2, 3, 5, 6 or 9**

Frequency and voltage, see page 8/20 — **1 to 9**

Gearbox housing mounting position, see page 3/92 — **A, D, E, F, H or M**

*) For mounting type B5-01

© Siemens AG 2011

Selection and ordering data (continued)

Power rating P_{Motor} kW	Output speed n_2 (50 Hz) rpm	Output torque T_2 Nm	Service factor f_B	Gearbox ratio i_{tot}		Order No.	Order code (No. of poles)	Weight *) kg
3	**FD.148B-LA100ZLD4E**							
	3.5	8 225	1.1	411.98		**2KJ1407 - ■FP13 - ■■T1**		316
	3.9	7 348	1.2	368.06	★	**2KJ1407 - ■FP13 - ■■S1**		316
	4.3	6 730	1.3	337.07		**2KJ1407 - ■FP13 - ■■R1**		316
	4.6	6 199	1.5	310.51	★	**2KJ1407 - ■FP13 - ■■Q1**		316
	5.0	5 740	1.6	287.49		**2KJ1407 - ■FP13 - ■■P1**		316
	5.4	5 338	1.7	267.35	★	**2KJ1407 - ■FP13 - ■■N1**		316
	5.7	4 983	1.8	249.58		**2KJ1407 - ■FP13 - ■■M1**		316
	6.4	4 458	2.0	223.31	★	**2KJ1407 - ■FP13 - ■■L1**		316
	FD.128B-LA100ZLD4E							
	4.0	7 087	0.86	354.99		**2KJ1406 - ■FP13 - ■■T1**		220
	4.5	6 394	0.95	320.24	★	**2KJ1406 - ■FP13 - ■■S1**		220
	4.9	5 854	1.0	293.22		**2KJ1406 - ■FP13 - ■■R1**		220
	5.5	5 208	1.2	260.84	★	**2KJ1406 - ■FP13 - ■■Q1**		220
	6.0	4 759	1.3	238.39		**2KJ1406 - ■FP13 - ■■P1**		220
	6.5	4 375	1.4	219.15	★	**2KJ1406 - ■FP13 - ■■N1**		220
	7.1	4 043	1.5	202.48		**2KJ1406 - ■FP13 - ■■M1**		220
	7.6	3 751	1.6	187.88	★	**2KJ1406 - ■FP13 - ■■L1**		220
	8.2	3 494	1.7	175.01		**2KJ1406 - ■FP13 - ■■K1**		220
	9.1	3 159	1.9	158.22	★	**2KJ1406 - ■FP13 - ■■J1**		220
	9.9	2 908	2.1	145.66		**2KJ1406 - ■FP13 - ■■H1**		220
	FD.108B-LA100ZLD4E							
	7.1	4 048	0.84	202.77		**2KJ1405 - ■FP13 - ■■N1**		139
	7.8	3 661	0.93	183.39	★	**2KJ1405 - ■FP13 - ■■M1**		139
	8.5	3 372	1.0	168.88		**2KJ1405 - ■FP13 - ■■L1**		139
	9.2	3 118	1.1	156.19	★	**2KJ1405 - ■FP13 - ■■K1**		139
	9.9	2 895	1.2	144.99		**2KJ1405 - ■FP13 - ■■J1**		139
	11.2	2 554	1.3	127.92	★	**2KJ1405 - ■FP13 - ■■H1**		139
	12.1	2 358	1.4	118.11		**2KJ1405 - ■FP13 - ■■G1**		139
	13.6	2 113	1.6	105.81	★	**2KJ1405 - ■FP13 - ■■F1**		139
	14.7	1 948	1.7	97.57		**2KJ1405 - ■FP13 - ■■E1**		139
	17.5	1 634	2.1	81.86		**2KJ1405 - ■FP13 - ■■D1**		139
	FZ.108B-LA100ZLD4E							
	22	1 282	2.3	64.21	★	**2KJ1305 - ■FP13 - ■■A2**		138
	FD.88B-LA100ZLD4E							
	12.4	2 315	0.82	115.93		**2KJ1404 - ■FP13 - ■■G1**		92
	13.6	2 109	0.90	105.61	★	**2KJ1404 - ■FP13 - ■■F1**		92
	14.8	1 932	0.98	96.75		**2KJ1404 - ■FP13 - ■■E1**		92
	16.6	1 724	1.1	86.33	★	**2KJ1404 - ■FP13 - ■■D1**		92
	18.6	1 538	1.2	77.04		**2KJ1404 - ■FP13 - ■■C1**		92
	22	1 306	1.5	65.43		**2KJ1404 - ■FP13 - ■■B1**		92
	26	1 088	1.7	54.47	★	**2KJ1404 - ■FP13 - ■■A1**		92
	FZ.88B-LA100ZLD4E							
	22	1289	1.5	64.58	★	**2KJ1304 - ■FP13 - ■■X1**		91

★ Preferred transmission ratio

Shaft designs, see page 3/89 — **1, 2, 3, 5, 6 or 9**

Frequency and voltage, see page 8/20 — **1 to 9**

Gearbox housing mounting position, see page 3/92 — **A, D, E, F, H or M**

*) For mounting type B5-01

© Siemens AG 2011

Selection and ordering data (continued)

Power rating P_{Motor} kW	Output speed n_2 (50 Hz) rpm	Output torque T_2 Nm	Service factor f_B	Gearbox ratio i_{tot}		Order No.	Order code (No. of poles)	Weight *) kg
3	**FZ.88B-LA100ZLD4E**							
	24	1 181	1.6	59.13		**2KJ1304 - ■FP13 - ■■W1**		91
	27	1 050	1.8	52.6	★	**2KJ1304 - ■FP13 - ■■V1**		91
	30	959	2.0	48.03		**2KJ1304 - ■FP13 - ■■U1**		91
	32	882	2.2	44.2	★	**2KJ1304 - ■FP13 - ■■T1**		91
	35	815	2.3	40.83		**2KJ1304 - ■FP13 - ■■S1**		91
	38	756	2.5	37.89	★	**2KJ1304 - ■FP13 - ■■R1**		91
	41	705	2.7	35.29		**2KJ1304 - ■FP13 - ■■Q1**		91
	FD.68B-LA100ZLD4E							
	24	1 172	0.85	58.71		**2KJ1403 - ■FP13 - ■■B1**		61
	28	1 008	0.99	50.48	★	**2KJ1403 - ■FP13 - ■■A1**		61
	FZ.68B-LA100ZLD4E							
	27	1 068	0.94	53.5		**2KJ1303 - ■FP13 - ■■A2**		60
	30	959	1.0	48.03	★	**2KJ1303 - ■FP13 - ■■X1**		60
	33	876	1.1	43.87		**2KJ1303 - ■FP13 - ■■V1**		60
	37	777	1.3	38.93	★	**2KJ1303 - ■FP13 - ■■U1**		60
	40	717	1.4	35.93		**2KJ1303 - ■FP13 - ■■T1**		60
	44	649	1.5	32.5	★	**2KJ1303 - ■FP13 - ■■S1**		60
	48	598	1.7	29.93		**2KJ1303 - ■FP13 - ■■R1**		60
	52	553	1.8	27.68	★	**2KJ1303 - ■FP13 - ■■Q1**		60
	56	513	1.9	25.69		**2KJ1303 - ■FP13 - ■■P1**		60
	63	453	2.2	22.67	★	**2KJ1303 - ■FP13 - ■■N1**		60
	69	418	2.4	20.93		**2KJ1303 - ■FP13 - ■■M1**		60
	76	374	2.7	18.75	★	**2KJ1303 - ■FP13 - ■■L1**		60
	83	345	2.9	17.29		**2KJ1303 - ■FP13 - ■■K1**		60
	99	290	3.5	14.51		**2KJ1303 - ■FP13 - ■■J1**		60
	FZ.48B-LA100ZLD4E							
	46	616	0.88	30.86	★	**2KJ1302 - ■FP13 - ■■T1**		45
	51	559	0.97	28.02		**2KJ1302 - ■FP13 - ■■S1**		45
	56	511	1.1	25.59	★	**2KJ1302 - ■FP13 - ■■R1**		45
	61	469	1.2	23.48		**2KJ1302 - ■FP13 - ■■Q1**		45
	66	432	1.3	21.63	★	**2KJ1302 - ■FP13 - ■■P1**		45
	73	392	1.4	19.64		**2KJ1302 - ■FP13 - ■■N1**		45
	80	357	1.5	17.89	★	**2KJ1302 - ■FP13 - ■■M1**		45
	88	327	1.7	16.39		**2KJ1302 - ■FP13 - ■■L1**		45
	98	292	1.8	14.63	★	**2KJ1302 - ■FP13 - ■■K1**		45
	110	261	2.1	13.05		**2KJ1302 - ■FP13 - ■■J1**		45
	129	221	2.4	11.09		**2KJ1302 - ■FP13 - ■■H1**		45
	155	184	2.9	9.23	★	**2KJ1302 - ■FP13 - ■■G1**		45
	171	168	3.0	8.39	★	**2KJ1302 - ■FP13 - ■■F1**		45
	187	153	3.0	7.68		**2KJ1302 - ■FP13 - ■■E1**		45
	209	137	3.2	6.86	★	**2KJ1302 - ■FP13 - ■■D1**		45
	234	122	3.3	6.12		**2KJ1302 - ■FP13 - ■■C1**		45
	276	104	3.6	5.2		**2KJ1302 - ■FP13 - ■■B1**		45
3	**331**	86	3.8	4.33	★	**2KJ1302 - ■FP13 - ■■A1**		45

★ Preferred transmission ratio

Shaft designs, see page 3/89 — **1, 2, 3, 5, 6 or 9**

Frequency and voltage, see page 8/20 — **1 to 9**

Gearbox housing mounting position, see page 3/92 — **A, D, E, F, H or M**

*) For mounting type B5-01

© Siemens AG 2011

Selection and ordering data (continued)

Power rating P_{Motor} kW	Output speed n_2 (50 Hz) rpm	Output torque T_2 Nm	Service factor f_B	Gearbox ratio i_{tot}		Order No.	Order code (No. of poles)	Weight *) kg
3	**FZ.48B-LA100ZLB2E**							
	162	177	3.0	17.89	★	**2KJ1302 - ■FM13 - ■■M1**	**P00**	45
	176	162	3.3	16.39		**2KJ1302 - ■FM13 - ■■L1**	**P00**	45
	198	145	3.7	14.63	★	**2KJ1302 - ■FM13 - ■■K1**	**P00**	45
	221	129	4.2	13.05		**2KJ1302 - ■FM13 - ■■J1**	**P00**	45
	FZ.38B-LA100ZLD4E							
	79	364	0.80	18.23	★	**2KJ1301 - ■FP13 - ■■P1**		37
	86	332	0.87	16.61		**2KJ1301 - ■FP13 - ■■N1**		37
	94	303	0.96	15.19	★	**2KJ1301 - ■FP13 - ■■M1**		37
	106	271	1.1	13.58		**2KJ1301 - ■FP13 - ■■L1**		37
	115	249	1.2	12.47	★	**2KJ1301 - ■FP13 - ■■K1**		37
	128	224	1.3	11.24		**2KJ1301 - ■FP13 - ■■J1**		37
	148	193	1.5	9.67	★	**2KJ1301 - ■FP13 - ■■H1**		37
	168	170	1.7	8.52	★	**2KJ1301 - ■FP13 - ■■G1**		37
	185	155	1.9	7.76		**2KJ1301 - ■FP13 - ■■F1**		37
	202	142	2.0	7.1	★	**2KJ1301 - ■FP13 - ■■E1**		37
	226	127	2.2	6.35		**2KJ1301 - ■FP13 - ■■D1**		37
	246	116	2.4	5.83	★	**2KJ1301 - ■FP13 - ■■C1**		37
	273	105	2.4	5.25		**2KJ1301 - ■FP13 - ■■B1**		37
	317	90	2.5	4.52	★	**2KJ1301 - ■FP13 - ■■A1**		37
	FZ.38B-LA100ZLB2E							
	159	181	1.6	18.23	★	**2KJ1301 - ■FM13 - ■■P1**	**P00**	37
	174	165	1.8	16.61		**2KJ1301 - ■FM13 - ■■N1**	**P00**	37
	190	151	1.9	15.19	★	**2KJ1301 - ■FM13 - ■■M1**	**P00**	37
	213	135	2.2	13.58		**2KJ1301 - ■FM13 - ■■L1**	**P00**	37
	232	124	2.3	12.47	★	**2KJ1301 - ■FM13 - ■■K1**	**P00**	37
	257	111	2.6	11.24		**2KJ1301 - ■FM13 - ■■J1**	**P00**	37
	299	96	3.0	9.67	★	**2KJ1301 - ■FM13 - ■■H1**	**P00**	37
	339	84	3.4	8.52	★	**2KJ1301 - ■FM13 - ■■G1**	**P00**	37
	372	77	3.8	7.76		**2KJ1301 - ■FM13 - ■■F1**	**P00**	37
	407	70	4.1	7.1	★	**2KJ1301 - ■FM13 - ■■E1**	**P00**	37
	455	63	4.4	6.35		**2KJ1301 - ■FM13 - ■■D1**	**P00**	37
	496	58	4.8	5.83	★	**2KJ1301 - ■FM13 - ■■C1**	**P00**	37
	550	52	4.9	5.25		**2KJ1301 - ■FM13 - ■■B1**	**P00**	37
	639	45	5.1	4.52	★	**2KJ1301 - ■FM13 - ■■A1**	**P00**	37
	FZ.28-LA100ZLD4E							
	199	144	0.88	7.2	★	**2KJ1300 - ■FP13 - ■■G1**		29
	220	130	0.94	6.53		**2KJ1300 - ■FP13 - ■■F1**		29
	242	119	0.99	5.94	★	**2KJ1300 - ■FP13 - ■■E1**		29
	273	105	1.1	5.25		**2KJ1300 - ■FP13 - ■■D1**		29
	296	97	1.1	4.85	★	**2KJ1300 - ■FP13 - ■■C1**		29
	343	84	1.2	4.18		**2KJ1300 - ■FP13 - ■■B1**		29
	378	76	1.3	3.8	★	**2KJ1300 - ■FP13 - ■■A1**		29

★ Preferred transmission ratio

Shaft designs, see page 3/89 — **1, 2, 3, 5, 6 or 9**

Frequency and voltage, see page 8/20 — **1 to 9**

Gearbox housing mounting position, see page 3/92 — **A, D, E, F, H or M**

*) For mounting type B5-01

© Siemens AG 2011

Selection and ordering data (continued)

Power rating P_{Motor} kW	Output speed n_2 (50 Hz) rpm	Output torque T_2 Nm	Service factor f_B	Gearbox ratio i_{tot}		Order No.	Order code (No. of poles)	Weight *) kg
4	**FD.188B-Z68-LAI112ZMP4**							
	1.4	24 905	0.80	1 030		**2KJ1441 - ■GJ13 - ■■F1**		680
	FD.188B-LA132ZMB6E							
	2.4	16 239	1.2	403.86	★	**2KJ1410 - ■HJ13 - ■■U1**	**P01**	684
	2.6	14 899	1.3	370.52		**2KJ1410 - ■HJ13 - ■■T1**	**P01**	684
	2.8	13 750	1.5	341.94	★	**2KJ1410 - ■HJ13 - ■■S1**	**P01**	684
	3.0	12 754	1.6	317.18		**2KJ1410 - ■HJ13 - ■■R1**	**P01**	684
	3.2	12 031	1.7	299.2	★	**2KJ1410 - ■HJ13 - ■■Q1**	**P01**	684
	3.4	11 253	1.8	279.86		**2KJ1410 - ■HJ13 - ■■P1**	**P01**	684
	FD.168B-LA132ZMB6E							
	2.6	14 848	0.94	369.26	★	**2KJ1408 - ■HJ13 - ■■V1**	**P01**	503
	2.8	13 611	1.0	338.49		**2KJ1408 - ■HJ13 - ■■U1**	**P01**	503
	3.0	12 551	1.1	312.12	★	**2KJ1408 - ■HJ13 - ■■T1**	**P01**	503
	3.3	11 631	1.2	289.26		**2KJ1408 - ■HJ13 - ■■S1**	**P01**	503
	3.5	11 059	1.3	275.03	★	**2KJ1408 - ■HJ13 - ■■R1**	**P01**	503
	3.7	10 336	1.4	257.04		**2KJ1408 - ■HJ13 - ■■Q1**	**P01**	503
	FD.148B-LA112ZMP4E							
	3.5	10 929	0.82	411.98		**2KJ1407 - ■GJ13 - ■■T1**		323
	3.9	9 764	0.92	368.06	★	**2KJ1407 - ■GJ13 - ■■S1**		323
	4.3	8 942	1.0	337.07		**2KJ1407 - ■GJ13 - ■■R1**		323
	4.6	8 237	1.1	310.51	★	**2KJ1407 - ■GJ13 - ■■Q1**		323
	5.0	7 626	1.2	287.49		**2KJ1407 - ■GJ13 - ■■P1**		323
	5.4	7 092	1.3	267.35	★	**2KJ1407 - ■GJ13 - ■■N1**		323
	5.8	6 621	1.4	249.58		**2KJ1407 - ■GJ13 - ■■M1**		323
	6.4	5 924	1.5	223.31	★	**2KJ1407 - ■GJ13 - ■■L1**		323
	7.0	5 489	1.6	206.93		**2KJ1407 - ■GJ13 - ■■K1**		323
	7.6	5 032	1.8	189.69	★	**2KJ1407 - ■GJ13 - ■■J1**		323
	8.3	4 613	2.0	173.89		**2KJ1407 - ■GJ13 - ■■H1**		323
	FD.128B-LA112ZMP4E							
	5.5	6 920	0.88	260.84	★	**2KJ1406 - ■GJ13 - ■■Q1**		227
	6.0	6 324	0.96	238.39		**2KJ1406 - ■GJ13 - ■■P1**		227
	6.6	5 814	1.0	219.15	★	**2KJ1406 - ■GJ13 - ■■N1**		227
	7.1	5 371	1.1	202.48		**2KJ1406 - ■GJ13 - ■■M1**		227
	7.7	4 984	1.2	187.88	★	**2KJ1406 - ■GJ13 - ■■L1**		227
	8.2	4 643	1.3	175.01		**2KJ1406 - ■GJ13 - ■■K1**		227
	9.1	4 197	1.5	158.22	★	**2KJ1406 - ■GJ13 - ■■J1**		227
	9.9	3 864	1.6	145.66		**2KJ1406 - ■GJ13 - ■■H1**		227
	11.0	3 475	1.8	131.01	★	**2KJ1406 - ■GJ13 - ■■G1**		227
	11.9	3 206	1.9	120.87		**2KJ1406 - ■GJ13 - ■■F1**		227
	14.1	2 717	2.2	102.41		**2KJ1406 - ■GJ13 - ■■E1**		227

★ Preferred transmission ratio

Shaft designs, see page 3/89 — **1, 2, 3, 5, 6 or 9**

Frequency and voltage, see page 8/20 — **1 to 9**

Gearbox housing mounting position, see page 3/92 — **A, D, E, F, H or M**

*) For mounting type B5-01

© Siemens AG 2011

Selection and ordering data (continued)

Power rating P_{Motor} kW	Output speed n_2 (50 Hz) rpm	Output torque T_2 Nm	Service factor f_B	Gearbox ratio i_{tot}		Order No.	Order code (No. of poles)	Weight *) kg
4	**FD.108B-LA112ZMP4E**							
	9.2	4 143	0.82	156.19	★	**2KJ1405 - ■GJ13 - ■■K1**		146
	9.9	3 846	0.88	144.99		**2KJ1405 - ■GJ13 - ■■J1**		146
	11.3	3 393	1.0	127.92	★	**2KJ1405 - ■GJ13 - ■■H1**		146
	12.2	3 133	1.1	118.11		**2KJ1405 - ■GJ13 - ■■G1**		146
	13.6	2 807	1.2	105.81	★	**2KJ1405 - ■GJ13 - ■■F1**		146
	14.8	2 588	1.3	97.57		**2KJ1405 - ■GJ13 - ■■E1**		146
	17.6	2 172	1.6	81.86		**2KJ1405 - ■GJ13 - ■■D1**		146
	21	1 853	1.8	69.84	★	**2KJ1405 - ■GJ13 - ■■C1**		146
	25	1 544	2.2	58.2		**2KJ1405 - ■GJ13 - ■■B1**		146
	FZ.108B-LA112ZMP4E							
	22	1 703	1.8	64.21	★	**2KJ1305 - ■GJ13 - ■■A2**		145
	24	1 560	1.9	58.8		**2KJ1305 - ■GJ13 - ■■X1**		145
	27	1 437	2.4	54.17	★	**2KJ1305 - ■GJ13 - ■■W1**		145
	FD.88B-LA112ZMP4E							
	16.7	2 290	0.83	86.33	★	**2KJ1404 - ■GJ13 - ■■D1**		99
	18.7	2 044	0.93	77.04		**2KJ1404 - ■GJ13 - ■■C1**		99
	22	1 736	1.1	65.43		**2KJ1404 - ■GJ13 - ■■B1**		99
	26	1 445	1.3	54.47	★	**2KJ1404 - ■GJ13 - ■■A1**		99
	FZ.88B-LA112ZMP4E							
	22	1 713	1.1	64.58	★	**2KJ1304 - ■GJ13 - ■■X1**		98
	24	1 569	1.2	59.13		**2KJ1304 - ■GJ13 - ■■W1**		98
	27	1 395	1.4	52.6	★	**2KJ1304 - ■GJ13 - ■■V1**		98
	30	1 274	1.5	48.03		**2KJ1304 - ■GJ13 - ■■U1**		98
	33	1 173	1.6	44.2	★	**2KJ1304 - ■GJ13 - ■■T1**		98
	35	1 083	1.8	40.83		**2KJ1304 - ■GJ13 - ■■S1**		98
	38	1 005	1.9	37.89	★	**2KJ1304 - ■GJ13 - ■■R1**		98
	41	936	2.0	35.29		**2KJ1304 - ■GJ13 - ■■Q1**		98
	45	847	2.2	31.91	★	**2KJ1304 - ■GJ13 - ■■P1**		98
	49	779	2.4	29.38		**2KJ1304 - ■GJ13 - ■■N1**		98
	54	701	2.7	26.42	★	**2KJ1304 - ■GJ13 - ■■M1**		98
	59	647	2.9	24.38		**2KJ1304 - ■GJ13 - ■■L1**		98
	FZ.68B-LA112ZMP4E							
	33	1 164	0.86	43.87		**2KJ1303 - ■GJ13 - ■■V1**		67
	37	1 033	0.97	38.93	★	**2KJ1303 - ■GJ13 - ■■U1**		67
	40	953	1.0	35.93		**2KJ1303 - ■GJ13 - ■■T1**		67
	44	862	1.2	32.5	★	**2KJ1303 - ■GJ13 - ■■S1**		67
	48	794	1.3	29.93		**2KJ1303 - ■GJ13 - ■■R1**		67
	52	734	1.4	27.68	★	**2KJ1303 - ■GJ13 - ■■Q1**		67
	56	681	1.5	25.69		**2KJ1303 - ■GJ13 - ■■P1**		67
	64	601	1.7	22.67	★	**2KJ1303 - ■GJ13 - ■■N1**		67
	69	555	1.8	20.93		**2KJ1303 - ■GJ13 - ■■M1**		67
	77	497	2.0	18.75	★	**2KJ1303 - ■GJ13 - ■■L1**		67
	83	459	2.2	17.29		**2KJ1303 - ■GJ13 - ■■K1**		67

★ Preferred transmission ratio

Shaft designs, see page 3/89 — **1, 2, 3, 5, 6 or 9**

Frequency and voltage, see page 8/20 — **1 to 9**

Gearbox housing mounting position, see page 3/92 — **A, D, E, F, H or M**

*) For mounting type B5-01

© Siemens AG 2011

Selection and ordering data (continued)

Power rating P_{Motor} kW	Output speed n_2 (50 Hz) rpm	Output torque T_2 Nm	Service factor f_B	Gearbox ratio i_{tot}		Order No.	Order code (No. of poles)	Weight *) kg
4	**FZ.68B-LA112ZMP4E**							
	99	385	2.6	14.51		**2KJ1303 - ■GJ13 - ■■J1**		67
	116	328	3.0	12.38	★	**2KJ1303 - ■GJ13 - ■■H1**		67
	140	274	3.7	10.31		**2KJ1303 - ■GJ13 - ■■G1**		67
	179	213	4.2	8.03		**2KJ1303 - ■GJ13 - ■■E1**		67
	FZ.48B-LA112ZMP4E							
	56	679	0.8	25.59	★	**2KJ1302 - ■GJ13 - ■■R1**		52
	61	623	0.87	23.48		**2KJ1302 - ■GJ13 - ■■Q1**		52
	67	574	0.94	21.63	★	**2KJ1302 - ■GJ13 - ■■P1**		52
	73	521	1.0	19.64		**2KJ1302 - ■GJ13 - ■■N1**		52
	80	475	1.1	17.89	★	**2KJ1302 - ■GJ13 - ■■M1**		52
	88	435	1.2	16.39		**2KJ1302 - ■GJ13 - ■■L1**		52
	98	388	1.4	14.63	★	**2KJ1302 - ■GJ13 - ■■K1**		52
	110	346	1.6	13.05		**2KJ1302 - ■GJ13 - ■■J1**		52
	130	294	1.8	11.09		**2KJ1302 - ■GJ13 - ■■H1**		52
	156	245	2.1	9.23	★	**2KJ1302 - ■GJ13 - ■■G1**		52
	172	223	2.3	8.39	★	**2KJ1302 - ■GJ13 - ■■F1**		52
	188	204	2.3	7.68		**2KJ1302 - ■GJ13 - ■■E1**		52
	210	182	2.4	6.86	★	**2KJ1302 - ■GJ13 - ■■D1**		52
	235	162	2.5	6.12		**2KJ1302 - ■GJ13 - ■■C1**		52
	277	138	2.7	5.2		**2KJ1302 - ■GJ13 - ■■B1**		52
	333	115	2.8	4.33	★	**2KJ1302 - ■GJ13 - ■■A1**		52
	FZ.48B-LA112ZMP2E							
	162	235	2.3	17.89	★	**2KJ1302 - ■GJ13 - ■■M1**	**P00**	52
	177	216	2.5	16.39		**2KJ1302 - ■GJ13 - ■■L1**	**P00**	52
	199	192	2.8	14.63	★	**2KJ1302 - ■GJ13 - ■■K1**	**P00**	52
	223	172	3.1	13.05		**2KJ1302 - ■GJ13 - ■■J1**	**P00**	52
	262	146	3.7	11.09		**2KJ1302 - ■GJ13 - ■■H1**	**P00**	52
	315	121	4.3	9.23	★	**2KJ1302 - ■GJ13 - ■■G1**	**P00**	52
	346	110	4.6	8.39	★	**2KJ1302 - ■GJ13 - ■■F1**	**P00**	52
	378	101	4.6	7.68		**2KJ1302 - ■GJ13 - ■■E1**	**P00**	52
	423	90	4.9	6.86	★	**2KJ1302 - ■GJ13 - ■■D1**	**P00**	52
	475	80	5.0	6.12		**2KJ1302 - ■GJ13 - ■■C1**	**P00**	52
	559	68	5.5	5.2		**2KJ1302 - ■GJ13 - ■■B1**	**P00**	52
	671	57	5.7	4.33	★	**2KJ1302 - ■GJ13 - ■■A1**	**P00**	52
5.5	**FD.208-LA160MB8**							
	2.9	17 904	1.9	242.01		**2KJ1411 - ■JF13 - ■■T1**	**P02**	1123
	FD.188B-LA132ZMD6E							
	2.4	22 097	0.91	403.86	★	**2KJ1410 - ■HK13 - ■■U1**	**P01**	684
	2.6	20 272	0.99	370.52		**2KJ1410 - ■HK13 - ■■T1**	**P01**	684
	2.8	18 709	1.1	341.94	★	**2KJ1410 - ■HK13 - ■■S1**	**P01**	684
	3.0	17 354	1.2	317.18		**2KJ1410 - ■HK13 - ■■R1**	**P01**	684
	3.2	16 370	1.2	299.2	★	**2KJ1410 - ■HK13 - ■■Q1**	**P01**	684
	3.4	15 312	1.3	279.86		**2KJ1410 - ■HK13 - ■■P1**	**P01**	684

★ Preferred transmission ratio

Shaft designs, see page 3/89 — **1, 2, 3, 5, 6 or 9**

Frequency and voltage, see page 8/20 — **1 to 9**

Gearbox housing mounting position, see page 3/92 — **A, D, E, F, H or M**

*) For mounting type B5-01

© Siemens AG 2011

Selection and ordering data (continued)

Power rating P_{Motor} kW	Output speed n_2 (50 Hz) rpm	Output torque T_2 Nm	Service factor f_B	Gearbox ratio i_{tot}		Order No.	Order code (No. of poles)	Weight *) kg
5.5	**FD.188B-LA132SP4E**							
	3.6	14 680	1.4	403.86	★	**2KJ1410 - ■HG13 - ■■U1**		684
	3.9	13 468	1.5	370.52		**2KJ1410 - ■HG13 - ■■T1**		684
	4.2	12 429	1.6	341.94	★	**2KJ1410 - ■HG13 - ■■S1**		684
	4.6	11 529	1.7	317.18		**2KJ1410 - ■HG13 - ■■R1**		684
	4.8	10 876	1.8	299.2	★	**2KJ1410 - ■HG13 - ■■Q1**		684
	5.2	10 173	2.0	279.86		**2KJ1410 - ■HG13 - ■■P1**		684
	FD.168B-LA132ZMD6E							
	3.1	17 077	0.82	312.12	★	**2KJ1408 - ■HK13 - ■■T1**	**P01**	503
	3.3	15 826	0.88	289.26		**2KJ1408 - ■HK13 - ■■S1**	**P01**	503
	3.5	15 048	0.93	275.03	★	**2KJ1408 - ■HK13 - ■■R1**	**P01**	503
	3.7	14 064	1.0	257.04		**2KJ1408 - ■HK13 - ■■Q1**	**P01**	503
	FD.168B-LA132SP4E							
	3.9	13 422	1.0	369.26	★	**2KJ1408 - ■HG13 - ■■V1**		503
	4.3	12 304	1.1	338.49		**2KJ1408 - ■HG13 - ■■U1**		503
	4.6	11 345	1.2	312.12	★	**2KJ1408 - ■HG13 - ■■T1**		503
	5.0	10 514	1.3	289.26		**2KJ1408 - ■HG13 - ■■S1**		503
	5.3	9 997	1.4	275.03	★	**2KJ1408 - ■HG13 - ■■R1**		503
	5.6	9 343	1.5	257.04		**2KJ1408 - ■HG13 - ■■Q1**		503
	6.4	8 242	1.7	226.74	★	**2KJ1408 - ■HG13 - ■■P1**		503
	6.8	7 774	1.8	213.87		**2KJ1408 - ■HG13 - ■■N1**		503
	7.5	6 966	2.0	191.63	★	**2KJ1408 - ■HG13 - ■■M1**		503
	FD.148B-LA132SP4E							
	4.7	11 287	0.80	310.51	★	**2KJ1407 - ■HG13 - ■■Q1**		341
	5.0	10 450	0.86	287.49		**2KJ1407 - ■HG13 - ■■P1**		341
	5.4	9 718	0.93	267.35	★	**2KJ1407 - ■HG13 - ■■N1**		341
	5.8	9 072	0.99	249.58		**2KJ1407 - ■HG13 - ■■M1**		341
	6.5	8 117	1.1	223.31	★	**2KJ1407 - ■HG13 - ■■L1**		341
	7.0	7 522	1.2	206.93		**2KJ1407 - ■HG13 - ■■K1**		341
	7.6	6 895	1.3	189.69	★	**2KJ1407 - ■HG13 - ■■J1**		341
	8.3	6 321	1.4	173.89		**2KJ1407 - ■HG13 - ■■H1**		341
	9.8	5 386	1.7	148.18		**2KJ1407 - ■HG13 - ■■G1**		341
	11.1	4 753	1.9	130.76	★	**2KJ1407 - ■HG13 - ■■F1**		341
	13.0	4 045	2.2	111.29		**2KJ1407 - ■HG13 - ■■E1**		341
	FZ.148B-LA132SP4E							
	21	2 480	2.3	68.23		**2KJ1307 - ■HG13 - ■■V1**		333
	FD.128B-LA132SP4E							
	7.1	7 360	0.83	202.48		**2KJ1406 - ■HG13 - ■■M1**		245
	7.7	6 829	0.89	187.88	★	**2KJ1406 - ■HG13 - ■■L1**		245
	8.3	6 362	0.96	175.01		**2KJ1406 - ■HG13 - ■■K1**		245
	9.1	5 751	1.1	158.22	★	**2KJ1406 - ■HG13 - ■■J1**		245
	9.9	5 295	1.2	145.66		**2KJ1406 - ■HG13 - ■■H1**		245
	11.0	4 762	1.3	131.01	★	**2KJ1406 - ■HG13 - ■■G1**		245
	12.0	4 394	1.4	120.87		**2KJ1406 - ■HG13 - ■■F1**		245

★ Preferred transmission ratio

Shaft designs, see page 3/89 — **1, 2, 3, 5, 6 or 9**

Frequency and voltage, see page 8/20 — **1 to 9**

Gearbox housing mounting position, see page 3/92 — **A, D, E, F, H or M**

*) For mounting type B5-01

© Siemens AG 2011

Selection and ordering data (continued)

Power rating P_{Motor} kW	Output speed n_2 (50 Hz) rpm	Output torque T_2 Nm	Service factor f_B	Gearbox ratio i_{tot}		Order No.	Order code (No. of poles)	Weight *) kg
5.5	**FD.128B-LA132SP4E**							
	14.1	3 723	1.6	102.41		**2KJ1406 - ■HG13 - ■■E1**		245
	16.2	3 244	1.9	89.25	★	**2KJ1406 - ■HG13 - ■■D1**		245
	19.0	2 760	2.2	75.93		**2KJ1406 - ■HG13 - ■■C1**		245
	FZ.128B-LA132SP4E							
	26	2 051	2.1	56.42	★	**2KJ1306 - ■HG13 - ■■A2**		241
	28	1 901	2.4	52.29		**2KJ1306 - ■HG13 - ■■X1**		241
	FD.108B-LA132SP4E							
	13.7	3 846	0.88	105.81	★	**2KJ1405 - ■HG13 - ■■F1**		164
	14.8	3 547	0.96	97.57		**2KJ1405 - ■HG13 - ■■E1**		164
	17.7	2 976	1.1	81.86		**2KJ1405 - ■HG13 - ■■D1**		164
	21	2 539	1.3	69.84	★	**2KJ1405 - ■HG13 - ■■C1**		164
	25	2 116	1.6	58.2		**2KJ1405 - ■HG13 - ■■B1**		164
	30	1 753	1.9	48.24	★	**2KJ1405 - ■HG13 - ■■A1**		164
	FZ.108B-LA132SP4E							
	22	2 334	1.3	64.21	★	**2KJ1305 - ■HG13 - ■■A2**		163
	25	2 137	1.4	58.8		**2KJ1305 - ■HG13 - ■■X1**		163
	27	1 969	1.7	54.17	★	**2KJ1305 - ■HG13 - ■■W1**		163
	29	1 823	1.9	50.15		**2KJ1305 - ■HG13 - ■■V1**		163
	31	1 695	2.0	46.64	★	**2KJ1305 - ■HG13 - ■■U1**		163
	33	1 583	2.1	43.54		**2KJ1305 - ■HG13 - ■■T1**		163
	37	1 416	2.4	38.95	★	**2KJ1305 - ■HG13 - ■■S1**		163
	40	1 312	2.6	36.1		**2KJ1305 - ■HG13 - ■■R1**		163
	FD.88B-LA132SP4E							
	22	2 378	0.80	65.43		**2KJ1404 - ■HG13 - ■■B1**		117
	26	1 980	0.96	54.47	★	**2KJ1404 - ■HG13 - ■■A1**		117
	FZ.88B-LA132SP4E							
	28	1 912	0.99	52.6	★	**2KJ1304 - ■HG13 - ■■V1**		116
	30	1 746	1.1	48.03		**2KJ1304 - ■HG13 - ■■U1**		116
	33	1 607	1.2	44.2	★	**2KJ1304 - ■HG13 - ■■T1**		116
	35	1 484	1.3	40.83		**2KJ1304 - ■HG13 - ■■S1**		116
	38	1 377	1.4	37.89	★	**2KJ1304 - ■HG13 - ■■R1**		116
	41	1 283	1.5	35.29		**2KJ1304 - ■HG13 - ■■Q1**		116
	45	1 160	1.6	31.91	★	**2KJ1304 - ■HG13 - ■■P1**		116
	49	1 068	1.8	29.38		**2KJ1304 - ■HG13 - ■■N1**		116
	55	960	2.0	26.42	★	**2KJ1304 - ■HG13 - ■■M1**		116
	59	886	2.1	24.38		**2KJ1304 - ■HG13 - ■■L1**		116
	70	751	2.5	20.65		**2KJ1304 - ■HG13 - ■■K1**		116
	80	654	2.9	18	★	**2KJ1304 - ■HG13 - ■■J1**		116
	94	557	3.4	15.31		**2KJ1304 - ■HG13 - ■■H1**		116
	FZ.68B-LA132SP4E							
	44	1 181	0.85	32.5	★	**2KJ1303 - ■HG13 - ■■S1**		85
	48	1 088	0.92	29.93		**2KJ1303 - ■HG13 - ■■R1**		85
	52	1 006	0.99	27.68	★	**2KJ1303 - ■HG13 - ■■Q1**		85

★ Preferred transmission ratio

Shaft designs, see page 3/89 — **1, 2, 3, 5, 6 or 9**

Frequency and voltage, see page 8/20 — **1 to 9**

Gearbox housing mounting position, see page 3/92 — **A, D, E, F, H or M**

*) For mounting type B5-01

© Siemens AG 2011

Selection and ordering data (continued)

Power rating P_{Motor} kW	Output speed n_2 (50 Hz) rpm	Output torque T_2 Nm	Service factor f_B	Gearbox ratio i_{tot}		Order No.	Order code (No. of poles)	Weight *) kg
5.5	**FZ.68B-LA132SP4E**							
	56	934	1.1	25.69		**2KJ1303 - ■HG13 - ■■P1**		85
	64	824	1.2	22.67	★	**2KJ1303 - ■HG13 - ■■N1**		85
	69	761	1.3	20.93		**2KJ1303 - ■HG13 - ■■M1**		85
	77	682	1.5	18.75	★	**2KJ1303 - ■HG13 - ■■L1**		85
	84	628	1.6	17.29		**2KJ1303 - ■HG13 - ■■K1**		85
	100	527	1.9	14.51		**2KJ1303 - ■HG13 - ■■J1**		85
	117	450	2.2	12.38	★	**2KJ1303 - ■HG13 - ■■H1**		85
	140	375	2.7	10.31		**2KJ1303 - ■HG13 - ■■G1**		85
	169	311	3.2	8.55	★	**2KJ1303 - ■HG13 - ■■F1**		85
	180	292	3.1	8.03		**2KJ1303 - ■HG13 - ■■E1**		85
	214	245	3.4	6.74		**2KJ1303 - ■HG13 - ■■D1**		85
	251	209	3.6	5.75	★	**2KJ1303 - ■HG13 - ■■C1**		85
	302	174	3.9	4.79		**2KJ1303 - ■HG13 - ■■B1**		85
	364	144	4.1	3.97	★	**2KJ1303 - ■HG13 - ■■A1**		85
	FZ.68B-LA132SB2E							
	156	336	3.0	18.75	★	**2KJ1303 - ■HF13 - ■■L1**	**P00**	77
	169	310	3.2	17.29		**2KJ1303 - ■HF13 - ■■K1**	**P00**	77
	202	260	3.8	14.51		**2KJ1303 - ■HF13 - ■■J1**	**P00**	77
	237	222	4.5	12.38	★	**2KJ1303 - ■HF13 - ■■H1**	**P00**	77
7.5	**FD.208-LA160LB8**							
	3.0	24 243	1.4	242.01		**2KJ1411 - ■JJ13 - ■■T1**	**P02**	1 135
	3.3	21 892	1.6	218.54		**2KJ1411 - ■JJ13 - ■■S1**	**P02**	1 135
	3.5	20 517	1.7	204.81		**2KJ1411 - ■JJ13 - ■■R1**	**P02**	1 135
	FD.208-LA160MD6E							
	4.0	17 963	1.9	242.01		**2KJ1411 - ■JJ13 - ■■T1**	**P01**	1 135
	FD.188B-LA160MD6E							
	3.2	22 207	0.90	299.2	★	**2KJ1410 - ■JJ13 - ■■Q1**	**P01**	720
	3.4	20 772	0.96	279.86		**2KJ1410 - ■JJ13 - ■■P1**	**P01**	720
	FD.188B-LA132ZMP4E							
	3.6	19 881	1.0	403.86	★	**2KJ1410 - ■HK13 - ■■U1**		684
	3.9	18 240	1.1	370.52		**2KJ1410 - ■HK13 - ■■T1**		684
	4.3	16 833	1.2	341.94	★	**2KJ1410 - ■HK13 - ■■S1**		684
	4.6	15 614	1.3	317.18		**2KJ1410 - ■HK13 - ■■R1**		684
	4.9	14 729	1.4	299.2	★	**2KJ1410 - ■HK13 - ■■Q1**		684
	5.2	13 777	1.5	279.86		**2KJ1410 - ■HK13 - ■■P1**		684
	5.8	12 250	1.6	248.85	★	**2KJ1410 - ■HK13 - ■■N1**		684
	6.2	11 565	1.7	234.93		**2KJ1410 - ■HK13 - ■■M1**		684
	6.9	10 381	1.9	210.89	★	**2KJ1410 - ■HK13 - ■■L1**		684
	7.5	9 528	2.1	193.56		**2KJ1410 - ■HK13 - ■■K1**		684
	FD.168B-LA132ZMP4E							
	4.3	16 663	0.84	338.49		**2KJ1408 - ■HK13 - ■■U1**		503
	4.7	15 365	0.91	312.12	★	**2KJ1408 - ■HK13 - ■■T1**		503
	5.0	14 239	0.98	289.26		**2KJ1408 - ■HK13 - ■■S1**		503

★ Preferred transmission ratio

Shaft designs, see page 3/89 — **1, 2, 3, 5, 6 or 9**

Frequency and voltage, see page 8/20 — **1 to 9**

Gearbox housing mounting position, see page 3/92 — **A, D, E, F, H or M**

*) For mounting type B5-01

© Siemens AG 2011

Selection and ordering data (continued)

Power rating P_{Motor} kW	Output speed n_2 (50 Hz) rpm	Output torque T_2 Nm	Service factor f_B	Gearbox ratio i_{tot}		Order No.	Order code (No. of poles)	Weight *) kg
7.5	**FD.168B-LA132ZMP4E**							
	5.3	13 539	1.0	275.03	★	**2KJ1408 - ■HK13 - ■■R1**		503
	5.7	12 653	1.1	257.04		**2KJ1408 - ■HK13 - ■■Q1**		503
	6.4	11 162	1.3	226.74	★	**2KJ1408 - ■HK13 - ■■P1**		503
	6.8	10 528	1.3	213.87		**2KJ1408 - ■HK13 - ■■N1**		503
	7.6	9 433	1.5	191.63	★	**2KJ1408 - ■HK13 - ■■M1**		503
	8.2	8 710	1.6	176.94		**2KJ1408 - ■HK13 - ■■L1**		503
	9.6	7 442	1.9	151.18		**2KJ1408 - ■HK13 - ■■K1**		503
	10.6	6 726	2.1	136.63	★	**2KJ1408 - ■HK13 - ■■J1**		503
	11.1	6 480	2.2	131.64		**2KJ1408 - ■HK13 - ■■H1**		503
	FD.148B-LA132ZMP4E							
	6.5	10 993	0.82	223.31	★	**2KJ1407 - ■HK13 - ■■L1**		341
	7.0	10 187	0.88	206.93		**2KJ1407 - ■HK13 - ■■K1**		341
	7.7	9 338	0.96	189.69	★	**2KJ1407 - ■HK13 - ■■J1**		341
	8.4	8 560	1.1	173.89		**2KJ1407 - ■HK13 - ■■H1**		341
	9.8	7 294	1.2	148.18		**2KJ1407 - ■HK13 - ■■G1**		341
	11.1	6 437	1.4	130.76	★	**2KJ1407 - ■HK13 - ■■F1**		341
	13.1	5 478	1.6	111.29		**2KJ1407 - ■HK13 - ■■E1**		341
	15.1	4 747	1.9	96.43	★	**2KJ1407 - ■HK13 - ■■D1**		341
	17.9	3 995	2.3	81.15	★	**2KJ1407 - ■HK13 - ■■C1**		341
	FZ.148B-LA132ZMP4E							
	21	3 359	1.7	68.23		**2KJ1307 - ■HK13 - ■■V1**		333
	23	3 169	2.1	64.37	★	**2KJ1307 - ■HK13 - ■■U1**		333
	24	2 964	2.4	60.21		**2KJ1307 - ■HK13 - ■■T1**		333
	FD.128B-LA132ZMP4E							
	10.0	7 170	0.85	145.66		**2KJ1406 - ■HK13 - ■■H1**		245
	11.1	6 449	0.95	131.01	★	**2KJ1406 - ■HK13 - ■■G1**		245
	12.0	5 950	1.0	120.87		**2KJ1406 - ■HK13 - ■■F1**		245
	14.2	5 041	1.2	102.41		**2KJ1406 - ■HK13 - ■■E1**		245
	16.3	4 393	1.4	89.25	★	**2KJ1406 - ■HK13 - ■■D1**		245
	19.2	3 738	1.6	75.93		**2KJ1406 - ■HK13 - ■■C1**		245
	22	3 190	1.9	64.8	★	**2KJ1406 - ■HK13 - ■■B1**		245
	27	2 615	2.3	53.13	★	**2KJ1406 - ■HK13 - ■■A1**		245
	FZ.128B-LA132ZMP4E							
	26	2 777	1.5	56.42	★	**2KJ1306 - ■HK13 - ■■A2**		241
	28	2 574	1.8	52.29		**2KJ1306 - ■HK13 - ■■X1**		241
	29	2 447	2.0	49.71	★	**2KJ1306 - ■HK13 - ■■W1**		241
	31	2 287	2.3	46.46		**2KJ1306 - ■HK13 - ■■V1**		241
	FD.108B-LA132ZMP4E							
	17.8	4 030	0.84	81.86		**2KJ1405 - ■HK13 - ■■D1**		164
	21	3 438	0.99	69.84	★	**2KJ1405 - ■HK13 - ■■C1**		164
	25	2 865	1.2	58.2		**2KJ1405 - ■HK13 - ■■B1**		164
	30	2 375	1.4	48.24	★	**2KJ1405 - ■HK13 - ■■A1**		164

★ Preferred transmission ratio

Shaft designs, see page 3/89 — **1, 2, 3, 5, 6 or 9**

Frequency and voltage, see page 8/20 — **1 to 9**

Gearbox housing mounting position, see page 3/92 — **A, D, E, F, H or M**

*) For mounting type B5-01

© Siemens AG 2011

Selection and ordering data (continued)

Power rating P_{Motor} kW	Output speed n_2 (50 Hz) rpm	Output torque T_2 Nm	Service factor f_B	Gearbox ratio i_{tot}		Order No.	Order code (No. of poles)	Weight *) kg
7.5	**FZ.108B-LA132ZMP4E**							
	23	3 161	0.95	64.21	★	**2KJ1305 - ■HK13 - ■■A2**		163
	25	2 895	1.0	58.8		**2KJ1305 - ■HK13 - ■■X1**		163
	27	2 667	1.3	54.17	★	**2KJ1305 - ■HK13 - ■■W1**		163
	29	2 469	1.4	50.15		**2KJ1305 - ■HK13 - ■■V1**		163
	31	2 296	1.5	46.64	★	**2KJ1305 - ■HK13 - ■■U1**		163
	33	2 143	1.6	43.54		**2KJ1305 - ■HK13 - ■■T1**		163
	37	1 917	1.8	38.95	★	**2KJ1305 - ■HK13 - ■■S1**		163
	40	1 777	1.9	36.1		**2KJ1305 - ■HK13 - ■■R1**		163
	44	1 629	2.1	33.09	★	**2KJ1305 - ■HK13 - ■■Q1**		163
	48	1 493	2.3	30.33		**2KJ1305 - ■HK13 - ■■P1**		163
	56	1 273	2.7	25.85		**2KJ1305 - ■HK13 - ■■N1**		163
	64	1 123	3.0	22.81	★	**2KJ1305 - ■HK13 - ■■M1**		163
	FZ.88B-LA132ZMP4E							
	30	2 364	0.80	48.03		**2KJ1304 - ■HK13 - ■■U1**		116
	33	2 176	0.87	44.2	★	**2KJ1304 - ■HK13 - ■■T1**		116
	36	2 010	0.95	40.83		**2KJ1304 - ■HK13 - ■■S1**		116
	38	1 865	1.0	37.89	★	**2KJ1304 - ■HK13 - ■■R1**		116
	41	1 737	1.1	35.29		**2KJ1304 - ■HK13 - ■■Q1**		116
	46	1 571	1.2	31.91	★	**2KJ1304 - ■HK13 - ■■P1**		116
	50	1 446	1.3	29.38		**2KJ1304 - ■HK13 - ■■N1**		116
	55	1 301	1.5	26.42	★	**2KJ1304 - ■HK13 - ■■M1**		116
	60	1 200	1.6	24.38		**2KJ1304 - ■HK13 - ■■L1**		116
	70	1 017	1.9	20.65		**2KJ1304 - ■HK13 - ■■K1**		116
	81	886	2.1	18	★	**2KJ1304 - ■HK13 - ■■J1**		116
	95	754	2.5	15.31		**2KJ1304 - ■HK13 - ■■H1**		116
	111	643	3.0	13.07	★	**2KJ1304 - ■HK13 - ■■G1**		116
	136	527	3.6	10.71	★	**2KJ1304 - ■HK13 - ■■F1**		116
	158	452	3.7	9.19		**2KJ1304 - ■HK13 - ■■E1**		116
	182	394	3.9	8.01	★	**2KJ1304 - ■HK13 - ■■D1**		116
	213	336	4.3	6.82		**2KJ1304 - ■HK13 - ■■C1**		116
	250	286	4.7	5.82	★	**2KJ1304 - ■HK13 - ■■B1**		116
	FZ.68B-LA132ZMP4E							
	64	1 116	0.90	22.67	★	**2KJ1303 - ■HK13 - ■■N1**		85
	70	1 030	0.97	20.93		**2KJ1303 - ■HK13 - ■■M1**		85
	78	923	1.1	18.75	★	**2KJ1303 - ■HK13 - ■■L1**		85
	84	851	1.2	17.29		**2KJ1303 - ■HK13 - ■■K1**		85
	100	714	1.4	14.51		**2KJ1303 - ■HK13 - ■■J1**		85
	118	609	1.6	12.38	★	**2KJ1303 - ■HK13 - ■■H1**		85
	141	508	2.0	10.31		**2KJ1303 - ■HK13 - ■■G1**		85
	170	421	2.4	8.55	★	**2KJ1303 - ■HK13 - ■■F1**		85
	181	395	2.3	8.03		**2KJ1303 - ■HK13 - ■■E1**		85
	216	332	2.5	6.74		**2KJ1303 - ■HK13 - ■■D1**		85
	253	283	2.7	5.75	★	**2KJ1303 - ■HK13 - ■■C1**		85

★ Preferred transmission ratio

Shaft designs, see page 3/89 — **1, 2, 3, 5, 6 or 9**

Frequency and voltage, see page 8/20 — **1 to 9**

Gearbox housing mounting position, see page 3/92 — **A, D, E, F, H or M**

*) For mounting type B5-01

© Siemens AG 2011

Selection and ordering data (continued)

Power rating P_{Motor} kW	Output speed n_2 (50 Hz) rpm	Output torque T_2 Nm	Service factor f_B	Gearbox ratio i_{tot}		Order No.	Order code (No. of poles)	Weight *) kg
7.5	**FZ.68B-LA132ZMP4E**							
	304	236	2.9	4.79		**2KJ1303 - ■HK13 - ■■B1**		85
	366	195	3.0	3.97	★	**2KJ1303 - ■HK13 - ■■A1**		85
	FZ.68B-LA132ZSD2E							
	156	458	2.2	18.75	★	**2KJ1303 - ■HJ13 - ■■L1**	**P00**	85
	169	423	2.4	17.29		**2KJ1303 - ■HJ13 - ■■K1**	**P00**	85
	202	355	2.8	14.51		**2KJ1303 - ■HJ13 - ■■J1**	**P00**	85
	237	303	3.3	12.38	★	**2KJ1303 - ■HJ13 - ■■H1**	**P00**	85
	284	252	4.0	10.31		**2KJ1303 - ■HJ13 - ■■G1**	**P00**	85
	343	209	4.8	8.55	★	**2KJ1303 - ■HJ13 - ■■F1**	**P00**	85
	365	196	4.6	8.03		**2KJ1303 - ■HJ13 - ■■E1**	**P00**	85
	435	165	5.1	6.74		**2KJ1303 - ■HJ13 - ■■D1**	**P00**	85
	510	141	5.4	5.75	★	**2KJ1303 - ■HJ13 - ■■C1**	**P00**	85
	612	117	5.8	4.79		**2KJ1303 - ■HJ13 - ■■B1**	**P00**	85
	738	97	6.1	3.97	★	**2KJ1303 - ■HJ13 - ■■A1**	**P00**	85
9.2	**FD.188B-LA160MB4E**							
	4.9	18 067	1.1	299.2	★	**2KJ1410 - ■JP13 - ■■Q1**		708
	5.2	16 899	1.2	279.86		**2KJ1410 - ■JP13 - ■■P1**		708
	5.8	15 027	1.3	248.85	★	**2KJ1410 - ■JP13 - ■■N1**		708
	6.2	14 186	1.4	234.93		**2KJ1410 - ■JP13 - ■■M1**		708
	6.9	12 735	1.6	210.89	★	**2KJ1410 - ■JP13 - ■■L1**		708
	7.5	11 688	1.7	193.56		**2KJ1410 - ■JP13 - ■■K1**		708
	8.7	10 086	2.0	167.03		**2KJ1410 - ■JP13 - ■■J1**		708
	FD.168B-LA160MB4E							
	5.3	16 608	0.84	275.03	★	**2KJ1408 - ■JP13 - ■■R1**		527
	5.7	15 521	0.9	257.04		**2KJ1408 - ■JP13 - ■■Q1**		527
	6.4	13 692	1.0	226.74	★	**2KJ1408 - ■JP13 - ■■P1**		527
	6.8	12 915	1.1	213.87		**2KJ1408 - ■JP13 - ■■N1**		527
	7.6	11 572	1.2	191.63	★	**2KJ1408 - ■JP13 - ■■M1**		527
	8.2	10 685	1.3	176.94		**2KJ1408 - ■JP13 - ■■L1**		527
	9.6	9 129	1.5	151.18		**2KJ1408 - ■JP13 - ■■K1**		527
	10.6	8 250	1.7	136.63	★	**2KJ1408 - ■JP13 - ■■J1**		527
	11.1	7 949	1.8	131.64		**2KJ1408 - ■JP13 - ■■H1**		527
	12.8	6 875	2.0	113.86		**2KJ1408 - ■JP13 - ■■G1**		527
	FD.148B-LA160MB4E							
	8.4	10 500	0.86	173.89		**2KJ1407 - ■JP13 - ■■H1**		365
	9.8	8 948	1.0	148.18		**2KJ1407 - ■JP13 - ■■G1**		365
	11.1	7 896	1.1	130.76	★	**2KJ1407 - ■JP13 - ■■F1**		365
	13.1	6 720	1.3	111.29		**2KJ1407 - ■JP13 - ■■E1**		365
	15.1	5 823	1.5	96.43	★	**2KJ1407 - ■JP13 - ■■D1**		365
	17.9	4 900	1.8	81.15	★	**2KJ1407 - ■JP13 - ■■C1**		365
	19.9	4 421	2.0	73.22		**2KJ1407 - ■JP13 - ■■B1**		365
	23	3 800	2.4	62.93	★	**2KJ1407 - ■JP13 - ■■A1**		365

★ Preferred transmission ratio

Shaft designs, see page 3/89 — **1, 2, 3, 5, 6 or 9**

Frequency and voltage, see page 8/20 — **1 to 9**

Gearbox housing mounting position, see page 3/92 — **A, D, E, F, H or M**

*) For mounting type B5-01

© Siemens AG 2011

3

Selection and ordering data (continued)

Power rating P_{Motor} kW	Output speed n_2 (50 Hz) rpm	Output torque T_2 Nm	Service factor f_B	Gearbox ratio i_{tot}		Order No.	Order code (No. of poles)	Weight *) kg
9.2	**FZ.148B-LA160MB4E**							
	23	3 887	1.7	64.37	★	**2KJ1307 - ■JP13 - ■■U1**		357
	24	3 636	1.9	60.21		**2KJ1307 - ■JP13 - ■■T1**		357
	27	3 232	2.5	53.53	★	**2KJ1307 - ■JP13 - ■■S1**		357
	FD.128B-LA160MB4E							
	12.0	7 299	0.84	120.87		**2KJ1406 - ■JP13 - ■■F1**		269
	14.2	6 184	0.99	102.41		**2KJ1406 - ■JP13 - ■■E1**		269
	16.3	5 389	1.1	89.25	★	**2KJ1406 - ■JP13 - ■■D1**		269
	19.2	4 585	1.3	75.93		**2KJ1406 - ■JP13 - ■■C1**		269
	22	3 913	1.6	64.8	★	**2KJ1406 - ■JP13 - ■■B1**		269
	27	3 208	1.9	53.13	★	**2KJ1406 - ■JP13 - ■■A1**		269
	FZ.128B-LA160MB4E							
	29	3 002	1.6	49.71	★	**2KJ1306 - ■JP13 - ■■W1**		265
	31	2 805	1.8	46.46		**2KJ1306 - ■JP13 - ■■V1**		265
	36	2 475	2.3	40.99	★	**2KJ1306 - ■JP13 - ■■U1**		265
	38	2 334	2.6	38.66		**2KJ1306 - ■JP13 - ■■T1**		265
	FD.108B-LA160MB4E							
	21	4 217	0.81	69.84	★	**2KJ1405 - ■JP13 - ■■C1**		188
	25	3 514	0.97	58.2		**2KJ1405 - ■JP13 - ■■B1**		188
	30	2 913	1.2	48.24	★	**2KJ1405 - ■JP13 - ■■A1**		188
	FZ.108B-LA160MB4E							
	31	2 816	1.2	46.64	★	**2KJ1305 - ■JP13 - ■■U1**		187
	33	2 629	1.3	43.54		**2KJ1305 - ■JP13 - ■■T1**		187
	37	2 352	1.4	38.95	★	**2KJ1305 - ■JP13 - ■■S1**		187
	40	2 180	1.6	36.1		**2KJ1305 - ■JP13 - ■■R1**		187
	44	1 998	1.7	33.09	★	**2KJ1305 - ■JP13 - ■■Q1**		187
	48	1 831	1.9	30.33		**2KJ1305 - ■JP13 - ■■P1**		187
	56	1 561	2.2	25.85		**2KJ1305 - ■JP13 - ■■N1**		187
	64	1 377	2.5	22.81	★	**2KJ1305 - ■JP13 - ■■M1**		187
	75	1 172	2.9	19.41		**2KJ1305 - ■JP13 - ■■L1**		187
	86	1 016	3.3	16.82	★	**2KJ1305 - ■JP13 - ■■K1**		187
	FZ.88B-LA160MB4E							
	38	2 288	0.83	37.89	★	**2KJ1304 - ■JP13 - ■■R1**		140
	41	2 131	0.89	35.29		**2KJ1304 - ■JP13 - ■■Q1**		140
	46	1 927	0.99	31.91	★	**2KJ1304 - ■JP13 - ■■P1**		140
	50	1 774	1.1	29.38		**2KJ1304 - ■JP13 - ■■N1**		140
	55	1 595	1.2	26.42	★	**2KJ1304 - ■JP13 - ■■M1**		140
	60	1 472	1.3	24.38		**2KJ1304 - ■JP13 - ■■L1**		140
	70	1 247	1.5	20.65		**2KJ1304 - ■JP13 - ■■K1**		140
	81	1 087	1.7	18	★	**2KJ1304 - ■JP13 - ■■J1**		140
	95	924	2.1	15.31		**2KJ1304 - ■JP13 - ■■H1**		140
	111	789	2.4	13.07	★	**2KJ1304 - ■JP13 - ■■G1**		140
	136	647	2.9	10.71	★	**2KJ1304 - ■JP13 - ■■F1**		140
	158	555	3.0	9.19		**2KJ1304 - ■JP13 - ■■E1**		140

★ Preferred transmission ratio

Shaft designs, see page 3/89 — **1, 2, 3, 5, 6 or 9**

Frequency and voltage, see page 8/20 — **1 to 9**

Gearbox housing mounting position, see page 3/92 — **A, D, E, F, H or M**

*) For mounting type B5-01

© Siemens AG 2011

Selection and ordering data (continued)

Power rating P_{Motor} kW	Output speed n_2 (50 Hz) rpm	Output torque T_2 Nm	Service factor f_B	Gearbox ratio i_{tot}		Order No.	Order code (No. of poles)	Weight *) kg
9.2	**FZ.88B-LA160MB4E**							
	182	484	3.2	8.01	★	**2KJ1304 - ■JP13 - ■■D1**		140
	213	412	3.5	6.82		**2KJ1304 - ■JP13 - ■■C1**		140
	250	351	3.8	5.82	★	**2KJ1304 - ■JP13 - ■■B1**		140
	305	288	4.2	4.77	★	**2KJ1304 - ■JP13 - ■■A1**		140
11	**FD.208-LG180LA8**							
	3.0	35 066	0.97	242.01		**2KJ1411 - ■KM13 - ■■T1**	**P02**	1 205
	3.3	31 666	1.1	218.54		**2KJ1411 - ■KM13 - ■■S1**	**P02**	1 205
	3.5	29 676	1.1	204.81		**2KJ1411 - ■KM13 - ■■R1**	**P02**	1 205
	FD.208-LA160ZLP6E							
	4.0	26 482	1.3	242.01		**2KJ1411 - ■JT13 - ■■T1**	**P01**	1 135
	4.4	23 914	1.4	218.54		**2KJ1411 - ■JT13 - ■■S1**	**P01**	1 135
	4.7	22 412	1.5	204.81		**2KJ1411 - ■JT13 - ■■R1**	**P01**	1 135
	5.5	19 250	1.8	175.92	★	**2KJ1411 - ■JT13 - ■■Q1**	**P01**	1 135
	FD.208-LA160MP4E							
	6.0	17 413	2.0	242.01		**2KJ1411 - ■JQ13 - ■■T1**		1 123
	FD.188B-LA160MP4E							
	4.9	21 528	0.93	299.2	★	**2KJ1410 - ■JQ13 - ■■Q1**		708
	5.2	20 137	0.99	279.86		**2KJ1410 - ■JQ13 - ■■P1**		708
	5.9	17 905	1.1	248.85	★	**2KJ1410 - ■JQ13 - ■■N1**		708
	6.2	16 904	1.2	234.93		**2KJ1410 - ■JQ13 - ■■M1**		708
	6.9	15 174	1.3	210.89	★	**2KJ1410 - ■JQ13 - ■■L1**		708
	7.5	13 927	1.4	193.56		**2KJ1410 - ■JQ13 - ■■K1**		708
	8.7	12 018	1.7	167.03		**2KJ1410 - ■JQ13 - ■■J1**		708
	10.0	10 513	1.9	146.11		**2KJ1410 - ■JQ13 - ■■H1**		708
	11.5	9 143	2.2	127.07		**2KJ1410 - ■JQ13 - ■■G1**		708
	FD.168B-LA160MP4E							
	6.4	16 314	0.86	226.74	★	**2KJ1408 - ■JQ13 - ■■P1**		527
	6.8	15 388	0.91	213.87		**2KJ1408 - ■JQ13 - ■■N1**		527
	7.6	13 788	1.0	191.63	★	**2KJ1408 - ■JQ13 - ■■M1**		527
	8.3	12 731	1.1	176.94		**2KJ1408 - ■JQ13 - ■■L1**		527
	9.7	10 878	1.3	151.18		**2KJ1408 - ■JQ13 - ■■K1**		527
	10.7	9 831	1.4	136.63	★	**2KJ1408 - ■JQ13 - ■■J1**		527
	11.1	9 472	1.5	131.64		**2KJ1408 - ■JQ13 - ■■H1**		527
	12.8	8 192	1.7	113.86		**2KJ1408 - ■JQ13 - ■■G1**		527
	14.7	7 146	2.0	99.31	★	**2KJ1408 - ■JQ13 - ■■F1**		527
	17.2	6 115	2.3	84.99	★	**2KJ1408 - ■JQ13 - ■■E1**		527
	FZ.168B-LA160MP4E							
	27	3 848	2.3	53.48		**2KJ1308 - ■JQ13 - ■■R1**		510
	FD.148B-LA160MP4E							
	9.9	10 662	0.84	148.18		**2KJ1407 - ■JQ13 - ■■G1**		365
	11.2	9 408	0.96	130.76	★	**2KJ1407 - ■JQ13 - ■■F1**		365
	13.1	8 008	1.1	111.29		**2KJ1407 - ■JQ13 - ■■E1**		365
	15.1	6 938	1.3	96.43	★	**2KJ1407 - ■JQ13 - ■■D1**		365

★ Preferred transmission ratio

Shaft designs, see page 3/89 — **1, 2, 3, 5, 6 or 9**

Frequency and voltage, see page 8/20 — **1 to 9**

Gearbox housing mounting position, see page 3/92 — **A, D, E, F, H or M**

*) For mounting type B5-01

© Siemens AG 2011

Selection and ordering data (continued)

Power rating P_{Motor} kW	Output speed n_2 (50 Hz) rpm	Output torque T_2 Nm	Service factor f_B	Gearbox ratio i_{tot}		Order No.	Order code (No. of poles)	Weight *) kg
11	**FD.148B-LA160MP4E**							
	18.0	5 839	1.5	81.15	★	**2KJ1407 - ■JQ13 - ■■C1**		365
	19.9	5 268	1.7	73.22		**2KJ1407 - ■JQ13 - ■■B1**		365
	23	4 528	2.0	62.93	★	**2KJ1407 - ■JQ13 - ■■A1**		365
	FZ.148B-LA160MP4E							
	23	4 632	1.4	64.37	★	**2KJ1307 - ■JQ13 - ■■U1**		357
	24	4 332	1.6	60.21		**2KJ1307 - ■JQ13 - ■■T1**		357
	27	3 852	2.1	53.53	★	**2KJ1307 - ■JQ13 - ■■S1**		357
	29	3 636	2.2	50.54		**2KJ1307 - ■JQ13 - ■■R1**		357
	FD.128B-LA160MP4E							
	14.3	7 369	0.83	102.41		**2KJ1406 - ■JQ13 - ■■E1**		269
	16.4	6 422	0.95	89.25	★	**2KJ1406 - ■JQ13 - ■■D1**		269
	19.2	5 463	1.1	75.93		**2KJ1406 - ■JQ13 - ■■C1**		269
	22	4 662	1.3	64.8	★	**2KJ1406 - ■JQ13 - ■■B1**		269
	28	3 823	1.6	53.13	★	**2KJ1406 - ■JQ13 - ■■A1**		269
	FZ.128B-LA160MP4E							
	29	3 577	1.4	49.71	★	**2KJ1306 - ■JQ13 - ■■W1**		265
	31	3 343	1.5	46.46		**2KJ1306 - ■JQ13 - ■■V1**		265
	36	2 949	1.9	40.99	★	**2KJ1306 - ■JQ13 - ■■U1**		265
	38	2 782	2.2	38.66		**2KJ1306 - ■JQ13 - ■■T1**		265
	42	2 492	2.4	34.64	★	**2KJ1306 - ■JQ13 - ■■S1**		265
	46	2 301	2.7	31.98		**2KJ1306 - ■JQ13 - ■■R1**		265
	FD.108B-LA160MP4E							
	25	4 188	0.81	58.2		**2KJ1405 - ■JQ13 - ■■B1**		188
	30	3 471	0.98	48.24	★	**2KJ1405 - ■JQ13 - ■■A1**		188
	FZ.108B-LA160MP4E							
	31	3 356	1.0	46.64	★	**2KJ1305 - ■JQ13 - ■■U1**		187
	34	3 133	1.1	43.54		**2KJ1305 - ■JQ13 - ■■T1**		187
	38	2 803	1.2	38.95	★	**2KJ1305 - ■JQ13 - ■■S1**		187
	40	2 597	1.3	36.1		**2KJ1305 - ■JQ13 - ■■R1**		187
	44	2 381	1.4	33.09	★	**2KJ1305 - ■JQ13 - ■■Q1**		187
	48	2 182	1.6	30.33		**2KJ1305 - ■JQ13 - ■■P1**		187
	56	1 860	1.8	25.85		**2KJ1305 - ■JQ13 - ■■N1**		187
	64	1 641	2.1	22.81	★	**2KJ1305 - ■JQ13 - ■■M1**		187
	75	1 397	2.4	19.41		**2KJ1305 - ■JQ13 - ■■L1**		187
	87	1 210	2.8	16.82	★	**2KJ1305 - ■JQ13 - ■■K1**		187
	103	1 019	3.2	14.16	★	**2KJ1305 - ■JQ13 - ■■J1**		187
	114	919	3.5	12.77		**2KJ1305 - ■JQ13 - ■■H1**		187
	FZ.88B-LA160MP4E							
	46	2 296	0.83	31.91	★	**2KJ1304 - ■JQ13 - ■■P1**		140
	50	2 114	0.90	29.38		**2KJ1304 - ■JQ13 - ■■N1**		140
	55	1 901	1.0	26.42	★	**2KJ1304 - ■JQ13 - ■■M1**		140
	60	1 754	1.1	24.38		**2KJ1304 - ■JQ13 - ■■L1**		140
	71	1 486	1.3	20.65		**2KJ1304 - ■JQ13 - ■■K1**		140

★ Preferred transmission ratio

Shaft designs, see page 3/89 — **1, 2, 3, 5, 6 or 9**

Frequency and voltage, see page 8/20 — **1 to 9**

Gearbox housing mounting position, see page 3/92 — **A, D, E, F, H or M**

*) For mounting type B5-01

© Siemens AG 2011

Selection and ordering data (continued)

Power rating P_{Motor} kW	Output speed n_2 (50 Hz) rpm	Output torque T_2 Nm	Service factor f_B	Gearbox ratio i_{tot}		Order No.	Order code (No. of poles)	Weight *) kg
11	**FZ.88B-LA160MP4E**							
	81	1 295	1.5	18	★	**2KJ1304 - ■JQ13 - ■■J1**		140
	95	1 102	1.7	15.31		**2KJ1304 - ■JQ13 - ■■H1**		140
	112	940	2.0	13.07	★	**2KJ1304 - ■JQ13 - ■■G1**		140
	136	771	2.5	10.71	★	**2KJ1304 - ■JQ13 - ■■F1**		140
	159	661	2.5	9.19		**2KJ1304 - ■JQ13 - ■■E1**		140
	182	576	2.7	8.01	★	**2KJ1304 - ■JQ13 - ■■D1**		140
	214	491	3.0	6.82		**2KJ1304 - ■JQ13 - ■■C1**		140
	251	419	3.2	5.82	★	**2KJ1304 - ■JQ13 - ■■B1**		140
	306	343	3.5	4.77	★	**2KJ1304 - ■JQ13 - ■■A1**		140
15	**FD.208-LG200L8**							
	3.5	40 468	0.84	204.81		**2KJ1411 - ■LL13 - ■■R1**	**P02**	1 255
	FD.208-LG180ZLB6E							
	4.0	35 557	0.96	242.01		**2KJ1411 - ■KP13 - ■■T1**	**P01**	1 205
	4.5	32 109	1.1	218.54		**2KJ1411 - ■KP13 - ■■S1**	**P01**	1 205
	4.8	30 091	1.1	204.81		**2KJ1411 - ■KP13 - ■■R1**	**P01**	1 205
	5.5	25 847	1.3	175.92	★	**2KJ1411 - ■KP13 - ■■Q1**	**P01**	1 205
	FD.208-LA160ZLP4E							
	6.0	23 745	1.4	242.01		**2KJ1411 - ■JT13 - ■■T1**		1 135
	6.7	21 442	1.6	218.54		**2KJ1411 - ■JT13 - ■■S1**		1 135
	7.1	20 095	1.7	204.81		**2KJ1411 - ■JT13 - ■■R1**		1 135
	8.3	17 261	2.0	175.92	★	**2KJ1411 - ■JT13 - ■■Q1**		1 135
	FD.188B-LA160ZLP4E							
	5.9	24 416	0.82	248.85	★	**2KJ1410 - ■JT13 - ■■N1**		720
	6.2	23 050	0.87	234.93		**2KJ1410 - ■JT13 - ■■M1**		720
	6.9	20 692	0.97	210.89	★	**2KJ1410 - ■JT13 - ■■L1**		720
	7.5	18 991	1.1	193.56		**2KJ1410 - ■JT13 - ■■K1**		720
	8.7	16 388	1.2	167.03		**2KJ1410 - ■JT13 - ■■J1**		720
	10.0	14 336	1.4	146.11		**2KJ1410 - ■JT13 - ■■H1**		720
	11.5	12 468	1.6	127.07		**2KJ1410 - ■JT13 - ■■G1**		720
	13.1	10 939	1.8	111.49	★	**2KJ1410 - ■JT13 - ■■F1**		720
	15.5	9250	2.2	94.28	★	**2KJ1410 - ■JT13 - ■■E1**		720
	FD.168B-LA160ZLP4E							
	8.3	17 361	0.81	176.94		**2KJ1408 - ■JT13 - ■■L1**		539
	9.7	14 833	0.94	151.18		**2KJ1408 - ■JT13 - ■■K1**		539
	10.7	13 406	1.0	136.63	★	**2KJ1408 - ■JT13 - ■■J1**		539
	11.1	12 916	1.1	131.64		**2KJ1408 - ■JT13 - ■■H1**		539
	12.8	11 172	1.3	113.86		**2KJ1408 - ■JT13 - ■■G1**		539
	14.7	9 744	1.4	99.31	★	**2KJ1408 - ■JT13 - ■■F1**		539
	17.2	8 339	1.7	84.99	★	**2KJ1408 - ■JT13 - ■■E1**		539
	19.2	7 469	1.9	76.12		**2KJ1408 - ■JT13 - ■■D1**		539
	23	6 326	2.2	64.47	★	**2KJ1408 - ■JT13 - ■■C1**		539

★ Preferred transmission ratio

Shaft designs, see page 3/89 — **1, 2, 3, 5, 6 or 9**

Frequency and voltage, see page 8/20 — **1 to 9**

Gearbox housing mounting position, see page 3/92 — **A, D, E, F, H or M**

*) For mounting type B5-01

© Siemens AG 2011

Selection and ordering data (continued)

Power rating P_{Motor} kW	Output speed n_2 (50 Hz) rpm	Output torque T_2 Nm	Service factor f_B		Gearbox ratio i_{tot}	Order No.	Order code (No. of poles)	Weight *) kg
15	**FZ.168B-LA160ZLP4E**							
	27	5 247	1.7		53.48	**2KJ1308 - ■JT13 - ■■R1**		522
	30	4 738	2.2		48.29	**2KJ1308 - ■JT13 - ■■Q1**		522
	FD.148B-LA160ZLP4E							
	13.1	10 919	0.82		111.29	**2KJ1407 - ■JT13 - ■■E1**		377
	15.1	9 461	0.95		96.43	★ **2KJ1407 - ■JT13 - ■■D1**		377
	18.0	7 962	1.1		81.15	★ **2KJ1407 - ■JT13 - ■■C1**		377
	19.9	7 184	1.3		73.22	**2KJ1407 - ■JT13 - ■■B1**		377
	23	6 174	1.5		62.93	★ **2KJ1407 - ■JT13 - ■■A1**		377
	FZ.148B-LA160ZLP4E							
	23	6 316	1.0		64.37	★ **2KJ1307 - ■JT13 - ■■U1**		369
	24	5 908	1.2		60.21	**2KJ1307 - ■JT13 - ■■T1**		369
	27	5 252	1.5		53.53	★ **2KJ1307 - ■JT13 - ■■S1**		369
	29	4 959	1.6		50.54	**2KJ1307 - ■JT13 - ■■R1**		369
	32	4 452	2.0		45.37	★ **2KJ1307 - ■JT13 - ■■Q1**		369
	35	4 086	2.2		41.64	**2KJ1307 - ■JT13 - ■■P1**		369
	41	3 525	2.6		35.93	**2KJ1307 - ■JT13 - ■■N1**		369
	FD.128B-LA160ZLP4E							
	19.2	7 450	0.82		75.93	**2KJ1406 - ■JT13 - ■■C1**		281
	22	6 358	0.96		64.8	★ **2KJ1406 - ■JT13 - ■■B1**		281
	28	5 213	1.2		53.13	★ **2KJ1406 - ■JT13 - ■■A1**		281
	FZ.128B-LA160ZLP4E							
	29	4 877	1.0		49.71	★ **2KJ1306 - ■JT13 - ■■W1**		277
	31	4 558	1.1		46.46	**2KJ1306 - ■JT13 - ■■V1**		277
	36	4 022	1.4		40.99	★ **2KJ1306 - ■JT13 - ■■U1**		277
	38	3 793	1.6		38.66	**2KJ1306 - ■JT13 - ■■T1**		277
	42	3 399	1.8		34.64	★ **2KJ1306 - ■JT13 - ■■S1**		277
	46	3 138	1.9		31.98	**2KJ1306 - ■JT13 - ■■R1**		277
	53	2 682	2.3		27.33	**2KJ1306 - ■JT13 - ■■Q1**		277
	59	2 423	2.5		24.7	★ **2KJ1306 - ■JT13 - ■■P1**		277
	61	2 335	2.6		23.8	**2KJ1306 - ■JT13 - ■■N1**		277
	71	2 019	3.0		20.58	**2KJ1306 - ■JT13 - ■■L1**		277
	FZ.108B-LA160ZLP4E							
	34	4 272	0.80		43.54	**2KJ1305 - ■JT13 - ■■T1**		199
	38	3 822	0.89		38.95	★ **2KJ1305 - ■JT13 - ■■S1**		199
	40	3 542	0.96		36.1	**2KJ1305 - ■JT13 - ■■R1**		199
	44	3 247	1.0		33.09	★ **2KJ1305 - ■JT13 - ■■Q1**		199
	48	2 976	1.1		30.33	**2KJ1305 - ■JT13 - ■■P1**		199
	56	2 536	1.3		25.85	**2KJ1305 - ■JT13 - ■■N1**		199
	64	2 238	1.5		22.81	★ **2KJ1305 - ■JT13 - ■■M1**		199
	75	1 904	1.8		19.41	**2KJ1305 - ■JT13 - ■■L1**		199
	87	1 650	2.1		16.82	★ **2KJ1305 - ■JT13 - ■■K1**		199
	103	1 389	2.4		14.16	★ **2KJ1305 - ■JT13 - ■■J1**		199
	114	1 253	2.6		12.77	**2KJ1305 - ■JT13 - ■■H1**		199

★ Preferred transmission ratio

Shaft designs, see page 3/89 — **1, 2, 3, 5, 6 or 9**

Frequency and voltage, see page 8/20 — **1 to 9**

Gearbox housing mounting position, see page 3/92 — **A, D, E, F, H or M**

*) For mounting type B5-01

© Siemens AG 2011

Selection and ordering data (continued)

Power rating P_{Motor} kW	Output speed n_2 (50 Hz) rpm	Output torque T_2 Nm	Service factor f_B	Gearbox ratio i_{tot}		Order No.	Order code (No. of poles)	Weight *) kg
15	**FZ.108B-LA160ZLP4E**							
	133	1 077	2.9	10.98	★	**2KJ1305 - ■JT13 - ■■G1**		199
	145	985	3.4	10.04		**2KJ1305 - ■JT13 - ■■F1**		199
	168	854	3.6	8.7	★	**2KJ1305 - ■JT13 - ■■E1**		199
	199	718	4.0	7.32	★	**2KJ1305 - ■JT13 - ■■D1**		199
	221	648	4.1	6.6		**2KJ1305 - ■JT13 - ■■C1**		199
	257	557	4.3	5.68	★	**2KJ1305 - ■JT13 - ■■B1**		199
	FZ.88B-LA160ZLP4E							
	71	2 026	0.94	20.65		**2KJ1304 - ■JT13 - ■■K1**		152
	81	1 766	1.1	18	★	**2KJ1304 - ■JT13 - ■■J1**		152
	95	1 502	1.3	15.31		**2KJ1304 - ■JT13 - ■■H1**		152
	112	1 282	1.5	13.07	★	**2KJ1304 - ■JT13 - ■■G1**		152
	136	1 051	1.8	10.71	★	**2KJ1304 - ■JT13 - ■■F1**		152
	159	902	1.8	9.19		**2KJ1304 - ■JT13 - ■■E1**		152
	182	786	2.0	8.01	★	**2KJ1304 - ■JT13 - ■■D1**		152
	214	669	2.2	6.82		**2KJ1304 - ■JT13 - ■■C1**		152
	251	571	2.4	5.82	★	**2KJ1304 - ■JT13 - ■■B1**		152
	306	468	2.6	4.77	★	**2KJ1304 - ■JT13 - ■■A1**		152
18.5	**FD.208-LG200L6E**							
	4.5	39 601	0.86	218.54		**2KJ1411 - ■LL13 - ■■S1**	**P01**	1 255
	4.8	37 113	0.92	204.81		**2KJ1411 - ■LL13 - ■■R1**	**P01**	1 255
	5.5	31 878	1.1	175.92	★	**2KJ1411 - ■LL13 - ■■Q1**	**P01**	1 255
	FD.208-LG180ZMB4E							
	6.1	29 086	1.2	242.01		**2KJ1411 - ■KL13 - ■■T1**		1 190
	6.7	26 266	1.3	218.54		**2KJ1411 - ■KL13 - ■■S1**		1 190
	7.2	24 616	1.4	204.81		**2KJ1411 - ■KL13 - ■■R1**		1 190
	8.4	21 143	1.6	175.92	★	**2KJ1411 - ■KL13 - ■■Q1**		1 190
	9.7	18 267	1.9	151.99		**2KJ1411 - ■KL13 - ■■P1**		1 190
	11.0	16 124	2.1	134.16		**2KJ1411 - ■KL13 - ■■N1**		1 190
	FD.188B-LG180ZMB4E							
	7.6	23 263	0.86	193.56		**2KJ1410 - ■KL13 - ■■K1**		775
	8.8	20 075	1.0	167.03		**2KJ1410 - ■KL13 - ■■J1**		775
	10.1	17 561	1.1	146.11		**2KJ1410 - ■KL13 - ■■H1**		775
	11.6	15 272	1.3	127.07		**2KJ1410 - ■KL13 - ■■G1**		775
	13.2	13 400	1.5	111.49	★	**2KJ1410 - ■KL13 - ■■F1**		775
	15.6	11 331	1.8	94.28	★	**2KJ1410 - ■KL13 - ■■E1**		775
	17.2	10 281	1.9	85.54		**2KJ1410 - ■KL13 - ■■D1**		775
	19.7	8 964	2.2	74.58	★	**2KJ1410 - ■KL13 - ■■C1**		775
	FD.168B-LG180ZMB4E							
	10.8	16 421	0.85	136.63	★	**2KJ1408 - ■KL13 - ■■J1**		594
	11.2	15 821	0.88	131.64		**2KJ1408 - ■KL13 - ■■H1**		594
	12.9	13 685	1.0	113.86		**2KJ1408 - ■KL13 - ■■G1**		594
	14.8	11 936	1.2	99.31	★	**2KJ1408 - ■KL13 - ■■F1**		594
	17.3	10 215	1.4	84.99	★	**2KJ1408 - ■KL13 - ■■E1**		594

★ Preferred transmission ratio

Shaft designs, see page 3/89 — **1, 2, 3, 5, 6 or 9**

Frequency and voltage, see page 8/20 — **1 to 9**

Gearbox housing mounting position, see page 3/92 — **A, D, E, F, H or M**

*) For mounting type B5-01

© Siemens AG 2011

Selection and ordering data (continued)

Power rating P_{Motor} kW	Output speed n_2 (50 Hz) rpm	Output torque T_2 Nm	Service factor f_B	Gearbox ratio i_{tot}		Order No.	Order code (No. of poles)	Weight *) kg
18.5	**FD.168B-LG180ZMB4E**							
	19.3	9 149	1.5	76.12		**2KJ1408 - ■KL13 - ■■D1**		594
	23	7 748	1.8	64.47	★	**2KJ1408 - ■KL13 - ■■C1**		594
	26	6 692	2.1	55.68		**2KJ1408 - ■KL13 - ■■B1**		594
	FZ.168B-LG180ZMB4E							
	28	6 428	1.4	53.48		**2KJ1308 - ■KL13 - ■■R1**		577
	30	5 804	1.8	48.29		**2KJ1308 - ■KL13 - ■■Q1**		577
	32	5 438	2.1	45.25		**2KJ1308 - ■KL13 - ■■P1**		577
	FD.148B-LG180ZMB4E							
	18.1	9 753	0.92	81.15	★	**2KJ1407 - ■KL13 - ■■C1**		432
	20	8 800	1.0	73.22		**2KJ1407 - ■KL13 - ■■B1**		432
	23	7 563	1.2	62.93	★	**2KJ1407 - ■KL13 - ■■A1**		432
	FZ.148B-LG180ZMB4E							
	28	6 434	1.2	53.53	★	**2KJ1307 - ■KL13 - ■■S1**		424
	29	6 074	1.3	50.54		**2KJ1307 - ■KL13 - ■■R1**		424
	32	5 453	1.6	45.37	★	**2KJ1307 - ■KL13 - ■■Q1**		424
	35	5 005	1.8	41.64		**2KJ1307 - ■KL13 - ■■P1**		424
	41	4 318	2.1	35.93		**2KJ1307 - ■KL13 - ■■N1**		424
	47	3 777	2.4	31.43		**2KJ1307 - ■KL13 - ■■M1**		424
	54	3 286	2.7	27.34		**2KJ1307 - ■KL13 - ■■L1**		424
	FD.128B-LG180ZMB4E							
	28	6 386	0.96	53.13	★	**2KJ1406 - ■KL13 - ■■A1**		336
	FZ.128B-LG180ZMB4E							
	36	4 926	1.2	40.99	★	**2KJ1306 - ■KL13 - ■■U1**		332
	38	4 646	1.3	38.66		**2KJ1306 - ■KL13 - ■■T1**		332
	42	4 163	1.5	34.64	★	**2KJ1306 - ■KL13 - ■■S1**		332
	46	3 844	1.6	31.98		**2KJ1306 - ■KL13 - ■■R1**		332
	54	3 285	1.9	27.33		**2KJ1306 - ■KL13 - ■■Q1**		332
	60	2 969	2.1	24.7	★	**2KJ1306 - ■KL13 - ■■P1**		332
	62	2 860	2.1	23.8		**2KJ1306 - ■KL13 - ■■N1**		332
	71	2 473	2.5	20.58		**2KJ1306 - ■KL13 - ■■L1**		332
	82	2 157	2.8	17.95	★	**2KJ1306 - ■KL13 - ■■K1**		332
	96	1 846	3.2	15.36	★	**2KJ1306 - ■KL13 - ■■J1**		332
	107	1 654	3.4	13.76		**2KJ1306 - ■KL13 - ■■H1**		332
	126	1 400	3.8	11.65	★	**2KJ1306 - ■KL13 - ■■G1**		332
	213	830	4.3	6.91		**2KJ1306 - ■KL13 - ■■D1**		332
	251	703	4.7	5.85	★	**2KJ1306 - ■KL13 - ■■C1**		332
	FZ.108B-LG180ZMB4E							
	44	3 977	0.85	33.09	★	**2KJ1305 - ■KL13 - ■■Q1**		254
	48	3 645	0.93	30.33		**2KJ1305 - ■KL13 - ■■P1**		254
	57	3 107	1.1	25.85		**2KJ1305 - ■KL13 - ■■N1**		254
	64	2 741	1.2	22.81	★	**2KJ1305 - ■KL13 - ■■M1**		254
	76	2 333	1.5	19.41		**2KJ1305 - ■KL13 - ■■L1**		254
	87	2 022	1.7	16.82	★	**2KJ1305 - ■KL13 - ■■K1**		254

★ Preferred transmission ratio

Shaft designs, see page 3/89 — **1, 2, 3, 5, 6 or 9**

Frequency and voltage, see page 8/20 — **1 to 9**

Gearbox housing mounting position, see page 3/92 — **A, D, E, F, H or M**

*) For mounting type B5-01

© Siemens AG 2011

Selection and ordering data (continued)

Power rating P_{Motor} kW	Output speed n_2 (50 Hz) rpm	Output torque T_2 Nm	Service factor f_B	Gearbox ratio i_{tot}		Order No.	Order code (No. of poles)	Weight *) kg
18.5	**FZ.108B-LG180ZMB4E**							
	104	1 702	1.9	14.16	★	**2KJ1305 - ■KL13 - ■■J1**		254
	115	1 535	2.1	12.77		**2KJ1305 - ■KL13 - ■■H1**		254
	134	1 320	2.4	10.98	★	**2KJ1305 - ■KL13 - ■■G1**		254
	146	1 207	2.8	10.04		**2KJ1305 - ■KL13 - ■■F1**		254
	169	1 046	3.0	8.7	★	**2KJ1305 - ■KL13 - ■■E1**		254
	201	880	3.2	7.32	★	**2KJ1305 - ■KL13 - ■■D1**		254
	223	793	3.3	6.6		**2KJ1305 - ■KL13 - ■■C1**		254
	259	683	3.5	5.68	★	**2KJ1305 - ■KL13 - ■■B1**		254
22	**FD.208-LG200ZLB6E**							
	5.5	37 909	0.90	175.92	★	**2KJ1411 - ■LM13 - ■■Q1**	**P01**	1 255
	FD.208-LG180ZLB4E							
	6.1	34 707	0.98	242.01		**2KJ1411 - ■KP13 - ■■T1**		1 205
	6.7	31 341	1.1	218.54		**2KJ1411 - ■KP13 - ■■S1**		1 205
	7.2	29 372	1.2	204.81		**2KJ1411 - ■KP13 - ■■R1**		1 205
	8.3	25 229	1.3	175.92	★	**2KJ1411 - ■KP13 - ■■Q1**		1 205
	9.6	21 797	1.6	151.99		**2KJ1411 - ■KP13 - ■■P1**		1 205
	10.9	19 240	1.8	134.16		**2KJ1411 - ■KP13 - ■■N1**		1 205
	12.1	17 320	2.0	120.77	★	**2KJ1411 - ■KP13 - ■■M1**		1 205
	FD.188B-LG180ZLB4E							
	8.8	23 954	0.83	167.03		**2KJ1410 - ■KP13 - ■■J1**		790
	10.0	20 954	0.95	146.11		**2KJ1410 - ■KP13 - ■■H1**		790
	11.5	18 223	1.1	127.07		**2KJ1410 - ■KP13 - ■■G1**		790
	13.1	15 989	1.3	111.49	★	**2KJ1410 - ■KP13 - ■■F1**		790
	15.5	13 521	1.5	94.28	★	**2KJ1410 - ■KP13 - ■■E1**		790
	17.1	12 268	1.6	85.54		**2KJ1410 - ■KP13 - ■■D1**		790
	19.6	10 696	1.9	74.58	★	**2KJ1410 - ■KP13 - ■■C1**		790
	23	9 081	2.2	63.32		**2KJ1410 - ■KP13 - ■■B1**		790
	FZ.188B-LG180ZLB4E							
	28	7 548	2.2	52.63		**2KJ1310 - ■KP13 - ■■P1**		767
	30	6 951	2.4	48.47		**2KJ1310 - ■KP13 - ■■N1**		767
	FD.168B-LG180ZLB4E							
	12.9	16 329	0.86	113.86		**2KJ1408 - ■KP13 - ■■G1**		609
	14.8	14 242	0.98	99.31	★	**2KJ1408 - ■KP13 - ■■F1**		609
	17.2	12 189	1.1	84.99	★	**2KJ1408 - ■KP13 - ■■E1**		609
	19.2	10 917	1.3	76.12		**2KJ1408 - ■KP13 - ■■D1**		609
	23	9 246	1.5	64.47	★	**2KJ1408 - ■KP13 - ■■C1**		609
	26	7 985	1.8	55.68		**2KJ1408 - ■KP13 - ■■B1**		609
	35	6 002	2.3	41.85	★	**2KJ1408 - ■KP13 - ■■A1**		609
	FZ.168B-LG180ZLB4E							
	27	7 670	1.2	53.48		**2KJ1308 - ■KP13 - ■■R1**		592
	30	6 925	1.5	48.29		**2KJ1308 - ■KP13 - ■■Q1**		592
	32	6 489	1.8	45.25		**2KJ1308 - ■KP13 - ■■P1**		592
	38	5 574	2.3	38.87	★	**2KJ1308 - ■KP13 - ■■N1**		592
	44	4 816	2.7	33.58		**2KJ1308 - ■KP13 - ■■M1**		592

★ Preferred transmission ratio

Shaft designs, see page 3/89 — **1, 2, 3, 5, 6 or 9**

Frequency and voltage, see page 8/20 — **1 to 9**

Gearbox housing mounting position, see page 3/92 — **A, D, E, F, H or M**

*) For mounting type B5-01

© Siemens AG 2011

Selection and ordering data (continued)

Power rating P_{Motor} kW	Output speed n_2 (50 Hz) rpm	Output torque T_2 Nm	Service factor f_B	Gearbox ratio i_{tot}		Order No.	Order code (No. of poles)	Weight *) kg
22	**FD.148B-LG180ZLB4E**							
	20	10 501	0.86	73.22		**2KJ1407 - ■KP13 - ■■B1**		447
	23	9 025	1.0	62.93	★	**2KJ1407 - ■KP13 - ■■A1**		447
	FZ.148B-LG180ZLB4E							
	27	7 677	1.0	53.53	★	**2KJ1307 - ■KP13 - ■■S1**		439
	29	7 248	1.1	50.54		**2KJ1307 - ■KP13 - ■■R1**		439
	32	6 507	1.3	45.37	★	**2KJ1307 - ■KP13 - ■■Q1**		439
	35	5 972	1.5	41.64		**2KJ1307 - ■KP13 - ■■P1**		439
	41	5 153	1.7	35.93		**2KJ1307 - ■KP13 - ■■N1**		439
	47	4 507	2.0	31.43		**2KJ1307 - ■KP13 - ■■M1**		439
	54	3 921	2.3	27.34		**2KJ1307 - ■KP13 - ■■L1**		439
	61	3 439	2.6	23.98	★	**2KJ1307 - ■KP13 - ■■K1**		439
	72	2 908	3.1	20.28	★	**2KJ1307 - ■KP13 - ■■J1**		439
	FD.128B-LG180ZLB4E							
	28	7 620	0.80	53.13	★	**2KJ1406 - ■KP13 - ■■A1**		351
	FZ.128B-LG180ZLB4E							
	36	5 878	0.97	40.99	★	**2KJ1306 - ■KP13 - ■■U1**		347
	38	5 544	1.1	38.66		**2KJ1306 - ■KP13 - ■■T1**		347
	42	4 968	1.2	34.64	★	**2KJ1306 - ■KP13 - ■■S1**		347
	46	4 586	1.3	31.98		**2KJ1306 - ■KP13 - ■■R1**		347
	54	3 919	1.6	27.33		**2KJ1306 - ■KP13 - ■■Q1**		347
	59	3 542	1.7	24.7	★	**2KJ1306 - ■KP13 - ■■P1**		347
	62	3 413	1.8	23.8		**2KJ1306 - ■KP13 - ■■N1**		347
	71	2 951	2.1	20.58		**2KJ1306 - ■KP13 - ■■L1**		347
	82	2 574	2.4	17.95	★	**2KJ1306 - ■KP13 - ■■K1**		347
	95	2 203	2.7	15.36	★	**2KJ1306 - ■KP13 - ■■J1**		347
	106	1 973	2.9	13.76		**2KJ1306 - ■KP13 - ■■H1**		347
	126	1 671	3.2	11.65	★	**2KJ1306 - ■KP13 - ■■G1**		347
	145	1 444	3.5	10.07		**2KJ1306 - ■KP13 - ■■F1**		347
	194	1 086	4.2	7.57	★	**2KJ1306 - ■KP13 - ■■E1**		347
	212	991	3.6	6.91		**2KJ1306 - ■KP13 - ■■D1**		347
	250	839	3.9	5.85	★	**2KJ1306 - ■KP13 - ■■C1**		347
	290	724	4.3	5.05		**2KJ1306 - ■KP13 - ■■B1**		347
	386	545	5.0	3.8	★	**2KJ1306 - ■KP13 - ■■A1**		347
	FZ.108B-LG180ZLB4E							
	57	3 707	0.92	25.85		**2KJ1305 - ■KP13 - ■■N1**		269
	64	3 271	1.0	22.81	★	**2KJ1305 - ■KP13 - ■■M1**		269
	76	2 784	1.2	19.41		**2KJ1305 - ■KP13 - ■■L1**		269
	87	2 412	1.4	16.82	★	**2KJ1305 - ■KP13 - ■■K1**		269
	103	2 031	1.6	14.16	★	**2KJ1305 - ■KP13 - ■■J1**		269
	115	1 831	1.8	12.77		**2KJ1305 - ■KP13 - ■■H1**		269
	133	1 575	2.0	10.98	★	**2KJ1305 - ■KP13 - ■■G1**		269
	146	1 440	2.3	10.04		**2KJ1305 - ■KP13 - ■■F1**		269
	168	1 248	2.5	8.7	★	**2KJ1305 - ■KP13 - ■■E1**		269

★ Preferred transmission ratio

Shaft designs, see page 3/89 — **1, 2, 3, 5, 6 or 9**

Frequency and voltage, see page 8/20 — **1 to 9**

Gearbox housing mounting position, see page 3/92 — **A, D, E, F, H or M**

*) For mounting type B5-01

© Siemens AG 2011

Selection and ordering data (continued)

Power rating P_{Motor} kW	Output speed n_2 (50 Hz) rpm	Output torque T_2 Nm	Service factor f_B	Gearbox ratio i_{tot}		Order No.	Order code (No. of poles)	Weight *) kg
22	**FZ.108B-LG180ZLB4E**							
	200	1 050	2.7	7.32	★	**2KJ1305 - ■KP13 - ■■D1**		269
	222	947	2.8	6.6		**2KJ1305 - ■KP13 - ■■C1**		269
	258	815	3.0	5.68	★	**2KJ1305 - ■KP13 - ■■B1**		269
30	**FD.208-LG200LB4E**							
	6.7	42 449	0.80	218.54		**2KJ1411 - ■LM13 - ■■S1**		1 255
	7.2	39 782	0.85	204.81		**2KJ1411 - ■LM13 - ■■R1**		1 255
	8.4	34 170	1.0	175.92	★	**2KJ1411 - ■LM13 - ■■Q1**		1 255
	9.7	29 522	1.2	151.99		**2KJ1411 - ■LM13 - ■■P1**		1 255
	11.0	26 059	1.3	134.16		**2KJ1411 - ■LM13 - ■■N1**		1 255
	12.2	23 458	1.4	120.77	★	**2KJ1411 - ■LM13 - ■■M1**		1 255
	14.7	19 465	1.7	100.21	★	**2KJ1411 - ■LM13 - ■■L1**		1 255
	16.1	17 749	1.9	91.38		**2KJ1411 - ■LM13 - ■■K1**		1 255
	18.4	15 572	2.2	80.17	★	**2KJ1411 - ■LM13 - ■■J1**		1 255
	FD.188B-LG200LB4E							
	11.6	24 682	0.81	127.07		**2KJ1410 - ■LM13 - ■■G1**		840
	13.2	21 656	0.92	111.49	★	**2KJ1410 - ■LM13 - ■■F1**		840
	15.6	18 313	1.1	94.28	★	**2KJ1410 - ■LM13 - ■■E1**		840
	17.2	16 615	1.2	85.54		**2KJ1410 - ■LM13 - ■■D1**		840
	19.8	14 486	1.4	74.58	★	**2KJ1410 - ■LM13 - ■■C1**		840
	23	12 299	1.6	63.32		**2KJ1410 - ■LM13 - ■■B1**		840
	30	9 413	2.1	48.46	★	**2KJ1410 - ■LM13 - ■■A1**		840
	FZ.188B-LG200LB4E							
	28	10 223	1.6	52.63		**2KJ1310 - ■LM13 - ■■P1**		817
	30	9 415	1.8	48.47		**2KJ1310 - ■LM13 - ■■N1**		817
	35	8 172	2.1	42.07	★	**2KJ1310 - ■LM13 - ■■M1**		817
	40	7 202	2.4	37.08		**2KJ1310 - ■LM13 - ■■L1**		817
	FD.168B-LG200LB4E							
	17.4	16 508	0.85	84.99	★	**2KJ1408 - ■LM13 - ■■E1**		659
	19.4	14 785	0.95	76.12		**2KJ1408 - ■LM13 - ■■D1**		659
	23	12 522	1.1	64.47	★	**2KJ1408 - ■LM13 - ■■C1**		659
	26	10 815	1.3	55.68		**2KJ1408 - ■LM13 - ■■B1**		659
	35	8 129	1.7	41.85	★	**2KJ1408 - ■LM13 - ■■A1**		659
	FZ.168B-LG200LB4E							
	28	10 388	0.87	53.48		**2KJ1308 - ■LM13 - ■■R1**		642
	30	9 380	1.1	48.29		**2KJ1308 - ■LM13 - ■■Q1**		642
	33	8 789	1.3	45.25		**2KJ1308 - ■LM13 - ■■P1**		642
	38	7 550	1.7	38.87	★	**2KJ1308 - ■LM13 - ■■N1**		642
	44	6 522	2.0	33.58		**2KJ1308 - ■LM13 - ■■M1**		642
	50	5 757	2.4	29.64		**2KJ1308 - ■LM13 - ■■L1**		642
	55	5 182	2.7	26.68	★	**2KJ1308 - ■LM13 - ■■K1**		642
	FZ.148B-LG200LB4E							
	29	9 817	0.81	50.54		**2KJ1307 - ■LM13 - ■■R1**		489
	32	8 813	0.99	45.37	★	**2KJ1307 - ■LM13 - ■■Q1**		489

★ Preferred transmission ratio

Shaft designs, see page 3/89 — **1, 2, 3, 5, 6 or 9**

Frequency and voltage, see page 8/20 — **1 to 9**

Gearbox housing mounting position, see page 3/92 — **A, D, E, F, H or M**

*) For mounting type B5-01

© Siemens AG 2011

Selection and ordering data (continued)

Power rating P_{Motor} kW	Output speed n_2 (50 Hz) rpm	Output torque T_2 Nm	Service factor f_B	Gearbox ratio i_{tot}		Order No.	Order code (No. of poles)	Weight *) kg
30	**FZ.148B-LG200LB4E**							
	35	8 088	1.1	41.64		**2KJ1307 - ■LM13 - ■■P1**		489
	41	6 979	1.3	35.93		**2KJ1307 - ■LM13 - ■■N1**		489
	47	6 105	1.5	31.43		**2KJ1307 - ■LM13 - ■■M1**		489
	54	5 310	1.7	27.34		**2KJ1307 - ■LM13 - ■■L1**		489
	62	4 658	1.9	23.98	★	**2KJ1307 - ■LM13 - ■■K1**		489
	73	3 939	2.3	20.28	★	**2KJ1307 - ■LM13 - ■■J1**		489
	80	3 574	2.5	18.4		**2KJ1307 - ■LM13 - ■■H1**		489
	92	3 116	2.9	16.04	★	**2KJ1307 - ■LM13 - ■■G1**		489
	108	2 646	3.2	13.62		**2KJ1307 - ■LM13 - ■■F1**		489
	141	2 026	3.9	10.43	★	**2KJ1307 - ■LM13 - ■■E1**		489
	155	1 847	3.6	9.51		**2KJ1307 - ■LM13 - ■■D1**		489
	178	1 610	3.9	8.29	★	**2KJ1307 - ■LM13 - ■■C1**		489
	210	1 367	4.3	7.04		**2KJ1307 - ■LM13 - ■■B1**		489
	274	1 047	4.9	5.39	★	**2KJ1307 - ■LM13 - ■■A1**		489
	FZ.128B-LG200LB4E							
	38	7 509	0.80	38.66		**2KJ1306 - ■LM13 - ■■T1**		397
	43	6 728	0.91	34.64	★	**2KJ1306 - ■LM13 - ■■S1**		397
	46	6 212	0.98	31.98		**2KJ1306 - ■LM13 - ■■R1**		397
	54	5 309	1.1	27.33		**2KJ1306 - ■LM13 - ■■Q1**		397
	60	4 798	1.3	24.7	★	**2KJ1306 - ■LM13 - ■■P1**		397
	62	4 623	1.3	23.8		**2KJ1306 - ■LM13 - ■■N1**		397
	72	3 997	1.5	20.58		**2KJ1306 - ■LM13 - ■■L1**		397
	82	3 487	1.7	17.95	★	**2KJ1306 - ■LM13 - ■■K1**		397
	96	2 983	2.0	15.36	★	**2KJ1306 - ■LM13 - ■■J1**		397
	107	2 673	2.1	13.76		**2KJ1306 - ■LM13 - ■■H1**		397
	127	2 263	2.4	11.65	★	**2KJ1306 - ■LM13 - ■■G1**		397
	146	1 956	2.6	10.07		**2KJ1306 - ■LM13 - ■■F1**		397
	195	1 470	3.1	7.57	★	**2KJ1306 - ■LM13 - ■■E1**		397
	213	1 342	2.7	6.91		**2KJ1306 - ■LM13 - ■■D1**		397
	252	1 136	2.9	5.85	★	**2KJ1306 - ■LM13 - ■■C1**		397
	292	981	3.2	5.05		**2KJ1306 - ■LM13 - ■■B1**		397
	388	738	3.7	3.8	★	**2KJ1306 - ■LM13 - ■■A1**		397
37	**FD.208-LG225S4E**							
	8.4	42 287	0.80	175.92	★	**2KJ1411 - ■ME13 - ■■Q1**		1 335
	9.7	36 534	0.93	151.99		**2KJ1411 - ■ME13 - ■■P1**		1 335
	11.0	32 249	1.1	134.16		**2KJ1411 - ■ME13 - ■■N1**		1 335
	12.2	29 030	1.2	120.77	★	**2KJ1411 - ■ME13 - ■■M1**		1 335
	14.7	24 088	1.4	100.21	★	**2KJ1411 - ■ME13 - ■■L1**		1 335
	16.1	21 965	1.5	91.38		**2KJ1411 - ■ME13 - ■■K1**		1 335
	18.3	19 271	1.8	80.17	★	**2KJ1411 - ■ME13 - ■■J1**		1 335
	21	16 562	2.1	68.9		**2KJ1411 - ■ME13 - ■■H1**		1 335
	FD.188B-LG225S4E							
	15.6	22 662	0.88	94.28	★	**2KJ1410 - ■ME13 - ■■E1**		920

★ Preferred transmission ratio

Shaft designs, see page 3/89 — **1, 2, 3, 5, 6 or 9**

Frequency and voltage, see page 8/20 — **1 to 9**

Gearbox housing mounting position, see page 3/92 — **A, D, E, F, H or M**

*) For mounting type B5-01

© Siemens AG 2011

Selection and ordering data (continued)

Power rating P_{Motor} kW	Output speed n_2 (50 Hz) rpm	Output torque T_2 Nm	Service factor f_B	Gearbox ratio i_{tot}		Order No.	Order code (No. of poles)	Weight *) kg
37	**FD.188B-LG225S4E**							
	17.2	20 562	0.97	85.54		**2KJ1410 - ■ME13 - ■■D1**		920
	19.7	17 927	1.1	74.58	★	**2KJ1410 - ■ME13 - ■■C1**		920
	23	15 220	1.3	63.32		**2KJ1410 - ■ME13 - ■■B1**		920
	30	11 649	1.7	48.46	★	**2KJ1410 - ■ME13 - ■■A1**		920
	FZ.188B-LG225S4E							
	28	12 651	1.3	52.63		**2KJ1310 - ■ME13 - ■■P1**		897
	30	11 651	1.4	48.47		**2KJ1310 - ■ME13 - ■■N1**		897
	35	10 113	1.7	42.07	★	**2KJ1310 - ■ME13 - ■■M1**		897
	40	8 913	2.0	37.08		**2KJ1310 - ■ME13 - ■■L1**		897
	45	7 822	2.4	32.54		**2KJ1310 - ■ME13 - ■■K1**		897
	50	7 050	2.8	29.33	★	**2KJ1310 - ■ME13 - ■■J1**		897
	FD.168B-LG225S4E							
	23	15 497	0.90	64.47	★	**2KJ1408 - ■ME13 - ■■C1**		739
	26	13 384	1.0	55.68		**2KJ1408 - ■ME13 - ■■B1**		739
	35	10 060	1.4	41.85	★	**2KJ1408 - ■ME13 - ■■A1**		739
	FZ.168B-LG225S4E							
	30	11 608	0.90	48.29		**2KJ1308 - ■ME13 - ■■Q1**		722
	32	10 877	1.1	45.25		**2KJ1308 - ■ME13 - ■■P1**		722
	38	9 343	1.4	38.87	★	**2KJ1308 - ■ME13 - ■■N1**		722
	44	8 072	1.6	33.58		**2KJ1308 - ■ME13 - ■■M1**		722
	50	7 125	2.0	29.64		**2KJ1308 - ■ME13 - ■■L1**		722
	55	6 413	2.2	26.68	★	**2KJ1308 - ■ME13 - ■■K1**		722
	66	5 322	2.6	22.14	★	**2KJ1308 - ■ME13 - ■■J1**		722
	73	4 853	2.9	20.19		**2KJ1308 - ■ME13 - ■■H1**		722
	83	4 257	3.3	17.71	★	**2KJ1308 - ■ME13 - ■■G1**		722
	FZ.148B-LG225S4E							
	32	10 906	0.80	45.37	★	**2KJ1307 - ■ME13 - ■■Q1**		569
	35	10 009	0.90	41.64		**2KJ1307 - ■ME13 - ■■P1**		569
	41	8 637	1.0	35.93		**2KJ1307 - ■ME13 - ■■N1**		569
	47	7 555	1.2	31.43		**2KJ1307 - ■ME13 - ■■M1**		569
	54	6 572	1.4	27.34		**2KJ1307 - ■ME13 - ■■L1**		569
	61	5 764	1.6	23.98	★	**2KJ1307 - ■ME13 - ■■K1**		569
	72	4 875	1.8	20.28	★	**2KJ1307 - ■ME13 - ■■J1**		569
	80	4 423	2.0	18.4		**2KJ1307 - ■ME13 - ■■H1**		569
	92	3 856	2.3	16.04	★	**2KJ1307 - ■ME13 - ■■G1**		569
	108	3 274	2.6	13.62		**2KJ1307 - ■ME13 - ■■F1**		569
	141	2 507	3.1	10.43	★	**2KJ1307 - ■ME13 - ■■E1**		569
	155	2 286	2.9	9.51		**2KJ1307 - ■ME13 - ■■D1**		569
	177	1 993	3.1	8.29	★	**2KJ1307 - ■ME13 - ■■C1**		569
	209	1 692	3.4	7.04		**2KJ1307 - ■ME13 - ■■B1**		569
	273	1 296	4.0	5.39	★	**2KJ1307 - ■ME13 - ■■A1**		569
	FZ.128B-K4-LGI225S4E							
	54	6 569	0.93	27.33		**2KJ1306 - ■ME13 - ■■Q1**		477

★ Preferred transmission ratio

Shaft designs, see page 3/89 — **1, 2, 3, 5, 6 or 9**

Frequency and voltage, see page 8/20 — **1 to 9**

Gearbox housing mounting position, see page 3/92 — **A, D, E, F, H or M**

*) For mounting type B5-01

© Siemens AG 2011

Selection and ordering data (continued)

Power rating P_{Motor} kW	Output speed n_2 (50 Hz) rpm	Output torque T_2 Nm	Service factor f_B	Gearbox ratio i_{tot}		Order No.	Order code (No. of poles)	Weight *) kg
37	**FZ.128B-K4-LGI225S4E**							
	60	5 937	1.0	24.7	★	**2KJ1306 - ■ME13 - ■■P1**		477
	62	5 721	1.1	23.8		**2KJ1306 - ■ME13 - ■■N1**		477
	71	4 947	1.2	20.58		**2KJ1306 - ■ME13 - ■■L1**		477
	82	4 315	1.4	17.95	★	**2KJ1306 - ■ME13 - ■■K1**		477
	96	3 692	1.6	15.36	★	**2KJ1306 - ■ME13 - ■■J1**		477
	107	3 308	1.7	13.76		**2KJ1306 - ■ME13 - ■■H1**		477
	126	2 800	1.9	11.65	★	**2KJ1306 - ■ME13 - ■■G1**		477
	146	2 421	2.1	10.07		**2KJ1306 - ■ME13 - ■■F1**		477
	194	1 820	2.5	7.57	★	**2KJ1306 - ■ME13 - ■■E1**		477
	213	1 661	2.2	6.91		**2KJ1306 - ■ME13 - ■■D1**		477
	251	1 406	2.3	5.85	★	**2KJ1306 - ■ME13 - ■■C1**		477
	291	1 214	2.6	5.05		**2KJ1306 - ■ME13 - ■■B1**		477
	387	913	3.0	3.8	★	**2KJ1306 - ■ME13 - ■■A1**		477
45	**FD.208-LG225ZM4E**							
	11.0	39 088	0.87	134.16		**2KJ1411 - ■MU13 - ■■N1**		1 335
	12.2	35 187	0.97	120.77	★	**2KJ1411 - ■MU13 - ■■M1**		1 335
	14.7	29 197	1.2	100.21	★	**2KJ1411 - ■MU13 - ■■L1**		1 335
	16.1	26 624	1.3	91.38		**2KJ1411 - ■MU13 - ■■K1**		1 335
	18.4	23 358	1.5	80.17	★	**2KJ1411 - ■MU13 - ■■J1**		1 335
	21	20 074	1.7	68.9		**2KJ1411 - ■MU13 - ■■H1**		1 335
	28	15 634	2.2	53.66		**2KJ1411 - ■MU13 - ■■G1**		1 335
	FD.188B-LG225ZM4E							
	17.2	24 923	0.80	85.54		**2KJ1410 - ■MU13 - ■■D1**		920
	19.8	21 729	0.92	74.58	★	**2KJ1410 - ■MU13 - ■■C1**		920
	23	18 449	1.1	63.32		**2KJ1410 - ■MU13 - ■■B1**		920
	30	14 119	1.4	48.46	★	**2KJ1410 - ■MU13 - ■■A1**		920
	FZ.188B-LG225ZM4E							
	28	15 334	1.1	52.63		**2KJ1310 - ■MU13 - ■■P1**		897
	30	14 122	1.2	48.47		**2KJ1310 - ■MU13 - ■■N1**		897
	35	12 257	1.4	42.07	★	**2KJ1310 - ■MU13 - ■■M1**		897
	40	10 803	1.6	37.08		**2KJ1310 - ■MU13 - ■■L1**		897
	45	9 481	2.0	32.54		**2KJ1310 - ■MU13 - ■■K1**		897
	50	8 545	2.3	29.33	★	**2KJ1310 - ■MU13 - ■■J1**		897
	59	7 255	2.8	24.9	★	**2KJ1310 - ■MU13 - ■■H1**		897
	64	6 739	3.0	23.13		**2KJ1310 - ■MU13 - ■■G1**		897
	FD.168B-LG225ZM4E							
	26	16 223	0.86	55.68		**2KJ1408 - ■MU13 - ■■B1**		739
	35	12 193	1.1	41.85	★	**2KJ1408 - ■MU13 - ■■A1**		739
	FZ.168B-LG225ZM4E							
	33	13 184	0.87	45.25		**2KJ1308 - ■MU13 - ■■P1**		722
	38	11 325	1.1	38.87	★	**2KJ1308 - ■MU13 - ■■N1**		722
	44	9 784	1.3	33.58		**2KJ1308 - ■MU13 - ■■M1**		722
	50	8 636	1.6	29.64		**2KJ1308 - ■MU13 - ■■L1**		722

★ Preferred transmission ratio

Shaft designs, see page 3/89 — **1, 2, 3, 5, 6 or 9**

Frequency and voltage, see page 8/20 — **1 to 9**

Gearbox housing mounting position, see page 3/92 — **A, D, E, F, H or M**

*) For mounting type B5-01

© Siemens AG 2011

Selection and ordering data (continued)

Power rating P_{Motor} kW	Output speed n_2 (50 Hz) rpm	Output torque T_2 Nm	Service factor f_B	Gearbox ratio i_{tot}		Order No.	Order code (No. of poles)	Weight *) kg
45	**FZ.168B-LG225ZM4E**							
	55	7 773	1.8	26.68	★	**2KJ1308 - ■MU13 - ■■K1**		722
	67	6 451	2.2	22.14	★	**2KJ1308 - ■MU13 - ■■J1**		722
	73	5 882	2.4	20.19		**2KJ1308 - ■MU13 - ■■H1**		722
	83	5 160	2.7	17.71	★	**2KJ1308 - ■MU13 - ■■G1**		722
	97	4 434	3.2	15.22		**2KJ1308 - ■MU13 - ■■F1**		722
	FZ.148B-LG225ZM4E							
	41	10 468	0.86	35.93		**2KJ1307 - ■MU13 - ■■N1**		569
	47	9 157	0.98	31.43		**2KJ1307 - ■MU13 - ■■M1**		569
	54	7 966	1.1	27.34		**2KJ1307 - ■MU13 - ■■L1**		569
	62	6 987	1.3	23.98	★	**2KJ1307 - ■MU13 - ■■K1**		569
	73	5 909	1.5	20.28	★	**2KJ1307 - ■MU13 - ■■J1**		569
	80	5 361	1.7	18.4		**2KJ1307 - ■MU13 - ■■H1**		569
	92	4 673	1.9	16.04	★	**2KJ1307 - ■MU13 - ■■G1**		569
	108	3 968	2.1	13.62		**2KJ1307 - ■MU13 - ■■F1**		569
	141	3 039	2.6	10.43	★	**2KJ1307 - ■MU13 - ■■E1**		569
	155	2 771	2.4	9.51		**2KJ1307 - ■MU13 - ■■D1**		569
	178	2 415	2.6	8.29	★	**2KJ1307 - ■MU13 - ■■C1**		569
	210	2 051	2.8	7.04		**2KJ1307 - ■MU13 - ■■B1**		569
	274	1 570	3.3	5.39	★	**2KJ1307 - ■MU13 - ■■A1**		569
	FZ.128B-K4-LGI225ZM4E							
	60	7 188	0.85	24.7	★	**2KJ1306 - ■MU13 - ■■P1**		477
	62	6 926	0.88	23.8		**2KJ1306 - ■MU13 - ■■N1**		477
	72	5 989	1.0	20.58		**2KJ1306 - ■MU13 - ■■L1**		477
	82	5 223	1.2	17.95	★	**2KJ1306 - ■MU13 - ■■K1**		477
	96	4 470	1.3	15.36	★	**2KJ1306 - ■MU13 - ■■J1**		477
	107	4 004	1.4	13.76		**2KJ1306 - ■MU13 - ■■H1**		477
	127	3 390	1.6	11.65	★	**2KJ1306 - ■MU13 - ■■G1**		477
	146	2 930	1.7	10.07		**2KJ1306 - ■MU13 - ■■F1**		477
	195	2 203	2.1	7.57	★	**2KJ1306 - ■MU13 - ■■E1**		477
	213	2 011	1.8	6.91		**2KJ1306 - ■MU13 - ■■D1**		477
	252	1 702	1.9	5.85	★	**2KJ1306 - ■MU13 - ■■C1**		477
	292	1 470	2.1	5.05		**2KJ1306 - ■MU13 - ■■B1**		477
	388	1 106	2.4	3.8	★	**2KJ1306 - ■MU13 - ■■A1**		477
55	**FD.208-LG250ZM4E**							
	14.8	35 564	0.96	100.21	★	**2KJ1411 - ■NN13 - ■■L1**		1 425
	16.2	32 431	1.0	91.38		**2KJ1411 - ■NN13 - ■■K1**		1 425
	18.5	28 452	1.2	80.17	★	**2KJ1411 - ■NN13 - ■■J1**		1 425
	22	24 453	1.4	68.9		**2KJ1411 - ■NN13 - ■■H1**		1 425
	28	19 044	1.8	53.66		**2KJ1411 - ■NN13 - ■■G1**		1 425
	35	15 129	2.2	42.63	★	**2KJ1411 - ■NN13 - ■■F1**		1 425
	38	13 784	2.5	38.84		**2KJ1411 - ■NN13 - ■■E1**		1 425

★ Preferred transmission ratio

Shaft designs, see page 3/89 — **1, 2, 3, 5, 6 or 9**

Frequency and voltage, see page 8/20 — **1 to 9**

Gearbox housing mounting position, see page 3/92 — **A, D, E, F, H or M**

*) For mounting type B5-01

© Siemens AG 2011

Selection and ordering data (continued)

Power rating P_{Motor} kW	Output speed n_2 (50 Hz) rpm	Output torque T_2 Nm	Service factor f_B	Gearbox ratio i_{tot}		Order No.	Order code (No. of poles)	Weight *) kg
55	**FD.188B-LG250ZM4E**							
	23	22 472	0.89	63.32		**2KJ1410 - ■NN13 - ■■B1**		1 010
	30	17 198	1.2	48.46	★	**2KJ1410 - ■NN13 - ■■A1**		1 010
	FZ.188B-LG250ZM4E							
	30	17 202	0.98	48.47		**2KJ1310 - ■NN13 - ■■N1**		987
	35	14 931	1.2	42.07	★	**2KJ1310 - ■NN13 - ■■M1**		987
	40	13 160	1.3	37.08		**2KJ1310 - ■NN13 - ■■L1**		987
	46	11 548	1.6	32.54		**2KJ1310 - ■NN13 - ■■K1**		987
	50	10 409	1.9	29.33	★	**2KJ1310 - ■NN13 - ■■J1**		987
	59	8 837	2.3	24.9	★	**2KJ1310 - ■NN13 - ■■H1**		987
	64	8 209	2.4	23.13		**2KJ1310 - ■NN13 - ■■G1**		987
	74	7 052	2.8	19.87	★	**2KJ1310 - ■NN13 - ■■F1**		987
	87	6 016	3.1	16.95		**2KJ1310 - ■NN13 - ■■E1**		987
	FD.168B-LG250ZM4E							
	35	14 853	0.94	41.85	★	**2KJ1408 - ■NN13 - ■■A1**		829
	FZ.168B-LG250ZM4E							
	38	13 795	0.94	38.87	★	**2KJ1308 - ■NN13 - ■■N1**		812
	44	11 917	1.1	33.58		**2KJ1308 - ■NN13 - ■■M1**		812
	50	10 519	1.3	29.64		**2KJ1308 - ■NN13 - ■■L1**		812
	56	9 469	1.5	26.68	★	**2KJ1308 - ■NN13 - ■■K1**		812
	67	7 857	1.8	22.14	★	**2KJ1308 - ■NN13 - ■■J1**		812
	73	7 165	2.0	20.19		**2KJ1308 - ■NN13 - ■■H1**		812
	84	6 285	2.2	17.71	★	**2KJ1308 - ■NN13 - ■■G1**		812
	97	5 402	2.6	15.22		**2KJ1308 - ■NN13 - ■■F1**		812
	125	4 209	3.1	11.86	★	**2KJ1308 - ■NN13 - ■■E1**		812
	157	3 343	3.6	9.42	★	**2KJ1308 - ■NN13 - ■■D1**		812
	173	3 031	3.7	8.54		**2KJ1308 - ■NN13 - ■■C1**		812
	223	2 360	4.2	6.65	★	**2KJ1308 - ■NN13 - ■■B1**		812
	280	1 874	4.6	5.28	★	**2KJ1308 - ■NN13 - ■■A1**		812
	FZ.148B-K4-LGI250ZM4E							
	47	11 154	0.81	31.43		**2KJ1307 - ■NN13 - ■■M1**		659
	54	9 703	0.93	27.34		**2KJ1307 - ■NN13 - ■■L1**		659
	62	8 510	1.1	23.98	★	**2KJ1307 - ■NN13 - ■■K1**		659
	73	7 197	1.3	20.28	★	**2KJ1307 - ■NN13 - ■■J1**		659
	80	6 530	1.4	18.4		**2KJ1307 - ■NN13 - ■■H1**		659
	92	5 693	1.6	16.04	★	**2KJ1307 - ■NN13 - ■■G1**		659
	109	4 834	1.8	13.62		**2KJ1307 - ■NN13 - ■■F1**		659
	142	3 702	2.1	10.43	★	**2KJ1307 - ■NN13 - ■■E1**		659
	156	3 375	1.9	9.51		**2KJ1307 - ■NN13 - ■■D1**		659
	179	2 942	2.1	8.29	★	**2KJ1307 - ■NN13 - ■■C1**		659
	210	2 498	2.3	7.04		**2KJ1307 - ■NN13 - ■■B1**		659
	275	1 913	2.7	5.39	★	**2KJ1307 - ■NN13 - ■■A1**		659

★ Preferred transmission ratio

Shaft designs, see page 3/89 — **1, 2, 3, 5, 6 or 9**

Frequency and voltage, see page 8/20 — **1 to 9**

Gearbox housing mounting position, see page 3/92 — **A, D, E, F, H or M**

*) For mounting type B5-01

© Siemens AG 2011

Selection and ordering data (continued)

Power rating P_{Motor} kW	Output speed n_2 (50 Hz) rpm	Output torque T_2 Nm	Service factor f_B	Gearbox ratio i_{tot}		Order No.	Order code (No. of poles)	Weight *) kg
75	**FD.208-K4-LGI280S4E**							
	18.5	38 668	0.88	80.17	★	**2KJ1411 - ■PG13 - ■■J1**		1 550
	22	33 232	1.0	68.9		**2KJ1411 - ■PG13 - ■■H1**		1 550
	28	25 881	1.3	53.66		**2KJ1411 - ■PG13 - ■■G1**		1 550
	35	20 561	1.7	42.63	★	**2KJ1411 - ■PG13 - ■■F1**		1 550
	38	18 733	1.8	38.84		**2KJ1411 - ■PG13 - ■■E1**		1 550
	49	14 590	2.2	30.25	★	**2KJ1411 - ■PG13 - ■■D1**		1 550
	62	11 590	2.6	24.03	★	**2KJ1411 - ■PG13 - ■■C1**		1 550
	FD.188B-K4-LGI280S4E							
	31	23 373	0.86	48.46	★	**2KJ1410 - ■PG13 - ■■A1**		1 135
	FZ.188B-K4-LGI280S4E							
	40	17 885	0.98	37.08		**2KJ1310 - ■PG13 - ■■L1**		1 112
	46	15 695	1.2	32.54		**2KJ1310 - ■PG13 - ■■K1**		1 112
	51	14 147	1.4	29.33	★	**2KJ1310 - ■PG13 - ■■J1**		1 112
	60	12 010	1.7	24.9	★	**2KJ1310 - ■PG13 - ■■H1**		1 112
	64	11 156	1.8	23.13		**2KJ1310 - ■PG13 - ■■G1**		1 112
	75	9 584	2.1	19.87	★	**2KJ1310 - ■PG13 - ■■F1**		1 112
	88	8 175	2.3	16.95		**2KJ1310 - ■PG13 - ■■E1**		1 112
	111	6 439	2.7	13.35	★	**2KJ1310 - ■PG13 - ■■D1**		1 112
	138	5 180	3.1	10.74	★	**2KJ1310 - ■PG13 - ■■C1**		1 112
	159	4 505	3.3	9.34		**2KJ1310 - ■PG13 - ■■B1**		1 112
	178	4 023	3.5	8.34		**2KJ1310 - ■PG13 - ■■A1**		1 112
	FZ.168B-K4-LGI280S4E							
	44	16 196	0.80	33.58		**2KJ1308 - ■PG13 - ■■M1**		937
	50	14 296	0.98	29.64		**2KJ1308 - ■PG13 - ■■L1**		937
	56	12 868	1.1	26.68	★	**2KJ1308 - ■PG13 - ■■K1**		937
	67	10 679	1.3	22.14	★	**2KJ1308 - ■PG13 - ■■J1**		937
	74	9 738	1.4	20.19		**2KJ1308 - ■PG13 - ■■H1**		937
	84	8 542	1.6	17.71	★	**2KJ1308 - ■PG13 - ■■G1**		937
	98	7 341	1.9	15.22		**2KJ1308 - ■PG13 - ■■F1**		937
	125	5 720	2.3	11.86	★	**2KJ1308 - ■PG13 - ■■E1**		937
	158	4 543	2.7	9.42	★	**2KJ1308 - ■PG13 - ■■D1**		937
	174	4 119	2.7	8.54		**2KJ1308 - ■PG13 - ■■C1**		937
	223	3 207	3.1	6.65	★	**2KJ1308 - ■PG13 - ■■B1**		937
	281	2 547	3.4	5.28	★	**2KJ1308 - ■PG13 - ■■A1**		937
90	**FD.208-K4-LGI280ZM4E**							
	22	39 878	0.85	68.9		**2KJ1411 - ■PW13 - ■■H1**		1 590
	28	31 058	1.1	53.66		**2KJ1411 - ■PW13 - ■■G1**		1 590
	35	24 674	1.4	42.63	★	**2KJ1411 - ■PW13 - ■■F1**		1 590
	38	22 480	1.5	38.84		**2KJ1411 - ■PW13 - ■■E1**		1 590
	49	17 508	1.8	30.25	★	**2KJ1411 - ■PW13 - ■■D1**		1 590
	62	13 908	2.1	24.03	★	**2KJ1411 - ■PW13 - ■■C1**		1 590

★ Preferred transmission ratio

Shaft designs, see page 3/89 — **1, 2, 3, 5, 6 or 9**

Frequency and voltage, see page 8/20 — **1 to 9**

Gearbox housing mounting position, see page 3/92 — **A, D, E, F, H or M**

*) For mounting type B5-01

© Siemens AG 2011

Selection and ordering data (continued)

Power rating P_{Motor} kW	Output speed n_2 (50 Hz) rpm	Output torque T_2 Nm	Service factor f_B	Gearbox ratio i_{tot}		Order No.	Order code (No. of poles)	Weight *) kg
90	**FZ.208-K4-LGI280ZM4E**							
	74	11 610	2.8	20.06		**2KJ1311 - ■PW13 - ■■H1**		1 570
	93	9 272	3.3	16.02	★	**2KJ1311 - ■PW13 - ■■G1**		1 570
	FZ.188B-K4-LGI280ZM4E							
	40	21 461	0.82	37.08		**2KJ1310 - ■PW13 - ■■L1**		1 152
	46	18 834	0.98	32.54		**2KJ1310 - ■PW13 - ■■K1**		1 152
	51	16 976	1.2	29.33	★	**2KJ1310 - ■PW13 - ■■J1**		1 152
	60	14 412	1.4	24.9	★	**2KJ1310 - ■PW13 - ■■H1**		1 152
	64	13 387	1.5	23.13		**2KJ1310 - ■PW13 - ■■G1**		1 152
	75	11 501	1.7	19.87	★	**2KJ1310 - ■PW13 - ■■F1**		1 152
	88	9 810	1.9	16.95		**2KJ1310 - ■PW13 - ■■E1**		1 152
	111	7 727	2.3	13.35	★	**2KJ1310 - ■PW13 - ■■D1**		1 152
	138	6 216	2.6	10.74	★	**2KJ1310 - ■PW13 - ■■C1**		1 152
	159	5 406	2.8	9.34		**2KJ1310 - ■PW13 - ■■B1**		1 152
	178	4 827	2.9	8.34		**2KJ1310 - ■PW13 - ■■A1**		1 152
	FZ.168B-K4-LGI280ZM4E							
	50	17 155	0.82	29.64		**2KJ1308 - ■PW13 - ■■L1**		977
	56	15 442	0.91	26.68	★	**2KJ1308 - ■PW13 - ■■K1**		977
	67	12 814	1.1	22.14	★	**2KJ1308 - ■PW13 - ■■J1**		977
	74	11 686	1.2	20.19		**2KJ1308 - ■PW13 - ■■H1**		977
	84	10 250	1.4	17.71	★	**2KJ1308 - ■PW13 - ■■G1**		977
	98	8 809	1.6	15.22		**2KJ1308 - ■PW13 - ■■F1**		977
	125	6 864	1.9	11.86	★	**2KJ1308 - ■PW13 - ■■E1**		977
	158	5 452	2.2	9.42	★	**2KJ1308 - ■PW13 - ■■D1**		977
	174	4 943	2.3	8.54		**2KJ1308 - ■PW13 - ■■C1**		977
	223	3 849	2.6	6.65	★	**2KJ1308 - ■PW13 - ■■B1**		977
	281	3 056	2.8	5.28	★	**2KJ1308 - ■PW13 - ■■A1**		977
110	**FD.208-K2-LGI315S4E**							
	28	37 832	0.90	53.66		**2KJ1411 - ■QQ13 - ■■G1**		1 770
	35	30 056	1.1	42.63	★	**2KJ1411 - ■QQ13 - ■■F1**		1 770
	38	27 384	1.2	38.84		**2KJ1411 - ■QQ13 - ■■E1**		1 770
	49	21 327	1.5	30.25	★	**2KJ1411 - ■QQ13 - ■■D1**		1 770
	62	16 942	1.8	24.03	★	**2KJ1411 - ■QQ13 - ■■C1**		1 770
	FZ.208-K2-LGI315S4E							
	74	14 143	2.3	20.06		**2KJ1311 - ■QQ13 - ■■H1**		1 750
	93	11 295	2.7	16.02	★	**2KJ1311 - ■QQ13 - ■■G1**		1 750
	114	9 229	3.1	13.09	★	**2KJ1311 - ■QQ13 - ■■F1**		1 750
	129	8 115	3.4	11.51		**2KJ1311 - ■QQ13 - ■■E1**		1 750
	141	7 452	3.6	10.57		**2KJ1311 - ■QQ13 - ■■D1**		1 750
	165	6 352	4.0	9.01		**2KJ1311 - ■QQ13 - ■■C1**		1 750
	FZ.188B-K2-LGI315S4E							
	88	11 950	1.6	16.95		**2KJ1310 - ■QQ13 - ■■E1**		1 332
	112	9 412	1.9	13.35	★	**2KJ1310 - ■QQ13 - ■■D1**		1 332
	139	7 572	2.1	10.74	★	**2KJ1310 - ■QQ13 - ■■C1**		1 332

★ Preferred transmission ratio

Shaft designs, see page 3/89 — **1, 2, 3, 5, 6 or 9**

Frequency and voltage, see page 8/20 — **1 to 9**

Gearbox housing mounting position, see page 3/92 — **A, D, E, F, H or M**

*) For mounting type B5-01

© Siemens AG 2011

Selection and ordering data (continued)

Power rating P_{Motor} kW	Output speed n_2 (50 Hz) rpm	Output torque T_2 Nm	Service factor f_B	Gearbox ratio i_{tot}		Order No.	Order code (No. of poles)	Weight *) kg
110	**FZ.188B-K2-LGI315S4E**							
	160	6 585	2.3	9.34		**2KJ1310 - ■QQ13 - ■■B1**		1 332
	179	5 880	2.4	8.34		**2KJ1310 - ■QQ13 - ■■A1**		1 332
132	**FD.208-K2-LGI315ZM4E**							
	35	36 188	0.94	42.63	★	**2KJ1411 - ■QS13 - ■■F1**		1 825
	38	32 971	1.0	38.84		**2KJ1411 - ■QS13 - ■■E1**		1 825
	49	25 679	1.2	30.25	★	**2KJ1411 - ■QS13 - ■■D1**		1 825
	62	20 399	1.5	24.03	★	**2KJ1411 - ■QS13 - ■■C1**		1 825
	FZ.208-K2-LGI315ZM4E							
	74	17 029	1.9	20.06		**2KJ1311 - ■QS13 - ■■H1**		1 805
	93	13 599	2.2	16.02	★	**2KJ1311 - ■QS13 - ■■G1**		1 805
	113	11 112	2.6	13.09	★	**2KJ1311 - ■QS13 - ■■F1**		1 805
	129	9 771	2.8	11.51		**2KJ1311 - ■QS13 - ■■E1**		1 805
	140	8 973	3.0	10.57		**2KJ1311 - ■QS13 - ■■D1**		1 805
	165	7 648	3.3	9.01		**2KJ1311 - ■QS13 - ■■C1**		1 805
	FZ.188B2-K2-LGI315ZM4E							
	88	14 389	1.3	16.95		**2KJ1310 - ■QS13 - ■■E1**		1 387
	111	11 333	1.5	13.35	★	**2KJ1310 - ■QS13 - ■■D1**		1 387
	138	9 117	1.8	10.74	★	**2KJ1310 - ■QS13 - ■■C1**		1 387
	159	7 929	1.9	9.34		**2KJ1310 - ■QS13 - ■■B1**		1 387
	178	7 080	2.0	8.34		**2KJ1310 - ■QS13 - ■■A1**		1 387
160	**FD.208-K2-LGI315L4E**							
	38	39 965	0.85	38.84		**2KJ1411 - ■QU13 - ■■E1**		1 950
	49	31 126	1.0	30.25	★	**2KJ1411 - ■QU13 - ■■D1**		1 950
	62	24 726	1.2	24.03	★	**2KJ1411 - ■QU13 - ■■C1**		1 950
	FZ.208-K2-LGI315L4E							
	74	20 641	1.6	20.06		**2KJ1311 - ■QU13 - ■■H1**		1 930
	93	16 484	1.8	16.02	★	**2KJ1311 - ■QU13 - ■■G1**		1 930
	113	13 469	2.1	13.09	★	**2KJ1311 - ■QU13 - ■■F1**		1 930
	129	11 843	2.3	11.51		**2KJ1311 - ■QU13 - ■■E1**		1 930
	140	10 876	2.5	10.57		**2KJ1311 - ■QU13 - ■■D1**		1 930
	165	9 271	2.7	9.01		**2KJ1311 - ■QU13 - ■■C1**		1 930
	FZ.188B-K2-LGI315L4E							
	88	17 441	1.1	16.95		**2KJ1310 - ■QU13 - ■■E1**		1 512
	111	13 737	1.3	13.35	★	**2KJ1310 - ■QU13 - ■■D1**		1 512
	138	11 051	1.5	10.74	★	**2KJ1310 - ■QU13 - ■■C1**		1 512
	159	9 610	1.6	9.34		**2KJ1310 - ■QU13 - ■■B1**		1 512
	178	8 581	1.7	8.34		**2KJ1310 - ■QU13 - ■■A1**		1 512
200	**FD.208-K2-LGI315ZLB4E**							
	49	38 777	0.83	30.25	★	**2KJ1411 - ■QV13 - ■■D1**		2 065
	62	30 804	0.97	24.03	★	**2KJ1411 - ■QV13 - ■■C1**		2 065
	FZ.208-K2-LGI315ZLB4E							
	74	25 714	1.3	20.06		**2KJ1311 - ■QV13 - ■■H1**		2 045
	93	20 536	1.5	16.02	★	**2KJ1311 - ■QV13 - ■■G1**		2 045

★ Preferred transmission ratio

Shaft designs, see page 3/89 — **1, 2, 3, 5, 6 or 9**

Frequency and voltage, see page 8/20 — **1 to 9**

Gearbox housing mounting position, see page 3/92 — **A, D, E, F, H or M**

*) For mounting type B5-01

© Siemens AG 2011

Selection and ordering data (continued)

Power rating P_{Motor} kW	Output speed n_2 (50 Hz) rpm	Output torque T_2 Nm	Service factor f_B	Gearbox ratio i_{tot}		Order No.	Order code (No. of poles)	Weight *) kg
200	**FZ.208-K2-LGI315ZLB4E**							
	114	16 780	1.7	13.09	★	**2KJ1311 - ■QV13 - ■■F1**		2 045
	129	14 754	1.9	11.51		**2KJ1311 - ■QV13 - ■■E1**		2 045
	141	13 549	2.0	10.57		**2KJ1311 - ■QV13 - ■■D1**		2 045
	165	11 550	2.2	9.01		**2KJ1311 - ■QV13 - ■■C1**		2 045
	FZ.188B-K2-LGI315ZLB4E							
	88	21 728	0.86	16.95		**2KJ1310 - ■QV13 - ■■E1**		1 627
	112	17 113	1.0	13.35	★	**2KJ1310 - ■QV13 - ■■D1**		1 627
	139	13 767	1.2	10.74	★	**2KJ1310 - ■QV13 - ■■C1**		1 627
	160	11 973	1.3	9.34		**2KJ1310 - ■QV13 - ■■B1**		1 627
	179	10 691	1.3	8.34		**2KJ1310 - ■QV13 - ■■A1**		1 627

★ Preferred transmission ratio

Shaft designs, see page 3/89 — **1, 2, 3, 5, 6 or 9**

Frequency and voltage, see page 8/20 — **1 to 9**

Gearbox housing mounting position, see page 3/92 — **A, D, E, F, H or M**

*) For mounting type B5-01

© Siemens AG 2011

Selection and ordering data

Gearbox size	Ratio code	Transmission ratio	Output speed	Twisting angle[1]	Nominal torque	Permissible input torque T_1 [Nm] 2.5x the value is permissible for a brief period (e.g. motor starting torque)												
Max. gearbox torque	Order No					3	3	5	10	20	26	61	98	198	198	291	356	580	1290
	15th and 16th position	i_{tot}	n_2 (50 Hz)	φ	T_{2N} (f_B=1)	Motor size												
Nm			rpm	arcmin	Nm	63	71	80	90	100	112	132	160	180	200	225	250	280	315
FD.28	**N1**	280.00	5.2	21	150		•												
150	**M1**	241.56 ★	6.0	21	150		•	•											
	L1	207.53	7.0	21	150		•	•											
	K1	191.06 ★	7.6	21	150		•	•	•										
	J1	173.69	8.3	21	150		•	•	•										
	H1	153.74 ★	9.4	21	150		•	•	•										
	G1	128.77	11.3	21	150		•	•	•										
	F1	109.79 ★	13.2	21	150		•	•	•										
	E1	93.32 ★	15.5	21	150		•	•	•										
	D1	81.10	17.9	22	150		•	•	•										
	C1	70.59 ★	21.0	22	150		•	•	•										
	B1	63.68	23.0	22	150		•	•	•										
	A1	56.20	26.0	22	150		•	•	•										
FZ.28	**C2**	59.65	24	20	150		•												
96 ... 150	**B2**	50.30 ★	29	20	150		•	•											
	A2	44.66	32	20	150		•	•											
	X1	39.15 ★	37	20	150		•	•	•										
	W1	35.04	41	20	150		•	•	•										
	V1	31.10 ★	47	20	150		•	•	•										
	U1	27.25	53	20	150		•	•	•										
	T1	23.96 ★	61	20	150		•	•	•										
	S1	21.64	67	20	150		•	•	•	•									
	R1	18.86 ★	77	20	150		•	•	•										
	Q1	16.94	86	20	150		•	•	•										
	P1	15.29 ★	95	21	150		•	•	•	•									
	N1	13.87	105	21	150		•	•	•	•									
	M1	12.62 ★	115	21	148		•	•	•	•									
	L1	11.16	130	21	142		•	•	•	•									
	K1	10.30 ★	141	21	138		•	•	•	•									
	J1	8.87	163	22	131		•	•	•	•									
	H1	8.06 ★	180	22	127		•	•	•	•									
	G1	7.20 ★	201	27	126		•	•	•	•									
	F1	6.53	222	28	122		•	•	•	•									
	E1	5.94 ★	244	28	118		•	•	•	•									
	D1	5.25	276	28	111		•	•	•	•									
	C1	4.85 ★	299	28	110		•	•	•	•									
	B1	4.18	347	29	99		•	•	•	•									

★ Preferred transmission ratio

[1] Twisting angle applies to reduced-backlash gearboxes.

In the case of gearboxes of size 28, only possible with integrated motor or input unit KQ and KQS.

Calculation of maximum output torque T_{2max} for gearboxes with input units:

$T_{2max} = T_1 \times i_{tot}$, if $T_{2max} \leq T_{2N}$

If $T_{2max} \geq T_{2N}$ the max. output torque T_{2N} of the unit is the decisive factor.

© Siemens AG 2011

Transmission ratios and maximum torques

Selection and ordering data (continued)

Gearbox size	Ratio code	Transmission ratio		Output speed	Twisting angle [2]	Nominal torque	Permissible input torque T_1 [Nm] 2.5x the value is permissible for a brief period (e.g. motor starting torque)												
Max. gearbox torque	Order No.						3	3	5	10	20	26	61	98	198	198	291	356	580	1290
	15th and 16th position	i_{tot}		n_2 (50 Hz)	φ	T_{2N} (f_B=1)	Motor size													
Nm				rpm	arcmin	Nm	63	71	80	90	100	112	132	160	180	200	225	250	280	315
FZ.38B-D28 290	**M1**	7 591		0.18	–	290		•												
	L1	6 548	★	0.21	–	290		•	•											
	K1	5 626		0.25	–	290		•	•											
	J1	5 179	★	0.27	–	290		•	•	•										
	H1	4 709		0.30	–	290		•	•	•										
	G1	4 168	★	0.34	–	290		•	•	•										
	F1	3 491		0.40	–	290		•	•	•										
	E1	2 976	★	0.47	–	290		•	•	•										
	D1	2 530	★	0.55	–	290		•	•	•										
	C1	2 199		0.64	–	290		•	•	•										
	B1	1 914	★	0.73	–	290		•	•	•										
	A1	1 726		0.81	–	290		•	•	•										
FZ.38B-Z28 290	**Q1**	1 617		0.87	–	290		•												
	P1	1 364	★	1.00	–	290		•	•											
	N1	1 211		1.20	–	290		•	•											
	M1	1 061	★	1.30	–	290		•	•	•										
	L1	950		1.50	–	290		•	•	•										
	K1	843	★	1.70	–	290		•	•	•										
	J1	739		1.90	–	290		•	•	•										
	H1	650	★	2.20	–	290		•	•	•										
	G1	587		2.40	–	290		•	•	•	•									
	F1	511	★	2.70	–	290		•	•	•										
	E1	459		3.10	–	290		•	•	•										
	D1	415	★	3.40	–	290		•	•	•	•									
	C1	376		3.70	–	290		•	•	•	•									
	B1	342	★	4.10	–	290		•	•	•	•									
	A1	303		4.60	–	290		•	•	•	•									

★ Preferred transmission ratio

[1] Only possible with integrated motor.

[2] Twisting angle applies to reduced-backlash gearboxes.

In the case of gearboxes of size 28, only possible with integrated motor or input unit KQ and KQS.

Calculation of maximum output torque T_{2max} for gearboxes with input unit.

$T_{2max} = T_1 \times i_{tot}$, if $T_{2max} \leq T_{2N}$

If $T_{2max} \geq T_{2N}$ the max. output torque T_{2N} of the unit is the decisive factor.

© Siemens AG 2011

Selection and ordering data (continued)

Gearbox size	Ratio code	Transmission ratio	Output speed	Twisting angle [2]	Nominal torque	Permissible input torque T_1 [Nm] 2.5x the value is permissible for a brief period (e.g. motor starting torque)												
Max. gearbox torque	Order No.					3	3	5	10	20	26	61	98	198	198	291	356	580	1290
Nm	15th and 16th position	i_{tot}	n_2 (50 Hz) rpm	φ arcmin	T_{2N} (f_B=1) Nm	Motor size 63	71	80	90	100	112	132	160	180	200	225	250	280	315
FD.38B 290	**N1**	280.41	5.2	20	290	•	•												
	M1	241.91 ★	6.0	20	290	•	•	•											
	L1	207.83	7.0	20	290	•	•	•											
	K1	191.34 ★	7.6	20	290	•	•	•	•										
	J1	173.94	8.3	20	290	•	•	•	•										
	H1	153.96 ★	9.4	20	290	•	•	•	•										
	G1	128.95	11.2	20	290	•	•	•	•										
	F1	109.95 ★	13.2	20	290	•	•	•	•										
	E1	93.46 ★	15.5	20	290	•	•	•	•										
	D1	81.22	17.9	20	290	•	•	•	•										
	C1	70.70 ★	21.0	20	290	•	•	•	•										
	B1	63.77	23.0	20	290	•	•	•	•										
	A1	56.28	26.0	20	290	•	•	•	•										
FZ.38B 210 ... 290	**B2**	56.72 ★	26	19	210	•	•	•											
	A2	50.44	29	19	230	•	•	•											
	X1	43.75 ★	33	19	250	•	•	•	•										
	W1	40.88	35	19	275	•	•	•	•										
	V1	35.96 ★	40	19	290	•	•	•	•										
	U1	31.49	46	19	290	•	•	•	•	•									
	T1	27.85 ★	52	19	290	•	•	•	•	•									
	S1	25.24	57	19	290	•	•	•	•	•									
	R1	22.28 ★	65	19	290	•	•	•	•	•									
	Q1	20.10	72	20	290	•	•	•	•	•									
	P1	18.23 ★	80	20	290	•	•	•	•	•									
	N1	16.61	87	20	290	•	•	•	•	•									
	M1	15.19 ★	95	20	290	•	•	•	•	•									
	L1	13.58	107	20	290	•	•	•	•	•									
	K1	12.47 ★	116	20	290	•	•	•	•	•									
	J1	11.24	129	20	290	•	•	•	•	•									
	H1	9.67 ★	150	20	290	•	•	•	•	•									
	G1	8.52 ★	170	20	290	•	•	•	•	•									
	F1	7.76	187	20	290	•	•	•	•	•									
	E1	7.10 ★	204	20	290	•	•	•	•	•									
	D1	6.35	228	20	275	•	•	•	•	•									
	C1	5.83 ★	249	20	275	•	•	•	•	•									
	B1	5.25	276	20	253	•	•	•	•	•									
	A1	4.52 ★	321	21	228	•	•	•	•	•									

★ Preferred transmission ratio

[1] Only possible with integrated motor.

[2] Twisting angle applies to reduced-backlash gearboxes.

In the case of gearboxes of size 28, only possible with integrated motor or input unit KQ and KQS.

Calculation of maximum output torque T_{2max} for gearboxes with input unit.

$T_{2max} = T_1 \times i_{tot}$, if $T_{2max} \leq T_{2N}$

If $T_{2max} \geq T_{2N}$ the max. output torque T_{2N} of the unit is the decisive factor.

© Siemens AG 2011

Transmission ratios and maximum torques

Selection and ordering data (continued)

Gearbox size	Ratio code	Transmission ratio		Output speed	Twisting angle [2]	Nominal torque	Permissible input torque T_1 [Nm] 2.5x the value is permissible for a brief period (e.g. motor starting torque)													
Max. gearbox torque	Order No.						3	3	5	10	20	26	61	98	198	198	291	356	580	1290
Nm	15th and 16th position	i_{tot}		n_2 (50 Hz) rpm	φ arcmin	T_{2N} (f_B=1) Nm	Motor size 63	71	80	90	100	112	132	160	180	200	225	250	280	315
FD.48B-D28 540	**M1**	19 701		0.07	–	540		•												
	L1	16 996	★	0.08	–	540		•	•											
	K1	14 602		0.10	–	540		•	•											
	J1	13 443	★	0.10	–	540		•	•	•										
	H1	12 221		0.11	–	540		•	•	•										
	G1	10 817	★	0.13	–	540		•	•	•										
	F1	9 060		0.15	–	540		•	•	•										
	E1	7 725	★	0.18	–	540		•	•	•										
	D1	6 566	★	0.21	–	540		•	•	•										
	C1	5 706		0.25	–	540		•	•	•										
	B1	4 967	★	0.28	–	540		•	•	•										
	A1	4 480		0.31	–	540		•	•	•										
FD.48B-Z28 540	**B2**	4 197		0.33	–	540		•												
	A2	3 539	★	0.40	–	540		•	•											
	X1	3 142		0.45	–	540		•	•											
	W1	2 755	★	0.51	–	540		•	•	•										
	V1	2 465		0.57	–	540		•	•	•										
	U1	2 188	★	0.64	–	540		•	•	•										
	T1	1 918		0.73	–	540		•	•	•										
	S1	1 686	★	0.83	–	540		•	•	•										
	R1	1 523		0.92	–	540		•	•	•	•									
	Q1	1 327	★	1.10	–	540		•	•	•										
	P1	1 192		1.20	–	540		•	•	•										
	N1	1 076	★	1.30	–	540		•	•	•	•									
	M1	976		1.40	–	540		•	•	•	•									
	L1	888	★	1.60	–	540		•	•	•	•									
	K1	785		1.80	–	540		•	•	•	•									
	J1	725	★	1.90	–	540		•	•	•	•									
	H1	624		2.20	–	540		•	•	•	•									
	G1	567	★	2.50	–	540		•	•	•	•									
	F1	516	★	2.70	–	540		•	•	•	•									
	E1	468		3.00	–	540		•	•	•	•									
	D1	426	★	3.30	–	540		•	•	•	•									
	C1	376		3.70	–	540		•	•	•	•									
	B1	347	★	4.00	–	540		•	•	•	•									
	A1	299		4.70	–	540		•	•	•	•									

★ Preferred transmission ratio

[1] Only possible with integrated motor.

[2] Twisting angle applies to reduced-backlash gearboxes.

In the case of gearboxes of size 28, only possible with integrated motor or input unit KQ and KQS.

Calculation of maximum output torque T_{2max} for gearboxes with input unit.

$T_{2max} = T_1 \times i_{tot}$, if $T_{2max} \leq T_{2N}$

If $T_{2max} \geq T_{2N}$ the max. output torque T_{2N} of the unit is the decisive factor.

© Siemens AG 2011

Selection and ordering data (continued)

Gearbox size	Ratio code	Transmission ratio	Output speed	Twisting angle [2]	Nominal torque	Permissible input torque T_1 [Nm] 2.5x the value is permissible for a brief period (e.g. motor starting torque)												
Max. gearbox torque	Order No.					3	3	5	10	20	26	61	98	198	198	291	356	580	1290
Nm	15th and 16th position	i_{tot}	n_2 (50 Hz) rpm	φ arcmin	T_{2N} (f_B=1) Nm	Motor size 63	71	80	90	100	112	132	160	180	200	225	250	280	315
FD.48B 540	**S1**	268.80 ★	5.4	12	540	•	•	•											
	R1	238.65	6.1	12	540	•	•	•											
	Q1	209.23 ★	6.9	12	540	•	•	•	•										
	P1	187.24	7.7	12	540	•	•	•	•										
	N1	166.19 ★	8.7	13	540	•	•	•	•										
	M1	145.63	10.0	13	540	•	•	•	•										
	L1	128.04 ★	11.3	13	540	•	•	•	•										
	K1	115.68	12.5	13	540	•	•	•	•										
	J1	100.80 ★	14.4	13	540	•	•	•	•										
	H1	90.53	16.0	13	540	•	•	•	•										
	G1	81.73 ★	17.7	13	540	•	•	•	•	•									
	F1	74.10	19.6	13	540	•	•	•	•	•									
	E1	67.43 ★	22.0	13	540	•	•	•	•	•									
	D1	59.62	24.0	13	540	•	•	•	•	•									
	C1	55.06 ★	26.0	13	540	•	•	•	•	•									
	B1	47.40	31.0	13	540	•	•	•	•	•									
	A1	43.09 ★	34.0	13	540	•	•	•	•	•									
FZ.48B 325 ... 540	**B2**	60.71 ★	24	12	400	•	•	•	•										
	A2	55.19	26	12	500	•	•	•	•										
	X1	49.58 ★	29	12	540	•	•	•	•										
	W1	42.50	34	12	540	•	•	•	•	•									
	V1	38.45 ★	38	12	540	•	•	•	•	•	• [1]								
	U1	35.49	41	12	540	•	•	•	•	•	• [1]								
	T1	30.86 ★	47	12	540	•	•	•	•	•	• [1]								
	S1	28.02	52	12	540	•	•	•	•	•	• [1]								
	R1	25.59 ★	57	12	540	•	•	•	•	•	• [1]								
	Q1	23.48	62	12	540	•	•	•	•	•	• [1]								
	P1	21.63 ★	67	12	540	•	•	•	•	•	• [1]								
	N1	19.64	74	12	540	•	•	•	•	•	• [1]								
	M1	17.89 ★	81	12	540	•	•	•	•	•	• [1]								
	L1	16.39	88	12	540	•	•	•	•	•	• [1]								
	K1	14.63 ★	99	12	540	•	•	•	•	•	• [1]								
	J1	13.05	111	13	540			•	•	•	• [1]								
	H1	11.09	131	13	535			•	•	•	• [1]								
	G1	9.23 ★	157	13	526			•	•	•	• [1]								
	F1	8.39 ★	173	16	510	•	•	•	•	•	• [1]								
	E1	7.68	189	16	467	•	•	•	•	•	• [1]								
	D1	6.86 ★	211	17	443	•	•	•	•	•	• [1]								
	C1	6.12	237	17	406			•	•	•	• [1]								
	B1	5.20	279	18	378			•	•	•	• [1]								
	A1	4.33 ★	335	19	325			•	•	•	• [1]								

★ Preferred transmission ratio

[1] Only possible with integrated motor.

[2] Twisting angle applies to reduced-backlash gearboxes.

In the case of gearboxes of size 28, only possible with integrated motor or input unit KQ and KQS.

Calculation of maximum output torque T_{2max} for gearboxes with input unit.

$T_{2max} = T_1 \times i_{tot}$, if $T_{2max} \leq T_{2N}$

If $T_{2max} \geq T_{2N}$ the max. output torque T_{2N} of the unit is the decisive factor.

© Siemens AG 2011

Transmission ratios and maximum torques

Selection and ordering data (continued)

Gearbox size	Ratio code	Transmission ratio		Output speed	Twisting angle [2]	Nominal torque	Permissible input torque T_1 [Nm] 2.5x the value is permissible for a brief period (e.g. motor starting torque)													
Max. gearbox torque	Order No.						3	3	5	10	20	26	61	98	198	198	291	356	580	1290
	15th and 16th position	i_{tot}		n_2 (50 Hz)	φ	T_{2N} (f_B=1)	Motor size													
Nm				rpm	arcmin	Nm	63	71	80	90	100	112	132	160	180	200	225	250	280	315
FD.68B-D28	**T1**	39 638		0.04	–	1 000		•												
1 000	**S1**	34 196	★	0.04	–	1 000		•	•											
	R1	29 378		0.05	–	1 000		•	•											
	Q1	27 047	★	0.05	–	1 000		•	•	•										
	P1	24 588		0.06	–	1 000		•	•	•										
	N1	21 763	★	0.06	–	1 000		•	•	•										
	M1	20 908		0.07	–	1 000		•												
	L1	18 038	★	0.08	–	1 000		•	•											
	K1	15 497	★	0.09	–	1 000		•	•											
	J1	14 267		0.10	–	1 000		•	•	•										
	H1	12 970	★	0.11	–	1 000		•	•	•										
	G1	11 480		0.12	–	1 000		•	•	•										
	F1	9 615		0.15	–	1 000		•	•	•										
	E1	8 198		0.17	–	1 000		•	•	•										
	D1	6 969		0.20	–	1 000		•	•	•										
	C1	6 056		0.23	–	1 000		•	•	•										
	B1	5 271		0.27	–	1 000		•	•	•										
	A1	4 755		0.29	–	1 000		•	•	•										
FD.68B-Z28	**B2**	4 454		0.31	–	1 000		•												
1 000	**A2**	3 756	★	0.37	–	1 000		•	•											
	X1	3 335		0.42	–	1 000		•	•											
	W1	2 924	★	0.48	–	1 000		•	•	•										
	V1	2 916		0.54	–	1 000		•	•	•										
	U1	2 322	★	0.60	–	1 000		•	•	•										
	T1	2 035		0.69	–	1 000		•	•	•										
	S1	1 789	★	0.78	–	1 000		•	•	•										
	R1	1 616		0.87	–	1 000		•	•	•	•									
	Q1	1 408	★	0.99	–	1 000		•	•	•										
	P1	1 265		1.10	–	1 000		•	•	•										
	N1	1 142	★	1.20	–	1 000		•	•	•	•									
	M1	1 036		1.40	–	1 000		•	•	•	•									
	L1	942	★	1.50	–	1 000		•	•	•	•									
	K1	833		1.70	–	1 000		•	•	•	•									
	J1	769	★	1.80	–	1 000		•	•	•	•									
	H1	662		2.10	–	1 000		•	•	•	•									
	G1	602	★	2.30	–	1 000		•	•	•	•									
	F1	547	★	2.60	–	1 000		•	•	•	•									
	E1	496		2.80	–	1 000		•	•	•	•									
	D1	452	★	3.10	–	1 000		•	•	•	•									
	C1	399		3.50	–	1 000		•	•	•	•									
	B1	369	★	3.80	–	1 000		•	•	•	•									
	A1	317		4.40	–	1 000		•	•	•	•									

★ Preferred transmission ratio

[1] Only possible with integrated motor.

[2] Twisting angle applies to reduced-backlash gearboxes.

In the case of gearboxes of size 28, only possible with integrated motor or input unit KQ and KQS.

Calculation of maximum output torque T_{2max} for gearboxes with input unit.

$T_{2max} = T_1 \times i_{tot}$, if $T_{2max} \leq T_{2N}$

If $T_{2max} \geq T_{2N}$ the max. output torque T_{2N} of the unit is the decisive factor.

© Siemens AG 2011

Selection and ordering data (continued)

Gearbox size	Ratio code	Transmission ratio	Output speed	Twisting angle [2]	Nominal torque	Permissible input torque T_1 [Nm] 2.5x the value is permissible for a brief period (e.g. motor starting torque)													
Max. gearbox torque	Order No.					3	3	5	10	20	26	61	98	198	198	291	356	580	1290
Nm	15th and 16th position	i_{tot}	n_2 (50 Hz) rpm	φ arcmin	T_{2N} (f_B=1) Nm	Motor size 63	71	80	90	100	112	132	160	180	200	225	250	280	315
FD.68B	**S1**	296.18 ★	4.9	10.	1 000	•	•	•											
1 000	**R1**	263.39	5.5	10	1 000	•	•	•											
	Q1	228.48 ★	6.3	10	1 000	•	•	•	•										
	P1	213.48	6.8	10	1 000	•	•	•	•										
	N1	187.76 ★	7.7	11	1 000	•	•	•	•										
	M1	164.44	8.8	11	1 000	•	•	•	•	•									
	L1	145.44 ★	10.0	11	1 000	•	•	•	•	•									
	K1	131.82	11.0	11	1 000	•	•	•	•	•									
	J1	116.36 ★	12.5	11	1 000	•	•	•	•	•									
	H1	104.96	13.8	11	1 000	•	•	•	•	•									
	G1	95.20 ★	15.2	11	1 000	•	•	•	•	•									
	F1	86.74	16.7	11	1 000	•	•	•	•	•									
	E1	79.33 ★	18.3	11	1 000	•	•	•	•	•									
	D1	70.93	20.0	11	1 000	•	•	•	•	•									
	C1	65.14 ★	22.0	11	1 000	•	•	•	•	•									
	B1	58.71	25.0	11	1 000	•	•	•	•	•									
	A1	50.48 ★	29.0	11	1 000	•	•	•	•	•									
FZ.68B	**B2**	61.17 ★	24	10	850			•	•										
589 ... 1 000	**A2**	53.50	27	10	1 000			•	•	•									
	X1	48.03 ★	30	10	1 000			•	•	•	•								
	V1	43.87	33	10	1 000			•	•	•	•								
	U1	38.93 ★	37	10	1 000			•	•	•	•	• [1]							
	T1	35.93	40	10	1 000			•	•	•	•	• [1]							
	S1	32.50 ★	45	10	1 000			•	•	•	•	• [1]							
	R1	29.93	48	10	1 000			•	•	•	•	• [1]							
	Q1	27.68 ★	52	10	1 000			•	•	•	•	• [1]							
	P1	25.69	56	10	1 000			•	•	•	•	• [1]							
	N1	22.67 ★	64	10	1 000			•	•	•	•	• [1]							
	M1	20.93	69	10	1 000			•	•	•	•	• [1]							
	L1	18.75 ★	77	10	1 000			•	•	•	•	• [1]							
	K1	17.29	84	10	1 000			•	•	•	•	• [1]							
	J1	14.51	100	10	1 000			•	•	•	•	• [1]							
	H1	12.38 ★	117	11	1 000			•	•	•	•	• [1]							
	G1	10.31	141	11	1 000					•	•	• [1]							
	F1	8.55 ★	170	11	1 000					•	•	• [1]							
	E1	8.03	181	15	897			•	•	•	•	• [1]							
	D1	6.74	215	15	835			•	•	•	•	• [1]							
	C1	5.75 ★	252	16	755			•	•	•	•	• [1]							
	B1	4.79	303	16	682					•	•	• [1]							
	A1	3.97 ★	365	17	589					•	•	• [1]							

★ Preferred transmission ratio

[1] Only possible with integrated motor.

[2] Twisting angle applies to reduced-backlash gearboxes.

In the case of gearboxes of size 28, only possible with integrated motor or input unit KQ and KQS.

Calculation of maximum output torque T_{2max} for gearboxes with input unit.

$T_{2max} = T_1 \times i_{tot}$, if $T_{2max} \leq T_{2N}$

If $T_{2max} \geq T_{2N}$ the max. output torque T_{2N} of the unit is the decisive factor.

© Siemens AG 2011

Transmission ratios and maximum torques

Selection and ordering data (continued)

Gearbox size	Ratio code	Transmission ratio		Output speed	Twisting angle [2]	Nominal torque	Permissible input torque T_1 [Nm] 2.5x the value is permissible for a brief period (e.g. motor starting torque)													
Max. gearbox torque	Order No.						3	3	5	10	20	26	61	98	198	198	291	356	580	1290
	15th and 16th position	i_{tot}		n_2 (50 Hz)	φ	T_{2N} (f_B=1)	Motor size													
Nm				rpm	arcmin	Nm	63	71	80	90	100	112	132	160	180	200	225	250	280	315
FD.88B-D28	**T1**	54 705		0.03	–	1 900		•												
1 900	**S1**	47 195	★	0.03	–	1 900		•	•											
	R1	40 546		0.03	–	1 900		•	•											
	Q1	37 328	★	0.04	–	1 900		•	•	•										
	P1	33 935		0.04	–	1 900		•	•	•										
	N1	30 036	★	0.05	–	1 900		•	•	•										
	M1	28 814		0.05	–	1 900		•	•											
	L1	24 755	★	0.06	–	1 900		•	•											
	K1	22 790	★	0.06	–	1 900		•	•	•										
	J1	20 718		0.07	–	1 900		•	•	•										
	H1	18 338	★	0.08	–	1 900		•	•	•										
	G1	15 360		0.09	–	1 900		•	•	•										
	F1	13 096	★	0.11	–	1 900		•	•	•										
	E1	11 132	★	0.13	–	1 900		•	•	•										
	D1	9 674		0.14	–	1 900		•	•	•										
	C1	8 420	★	0.17	–	1 900		•	•	•										
	B1	7 595		0.18	–	1 900		•	•	•										
	A1	6 703		0.21	–	1 900		•	•	•										
FD.88B-Z28	**B2**	6 000	★	0.23	–	1 900		•	•											
1 900	**A2**	5 327		0.26	–	1 900		•	•											
	X1	4 670	★	0.30	–	1 900		•	•	•										
	W1	4 179		0.33	–	1 900		•	•	•										
	V1	3 709	★	0.38	–	1 900		•	•	•										
	U1	3 251		0.43	–	1 900		•	•	•										
	T1	2 858	★	0.49	–	1 900		•	•	•										
	S1	2 582		0.54	–	1 900		•	•	•	•									
	R1	2 250	★	0.62	–	1 900		•	•	•										
	Q1	2 021		0.69	–	1 900		•	•	•										
	P1	1 824	★	0.77	–	1 900		•	•	•	•									
	N1	1 654		0.85	–	1 900		•	•	•	•									
	M1	1 505	★	0.93	–	1 900		•	•	•	•									
	L1	1 331		1.10	–	1 900		•	•	•	•									
	K1	1 229	★	1.10	–	1 900		•	•	•	•									
	J1	1 058		1.30	–	1 900		•	•	•	•									
	H1	962	★	1.50	–	1 900		•	•	•	•									
	G1	874	★	1.60	–	1 900		•	•	•	•									
	F1	793		1.80	–	1 900		•	•	•	•									
	E1	721	★	1.90	–	1 900		•	•	•	•									
	D1	638		2.20	–	1 900		•	•	•	•									
	C1	589	★	2.40	–	1 900		•	•	•	•									
	B1	507		2.80	–	1 900		•	•	•	•									
	A1	461	★	3.00	–	1 900		•	•	•	•									

★ Preferred transmission ratio

[1] Only possible with integrated motor.

[2] Twisting angle applies to reduced-backlash gearboxes.

In the case of gearboxes of size 28, only possible with integrated motor or input unit KQ and KQS.

Calculation of maximum output torque T_{2max} for gearboxes with input unit.

$T_{2max} = T_1 \times i_{tot}$, if $T_{2max} \leq T_{2N}$

If $T_{2max} \geq T_{2N}$ the max. output torque T_{2N} of the unit is the decisive factor.

© Siemens AG 2011

Selection and ordering data (continued)

Gearbox size	Ratio code	Transmission ratio	Output speed	Twisting angle [2]	Nominal torque	Permissible input torque T_1 [Nm] 2.5x the value is permissible for a brief period (e.g. motor starting torque)													
Max. gearbox torque	Order No.					3	3	5	10	20	26	61	98	198	198	291	356	580	1290
Nm	15th and 16th position	i_{tot}	n_2 (50 Hz) rpm	φ arcmin	T_{2N} (f_B=1) Nm	Motor size 63	71	80	90	100	112	132	160	180	200	225	250	280	315
FD.88B	**V1**	404.92	3.6	9	1 900	•	•	•											
1 900	**U1**	358.33 ★	4.0	9	1 900	•	•	•	•										
	T1	325.76	4.5	9	1 900	•	•	•	•										
	S1	292.64 ★	5.0	9	1 900	•	•	•	•										
	R1	250.83	5.8	9	1 900	•	•	•	•	•									
	P1	226.94 ★	6.4	9	1 900	•	•	•	•	•	•								
	N1	209.49	6.9	9	1 900	•	•	•	•	•	•								
	M1	182.15 ★	8.0	9	1 900	•	•	•	•	•	•	•							
	L1	165.38	8.8	9	1 900	•	•	•	•	•	•	•							
	K1	151.01 ★	9.6	9	1 900	•	•	•	•	•	•	•							
	J1	138.56	10.5	9	1 900	•	•	•	•	•	•	•							
	H1	127.66 ★	11.4	9	1 900	•	•	•	•	•	•	•							
	G1	115.93	12.5	9	1 900	•	•	•	•	•	•	•							
	F1	105.61 ★	13.7	9	1 900	•	•	•	•	•	•	•							
	E1	96.75	15.0	9	1 900	•	•	•	•	•	•	•							
	D1	86.33 ★	16.8	9	1 900	•	•	•	•	•	•	•							
	C1	77.04	18.8	9	1 900			•	•	•	•	•							
	B1	65.43	22.0	9	1 900			•	•	•	•	•							
	A1	54.47 ★	27.0	9	1 900			•	•	•	•	•							
FZ.88B	**X1**	64.58 ★	22	8	1 900			•	•	•	•								
1 199 ... 1 900	**W1**	59.13	25	8	1 900			•	•	•	•								
	V1	52.60 ★	28	8	1 900			•	•	•	•	•							
	U1	48.08	30	8	1 900			•	•	•	•	•							
	T1	44.20 ★	33	8	1 900			•	•	•	•	•							
	S1	40.83	36	8	1 900			•	•	•	•	•							
	R1	37.89 ★	38	8	1 900			•	•	•	•	•	• [1]						
	Q1	35.29	41	8	1 900			•	•	•	•	•	• [1]						
	P1	31.91 ★	45	8	1 900			•	•	•	•	•	• [1]						
	N1	29.38	49	8	1 900			•	•	•	•	•	• [1]						
	M1	26.42 ★	55	8	1 900			•	•	•	•	•	• [1]						
	L1	24.38	59	9	1 900			•	•	•	•	•	• [1]						
	K1	20.65	70	9	1 900			•	•	•	•	•	• [1]						
	J1	18.00 ★	81	9	1 900			•	•	•	•	•	• [1]						
	H1	15.31	95	9	1 900					•	•	•	• [1]						
	G1	13.07 ★	111	9	1 900					•	•	•	• [1]						
	F1	10.71 ★	135	9	1 900					•	•	•	• [1]						
	E1	9.19	158	12	1 658			•	•	•	•	•	• [1]						
	D1	8.01 ★	181	12	1 548			•	•	•	•	•	• [1]						
	C1	6.82	213	13	1 454					•	•	•	• [1]						
	B1	5.82 ★	249	13	1 348					•	•	•	• [1]						
	A1	4.77 ★	304	13	1 199					•	•	•	• [1]						

★ Preferred transmission ratio

[1] Only possible with integrated motor.

[2] Twisting angle applies to reduced-backlash gearboxes.

In the case of gearboxes of size 28, only possible with integrated motor or input unit KQ and KQS.

Calculation of maximum output torque T_{2max} for gearboxes with input unit.

$T_{2max} = T_1 \times i_{tot}$, if $T_{2max} \leq T_{2N}$

If $T_{2max} \geq T_{2N}$ the max. output torque T_{2N} of the unit is the decisive factor.

© Siemens AG 2011

Transmission ratios and maximum torques

Selection and ordering data (continued)

Gearbox size	Ratio code	Transmission ratio		Output speed	Twisting angle [2]	Nominal torque	Permissible input torque T_1 [Nm] 2.5x the value is permissible for a brief period (e.g. motor starting torque)													
Max. gearbox torque	Order No.						3	3	5	10	20	26	61	98	198	198	291	356	580	1290
	15th and 16th position	i_{tot}		n_2 (50 Hz)	φ	T_{2N} (f_B=1)	Motor size													
Nm				rpm	arcmin	Nm	63	71	80	90	100	112	132	160	180	200	225	250	280	315
FD.108B-D38 3 400	**N1**	66 190	★	0.02	–	3 400	•	•	•											
	M1	58 766		0.02	–	3 400	•	•	•											
	L1	51 521	★	0.03	–	3 400	•	•	•	•										
	K1	46 105		0.03	–	3 400	•	•	•	•										
	J1	40 922	★	0.04	–	3 400	•	•	•	•										
	H1	35 860		0.04	–	3 400	•	•	•	•										
	G1	31 530	★	0.05	–	3 400	•	•	•	•										
	F1	28 485		0.05	–	3 400	•	•	•	•										
	E1	24 821	★	0.06	–	3 400	•	•	•	•										
	D1	22 293		0.07	–	3 400	•	•	•	•										
	C1	20 125	★	0.07	–	3 400	•	•	•	•										
	B1	18 247		0.08	–	3 400	•	•	•	•										
	A1	16 603	★	0.09	–	3 400	•	•	•	•										
FD.108B-Z38 3 400	**M2**	15 230	★	0.10	–	3 400	•	•	•											
	L2	13 544		0.11	–	3 400	•	•	•											
	K2	11 749	★	0.12	–	3 400	•	•	•	•										
	J2	10 977		0.13	–	3 400	•	•	•	•										
	H2	9 655	★	0.15	–	3 400	•	•	•	•										
	G2	8 456		0.17	–	3 400	•	•	•	•	•									
	F2	7 479	★	0.19	–	3 400	•	•	•	•	•									
	E2	6 778		0.21	–	3 400	•	•	•	•	•									
	D2	5 983	★	0.24	–	3 400	•	•	•	•	•									
	C2	5 397		0.27	–	3 400	•	•	•	•	•									
	B2	4 895	★	0.30	–	3 400	•	•	•	•	•									
	A2	4 460		0.33	–	3 400	•	•	•	•	•									
	X1	4 079	★	0.36	–	3 400	•	•	•	•	•									
	W1	3 648		0.40	–	3 400	•	•	•	•	•									
	V1	3 349	★	0.43	–	3 400	•	•	•	•	•									
	U1	3 019		0.48	–	3 400	•	•	•	•	•									
	T1	2 596	★	0.56	–	3 400	•	•	•	•	•									
	S1	2 315		0.63	–	3 400	•	•	•	•	•									
	R1	2 126	★	0.68	–	3 400	•	•	•	•	•									
	Q1	1 916		0.76	–	3 400	•	•	•	•	•									
	P1	1 647	★	0.88	–	3 400	•	•	•	•	•									
	N1	1 526		0.95	–	3 400	•	•	•	•	•									
	M1	1 384	★	1.00	–	3 400	•	•	•	•	•									
	L1	1 261		1.10	–	3 400	•	•	•	•	•									
	K1	1 153	★	1.30	–	3 400	•	•	•	•	•									
	J1	1 031		1.40	–	3 400	•	•	•	•	•									
	H1	947	★	1.50	–	3 400	•	•	•	•	•									
	G1	853		1.70	–	3 400	•	•	•	•	•									
	F1	734	★	2.00	–	3 400	•	•	•	•	•									
	E1	732	★	2.00	–	3 400	•	•	•	•	•									
	D1	654		2.20	–	3 400	•	•	•	•	•									
	C1	601	★	2.40	–	3 400	•	•	•	•	•									
	B1	541		2.70	–	3 400	•	•	•	•	•									
	A1	466	★	3.10	–	3 400	•	•	•	•	•									

★ Preferred transmission ratio

[1] Only possible with integrated motor.

[2] Twisting angle applies to reduced-backlash gearboxes.

In the case of gearboxes of size 28, only possible with integrated motor or input unit KQ and KQS.

Calculation of maximum output torque T_{2max} for gearboxes with input unit.

$T_{2max} = T_1 \times i_{tot}$, if $T_{2max} \leq T_{2N}$

If $T_{2max} \geq T_{2N}$ the max. output torque T_{2N} of the unit is the decisive factor.

© Siemens AG 2011

Selection and ordering data (continued)

Gearbox size	Ratio code	Transmission ratio	Output speed	Twisting angle [2]	Nominal torque	Permissible input torque T_1 [Nm] 2.5x the value is permissible for a brief period (e.g. motor starting torque)													
Max. gearbox torque	Order No.					3	3	5	10	20	26	61	98	198	198	291	356	580	1290
Nm	15th and 16th position	i_{tot}	n_2 (50 Hz) rpm	φ arcmin	T_{2N} (f_B=1) Nm	Motor size 63	71	80	90	100	112	132	160	180	200	225	250	280	315
FD.108B 3 400	**V1**	424.49 ★	3.4	7	3 400			•	•										
	U1	382.79	3.8	7	3 400			•	•										
	T1	345.19 ★	4.2	7	3 400			•	•										
	S1	301.88	4.8	7	3 400			•	•	•									
	R1	271.01 ★	5.4	7	3 400			•	•	•	•								
	Q1	247.53	5.9	7	3 400			•	•	•	•								
	P1	219.66 ★	6.6	7	3 400			•	•	•	•	•							
	N1	202.77	7.2	7	3 400			•	•	•	•	•							
	M1	183.39 ★	7.9	7	3 400			•	•	•	•	•							
	L1	168.88	8.6	8	3 400			•	•	•	•	•							
	K1	156.19 ★	9.3	8	3 400			•	•	•	•	•	•						
	J1	144.99	10.0	8	3 400			•	•	•	•	•	•						
	H1	127.92 ★	11.3	8	3 400			•	•	•	•	•	•						
	G1	118.11	12.3	8	3 400			•	•	•	•	•	•						
	F1	105.81 ★	13.7	8	3 400			•	•	•	•	•	•						
	E1	97.57	14.9	8	3 400			•	•	•	•	•	•						
	D1	81.86	17.7	8	3 400			•	•	•	•	•	•						
	C1	69.84 ★	21.0	8	3 400			•	•	•	•	•	•						
	B1	58.20	25.0	8	3 400					•	•	•	•						
	A1	48.24 ★	30.0	8	3 400					•	•	•	•						
FZ.108B 2 422 ... 3 400	**A2**	64.21 ★	23	7	3 000					•	•	•							
	X1	58.80	25	7	3 000					•	•	•							
	W1	54.17 ★	27	7	3 400					•	•	•							
	V1	50.15	29	7	3 400					•	•	•							
	U1	46.64 ★	31	7	3 400					•	•	•	•						
	T1	43.54	33	7	3 400					•	•	•	•						
	S1	38.95 ★	37	7	3 400					•	•	•	•	• [1]					
	R1	36.10	40	7	3 400					•	•	•	•	• [1]					
	Q1	33.09 ★	44	7	3 400					•	•	•	•	• [1]					
	P1	30.33	48	7	3 400					•	•	•	•	• [1]					
	N1	25.85	56	7	3 400					•	•	•	•	• [1]					
	M1	22.81 ★	64	7	3 400					•	•	•	•	• [1]					
	L1	19.41	75	7	3 400					•	•	•	•	• [1]					
	K1	16.82 ★	86	7	3 400					•	•	•	•	• [1]					
	J1	14.16 ★	102	7	3 304					•	•	•	•	• [1]					
	H1	12.77	114	7	3 249							•	•	• [1]					
	G1	10.98 ★	132	8	3 153							•	•	• [1]					
	F1	10.04	144	10	3 374					•	•	•	•	• [1]					
	E1	8.70 ★	167	10	3 102					•	•	•	•	• [1]					
	D1	7.32 ★	198	10	2 853					•	•	•	•	• [1]					
	C1	6.60	220	10	2 651							•	•	• [1]					
	B1	5.68 ★	255	10	2 422							•	•	• [1]					

★ Preferred transmission ratio

[1] Only possible with integrated motor.

[2] Twisting angle applies to reduced-backlash gearboxes.

In the case of gearboxes of size 28, only possible with integrated motor or input unit KQ and KQS.

Calculation of maximum output torque T_{2max} for gearboxes with input unit.

$T_{2max} = T_1 \times i_{tot}$, if $T_{2max} \leq T_{2N}$

If $T_{2max} \geq T_{2N}$ the max. output torque T_{2N} of the unit is the decisive factor.

© Siemens AG 2011

Transmission ratios and maximum torques

Selection and ordering data (continued)

Gearbox size	Ratio code	Transmission ratio		Output speed	Twisting angle [2]	Nominal torque	Permissible input torque T_1 [Nm] 2.5x the value is permissible for a brief period (e.g. motor starting torque)													
Max. gearbox torque	Order No.						3	3	5	10	20	26	61	98	198	198	291	356	580	1290
Nm	15th and 16th position	i_{tot}		n_2 (50 Hz) rpm	φ arcmin	T_{2N} (f_B=1) Nm	Motor size 63	71	80	90	100	112	132	160	180	200	225	250	280	315
FD.128B-D38 6 100	**N1**	68 070	★	0.02	–	6 100	•	•	•											
	M1	60 435		0.02	–	6 100	•	•	•											
	L1	52 984	★	0.03	–	6 100	•	•	•	•										
	K1	47 415		0.03	–	6 100	•	•	•	•										
	J1	42 084	★	0.03	–	6 100	•	•	•	•										
	H1	36 878		0.04	–	6 100	•	•	•	•										
	G1	32 425	★	0.04	–	6 100	•	•	•	•										
	F1	29 294		0.05	–	6 100	•	•	•	•										
	E1	25 526	★	0.06	–	6 100	•	•	•	•										
	D1	22 926		0.06	–	6 100	•	•	•	•										
	C1	20 697	★	0.07	–	6 100	•	•	•	•										
	B1	18 765		0.08	–	6 100	•	•	•	•										
	A1	17 075	★	0.08	–	6 100	•	•	•	•										
FD.128B-Z38 6 100	**W1**	15 663	★	0.09	–	6 100	•	•	•											
	V1	13 928		0.10	–	6 100	•	•	•											
	U1	12 083	★	0.12	–	6 100	•	•	•	•										
	T1	11 289		0.13	–	6 100	•	•	•	•										
	S1	9 929	★	0.15	–	6 100	•	•	•	•										
	R1	8 696		0.17	–	6 100	•	•	•	•	•									
	Q1	7 691	★	0.19	–	6 100	•	•	•	•	•									
	P1	6 971		0.21	–	6 100	•	•	•	•	•									
	N1	6 153	★	0.24	–	6 100	•	•	•	•	•									
	M1	5 551		0.26	–	6 100	•	•	•	•	•									
	L1	5 034	★	0.29	–	6 100	•	•	•	•	•									
	K1	4 587		0.32	–	6 100	•	•	•	•	•									
	J1	4 195	★	0.35	–	6 100	•	•	•	•	•									
	H1	3 751		0.39	–	6 100	•	•	•	•	•									
	G1	3 445	★	0.42	–	6 100	•	•	•	•	•									
	F1	3 105		0.47	–	6 100	•	•	•	•	•									
	E1	2 670	★	0.54	–	6 100	•	•	•	•	•									
	D1	2 381		0.61	–	6 100	•	•	•	•	•									
	C1	2 186	★	0.66	–	6 100	•	•	•	•	•									
	B1	1 970		0.74	–	6 100	•	•	•	•	•									
	A1	1 694	★	0.86	–	6 100	•	•	•	•	•									
FD.128B-Z48 6 100	**L1**	1 504		0.96	–	6 100	•	•	•	•	•	•								
	K1	1 370	★	1.10	–	6 100	•	•	•	•	•	•								
	J1	1 255		1.20	–	6 100	•	•	•	•	•	•								
	H1	1 120	★	1.30	–	6 100	•	•	•	•	•	•								
	G1	999		1.50	–	6 100			•	•	•	•								
	F1	849		1.70	–	6 100			•	•	•	•								
	E1	706	★	2.10	–	6 100			•	•	•	•								
	D1	695	★	2.10	–	6 100	•	•	•	•	•	•								
	C1	620		2.30	–	6 100			•	•	•	•								
	B1	527		2.80	–	6 100			•	•	•	•								
	A1	439	★	3.30	–	6 100			•	•	•	•								

★ Preferred transmission ratio

[1] Only possible with integrated motor.

[2] Twisting angle applies to reduced-backlash gearboxes.

In the case of gearboxes of size 28, only possible with integrated motor or input unit KQ and KQS.

Calculation of maximum output torque T_{2max} for gearboxes with input unit.

$T_{2max} = T_1 \times i_{tot}$, if $T_{2max} \leq T_{2N}$

If $T_{2max} \geq T_{2N}$ the max. output torque T_{2N} of the unit is the decisive factor.

© Siemens AG 2011

Selection and ordering data (continued)

Gearbox size	Ratio code	Transmission ratio	Output speed	Twisting angle [2]	Nominal torque	Permissible input torque T_1 [Nm] 2.5x the value is permissible for a brief period (e.g. motor starting torque)												
Max. gearbox torque	Order No.					3	3	5	10	20	26	61	98	198	198	291	356	580	1290
	15th and 16th position	i_{tot}	n_2 (50 Hz)	φ	T_{2N} (f_B=1)	Motor size												
Nm			rpm	arcmin	Nm	63	71	80	90	100	112	132	160	180	200	225	250	280	315
FD.128B 6 100	**V1**	447.96	3.2	7	6 100				•										
	U1	405.47 ★	3.6	7	6 100				•										
	T1	354.99	4.1	7	6 100				•	•									
	S1	320.24 ★	4.5	7	6 100				•	•	•								
	R1	293.22	4.9	7	6 100				•	•	•								
	Q1	260.84 ★	5.6	7	6 100				•	•	•	•							
	P1	238.39	6.1	7	6 100				•	•	•	•							
	N1	219.15 ★	6.6	7	6 100				•	•	•	•							
	M1	202.48	7.2	7	6 100				•	•	•	•							
	L1	187.88 ★	7.7	7	6 100				•	•	•	•	•						
	K1	175.01	8.3	7	6 100				•	•	•	•	•						
	J1	158.22 ★	9.2	7	6 100				•	•	•	•	•	•	•				
	H1	145.66	10.0	7	6 100				•	•	•	•	•	•	•				
	G1	131.01 ★	11.1	7	6 100				•	•	•	•	•	•	•				
	F1	120.87	12.0	7	6 100				•	•	•	•	•	•	•				
	E1	102.41	14.2	7	6 100				•	•	•	•	•	•	•				
	D1	89.25 ★	16.2	7	6 100				•	•	•	•	•	•	•				
	C1	75.93	19.1	7	6 100					•	•	•	•	•	•				
	B1	64.80 ★	22.0	7	6 100					•	•	•	•	•	•				
	A1	53.13 ★	27.0	7	6 100					•	•	•	•	•	•				
FZ.128B 2 703 ... 6 100	**A2**	56.42 ★	26	6	4 300						•	•							
	X1	52.29	28	6	4 600						•	•							
	W1	49.71 ★	29	6	4 900						•	•	•						
	V1	46.46	31	6	5 150						•	•	•						
	U1	40.99 ★	35	6	5 700						•	•	•	•	•				
	T1	38.66	38	6	6 000						•	•	•	•	•				
	S1	34.64 ★	42	6	6 100						•	•	•	•	•	• [1]			
	R1	31.98	45	7	6 100						•	•	•	•	•	• [1]			
	Q1	27.33	53	7	6 100						•	•	•	•	•	• [1]			
	P1	24.70 ★	59	7	6 100						•	•	•	•	•	• [1]			
	N1	23.80	61	7	6 100						•	•	•	•	•	• [1]			
	L1	20.58	70	7	6 100						•	•	•	•	•	• [1]			
	K1	17.95 ★	81	7	6 100						•	•	•	•	•	• [1]			
	J1	15.36 ★	94	7	5 847						•	•	•	•	•	• [1]			
	H1	13.76	105	7	5 640							•	•	•	•	• [1]			
	G1	11.65 ★	124	7	5 347							•	•	•	•	• [1]			
	F1	10.07	144	7	5 113								•	•	•	• [1]			
	E1	7.57 ★	192	7	4 565								•	•	•	• [1]			
	D1	6.91	210	9	3 592							•	•	•	•	• [1]			
	C1	5.85 ★	248	10	3 301							•	•	•	•	• [1]			
	B1	5.05	287	10	3 137								•	•	•	• [1]			
	A1	3.80 ★	382	10	2 708								•	•	•	• [1]			

★ Preferred transmission ratio

[1] Only possible with integrated motor.

[2] Twisting angle applies to reduced-backlash gearboxes.

In the case of gearboxes of size 28, only possible with integrated motor or input unit KQ and KQS.

Calculation of maximum output torque T_{2max} for gearboxes with input unit.

$T_{2max} = T_1 \times i_{tot}$, if $T_{2max} \leq T_{2N}$

If $T_{2max} \geq T_{2N}$ the max. output torque T_{2N} of the unit is the decisive factor.

© Siemens AG 2011

Transmission ratios and maximum torques

Selection and ordering data (continued)

Gearbox size	Ratio code	Transmission ratio		Output speed	Twisting angle [2]	Nominal torque	Permissible input torque T_1 [Nm] 2.5x the value is permissible for a brief period (e.g. motor starting torque)													
Max. gearbox torque	Order No.						3	3	5	10	20	26	61	98	198	198	291	356	580	1290
Nm	15th and 16th position	i_{tot}		n_2 (50 Hz) rpm	φ arcmin	T_{2N} (f_B=1) Nm	Motor size 63	71	80	90	100	112	132	160	180	200	225	250	280	315
FD.148B-D38	**N1**	70 576	★	0.02	–	9 000	•	•	•											
9 000	**M1**	62 660		0.02	–	9 000	•	•	•											
	L1	54 935	★	0.03	–	9 000	•	•	•	•										
	K1	49 161		0.03	–	9 000	•	•	•	•										
	J1	43 633	★	0.03	–	9 000	•	•	•	•										
	H1	38 236		0.04	–	9 000	•	•	•	•										
	G1	33 619	★	0.04	–	9 000	•	•	•	•										
	F1	30 373		0.05	–	9 000	•	•	•	•										
	E1	26 466	★	0.05	–	9 000	•	•	•	•										
	D1	23 770		0.06	–	9 000	•	•	•	•										
	C1	21 459	★	0.07	–	9 000	•	•	•	•										
	B1	19 456		0.07	–	9 000	•	•	•	•										
	A1	17 704	★	0.08	–	9 000	•	•	•	•										
FD.148B-Z38	**W1**	16 239	★	0.09	–	9 000	•	•	•											
9 000	**V1**	14 441		0.10	–	9 000	•	•	•											
	U1	12 527	★	0.12	–	9 000	•	•	•	•										
	T1	11 705		0.12	–	9 000	•	•	•	•										
	S1	10 295	★	0.14	–	9 000	•	•	•	•										
	R1	9 016		0.16	–	9 000	•	•	•	•	•									
	Q1	7 975	★	0.18	–	9 000	•	•	•	•	•									
	P1	7 227		0.20	–	9 000	•	•	•	•	•									
	N1	6 380	★	0.23	–	9 000	•	•	•	•	•									
	M1	5 755		0.25	–	9 000	•	•	•	•	•									
	L1	5 220	★	0.28	–	9 000	•	•	•	•	•									
	K1	4 756		0.30	–	9 000	•	•	•	•	•									
	J1	4 350	★	0.33	–	9 000	•	•	•	•	•									
	H1	3 889		0.37	–	9 000	•	•	•	•	•									
	G1	3 571	★	0.41	–	9 000	•	•	•	•	•									
	F1	3 219		0.45	–	9 000	•	•	•	•	•									
	E1	2 768	★	0.52	–	9 000	•	•	•	•	•									
	D1	2 468		0.59	–	9 000	•	•	•	•	•									
	C1	2 266	★	0.64	–	9 000	•	•	•	•	•									
	B1	2 043		0.71	–	9 000	•	•	•	•	•									
	A1	1 757	★	0.83	–	9 000	•	•	•	•	•									
FD.148B-Z48	**K1**	1 634		0.89	–	9 000	•	•	•	•	•	•								
9 000	**J1**	1 489	★	0.97	–	9 000	•	•	•	•	•	•								
	H1	1 364		1.10	–	9 000	•	•	•	•	•	•								
	G1	1 217	★	1.20	–	9 000	•	•	•	•	•	•								
	F1	1 086		1.30	–	9 000			•	•	•	•								
	E1	922		1.60	–	9 000			•	•	•	•								
	D1	768	★	1.90	–	9 000	•	•	•	•	•	•								
	C1	674		2.20	–	9 000			•	•	•	•								
	B1	573		2.50	–	9 000			•	•	•	•								
	A1	477	★	3.00	–	9 000			•	•	•	•								

★ Preferred transmission ratio

[1] Only possible with integrated motor.

[2] Twisting angle applies to reduced-backlash gearboxes.

In the case of gearboxes of size 28, only possible with integrated motor or input unit KQ and KQS.

Calculation of maximum output torque T_{2max} for gearboxes with input unit.

$T_{2max} = T_1 \times i_{tot}$, if $T_{2max} \leq T_{2N}$

If $T_{2max} \geq T_{2N}$ the max. output torque T_{2N} of the unit is the decisive factor.

© Siemens AG 2011

Selection and ordering data (continued)

Gearbox size	Ratio code	Transmission ratio	Output speed	Twisting angle [2]	Nominal torque	Permissible input torque T_1 [Nm] 2.5x the value is permissible for a brief period (e.g. motor starting torque)													
Max. gearbox torque	Order No.					3	3	5	10	20	26	61	98	198	198	291	356	580	1290
	15th and 16th position	i_{tot}	n_2 (50 Hz)	φ	T_{2N} (f_B=1)	Motor size													
Nm			rpm	arcmin	Nm	63	71	80	90	100	112	132	160	180	200	225	250	280	315
FD.148B 9 000	**U1**	449.21 ★	3.2	6	9 000					•	•								
	T1	411.98	3.5	6	9 000					•	•								
	S1	368.06 ★	3.9	6	9 000					•	•	•							
	R1	337.07	4.3	6	9 000					•	•	•							
	Q1	310.51 ★	4.7	6	9 000					•	•	•							
	P1	287.49	5.0	6	9 000					•	•	•							
	N1	267.35 ★	5.4	6	9 000					•	•	•	•						
	M1	249.58	5.8	6	9 000					•	•	•	•						
	L1	223.31 ★	6.5	6	9 000					•	•	•	•	•	•				
	K1	206.93	7.0	6	9 000					•	•	•	•	•	•				
	J1	189.69 ★	7.6	6	9 000					•	•	•	•	•	•	•			
	H1	173.89	8.3	6	9 000					•	•	•	•	•	•	•			
	G1	148.18	9.8	6	9 000					•	•	•	•	•	•	•			
	F1	130.76 ★	11.1	6	9 000					•	•	•	•	•	•	•			
	E1	111.29	13.0	6	9 000					•	•	•	•	•	•	•			
	D1	96.43 ★	15.0	6	9 000					•	•	•	•	•	•	•			
	C1	81.15 ★	17.9	6	9 000					•	•	•	•	•	•	•			
	B1	73.22	19.8	6	9 000							•	•	•	•	•			
	A1	62.93 ★	23.0	6	9 000							•	•	•	•	•			
FZ.148B 5 124 ... 9 000	**V1**	68.23	21	5	5 600							•							
	U1	64.37 ★	23	5	6 500							•	•						
	T1	60.21	24	5	7 000							•	•						
	S1	53.53 ★	27	6	8 000							•	•	•	•				
	R1	50.54	29	6	8 000							•	•	•	•				
	Q1	45.37 ★	32	6	8 700							•	•	•	•	•			
	P1	41.64	35	6	9 000							•	•	•	•	•			
	N1	35.93	40	6	9 000							•	•	•	•	•	• [1]		
	M1	31.43	46	6	9 000							•	•	•	•	•	• [1]		
	L1	27.34	53	6	9 000							•	•	•	•	•	• [1]		
	K1	23.98 ★	60	6	9 000							•	•	•	•	•	• [1]		
	J1	20.28 ★	71	6	9 000							•	•	•	•	•	• [1]		
	H1	18.40	79	6	9 000							•	•	•	•	•	• [1]		
	G1	16.04 ★	90	6	9 000							•	•	•	•	•	• [1]		
	F1	13.62	106	6	8 519								•	•	•	•	• [1]		
	E1	10.43 ★	139	6	7 822								•	•	•	•	• [1]		
	D1	9.51	152	8	6 581							•	•	•	•	•	• [1]		
	C1	8.29 ★	175	9	6 204							•	•	•	•	•	• [1]		
	B1	7.04	206	9	5 820								•	•	•	•	• [1]		
	A1	5.39 ★	269	9	5 124								•	•	•	•	• [1]		

★ Preferred transmission ratio

[1] Only possible with integrated motor.

[2] Twisting angle applies to reduced-backlash gearboxes.

In the case of gearboxes of size 28, only possible with integrated motor or input unit KQ and KQS.

Calculation of maximum output torque T_{2max} for gearboxes with input unit.

$T_{2max} = T_1 \times i_{tot}$, if $T_{2max} \leq T_{2N}$

If $T_{2max} \geq T_{2N}$ the max. output torque T_{2N} of the unit is the decisive factor.

© Siemens AG 2011

Transmission ratios and maximum torques

Selection and ordering data (continued)

Gearbox size	Ratio code	Transmission ratio		Output speed	Twisting angle [2]	Nominal torque	Permissible input torque T_1 [Nm] 2.5x the value is permissible for a brief period (e.g. motor starting torque)													
Max. gearbox torque	Order No.						3	3	5	10	20	26	61	98	198	198	291	356	580	1290
Nm	15th and 16th position	i_{tot}		n_2 (50 Hz) rpm	φ arcmin	T_{2N} (f_B=1) Nm	Motor size 63	71	80	90	100	112	132	160	180	200	225	250	280	315
FD.168B-D48 14 000	**N1**	65 160	★	0.02	–	14 000	•	•	•											
	M1	57 946		0.03	–	14 000	•	•	•											
	L1	50 267	★	0.03	–	14 000	•	•	•	•										
	K1	46 966		0.03	–	14 000	•	•	•	•										
	J1	41 307	★	0.04	–	14 000	•	•	•	•										
	H1	36 177		0.04	–	14 000	•	•	•	•	•									
	G1	31 998	★	0.05	–	14 000	•	•	•	•	•									
	F1	29 000		0.05	–	14 000	•	•	•	•	•									
	E1	25 599	★	0.06	–	14 000	•	•	•	•	•									
	D1	23 093		0.06	–	14 000	•	•	•	•	•									
	C1	20 944	★	0.07	–	14 000	•	•	•	•	•									
	B1	19 083		0.08	–	14 000	•	•	•	•	•									
	A1	17 454	★	0.08	–	14 000	•	•	•	•	•									
FD.168B-Z48 14 000	**A2**	16 007		0.09	–	14 000	•	•	•											
	X1	14 165	★	0.10	–	14 000	•	•	•	•										
	W1	12 878		0.11	–	14 000	•	•	•	•										
	V1	11 568	★	0.13	–	14 000	•	•	•	•										
	U1	9 916		0.15	–	14 000	•	•	•	•	•									
	T1	8 971	★	0.16	–	14 000	•	•	•	•	•	•								
	S1	8 281		0.18	–	14 000	•	•	•	•	•	•								
	R1	7 201	★	0.20	–	14 000	•	•	•	•	•	•								
	Q1	6 538		0.22	–	14 000	•	•	•	•	•	•								
	P1	5 970	★	0.24	–	14 000	•	•	•	•	•	•								
	N1	5 477		0.26	–	14 000	•	•	•	•	•	•								
	M1	5 046	★	0.29	–	14 000	•	•	•	•	•	•								
	L1	4 583		0.32	–	14 000	•	•	•	•	•	•								
	K1	4 175	★	0.35	–	14 000	•	•	•	•	•	•								
	J1	3 825		0.38	–	14 000	•	•	•	•	•	•								
	H1	3 413	★	0.42	–	14 000	•	•	•	•	•	•								
	G1	3 046		0.48	–	14 000			•	•	•	•								
	F1	2 587		0.56	–	14 000			•	•	•	•								
	E1	2 153	★	0.67	–	14 000			•	•	•	•								
	D1	2 119	★	0.68	–	14 000	•	•	•	•	•	•								
	C1	1 891		0.77	–	14 000			•	•	•	•								
	B1	1 606		0.90	–	14 000			•	•	•	•								
	A1	1 337	★	1.10	–	14 000			•	•	•	•								
FD.168B-Z68 14 000	**H1**	1 298		1.1	–	14 000			•	•	•	•	•							
	G1	1 108	★	1.3	–	14 000			•	•	•	•	•							
	F1	923		1.6	–	14 000					•	•	•							
	E1	765	★	1.9	–	14 000					•	•	•							
	D1	675		2.1	–	14 000			•	•	•	•	•							
	C1	576	★	2.5	–	14 000			•	•	•	•	•							
	B1	480		3.0	–	14 000					•	•	•							
	A1	398	★	3.6	–	14 000					•	•	•							

★ Preferred transmission ratio

[1] Only possible with integrated motor.

[2] Twisting angle applies to reduced-backlash gearboxes.

In the case of gearboxes of size 28, only possible with integrated motor or input unit KQ and KQS.

Calculation of maximum output torque T_{2max} for gearboxes with input unit.

$T_{2max} = T_1 \times i_{tot}$, if $T_{2max} \leq T_{2N}$

If $T_{2max} \geq T_{2N}$ the max. output torque T_{2N} of the unit is the decisive factor.

© Siemens AG 2011

Selection and ordering data (continued)

Gearbox size	Ratio code	Transmission ratio	Output speed	Twisting angle [2]	Nominal torque	Permissible input torque T_1 [Nm] 2.5x the value is permissible for a brief period (e.g. motor starting torque)													
Max. gearbox torque	Order No.					3	3	5	10	20	26	61	98	198	198	291	356	580	1290
Nm	15th and 16th position	i_{tot}	n_2 (50 Hz) rpm	φ arcmin	T_{2N} (f_B=1) Nm	Motor size 63	71	80	90	100	112	132	160	180	200	225	250	280	315
FD.168B 14 000	**V1**	369.26 ★	3.9	6	14 000							•							
	U1	338.49	4.3	6	14 000							•							
	T1	312.12 ★	4.6	6	14 000							•							
	S1	289.26	5.0	6	14 000							•							
	R1	275.03 ★	5.3	6	14 000							•	•						
	Q1	257.04	5.6	6	14 000							•	•						
	P1	226.74 ★	6.4	6	14 000							•	•	•	•				
	N1	213.87	6.8	6	14 000							•	•	•	•				
	M1	191.63 ★	7.6	6	14 000							•	•	•	•	•			
	L1	176.94	8.2	6	14 000							•	•	•	•	•			
	K1	151.18	9.6	6	14 000							•	•	•	•	•			
	J1	136.63 ★	10.6	6	14 000							•	•	•	•	•			
	H1	131.64	11.0	6	14 000							•	•	•	•	•	•		
	G1	113.86	12.7	6	14 000							•	•	•	•	•	•		
	F1	99.31 ★	14.6	6	14 000							•	•	•	•	•	•		
	E1	84.99 ★	17.1	6	14 000							•	•	•	•	•	•		
	D1	76.12	19.0	6	14 000							•	•	•	•	•	•		
	C1	64.47 ★	22.0	6	14 000							•	•	•	•	•	•		
	B1	55.68	26.0	6	14 000								•	•	•	•	•		
	A1	41.85 ★	35.0	6	14 000								•	•	•	•	•		
FZ.168B 8 683 ... 14 000	**R1**	53.48	27	5	9 000							•	•	•	•				
	Q1	48.29	30	6	10 500							•	•	•	•	•			
	P1	45.25	32	6	11 500							•	•	•	•	•	•		
	N1	38.87 ★	37	6	13 000							•	•	•	•	•	•		
	M1	33.58	43	6	13 000							•	•	•	•	•	•	•	
	L1	29.64	49	6	14 000							•	•	•	•	•	•	•	
	K1	26.68 ★	54	6	14 000							•	•	•	•	•	•	•	
	J1	22.14 ★	65	6	14 000							•	•	•	•	•	•	•	
	H1	20.19	72	6	14 000							•	•	•	•	•	•	•	
	G1	17.71 ★	82	6	14 000							•	•	•	•	•	•	•	
	F1	15.22	95	6	14 000								•	•	•	•	•	•	
	E1	11.86 ★	122	6	13 076								•	•	•	•	•	•	
	D1	9.42 ★	154	6	12 147									•	•	•	•	•	
	C1	8.54	170	7	11 257								•	•	•	•	•	•	
	B1	6.65 ★	218	8	10 011								•	•	•	•	•	•	
	A1	5.28 ★	275	8	8 682									•	•	•	•	•	

★ Preferred transmission ratio

[1] Only possible with integrated motor.

[2] Twisting angle applies to reduced-backlash gearboxes.

In the case of gearboxes of size 28, only possible with integrated motor or input unit KQ and KQS.

Calculation of maximum output torque T_{2max} for gearboxes with input unit.

$T_{2max} = T_1 \times i_{tot}$, if $T_{2max} \leq T_{2N}$

If $T_{2max} \geq T_{2N}$ the max. output torque T_{2N} of the unit is the decisive factor.

© Siemens AG 2011

Transmission ratios and maximum torques

Selection and ordering data (continued)

Gearbox size	Ratio code	Transmission ratio		Output speed	Twisting angle [2]	Nominal torque	Permissible input torque T_1 [Nm] 2.5x the value is permissible for a brief period (e.g. motor starting torque)												
Max. gearbox torque	Order No.						3	3	5	10	20	26	61	98	198	198	291	356	580	1290
	15th and 16th position	i_{tot}		n_2 (50 Hz)	φ	T_{2N} (f_B=1)	Motor size													
Nm				rpm	arcmin	Nm	63	71	80	90	100	112	132	160	180	200	225	250	280	315
FD.188B-D48 20 000	**N1**	71 388	★	0.02	–	20 000	•	•	•											
	M1	63 484		0.02	–	20 000	•	•	•											
	L1	55 070	★	0.03	–	20 000	•	•	•	•										
	K1	51 455		0.03	–	20 000	•	•	•	•										
	J1	45 255	★	0.03	–	20 000	•	•	•	•										
	H1	39 634		0.04	–	20 000	•	•	•	•	•									
	G1	35 056	★	0.04	–	20 000	•	•	•	•	•									
	F1	31 771		0.05	–	20 000	•	•	•	•	•									
	E1	28 045	★	0.05	–	20 000	•	•	•	•	•									
	D1	25 299		0.06	–	20 000	•	•	•	•	•									
	C1	22 946	★	0.06	–	20 000	•	•	•	•	•									
	B1	20 906		0.07	–	20 000	•	•	•	•	•									
	A1	19 122	★	0.08	–	20 000	•	•	•	•	•									
FD.188B-Z48 20 000	**A2**	17 537		0.08	–	20 000	•	•	•											
	X1	15 519	★	0.09	–	20 000	•	•	•	•										
	W1	14 108		0.10	–	20 000	•	•	•	•										
	V1	12 674	★	0.11	–	20 000	•	•	•	•										
	U1	10 863		0.13	–	20 000	•	•	•	•	•									
	T1	9 829	★	0.15	–	20 000	•	•	•	•	•	•								
	S1	9 073		0.16	–	20 000	•	•	•	•	•	•								
	R1	7 889	★	0.18	–	20 000	•	•	•	•	•	•								
	Q1	7 163		0.20	–	20 000	•	•	•	•	•	•								
	P1	6 540	★	0.22	–	20 000	•	•	•	•	•	•								
	N1	6 001		0.24	–	20 000	•	•	•	•	•	•								
	M1	5 529	★	0.26	–	20 000	•	•	•	•	•	•								
	L1	5 021		0.29	–	20 000	•	•	•	•	•	•								
	K1	4 574	★	0.32	–	20 000	•	•	•	•	•	•								
	J1	4 190		0.35	–	20 000	•	•	•	•	•	•								
	H1	3 739	★	0.39	–	20 000	•	•	•	•	•	•								
	G1	3 337		0.43	–	20 000			•	•	•	•								
	F1	2 834		0.51	–	20 000			•	•	•	•								
	E1	2 359	★	0.61	–	20 000			•	•	•	•								
	D1	2 322	★	0.62	–	20 000	•	•	•	•	•	•								
	C1	2 072		0.70	–	20 000			•	•	•	•								
	B1	1 760		0.82	–	20 000			•	•	•	•								
	A1	1 465	★	0.99	–	20 000			•	•	•	•								
FD.188B-Z68 20 000	**H1**	1 449		1.0	–	20 000			•	•	•	•	•							
	G1	1 236	★	1.2	–	20 000			•	•	•	•	•							
	F1	1 030		1.4	–	20 000					•	•	•							
	E1	854	★	1.7	–	20 000					•	•	•							
	D1	754		1.9	–	20 000			•	•	•	•	•							
	C1	643	★	2.3	–	20 000			•	•	•	•	•							
	B1	536		2.7	–	20 000					•	•	•							
	A1	444	★	3.3	–	20 000					•	•	•							

★ Preferred transmission ratio

[1] Only possible with integrated motor.

[2] Twisting angle applies to reduced-backlash gearboxes.

In the case of gearboxes of size 28, only possible with integrated motor or input unit KQ and KQS.

Calculation of maximum output torque T_{2max} for gearboxes with input unit.

$T_{2max} = T_1 \times i_{tot}$, if $T_{2max} \leq T_{2N}$

If $T_{2max} \geq T_{2N}$ the max. output torque T_{2N} of the unit is the decisive factor.

© Siemens AG 2011

Selection and ordering data (continued)

Gearbox size	Ratio code	Transmission ratio	Output speed	Twisting angle [2]	Nominal torque	Permissible input torque T_1 [Nm] 2.5x the value is permissible for a brief period (e.g. motor starting torque)													
Max. gearbox torque	Order No.					3	3	5	10	20	26	61	98	198	198	291	356	580	1290
Nm	15th and 16th position	i_{tot}	n_2 (50 Hz) rpm	φ arcmin	T_{2N} (f_B=1) Nm	Motor size 63	71	80	90	100	112	132	160	180	200	225	250	280	315
FD.188B 20 000	**U1**	403.86 ★	3.6	6	20 000							•							
	T1	370.52	3.9	6	20 000							•							
	S1	341.94 ★	4.2	6	20 000							•							
	R1	317.18	4.6	6	20 000							•							
	Q1	299.20 ★	4.8	6	20 000							•	•						
	P1	279.86	5.2	6	20 000							•	•						
	N1	248.85 ★	5.8	6	20 000							•	•	•	•				
	M1	234.93	6.2	6	20 000							•	•	•	•				
	L1	210.89 ★	6.9	6	20 000							•	•	•	•	•			
	K1	193.56	7.5	6	20 000							•	•	•	•	•			
	J1	167.03	8.7	6	20 000							•	•	•	•	•	•		
	H1	146.11	9.9	6	20 000							•	•	•	•	•	•		
	G1	127.07	11.4	6	20 000							•	•	•	•	•	•	•	
	F1	111.49 ★	13.0	6	20 000							•	•	•	•	•	•	•	
	E1	94.28 ★	15.4	6	20 000							•	•	•	•	•	•	•	
	D1	85.54	17.0	6	20 000							•	•	•	•	•	•	•	
	C1	74.58 ★	19.4	6	20 000							•	•	•	•	•	•	•	
	B1	63.32	23.0	6	20 000								•	•	•	•	•	•	
	A1	48.46 ★	30.0	6	20 000								•	•	•	•	•	•	
FZ.188B 14 190 ... 20 000	**P1**	52.63	28	5	16 580								•	•	•	•			
	N1	48.47	30	5	16 870								•	•	•	•	•		
	M1	42.07 ★	34	5	17 500								•	•	•	•	•		
	L1	37.08	39	5	17 510								•	•	•	•	•	•	
	K1	32.54	45	5	18 550								•	•	•	•	•	•	
	J1	29.33 ★	49	5	20 000								•	•	•	•	•	•	
	H1	24.90 ★	58	5	20 000								•	•	•	•	•	•	
	G1	23.13	63	5	20 000								•	•	•	•	•	•	
	F1	19.87 ★	73	5	19 790								•	•	•	•	•	•	
	E1	16.95	86	5	18 870								•	•	•	•	•	•	•
	D1	13.35 ★	109	6	17 560								•	•	•	•	•	•	•
	C1	10.74 ★	135	6	16 070									•	•	•	•	•	•
	B1	9.34	155	6	14 990											•	•	•	•
	A1	8.34	174	6	14 190												•	•	•

★ Preferred transmission ratio

[1] Only possible with integrated motor.

[2] Twisting angle applies to reduced-backlash gearboxes.

In the case of gearboxes of size 28, only possible with integrated motor or input unit KQ and KQS.

Calculation of maximum output torque T_{2max} for gearboxes with input unit.

$T_{2max} = T_1 \times i_{tot}$, if $T_{2max} \leq T_{2N}$

If $T_{2max} \geq T_{2N}$ the max. output torque T_{2N} of the unit is the decisive factor.

© Siemens AG 2011

Transmission ratios and maximum torques

Selection and ordering data (continued)

Gearbox size	Ratio code	Transmission ratio	Output speed	Twisting angle [2]	Nominal torque	Permissible input torque T_1 [Nm] 2.5x the value is permissible for a brief period (e.g. motor starting torque)													
Max. gearbox torque	Order No.					3	3	5	10	20	26	61	98	198	198	291	356	580	1290
	15th and 16th position	i_{tot}	n_2 (50 Hz)	φ	T_{2N} (f_B=1)	Motor size													
Nm			rpm	arcmin	Nm	63	71	80	90	100	112	132	160	180	200	225	250	280	315
FD.208-D68 34 000	**V1**	61 412	0.02	–	34 000		•	•											
	U1	54 347	0.03	–	34 000		•	•	•										
	T1	49 406	0.03	–	34 000		•	•	•										
	S1	44 383	0.03	–	34 000		•	•	•										
	R1	38 043	0.04	–	34 000		•	•	•	•									
	Q1	34 420	0.04	–	34 000		•	•	•	•									
	P1	31 772	0.04	–	34 000		•	•	•	•									
	N1	27 626	0.05	–	34 000		•	•	•	•									
	M1	25 083	0.06	–	34 000		•	•	•	•									
	L1	22 903	0.06	–	34 000		•	•	•	•									
	K1	21 014	0.07	–	34 000		•	•	•	•									
	J1	19 361	0.07	–	34 000		•	•	•	•									
	H1	17 583	0.08	–	34 000		•	•	•	•									
	G1	16 018	0.09	–	34 000		•	•	•	•									
	F1	14 674	0.10	–	34 000		•	•	•	•									
	E1	13 093	0.11	–	34 000		•	•	•	•									
	D1	11 685	0.12	–	34 000			•	•	•									
	C1	9 924	0.14	–	34 000			•	•	•									
FD.208-Z68 34 000	**X1**	8 251	0.17	–	34 000			•	•	•	•								
	W1	7 536	0.19	–	34 000			•	•	•	•								
	V1	6 688	0.21	–	34 000			•	•	•	•	•							
	U1	6 173	0.23	–	34 000			•	•	•	•	•							
	T1	5 584	0.25	–	34 000			•	•	•	•	•							
	S1	5 142	0.27	–	34 000			•	•	•	•	•							
	R1	4 755	0.29	–	34 000			•	•	•	•	•	•						
	Q1	4 414	0.32	–	34 000			•	•	•	•	•	•						
	P1	3 895	0.36	–	34 000			•	•	•	•	•	•						
	N1	3 596	0.39	–	34 000			•	•	•	•	•	•						
	M1	3 222	0.43	–	34 000			•	•	•	•	•	•						
	L1	2 970	0.47	–	34 000				•	•	•	•	•						
	K1	2 492	0.56	–	34 000				•	•	•	•	•						
	J1	2 126	0.66	–	34 000				•	•	•	•	•						
	H1	1 772	0.79	–	34 000					•	•	•	•						
	G1	1 469	0.95	–	34 000					•	•	•	•						
	F1	1 296	1.08	–	34 000				•	•	•	•	•						
	E1	1 106	1.27	–	34 000				•	•	•	•	•						
	D1	921	1.52	–	34 000					•	•	•	•						
	C1	764	1.83	–	34 000					•	•	•	•						
FD.208-Z88 34 000	**J1**	694	2.02	–	34 000					•	•	•	•	•	•				
	H1	636	2.20	–	34 000					•	•	•	•	•	•				
	G1	543	2.58	–	34 000					•	•	•	•	•	•				
	F1	445	3.15	–	34 000					•	•	•	•	•	•				
	E1	406	3.45	–	34 000					•	•	•	•	•	•				
	D1	347	4.04	–	34 000					•	•	•	•	•	•				
	C1	284	4.92	–	34 000					•	•	•	•	•	•				

★ Preferred transmission ratio

[1] Only possible with integrated motor.

[2] Twisting angle applies to reduced-backlash gearboxes.

In the case of gearboxes of size 28, only possible with integrated motor or input unit KQ and KQS.

Calculation of maximum output torque T_{2max} for gearboxes with input unit.

$T_{2max} = T_1 \times i_{tot}$, if $T_{2max} \leq T_{2N}$

If $T_{2max} \geq T_{2N}$ the max. output torque T_{2N} of the unit is the decisive factor.

© Siemens AG 2011

Selection and ordering data (continued)

Gearbox size	Ratio code	Transmission ratio	Output speed	Twisting angle [2]	Nominal torque	Permissible input torque T_1 [Nm] 2.5x the value is permissible for a brief period (e.g. motor starting torque)												
Max. gearbox torque	Order No.					3	3	5	10	20	26	61	98	198	198	291	356	580	1290
	15th and 16th position	i_{tot}	n_2 (50 Hz)	φ	T_{2N} (f_B=1)	**Motor size**												
Nm			rpm	arcmin	Nm	63	71	80	90	100	112	132	160	180	200	225	250	280	315
FD.208	**T1**	242.01	6.1	5	34 000							•	•	•	•				
29 901 ... 34 000	**S1**	218.54	6.8	5	34 000							•	•	•	•	•			
	R1	204.81	7.2	5	34 000							•	•	•	•	•	•	•	
	Q1	175.92	8.4	5	34 000							•	•	•	•	•	•	•	
	P1	151.99	9.7	5	34 000							•	•	•	•	•	•	•	
	N1	134.16	11	5	34 000							•	•	•	•	•	•	•	
	M1	120.77	12	5	34 000							•	•	•	•	•	•	•	
	L1	100.21	15	5	34 000							•	•	•	•	•	•	•	
	K1	91.38	16	5	34 000							•	•	•	•	•	•	•	
	J1	80.17	18	5	34 000							•	•	•	•	•	•	•	
	H1	68.90	21	5	34 000								•	•	•	•	•	•	•
	G1	53.66	28	5	34 000								•	•	•	•	•	•	•
	F1	42.63	35	5	34 000									•	•	•	•	•	•
	E1	38.84	38	5	34 000								•	•	•	•	•	•	•
	D1	30.25	49	6	32 038								•	•	•	•	•	•	•
	C1	24.03	62	6	29 901									•	•	•	•	•	•
FZ.208	**H1**	20.06	74	5	32 681								•	•	•	•	•	•	•
25 469 ... 32 681	**G1**	16.02	92	5	30 487								•	•	•	•	•	•	•
	F1	13.09	113	5	28 634									•	•	•	•	•	•
	E1	11.51	129	5	27 499											•	•	•	•
	D1	10.57	140	5	26 785												•	•	•
	C1	9.01	164	5	25 469													•	•

★ Preferred transmission ratio

[1] Only possible with integrated motor.

[2] Twisting angle applies to reduced-backlash gearboxes.

In the case of gearboxes of size 28, only possible with integrated motor or input unit KQ and KQS.

Calculation of maximum output torque T_{2max} for gearboxes with input unit.

$T_{2max} = T_1 \times i_{tot}$, if $T_{2max} \leq T_{2N}$

If $T_{2max} \geq T_{2N}$ the max. output torque T_{2N} of the unit is the decisive factor.

© Siemens AG 2011

Mounting types

Selection and ordering data

Mounting type	Order No. 14th position	Code in type designation 3rd position for solid shaft, 4th position for hollow shaft	Representation
Foot-mounted design	**A**	–	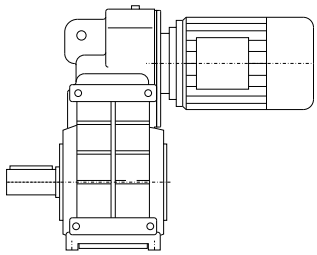
Housing flange (C-type)	**H**	Z	
Design with torque arm	**D**	D	
Flange-mounted design (A-type)	**F**	F	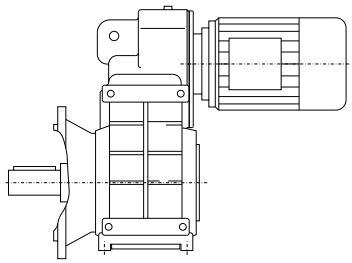
Mixer flange	**M**	M	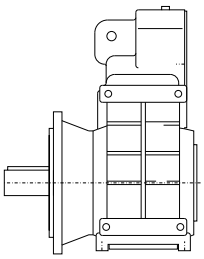
Extruder flange	**E**	E	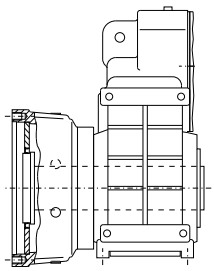

© Siemens AG 2011

Selection and ordering data (continued)

Parallel shaft gearbox with torque arm

The rubber buffers (supplied loose) are used to flexibly support the gearbox on the housing plate provided. The rubber buffers are suitable for all mounting positions and can withstand temperatures of between –40 °C and +80 °C.

The rubber buffer must be stretched to the dimesnion l1 during installation.

Material: Natural rubber, hardness 70 ± 5, Shore A.

Order No.: **D** in **14th position**

The shafts, mounting positions, and dimensions correspond to the design featuring a housing flange.

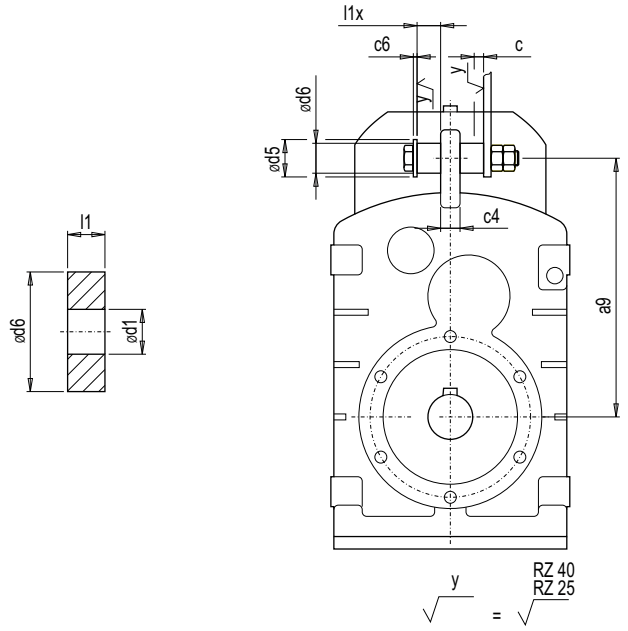

Gearbox type	a9	l1	l1x	d6	d1	d5	c6 $_{min}$	c4	c*)
F.28	140	15	14.0	30	10.5 + 0.5	40	2.0	10	1.8
F.38B	140	15	13.1	30	10.5 + 0.5	40	2.5	12	3.8
F.48B	185	20	18.2	40	12.5 + 0.5	50	3.0	12	3.7
F.68B	218	20	17.0	40	12.5 + 0.5	50	3.0	16	5.6
F.88B	278	30	27.2	60	21.0 + 0.5	75	4.0	20	5.0
F.108B	346	30	26.0	60	21.0 + 0.5	75	4.0	26	7.3
F.128B	395	40	35.8	80	25.0 + 0.5	100	6.0	30	8.0
F.148B	485	40	34.8	80	25.0 + 0.5	100	6.0	36	9.4
F.168B	550	50	46.2	120	31.0 + 0.5	140	8.0	50	6.2
F.188B	620	50	45.1	120	31.0 + 0.5	140	8.0	50	8.3

*) Spring compression at max. torque

© Siemens AG 2011

Mounting types

Selection and ordering data (continued)

Parallel shaft gearbox with mixer flange, sizes 88 to 168

Heavy-duty design

The mixer flange is fitted with a heavy-duty output bearing with a sizable bearing span for absorbing large radial and axial forces.

The optimized design ensures that no axial forces are transferred to the gearbox housing.

Bearing life can be calculated on request or using the MOTOX Configurator calculation program.

Parallel shaft gearbox with extruder flange, sizes 68 to 168

Gearboxes with an extruder flange are ideal for use in the extrusion industry, particularly in the low to medium performance range.

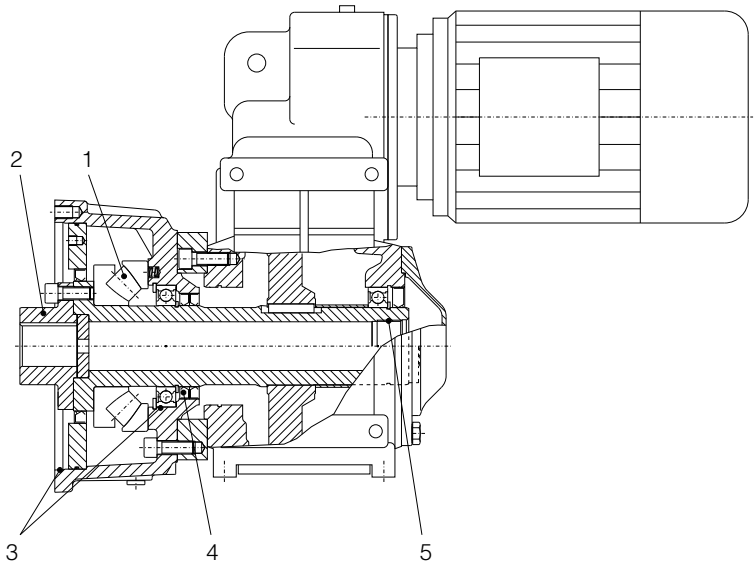

1. Large axial spherical roller bearing

294 series spherical roller bearing for heavy axial loads.

2. Simple, low-cost design

Flange hub supplied by customer, no grinding processes. Standard shaft-hub connection with feather key in acc. with DIN 6885/1.

3. Good radial eccentricity

Radial bearing hole and center hole created in one clamping operation and direction.

4. Optimum lubrication

Extruder oil chamber separate from gearbox oil chamber.

5. Standard connection

Metric thread for supporting the extruder worm (worm pulled out from rear).

Area of application

Parallel shaft gearbox		F.AE 68B	F.AE 88B	F.AE 108B	F.AE 128B	F.AE 148B	F.AE 168B
Max. power	[kW]	9.2	15	30	45	55	90
Transmission ratio min./max.	[2-stage]	3.97 / 61.17	4.77 / 64.58	5.60 / 64.21	3.8 / 56.42	5.39 / 68.23	5.28 / 53.48
Max. torque	[Nm]	1 000	1 900	3 400	6 100	9 000	14 000
Max. axial forces	[kN]	65	105	180	260	400	580
Spherical roller bearing	[.]	29414E	29417E	29420E	29424E	29426E	29432E

© Siemens AG 2011

Selection and ordering data

Shaft design	Order No. 8th position	Order No. suffix	Shaft dimensions					
Parallel shaft gearbox FZ, 2-stage and FD, 3-stage, foot-mounted design								
Size			**F.28**	**F.38B**	**F.48B**	**F.68B**	**F.88B**	
Hollow shaft	**5**		H25 x 104 *)	H30 x 120 *)	H35 x 150 *)	H40 x 180 *)	H50 x 210 *)	
	6				H40 x 150	H45 x 180	H60 x 210	
Hollow shaft with shrink disk	**9**	**H3A**	H25 x 126 *)	H30 x 146 *)	H40 x 177	H50 x 209	H60 x 241	
	9	**H3B**		H30/31 x 146	H40/41 x 177	H50/51 x 209	H60/61 x 241	
	9	**H3C**			H35 x 177 *)	H40 x 209 *)	H50 x 241 *)	
	9	**H3D**				H40/42 x 209	H50/52 x 241	
Hollow shaft with splined shaft	**9**	**H4A**	N25x1.25x30x 18x9H x 104	N35x1.25x30x 26x9H x 120	N40x2x30x18x 9H x 150	N50x2x30x24x 9H x 180	N60x2x30x28x 9H x 210	
Size			**F.108B**	**F.128B**	**F.148B**	**F.168B**	**F.188B**	**F.208**
Hollow shaft	**5**		H60 x 240 *)	H70 x 300 *)	H80 x 350	H100 x 410 *)	H120 x 500 *)	
	6		H70 x 240	H80 x 300	H90 x 350 *)	H110 x 410		
Hollow shaft with shrink disk	**9**	**H3A**	H70 x 280	H80 x 345	H95 x 404 *)	H105 x 483 *)	H125 x 580 *)	
	9	**H3B**	H70/71 x 280	H80/81 x 345	H95/96 x 404	H105/106 x483		H145/146 x 728
	9	**H3C**	H65 x 280 *)	H75 x 345 *)				
	9	**H3D**	H65/66 x 280	H75/76 x 345				
Hollow shaft with splined shaft	**9**	**H4A**	N70x2x30x34x 9H x240	N80x3x30x25x 9H x300	N90x3x30x28x 9H x350	N110x3x30x35x 9Hx410	N130x5x30x24x 9H x 500	
Parallel shaft gearbox FZ.Z, 2-stage and FD.Z, 3-stage with housing flange								
Size			**F..Z28**	**F..Z38B**	**F..Z48B**	**F..Z68B**	**F..Z88B**	
Solid shaft with feather key	**1**		V25 x 50 *)	V25 x 50 *)	V30 x 60 *)	V40 x 80 *)	V50 x 100 *)	
	3			V35 x 70	V40 x 80	V50 x 100	V70 x 140	
	4					V35 x 70		
Hollow shaft	**5**		H25 x 104 *)	H30 x 120 *)	H35 x 150 *)	H40 x 180 *)	H50 x 210 *)	
	6				H40 x 150	H45 x 180	H60 x 210	
Hollow shaft with shrink disk	**9**	**H3A**	H25 x 126 *)	H30 x 146 *)	H40 x 177	H50 x 209	H60 x 241	
	9	**H3B**		H30/31 x 146	H40/41 x 177	H50/51 x 209	H60/61 x 241	
	9	**H3C**			H35 x 177 *)	H40 x 209 *)	H50 x 241 *)	
	9	**H3D**				H40/42 x 209	H50/52 x 241	
Hollow shaft with splined shaft	**9**	**H4A**	N25x1.25x30x 18x9H x 104	N35x1.25x30x 26x9H x 120	N40x2x30x18x 9H x 150	N50x2x30x24x 9H x 180	N60x2x30x28x 9H x 210	
Size			**F..Z108B**	**F..Z128B**	**F..Z148B**	**F..Z168B**	**F..Z188B**	**F.208**
Solid shaft with feather key	**1**		V60 x 120 *)	V70 x 140 *)	V90 x 170 *)	V110 x 210 *)	V120 x 210 *)	V160 x 250 *)
	3		V80 x 170	V90 x 170	V100 x 210	V120 x 210	V140 x 250	
Hollow shaft	**5**		H60 x 240 *)	H70 x 300 *)	H80 x 350	H100 x 410	H120 x 500 *)	
	6		H70 x 240	H80 x 300	H90 x 350 *)	H110 x 410 *)		
Hollow shaft with shrink disk	**9**	**H3A**	H70 x 280	H80 x 345	H95 x 404 *)	H105 x 483 *)	H125 x 580 *)	
	9	**H3B**	H70/71 x 280	H80/81 x 345	H95/96 x 404	H105/106 x483		H145/146 x 728
	9	**H3C**	H65 x 280 *)	H75 x 345 *)				
	9	**H3D**	H65/66 x 280	H75/76 x 345				
Hollow shaft with splined shaft	**9**	**H4A**	N70x2x30x34x 9H x 240	N80x3x30x25x 9H x 300	N90x3x30x28x 9H x 350	N110x3x30x35x 9H x 410	N130x5x30x24x 9H x 500	

*) Preferred series

© Siemens AG 2011

Shaft designs

Selection and ordering data (continued)

Shaft design	Order No. 8th position	Order No. suffix	Shaft dimensions				
Parallel shaft gearbox FZ.F, 2-stage and FD.F, 3-stage, flange-mounted design (A-type)							
Size			**F..F28**	**F..F38B**	**F..F48B**	**F..F68B**	**F..F88B**
Solid shaft with feather key	**2**		V25 x 50 (i2=I) *)	V25 x 50 (i2=I) *)	V30 x 60 (i2=I) *)	V40 x 80 (i2=I) *)	V50 x 100 (i2=I) *)
Hollow shaft	**5**		H25 x 104 *)	H30 x 120 *)	H35 x 150 *)	H40 x 180 *)	H50 x 210 *)
	6				H40 x 150	H45 x 180	H60 x 210
Hollow shaft with shrink disk	**9**	**H3A**	H25 x 126 *)	H30 x 146 *)	H40 x 177	H50 x 209	H60 x 241
	9	**H3B**		H30/31 x 146	H40/41 x 177	H50/51 x 209	H60/61 x 241
	9	**H3C**			H35 x 177 *)	H40 x 209 *)	H50 x 241 *)
	9	**H3D**				H40/42 x 209	H50/52 x 241
Hollow shaft with splined shaft	**9**	**H4A**	N25x1.25x30x18 x9H x 104	N35x1.25x30x26 x9H x 120	N40x2x30x18x9H x 150	N50x2x30x24x9H x 180	N60x2x30x28x9H x 210
Size			**F..F108B**	**F..F128B**	**F..F148B**	**F..F168B**	**F..F188B**
Solid shaft with feather key	**2**		V60 x 120 (i2=I) *)	V70 x 140 (i2=I) *)	V90 x 170 (i2=I) *)	V110 x 210 (i2=I) *)	V120 x 210 (i2=I) *)
Hollow shaft	**5**		H60 x 240 *)	H70 x 300 *)	H80 x 350	H100 x 410 *)	H120 x 500 *)
	6		H70 x 240	H80 x 300	H90 x 350 *)	H110 x 410	
Hollow shaft with shrink disk	**9**	**H3A**	H70 x 280	H80 x 345	H95 x 404 *)	H105 x 483 *)	H125 x 580 *)
	9	**H3B**	H70/71 x 280	H80/81 x 345	H95/96 x 404	H105/106 x483	
	9	**H3C**	H65 x 280 *)	H75 x 345 *)			
	9	**H3D**	H65/66 x 280	H75/76 x 345			
Hollow shaft with splined shaft	**9**	**H4A**	N70x2x30x34x9H x 240	N80x3x30x25x9H x 300	N90x3x30x28x9H x 350	N110x3x30x35x9H x 410	N130x5x30x24x9 H x 500

*) Preferred series

Shaft designs for parallel shaft gearbox with mixer flange

Shaft design	Order No. 8th position	Order No. suffix	Shaft dimensions				
Parallel shaft gearbox F..M, 2-stage and 3-stage							
Size			**F..M88B**	**F..M108B**	**F..M128B**	**F..M148B**	**F.M168B**
Solid shaft with feather key	**3**		V70 x 140	V80 x 170	V90 x 170	V100 x 210	V120 x 210
Hollow shaft	**9**	**H2F**	H60 x 321	H70 x 366	H80 x 456	H90 x 524	H110 x 609

Shaft designs for parallel shaft gearbox with extruder flange

Shaft design	Order No. 8th position	Order No. suffix	Shaft dimensions					
Parallel shaft gearbox F..E, 2-stage and 3-stage								
Size			**F.AE68**	**F.AE88**	**F.AE108**	**F.AE128**	**F.AE148**	**F.AE168**
Hollow shaft	**9**	**H2A**	H20 x 48	H30 x 58	H40 x 71	H45 x 87	H60 x 95	H70 x 105
	9	**H2B**	H25 x 48	H35 x 58	H45 x 71	H50 x 87	H70 x 95	H80 x 105
	9	**H2C**	H30 x 48 *)	H40 x 58 *)	H50 x 71 *)	H60 x 87 *)	H75 x 95 *)	H90 x 105 *)

*) Preferred series

© Siemens AG 2011

Selection and ordering data

Order code	Flange diameter									
Parallel shaft gearbox FZ.F, 2-stage										
Size	**FZ.F28**	**FZ.F38B**	**FZ.F48B**	**FZ.F68B**	**FZ.F88B**	**FZ.F108B**	**FZ.F128B**	**FZ.F148B**	**FZ.F168B**	**FZ.F188B**
H02	120	160	200	250	300	350		450		660
H03	160						450		550	
Parallel shaft gearbox FD.F, 3-stage										
Size	**FD.F28**	**FD.F38B**	**FD.F48B**	**FD.F68B**	**FD.F88B**	**FD.F108B**	**FD.F128B**	**FD.F148B**	**FD.F168B**	**FD.F188B**
H02	120	160	200	250	300	350		450		660
H03	160						450		550	

© Siemens AG 2011

Mounting types and mounting positions

Selection and ordering data

The mounting type / mounting position must be specified when you place your order to ensure that the gearbox is supplied with the correct quantity of oil.

Please contact customer service to discuss the oil quantity if you wish to use a mounting position which is not shown here.

Position of the terminal box

The terminal box of the motor can be mounted in four different positions. See Chapter 8 for an accurate representation of the terminal box position and the corresponding order codes.

2-stage and 3-stage parallel shaft gearbox, foot-mounted design, flange-mounted design, and with housing flange

Oil control valves:

- Size 28: These types are lubricated for life. No ventilation, oil level, or drain plugs are present.
- Size 38B: V Oil inlet
- From size 48B up: Oil level, Ventilation, Oil drain, Oil dipstick, - - - - alternative

② 2-stage gearbox ③ 3-stage gearbox * On opposite side A,B position of the customer's solid/plug-in shaft

1 ... 4 Position of the terminal box, see Chapter 8.

1) Standard mounting type

F.Z, F.F: B5-01 (IM B5-01) [1)]
Order code (output side A): **D22**
F.AZ, F.AF: H-01 [1)]
Order code (output side A): **D76**

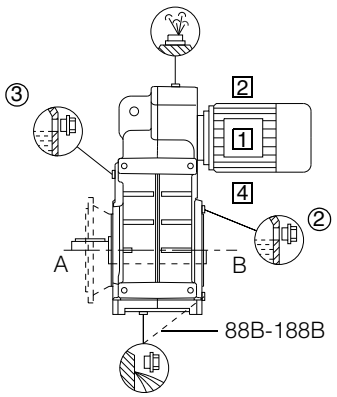

F.Z, F.F: B5-03 (IM B5-03)
Order code (output side A): **D32**
F.AZ, F.AF: H-02
Order code (output side A): **D78**

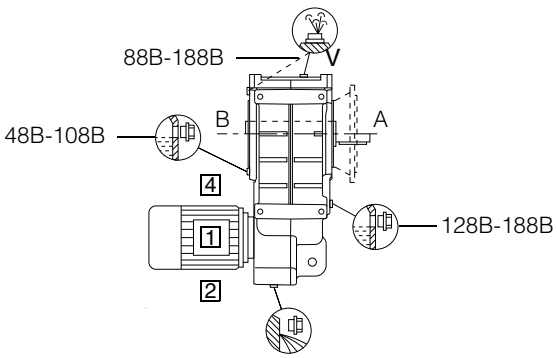

F.Z, F.F: B5-02 (IM B5-02)
Order code (output side A): **D27**
F.AZ, F.AF: H-03
Order code (output side A): **D80**

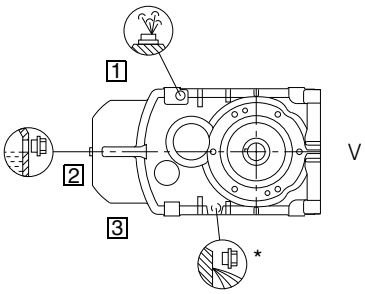

F.Z, F.F: B5-00 (IM B5-00)
Order code (output side A): **D18**
F.AZ, F.AF: H-04
Order code (output side A): **D82**

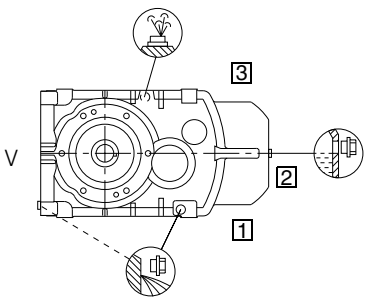

© Siemens AG 2011

Selection and ordering data (continued)

2-stage and 3-stage parallel shaft gearbox, foot-mounted design, flange-mounted design and with housing flange

Oil control valves:

- Size 28: These types are lubricated for life. No ventilation, oil level, or drain plugs are present.
- Size 38B: V Oil inlet
- From size 48B up: Oil level, Ventilation, Oil drain, Oil dipstick, - - - - Alternative

② 2-stage gearbox ③ 3-stage gearbox * On opposite side A,B position of the customer's solid/plug-in shaft

1 ... 4 Position of the terminal box, see Chapter 8.

F.Z, F.F: V1-00 (IM V1-00)
Order code (output side A): **D90**

F.AZ, F.AF: H-05
Order code (output side A): **D84**

F.Z, F.F: V3-00 (IM V3-00)
Order code (output side A): **D98**

F.AZ, F.AF: H-06
Order code (output side A): **D86**

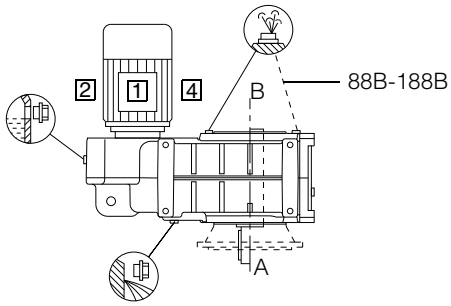

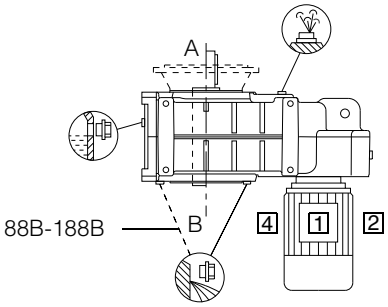

2-stage and 3-stage parallel shaft gearbox with mixer flange (FZ.M/FD.M)

Mounting positions correspond to those of standard gearboxes.

2-stage and 3-stage parallel shaft gearbox with extruder flange (FZAE/FDAE)

Mounting positions correspond to those of standard gearboxes with hollow shaft.

© Siemens AG 2011

Mounting types and mounting positions

Selection and ordering data (continued)

2-stage and 3-stage parallel shaft gearbox, foot-mounted design, flange-mounted design, and with housing flange for size 208

Oil control valves:

Oil level | Ventilation | Oil drain | Oil dipstick | - - - - Alternative

② 2-stage gearbox ③ 3-stage gearbox ④ Tandem gearbox * On opposite side A,B position of the customer's solid/plug-in shaft

1 ... 4 Position of the terminal box, see Chapter 8.

3

F.Z: B5-01 (IM B5-01) [1)]
Order code (output side A): **D22**
F.A.: H-01 [1)]
Order code (output side A): **D76**

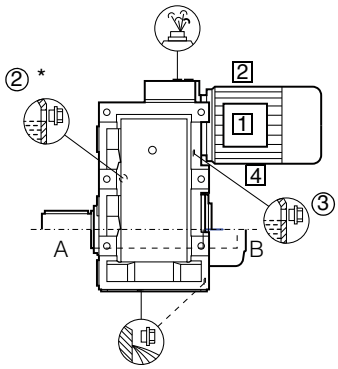

F.Z: B5-03 (IM B5-03)
Order code (output side A): **D32**
F.A.: H-02
Order code (output side A): **D78**

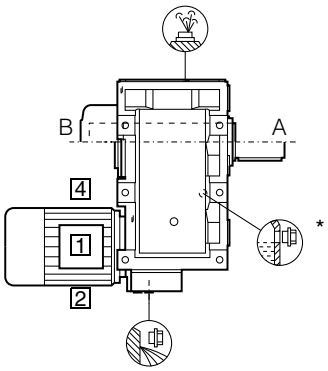

F.Z: B5-02 (IM B5-02)
Order code (output side A): **D27**
F.A.: H-03
Order code (output side A): **D80**

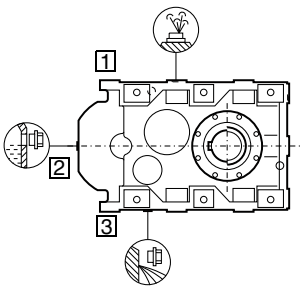

F.Z: B5-00 (IM B5-00)
Order code (output side A): **D18**
F.A.: H-04
Order code (output side A): **D82**

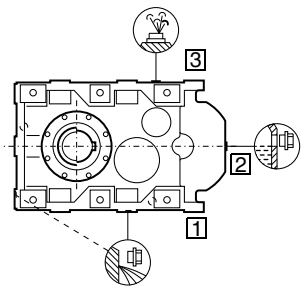

F.Z: V1-00 (IM V1-00)
Order code (output side A): **D90**
F.A.: H-05
Order code (output side A): **D84**

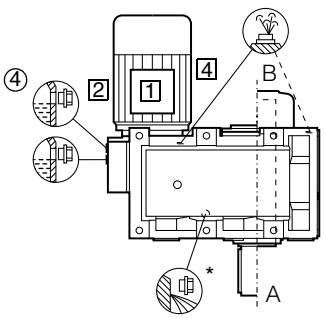

F.Z: V3-00 (IM V3-00)
Order code (output side A): **D98**
F.A.: H-06
Order code (output side A): **D86**

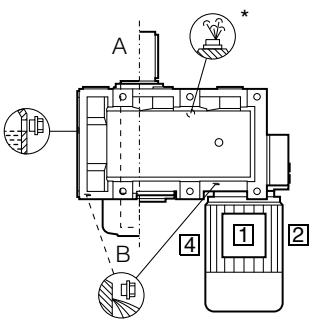

© Siemens AG 2011

Selection and ordering data (continued)

Parallel shaft tandem gearbox

The mounting type / mounting position of the tandem gearbox corresponds to that of the main gearbox.
The figures below are only designed to show the position of the oil control valves of the 2nd gearbox.

Note:

In a horizontal operating position the bulging part of the housing of the 2nd gearbox generally faces vertically downwards.

Oil control valves:

- Size 28/38 (2nd gearbox): These types are lubricated for life. No ventilation, oil level, or drain plugs are present.
- From size 48B up: Oil level Ventilation Oil drain * On opposite side

② 2-stage gearbox ③ 3-stage gearbox

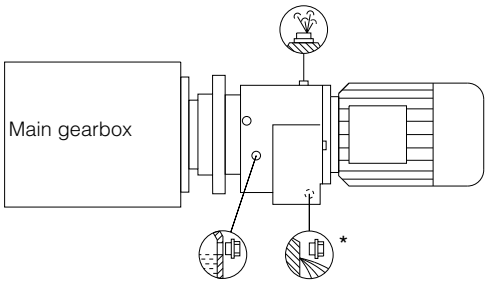

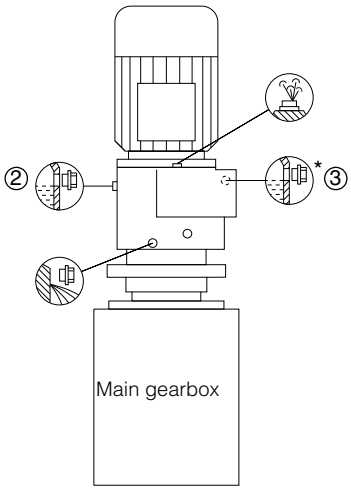

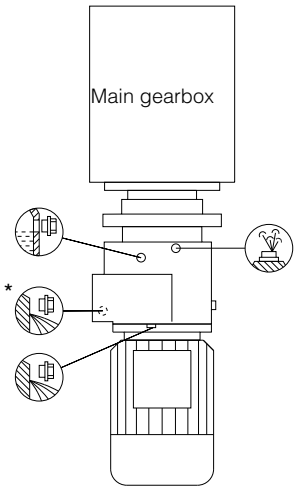

© Siemens AG 2011

Special versions

Lubricants

Parallel shaft gearboxes are filled with mineral oil as standard.

If the gearbox is to be used in an application with special requirements, the lubricants listed in the table below can be used.

Area of application	Ambient temperature [1]	DIN ISO designation	Order code
Standard oils			
Standard temperature	-10 … +40 °C	CLP ISO VG220	**K06**
Improved oil service life	-20 … +50 °C	CLP ISO PG VG220	**K07**
High temperature usage	0 … +60 °C	CLP ISO PG VG460	**K08**
Low temperature usage	-40 … +40 °C	CLP ISO PAO VG220	[2]
Lowest temperature usage	-40 … +10 °C	CLP ISO PAO VG68	[2]
Physiologically safe oils (for use in the food industry) in acc. with NSF (USDA)-H1			
Standard temperature	-30 … +40 °C	CLP ISO H1 VG460	**K11**
Biologically degradable oils			
Standard temperature	-20 … +40 °C	CLP ISO E VG220	**K10**

[1] Recommendation
[2] On request

Size 28 does not feature any ventilation, oil level, or drain plugs. The lubricant does not need to be changed, due to the low thermal load the gearbox is subjected to.

Parallel shaft gearboxes of size 38B have an oil screw; these gearboxes do not require ventilation or ventilation elements.

Gearboxes of sizes 48B to 188B are fitted with filler, oil level, and drain plugs as standard. The ventilation and vent filter, which is delivered loose, must be attached in place of the filler plug prior to startup.

Oil level control

Oil sight glass

For size 48B and above, gearboxes can be equipped with a visual oil level indicator (oil sight glass) for most mounting types and mounting positions.

Order code:
Oil sight glass **G34**

Size	SW (Wrench width)	h
FD./FZ.48B … FD./FZ.128B	19	8
FD./FZ.148B … FD./FZ.188B	24	8
FD./FZ.208	32	11

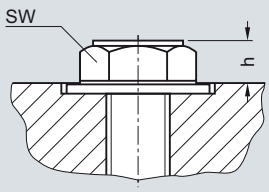

Electrical oil level monitoring system

If required, the gearbox can be supplied with an electrical oil level monitoring system, which enables the oil level of the gearbox to be monitored remotely. The oil level is monitored by a capacitive sensor only when the gearbox starts up; it is not measured continuously.

© Siemens AG 2011

Gearbox ventilation

The positions of the ventilation and ventilation elements can be seen on the mounting position diagrams.

If required, a pressure ventilation valve can be used for size 48B and above.

Order code:
Vent filter **G44**
Pressure ventilation valve **G45**

Vent filter:

Size	d	d1	c	h
FD./FZ.48B … FD./FZ.128B	27	22	4.0	20.0
FD./FZ.148B … FD./FZ.188B	32	32	4.0	24.0
FD./FZ.208	45	40	6.5	23.5

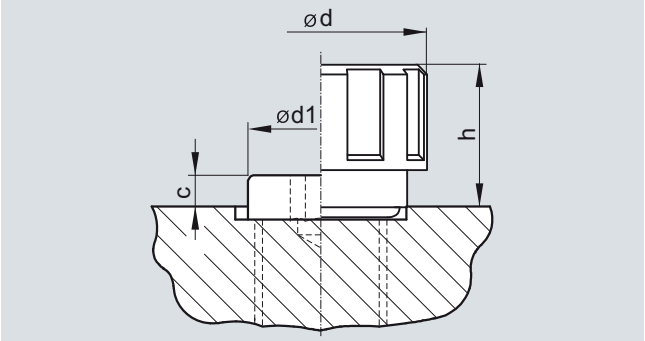

Pressure ventilation valve:

Size	SW (Wrench width)	d2	h1
FD./FZ.48B … FD./FZ.128B	17	11	15.0
FD./FZ.148B … FD./FZ.188B	24	11	14.0
FD./FZ.208	27	11	29.5

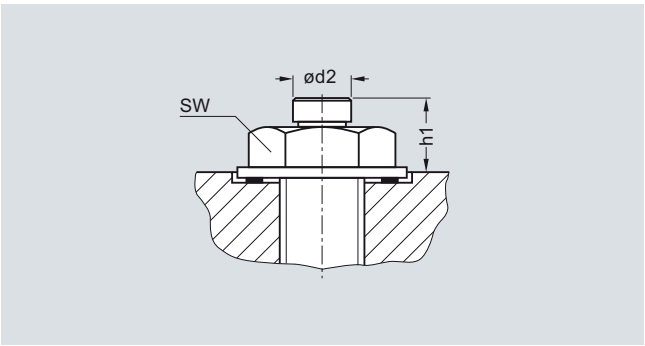

Oil drain

Magnetic oil drain plug

A magnetic oil drain plug for inserting in the oil drainage hole is available on request for parallel shaft gearboxes of size 48B and above. This serves to collect any grit contained in the gear lubricant.

Order code:
Magnetic oil drain plug **G53**

Oil drain valve

An oil drain valve is available on request for parallel shaft gearboxes of size 48B and above.

The oil drain valve may be designed as a complete unit featuring a screw plug, depending on the corresponding mounting position.

Order code:
Oil drain valve, straight **G54**

An angled oil drain valve is also available on request.

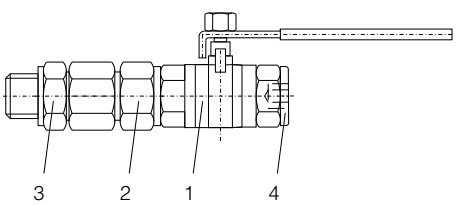

Item 1 Oil drain valve
Item 2 Screwed connection EGE
Item 3 Screwed connection GE
Item 4 Screw plug

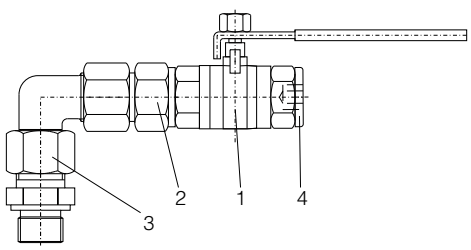

Item 1 Oil drain valve
Item 2 Screwed connection EGE
Item 3 Screwed connection GE
Item 4 Screw plug

© Siemens AG 2011

Sealing

Combination shaft sealing

A combination shaft sealing, which helps to prevent oil from leaking, is available for parallel shaft gearboxes of sizes 38B to 168B.

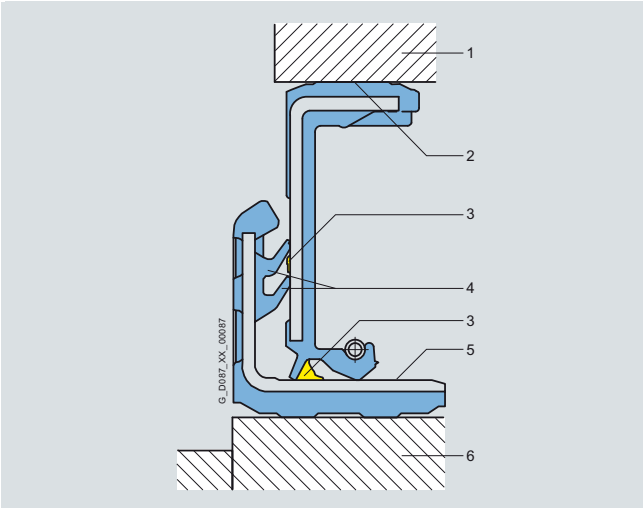

A combination shaft sealing is particularly well suited to external use.

Order code:
Combination shaft sealing **G24**

1 • Housing
2 • Rubberized inner and outer diameter
3 • Grease filling prevents dry running of the sealing lips
4 • Additional sealing lips to protect against dirt
• Decoupled sealing system prevents scoring of the shaft as a result of corrosion or dirt
5 • Protected running surface for radial shaft sealing ring
• No damage when mounting
6 • Shaft

Double sealing

Double sealing is possible for parallel shaft gearboxes of sizes 28 and 188B. Double sealing is particularly well suited to external use.

Order code:

Double sealing MSS1 (size 28)	**G23**
Double radial shaft seal (sizes 188B)	**G22+G31**

High temperature resistant sealing

High temperature resistant sealings (Viton/fluorinated rubber) for high operating and ambient temperatures of +60 °C and above are available for parallel shaft gearboxes.

Order code:
High temperature resistant sealing **G25**

© Siemens AG 2011

Hollow shaft cover (protection cover)

Gearboxes with hollow shaft are delivered with a plastic sealing cap as standard.

If required, they can be fitted with a fixed protection cover. Gearboxes of size 28 are fitted with a steel protection cover as standard.

The steel protection cover can only be used for gearboxes with hollow shaft and shrink disk.

For outdoor applications we recommend the ATEX versions.

Order codes:

Protection cover	**G62**
Protection cover (ATEX)	**G63**
Steel protection cover	**G60**
Steel protection cover (ATEX)	**G61**

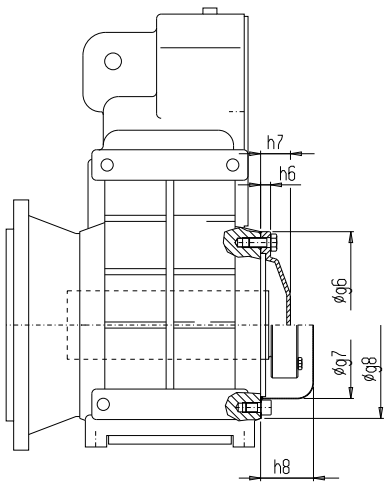

F.A, F.AF, F.AZ, F.AS [1], F.AFS [1], F.AZS [1], F.AT, F.AFT, F.AZT

[1] Only a steel protection cover is available for F.AS, F.ADS, F.AFS, and F.AZS

Gearbox type	Steel protection cover			Protection cover		
	g7	g8	h8	g6	h6	h7
F.28	58.0	102	33.5	–	–	–
F.38B	82.2	115	40.0	120	10	33
F.48B	99.0	130	44.0	132	10	33
F.68B	115.0	150	62.5	150	10	37
F.88B	137.0	190	70.0	190	13	50
F.108B	187.0	240	80.0	245	13	55
F.128B	233.0	292	85.0	295	16	48
F.148B	257.5	334	100.0	335	13	50
F.168B	309.5	390	129.5	400	13	50
F.188B	309.5	390	129.5	400	13	50
F.208	373.0	373	179.0	–	–	–

Radially reinforced output shaft bearings

The bearings of the MOTOX gearboxes are dimensioned such that they are strong enough to withstand most application cases.

However, the gearboxes can be fitted with a reinforced output shaft bearing arrangement for applications with particularly high radial forces.

Order code:

Radially reinforced output shaft bearings **G20**

© Siemens AG 2011

Special versions

Mixer flange in dry-well design

The agitator flange can be fitted with an additional "V" ring (1) in mounting position V1-00 in order to drain off any leak oil to a safety chamber and protect the equipment against the effects of leakages.

The oil can either be viewed through a sight glass, or its presence indicated by an electrical sensor (2).

Order codes:

Dry-well design with sight glass	**G89**
Dry-well design with sensor	**G90**

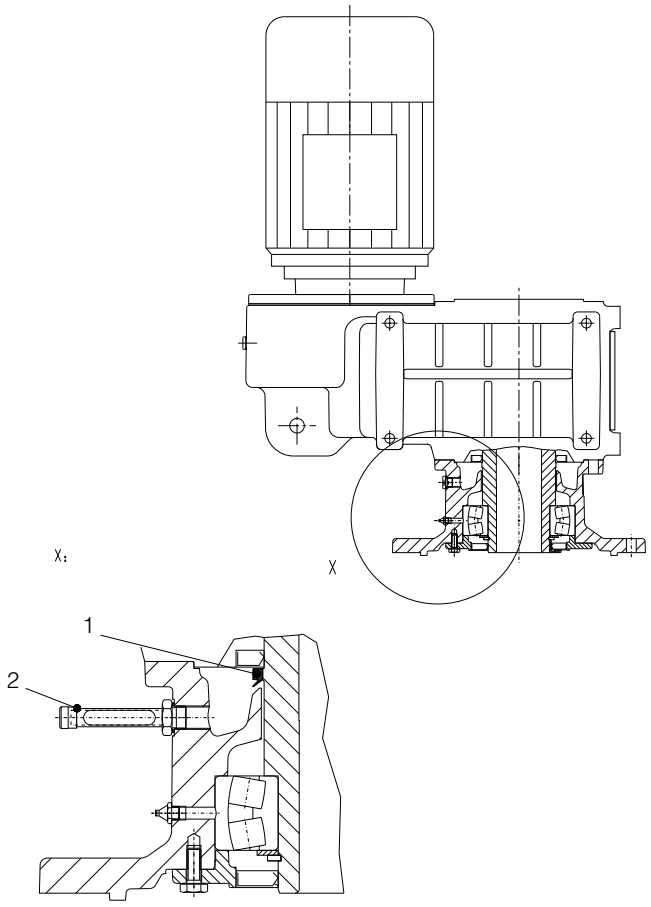

Regreasing device for the mixer flange

The mixer gearbox can be fitted with a regreasing device on request.

© Siemens AG 2011

Dimension drawing overview

Representation	Gearbox type	Dimension drawing on page
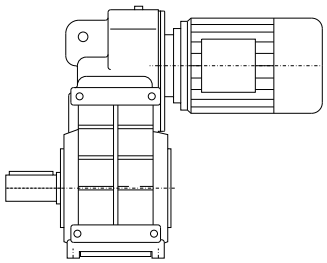	F.Z28	3/104
	F.Z38B	3/110
	F.Z48B	3/116
	F.Z68B	3/122
	F.Z88B	3/128
	F.Z108B	3/134
	F.Z128B	3/140
	F.Z148B	3/146
	F.Z168B	3/152
	F.Z188B	3/158
	F.Z208	3/164
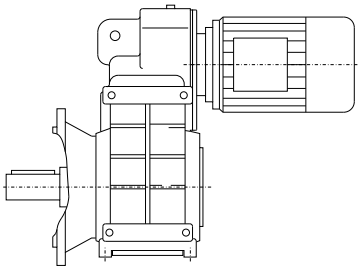	F.F28	3/105
	F.F38B	3/111
	F.F48B	3/117
	F.F68B	3/123
	F.F88B	3/129
	F.F108B	3/135
	F.F128B	3/141
	F.F148B	3/147
	F.F168B	3/153
	F.F188B	3/159
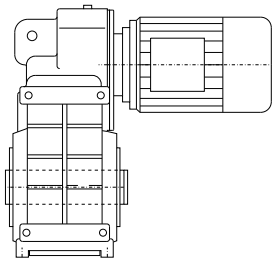	F.A28 / F.AZ28	3/106
	F.A38B / F.AZ38B	3/112
	F.A48B / F.AZ48B	3/118
	F.A68B / F.AZ68B	3/124
	F.A88B / F.AZ88B	3/130
	F.A108B / F.AZ108B	3136
	F.A128B / F.AZ128B	3/142
	F.A148B / F.AZ148B	3/148
	F.A168B / F.AZ168B	3/154
	F.A188B / F.AZ188B	3/160
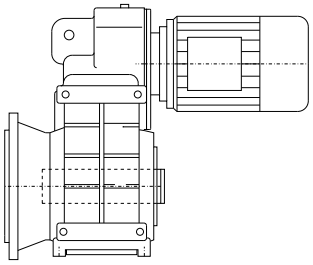	F.AF28	3/107
	F.AF38B	3/113
	F.AF48B	3/119
	F.AF68B	3/125
	F.AF88B	3/131
	F.AF108B	3/137
	F.AF128B	3/143
	F.AF148B	3/149
	F.AF168B	3/155
	F.AF188B	3/161
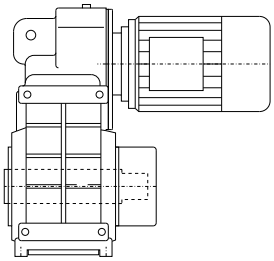	F.AS28 / F.AZS28	3/108
	F.AS38B / F.AZS38B	3/114
	F.AS48B / F.AZS48B	3/120
	F.AS68B / F.AZS68B	3/126
	F.AS88B / F.AZS88B	3/132
	F.AS108B / F.AZS108B	3/138
	F.AS128B / F.AZS128B	3/144
	F.AS148B / F.AZS148B	3/150
	F.AS168B / F.AZS168B	3/156
	F.AS188B / F.AZS188B	3/162
	F.AS1208 / F.AZS208	3/165

© Siemens AG 2011

Dimensions

Dimension drawing overview (continued)

Representation	Gearbox type	Dimension drawing on page
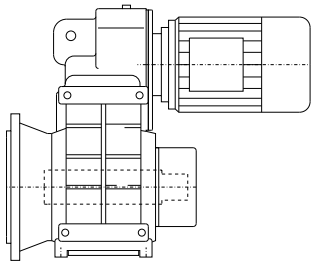	F.AFS28	3/109
	F.AFS38B	3/115
	F.AFS48B	3/121
	F.AFS68B	3/127
	F.AFS88B	3/133
	F.AFS108B	3/139
	F.AFS128B	3/145
	F.AFS148B	3/151
	F.AFS168B	3/157
	F.AFS188B	3/163
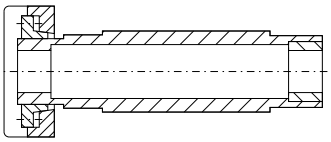	F.A.S38B ... F.A.S188B	3/168
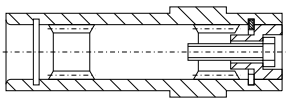	F.A.T38B ... F.A.T188B	3/169
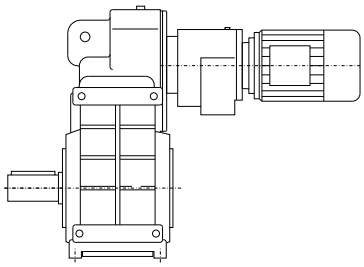	F.38B-Z28 ... F.188B-Z68	3/170
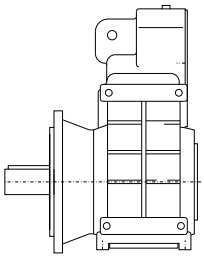	F.M88B ... F.M168B	3/174

© Siemens AG 2011

Dimension drawing overview (continued)

Representation	Gearbox type	Dimension drawing on page
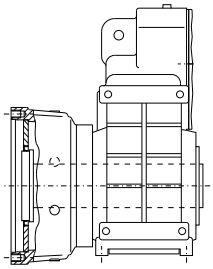	F.E88B ... F.E168B	3/176
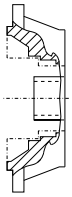	Additional flange-mounted design	3/178
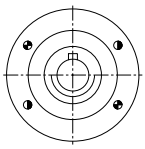 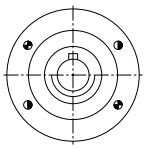	Pin holes	3/179

© Siemens AG 2011

Dimensions

Gearbox FDZ/FZZ28 (3- / 2-stage), housing-flange-mounted design (C-type)

FZ012

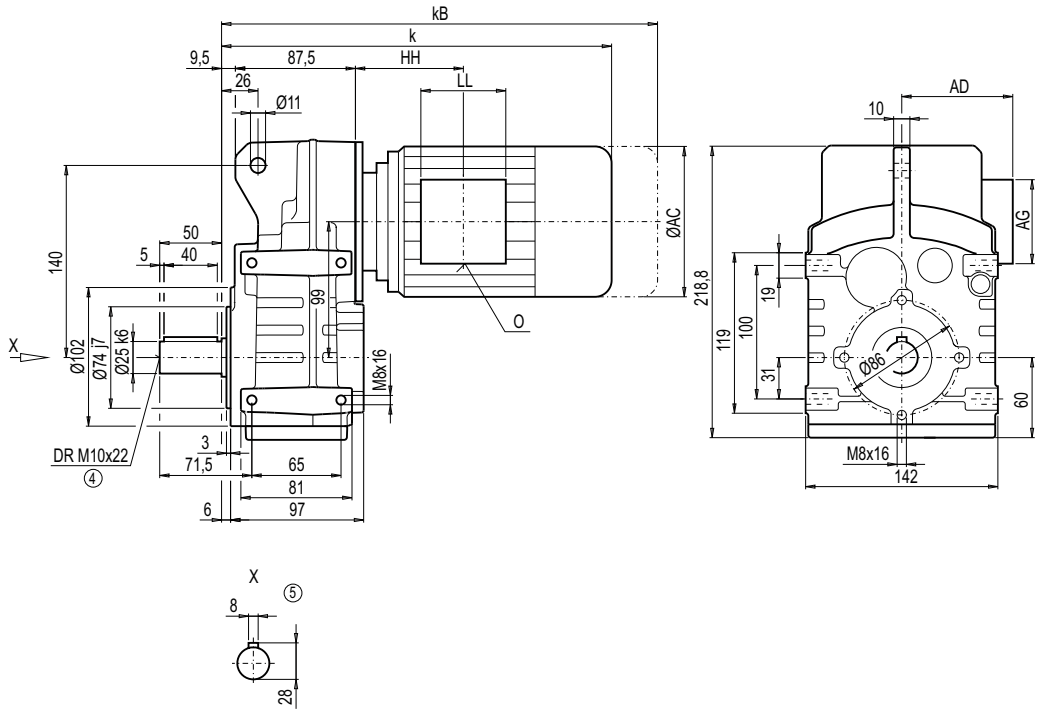

Motor	F.Z28 k	kB	AC	AD	AG	LL	HH	O	Weight FDZ28	Weight FZZ28
LA71	299.5	354.5	139.0	146	90	90	58.5	M20x1.5/M25x1.5	10	10
LA71Z	318.5	373.5	139.0	146	90	90	58.5	M20x1.5/M25x1.5	10	10
LA80	401.5	465.0	156.5	155	90	90	123.0	M20x1.5/M25x1.5	15	15
LA80Z	424.0	487.5	156.5	155	90	90	196.0	M20x1.5/M25x1.5	19	19
LA90S/L	396.5	467.5	174.0	163	90	90	87.0	M20x1.5/M25x1.5	26	25
LA90ZL	441.5	512.5	174.0	163	90	90	211.0	M20x1.5/M25x1.5	23	22
LA100L	478.5	559.5	195.0	168	120	120	163.5	2xM32x1.5	–	29
LA100ZL	548.5	629.5	195.0	168	120	120	295.5	2xM32x1.5	–	39

④ DIN 332

⑤ Feather key / keyway DIN 6885

© Siemens AG 2011

Gearbox FDF/FZF28 (3- / 2-stage), flange-mounted design (A-type)

FF012

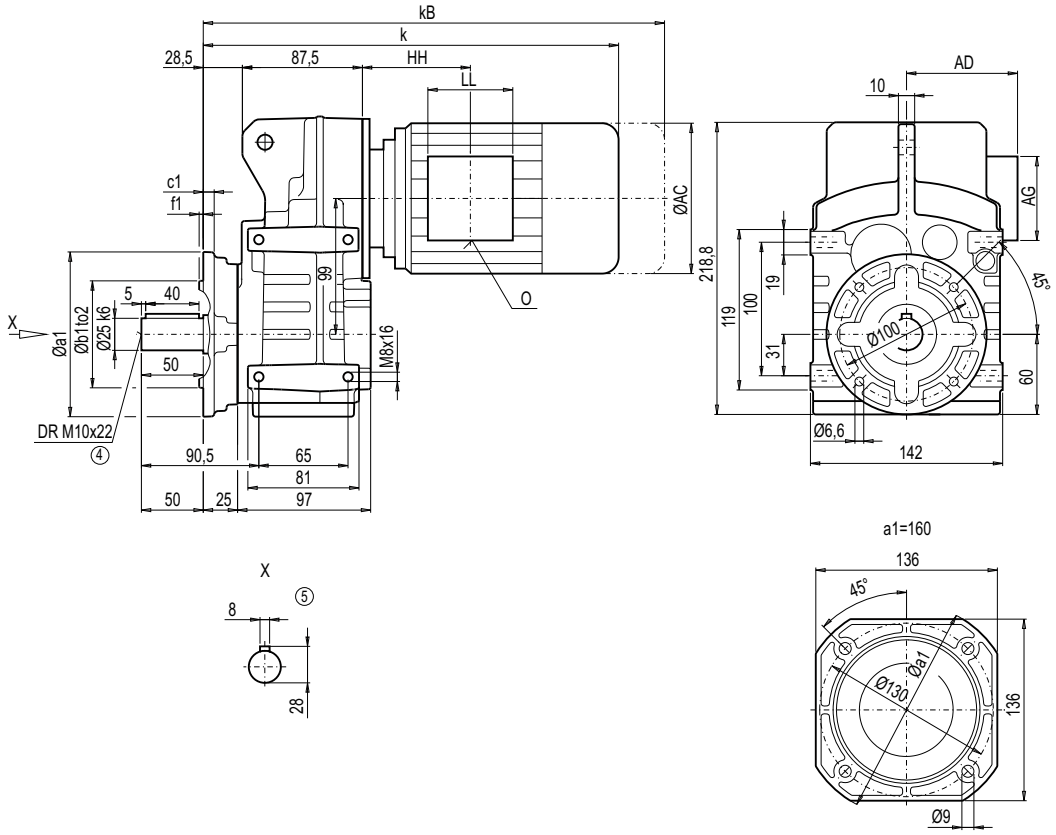

Flange	a1	b1	to2	c1	f1
A120	120	80	j6	8	3.0
A160	160	110	j6	9	3.5

	F.F28								Weight	
Motor	**k**	**kB**	**AC**	**AD**	**AG**	**LL**	**HH**	**O**	**FDF28**	**FZF28**
LA71	318.5	373.5	139.0	146	90	90	58.5	M20x1.5/M25x1.5	11	10
LA71Z	337.5	392.5	139.0	146	90	90	58.5	M20x1.5/M25x1.5	11	10
LA80	420.5	474.0	156.5	155	90	90	123.0	M20x1.5/M25x1.5	15	15
LA80Z	443.0	506.5	156.5	155	90	90	196.0	M20x1.5/M25x1.5	19	19
LA90S/L	415.5	486.5	174.0	163	90	90	87.0	M20x1.5/M25x1.5	20	20
LA90ZL	460.5	531.5	174.0	163	90	90	211.0	M20x1.5/M25x1.5	29	29
LA100L	497.5	578.5	195.0	168	120	120	163.5	2xM32x1.5	–	29
LA100ZL	567.5	648.5	195.0	168	120	120	295.5	2xM32x1.5	–	39

④ DIN 332

⑤ Feather key / keyway DIN 6885

© Siemens AG 2011

Dimensions

Gearbox FDA/FZA28, FDAZ/FZAZ28 (3- / 2-stage), housing-flange-mounted design (C-type)

FA012
FAZ012

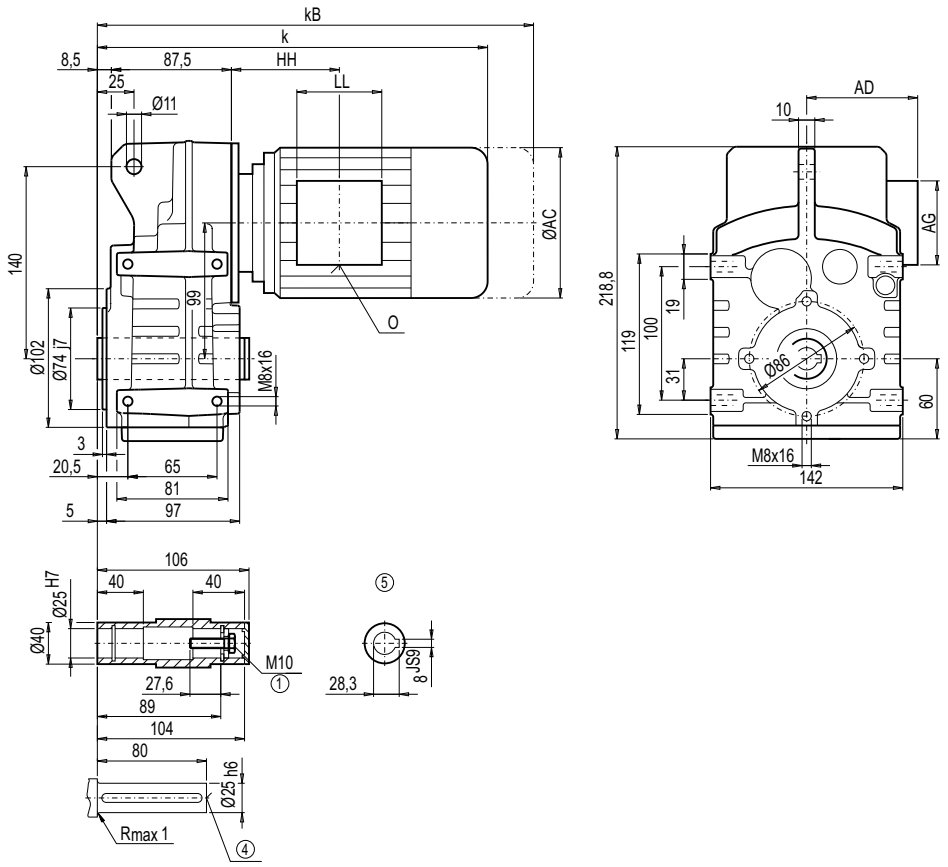

Motor	F.A.28 k	kB	AC	AD	AG	LL	HH	O	Weight FDA.28	FZA.28
LA71	299.5	354.5	139.0	146	90	90	58.5	M20x1.5/M25x1.5	10	9
LA71Z	318.5	373.5	139.0	146	90	90	58.5	M20x1.5/M25x1.5	10	9
LA80	401.5	465.0	156.5	155	90	90	123.0	M20x1.5/M25x1.5	15	15
LA80Z	424.0	487.5	156.5	155	90	90	196.0	M20x1.5/M25x1.5	19	19
LA90S/L	396.5	467.5	174.0	163	90	90	87.0	M20x1.5/M25x1.5	19	19
LA90ZL	441.5	512.5	174.0	163	90	90	211.0	M20x1.5/M25x1.5	28	28
LA100L	478.5	559.5	195.0	168	120	120	163.5	2xM32x1.5	–	28
LA100ZL	548.5	629.5	195.0	168	120	120	295.5	2xM32x1.5	–	38

① DIN EN ISO 4017 ④ DIN 332 ⑤ Feather key / keyway DIN 6885

© Siemens AG 2011

Gearbox FDAF/FZAF28 (3- / 2-stage), flange-mounted design

FAF012

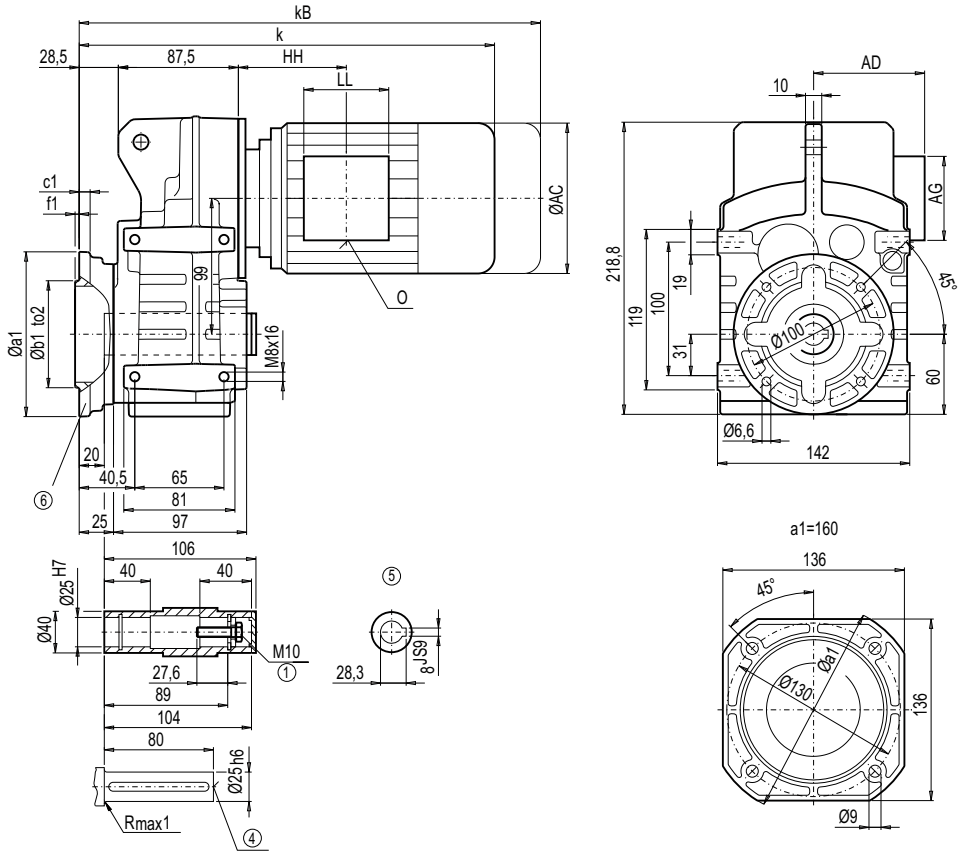

Flange	a1	b1	to2	c1	f1
A120	120	80	j6	8	3.0
A160	160	110	j6	9	3.5

	F.AF28								Weight	
Motor	**k**	**kB**	**AC**	**AD**	**AG**	**LL**	**HH**	**O**	**FDAF28**	**FZAF28**
LA71	318.5	373.5	139.0	146	90	90	58.5	M20x1.5/M25x1.5	10	9
LA71Z	337.5	392.5	139.0	146	90	90	58.5	M20x1.5/M25x1.5	10	9
LA80	420.5	474.0	156.5	155	90	90	123.0	M20x1.5/M25x1.5	15	15
LA80Z	443.0	506.5	156.5	155	90	90	196.0	M20x1.5/M25x1.5	19	19
LA90S/L	415.5	486.5	174.0	163	90	90	87.0	M20x1.5/M25x1.5	19	19
LA90ZL	460.5	531.5	174.0	163	90	90	211.0	M20x1.5/M25x1.5	28	28
LA100L	497.5	578.5	195.0	168	120	120	163.5	2xM32x1.5	–	28
LA100ZL	567.5	648.5	195.0	168	120	120	295.5	2xM32x1.5		38

① DIN EN ISO 4017 ④ DIN 332 ⑤ Feather key / keyway DIN 6885 ⑥ For note, see page 3/178

© Siemens AG 2011

Dimensions

Gearbox FDAS/FZAS28, FDAZS/FZAZS28 (3- / 2-stage) shaft-mounted design with shrink disk

FAS012
FAZS012

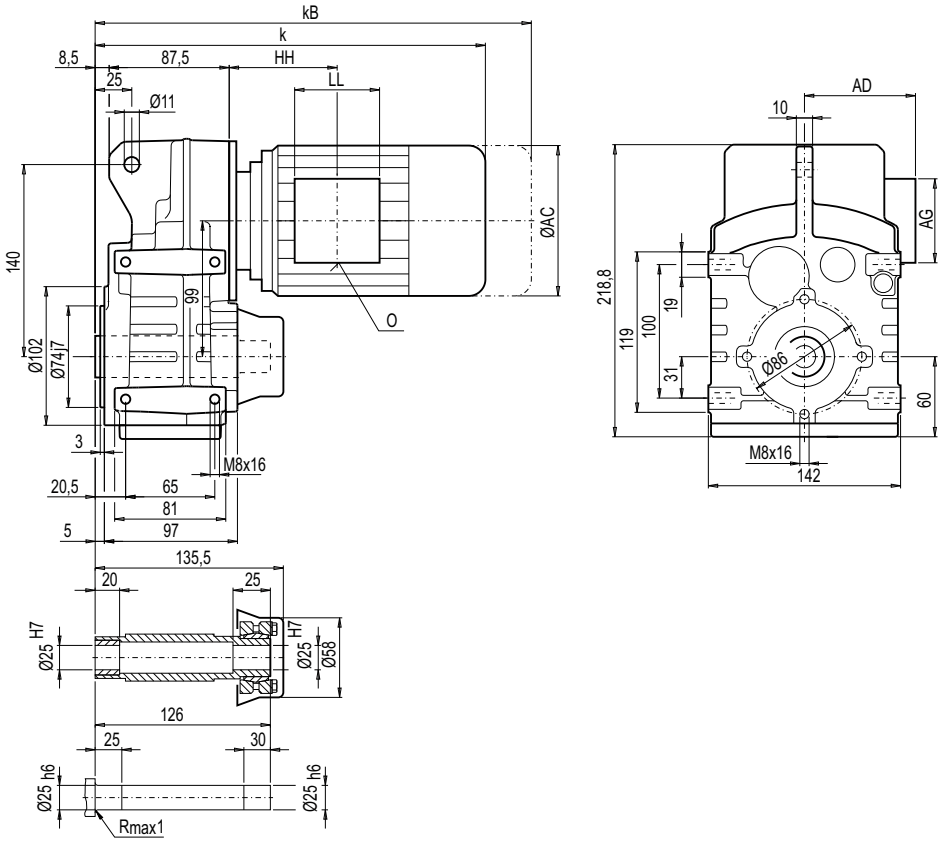

Motor	F.A.S28 k	kB	AC	AD	AG	LL	HH	O	Weight FDA.S28	FZA.S28
LA71	299.5	354.5	139.0	146	90	90	58.5	M20x1.5/M25x1.5	10	9
LA71Z	318.5	373.5	139.0	146	90	90	58.5	M20x1.5/M25x1.5	10	9
LA80	401.5	465.0	156.5	155	90	90	123.0	M20x1.5/M25x1.5	15	15
LA80Z	424.0	487.5	156.5	155	90	90	196.0	M20x1.5/M25x1.5	19	19
LA90S/L	396.5	467.5	174.0	163	90	90	87.0	M20x1.5/M25x1.5	19	19
LA90ZL	441.5	512.5	174.0	163	90	90	211.0	M20x1.5/M25x1.5	28	28
LA100L	478.5	559.5	195.0	168	120	120	163.5	2xM32x1.5	–	28
LA100ZL	548.5	629.5	195.0	168	120	120	295.5	2xM32x1.5	–	38

© Siemens AG 2011

Gearbox FDAFS/FZAFS28 (3- / 2-stage), flange-mounted design and shrink disk

FAFS012

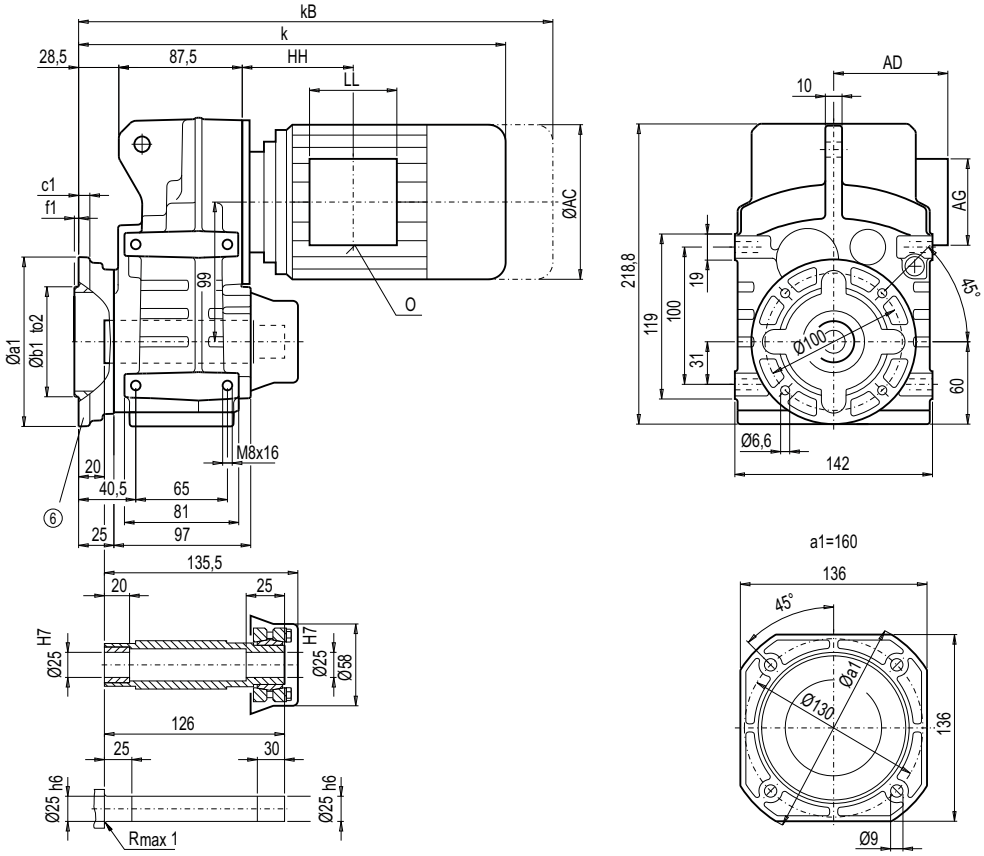

Flange	a1	b1	to2	c1	f1
A120	120	80	j6	8	3.0
A160	160	110	j6	9	3.5

	F.AFS28								Weight	
Motor	**k**	**kB**	**AC**	**AD**	**AG**	**LL**	**HH**	**O**	**FDAFS28**	**FZAFS28**
LA71	318.5	373.5	139.0	146	90	90	58.5	M20x1.5/M25x1.5	10	10
LA71Z	337.5	392.5	139.0	146	90	90	58.5	M20x1.5/M25x1.5	10	10
LA80	420.5	474.0	156.5	155	90	90	123.0	M20x1.5/M25x1.5	15	15
LA80Z	443.0	506.5	156.5	155	90	90	196.0	M20x1.5/M25x1.5	19	19
LA90S/L	415.5	486.5	174.0	163	90	90	87.0	M20x1.5/M25x1.5	20	19
LA90ZL	460.5	531.5	174.0	163	90	90	211.0	M20x1.5/M25x1.5	29	28
LA100L	497.5	578.5	195.0	168	120	120	163.5	2xM32x1.5	–	29
LA100ZL	567.5	648.5	195.0	168	120	120	295.5	2xM32x1.5	–	39

⑥ For note, see page 3/178

© Siemens AG 2011

Dimensions

Gearbox FDZ/FZZ38B (3- / 2-stage), housing-flange-mounted design (C-type)

FZ012

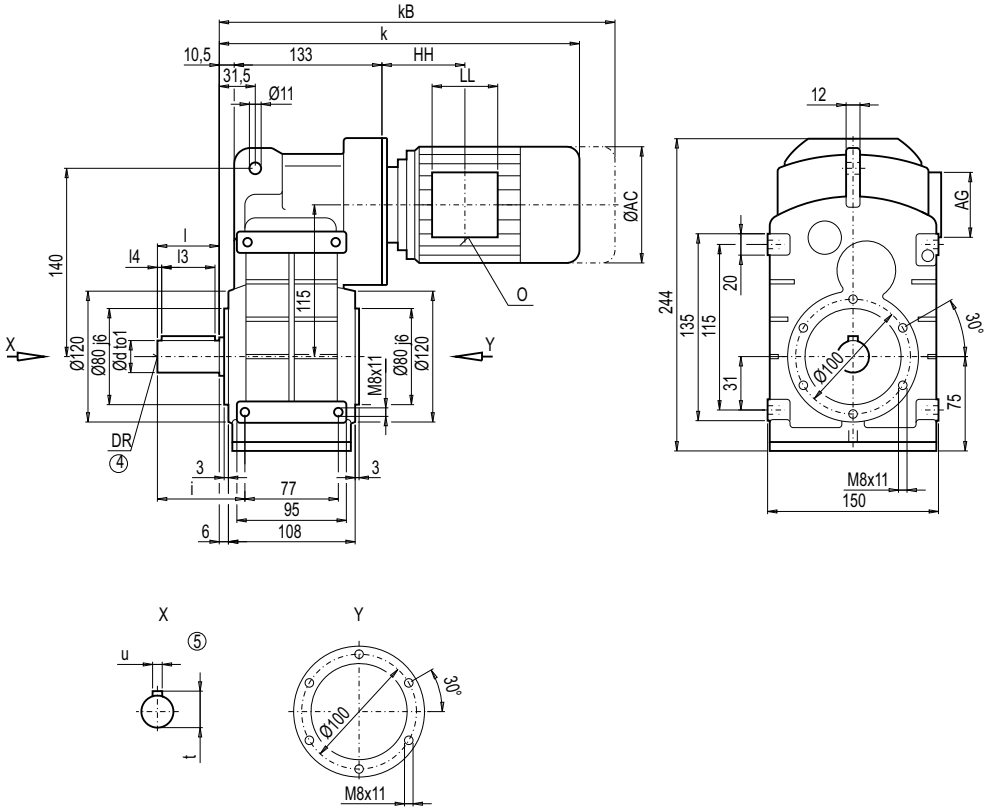

d	to1	l	l3	l4	t	u	i	DR
25 *)	k6	50	40	5	28	8	71.5	M10x22
35	k6	70	56	5	38	10	91.5	M12x28

*) Preferred series

	F.Z38B								Weight	
Motor	**k**	**kB**	**AC**	**AD**	**AG**	**LL**	**HH**	**O**	**FDZ38B**	**FZZ38B**
LA71	377.0	432.0	139.0	146	90	90	89.5	M20x1.5/M25x1.5	18	17
LA71Z	396.0	451.0	139.0	146	90	90	89.5	M20x1.5/M25x1.5	18	17
LA80	414.0	477.5	156.5	155	90	90	89.0	M20x1.5/M25x1.5	23	22
LA80Z	436.5	500.0	156.5	155	90	90	162.0	M20x1.5/M25x1.5	27	26
LA90S/L	445.0	516.0	174.0	163	90	90	89.0	M20x1.5/M25x1.5	27	27
LA90ZL	490.0	561.0	174.0	163	90	90	213.0	M20x1.5/M25x1.5	33	33
LA100L	491.0	572.0	195.0	168	120	120	129.5	2xM32x1.5	–	36
LA100ZL	561.0	642.0	195.0	168	120	120	261.5	2xM32x1.5	–	46

④ DIN 332

⑤ Feather key / keyway DIN 6885

© Siemens AG 2011

Gearbox FDF/FZF38B (3- / 2-stage), flange-mounted design (A-type)

FF012

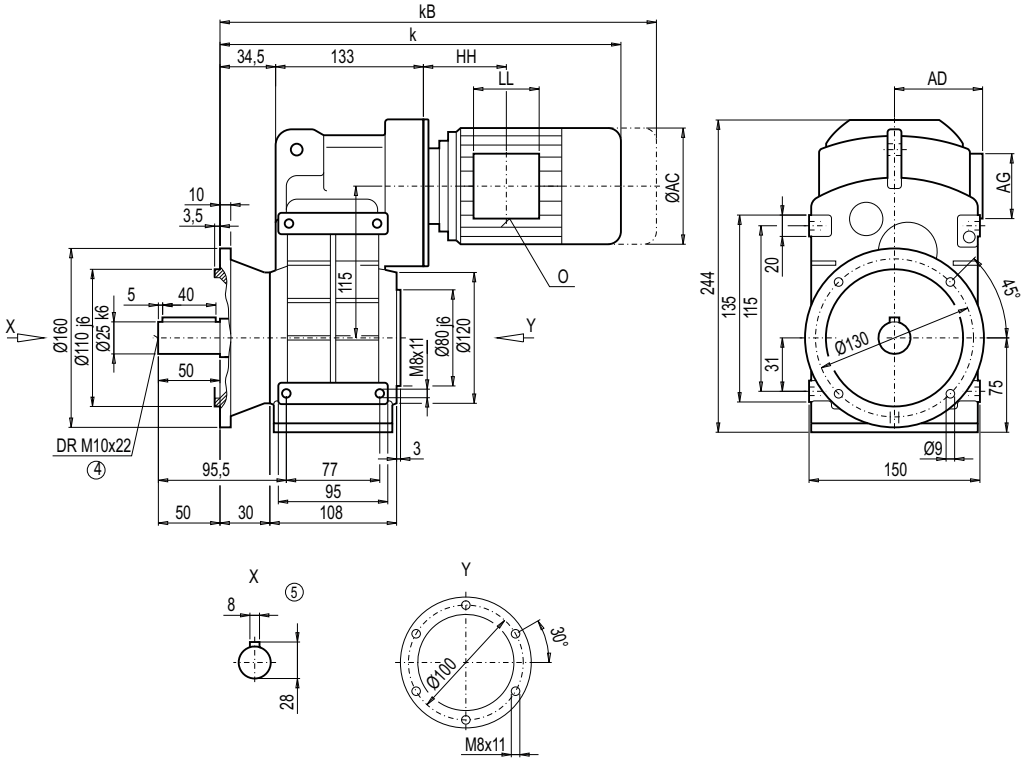

Motor	F.F38B k	kB	AC	AD	AG	LL	HH	O	Weight FDF38B	Weight FZF38B
LA71	401.0	456.0	139.0	146	90	90	89.5	M20x1.5/M25x1.5	20	19
LA71Z	420.0	475.0	139.0	146	90	90	89.5	M20x1.5/M25x1.5	20	19
LA80	438.0	501.5	156.5	155	90	90	89.0	M20x1.5/M25x1.5	25	24
LA80Z	460.5	524.0	156.5	155	90	90	162.0	M20x1.5/M25x1.5	29	28
LA90S/L	469.0	540.0	174.0	163	90	90	89.0	M20x1.5/M25x1.5	29	29
LA90ZL	514.0	585.0	174.0	163	90	90	213.0	M20x1.5/M25x1.5	35	35
LA100L	515.0	596.0	195.0	168	120	120	129.5	2xM32x1.5	–	38
LA100ZL	585.0	666.0	195.0	168	120	120	261.5	2xM32x1.5	–	48

④ DIN 332

⑤ Feather key / keyway DIN 6885

© Siemens AG 2011

Dimensions

Gearbox FDA/FZA38B, FDAZ/FZAZ38B (3- / 2-stage), housing-flange-mounted design (C-type)

FA012
FAZ012

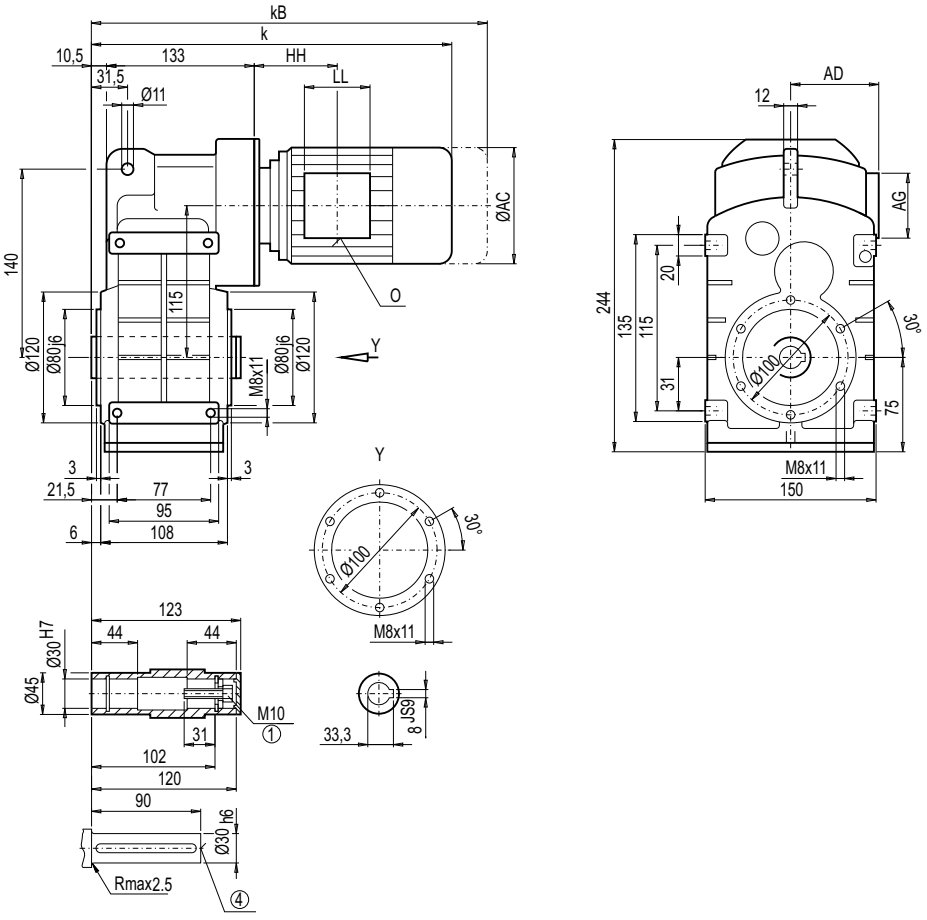

Motor	F.A.38B k	kB	AC	AD	AG	LL	HH	O	Weight FDA.38B	FZA.38B
LA71	377.0	432.0	139.0	146	90	90	89.5	M20x1.5/M25x1.5	16	16
LA71Z	396.0	451.0	139.0	146	90	90	89.5	M20x1.5/M25x1.5	16	16
LA80	414.0	477.5	156.5	155	90	90	89.0	M20x1.5/M25x1.5	21	21
LA80Z	436.5	500.0	156.5	155	90	90	162.0	M20x1.5/M25x1.5	25	25
LA90S/L	445.0	516.0	174.0	163	90	90	89.0	M20x1.5/M25x1.5	26	26
LA90ZL	490.0	561.0	174.0	163	90	90	213.0	M20x1.5/M25x1.5	32	32
LA100L	491.0	572.0	195.0	168	120	120	129.5	2xM32x1.5	–	35
LA100ZL	561.0	642.0	195.0	168	120	120	261.5	2xM32x1.5	–	45

① DIN 6912 ④ DIN 332 ⑤ Feather key / keyway DIN 6885

© Siemens AG 2011

Gearbox FDAF/FZAF38B (3- / 2-stage), flange-mounted design

FAF012

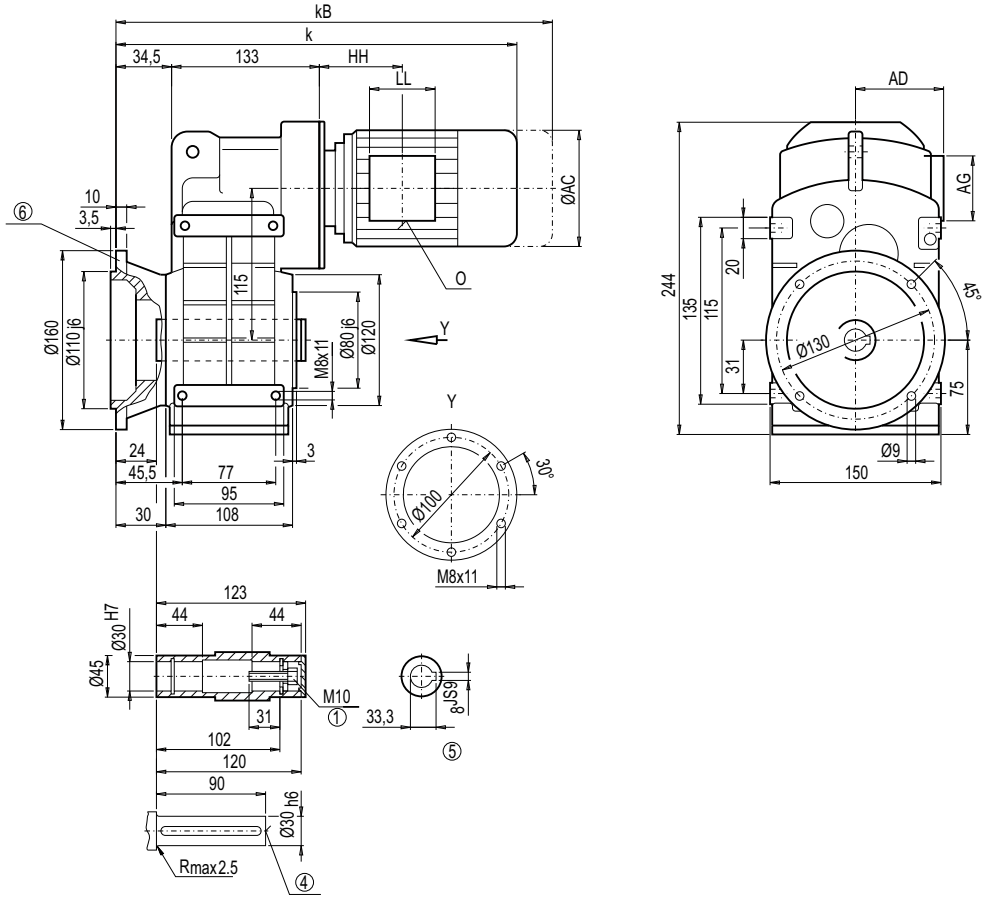

Motor	F.AF38B k	kB	AC	AD	AG	LL	HH	O	Weight FDAF38B	FZAF38B
LA71	401.0	456.0	139.0	146	90	90	89.5	M20x1.5/M25x1.5	18	18
LA71Z	420.0	475.0	139.0	146	90	90	89.5	M20x1.5/M25x1.5	18	18
LA80	438.0	501.5	156.5	155	90	90	89.0	M20x1.5/M25x1.5	23	23
LA80Z	460.5	524.0	156.5	155	90	90	162.0	M20x1.5/M25x1.5	27	27
LA90S/L	469.0	540.0	174.0	163	90	90	89.0	M20x1.5/M25x1.5	28	28
LA90ZL	514.0	585.0	174.0	163	90	90	213.0	M20x1.5/M25x1.5	34	34
LA100L	515.0	596.0	195.0	168	120	120	129.5	2xM32x1.5	–	37
LA100ZL	585.0	666.0	195.0	168	120	120	261.5	2xM32x1.5	–	47

① DIN 6912 ④ DIN 332 ⑤ Feather key / keyway DIN 6885 ⑥ For note, see page 3/178

© Siemens AG 2011

Dimensions

Gearbox FDAS/FZAS38B, FDAZS/FZAZS38B (3- / 2-stage), shaft-mounted design with shrink disk

FAS012
FAZS012

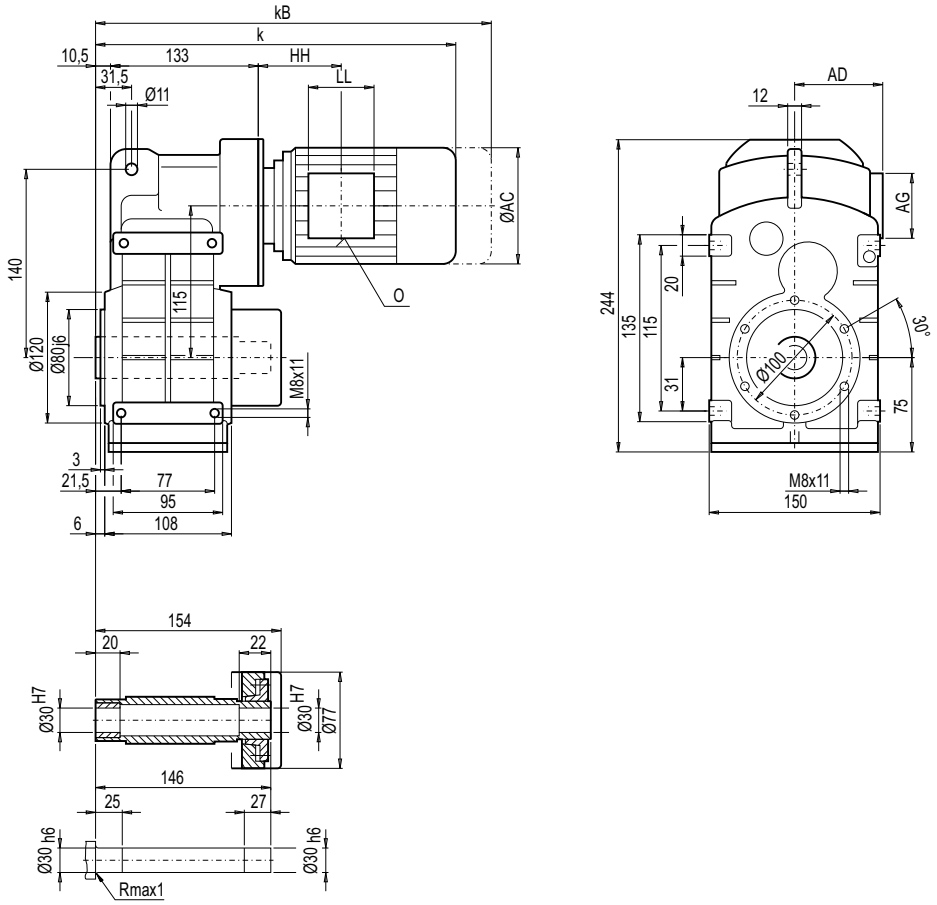

Motor	F.A.S38B k	kB	AC	AD	AG	LL	HH	O	Weight FDA.S38B	FZA.S38B
LA71	377.0	432.0	139.0	146	90	90	89.5	M20x1.5/M25x1.5	17	17
LA71Z	396.0	451.0	139.0	146	90	90	89.5	M20x1.5/M25x1.5	17	17
LA80	414.0	477.5	156.5	155	90	90	89.0	M20x1.5/M25x1.5	22	22
LA80Z	436.5	500.0	156.5	155	90	90	162.0	M20x1.5/M25x1.5	26	26
LA90S/L	445.0	516.0	174.0	163	90	90	89.0	M20x1.5/M25x1.5	27	26
LA90ZL	490.0	561.0	174.0	163	90	90	213.0	M20x1.5/M25x1.5	33	32
LA100L	491.0	572.0	195.0	168	120	120	129.5	2xM32x1.5	–	35
LA100ZL	561.0	642.0	195.0	168	120	120	261.5	2xM32x1.5	–	45

© Siemens AG 2011

Gearbox FDAFS/FZAFS38B (3- / 2-stage), flange-mounted design and shrink disk

FAFS012

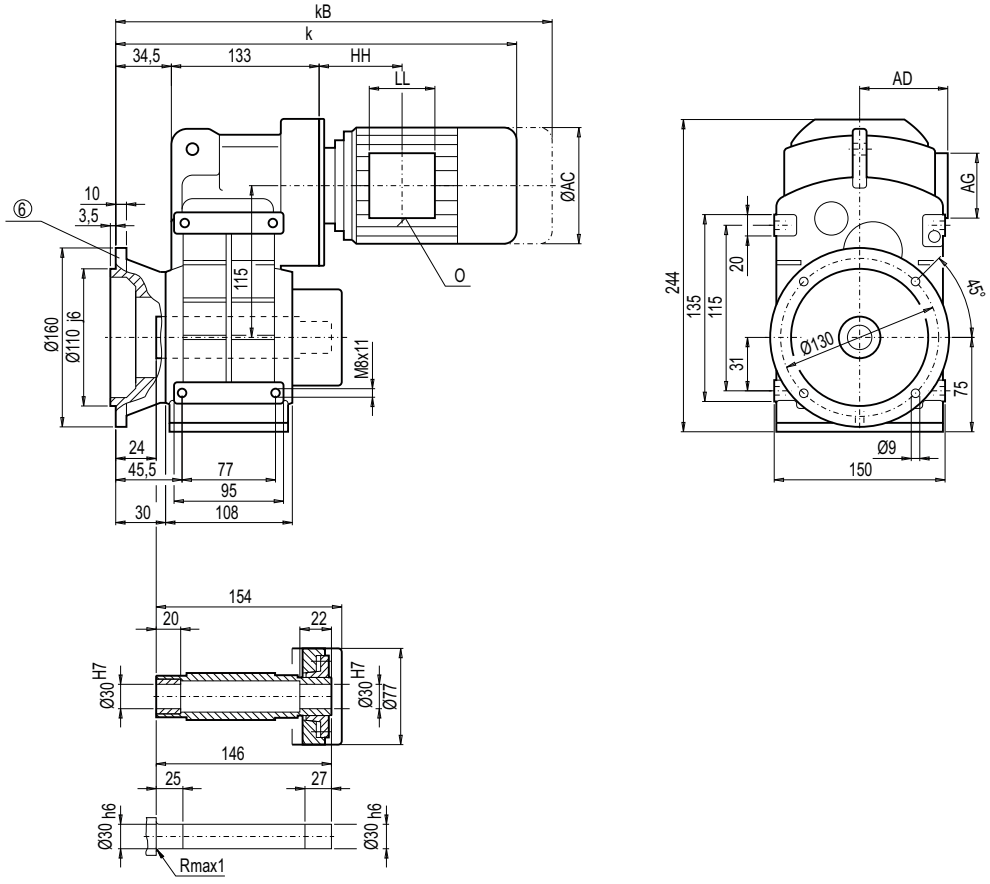

Motor	F.AFS38B k	kB	AC	AD	AG	LL	HH	O	Weight FDAFS38B	FZAFS38B
LA71	401.0	456.0	139.0	146	90	90	89.5	M20x1.5/M25x1.5	19	19
LA71Z	420.0	475.0	139.0	146	90	90	89.5	M20x1.5/M25x1.5	19	19
LA80	438.0	501.5	156.5	155	90	90	89.0	M20x1.5/M25x1.5	24	24
LA80Z	460.5	524.0	156.5	155	90	90	162.0	M20x1.5/M25x1.5	28	28
LA90S/L	469.0	540.0	174.0	163	90	90	89.0	M20x1.5/M25x1.5	29	28
LA90ZL	514.0	585.0	174.0	163	90	90	213.0	M20x1.5/M25x1.5	35	34
LA100L	515.0	596.0	195.0	168	120	120	129.5	2xM32x1.5	–	37
LA100ZL	585.0	666.0	195.0	168	120	120	261.5	2xM32x1.5	–	47

⑥ For note, see page 3/178

© Siemens AG 2011

Dimensions

Gearbox FDZ/FZZ48B (3- / 2-stage), housing-flange-mounted design (C-type)

FZ012

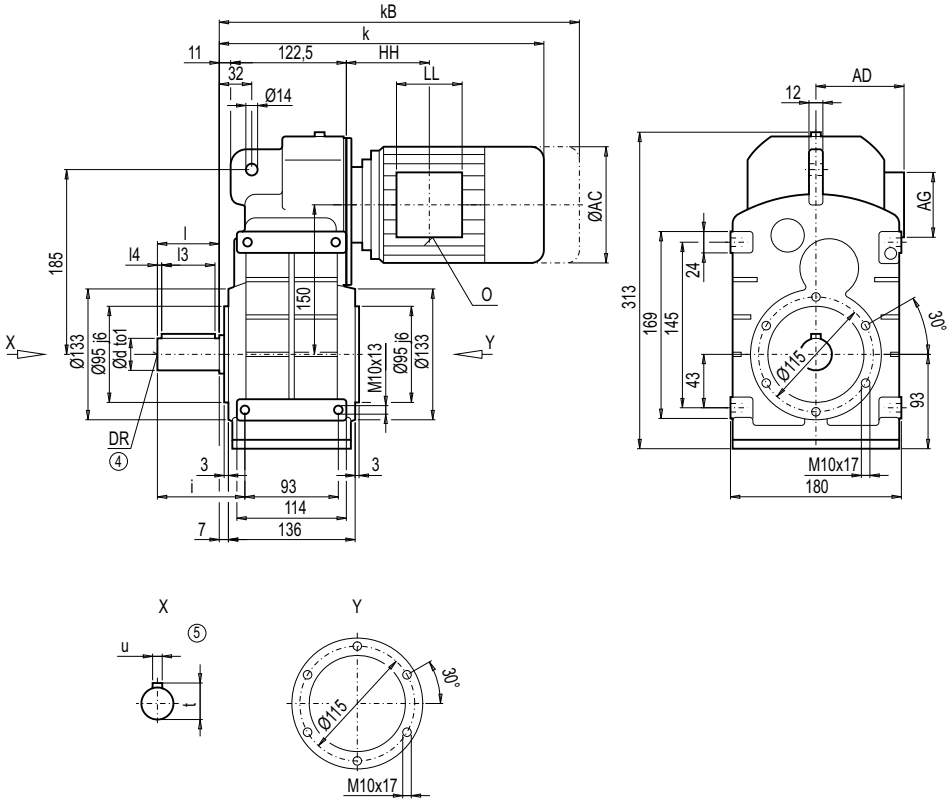

d	to1	l	l3	l4	t	u	i	DR
30 *)	k6	60	50	3.5	33	8	88.5	M10x22
40	k6	80	70	5.0	43	12	108.5	M16x36

*) Preferred series

	F.Z48B								Weight	
Motor	**k**	**kB**	**AC**	**AD**	**AG**	**LL**	**HH**	**O**	**FDZ48B**	**FZZ48B**
LA71	392.0	447.0	139.0	146	90	90	114.5	M20x1.5/M25x1.5	25	25
LA71Z	411.0	466.0	139.0	146	90	90	114.5	M20x1.5/M25x1.5	25	25
LA80	429.0	492.5	156.5	155	90	90	114.0	M20x1.5/M25x1.5	30	30
LA80Z	451.5	515.0	156.5	155	90	90	187.0	M20x1.5/M25x1.5	34	34
LA90S/L	460.0	531.0	174.0	163	90	90	114.0	M20x1.5/M25x1.5	35	35
LA90ZL	505.0	576.0	174.0	163	90	90	238.0	M20x1.5/M25x1.5	41	41
LA100L	506.0	587.0	195.0	168	120	120	154.5	2xM32x1.5	44	44
LA100ZL	576.0	657.0	195.0	168	120	120	286.5	2xM32x1.5	54	54
LA112M	535.5	616.5	219.0	181	120	120	160.0	2xM32x1.5	–	54
LA112ZM	563.5	644.5	219.0	181	120	120	264.0	2xM32x1.5	–	61

④ DIN 332

⑤ Feather key / keyway DIN 6885

© Siemens AG 2011

Gearbox FDF/FZF48B (3- / 2-stage), flange-mounted design (A-type)

FF012

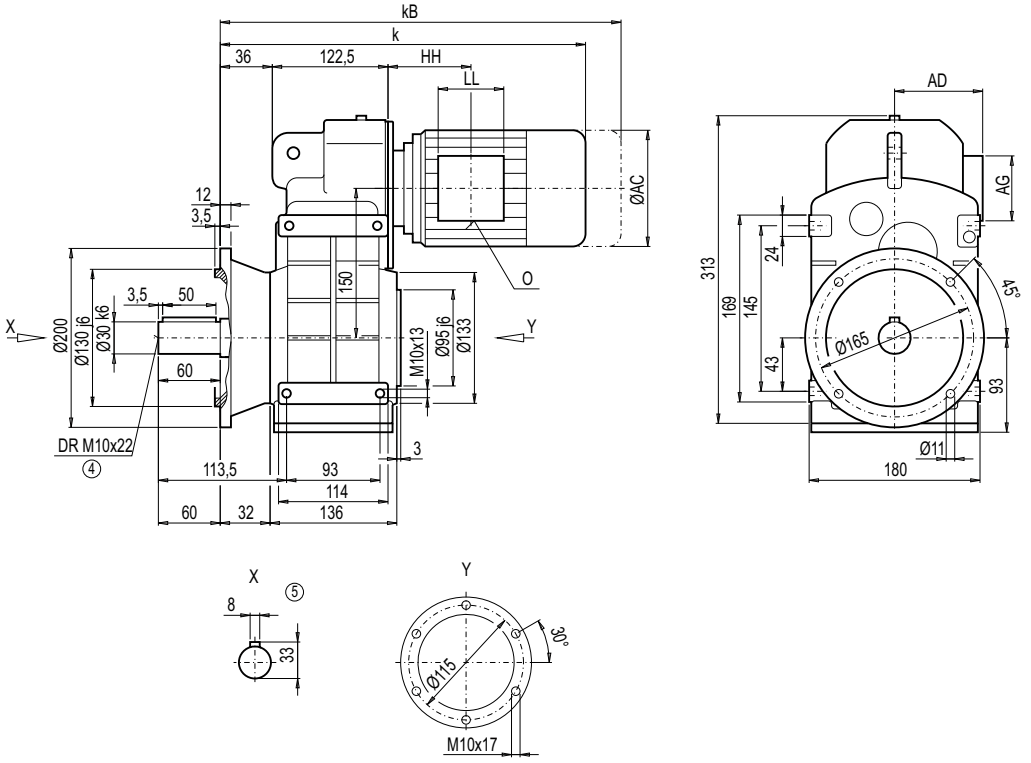

Motor	F.F48B k	kB	AC	AD	AG	LL	HH	O	Weight FDF48B	FZF48B
LA71	417.0	472.0	139.0	146	90	90	114.5	M20x1.5/M25x1.5	28	28
LA71Z	436.0	491.0	139.0	146	90	90	114.5	M20x1.5/M25x1.5	28	28
LA80	454.0	517.5	156.5	155	90	90	114.0	M20x1.5/M25x1.5	33	33
LA80Z	476.5	540.0	156.5	155	90	90	187.0	M20x1.5/M25x1.5	37	37
LA90S/L	485.0	556.0	174.0	163	90	90	114.0	M20x1.5/M25x1.5	38	38
LA90ZL	530.0	601.0	174.0	163	90	90	238.0	M20x1.5/M25x1.5	44	44
LA100L	531.0	612.0	195.0	168	120	120	154.5	2xM32x1.5	47	47
LA100ZL	601.0	682.0	195.0	168	120	120	286.5	2xM32x1.5	57	57
LA112M	560.5	641.5	219.0	181	120	120	160.0	2xM32x1.5	–	57
LA112ZM	588.5	669.5	219.0	181	120	120	264.0	2xM32x1.5	–	64

④ DIN 332

⑤ Feather key / keyway DIN 6885

© Siemens AG 2011

Dimensions

Gearbox FDA/FZA48B, FDAZ/FZAZ48B (3- / 2-stage), housing-flange-mounted design (C-type)

FA012
FAZ012

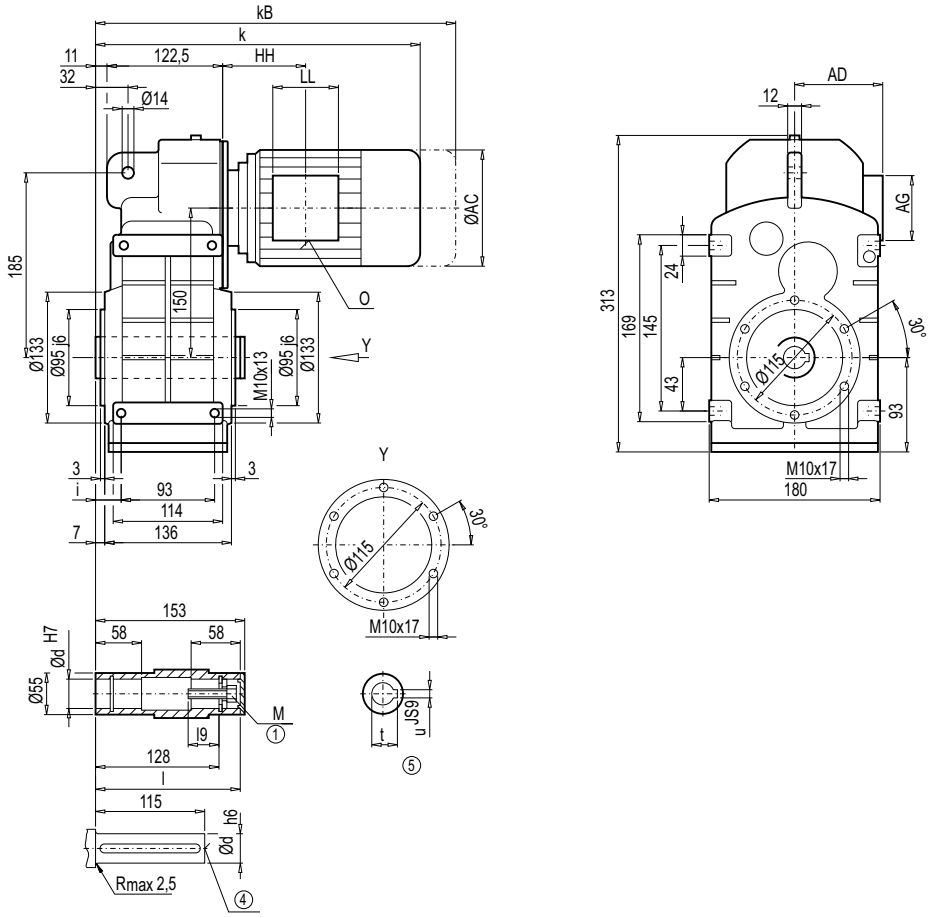

d	l	l9	M	t	u	i
35 *)	150	40	M12	38.3	10	28.5
40	150	48	M16	43.3	12	28.5

*) Preferred series

	F.A.48B								Weight	
Motor	**k**	**kB**	**AC**	**AD**	**AG**	**LL**	**HH**	**O**	**FDA.48B**	**FZA.48B**
LA71	392.0	447.0	139.0	146	90	90	114.5	M20x1.5/M25x1.5	24	24
LA71Z	411.0	466.0	139.0	146	90	90	114.5	M20x1.5/M25x1.5	24	24
LA80	429.0	492.5	156.5	155	90	90	114.0	M20x1.5/M25x1.5	29	29
LA80Z	451.5	515.0	156.5	155	90	90	187.0	M20x1.5/M25x1.5	33	33
LA90S/L	460.0	531.0	174.0	163	90	90	114.0	M20x1.5/M25x1.5	34	33
LA90ZL	505.0	576.0	174.0	163	90	90	238.0	M20x1.5/M25x1.5	40	39
LA100L	506.0	587.0	195.0	168	120	120	154.5	2xM32x1.5	43	42
LA100ZL	576.0	657.0	195.0	168	120	120	286.5	2xM32x1.5	53	52
LA112M	535.5	616.5	219.0	181	120	120	160.0	2xM32x1.5	–	53
LA112ZM	563.5	644.5	219.0	181	120	120	264.0	2xM32x1.5	–	60

① DIN 6912 ④ DIN 332 ⑤ Feather key / keyway DIN 6885

© Siemens AG 2011

Gearbox FDAF/FZAF48B (3- / 2-stage), flange-mounted design

FAF012

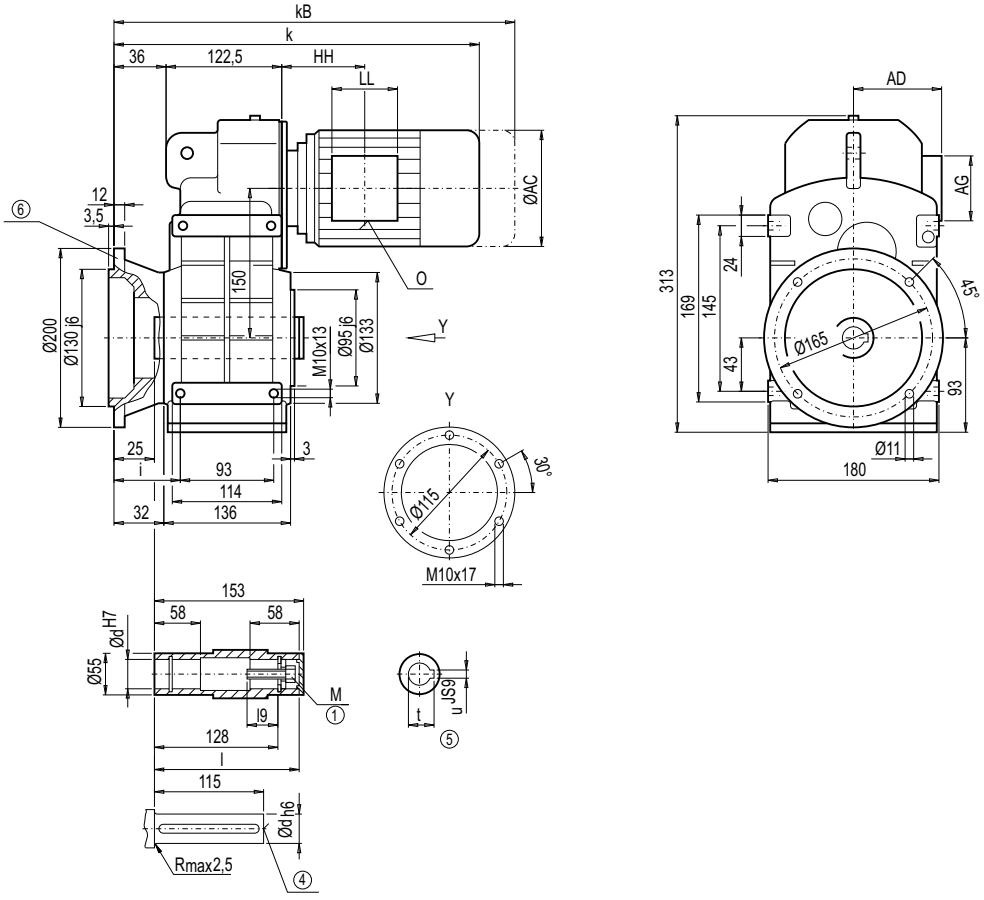

d	l	l9	M	t	u	i
35 *)	150	40	M12	38.3	10	53.5
40	150	48	M16	43.3	12	53.5

*) Preferred series

	F.AF48B								Weight	
Motor	**k**	**kB**	**AC**	**AD**	**AG**	**LL**	**HH**	**O**	**FDAF48B**	**FZAF48B**
LA71	417.0	472.0	139.0	146	90	90	114.5	M20x1.5/M25x1.5	27	27
LA71Z	436.0	491.0	139.0	146	90	90	114.5	M20x1.5/M25x1.5	27	27
LA80	454.0	517.5	156.5	155	90	90	114.0	M20x1.5/M25x1.5	32	32
LA80Z	476.5	540.0	156.5	155	90	90	187.0	M20x1.5/M25x1.5	36	36
LA90S/L	485.0	556.0	174.0	163	90	90	114.0	M20x1.5/M25x1.5	37	36
LA90ZL	530.0	601.0	174.0	163	90	90	238.0	M20x1.5/M25x1.5	43	42
LA100L	531.0	612.0	195.0	168	120	120	154.5	2xM32x1.5	46	45
LA100ZL	601.0	682.0	195.0	168	120	120	286.5	2xM32x1.5	56	55
LA112M	560.5	641.5	219.0	181	120	120	160.0	2xM32x1.5	–	56
LA112ZM	588.5	669.5	219.0	181	120	120	264.0	2xM32x1.5	–	63

① DIN 6912 ④ DIN 332 ⑤ Feather key / keyway DIN 6885 ⑥ For note, see page 3/178

© Siemens AG 2011

Dimensions

Gearbox FDAS/FZAS48B, FDAZS/FZAZS48B (3- / 2-stage), shaft-mounted design with shrink disk

FAS012
FAZS012

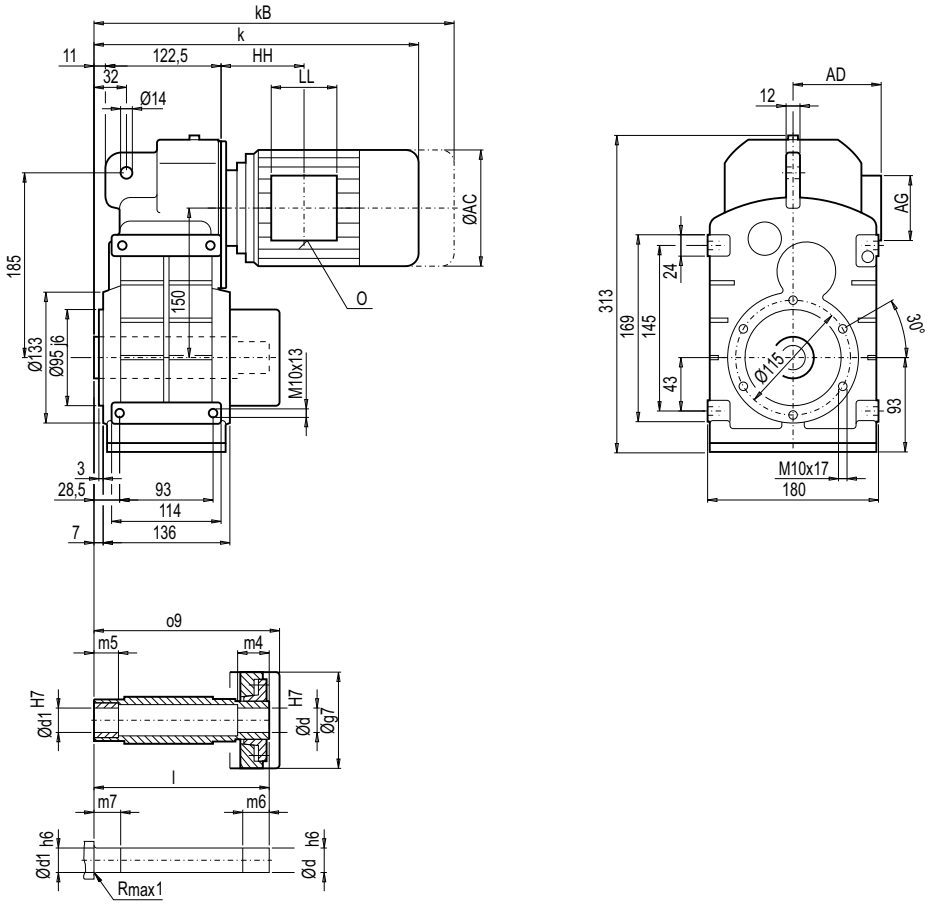

d	d1	l	o9	m4	m5	m6	m7	g7
35 *)	35	177	184	32	20	37	25	93
40	50	177	184	25	20	30	25	93

*) Preferred series

	F.A.S48B								Weight	
Motor	**k**	**kB**	**AC**	**AD**	**AG**	**LL**	**HH**	**O**	**FDA.S48B**	**FZA.S48B**
LA71	392.0	447.0	139.0	146	90	90	114.5	M20x1.5/M25x1.5	25	25
LA71Z	411.0	466.0	139.0	146	90	90	114.5	M20x1.5/M25x1.5	25	25
LA80	429.0	492.5	156.5	155	90	90	114.0	M20x1.5/M25x1.5	30	30
LA80Z	451.5	515.0	156.5	155	90	90	187.0	M20x1.5/M25x1.5	34	34
LA90S/L	460.0	531.0	174.0	163	90	90	114.0	M20x1.5/M25x1.5	34	34
LA90ZL	505.0	576.0	174.0	163	90	90	238.0	M20x1.5/M25x1.5	40	40
LA100L	506.0	587.0	195.0	168	120	120	154.5	2xM32x1.5	43	43
LA100ZL	576.0	657.0	195.0	168	120	120	286.5	2xM32x1.5	53	53
LA112M	535.5	616.5	219.0	181	120	120	160.0	2xM32x1.5	–	54
LA112ZM	563.5	644.5	219.0	181	120	120	264.0	2xM32x1.5	–	61

© Siemens AG 2011

Gearbox FDAFS/FZAFS48B (3- / 2-stage), flange-mounted design and shrink disk

FAFS012

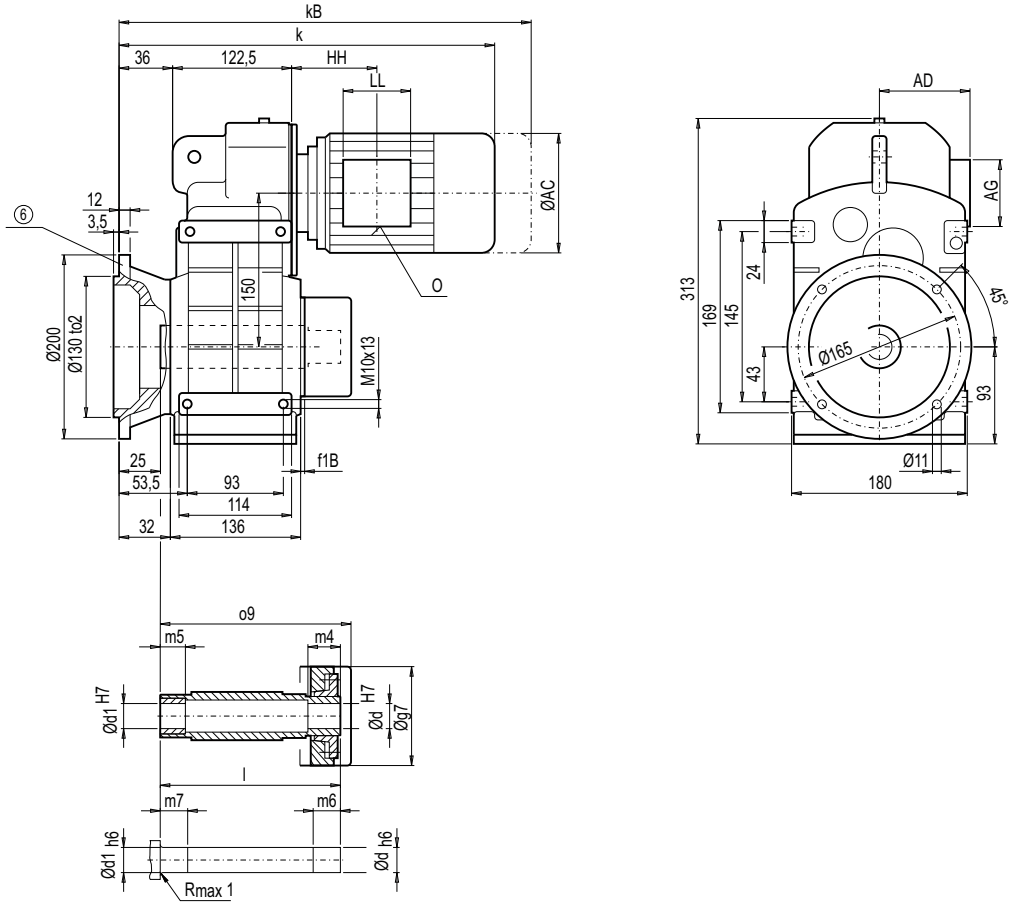

d	d1	l	o9	m4	m5	m6	m7	g7
35 *)	35	177	184	32	20	37	25	93
40	40	177	184	25	20	30	25	93

*) Preferred series

	F.AFS48B								Weight	
Motor	**k**	**kB**	**AC**	**AD**	**AG**	**LL**	**HH**	**O**	**FDAFS48B**	**FZAFS48B**
LA71	417.0	472.0	139.0	146	90	90	114.5	M20x1.5/M25x1.5	28	28
LA71Z	436.0	491.0	139.0	146	90	90	114.5	M20x1.5/M25x1.5	28	28
LA80	454.0	517.5	156.5	155	90	90	114.0	M20x1.5/M25x1.5	33	33
LA80Z	476.5	540.0	156.5	155	90	90	187.0	M20x1.5/M25x1.5	37	37
LA90S/L	485.0	556.0	174.0	163	90	90	114.0	M20x1.5/M25x1.5	37	37
LA90ZL	530.0	601.0	174.0	163	90	90	238.0	M20x1.5/M25x1.5	43	43
LA100L	531.0	612.0	195.0	168	120	120	154.5	2xM32x1.5	46	46
LA100ZL	601.0	682.0	195.0	168	120	120	286.5	2xM32x1.5	56	56
LA112M	560.5	641.5	219.0	181	120	120	160.0	2xM32x1.5	–	57
LA112ZM	588.5	669.5	219.0	181	120	120	264.0	2xM32x1.5	–	64

⑥ For note, see page 3/178

© Siemens AG 2011

Dimensions

Gearbox FDZ/FZZ68B (3- / 2-stage), housing-flange-mounted design (C-type)

FZ012

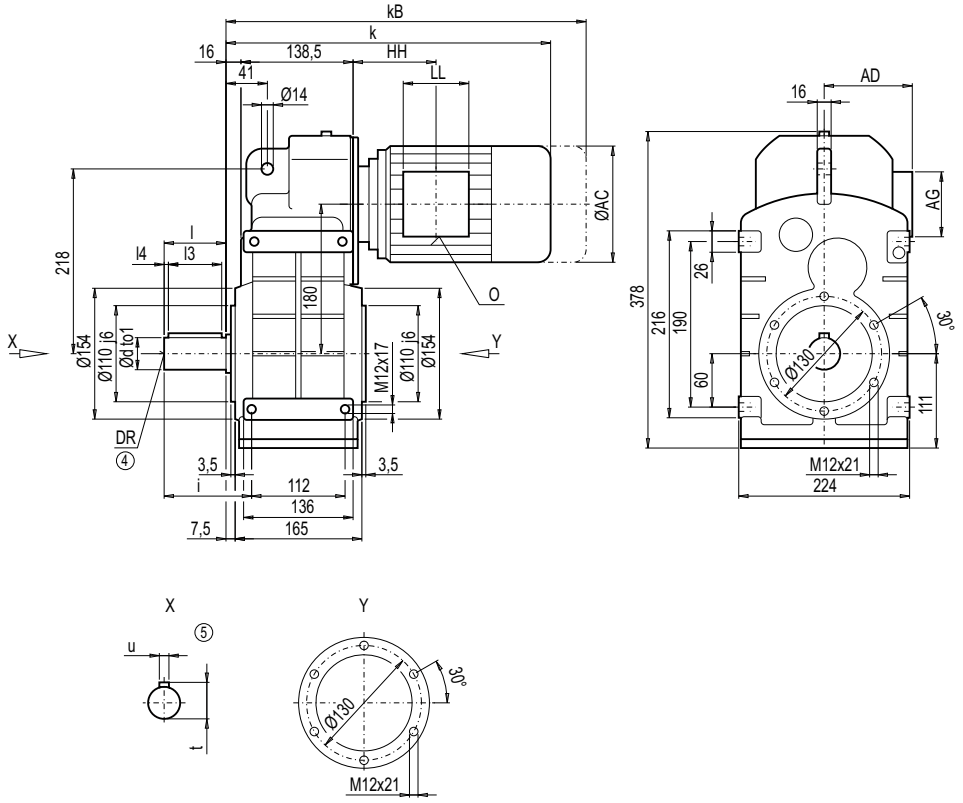

d	to1	l	l3	l4	t	u	i	DR
35	k6	70	56	5	38.0	10	104	M12x28
40 *)	k6	80	70	5	43.0	12	114	M16x36
50	k6	100	80	10	53.5	14	134	M16x36

*) Preferred series

	F.Z68B								Weight	
Motor	**k**	**kB**	**AC**	**AD**	**AG**	**LL**	**HH**	**O**	**FDZ68B**	**FZZ68B**
LA71	407.5	462.5	139.0	146	90	90	109.0	M20x1.5/M25x1.5	40	–
LA71Z	426.5	481.5	139.0	146	90	90	109.0	M20x1.5/M25x1.5	40	–
LA80	444.5	508.0	156.5	155	90	90	108.5	M20x1.5/M25x1.5	45	45
LA80Z	467.0	530.5	156.5	155	90	90	181.5	M20x1.5/M25x1.5	49	49
LA90S/L	475.5	546.5	174.0	163	90	90	108.5	M20x1.5/M25x1.5	50	50
LA90ZL	520.5	591.5	174.0	163	90	90	232.5	M20x1.5/M25x1.5	56	56
LA100L	521.5	602.5	195.0	168	120	120	149.0	2xM32x1.5	59	59
LA100ZL	591.5	672.5	195.0	168	120	120	281.0	2xM32x1.5	69	69
LA112M	550.5	631.5	219.0	181	120	120	154.0	2xM32x1.5	–	70
LA112ZM	578.5	659.5	219.0	181	120	120	258.0	2xM32x1.5	–	77
LA132S/M	612.5	714.5	259.0	195	140	140	196.5	2xM32x1.5	–	80
LA132ZM	658.5	760.5	259.0	195	140	140	304.5	2xM32x1.5	–	51

④ DIN 332

⑤ Feather key / keyway DIN 6885

© Siemens AG 2011

Gearbox FDF/FZF68B (3- / 2-stage), flange-mounted design (A-type)

FF012

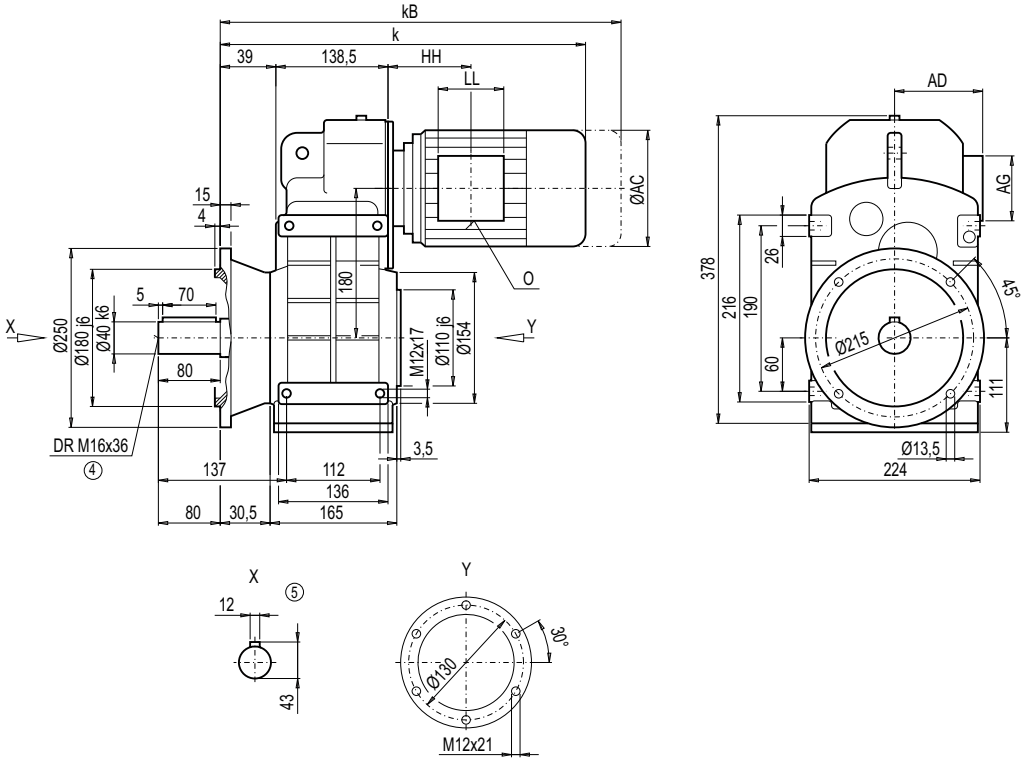

Motor	F.F68B k	kB	AC	AD	AG	LL	HH	O	Weight FDF68B	Weight FZF68B
LA71	430.5	485.5	139.0	146	90	90	109.0	M20x1.5/M25x1.5	48	–
LA71Z	449.5	504.5	139.0	146	90	90	109.0	M20x1.5/M25x1.5	48	–
LA80	467.5	531.0	156.5	155	90	90	108.5	M20x1.5/M25x1.5	53	53
LA80Z	490.0	553.5	156.5	155	90	90	181.5	M20x1.5/M25x1.5	57	57
LA90S/L	498.5	569.5	174.0	163	90	90	108.5	M20x1.5/M25x1.5	57	57
LA90ZL	543.5	614.5	174.0	163	90	90	232.5	M20x1.5/M25x1.5	63	63
LA100L	544.5	625.5	195.0	168	120	120	149.0	2xM32x1.5	67	67
LA100ZL	614.5	695.5	195.0	168	120	120	281.0	2xM32x1.5	77	77
LA112M	573.5	654.5	219.0	181	120	120	154.0	2xM32x1.5	–	78
LA112ZM	601.5	682.5	219.0	181	120	120	258.0	2xM32x1.5	–	85
LA132S/M	635.5	737.5	259.0	195	140	140	196.5	2xM32x1.5	–	88
LA132ZM	681.5	783.5	259.0	195	140	140	304.5	2xM32x1.5	–	109

④ DIN 332

⑤ Feather key / keyway DIN 6885

© Siemens AG 2011

Dimensions

Gearbox FDA/FZA68B, FDAZ/FZAZ68B (3- / 2-stage), housing-flange-mounted design (C-type)

FA012
FAZ012

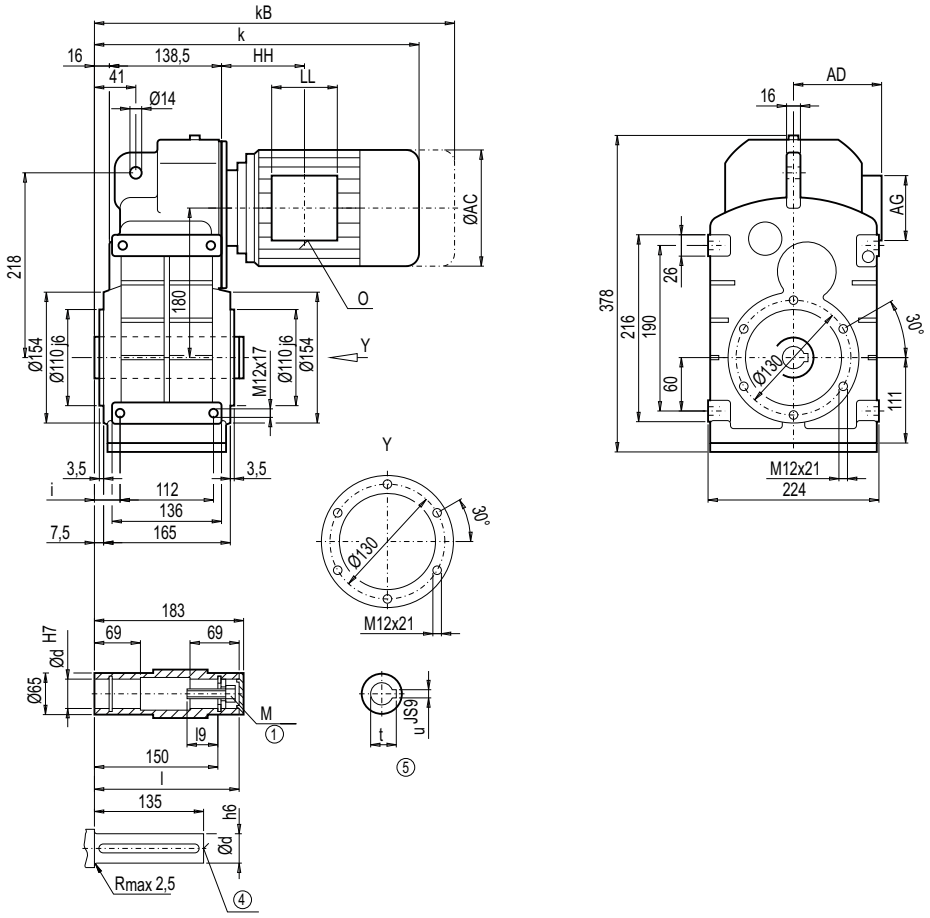

d	l	l9	M	t	u	i
40 *)	180	48	M16	43.3	12	34
45	180	47	M16	48.8	14	34

*) Preferred series

	F.A.68B								Weight	
Motor	**k**	**kB**	**AC**	**AD**	**AG**	**LL**	**HH**	**O**	**FDA.68B**	**FZA.68B**
LA71	407.5	462.5	139.0	146	90	90	109.0	M20x1.5/M25x1.5	37	–
LA71Z	426.5	481.5	139.0	146	90	90	109.0	M20x1.5/M25x1.5	37	–
LA80	444.5	508.0	156.5	155	90	90	108.5	M20x1.5/M25x1.5	42	42
LA80Z	467.0	530.5	156.5	155	90	90	181.5	M20x1.5/M25x1.5	46	46
LA90S/L	475.5	546.5	174.0	163	90	90	108.5	M20x1.5/M25x1.5	46	46
LA90ZL	520.5	591.5	174.0	163	90	90	232.5	M20x1.5/M25x1.5	52	52
LA100L	521.5	602.5	195.0	168	120	120	149.0	2xM32x1.5	55	55
LA100ZL	591.5	672.5	195.0	168	120	120	281.0	2xM32x1.5	65	65
LA112M	550.5	631.5	219.0	181	120	120	154.0	2xM32x1.5	–	67
LA112ZM	578.5	659.5	219.0	181	120	120	258.0	2xM32x1.5	–	74
LA132S/M	612.5	714.5	259.0	195	140	140	196.5	2xM32x1.5	–	77
LA132ZM	658.5	760.5	259.0	195	140	140	304.5	2xM32x1.5	–	98

① DIN 6912 ④ DIN 332 ⑤ Feather key / keyway DIN 6885

© Siemens AG 2011

Gearbox FDAF/FZAF68B (3- / 2-stage), flange-mounted design

FAF012

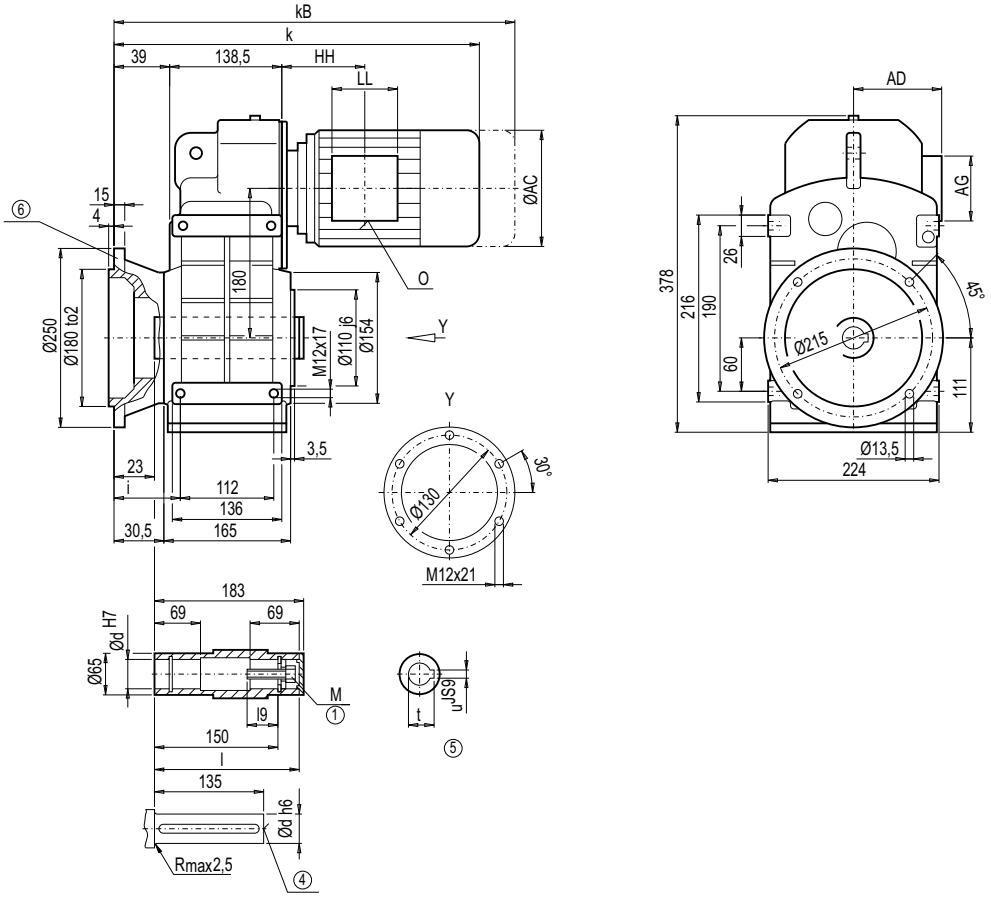

d	l	l9	M	t	u	i
40 *)	180	48	M16	43.3	12	57
45	180	47	M16	48.8	14	57

*) Preferred series

	F.AF68B								Weight	
Motor	**k**	**kB**	**AC**	**AD**	**AG**	**LL**	**HH**	**O**	**FDAF68B**	**FZAF68B**
LA71	430.5	485.5	139.0	146	90	90	109.0	M20x1.5/M25x1.5	45	–
LA71Z	449.5	504.5	139.0	146	90	90	109.0	M20x1.5/M25x1.5	45	–
LA80	467.5	531.0	156.5	155	90	90	108.5	M20x1.5/M25x1.5	50	50
LA80Z	490.0	553.5	156.5	155	90	90	181.5	M20x1.5/M25x1.5	54	54
LA90S/L	498.5	569.5	174.0	163	90	90	108.5	M20x1.5/M25x1.5	54	54
LA90ZL	543.5	614.5	174.0	163	90	90	232.5	M20x1.5/M25x1.5	60	60
LA100L	544.5	625.5	195.0	168	120	120	149.0	2xM32x1.5	63	63
LA100ZL	614.5	695.5	195.0	168	120	120	281.0	2xM32x1.5	73	73
LA112M	573.5	654.5	219.0	181	120	120	154.0	2xM32x1.5	–	75
LA112ZM	601.5	682.5	219.0	181	120	120	258.0	2xM32x1.5	–	82
LA132S/M	635.5	737.5	259.0	195	140	140	196.5	2xM32x1.5	–	85
LA132ZM	681.5	783.5	259.0	195	140	140	304.5	2xM32x1.5	–	106

① DIN 6912 ④ DIN 332 ⑤ Feather key / keyway DIN 6885 ⑥ For note, see page 3/178

© Siemens AG 2011

Dimensions

Gearbox FDAS/FZAS68B, FDAZS/FZAZS68B (3- / 2-stage), shaft-mounted design with shrink disk

FAS012
FAZS012

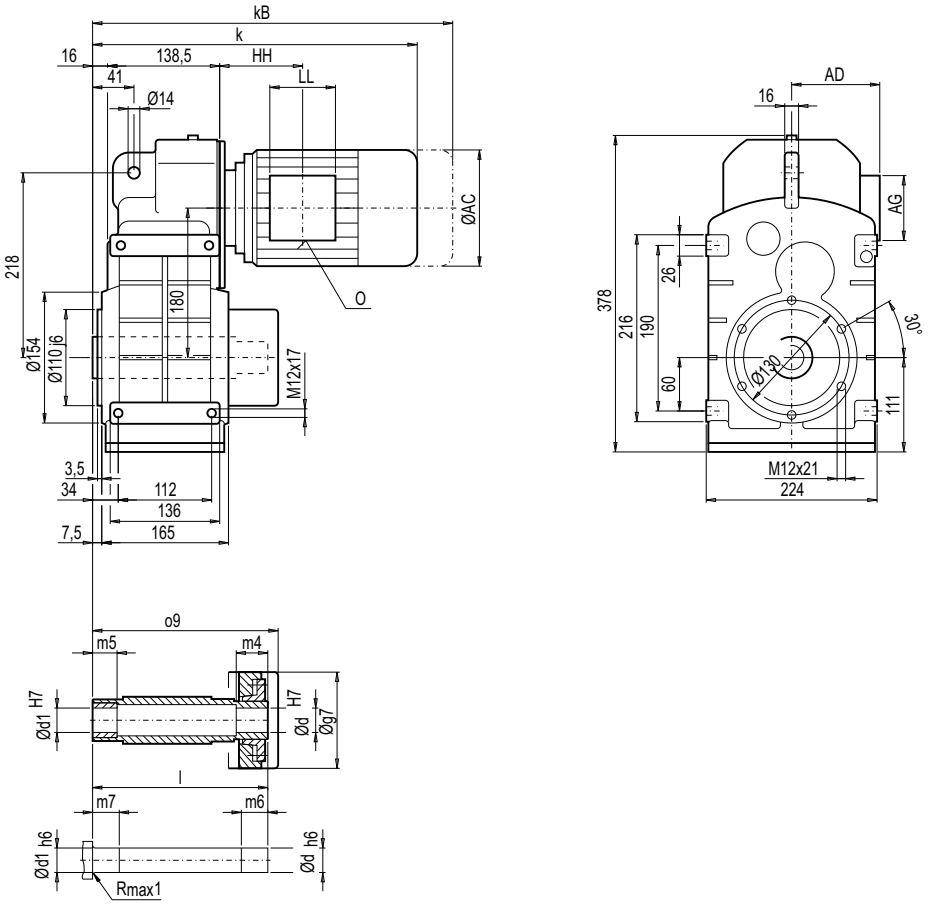

d	d1	l	o9	m4	m5	m6	m7	g7
40 *)	40	209	216	35	20	40	25	112
50	50	209	216	27	20	32	25	112

*) Preferred series

	F.A.S68B								Weight	
Motor	**k**	**kB**	**AC**	**AD**	**AG**	**LL**	**HH**	**O**	**FDA.S68B**	**FZA.S68B**
LA71	407.5	462.5	139.0	146	90	90	109.0	M20x1.5/M25x1.5	38	–
LA71Z	426.5	481.5	139.0	146	90	90	109.0	M20x1.5/M25x1.5	38	–
LA80	444.5	508.0	156.5	155	90	90	108.5	M20x1.5/M25x1.5	43	43
LA80Z	467.0	530.5	156.5	155	90	90	181.5	M20x1.5/M25x1.5	47	47
LA90S/L	475.5	546.5	174.0	163	90	90	108.5	M20x1.5/M25x1.5	48	48
LA90ZL	520.5	591.5	174.0	163	90	90	232.5	M20x1.5/M25x1.5	54	54
LA100L	521.5	602.5	195.0	168	120	120	149.0	2xM32x1.5	57	57
LA100ZL	591.5	672.5	195.0	168	120	120	281.0	2xM32x1.5	67	67
LA112M	550.5	631.5	219.0	181	120	120	154.0	2xM32x1.5	–	68
LA112ZM	578.5	659.5	219.0	181	120	120	258.0	2xM32x1.5	–	75
LA132S/M	612.5	714.5	259.0	195	140	140	196.5	2xM32x1.5	–	78
LA132ZM	658.5	760.5	259.0	195	140	140	304.5	2xM32x1.5	–	99

© Siemens AG 2011

Gearbox FDAFS/FZAFS68B (3- / 2-stage), flange-mounted design and shrink disk

FAFS012

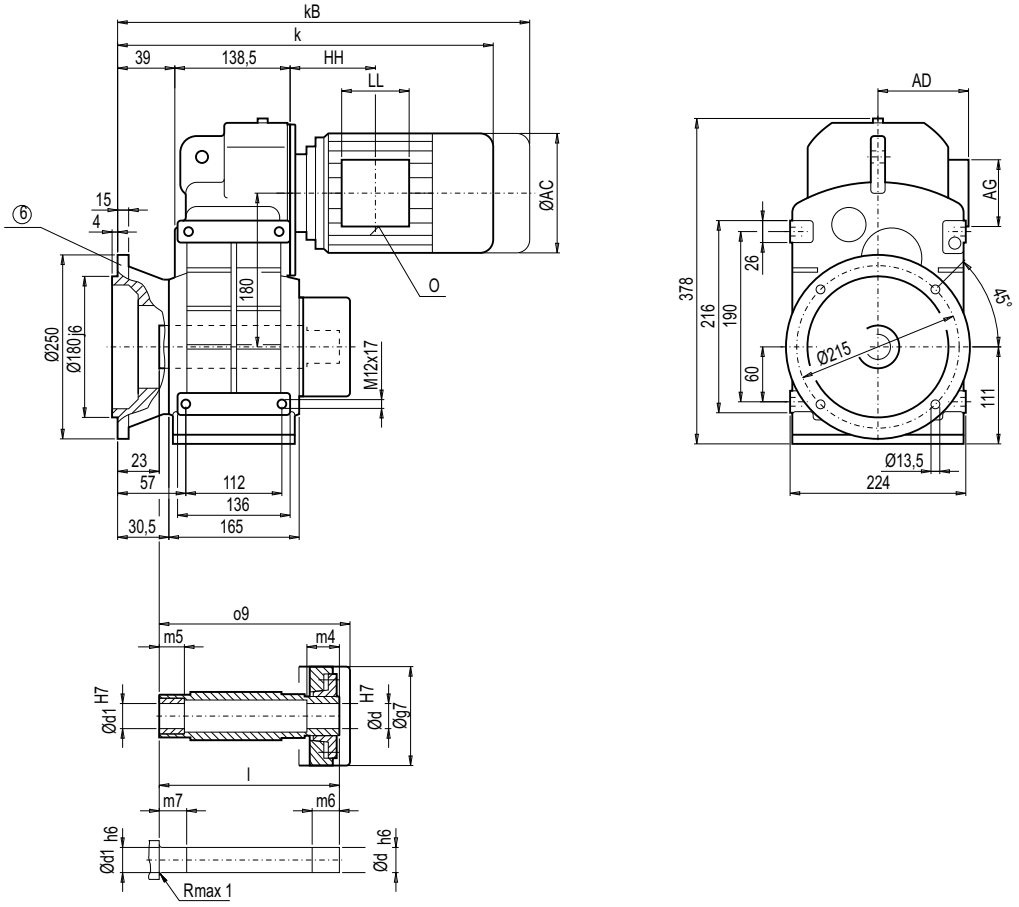

d	d1	l	o9	m4	m5	m6	m7	g7
40 *)	40	209	216	35	20	40	25	112
50	50	209	216	27	20	32	25	112

*) Preferred series

	F.AFS68B								Weight	
Motor	**k**	**kB**	**AC**	**AD**	**AG**	**LL**	**HH**	**O**	**FDAFS68B**	**FZAFS68B**
LA71	430.5	485.5	139.0	146	90	90	109.0	M20x1.5/M25x1.5	46	–
LA71Z	449.5	504.5	139.0	146	90	90	109.0	M20x1.5/M25x1.5	46	–
LA80	467.5	531.0	156.5	155	90	90	108.5	M20x1.5/M25x1.5	51	51
LA80Z	490.0	553.5	156.5	155	90	90	181.5	M20x1.5/M25x1.5	55	55
LA90S/L	498.5	569.5	174.0	163	90	90	108.5	M20x1.5/M25x1.5	55	55
LA90ZL	543.5	614.5	174.0	163	90	90	232.5	M20x1.5/M25x1.5	61	61
LA100L	544.5	625.5	195.0	168	120	120	149.0	2xM32x1.5	65	65
LA100ZL	614.5	695.5	195.0	168	120	120	281.0	2xM32x1.5	75	75
LA112M	573.5	654.5	219.0	181	120	120	154.0	2xM32x1.5	–	76
LA112ZM	601.5	682.5	219.0	181	120	120	258.0	2xM32x1.5	–	83
LA132S/M	635.5	737.5	259.0	195	140	140	196.5	2xM32x1.5	–	86
LA132ZM	681.5	783.5	259.0	195	140	140	304.5	2xM32x1.5	–	107

⑥ For note, see page 3/178

© Siemens AG 2011

Dimensions

Gearbox FDZ/FZZ88B (3- / 2-stage), housing-flange-mounted design (C-type)

FZ012

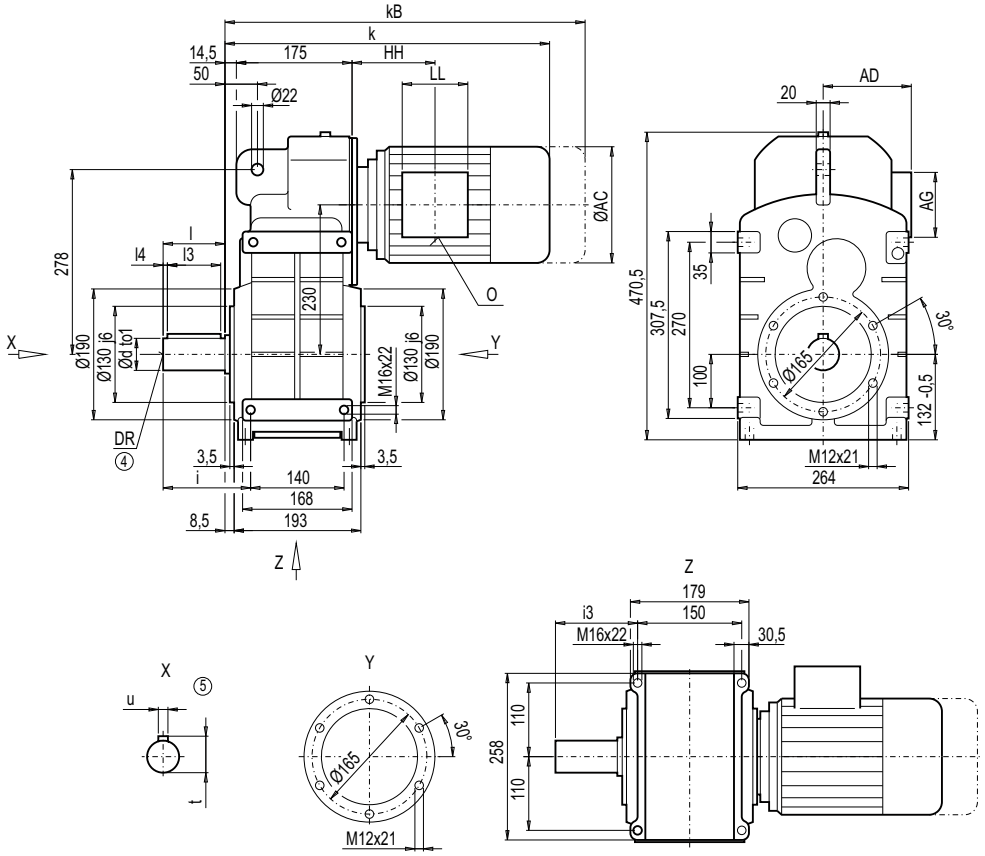

d	to1	l	l3	l4	t	u	i	i3	DR
50 *)	k6	100	80	10	53.5	14	135	130	M16x36
70	m6	140	110	15	74.5	20	175	170	M20x42

*) Preferred series

	F.Z88B								Weight	
Motor	**k**	**kB**	**AC**	**AD**	**AG**	**LL**	**HH**	**O**	**FDZ88B**	**FZZ88B**
LA71	436.5	491.5	139.0	146	90	90	103.0	M20x1.5/M25x1.5	70	–
LA71Z	455.5	510.5	139.0	146	90	90	103.0	M20x1.5/M25x1.5	70	–
LA80	473.5	537.0	156.5	155	90	90	102.5	M20x1.5/M25x1.5	75	75
LA80Z	496.0	559.5	156.5	155	90	90	175.5	M20x1.5/M25x1.5	79	79
LA90S/L	504.5	575.5	174.0	163	90	90	102.5	M20x1.5/M25x1.5	80	80
LA90ZL	549.5	620.5	174.0	163	90	90	226.5	M20x1.5/M25x1.5	86	86
LA100L	550.5	631.5	195.0	168	120	120	143.0	2xM32x1.5	89	89
LA100ZL	620.5	701.5	195.0	168	120	120	275.0	2xM32x1.5	99	99
LA112M	577.5	658.5	219.0	181	120	120	146.0	2xM32x1.5	100	101
LA112ZM	605.5	686.5	219.0	181	120	120	250.0	2xM32x1.5	107	108
LA132S/M	637.5	739.5	259.0	195	140	140	186.5	2xM32x1.5	113	114
LA132ZM	683.5	785.5	259.0	195	140	140	294.5	2xM32x1.5	135	135
LA160M/L	740.0	858.5	313.5	227	165	165	212.0	2xM40x1.5	–	147
LA160ZL	788.0	906.5	313.5	227	165	165	365.0	2xM40x1.5	–	186

④ DIN 332

⑤ Feather key / keyway DIN 6885

© Siemens AG 2011

Gearbox FDF/FZF88B (3- / 2-stage), flange-mounted design (A-type)

FF012

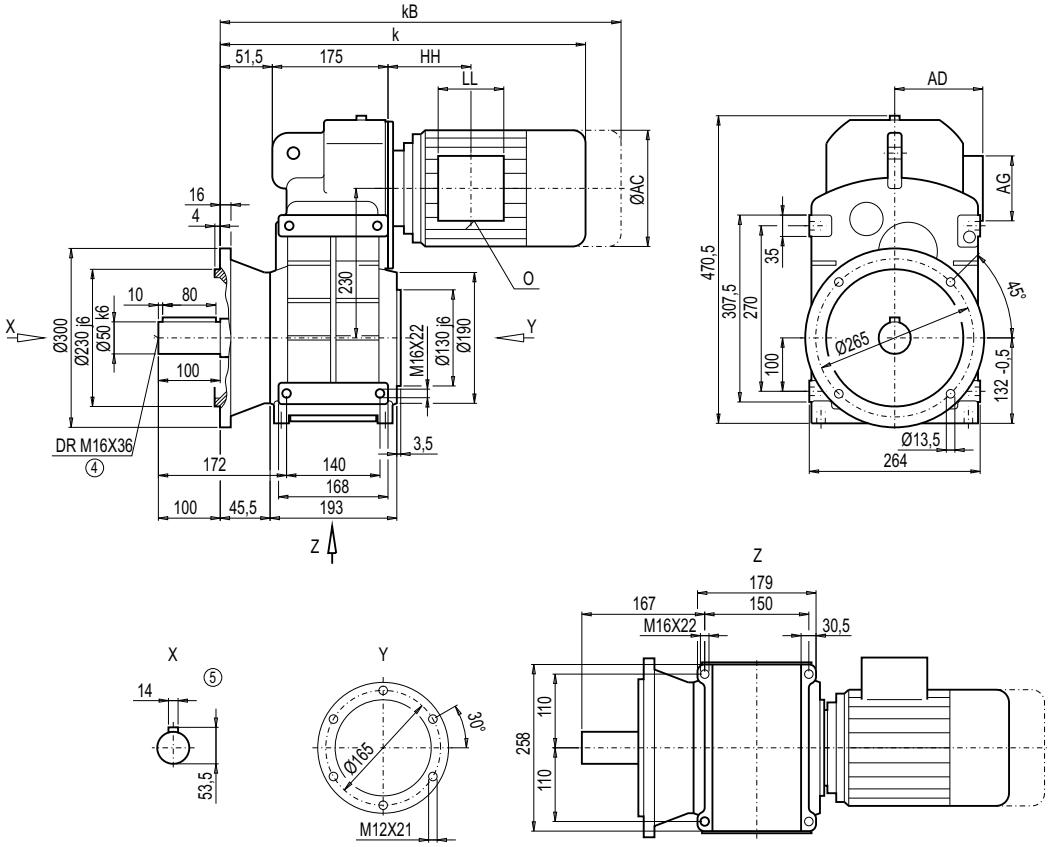

Motor	F.F88B k	kB	AC	AD	AG	LL	HH	O	Weight FDF88B	FZF88B
LA71	473.5	528.5	139.0	146	90	90	103.0	M20x1.5/M25x1.5	81	–
LA71Z	492.5	547.5	139.0	146	90	90	103.0	M20x1.5/M25x1.5	81	–
LA80	510.5	574.0	156.5	155	90	90	102.5	M20x1.5/M25x1.5	86	86
LA80Z	533.0	596.5	156.5	155	90	90	175.5	M20x1.5/M25x1.5	90	90
LA90S/L	541.5	612.5	174.0	163	90	90	102.5	M20x1.5/M25x1.5	91	91
LA90ZL	586.5	657.5	174.0	163	90	90	226.5	M20x1.5/M25x1.5	97	97
LA100L	587.5	668.5	195.0	168	120	120	143.0	2xM32x1.5	100	100
LA100ZL	657.5	738.5	195.0	168	120	120	275.0	2xM32x1.5	110	110
LA112M	614.5	695.5	219.0	181	120	120	146.0	2xM32x1.5	111	112
LA112ZM	642.5	723.5	219.0	181	120	120	250.0	2xM32x1.5	118	119
LA132S/M	674.5	776.5	259.0	195	140	140	186.5	2xM32x1.5	124	125
LA132ZM	720.5	822.5	259.0	195	140	140	294.5	2xM32x1.5	146	146
LA160M/L	777.0	895.5	313.5	227	165	165	212.0	2xM40x1.5	–	158
LA160ZL	825.0	943.5	313.5	227	165	165	365.0	2xM40x1.5	–	197

④ DIN 332

⑤ Feather key / keyway DIN 6885

© Siemens AG 2011

Dimensions

Gearbox FDA/FZA88B, FDAZ/FZAZ88B (3- / 2-stage), housing-flange-mounted design (C-type)

FA012
FAZ012

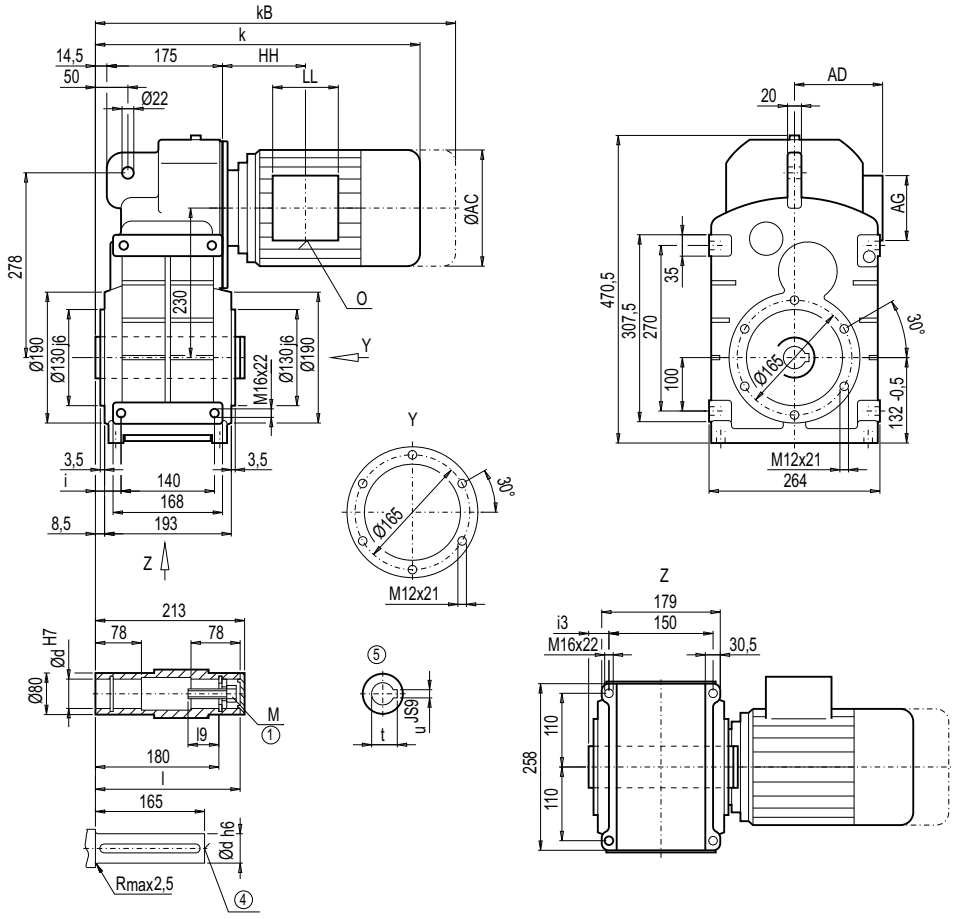

d	l	l9	M	t	u	i	i3
50 *)	210	44.5	M16	53.8	14	35	30
60	210	54.0	M20	64.4	18	35	30

*) Preferred series

	F.A.88B								Weight	
Motor	**k**	**kB**	**AC**	**AD**	**AG**	**LL**	**HH**	**O**	**FDA.88B**	**FZA.88B**
LA71	436.5	491.5	139.0	146	90	90	103.0	M20x1.5/M25x1.5	62	–
LA71Z	455.5	510.5	139.0	146	90	90	103.0	M20x1.5/M25x1.5	62	–
LA80	473.5	537.0	156.5	155	90	90	102.5	M20x1.5/M25x1.5	67	67
LA80Z	496.0	559.5	156.5	155	90	90	175.5	M20x1.5/M25x1.5	71	71
LA90S/L	504.5	575.5	174.0	163	90	90	102.5	M20x1.5/M25x1.5	71	72
LA90ZL	549.5	620.5	174.0	163	90	90	226.5	M20x1.5/M25x1.5	77	78
LA100L	550.5	631.5	195.0	168	120	120	143.0	2xM32x1.5	81	81
LA100ZL	620.5	701.5	195.0	168	120	120	275.0	2xM32x1.5	91	91
LA112M	577.5	658.5	219.0	181	120	120	146.0	2xM32x1.5	92	93
LA112ZM	605.5	686.5	219.0	181	120	120	250.0	2xM32x1.5	99	100
LA132S/M	637.5	739.5	259.0	195	140	140	186.5	2xM32x1.5	105	106
LA132ZM	683.5	785.5	259.0	195	140	140	294.5	2xM32x1.5	126	127
LA160M/L	740.0	858.5	313.5	227	165	165	212.0	2xM40x1.5	–	139
LA160ZL	788.0	906.5	313.5	227	165	165	365.0	2xM40x1.5	–	178

① DIN EN ISO 4014 ④ DIN 332 ⑤ Feather key / keyway DIN 6885

© Siemens AG 2011

Gearbox FDAF/FZAF88B (3- / 2-stage), flange-mounted design

FAF012

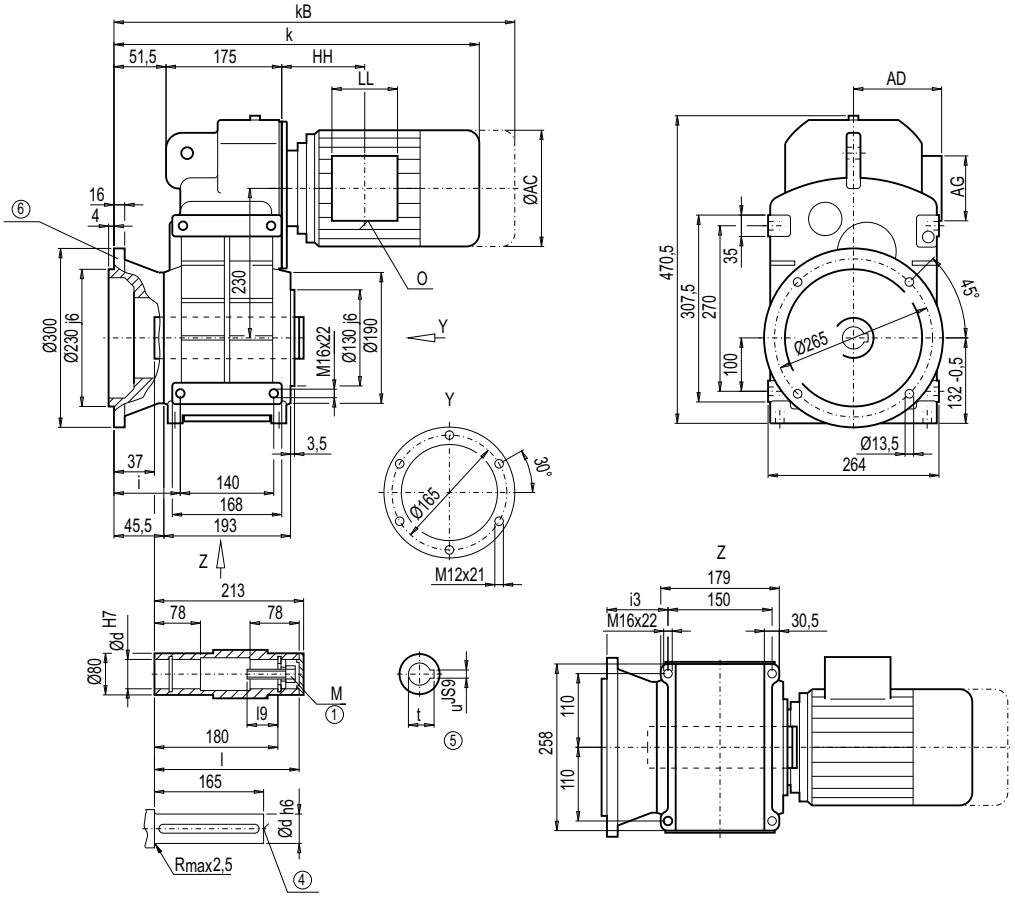

d	l	l9	M	t	u	i	i3
50 *)	210	44.5	M16	53.8	14	72	67
60	210	54.0	M20	64.4	18	72	67

*) Preferred series

	F.AF88B								Weight	
Motor	**k**	**kB**	**AC**	**AD**	**AG**	**LL**	**HH**	**O**	**FDAF88B**	**FZAF88B**
LA71	473.5	528.5	139.0	146	90	90	103.0	M20x1.5/M25x1.5	73	–
LA71Z	492.5	547.5	139.0	146	90	90	103.0	M20x1.5/M25x1.5	73	–
LA80	510.5	574.0	156.5	155	90	90	102.5	M20x1.5/M25x1.5	78	78
LA80Z	533.0	596.5	156.5	155	90	90	175.5	M20x1.5/M25x1.5	82	82
LA90S/L	541.5	612.5	174.0	163	90	90	102.5	M20x1.5/M25x1.5	82	83
LA90ZL	586.5	657.5	174.0	163	90	90	226.5	M20x1.5/M25x1.5	88	89
LA100L	587.5	668.5	195.0	168	120	120	143.0	2xM32x1.5	92	92
LA100ZL	657.5	738.5	195.0	168	120	120	275.0	2xM32x1.5	102	102
LA112M	614.5	695.5	219.0	181	120	120	146.0	2xM32x1.5	103	104
LA112ZM	642.5	723.5	219.0	181	120	120	250.0	2xM32x1.5	110	111
LA132S/M	674.5	776.5	259.0	195	140	140	186.5	2xM32x1.5	116	117
LA132ZM	720.5	822.5	259.0	195	140	140	294.5	2xM32x1.5	137	138
LA160M/L	777.0	895.5	313.5	227	165	165	212.0	2xM40x1.5	–	150
LA160ZL	825.0	943.5	313.5	227	165	165	365.0	2xM40x1.5	–	189

① DIN EN ISO 4014 ④ DIN 332 ⑤ Feather key / keyway DIN 6885 ⑥ For note, see page 3/178

© Siemens AG 2011

Dimensions

Gearbox FDAS/FZAS88B, FDAZS/FZAZS88B (3- / 2-stage), shaft-mounted design with shrink disk

FAS012
FAZS012

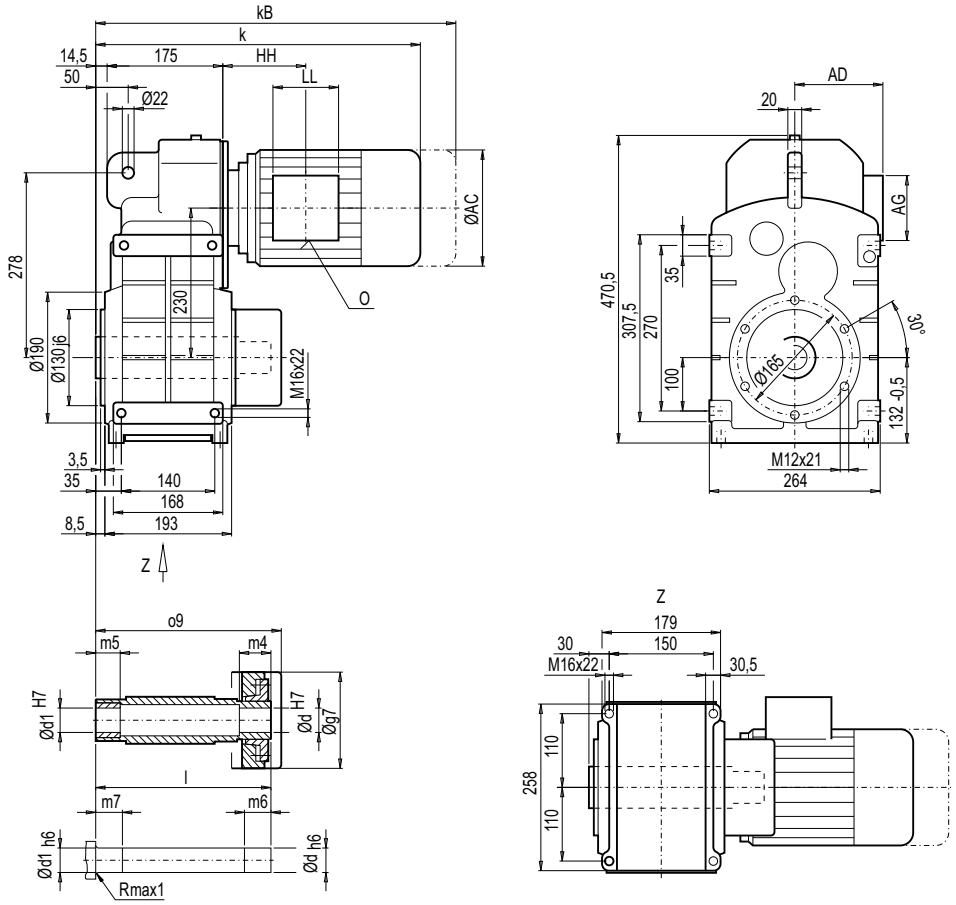

d	d1	l	o9	m4	m5	m6	m7	g7
50 *)	50	241	249	29	30	34	35	132
60	60	241	249	29	30	34	35	132

*) Preferred series

	F.A.S88B								Weight	
Motor	**k**	**kB**	**AC**	**AD**	**AG**	**LL**	**HH**	**O**	**FDA.S88B**	**FZA.S88B**
LA71	436.5	491.5	139.0	146	90	90	103.0	M20x1.5/M25x1.5	64	–
LA71Z	455.5	510.5	139.0	146	90	90	103.0	M20x1.5/M25x1.5	64	–
LA80	473.5	537.0	156.5	155	90	90	102.5	M20x1.5/M25x1.5	69	69
LA80Z	496.0	559.5	156.5	155	90	90	175.5	M20x1.5/M25x1.5	73	73
LA90S/L	504.5	575.5	174.0	163	90	90	102.5	M20x1.5/M25x1.5	73	74
LA90ZL	549.5	620.5	174.0	163	90	90	226.5	M20x1.5/M25x1.5	79	80
LA100L	550.5	631.5	195.0	168	120	120	143.0	2xM32x1.5	82	83
LA100ZL	620.5	701.5	195.0	168	120	120	275.0	2xM32x1.5	92	93
LA112M	577.5	658.5	219.0	181	120	120	146.0	2xM32x1.5	94	95
LA112ZM	605.5	686.5	219.0	181	120	120	250.0	2xM32x1.5	101	102
LA132S/M	637.5	739.5	259.0	195	140	140	186.5	2xM32x1.5	107	108
LA132ZM	683.5	785.5	259.0	195	140	140	294.5	2xM32x1.5	128	129
LA160M/L	740.0	858.5	313.5	227	165	165	212.0	2xM40x1.5	–	140
LA160ZL	788.0	906.5	313.5	227	165	165	365.0	2xM40x1.5	–	179

© Siemens AG 2011

Gearbox FDAFS/FZAFS88B (3- / 2-stage), flange-mounted design and shrink disk

FAFS012

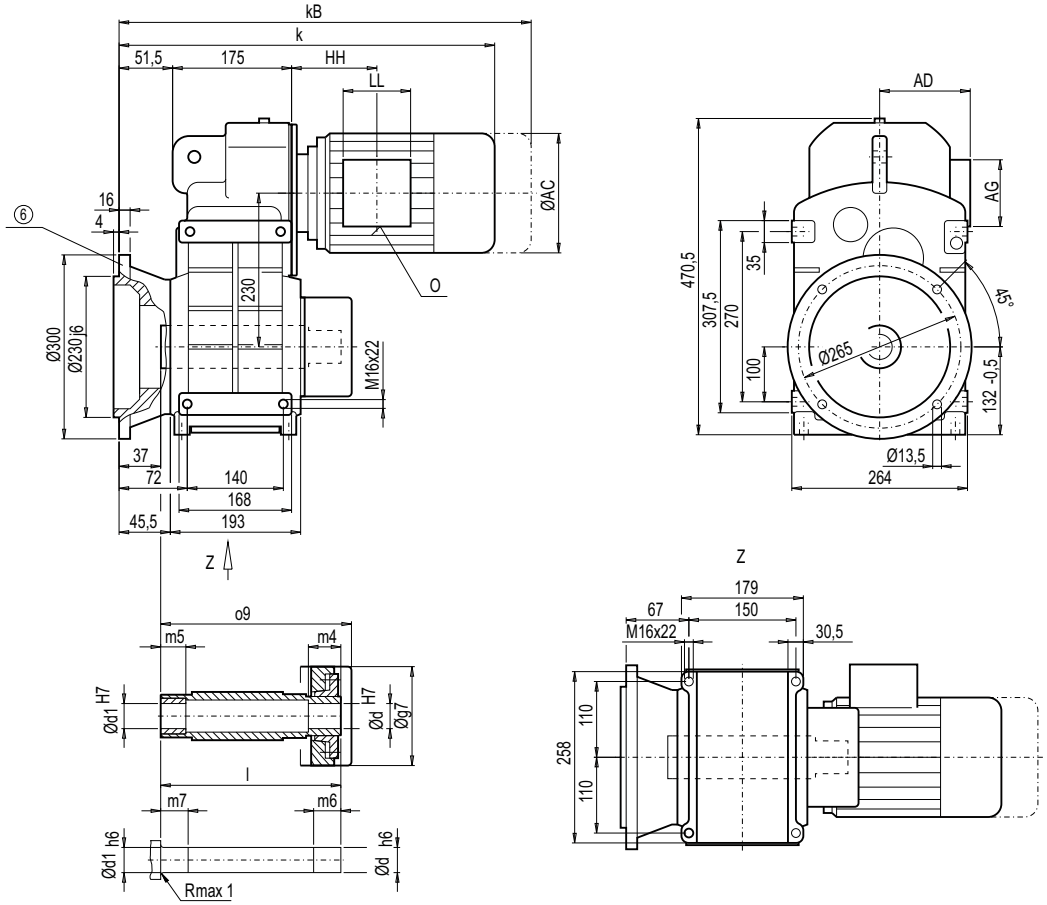

d	d1	l	o9	m4	m5	m6	m7	g7
50 *)	50	241	249	29	30	34	35	132
60	60	241	249	29	30	34	35	132

*) Preferred series

	F.AFS88B								Weight	
Motor	**k**	**kB**	**AC**	**AD**	**AG**	**LL**	**HH**	**O**	**FDAFS88B**	**FZAFS88B**
LA71	473.5	528.5	139.0	146	90	90	103.0	M20x1.5/M25x1.5	75	–
LA71Z	492.5	547.5	139.0	146	90	90	103.0	M20x1.5/M25x1.5	75	–
LA80	510.5	574.0	156.5	155	90	90	102.5	M20x1.5/M25x1.5	80	80
LA80Z	533.0	596.5	156.5	155	90	90	175.5	M20x1.5/M25x1.5	84	84
LA90S/L	541.5	612.5	174.0	163	90	90	102.5	M20x1.5/M25x1.5	84	85
LA90ZL	586.5	657.5	174.0	163	90	90	226.5	M20x1.5/M25x1.5	90	91
LA100L	587.5	668.5	195.0	168	120	120	143.0	2xM32x1.5	93	94
LA100ZL	657.5	738.5	195.0	168	120	120	275.0	2xM32x1.5	103	104
LA112M	614.5	695.5	219.0	181	120	120	146.0	2xM32x1.5	105	106
LA112ZM	642.5	723.5	219.0	181	120	120	250.0	2xM32x1.5	112	113
LA132S/M	674.5	776.5	259.0	195	140	140	186.5	2xM32x1.5	118	119
LA132ZM	720.5	822.5	259.0	195	140	140	294.5	2xM32x1.5	139	140
LA160M/L	777.0	895.5	313.5	227	165	165	212.0	2xM40x1.5	–	151
LA160ZL	825.0	943.5	313.5	227	165	165	365.0	2xM40x1.5	–	190

⑥ For note, see page 3/178

© Siemens AG 2011

Dimensions

Gearbox FDZ/FZZ108B (3- / 2-stage), housing-flange-mounted design (C-type)

FZ012

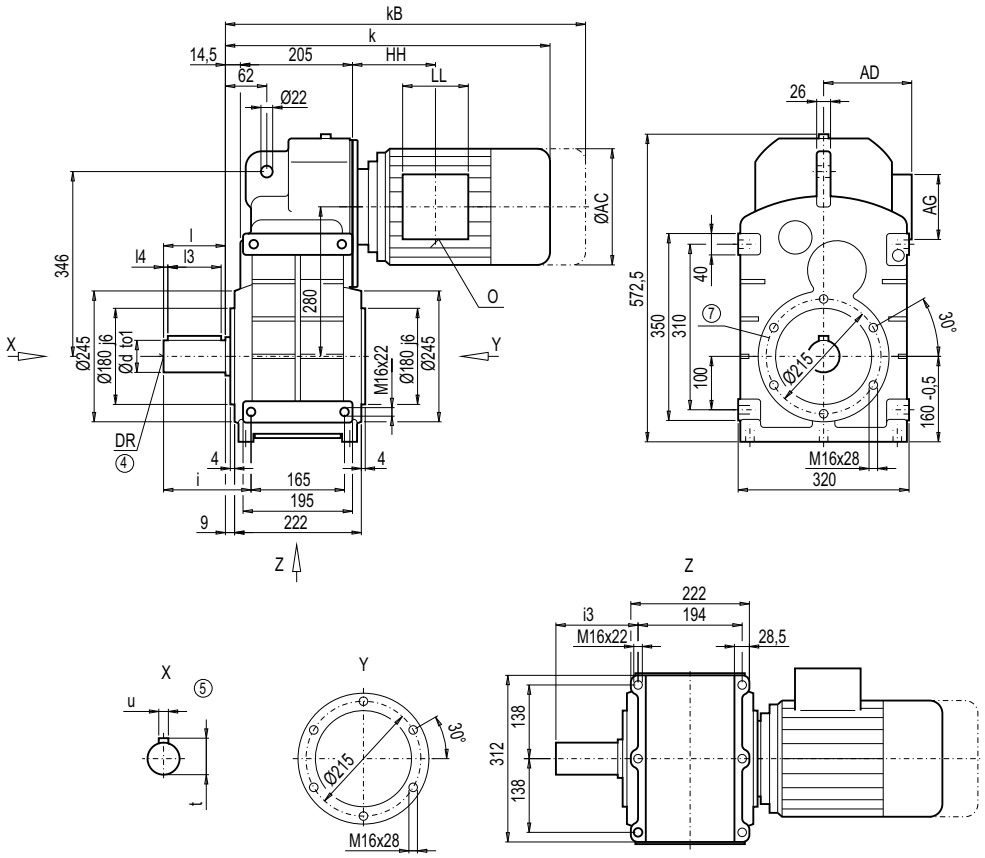

d	to1	l	l3	l4	t	u	i	i3	DR
60 *)	m6	120	110	5	64	18	157.5	143	M20x42
80	m6	170	125	20	85	22	207.5	193	M20x42

*) Preferred series

	F.Z108B								Weight	
Motor	**k**	**kB**	**AC**	**AD**	**AG**	**LL**	**HH**	**O**	**FDZ108B**	**FZZ108B**
LA80	488.5	552.0	156.5	155.0	90	90	87.5	M20x1.5/M25x1.5	121	–
LA80Z	511.0	574.5	156.5	155.0	90	90	160.5	M20x1.5/M25x1.5	125	–
LA90S/L	519.5	590.5	174.0	163.0	90	90	87.5	M20x1.5/M25x1.5	126	–
LA90ZL	564.5	635.5	174.0	163.0	90	90	211.5	M20x1.5/M25x1.5	132	–
LA100L	563.0	644.0	195.0	168.0	120	120	125.5	2xM32x1.5	134	134
LA100ZL	633.0	714.0	195.0	168.0	120	120	257.5	2xM32x1.5	144	144
LA112M	589.0	670.0	219.0	181.0	120	120	127.5	2xM32x1.5	146	146
LA112ZM	617.0	698.0	219.0	181.0	120	120	231.5	2xM32x1.5	153	153
LA132S/M	649.0	751.0	259.0	195.0	140	140	168.0	2xM32x1.5	157	158
LA132ZM	695.0	797.0	259.0	195.0	140	140	276.0	2xM32x1.5	179	179
LA160M/L	753.5	872.0	313.5	227.0	165	165	195.5	2xM40x1.5	192	193
LA160ZL	801.5	920.0	313.5	227.0	165	165	348.5	2xM40x1.5	231	232
LG180M/L	813.0	935.0	348.0	322.5	260	192	212.5	2xM40x1.5	–	285
LG180ZM/ZL	864.0	986.0	348.0	322.5	260	192	212.5	2xM40x1.5	–	315

④ DIN 332 ⑤ Feather key / keyway DIN 6885 ⑦ For note, see page 3/179

© Siemens AG 2011

Gearbox FDF/FZF108B (3- / 2-stage), flange-mounted design (A-type)

FF012

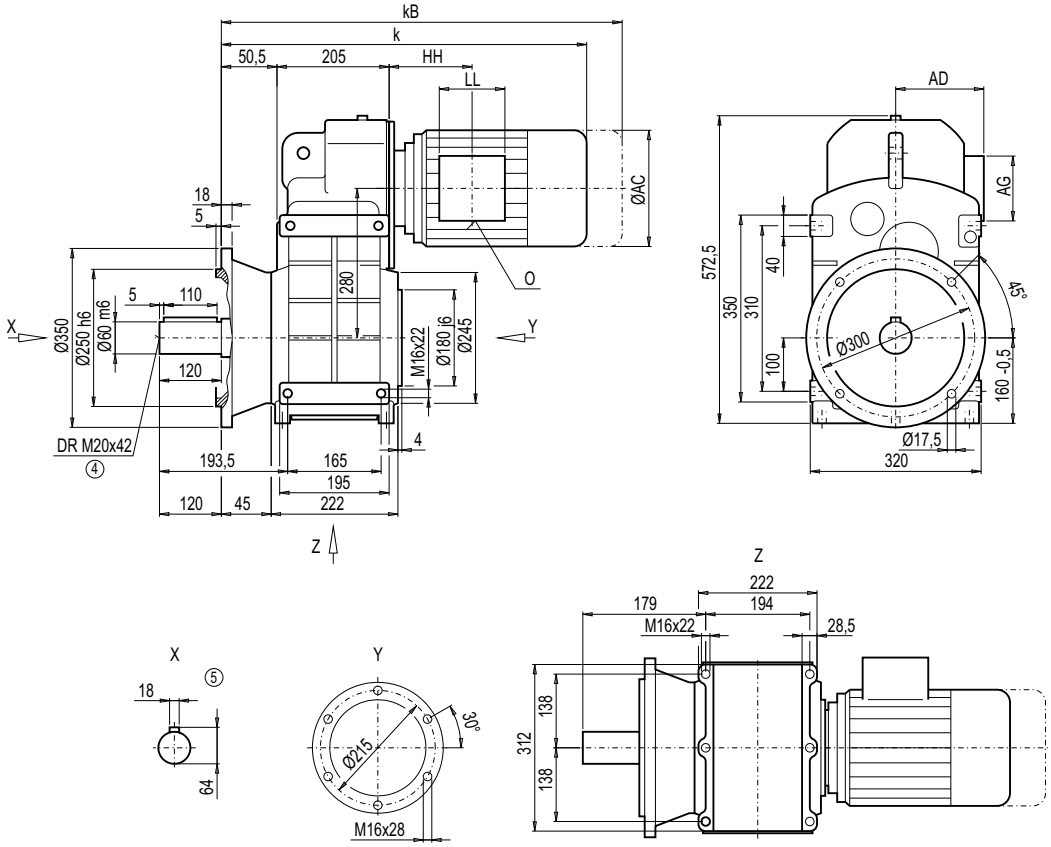

	F.F108B								Weight	
Motor	**k**	**kB**	**AC**	**AD**	**AG**	**LL**	**HH**	**O**	**FDF108B**	**FZF108B**
LA80	524.5	588.0	156.5	155.0	90	90	87.5	M20x1.5/M25x1.5	134	–
LA80Z	547.0	610.5	156.5	155.0	90	90	160.5	M20x1.5/M25x1.5	138	–
LA90S/L	555.5	626.5	174.0	163.0	90	90	87.5	M20x1.5/M25x1.5	139	–
LA90ZL	600.5	671.5	174.0	163.0	90	90	211.5	M20x1.5/M25x1.5	145	–
LA100L	599.0	680.0	195.0	168.0	120	120	125.5	2xM32x1.5	147	147
LA100ZL	669.0	750.0	195.0	168.0	120	120	257.5	2xM32x1.5	157	157
LA112M	625.0	706.0	219.0	181.0	120	120	127.5	2xM32x1.5	159	159
LA112ZM	653.0	734.0	219.0	181.0	120	120	231.5	2xM32x1.5	166	166
LA132S/M	685.0	787.0	259.0	195.0	140	140	168.0	2xM32x1.5	170	171
LA132ZM	731.0	833.0	259.0	195.0	140	140	276.0	2xM32x1.5	192	192
LA160M/L	789.5	908.0	313.5	227.0	165	165	195.5	2xM40x1.5	205	206
LA160ZL	837.5	956.0	313.5	227.0	165	165	348.5	2xM40x1.5	244	245
LG180M/L	849.0	971.0	348.0	322.5	260	192	212.5	2xM40x1.5	–	298
LG180ZM/ZL	900.0	1 022.0	348.0	322.5	260	192	212.5	2xM40x1.5	–	328

④ DIN 332

⑤ Feather key / keyway DIN 6885

© Siemens AG 2011

Dimensions

Gearbox FDA/FZA108B, FDAZ/FZAZ108B (3- / 2-stage), housing-flange-mounted design (C-type)

FA012
FAZ012

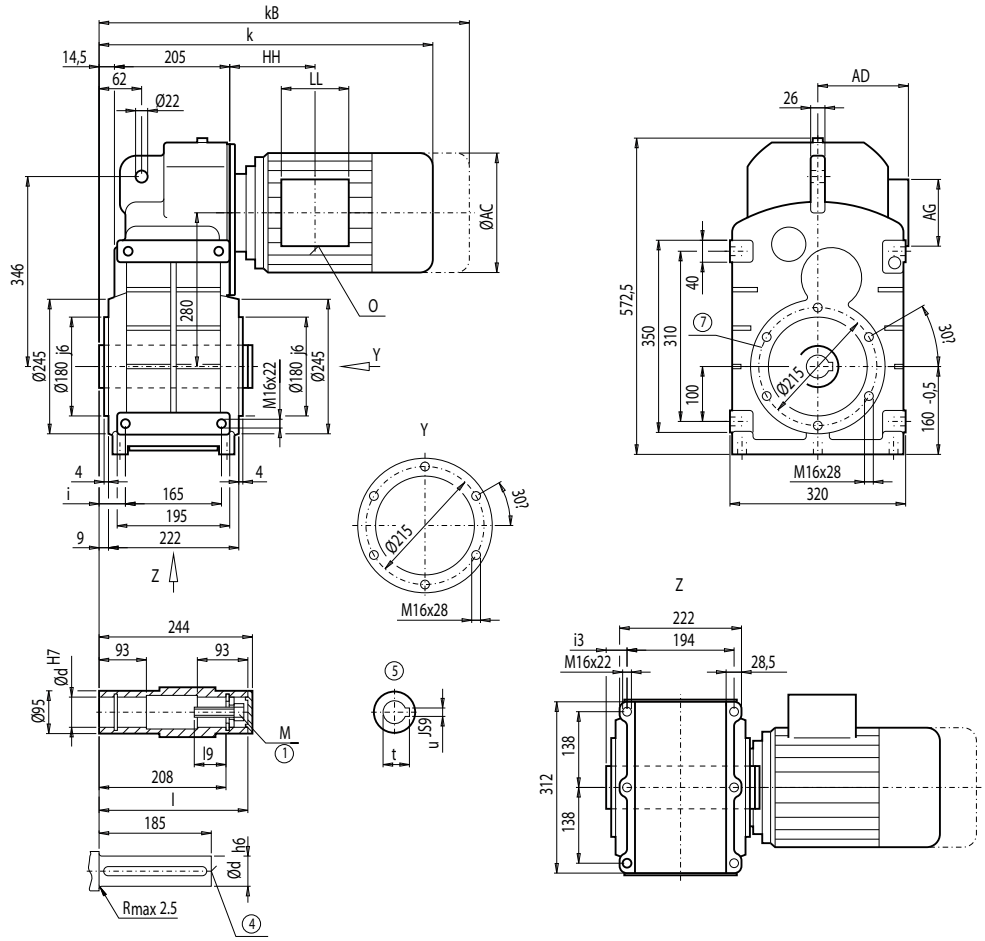

d	l	l9	M	t	u	i	i3
60 *)	240	63.5	M20	64.4	18	37.5	23
70	240	63.5	M20	74.9	20	37.5	23

*) Preferred series

	F.A.108B								Weight	
Motor	**k**	**kB**	**AC**	**AD**	**AG**	**LL**	**HH**	**O**	**FDA.108B**	**FZA.108B**
LA80	488.5	552.0	156.5	155.0	90	90	87.5	M20x1.5/M25x1.5	108	–
LA80Z	511.0	574.5	156.5	155.0	90	90	160.5	M20x1.5/M25x1.5	112	–
LA90S/L	519.5	590.5	174.0	163.0	90	90	87.5	M20x1.5/M25x1.5	113	–
LA90ZL	564.5	635.5	174.0	163.0	90	90	211.5	M20x1.5/M25x1.5	119	–
LA100L	563.0	644.0	195.0	168.0	120	120	125.5	2xM32x1.5	121	121
LA100ZL	633.0	714.0	195.0	168.0	120	120	257.5	2xM32x1.5	131	131
LA112M	589.0	670.0	219.0	181.0	120	120	127.5	2xM32x1.5	133	134
LA112ZM	617.0	698.0	219.0	181.0	120	120	231.5	2xM32x1.5	140	141
LA132S/M	649.0	751.0	259.0	195.0	140	140	168.0	2xM32x1.5	145	145
LA132ZM	695.0	797.0	259.0	195.0	140	140	276.0	2xM32x1.5	166	166
LA160M/L	753.5	872.0	313.5	227.0	165	165	195.5	2xM40x1.5	179	180
LA160ZL	801.5	920.0	313.5	227.0	165	165	348.5	2xM40x1.5	218	219
LG180M/L	813.0	935.0	348.0	322.5	260	192	212.5	2xM40x1.5	–	272
LG180ZM/ZL	864.0	986.0	348.0	322.5	260	192	212.5	2xM40x1.5	–	302

① DIN EN ISO 4014 ④ DIN 332 ⑤ Feather key / keyway DIN 6885 ⑦ For note, see page 3/179

© Siemens AG 2011

Gearbox FDAF/FZAF108B (3- / 2-stage), flange-mounted design

FAF012

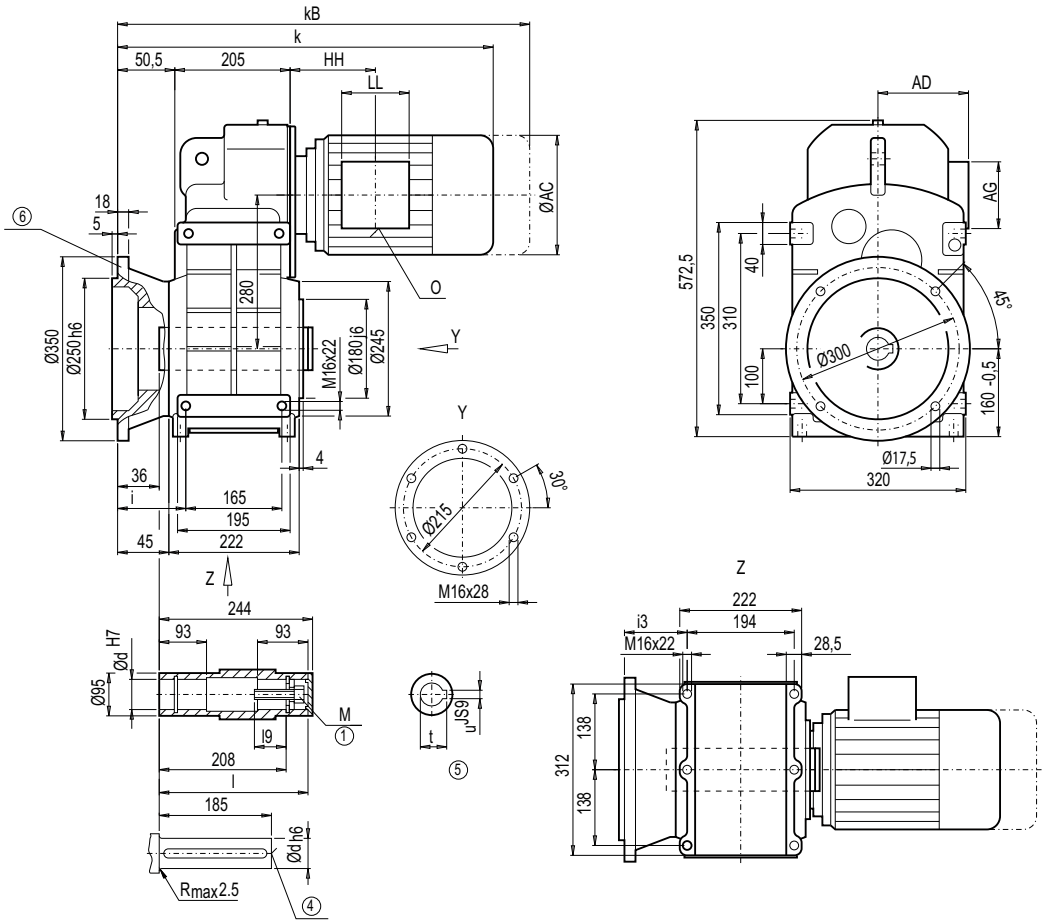

d	l	l9	M	t	u	i	i3
60 *)	240	63.5	M20	64.4	18	73.5	59
70	240	63.5	M20	74.9	20	73.5	59

*) Preferred series

	F.AF108B								Weight	
Motor	**k**	**kB**	**AC**	**AD**	**AG**	**LL**	**HH**	**O**	**FDAF108B**	**FZAF108B**
LA80	524.5	588.0	156.5	155.0	90	90	87.5	M20x1.5/M25x1.5	121	–
LA80Z	547.0	610.5	156.5	155.0	90	90	160.5	M20x1.5/M25x1.5	125	–
LA90S/L	555.5	626.5	174.0	163.0	90	90	87.5	M20x1.5/M25x1.5	126	–
LA90ZL	600.5	671.5	174.0	163.0	90	90	211.5	M20x1.5/M25x1.5	132	–
LA100L	599.0	680.0	195.0	168.0	120	120	125.5	2xM32x1.5	134	134
LA100ZL	669.0	750.0	195.0	168.0	120	120	257.5	2xM32x1.5	144	144
LA112M	625.0	706.0	219.0	181.0	120	120	127.5	2xM32x1.5	146	147
LA112ZM	653.0	734.0	219.0	181.0	120	120	231.5	2xM32x1.5	153	154
LA132S/M	685.0	787.0	259.0	195.0	140	140	168.0	2xM32x1.5	158	158
LA132ZM	731.0	833.0	259.0	195.0	140	140	276.0	2xM32x1.5	179	179
LA160M/L	789.5	908.0	313.5	227.0	165	165	195.5	2xM40x1.5	192	193
LA160ZL	837.5	956.0	313.5	227.0	165	165	348.5	2xM40x1.5	231	232
LG180M/L	849.0	971.0	348.0	322.5	260	192	212.5	2xM40x1.5	–	285
LG180ZM/ZL	900.0	1 022.0	348.0	322.5	260	192	212.5	2xM40x1.5	–	315

① DIN EN ISO 4014 ④ DIN 332 ⑤ Feather key / keyway DIN 6885 ⑥ For note, see page 3/178

© Siemens AG 2011

Dimensions

Gearbox FDAS/FZAS108B, FDAZS/FZAZS108B (3- / 2-stage), shaft-mounted design with shrink disk

FAS012
FAZS012

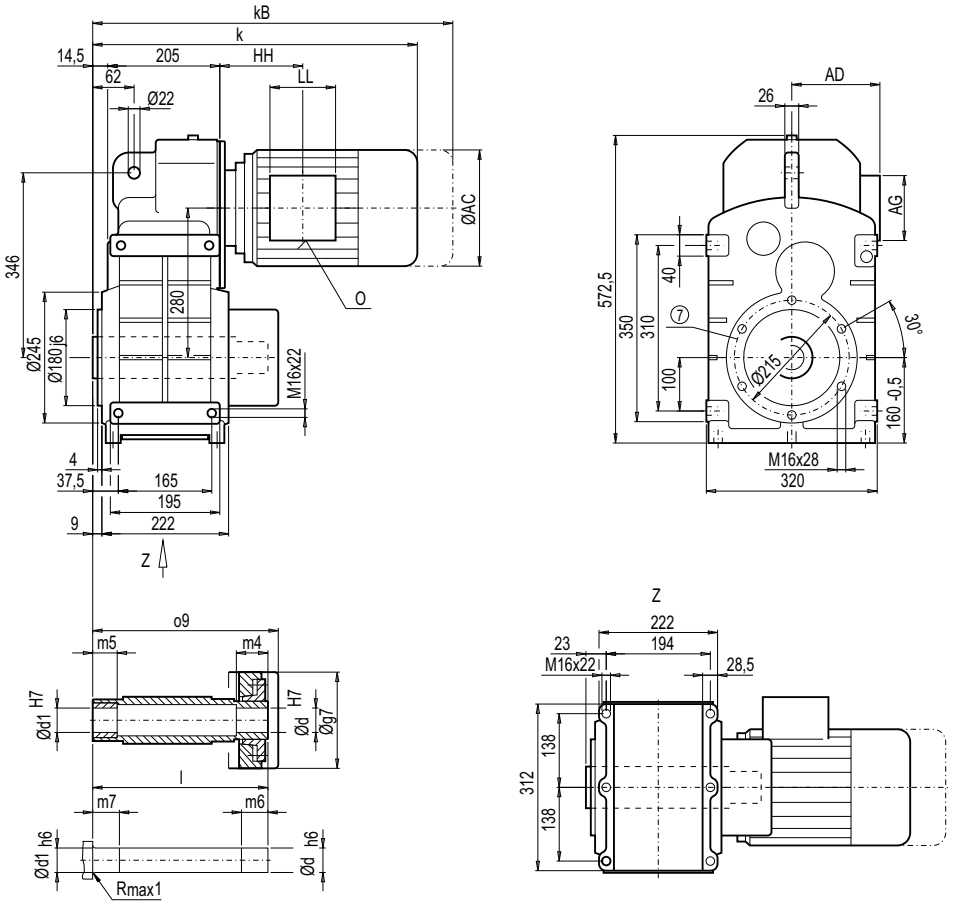

d	d1	l	o9	m4	m5	m6	m7	g7
65 *)	65	280	288	30	40	35	45	144
70	70	280	288	30	40	35	45	144

*) Preferred series

	F.A.S108B								Weight	
Motor	**k**	**kB**	**AC**	**AD**	**AG**	**LL**	**HH**	**O**	**FDA.S108B**	**FZA.S108B**
LA80	488.5	552.0	156.5	155.0	90	90	87.5	M20x1.5/M25x1.5	115	–
LA80Z	511.0	574.5	156.5	155.0	90	90	160.5	M20x1.5/M25x1.5	119	–
LA90S/L	519.5	590.5	174.0	163.0	90	90	87.5	M20x1.5/M25x1.5	120	–
LA90ZL	564.5	635.5	174.0	163.0	90	90	211.5	M20x1.5/M25x1.5	126	–
LA100L	563.0	644.0	195.0	168.0	120	120	125.5	2xM32x1.5	128	128
LA100ZL	633.0	714.0	195.0	168.0	120	120	257.5	2xM32x1.5	138	138
LA112M	589.0	670.0	219.0	181.0	120	120	127.5	2xM32x1.5	140	140
LA112ZM	617.0	698.0	219.0	181.0	120	120	231.5	2xM32x1.5	147	147
LA132S/M	649.0	751.0	259.0	195.0	140	140	168.0	2xM32x1.5	151	152
LA132ZM	695.0	797.0	259.0	195.0	140	140	276.0	2xM32x1.5	173	173
LA160M/L	753.5	872.0	313.5	227.0	165	165	195.5	2xM40x1.5	186	187
LA160ZL	801.5	920.0	313.5	227.0	165	165	348.5	2xM40x1.5	225	226
LG180M/L	813.0	935.0	348.0	322.5	260	192	212.5	2xM40x1.5	–	279
LG180ZM/ZL	864.0	986.0	348.0	322.5	260	192	212.5	2xM40x1.5	–	309

⑦ For note, see page 3/179

© Siemens AG 2011

Gearbox FDAFS/FZAFS108B (3- / 2-stage), flange-mounted design and shrink disk

FAFS012

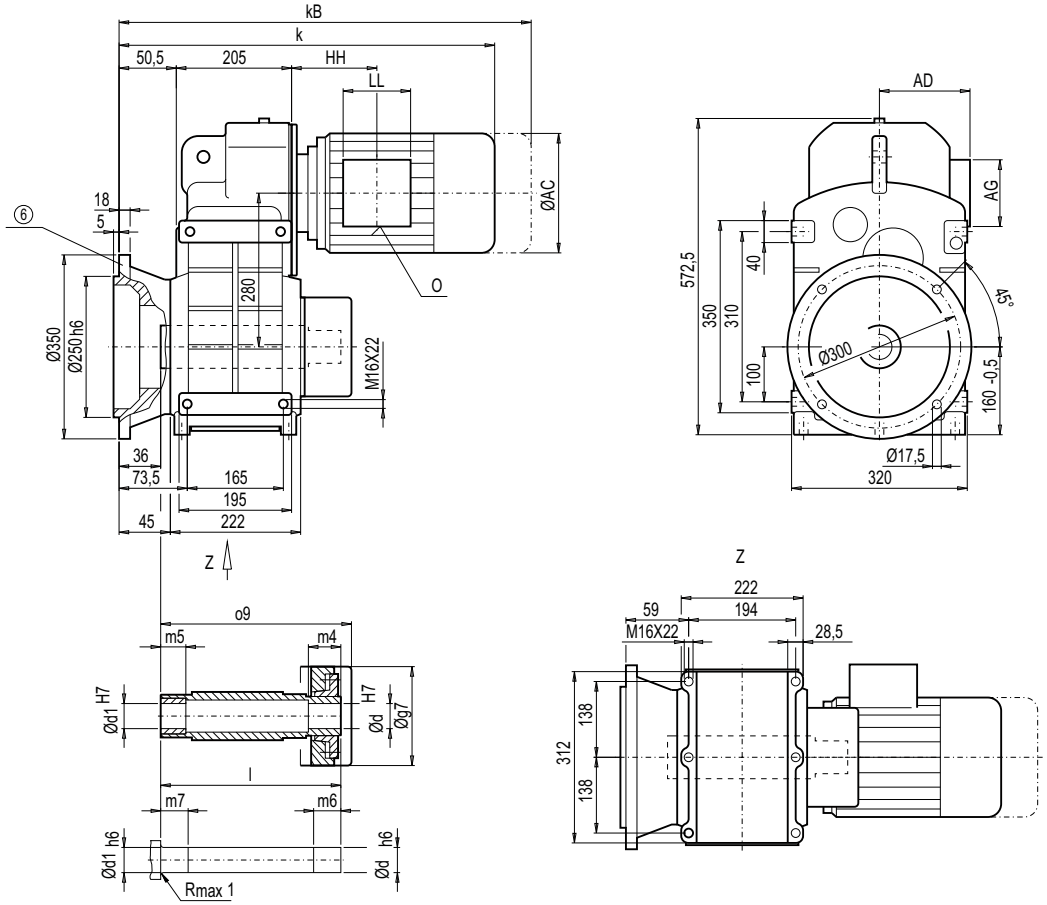

d	d1	l	o9	m4	m5	m6	m7	g7
65 *)	65	280	288	30	40	35	45	144
70	70	280	288	30	40	35	45	144

*) Preferred series

	F.AFS108B								Weight	
Motor	**k**	**kB**	**AC**	**AD**	**AG**	**LL**	**HH**	**O**	**FDAFS108B**	**FZAFS108B**
LA80	524.5	588.0	156.5	155.0	90	90	87.5	M20x1.5/M25x1.5	128	–
LA80Z	547.0	610.5	156.5	155.0	90	90	160.5	M20x1.5/M25x1.5	132	–
LA90S/L	555.5	626.5	174.0	163.0	90	90	87.5	M20x1.5/M25x1.5	133	–
LA90ZL	600.5	671.5	174.0	163.0	90	90	211.5	M20x1.5/M25x1.5	139	–
LA100L	599.0	680.0	195.0	168.0	120	120	125.5	2xM32x1.5	141	141
LA100ZL	669.0	750.0	195.0	168.0	120	120	257.5	2xM32x1.5	151	151
LA112M	625.0	706.0	219.0	181.0	120	120	127.5	2xM32x1.5	153	153
LA112ZM	653.0	734.0	219.0	181.0	120	120	231.5	2xM32x1.5	160	160
LA132S/M	685.0	787.0	259.0	195.0	140	140	168.0	2xM32x1.5	164	165
LA132ZM	731.0	833.0	259.0	195.0	140	140	276.0	2xM32x1.5	186	186
LA160M/L	789.5	908.0	313.5	227.0	165	165	195.5	2xM40x1.5	199	200
LA160ZL	837.5	956.0	313.5	227.0	165	165	348.5	2xM40x1.5	238	239
LG180M/L	849.0	971.0	348.0	322.5	260	192	212.5	2xM40x1.5	–	292
LG180ZM/ZL	900.0	1 022.0	348.0	322.5	260	192	212.5	2xM40x1.5	–	322

⑥ For note, see page 3/178

© Siemens AG 2011

Dimensions

Gearbox FDZ/FZZ128B (3- / 2-stage), housing-flange-mounted design (C-type)

FZ012

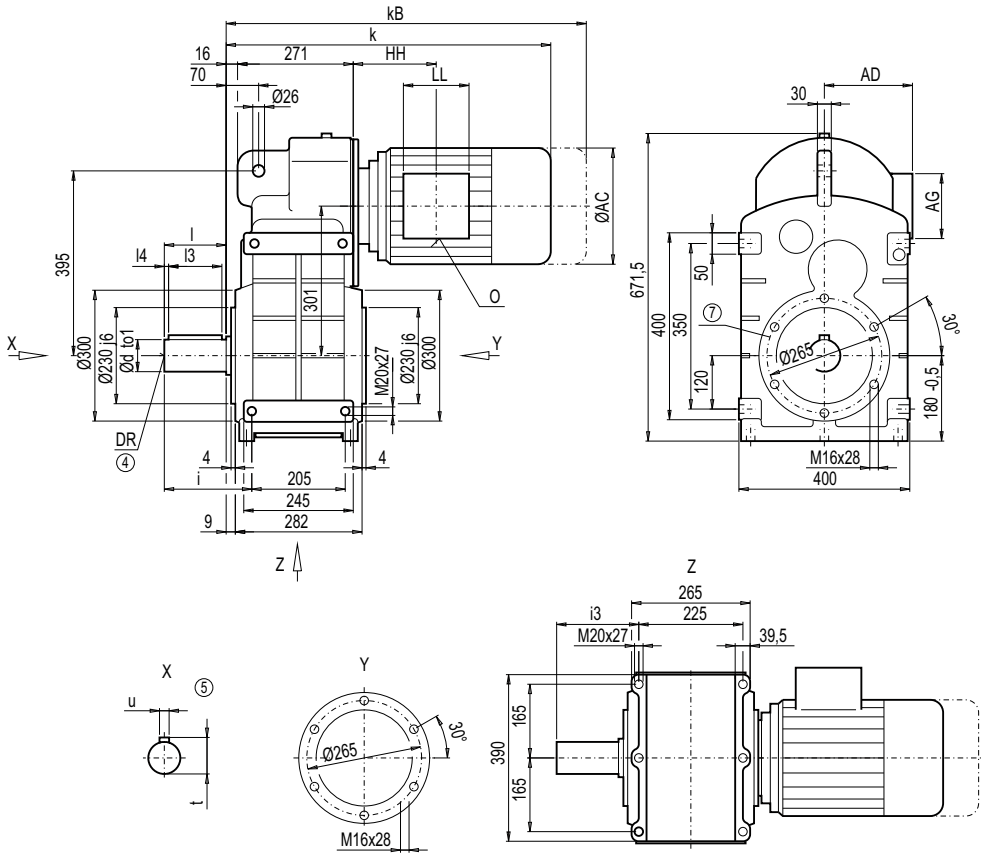

d	to1	l	l3	l4	t	u	i	i3	DR
70 *)	m6	140	125	7.5	74.5	20	187.5	177.5	M20x42
90	m6	170	140	15.0	95.0	25	217.5	207.5	M24x50

*) Preferred series

	F.Z128B								Weight	
Motor	**k**	**kB**	**AC**	**AD**	**AG**	**LL**	**HH**	**O**	**FDZ128B**	**FZZ128B**
LA90S/L	575.5	646.5	174.0	163.0	90	90	76.0	M20x1.5/M25x1.5	206	–
LA90ZL	620.5	691.5	174.0	163.0	90	90	200.0	M20x1.5/M25x1.5	212	–
LA100L	618.5	699.5	195.0	168.0	120	120	113.5	2xM32x1.5	214	–
LA100ZL	688.5	769.5	195.0	168.0	120	120	245.5	2xM32x1.5	224	–
LA112M	645.0	726.0	219.0	181.0	120	120	116.0	2xM32x1.5	226	224
LA112ZM	673.0	754.0	219.0	181.0	120	120	220.0	2xM32x1.5	233	231
LA132S/M	704.0	806.0	259.0	195.0	140	140	155.5	2xM32x1.5	236	235
LA132ZM	750.0	852.0	259.0	195.0	140	140	263.5	2xM32x1.5	258	256
LA160M/L	809.5	928.0	313.5	227.0	165	165	184.0	2xM40x1.5	271	269
LA160ZL	857.5	976.0	313.5	227.0	165	165	337.0	2xM40x1.5	310	308
LG180M/L	866.0	988.0	348.0	322.5	260	192	198.0	2xM40x1.5	367	366
LG180ZM/ZL	917.0	1 039.0	348.0	322.5	260	192	198.0	2xM40x1.5	397	396
LG200L	922.0	1 048.0	385.0	301.0	260	192	228.0	2xM50x1.5	447	446
K4-LGI225S	1 182.5	1 421.5	442.0	325.0	260	192	443.0	2xM50x1.5	–	601
K4-LGI225M	1 182.5	1 421.5	442.0	325.0	260	192	443.0	2xM50x1.5	–	589
K4-LGI225ZM	1 242.5	1 481.5	442.0	325.0	260	192	443.0	2xM50x1.5	–	647

④ DIN 332 ⑤ Feather key / keyway DIN 6885 ⑦ For note, see page 3/179

© Siemens AG 2011

Gearbox FDF/FZF128B (3- / 2-stage), flange-mounted design (A-type)

FF012

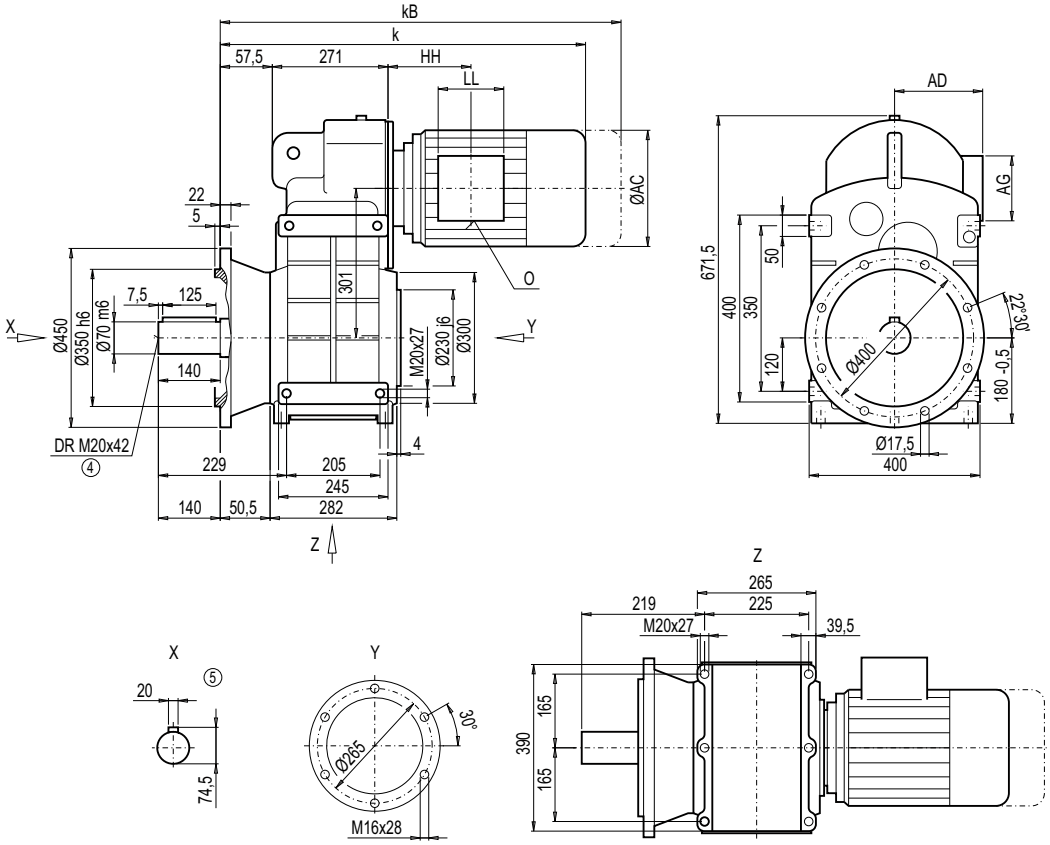

Motor	F.F128B k	kB	AC	AD	AG	LL	HH	O	Weight FDF128B	FZF128B
LA90S/L	617.0	688.0	174.0	163.0	90	90	76.0	M20x1.5/M25x1.5	226	–
LA90ZL	662.0	733.0	174.0	163.0	90	90	200.0	M20x1.5/M25x1.5	232	–
LA100L	660.0	741.0	195.0	168.0	120	120	113.5	2xM32x1.5	234	–
LA100ZL	730.0	811.0	195.0	168.0	120	120	245.5	2xM32x1.5	244	–
LA112M	686.5	767.5	219.0	181.0	120	120	116.0	2xM32x1.5	246	244
LA112ZM	714.5	795.5	219.0	181.0	120	120	220.0	2xM32x1.5	253	251
LA132S/M	745.5	847.5	259.0	195.0	140	140	155.5	2xM32x1.5	256	255
LA132ZM	791.5	893.5	259.0	195.0	140	140	263.5	2xM32x1.5	278	276
LA160M/L	851.0	969.5	313.5	227.0	165	165	184.0	2xM40x1.5	291	289
LA160ZL	899.0	1 017.5	313.5	227.0	165	165	337.0	2xM40x1.5	230	328
LG180M/L	907.5	1 029.5	348.0	322.5	260	192	198.0	2xM40x1.5	387	386
LG180ZM/ZL	958.5	1 080.5	348.0	322.5	260	192	198.0	2xM40x1.5	417	416
LG200L	963.5	1 089.5	385.0	301.0	260	192	228.0	2xM50x1.5	467	466
K4-LGI225S	1 224.0	1 463.0	442.0	325.0	260	192	443.0	2xM50x1.5	–	621
K4-LGI225M	1 224.0	1 463.0	442.0	325.0	260	192	443.0	2xM50x1.5	–	609
K4-LGI225ZM	1 284.0	1 523.0	442.0	325.0	260	192	443.0	2xM50x1.5	–	667

④ DIN 332

⑤ Feather key / keyway DIN 6885

© Siemens AG 2011

Dimensions

Gearbox FDA/FZA128B, FDAZ/FZAZ128B (3- / 2-stage), housing-flange-mounted design (C-type)

FA012
FAZ012

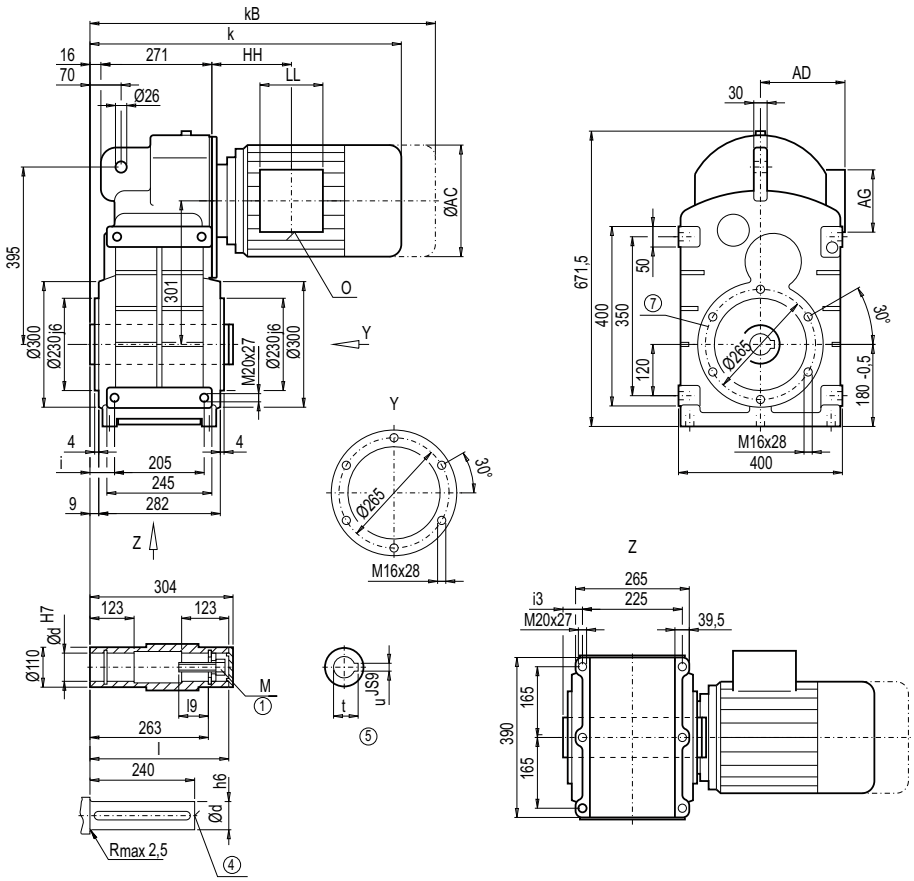

d	l	l9	M	t	u	i	i3
70 *)	300	63.5	M20	74.9	20	47.5	37.5
80	300	63.5	M20	85.4	22	47.5	37.5

*) Preferred series

	F.A.128B								Weight	
Motor	**k**	**kB**	**AC**	**AD**	**AG**	**LL**	**HH**	**O**	**FDA.128B**	**FZA.128B**
LA90S/L	575.5	646.5	174.0	163.0	90	90	76.0	M20x1.5/M25x1.5	186	–
LA90ZL	620.5	691.5	174.0	163.0	90	90	200.0	M20x1.5/M25x1.5	192	–
LA100L	618.5	699.5	195.0	168.0	120	120	113.5	2xM32x1.5	194	–
LA100ZL	688.5	769.5	195.0	168.0	120	120	245.5	2xM32x1.5	204	–
LA112M	645.0	726.0	219.0	181.0	120	120	116.0	2xM32x1.5	206	204
LA112ZM	673.0	754.0	219.0	181.0	120	120	220.0	2xM32x1.5	213	211
LA132S/M	704.0	806.0	259.0	195.0	140	140	155.5	2xM32x1.5	217	215
LA132ZM	750.0	852.0	259.0	195.0	140	140	263.5	2xM32x1.5	238	236
LA160M/L	809.5	928.0	313.5	227.0	165	165	184.0	2xM40x1.5	251	249
LA160ZL	857.5	976.0	313.5	227.0	165	165	337.0	2xM40x1.5	290	289
LG180M/L	866.0	988.0	348.0	322.5	260	192	198.0	2xM40x1.5	348	346
LG180ZM/ZL	917.0	1 039.0	348.0	322.5	260	192	198.0	2xM40x1.5	378	376
LG200L	922.0	1 048.0	385.0	301.0	260	192	228.0	2xM50x1.5	428	426
K4-LGI225S	1 182.5	1 421.5	442.0	325.0	260	192	443.0	2xM50x1.5	–	581
K4-LGI225M	1 182.5	1 421.5	442.0	325.0	260	192	443.0	2xM50x1.5	–	568
K4-LGI225ZM	1 242.5	1 481.5	442.0	325.0	260	192	443.0	2xM50x1.5	–	627

① DIN EN ISO 4014 ④ DIN 332 ⑤ Feather key / keyway DIN 6885 ⑦ For note, see page 3/179

© Siemens AG 2011

Gearbox FDAF/FZAF128B (3- / 2-stage), flange-mounted design

FAF012

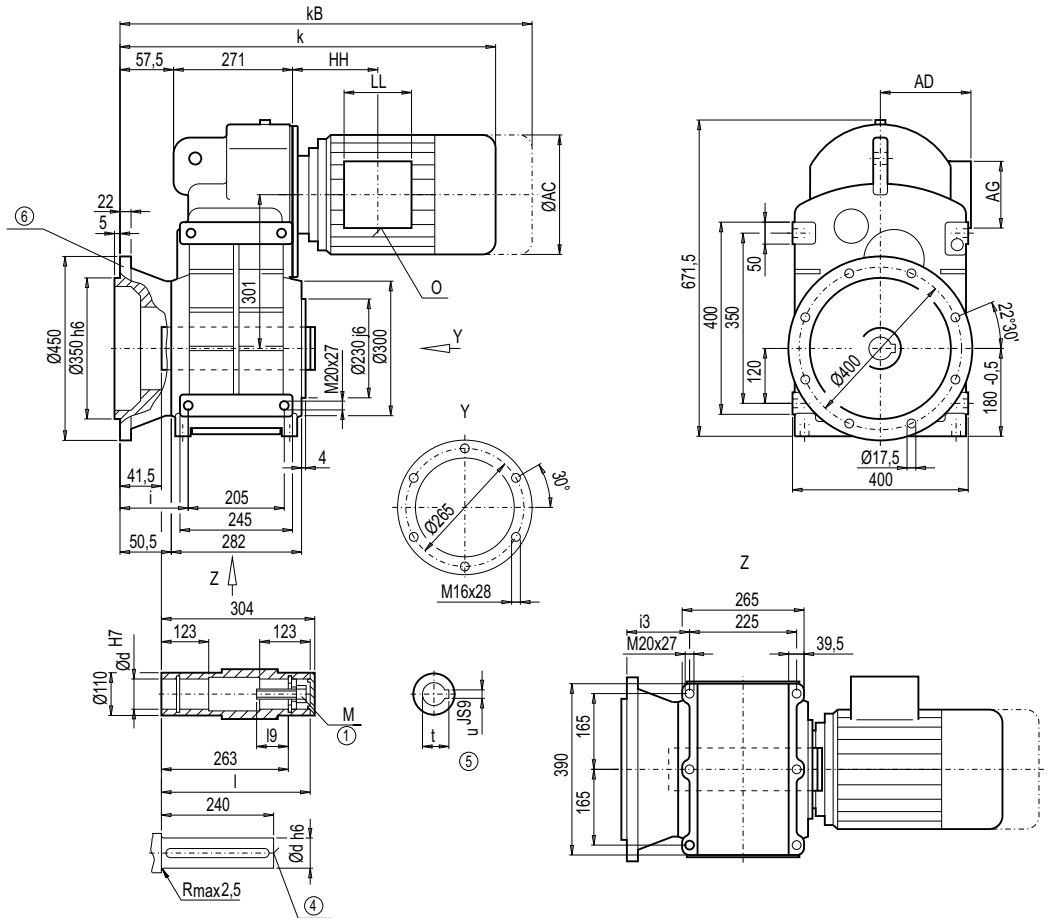

d	l	l9	M	t	u	i	i3
70 *)	300	63.5	M20	74.9	20	89	79
80	300	63.5	M20	85.4	22	89	79

*) Preferred series

	F.AF128B								Weight	
Motor	**k**	**kB**	**AC**	**AD**	**AG**	**LL**	**HH**	**O**	**FDAF128B**	**FZAF128B**
LA90S/L	617.0	688.0	174.0	163.0	90	90	76.0	M20x1.5/M25x1.5	206	–
LA90ZL	662.0	733.0	174.0	163.0	90	90	200.0	M20x1.5/M25x1.5	212	–
LA100L	660.0	741.0	195.0	168.0	120	120	113.5	2xM32x1.5	214	–
LA100ZL	730.0	811.0	195.0	168.0	120	120	245.5	2xM32x1.5	224	–
LA112M	686.5	767.5	219.0	181.0	120	120	116.0	2xM32x1.5	226	224
LA112ZM	714.5	795.5	219.0	181.0	120	120	220.0	2xM32x1.5	238	236
LA132S/M	745.5	847.5	259.0	195.0	140	140	155.5	2xM32x1.5	237	235
LA132ZM	791.5	893.5	259.0	195.0	140	140	263.5	2xM32x1.5	258	256
LA160M/L	851.0	969.5	313.5	227.0	165	165	184.0	2xM40x1.5	271	269
LA160ZL	899.0	1 017.5	313.5	227.0	165	165	337.0	2xM40x1.5	310	308
LG180M/L	907.5	1 029.5	348.0	322.5	260	192	198.0	2xM40x1.5	368	366
LG180ZM/ZL	958.5	1 080.5	348.0	322.5	260	192	198.0	2xM40x1.5	398	396
LG200L	963.5	1 089.5	385.0	301.0	260	192	228.0	2xM50x1.5	448	446
K4-LGI225S	1 224.0	1 463.0	442.0	325.0	260	192	443.0	2xM50x1.5	–	601
K4-LGI225M	1 224.0	1 463.0	442.0	325.0	260	192	443.0	2xM50x1.5	–	589
K4-LGI225ZM	1 284.0	1 523.0	442.0	325.0	260	192	443.0	2xM50x1.5	–	647

① DIN EN ISO 4014 ④ DIN 332 ⑤ Feather key / keyway DIN 6885 ⑥ For note, see page 3/178

© Siemens AG 2011

Dimensions

Gearbox FDAS/FZAS128B, FDAZS/FZAZS128B (3- / 2-stage), shaft-mounted design with shrink disk

FAS012
FAZS012

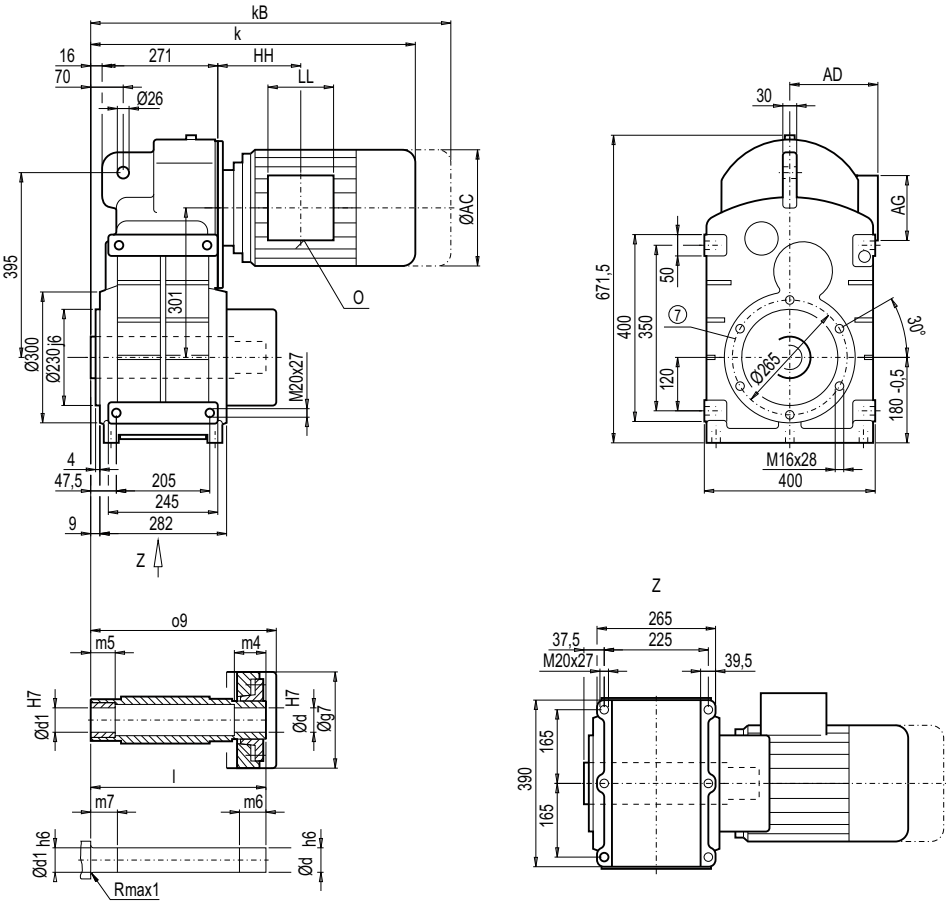

d	d1	l	o9	m4	m5	m6	m7	g7
75 *)	75	345	357	44	50	49	55	180
80	80	345	357	40	50	45	55	180

*) Preferred series

	F.A.S128B								Weight	
Motor	**k**	**kB**	**AC**	**AD**	**AG**	**LL**	**HH**	**O**	**FDA.S128B**	**FZA.S128B**
LA90S/L	575.5	646.5	174.0	163.0	90	90	76.0	M20x1.5/M25x1.5	191	–
LA90ZL	620.5	691.5	174.0	163.0	90	90	200.0	M20x1.5/M25x1.5	197	–
LA100L	618.5	699.5	195.0	168.0	120	120	113.5	2xM32x1.5	199	–
LA100ZL	688.5	769.5	195.0	168.0	120	120	245.5	2xM32x1.5	209	–
LA112M	645.0	726.0	219.0	181.0	120	120	116.0	2xM32x1.5	210	209
LA112ZM	673.0	754.0	219.0	181.0	120	120	220.0	2xM32x1.5	217	216
LA132S/M	704.0	806.0	259.0	195.0	140	140	155.5	2xM32x1.5	221	219
LA132ZM	750.0	852.0	259.0	195.0	140	140	263.5	2xM32x1.5	242	240
LA160M/L	809.5	928.0	313.5	227.0	165	165	184.0	2xM40x1.5	256	254
LA160ZL	857.5	976.0	313.5	227.0	165	165	337.0	2xM40x1.5	295	293
LG180M/L	866.0	988.0	348.0	322.5	260	192	198.0	2xM40x1.5	352	350
LG180ZM/ZL	917.0	1 039.0	348.0	322.5	260	192	198.0	2xM40x1.5	382	380
LG200L	922.0	1 048.0	385.0	301.0	260	192	228.0	2xM50x1.5	432	430
K4-LGI225S	1 182.5	1 421.5	442.0	325.0	260	192	443.0	2xM50x1.5	–	585
K4-LGI225M	1 182.5	1 421.5	442.0	325.0	260	192	443.0	2xM50x1.5	–	573
K4-LGI225ZM	1 242.5	1 481.5	442.0	325.0	260	192	443.0	2xM50x1.5	–	631

⑦ For note, see page 3/179

© Siemens AG 2011

Gearbox FDAFS/FZAFS128B (3- / 2-stage), flange-mounted design and shrink disk

FAFS012

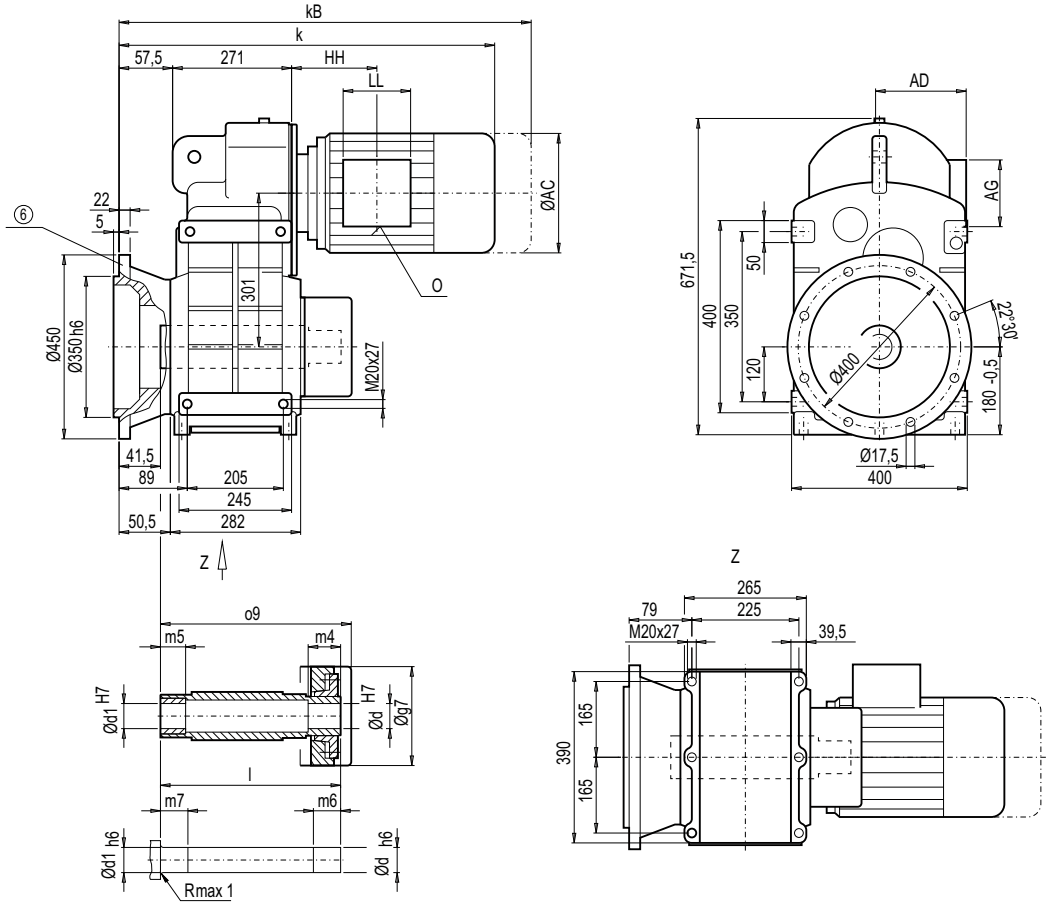

d	d1	l	o9	m4	m5	m6	m7	g7
75 *)	75	345	357	44	50	49	55	180
80	80	345	357	40	50	45	55	180

*) Preferred series

	F.AFS128B								Weight	
Motor	**k**	**kB**	**AC**	**AD**	**AG**	**LL**	**HH**	**O**	**FDAFS128B**	**FZAFS128B**
LA90S/L	617.0	688.0	174.0	163.0	90	90	76.0	M20x1.5/M25x1.5	210	–
LA90ZL	662.0	733.0	174.0	163.0	90	90	200.0	M20x1.5/M25x1.5	216	–
LA100L	660.0	741.0	195.0	168.0	120	120	113.5	2xM32x1.5	218	–
LA100ZL	730.0	811.0	195.0	168.0	120	120	245.5	2xM32x1.5	228	–
LA112M	686.5	767.5	219.0	181.0	120	120	116.0	2xM32x1.5	230	228
LA112ZM	714.5	795.5	219.0	181.0	120	120	220.0	2xM32x1.5	237	235
LA132S/M	745.5	847.5	259.0	195.0	140	140	155.5	2xM32x1.5	241	239
LA132ZM	791.5	893.5	259.0	195.0	140	140	263.5	2xM32x1.5	262	260
LA160M/L	851.0	969.5	313.5	227.0	165	165	184.0	2xM40x1.5	275	274
LA160ZL	899.0	1 017.5	313.5	227.0	165	165	337.0	2xM40x1.5	314	313
LG180M/L	907.5	1 029.5	348.0	322.5	260	192	198.0	2xM40x1.5	372	370
LG180ZM/ZL	958.5	1 080.5	348.0	322.5	260	192	198.0	2xM40x1.5	402	400
LG200L	963.5	1 089.5	385.0	301.0	260	192	228.0	2xM50x1.5	452	450
K4-LGI225S	1 224.0	1 463.0	442.0	325.0	260	192	443.0	2xM50x1.5	–	615
K4-LGI225M	1 224.0	1 463.0	442.0	325.0	260	192	443.0	2xM50x1.5	–	593
K4-LGI225ZM	1 284.0	1 523.0	442.0	325.0	260	192	443.0	2xM50x1.5	–	651

⑥ For note, see page 3/178

© Siemens AG 2011

Dimensions

Gearbox FDZ/FZZ148B (3- / 2-stage), housing-flange-mounted design (C-type)

FZ012

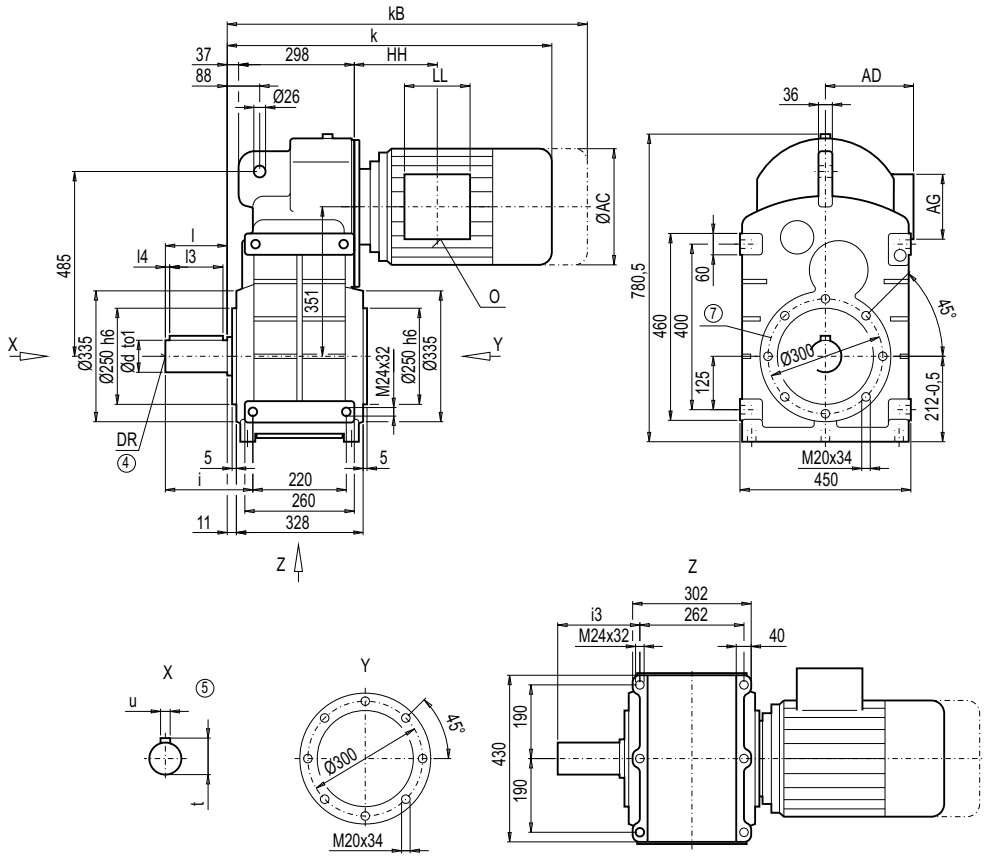

d	to1	l	l3	l4	t	u	i	i3	DR
90 *)	m6	170	140	15	95	25	235	214	M24x50
100	m6	210	180	15	106	28	275	254	M24x50

*) Preferred series

	F.Z148B								Weight	
Motor	**k**	**kB**	**AC**	**AD**	**AG**	**LL**	**HH**	**O**	**FDZ148B**	**FZZ148B**
LA100L	657.0	738.0	195.0	168.0	120	120	104.0	2xM32x1.5	311	–
LA100ZL	727.0	808.0	195.0	168.0	120	120	236.0	2xM32x1.5	321	–
LA112M	682.5	763.5	219.0	181.0	120	120	105.5	2xM32x1.5	322	–
LA112ZM	710.5	791.5	219.0	181.0	120	120	209.5	2xM32x1.5	329	–
LA132S/M	741.5	843.5	259.0	195.0	140	140	145.0	2xM32x1.5	331	327
LA132ZM	787.5	889.5	259.0	195.0	140	140	253.0	2xM32x1.5	352	348
LA160M/L	841.0	959.5	313.5	227.0	165	165	167.5	2xM40x1.5	371	366
LA160ZL	889.0	1 007.5	313.5	227.0	165	165	320.5	2xM40x1.5	410	405
LG180M/L	900.5	1 022.5	348.0	322.5	260	192	184.5	2xM40x1.5	462	457
LG180ZM/ZL	951.5	1 073.5	348.0	322.5	260	192	184.5	2xM40x1.5	492	487
LG200L	956.5	1 082.5	385.0	301.0	260	192	214.5	2xM50x1.5	542	537
LG225S	1 027.5	1 266.5	442.0	325.0	260	192	250.5	2xM50x1.5	618	614
LG225M	1 027.5	1 266.5	442.0	325.0	260	192	250.5	2xM50x1.5	606	602
LG225ZM	1 087.5	1 326.5	442.0	325.0	260	192	250.5	2xM50x1.5	664	660
K4-LGI250M	1 314.5	1 539.5	495.0	392.0	300	236	469.5	2xM63x1.5	–	781
K4-LGI250ZM	1 384.5	1 609.5	495.0	392.0	300	236	469.5	2xM63x1.5	–	884

④ DIN 332 ⑤ Feather key / keyway DIN 6885 ⑦ For note, see page 3/179

© Siemens AG 2011

Gearbox FDF/FZF148B (3- / 2-stage), flange-mounted design (A-type)

FF012

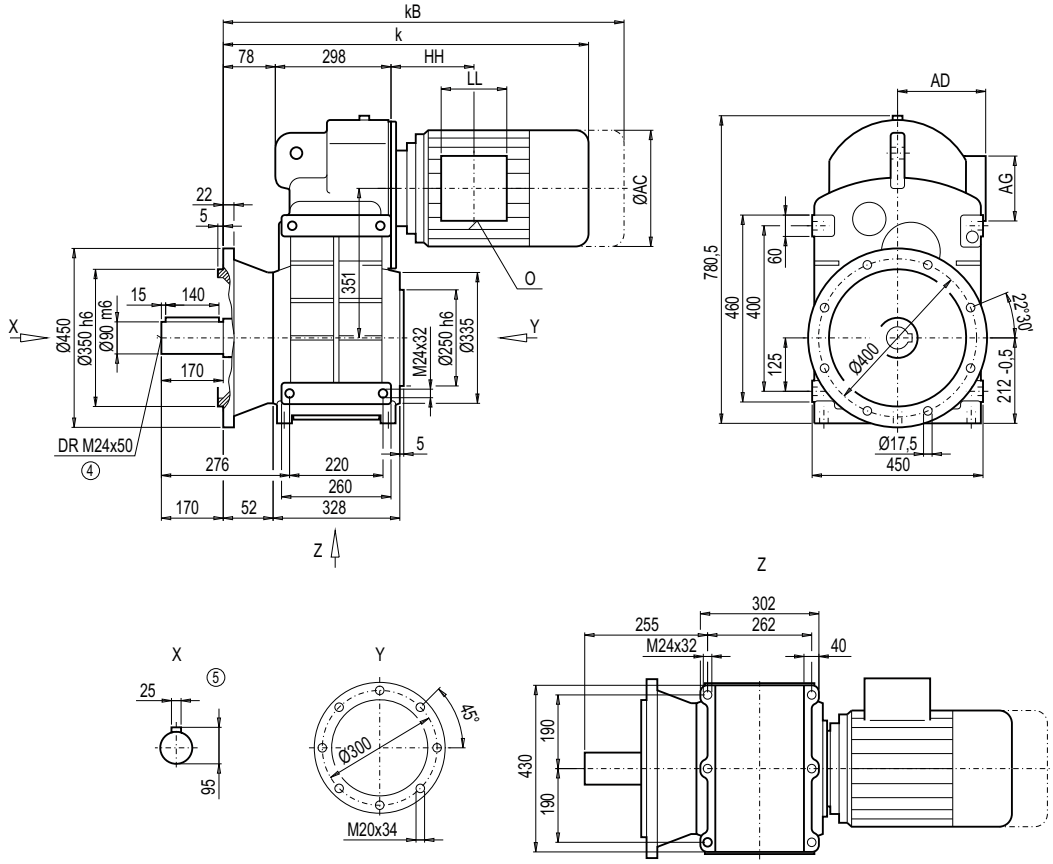

Motor	F.F148B k	kB	AC	AD	AG	LL	HH	O	Weight FDF148B	FZF148B
LA100L	698.0	779.0	195.0	168.0	120	120	104.0	2xM32x1.5	333	–
LA100ZL	768.0	849.0	195.0	168.0	120	120	236.0	2xM32x1.5	343	–
LA112M	723.5	804.5	219.0	181.0	120	120	105.5	2xM32x1.5	345	–
LA112ZM	751.5	832.5	219.0	181.0	120	120	209.5	2xM32x1.5	352	–
LA132S/M	782.5	884.5	259.0	195.0	140	140	145.0	2xM32x1.5	354	350
LA132ZM	828.5	930.5	259.0	195.0	140	140	253.0	2xM32x1.5	375	371
LA160M/L	882.0	1 000.5	313.5	227.0	165	165	167.5	2xM40x1.5	393	389
LA160ZL	930.0	1 048.5	313.5	227.0	165	165	320.5	2xM40x1.5	432	428
LG180M/L	941.5	1 063.5	348.0	322.5	260	192	184.5	2xM40x1.5	484	480
LG180ZM/ZL	992.5	1 114.5	348.0	322.5	260	192	184.5	2xM40x1.5	514	510
LG200L	997.5	1 123.5	385.0	301.0	260	192	214.5	2xM50x1.5	564	560
LG225S	1 068.5	1 307.5	442.0	325.0	260	192	250.5	2xM50x1.5	638	637
LG225M	1 068.5	1 307.5	442.0	325.0	260	192	250.5	2xM50x1.5	626	625
LG225ZM	1 128.5	1 367.5	442.0	325.0	260	192	250.5	2xM50x1.5	684	683
K4-LGI250M	1 355.5	1 580.5	495.0	392.0	300	236	469.5	2xM63x1.5	–	804
K4-LGI250ZM	1 425.5	1 650.5	495.0	392.0	300	236	469.5	2xM63x1.5	–	907

④ DIN 332

⑤ Feather key / keyway DIN 6885

© Siemens AG 2011

Dimensions

Gearbox FDA/FZA148B, FDAZ/FZAZ148B (3- / 2-stage), housing-flange-mounted design (C-type)

FA012
FAZ012

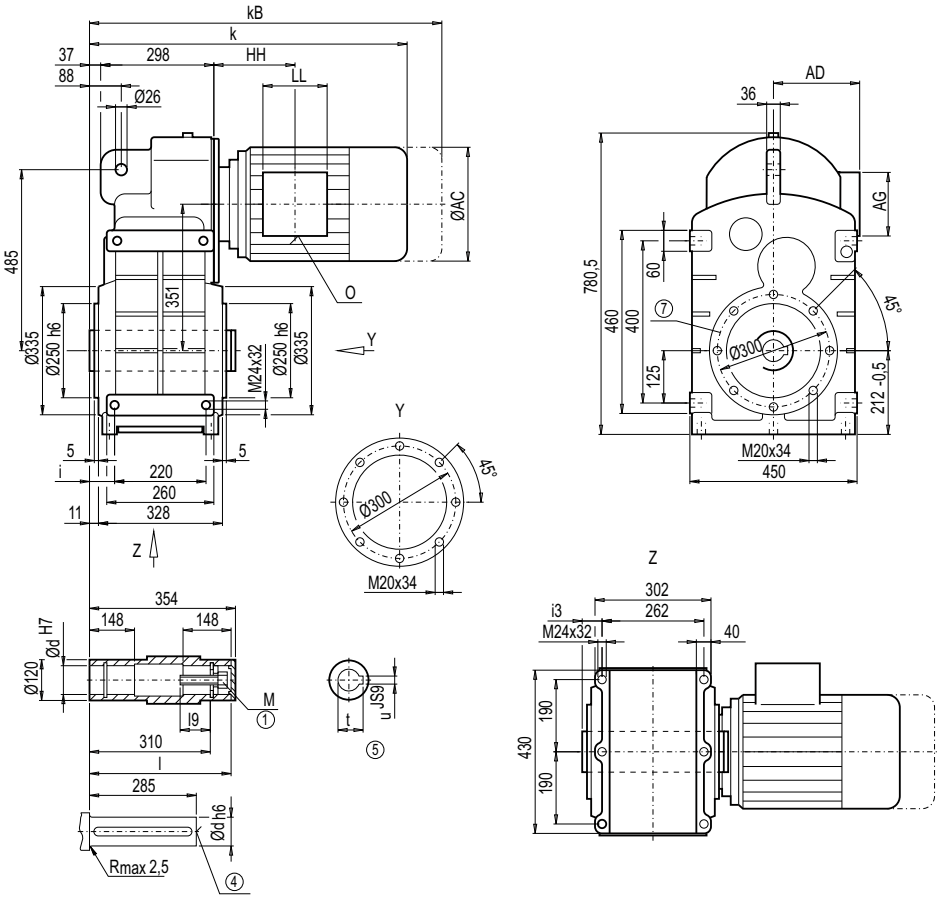

d	l	l9	M	t	u	i	i3
80 *)	350	63.5	M20	85.4	22	65	44
90	350	72.0	M24	95.4	25	65	44

*) Preferred series

	F.A.148B								Weight	
Motor	**k**	**kB**	**AC**	**AD**	**AG**	**LL**	**HH**	**O**	**FDA.148B**	**FZA.148B**
LA100L	657.0	738.0	195.0	168.0	120	120	104.0	2xM32x1.5	283	–
LA100ZL	727.0	808.0	195.0	168.0	120	120	236.0	2xM32x1.5	293	–
LA112M	682.5	763.5	219.0	181.0	120	120	105.5	2xM32x1.5	294	–
LA112ZM	710.5	791.5	219.0	181.0	120	120	209.5	2xM32x1.5	301	–
LA132S/M	741.5	843.5	259.0	195.0	140	140	145.0	2xM32x1.5	303	299
LA132ZM	787.5	889.5	259.0	195.0	140	140	253.0	2xM32x1.5	325	320
LA160M/L	841.0	959.5	313.5	227.0	165	165	167.5	2xM40x1.5	343	339
LA160ZL	889.0	1 007.5	313.5	227.0	165	165	320.5	2xM40x1.5	382	378
LG180M/L	900.5	1 022.5	348.0	322.5	260	192	184.5	2xM40x1.5	434	430
LG180ZM/ZL	951.5	1 073.5	348.0	322.5	260	192	184.5	2xM40x1.5	464	460
LG200L	956.5	1 082.5	385.0	301.0	260	192	214.5	2xM50x1.5	514	510
LG225S	1 027.5	1 266.5	442.0	325.0	260	192	250.5	2xM50x1.5	590	587
LG225M	1 027.5	1 266.5	442.0	325.0	260	192	250.5	2xM50x1.5	578	574
LG225ZM	1 087.5	1 326.5	442.0	325.0	260	192	250.5	2xM50x1.5	636	633
K4-LGI250M	1 314.5	1 539.5	495.0	392.0	300	236	469.5	2xM63x1.5	–	754
K4-LGI250ZM	1 384.5	1 609.5	495.0	392.0	300	236	469.5	2xM63x1.5	–	857

① DIN EN ISO 4014 ④ DIN 332 ⑤ Feather key / keyway DIN 6885 ⑦ For note, see page 3/179

© Siemens AG 2011

Gearbox FDAF/FZAF148B (3- / 2-stage), flange-mounted design

FAF012

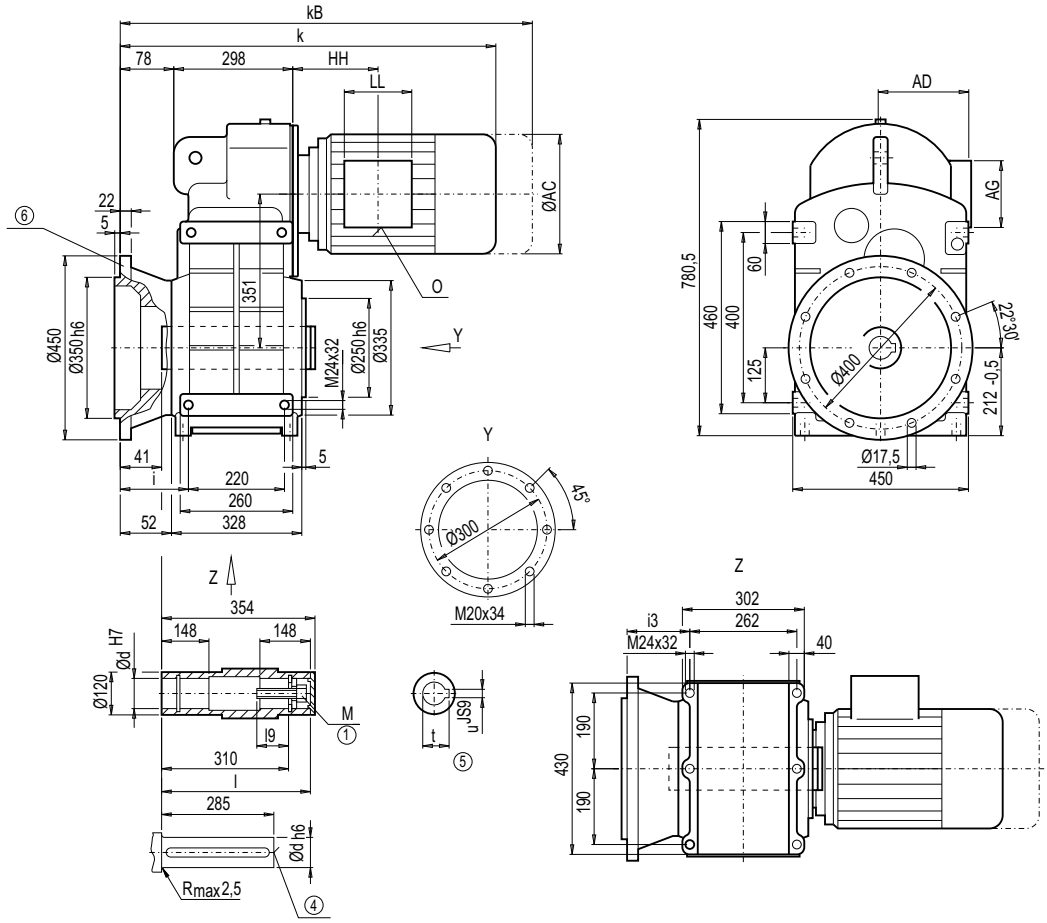

d	l	l9	M	t	u	i	i3
80 *)	350	63.5	M20	85.4	22	106	85
90	350	72.0	M24	95.4	25	106	85

*) Preferred series

	F.AF148B								Weight	
Motor	**k**	**kB**	**AC**	**AD**	**AG**	**LL**	**HH**	**O**	**FDAF148B**	**FZAF148B**
LA100L	698.0	779.0	195.0	168.0	120	120	104.0	2xM32x1.5	305	–
LA100ZL	768.0	849.0	195.0	168.0	120	120	236.0	2xM32x1.5	315	–
LA112M	723.5	804.5	219.0	181.0	120	120	105.5	2xM32x1.5	317	–
LA112ZM	751.5	832.5	219.0	181.0	120	120	209.5	2xM32x1.5	324	–
LA132S/M	782.5	884.5	259.0	195.0	140	140	145.0	2xM32x1.5	326	322
LA132ZM	828.5	930.5	259.0	195.0	140	140	253.0	2xM32x1.5	347	343
LA160M/L	882.0	1 000.5	313.5	227.0	165	165	167.5	2xM40x1.5	365	361
LA160ZL	930.0	1 048.5	313.5	227.0	165	165	320.5	2xM40x1.5	404	400
LG180M/L	941.5	1 063.5	348.0	322.5	260	192	184.5	2xM40x1.5	456	452
LG180ZM/ZL	992.5	1 114.5	348.0	322.5	260	192	184.5	2xM40x1.5	486	482
LG200L	997.5	1 123.5	385.0	301.0	260	192	214.5	2xM50x1.5	536	532
LG225S	1 068.5	1 307.5	442.0	325.0	260	192	250.5	2xM50x1.5	610	609
LG225M	1 068.5	1 307.5	442.0	325.0	260	192	250.5	2xM50x1.5	598	597
LG225ZM	1 128.5	1 367.5	442.0	325.0	260	192	250.5	2xM50x1.5	656	655
K4-LGI250M	1 355.5	1 580.5	495.0	392.0	300	236	469.5	2xM63x1.5	–	776
K4-LGI250ZM	1 425.5	1 650.5	495.0	392.0	300	236	469.5	2xM63x1.5	–	879

① DIN EN ISO 4014 ④ DIN 332 ⑤ Feather key / keyway DIN 6885 ⑥ For note, see page 3/178

© Siemens AG 2011

Dimensions

Gearbox FDAS/FZAS148B, FDAZS/FZAZS148B (3- / 2-stage), shaft-mounted design with shrink disk

FAS012
FAZS012

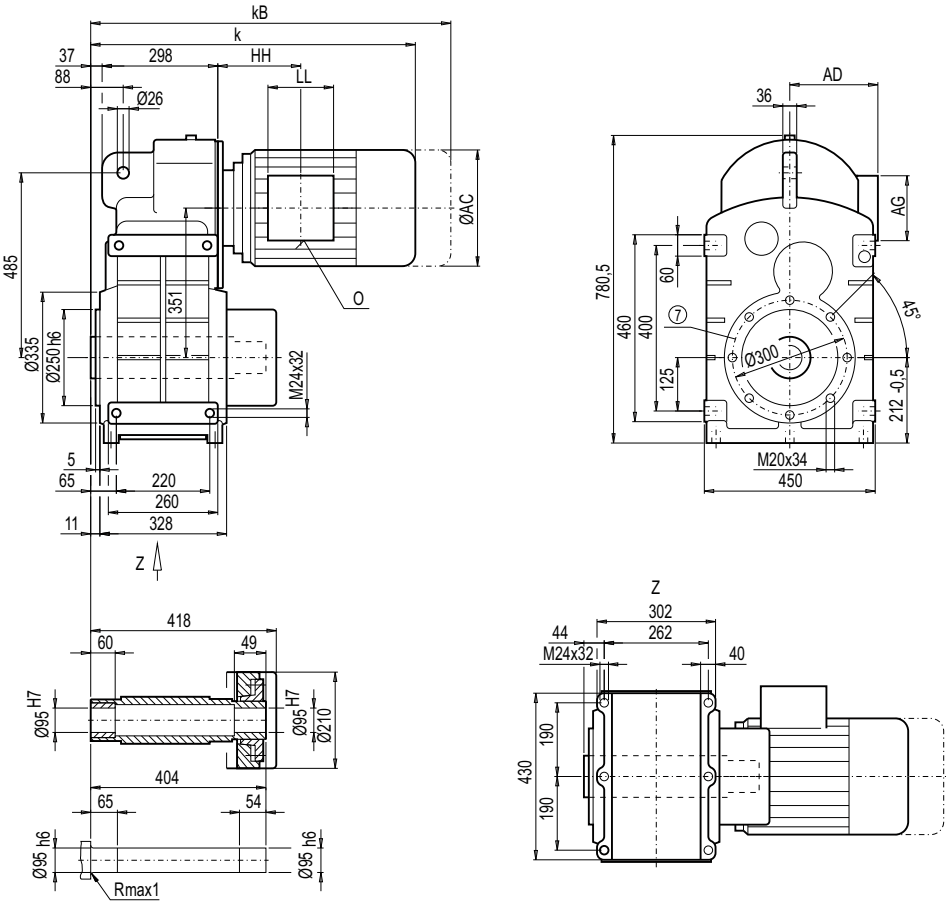

Motor	F.A.S148B k	kB	AC	AD	AG	LL	HH	O	Weight FDA.S148B	FZA.S148B
LA100L	657.0	738.0	195.0	168.0	120	120	104.0	2xM32x1.5	290	–
LA100ZL	727.0	808.0	195.0	168.0	120	120	236.0	2xM32x1.5	300	–
LA112M	682.5	763.5	219.0	181.0	120	120	105.5	2xM32x1.5	301	–
LA112ZM	710.5	791.5	219.0	181.0	120	120	209.5	2xM32x1.5	308	–
LA132S/M	741.5	843.5	259.0	195.0	140	140	145.0	2xM32x1.5	310	306
LA132ZM	787.5	889.5	259.0	195.0	140	140	253.0	2xM32x1.5	331	327
LA160M/L	841.0	959.5	313.5	227.0	165	165	167.5	2xM40x1.5	350	345
LA160ZL	889.0	1 007.5	313.5	227.0	165	165	320.5	2xM40x1.5	389	384
LG180M/L	900.5	1 022.5	348.0	322.5	260	192	184.5	2xM40x1.5	441	436
LG180ZM/ZL	951.5	1 073.5	348.0	322.5	260	192	184.5	2xM40x1.5	471	466
LG200L	956.5	1 082.5	385.0	301.0	260	192	214.5	2xM50x1.5	521	516
LG225S	1 027.5	1 266.5	442.0	325.0	260	192	250.5	2xM50x1.5	597	593
LG225M	1 027.5	1 266.5	442.0	325.0	260	192	250.5	2xM50x1.5	585	581
LG225ZM	1 087.5	1 326.5	442.0	325.0	260	192	250.5	2xM50x1.5	643	639
K4-LGI250M	1 314.5	1 539.5	495.0	392.0	300	236	469.5	2xM63x1.5	–	760
K4-LGI250ZM	1 384.5	1 609.5	495.0	392.0	300	236	469.5	2xM63x1.5	–	863

⑦ For note, see page 3/179

© Siemens AG 2011

Gearbox FDAFS/FZAFS148B (3- / 2-stage), flange-mounted design and shrink disk

FAFS012

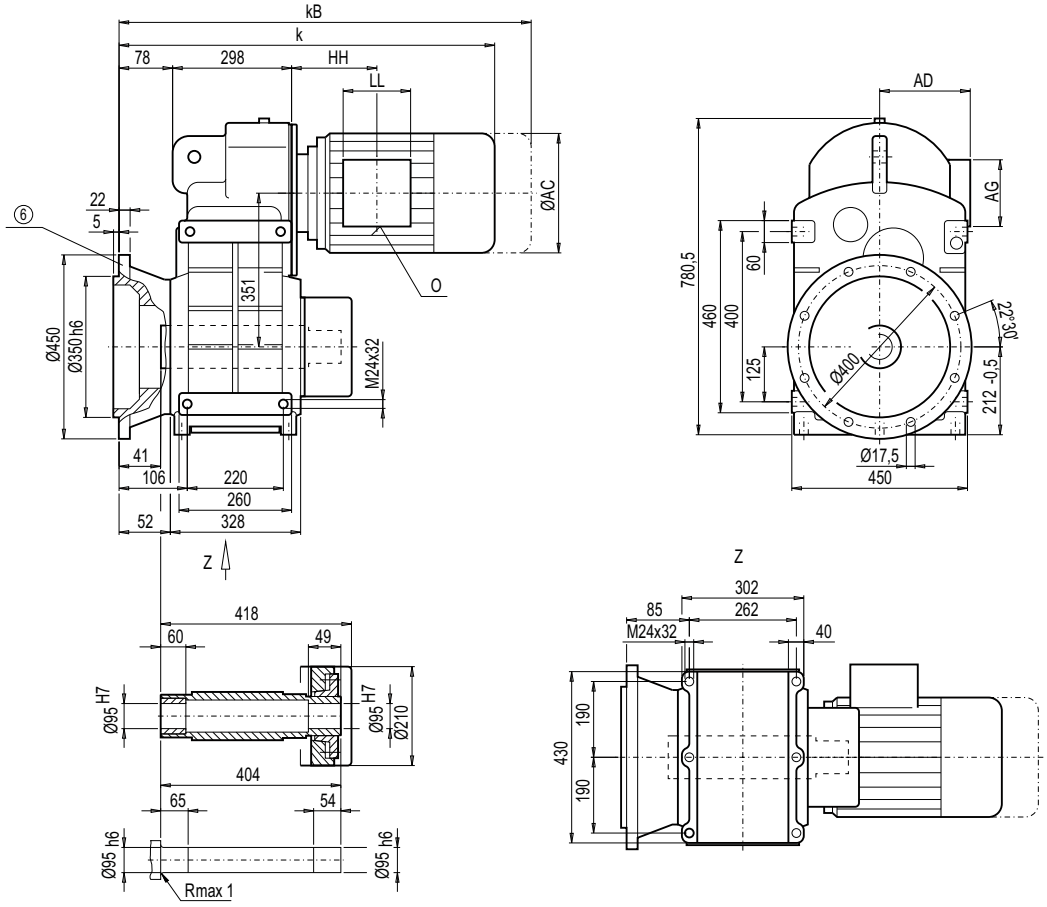

	F.AFS148B								Weight	
Motor	**k**	**kB**	**AC**	**AD**	**AG**	**LL**	**HH**	**O**	**FDAFS148B**	**FZAFS148B**
LA100L	698.0	779.0	195.0	168.0	120	120	104.0	2xM32x1.5	312	–
LA100ZL	768.0	849.0	195.0	168.0	120	120	236.0	2xM32x1.5	322	–
LA112M	723.5	804.5	219.0	181.0	120	120	105.5	2xM32x1.5	324	–
LA112ZM	751.5	832.5	219.0	181.0	120	120	209.5	2xM32x1.5	331	–
LA132S/M	782.5	884.5	259.0	195.0	140	140	145.0	2xM32x1.5	333	329
LA132ZM	828.5	930.5	259.0	195.0	140	140	253.0	2xM32x1.5	354	350
LA160M/L	882.0	1 000.5	313.5	227.0	165	165	167.5	2xM40x1.5	372	368
LA160ZL	930.0	1 048.5	313.5	227.0	165	165	320.5	2xM40x1.5	411	407
LG180M/L	941.5	1 063.5	348.0	322.5	260	192	184.5	2xM40x1.5	463	459
LG180ZM/ZL	992.5	1 114.5	348.0	322.5	260	192	184.5	2xM40x1.5	493	489
LG200L	997.5	1 123.5	385.0	301.0	260	192	214.5	2xM50x1.5	543	539
LG225S	1 068.5	1 307.5	442.0	325.0	260	192	250.5	2xM50x1.5	617	616
LG225M	1 068.5	1 307.5	442.0	325.0	260	192	250.5	2xM50x1.5	605	604
LG225ZM	1 128.5	1 367.5	442.0	325.0	260	192	250.5	2xM50x1.5	663	662
K4-LGI250M	1 355.5	1 580.5	495.0	392.0	300	236	469.5	2xM63x1.5	–	783
K4-LGI250ZM	1 425.5	1 650.5	495.0	392.0	300	236	469.5	2xM63x1.5	–	886

⑥ For note, see page 3/178

© Siemens AG 2011

Dimensions

Gearbox FDZ/FZZ168B (3- / 2-stage), housing-flange-mounted design (C-type)

FZ012

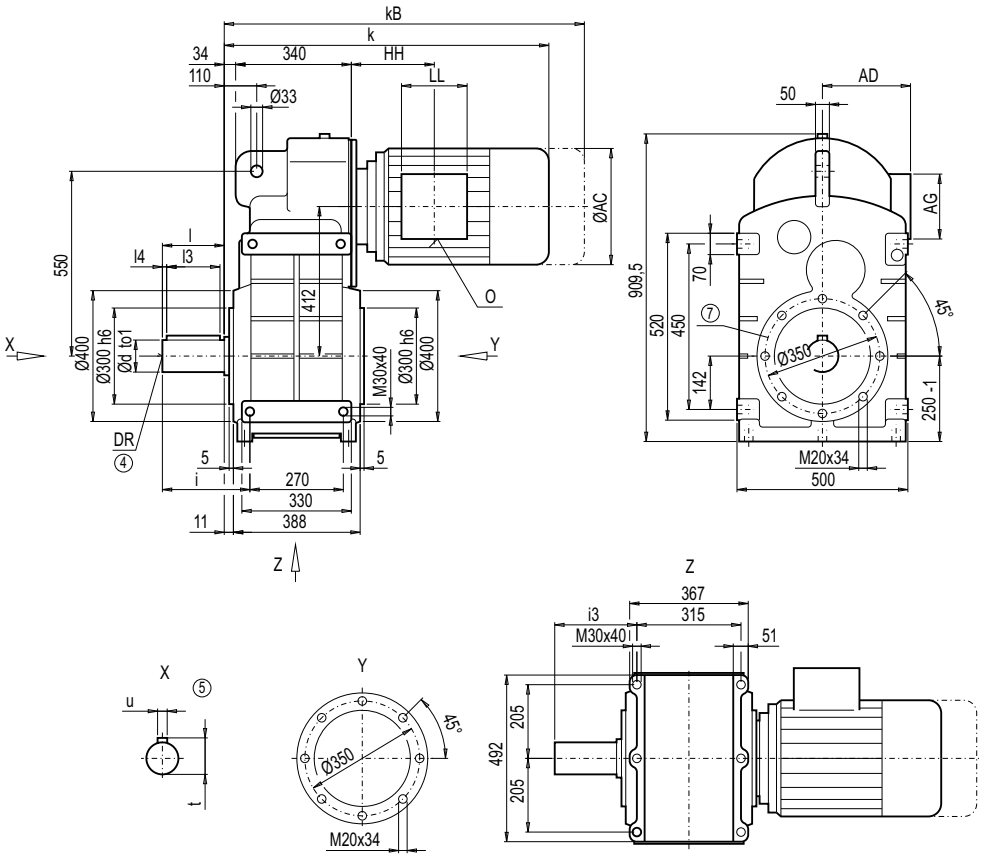

d	to1	l	l3	l4	t	u	i	i3	DR
110 *)	m6	210	180	15	116	28	280	252	M24x50
120	m6	210	180	15	127	32	280	252	M24x50

*) Preferred series

	F.Z168B								Weight	
Motor	**k**	**kB**	**AC**	**AD**	**AG**	**LL**	**HH**	**O**	**FDZ168B**	**FZZ168B**
LA132S/M	772.5	874.5	259.0	195.0	140	140	137.0	2xM32x1.5	496	485
LA132ZM	818.5	920.5	259.0	195.0	140	140	245.0	2xM32x1.5	517	506
LA160M/L	872.5	991.0	313.5	227.0	165	165	160.0	2xM40x1.5	530	519
LA160ZL	920.5	1 039.0	313.5	227.0	165	165	313.0	2xM40x1.5	569	558
LG180M/L	932.0	1 054.0	348.0	322.5	260	192	177.0	2xM40x1.5	626	614
LG180ZM/ZL	983.0	1 105.0	348.0	322.5	260	192	177.0	2xM40x1.5	656	644
LG200L	988.0	1 114.0	385.0	301.0	260	192	207.0	2xM50x1.5	706	694
LG225S	1 059.0	1 298.0	442.0	325.0	260	192	243.0	2xM50x1.5	779	768
LG225M	1 059.0	1 298.0	442.0	325.0	260	192	243.0	2xM50x1.5	767	756
LG225ZM	1 119.0	1 358.0	442.0	325.0	260	192	243.0	2xM50x1.5	825	814
LG250M	1 152.5	1 377.5	495.0	392.0	300	236	278.5	2xM63x1.5	869	858
LG250ZM	1 222.5	1 448.0	495.0	392.0	300	236	278.5	2xM63x1.5	972	961
K4-LGI280S	1 431.5	1 658.5	555.0	432.0	300	236	489.5	2xM63x1.5	–	1 089
K4-LGI280M	1 431.5	1 658.5	555.0	432.0	300	236	489.5	2xM63x1.5	–	1 101
K4-LGI280ZM	1 541.5	1 768.5	555.0	432.0	300	236	489.5	2xM63x1.5	–	1 189

④ DIN 332 ⑤ Feather key / keyway DIN 6885 ⑦ For note, see page 3/179

© Siemens AG 2011

Gearbox FDF/FZF168B (3- / 2-stage), flange-mounted design (A-type)

FF012

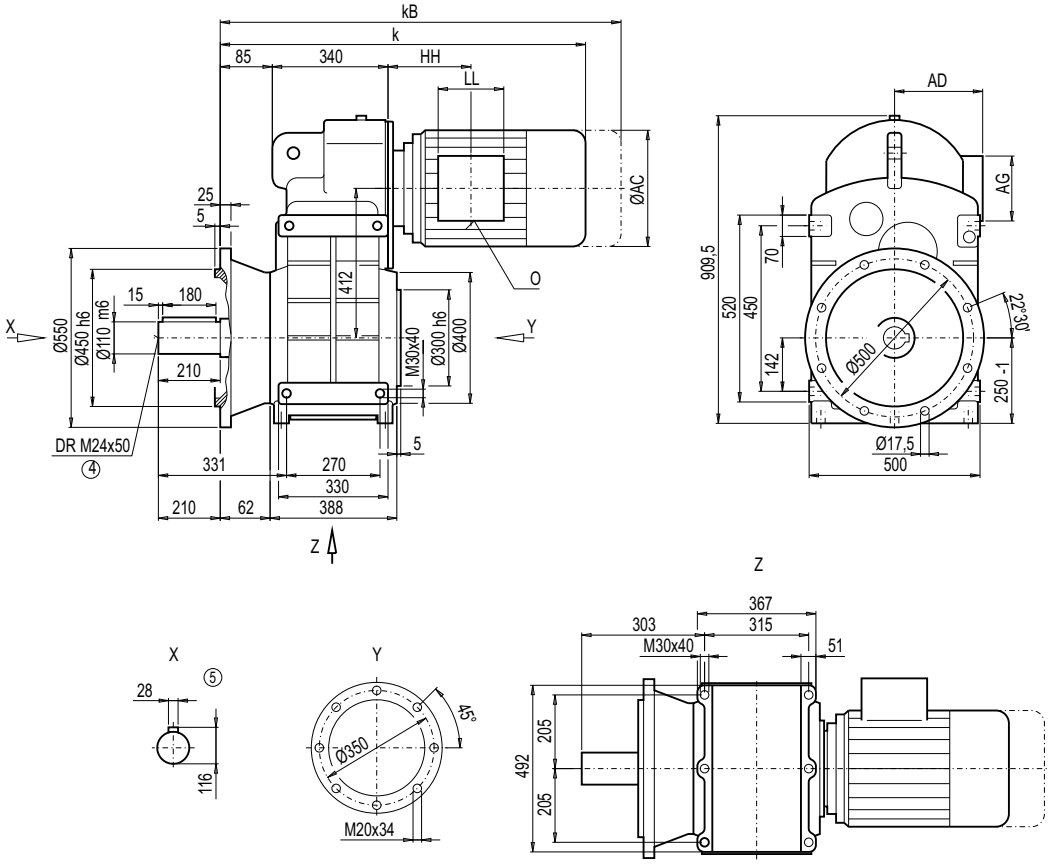

Motor	F.F168B k	kB	AC	AD	AG	LL	HH	O	Weight FDF168B	FZF168B
LA132S/M	823.5	925.5	259.0	195.0	140	140	137.0	2xM32x1.5	533	522
LA132ZM	869.5	971.5	259.0	195.0	140	140	245.0	2xM32x1.5	554	543
LA160M/L	923.5	1 042.0	313.5	227.0	165	165	160.0	2xM40x1.5	567	556
LA160ZL	971.5	1 090.0	313.5	227.0	165	165	313.0	2xM40x1.5	606	595
LG180M/L	983.0	1 105.0	348.0	322.5	260	192	177.0	2xM40x1.5	663	651
LG180ZM/ZL	1 034.0	1 156.0	348.0	322.5	260	192	177.0	2xM40x1.5	693	681
LG200L	1 039.0	1 165.0	385.0	301.0	260	192	207.0	2xM50x1.5	743	731
LG225S	1 110.0	1 349.0	442.0	325.0	260	192	243.0	2xM50x1.5	816	805
LG225M	1 110.0	1 349.0	442.0	325.0	260	192	243.0	2xM50x1.5	804	793
LG225ZM	1 170.0	1 409.0	442.0	325.0	260	192	243.0	2xM50x1.5	862	851
LG250M	1 203.5	1 428.5	495.0	392.0	300	236	278.5	2xM63x1.5	906	895
LG250ZM	1 273.5	1 499.0	495.0	392.0	300	236	278.5	2xM63x1.5	1 009	998
K4-LGI280S	1 482.5	1 709.5	555.0	432.0	300	236	489.5	2xM63x1.5	–	1 125
K4-LGI280M	1 482.5	1 709.5	555.0	432.0	300	236	489.5	2xM63x1.5	–	1 138
K4-LGI280ZM	1 592.5	1 819.5	555.0	432.0	300	236	489.5	2xM63x1.5	–	1 226

④ DIN 332

⑤ Feather key / keyway DIN 6885

© Siemens AG 2011

Dimensions

Gearbox FDA/FZA168B, FDAZ/FZAZ168B (3- / 2-stage), housing-flange-mounted design (C-type)

FA012
FAZ012

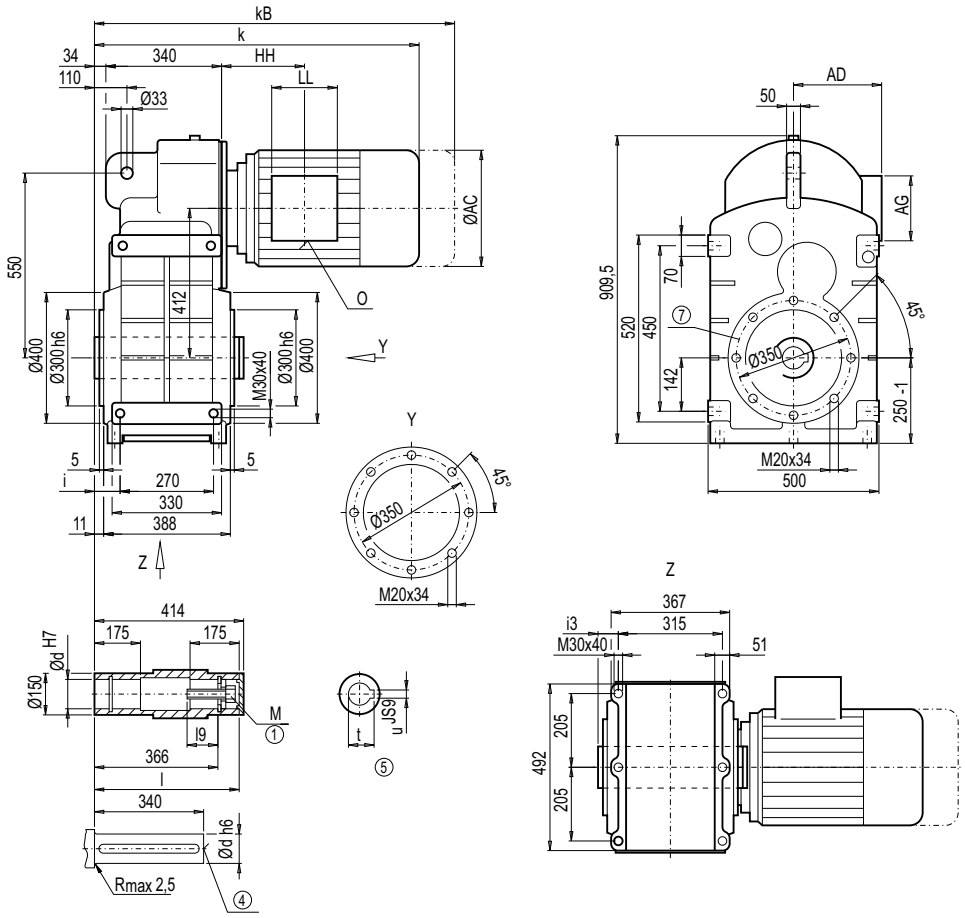

d	l	l9	M	t	u	i	i3
100 *)	410	72	M24	106.4	28	70	42
110	410	73	M24	116.4	28	70	42

*) Preferred series

	F.A.168B								Weight	
Motor	**k**	**kB**	**AC**	**AD**	**AG**	**LL**	**HH**	**O**	**FDA.168B**	**FZA.168B**
LA132S/M	772.5	874.5	259.0	195.0	140	140	137.0	2xM32x1.5	451	440
LA132ZM	818.5	920.5	259.0	195.0	140	140	245.0	2xM32x1.5	472	461
LA160M/L	872.5	991.0	313.5	227.0	165	165	160.0	2xM40x1.5	485	474
LA160ZL	920.5	1 039.0	313.5	227.0	165	165	313.0	2xM40x1.5	524	513
LG180M/L	932.0	1 054.0	348.0	322.5	260	192	177.0	2xM40x1.5	581	569
LG180ZM/ZL	983.0	1 105.0	348.0	322.5	260	192	177.0	2xM40x1.5	611	599
LG200L	988.0	1 114.0	385.0	301.0	260	192	207.0	2xM50x1.5	661	649
LG225S	1 059.0	1 298.0	442.0	325.0	260	192	243.0	2xM50x1.5	734	723
LG225M	1 059.0	1 298.0	442.0	325.0	260	192	243.0	2xM50x1.5	722	711
LG225ZM	1 119.0	1 358.0	442.0	325.0	260	192	243.0	2xM50x1.5	780	769
LG250M	1 152.5	1 377.5	495.0	392.0	300	236	278.5	2xM63x1.5	824	813
LG250ZM	1 222.5	1 448.0	495.0	392.0	300	236	278.5	2xM63x1.5	927	916
K4-LGI280S	1 431.5	1 658.5	555.0	432.0	300	236	489.5	2xM63x1.5	–	1 044
K4-LGI280M	1 431.5	1 658.5	555.0	432.0	300	236	489.5	2xM63x1.5	–	1 056
K4-LGI280ZM	1 541.5	1 768.5	555.0	432.0	300	236	489.5	2xM63x1.5	–	1 144

① DIN EN ISO 4014 ④ DIN 332 ⑤ Feather key / keyway DIN 6885 ⑦ For note, see page 3/179

© Siemens AG 2011

Gearbox FDAF/FZAF168B (3- / 2-stage), flange-mounted design

FAF012

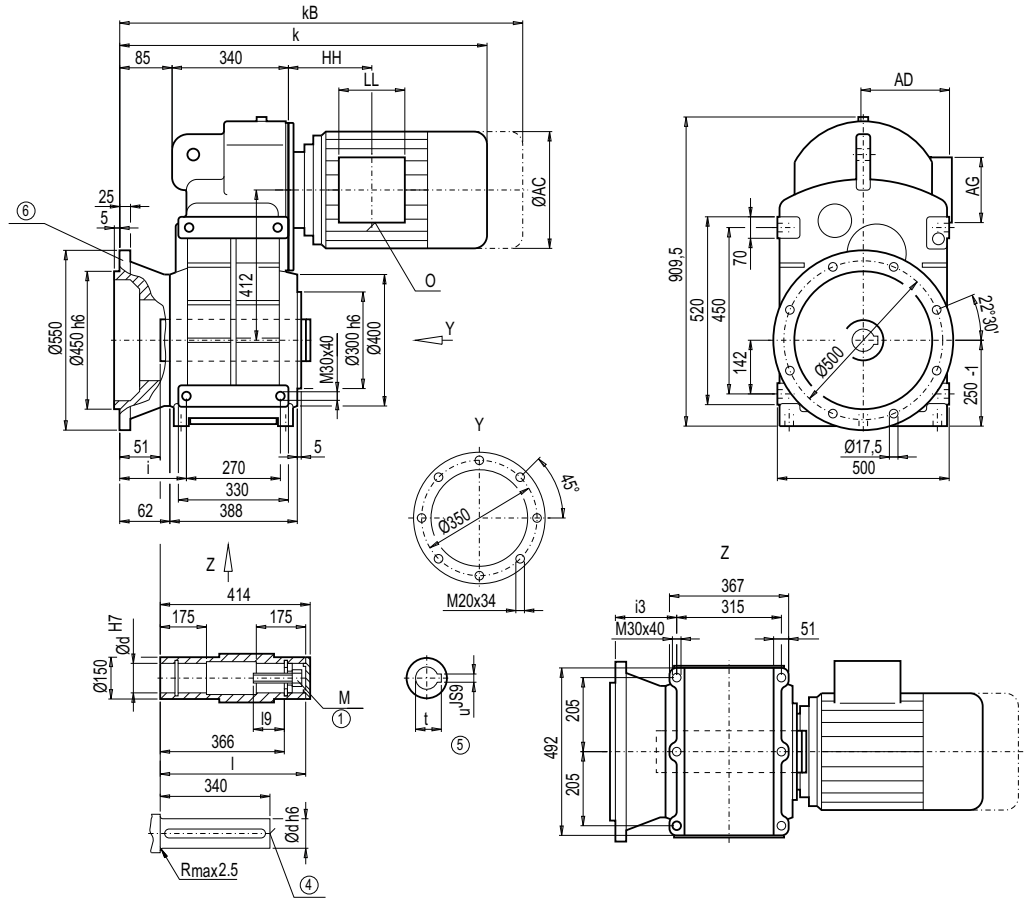

d	l	l9	M	t	u	i	i3
100 *)	410	72	M24	106.4	28	121	93
110	410	73	M24	116.4	28	121	93

*) Preferred series

	F.AF168B								Weight	
Motor	**k**	**kB**	**AC**	**AD**	**AG**	**LL**	**HH**	**O**	**FDAF168B**	**FZAF168B**
LA132S/M	823.5	925.5	259.0	195.0	140	140	137.0	2xM32x1.5	488	477
LA132ZM	869.5	971.5	259.0	195.0	140	140	245.0	2xM32x1.5	509	498
LA160M/L	923.5	1 042.0	313.5	227.0	165	165	160.0	2xM40x1.5	522	511
LA160ZL	971.5	1 090.0	313.5	227.0	165	165	313.0	2xM40x1.5	561	550
LG180M/L	983.0	1 105.0	348.0	322.5	260	192	177.0	2xM40x1.5	618	606
LG180ZM/ZL	1 034.0	1 156.0	348.0	322.5	260	192	177.0	2xM40x1.5	648	636
LG200L	1 039.0	1 165.0	385.0	301.0	260	192	207.0	2xM50x1.5	698	686
LG225S	1 110.0	1 349.0	442.0	325.0	260	192	243.0	2xM50x1.5	771	760
LG225M	1 110.0	1 349.0	442.0	325.0	260	192	243.0	2xM50x1.5	759	748
LG225ZM	1 170.0	1 409.0	442.0	325.0	260	192	243.0	2xM50x1.5	817	806
LG250M	1 203.5	1 428.5	495.0	392.0	300	236	278.5	2xM63x1.5	861	850
LG250ZM	1 273.5	1 499.0	495.0	392.0	300	236	278.5	2xM63x1.5	964	953
K4-LGI280S	1 482.5	1 709.5	555.0	432.0	300	236	489.5	2xM63x1.5	–	1 081
K4-LGI280M	1 482.5	1 709.5	555.0	432.0	300	236	489.5	2xM63x1.5	–	1 093
K4-LGI280ZM	1 592.5	1 819.5	555.0	432.0	300	236	489.5	2xM63x1.5	–	1 181

① DIN EN ISO 4014 ④ DIN 332 ⑤ Feather key / keyway DIN 6885 ⑥ For note, see page 3/178

© Siemens AG 2011

Dimensions

Gearbox FDAS/FZAS168B, FDAZS/FZAZS168B (3- / 2-stage), shaft-mounted design with shrink disk

FAS012
FAZS012

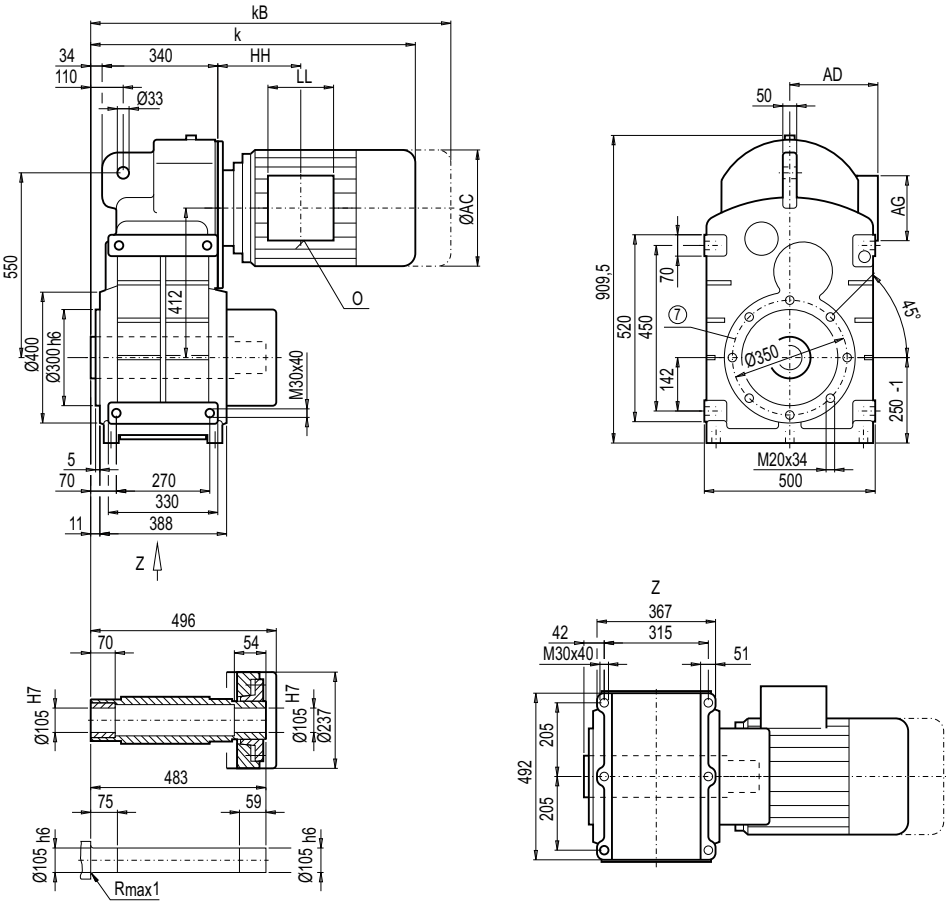

	F.A.S168B								Weight	
Motor	**k**	**kB**	**AC**	**AD**	**AG**	**LL**	**HH**	**O**	**FDA.S168B**	**FZA.S168B**
LA132S/M	772.5	874.5	259.0	195.0	140	140	137.0	2xM32x1.5	461	450
LA132ZM	818.5	920.5	259.0	195.0	140	140	245.0	2xM32x1.5	483	471
LA160M/L	872.5	991.0	313.5	227.0	165	165	160.0	2xM40x1.5	495	484
LA160ZL	920.5	1 039.0	313.5	227.0	165	165	313.0	2xM40x1.5	534	523
LG180M/L	932.0	1 054.0	348.0	322.5	260	192	177.0	2xM40x1.5	591	580
LG180ZM/ZL	983.0	1 105.0	348.0	322.5	260	192	177.0	2xM40x1.5	621	610
LG200L	988.0	1 114.0	385.0	301.0	260	192	207.0	2xM50x1.5	671	660
LG225S	1 059.0	1 298.0	442.0	325.0	260	192	243.0	2xM50x1.5	744	733
LG225M	1 059.0	1 298.0	442.0	325.0	260	192	243.0	2xM50x1.5	732	721
LG225ZM	1 119.0	1 358.0	442.0	325.0	260	192	243.0	2xM50x1.5	790	779
LG250M	1 152.5	1 377.5	495.0	392.0	300	236	278.5	2xM63x1.5	834	823
LG250ZM	1 222.5	1 448.0	495.0	392.0	300	236	278.5	2xM63x1.5	937	926
K4-LGI280S	1 431.5	1 658.5	555.0	432.0	300	236	489.5	2xM63x1.5	–	1 054
K4-LGI280M	1 431.5	1 658.5	555.0	432.0	300	236	489.5	2xM63x1.5	–	1 066
K4-LGI280ZM	1 541.5	1 768.5	555.0	432.0	300	236	489.5	2xM63x1.5	–	1 154

⑦ For note, see page 3/179

© Siemens AG 2011

Gearbox FDAFS/FZAFS168B (3- / 2-stage), flange-mounted design and shrink disk

FAFS012

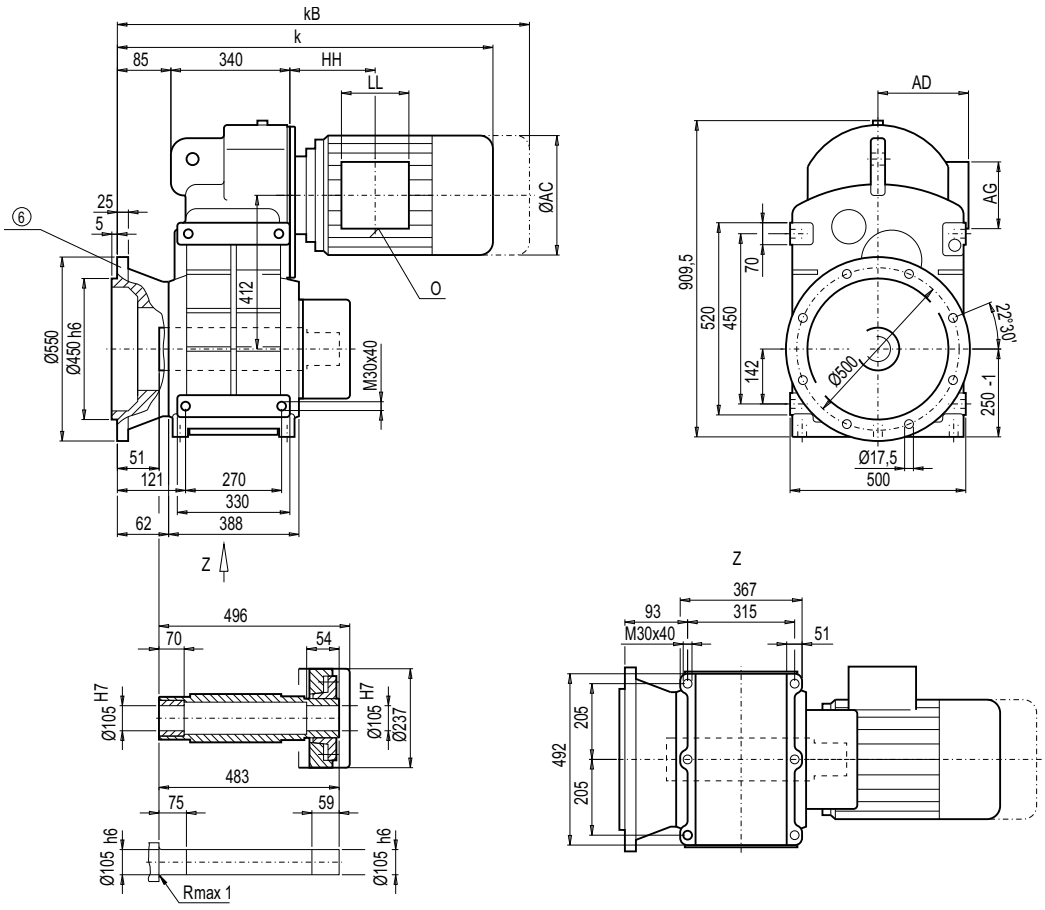

	F.AFS168B								Weight	
Motor	**k**	**kB**	**AC**	**AD**	**AG**	**LL**	**HH**	**O**	**FDAFS168B**	**FZAFS168B**
LA132S/M	823.5	925.5	259.0	195.0	140	140	137.0	2xM32x1.5	498	487
LA132ZM	869.5	971.5	259.0	195.0	140	140	245.0	2xM32x1.5	519	508
LA160M/L	923.5	1 042.0	313.5	227.0	165	165	160.0	2xM40x1.5	532	521
LA160ZL	971.5	1 090.0	313.5	227.0	165	165	313.0	2xM40x1.5	571	560
LG180M/L	983.0	1 105.0	348.0	322.5	260	192	177.0	2xM40x1.5	628	616
LG180ZM/ZL	1 034.0	1 156.0	348.0	322.5	260	192	177.0	2xM40x1.5	658	646
LG200L	1 039.0	1 165.0	385.0	301.0	260	192	207.0	2xM50x1.5	708	696
LG225S	1 110.0	1 349.0	442.0	325.0	260	192	243.0	2xM50x1.5	781	770
LG225M	1 110.0	1 349.0	442.0	325.0	260	192	243.0	2xM50x1.5	769	758
LG225ZM	1 170.0	1 409.0	442.0	325.0	260	192	243.0	2xM50x1.5	827	816
LG250M	1 203.5	1 428.5	495.0	392.0	300	236	278.5	2xM63x1.5	871	860
LG250ZM	1 273.5	1 499.0	495.0	392.0	300	236	278.5	2xM63x1.5	974	963
K4-LGI280S	1 482.5	1 709.5	555.0	432.0	300	236	489.5	2xM63x1.5	–	1 091
K4-LGI280M	1 482.5	1 709.5	555.0	432.0	300	236	489.5	2xM63x1.5	–	1 103
K4-LGI280ZM	1 592.5	1 819.5	555.0	432.0	300	236	489.5	2xM63x1.5	–	1 191

⑥ For note, see page 3/178

© Siemens AG 2011

Dimensions

Gearbox FDZ/FZZ188B (3- / 2-stage), housing-flange-mounted design (C-type)

FZ012

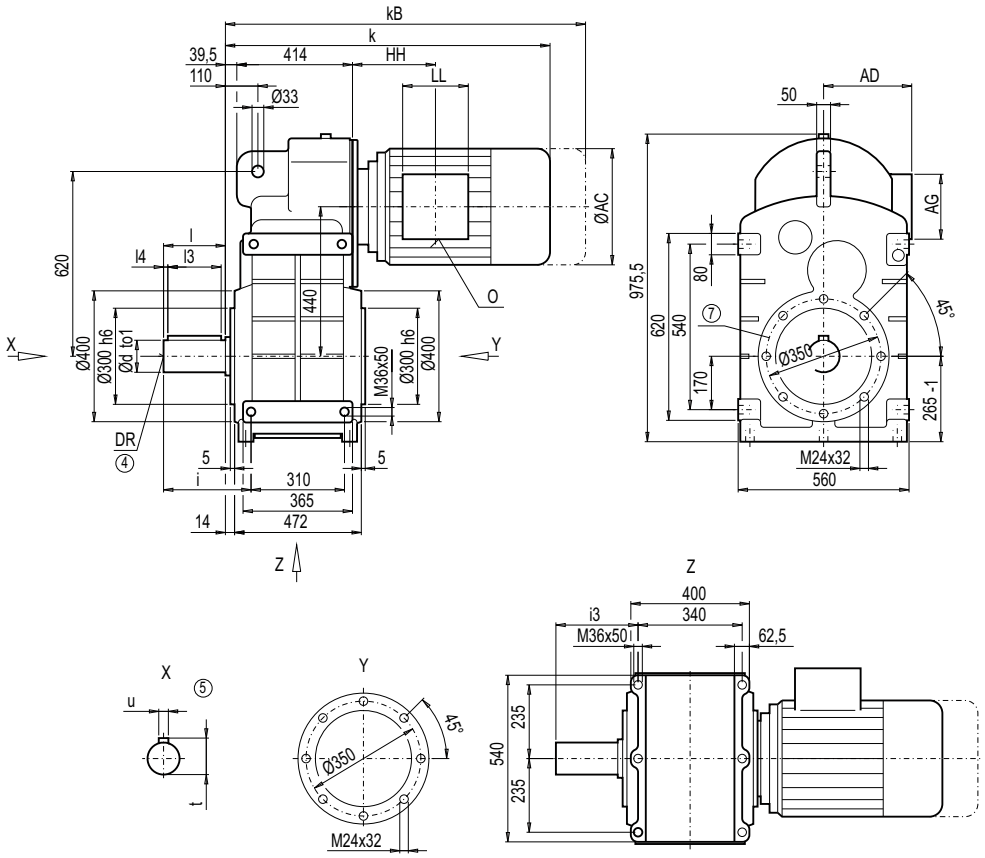

d	to1	l	l3	l4	t	u	i	i3	DR
120 *)	m6	210	180,	15	127	32	305	290	M24x50
140	m6	250	220	10	148	36	345	330	M24x50

*) Preferred series

	F.Z188B								Weight	
Motor	**k**	**kB**	**AC**	**AD**	**AG**	**LL**	**HH**	**O**	**FDZ188B**	**FZZ188B**
LA132S/M	837.5	939.5	259.0	195.0	140	140	122.5	2xM32x1.5	685	–
LA132ZM	883.5	985.5	259.0	195.0	140	140	230.5	2xM32x1.5	706	–
LA160M/L	937.5	1 056.0	313.5	227.0	165	165	145.5	2xM40x1.5	718	704
LA160ZL	985.5	1 104.0	313.5	227.0	165	165	298.5	2xM40x1.5	757	743
LG180M/L	997.0	1 119.0	348.0	322.5	260	192	162.5	2xM40x1.5	814	799
LG180ZM/ZL	1 048.0	1 170.0	348.0	322.5	260	192	162.5	2xM40x1.5	844	829
LG200L	1 053.0	1 179.0	385.0	301.0	260	192	192.5	2xM50x1.5	894	879
LG225S	1 124.0	1 363.0	442.0	325.0	260	192	228.5	2xM50x1.5	967	952
LG225M	1 124.0	1 363.0	442.0	325.0	260	192	228.5	2xM50x1.5	955	940
LG225ZM	1 184.0	1 423.0	442.0	325.0	260	192	228.5	2xM50x1.5	1 013	998
LG250M	1 217.5	1 442.5	495.0	392.0	300	236	264.0	2xM63x1.5	1 057	1 042
LG250ZM	1 287.5	1 513.0	495.0	392.0	300	236	264.0	2xM63x1.5	1 160	1 145
K4-LGI280S	1 497.0	1 724.0	555.0	432.0	300	236	475.5	2xM63x1.5	1 185	1 171
K4-LGI280M	1 497.0	1 724.0	555.0	432.0	300	236	475.5	2xM63x1.5	1 291	1 276
K4-LGI280ZM	1 607.0	1 834.0	555.0	432.0	300	236	475.5	2xM63x1.5	1 379	1 364
K2-LGI315S/M	1 685.0	1 950.0	610.0	500.0	380	307	584.5	2xM63x1.5	–	1 406
K2-LGI315ZM	1 845.0	2 110.0	610.0	500.0	380	307	584.5	2xM63x1.5	–	1 561
K2-LGI315L	1 845.0	2 110.0	610.0	500.0	380	307	584.5	2xM63x1.5	–	1 701
K2-LGI315ZL	1 985.0	2 250.0	610.0	500.0	380	307	584.5	2xM63x1.5	–	1 901

④ DIN 332 ⑤ Feather key / keyway DIN 6885 ⑦ For note, see page 3/179

© Siemens AG 2011

Gearbox FDF/FZF188B (3- / 2-stage), flange-mounted design (A-type)

FF012

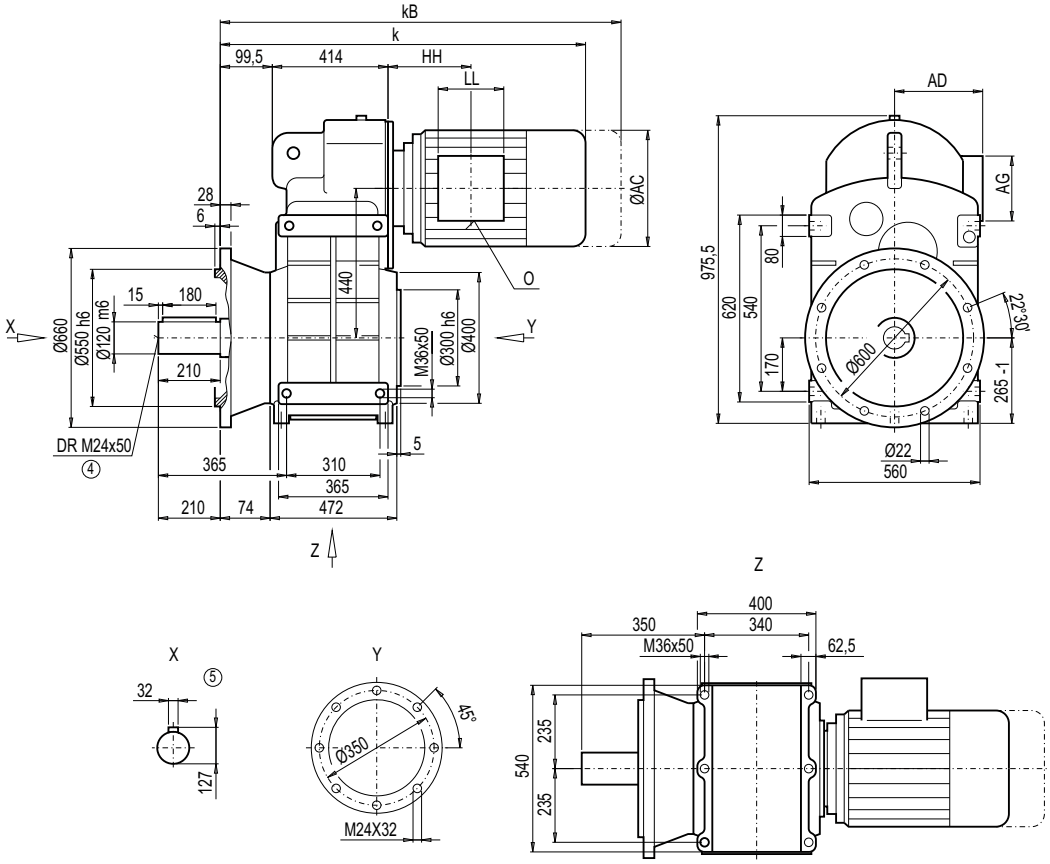

Motor	F.F188B k	kB	AC	AD	AG	LL	HH	O	Weight FDF188B	FZF188B
LA132S/M	897.5	999.5	259.0	195.0	140	140	122.5	2xM32x1.5	740	–
LA132ZM	943.5	1 045.5	259.0	195.0	140	140	230.5	2xM32x1.5	761	–
LA160M/L	997.5	1 116.0	313.5	227.0	165	165	145.5	2xM40x1.5	773	759
LA160ZL	1 045.5	1 164.0	313.5	227.0	165	165	298.5	2xM40x1.5	812	798
LG180M/L	1 057.0	1 179.0	348.0	322.5	260	192	162.5	2xM40x1.5	869	854
LG180ZM/ZL	1 108.0	1 230.0	348.0	322.5	260	192	162.5	2xM40x1.5	899	884
LG200L	1 113.0	1 239.0	385.0	301.0	260	192	192.5	2xM50x1.5	949	934
LG225S	1 184.0	1 423.0	442.0	325.0	260	192	228.5	2xM50x1.5	1 022	1 007
LG225M	1 184.0	1 423.0	442.0	325.0	260	192	228.5	2xM50x1.5	1 010	995
LG225ZM	1 244.0	1 483.0	442.0	325.0	260	192	228.5	2xM50x1.5	1 068	1 053
LG250M	1 277.5	1 502.5	495.0	392.0	300	236	264.0	2xM63x1.5	1 112	1 097
LG250ZM	1 347.5	1 573.0	495.0	392.0	300	236	264.0	2xM63x1.5	1 215	1 200
K4-LGI280S	1 557.0	1 784.0	555.0	432.0	300	236	475.5	2xM63x1.5	1 240	1 226
K4-LGI280M	1 557.0	1 784.0	555.0	432.0	300	236	475.5	2xM63x1.5	1 346	1 331
K4-LGI280ZM	1 667.0	1 894.0	555.0	432.0	300	236	475.5	2xM63x1.5	1 434	1 419
K2-LGI315S/M	1 745.0	2 010.0	610.0	500.0	380	307	584.5	2xM63x1.5	–	1 461
K2-LGI315ZM	1 905.0	2 170.0	610.0	500.0	380	307	584.5	2xM63x1.5	–	1 616
K2-LGI315L	1 905.0	2 170.0	610.0	500.0	380	307	584.5	2xM63x1.5	–	1 756
K2-LGI315ZL	2 045.0	2 310.0	610.0	500.0	380	307	584.5	2xM63x1.5	–	1 956

④ DIN 332

⑤ Feather key / keyway DIN 6885

© Siemens AG 2011

Dimensions

Gearbox FDA/FZA188B, FDAZ/FZAZ188B (3- / 2-stage), housing-flange-mounted design (C-type)

FA012
FAZ012

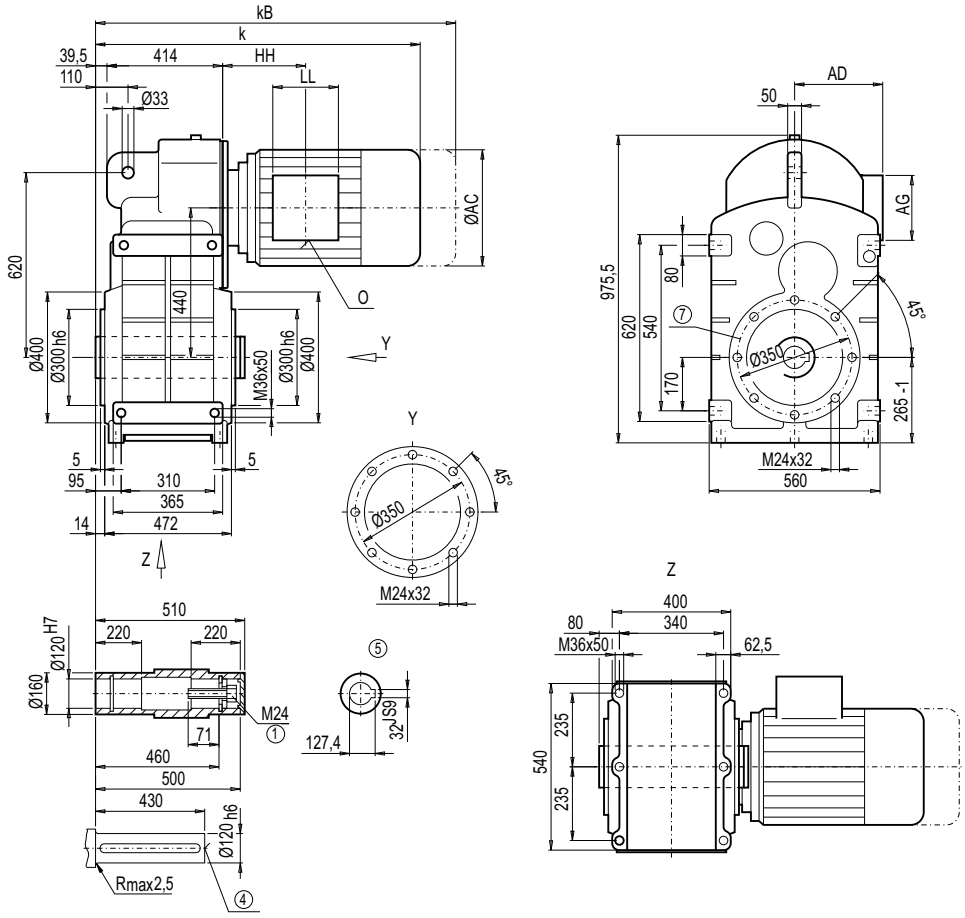

Motor	F.A.188B k	kB	AC	AD	AG	LL	HH	O	Weight FDA.188B	FZA.188B
LA132S/M	837.5	939.5	259.0	195.0	140	140	122.5	2xM32x1.5	622	–
LA132ZM	883.5	985.5	259.0	195.0	140	140	230.5	2xM32x1.5	643	–
LA160M/L	937.5	1 056.0	313.5	227.0	165	165	145.5	2xM40x1.5	655	641
LA160ZL	985.5	1 104.0	313.5	227.0	165	165	298.5	2xM40x1.5	694	680
LG180M/L	997.0	1 119.0	348.0	322.5	260	192	162.5	2xM40x1.5	751	736
LG180ZM/ZL	1 048.0	1 170.0	348.0	322.5	260	192	162.5	2xM40x1.5	781	766
LG200L	1 053.0	1 179.0	385.0	301.0	260	192	192.5	2xM50x1.5	831	816
LG225S	1 124.0	1 363.0	442.0	325.0	260	192	228.5	2xM50x1.5	904	889
LG225M	1 124.0	1 363.0	442.0	325.0	260	192	228.5	2xM50x1.5	892	877
LG225ZM	1 184.0	1 423.0	442.0	325.0	260	192	228.5	2xM50x1.5	950	935
LG250M	1 217.5	1 442.5	495.0	392.0	300	236	264.0	2xM63x1.5	994	979
LG250ZM	1 287.5	1 513.0	495.0	392.0	300	236	264.0	2xM63x1.5	1 097	1 082
K4-LGI280S	1 497.0	1 724.0	555.0	432.0	300	236	475.5	2xM63x1.5	1 122	1 108
K4-LGI280M	1 497.0	1 724.0	555.0	432.0	300	236	475.5	2xM63x1.5	1 228	1 213
K4-LGI280ZM	1 607.0	1 834.0	555.0	432.0	300	236	475.5	2xM63x1.5	1 316	1 301
K2-LGI315S/M	1 685.0	1 950.0	610.0	500.0	380	307	584.5	2xM63x1.5	–	1 343
K2-LGI315ZM	1 845.0	2 110.0	610.0	500.0	380	307	584.5	2xM63x1.5	–	1 498
K2-LGI315L	1 845.0	2 110.0	610.0	500.0	380	307	584.5	2xM63x1.5	–	1 643
K2-LGI315ZL	1 985.0	2 250.0	610.0	500.0	380	307	584.5	2xM63x1.5	–	1 838

① DIN EN ISO 4014 ④ DIN 332 ⑤ Feather key / keyway DIN 6885 ⑦ For note, see page 3/179

© Siemens AG 2011

Gearbox FDAF/FZAF188B (3- / 2-stage), flange-mounted design

FAF012

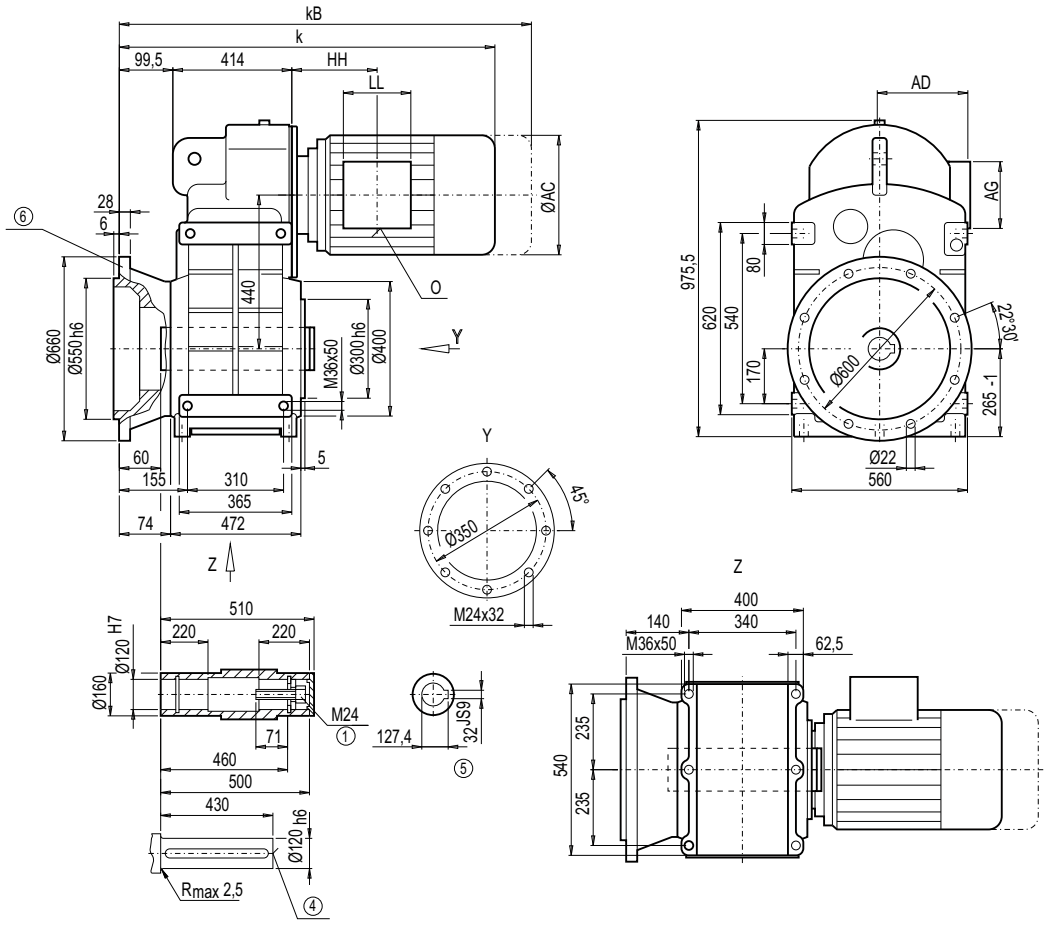

	F.AF188B								Weight	
Motor	**k**	**kB**	**AC**	**AD**	**AG**	**LL**	**HH**	**O**	**FDAF188B**	**FZAF188B**
LA132S/M	897.5	999.5	259.0	195.0	140	140	122.5	2xM32x1.5	677	–
LA132ZM	943.5	1 045.5	259.0	195.0	140	140	230.5	2xM32x1.5	698	–
LA160M/L	997.5	1 116.0	313.5	227.0	165	165	145.5	2xM40x1.5	710	696
LA160ZL	1 045.5	1 164.0	313.5	227.0	165	165	298.5	2xM40x1.5	749	735
LG180M/L	1 057.0	1 179.0	348.0	322.5	260	192	162.5	2xM40x1.5	806	791
LG180ZM/ZL	1 108.0	1 230.0	348.0	322.5	260	192	162.5	2xM40x1.5	836	821
LG200L	1 113.0	1 239.0	385.0	301.0	260	192	192.5	2xM50x1.5	886	871
LG225S	1 184.0	1 423.0	442.0	325.0	260	192	228.5	2xM50x1.5	959	944
LG225M	1 184.0	1 423.0	442.0	325.0	260	192	228.5	2xM50x1.5	947	932
LG225ZM	1 244.0	1 483.0	442.0	325.0	260	192	228.5	2xM50x1.5	1 005	990
LG250M	1 277.5	1 502.5	495.0	392.0	300	236	264.0	2xM63x1.5	1 051	1 034
LG250ZM	1 347.5	1 573.0	495.0	392.0	300	236	264.0	2xM63x1.5	1 152	1 137
K4-LGI280S	1 557.0	1 784.0	555.0	432.0	300	236	475.5	2xM63x1.5	1 177	1 163
K4-LGI280M	1 557.0	1 784.0	555.0	432.0	300	236	475.5	2xM63x1.5	1 283	1 268
K4-LGI280ZM	1 667.0	1 894.0	555.0	432.0	300	236	475.5	2xM63x1.5	1 371	1 356
K2-LGI315S/M	1 745.0	2 010.0	610.0	500.0	380	307	584.5	2xM63x1.5	–	1 398
K2-LGI315ZM	1 905.0	2 170.0	610.0	500.0	380	307	584.5	2xM63x1.5	–	1 553
K2-LGI315L	1 905.0	2 170.0	610.0	500.0	380	307	584.5	2xM63x1.5	–	1 693
K2-LGI315ZL	2 045.0	2 310.0	610.0	500.0	380	307	584.5	2xM63x1.5	–	1 893

① DIN EN ISO 4014 ④ DIN 332 ⑤ Feather key / keyway DIN 6885 ⑥ For note, see page 3/178

© Siemens AG 2011

Dimensions

Gearbox FDAS/FZAS188B, FDAZS/FZAZS188B (3- / 2-stage), shaft-mounted design with shrink disk

FAS012
FAZS012

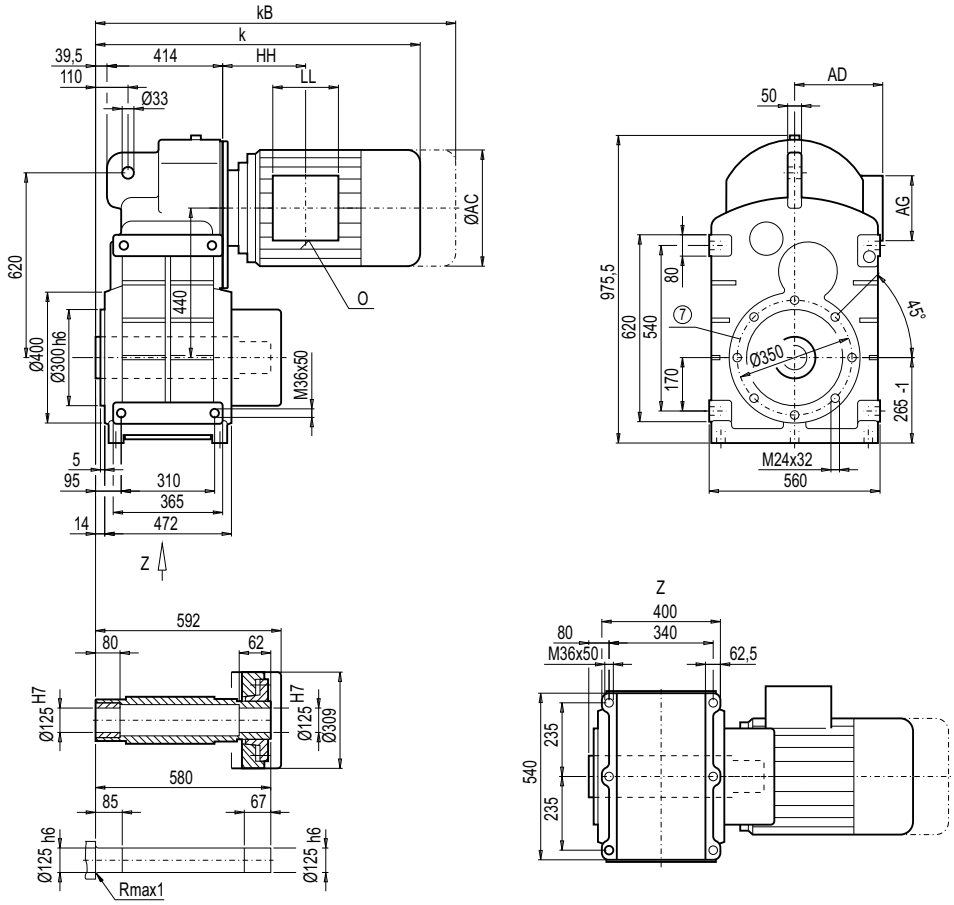

Motor	F.A.S188B k	kB	AC	AD	AG	LL	HH	O	Weight FDA.S188B	FZA.S188B
LA132S/M	837.5	939.5	259.0	195.0	140	140	122.5	2xM32x1.5	738	–
LA132ZM	883.5	985.5	259.0	195.0	140	140	230.5	2xM32x1.5	759	–
LA160M/L	937.5	1 056.0	313.5	227.0	165	165	145.5	2xM40x1.5	771	757
LA160ZL	985.5	1 104.0	313.5	227.0	165	165	298.5	2xM40x1.5	810	796
LG180M/L	997.0	1 119.0	348.0	322.5	260	192	162.5	2xM40x1.5	867	852
LG180ZM/ZL	1 048.0	1 170.0	348.0	322.5	260	192	162.5	2xM40x1.5	897	882
LG200L	1 053.0	1 179.0	385.0	301.0	260	192	192.5	2xM50x1.5	947	932
LG225S	1 124.0	1 363.0	442.0	325.0	260	192	228.5	2xM50x1.5	1 020	1 005
LG225M	1 124.0	1 363.0	442.0	325.0	260	192	228.5	2xM50x1.5	1 008	993
LG225ZM	1 184.0	1 423.0	442.0	325.0	260	192	228.5	2xM50x1.5	1 066	1 051
LG250M	1 217.5	1 442.5	495.0	392.0	300	236	264.0	2xM63x1.5	1 110	1 095
LG250ZM	1 287.5	1 513.0	495.0	392.0	300	236	264.0	2xM63x1.5	1 213	1 198
K4-LGI280S	1 497.0	1 724.0	555.0	432.0	300	236	475.5	2xM63x1.5	1 238	1 224
K4-LGI280M	1 497.0	1 724.0	555.0	432.0	300	236	475.5	2xM63x1.5	1 344	1 329
K4-LGI280ZM	1 607.0	1 834.0	555.0	432.0	300	236	475.5	2xM63x1.5	1 432	1 417
K2-LGI315S/M	1 685.0	1 950.0	610.0	500.0	380	307	584.5	2xM63x1.5	–	1 459
K2-LGI315ZM	1 845.0	2 110.0	610.0	500.0	380	307	584.5	2xM63x1.5	–	1 614
K2-LGI315L	1 845.0	2 110.0	610.0	500.0	380	307	584.5	2xM63x1.5	–	1 754
K2-LGI315ZL	1 985.0	2 250.0	610.0	500.0	380	307	584.5	2xM63x1.5	–	1 954

⑦ For note, see page 3/179

© Siemens AG 2011

Gearbox FDAFS/FZAFS188B (3- / 2-stage), flange-mounted design and shrink disk

FAFS012

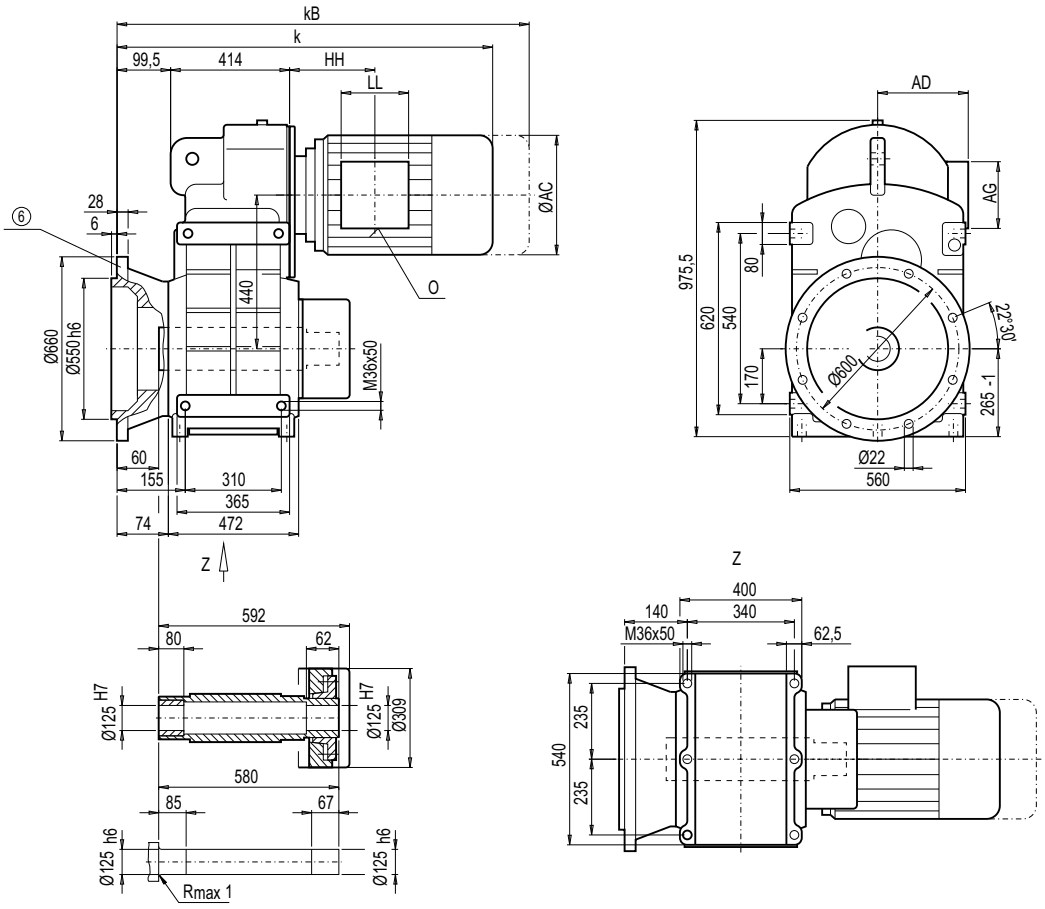

Motor	F.AFS188B k	kB	AC	AD	AG	LL	HH	O	Weight FDAFS188B	FZAFS188B
LA132S/M	897.5	999.5	259.0	195.0	140	140	122.5	2xM32x1.5	687	–
LA132ZM	943.5	1 045.5	259.0	195.0	140	140	230.5	2xM32x1.5	708	–
LA160M/L	997.5	1 116.0	313.5	227.0	165	165	145.5	2xM40x1.5	721	706
LA160ZL	1 045.5	1 164.0	313.5	227.0	165	165	298.5	2xM40x1.5	760	745
LG180M/L	1 057.0	1 179.0	348.0	322.5	260	192	162.5	2xM40x1.5	816	802
LG180ZM/ZL	1 108.0	1 230.0	348.0	322.5	260	192	162.5	2xM40x1.5	846	832
LG200L	1 113.0	1 239.0	385.0	301.0	260	192	192.5	2xM50x1.5	896	882
LG225S	1 184.0	1 423.0	442.0	325.0	260	192	228.5	2xM50x1.5	969	954
LG225M	1 184.0	1 423.0	442.0	325.0	260	192	228.5	2xM50x1.5	957	942
LG225ZM	1 244.0	1 483.0	442.0	325.0	260	192	228.5	2xM50x1.5	1 015	1 000
LG250M	1 277.5	1 502.5	495.0	392.0	300	236	264.0	2xM63x1.5	1 059	1 044
LG250ZM	1 347.5	1 573.0	495.0	392.0	300	236	264.0	2xM63x1.5	1 162	1 147
K4-LGI280S	1 557.0	1 784.0	555.0	432.0	300	236	475.5	2xM63x1.5	1 187	1 173
K4-LGI280M	1 557.0	1 784.0	555.0	432.0	300	236	475.5	2xM63x1.5	1 293	1 278
K4-LGI280ZM	1 667.0	1 894.0	555.0	432.0	300	236	475.5	2xM63x1.5	1 381	1 366
K2-LGI315S/M	1 745.0	2 010.0	610.0	500.0	380	307	584.5	2xM63x1.5	–	1 408
K2-LGI315ZM	1 905.0	2 170.0	610.0	500.0	380	307	584.5	2xM63x1.5	–	1 563
K2-LGI315L	1 905.0	2 170.0	610.0	500.0	380	307	584.5	2xM63x1.5	–	1 703
K2-LGI315ZL	2 045.0	2 310.0	610.0	500.0	380	307	584.5	2xM63x1.5	–	1 903

⑥ For note, see page 3/178

© Siemens AG 2011

Dimensions

Gearbox FD/FZ208, FDZ/FZZ208 (3- / 2-stage), housing-flange-mounted design (C-type)

F012
FZ012

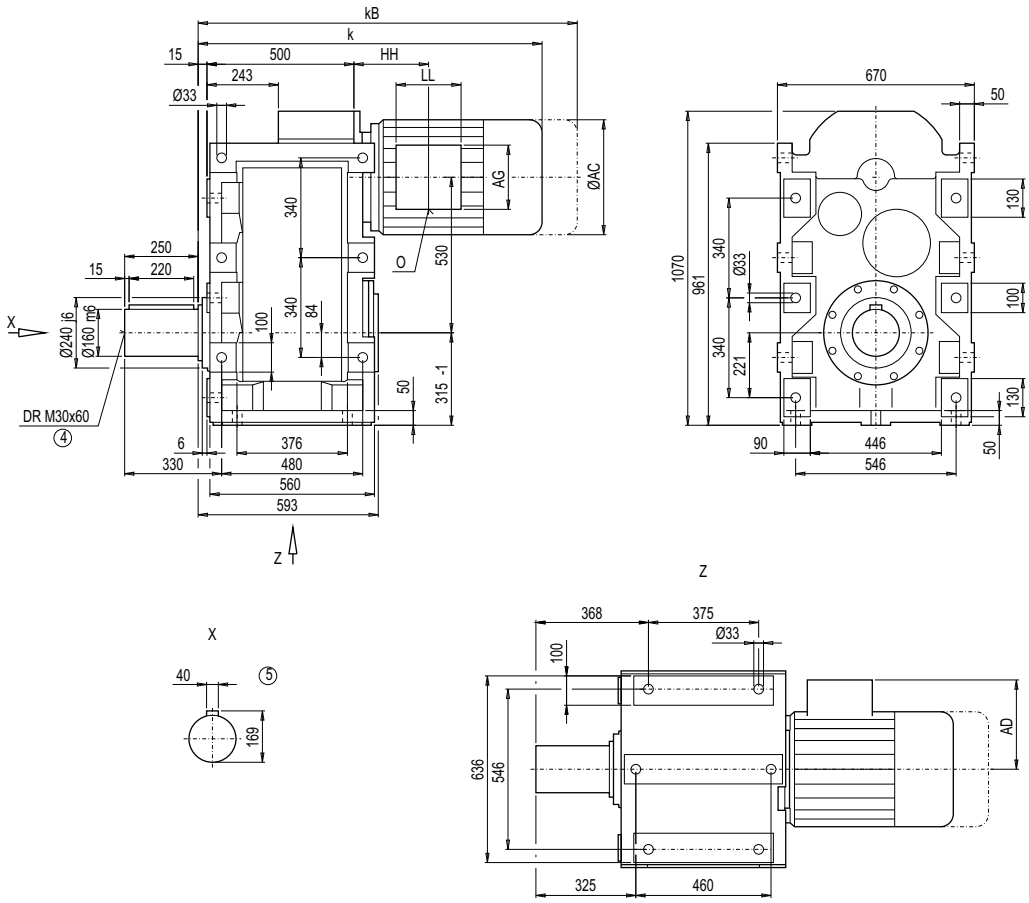

Motor	F..208 k	kB	AC	AD	AG	LL	HH	O	Weight FD.208	FZ.208
LA132S/M	899.0	1 001.0	259.0	195.0	140	140	122.5	2xM32x1.5	1 124	–
LA132ZM	945.0	1 047.0	259.0	195.0	140	140	230.5	2xM32x1.5	1 145	–
LA160M/L	999.0	1 117.5	313.5	227.0	165	165	145.5	2xM40x1.5	1 158	1 128
LA160ZL	1 047.0	1 165.5	313.5	227.0	165	165	298.5	2xM40x1.5	1 197	1 166
LG180M/L	1 058.5	1 180.5	348.0	322.5	260	192	162.5	2xM40x1.5	1 253	1 223
LG180ZM/ZL	1 109.5	1 231.5	348.0	322.5	260	192	162.5	2xM40x1.5	1 283	1 253
LG200L	1 114.5	1 240.5	385.0	301.0	260	192	192.5	2xM50x1.5	1 333	1 303
LG225S	1 185.5	1 424.5	442.0	325.0	260	192	228.5	2xM50x1.5	1 406	1 376
LG225M	1 185.5	1 424.5	442.0	325.0	260	192	228.5	2xM50x1.5	1 394	1 364
LG225ZM	1 245.5	1 484.5	442.0	325.0	260	192	228.5	2xM50x1.5	1 452	1 422
LG250M	1 279.0	1 504.5	495.0	392.0	300	236	264.0	2xM63x1.5	1 496	1 466
LG250ZM	1 349.0	1 574.5	495.0	392.0	300	236	264.0	2xM63x1.5	1 599	1 569
K4-LGI280S	1 558.5	1 785.5	555.0	432.0	300	236	475.5	2xM63x1.5	1 625	1 595
K4-LGI280M	1 558.5	1 785.5	555.0	432.0	300	236	475.5	2xM63x1.5	1 730	1 700
K4-LGI280ZM	1 668.5	1 895.5	555.0	432.0	300	236	475.5	2xM63x1.5	1 818	1 788
K2-LGI315S/M	1 746.5	2 011.5	610.0	500.0	380	307	584.5	2xM63x1.5	1 860	1 830
K2-LGI315ZM	1 906.5	2 171.5	610.0	500.0	380	307	584.5	2xM63x1.5	2 015	1 985
K2-LGI315L	1 906.5	2 171.5	610.0	500.0	380	307	584.5	2xM63x1.5	2 155	2 125
K2-LGI315ZL	2 046.5	2 311.5	610.0	500.0	380	307	584.5	2xM63x1.5	2 355	2 325

④ DIN 332

⑤ Feather key / keyway DIN 6885

© Siemens AG 2011

Gearbox FDAS/FZAS208, FDAZS/FZAZS208 (3- / 2-stage) shaft-mounted design with shrink disk

FAS012
FAZS012

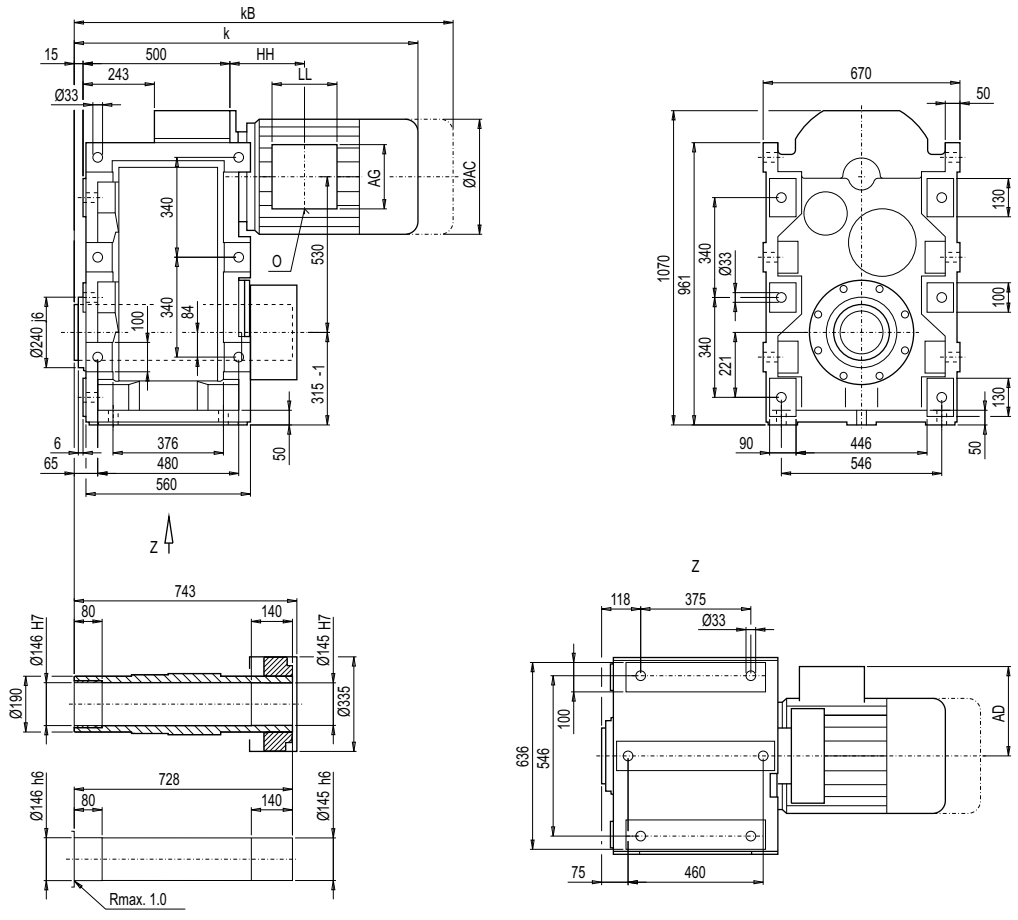

Motor	F.A.S208B k	kB	AC	AD	AG	LL	HH	O	Weight FDA.S208	FZA.S208
LA132S/M	899.0	1 001.0	259.0	195.0	140	140	122.5	2xM32x1.5	1 054	–
LA132ZM	945.0	1 047.0	259.0	195.0	140	140	230.5	2xM32x1.5	1 075	–
LA160M/L	999.0	1 117.5	313.5	227.0	165	165	145.5	2xM40x1.5	1 088	1 060
LA160ZL	1 047.0	1 165.5	313.5	227.0	165	165	298.5	2xM40x1.5	1 127	1 099
LG180M/L	1 058.5	1 180.5	348.0	322.5	260	192	162.5	2xM40x1.5	1 183	1 155
LG180ZM/ZL	1 109.5	1 231.5	348.0	322.5	260	192	162.5	2xM40x1.5	1 213	1 185
LG200L	1 114.5	1 240.5	385.0	301.0	260	192	192.5	2xM50x1.5	1 263	1 235
LG225S	1 185.5	1 424.5	442.0	325.0	260	192	228.5	2xM50x1.5	1 336	1 308
LG225M	1 185.5	1 424.5	442.0	325.0	260	192	228.5	2xM50x1.5	1 324	1 296
LG225ZM	1 245.5	1 484.5	442.0	325.0	260	192	228.5	2xM50x1.5	1 382	1 354
LG250M	1 279.0	1 504.5	495.0	392.0	300	236	264.0	2xM63x1.5	1 426	1 398
LG250ZM	1 349.0	1 574.5	495.0	392.0	300	236	264.0	2xM63x1.5	1 529	1 501
K4-LGI280S	1 558.5	1 785.5	555.0	432.0	300	236	475.5	2xM63x1.5	1 555	1 527
K4-LGI280M	1 558.5	1 785.5	555.0	432.0	300	236	475.5	2xM63x1.5	1 660	1 632
K4-LGI280ZM	1 668.5	1 895.5	555.0	432.0	300	236	475.5	2xM63x1.5	1 748	1 720
K2-LGI315S/M	1 746.5	2 011.5	610.0	500.0	380	307	584.5	2xM63x1.5	1 790	1 762
K2-LGI315ZM	1 906.5	2 171.5	610.0	500.0	380	307	584.5	2xM63x1.5	1 945	1 917
K2-LGI315L	1 906.5	2 171.5	610.0	500.0	380	307	584.5	2xM63x1.5	2 085	2 057
K2-LGI315ZL	2 046.5	2 311.5	610.0	500.0	380	307	584.5	2xM63x1.5	2 285	2 257

© Siemens AG 2011

Dimensions

Gearbox FDADS/FZADS208 (3- / 2-stage), shaft-mounted design with torque arm

FADS012

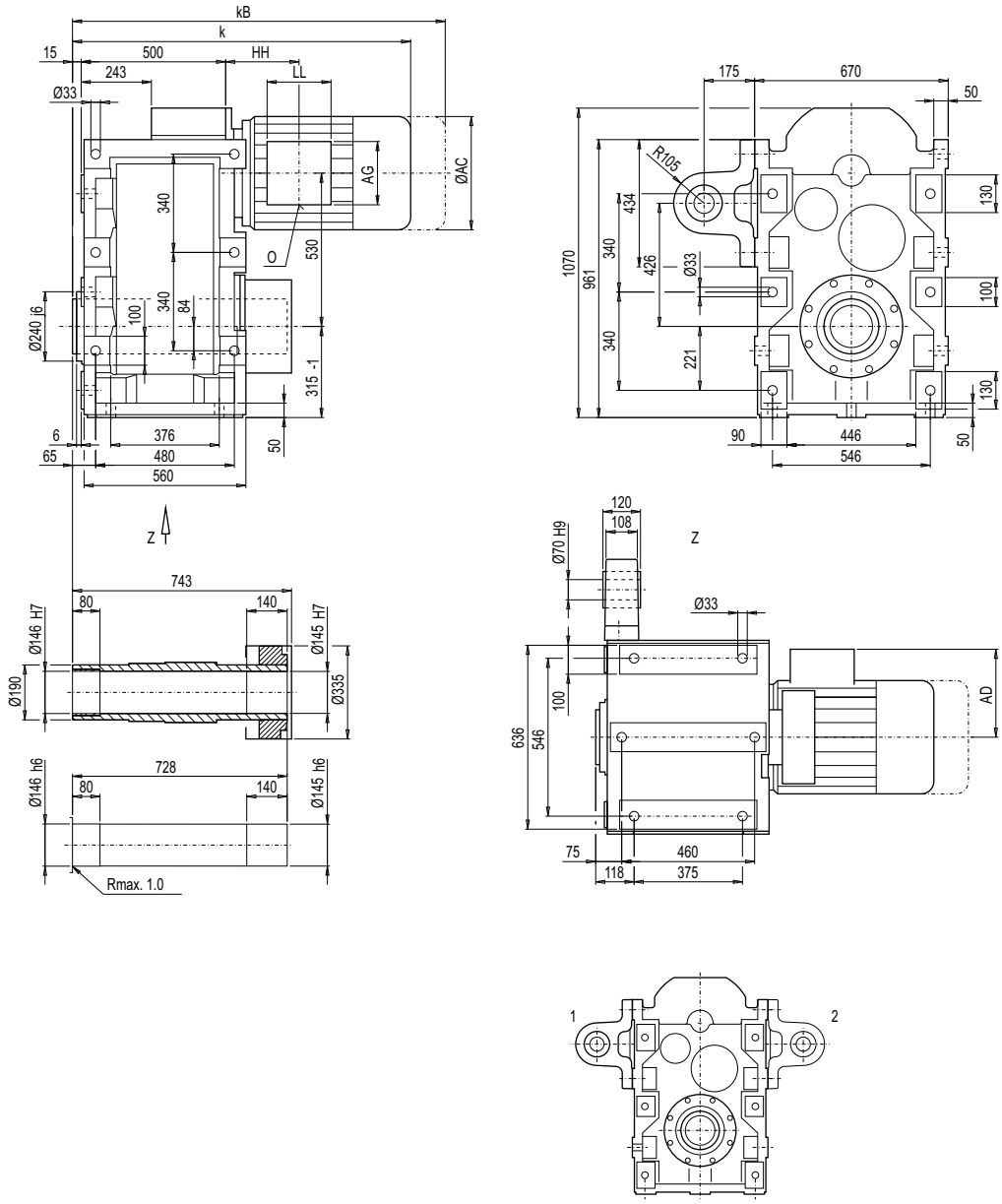

© Siemens AG 2011

Gearbox FDADS/FZADS208 (3- / 2-stage), shaft-mounted design with torque arm (continued)

FADS012

	F.ADS208								Weight	
Motor	k	kB	AC	AD	AG	LL	HH	O	FDADS208	FZADS208
LA132S/M	899.0	1 001.0	259.0	195.0	140	140	122.5	2xM32x1.5	1 077	–
LA132ZM	945.0	1 047.0	259.0	195.0	140	140	230.5	2xM32x1.5	1 098	–
LA160M/L	999.0	1 117.5	313.5	227.0	165	165	145.5	2xM40x1.5	1 111	1 083
LA160ZL	1 047.0	1 165.5	313.5	227.0	165	165	298.5	2xM40x1.5	1 150	1 122
LG180M/L	1 058.5	1 180.5	348.0	322.5	260	192	162.5	2xM40x1.5	1 206	1 178
LG180ZM/ZL	1 109.5	1 231.5	348.0	322.5	260	192	162.5	2xM40x1.5	1 236	1 208
LG200L	1 114.5	1 240.5	385.0	301.0	260	192	192.5	2xM50x1.5	1 286	1 258
LG225S	1 185.5	1 424.5	442.0	325.0	260	192	228.5	2xM50x1.5	1 359	1 331
LG225M	1 185.5	1 424.5	442.0	325.0	260	192	228.5	2xM50x1.5	1 348	1 319
LG225ZM	1 245.5	1 484.5	442.0	325.0	260	192	228.5	2xM50x1.5	1 405	1 377
LG250M	1 279.0	1 504.5	495.0	392.0	300	236	264.0	2xM63x1.5	1 449	1 421
LG250ZM	1 349.0	1 574.5	495.0	392.0	300	236	264.0	2xM63x1.5	1 552	1 524
K4-LGI280S	1 558.5	1 785.5	555.0	432.0	300	236	475.5	2xM63x1.5	1 578	1 550
K4-LGI280M	1 558.5	1 785.5	555.0	432.0	300	236	475.5	2xM63x1.5	1 683	1 655
K4-LGI280ZM	1 668.5	1 895.5	555.0	432.0	300	236	475.5	2xM63x1.5	1 771	1 743
K2-LGI315S/M	1 746.5	2 011.5	610.0	500.0	380	307	584.5	2xM63x1.5	1 813	1 785
K2-LGI315ZM	1 906.5	2 171.5	610.0	500.0	380	307	584.5	2xM63x1.5	1 968	1 940
K2-LGI315L	1 906.5	2 171.5	610.0	500.0	380	307	584.5	2xM63x1.5	2 108	2 080
K2-LGI315ZL	2 046.5	2 311.5	610.0	500.0	380	307	584.5	2xM63x1.5	2 308	2 280

© Siemens AG 2011

Dimensions

Offset hollow shafts with shrink disk

Optional hollow shafts for parallel shaft gearbox with shrink disk

FA.S

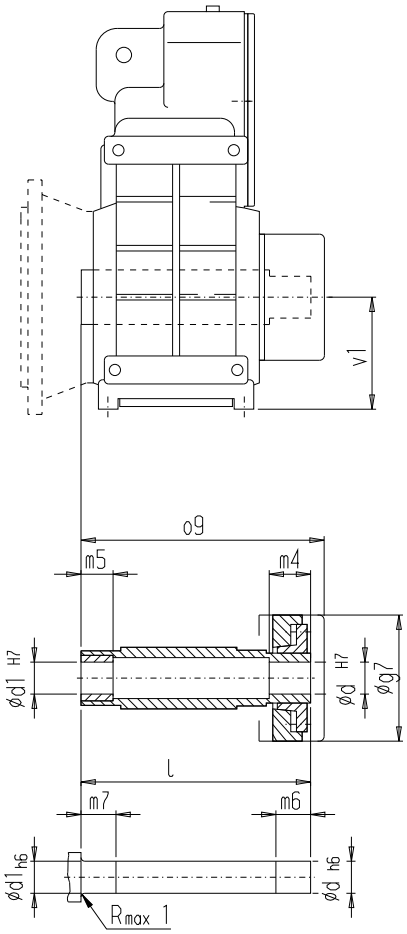

Gearbox	d	d1	l	o9	m4	m5	m6	m7	g7	v1
F.AS/F.AFS38B	30	31	146	154	22	20	27	25	77	75
F.AS/F.AFS48B	40	41	177	184	25	20	30	25	93	93
F.AS/F.AFS68B	40	42	209	216	35	20	40	25	112	111
	50	51	209	216	27	20	32	25	112	111
F.AS/F.AFS88B	50	52	214	249	29	30	34	35	132	132
	60	61	241	249	29	30	34	35	132	132
F.AS/F.AFS108B	65	66	280	288	30	40	35	45	144	160
	70	71	280	288	30	40	35	45	144	160
F.AS/F.AFS128B	75	76	345	357	44	50	49	55	180	180
	80	81	345	357	40	50	45	55	180	180
F.AS/F.AFS148B	95	96	404	418	49	60	54	65	210	212
F.AS/F.AFS168B	105	106	483	496	54	70	59	75	237	250
F.AS/F.AFS188B	125	126	580	592	61	80	67	85	263	265

© Siemens AG 2011

Shaft-mounted design with splined shaft in acc. with DIN 5480

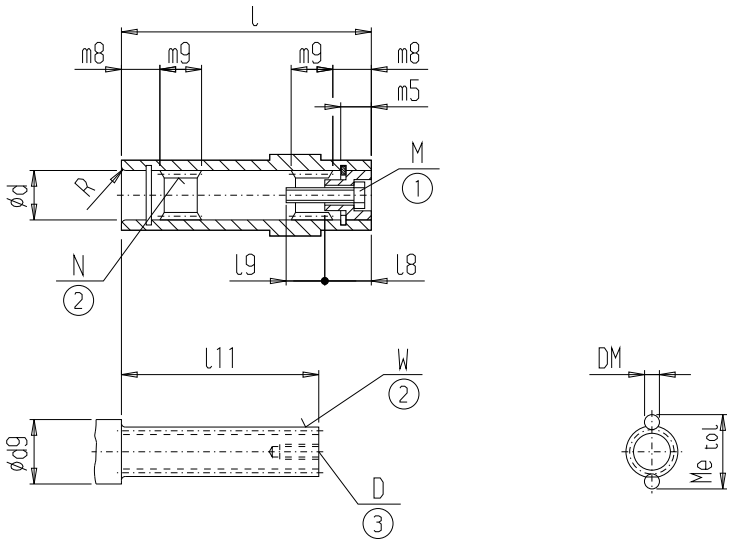

Gearbox	d	l	d9 min.	l11	W	D	R	m8	m9
F.A.T28	30	104	36	72	W25x1.25x30x18 8f	M10	R1.6	17.0	25
F.A.T38B	35	120	45	95	W35x1.25x30x26 8f	M10	R2	17.0	27
F.A.T48B	40	150	52	120	W40x2x30x18 8f	M12	R3	22.0	34
F.A.T68B	55	180	65	142	W50x2x30x24 8f	M16	R2	21.0	40
F.A.T88B	65	210	80	172	W60x2x30x28 8f	M16	R2	22.5	49
F.A.T108B	72	240	85	201	W70x2x30x34 8f	M20	R2	22.5	56
F.A.T128B	90	300	105	257	W80x3x30x25 8f	M20	R2	24.0	71
F.A.T148B	90	350	110	306	W90x3x30x28 8f	M20	R3	25.0	88
F.A.T168B	110	410	130	350	W110x3x30x35 8f	M24	R3	32.0	99
F.A.T188B	135	500	145	445	W130x5x30x24 8f	M24	R4	42.0	120

Gearbox	N	m5	l8	l9	M	DM	Me	tol
F.A.T28	N25x1.25x30x18 9H	9.0	17	31.8	M10x40	2.75	28.023	-0.049
F.A.T38B	N35x1.25x30x26 9H	12.0	18	27.0	M10x35	2.50	37.423	-0.041
F.A.T48B	N40x2x30x18 9H	14.0	20	37.0	M12x45	4.50	45.083	-0.043
F.A.T68B	N50x2x30x24 9H	16.0	23	49.5	M16x55	4.00	54.156	-0.049
F.A.T88B	N60x2x30x28 9H	16.5	26	46.5	M16x55	4.00	63.918	-0.053
F.A.T108B	N70x2x30x34 9H	16.5	28	51.0	M20x60	4.00	74.181	-0.057
F.A.T128B	N80x3x30x25 9H	17.0	31	46.0	M20x60	6.00	85.856	-0.053
F.A.T148B	N90x3x30x28 9H	17.0	31	51.0	M20x60	6.00	95.911	-0.053
F.A.T168B	N110x3x30x35 9H	20.0	41	65.5	M24x80	6.00	115.998	-0.061
F.A.T188B	N130x5x30x24 9H	20.0	50	35.5	M24x60	10.00	139.848	-0.061

① DIN 912 ② DIN 5480 ③ DIN 332-D

© Siemens AG 2011

Dimensions

Parallel shaft tandem gearbox

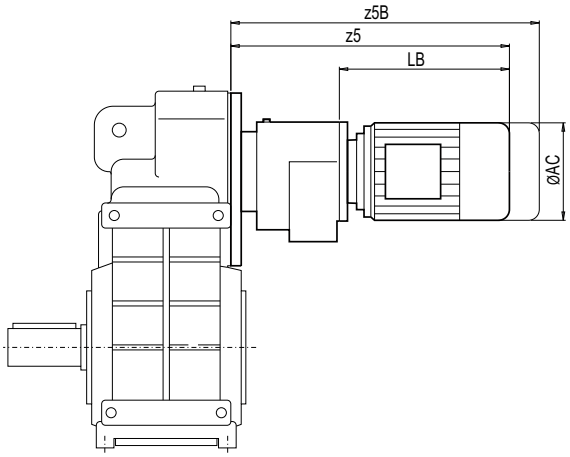

Gearbox	Motor	AC	z5	zB5	LB
FZ.38B-Z28	LA71	139.0	338.0	393.0	202.5
	LA71Z	139.0	357.0	412.0	221.5
	LA80	156.5	440.0	503.5	304.5
	LA80Z	156.5	462.5	526.0	327.0
	LA90S/L	174.0	435.0	506.0	299.5
	LA90ZL	174.0	480.0	551.0	344.5
	LA100L	195.0	517.0	598.0	381.5
	LA100ZL	195.0	587.0	668.0	451.5
FZ.38B-D28	LA71	139.0	338.0	393.0	202.5
	LA71Z	139.0	357.0	412.0	221.5
	LA80	156.5	440.0	503.5	304.5
	LA80Z	156.5	462.5	526.0	327.0
	LA90S/L	174.0	435.0	506.0	299.5
	LA90ZL	174.0	480.0	551.0	344.5
FD.48B-Z28	LA71	139.0	363.0	418.0	202.5
	LA71Z	139.0	382.0	437.0	221.5
	LA80	156.5	465.0	528.5	304.5
	LA80Z	156.5	487.5	551.0	327.0
	LA90S/L	174.0	460.0	531.0	299.5
	LA90ZL	174.0	505.0	576.0	344.5
	LA100L	195.0	542.0	623.0	381.5
	LA100ZL	195.0	612.0	693.0	451.5
FD.48B-D28	LA71	139.0	363.0	418.0	202.5
	LA71Z	139.0	382.0	437.0	221.5
	LA80	156.5	465.0	528.5	304.5
	LA80Z	156.5	487.5	551.0	327.0
	LA90S/L	174.0	460.0	531.0	299.5
	LA90ZL	174.0	505.0	576.0	344.5
FD.68B-Z28	LA71	139.0	357.5	412.5	202.5
	LA71Z	139.0	376.5	431.5	221.5
	LA80	156.5	459.5	523.0	304.5
	LA80Z	156.5	482.0	545.5	327.0
	LA90S/L	174.0	454.5	525.5	299.5
	LA90ZL	174.0	499.5	570.5	344.5
	LA100L	195.0	536.5	617.5	381.5
	LA100ZL	195.0	606.5	687.5	451.5

Gearbox	Motor	AC	z5	zB5	LB
FD.68B-D28	LA71	139.0	357.5	412.5	202.5
	LA71Z	139.0	376.5	431.5	221.5
	LA80	156.5	459.5	523.0	304.5
	LA80Z	156.5	482.0	545.5	327.0
	LA90S/L	174.0	454.5	525.5	299.5
	LA90ZL	174.0	499.5	570.5	344.5
FD.88B-Z28	LA71	139.0	351.5	406.5	202.5
	LA71Z	139.0	370.5	425.5	221.5
	LA80	156.5	453.5	517.0	304.5
	LA80Z	156.5	476.0	539.5	327.0
	LA90S/L	174.0	448.5	519.5	299.5
	LA90ZL	174.0	493.5	564.5	344.5
	LA100L	195.0	530.5	611.5	381.5
	LA100ZL	195.0	600.5	681.5	451.5
FD.88B-D28	LA71	139.0	351.5	406.5	202.5
	LA71Z	139.0	370.5	425.5	221.5
	LA80	156.5	453.5	517.0	304.5
	LA80Z	156.5	476.0	539.5	327.0
	LA90S/L	174.0	448.5	519.5	299.5
	LA90ZL	174.0	493.5	564.5	344.5
FD.108B-Z38	LA71 [1]	139.0	465.5	520.5	258.5
	LA71Z [1]	139.0	484.5	539.5	277.5
	LA80 [1]	156.5	502.5	566.0	295.5
	LA80Z [1]	156.5	525.0	588.5	318.0
	LA90S/L [1]	174.0	533.5	604.5	326.5
	LA90ZL [1]	174.0	578.5	649.5	371.5
	LA100L [1]	195.0	579.5	660.5	372.5
	LA100ZL [1]	195.0	649.5	730.5	442.5
	LA112M [1]	219.0	609.0	690.0	402.0
	LA112ZM [1]	219.0	637.0	718.0	430.0
	LA71 [2]	139.0	476.0	531.0	258.5
	LA71Z [2]	139.0	495.0	550.0	277.5
	LA80 [2]	156.5	513.0	576.5	295.5
	LA80Z [2]	156.5	535.5	599.0	318.0
	LA90S/L [2]	174.0	544.0	615.0	326.5
	LA90ZL [2]	174.0	589.0	660.0	371.5

1) $i_{tot} \geq 1647$

2) $i_{tot} < 1647$

© Siemens AG 2011

Parallel shaft tandem gearbox (continued)

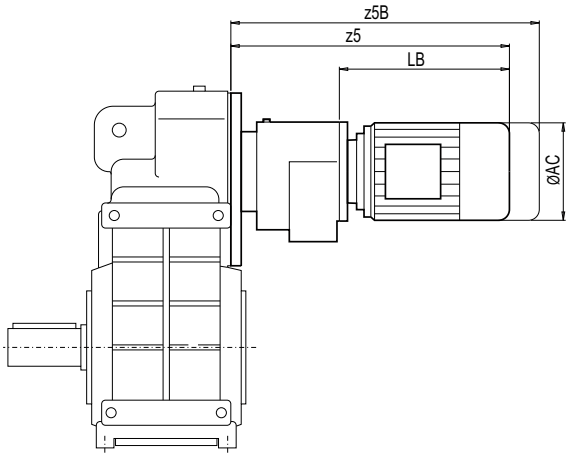

Gearbox	Motor	AC	z5	zB5	LB
FD.108B-Z38	LA100L [2]	195.0	590.0	671.0	372.5
	LA100ZL [2]	195.0	660.0	741.0	442.5
	LA112M [2]	219.0	619.5	700.5	402.0
	LA112ZM [2]	219.0	647.5	728.5	430.0
FD.108B-D38	LA71	139.0	480.5	535.5	273.5
	LA71Z	139.0	499.5	554.5	292.5
	LA80	156.5	517.5	581.0	310.5
	LA80Z	156.5	540.0	603.5	333.0
	LA90S/L	174.0	548.5	619.5	341.5
	LA90ZL	174.0	593.5	664.5	386.5
FD.128B-Z38	LA71	139.0	458.5	513.5	258.5
	LA71Z	139.0	477.5	532.5	277.5
	LA80	156.5	495.5	559.0	295.5
	LA80Z	156.5	518.0	581.5	318.0
	LA90S/L	174.0	526.5	597.5	326.5
	LA90ZL	174.0	571.5	642.5	371.5
	LA100L	195.0	572.5	653.5	372.5
	LA100ZL	195.0	642.5	723.5	442.5
	LA112M	219.0	602.0	683.0	402.0
	LA112ZM	219.0	630.0	711.0	430.0
FD.128B-D38	LA71	139.0	473.5	528.5	273.5
	LA71Z	139.0	492.5	547.5	292.5
	LA80	156.5	510.5	574.0	310.5
	LA80Z	156.5	533.0	596.5	333.0
	LA90S/L	174.0	541.5	612.5	341.5
	LA90ZL	174.0	586.5	657.5	386.5
FD.128B-Z48	LA71	139.0	532.0	587.0	253.0
	LA71Z	139.0	551.0	606.0	272.0
	LA80	156.5	569.0	632.5	290.0
	LA80Z	156.5	591.5	655.0	312.5
	LA90S	174.0	600.0	671.0	321.0
	LA90L	174.0	600.0	671.0	321.0
	LA90ZL	174.0	645.0	716.0	366.0
	LA100L	195.0	646.0	727.0	367.0
	LA100ZL	195.0	716.0	797.0	437.0

Gearbox	Motor	AC	z5	zB5	LB
FD.128B-Z48	LA112M	219.0	675.0	756.0	396.0
	LA112ZM	219.0	703.0	784.0	424.0
	LA132S	259.0	737.0	839.0	458.0
	LA132M	259.0	737.0	839.0	458.0
	LA132ZM	259.0	783.0	885.0	504.0
FD.148B-Z38	LA71	139.0	454.0	509.0	258.5
	LA71Z	139.0	473.0	528.0	277.5
	LA80	156.5	491.0	554.5	295.5
	LA80Z	156.5	513.5	577.0	318.0
	LA90S	174.0	522.0	593.0	326.5
	LA90L	174.0	522.0	593.0	326.5
	LA90ZL	174.0	567.0	638.0	371.5
	LA100L	195.0	568.0	649.0	372.5
	LA100ZL	195.0	638.0	719.0	442.5
	LA112M	219.0	597.5	678.5	402.0
	LA112ZM	219.0	625.5	706.5	430.0
FD.148B-D38	LA71	139.0	469.0	524.0	273.5
	LA71Z	139.0	488.0	543.0	292.5
	LA80	156.5	506.0	569.5	310.5
	LA80Z	156.5	528.5	592.0	333.0
	LA90S	174.0	537.0	608.0	341.5
	LA90L	174.0	537.0	608.0	341.5
	LA90ZL	174.0	582.0	653.0	386.5
FD.148B-Z48	LA71	139.0	521.5	576.5	253.0
	LA71Z	139.0	540.5	595.5	272.0
	LA80	156.5	558.5	622.0	290.0
	LA80Z	156.5	581.0	644.5	312.5
	LA90S/L	174.0	589.5	660.5	321.0
	LA90ZL	174.0	634.5	705.5	366.0
	LA100L	195.0	635.5	716.5	367.0
	LA100ZL	195.0	705.5	786.5	437.0
	LA112M	219.0	664.5	745.5	396.0
	LA112ZM	219.0	692.5	773.5	424.0
	LA132S/M	259.0	726.5	828.5	458.0
	LA132ZM	259.0	772.5	874.5	504.0

2) $i_{tot} < 1647$

© Siemens AG 2011

Dimensions

Parallel shaft tandem gearbox (continued)

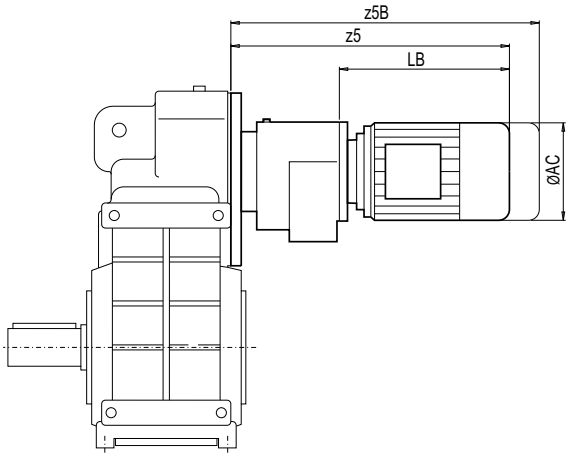

Gearbox	Motor	AC	z5	zB5	LB
FD.168B-Z48	LA71	139.0	513.5	568.5	253.0
	LA71Z	139.0	532.5	587.5	272.0
	LA80	156.5	550.5	614.0	290.0
	LA80Z	156.5	573.0	636.5	312.5
	LA90S	174.0	581.5	652.5	321.0
	LA90L	174.0	581.5	652.5	321.0
	LA90ZL	174.0	626.5	697.5	366.0
	LA100L	195.0	627.5	708.5	367.0
	LA100ZL	195.0	697.5	778.5	437.0
	LA112M	219.0	656.5	737.5	396.0
	LA112ZM	219.0	684.5	765.5	424.0
	LA132S	259.0	718.5	820.5	458.0
	LA132M	259.0	718.5	820.5	458.0
	LA132ZM	259.0	764.5	866.5	504.0
FD.168B-D48	LA71	139.0	530.5	585.5	270.0
	LA71Z	139.0	549.5	604.5	289.0
	LA80	156.5	567.5	631.0	307.0
	LA80Z	156.5	590.0	653.5	329.5
	LA90S/L	174.0	598.5	669.5	338.0
	LA90ZL	174.0	643.5	714.5	383.0
	LA100L	195.0	644.5	725.5	384.0
	LA100ZL	195.0	714.5	795.5	454.0
FD.168B-Z68	LA71	139.0	583.0	638.0	247.0
	LA71Z	139.0	602.0	657.0	266.0
	LA80	156.5	620.0	683.5	284.0
	LA80Z	156.5	642.5	706.0	306.5
	LA90S/L	174.0	651.0	722.0	315.0
	LA90ZL	174.0	696.0	767.0	360.0
	LA100L	195.0	697.0	778.0	361.0
	LA100ZL	195.0	767.0	848.0	431.0
	LA112M	219.0	724.0	805.0	388.0
	LA112ZM	219.0	752.0	833.0	416.0
	LA132S/M	259.0	784.0	886.0	448.0
	LA132ZM	259.0	830.0	932.0	494.0
	LA160M/L	313.5	886.5	1 005.0	550.5
	LA160ZL	313.5	934.5	1 053.0	598.5

Gearbox	Motor	AC	z5	zB5	LB
FD.188B-Z48	LA71	139.0	499.0	554.0	253.0
	LA71Z	139.0	518.0	573.0	272.0
	LA80	156.5	536.0	599.5	290.0
	LA80Z	156.5	558.5	622.0	312.5
	LA90S/L	174.0	567.0	638.0	321.0
	LA90ZL	174.0	612.0	683.0	366.0
	LA100L	195.0	613.0	694.0	367.0
	LA100ZL	195.0	683.0	764.0	437.0
	LA112M	219.0	642.0	723.0	396.0
	LA112ZM	219.0	670.0	751.0	424.0
	LA132S/M	259.0	704.0	806.0	458.0
	LA132ZM	259.0	750.0	852.0	504.0
FD_188B-D48	LA71	139.0	516.0	571.0	270.0
	LA71Z	139.0	535.0	590.0	289.0
	LA80	156.5	553.0	616.5	307.0
	LA80Z	156.5	575.5	639.0	329.5
	LA90S	174.0	584.0	655.0	338.0
	LA90L	174.0	584.0	655.0	338.0
	LA90ZL	174.0	629.0	700.0	383.0
	LA100L	195.0	630.0	711.0	384.0
	LA100ZL	195.0	700.0	781.0	454.0
FD_188B-Z68	LA71	139.0	585.0	640.0	247.0
	LA71Z	139.0	604.0	659.0	266.0
	LA80	156.5	622.0	685.5	284.0
	LA80Z	156.5	644.5	708.0	306.5
	LA90S/L	174.0	653.0	724.0	315.0
	LA90ZL	174.0	698.0	769.0	360.0
	LA100L	195.0	699.0	780.0	361.0
	LA100ZL	195.0	769.0	850.0	431.0
	LA132S/M	259.0	786.0	888.0	448.0
	LA132ZM	259.0	832.0	934.0	494.0
	LA160M/L	313.5	888.5	1 007.0	550.5
	LA160ZL	313.5	936.5	1 055.0	598.5

© Siemens AG 2011

Parallel shaft tandem gearbox (continued)

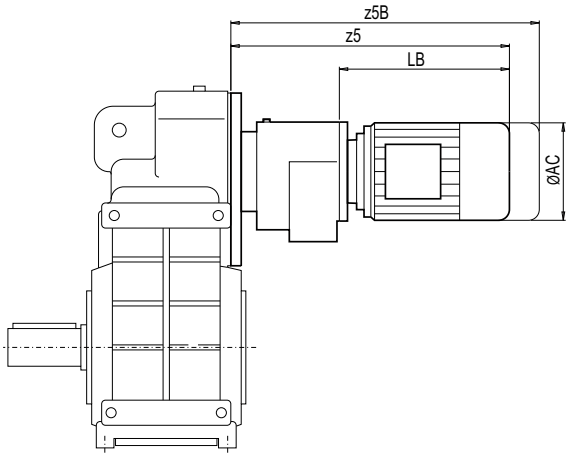

Gearbox	Motor	AC	z5	zB5	LB
FD.208-Z68	LA71	139.0	585.0	640.0	247.0
	LA71Z	139.0	604.0	659.0	266.0
	LA80	156.5	622.0	685.5	284.0
	LA80Z	156.5	644.5	708.0	306.5
	LA90S/L	174.0	653.0	724.0	315.0
	LA90ZL	174.0	698.0	769.0	360.0
	LA100L	195.0	699.0	780.0	361.0
	LA100ZL	195.0	769.0	850.0	431.0
	LA132S/M	259.0	786.0	888.0	448.0
	LA132ZM	259.0	832.0	934.0	494.0
	LA160M/L	313.5	888.5	1 007.0	550.5
	LA160ZL	313.5	936.5	1 055.0	598.5
FD_208-D68	LA71	139.0	603.5	658.5	265.5
	LA71Z	139.0	622.5	677.5	284.5
	LA80	156.5	640.5	704.0	302.5
	LA80Z	156.5	663.0	726.5	325.0
	LA90S/L	174.0	671.5	742.5	333.5
	LA90ZL	174.0	716.5	787.5	378.5
	LA100L	195.0	717.5	798.5	379.5
	LA100ZL	195.0	787.5	868.5	449.5

Gearbox	Motor	AC	z5	zB5	LB
FD.208-Z88	LA90S/L	174.0	776.5	847.5	300.0
	LA90ZL	174.0	821.5	892.5	345.0
	LA100L	195.0	820.0	901.0	343.5
	LA100ZL	195.0	890.0	971.0	413.5
	LA112M	219.0	846.0	927.0	369.5
	LA112ZM	219.0	874.0	955.0	397.5
	LA132S/M	259.0	906.0	1 008.0	429.5
	LA132ZM	259.0	952.0	1 054.0	475.5
	LA160M/L	313.5	1 010.5	1 129.0	534.0
	LA160ZL	313.5	1 058.5	1 177.0	582.0
	LG180M/L	348.0	1 070.0	1 192.0	593.5
	LG180ZM/ZL	348.0	1 121.0	1 243.0	644.5

© Siemens AG 2011

Dimensions

Flange design for mixers

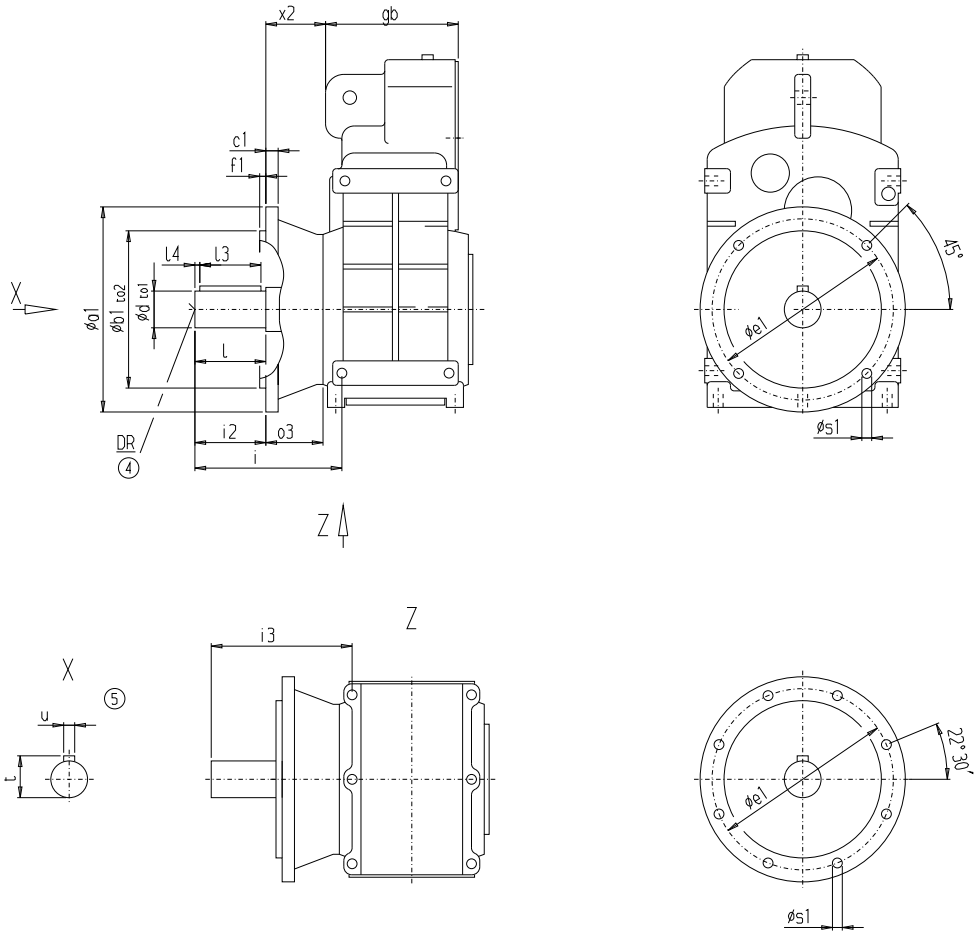

Gearbox	a1	b1	to2	c1	e1	f1	s1	o3	i	i2	i3
FDM88B FZM88B	300	230	j6	20	265	4	13.5	120	286.5	140	281.5
FDM108B FZM108B	350	250	h6	20	300	5	17.5	135	333.5	170	319.0
FDM128B FZM128B	450	350	h6	25	400	5	17.5	165	373.5	170	363.5
FDM148B FZM148B	450	350	h6	25	400	5	17.5	185	449.0	210	428.0
FDM168B FZM168B	550	450	h6	28	500	5	17.5	210	479.0	210	451.0

Gearbox	x2	gb	d	to1	l	l3	l4	t	u	DR	Weights	
											FDM	FZM
FDM88B FZM88B	126.0	175	70	m6	140	110	15	74.5	20	M20x42	80	81
FDM108B FZM108B	140.5	205	80	m6	170	125	20	85.0	22	M20x42	135	135
FDM128B FZM128B	172.0	271	90	m6	170	140	15	95.0	25	M24x50	236	234
FDM148B FZM148B	211.0	298	100	m6	210	180	15	106.0	28	M24x50	337	333
FDM168B FZM168B	237.0	336	120	m6	210	180	15	127.0	32	M24x50	540	529

④ DIN 332

⑤ Feather key / keyway DIN 6885

© Siemens AG 2011

Shaft-mounted design with mixer flanges

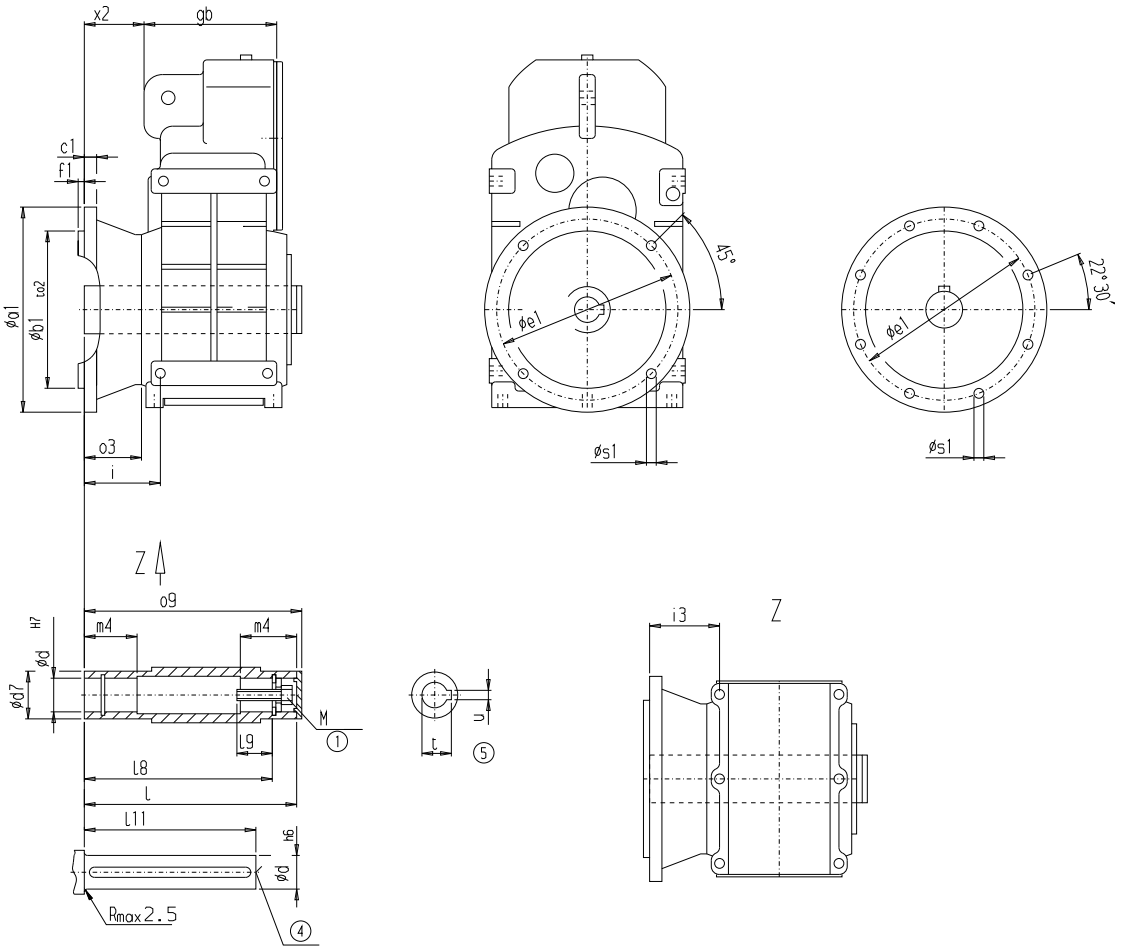

Gearbox	a1	b1	to2	c1	e1	f1	s1	o3	i	i3	x2	gb
FDAM88B FZAM88B	300	230	j6	20	265	4	13.5	120	146.5	141.5	126.0	175
FDAM108B FZAM108B	350	250	h6	20	300	5	17.5	135	163.5	149.0	140.5	205
FDAM128B FZAM128B	450	350	h6	25	400	5	17.5	165	203.5	193.5	172.0	271
FDAM148B FZAM148B	450	350	h6	25	400	5	17.5	185	239.0	218.0	211.0	298
FDAM168B FZAM168B	550	450	h6	28	500	5	17.5	210	269.0	241.0	237.0	336

Gearbox	o9	d	d7	l	m4	l8	l9	l11	t	u	M	Weights	
												FDAM	FZAM
FDAM88B FZAM88B	324.0	60	80	321	78	291	54.0	275	64.4	18	M20	72	73
FDAM108B FZAM108B	369.5	70	95	366	93	334	63.5	310	74.9	20	M20	122	122
FDAM128B FZAM128B	458.0	80	110	456	123	419	63.5	395	85.4	22	M20	216	214
FDAM148B FZAM148B	526.0	90	120	524	148	484	72.0	460	95.4	25	M24	309	305
FDAM168B FZAM168B	611.0	110	150	609	175	565	73.0	540	116.4	28	M24	495	484

④ DIN 332

⑤ Feather key / keyway DIN 6885

© Siemens AG 2011

Dimensions

Flange design for extruder drives

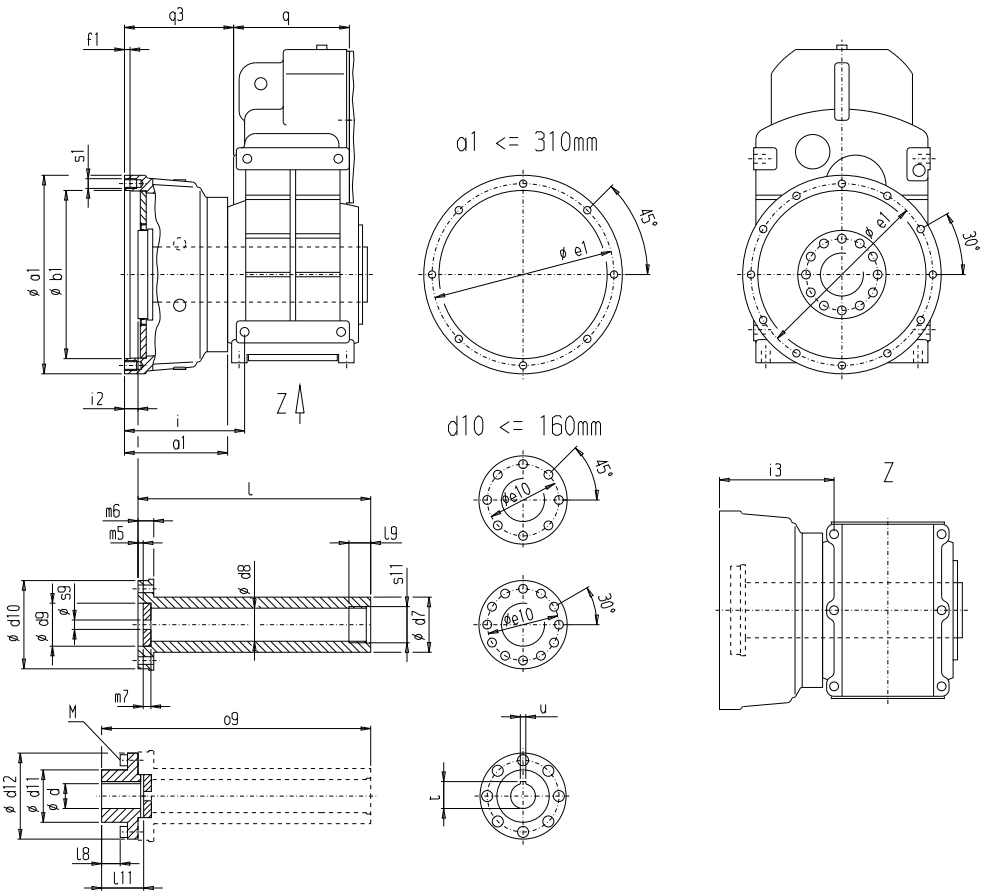

Gearbox	a1	b1		e1	f1	s1	q1	i	i3	i2	q3	q
FDAE/FZAE68B	260	220	+0.046 / 0	236	10	M12x17	147.5	174.0	–	15.0	156.0	138.5
FDAE/FZAE88B	310	255	+0.052 / 0	280	10	M16x22	171.0	197.5	192.5	15.5	177.0	175.0
FDAE/FZAE108B	360	305	+0.052 / 0	330	10	M16x22	188.0	216.5	202.0	23.0	193.5	205.0
FDAE/FZAE128B	420	345	+0.057 / 0	380	10	M20x27	206.0	244.5	234.5	25.0	213.0	271.0
FDAE/FZAE148B	450	360	+0.057 / 0	400	10	M24x32	225.0	279.0	258.0	27.0	251.0	298.0
FDAE/FZAE168B	510	420	+0.063 / 0	460	15	M24x32	262.0	321.0	293.0	38.0	285.0	340.0

© Siemens AG 2011

Flange design for extruder drives (continued)

Gearbox	d	l11	d7	d8	l9	s11	o9 l	d10 d12	m6	e10
FDAE/FZAE68B	20	48	65	38	30	M42x2	349.0	105	14	88
	25									
	30						305.0	104		
FDAE/FZAE88B	30	58	80	49	39	M56x2	410.5	130	23	110
	35									
	40						357.0	129		
FDAE/FZAE108B	40	71	95	60	39	M64x2	462.0	160	25	130
	45									
	50						396.0	156		
FDAE/FZAE128B	45	87	110	71	49	M80x3	554.0	175	31	150
	50									
	60						472.0	174		
FDAE/FZAE148B	60	95	120	88	52	M95x3	626.0	190	33	160
	70									
	75						537.0	189		
FDAE/FZAE168B	70	105	150	104	57	M110x3	722.0	230	42	195
	80									
	90						623.0	229		

Gearbox	d	d9		s9	m7	d11	m5	l8	M	t	u
FDAE/FZAE68B	20	48	+0.025 / 0	11	11	65	4.0	20.0	M10x25	22.8	6
	25									28.3	8
	30									33.3	8
FDAE/FZAE88B	30	63	+0.030 / 0	17	12	80	4.5	23.5	M12x35	33.3	8
	35									38.3	10
	40									43.3	12
FDAE/FZAE108B	40	78	+0.030 / 0	17	14	95	5.0	31.0	M16x40	43.3	12
	45									48.8	14
	50									53.8	14
FDAE/FZAE128B	45	88	+0.035 / 0	22	17	110	5.0	42.0	M16x45	48.8	14
	50									53.8	14
	60									64.4	18
FDAE/FZAE148B	60	105	+0.035 / 0	22	20	120	6.0	45.0	M16x55	64.4	18
	70									74.9	20
	75									79.9	20
FDAE/FZAE168B	70	125	+0.040 / 0	25	22	150	6.0	49.0	M20x55	74.9	20
	80									85.4	22
	90									95.4	25

© Siemens AG 2011

Dimensions

Inside contour of the flange-mounted design (A-type)

Design notes for the customer's interface, e.g. plug-in shaft for hollow shaft design.

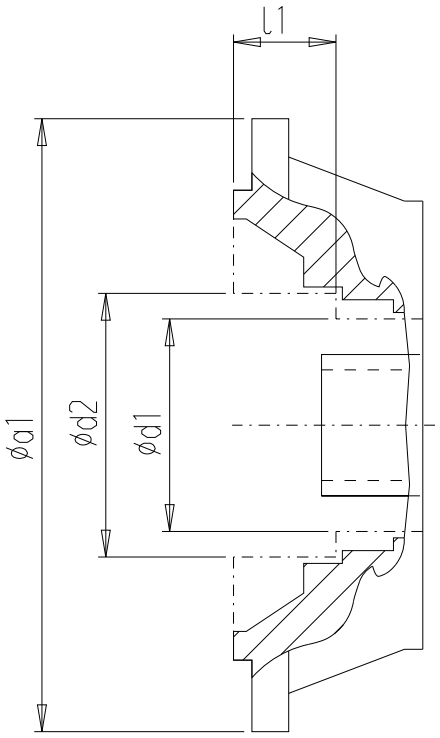

Gearbox	a1	d1	d2	l1
F.F.28	120	70	72	24.0
F.F.28	160	70	103	8.5
F.F.38B	160	70	77	20.0
F.F.48B	200	84	90	22.5
F.F.68B	250	96	96	–
F.F.88B	300	126	138	31.0
F.F.108B	350	176	185	32.0
F.F.128B	450	226	234	38.5
F.F.148B	450	246	262	34.0
F.F.168B	550	296	313	39.0
F.F.188B	660	296	296	–

© Siemens AG 2011

Pin holes

In the case of sizes F.Z.108B to 188B, the customer's interface can be pinned on the housing flange (C-type).

The output flanges have been designed to ensure the reliable transmission of the permissible torques and radial forces by the bolt connections.

If an additional fuse, e. g. for high shock loads, is required, the existing pin holes can be used.

The gearbox and the machine can be drilled and pinned together. To do so, the provided dimensions must be observed.

F.Z.108B

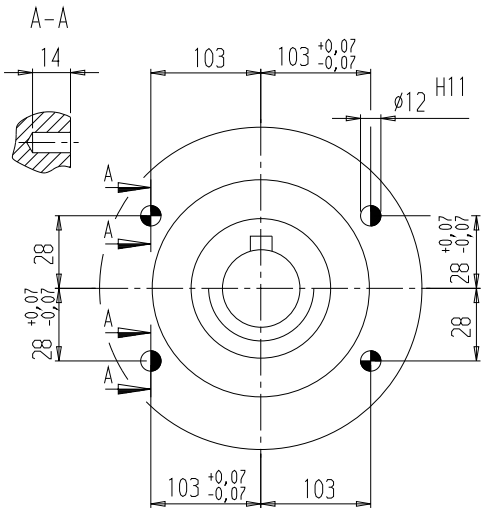

F.Z.128B

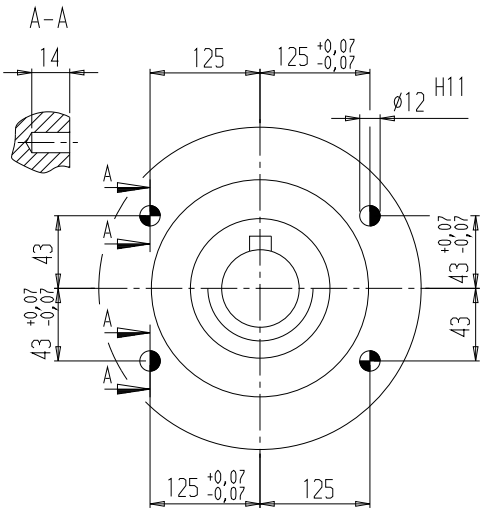

F.Z.148B

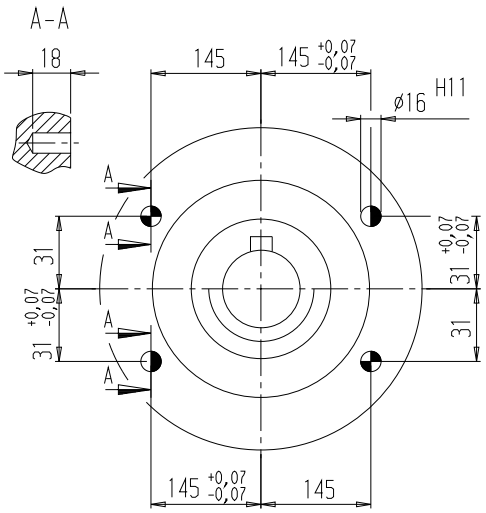

F.Z.168B, F.Z.188B

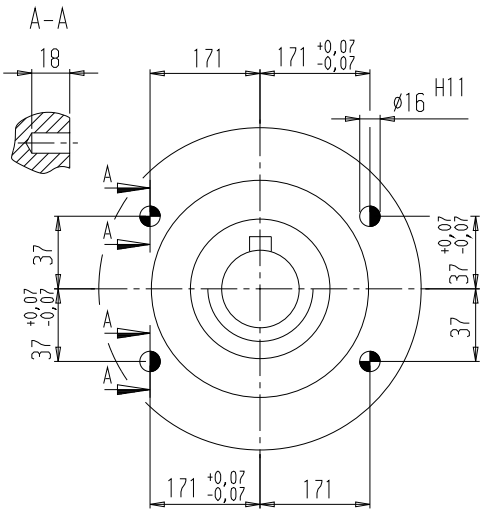

◑ Spring pins, heavy-duty design, to DIN 1481: Use pin holes provided in the housing flange.

◒ Grooved cylindrical pins with chamfer to DIN EN 28740/ISO 8740: Drill connecting component together with housing.

© Siemens AG 2011

Notes

© Siemens AG 2011

Bevel helical geared motors

4



Orientation
4/2 Overview
4/4 Modular system

General technical data
4/5 Permissible radial force

Geared motors up to 200 kW
4/6 Selection and ordering data

Transmission ratios and maximum torques
4/60 Selection and ordering data

Mounting types
4/80 Selection and ordering data

Shaft designs
4/83 Selection and ordering data

Flange-mounted designs
4/86 Selection and ordering data

Mounting types and mounting positions
4/87 Selection and ordering data

Special versions
4/92 Lubricants
4/93 Oil level control
4/93 Gearbox ventilation
4/94 Oil drain
4/94 Sealing
4/95 Hollow shaft cover (protection cover)
4/95 Reinforced output shaft bearings
4/96 2nd output shaft extension
4/96 Bevel helical gearbox with backstop
4/97 Mixer flange in dry-well design

Dimensions
4/98 Dimension drawing overview
4/102 Dimension drawings

© Siemens AG 2011

Orientation

Overview



MOTOX bevel helical gearboxes are part of the MOTOX modular system. With helical, parallel shaft, helical worm, or variable speed gearboxes and three-phase AC motors with or without brakes, this system covers all possible drive combinations, right up to electronic variable speed drives.

MOTOX bevel helical gearboxes are designed for continuous duty. The gearbox housings made of gray cast iron or aluminium are developed in 3D CAD and have an optimized structure in terms of rigidity and vibration absorption. Radial shaft seals with dust-protection lips prevent oil from leaking out of the housing and dust and water from entering it. The gear wheels of the helical gear stages are milled and their surfaces hardened.
The tooth flanks are ground or honed so that they are convex and corrected in terms of the profile. For the standard range, the bevel gear stage is milled, its surface is hardened, and it is lapped in pairs. Optimum running smoothness is also achieved thanks to the helical gears' helical teeth.
Positioning the bevel gear stage as the second stage means that less noise is emitted. The output shaft is positioned at a right angle to the input shaft.

© Siemens AG 2011

Overview (continued)

Bevel helical gearboxes are designated as follows:

Gearbox type:

(-) Bevel helical gearbox

B 2-stage
K 3-stage

Transmission stage (-) Unspecified

Type:

Shaft
(-) Solid shaft
A Hollow shaft

Mounting
(-) Foot-mounted design
F Flange-mounted design (A-type)
Z Housing flange (C-type)
D Torque arm
G Flange (A-type) on opposite side to output shaft
M Agitator / mixer flange
E Extruder flange

Connections
(-) Feather key
S Shrink disk
T Hollow shaft with splined shaft

Special features **W** Reduced-backlash version

Backstop **X** Backstop in intermediate stage

Type of intermediate gearbox

(-) Helical gearbox

Transmission stage
Z 2-stage
D 3-stage

Input unit

K2 Coupling lantern with flexible coupling for connecting an IEC motor

K2TC Coupling lantern with flexible coupling for connecting a NEMA motor [1)]

K4 Short coupling lantern with clamp connection for connecting an IEC motor

K5 Short coupling lantern with clamp connection for connecting a NEMA motor [1)]

KQ Lantern for servomotor with feather key and with zero-backlash flexible coupling for connecting a servomotor

KQS Lantern for servomotor without feather key and with zero-backlash flexible coupling for connecting a servomotor

A Input unit with free input shaft

A5 Input unit with free input shaft (NEMA design) [1)]

P Input unit with free input shaft and piggy back for connecting an IEC motor

P5 Input unit with free input shaft and piggy back for connecting a NEMA motor [1)]

PS Input unit with free input shaft and piggy back with protection cover

Example:

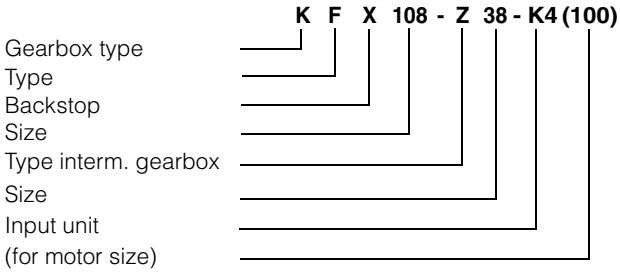

The series currently comprises 10 gearbox sizes.

Type K bevel helical gearboxes are available in a 3-stage version, type B in a 2-stage version.

[1)] These designs can be selected from our MOTOX Configurator electronic catalog.

© Siemens AG 2011

General technical data

Modular system

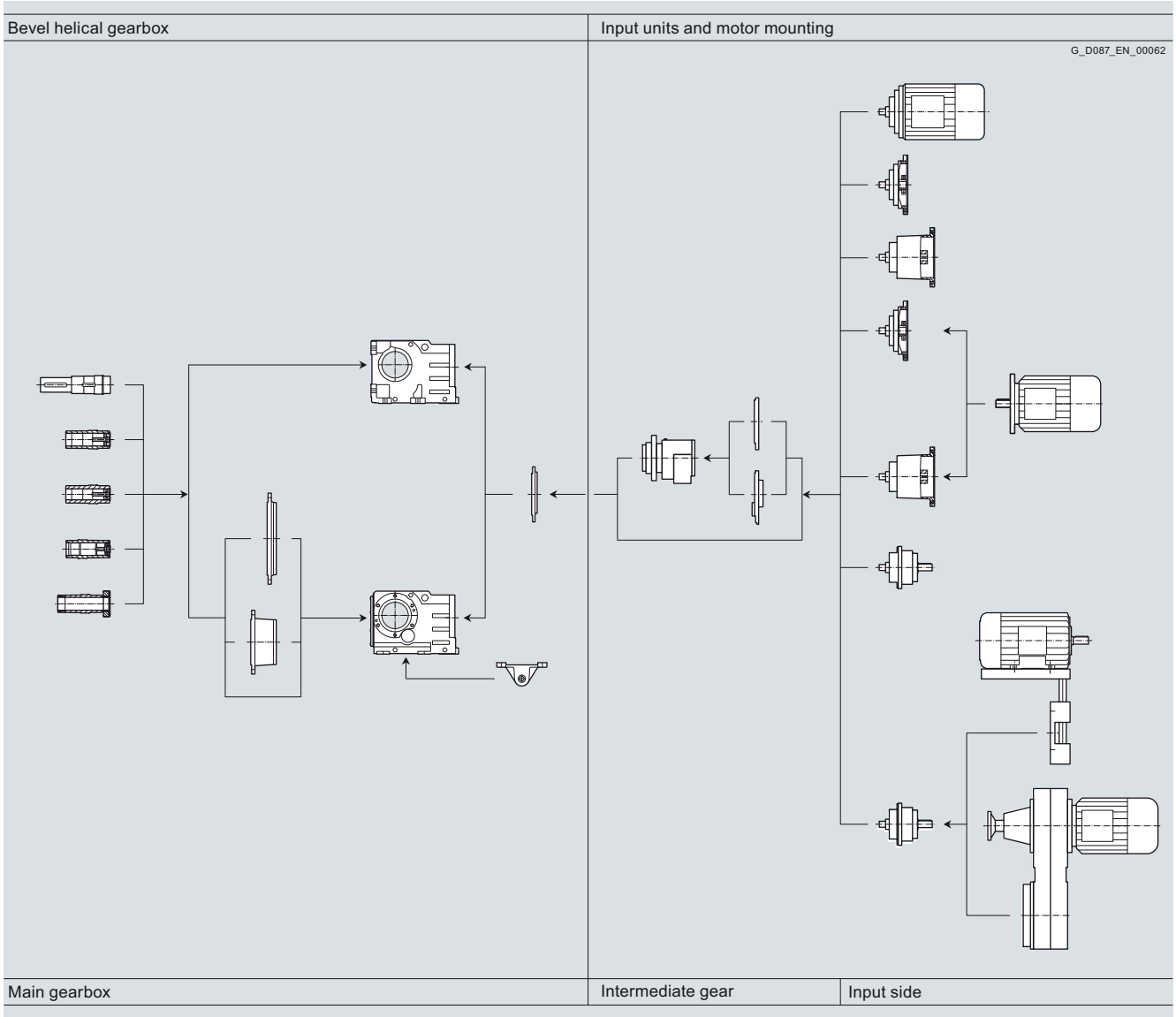

Use

The MOTOX bevel helical gearbox series can be supplied in foot-mounted or flange-mounted design for mounting in any position.

The gearboxes are available in a solid-shaft or hollow-shaft design with a feather key connection, shrink disk connection, or splined shaft.

Oil quantities

The oil quantities corresponding to the applicable mounting positions are specified in the operating instructions and on the rating plate.

© Siemens AG 2011

Permissible radial force F_{Rperm}

3-stage bevel helical gearbox – standard bearing arrangement

Gearbox type	d mm	l mm	y mm	z mm	a kNmm	F_{Rperm} in N with x = l/2 for output speeds n_2 in rpm: Direction of rotation when viewing the output shaft	≤ 16	≤ 25	≤ 40	≤ 63	≤ 100	≤ 160	≤ 250	≤ 320	≤ 400
BF28	20	40	138	118	63.4	Left	–	3 170	3 170	3 170	3 170	3 120	2 870	2 520	2 430
						Right	–	3 170	3 170	3 170	3 170	3 170	3 120	2 770	2 260
BF38	30	60	173	143	193.0	Left	–	6 446	6 060	4 840	3 960	3 820	3 570	3 430	3 240
						Right	–	6 446	6 446	5 690	4 730	4 350	3 860	3 670	3 430
KF38	25	50	146	121	153.0	Left	5 530	5 400	4 320	3 810	3 210	2 640	2 160	2 080	–
						Right	5 820	5 700	4 610	4 060	3 420	2 820	2 330	2 250	–
KF48	30	60	176	146	255.0	Left	8 280	7 660	6 120	4 990	3 850	3 490	3 420	–	–
						Right	8 500	8 090	6 560	5 430	4 280	3 900	3 630	–	–
KF68	40	80	213	173	440.0	Left	9 490	7 590	6 130	4 430	3 550	2 970	3 470	–	–
						Right	10 050	8 140	6 690	4 990	4 110	3 490	3 720	–	–
KF88	50	100	262	212	845.0	Left	13 740	10 910	9 010	6 300	5 550	4 840	5 560	5 210	–
						Right	14 810	11 980	10 080	7 370	6 520	5 710	5 950	5 570	–
KF108	60	120	298	238	1 350	Left	16 210	12 070	8 990	6 470	5 730	5 310	5 450	–	–
						Right	18 170	14 030	10 850	8 290	7 370	6 730	6 260	–	–
KF128	70	140	372	302	2 247	Left	24 380	19 170	14 150	10 790	6 550	6 160	7 250	–	–
						Right	26 540	21 330	16 320	12 960	8 680	8 200	8 310	–	–
KF148	90	170	434	349	2 873	Left	19 620	13 920	9 150	3 620	1 240	840	6 360	5 700	–
						Right	22 310	16 620	11 840	6 310	3 800	3 080	7 370	6 630	–
KF168	110	210	518	413	5 891	Left	31 190	21 030	16 060	7 200	6 020	5 300	10 160	–	–
						Right	34 350	24 180	19 220	10 350	8 810	7 880	11 530	–	–
KF188	120	210	598	493	8 159	Left	77 700	77 700	77 700	77 700	77 240	70 580	–	–	–
						Right	77 700	77 700	77 700	77 700	77 700	73 960	–	–	–

3-stage bevel helical gearbox – reinforced bearing arrangement

Gearbox type	d mm	l mm	y mm	z mm	a kNmm	F_{Rperm} in N with x = l/2 for output speeds n_2 in rpm: Direction of rotation when viewing the output shaft	≤ 16	≤ 25	≤ 40	≤ 63	≤ 100	≤ 160	≤ 250	≤ 320
KF68	40	80	213	173	555	Left	13 870	13 870	13 870	13 870	13 870	12 690	11 510	–
						Right	13 870	13 870	13 870	13 870	13 870	13 240	11 780	–
KF88	50	100	262	212	1 182	Left	23 630	23 630	23 630	23 630	23 000	20 590	18 910	17 880
						Right	23 630	23 630	23 630	23 630	23 630	21 400	19 320	18 270
KF108	60	120	298	238	1 743	Left	29 050	29 050	29 050	29 050	28 280	25 080	23 640	–
						Right	29 050	29 050	29 050	29 050	29 050	26 010	24 500	–
KF128	70	140	372	302	2 893	Left	41 330	41 330	41 330	41 330	41 330	39 430	36 540	–
						Right	41 330	41 330	41 330	41 330	41 330	40 660	37 680	–
KF148	90	170	434	349	4 225	Left	49 710	49 710	49 710	49 710	42 240	37 130	38 240	35 110
						Right	49 710	49 710	49 710	49 710	44 970	39 520	39 320	36 100
KF168	110	210	518	413	8 059	Left	76 750	76 750	76 750	76 750	70 560	65 140	59 690	–
						Right	76 750	76 750	76 750	76 750	73 550	67 890	61 160	–
KF188	120	210	598	493	8 159	Left	77 700	77 700	77 700	77 700	77 240	70 580	–	–
						Right	77 700	77 700	77 700	77 700	77 700	73 960	–	–

The values in the table apply to the worst-case scenario. The output shaft bearing arrangement can be calculated using our MOTOX Configurator electronic catalog. See Chapter 1 of the configuring guide for more infomation on calculating the permissible radial force.

© Siemens AG 2011

Geared motors up to 200 kW

Selection and ordering data

The selection tables show the most common variants and combinations. Other combinations can be selected using our MOTOX Configurator or made available on request

At an identical power rating and output speed, priority is given in the selection tables to 4-pole geared motors.

At the available transmission ratios, they cover the majority of output speeds.

Due to their prevalence, 4-pole geared motors are easily available, with short delivery times and at a low cost. They also feature a favorable size / power ratio.

Power rating P_{Motor} kW (50 Hz)	Output speed n_2 (50 Hz) rpm	Output torque T_2 Nm	Service factor f_B	Gearbox ratio i_{tot}		Order No.	Order code (No. of poles)	Weight *) kg
0.09	**K.48-LA71M8**							
	3.7	231	1.9	169.53	★	**2KJ1503 - ■CE13 - ■■J2**	**P02**	25
	K.38-LA71M8							
	3.5	244	1.0	179.13	★	**2KJ1502 - ■CE13 - ■■L2**	**P02**	21
	4.0	217	1.2	159.04		**2KJ1502 - ■CE13 - ■■K2**	**P02**	21
	4.5	190	1.3	139.43	★	**2KJ1502 - ■CE13 - ■■J2**	**P02**	21
	K.38-LA71B6							
	5.0	172	1.5	179.13	★	**2KJ1502 - ■CB13 - ■■L2**	**P01**	21
	5.6	153	1.6	159.04		**2KJ1502 - ■CB13 - ■■K2**	**P01**	21
	6.4	134	1.9	139.43	★	**2KJ1502 - ■CB13 - ■■J2**	**P01**	21
	7.2	120	2.1	124.78		**2KJ1502 - ■CB13 - ■■H2**	**P01**	21
0.12	**K.188-D68-LA71B4**							
	0.05	15 541	1.3	27 817		**2KJ1542 - ■CB13 - ■■M1**		749
	0.05	16 836	1.2	30 135	★	**2KJ1542 - ■CB13 - ■■N1**		749
	0.06	12 269	1.6	21 961		**2KJ1542 - ■CB13 - ■■K1**		749
	0.06	13 513	1.5	24 187	★	**2KJ1542 - ■CB13 - ■■L1**		749
	0.07	11 203	1.8	20 052	★	**2KJ1542 - ■CB13 - ■■J1**		749
	0.08	10 279	1.9	18 398		**2KJ1542 - ■CB13 - ■■H1**		749
	K.168-D48-LA71B4							
	0.05	14 947	0.90	26 754		**2KJ1538 - ■CB13 - ■■G1**		487
	0.05	16 493	0.82	29 521	★	**2KJ1538 - ■CB13 - ■■H1**		487
	0.06	13 194	1.0	23 617	★	**2KJ1538 - ■CB13 - ■■F1**		487
	0.07	10 795	1.3	19 323	★	**2KJ1538 - ■CB13 - ■■D1**		487
	0.07	11 902	1.1	21 304		**2KJ1538 - ■CB13 - ■■E1**		487
	0.08	9 835	1.4	17 605		**2KJ1538 - ■CB13 - ■■C1**		487
	0.09	8 996	1.5	16 102	★	**2KJ1538 - ■CB13 - ■■B1**		487
	0.10	8 043	1.7	14 397		**2KJ1538 - ■CB13 - ■■A1**		487
	K.168-Z48-LA71B4							
	0.10	8 431	1.6	14 767		**2KJ1537 - ■CB13 - ■■A2**		486
	0.11	7 461	1.8	13 068	★	**2KJ1537 - ■CB13 - ■■X1**		486
	0.12	6 783	2.0	11 880		**2KJ1537 - ■CB13 - ■■W1**		486
	K.148-D38-LA71B4							
	0.08	9 970	0.80	17 845		**2KJ1535 - ■CB13 - ■■D1**		296
	0.09	9 039	0.89	16 180		**2KJ1535 - ■CB13 - ■■C1**		296
	0.10	8 225	0.97	14 722		**2KJ1535 - ■CB13 - ■■B1**		296
	0.11	7 272	1.1	13 017		**2KJ1535 - ■CB13 - ■■A1**		296
	K.148-Z38-LA71B4							
	0.10	7 711	1.0	13 505		**2KJ1534 - ■CB13 - ■■W1**		296

★ Preferred transmission ratio

Shaft designs, see page 4/83 — **1, 2, 3, 5, 6 or 9**

Frequency and voltage, see page 8/20 — **1 to 9**

Gearbox housing mounting position, see page 4/87 — **A, D, E, F, H or M**

*) For mounting type B3

© Siemens AG 2011

Selection and ordering data (continued)

Power rating P_{Motor} kW (50 Hz)	Output speed n_2 (50 Hz) rpm	Output torque T_2 Nm	Service factor f_B		Gearbox ratio i_{tot}	Order No.	Order code (No. of poles)	Weight *) kg
0.12	**K.148-Z38-LA71B4**							
	0.12	6 857	1.2		12 009	**2KJ1534 - ■CB13 - ■■V1**		296
	0.13	5 948	1.3		10 418	**2KJ1534 - ■CB13 - ■■U1**		296
	0.14	5 558	1.4		9 734	**2KJ1534 - ■CB13 - ■■T1**		296
	0.16	4 888	1.6		8 561	**2KJ1534 - ■CB13 - ■■S1**		296
	0.19	4 281	1.9		7 498	**2KJ1534 - ■CB13 - ■■R1**		296
	K.128-Z38-LA71B4							
	0.14	5 740	0.82		10 054	★ **2KJ1531 - ■CB13 - ■■U1**		201
	0.15	5 364	0.88		9 394	**2KJ1531 - ■CB13 - ■■T1**		201
	0.17	4 717	1.0		8 262	★ **2KJ1531 - ■CB13 - ■■S1**		201
	0.19	4 131	1.1		7 236	**2KJ1531 - ■CB13 - ■■R1**		201
	0.22	3 654	1.3		6 400	★ **2KJ1531 - ■CB13 - ■■Q1**		201
	0.24	3 312	1.4		5 800	**2KJ1531 - ■CB13 - ■■P1**		201
	0.27	2 923	1.6		5 120	★ **2KJ1531 - ■CB13 - ■■N1**		201
	0.30	2 637	1.8		4 619	**2KJ1531 - ■CB13 - ■■M1**		201
	0.33	2 392	2.0		4 189	★ **2KJ1531 - ■CB13 - ■■L1**		201
	K.108-Z38-LA71B4							
	0.23	3 445	0.87		6 033	**2KJ1527 - ■CB13 - ■■P1**		134
	0.26	3 041	0.99		5 326	**2KJ1527 - ■CB13 - ■■N1**		134
	0.29	2 743	1.1		4 804	**2KJ1527 - ■CB13 - ■■M1**		134
	0.32	2 488	1.2		4 357	**2KJ1527 - ■CB13 - ■■L1**		134
	0.35	2 267	1.3		3 970	**2KJ1527 - ■CB13 - ■■K1**		134
	0.39	2 073	1.4		3 631	**2KJ1527 - ■CB13 - ■■J1**		134
	0.43	1 854	1.6		3 247	**2KJ1527 - ■CB13 - ■■H1**		134
	0.47	1 702	1.8		2 981	**2KJ1527 - ■CB13 - ■■G1**		134
	0.52	1 534	2.0		2 687	**2KJ1527 - ■CB13 - ■■F1**		134
	K.88-Z28-LA71B4							
	0.40	1 990	0.83		3 485	★ **2KJ1523 - ■CB13 - ■■X1**		76
	0.45	1 780	0.93		3 118	**2KJ1523 - ■CB13 - ■■W1**		76
	0.51	1 580	1.0		2 768	★ **2KJ1523 - ■CB13 - ■■V1**		76
	0.58	1 385	1.2		2 426	**2KJ1523 - ■CB13 - ■■U1**		76
	0.66	1 218	1.4		2 133	★ **2KJ1523 - ■CB13 - ■■T1**		76
	0.73	1 100	1.5		1 926	**2KJ1523 - ■CB13 - ■■S1**		76
	0.83	959	1.7		1 679	★ **2KJ1523 - ■CB13 - ■■R1**		76
	0.93	861	1.9		1 508	**2KJ1523 - ■CB13 - ■■Q1**		76
	K.68-Z28-LA71B4							
	0.81	982	0.83		1 720	★ **2KJ1518 - ■CB13 - ■■T1**		47
	0.90	887	0.92		1 554	**2KJ1518 - ■CB13 - ■■S1**		47
	1.0	773	1.1		1 354	★ **2KJ1518 - ■CB13 - ■■R1**		47
	1.2	694	1.2		1 216	**2KJ1518 - ■CB13 - ■■Q1**		47
	1.3	627	1.3		1 098	★ **2KJ1518 - ■CB13 - ■■P1**		47
	1.4	569	1.4		996	**2KJ1518 - ■CB13 - ■■N1**		47
	1.5	517	1.6		906	★ **2KJ1518 - ■CB13 - ■■M1**		47
	1.7	457	1.8		801	**2KJ1518 - ■CB13 - ■■L1**		47

★ Preferred transmission ratio

Shaft designs, see page 4/83 — **1, 2, 3, 5, 6 or 9**

Frequency and voltage, see page 8/20 — **1 to 9**

Gearbox housing mounting position, see page 4/87 — **A, D, E, F, H or M**

*) For mounting type B3

© Siemens AG 2011

Selection and ordering data (continued)

Power rating P_{Motor} kW (50 Hz)	Output speed n_2 (50 Hz) rpm	Output torque T_2 Nm	Service factor f_B	Gearbox ratio i_{tot}		Order No.	Order code (No. of poles)	Weight *) kg
0.12	**K.68-Z28-LA71B4**							
	1.9	423	1.9	740	★	**2KJ1518 - ■CB13 - ■■K1**		47
	K.68-LA71MB8							
	2.6	433	1.9	243.72		**2KJ1504 - ■CF13 - ■■N2**	**P02**	44
	K.48-Z28-LA71B4							
	1.6	505	0.89	885	★	**2KJ1516 - ■CB13 - ■■R1**		28
	1.8	454	0.99	795		**2KJ1516 - ■CB13 - ■■Q1**		28
	2.0	409	1.1	717	★	**2KJ1516 - ■CB13 - ■■P1**		28
	2.2	372	1.2	651		**2KJ1516 - ■CB13 - ■■N1**		28
	2.4	338	1.3	592	★	**2KJ1516 - ■CB13 - ■■M1**		28
	2.7	299	1.5	523		**2KJ1516 - ■CB13 - ■■L1**		28
	2.9	276	1.6	483	★	**2KJ1516 - ■CB13 - ■■K1**		28
	3.4	238	1.9	416		**2KJ1516 - ■CB13 - ■■J1**		28
	K.48-LA71MB8							
	3.8	301	1.5	169.53	★	**2KJ1503 - ■CF13 - ■■J2**	**P02**	25
	4.3	268	1.7	150.76		**2KJ1503 - ■CF13 - ■■H2**	**P02**	25
	K.48-LA71C6							
	5.1	226	2.0	169.53	★	**2KJ1503 - ■CC13 - ■■J2**	**P01**	25
	K.38-Z28-LA71B4							
	2.7	299	0.84	523		**2KJ1514 - ■CB13 - ■■L1**		24
	2.9	276	0.91	483	★	**2KJ1514 - ■CB13 - ■■K1**		24
	K.38-LA71MB8							
	4.1	283	0.88	159.04		**2KJ1502 - ■CF13 - ■■K2**	**P02**	21
	4.6	248	1.0	139.43	★	**2KJ1502 - ■CF13 - ■■J2**	**P02**	21
	K.38-LA71C6							
	4.8	239	1.0	179.13	★	**2KJ1502 - ■CC13 - ■■L2**	**P01**	21
	5.4	212	1.2	159.04		**2KJ1502 - ■CC13 - ■■K2**	**P01**	21
	6.2	186	1.3	139.43	★	**2KJ1502 - ■CC13 - ■■J2**	**P01**	21
	6.9	166	1.5	124.78		**2KJ1502 - ■CC13 - ■■H2**	**P01**	21
	K.38-LA71B4							
	7.8	147	1.7	179.13	★	**2KJ1502 - ■CB13 - ■■L2**		21
	8.8	130	1.9	159.04		**2KJ1502 - ■CB13 - ■■K2**		21
	10.0	114	2.2	139.43	★	**2KJ1502 - ■CB13 - ■■J2**		21
	B.38-LA71MB8							
	9.8	117	2.1	65.69		**2KJ1501 - ■CF13 - ■■U2**	**P02**	23
	B.28-LA71B4							
	24	47	2.8	57.53		**2KJ1500 - ■CB13 - ■■D2**		11
	29	40	3.3	48.51		**2KJ1500 - ■CB13 - ■■C2**		11
	32	35	3.7	43.07		**2KJ1500 - ■CB13 - ■■B2**		11
	37	31	4.2	37.76		**2KJ1500 - ■CB13 - ■■A2**		11
	41	28	4.7	33.79		**2KJ1500 - ■CB13 - ■■X1**		11
	47	24	5.3	29.99		**2KJ1500 - ■CB13 - ■■W1**		11
	53	22	6.0	26.28		**2KJ1500 - ■CB13 - ■■V1**		11

★ Preferred transmission ratio

Shaft designs, see page 4/83 — **1, 2, 3, 5, 6 or 9**

Frequency and voltage, see page 8/20 — **1 to 9**

Gearbox housing mounting position, see page 4/87 — **A, D, E, F, H or M**

*) For mounting type B3

© Siemens AG 2011

Selection and ordering data (continued)

Power rating P_{Motor} kW (50 Hz)	Output speed n_2 (50 Hz) rpm	Output torque T_2 Nm	Service factor f_B	Gearbox ratio i_{tot}		Order No.	Order code (No. of poles)	Weight *) kg
0.12	**B.28-LA71B4**							
	61	19	6.9	23.11		**2KJ1500 - ■CB13 - ■■7U1**		11
	67	17	7.6	20.87		**2KJ1500 - ■CB13 - ■■T1**		11
	77	15	8.7	18.19		**2KJ1500 - ■CB13 - ■■S1**		11
	86	13	9.7	16.34		**2KJ1500 - ■CB13 - ■■R1**		11
	95	12	10.8	14.75		**2KJ1500 - ■CB13 - ■■Q1**		11
	105	11	11.9	13.38		**2KJ1500 - ■CB13 - ■■P1**		11
	115	10	13.0	12.17		**2KJ1500 - ■CB13 - ■■N1**		11
	130	8.8	14.8	10.76		**2KJ1500 - ■CB13 - ■■M1**		11
	187	6.1	14.7	7.49		**2KJ1500 - ■CB13 - ■■H1**		11
0.18	**K.188-D68-LA71C4**							
	0.06	20 896	0.96	21 961		**2KJ1542 - ■CC13 - ■■K1**		749
	0.06	23 014	0.87	24 187	★	**2KJ1542 - ■CC13 - ■■L1**		749
	0.07	17 506	1.1	18 398		**2KJ1542 - ■CC13 - ■■H1**		749
	0.07	19 080	1.0	20 052	★	**2KJ1542 - ■CC13 - ■■J1**		749
	0.08	16 129	1.2	16 951	★	**2KJ1542 - ■CC13 - ■■G1**		749
	0.09	14 648	1.4	15 394		**2KJ1542 - ■CC13 - ■■F1**		749
	0.10	13 344	1.5	14 024	★	**2KJ1542 - ■CC13 - ■■E1**		749
	0.11	12 224	1.6	12 847		**2KJ1542 - ■CC13 - ■■D1**		749
	0.12	10 907	1.8	11 463	★	**2KJ1542 - ■CC13 - ■■C1**		749
	K.168-D48-LA71C4							
	0.08	15 321	0.88	16 102	★	**2KJ1538 - ■CC13 - ■■B1**		487
	0.08	16 751	0.81	17 605		**2KJ1538 - ■CC13 - ■■C1**		487
	0.10	13 699	0.99	14 397		**2KJ1538 - ■CC13 - ■■A1**		487
	K.168-Z48-LA71C4							
	0.09	14 360	0.94	14 767		**2KJ1537 - ■CC13 - ■■A2**		486
	0.10	12 708	1.1	13 068	★	**2KJ1537 - ■CC13 - ■■X1**		486
	0.12	11 552	1.2	11 880		**2KJ1537 - ■CC13 - ■■W1**		486
	0.13	10 379	1.3	10 673	★	**2KJ1537 - ■CC13 - ■■V1**		486
	0.15	8 896	1.5	9 148		**2KJ1537 - ■CC13 - ■■U1**		486
	0.17	8 049	1.7	8 277	★	**2KJ1537 - ■CC13 - ■■T1**		486
	0.18	7 429	1.8	7 640		**2KJ1537 - ■CC13 - ■■S1**		486
	K.148-Z38-LA71C4							
	0.14	9 466	0.85	9 734		**2KJ1534 - ■CC13 - ■■T1**		296
	0.16	8 325	0.96	8 561		**2KJ1534 - ■CC13 - ■■S1**		296
	0.18	7 291	1.1	7 498		**2KJ1534 - ■CC13 - ■■R1**		296
	0.21	6 449	1.2	6 632		**2KJ1534 - ■CC13 - ■■Q1**		296
	0.23	5 844	1.4	6 010		**2KJ1534 - ■CC13 - ■■P1**		296
	0.26	5 159	1.6	5 305		**2KJ1534 - ■CC13 - ■■N1**		296
	0.29	4 654	1.7	4 786		**2KJ1534 - ■CC13 - ■■M1**		296
	0.32	4 221	1.9	4 341		**2KJ1534 - ■CC13 - ■■L1**		296
	K.128-Z38-LA71C4							
	0.24	5 640	0.83	5 800		**2KJ1531 - ■CC13 - ■■P1**		201
	0.27	4 979	0.94	5 120	★	**2KJ1531 - ■CC13 - ■■N1**		201

★ Preferred transmission ratio

Shaft designs, see page 4/83 — **1, 2, 3, 5, 6 or 9**

Frequency and voltage, see page 8/20 — **1 to 9**

Gearbox housing mounting position, see page 4/87 — **A, D, E, F, H or M**

*) For mounting type B3

© Siemens AG 2011

Selection and ordering data (continued)

Power rating P_{Motor} kW (50 Hz)	Output speed n_2 (50 Hz) rpm	Output torque T_2 Nm	Service factor f_B	Gearbox ratio i_{tot}		Order No.	Order code (No. of poles)	Weight *) kg
0.18	**K.128-Z38-LA71C4**							
	0.30	4 492	1.0	4 619		**2KJ1531 - ■CC13 - ■■M1**		201
	0.33	4 073	1.2	4 189	★	**2KJ1531 - ■CC13 - ■■L1**		201
	0.36	3 712	1.3	3 817		**2KJ1531 - ■CC13 - ■■K1**		201
	0.39	3 395	1.4	3 491	★	**2KJ1531 - ■CC13 - ■■J1**		201
	0.44	3 035	1.5	3 121		**2KJ1531 - ■CC13 - ■■H1**		201
	0.48	2 787	1.7	2 866	★	**2KJ1531 - ■CC13 - ■■G1**		201
	0.53	2 512	1.9	2 583		**2KJ1531 - ■CC13 - ■■F1**		201
	K.108-Z38-LA71C4							
	0.38	3 531	0.85	3 631		**2KJ1527 - ■CC13 - ■■J1**		134
	0.42	3 157	0.95	3 247		**2KJ1527 - ■CC13 - ■■H1**		134
	0.46	2 899	1.0	2 981		**2KJ1527 - ■CC13 - ■■G1**		134
	0.51	2 613	1.1	2 687		**2KJ1527 - ■CC13 - ■■F1**		134
	0.59	2 247	1.3	2 311		**2KJ1527 - ■CC13 - ■■E1**		134
	0.66	2 003	1.5	2 060		**2KJ1527 - ■CC13 - ■■D1**		134
	0.72	1 840	1.6	1 892		**2KJ1527 - ■CC13 - ■■C1**		134
	0.8	1 658	1.8	1 705		**2KJ1527 - ■CC13 - ■■B1**		134
	K.88-Z28-LA71C4							
	0.64	2 074	0.80	2 133	★	**2KJ1523 - ■CC13 - ■■T1**		76
	0.71	1 873	0.88	1 926		**2KJ1523 - ■CC13 - ■■S1**		76
	0.82	1 633	1.0	1 679	★	**2KJ1523 - ■CC13 - ■■R1**		76
	0.91	1 466	1.1	1 508		**2KJ1523 - ■CC13 - ■■Q1**		76
	1.0	1 323	1.2	1 361	★	**2KJ1523 - ■CC13 - ■■P1**		76
	1.1	1 200	1.4	1 234		**2KJ1523 - ■CC13 - ■■N1**		76
	1.2	1 092	1.5	1 123	★	**2KJ1523 - ■CC13 - ■■M1**		76
	1.4	966	1.7	993		**2KJ1523 - ■CC13 - ■■L1**		76
	1.5	892	1.9	917	★	**2KJ1523 - ■CC13 - ■■K1**		76
	K.88-LA80S8							
	2.2	771	2.0	302.68	★	**2KJ1505 - ■DB13 - ■■M2**	**P02**	78
	K.68-Z28-LA71C4							
	1.4	969	0.85	996		**2KJ1518 - ■CC13 - ■■N1**		47
	1.5	881	0.93	906	★	**2KJ1518 - ■CC13 - ■■M1**		47
	1.7	779	1.1	801		**2KJ1518 - ■CC13 - ■■L1**		47
	1.9	720	1.1	740	★	**2KJ1518 - ■CC13 - ■■K1**		47
	2.2	619	1.3	637		**2KJ1518 - ■CC13 - ■■J1**		47
	2.4	563	1.5	579	★	**2KJ1518 - ■CC13 - ■■H1**		47
	K.68-LA80S8							
	2.8	621	1.3	243.72		**2KJ1504 - ■DB13 - ■■N2**	**P02**	48
	3.1	549	1.5	215.68	★	**2KJ1504 - ■DB13 - ■■M2**	**P02**	48
	K.68-LA71S6							
	3.5	493	1.7	243.72		**2KJ1504 - ■CD13 - ■■N2**	**P01**	44
	3.9	436	1.9	215.68	★	**2KJ1504 - ■CD13 - ■■M2**	**P01**	44
	K.48-Z28-LA71C4							
	2.6	509	0.88	523		**2KJ1516 - ■CC13 - ■■L1**		28

★ Preferred transmission ratio

Shaft designs, see page 4/83 — **1, 2, 3, 5, 6 or 9**

Frequency and voltage, see page 8/20 — **1 to 9**

Gearbox housing mounting position, see page 4/87 — **A, D, E, F, H or M**

*) For mounting type B3

© Siemens AG 2011

Selection and ordering data (continued)

Power rating P_{Motor} kW (50 Hz)	Output speed n_2 (50 Hz) rpm	Output torque T_2 Nm	Service factor f_B	Gearbox ratio i_{tot}		Order No.	Order code (No. of poles)	Weight *) kg
0.18	**K.48-Z28-LA71C4**							
	2.8	470	0.96	483	★	**2KJ1516 - ■CC13 - ■■K1**		28
	3.3	405	1.1	416		**2KJ1516 - ■CC13 - ■■J1**		28
	K.48-LA80S8							
	4.0	432	1.0	169.53	★	**2KJ1503 - ■DB13 - ■■J2**	**P02**	29
	4.5	384	1.2	150.76		**2KJ1503 - ■DB13 - ■■H2**	**P02**	29
	K.48-LA71S6							
	5.0	343	1.3	169.53	★	**2KJ1503 - ■CD13 - ■■J2**	**P01**	25
	5.6	305	1.5	150.76		**2KJ1503 - ■CD13 - ■■H2**	**P01**	25
	6.5	264	1.7	130.78	★	**2KJ1503 - ■CD13 - ■■G2**	**P01**	25
	7.0	247	1.8	122.19		**2KJ1503 - ■CD13 - ■■F2**	**P01**	25
	K.48-LA71C4							
	8.1	213	2.1	169.53	★	**2KJ1503 - ■CC13 - ■■J2**		25
	K.38-LA71S6							
	6.1	282	0.89	139.43	★	**2KJ1502 - ■CD13 - ■■J2**	**P01**	21
	6.8	252	0.99	124.78		**2KJ1502 - ■CD13 - ■■H2**	**P01**	21
	K.38-LA71C4							
	7.6	225	1.1	179.13	★	**2KJ1502 - ■CC13 - ■■L2**		21
	8.6	200	1.3	159.04		**2KJ1502 - ■CC13 - ■■K2**		21
	9.8	175	1.4	139.43	★	**2KJ1502 - ■CC13 - ■■J2**		21
	11.0	157	1.6	124.78		**2KJ1502 - ■CC13 - ■■H2**		21
	12.4	139	1.8	110.75	★	**2KJ1502 - ■CC13 - ■■G2**		21
	14.1	122	2.1	97.05		**2KJ1502 - ■CC13 - ■■F2**		21
	16.1	107	2.3	85.33	★	**2KJ1502 - ■CC13 - ■■E2**		21
	B.38-LA80S8							
	11.8	145	1.7	57.04		**2KJ1501 - ■DB13 - ■■T2**	**P02**	27
	B.38-LA71S6							
	12.9	133	1.9	65.69		**2KJ1501 - ■CD13 - ■■U2**	**P01**	23
	14.9	115	2.2	57.04		**2KJ1501 - ■CD13 - ■■T2**	**P01**	23
	B.28-LA71C4							
	24	72	1.8	57.53		**2KJ1500 - ■CC13 - ■■D2**		11
	28	61	2.1	48.51		**2KJ1500 - ■CC13 - ■■C2**		11
	32	54	2.4	43.07		**2KJ1500 - ■CC13 - ■■B2**		11
	36	47	2.7	37.76		**2KJ1500 - ■CC13 - ■■A2**		11
	40	42	3.1	33.79		**2KJ1500 - ■CC13 - ■■X1**		11
	46	38	3.5	29.99		**2KJ1500 - ■CC13 - ■■W1**		11
	52	33	3.9	26.28		**2KJ1500 - ■CC13 - ■■V1**		11
	59	29	4.5	23.11		**2KJ1500 - ■CC13 - ■■U1**		11
	66	26	5.0	20.87		**2KJ1500 - ■CC13 - ■■T1**		11
	75	23	5.7	18.19		**2KJ1500 - ■CC13 - ■■S1**		11
	84	20	6.3	16.34		**2KJ1500 - ■CC13 - ■■R1**		11
	93	18	7.0	14.75		**2KJ1500 - ■CC13 - ■■Q1**		11
	102	17	7.7	13.38		**2KJ1500 - ■CC13 - ■■P1**		11

★ Preferred transmission ratio

Shaft designs, see page 4/83 — **1, 2, 3, 5, 6 or 9**

Frequency and voltage, see page 8/20 — **1 to 9**

Gearbox housing mounting position, see page 4/87 — **A, D, E, F, H or M**

*) For mounting type B3

© Siemens AG 2011

Selection and ordering data (continued)

Power rating P_{Motor} kW (50 Hz)	Output speed n_2 (50 Hz) rpm	Output torque T_2 Nm	Service factor f_B	Gearbox ratio i_{tot}		Order No.	Order code (No. of poles)	Weight *) kg
0.18	**B.28-LA71C4**							
	113	15	8.5	12.17		**2KJ1500 - ■CC13 - ■■N1**		11
	127	14	9.6	10.76		**2KJ1500 - ■CC13 - ■■M1**		11
	138	12	10.3	9.94		**2KJ1500 - ■CC13 - ■■L1**		11
	160	11	11.3	8.56		**2KJ1500 - ■CC13 - ■■K1**		11
	176	9.8	12.0	7.78		**2KJ1500 - ■CC13 - ■■J1**		11
	183	9.4	9.6	7.49		**2KJ1500 - ■CC13 - ■■H1**		11
	203	8.5	10.6	6.76		**2KJ1500 - ■CC13 - ■■G1**		11
	223	7.7	11.7	6.13		**2KJ1500 - ■CC13 - ■■F1**		11
	246	7.0	12.9	5.58		**2KJ1500 - ■CC13 - ■■E1**		11
	277	6.2	14.5	4.94		**2KJ1500 - ■CC13 - ■■D1**		11
0.25	**K.188-D68-LA71S4**							
	0.08	24 007	0.83	16 951	★	**2KJ1542 - ■CD13 - ■■G1**		749
	0.09	21 801	0.92	15 394		**2KJ1542 - ■CD13 - ■■F1**		749
	0.10	18 194	1.1	12 847		**2KJ1542 - ■CD13 - ■■D1**		749
	0.10	19 861	1.0	14 024	★	**2KJ1542 - ■CD13 - ■■E1**		749
	0.12	16 234	1.2	11 463	★	**2KJ1542 - ■CD13 - ■■C1**		749
	K.188-Z68-LA71S4							
	0.15	13 317	1.5	9 201	★	**2KJ1541 - ■CD13 - ■■X1**		747
	0.17	11 647	1.7	8 047		**2KJ1541 - ■CD13 - ■■W1**		747
	0.19	10 456	1.9	7 224	★	**2KJ1541 - ■CD13 - ■■V1**		747
	K.168-Z48-LA71S4							
	0.13	15 448	0.87	10 673	★	**2KJ1537 - ■CD13 - ■■V1**		486
	0.15	13 240	1.0	9 148		**2KJ1537 - ■CD13 - ■■U1**		486
	0.16	11 980	1.1	8 277	★	**2KJ1537 - ■CD13 - ■■T1**		486
	0.18	11 058	1.2	7 640		**2KJ1537 - ■CD13 - ■■S1**		486
	0.20	9 615	1.4	6 643	★	**2KJ1537 - ■CD13 - ■■R1**		486
	0.22	8 730	1.5	6 032		**2KJ1537 - ■CD13 - ■■Q1**		486
	0.24	7 971	1.7	5 507	★	**2KJ1537 - ■CD13 - ■■P1**		486
	0.27	7 313	1.8	5 053		**2KJ1537 - ■CD13 - ■■N1**		486
	0.29	6 739	2.0	4 656	★	**2KJ1537 - ■CD13 - ■■M1**		486
	K.148-Z38-LA71S4							
	0.20	9 599	0.83	6 632		**2KJ1534 - ■CD13 - ■■Q1**		296
	0.22	8 699	0.92	6 010		**2KJ1534 - ■CD13 - ■■P1**		296
	0.25	7 678	1.0	5 305		**2KJ1534 - ■CD13 - ■■N1**		296
	0.28	6 927	1.2	4 786		**2KJ1534 - ■CD13 - ■■M1**		296
	0.31	6 283	1.3	4 341		**2KJ1534 - ■CD13 - ■■L1**		296
	0.34	5 724	1.4	3 955		**2KJ1534 - ■CD13 - ■■K1**		296
	0.37	5 235	1.5	3 617		**2KJ1534 - ■CD13 - ■■J1**		296
	0.42	4 681	1.7	3 234		**2KJ1534 - ■CD13 - ■■H1**		296
	0.46	4 299	1.9	2 970		**2KJ1534 - ■CD13 - ■■G1**		296
	K.128-Z38-LA71S4							
	0.35	5 525	0.85	3 817		**2KJ1531 - ■CD13 - ■■K1**		201
	0.39	5 053	0.93	3 491	★	**2KJ1531 - ■CD13 - ■■J1**		201

★ Preferred transmission ratio

Shaft designs, see page 4/83 — **1, 2, 3, 5, 6 or 9**

Frequency and voltage, see page 8/20 — **1 to 9**

Gearbox housing mounting position, see page 4/87 — **A, D, E, F, H or M**

*) For mounting type B3

© Siemens AG 2011

Selection and ordering data (continued)

Power rating P_{Motor} kW (50 Hz)	Output speed n_2 (50 Hz) rpm	Output torque T_2 Nm	Service factor f_B	Gearbox ratio i_{tot}		Order No.	Order code (No. of poles)	Weight *) kg
0.25	**K.128-Z38-LA71S4**							
	0.43	4 517	1.0	3 121		**2KJ1531 - ■CD13 - ■■H1**		201
	0.47	4 148	1.1	2 866	★	**2KJ1531 - ■CD13 - ■■G1**		201
	0.52	3 739	1.3	2 583		**2KJ1531 - ■CD13 - ■■F1**		201
	0.61	3 215	1.5	2 221	★	**2KJ1531 - ■CD13 - ■■E1**		201
	0.68	2 867	1.6	1 981		**2KJ1531 - ■CD13 - ■■D1**		201
	0.74	2 633	1.8	1 819	★	**2KJ1531 - ■CD13 - ■■C1**		201
	0.82	2 372	2.0	1 639		**2KJ1531 - ■CD13 - ■■B1**		201
	K.108-Z38-LA71S4							
	0.58	3 345	0.90	2 311		**2KJ1527 - ■CD13 - ■■E1**		134
	0.66	2 982	1.0	2 060		**2KJ1527 - ■CD13 - ■■D1**		134
	0.71	2 738	1.1	1 892		**2KJ1527 - ■CD13 - ■■C1**		134
	0.79	2 468	1.2	1 705		**2KJ1527 - ■CD13 - ■■B1**		134
	0.92	2 122	1.4	1 466		**2KJ1527 - ■CD13 - ■■A1**		134
	K.108-Z48-LA71S4							
	1.0	1 944	1.5	1 343	★	**2KJ1530 - ■CD13 - ■■P1**		143
	1.1	1 785	1.7	1 233		**2KJ1530 - ■CD13 - ■■N1**		143
	1.2	1 644	1.8	1 136	★	**2KJ1530 - ■CD13 - ■■M1**		143
	1.3	1 492	2.0	1 031		**2KJ1530 - ■CD13 - ■■L1**		143
	K.88-Z28-LA71S4							
	0.99	1 970	0.84	1 361	★	**2KJ1523 - ■CD13 - ■■P1**		76
	1.1	1 786	0.92	1 234		**2KJ1523 - ■CD13 - ■■N1**		76
	1.2	1 625	1.0	1 123	★	**2KJ1523 - ■CD13 - ■■M1**		76
	1.4	1 437	1.1	993		**2KJ1523 - ■CD13 - ■■L1**		76
	1.5	1 327	1.2	917	★	**2KJ1523 - ■CD13 - ■■K1**		76
	1.7	1 142	1.4	789		**2KJ1523 - ■CD13 - ■■J1**		76
	1.9	1 039	1.6	718	★	**2KJ1523 - ■CD13 - ■■H1**		76
	2.1	944	1.7	652	★	**2KJ1523 - ■CD13 - ■■G1**		76
	K.88-LA80M8							
	2.3	1 055	1.5	302.68	★	**2KJ1505 - ■DC13 - ■■M2**	**P02**	78
	2.5	951	1.7	272.95		**2KJ1505 - ■DC13 - ■■L2**	**P02**	78
	K.88-LA71M6							
	2.8	840	1.8	302.68	★	**2KJ1505 - ■CE13 - ■■M2**	**P01**	74
	K.68-Z28-LA71S4							
	2.1	922	0.89	637		**2KJ1518 - ■CD13 - ■■J1**		47
	2.3	838	0.98	579	★	**2KJ1518 - ■CD13 - ■■H1**		47
	K.68-LA80M8							
	2.8	849	0.97	243.72		**2KJ1504 - ■DC13 - ■■N2**	**P02**	48
	3.2	752	1.1	215.68	★	**2KJ1504 - ■DC13 - ■■M2**	**P02**	48
	K.68-LA71M6							
	3.5	677	1.2	243.72		**2KJ1504 - ■CE13 - ■■N2**	**P01**	44
	4.0	599	1.4	215.68	★	**2KJ1504 - ■CE13 - ■■M2**	**P01**	44
	4.4	544	1.5	196.07		**2KJ1504 - ■CE13 - ■■L2**	**P01**	44

★ Preferred transmission ratio

Shaft designs, see page 4/83 — **1, 2, 3, 5, 6 or 9**

Frequency and voltage, see page 8/20 — **1 to 9**

Gearbox housing mounting position, see page 4/87 — **A, D, E, F, H or M**

*) For mounting type B3

© Siemens AG 2011

Selection and ordering data (continued)

Power rating P_{Motor} kW (50 Hz)	Output speed n_2 (50 Hz) rpm	Output torque T_2 Nm	Service factor f_B	Gearbox ratio i_{tot}		Order No.	Order code (No. of poles)	Weight *) kg
0.25	**K.68-LA71M6**							
	4.9	489	1.7	176.14	★	**2KJ1504 - ■CE13 - ■■K2**	**P01**	44
	K.68-LA71S4							
	5.5	431	1.9	243.72		**2KJ1504 - ■CD13 - ■■N2**		44
	6.3	381	2.1	215.68	★	**2KJ1504 - ■CD13 - ■■M2**		44
	K.48-LA80M8							
	4.5	525	0.86	150.76		**2KJ1503 - ■DC13 - ■■H2**	**P02**	29
	K.48-LA71M6							
	5.1	471	0.96	169.53	★	**2KJ1503 - ■CE13 - ■■J2**	**P01**	25
	5.7	419	1.1	150.76		**2KJ1503 - ■CE13 - ■■H2**	**P01**	25
	6.6	363	1.2	130.78	★	**2KJ1503 - ■CE13 - ■■G2**	**P01**	25
	7.0	339	1.3	122.19		**2KJ1503 - ■CE13 - ■■F2**	**P01**	25
	K.48-LA71S4							
	8.0	300	1.5	169.53	★	**2KJ1503 - ■CD13 - ■■J2**		25
	9.0	267	1.7	150.76		**2KJ1503 - ■CD13 - ■■H2**		25
	10.3	231	1.9	130.78	★	**2KJ1503 - ■CD13 - ■■G2**		25
	11.0	216	2.1	122.19		**2KJ1503 - ■CD13 - ■■F2**		25
	K.38-LA71S4							
	8.5	281	0.89	159.04		**2KJ1502 - ■CD13 - ■■K2**		21
	9.7	247	1.0	139.43	★	**2KJ1502 - ■CD13 - ■■J2**		21
	10.8	221	1.1	124.78		**2KJ1502 - ■CD13 - ■■H2**		21
	12.2	196	1.3	110.75	★	**2KJ1502 - ■CD13 - ■■G2**		21
	13.9	172	1.5	97.05		**2KJ1502 - ■CD13 - ■■F2**		21
	15.8	151	1.7	85.33	★	**2KJ1502 - ■CD13 - ■■E2**		21
	17.5	136	1.8	77.09		**2KJ1502 - ■CD13 - ■■D2**		21
	20	119	2.1	67.18	★	**2KJ1502 - ■CD13 - ■■C2**		21
	22	107	2.3	60.33		**2KJ1502 - ■CD13 - ■■B2**		21
	B.38-LA80M8							
	12	199	1.3	57.04		**2KJ1501 - ■DC13 - ■■T2**	**P02**	27
	B.38-LA71M6							
	13.1	182	1.4	65.69		**2KJ1501 - ■CE13 - ■■U2**	**P01**	23
	15.1	158	1.6	57.04		**2KJ1501 - ■CE13 - ■■T2**	**P01**	23
	17.0	141	1.8	50.72		**2KJ1501 - ■CE13 - ■■S2**	**P01**	23
	19.5	122	2.0	44		**2KJ1501 - ■CE13 - ■■R2**	**P01**	23
	B.38-LA71S4							
	21	116	2.2	65.69		**2KJ1501 - ■CD13 - ■■U2**		23
	B.28-LA71S4							
	24	102	1.3	57.53		**2KJ1500 - ■CD13 - ■■D2**		11
	28	86	1.5	48.51		**2KJ1500 - ■CD13 - ■■C2**		11
	31	76	1.7	43.07		**2KJ1500 - ■CD13 - ■■B2**		11
	36	67	1.9	37.76		**2KJ1500 - ■CD13 - ■■A2**		11
	40	60	2.2	33.79		**2KJ1500 - ■CD13 - ■■X1**		11
	45	53	2.5	29.99		**2KJ1500 - ■CD13 - ■■W1**		11

★ Preferred transmission ratio

Shaft designs, see page 4/83 — **1, 2, 3, 5, 6 or 9**

Frequency and voltage, see page 8/20 — **1 to 9**

Gearbox housing mounting position, see page 4/87 — **A, D, E, F, H or M**

*) For mounting type B3

© Siemens AG 2011

Selection and ordering data (continued)

Power rating P_{Motor} kW (50 Hz)	Output speed n_2 (50 Hz) rpm	Output torque T_2 Nm	Service factor f_B	Gearbox ratio i_{tot}		Order No.	Order code (No. of poles)	Weight *) kg
0.25	**B.28-LA71S4**							
	51	46	2.8	26.28		**2KJ1500 - ■CD13 - ■■V1**		11
	58	41	3.2	23.11		**2KJ1500 - ■CD13 - ■■U1**		11
	65	37	3.5	20.87		**2KJ1500 - ■CD13 - ■■T1**		11
	74	32	4.0	18.19		**2KJ1500 - ■CD13 - ■■S1**		11
	83	29	4.5	16.34		**2KJ1500 - ■CD13 - ■■R1**		11
	92	26	5.0	14.75		**2KJ1500 - ■CD13 - ■■Q1**		11
	101	24	5.5	13.38		**2KJ1500 - ■CD13 - ■■P1**		11
	111	22	6.0	12.17		**2KJ1500 - ■CD13 - ■■N1**		11
	125	19	6.8	10.76		**2KJ1500 - ■CD13 - ■■M1**		11
	136	18	7.3	9.94		**2KJ1500 - ■CD13 - ■■L1**		11
	158	15	8.0	8.56		**2KJ1500 - ■CD13 - ■■K1**		11
	174	14	8.5	7.78		**2KJ1500 - ■CD13 - ■■J1**		11
	180	13	6.8	7.49		**2KJ1500 - ■CD13 - ■■H1**		11
	200	12	7.5	6.76		**2KJ1500 - ■CD13 - ■■G1**		11
	220	11	8.3	6.13		**2KJ1500 - ■CD13 - ■■F1**		11
	242	9.9	9.1	5.58		**2KJ1500 - ■CD13 - ■■E1**		11
	273	8.7	10.3	4.94		**2KJ1500 - ■CD13 - ■■D1**		11
	296	8.1	10.8	4.56		**2KJ1500 - ■CD13 - ■■C1**		11
	344	6.9	11.8	3.92		**2KJ1500 - ■CD13 - ■■B1**		11
	378	6.3	12.5	3.57		**2KJ1500 - ■CD13 - ■■A1**		11
0.37	**K.188-D68-LA71M4**							
	0.12	24 723	0.81	11 463	★	**2KJ1542 - ■CE13 - ■■C1**		749
	K.188-Z68-LA71M4							
	0.15	20 281	0.99	9 201	★	**2KJ1541 - ■CE13 - ■■X1**		747
	0.17	17 737	1.1	8 047		**2KJ1541 - ■CE13 - ■■W1**		747
	0.19	15 923	1.3	7 224	★	**2KJ1541 - ■CE13 - ■■V1**		747
	0.21	14 543	1.4	6 598		**2KJ1541 - ■CE13 - ■■U1**		747
	0.23	12 905	1.5	5 855	★	**2KJ1541 - ■CE13 - ■■T1**		747
	0.25	11 914	1.7	5 405		**2KJ1541 - ■CE13 - ■■S1**		747
	0.28	10 776	1.9	4 889	★	**2KJ1541 - ■CE13 - ■■R1**		747
	0.30	9 923	2.0	4 502		**2KJ1541 - ■CE13 - ■■Q1**		747
	K.168-Z48-LA71M4							
	0.18	16 840	0.80	7 640		**2KJ1537 - ■CE13 - ■■S1**		486
	0.21	14 642	0.92	6 643	★	**2KJ1537 - ■CE13 - ■■R1**		486
	0.23	13 296	1.0	6 032		**2KJ1537 - ■CE13 - ■■Q1**		486
	0.25	12 138	1.1	5 507	★	**2KJ1537 - ■CE13 - ■■P1**		486
	0.27	11 138	1.2	5 053		**2KJ1537 - ■CE13 - ■■N1**		486
	0.29	10 263	1.3	4 656	★	**2KJ1537 - ■CE13 - ■■M1**		486
	0.32	9 319	1.4	4 228		**2KJ1537 - ■CE13 - ■■L1**		486
	0.36	8 490	1.6	3 852	★	**2KJ1537 - ■CE13 - ■■K1**		486
	0.39	7 776	1.7	3 528		**2KJ1537 - ■CE13 - ■■J1**		486
	0.44	6 939	1.9	3 148	★	**2KJ1537 - ■CE13 - ■■H1**		486

★ Preferred transmission ratio

Shaft designs, see page 4/83 — **1, 2, 3, 5, 6 or 9**

Frequency and voltage, see page 8/20 — **1 to 9**

Gearbox housing mounting position, see page 4/87 — **A, D, E, F, H or M**

*) For mounting type B3

© Siemens AG 2011

Selection and ordering data (continued)

Power rating P_{Motor} kW (50 Hz)	Output speed n_2 (50 Hz) rpm	Output torque T_2 Nm	Service factor f_B	Gearbox ratio i_{tot}		Order No.	Order code (No. of poles)	Weight *) kg
0.37	**K.148-Z38-LA71M4**							
	0.32	9 568	0.84	4 341		**2KJ1534 - ■CE13 - ■■L1**		296
	0.35	8 717	0.92	3 955		**2KJ1534 - ■CE13 - ■■K1**		296
	0.38	7 972	1.0	3 617		**2KJ1534 - ■CE13 - ■■J1**		296
	0.42	7 128	1.1	3 234		**2KJ1534 - ■CE13 - ■■H1**		296
	0.46	6 546	1.2	2 970		**2KJ1534 - ■CE13 - ■■G1**		296
	0.51	5 901	1.4	2 677		**2KJ1534 - ■CE13 - ■■F1**		296
	0.60	5 074	1.6	2 302		**2KJ1534 - ■CE13 - ■■E1**		296
	0.67	4 525	1.8	2 053		**2KJ1534 - ■CE13 - ■■D1**		296
	0.73	4 155	1.9	1 885		**2KJ1534 - ■CE13 - ■■C1**		296
	K.128-Z38-LA71M4							
	0.53	5 693	0.83	2 583		**2KJ1531 - ■CE13 - ■■F1**		201
	0.62	4 895	0.96	2 221	★	**2KJ1531 - ■CE13 - ■■E1**		201
	0.69	4 366	1.1	1 981		**2KJ1531 - ■CE13 - ■■D1**		201
	0.75	4 009	1.2	1 819	★	**2KJ1531 - ■CE13 - ■■C1**		201
	0.84	3 613	1.3	1 639		**2KJ1531 - ■CE13 - ■■B1**		201
	0.97	3 108	1.5	1 410	★	**2KJ1531 - ■CE13 - ■■A1**		201
	K.128-Z48-LA71M4							
	0.98	3 086	1.5	1 400		**2KJ1533 - ■CE13 - ■■P1**		210
	1.1	2 830	1.7	1 284		**2KJ1533 - ■CE13 - ■■N1**		210
	1.2	2 608	1.8	1 183		**2KJ1533 - ■CE13 - ■■M1**		210
	1.3	2 367	2.0	1 074		**2KJ1533 - ■CE13 - ■■L1**		210
	K.108-Z38-LA71M4							
	0.80	3 758	0.80	1 705		**2KJ1527 - ■CE13 - ■■B1**		134
	0.94	3 231	0.93	1 466		**2KJ1527 - ■CE13 - ■■A1**		134
	K.108-Z48-LA71M4							
	1.0	2 960	1.0	1 343	★	**2KJ1530 - ■CE13 - ■■P1**		143
	1.1	2 718	1.1	1 233		**2KJ1530 - ■CE13 - ■■N1**		143
	1.2	2 504	1.2	1 136	★	**2KJ1530 - ■CE13 - ■■M1**		143
	1.3	2 272	1.3	1 031		**2KJ1530 - ■CE13 - ■■L1**		143
	1.5	2 072	1.4	940	★	**2KJ1530 - ■CE13 - ■■K1**		143
	1.6	1 898	1.6	861		**2KJ1530 - ■CE13 - ■■J1**		143
	1.8	1 693	1.8	768	★	**2KJ1530 - ■CE13 - ■■H1**		143
	K.108-LA90SA8							
	2.2	1 608	1.8	307.24		**2KJ1506 - ■EB13 - ■■K2**	**P02**	135
	2.4	1 456	1.9	278.1	★	**2KJ1506 - ■EB13 - ■■J2**	**P02**	135
	K.88-Z28-LA71M4							
	1.5	2 021	0.82	917	★	**2KJ1523 - ■CE13 - ■■K1**		76
	1.7	1 739	0.95	789		**2KJ1523 - ■CE13 - ■■J1**		76
	1.9	1 583	1.0	718	★	**2KJ1523 - ■CE13 - ■■H1**		76
	2.1	1 437	1.1	652	★	**2KJ1523 - ■CE13 - ■■G1**		76
	K.88-LA90SA8							
	2.2	1 584	0.97	302.68	★	**2KJ1505 - ■EB13 - ■■M2**	**P02**	81
	2.5	1 429	1.2	272.95		**2KJ1505 - ■EB13 - ■■L2**	**P02**	81

★ Preferred transmission ratio

Shaft designs, see page 4/83 — **1, 2, 3, 5, 6 or 9**

Frequency and voltage, see page 8/20 — **1 to 9**

Gearbox housing mounting position, see page 4/87 — **A, D, E, F, H or M**

*) For mounting type B3

© Siemens AG 2011

Selection and ordering data (continued)

Power rating P_{Motor} kW (50 Hz)	Output speed n_2 (50 Hz) rpm	Output torque T_2 Nm	Service factor f_B	Gearbox ratio i_{tot}		Order No.	Order code (No. of poles)	Weight *) kg
0.37	**K.88-LA90SA8**							
	2.7	1 288	1.3	246.13	★	**2KJ1505 - ■EB13 - ■■K2**	**P02**	81
	K.88-LA80S6							
	3.0	1 163	1.3	302.68	★	**2KJ1505 - ■DB13 - ■■M2**	**P01**	78
	3.4	1 048	1.6	272.95		**2KJ1505 - ■DB13 - ■■L2**	**P01**	78
	3.7	945	1.7	246.13	★	**2KJ1505 - ■DB13 - ■■K2**	**P01**	78
	4.3	827	2.0	215.25		**2KJ1505 - ■DB13 - ■■J2**	**P01**	78
	K.88-LA71M4							
	4.5	781	2.0	302.68	★	**2KJ1505 - ■CE13 - ■■M2**		74
	K.68-LA80S6							
	3.8	936	0.88	243.72		**2KJ1504 - ■DB13 - ■■N2**	**P01**	48
	4.3	828	0.99	215.68	★	**2KJ1504 - ■DB13 - ■■M2**	**P01**	48
	4.7	753	1.1	196.07		**2KJ1504 - ■DB13 - ■■L2**	**P01**	48
	5.2	677	1.2	176.14	★	**2KJ1504 - ■DB13 - ■■K2**	**P01**	48
	K.68-LA71M4							
	5.6	629	1.3	243.72		**2KJ1504 - ■CE13 - ■■N2**		44
	6.4	556	1.5	215.68	★	**2KJ1504 - ■CE13 - ■■M2**		44
	7.0	506	1.6	196.07		**2KJ1504 - ■CE13 - ■■L2**		44
	7.8	454	1.8	176.14	★	**2KJ1504 - ■CE13 - ■■K2**		44
	9.1	389	2.1	150.98		**2KJ1504 - ■CE13 - ■■J2**		44
	K.48-LA80S6							
	7.0	502	0.90	130.78	★	**2KJ1503 - ■DB13 - ■■G2**	**P01**	29
	7.5	469	0.96	122.19		**2KJ1503 - ■DB13 - ■■F2**	**P01**	29
	K.48-LA71M4							
	8.1	437	1.0	169.53	★	**2KJ1503 - ■CE13 - ■■J2**		25
	9.1	389	1.2	150.76		**2KJ1503 - ■CE13 - ■■H2**		25
	10.5	337	1.3	130.78	★	**2KJ1503 - ■CE13 - ■■G2**		25
	11.2	315	1.4	122.19		**2KJ1503 - ■CE13 - ■■F2**		25
	12.7	277	1.6	107.47	★	**2KJ1503 - ■CE13 - ■■E2**		25
	14.6	243	1.9	94.12		**2KJ1503 - ■CE13 - ■■D2**		25
	16.5	215	2.1	83.25	★	**2KJ1503 - ■CE13 - ■■C2**		25
	18.2	195	2.3	75.45		**2KJ1503 - ■CE13 - ■■B2**		25
	K.38-LA71M4							
	12.4	286	0.88	110.75	★	**2KJ1502 - ■CE13 - ■■G2**		21
	14.1	250	1.0	97.05		**2KJ1502 - ■CE13 - ■■F2**		21
	16.1	220	1.1	85.33	★	**2KJ1502 - ■CE13 - ■■E2**		21
	17.8	199	1.3	77.09		**2KJ1502 - ■CE13 - ■■D2**		21
	20	173	1.4	67.18	★	**2KJ1502 - ■CE13 - ■■C2**		21
	23	156	1.6	60.33		**2KJ1502 - ■CE13 - ■■B2**		21
	25	140	1.8	54.47	★	**2KJ1502 - ■CE13 - ■■A2**		21
	28	127	2.0	49.38		**2KJ1502 - ■CE13 - ■■X1**		21
	30	116	2.2	44.94	★	**2KJ1502 - ■CE13 - ■■W1**		21
	34	102	2.4	39.73		**2KJ1502 - ■CE13 - ■■V1**		21
	37	95	2.6	36.69	★	**2KJ1502 - ■CE13 - ■■U1**		21

★ Preferred transmission ratio

Shaft designs, see page 4/83 — **1, 2, 3, 5, 6 or 9**

Frequency and voltage, see page 8/20 — **1 to 9**

Gearbox housing mounting position, see page 4/87 — **A, D, E, F, H or M**

*) For mounting type B3

© Siemens AG 2011

Selection and ordering data (continued)

Power rating P_{Motor} kW (50 Hz)	Output speed n_2 (50 Hz) rpm	Output torque T_2 Nm	Service factor f_B	Gearbox ratio i_{tot}		Order No.	Order code (No. of poles)	Weight *) kg
0.37	**B.38-LA80S6**							
	16.1	219	1.1	57.04		**2KJ1501 - ■DB13 - ■■T2**	**P01**	27
	18.1	195	1.3	50.72		**2KJ1501 - ■DB13 - ■■S2**	**P01**	27
	B.38-LA71M4							
	21	169	1.5	65.69		**2KJ1501 - ■CE13 - ■■U2**		23
	24	147	1.7	57.04		**2KJ1501 - ■CE13 - ■■T2**		23
	27	131	1.9	50.72		**2KJ1501 - ■CE13 - ■■S2**		23
	31	113	2.2	44		**2KJ1501 - ■CE13 - ■■R2**		23
	33	106	2.4	41.11		**2KJ1501 - ■CE13 - ■■Q2**		23
	B.28-LA71M4							
	24	148	0.88	57.53		**2KJ1500 - ■CE13 - ■■D2**		11
	28	125	1.0	48.51		**2KJ1500 - ■CE13 - ■■C2**		11
	32	111	1.2	43.07		**2KJ1500 - ■CE13 - ■■B2**		11
	36	97	1.3	37.76		**2KJ1500 - ■CE13 - ■■A2**		11
	40	87	1.5	33.79		**2KJ1500 - ■CE13 - ■■X1**		11
	46	77	1.7	29.99		**2KJ1500 - ■CE13 - ■■W1**		11
	52	68	1.9	26.28		**2KJ1500 - ■CE13 - ■■V1**		11
	59	60	2.2	23.11		**2KJ1500 - ■CE13 - ■■U1**		11
	66	54	2.4	20.87		**2KJ1500 - ■CE13 - ■■T1**		11
	75	47	2.8	18.19		**2KJ1500 - ■CE13 - ■■S1**		11
	84	42	3.1	16.34		**2KJ1500 - ■CE13 - ■■R1**		11
	93	38	3.4	14.75		**2KJ1500 - ■CE13 - ■■Q1**		11
0.55	**K.188-Z68-LA71ZMP4**							
	0.19	24 353	0.82	7 224	★	**2KJ1541 - ■CG13 - ■■V1**		747
	0.21	22 242	0.9	6 598		**2KJ1541 - ■CG13 - ■■U1**		747
	0.23	19 738	1.0	5 855	★	**2KJ1541 - ■CG13 - ■■T1**		747
	0.25	18 221	1.1	5 405		**2KJ1541 - ■CG13 - ■■S1**		747
	0.28	16 481	1.2	4 889	★	**2KJ1541 - ■CG13 - ■■R1**		747
	0.30	15 177	1.3	4 502		**2KJ1541 - ■CG13 - ■■Q1**		747
	0.33	14 034	1.4	4 163	★	**2KJ1541 - ■CG13 - ■■P1**		747
	0.35	13 029	1.5	3 865		**2KJ1541 - ■CG13 - ■■N1**		747
	0.40	11 495	1.7	3 410	★	**2KJ1541 - ■CG13 - ■■M1**		747
	0.44	10 612	1.9	3 148		**2KJ1541 - ■CG13 - ■■L1**		747
	K.168-Z48-LA71ZMP4							
	0.29	15 696	0.86	4 656	★	**2KJ1537 - ■CG13 - ■■M1**		486
	0.32	14 253	0.95	4 228		**2KJ1537 - ■CG13 - ■■L1**		486
	0.36	12 985	1.0	3 852	★	**2KJ1537 - ■CG13 - ■■K1**		486
	0.39	11 893	1.1	3 528		**2KJ1537 - ■CG13 - ■■J1**		486
	0.44	10 612	1.3	3 148	★	**2KJ1537 - ■CG13 - ■■H1**		486
	0.70	6 590	2.0	1 955	★	**2KJ1537 - ■CG13 - ■■D1**		486
	K.148-Z38-LA71ZMP4							
	0.46	10 012	0.80	2 970		**2KJ1534 - ■CG13 - ■■G1**		296
	0.51	9 024	0.89	2 677		**2KJ1534 - ■CG13 - ■■F1**		296
	0.60	7 760	1.0	2 302		**2KJ1534 - ■CG13 - ■■E1**		296

★ Preferred transmission ratio

Shaft designs, see page 4/83 — **1, 2, 3, 5, 6 or 9**

Frequency and voltage, see page 8/20 — **1 to 9**

Gearbox housing mounting position, see page 4/87 — **A, D, E, F, H or M**

*) For mounting type B3

© Siemens AG 2011

Selection and ordering data (continued)

Power rating P_{Motor} kW (50 Hz)	Output speed n_2 (50 Hz) rpm	Output torque T_2 Nm	Service factor f_B	Gearbox ratio i_{tot}		Order No.	Order code (No. of poles)	Weight *) kg
0.55	**K.148-Z38-LA71ZMP4**							
	0.67	6 921	1.2	2 053		**2KJ1534 - ■CG13 - ■■D1**		296
	0.73	6 354	1.3	1 885		**2KJ1534 - ■CG13 - ■■C1**		296
	0.81	5 727	1.4	1 699		**2KJ1534 - ■CG13 - ■■B1**		296
	0.94	4 925	1.6	1 461		**2KJ1534 - ■CG13 - ■■A1**		296
	K.148-Z68-LA71ZMP4							
	0.98	4 693	1.7	1 392		**2KJ1536 - ■CG13 - ■■L1**		322
	1.1	4 204	1.9	1 247	★	**2KJ1536 - ■CG13 - ■■K1**		322
	K.128-Z38-LA71ZMP4							
	0.84	5 525	0.85	1 639		**2KJ1531 - ■CG13 - ■■B1**		201
	0.97	4 753	0.99	1 410	★	**2KJ1531 - ■CG13 - ■■A1**		201
	K.128-Z48-LA71ZMP4							
	0.98	4 720	1.0	1 400		**2KJ1533 - ■CG13 - ■■P1**		210
	1.1	4 328	1.1	1 284		**2KJ1533 - ■CG13 - ■■N1**		210
	1.2	3 988	1.2	1 183		**2KJ1533 - ■CG13 - ■■M1**		210
	1.3	3 621	1.3	1 074		**2KJ1533 - ■CG13 - ■■L1**		210
	1.4	3 300	1.4	979		**2KJ1533 - ■CG13 - ■■K1**		210
	1.5	3 024	1.6	897		**2KJ1533 - ■CG13 - ■■J1**		210
	1.7	2 697	1.7	800		**2KJ1533 - ■CG13 - ■■H1**		210
	K.128-LA90LA8							
	2.3	2 298	2.0	295.38	★	**2KJ1507 - ■EE13 - ■■L2**	**P02**	209
	K.108-Z48-LA71ZMP4							
	1.3	3 476	0.86	1 031		**2KJ1530 - ■CG13 - ■■L1**		143
	1.5	3 169	0.95	940	★	**2KJ1530 - ■CG13 - ■■K1**		143
	1.6	2 903	1.0	861		**2KJ1530 - ■CG13 - ■■J1**		143
	1.8	2 589	1.2	768	★	**2KJ1530 - ■CG13 - ■■H1**		143
	K.108-LA90LA8							
	2.2	2 391	1.2	307.24		**2KJ1506 - ■EE13 - ■■K2**	**P02**	138
	2.4	2 164	1.3	278.1	★	**2KJ1506 - ■EE13 - ■■J2**	**P02**	138
	2.8	1 895	1.6	243.47		**2KJ1506 - ■EE13 - ■■H2**	**P02**	138
	K.108-LA80M6							
	3.0	1 773	1.6	307.24		**2KJ1506 - ■DC13 - ■■K2**	**P01**	132
	3.3	1 605	1.8	278.1	★	**2KJ1506 - ■DC13 - ■■J2**	**P01**	132
	K.88-LA90LA8							
	2.7	1 915	0.86	246.13	★	**2KJ1505 - ■EE13 - ■■K2**	**P02**	84
	K.88-LA80M6							
	3.0	1 747	0.88	302.68	★	**2KJ1505 - ■DC13 - ■■M2**		78
	3.3	1 575	1.0	272.95		**2KJ1505 - ■DC13 - ■■L2**		78
	3.7	1 421	1.2	246.13	★	**2KJ1505 - ■DC13 - ■■K2**		78
	4.2	1 242	1.3	215.25		**2KJ1505 - ■DC13 - ■■J2**		78
	K.88-LA71ZMP4							
	4.5	1 160	1.3	302.68	★	**2KJ1505 - ■CG13 - ■■M2**		74
	5.0	1 046	1.6	272.95		**2KJ1505 - ■CG13 - ■■L2**		74

★ Preferred transmission ratio

Shaft designs, see page 4/83 — **1, 2, 3, 5, 6 or 9**

Frequency and voltage, see page 8/20 — **1 to 9**

Gearbox housing mounting position, see page 4/87 — **A, D, E, F, H or M**

*) For mounting type B3

© Siemens AG 2011

Selection and ordering data (continued)

Power rating P_{Motor} kW (50 Hz)	Output speed n_2 (50 Hz) rpm	Output torque T_2 Nm	Service factor f_B	Gearbox ratio i_{tot}		Order No.	Order code (No. of poles)	Weight *) kg
0.55	**K.88-LA71ZMP4**							
	5.6	944	1.7	246.13	★	**2KJ1505 - ■CG13 - ■■K2**		74
	6.4	825	2.0	215.25		**2KJ1505 - ■CG13 - ■■J2**		74
	K.68-LA80M6							
	5.2	1 017	0.81	176.14	★	**2KJ1504 - ■DC13 - ■■K2**	**P01**	48
	K.68-LA71ZMP4							
	5.6	934	0.88	243.72		**2KJ1504 - ■CG13 - ■■N2**		44
	6.4	827	0.99	215.68	★	**2KJ1504 - ■CG13 - ■■M2**		44
	7.0	752	1.1	196.07		**2KJ1504 - ■CG13 - ■■L2**		44
	7.8	675	1.2	176.14	★	**2KJ1504 - ■CG13 - ■■K2**		44
	9.1	579	1.4	150.98		**2KJ1504 - ■CG13 - ■■J2**		44
	10.0	524	1.6	136.6	★	**2KJ1504 - ■CG13 - ■■H2**		44
	10.9	483	1.7	126.09		**2KJ1504 - ■CG13 - ■■G2**		44
	12.5	420	2.0	109.64	★	**2KJ1504 - ■CG13 - ■■F2**		44
	13.8	382	2.1	99.55		**2KJ1504 - ■CG13 - ■■E2**		44
	K.48-LA71ZMP4							
	10.5	501	0.90	130.78	★	**2KJ1503 - ■CG13 - ■■G2**		25
	11.2	468	0.96	122.19		**2KJ1503 - ■CG13 - ■■F2**		25
	12.7	412	1.1	107.47	★	**2KJ1503 - ■CG13 - ■■E2**		25
	14.6	361	1.2	94.12		**2KJ1503 - ■CG13 - ■■D2**		25
	16.5	319	1.4	83.25	★	**2KJ1503 - ■CG13 - ■■C2**		25
	18.2	289	1.6	75.45		**2KJ1503 - ■CG13 - ■■B2**		25
	21	255	1.8	66.6	★	**2KJ1503 - ■CG13 - ■■A2**		25
	23	230	2.0	60.08		**2KJ1503 - ■CG13 - ■■X1**		25
	25	209	2.2	54.49	★	**2KJ1503 - ■CG13 - ■■W1**		25
	28	190	2.4	49.65		**2KJ1503 - ■CG13 - ■■V1**		25
	K.38-LA71ZMP4							
	17.8	296	0.85	77.09		**2KJ1502 - ■CG13 - ■■D2**		21
	20	258	0.97	67.18	★	**2KJ1502 - ■CG13 - ■■C2**		21
	23	231	1.1	60.33		**2KJ1502 - ■CG13 - ■■B2**		21
	25	209	1.2	54.47	★	**2KJ1502 - ■CG13 - ■■A2**		21
	28	189	1.3	49.38		**2KJ1502 - ■CG13 - ■■X1**		21
	30	172	1.5	44.94	★	**2KJ1502 - ■CG13 - ■■W1**		21
	34	152	1.6	39.73		**2KJ1502 - ■CG13 - ■■V1**		21
	37	141	1.8	36.69	★	**2KJ1502 - ■CG13 - ■■U1**		21
	43	121	2.1	31.59		**2KJ1502 - ■CG13 - ■■T1**		21
	48	110	2.3	28.72	★	**2KJ1502 - ■CG13 - ■■S1**		21
	51	103	2.1	26.9	★	**2KJ1502 - ■CG13 - ■■R1**		21
	57	93	2.3	24.16		**2KJ1502 - ■CG13 - ■■Q1**		21
	63	84	2.4	21.81	★	**2KJ1502 - ■CG13 - ■■P1**		21
	69	76	2.6	19.78		**2KJ1502 - ■CG13 - ■■N1**		21
	76	69	2.8	17.99	★	**2KJ1502 - ■CG13 - ■■M1**		21
	86	61	3.0	15.91		**2KJ1502 - ■CG13 - ■■L1**		21
	93	56	3.2	14.69	★	**2KJ1502 - ■CG13 - ■■K1**		21

★ Preferred transmission ratio

Shaft designs, see page 4/83 — **1, 2, 3, 5, 6 or 9**

Frequency and voltage, see page 8/20 — **1 to 9**

Gearbox housing mounting position, see page 4/87 — **A, D, E, F, H or M**

*) For mounting type B3

© Siemens AG 2011

Selection and ordering data (continued)

Power rating P_{Motor} kW (50 Hz)	Output speed n_2 (50 Hz) rpm	Output torque T_2 Nm	Service factor f_B	Gearbox ratio i_{tot}		Order No.	Order code (No. of poles)	Weight *) kg
0.55	**K.38-LA71ZMP4**							
	108	48	3.5	12.65		**2KJ1502 - ■CG13 - ■■J1**		21
	B.38-LA80M6							
	17.9	293	0.85	50.72		**2KJ1501 - ■DC13 - ■■S2**	**P01**	27
	B.38-LA71ZMP4							
	21	252	0.99	65.69		**2KJ1501 - ■CG13 - ■■U2**		23
	24	219	1.1	57.04		**2KJ1501 - ■CG13 - ■■T2**		23
	27	194	1.3	50.72		**2KJ1501 - ■CG13 - ■■S2**		23
	31	169	1.5	44		**2KJ1501 - ■CG13 - ■■R2**		23
	33	158	1.6	41.11		**2KJ1501 - ■CG13 - ■■Q2**		23
	38	139	1.8	36.16		**2KJ1501 - ■CG13 - ■■P2**		23
	43	121	2.1	31.67		**2KJ1501 - ■CG13 - ■■N2**		23
	49	107	2.3	28.01		**2KJ1501 - ■CG13 - ■■M2**		23
	54	97	2.6	25.38		**2KJ1501 - ■CG13 - ■■L2**		23
	61	86	2.8	22.41		**2KJ1501 - ■CG13 - ■■K2**		23
	68	78	3.0	20.22		**2KJ1501 - ■CG13 - ■■J2**		23
	75	70	3.2	18.33		**2KJ1501 - ■CG13 - ■■H2**		23
	B.28-LA71ZMP4							
	36	145	0.90	37.76		**2KJ1500 - ■CG13 - ■■A2**		11
	40	130	1.0	33.79		**2KJ1500 - ■CG13 - ■■X1**		11
	46	115	1.1	29.99		**2KJ1500 - ■CG13 - ■■W1**		11
	52	101	1.3	26.28		**2KJ1500 - ■CG13 - ■■V1**		11
	59	89	1.5	23.11		**2KJ1500 - ■CG13 - ■■U1**		11
	66	80	1.6	20.87		**2KJ1500 - ■CG13 - ■■T1**		11
	75	70	1.9	18.19		**2KJ1500 - ■CG13 - ■■S1**		11
	84	63	2.1	16.34		**2KJ1500 - ■CG13 - ■■R1**		11
	93	57	2.3	14.75		**2KJ1500 - ■CG13 - ■■Q1**		11
	102	51	2.5	13.38		**2KJ1500 - ■CG13 - ■■P1**		11
	113	47	2.8	12.17		**2KJ1500 - ■CG13 - ■■N1**		11
	127	41	3.2	10.76		**2KJ1500 - ■CG13 - ■■M1**		11
	138	38	3.4	9.94		**2KJ1500 - ■CG13 - ■■L1**		11
	160	33	3.7	8.56		**2KJ1500 - ■CG13 - ■■K1**		11
	176	30	3.9	7.78		**2KJ1500 - ■CG13 - ■■J1**		11
	183	29	3.1	7.49		**2KJ1500 - ■CG13 - ■■H1**		11
	203	26	3.5	6.76		**2KJ1500 - ■CG13 - ■■G1**		11
	223	24	3.8	6.13		**2KJ1500 - ■CG13 - ■■F1**		11
	246	21	4.2	5.58		**2KJ1500 - ■CG13 - ■■E1**		11
	277	19	4.8	4.94		**2KJ1500 - ■CG13 - ■■D1**		11
	300	18	5.0	4.56		**2KJ1500 - ■CG13 - ■■C1**		11
0.75	**K.188-Z68-LA80ZMB4E**							
	0.26	24 688	0.81	5 405		**2KJ1541 - ■DE13 - ■■S1**		751
	0.29	22 331	0.90	4 889	★	**2KJ1541 - ■DE13 - ■■R1**		751
	0.31	20 563	0.97	4 502		**2KJ1541 - ■DE13 - ■■Q1**		751
	0.34	19 015	1.1	4 163	★	**2KJ1541 - ■DE13 - ■■P1**		751

★ Preferred transmission ratio

Shaft designs, see page 4/83 — **1, 2, 3, 5, 6 or 9**

Frequency and voltage, see page 8/20 — **1 to 9**

Gearbox housing mounting position, see page 4/87 — **A, D, E, F, H or M**

*) For mounting type B3

© Siemens AG 2011

Selection and ordering data (continued)

Power rating P_{Motor} kW (50 Hz)	Output speed n_2 (50 Hz) rpm	Output torque T_2 Nm	Service factor f_B	Gearbox ratio i_{tot}		Order No.	Order code (No. of poles)	Weight *) kg
0.75	**K.188-Z68-LA80ZMB4E**							
	0.36	17 654	1.1	3 865		**2KJ1541 - ■DE13 - ■■N1**		751
	0.41	15 576	1.3	3 410	★	**2KJ1541 - ■DE13 - ■■M1**		751
	0.44	14 379	1.4	3 148		**2KJ1541 - ■DE13 - ■■L1**		751
	0.50	12 885	1.6	2 821	★	**2KJ1541 - ■DE13 - ■■K1**		751
	0.54	11 880	1.7	2 601		**2KJ1541 - ■DE13 - ■■J1**		751
	0.64	9 967	2.0	2 182		**2KJ1541 - ■DE13 - ■■H1**		751
	K.168-Z48-LA80ZMB4E							
	0.40	16 115	0.84	3 528		**2KJ1537 - ■DE13 - ■■J1**		490
	0.44	14 379	0.94	3 148	★	**2KJ1537 - ■DE13 - ■■H1**		490
	0.50	12 835	1.1	2 810		**2KJ1537 - ■DE13 - ■■G1**		490
	0.59	10 898	1.2	2 386		**2KJ1537 - ■DE13 - ■■F1**		490
	0.70	9 071	1.5	1 986	★	**2KJ1537 - ■DE13 - ■■E1**		490
	0.72	8 930	1.5	1 955	★	**2KJ1537 - ■DE13 - ■■D1**		490
	0.80	7 971	1.7	1 745		**2KJ1537 - ■DE13 - ■■C1**		490
	0.94	6 769	2.0	1 482		**2KJ1537 - ■DE13 - ■■B1**		490
	K.148-Z38-LA80ZMB4E							
	0.68	9 377	0.85	2 053		**2KJ1534 - ■DE13 - ■■D1**		300
	0.74	8 610	0.93	1 885		**2KJ1534 - ■DE13 - ■■C1**		300
	0.82	7 760	1.0	1 699		**2KJ1534 - ■DE13 - ■■B1**		300
	0.96	6 673	1.2	1 461		**2KJ1534 - ■DE13 - ■■A1**		300
	K.148-Z68-LA80ZMB4E							
	1.0	6 358	1.3	1 392		**2KJ1536 - ■DE13 - ■■L1**		326
	1.1	5 696	1.4	1 247	★	**2KJ1536 - ■DE13 - ■■K1**		326
	1.2	5 253	1.5	1 150		**2KJ1536 - ■DE13 - ■■J1**		326
	1.5	4 408	1.8	965		**2KJ1536 - ■DE13 - ■■H1**		326
	K.128-Z48-LA80ZMB4E							
	1.1	5 865	0.80	1 284		**2KJ1533 - ■DE13 - ■■N1**		214
	1.2	5 404	0.87	1 183		**2KJ1533 - ■DE13 - ■■M1**		214
	1.3	4 906	0.96	1 074		**2KJ1533 - ■DE13 - ■■L1**		214
	1.4	4 472	1.1	979		**2KJ1533 - ■DE13 - ■■K1**		214
	1.6	4 097	1.1	897		**2KJ1533 - ■DE13 - ■■J1**		214
	1.8	3 654	1.3	800		**2KJ1533 - ■DE13 - ■■H1**		214
	2.0	3 261	1.4	714		**2KJ1533 - ■DE13 - ■■G1**		214
	K.128-LA100LA8							
	2.3	3 111	1.5	295.38	★	**2KJ1507 - ■FB13 - ■■L2**	**P02**	217
	2.5	2 853	1.6	270.9		**2KJ1507 - ■FB13 - ■■K2**	**P02**	217
	2.8	2 549	1.8	242.02	★	**2KJ1507 - ■FB13 - ■■J2**	**P02**	217
	3.1	2 335	2.0	221.64		**2KJ1507 - ■FB13 - ■■H2**	**P02**	217
	K.108-Z48-LA80ZMB4E							
	1.8	3 508	0.86	768	★	**2KJ1530 - ■DE13 - ■■H1**		147
	2.0	3 129	0.96	685		**2KJ1530 - ■DE13 - ■■G1**		147
	K.108-LA100LA8							
	2.8	2 564	1.2	243.47		**2KJ1506 - ■FB13 - ■■H2**	**P02**	146

★ Preferred transmission ratio

Shaft designs, see page 4/83 — **1, 2, 3, 5, 6 or 9**

Frequency and voltage, see page 8/20 — **1 to 9**

Gearbox housing mounting position, see page 4/87 — **A, D, E, F, H or M**

*) For mounting type B3

© Siemens AG 2011

Selection and ordering data (continued)

Power rating P_{Motor} kW (50 Hz)	Output speed n_2 (50 Hz) rpm	Output torque T_2 Nm	Service factor f_B	Gearbox ratio i_{tot}		Order No.	Order code (No. of poles)	Weight *) kg
0.75	**K.108-LA90SB6E**							
	3.0	2 379	1.2	307.24		**2KJ1506 - ■ED13 - ■■K2**	**P01**	135
	3.3	2 153	1.3	278.1	★	**2KJ1506 - ■ED13 - ■■J2**	**P01**	135
	3.8	1 885	1.6	243.47		**2KJ1506 - ■ED13 - ■■H2**	**P01**	135
	4.2	1 701	1.8	219.64	★	**2KJ1506 - ■ED13 - ■■G2**	**P01**	135
	K.108-LA80ZMB4E							
	4.6	1 572	1.8	307.24		**2KJ1506 - ■DE13 - ■■K2**		132
	5.0	1 423	2.0	278.1	★	**2KJ1506 - ■DE13 - ■■J2**		132
	K.88-LA90SB6E							
	3.8	1 906	0.87	246.13	★	**2KJ1505 - ■ED13 - ■■K2**	**P01**	81
	4.3	1 667	0.99	215.25		**2KJ1505 - ■ED13 - ■■J2**	**P01**	81
	K.88-LA80ZMB4E							
	4.6	1 549	0.99	302.68	★	**2KJ1505 - ■DE13 - ■■M2**		78
	5.1	1 396	1.2	272.95		**2KJ1505 - ■DE13 - ■■L2**		78
	5.7	1 259	1.3	246.13	★	**2KJ1505 - ■DE13 - ■■K2**		78
	6.5	1 101	1.5	215.25		**2KJ1505 - ■DE13 - ■■J2**		78
	7.2	989	1.7	193.24	★	**2KJ1505 - ■DE13 - ■■H2**		78
	7.9	903	1.8	176.5		**2KJ1505 - ■DE13 - ■■G2**		78
	8.9	801	2.1	156.63	★	**2KJ1505 - ■DE13 - ■■F2**		78
	K.68-LA80ZMB4E							
	7.1	1 003	0.82	196.07		**2KJ1504 - ■DE13 - ■■L2**		48
	7.9	901	0.91	176.14	★	**2KJ1504 - ■DE13 - ■■K2**		48
	9.3	772	1.1	150.98		**2KJ1504 - ■DE13 - ■■J2**		48
	10.2	699	1.2	136.6	★	**2KJ1504 - ■DE13 - ■■H2**		48
	11.1	645	1.3	126.09		**2KJ1504 - ■DE13 - ■■G2**		48
	12.8	561	1.5	109.64	★	**2KJ1504 - ■DE13 - ■■F2**		48
	14.1	509	1.6	99.55		**2KJ1504 - ■DE13 - ■■E2**		48
	15.4	465	1.8	90.89	★	**2KJ1504 - ■DE13 - ■■D2**		48
	16.8	427	1.9	83.4		**2KJ1504 - ■DE13 - ■■C2**		48
	18.2	393	2.1	76.84	★	**2KJ1504 - ■DE13 - ■■B2**		48
	20	357	2.3	69.78		**2KJ1504 - ■DE13 - ■■A2**		48
	K.48-LA80ZMB4E							
	13.0	550	0.82	107.47	★	**2KJ1503 - ■DE13 - ■■E2**		29
	14.9	482	0.93	94.12		**2KJ1503 - ■DE13 - ■■D2**		29
	16.8	426	1.1	83.25	★	**2KJ1503 - ■DE13 - ■■C2**		29
	18.6	386	1.2	75.45		**2KJ1503 - ■DE13 - ■■B2**		29
	21	341	1.3	66.6	★	**2KJ1503 - ■DE13 - ■■A2**		29
	23	307	1.5	60.08		**2KJ1503 - ■DE13 - ■■X1**		29
	26	279	1.6	54.49	★	**2KJ1503 - ■DE13 - ■■W1**		29
	28	254	1.8	49.65		**2KJ1503 - ■DE13 - ■■V1**		29
	31	232	1.9	45.41	★	**2KJ1503 - ■DE13 - ■■U1**		29
	34	208	2.2	40.6		**2KJ1503 - ■DE13 - ■■T1**		29
	38	191	2.4	37.28	★	**2KJ1503 - ■DE13 - ■■S1**		29
	42	172	2.6	33.6		**2KJ1503 - ■DE13 - ■■R1**		29

★ Preferred transmission ratio

Shaft designs, see page 4/83 — **1, 2, 3, 5, 6 or 9**

Frequency and voltage, see page 8/20 — **1 to 9**

Gearbox housing mounting position, see page 4/87 — **A, D, E, F, H or M**

*) For mounting type B3

© Siemens AG 2011

Selection and ordering data (continued)

Power rating P_{Motor} kW (50 Hz)	Output speed n_2 (50 Hz) rpm	Output torque T_2 Nm	Service factor f_B	Gearbox ratio i_{tot}		Order No.	Order code (No. of poles)	Weight *) kg
0.75	**K.38-LA80ZMB4E**							
	23	309	0.81	60.33		**2KJ1502 - ■DE13 - ■■B2**		25
	26	279	0.90	54.47	★	**2KJ1502 - ■DE13 - ■■A2**		25
	28	253	0.99	49.38		**2KJ1502 - ■DE13 - ■■X1**		25
	31	230	1.1	44.94	★	**2KJ1502 - ■DE13 - ■■W1**		25
	35	203	1.2	39.73		**2KJ1502 - ■DE13 - ■■V1**		25
	38	188	1.3	36.69	★	**2KJ1502 - ■DE13 - ■■U1**		25
	44	162	1.5	31.59		**2KJ1502 - ■DE13 - ■■T1**		25
	49	147	1.7	28.72	★	**2KJ1502 - ■DE13 - ■■S1**		25
	52	138	1.6	26.9	★	**2KJ1502 - ■DE13 - ■■R1**		25
	58	124	1.7	24.16		**2KJ1502 - ■DE13 - ■■Q1**		25
	64	112	1.8	21.81	★	**2KJ1502 - ■DE13 - ■■P1**		25
	71	101	1.9	19.78		**2KJ1502 - ■DE13 - ■■N1**		25
	78	92	2.1	17.99	★	**2KJ1502 - ■DE13 - ■■M1**		25
	88	81	2.3	15.91		**2KJ1502 - ■DE13 - ■■L1**		25
	95	75	2.4	14.69	★	**2KJ1502 - ■DE13 - ■■K1**		25
	111	65	2.7	12.65		**2KJ1502 - ■DE13 - ■■J1**		25
	122	59	2.8	11.5	★	**2KJ1502 - ■DE13 - ■■H1**		25
	131	55	2.9	10.72	★	**2KJ1502 - ■DE13 - ■■G1**		25
	144	50	3.2	9.72		**2KJ1502 - ■DE13 - ■■F1**		25
	158	45	3.5	8.85	★	**2KJ1502 - ■DE13 - ■■E1**		25
	179	40	4.0	7.82		**2KJ1502 - ■DE13 - ■■D1**		25
	194	37	4.3	7.22	★	**2KJ1502 - ■DE13 - ■■C1**		25
	B.38-LA80ZMB4E							
	24	292	0.86	57.04		**2KJ1501 - ■DE13 - ■■T2**		27
	28	259	0.96	50.72		**2KJ1501 - ■DE13 - ■■S2**		27
	32	225	1.1	44		**2KJ1501 - ■DE13 - ■■R2**		27
	34	210	1.2	41.11		**2KJ1501 - ■DE13 - ■■Q2**		27
	39	185	1.4	36.16		**2KJ1501 - ■DE13 - ■■P2**		27
	44	162	1.5	31.67		**2KJ1501 - ■DE13 - ■■N2**		27
	50	143	1.7	28.01		**2KJ1501 - ■DE13 - ■■M2**		27
	55	130	1.9	25.38		**2KJ1501 - ■DE13 - ■■L2**		27
	62	115	2.1	22.41		**2KJ1501 - ■DE13 - ■■K2**		27
	69	103	2.2	20.22		**2KJ1501 - ■DE13 - ■■J2**		27
	76	94	2.4	18.33		**2KJ1501 - ■DE13 - ■■H2**		27
	84	85	2.6	16.7		**2KJ1501 - ■DE13 - ■■G2**		27
	92	78	2.7	15.28		**2KJ1501 - ■DE13 - ■■F2**		27
	102	70	3.0	13.66		**2KJ1501 - ■DE13 - ■■E2**		27
	112	64	3.4	12.5		**2KJ1501 - ■DE13 - ■■C2**		27
	B.28-LA80ZMB4E							
	47	153	0.85	29.99		**2KJ1500 - ■DE13 - ■■W1**		15
	53	134	0.97	26.28		**2KJ1500 - ■DE13 - ■■V1**		15
	61	118	1.1	23.11		**2KJ1500 - ■DE13 - ■■U1**		15
	67	107	1.2	20.87		**2KJ1500 - ■DE13 - ■■T1**		15

★ Preferred transmission ratio

Shaft designs, see page 4/83 — **1, 2, 3, 5, 6 or 9**

Frequency and voltage, see page 8/20 — **1 to 9**

Gearbox housing mounting position, see page 4/87 — **A, D, E, F, H or M**

*) For mounting type B3

© Siemens AG 2011

Selection and ordering data (continued)

Power rating P_{Motor} kW (50 Hz)	Output speed n_2 (50 Hz) rpm	Output torque T_2 Nm	Service factor f_B	Gearbox ratio i_{tot}		Order No.	Order code (No. of poles)	Weight *) kg
0.75	**B.28-LA80ZMB4E**							
	77	93	1.4	18.19		**2KJ1500 - ■DE13 - ■■S1**		15
	86	84	1.6	16.34		**2KJ1500 - ■DE13 - ■■R1**		15
	95	76	1.7	14.75		**2KJ1500 - ■DE13 - ■■Q1**		15
	105	68	1.9	13.38		**2KJ1500 - ■DE13 - ■■P1**		15
	115	62	2.1	12.17		**2KJ1500 - ■DE13 - ■■N1**		15
	130	55	2.4	10.76		**2KJ1500 - ■DE13 - ■■M1**		15
	141	51	2.5	9.94		**2KJ1500 - ■DE13 - ■■L1**		15
	164	44	2.8	8.56		**2KJ1500 - ■DE13 - ■■K1**		15
	180	40	2.9	7.78		**2KJ1500 - ■DE13 - ■■J1**		15
	187	38	2.3	7.49		**2KJ1500 - ■DE13 - ■■H1**		15
	207	35	2.6	6.76		**2KJ1500 - ■DE13 - ■■G1**		15
	228	31	2.9	6.13		**2KJ1500 - ■DE13 - ■■F1**		15
	251	28	3.2	5.58		**2KJ1500 - ■DE13 - ■■E1**		15
	283	25	3.6	4.94		**2KJ1500 - ■DE13 - ■■D1**		15
	307	23	3.7	4.56		**2KJ1500 - ■DE13 - ■■C1**		15
	357	20	4.1	3.92		**2KJ1500 - ■DE13 - ■■B1**		15
	392	18	4.3	3.57		**2KJ1500 - ■DE13 - ■■A1**		15
1.1	**K.188-Z68-LA90SB4E**							
	0.42	22 504	0.89	3 410	★	**2KJ1541 - ■EM13 - ■■M1**		754
	0.46	20 775	0.96	3 148		**2KJ1541 - ■EM13 - ■■L1**		754
	0.51	18 617	1.1	2 821	★	**2KJ1541 - ■EM13 - ■■K1**		754
	0.55	17 165	1.2	2 601		**2KJ1541 - ■EM13 - ■■J1**		754
	0.66	14 400	1.4	2 182		**2KJ1541 - ■EM13 - ■■H1**		754
	0.77	12 288	1.6	1 862	★	**2KJ1541 - ■EM13 - ■■G1**		754
	K.168-Z68-LA90SB4E							
	1.4	6 817	2.0	1 033		**2KJ1540 - ■EM13 - ■■H1**		510
	K.168-Z48-LA90SB4E							
	0.60	15 746	0.86	2 386		**2KJ1537 - ■EM13 - ■■F1**		493
	0.72	13 107	1.0	1 986	★	**2KJ1537 - ■EM13 - ■■E1**		493
	0.74	12 902	1.0	1 955	★	**2KJ1537 - ■EM13 - ■■D1**		493
	0.82	11 516	1.2	1 745		**2KJ1537 - ■EM13 - ■■C1**		493
	0.97	9 780	1.4	1 482		**2KJ1537 - ■EM13 - ■■B1**		493
	1.2	8 137	1.7	1 233	★	**2KJ1537 - ■EM13 - ■■A1**		493
	K.148-Z68-LA90SB4E							
	1.0	9 186	0.87	1 392		**2KJ1536 - ■EM13 - ■■L1**		329
	1.2	8 230	0.97	1 247	★	**2KJ1536 - ■EM13 - ■■K1**		329
	1.3	7 589	1.1	1 150		**2KJ1536 - ■EM13 - ■■J1**		329
	1.5	6 368	1.3	965		**2KJ1536 - ■EM13 - ■■H1**		329
	1.7	5 431	1.5	823	★	**2KJ1536 - ■EM13 - ■■G1**		329
	K.148-Z38-LA90SB4E							
	0.99	9 642	0.83	1 461		**2KJ1534 - ■EM13 - ■■A1**		303

★ Preferred transmission ratio

Shaft designs, see page 4/83 — **1, 2, 3, 5, 6 or 9**

Frequency and voltage, see page 8/20 — **1 to 9**

Gearbox housing mounting position, see page 4/87 — **A, D, E, F, H or M**

*) For mounting type B3

© Siemens AG 2011

Selection and ordering data (continued)

Power rating P_{Motor} kW (50 Hz)	Output speed n_2 (50 Hz) rpm	Output torque T_2 Nm	Service factor f_B	Gearbox ratio i_{tot}		Order No.	Order code (No. of poles)	Weight *) kg
1.1	**K.148-LA100L8**							
	2.2	4 728	1.7	306.08		**2KJ1508 - ■FL13 - ■■N2**	**P02**	317
	2.5	4 239	1.9	274.42	★	**2KJ1508 - ■FL13 - ■■M2**	**P02**	317
	K.128-Z48-LA90SB4E							
	1.8	5 280	0.89	800		**2KJ1533 - ■EM13 - ■■H1**		217
	2.0	4 712	1.0	714		**2KJ1533 - ■EM13 - ■■G1**		217
	K.128-LA100L8							
	2.3	4 563	1.0	295.38	★	**2KJ1507 - ■FL13 - ■■L2**	**P02**	217
	2.5	4 185	1.1	270.9		**2KJ1507 - ■FL13 - ■■K2**	**P02**	217
	2.8	3 739	1.3	242.02	★	**2KJ1507 - ■FL13 - ■■J2**	**P02**	217
	3.1	3 424	1.4	221.64		**2KJ1507 - ■FL13 - ■■H2**	**P02**	217
	K.128-LA90ZLD6E							
	3.2	3 301	1.4	295.38	★	**2KJ1507 - ■EQ13 - ■■L2**	**P01**	209
	3.5	3 027	1.6	270.9		**2KJ1507 - ■EQ13 - ■■K2**	**P01**	209
	3.9	2 705	1.7	242.02	★	**2KJ1507 - ■EQ13 - ■■J2**	**P01**	209
	4.2	2 477	1.9	221.64		**2KJ1507 - ■EQ13 - ■■H2**	**P01**	209
	K.108-LA100L8							
	2.8	3 761	0.80	243.47		**2KJ1506 - ■FL13 - ■■H2**	**P02**	146
	K.108-LA90ZLD6E							
	3.1	3 434	0.85	307.24		**2KJ1506 - ■EQ13 - ■■K2**	**P01**	138
	3.4	3 108	0.91	278.1	★	**2KJ1506 - ■EQ13 - ■■J2**	**P01**	138
	3.9	2 721	1.1	243.47		**2KJ1506 - ■EQ13 - ■■H2**	**P01**	138
	4.3	2 455	1.2	219.64	★	**2KJ1506 - ■EQ13 - ■■G2**	**P01**	138
	K.108-LA90SB4E							
	4.7	2 241	1.3	307.24		**2KJ1506 - ■EM13 - ■■K2**		135
	5.2	2 029	1.4	278.1	★	**2KJ1506 - ■EM13 - ■■J2**		135
	5.9	1 776	1.7	243.47		**2KJ1506 - ■EM13 - ■■H2**		135
	6.6	1 602	1.9	219.64	★	**2KJ1506 - ■EM13 - ■■G2**		135
	7.2	1 467	2.0	201.11		**2KJ1506 - ■EM13 - ■■F2**		135
	K.88-LA90SB4E							
	5.3	1 991	0.83	272.95		**2KJ1505 - ■EM13 - ■■L2**		81
	5.9	1 796	0.92	246.13	★	**2KJ1505 - ■EM13 - ■■K2**		81
	6.7	1 570	1.1	215.25		**2KJ1505 - ■EM13 - ■■J2**		81
	7.5	1 410	1.2	193.24	★	**2KJ1505 - ■EM13 - ■■H2**		81
	8.2	1 288	1.3	176.5		**2KJ1505 - ■EM13 - ■■G2**		81
	9.2	1 143	1.4	156.63	★	**2KJ1505 - ■EM13 - ■■F2**		81
	10.0	1 055	1.6	144.58		**2KJ1505 - ■EM13 - ■■E2**		81
	11.0	954	1.7	130.77	★	**2KJ1505 - ■EM13 - ■■D2**		81
	12.0	878	1.9	120.42		**2KJ1505 - ■EM13 - ■■C2**		81
	12.9	812	2.0	111.37	★	**2KJ1505 - ■EM13 - ■■B2**		81
	13.9	754	2.2	103.38		**2KJ1505 - ■EM13 - ■■A2**		81

★ Preferred transmission ratio

Shaft designs, see page 4/83 — **1, 2, 3, 5, 6 or 9**

Frequency and voltage, see page 8/20 — **1 to 9**

Gearbox housing mounting position, see page 4/87 — **A, D, E, F, H or M**

*) For mounting type B3

© Siemens AG 2011

Selection and ordering data (continued)

Power rating P_{Motor} kW (50 Hz)	Output speed n_2 (50 Hz) rpm	Output torque T_2 Nm	Service factor f_B	Gearbox ratio i_{tot}		Order No.	Order code (No. of poles)	Weight *) kg
1.1	**K.68-LA90SB4E**							
	10.5	997	0.82	136.6	★	**2KJ1504 - ■EM13 - ■■H2**		51
	11.4	920	0.89	126.09		**2KJ1504 - ■EM13 - ■■G2**		51
	13.1	800	1.0	109.64	★	**2KJ1504 - ■EM13 - ■■F2**		51
	14.5	726	1.1	99.55		**2KJ1504 - ■EM13 - ■■E2**		51
	15.8	663	1.2	90.89	★	**2KJ1504 - ■EM13 - ■■D2**		51
	17.3	608	1.3	83.4		**2KJ1504 - ■EM13 - ■■C2**		51
	18.7	561	1.5	76.84	★	**2KJ1504 - ■EM13 - ■■B2**		51
	21	509	1.6	69.78		**2KJ1504 - ■EM13 - ■■A2**		51
	23	464	1.8	63.57	★	**2KJ1504 - ■EM13 - ■■X1**		51
	25	425	1.9	58.23		**2KJ1504 - ■EM13 - ■■W1**		51
	28	379	2.2	51.96	★	**2KJ1504 - ■EM13 - ■■V1**		51
	31	338	2.4	46.37		**2KJ1504 - ■EM13 - ■■U1**		51
	K.48-LA90SB4E							
	19.1	550	0.82	75.45		**2KJ1503 - ■EM13 - ■■B2**		32
	22	486	0.93	66.6	★	**2KJ1503 - ■EM13 - ■■A2**		32
	24	438	1.0	60.08		**2KJ1503 - ■EM13 - ■■X1**		32
	26	398	1.1	54.49	★	**2KJ1503 - ■EM13 - ■■W1**		32
	29	362	1.2	49.65		**2KJ1503 - ■EM13 - ■■V1**		32
	32	331	1.4	45.41	★	**2KJ1503 - ■EM13 - ■■U1**		32
	36	296	1.5	40.6		**2KJ1503 - ■EM13 - ■■T1**		32
	39	272	1.7	37.28	★	**2KJ1503 - ■EM13 - ■■S1**		32
	43	245	1.8	33.6		**2KJ1503 - ■EM13 - ■■R1**		32
	50	211	2.1	28.9	★	**2KJ1503 - ■EM13 - ■■Q1**		32
	52	201	2.2	27.55	★	**2KJ1503 - ■EM13 - ■■P1**		32
	58	181	2.5	24.85		**2KJ1503 - ■EM13 - ■■N1**		32
	64	164	2.7	22.54	★	**2KJ1503 - ■EM13 - ■■M1**		32
	70	150	3.0	20.54		**2KJ1503 - ■EM13 - ■■L1**		32
	127	83	3.5	11.35	★	**2KJ1503 - ■EM13 - ■■E1**		32
	142	74	3.8	10.15		**2KJ1503 - ■EM13 - ■■D1**		32
	K.38-LA90SB4E							
	36	290	0.86	39.73		**2KJ1502 - ■EM13 - ■■V1**		28
	39	268	0.93	36.69	★	**2KJ1502 - ■EM13 - ■■U1**		28
	46	230	1.1	31.59		**2KJ1502 - ■EM13 - ■■T1**		28
	50	210	1.2	28.72	★	**2KJ1502 - ■EM13 - ■■S1**		28
	54	196	1.1	26.9	★	**2KJ1502 - ■EM13 - ■■R1**		28
	60	176	1.2	24.16		**2KJ1502 - ■EM13 - ■■Q1**		28
	66	159	1.3	21.81	★	**2KJ1502 - ■EM13 - ■■P1**		28
	73	144	1.4	19.78		**2KJ1502 - ■EM13 - ■■N1**		28
	80	131	1.5	17.99	★	**2KJ1502 - ■EM13 - ■■M1**		28
	90	116	1.6	15.91		**2KJ1502 - ■EM13 - ■■L1**		28
	98	107	1.7	14.69	★	**2KJ1502 - ■EM13 - ■■K1**		28
	114	92	1.9	12.65		**2KJ1502 - ■EM13 - ■■J1**		28
	125	84	2.0	11.5	★	**2KJ1502 - ■EM13 - ■■H1**		28

★ Preferred transmission ratio

Shaft designs, see page 4/83 — **1, 2, 3, 5, 6 or 9**

Frequency and voltage, see page 8/20 — **1 to 9**

Gearbox housing mounting position, see page 4/87 — **A, D, E, F, H or M**

*) For mounting type B3

© Siemens AG 2011

Selection and ordering data (continued)

Power rating P_{Motor} kW (50 Hz)	Output speed n_2 (50 Hz) rpm	Output torque T_2 Nm	Service factor f_B	Gearbox ratio i_{tot}		Order No.	Order code (No. of poles)	Weight *) kg
1.1	**K.38-LA90SB4E**							
	134	78	2.0	10.72	★	**2KJ1502 - ■EM13 - ■■G1**		28
	148	71	2.2	9.72		**2KJ1502 - ■EM13 - ■■F1**		28
	163	65	2.5	8.85	★	**2KJ1502 - ■EM13 - ■■E1**		28
	184	57	2.8	7.82		**2KJ1502 - ■EM13 - ■■D1**		28
	199	53	3.0	7.22	★	**2KJ1502 - ■EM13 - ■■C1**		28
	232	45	3.3	6.22		**2KJ1502 - ■EM13 - ■■B1**		28
	255	41	3.6	5.65	★	**2KJ1502 - ■EM13 - ■■A1**		28
	B.38-LA90SB4E							
	35	300	0.83	41.11		**2KJ1501 - ■EM13 - ■■Q2**		30
	40	264	0.95	36.16		**2KJ1501 - ■EM13 - ■■P2**		30
	46	231	1.1	31.67		**2KJ1501 - ■EM13 - ■■N2**		30
	51	204	1.2	28.01		**2KJ1501 - ■EM13 - ■■M2**		30
	57	185	1.4	25.38		**2KJ1501 - ■EM13 - ■■L2**		30
	64	163	1.5	22.41		**2KJ1501 - ■EM13 - ■■K2**		30
	71	148	1.6	20.22		**2KJ1501 - ■EM13 - ■■J2**		30
	79	134	1.7	18.33		**2KJ1501 - ■EM13 - ■■H2**		30
	86	122	1.8	16.7		**2KJ1501 - ■EM13 - ■■G2**		30
	94	111	1.9	15.28		**2KJ1501 - ■EM13 - ■■F2**		30
	105	100	2.1	13.66		**2KJ1501 - ■EM13 - ■■E2**		30
	115	91	2.4	12.5		**2KJ1501 - ■EM13 - ■■C2**		30
	130	81	2.8	11.05		**2KJ1501 - ■EM13 - ■■A2**		30
	144	73	3.0	10.02		**2KJ1501 - ■EM13 - ■■X1**		30
	163	64	3.7	8.84		**2KJ1501 - ■EM13 - ■■U1**		30
	180	58	4.1	7.98		**2KJ1501 - ■EM13 - ■■S1**		30
	B.28-LA90SB4E							
	69	152	0.85	20.87		**2KJ1500 - ■EM13 - ■■T1**		18
	79	133	0.98	18.19		**2KJ1500 - ■EM13 - ■■S1**		18
	88	119	1.1	16.34		**2KJ1500 - ■EM13 - ■■R1**		18
	98	108	1.2	14.75		**2KJ1500 - ■EM13 - ■■Q1**		18
	108	98	1.3	13.38		**2KJ1500 - ■EM13 - ■■P1**		18
	118	89	1.5	12.17		**2KJ1500 - ■EM13 - ■■N1**		18
	134	78	1.7	10.76		**2KJ1500 - ■EM13 - ■■M1**		18
	145	72	1.8	9.94		**2KJ1500 - ■EM13 - ■■L1**		18
	168	62	1.9	8.56		**2KJ1500 - ■EM13 - ■■K1**		18
	185	57	2.1	7.78		**2KJ1500 - ■EM13 - ■■J1**		18
	192	55	1.6	7.49		**2KJ1500 - ■EM13 - ■■H1**		18
	213	49	1.8	6.76		**2KJ1500 - ■EM13 - ■■G1**		18
	235	45	2.0	6.13		**2KJ1500 - ■EM13 - ■■F1**		18
	258	41	2.2	5.58		**2KJ1500 - ■EM13 - ■■E1**		18
	291	36	2.5	4.94		**2KJ1500 - ■EM13 - ■■D1**		18
	316	33	2.6	4.56		**2KJ1500 - ■EM13 - ■■C1**		18
	367	29	2.9	3.92		**2KJ1500 - ■EM13 - ■■B1**		18
	403	26	3.0	3.57		**2KJ1500 - ■EM13 - ■■A1**		18

★ Preferred transmission ratio

Shaft designs, see page 4/83 — **1, 2, 3, 5, 6 or 9**

Frequency and voltage, see page 8/20 — **1 to 9**

Gearbox housing mounting position, see page 4/87 — **A, D, E, F, H or M**

*) For mounting type B3

© Siemens AG 2011

Selection and ordering data (continued)

Power rating P_{Motor} kW (50 Hz)	Output speed n_2 (50 Hz) rpm	Output torque T_2 Nm	Service factor f_B	Gearbox ratio i_{tot}		Order No.	Order code (No. of poles)	Weight *) kg
1.5	**K.188-Z68-LA90ZLB4E**							
	0.55	23 582	0.85	2 601		**2KJ1541 - ■EQ13 - ■■J1**		757
	0.66	19 783	1.0	2 182		**2KJ1541 - ■EQ13 - ■■H1**		757
	0.77	16 882	1.2	1 862	★	**2KJ1541 - ■EQ13 - ■■G1**		757
	1.3	10 291	1.9	1 135		**2KJ1541 - ■EQ13 - ■■D1**		757
	K.168-Z68-LA90ZLB4E							
	1.4	9 366	1.4	1 033		**2KJ1540 - ■EQ13 - ■■H1**		513
	1.6	7 988	1.7	881		**2KJ1540 - ■EQ13 - ■■G1**		513
	K.168-Z48-LA90ZLB4E							
	0.82	15 821	0.85	1 745		**2KJ1537 - ■EQ13 - ■■C1**		496
	0.97	13 437	1.0	1 482		**2KJ1537 - ■EQ13 - ■■B1**		496
	1.2	11 179	1.2	1 233	★	**2KJ1537 - ■EQ13 - ■■A1**		496
	K.148-Z68-LA90ZLB4E							
	1.5	8 749	0.91	965		**2KJ1536 - ■EQ13 - ■■H1**		332
	1.7	7 462	1.1	823	★	**2KJ1536 - ■EQ13 - ■■G1**		332
	K.148-LA112M8							
	2.3	6 219	1.3	306.08		**2KJ1508 - ■GG13 - ■■N2**	**P02**	324
	2.6	5 576	1.4	274.42	★	**2KJ1508 - ■GG13 - ■■M2**	**P02**	324
	2.8	5 111	1.6	251.55		**2KJ1508 - ■GG13 - ■■L2**	**P02**	324
	3.0	4 713	1.7	231.95	★	**2KJ1508 - ■GG13 - ■■K2**	**P02**	324
	K.148-LA100ZLP6E							
	3.1	4 689	1.7	306.08		**2KJ1508 - ■FM13 - ■■N2**	**P01**	317
	3.4	4 204	1.9	274.42	★	**2KJ1508 - ■FM13 - ■■M2**	**P01**	317
	K.128-LA112M8							
	2.6	5 504	0.85	270.9		**2KJ1507 - ■GG13 - ■■K2**	**P02**	224
	2.9	4 918	0.96	242.02	★	**2KJ1507 - ■GG13 - ■■J2**	**P02**	224
	K.128-LA100ZLP6E							
	3.2	4 525	1.0	295.38	★	**2KJ1507 - ■FM13 - ■■L2**	**P01**	217
	3.5	4 150	1.1	270.9		**2KJ1507 - ■FM13 - ■■K2**	**P01**	217
	3.9	3 708	1.3	242.02	★	**2KJ1507 - ■FM13 - ■■J2**	**P01**	217
	4.2	3 396	1.4	221.64		**2KJ1507 - ■FM13 - ■■H2**	**P01**	217
	4.6	3 128	1.5	204.18	★	**2KJ1507 - ■FM13 - ■■G2**	**P01**	217
	K.128-LA90ZLB4E							
	4.9	2 938	1.6	295.38	★	**2KJ1507 - ■EQ13 - ■■L2**		209
	5.3	2 695	1.7	270.9		**2KJ1507 - ■EQ13 - ■■K2**		209
	5.9	2 408	2.0	242.02	★	**2KJ1507 - ■EQ13 - ■■J2**		209
	6.5	2 205	2.1	221.64		**2KJ1507 - ■EQ13 - ■■H2**		209
	K.108-LA100ZLP6E							
	3.8	3 730	0.80	243.47		**2KJ1506 - ■FM13 - ■■H2**	**P01**	146
	4.3	3 365	0.89	219.64	★	**2KJ1506 - ■FM13 - ■■G2**	**P01**	146
	K.108-LA90ZLB4E							
	4.7	3 056	0.95	307.24		**2KJ1506 - ■EQ13 - ■■K2**		138
	5.2	2 767	1.0	278.1	★	**2KJ1506 - ■EQ13 - ■■J2**		138

★ Preferred transmission ratio

Shaft designs, see page 4/83 — **1, 2, 3, 5, 6 or 9**

Frequency and voltage, see page 8/20 — **1 to 9**

Gearbox housing mounting position, see page 4/87 — **A, D, E, F, H or M**

*) For mounting type B3

© Siemens AG 2011

Selection and ordering data (continued)

Power rating P_{Motor} kW (50 Hz)	Output speed n_2 (50 Hz) rpm	Output torque T_2 Nm	Service factor f_B	Gearbox ratio i_{tot}		Order No.	Order code (No. of poles)	Weight *) kg
1.5	**K.108-LA90ZLB4E**							
	5.9	2 422	1.2	243.47		**2KJ1506 - ■EQ13 - ■■H2**		138
	6.6	2 185	1.4	219.64	★	**2KJ1506 - ■EQ13 - ■■G2**		138
	7.2	2 001	1.5	201.11		**2KJ1506 - ■EQ13 - ■■F2**		138
	8.0	1 780	1.7	178.9	★	**2KJ1506 - ■EQ13 - ■■E2**		138
	8.8	1 627	1.8	163.51		**2KJ1506 - ■EQ13 - ■■D2**		138
	9.6	1 495	2.0	150.31	★	**2KJ1506 - ■EQ13 - ■■C2**		138
	10.4	1 381	2.2	138.87		**2KJ1506 - ■EQ13 - ■■B2**		138
	K.88-LA90ZLB4E							
	7.5	1 922	0.86	193.24	★	**2KJ1505 - ■EQ13 - ■■H2**		84
	8.2	1 756	0.94	176.5		**2KJ1505 - ■EQ13 - ■■G2**		84
	9.2	1 558	1.1	156.63	★	**2KJ1505 - ■EQ13 - ■■F2**		84
	10.0	1 438	1.1	144.58		**2KJ1505 - ■EQ13 - ■■E2**		84
	11.0	1 301	1.3	130.77	★	**2KJ1505 - ■EQ13 - ■■D2**		84
	12.0	1 198	1.4	120.42		**2KJ1505 - ■EQ13 - ■■C2**		84
	12.9	1 108	1.5	111.37	★	**2KJ1505 - ■EQ13 - ■■B2**		84
	13.9	1 028	1.6	103.38		**2KJ1505 - ■EQ13 - ■■A2**		84
	15.8	907	1.8	91.22	★	**2KJ1505 - ■EQ13 - ■■X1**		84
	17.1	838	2.0	84.21		**2KJ1505 - ■EQ13 - ■■W1**		84
	19.1	751	2.2	75.45	★	**2KJ1505 - ■EQ13 - ■■V1**		84
	21	692	2.4	69.57		**2KJ1505 - ■EQ13 - ■■U1**		84
	K.68-LA90ZLB4E							
	14.5	990	0.83	99.55		**2KJ1504 - ■EQ13 - ■■E2**		54
	15.8	904	0.91	90.89	★	**2KJ1504 - ■EQ13 - ■■D2**		54
	17.3	830	0.99	83.4		**2KJ1504 - ■EQ13 - ■■C2**		54
	18.7	764	1.1	76.84	★	**2KJ1504 - ■EQ13 - ■■B2**		54
	21	694	1.2	69.78		**2KJ1504 - ■EQ13 - ■■A2**		54
	23	632	1.3	63.57	★	**2KJ1504 - ■EQ13 - ■■X1**		54
	25	579	1.4	58.23		**2KJ1504 - ■EQ13 - ■■W1**		54
	28	517	1.6	51.96	★	**2KJ1504 - ■EQ13 - ■■V1**		54
	31	461	1.8	46.37		**2KJ1504 - ■EQ13 - ■■U1**		54
	37	392	2.1	39.39		**2KJ1504 - ■EQ13 - ■■T1**		54
	44	326	2.5	32.78	★	**2KJ1504 - ■EQ13 - ■■S1**		54
	47	302	2.7	30.38		**2KJ1504 - ■EQ13 - ■■R1**		54
	126	114	3.8	11.41		**2KJ1504 - ■EQ13 - ■■G1**		54
	K.48-LA90ZLB4E							
	26	542	0.83	54.49	★	**2KJ1503 - ■EQ13 - ■■W1**		35
	29	494	0.91	49.65		**2KJ1503 - ■EQ13 - ■■V1**		35
	32	452	1.0	45.41	★	**2KJ1503 - ■EQ13 - ■■U1**		35
	36	404	1.1	40.6		**2KJ1503 - ■EQ13 - ■■T1**		35
	39	371	1.2	37.28	★	**2KJ1503 - ■EQ13 - ■■S1**		35
	43	334	1.3	33.6		**2KJ1503 - ■EQ13 - ■■R1**		35
	50	287	1.6	28.9	★	**2KJ1503 - ■EQ13 - ■■Q1**		35
	52	274	1.6	27.55	★	**2KJ1503 - ■EQ13 - ■■P1**		35

★ Preferred transmission ratio

Shaft designs, see page 4/83 — **1, 2, 3, 5, 6 or 9**

Frequency and voltage, see page 8/20 — **1 to 9**

Gearbox housing mounting position, see page 4/87 — **A, D, E, F, H or M**

*) For mounting type B3

© Siemens AG 2011

Selection and ordering data (continued)

Power rating P_{Motor} kW (50 Hz)	Output speed n_2 (50 Hz) rpm	Output torque T_2 Nm	Service factor f_B	Gearbox ratio i_{tot}		Order No.	Order code (No. of poles)	Weight *) kg
1.5	**K.48-LA90ZLB4E**							
	58	247	1.8	24.85		**2KJ1503 - ■EQ13 - ■■N1**		35
	64	224	2.0	22.54	★	**2KJ1503 - ■EQ13 - ■■M1**		35
	70	204	2.2	20.54		**2KJ1503 - ■EQ13 - ■■L1**		35
	77	187	2.4	18.78	★	**2KJ1503 - ■EQ13 - ■■K1**		35
	86	167	2.7	16.79		**2KJ1503 - ■EQ13 - ■■J1**		35
	93	153	2.9	15.42	★	**2KJ1503 - ■EQ13 - ■■H1**		35
	104	138	3.2	13.9		**2KJ1503 - ■EQ13 - ■■G1**		35
	121	119	3.5	11.95	★	**2KJ1503 - ■EQ13 - ■■F1**		35
	127	113	2.6	11.35	★	**2KJ1503 - ■EQ13 - ■■E1**		35
	142	101	2.8	10.15		**2KJ1503 - ■EQ13 - ■■D1**		35
	155	93	3.0	9.32	★	**2KJ1503 - ■EQ13 - ■■C1**		35
	171	84	3.2	8.4		**2KJ1503 - ■EQ13 - ■■B1**		35
	199	72	3.6	7.22	★	**2KJ1503 - ■EQ13 - ■■A1**		35
	K.38-LA90ZLB4E							
	46	314	0.80	31.59		**2KJ1502 - ■EQ13 - ■■T1**		31
	50	286	0.88	28.72	★	**2KJ1502 - ■EQ13 - ■■S1**		31
	54	268	0.81	26.9	★	**2KJ1502 - ■EQ13 - ■■R1**		31
	60	240	0.87	24.16		**2KJ1502 - ■EQ13 - ■■Q1**		31
	66	217	0.94	21.81	★	**2KJ1502 - ■EQ13 - ■■P1**		31
	73	197	1.0	19.78		**2KJ1502 - ■EQ13 - ■■N1**		31
	80	179	1.1	17.99	★	**2KJ1502 - ■EQ13 - ■■M1**		31
	90	158	1.2	15.91		**2KJ1502 - ■EQ13 - ■■L1**		31
	98	146	1.2	14.69	★	**2KJ1502 - ■EQ13 - ■■K1**		31
	114	126	1.4	12.65		**2KJ1502 - ■EQ13 - ■■J1**		31
	125	114	1.5	11.5	★	**2KJ1502 - ■EQ13 - ■■H1**		31
	134	107	1.5	10.72	★	**2KJ1502 - ■EQ13 - ■■G1**		31
	148	97	1.6	9.72		**2KJ1502 - ■EQ13 - ■■F1**		31
	163	88	1.8	8.85	★	**2KJ1502 - ■EQ13 - ■■E1**		31
	184	78	2.0	7.82		**2KJ1502 - ■EQ13 - ■■D1**		31
	199	72	2.2	7.22	★	**2KJ1502 - ■EQ13 - ■■C1**		31
	232	62	2.5	6.22		**2KJ1502 - ■EQ13 - ■■B1**		31
	255	56	2.6	5.65	★	**2KJ1502 - ■EQ13 - ■■A1**		31
	B.38-LA90ZLB4E							
	51	279	0.90	28.01		**2KJ1501 - ■EQ13 - ■■M2**		33
	57	252	0.99	25.38		**2KJ1501 - ■EQ13 - ■■L2**		33
	64	223	1.1	22.41		**2KJ1501 - ■EQ13 - ■■K2**		33
	71	201	1.2	20.22		**2KJ1501 - ■EQ13 - ■■J2**		33
	79	182	1.2	18.33		**2KJ1501 - ■EQ13 - ■■H2**		33
	86	166	1.3	16.7		**2KJ1501 - ■EQ13 - ■■G2**		33
	94	152	1.4	15.28		**2KJ1501 - ■EQ13 - ■■F2**		33
	105	136	1.5	13.66		**2KJ1501 - ■EQ13 - ■■E2**		33
	115	124	1.8	12.5		**2KJ1501 - ■EQ13 - ■■C2**		33
	130	110	2.0	11.05		**2KJ1501 - ■EQ13 - ■■A2**		33

★ Preferred transmission ratio

Shaft designs, see page 4/83 — **1, 2, 3, 5, 6 or 9**

Frequency and voltage, see page 8/20 — **1 to 9**

Gearbox housing mounting position, see page 4/87 — **A, D, E, F, H or M**

*) For mounting type B3

© Siemens AG 2011

Selection and ordering data (continued)

Power rating P_{Motor} kW (50 Hz)	Output speed n_2 (50 Hz) rpm	Output torque T_2 Nm	Service factor f_B	Gearbox ratio i_{tot}		Order No.	Order code (No. of poles)	Weight *) kg
1.5	**B.38-LA90ZLB4E**							
	144	100	2.2	10.02		**2KJ1501 - ■EQ13 - ■■X1**		33
	163	88	2.7	8.84		**2KJ1501 - ■EQ13 - ■■U1**		33
	180	79	3.0	7.98		**2KJ1501 - ■EQ13 - ■■S1**		33
	199	72	3.3	7.24		**2KJ1501 - ■EQ13 - ■■R1**		33
	219	66	3.6	6.59		**2KJ1501 - ■EQ13 - ■■P1**		33
	239	60	3.9	6.03		**2KJ1501 - ■EQ13 - ■■M1**		33
	267	54	3.9	5.39		**2KJ1501 - ■EQ13 - ■■K1**		33
	291	49	4.5	4.95		**2KJ1501 - ■EQ13 - ■■H1**		33
	323	44	4.8	4.46		**2KJ1501 - ■EQ13 - ■■F1**		33
	375	38	5.3	3.84		**2KJ1501 - ■EQ13 - ■■C1**		33
	B.28-LA90ZLB4E							
	88	163	0.80	16.34		**2KJ1500 - ■EQ13 - ■■R1**		21
	98	147	0.89	14.75		**2KJ1500 - ■EQ13 - ■■Q1**		21
	108	133	0.98	13.38		**2KJ1500 - ■EQ13 - ■■P1**		21
	118	121	1.1	12.17		**2KJ1500 - ■EQ13 - ■■N1**		21
	134	107	1.2	10.76		**2KJ1500 - ■EQ13 - ■■M1**		21
	145	99	1.3	9.94		**2KJ1500 - ■EQ13 - ■■L1**		21
	168	85	1.4	8.56		**2KJ1500 - ■EQ13 - ■■K1**		21
	185	77	1.5	7.78		**2KJ1500 - ■EQ13 - ■■J1**		21
	192	74	1.2	7.49		**2KJ1500 - ■EQ13 - ■■H1**		21
	213	67	1.3	6.76		**2KJ1500 - ■EQ13 - ■■G1**		21
	235	61	1.5	6.13		**2KJ1500 - ■EQ13 - ■■F1**		21
	258	56	1.6	5.58		**2KJ1500 - ■EQ13 - ■■E1**		21
	291	49	1.8	4.94		**2KJ1500 - ■EQ13 - ■■D1**		21
	316	45	1.9	4.56		**2KJ1500 - ■EQ13 - ■■C1**		21
	367	39	2.1	3.92		**2KJ1500 - ■EQ13 - ■■B1**		21
	403	36	2.2	3.57		**2KJ1500 - ■EQ13 - ■■A1**		21
2.2	**K.188-Z68-LA100ZLP4E**							
	0.77	25 008	0.80	1 862	★	**2KJ1541 - ■FM13 - ■■G1**		765
	0.92	20 831	0.96	1 551		**2KJ1541 - ■FM13 - ■■F1**		765
	1.1	17 272	1.2	1 286	★	**2KJ1541 - ■FM13 - ■■E1**		765
	1.3	15 244	1.3	1 135		**2KJ1541 - ■FM13 - ■■D1**		765
	1.5	13 001	1.5	968	★	**2KJ1541 - ■FM13 - ■■C1**		765
	1.8	10 838	1.8	807		**2KJ1541 - ■FM13 - ■■B1**		765
	K.168-Z68-LA100ZLP4E							
	1.4	13 874	0.97	1 033		**2KJ1540 - ■FM13 - ■■H1**		521
	1.6	11 832	1.1	881		**2KJ1540 - ■FM13 - ■■G1**		521
	2.0	9 871	1.4	735		**2KJ1540 - ■FM13 - ■■F1**		521
	K.168-Z48-LA100ZLP4E							
	1.2	16 560	0.82	1 233	★	**2KJ1537 - ■FM13 - ■■A1**		504
	K.168-LA132S8							
	2.4	8 643	1.6	287.95	★	**2KJ1510 - ■HE13 - ■■H2**	**P02**	519
	2.6	7 929	1.7	264.18		**2KJ1510 - ■HE13 - ■■G2**	**P02**	519

★ Preferred transmission ratio

Shaft designs, see page 4/83 — **1, 2, 3, 5, 6 or 9**

Frequency and voltage, see page 8/20 — **1 to 9**

Gearbox housing mounting position, see page 4/87 — **A, D, E, F, H or M**

*) For mounting type B3

© Siemens AG 2011

Selection and ordering data (continued)

Power rating P_{Motor} kW (50 Hz)	Output speed n_2 (50 Hz) rpm	Output torque T_2 Nm	Service factor f_B	Gearbox ratio i_{tot}		Order No.	Order code (No. of poles)	Weight *) kg
2.2	**K.168-LA132S8**							
	2.9	7 317	1.8	243.8	★	**2KJ1510 - ■HE13 - ■■F2**	**P02**	519
	3.1	6 788	2.0	226.15		**2KJ1510 - ■HE13 - ■■E2**	**P02**	519
	K.148-Z68-LA100ZLP4E							
	2.1	9 213	0.87	686		**2KJ1536 - ■FM13 - ■■F1**		340
	K.148-LA132S8							
	2.6	8 237	0.97	274.42	★	**2KJ1508 - ■HE13 - ■■M2**	**P02**	334
	2.8	7 550	1.1	251.55		**2KJ1508 - ■HE13 - ■■L2**	**P02**	334
	3.0	6 962	1.1	231.95	★	**2KJ1508 - ■HE13 - ■■K2**	**P02**	334
	K.148-LA112ZMP6E							
	3.1	6 734	1.2	306.08		**2KJ1508 - ■GJ13 - ■■N2**	**P01**	324
	3.5	6 037	1.3	274.42	★	**2KJ1508 - ■GJ13 - ■■M2**	**P01**	324
	3.8	5 534	1.4	251.55		**2KJ1508 - ■GJ13 - ■■L2**	**P01**	324
	4.1	5 103	1.6	231.95	★	**2KJ1508 - ■GJ13 - ■■K2**	**P01**	324
	4.4	4 729	1.7	214.96		**2KJ1508 - ■GJ13 - ■■J2**	**P01**	324
	K.148-LA100ZLP4E							
	4.7	4 481	1.8	306.08		**2KJ1508 - ■FM13 - ■■N2**		317
	5.2	4 018	2.0	274.42	★	**2KJ1508 - ■FM13 - ■■M2**		317
	K.128-LA112ZMP6E							
	3.9	5 324	0.88	242.02	★	**2KJ1507 - ■GJ13 - ■■J2**	**P01**	224
	4.3	4 876	0.96	221.64		**2KJ1507 - ■GJ13 - ■■H2**	**P01**	224
	4.7	4 492	1.0	204.18	★	**2KJ1507 - ■GJ13 - ■■G2**	**P01**	224
	K.128-LA100ZLP4E							
	4.9	4 325	1.1	295.38	★	**2KJ1507 - ■FM13 - ■■L2**		217
	5.3	3 966	1.2	270.9		**2KJ1507 - ■FM13 - ■■K2**		217
	5.9	3 543	1.3	242.02	★	**2KJ1507 - ■FM13 - ■■J2**		217
	6.5	3 245	1.4	221.64		**2KJ1507 - ■FM13 - ■■H2**		217
	7.0	2 989	1.6	204.18	★	**2KJ1507 - ■FM13 - ■■G2**		217
	7.6	2 768	1.7	189.04		**2KJ1507 - ■FM13 - ■■F2**		217
	8.2	2 574	1.8	175.8	★	**2KJ1507 - ■FM13 - ■■E2**		217
	8.7	2 403	2.0	164.11		**2KJ1507 - ■FM13 - ■■D2**		217
	K.108-LA100ZLP4E							
	5.9	3 565	0.84	243.47		**2KJ1506 - ■FM13 - ■■H2**		146
	6.5	3 216	0.93	219.64	★	**2KJ1506 - ■FM13 - ■■G2**		146
	7.1	2 944	1.0	201.11		**2KJ1506 - ■FM13 - ■■F2**		146
	8.0	2 619	1.1	178.9	★	**2KJ1506 - ■FM13 - ■■E2**		146
	8.8	2 394	1.3	163.51		**2KJ1506 - ■FM13 - ■■D2**		146
	9.5	2 201	1.4	150.31	★	**2KJ1506 - ■FM13 - ■■C2**		146
	10.3	2 033	1.5	138.87		**2KJ1506 - ■FM13 - ■■B2**		146
	11.1	1 887	1.6	128.86	★	**2KJ1506 - ■FM13 - ■■A2**		146
	12.0	1 757	1.7	120.03		**2KJ1506 - ■FM13 - ■■X1**		146
	13.2	1 589	1.9	108.52	★	**2KJ1506 - ■FM13 - ■■W1**		146
	14.4	1 463	2.1	99.9		**2KJ1506 - ■FM13 - ■■V1**		146
	16.0	1 316	2.3	89.85	★	**2KJ1506 - ■FM13 - ■■U1**		146

★ Preferred transmission ratio

Shaft designs, see page 4/83 — **1, 2, 3, 5, 6 or 9**

Frequency and voltage, see page 8/20 — **1 to 9**

Gearbox housing mounting position, see page 4/87 — **A, D, E, F, H or M**

*) For mounting type B3

© Siemens AG 2011

Selection and ordering data (continued)

Power rating P_{Motor} kW (50 Hz)	Output speed n_2 (50 Hz) rpm	Output torque T_2 Nm	Service factor f_B	Gearbox ratio i_{tot}		Order No.	Order code (No. of poles)	Weight *) kg
2.2	**K.88-LA100ZLP4E**							
	11.0	1 915	0.86	130.77	★	**2KJ1505 - ■FM13 - ■■D2**		92
	11.9	1 763	0.94	120.42		**2KJ1505 - ■FM13 - ■■C2**		92
	12.9	1 631	1.0	111.37	★	**2KJ1505 - ■FM13 - ■■B2**		92
	13.9	1 514	1.1	103.38		**2KJ1505 - ■FM13 - ■■A2**		92
	15.7	1 336	1.2	91.22	★	**2KJ1505 - ■FM13 - ■■X1**		92
	17.0	1 233	1.3	84.21		**2KJ1505 - ■FM13 - ■■W1**		92
	19.0	1 105	1.5	75.45	★	**2KJ1505 - ■FM13 - ■■V1**		92
	21	1 019	1.6	69.57		**2KJ1505 - ■FM13 - ■■U1**		92
	25	855	1.9	58.37		**2KJ1505 - ■FM13 - ■■T1**		92
	29	729	2.3	49.8	★	**2KJ1505 - ■FM13 - ■■S1**		92
	K.68-LA100ZLP4E							
	21	1 022	0.80	69.78		**2KJ1504 - ■FM13 - ■■A2**		62
	23	931	0.88	63.57	★	**2KJ1504 - ■FM13 - ■■X1**		62
	25	853	0.96	58.23		**2KJ1504 - ■FM13 - ■■W1**		62
	28	761	1.1	51.96	★	**2KJ1504 - ■FM13 - ■■V1**		62
	31	679	1.2	46.37		**2KJ1504 - ■FM13 - ■■U1**		62
	36	577	1.4	39.39		**2KJ1504 - ■FM13 - ■■T1**		62
	44	480	1.7	32.78	★	**2KJ1504 - ■FM13 - ■■S1**		62
	47	445	1.8	30.38		**2KJ1504 - ■FM13 - ■■R1**		62
	51	410	2.0	27.99	★	**2KJ1504 - ■FM13 - ■■Q1**		62
	56	372	2.2	25.42		**2KJ1504 - ■FM13 - ■■P1**		62
	62	339	2.4	23.16	★	**2KJ1504 - ■FM13 - ■■N1**		62
	68	311	2.6	21.22		**2KJ1504 - ■FM13 - ■■M1**		62
	76	277	3.0	18.93	★	**2KJ1504 - ■FM13 - ■■L1**		62
	85	247	3.3	16.89		**2KJ1504 - ■FM13 - ■■K1**		62
	126	167	2.6	11.41		**2KJ1504 - ■FM13 - ■■G1**		62
	138	152	2.8	10.4	★	**2KJ1504 - ■FM13 - ■■F1**		62
	151	139	2.9	9.52		**2KJ1504 - ■FM13 - ■■E1**		62
	169	124	3.2	8.5	★	**2KJ1504 - ■FM13 - ■■D1**		62
	189	111	3.5	7.58		**2KJ1504 - ■FM13 - ■■C1**		62
	223	94	3.9	6.44		**2KJ1504 - ■FM13 - ■■B1**		62
	268	78	4.4	5.36	★	**2KJ1504 - ■FM13 - ■■A1**		62
	K.48-LA100ZLP4E							
	38	546	0.82	37.28	★	**2KJ1503 - ■FM13 - ■■S1**		43
	43	492	0.91	33.6		**2KJ1503 - ■FM13 - ■■R1**		43
	50	423	1.1	28.9	★	**2KJ1503 - ■FM13 - ■■Q1**		43
	52	403	1.1	27.55	★	**2KJ1503 - ■FM13 - ■■P1**		43
	58	364	1.2	24.85		**2KJ1503 - ■FM13 - ■■N1**		43
	64	330	1.4	22.54	★	**2KJ1503 - ■FM13 - ■■M1**		43
	70	301	1.5	20.54		**2KJ1503 - ■FM13 - ■■L1**		43
	76	275	1.6	18.78	★	**2KJ1503 - ■FM13 - ■■K1**		43
	86	246	1.8	16.79		**2KJ1503 - ■FM13 - ■■J1**		43
	93	226	2.0	15.42	★	**2KJ1503 - ■FM13 - ■■H1**		43

★ Preferred transmission ratio

Shaft designs, see page 4/83 — **1, 2, 3, 5, 6 or 9**

Frequency and voltage, see page 8/20 — **1 to 9**

Gearbox housing mounting position, see page 4/87 — **A, D, E, F, H or M**

*) For mounting type B3

© Siemens AG 2011

Selection and ordering data (continued)

Power rating P_{Motor} kW (50 Hz)	Output speed n_2 (50 Hz) rpm	Output torque T_2 Nm	Service factor f_B	Gearbox ratio i_{tot}		Order No.	Order code (No. of poles)	Weight *) kg
2.2	**K.48-LA100ZLP4E**							
	103	204	2.2	13.9		**2KJ1503 - ■FM13 - ■■G1**		43
	120	175	2.4	11.95	★	**2KJ1503 - ■FM13 - ■■F1**		43
	126	166	1.8	11.35	★	**2KJ1503 - ■FM13 - ■■E1**		43
	141	149	1.9	10.15		**2KJ1503 - ■FM13 - ■■D1**		43
	154	136	2.0	9.32	★	**2KJ1503 - ■FM13 - ■■C1**		43
	171	123	2.2	8.4		**2KJ1503 - ■FM13 - ■■B1**		43
	199	106	2.4	7.22	★	**2KJ1503 - ■FM13 - ■■A1**		43
	K.38-LA100ZLP4E							
	98	215	0.84	14.69	★	**2KJ1502 - ■FM13 - ■■K1**		39
	113	185	0.93	12.65		**2KJ1502 - ■FM13 - ■■J1**		39
	125	168	0.99	11.5	★	**2KJ1502 - ■FM13 - ■■H1**		39
	134	157	1.0	10.72	★	**2KJ1502 - ■FM13 - ■■G1**		39
	148	142	1.1	9.72		**2KJ1502 - ■FM13 - ■■F1**		39
	162	130	1.2	8.85	★	**2KJ1502 - ■FM13 - ■■E1**		39
	184	114	1.4	7.82		**2KJ1502 - ■FM13 - ■■D1**		39
	199	106	1.5	7.22	★	**2KJ1502 - ■FM13 - ■■C1**		39
	231	91	1.7	6.22		**2KJ1502 - ■FM13 - ■■B1**		39
	254	83	1.8	5.65	★	**2KJ1502 - ■FM13 - ■■A1**		39
	B.38-LA100ZLP4E							
	78	268	0.84	18.33		**2KJ1501 - ■FM13 - ■■H2**		41
	86	245	0.90	16.7		**2KJ1501 - ■FM13 - ■■G2**		41
	94	224	0.96	15.28		**2KJ1501 - ■FM13 - ■■F2**		41
	105	200	1.0	13.66		**2KJ1501 - ■FM13 - ■■E2**		41
	115	183	1.2	12.5		**2KJ1501 - ■FM13 - ■■C2**		41
	130	162	1.4	11.05		**2KJ1501 - ■FM13 - ■■A2**		41
	143	147	1.5	10.02		**2KJ1501 - ■FM13 - ■■X1**		41
	162	129	1.8	8.84		**2KJ1501 - ■FM13 - ■■U1**		41
	180	117	2.0	7.98		**2KJ1501 - ■FM13 - ■■S1**		41
	198	106	2.2	7.24		**2KJ1501 - ■FM13 - ■■R1**		41
	218	96	2.4	6.59		**2KJ1501 - ■FM13 - ■■P1**		41
	238	88	2.7	6.03		**2KJ1501 - ■FM13 - ■■M1**		41
	266	79	2.7	5.39		**2KJ1501 - ■FM13 - ■■K1**		41
	290	72	3.0	4.95		**2KJ1501 - ■FM13 - ■■H1**		41
	322	65	3.3	4.46		**2KJ1501 - ■FM13 - ■■F1**		41
	374	56	3.6	3.84		**2KJ1501 - ■FM13 - ■■C1**		41
3	**K.188-Z68-LA100ZLD4E**							
	1.1	23 639	0.85	1 286	★	**2KJ1541 - ■FP13 - ■■E1**		765
	1.3	20 863	0.96	1 135		**2KJ1541 - ■FP13 - ■■D1**		765
	1.5	17 794	1.1	968	★	**2KJ1541 - ■FP13 - ■■C1**		765
	1.8	14 834	1.3	807		**2KJ1541 - ■FP13 - ■■B1**		765
	2.1	12 298	1.6	669	★	**2KJ1541 - ■FP13 - ■■A1**		765

★ Preferred transmission ratio

Shaft designs, see page 4/83 — **1, 2, 3, 5, 6 or 9**

Frequency and voltage, see page 8/20 — **1 to 9**

Gearbox housing mounting position, see page 4/87 — **A, D, E, F, H or M**

*) For mounting type B3

© Siemens AG 2011

Selection and ordering data (continued)

Power rating P_{Motor} kW (50 Hz)	Output speed n_2 (50 Hz) rpm	Output torque T_2 Nm	Service factor f_B	Gearbox ratio i_{tot}		Order No.	Order code (No. of poles)	Weight *) kg
3	**K.188-Z88-LA100ZLD4E**							
	2.1	12 298	1.6	669	★	**2KJ1543 - ■FP13 - ■■H1**		798
	2.6	10 073	2.0	548	★	**2KJ1543 - ■FP13 - ■■G1**		798
	K.168-Z68-LA100ZLD4E							
	1.6	16 194	0.83	881		**2KJ1540 - ■FP13 - ■■G1**		521
	2.0	13 511	1.0	735		**2KJ1540 - ■FP13 - ■■F1**		521
	K.168-LA132MA8							
	2.4	11 785	1.1	287.95	★	**2KJ1510 - ■HG13 - ■■H2**	**P02**	527
	2.6	10 813	1.2	264.18		**2KJ1510 - ■HG13 - ■■G2**	**P02**	527
	2.9	9 978	1.4	243.8	★	**2KJ1510 - ■HG13 - ■■F2**	**P02**	527
	3.1	9 256	1.5	226.15		**2KJ1510 - ■HG13 - ■■E2**	**P02**	527
	K.168-LA132SB6E							
	3.3	8 684	1.6	287.95	★	**2KJ1510 - ■HF13 - ■■H2**	**P01**	527
	3.6	7 967	1.7	264.18		**2KJ1510 - ■HF13 - ■■G2**	**P01**	527
	3.9	7 352	1.8	243.8	★	**2KJ1510 - ■HF13 - ■■F2**	**P01**	527
	4.2	6 820	2.0	226.15		**2KJ1510 - ■HF13 - ■■E2**	**P01**	527
	K.148-LA132MA8							
	3.0	9 493	0.84	231.95	★	**2KJ1508 - ■HG13 - ■■K2**	**P02**	342
	K.148-LA132SB6E							
	3.5	8 276	0.97	274.42	★	**2KJ1508 - ■HF13 - ■■M2**	**P01**	342
	3.8	7 586	1.1	251.55		**2KJ1508 - ■HF13 - ■■L2**	**P01**	342
	4.1	6 995	1.1	231.95	★	**2KJ1508 - ■HF13 - ■■K2**	**P01**	342
	4.4	6 483	1.2	214.96		**2KJ1508 - ■HF13 - ■■J2**	**P01**	342
	K.148-LA100ZLD4E							
	4.7	6 111	1.3	306.08		**2KJ1508 - ■FP13 - ■■N2**		317
	5.2	5 479	1.5	274.42	★	**2KJ1508 - ■FP13 - ■■M2**		317
	5.7	5 022	1.6	251.55		**2KJ1508 - ■FP13 - ■■L2**		317
	6.2	4 631	1.7	231.95	★	**2KJ1508 - ■FP13 - ■■K2**		317
	6.7	4 292	1.9	214.96		**2KJ1508 - ■FP13 - ■■J2**		317
	7.0	4 080	2.0	204.38	★	**2KJ1508 - ■FP13 - ■■H2**		317
	7.5	3 814	2.1	191.02		**2KJ1508 - ■FP13 - ■■G2**		317
	K.128-LA100ZLD4E							
	4.9	5 897	0.80	295.38	★	**2KJ1507 - ■FP13 - ■■L2**		217
	5.3	5 409	0.87	270.9		**2KJ1507 - ■FP13 - ■■K2**		217
	5.9	4 832	0.97	242.02	★	**2KJ1507 - ■FP13 - ■■J2**		217
	6.5	4 425	1.1	221.64		**2KJ1507 - ■FP13 - ■■H2**		217
	7.0	4 076	1.2	204.18	★	**2KJ1507 - ■FP13 - ■■G2**		217
	7.6	3 774	1.2	189.04		**2KJ1507 - ■FP13 - ■■F2**		217
	8.2	3 510	1.3	175.8	★	**2KJ1507 - ■FP13 - ■■E2**		217
	8.7	3 276	1.4	164.11		**2KJ1507 - ■FP13 - ■■D2**		217
	9.8	2 932	1.6	146.84	★	**2KJ1507 - ■FP13 - ■■C2**		217
	10.5	2 716	1.7	136.06		**2KJ1507 - ■FP13 - ■■B2**		217
	11.5	2 490	1.9	124.73	★	**2KJ1507 - ■FP13 - ■■A2**		217
	12.6	2 283	2.1	114.34		**2KJ1507 - ■FP13 - ■■X1**		217

★ Preferred transmission ratio

Shaft designs, see page 4/83 — **1, 2, 3, 5, 6 or 9**

Frequency and voltage, see page 8/20 — **1 to 9**

Gearbox housing mounting position, see page 4/87 — **A, D, E, F, H or M**

*) For mounting type B3

© Siemens AG 2011

Selection and ordering data (continued)

Power rating P_{Motor} kW (50 Hz)	Output speed n_2 (50 Hz) rpm	Output torque T_2 Nm	Service factor f_B	Gearbox ratio i_{tot}		Order No.	Order code (No. of poles)	Weight *) kg
3	**K.108-LA100ZLD4E**							
	8.0	3 572	0.84	178.9	★	**2KJ1506 - ■FP13 - ■■E2**		146
	8.8	3 265	0.92	163.51		**2KJ1506 - ■FP13 - ■■D2**		146
	9.5	3 001	1.0	150.31	★	**2KJ1506 - ■FP13 - ■■C2**		146
	10.3	2 773	1.1	138.87		**2KJ1506 - ■FP13 - ■■B2**		146
	11.1	2 573	1.2	128.86	★	**2KJ1506 - ■FP13 - ■■A2**		146
	12.0	2 396	1.3	120.03		**2KJ1506 - ■FP13 - ■■X1**		146
	13.2	2 167	1.4	108.52	★	**2KJ1506 - ■FP13 - ■■W1**		146
	14.4	1 995	1.5	99.9		**2KJ1506 - ■FP13 - ■■V1**		146
	16.0	1 794	1.7	89.85	★	**2KJ1506 - ■FP13 - ■■U1**		146
	17.3	1 655	1.8	82.9		**2KJ1506 - ■FP13 - ■■T1**		146
	20	1 402	2.1	70.24		**2KJ1506 - ■FP13 - ■■S1**		146
	K.88-LA100ZLD4E							
	13.9	2 064	0.80	103.38		**2KJ1505 - ■FP13 - ■■A2**		92
	15.7	1 821	0.91	91.22	★	**2KJ1505 - ■FP13 - ■■X1**		92
	17.0	1 681	0.98	84.21		**2KJ1505 - ■FP13 - ■■W1**		92
	19.0	1 506	1.1	75.45	★	**2KJ1505 - ■FP13 - ■■V1**		92
	21	1 389	1.2	69.57		**2KJ1505 - ■FP13 - ■■U1**		92
	25	1 165	1.4	58.37		**2KJ1505 - ■FP13 - ■■T1**		92
	29	994	1.7	49.8	★	**2KJ1505 - ■FP13 - ■■S1**		92
	35	829	2.0	41.5		**2KJ1505 - ■FP13 - ■■Q1**		92
	42	687	2.4	34.4	★	**2KJ1505 - ■FP13 - ■■P1**		92
	46	616	2.7	30.87	★	**2KJ1505 - ■FP13 - ■■N1**		92
	128	224	3.6	11.21		**2KJ1505 - ■FP13 - ■■E1**		92
	K.68-LA100ZLD4E							
	31	926	0.89	46.37		**2KJ1504 - ■FP13 - ■■U1**		62
	36	786	1.0	39.39		**2KJ1504 - ■FP13 - ■■T1**		62
	44	654	1.3	32.78	★	**2KJ1504 - ■FP13 - ■■S1**		62
	47	607	1.4	30.38		**2KJ1504 - ■FP13 - ■■R1**		62
	51	559	1.5	27.99	★	**2KJ1504 - ■FP13 - ■■Q1**		62
	56	508	1.6	25.42		**2KJ1504 - ■FP13 - ■■P1**		62
	62	462	1.8	23.16	★	**2KJ1504 - ■FP13 - ■■N1**		62
	68	424	1.9	21.22		**2KJ1504 - ■FP13 - ■■M1**		62
	76	378	2.2	18.93	★	**2KJ1504 - ■FP13 - ■■L1**		62
	85	337	2.4	16.89		**2KJ1504 - ■FP13 - ■■K1**		62
	100	286	2.8	14.35		**2KJ1504 - ■FP13 - ■■J1**		62
	120	238	3.2	11.94	★	**2KJ1504 - ■FP13 - ■■H1**		62
	126	228	1.9	11.41		**2KJ1504 - ■FP13 - ■■G1**		62
	138	208	2.0	10.4	★	**2KJ1504 - ■FP13 - ■■F1**		62
	151	190	2.2	9.52		**2KJ1504 - ■FP13 - ■■E1**		62
	169	170	2.3	8.5	★	**2KJ1504 - ■FP13 - ■■D1**		62
	189	151	2.5	7.58		**2KJ1504 - ■FP13 - ■■C1**		62
	223	129	2.8	6.44		**2KJ1504 - ■FP13 - ■■B1**		62
	268	107	3.2	5.36	★	**2KJ1504 - ■FP13 - ■■A1**		62

★ Preferred transmission ratio

Shaft designs, see page 4/83 — **1, 2, 3, 5, 6 or 9**

Frequency and voltage, see page 8/20 — **1 to 9**

Gearbox housing mounting position, see page 4/87 — **A, D, E, F, H or M**

*) For mounting type B3

© Siemens AG 2011

Selection and ordering data (continued)

Power rating P_{Motor} kW (50 Hz)	Output speed n_2 (50 Hz) rpm	Output torque T_2 Nm	Service factor f_B	Gearbox ratio i_{tot}		Order No.	Order code (No. of poles)	Weight *) kg
3	**K.48-LA100ZLD4E**							
	52	550	0.82	27.55	★	**2KJ1503 - ■FP13 - ■■P1**		43
	58	496	0.91	24.85		**2KJ1503 - ■FP13 - ■■N1**		43
	64	450	1.0	22.54	★	**2KJ1503 - ■FP13 - ■■M1**		43
	70	410	1.1	20.54		**2KJ1503 - ■FP13 - ■■L1**		43
	76	375	1.2	18.78	★	**2KJ1503 - ■FP13 - ■■K1**		43
	86	335	1.3	16.79		**2KJ1503 - ■FP13 - ■■J1**		43
	93	308	1.5	15.42	★	**2KJ1503 - ■FP13 - ■■H1**		43
	103	278	1.6	13.9		**2KJ1503 - ■FP13 - ■■G1**		43
	120	239	1.8	11.95	★	**2KJ1503 - ■FP13 - ■■F1**		43
	126	227	1.3	11.35	★	**2KJ1503 - ■FP13 - ■■E1**		43
	141	203	1.4	10.15		**2KJ1503 - ■FP13 - ■■D1**		43
	154	186	1.5	9.32	★	**2KJ1503 - ■FP13 - ■■C1**		43
	171	168	1.6	8.4		**2KJ1503 - ■FP13 - ■■B1**		43
	199	144	1.8	7.22	★	**2KJ1503 - ■FP13 - ■■A1**		43
	K.38-LA100ZLD4E							
	148	194	0.82	9.72		**2KJ1502 - ■FP13 - ■■F1**		39
	162	177	0.90	8.85	★	**2KJ1502 - ■FP13 - ■■E1**		39
	184	156	1.0	7.82		**2KJ1502 - ■FP13 - ■■D1**		39
	199	144	1.1	7.22	★	**2KJ1502 - ■FP13 - ■■C1**		39
	231	124	1.2	6.22		**2KJ1502 - ■FP13 - ■■B1**		39
	254	113	1.3	5.65	★	**2KJ1502 - ■FP13 - ■■A1**		39
	B.38-LA100ZLD4E							
	115	250	0.88	12.5		**2KJ1501 - ■FP13 - ■■C2**		41
	130	221	1.0	11.05		**2KJ1501 - ■FP13 - ■■A2**		41
	143	200	1.1	10.02		**2KJ1501 - ■FP13 - ■■X1**		41
	162	176	1.3	8.84		**2KJ1501 - ■FP13 - ■■U1**		41
	180	159	1.5	7.98		**2KJ1501 - ■FP13 - ■■S1**		41
	198	145	1.6	7.24		**2KJ1501 - ■FP13 - ■■R1**		41
	218	132	1.8	6.59		**2KJ1501 - ■FP13 - ■■P1**		41
	238	120	2.0	6.03		**2KJ1501 - ■FP13 - ■■M1**		41
	266	108	2.0	5.39		**2KJ1501 - ■FP13 - ■■K1**		41
	290	99	2.2	4.95		**2KJ1501 - ■FP13 - ■■H1**		41
	322	89	2.4	4.46		**2KJ1501 - ■FP13 - ■■F1**		41
	374	77	2.6	3.84		**2KJ1501 - ■FP13 - ■■C1**		41
	B.28-LA100ZLD4E							
	257	111	0.81	5.58		**2KJ1500 - ■FP13 - ■■E1**		29
	290	99	0.91	4.94		**2KJ1500 - ■FP13 - ■■D1**		29
	315	91	0.96	4.56		**2KJ1500 - ■FP13 - ■■C1**		29
	366	78	1.0	3.92		**2KJ1500 - ■FP13 - ■■B1**		29
	402	71	1.1	3.57		**2KJ1500 - ■FP13 - ■■A1**		29
4	**K.188-Z68-LA112ZMP4E**							
	1.5	23 702	0.84	968	★	**2KJ1541 - ■GJ13 - ■■C1**		772
	1.8	19 760	1.0	807		**2KJ1541 - ■GJ13 - ■■B1**		772

★ Preferred transmission ratio

Shaft designs, see page 4/83 — **1, 2, 3, 5, 6 or 9**

Frequency and voltage, see page 8/20 — **1 to 9**

Gearbox housing mounting position, see page 4/87 — **A, D, E, F, H or M**

*) For mounting type B3

© Siemens AG 2011

Selection and ordering data (continued)

Power rating P_{Motor} kW (50 Hz)	Output speed n_2 (50 Hz) rpm	Output torque T_2 Nm	Service factor f_B	Gearbox ratio i_{tot}		Order No.	Order code (No. of poles)	Weight *) kg
4	**K.188-Z68-LA112ZMP4E**							
	2.2	16 381	1.2	669	★	**2KJ1541 - ■GJ13 - ■■A1**		772
	K.188-Z88-LA112ZMP4E							
	2.2	16 381	1.2	669	★	**2KJ1543 - ■GJ13 - ■■H1**		805
	2.6	13 418	1.5	548	★	**2KJ1543 - ■GJ13 - ■■G1**		805
	2.9	12 316	1.6	503		**2KJ1543 - ■GJ13 - ■■F1**		805
	3.4	10 504	1.9	429	★	**2KJ1543 - ■GJ13 - ■■E1**		805
	K.188-LA160M8							
	3.7	10 223	2.0	191.34		**2KJ1511 - ■JE13 - ■■U1**	**P02**	800
	K.168-LA132ZMB6E							
	3.3	11 579	1.2	287.95	★	**2KJ1510 - ■HJ13 - ■■H2**	**P01**	527
	3.6	10 623	1.3	264.18		**2KJ1510 - ■HJ13 - ■■G2**	**P01**	527
	3.9	9 803	1.4	243.8	★	**2KJ1510 - ■HJ13 - ■■F2**	**P01**	527
	4.2	9 094	1.5	226.15		**2KJ1510 - ■HJ13 - ■■E2**	**P01**	527
	4.5	8 578	1.6	213.33	★	**2KJ1510 - ■HJ13 - ■■D2**	**P01**	527
	4.8	8 024	1.7	199.54		**2KJ1510 - ■HJ13 - ■■C2**	**P01**	527
	K.148-LA132ZMB6E							
	4.1	9 327	0.86	231.95	★	**2KJ1508 - ■HJ13 - ■■K2**	**P01**	342
	4.4	8 644	0.93	214.96		**2KJ1508 - ■HJ13 - ■■J2**	**P01**	342
	K.148-LA112ZMP4E							
	4.7	8 120	0.99	306.08		**2KJ1508 - ■GJ13 - ■■N2**		324
	5.2	7 280	1.1	274.42	★	**2KJ1508 - ■GJ13 - ■■M2**		324
	5.7	6 673	1.2	251.55		**2KJ1508 - ■GJ13 - ■■L2**		324
	6.2	6 153	1.3	231.95	★	**2KJ1508 - ■GJ13 - ■■K2**		324
	6.7	5 702	1.4	214.96		**2KJ1508 - ■GJ13 - ■■J2**		324
	7.0	5 422	1.5	204.38	★	**2KJ1508 - ■GJ13 - ■■H2**		324
	7.5	5 067	1.6	191.02		**2KJ1508 - ■GJ13 - ■■G2**		324
	8.5	4 470	1.8	168.5	★	**2KJ1508 - ■GJ13 - ■■F2**		324
	9.1	4 216	1.9	158.93		**2KJ1508 - ■GJ13 - ■■E2**		324
	10.1	3 778	2.1	142.41	★	**2KJ1508 - ■GJ13 - ■■D2**		324
	K.128-LA112ZMP4E							
	6.5	5 880	0.80	221.64		**2KJ1507 - ■GJ13 - ■■H2**		224
	7.1	5 416	0.87	204.18	★	**2KJ1507 - ■GJ13 - ■■G2**		224
	7.6	5 015	0.94	189.04		**2KJ1507 - ■GJ13 - ■■F2**		224
	8.2	4 664	1.0	175.8	★	**2KJ1507 - ■GJ13 - ■■E2**		224
	8.8	4 353	1.1	164.11		**2KJ1507 - ■GJ13 - ■■D2**		224
	9.8	3 895	1.2	146.84	★	**2KJ1507 - ■GJ13 - ■■C2**		224
	10.6	3 609	1.3	136.06		**2KJ1507 - ■GJ13 - ■■B2**		224
	11.5	3 309	1.4	124.73	★	**2KJ1507 - ■GJ13 - ■■A2**		224
	12.6	3 033	1.5	114.34		**2KJ1507 - ■GJ13 - ■■X1**		224
	14.8	2 585	1.8	97.44		**2KJ1507 - ■GJ13 - ■■W1**		224
	16.7	2 281	2.1	85.98	★	**2KJ1507 - ■GJ13 - ■■V1**		224
	K.108-LA112ZMP4E							
	10.4	3 684	0.81	138.87		**2KJ1506 - ■GJ13 - ■■B2**		153

★ Preferred transmission ratio

Shaft designs, see page 4/83 — **1, 2, 3, 5, 6 or 9**

Frequency and voltage, see page 8/20 — **1 to 9**

Gearbox housing mounting position, see page 4/87 — **A, D, E, F, H or M**

*) For mounting type B3

© Siemens AG 2011

Selection and ordering data (continued)

Power rating P_{Motor} kW (50 Hz)	Output speed n_2 (50 Hz) rpm	Output torque T_2 Nm	Service factor f_B	Gearbox ratio i_{tot}		Order No.	Order code (No. of poles)	Weight *) kg
4	**K.108-LA112ZMP4E**							
	11.2	3 418	0.88	128.86	★	**2KJ1506 - ■GJ13 - ■■A2**		153
	12.0	3 184	0.94	120.03		**2KJ1506 - ■GJ13 - ■■X1**		153
	13.3	2 879	1.0	108.52	★	**2KJ1506 - ■GJ13 - ■■W1**		153
	14.4	2 650	1.1	99.9		**2KJ1506 - ■GJ13 - ■■V1**		153
	16.0	2 384	1.3	89.85	★	**2KJ1506 - ■GJ13 - ■■U1**		153
	17.4	2 199	1.4	82.9		**2KJ1506 - ■GJ13 - ■■T1**		153
	20	1 863	1.6	70.24		**2KJ1506 - ■GJ13 - ■■S1**		153
	24	1 624	1.8	61.22	★	**2KJ1506 - ■GJ13 - ■■R1**		153
	28	1 382	2.2	52.08		**2KJ1506 - ■GJ13 - ■■Q1**		153
	32	1 179	2.5	44.44	★	**2KJ1506 - ■GJ13 - ■■P1**		153
	K.88-LA112ZMP4E							
	19.1	2 002	0.82	75.45	★	**2KJ1505 - ■GJ13 - ■■V1**		99
	21	1 846	0.89	69.57		**2KJ1505 - ■GJ13 - ■■U1**		99
	25	1 548	1.1	58.37		**2KJ1505 - ■GJ13 - ■■T1**		99
	29	1 321	1.2	49.8	★	**2KJ1505 - ■GJ13 - ■■S1**		99
	35	1 101	1.5	41.5		**2KJ1505 - ■GJ13 - ■■Q1**		99
	42	913	1.8	34.4	★	**2KJ1505 - ■GJ13 - ■■P1**		99
	47	819	2.0	30.87	★	**2KJ1505 - ■GJ13 - ■■N1**		99
	50	756	2.2	28.5		**2KJ1505 - ■GJ13 - ■■M1**		99
	56	677	2.4	25.53	★	**2KJ1505 - ■GJ13 - ■■L1**		99
	61	624	2.6	23.54		**2KJ1505 - ■GJ13 - ■■K1**		99
	73	524	3.0	19.75		**2KJ1505 - ■GJ13 - ■■J1**		99
	128	297	2.7	11.21		**2KJ1505 - ■GJ13 - ■■E1**		99
	153	250	3.1	9.41		**2KJ1505 - ■GJ13 - ■■D1**		99
	179	213	3.4	8.03	★	**2KJ1505 - ■GJ13 - ■■C1**		99
	215	177	3.9	6.69		**2KJ1505 - ■GJ13 - ■■B1**		99
	260	147	4.4	5.54	★	**2KJ1505 - ■GJ13 - ■■A1**		99
	K.68-LA112ZMP4E							
	44	870	0.94	32.78	★	**2KJ1504 - ■GJ13 - ■■S1**		69
	47	806	1.0	30.38		**2KJ1504 - ■GJ13 - ■■R1**		69
	51	743	1.1	27.99	★	**2KJ1504 - ■GJ13 - ■■Q1**		69
	57	674	1.2	25.42		**2KJ1504 - ■GJ13 - ■■P1**		69
	62	614	1.3	23.16	★	**2KJ1504 - ■GJ13 - ■■N1**		69
	68	563	1.5	21.22		**2KJ1504 - ■GJ13 - ■■M1**		69
	76	502	1.6	18.93	★	**2KJ1504 - ■GJ13 - ■■L1**		69
	85	448	1.8	16.89		**2KJ1504 - ■GJ13 - ■■K1**		69
	100	381	2.1	14.35		**2KJ1504 - ■GJ13 - ■■J1**		69
	121	317	2.4	11.94	★	**2KJ1504 - ■GJ13 - ■■H1**		69
	126	303	1.4	11.41		**2KJ1504 - ■GJ13 - ■■G1**		69
	138	276	1.5	10.4	★	**2KJ1504 - ■GJ13 - ■■F1**		69
	151	253	1.6	9.52		**2KJ1504 - ■GJ13 - ■■E1**		69
	169	225	1.8	8.5	★	**2KJ1504 - ■GJ13 - ■■D1**		69
	190	201	1.9	7.58		**2KJ1504 - ■GJ13 - ■■C1**		69

★ Preferred transmission ratio

Shaft designs, see page 4/83 — **1, 2, 3, 5, 6 or 9**

Frequency and voltage, see page 8/20 — **1 to 9**

Gearbox housing mounting position, see page 4/87 — **A, D, E, F, H or M**

*) For mounting type B3

© Siemens AG 2011

Selection and ordering data (continued)

Power rating P_{Motor} kW (50 Hz)	Output speed n_2 (50 Hz) rpm	Output torque T_2 Nm	Service factor f_B	Gearbox ratio i_{tot}		Order No.	Order code (No. of poles)	Weight *) kg
4	**K.68-LA112ZMP4E**							
	224	171	2.1	6.44		**2KJ1504 - ■GJ13 - ■■B1**		69
	269	142	2.4	5.36	★	**2KJ1504 - ■GJ13 - ■■A1**		69
	K.48-LA112ZMP4E							
	70	545	0.83	20.54		**2KJ1503 - ■GJ13 - ■■L1**		50
	77	498	0.90	18.78	★	**2KJ1503 - ■GJ13 - ■■K1**		50
	86	445	1.0	16.79		**2KJ1503 - ■GJ13 - ■■J1**		50
	93	409	1.1	15.42	★	**2KJ1503 - ■GJ13 - ■■H1**		50
	104	369	1.2	13.9		**2KJ1503 - ■GJ13 - ■■G1**		50
	121	317	1.3	11.95	★	**2KJ1503 - ■GJ13 - ■■F1**		50
	127	301	0.97	11.35	★	**2KJ1503 - ■GJ13 - ■■E1**		50
	142	269	1.1	10.15		**2KJ1503 - ■GJ13 - ■■D1**		50
	155	247	1.1	9.32	★	**2KJ1503 - ■GJ13 - ■■C1**		50
	171	223	1.2	8.4		**2KJ1503 - ■GJ13 - ■■B1**		50
	199	192	1.3	7.22	★	**2KJ1503 - ■GJ13 - ■■A1**		50
	K.38-LA112ZMP4E							
	199	192	0.83	7.22	★	**2KJ1502 - ■GJ13 - ■■C1**		46
	232	165	0.92	6.22		**2KJ1502 - ■GJ13 - ■■B1**		46
	255	150	0.99	5.65	★	**2KJ1502 - ■GJ13 - ■■A1**		46
5.5	**K.188-Z68-LA132SP4E**							
	2.2	22 492	0.89	669	★	**2KJ1541 - ■HG13 - ■■A1**		790
	K.188-Z88-LA132SP4E							
	2.2	22 492	0.89	669	★	**2KJ1543 - ■HG13 - ■■H1**		823
	2.6	18 424	1.1	548	★	**2KJ1543 - ■HG13 - ■■G1**		823
	2.9	16 911	1.2	503		**2KJ1543 - ■HG13 - ■■F1**		823
	3.4	14 423	1.4	429	★	**2KJ1543 - ■HG13 - ■■E1**		823
	K.188-LA160MB8							
	3.7	14 155	1.4	191.34		**2KJ1511 - ■JF13 - ■■U1**	**P02**	800
	4.1	12 782	1.6	172.78		**2KJ1511 - ■JF13 - ■■T1**	**P02**	800
	4.4	11 979	1.7	161.92		**2KJ1511 - ■JF13 - ■■S1**	**P02**	800
	K.188-LA132ZMD6E							
	5.0	10 469	1.9	191.34		**2KJ1511 - ■HK13 - ■■U1**	**P01**	776
	5.6	9 453	2.1	172.78		**2KJ1511 - ■HK13 - ■■T1**	**P01**	776
	K.168-LA132ZMD6E							
	3.3	15 755	0.86	287.95	★	**2KJ1510 - ■HK13 - ■■H2**	**P01**	527
	3.6	14 454	0.93	264.18		**2KJ1510 - ■HK13 - ■■G2**	**P01**	527
	3.9	13 339	1.0	243.8	★	**2KJ1510 - ■HK13 - ■■F2**	**P01**	527
	4.2	12 373	1.1	226.15		**2KJ1510 - ■HK13 - ■■E2**	**P01**	527
	4.5	11 672	1.2	213.33	★	**2KJ1510 - ■HK13 - ■■D2**	**P01**	527
	4.8	10 918	1.2	199.54		**2KJ1510 - ■HK13 - ■■C2**	**P01**	527
	K.168-LA132SP4E							
	5.0	10 467	1.3	287.95	★	**2KJ1510 - ■HG13 - ■■H2**		527
	5.5	9 603	1.4	264.18		**2KJ1510 - ■HG13 - ■■G2**		527

★ Preferred transmission ratio

Shaft designs, see page 4/83 — **1, 2, 3, 5, 6 or 9**

Frequency and voltage, see page 8/20 — **1 to 9**

Gearbox housing mounting position, see page 4/87 — **A, D, E, F, H or M**

*) For mounting type B3

© Siemens AG 2011

Selection and ordering data (continued)

Power rating P_{Motor} kW (50 Hz)	Output speed n_2 (50 Hz) rpm	Output torque T_2 Nm	Service factor f_B	Gearbox ratio i_{tot}		Order No.	Order code (No. of poles)	Weight *) kg
5.5	**K.168-LA132SP4E**							
	5.9	8 862	1.5	243.8	★	**2KJ1510 - ■HG13 - ■■F2**		527
	6.4	8 220	1.6	226.15		**2KJ1510 - ■HG13 - ■■E2**		527
	6.8	7 754	1.7	213.33	★	**2KJ1510 - ■HG13 - ■■D2**		527
	7.2	7 253	1.9	199.54		**2KJ1510 - ■HG13 - ■■C2**		527
	8.1	6 449	2.1	177.43	★	**2KJ1510 - ■HG13 - ■■B2**		527
	K.148-LA132SP4E							
	5.3	9 975	0.80	274.42	★	**2KJ1508 - ■HG13 - ■■M2**		342
	5.7	9 144	0.87	251.55		**2KJ1508 - ■HG13 - ■■L2**		342
	6.2	8 431	0.95	231.95	★	**2KJ1508 - ■HG13 - ■■K2**		342
	6.7	7 814	1.0	214.96		**2KJ1508 - ■HG13 - ■■J2**		342
	7.1	7 429	1.1	204.38	★	**2KJ1508 - ■HG13 - ■■H2**		342
	7.6	6 943	1.2	191.02		**2KJ1508 - ■HG13 - ■■G2**		342
	8.6	6 125	1.3	168.5	★	**2KJ1508 - ■HG13 - ■■F2**		342
	9.1	5 777	1.4	158.93		**2KJ1508 - ■HG13 - ■■E2**		342
	10.1	5 177	1.5	142.41	★	**2KJ1508 - ■HG13 - ■■D2**		342
	11.0	4 780	1.7	131.49		**2KJ1508 - ■HG13 - ■■C2**		342
	12.9	4 084	2.0	112.35		**2KJ1508 - ■HG13 - ■■B2**		342
	14.2	3 691	2.2	101.53	★	**2KJ1508 - ■HG13 - ■■A2**		342
	14.8	3 556	2.2	97.82		**2KJ1508 - ■HG13 - ■■X1**		342
	K.128-LA132SP4E							
	9.8	5 338	0.88	146.84	★	**2KJ1507 - ■HG13 - ■■C2**		242
	10.6	4 946	0.95	136.06		**2KJ1507 - ■HG13 - ■■B2**		242
	11.6	4 534	1.0	124.73	★	**2KJ1507 - ■HG13 - ■■A2**		242
	12.6	4 156	1.1	114.34		**2KJ1507 - ■HG13 - ■■X1**		242
	14.8	3 542	1.3	97.44		**2KJ1507 - ■HG13 - ■■W1**		242
	16.8	3 125	1.5	85.98	★	**2KJ1507 - ■HG13 - ■■V1**		242
	19.7	2 660	1.8	73.18		**2KJ1507 - ■HG13 - ■■U1**		242
	23	2 305	2.0	63.41	★	**2KJ1507 - ■HG13 - ■■T1**		242
	27	1 940	2.4	53.36	★	**2KJ1507 - ■HG13 - ■■S1**		242
	K.108-LA132SP4E							
	14.5	3 631	0.83	99.9		**2KJ1506 - ■HG13 - ■■V1**		171
	16.1	3 266	0.92	89.85	★	**2KJ1506 - ■HG13 - ■■U1**		171
	17.4	3 013	1.0	82.9		**2KJ1506 - ■HG13 - ■■T1**		171
	21	2 553	1.2	70.24		**2KJ1506 - ■HG13 - ■■S1**		171
	24	2 225	1.3	61.22	★	**2KJ1506 - ■HG13 - ■■R1**		171
	28	1 893	1.6	52.08		**2KJ1506 - ■HG13 - ■■Q1**		171
	32	1 615	1.9	44.44	★	**2KJ1506 - ■HG13 - ■■P1**		171
	40	1 325	2.1	36.44	★	**2KJ1506 - ■HG13 - ■■N1**		171
	43	1 231	2.4	33.87	★	**2KJ1506 - ■HG13 - ■■M1**		171
	46	1 136	2.6	31.25		**2KJ1506 - ■HG13 - ■■L1**		171
	K.88-LA132SP4E							
	29	1 810	0.91	49.8	★	**2KJ1505 - ■HG13 - ■■S1**		117
	35	1 509	1.1	41.5		**2KJ1505 - ■HG13 - ■■Q1**		117

★ Preferred transmission ratio

Shaft designs, see page 4/83 — **1, 2, 3, 5, 6 or 9**

Frequency and voltage, see page 8/20 — **1 to 9**

Gearbox housing mounting position, see page 4/87 — **A, D, E, F, H or M**

*) For mounting type B3

© Siemens AG 2011

Selection and ordering data (continued)

Power rating P_{Motor} kW (50 Hz)	Output speed n_2 (50 Hz) rpm	Output torque T_2 Nm	Service factor f_B	Gearbox ratio i_{tot}		Order No.	Order code (No. of poles)	Weight *) kg
5.5	**K.88-LA132SP4E**							
	42	1 250	1.3	34.4	★	**2KJ1505 - ■HG13 - ■■P1**		117
	47	1 122	1.5	30.87	★	**2KJ1505 - ■HG13 - ■■N1**		117
	51	1 036	1.6	28.5		**2KJ1505 - ■HG13 - ■■M1**		117
	57	928	1.8	25.53	★	**2KJ1505 - ■HG13 - ■■L1**		117
	61	856	1.9	23.54		**2KJ1505 - ■HG13 - ■■K1**		117
	73	718	2.2	19.75		**2KJ1505 - ■HG13 - ■■J1**		117
	86	612	2.4	16.85	★	**2KJ1505 - ■HG13 - ■■H1**		117
	103	510	2.8	14.04		**2KJ1505 - ■HG13 - ■■G1**		117
	124	423	3.2	11.64	★	**2KJ1505 - ■HG13 - ■■F1**		117
	129	407	2.0	11.21		**2KJ1505 - ■HG13 - ■■E1**		117
	154	342	2.2	9.41		**2KJ1505 - ■HG13 - ■■D1**		117
	180	292	2.5	8.03	★	**2KJ1505 - ■HG13 - ■■C1**		117
	216	243	2.8	6.69		**2KJ1505 - ■HG13 - ■■B1**		117
	261	201	3.2	5.54	★	**2KJ1505 - ■HG13 - ■■A1**		117
	K.68-LA132SP4E							
	52	1 017	0.81	27.99	★	**2KJ1504 - ■HG13 - ■■Q1**		87
	57	924	0.89	25.42		**2KJ1504 - ■HG13 - ■■P1**		87
	62	842	0.97	23.16	★	**2KJ1504 - ■HG13 - ■■N1**		87
	68	771	1.1	21.22		**2KJ1504 - ■HG13 - ■■M1**		87
	76	688	1.2	18.93	★	**2KJ1504 - ■HG13 - ■■L1**		87
	86	614	1.3	16.89		**2KJ1504 - ■HG13 - ■■K1**		87
	101	522	1.6	14.35		**2KJ1504 - ■HG13 - ■■J1**		87
	121	434	1.8	11.94	★	**2KJ1504 - ■HG13 - ■■H1**		87
	127	415	1.0	11.41		**2KJ1504 - ■HG13 - ■■G1**		87
	139	378	1.1	10.4	★	**2KJ1504 - ■HG13 - ■■F1**		87
	152	346	1.2	9.52		**2KJ1504 - ■HG13 - ■■E1**		87
	170	309	1.3	8.5	★	**2KJ1504 - ■HG13 - ■■D1**		87
	191	276	1.4	7.58		**2KJ1504 - ■HG13 - ■■C1**		87
	224	234	1.6	6.44		**2KJ1504 - ■HG13 - ■■B1**		87
	270	195	1.8	5.36	★	**2KJ1504 - ■HG13 - ■■A1**		87
7.5	**K.188-Z88-LA132ZMP4E**							
	2.7	24 988	0.80	548	★	**2KJ1543 - ■HK13 - ■■G1**		823
	2.9	22 936	0.87	503		**2KJ1543 - ■HK13 - ■■F1**		823
	3.4	19 561	1.0	429	★	**2KJ1543 - ■HK13 - ■■E1**		823
	K.188-LA160LB8							
	3.7	19 167	1.0	191.34		**2KJ1511 - ■JJ13 - ■■U1**	**P02**	812
	4.1	17 308	1.2	172.78		**2KJ1511 - ■JJ13 - ■■T1**	**P02**	812
	4.4	16 220	1.2	161.92		**2KJ1511 - ■JJ13 - ■■S1**	**P02**	812
	K.188-LA160MD6E							
	5.0	14 202	1.4	191.34		**2KJ1511 - ■JJ13 - ■■U1**	**P01**	812
	5.6	12 824	1.6	172.78		**2KJ1511 - ■JJ13 - ■■T1**	**P01**	812
	6.0	12 018	1.7	161.92		**2KJ1511 - ■JJ13 - ■■S1**	**P01**	812
	6.9	10 323	1.9	139.08	★	**2KJ1511 - ■JJ13 - ■■R1**	**P01**	812

★ Preferred transmission ratio

Shaft designs, see page 4/83 — **1, 2, 3, 5, 6 or 9**

Frequency and voltage, see page 8/20 — **1 to 9**

Gearbox housing mounting position, see page 4/87 — **A, D, E, F, H or M**

*) For mounting type B3

© Siemens AG 2011

Selection and ordering data (continued)

Power rating P_{Motor} kW (50 Hz)	Output speed n_2 (50 Hz) rpm	Output torque T_2 Nm	Service factor f_B	Gearbox ratio i_{tot}		Order No.	Order code (No. of poles)	Weight *) kg
7.5	**K.188-LA132ZMP4E**							
	7.6	9 419	2.1	191.34		**2KJ1511 - ■HK13 - ■■U1**		776
	K.168-LA160MD6E							
	4.5	15 834	0.85	213.33	★	**2KJ1510 - ■JJ13 - ■■D2**	**P01**	563
	4.8	14 810	0.91	199.54		**2KJ1510 - ■JJ13 - ■■C2**	**P01**	563
	K.168-LA132ZMP4E							
	5.1	14 175	0.95	287.95	★	**2KJ1510 - ■HK13 - ■■H2**		527
	5.5	13 005	1.0	264.18		**2KJ1510 - ■HK13 - ■■G2**		527
	6.0	12 001	1.1	243.8	★	**2KJ1510 - ■HK13 - ■■F2**		527
	6.4	11 133	1.2	226.15		**2KJ1510 - ■HK13 - ■■E2**		527
	6.8	10 502	1.3	213.33	★	**2KJ1510 - ■HK13 - ■■D2**		527
	7.3	9 823	1.4	199.54		**2KJ1510 - ■HK13 - ■■C2**		527
	8.2	8 734	1.5	177.43	★	**2KJ1510 - ■HK13 - ■■B2**		527
	8.7	8 245	1.6	167.5		**2KJ1510 - ■HK13 - ■■A2**		527
	9.7	7 402	1.8	150.36	★	**2KJ1510 - ■HK13 - ■■X1**		527
	10.5	6 793	2.0	138		**2KJ1510 - ■HK13 - ■■W1**		527
	K.148-LA132ZMP4E							
	7.1	10 061	0.80	204.38	★	**2KJ1508 - ■HK13 - ■■H2**		342
	7.6	9 403	0.85	191.02		**2KJ1508 - ■HK13 - ■■G2**		342
	8.6	8 295	0.96	168.5	★	**2KJ1508 - ■HK13 - ■■F2**		342
	9.2	7 824	1.0	158.93		**2KJ1508 - ■HK13 - ■■E2**		342
	10.2	7 010	1.1	142.41	★	**2KJ1508 - ■HK13 - ■■D2**		342
	11.1	6 473	1.2	131.49		**2KJ1508 - ■HK13 - ■■C2**		342
	13.0	5 531	1.4	112.35		**2KJ1508 - ■HK13 - ■■B2**		342
	14.3	4 998	1.6	101.53	★	**2KJ1508 - ■HK13 - ■■A2**		342
	14.9	4 815	1.7	97.82		**2KJ1508 - ■HK13 - ■■X1**		342
	17.2	4 165	1.9	84.61		**2KJ1508 - ■HK13 - ■■W1**		342
	19.7	3 633	2.2	73.8	★	**2KJ1508 - ■HK13 - ■■V1**		342
	K.128-LA132ZMP4E							
	12.7	5 629	0.84	114.34		**2KJ1507 - ■HK13 - ■■X1**		242
	14.9	4 797	0.98	97.44		**2KJ1507 - ■HK13 - ■■W1**		242
	16.9	4 233	1.1	85.98	★	**2KJ1507 - ■HK13 - ■■V1**		242
	19.9	3 602	1.3	73.18		**2KJ1507 - ■HK13 - ■■U1**		242
	23	3 121	1.5	63.41	★	**2KJ1507 - ■HK13 - ■■T1**		242
	27	2 627	1.8	53.36	★	**2KJ1507 - ■HK13 - ■■S1**		242
	30	2 370	2.0	48.14		**2KJ1507 - ■HK13 - ■■R1**		242
	35	2 037	2.3	41.38	★	**2KJ1507 - ■HK13 - ■■Q1**		242
	37	1 929	2.4	39.19	★	**2KJ1507 - ■HK13 - ■■P1**		242
	40	1 768	2.7	35.92		**2KJ1507 - ■HK13 - ■■N1**		242
	K.108-LA132ZMP4E							
	21	3 458	0.87	70.24		**2KJ1506 - ■HK13 - ■■S1**		171
	24	3 014	1.0	61.22	★	**2KJ1506 - ■HK13 - ■■R1**		171
	28	2 564	1.2	52.08		**2KJ1506 - ■HK13 - ■■Q1**		171
	33	2 188	1.4	44.44	★	**2KJ1506 - ■HK13 - ■■P1**		171

★ Preferred transmission ratio

Shaft designs, see page 4/83 — **1, 2, 3, 5, 6 or 9**

Frequency and voltage, see page 8/20 — **1 to 9**

Gearbox housing mounting position, see page 4/87 — **A, D, E, F, H or M**

*) For mounting type B3

© Siemens AG 2011

Selection and ordering data (continued)

Power rating P_{Motor} kW (50 Hz)	Output speed n_2 (50 Hz) rpm	Output torque T_2 Nm	Service factor f_B	Gearbox ratio i_{tot}		Order No.	Order code (No. of poles)	Weight *) kg
7.5	**K.108-LA132ZMP4E**							
	40	1 794	1.6	36.44	★	**2KJ1506 - ■HK13 - ■■N1**		171
	43	1 667	1.8	33.87	★	**2KJ1506 - ■HK13 - ■■M1**		171
	47	1 538	2.0	31.25		**2KJ1506 - ■HK13 - ■■L1**		171
	55	1 304	2.2	26.48		**2KJ1506 - ■HK13 - ■■K1**		171
	63	1 136	2.4	23.08	★	**2KJ1506 - ■HK13 - ■■J1**		171
	74	966	2.7	19.63		**2KJ1506 - ■HK13 - ■■G1**		171
	87	825	3.0	16.75	★	**2KJ1506 - ■HK13 - ■■F1**		171
	106	676	3.5	13.74	★	**2KJ1506 - ■HK13 - ■■E1**		171
	113	635	3.1	12.9	★	**2KJ1506 - ■HK13 - ■■D1**		171
	133	540	3.4	10.97		**2KJ1506 - ■HK13 - ■■C1**		171
	155	461	3.8	9.36	★	**2KJ1506 - ■HK13 - ■■B1**		171
	K.88-LA132ZMP4E							
	35	2 043	0.81	41.5		**2KJ1505 - ■HK13 - ■■Q1**		117
	42	1 693	0.97	34.4	★	**2KJ1505 - ■HK13 - ■■P1**		117
	47	1 520	1.1	30.87	★	**2KJ1505 - ■HK13 - ■■N1**		117
	51	1 403	1.2	28.5		**2KJ1505 - ■HK13 - ■■M1**		117
	57	1 257	1.3	25.53	★	**2KJ1505 - ■HK13 - ■■L1**		117
	62	1 159	1.4	23.54		**2KJ1505 - ■HK13 - ■■K1**		117
	74	972	1.6	19.75		**2KJ1505 - ■HK13 - ■■J1**		117
	86	829	1.8	16.85	★	**2KJ1505 - ■HK13 - ■■H1**		117
	104	691	2.1	14.04		**2KJ1505 - ■HK13 - ■■G1**		117
	125	573	2.3	11.64	★	**2KJ1505 - ■HK13 - ■■F1**		117
	130	552	1.5	11.21		**2KJ1505 - ■HK13 - ■■E1**		117
	155	463	1.6	9.41		**2KJ1505 - ■HK13 - ■■D1**		117
	181	395	1.8	8.03	★	**2KJ1505 - ■HK13 - ■■C1**		117
	217	329	2.1	6.69		**2KJ1505 - ■HK13 - ■■B1**		117
	263	273	2.4	5.54	★	**2KJ1505 - ■HK13 - ■■A1**		117
	K.68-LA132ZMP4E							
	77	932	0.88	18.93	★	**2KJ1504 - ■HK13 - ■■L1**		87
	86	831	0.99	16.89		**2KJ1504 - ■HK13 - ■■K1**		87
	101	706	1.1	14.35		**2KJ1504 - ■HK13 - ■■J1**		87
	122	588	1.3	11.94	★	**2KJ1504 - ■HK13 - ■■H1**		87
	140	512	0.82	10.4	★	**2KJ1504 - ■HK13 - ■■F1**		87
	153	469	0.88	9.52		**2KJ1504 - ■HK13 - ■■E1**		87
	171	418	0.95	8.5	★	**2KJ1504 - ■HK13 - ■■D1**		87
	192	373	1.0	7.58		**2KJ1504 - ■HK13 - ■■C1**		87
	226	317	1.2	6.44		**2KJ1504 - ■HK13 - ■■B1**		87
	271	264	1.3	5.36	★	**2KJ1504 - ■HK13 - ■■A1**		87
9.2	**K.188-Z88-LA160MB4E**							
	3.4	24 013	0.83	429	★	**2KJ1543 - ■JP13 - ■■E1**		847
	K.188-LA160MB4E							
	7.6	11 554	1.7	191.34		**2KJ1511 - ■JP13 - ■■U1**		800
	8.4	10 433	1.9	172.78		**2KJ1511 - ■JP13 - ■■T1**		800

★ Preferred transmission ratio

Shaft designs, see page 4/83 — **1, 2, 3, 5, 6 or 9**

Frequency and voltage, see page 8/20 — **1 to 9**

Gearbox housing mounting position, see page 4/87 — **A, D, E, F, H or M**

*) For mounting type B3

© Siemens AG 2011

Selection and ordering data (continued)

Power rating P_{Motor} kW (50 Hz)	Output speed n_2 (50 Hz) rpm	Output torque T_2 Nm	Service factor f_B	Gearbox ratio i_{tot}		Order No.	Order code (No. of poles)	Weight *) kg
9.2	**K.188-LA160MB4E**							
	9.0	9 778	2.0	161.92		**2KJ1511 - ■JP13 - ■■S1**		800
	K.168-LA160MB4E							
	6.8	12 882	1.0	213.33	★	**2KJ1510 - ■JP13 - ■■D2**		551
	7.3	12 049	1.1	199.54		**2KJ1510 - ■JP13 - ■■C2**		551
	8.2	10 714	1.3	177.43	★	**2KJ1510 - ■JP13 - ■■B2**		551
	8.7	10 114	1.3	167.5		**2KJ1510 - ■JP13 - ■■A2**		551
	9.7	9 079	1.5	150.36	★	**2KJ1510 - ■JP13 - ■■X1**		551
	10.5	8 333	1.6	138		**2KJ1510 - ■JP13 - ■■W1**		551
	12.2	7 191	1.9	119.09		**2KJ1510 - ■JP13 - ■■V1**		551
	14.0	6 291	2.1	104.18		**2KJ1510 - ■JP13 - ■■U1**		551
	K.148-LA160MB4E							
	9.2	9 597	0.83	158.93		**2KJ1508 - ■JP13 - ■■E2**		366
	10.2	8 599	0.93	142.41	★	**2KJ1508 - ■JP13 - ■■D2**		366
	11.1	7 940	1.0	131.49		**2KJ1508 - ■JP13 - ■■C2**		366
	13.0	6 784	1.2	112.35		**2KJ1508 - ■JP13 - ■■B2**		366
	14.3	6 131	1.3	101.53	★	**2KJ1508 - ■JP13 - ■■A2**		366
	14.9	5 907	1.4	97.82		**2KJ1508 - ■JP13 - ■■X1**		366
	17.2	5 109	1.6	84.61		**2KJ1508 - ■JP13 - ■■W1**		366
	19.7	4 456	1.8	73.8	★	**2KJ1508 - ■JP13 - ■■V1**		366
	23	3 814	2.1	63.16	★	**2KJ1508 - ■JP13 - ■■U1**		366
	26	3 416	2.3	56.57		**2KJ1508 - ■JP13 - ■■T1**		366
	K.128-LA160MB4E							
	14.9	5 884	0.80	97.44		**2KJ1507 - ■JP13 - ■■W1**		266
	16.9	5 192	0.91	85.98	★	**2KJ1507 - ■JP13 - ■■V1**		266
	19.9	4 419	1.1	73.18		**2KJ1507 - ■JP13 - ■■U1**		266
	23	3 829	1.2	63.41	★	**2KJ1507 - ■JP13 - ■■T1**		266
	27	3 222	1.5	53.36	★	**2KJ1507 - ■JP13 - ■■S1**		266
	30	2 907	1.6	48.14		**2KJ1507 - ■JP13 - ■■R1**		266
	35	2 499	1.9	41.38	★	**2KJ1507 - ■JP13 - ■■Q1**		266
	37	2 366	2.0	39.19	★	**2KJ1507 - ■JP13 - ■■P1**		266
	40	2 169	2.2	35.92		**2KJ1507 - ■JP13 - ■■N1**		266
	48	1 848	2.5	30.61		**2KJ1507 - ■JP13 - ■■M1**		266
	54	1 632	2.9	27.02	★	**2KJ1507 - ■JP13 - ■■L1**		266
	K.108-LA160MB4E							
	24	3 697	0.81	61.22	★	**2KJ1506 - ■JP13 - ■■R1**		195
	28	3 145	0.95	52.08		**2KJ1506 - ■JP13 - ■■Q1**		195
	33	2 684	1.1	44.44	★	**2KJ1506 - ■JP13 - ■■P1**		195
	40	2 200	1.3	36.44	★	**2KJ1506 - ■JP13 - ■■N1**		195
	43	2 045	1.5	33.87	★	**2KJ1506 - ■JP13 - ■■M1**		195
	47	1 887	1.6	31.25		**2KJ1506 - ■JP13 - ■■L1**		195
	55	1 599	1.8	26.48		**2KJ1506 - ■JP13 - ■■K1**		195
	63	1 394	2.0	23.08	★	**2KJ1506 - ■JP13 - ■■J1**		195
	74	1 185	2.2	19.63		**2KJ1506 - ■JP13 - ■■G1**		195

★ Preferred transmission ratio

Shaft designs, see page 4/83 — **1, 2, 3, 5, 6 or 9**

Frequency and voltage, see page 8/20 — **1 to 9**

Gearbox housing mounting position, see page 4/87 — **A, D, E, F, H or M**

*) For mounting type B3

© Siemens AG 2011

Selection and ordering data (continued)

Power rating P_{Motor} kW (50 Hz)	Output speed n_2 (50 Hz) rpm	Output torque T_2 Nm	Service factor f_B	Gearbox ratio i_{tot}		Order No.	Order code (No. of poles)	Weight *) kg
9.2	**K.108-LA160MB4E**							
	87	1 011	2.5	16.75	★	**2KJ1506 - ■JP13 - ■■F1**		195
	106	830	2.8	13.74	★	**2KJ1506 - ■JP13 - ■■E1**		195
	113	779	2.5	12.9	★	**2KJ1506 - ■JP13 - ■■D1**		195
	133	662	2.8	10.97		**2KJ1506 - ■JP13 - ■■C1**		195
	155	565	3.1	9.36	★	**2KJ1506 - ■JP13 - ■■B1**		195
	189	464	3.6	7.68	★	**2KJ1506 - ■JP13 - ■■A1**		195
	K.88-LA160MB4E							
	47	1 864	0.89	30.87	★	**2KJ1505 - ■JP13 - ■■N1**		141
	51	1 721	0.96	28.5		**2KJ1505 - ■JP13 - ■■M1**		141
	57	1 542	1.1	25.53	★	**2KJ1505 - ■JP13 - ■■L1**		141
	62	1 421	1.2	23.54		**2KJ1505 - ■JP13 - ■■K1**		141
	74	1 193	1.3	19.75		**2KJ1505 - ■JP13 - ■■J1**		141
	86	1 017	1.5	16.85	★	**2KJ1505 - ■JP13 - ■■H1**		141
	104	848	1.7	14.04		**2KJ1505 - ■JP13 - ■■G1**		141
	125	703	1.9	11.64	★	**2KJ1505 - ■JP13 - ■■F1**		141
	130	677	1.2	11.21		**2KJ1505 - ■JP13 - ■■E1**		141
	155	568	1.3	9.41		**2KJ1505 - ■JP13 - ■■D1**		141
	181	485	1.5	8.03	★	**2KJ1505 - ■JP13 - ■■C1**		141
	217	404	1.7	6.69		**2KJ1505 - ■JP13 - ■■B1**		141
	263	335	1.9	5.54	★	**2KJ1505 - ■JP13 - ■■A1**		141
11	**K.188-LG180LA8**							
	4.2	25 035	0.80	172.78		**2KJ1511 - ■KM13 - ■■T1**	**P02**	882
	4.5	23 462	0.85	161.92		**2KJ1511 - ■KM13 - ■■S1**	**P02**	882
	K.188-LA160ZLP6E							
	5.0	20 938	0.96	191.34		**2KJ1511 - ■JT13 - ■■U1**	**P01**	812
	5.6	18 907	1.1	172.78		**2KJ1511 - ■JT13 - ■■T1**	**P01**	812
	5.9	17 718	1.1	161.92		**2KJ1511 - ■JT13 - ■■S1**	**P01**	812
	6.9	15 219	1.3	139.08	★	**2KJ1511 - ■JT13 - ■■R1**	**P01**	812
	K.188-LA160MP4E							
	7.6	13 767	1.5	191.34		**2KJ1511 - ■JQ13 - ■■U1**		800
	8.5	12 432	1.6	172.78		**2KJ1511 - ■JQ13 - ■■T1**		800
	9.0	11 650	1.7	161.92		**2KJ1511 - ■JQ13 - ■■S1**		800
	10.5	10 007	2.0	139.08	★	**2KJ1511 - ■JQ13 - ■■R1**		800
	K.168-LA160MP4E							
	6.8	15 350	0.88	213.33	★	**2KJ1510 - ■JQ13 - ■■D2**		551
	7.3	14 357	0.94	199.54		**2KJ1510 - ■JQ13 - ■■C2**		551
	8.2	12 766	1.1	177.43	★	**2KJ1510 - ■JQ13 - ■■B2**		551
	8.7	12 052	1.1	167.5		**2KJ1510 - ■JQ13 - ■■A2**		551
	9.7	10 819	1.2	150.36	★	**2KJ1510 - ■JQ13 - ■■X1**		551
	10.6	9 929	1.4	138		**2KJ1510 - ■JQ13 - ■■W1**		551
	12.3	8 569	1.6	119.09		**2KJ1510 - ■JQ13 - ■■V1**		551
	14.0	7 496	1.8	104.18		**2KJ1510 - ■JQ13 - ■■U1**		551
	16.1	6 519	2.1	90.6		**2KJ1510 - ■JQ13 - ■■T1**		551

★ Preferred transmission ratio

Shaft designs, see page 4/83 — **1, 2, 3, 5, 6 or 9**

Frequency and voltage, see page 8/20 — **1 to 9**

Gearbox housing mounting position, see page 4/87 — **A, D, E, F, H or M**

*) For mounting type B3

© Siemens AG 2011

Selection and ordering data (continued)

Power rating P_{Motor} kW (50 Hz)	Output speed n_2 (50 Hz) rpm	Output torque T_2 Nm	Service factor f_B	Gearbox ratio i_{tot}		Order No.	Order code (No. of poles)	Weight *) kg
11	**K.148-LA160MP4E**							
	11.1	9 461	0.85	131.49		**2KJ1508 - ■JQ13 - ■■C2**		366
	13.0	8 084	0.99	112.35		**2KJ1508 - ■JQ13 - ■■B2**		366
	14.4	7 305	1.1	101.53	★	**2KJ1508 - ■JQ13 - ■■A2**		366
	14.9	7 038	1.1	97.82		**2KJ1508 - ■JQ13 - ■■X1**		366
	17.3	6 088	1.3	84.61		**2KJ1508 - ■JQ13 - ■■W1**		366
	19.8	5 310	1.5	73.8	★	**2KJ1508 - ■JQ13 - ■■V1**		366
	23	4 544	1.8	63.16	★	**2KJ1508 - ■JQ13 - ■■U1**		366
	26	4 070	2.0	56.57		**2KJ1508 - ■JQ13 - ■■T1**		366
	30	3 447	2.3	47.91	★	**2KJ1508 - ■JQ13 - ■■R1**		366
	K.128-LA160MP4E							
	20	5 265	0.89	73.18		**2KJ1507 - ■JQ13 - ■■U1**		266
	23	4 562	1.0	63.41	★	**2KJ1507 - ■JQ13 - ■■T1**		266
	27	3 839	1.2	53.36	★	**2KJ1507 - ■JQ13 - ■■S1**		266
	30	3 464	1.4	48.14		**2KJ1507 - ■JQ13 - ■■R1**		266
	35	2 977	1.6	41.38	★	**2KJ1507 - ■JQ13 - ■■Q1**		266
	37	2 820	1.7	39.19	★	**2KJ1507 - ■JQ13 - ■■P1**		266
	41	2 585	1.8	35.92		**2KJ1507 - ■JQ13 - ■■N1**		266
	48	2 202	2.1	30.61		**2KJ1507 - ■JQ13 - ■■M1**		266
	54	1 944	2.4	27.02	★	**2KJ1507 - ■JQ13 - ■■L1**		266
	64	1 654	2.8	22.99		**2KJ1507 - ■JQ13 - ■■K1**		266
	116	904	3.6	12.56		**2KJ1507 - ■JQ13 - ■■E1**		266
	K.108-LA160MP4E							
	28	3 747	0.80	52.08		**2KJ1506 - ■JQ13 - ■■Q1**		195
	33	3 198	0.94	44.44	★	**2KJ1506 - ■JQ13 - ■■P1**		195
	40	2 622	1.1	36.44	★	**2KJ1506 - ■JQ13 - ■■N1**		195
	43	2 437	1.2	33.87	★	**2KJ1506 - ■JQ13 - ■■M1**		195
	47	2 249	1.3	31.25		**2KJ1506 - ■JQ13 - ■■L1**		195
	55	1 905	1.5	26.48		**2KJ1506 - ■JQ13 - ■■K1**		195
	63	1 661	1.7	23.08	★	**2KJ1506 - ■JQ13 - ■■J1**		195
	74	1 412	1.9	19.63		**2KJ1506 - ■JQ13 - ■■G1**		195
	87	1 205	2.1	16.75	★	**2KJ1506 - ■JQ13 - ■■F1**		195
	106	989	2.4	13.74	★	**2KJ1506 - ■JQ13 - ■■E1**		195
	113	928	2.1	12.9	★	**2KJ1506 - ■JQ13 - ■■D1**		195
	133	789	2.3	10.97		**2KJ1506 - ■JQ13 - ■■C1**		195
	156	673	2.6	9.36	★	**2KJ1506 - ■JQ13 - ■■B1**		195
	190	553	3.0	7.68	★	**2KJ1506 - ■JQ13 - ■■A1**		195
	K.88-LA160MP4E							
	51	2 051	0.80	28.5		**2KJ1505 - ■JQ13 - ■■M1**		141
	57	1 837	0.90	25.53	★	**2KJ1505 - ■JQ13 - ■■L1**		141
	62	1 694	0.97	23.54		**2KJ1505 - ■JQ13 - ■■K1**		141
	74	1 421	1.1	19.75		**2KJ1505 - ■JQ13 - ■■J1**		141
	87	1 212	1.2	16.85	★	**2KJ1505 - ■JQ13 - ■■H1**		141
	104	1 010	1.4	14.04		**2KJ1505 - ■JQ13 - ■■G1**		141

★ Preferred transmission ratio

Shaft designs, see page 4/83 — **1, 2, 3, 5, 6 or 9**

Frequency and voltage, see page 8/20 — **1 to 9**

Gearbox housing mounting position, see page 4/87 — **A, D, E, F, H or M**

*) For mounting type B3

© Siemens AG 2011

Selection and ordering data (continued)

Power rating P_{Motor} kW (50 Hz)	Output speed n_2 (50 Hz) rpm	Output torque T_2 Nm	Service factor f_B	Gearbox ratio i_{tot}		Order No.	Order code (No. of poles)	Weight *) kg
11	**K.88-LA160MP4E**							
	125	838	1.6	11.64	★	**2KJ1505 - ■JQ13 - ■■F1**		141
	130	807	1.0	11.21		**2KJ1505 - ■JQ13 - ■■E1**		141
	155	677	1.1	9.41		**2KJ1505 - ■JQ13 - ■■D1**		141
	182	578	1.3	8.03	★	**2KJ1505 - ■JQ13 - ■■C1**		141
	218	481	1.4	6.69		**2KJ1505 - ■JQ13 - ■■B1**		141
	264	399	1.6	5.54	★	**2KJ1505 - ■JQ13 - ■■A1**		141
15	**K.188-LG180ZLB6E**							
	6.0	23 790	0.84	161.92		**2KJ1511 - ■KP13 - ■■S1**	**P01**	882
	7.0	20 434	0.98	139.08	★	**2KJ1511 - ■KP13 - ■■R1**	**P01**	882
	K.188-LA160ZLP4E							
	7.6	18 774	1.1	191.34		**2KJ1511 - ■JT13 - ■■U1**		812
	8.5	16 953	1.2	172.78		**2KJ1511 - ■JT13 - ■■T1**		812
	9.0	15 887	1.3	161.92		**2KJ1511 - ■JT13 - ■■S1**		812
	10.5	13 646	1.5	139.08	★	**2KJ1511 - ■JT13 - ■■R1**		812
	12.2	11 790	1.7	120.16		**2KJ1511 - ■JT13 - ■■Q1**		812
	13.8	10 407	1.9	106.07		**2KJ1511 - ■JT13 - ■■P1**		812
	15.3	9 368	2.1	95.48	★	**2KJ1511 - ■JT13 - ■■N1**		812
	K.168-LA160ZLP4E							
	8.7	16 435	0.82	167.5		**2KJ1510 - ■JT13 - ■■A2**		563
	9.7	14 753	0.92	150.36	★	**2KJ1510 - ■JT13 - ■■X1**		563
	10.6	13 540	1.0	138		**2KJ1510 - ■JT13 - ■■W1**		563
	12.3	11 685	1.2	119.09		**2KJ1510 - ■JT13 - ■■V1**		563
	14.0	10 222	1.3	104.18		**2KJ1510 - ■JT13 - ■■U1**		563
	16.1	8 889	1.5	90.6		**2KJ1510 - ■JT13 - ■■T1**		563
	18.4	7 799	1.7	79.49	★	**2KJ1510 - ■JT13 - ■■S1**		563
	22	6 595	2.0	67.22	★	**2KJ1510 - ■JT13 - ■■R1**		563
	24	5 984	2.3	60.99		**2KJ1510 - ■JT13 - ■■Q1**		563
	K.148-LA160ZLP4E							
	14.4	9 962	0.80	101.53	★	**2KJ1508 - ■JT13 - ■■A2**		378
	14.9	9 598	0.83	97.82		**2KJ1508 - ■JT13 - ■■X1**		378
	17.3	8 302	0.96	84.61		**2KJ1508 - ■JT13 - ■■W1**		378
	19.8	7 241	1.1	73.8	★	**2KJ1508 - ■JT13 - ■■V1**		378
	23	6 197	1.3	63.16	★	**2KJ1508 - ■JT13 - ■■U1**		378
	26	5 550	1.4	56.57		**2KJ1508 - ■JT13 - ■■T1**		378
	30	4 701	1.7	47.91	★	**2KJ1508 - ■JT13 - ■■R1**		378
	35	4 060	2.0	41.38		**2KJ1508 - ■JT13 - ■■Q1**		378
	47	3 051	2.6	31.1	★	**2KJ1508 - ■JT13 - ■■N1**		378
	48	3 016	2.7	30.74		**2KJ1508 - ■JT13 - ■■M1**		378
	K.128-LA160ZLP4E							
	27	5 235	0.9	53.36	★	**2KJ1507 - ■JT13 - ■■S1**		278
	30	4 723	1.0	48.14		**2KJ1507 - ■JT13 - ■■R1**		278
	35	4 060	1.2	41.38	★	**2KJ1507 - ■JT13 - ■■Q1**		278
	37	3 845	1.2	39.19	★	**2KJ1507 - ■JT13 - ■■P1**		278

★ Preferred transmission ratio

Shaft designs, see page 4/83 — **1, 2, 3, 5, 6 or 9**

Frequency and voltage, see page 8/20 — **1 to 9**

Gearbox housing mounting position, see page 4/87 — **A, D, E, F, H or M**

*) For mounting type B3

© Siemens AG 2011

Selection and ordering data (continued)

Power rating P_{Motor} kW (50 Hz)	Output speed n_2 (50 Hz) rpm	Output torque T_2 Nm	Service factor f_B	Gearbox ratio i_{tot}		Order No.	Order code (No. of poles)	Weight *) kg
15	**K.128-LA160ZLP4E**							
	41	3 524	1.3	35.92		**2KJ1507 - ■JT13 - ■■N1**		278
	48	3 003	1.6	30.61		**2KJ1507 - ■JT13 - ■■M1**		278
	54	2 651	1.8	27.02	★	**2KJ1507 - ■JT13 - ■■L1**		278
	64	2 256	2.1	22.99		**2KJ1507 - ■JT13 - ■■K1**		278
	73	1 954	2.4	19.92	★	**2KJ1507 - ■JT13 - ■■J1**		278
	87	1 644	2.9	16.76	★	**2KJ1507 - ■JT13 - ■■H1**		278
	96	1 485	3.1	15.13		**2KJ1507 - ■JT13 - ■■G1**		278
	112	1 276	3.5	13	★	**2KJ1507 - ■JT13 - ■■F1**		278
	116	1 232	2.6	12.56		**2KJ1507 - ■JT13 - ■■E1**		278
	134	1 068	2.9	10.88	★	**2KJ1507 - ■JT13 - ■■D1**		278
	159	899	3.3	9.16	★	**2KJ1507 - ■JT13 - ■■C1**		278
	177	810	3.5	8.26		**2KJ1507 - ■JT13 - ■■B1**		278
	206	697	3.9	7.1	★	**2KJ1507 - ■JT13 - ■■A1**		278
	K.108-LA160ZLP4E							
	43	3 323	0.90	33.87	★	**2KJ1506 - ■JT13 - ■■M1**		207
	47	3 066	0.98	31.25		**2KJ1506 - ■JT13 - ■■L1**		207
	55	2 598	1.1	26.48		**2KJ1506 - ■JT13 - ■■K1**		207
	63	2 265	1.2	23.08	★	**2KJ1506 - ■JT13 - ■■J1**		207
	74	1 926	1.4	19.63		**2KJ1506 - ■JT13 - ■■G1**		207
	87	1 643	1.5	16.75	★	**2KJ1506 - ■JT13 - ■■F1**		207
	106	1 348	1.8	13.74	★	**2KJ1506 - ■JT13 - ■■E1**		207
	113	1 266	1.5	12.9	★	**2KJ1506 - ■JT13 - ■■D1**		207
	133	1 076	1.7	10.97		**2KJ1506 - ■JT13 - ■■C1**		207
	156	918	1.9	9.36	★	**2KJ1506 - ■JT13 - ■■B1**		207
	190	754	2.2	7.68	★	**2KJ1506 - ■JT13 - ■■A1**		207
	K.88-LA160ZLP4E							
	74	1 938	0.81	19.75		**2KJ1505 - ■JT13 - ■■J1**		153
	87	1 653	0.91	16.85	★	**2KJ1505 - ■JT13 - ■■H1**		153
	104	1 378	1.0	14.04		**2KJ1505 - ■JT13 - ■■G1**		153
	125	1 142	1.2	11.64	★	**2KJ1505 - ■JT13 - ■■F1**		153
	155	923	0.83	9.41		**2KJ1505 - ■JT13 - ■■D1**		153
	182	788	0.92	8.03	★	**2KJ1505 - ■JT13 - ■■C1**		153
	218	656	1.0	6.69		**2KJ1505 - ■JT13 - ■■B1**		153
	264	544	1.2	5.54	★	**2KJ1505 - ■JT13 - ■■A1**		153
18.5	**K.188-LG180ZMB4E**							
	7.7	22 997	0.87	191.34		**2KJ1511 - ■KL13 - ■■U1**		867
	8.5	20 766	0.96	172.78		**2KJ1511 - ■KL13 - ■■T1**		867
	9.1	19 461	1.0	161.92		**2KJ1511 - ■KL13 - ■■S1**		867
	10.6	16 716	1.2	139.08	★	**2KJ1511 - ■KL13 - ■■R1**		867
	12.2	14 442	1.4	120.16		**2KJ1511 - ■KL13 - ■■Q1**		867
	13.9	12 748	1.6	106.07		**2KJ1511 - ■KL13 - ■■P1**		867
	15.4	11 475	1.7	95.48	★	**2KJ1511 - ■KL13 - ■■N1**		867
	18.6	9 522	2.1	79.23	★	**2KJ1511 - ■KL13 - ■■M1**		867

★ Preferred transmission ratio

Shaft designs, see page 4/83 — **1, 2, 3, 5, 6 or 9**

Frequency and voltage, see page 8/20 — **1 to 9**

Gearbox housing mounting position, see page 4/87 — **A, D, E, F, H or M**

*) For mounting type B3

© Siemens AG 2011

Selection and ordering data (continued)

Power rating P_{Motor} kW (50 Hz)	Output speed n_2 (50 Hz) rpm	Output torque T_2 Nm	Service factor f_B	Gearbox ratio i_{tot}		Order No.	Order code (No. of poles)	Weight *) kg
18.5	**K.188-LG180ZMB4E**							
	20	8 682	2.3	72.24		**2KJ1511 - ■KL13 - ■■L1**		867
	K.168-LG180ZMB4E							
	10.7	16 586	0.81	138		**2KJ1510 - ■KL13 - ■■W1**		618
	12.3	14 313	0.94	119.09		**2KJ1510 - ■KL13 - ■■V1**		618
	14.1	12 521	1.1	104.18		**2KJ1510 - ■KL13 - ■■U1**		618
	16.2	10 889	1.2	90.6		**2KJ1510 - ■KL13 - ■■T1**		618
	18.5	9 554	1.4	79.49	★	**2KJ1510 - ■KL13 - ■■S1**		618
	22	8 079	1.7	67.22	★	**2KJ1510 - ■KL13 - ■■R1**		618
	24	7 330	1.8	60.99		**2KJ1510 - ■KL13 - ■■Q1**		618
	28	6 392	2.1	53.18	★	**2KJ1510 - ■KL13 - ■■P1**		618
	33	5 426	2.5	45.15		**2KJ1510 - ■KL13 - ■■N1**		618
	K.148-LG180ZMB4E							
	19.9	8 870	0.90	73.8	★	**2KJ1508 - ■KL13 - ■■V1**		433
	23	7 591	1.1	63.16	★	**2KJ1508 - ■KL13 - ■■U1**		433
	26	6 799	1.2	56.57		**2KJ1508 - ■KL13 - ■■T1**		433
	31	5 758	1.4	47.91	★	**2KJ1508 - ■KL13 - ■■R1**		433
	36	4 973	1.6	41.38		**2KJ1508 - ■KL13 - ■■Q1**		433
	47	3 738	2.1	31.1	★	**2KJ1508 - ■KL13 - ■■N1**		433
	48	3 695	2.2	30.74		**2KJ1508 - ■KL13 - ■■M1**		433
	55	3 195	2.5	26.58		**2KJ1508 - ■KL13 - ■■L1**		433
	63	2 787	2.9	23.19	★	**2KJ1508 - ■KL13 - ■■K1**		433
	167	1 056	3.8	8.79		**2KJ1508 - ■KL13 - ■■D1**		433
	198	894	4.2	7.44	★	**2KJ1508 - ■KL13 - ■■C1**		433
	K.128-LG180ZMB4E							
	30	5 786	0.81	48.14		**2KJ1507 - ■KL13 - ■■R1**		333
	36	4 973	0.95	41.38	★	**2KJ1507 - ■KL13 - ■■Q1**		333
	38	4 710	1.0	39.19	★	**2KJ1507 - ■KL13 - ■■P1**		333
	41	4 317	1.1	35.92		**2KJ1507 - ■KL13 - ■■N1**		333
	48	3 679	1.3	30.61		**2KJ1507 - ■KL13 - ■■M1**		333
	54	3 247	1.4	27.02	★	**2KJ1507 - ■KL13 - ■■L1**		333
	64	2 763	1.7	22.99		**2KJ1507 - ■KL13 - ■■K1**		333
	74	2 394	2.0	19.92	★	**2KJ1507 - ■KL13 - ■■J1**		333
	88	2 014	2.3	16.76	★	**2KJ1507 - ■KL13 - ■■H1**		333
	97	1 818	2.5	15.13		**2KJ1507 - ■KL13 - ■■G1**		333
	113	1 562	2.8	13	★	**2KJ1507 - ■KL13 - ■■F1**		333
	117	1 510	2.1	12.56		**2KJ1507 - ■KL13 - ■■E1**		333
	135	1 308	2.4	10.88	★	**2KJ1507 - ■KL13 - ■■D1**		333
	160	1 101	2.7	9.16	★	**2KJ1507 - ■KL13 - ■■C1**		333
	178	993	2.9	8.26		**2KJ1507 - ■KL13 - ■■B1**		333
	207	853	3.2	7.1	★	**2KJ1507 - ■KL13 - ■■A1**		333
	K.108-LG180ZMB4E							
	47	3 756	0.80	31.25		**2KJ1506 - ■KL13 - ■■L1**		262
	56	3 183	0.91	26.48		**2KJ1506 - ■KL13 - ■■K1**		262

★ Preferred transmission ratio

Shaft designs, see page 4/83 — **1, 2, 3, 5, 6 or 9**

Frequency and voltage, see page 8/20 — **1 to 9**

Gearbox housing mounting position, see page 4/87 — **A, D, E, F, H or M**

*) For mounting type B3

© Siemens AG 2011

Selection and ordering data (continued)

Power rating P_{Motor} kW (50 Hz)	Output speed n_2 (50 Hz) rpm	Output torque T_2 Nm	Service factor f_B	Gearbox ratio i_{tot}		Order No.	Order code (No. of poles)	Weight *) kg
18.5	**K.108-LG180ZMB4E**							
	64	2 774	1.0	23.08	★	**2KJ1506 - ■KL13 - ■■J1**		262
	75	2 359	1.1	19.63		**2KJ1506 - ■KL13 - ■■G1**		262
	88	2 013	1.2	16.75	★	**2KJ1506 - ■KL13 - ■■F1**		262
	107	1 651	1.4	13.74	★	**2KJ1506 - ■KL13 - ■■E1**		262
	114	1 550	1.2	12.9	★	**2KJ1506 - ■KL13 - ■■D1**		262
	134	1 318	1.4	10.97		**2KJ1506 - ■KL13 - ■■C1**		262
	157	1 125	1.6	9.36	★	**2KJ1506 - ■KL13 - ■■B1**		262
	191	923	1.8	7.68	★	**2KJ1506 - ■KL13 - ■■A1**		262
22	**K.188-LG180ZLB4E**							
	8.5	24 779	0.81	172.78		**2KJ1511 - ■KP13 - ■■T1**		882
	9.0	23 221	0.86	161.92		**2KJ1511 - ■KP13 - ■■S1**		882
	10.5	19 946	1.0	139.08	★	**2KJ1511 - ■KP13 - ■■R1**		882
	12.2	17 233	1.2	120.16		**2KJ1511 - ■KP13 - ■■Q1**		882
	13.8	15 212	1.3	106.07		**2KJ1511 - ■KP13 - ■■P1**		882
	15.3	13 693	1.5	95.48	★	**2KJ1511 - ■KP13 - ■■N1**		882
	18.5	11 363	1.8	79.23	★	**2KJ1511 - ■KP13 - ■■M1**		882
	20	10 360	1.9	72.24		**2KJ1511 - ■KP13 - ■■L1**		882
	23	9 090	2.2	63.38	★	**2KJ1511 - ■KP13 - ■■K1**		882
	K.168-LG180ZLB4E							
	14.1	14 941	0.9	104.18		**2KJ1510 - ■KP13 - ■■U1**		633
	16.2	12 993	1.0	90.6		**2KJ1510 - ■KP13 - ■■T1**		633
	18.4	11 400	1.2	79.49	★	**2KJ1510 - ■KP13 - ■■S1**		633
	22	9 640	1.4	67.22	★	**2KJ1510 - ■KP13 - ■■R1**		633
	24	8 747	1.5	60.99		**2KJ1510 - ■KP13 - ■■Q1**		633
	28	7 627	1.8	53.18	★	**2KJ1510 - ■KP13 - ■■P1**		633
	32	6 475	2.1	45.15		**2KJ1510 - ■KP13 - ■■N1**		633
	42	4 955	2.7	34.55	★	**2KJ1510 - ■KP13 - ■■M1**		633
	K.148-LG180ZLB4E							
	23	9 058	0.88	63.16	★	**2KJ1508 - ■KP13 - ■■U1**		448
	26	8 113	0.99	56.57		**2KJ1508 - ■KP13 - ■■T1**		448
	31	6 871	1.2	47.91	★	**2KJ1508 - ■KP13 - ■■R1**		448
	35	5 934	1.3	41.38		**2KJ1508 - ■KP13 - ■■Q1**		448
	47	4 460	1.8	31.1	★	**2KJ1508 - ■KP13 - ■■N1**		448
	48	4 409	1.8	30.74		**2KJ1508 - ■KP13 - ■■M1**		448
	55	3 812	2.1	26.58		**2KJ1508 - ■KP13 - ■■L1**		448
	63	3 326	2.4	23.19	★	**2KJ1508 - ■KP13 - ■■K1**		448
	74	2 845	2.8	19.84	★	**2KJ1508 - ■KP13 - ■■J1**		448
	82	2 548	3.1	17.77		**2KJ1508 - ■KP13 - ■■H1**		448
	97	2 158	3.5	15.05	★	**2KJ1508 - ■KP13 - ■■G1**		448
	167	1 261	3.2	8.79		**2KJ1508 - ■KP13 - ■■D1**		448
	197	1 067	3.5	7.44	★	**2KJ1508 - ■KP13 - ■■C1**		448
	228	922	3.9	6.43		**2KJ1508 - ■KP13 - ■■B1**		448
	303	693	4.8	4.83	★	**2KJ1508 - ■KP13 - ■■A1**		448

★ Preferred transmission ratio

Shaft designs, see page 4/83 — **1, 2, 3, 5, 6 or 9**

Frequency and voltage, see page 8/20 — **1 to 9**

Gearbox housing mounting position, see page 4/87 — **A, D, E, F, H or M**

*) For mounting type B3

© Siemens AG 2011

Selection and ordering data (continued)

Power rating P_{Motor} kW (50 Hz)	Output speed n_2 (50 Hz) rpm	Output torque T_2 Nm	Service factor f_B	Gearbox ratio i_{tot}		Order No.	Order code (No. of poles)	Weight *) kg
22	**K.128-LG180ZLB4E**							
	37	5 620	0.84	39.19	★	**2KJ1507 - ■KP13 - ■■P1**		348
	41	5 151	0.91	35.92		**2KJ1507 - ■KP13 - ■■N1**		348
	48	4 390	1.1	30.61		**2KJ1507 - ■KP13 - ■■M1**		348
	54	3 875	1.2	27.02	★	**2KJ1507 - ■KP13 - ■■L1**		348
	64	3 297	1.4	22.99		**2KJ1507 - ■KP13 - ■■K1**		348
	74	2 857	1.6	19.92	★	**2KJ1507 - ■KP13 - ■■J1**		348
	87	2 404	2.0	16.76	★	**2KJ1507 - ■KP13 - ■■H1**		348
	97	2 170	2.1	15.13		**2KJ1507 - ■KP13 - ■■G1**		348
	113	1 864	2.4	13	★	**2KJ1507 - ■KP13 - ■■F1**		348
	117	1 801	1.8	12.56		**2KJ1507 - ■KP13 - ■■E1**		348
	135	1 560	2.0	10.88	★	**2KJ1507 - ■KP13 - ■■D1**		348
	160	1 314	2.2	9.16	★	**2KJ1507 - ■KP13 - ■■C1**		348
	177	1 185	2.4	8.26		**2KJ1507 - ■KP13 - ■■B1**		348
	206	1 018	2.7	7.1	★	**2KJ1507 - ■KP13 - ■■A1**		348
	K.108-LG180ZLB4E							
	64	3 310	0.84	23.08	★	**2KJ1506 - ■KP13 - ■■J1**		277
	75	2 815	0.93	19.63		**2KJ1506 - ■KP13 - ■■G1**		277
	88	2 402	1.0	16.75	★	**2KJ1506 - ■KP13 - ■■F1**		277
	107	1 970	1.2	13.74	★	**2KJ1506 - ■KP13 - ■■E1**		277
	114	1 850	1.0	12.9	★	**2KJ1506 - ■KP13 - ■■D1**		277
	134	1 573	1.2	10.97		**2KJ1506 - ■KP13 - ■■C1**		277
	157	1 342	1.3	9.36	★	**2KJ1506 - ■KP13 - ■■B1**		277
	191	1 101	1.5	7.68	★	**2KJ1506 - ■KP13 - ■■A1**		277
30	**K.188-LG200LB4E**							
	12.3	23 340	0.86	120.16		**2KJ1511 - ■LM13 - ■■Q1**		932
	13.9	20 603	0.97	106.07		**2KJ1511 - ■LM13 - ■■P1**		932
	15.4	18 546	1.1	95.48	★	**2KJ1511 - ■LM13 - ■■N1**		932
	18.6	15 389	1.3	79.23	★	**2KJ1511 - ■LM13 - ■■M1**		932
	20	14 032	1.4	72.24		**2KJ1511 - ■LM13 - ■■L1**		932
	23	12 311	1.6	63.38	★	**2KJ1511 - ■LM13 - ■■K1**		932
	27	10 580	1.9	54.47		**2KJ1511 - ■LM13 - ■■J1**		932
	35	8 241	2.4	42.43	★	**2KJ1511 - ■LM13 - ■■H1**		932
	K.168-LG200LB4E							
	18.6	15 440	0.87	79.49	★	**2KJ1510 - ■LM13 - ■■S1**		683
	22	13 057	1.0	67.22	★	**2KJ1510 - ■LM13 - ■■R1**		683
	24	11 847	1.1	60.99		**2KJ1510 - ■LM13 - ■■Q1**		683
	28	10 330	1.3	53.18	★	**2KJ1510 - ■LM13 - ■■P1**		683
	33	8 770	1.5	45.15		**2KJ1510 - ■LM13 - ■■N1**		683
	43	6 711	2.0	34.55	★	**2KJ1510 - ■LM13 - ■■M1**		683
	45	6 319	2.1	32.53		**2KJ1510 - ■LM13 - ■■L1**		683
	52	5 544	2.4	28.54	★	**2KJ1510 - ■LM13 - ■■K1**		683
	61	4 689	2.9	24.14	★	**2KJ1510 - ■LM13 - ■■J1**		683
	67	4 254	3.1	21.9		**2KJ1510 - ■LM13 - ■■H1**		683

★ Preferred transmission ratio

Shaft designs, see page 4/83 — **1, 2, 3, 5, 6 or 9**

Frequency and voltage, see page 8/20 — **1 to 9**

Gearbox housing mounting position, see page 4/87 — **A, D, E, F, H or M**

*) For mounting type B3

© Siemens AG 2011

Selection and ordering data (continued)

Power rating P_{Motor} kW (50 Hz)	Output speed n_2 (50 Hz) rpm	Output torque T_2 Nm	Service factor f_B	Gearbox ratio i_{tot}		Order No.	Order code (No. of poles)	Weight *) kg
30	**K.168-LG200LB4E**							
	126	2 267	3.1	11.67		**2KJ1510 - ■LM13 - ■■D1**		683
	145	1 975	3.4	10.17	★	**2KJ1510 - ■LM13 - ■■C1**		683
	171	1 678	3.8	8.64		**2KJ1510 - ■LM13 - ■■B1**		683
	223	1 284	4.6	6.61	★	**2KJ1510 - ■LM13 - ■■A1**		683
	K.148-LG200LB4E							
	31	9 306	0.86	47.91	★	**2KJ1508 - ■LM13 - ■■R1**		498
	36	8 038	1.0	41.38		**2KJ1508 - ■LM13 - ■■Q1**		498
	47	6 041	1.3	31.1	★	**2KJ1508 - ■LM13 - ■■N1**		498
	48	5 971	1.3	30.74		**2KJ1508 - ■LM13 - ■■M1**		498
	56	5 163	1.5	26.58		**2KJ1508 - ■LM13 - ■■L1**		498
	64	4 504	1.8	23.19	★	**2KJ1508 - ■LM13 - ■■K1**		498
	74	3 854	2.1	19.84	★	**2KJ1508 - ■LM13 - ■■J1**		498
	83	3 452	2.3	17.77		**2KJ1508 - ■LM13 - ■■H1**		498
	98	2 923	2.6	15.05	★	**2KJ1508 - ■LM13 - ■■G1**		498
	113	2 525	2.9	13		**2KJ1508 - ■LM13 - ■■F1**		498
	151	1 898	3.5	9.77	★	**2KJ1508 - ■LM13 - ■■E1**		498
	168	1 707	2.3	8.79		**2KJ1508 - ■LM13 - ■■D1**		498
	198	1 445	2.6	7.44	★	**2KJ1508 - ■LM13 - ■■C1**		498
	229	1 249	2.9	6.43		**2KJ1508 - ■LM13 - ■■B1**		498
	305	938	3.5	4.83	★	**2KJ1508 - ■LM13 - ■■A1**		498
	K.128-LG200LB4E							
	55	5 248	0.9	27.02	★	**2KJ1507 - ■LM13 - ■■L1**		398
	64	4 466	1.1	22.99		**2KJ1507 - ■LM13 - ■■K1**		398
	74	3 869	1.2	19.92	★	**2KJ1507 - ■LM13 - ■■J1**		398
	88	3 255	1.4	16.76	★	**2KJ1507 - ■LM13 - ■■H1**		398
	98	2 939	1.6	15.13		**2KJ1507 - ■LM13 - ■■G1**		398
	113	2 525	1.8	13	★	**2KJ1507 - ■LM13 - ■■F1**		398
	117	2 440	1.3	12.56		**2KJ1507 - ■LM13 - ■■E1**		398
	136	2 113	1.5	10.88	★	**2KJ1507 - ■LM13 - ■■D1**		398
	161	1 779	1.6	9.16	★	**2KJ1507 - ■LM13 - ■■C1**		398
	179	1 604	1.8	8.26		**2KJ1507 - ■LM13 - ■■B1**		398
	208	1 379	2.0	7.1	★	**2KJ1507 - ■LM13 - ■■A1**		398
37	**K.188-LG225S4E**							
	15.4	22 951	0.87	95.48	★	**2KJ1511 - ■ME13 - ■■N1**		1 012
	18.6	19 045	1.1	79.23	★	**2KJ1511 - ■ME13 - ■■M1**		1 012
	20	17 365	1.2	72.24		**2KJ1511 - ■ME13 - ■■L1**		1 012
	23	15 235	1.3	63.38	★	**2KJ1511 - ■ME13 - ■■K1**		1 012
	27	13 093	1.5	54.47		**2KJ1511 - ■ME13 - ■■J1**		1 012
	35	10 199	2.0	42.43	★	**2KJ1511 - ■ME13 - ■■H1**		1 012
	43	8 240	2.4	34.28	★	**2KJ1511 - ■ME13 - ■■G1**		1 012
	52	6 839	2.9	28.45	★	**2KJ1511 - ■ME13 - ■■F1**		1 012
	K.168-LG225S4E							
	22	16 158	0.84	67.22	★	**2KJ1510 - ■ME13 - ■■R1**		763

★ Preferred transmission ratio

Shaft designs, see page 4/83 — **1, 2, 3, 5, 6 or 9**

Frequency and voltage, see page 8/20 — **1 to 9**

Gearbox housing mounting position, see page 4/87 — **A, D, E, F, H or M**

*) For mounting type B3

© Siemens AG 2011

Selection and ordering data (continued)

Power rating P_{Motor} kW (50 Hz)	Output speed n_2 (50 Hz) rpm	Output torque T_2 Nm	Service factor f_B	Gearbox ratio i_{tot}		Order No.	Order code (No. of poles)	Weight *) kg
37	**K.168-LG225S4E**							
	24	14 660	0.92	60.99		**2KJ1510 - ■ME13 - ■■Q1**		763
	28	12 783	1.1	53.18	★	**2KJ1510 - ■ME13 - ■■P1**		763
	33	10 853	1.2	45.15		**2KJ1510 - ■ME13 - ■■N1**		763
	42	8 305	1.6	34.55	★	**2KJ1510 - ■ME13 - ■■M1**		763
	45	7 819	1.7	32.53		**2KJ1510 - ■ME13 - ■■L1**		763
	52	6 860	2.0	28.54	★	**2KJ1510 - ■ME13 - ■■K1**		763
	61	5 803	2.3	24.14	★	**2KJ1510 - ■ME13 - ■■J1**		763
	67	5 264	2.5	21.9		**2KJ1510 - ■ME13 - ■■H1**		763
	77	4 589	2.7	19.09	★	**2KJ1510 - ■ME13 - ■■G1**		763
	91	3 896	3.1	16.21		**2KJ1510 - ■ME13 - ■■F1**		763
	118	2 983	3.7	12.41	★	**2KJ1510 - ■ME13 - ■■E1**		763
	126	2 805	2.5	11.67		**2KJ1510 - ■ME13 - ■■D1**		763
	145	2 445	2.7	10.17	★	**2KJ1510 - ■ME13 - ■■C1**		763
	170	2 077	3.1	8.64		**2KJ1510 - ■ME13 - ■■B1**		763
	222	1 589	3.7	6.61	★	**2KJ1510 - ■ME13 - ■■A1**		763
	K.148-LG225S4E							
	36	9 947	0.8	41.38		**2KJ1508 - ■ME13 - ■■Q1**		578
	47	7 476	1.1	31.1	★	**2KJ1508 - ■ME13 - ■■N1**		578
	48	7 389	1.1	30.74		**2KJ1508 - ■ME13 - ■■M1**		578
	55	6 389	1.3	26.58		**2KJ1508 - ■ME13 - ■■L1**		578
	63	5 574	1.4	23.19	★	**2KJ1508 - ■ME13 - ■■K1**		578
	74	4 769	1.7	19.84	★	**2KJ1508 - ■ME13 - ■■J1**		578
	83	4 271	1.9	17.77		**2KJ1508 - ■ME13 - ■■H1**		578
	98	3 618	2.1	15.05	★	**2KJ1508 - ■ME13 - ■■G1**		578
	113	3 125	2.3	13		**2KJ1508 - ■ME13 - ■■F1**		578
	150	2 348	2.8	9.77	★	**2KJ1508 - ■ME13 - ■■E1**		578
	167	2 113	1.9	8.79		**2KJ1508 - ■ME13 - ■■D1**		578
	198	1 788	2.1	7.44	★	**2KJ1508 - ■ME13 - ■■C1**		578
	229	1 546	2.3	6.43		**2KJ1508 - ■ME13 - ■■B1**		578
	304	1 161	2.9	4.83	★	**2KJ1508 - ■ME13 - ■■A1**		578
	K.128-K4-LGI225S4E							
	64	5 526	0.85	22.99		**2KJ1507 - ■ME13 - ■■K1**		478
	74	4 788	0.98	19.92	★	**2KJ1507 - ■ME13 - ■■J1**		478
	88	4 029	1.2	16.76	★	**2KJ1507 - ■ME13 - ■■H1**		478
	97	3 637	1.3	15.13		**2KJ1507 - ■ME13 - ■■G1**		478
	113	3 125	1.4	13	★	**2KJ1507 - ■ME13 - ■■F1**		478
	117	3 019	1.1	12.56		**2KJ1507 - ■ME13 - ■■E1**		478
	135	2 615	1.2	10.88	★	**2KJ1507 - ■ME13 - ■■D1**		478
	160	2 202	1.3	9.16	★	**2KJ1507 - ■ME13 - ■■C1**		478
	178	1 985	1.4	8.26		**2KJ1507 - ■ME13 - ■■B1**		478
	207	1 707	1.6	7.1	★	**2KJ1507 - ■ME13 - ■■A1**		478

★ Preferred transmission ratio

Shaft designs, see page 4/83 — **1, 2, 3, 5, 6 or 9**

Frequency and voltage, see page 8/20 — **1 to 9**

Gearbox housing mounting position, see page 4/87 — **A, D, E, F, H or M**

*) For mounting type B3

© Siemens AG 2011

Selection and ordering data (continued)

Power rating P_{Motor} kW (50 Hz)	Output speed n_2 (50 Hz) rpm	Output torque T_2 Nm	Service factor f_B	Gearbox ratio i_{tot}		Order No.	Order code (No. of poles)	Weight *) kg
45	**K.188-LG225ZM4E**							
	18.6	23 084	0.87	79.23	★	**2KJ1511 - ■MU13 - ■■M1**		1 012
	20	21 048	0.95	72.24		**2KJ1511 - ■MU13 - ■■L1**		1 012
	23	18 466	1.1	63.38	★	**2KJ1511 - ■MU13 - ■■K1**		1 012
	27	15 870	1.3	54.47		**2KJ1511 - ■MU13 - ■■J1**		1 012
	35	12 362	1.6	42.43	★	**2KJ1511 - ■MU13 - ■■H1**		1 012
	43	9 988	2.0	34.28	★	**2KJ1511 - ■MU13 - ■■G1**		1 012
	52	8 289	2.4	28.45	★	**2KJ1511 - ■MU13 - ■■F1**		1 012
	57	7 558	2.6	25.94		**2KJ1511 - ■MU13 - ■■E1**		1 012
	65	6 631	3.0	22.76	★	**2KJ1511 - ■MU13 - ■■D1**		1 012
	K.168-LG225ZM4E							
	28	15 494	0.87	53.18	★	**2KJ1510 - ■MU13 - ■■P1**		763
	33	13 155	1.0	45.15		**2KJ1510 - ■MU13 - ■■N1**		763
	43	10 066	1.3	34.55	★	**2KJ1510 - ■MU13 - ■■M1**		763
	45	9 478	1.4	32.53		**2KJ1510 - ■MU13 - ■■L1**		763
	52	8 315	1.6	28.54	★	**2KJ1510 - ■MU13 - ■■K1**		763
	61	7 033	1.9	24.14	★	**2KJ1510 - ■MU13 - ■■J1**		763
	67	6 381	2.1	21.9		**2KJ1510 - ■MU13 - ■■H1**		763
	77	5 562	2.3	19.09	★	**2KJ1510 - ■MU13 - ■■G1**		763
	91	4 723	2.5	16.21		**2KJ1510 - ■MU13 - ■■F1**		763
	119	3 616	3.0	12.41	★	**2KJ1510 - ■MU13 - ■■E1**		763
	126	3 400	2.1	11.67		**2KJ1510 - ■MU13 - ■■D1**		763
	145	2 963	2.3	10.17	★	**2KJ1510 - ■MU13 - ■■C1**		763
	171	2 517	2.5	8.64		**2KJ1510 - ■MU13 - ■■B1**		763
	223	1 926	3.0	6.61	★	**2KJ1510 - ■MU13 - ■■A1**		763
	K.148-LG225ZM4E							
	47	9 061	0.88	31.1	★	**2KJ1508 - ■MU13 - ■■N1**		578
	48	8 956	0.89	30.74		**2KJ1508 - ■MU13 - ■■M1**		578
	56	7 744	1.0	26.58		**2KJ1508 - ■MU13 - ■■L1**		578
	64	6 757	1.2	23.19	★	**2KJ1508 - ■MU13 - ■■K1**		578
	74	5 781	1.4	19.84	★	**2KJ1508 - ■MU13 - ■■J1**		578
	83	5 177	1.5	17.77		**2KJ1508 - ■MU13 - ■■H1**		578
	98	4 385	1.7	15.05	★	**2KJ1508 - ■MU13 - ■■G1**		578
	113	3 788	1.9	13		**2KJ1508 - ■MU13 - ■■F1**		578
	151	2 847	2.3	9.77	★	**2KJ1508 - ■MU13 - ■■E1**		578
	168	2 561	1.6	8.79		**2KJ1508 - ■MU13 - ■■D1**		578
	198	2 168	1.7	7.44	★	**2KJ1508 - ■MU13 - ■■C1**		578
	229	1 873	1.9	6.43		**2KJ1508 - ■MU13 - ■■B1**		578
	305	1 407	2.4	4.83	★	**2KJ1508 - ■MU13 - ■■A1**		578
	K.128-K4-LGI225ZM4E							
	74	5 797	0.81	19.92	★	**2KJ1507 - ■MU13 - ■■J1**		478
	88	4 877	0.96	16.76	★	**2KJ1507 - ■MU13 - ■■H1**		478
	98	4 403	1.1	15.13		**2KJ1507 - ■MU13 - ■■G1**		478
	113	3 783	1.2	13	★	**2KJ1507 - ■MU13 - ■■F1**		478

★ Preferred transmission ratio

Shaft designs, see page 4/83 — **1, 2, 3, 5, 6 or 9**

Frequency and voltage, see page 8/20 — **1 to 9**

Gearbox housing mounting position, see page 4/87 — **A, D, E, F, H or M**

*) For mounting type B3

© Siemens AG 2011

Selection and ordering data (continued)

Power rating P_{Motor} kW (50 Hz)	Output speed n_2 (50 Hz) rpm	Output torque T_2 Nm	Service factor f_B	Gearbox ratio i_{tot}		Order No.	Order code (No. of poles)	Weight *) kg
45	**K.128-K4-LGI225ZM4E**							
	117	3 655	0.88	12.56		**2KJ1507 - ■MU13 - ■■E1**		478
	136	3 166	0.97	10.88	★	**2KJ1507 - ■MU13 - ■■D1**		478
	161	2 666	1.1	9.16	★	**2KJ1507 - ■MU13 - ■■C1**		478
	179	2 404	1.2	8.26		**2KJ1507 - ■MU13 - ■■B1**		478
	208	2 066	1.3	7.1	★	**2KJ1507 - ■MU13 - ■■A1**		478
55	**K.188-LG250ZM4E**							
	23	22 493	0.89	63.38	★	**2KJ1511 - ■NN13 - ■■K1**		1 102
	27	19 331	1.0	54.47		**2KJ1511 - ■NN13 - ■■J1**		1 102
	35	15 058	1.3	42.43	★	**2KJ1511 - ■NN13 - ■■H1**		1 102
	43	12 166	1.6	34.28	★	**2KJ1511 - ■NN13 - ■■G1**		1 102
	52	10 097	2.0	28.45	★	**2KJ1511 - ■NN13 - ■■F1**		1 102
	57	9 206	2.2	25.94		**2KJ1511 - ■NN13 - ■■E1**		1 102
	65	8 077	2.5	22.76	★	**2KJ1511 - ■NN13 - ■■D1**		1 102
	76	6 942	2.9	19.56		**2KJ1511 - ■NN13 - ■■C1**		1 102
	97	5 405	3.5	15.23	★	**2KJ1511 - ■NN13 - ■■B1**		1 102
	K.168-LG250ZM4E							
	33	16 024	0.84	45.15		**2KJ1510 - ■NN13 - ■■N1**		853
	43	12 262	1.1	34.55	★	**2KJ1510 - ■NN13 - ■■M1**		853
	46	11 545	1.2	32.53		**2KJ1510 - ■NN13 - ■■L1**		853
	52	10 129	1.3	28.54	★	**2KJ1510 - ■NN13 - ■■K1**		853
	61	8 567	1.6	24.14	★	**2KJ1510 - ■NN13 - ■■J1**		853
	68	7 772	1.7	21.9		**2KJ1510 - ■NN13 - ■■H1**		853
	78	6 775	1.9	19.09	★	**2KJ1510 - ■NN13 - ■■G1**		853
	91	5 753	2.1	16.21		**2KJ1510 - ■NN13 - ■■F1**		853
	119	4 404	2.5	12.41	★	**2KJ1510 - ■NN13 - ■■E1**		853
	127	4 142	1.7	11.67		**2KJ1510 - ■NN13 - ■■D1**		853
	146	3 609	1.9	10.17	★	**2KJ1510 - ■NN13 - ■■C1**		853
	171	3 066	2.1	8.64		**2KJ1510 - ■NN13 - ■■B1**		853
	224	2 346	2.5	6.61	★	**2KJ1510 - ■NN13 - ■■A1**		853
	K.148-K4-LGI250ZM4E							
	56	9 433	0.85	26.58		**2KJ1508 - ■NN13 - ■■L1**		668
	64	8 230	0.97	23.19	★	**2KJ1508 - ■NN13 - ■■K1**		668
	75	7 041	1.1	19.84	★	**2KJ1508 - ■NN13 - ■■J1**		668
	83	6 307	1.3	17.77		**2KJ1508 - ■NN13 - ■■H1**		668
	98	5 341	1.4	15.05	★	**2KJ1508 - ■NN13 - ■■G1**		668
	114	4 614	1.6	13		**2KJ1508 - ■NN13 - ■■F1**		668
	151	3 467	1.9	9.77	★	**2KJ1508 - ■NN13 - ■■E1**		668
	168	3 120	1.3	8.79		**2KJ1508 - ■NN13 - ■■D1**		668
	199	2 640	1.4	7.44	★	**2KJ1508 - ■NN13 - ■■C1**		668
	230	2 282	1.6	6.43		**2KJ1508 - ■NN13 - ■■B1**		668
	306	1 714	1.9	4.83	★	**2KJ1508 - ■NN13 - ■■A1**		668

★ Preferred transmission ratio

Shaft designs, see page 4/83 — **1, 2, 3, 5, 6 or 9**

Frequency and voltage, see page 8/20 — **1 to 9**

Gearbox housing mounting position, see page 4/87 — **A, D, E, F, H or M**

*) For mounting type B3

© Siemens AG 2011

Selection and ordering data (continued)

Power rating P_{Motor} kW (50 Hz)	Output speed n_2 (50 Hz) rpm	Output torque T_2 Nm	Service factor f_B	Gearbox ratio i_{tot}		Order No.	Order code (No. of poles)	Weight *) kg
75	**K.188-K4-LGI280S4E**							
	35	20 465	0.98	42.43	★	**2KJ1511 - ■PG13 - ■■H1**		1 227
	43	16 534	1.2	34.28	★	**2KJ1511 - ■PG13 - ■■G1**		1 227
	52	13 722	1.5	28.45	★	**2KJ1511 - ■PG13 - ■■F1**		1 227
	57	12 511	1.6	25.94		**2KJ1511 - ■PG13 - ■■E1**		1 227
	65	10 978	1.8	22.76	★	**2KJ1511 - ■PG13 - ■■D1**		1 227
	76	9 434	2.1	19.56		**2KJ1511 - ■PG13 - ■■C1**		1 227
	98	7 346	2.6	15.23	★	**2KJ1511 - ■PG13 - ■■B1**		1 227
	123	5 836	3.0	12.1	★	**2KJ1511 - ■PG13 - ■■A1**		1 227
	K.168-K4-LGI280S4E							
	43	16 664	0.81	34.55	★	**2KJ1510 - ■PG13 - ■■M1**		978
	46	15 690	0.86	32.53		**2KJ1510 - ■PG13 - ■■L1**		978
	52	13 766	0.98	28.54	★	**2KJ1510 - ■PG13 - ■■K1**		978
	62	11 643	1.2	24.14	★	**2KJ1510 - ■PG13 - ■■J1**		978
	68	10 563	1.2	21.9		**2KJ1510 - ■PG13 - ■■H1**		978
	78	9 208	1.4	19.09	★	**2KJ1510 - ■PG13 - ■■G1**		978
	92	7 818	1.5	16.21		**2KJ1510 - ■PG13 - ■■F1**		978
	120	5 986	1.8	12.41	★	**2KJ1510 - ■PG13 - ■■E1**		978
	127	5 629	1.2	11.67		**2KJ1510 - ■PG13 - ■■D1**		978
	146	4 905	1.4	10.17	★	**2KJ1510 - ■PG13 - ■■C1**		978
	172	4 167	1.5	8.64		**2KJ1510 - ■PG13 - ■■B1**		978
	225	3 188	1.8	6.61	★	**2KJ1510 - ■PG13 - ■■A1**		978
90	**K.188-K4-LGI280ZM4E**							
	35	24 558	0.81	42.43	★	**2KJ1511 - ■PW13 - ■■H1**		1 267
	43	19 841	1.0	34.28	★	**2KJ1511 - ■PW13 - ■■G1**		1 267
	52	16 467	1.2	28.45	★	**2KJ1511 - ■PW13 - ■■F1**		1 267
	57	15 014	1.3	25.94		**2KJ1511 - ■PW13 - ■■E1**		1 267
	65	13 173	1.5	22.76	★	**2KJ1511 - ■PW13 - ■■D1**		1 267
	76	11 321	1.8	19.56		**2KJ1511 - ■PW13 - ■■C1**		1 267
	98	8 815	2.2	15.23	★	**2KJ1511 - ■PW13 - ■■B1**		1 267
	123	7 003	2.5	12.1	★	**2KJ1511 - ■PW13 - ■■A1**		1 267
	K.168-K4-LGI280ZM4E							
	52	16 519	0.82	28.54	★	**2KJ1510 - ■PW13 - ■■K1**		1 018
	62	13 972	0.97	24.14	★	**2KJ1510 - ■PW13 - ■■J1**		1 018
	68	12 675	1.0	21.9		**2KJ1510 - ■PW13 - ■■H1**		1 018
	78	11 049	1.1	19.09	★	**2KJ1510 - ■PW13 - ■■G1**		1 018
	92	9 382	1.3	16.21		**2KJ1510 - ■PW13 - ■■F1**		1 018
	120	7 183	1.5	12.41	★	**2KJ1510 - ■PW13 - ■■E1**		1 018
	127	6 754	1.0	11.67		**2KJ1510 - ■PW13 - ■■D1**		1 018
	146	5 886	1.1	10.17	★	**2KJ1510 - ■PW13 - ■■C1**		1 018
	172	5 001	1.3	8.64		**2KJ1510 - ■PW13 - ■■B1**		1 018
	225	3 826	1.5	6.61	★	**2KJ1510 - ■PW13 - ■■A1**		1 018

★ Preferred transmission ratio

Shaft designs, see page 4/83 — **1, 2, 3, 5, 6 or 9**

Frequency and voltage, see page 8/20 — **1 to 9**

Gearbox housing mounting position, see page 4/87 — **A, D, E, F, H or M**

*) For mounting type B3

© Siemens AG 2011

Selection and ordering data (continued)

Power rating P_{Motor} kW (50 Hz)	Output speed n_2 (50 Hz) rpm	Output torque T_2 Nm	Service factor f_B	Gearbox ratio i_{tot}		Order No.	Order code (No. of poles)	Weight *) kg
110	**K.188-K2-LGI315S4E**							
	76	13 790	1.5	19.56		**2KJ1511 - ■QQ13 - ■■C1**		1 447
	98	10 738	1.8	15.23	★	**2KJ1511 - ■QQ13 - ■■B1**		1 447
	123	8 531	2.1	12.1	★	**2KJ1511 - ■QQ13 - ■■A1**		1 447
132	**K.188-K2-LGI315ZM4E**							
	76	16 604	1.2	19.56		**2KJ1511 - ■QS13 - ■■C1**		1 502
	98	12 929	1.5	15.23	★	**2KJ1511 - ■QS13 - ■■B1**		1 502
	123	10 272	1.7	12.1	★	**2KJ1511 - ■QS13 - ■■A1**		1 502
160	**K.188-K2-LGI315L4E**							
	76	20 126	0.99	19.56		**2KJ1511 - ■QU13 - ■■C1**		1 627
	98	15 671	1.2	15.23	★	**2KJ1511 - ■QU13 - ■■B1**		1 627
	123	12 450	1.4	12.1	★	**2KJ1511 - ■QU13 - ■■A1**		1 627
200	**K.188-K2-LGI315ZLB4E**							
	76	25 074	0.80	19.56		**2KJ1511 - ■QV13 - ■■C1**		1 742
	98	19 523	0.97	15.23	★	**2KJ1511 - ■QV13 - ■■B1**		1 742
	123	15 511	1.1	12.1	★	**2KJ1511 - ■QV13 - ■■A1**		1 742

★ Preferred transmission ratio

Shaft designs, see page 4/83 — **1, 2, 3, 5, 6 or 9**

Frequency and voltage, see page 8/20 — **1 to 9**

Gearbox housing mounting position, see page 4/87 — **A, D, E, F, H or M**

*) For mounting type B3

© Siemens AG 2011

Transmission ratios and maxiumum torques

Selection and ordering data

Gearbox size	Ratio code	Transmission ratio	Output speed	Nominal torque	Permissible input torque T_1 [Nm] 2.5x the value is permissible for a brief period (e.g. motor starting torque)													
Max. gearbox torque	Order No				3	3	5	10	20	26	61	98	198	198	291	356	580	1290
	15th and 16th position	i_{tot}	n_2 (50 Hz)	T_{2N} (f_B=1)	**Motor size**													
Nm			rpm	Nm	63	71	80	90	100	112	132	160	180	220	225	250	280	315
B.28	**D2**	57.53	24	130		•												
79 ... 130	**C2**	48.51 ★	29	130		•	•											
	B2	43.07	33	130		•	•											
	A2	37.76 ★	37	130		•	•	•										
	X1	33.79	41	130		•	•	•										
	W1	29.99 ★	47	130		•	•	•										
	V1	26.28	53	130		•	•	•										
	U1	23.11 ★	61	130		•	•	•										
	T1	20.87	67	130		•	•	•	•									
	S1	18.19 ★	77	130		•	•	•										
	R1	16.34	86	130		•	•	•										
	Q1	14.75 ★	95	130		•	•	•	•									
	P1	13.38	105	130		•	•	•	•									
	N1	12.17 ★	115	130		•	•	•	•									
	M1	10.76	130	130		•	•	•	•									
	L1	9.94 ★	141	128		•	•	•	•									
	K1	8.56	164	121		•	•	•	•									
	J1	7.78 ★	180	117		•	•	•	•									
	H1	7.49	187	90		•	•	•										
	G1	6.76 ★	207	90		•	•	•	•									
	F1	6.13	228	90		•	•	•	•									
	E1	5.58 ★	251	90		•	•	•	•									
	D1	4.94	284	90		•	•	•	•									
	C1	4.56 ★	307	87		•	•	•	•									
	B1	3.92	357	82		•	•	•	•									
	A1	3.57 ★	393	79		•	•	•	•									

★ Preferred transmission ratio

[1] Only possible with integrated motor.

In the case of gearboxes of size 28, only possible with integrated motor or input unit KQ and KQS.

Calculation of maximum output torque T_{2max} for gearboxes with input units:

$T_{2max} = T_1 \times i_{tot}$, if $T_{2max} \leq T_{2N}$

If $T_{2max} \geq T_{2N}$ the max. output torque T_{2N} of the unit is the decisive factor.

© Siemens AG 2011

Selection and ordering data

Gearbox size	Ratio code	Transmission ratio	Output speed	Nominal torque	Permissible input torque T_1 [Nm] 2.5x the value is permissible for a brief period (e.g. motor starting torque)												
Max. gearbox torque	Order No 15th and 16th position	i_{tot}	n_2 (50 Hz)	T_{2N} (f_B=1)	3	3	5	10	20	26	61	98	198	198	291	356	580	1290
Nm			rpm	Nm	**Motor size** 63	71	80	90	100	112	132	160	180	220	225	250	280	315
B.38 203 … 250	**U2**	65.69	22	200		•												
	T2	57.04 ★	25	250		•	•											
	S2	50.72	29	250		•	•											
	R2	44.00 ★	33	250		•	•	•										
	Q2	41.11	35	250		•	•	•										
	P2	36.16 ★	40	250		•	•	•										
	N2	31.67	46	250		•	•	•	•									
	M2	28.01 ★	52	250		•	•	•	•									
	L2	25.38	57	250		•	•	•	•									
	K2	22.41 ★	65	250		•	•	•	•									
	J2	20.22	72	245		•	•	•	•									
	H2	18.33 ★	79	237		•	•	•	•									
	G2	16.70	87	230		•	•	•	•									
	F2	15.28 ★	95	225		•	•	•	•									
	E2	13.66	106	217		•	•	•	•									
	C2	12.50 ★	116	220		•	•	•	•									
	A2	11.05 ★	131	223		•	•	•	•									
	X1	10.02	145	221		•	•	•	•									
	U1	8.84 ★	164	236		•	•	•	•									
	S1	7.98	182	236		•	•	•	•									
	R1	7.24 ★	200	236		•	•	•	•									
	P1	6.59	220	236		•	•	•	•									
	M1	6.03 ★	240	235		•	•	•	•									
	K1	5.39	269	211		•	•	•	•									
	H1	4.95 ★	293	221		•	•	•	•									
	F1	4.46	325	213		•	•	•	•									
	C1	3.84 ★	378	203		•	•	•	•									

★ Preferred transmission ratio

[1] Only possible with integrated motor.

In the case of gearboxes of size 28, only possible with integrated motor or input unit KQ and KQS.

Calculation of maximum output torque T_{2max} for gearboxes with input units:

$T_{2max} = T_1 \times i_{tot}$, if $T_{2max} \leq T_{2N}$

If $T_{2max} \geq T_{2N}$ the max. output torque T_{2N} of the unit is the decisive factor.

© Siemens AG 2011

Transmission ratios and maxiumum torques

Selection and ordering data (continued)

Gearbox size	Ratio code Order No.	Transmission ratio		Output speed	Twisting angle [2]	Nominal torque	Permissible input torque T_1 [Nm] 2.5x the value is permissible for a brief period (e.g. motor starting torque)													
Max. gearbox torque							3	3	5	10	20	26	61	98	198	198	291	356	580	1290
Nm	15th and 16th position	i_{tot}		n_2 (50 Hz) rpm	φ arcmin	T_{2N} (f_B=1) Nm	Motor size 63	71	80	90	100	112	132	160	180	220	225	250	280	315
K.38-D.28 250	**M1**	13 129		0.11	–	250		•												
	L1	11 327	★	0.12	–	250		•	•											
	K1	9 731		0.14	–	250		•	•											
	J1	8 959	★	0.16	–	250		•	•	•										
	H1	8 144		0.17	–	250		•	•	•										
	G1	7 209	★	0.19	–	250		•	•	•										
	F1	6 038		0.23	–	250		•	•	•										
	E1	5 148	★	0.27	–	250		•	•	•										
	D1	4 376	★	0.32	–	250		•	•	•										
	C1	3 803		0.37	–	250		•	•	•										
	B1	3 310	★	0.42	–	250		•	•	•										
	A1	2 986		0.47	–	250		•	•	•										
K.38-Z.28 250	**C2**	2 797		0.50	–	250		•												
	B2	2 359	★	0.59	–	250		•	•											
	A2	2 094		0.67	–	250		•	•											
	X1	1 836		0.76	–	250		•	•	•										
	W1	1 643	★	0.85	–	250		•	•	•										
	V1	1 458		0.96	–	250		•	•	•										
	U1	1 278	★	1.10	–	250		•	•	•										
	T1	1 124		1.30	–	250		•	•	•										
	S1	1 015	★	1.40	–	250		•	•	•	•									
	R1	884		1.60	–	250		•	•	•										
	Q1	794	★	1.80	–	250		•	•	•										
	P1	717		1.90	–	250		•	•	•	•									
	N1	650	★	2.10	–	250		•	•	•	•									
	M1	592		2.40	–	250		•	•	•	•									
	L1	523	★	2.70	–	250		•	•	•	•									
	K1	483		2.90	–	250		•	•	•	•									
	J1	416		3.40	–	250		•	•	•	•									
	H1	378		3.70	–	250		•	•	•	•									
	G1	344		4.10	–	250		•	•	•	•									
	F1	312		4.50	–	250		•	•	•	•									
	E1	284		4.90	–	250		•	•	•	•									
	D1	251		5.60	–	250		•	•	•	•									
	C1	231		6.10	–	250		•	•	•	•									
	B1	199		7.00	–	250		•	•	•	•									
	A1	181		7.70	–	250		•	•	•	•									

★ Preferred transmission ratio

[1] Only possible with integrated motor.

[2] Twisting angle applies to reduced-backlash gearboxes.

In the case of gearboxes of size 18 or 28, only possible with integrated motor or input unit KQ and KQS.

Calculation of maximum output torque T_{2max} for gearboxes with input units:

$T_{2max} = T_1 \times i_{tot}$, if $T_{2max} \leq T_{2N}$

If $T_{2max} \geq T_{2N}$ the max. output torque T_{2N} of the gearbox is the decisive factor.

© Siemens AG 2011

Selection and ordering data (continued)

Gearbox size	Ratio code Order No.	Transmis-sion ratio	Output speed	Twisting angle [2]	Nominal torque	Permissible input torque T_1 [Nm] 2.5x the value is permissible for a brief period (e.g. motor starting torque)													
Max. gearbox torque						3	3	5	10	20	26	61	98	198	198	291	356	580	1290
	15th and 16th position	i_{tot}	n_2 (50 Hz)	φ	T_{2N} (f_B=1)	Motor size													
Nm			rpm	arcmin	Nm	63	71	80	90	100	112	132	160	180	220	225	250	280	315
K.38	**L2**	179.13 ★	8.1	15	250	•	•	•											
148 ... 250	**K2**	159.04	9.1	15	250	•	•	•											
	J2	139.43 ★	10.4	15	250	•	•	•	•										
	H2	124.78	11.6	15	250	•	•	•	•										
	G2	110.75 ★	13.1	15	250	•	•	•	•										
	F2	97.05	14.9	15	250	•	•	•	•										
	E2	85.33 ★	17.0	15	250	•	•	•	•										
	D2	77.09	18.8	15	250	•	•	•	•										
	C2	67.18 ★	22.0	15	250	•	•	•	•										
	B2	60.33	24.0	15	250	•	•	•	•										
	A2	54.47 ★	27.0	15	250	•	•	•	•										
	X1	49.38	29.0	15	250	•	•	•	•										
	W1	44.94 ★	32.0	15	250	•	•	•	•										
	V1	39.73	36.0	15	250	•	•	•	•										
	U1	36.69 ★	40.0	15	250	•	•	•	•										
	T1	31.59	46.0	16	250	•	•	•	•										
	S1	28.72 ★	50.0	16	250	•	•	•	•										
	R1	26.90 ★	54.0	17	216	•	•	•	•										
	Q1	24.16	60.0	17	209	•	•	•	•										
	P1	21.81 ★	66.0	17	203	•	•	•	•										
	N1	19.78	73.0	17	197	•	•	•	•										
	M1	17.99 ★	81.0	17	191	•	•	•	•										
	L1	15.91	91.0	18	184	•	•	•	•										
	K1	14.69 ★	99.0	18	180	•	•	•	•	•	• [1]								
	J1	12.65	115.0	18	172	•	•	•	•	•	• [1]								
	H1	11.50 ★	126.0	18	167	•	•	•	•	•	• [1]								
	G1	10.72 ★	135.0	24	159	•	•	•	•	•	• [1]								
	F1	9.72	149.0	24	159	•	•	•	•	•	• [1]								
	E1	8.85 ★	164.0	25	159	•	•	•	•	•	• [1]								
	D1	7.82	185.0	25	159	•	•	•	•	•	• [1]								
	C1	7.22 ★	201.0	25	159	•	•	•	•	•	• [1]								
	B1	6.22	233.0	25	152	•	•	•	•	•	• [1]								
	A1	5.65 ★	257.0	25	148	•	•	•	•	•	• [1]								

★ Preferred transmission ratio

[1] Only possible with integrated motor.

[2] Twisting angle applies to reduced-backlash gearboxes.

In the case of gearboxes of size 18 or 28, only possible with integrated motor or input unit KQ and KQS.

Calculation of maximum output torque T_{2max} for gearboxes with input units:

$T_{2max} = T_1 \times i_{tot}$, if $T_{2max} \leq T_{2N}$

If $T_{2max} \geq T_{2N}$ the max. output torque T_{2N} of the gearbox is the decisive factor.

© Siemens AG 2011

Transmission ratios and maxiumum torques

Selection and ordering data (continued)

Gearbox size	Ratio code Order No.	Transmis-sion ratio		Output speed	Twisting angle [2]	Nominal torque	Permissible input torque T_1 [Nm] 2.5x the value is permissible for a brief period (e.g. motor starting torque)													
Max. gearbox torque							3	3	5	10	20	26	61	98	198	198	291	356	580	1290
	15th and 16th position	i_{tot}		n_2 (50 Hz)	φ	T_{2N} (f_B=1)	Motor size													
Nm				rpm	arcmin	Nm	63	71	80	90	100	112	132	160	180	220	225	250	280	315
K.48-D.28 450	**M1**	13 135		0.11	–	450		•												
	L1	11 332	★	0.12	–	450		•	•											
	K1	9 735		0.14	–	450		•	•											
	J1	8 963	★	0.16	–	450		•	•	•										
	H1	8 148		0.17	–	450		•	•	•										
	G1	7 212	★	0.19	–	450		•	•	•										
	F1	6 041		0.23	–	450		•	•	•										
	E1	5 151	★	0.27	–	450		•	•	•										
	D1	4 378	★	0.32	–	450		•	•	•										
	C1	3 805		0.37	–	450		•	•	•										
	B1	3 312	★	0.42	–	450		•	•	•										
	A1	2 987		0.47	–	450		•	•	•										
K.48-Z.28 450	**C2**	2 798		0.50	–	450		•												
	B2	2 360	★	0.59	–	450		•	•											
	A2	2 095		0.67	–	450		•	•											
	X1	1 837	★	0.76	–	450		•	•	•										
	W1	1 644		0.85	–	450		•	•	•										
	V1	1 459	★	0.96	–	450		•	•	•										
	U1	1 279		1.10	–	450		•	•	•										
	T1	1 124	★	1.30	–	450		•	•	•										
	S1	1 015		1.40	–	450		•	•	•	•									
	R1	885	★	1.60	–	450		•	•	•										
	Q1	795		1.80	–	450		•	•	•										
	P1	717	★	2.00	–	450		•	•	•	•									
	N1	651		2.20	–	450		•	•	•	•									
	M1	592	★	2.40	–	450		•	•	•	•									
	L1	523		2.70	–	450		•	•	•	•									
	K1	483	★	2.90	–	450		•	•	•	•									
	J1	416		3.40	–	450		•	•	•	•									
	H1	378	★	3.70	–	450		•	•	•	•									
	G1	344	★	4.10	–	450		•	•	•	•									
	F1	312		4.50	–	450		•	•	•	•									
	E1	284	★	4.90	–	450		•	•	•	•									
	D1	251		5.60	–	450		•	•	•	•									
	C1	232	★	6.10	–	450		•	•	•	•									
	B1	199		7.00	–	450		•	•	•	•									
	A1	181	★	7.70	–	450		•	•	•	•									

★ Preferred transmission ratio
[1] Only possible with integrated motor.
[2] Twisting angle applies to reduced-backlash gearboxes.
In the case of gearboxes of size 18 or 28, only possible with integrated motor or input unit KQ and KQS.
Calculation of maximum output torque T_{2max} for gearboxes with input units:
$T_{2max} = T_1 \times i_{tot}$, if $T_{2max} \leq T_{2N}$
If $T_{2max} \geq T_{2N}$ the max. output torque T_{2N} of the gearbox is the decisive factor.

© Siemens AG 2011

Selection and ordering data (continued)

Gearbox size	Ratio code Order No.	Transmis-sion ratio	Output speed	Twisting angle [2]	Nominal torque	Permissible input torque T_1 [Nm] 2.5x the value is permissible for a brief period (e.g. motor starting torque)													
Max. gearbox torque	15th and 16th position	i_{tot}	n_2 (50 Hz)	φ	T_{2N} (f_B=1)	3	3	5	10	20	26	61	98	198	198	291	356	580	1290
						Motor size													
Nm			rpm	arcmin	Nm	63	71	80	90	100	112	132	160	180	220	225	250	280	315
K.48	**J2**	169.53 ★	8.6	14	450	•	•	•											
256 ... 450	**H2**	150.76	9.6	14	450	•	•	•											
	G2	130.78 ★	11.1	14	450	•	•	•	•										
	F2	122.19	11.9	14	450	•	•	•	•										
	E2	107.47 ★	13.5	14	450	•	•	•	•										
	D2	94.12	15.4	14	450	•	•	•	•	•									
	C2	83.25 ★	17.4	14	450	•	•	•	•	•	• [1]								
	B2	75.45	19.2	14	450	•	•	•	•	•	• [1]								
	A2	66.60 ★	22.0	14	450	•	•	•	•	•	• [1]								
	X1	60.08	24.0	14	450	•	•	•	•	•	• [1]								
	W1	54.49 ★	27.0	14	450	•	•	•	•	•	• [1]								
	V1	49.65	29.0	14	450	•	•	•	•	•	• [1]								
	U1	45.41 ★	32.0	14	450	•	•	•	•	•	• [1]								
	T1	40.60	36.0	14	450	•	•	•	•	•	• [1]								
	S1	37.28 ★	39.0	14	450	•	•	•	•	•	• [1]								
	R1	33.60	43.0	14	450	•	•	•	•	•	• [1]								
	Q1	28.90 ★	50.0	14	450	•	•	•	•	•	• [1]								
	P1	27.55 ★	53.0	16	450	•	•	•	•	•	• [1]								
	N1	24.85	58.0	16	450	•	•	•	•	•	• [1]								
	M1	22.54 ★	64.0	16	450	•	•	•	•	•	• [1]								
	L1	20.54	71.0	16	450	•	•	•	•	•	• [1]								
	K1	18.78 ★	77.0	17	450	•	•	•	•	•	• [1]								
	J1	16.79	86.0	17	450	•	•	•	•	•	• [1]								
	H1	15.42 ★	94.0	17	450	•	•	•	•	•	• [1]								
	G1	13.90	104.0	17	440	•	•	•	•	•	• [1]								
	F1	11.95 ★	121.0	17	420	•	•	•	•	•	• [1]								
	E1	11.35 ★	128.0	23	291	•	•	•	•	•	• [1]								
	D1	10.15	143.0	24	284	•	•	•	•	•	• [1]								
	C1	9.32 ★	156.0	24	277	•	•	•	•	•	• [1]								
	B1	8.40	173.0	24	268	•	•	•	•	•	• [1]								
	A1	7.22 ★	201.0	24	256	•	•	•	•	•	• [1]								

★ Preferred transmission ratio

[1] Only possible with integrated motor.

[2] Twisting angle applies to reduced-backlash gearboxes.

In the case of gearboxes of size 18 or 28, only possible with integrated motor or input unit KQ and KQS.

Calculation of maximum output torque T_{2max} for gearboxes with input units:

$T_{2max} = T_1 \times i_{tot}$, if $T_{2max} \leq T_{2N}$

If $T_{2max} \geq T_{2N}$ the max. output torque T_{2N} of the gearbox is the decisive factor.

© Siemens AG 2011

Transmission ratios and maxiumum torques

Selection and ordering data (continued)

Gearbox size	Ratio code Order No.	Transmis-sion ratio		Output speed	Twisting angle [2]	Nominal torque	Permissible input torque T_1 [Nm] 2.5x the value is permissible for a brief period (e.g. motor starting torque)													
Max. gearbox torque							3	3	5	10	20	26	61	98	198	198	291	356	580	1290
	15th and 16th position	i_{tot}		n_2 (50 Hz)	φ	T_{2N} (f_B=1)	Motor size													
Nm				rpm	arcmin	Nm	63	71	80	90	100	112	132	160	180	220	225	250	280	315
K.68-D.28 820	**M1**	20 103		0.07	–	820		•												
	L1	17 343	★	0.08	–	820		•	•											
	K1	14 900		0.09	–	820		•	•											
	J1	13 717	★	0.10	–	820		•	•	•										
	H1	12 470		0.11	–	820		•	•	•										
	G1	11 038	★	0.13	–	820		•	•	•										
	F1	9 245		0.15	–	820		•	•	•										
	E1	7 883	★	0.18	–	820		•	•	•										
	D1	6 700	★	0.21	–	820		•	•	•										
	C1	5 823		0.24	–	820		•	•	•										
	B1	5 068	★	0.28	–	820		•	•	•										
	A1	4 572		0.31	–	820		•	•	•										
K.68-Z.28 820	**C2**	4 282		0.33	–	820		•												
	B2	3 611	★	0.39	–	820		•	•											
	A2	3 206		0.44	–	820		•	•											
	X1	2 811	★	0.50	–	820		•	•	•										
	W1	2 515		0.56	–	820		•	•	•										
	V1	2 233	★	0.63	–	820		•	•	•										
	U1	1 957		0.72	–	820		•	•	•										
	T1	1 720	★	0.81	–	820		•	•	•										
	S1	1 554		0.90	–	820		•	•	•	•									
	R1	1 354	★	1.00	–	820		•	•	•										
	Q1	1 216		1.20	–	820		•	•	•										
	P1	1 098	★	1.30	–	820		•	•	•	•									
	N1	996		1.40	–	820		•	•	•	•									
	M1	906	★	1.60	–	820		•	•	•	•									
	L1	801		1.80	–	820		•	•	•	•									
	K1	740	★	1.90	–	820		•	•	•	•									
	J1	637		2.20	–	820		•	•	•	•									
	H1	579	★	2.40	–	820		•	•	•	•									
	G1	526	★	2.70	–	820		•	•	•	•									
	F1	477		2.90	–	820		•	•	•	•									
	E1	434	★	3.20	–	820		•	•	•	•									
	D1	384		3.70	–	820		•	•	•	•									
	C1	354	★	4.00	–	820		•	•	•	•									
	B1	305		4.60	–	820		•	•	•	•									
	A1	277	★	5.10	–	820		•	•	•	•									

★ Preferred transmission ratio

[1] Only possible with integrated motor.

[2] Twisting angle applies to reduced-backlash gearboxes.

In the case of gearboxes of size 18 or 28, only possible with integrated motor or input unit KQ and KQS.

Calculation of maximum output torque T_{2max} for gearboxes with input units:

$T_{2max} = T_1 \times i_{tot}$, if $T_{2max} \leq T_{2N}$

If $T_{2max} \geq T_{2N}$ the max. output torque T_{2N} of the gearbox is the decisive factor.

© Siemens AG 2011

Selection and ordering data (continued)

Gearbox size	Ratio code Order No.	Transmis-sion ratio	Output speed	Twisting angle [2]	Nominal torque	Permissible input torque T_1 [Nm] 2.5x the value is permissible for a brief period (e.g. motor starting torque)													
Max. gearbox torque	15th and 16th position	i_{tot}	n_2 (50 Hz)	φ	T_{2N} (f_B=1)	3	3	5	10	20	26	61	98	198	198	291	356	580	1290
						Motor size													
Nm			rpm	arcmin	Nm	63	71	80	90	100	112	132	160	180	220	225	250	280	315
K.68	**N2**	243.72	5.9	12	820	•	•	•											
345 ... 820	**M2**	215.68 ★	6.7	12	820	•	•	•	•										
	L2	196.07	7.4	12	820	•	•	•	•										
	K2	176.14 ★	8.2	12	820	•	•	•	•										
	J2	150.98	9.6	12	820	•	•	•	•	•									
	H2	136.60 ★	10.6	12	820	•	•	•	•	•	•								
	G2	126.09	11.5	12	820	•	•	•	•	•	•								
	F2	109.64 ★	13.2	12	820	•	•	•	•	•	•	• [1]							
	E2	99.55	14.6	12	820	•	•	•	•	•	•	• [1]							
	D2	90.89 ★	16.0	12	820	•	•	•	•	•	•	• [1]							
	C2	83.40	17.4	12	820	•	•	•	•	•	•	• [1]							
	B2	76.84 ★	18.9	12	820	•	•	•	•	•	•	• [1]							
	A2	69.78	21.0	12	820	•	•	•	•	•	•	• [1]							
	X1	63.57 ★	23.0	12	820	•	•	•	•	•	•	• [1]							
	W1	58.23	25.0	12	820	•	•	•	•	•	•	• [1]							
	V1	51.96 ★	28.0	12	820	•	•	•	•	•	•	• [1]							
	U1	46.37	31.0	12	820			•	•	•	•	• [1]							
	T1	39.39	37.0	12	820			•	•	•	•	• [1]							
	S1	32.78 ★	44.0	13	820			•	•	•	•	• [1]							
	R1	30.38	48.0	14	820	•	•	•	•	•	•	• [1]							
	Q1	27.99 ★	52.0	14	820	•	•	•	•	•	•	• [1]							
	P1	25.42	57.0	14	820	•	•	•	•	•	•	• [1]							
	N1	23.16 ★	63.0	14	820	•	•	•	•	•	•	• [1]							
	M1	21.22	68.0	14	820	•	•	•	•	•	•	• [1]							
	L1	18.93 ★	77.0	14	820	•	•	•	•	•	•	• [1]							
	K1	16.89	86.0	14	820			•	•	•	•	• [1]							
	J1	14.35	101.0	14	812			•	•	•	•	• [1]							
	H1	11.94 ★	121.0	15	768			•	•	•	•	• [1]							
	G1	11.41	127.0	21	434	•	•	•	•	•	•	• [1]							
	F1	10.40 ★	139.0	21	422	•	•	•	•	•	•	• [1]							
	E1	9.52	152.0	21	411	•	•	•	•	•	•	• [1]							
	D1	8.50 ★	171.0	21	397	•	•	•	•	•	•	• [1]							
	C1	7.58	191.0	22	383			•	•	•	•	• [1]							
	B1	6.44	225.0	22	365			•	•	•	•	• [1]							
	A1	5.36 ★	271.0	23	345			•	•	•	•	• [1]							

★ Preferred transmission ratio

[1] Only possible with integrated motor.

[2] Twisting angle applies to reduced-backlash gearboxes.

In the case of gearboxes of size 18 or 28, only possible with integrated motor or input unit KQ and KQS.

Calculation of maximum output torque T_{2max} for gearboxes with input units:

$T_{2max} = T_1 \times i_{tot}$, if $T_{2max} \leq T_{2N}$

If $T_{2max} \geq T_{2N}$ the max. output torque T_{2N} of the gearbox is the decisive factor.

© Siemens AG 2011

Transmission ratios and maxiumum torques

Selection and ordering data (continued)

Gearbox size	Ratio code Order No.	Transmis-sion ratio		Output speed	Twisting angle [2]	Nominal torque	Permissible input torque T_1 [Nm] 2.5x the value is permissible for a brief period (e.g. motor starting torque)													
Max. gearbox torque	15th and 16th position	i_{tot}		n_2 (50 Hz)	φ	T_{2N} (f_B=1)	3	3	5	10	20	26	61	98	198	198	291	356	580	1290
Nm				rpm	arcmin	Nm	Motor size 63	71	80	90	100	112	132	160	180	220	225	250	280	315
K.88-D.28	**M1**	24 920		0.06	–	1 650		•												
1 650	**L1**	21 499	★	0.07	–	1 650		•	•											
	K1	18 470		0.08	–	1 650		•	•											
	J1	17 005	★	0.08	–	1 650		•	•	•										
	H1	15 459		0.09	–	1 650		•	•	•										
	G1	13 683	★	0.10	–	1 650		•	•	•										
	F1	11 460		0.12	–	1 650		•	•	•										
	E1	9 772	★	0.14	–	1 650		•	•	•										
	D1	8 306	★	0.17	–	1 650		•	•	•										
	C1	7 218		0.19	–	1 650		•	•	•										
	B1	6 283	★	0.22	–	1 650		•	•	•										
	A1	5 667		0.25	–	1 650		•	•	•										
K.88-Z.28	**C2**	5 309		0.26	–	1 650		•												
1 650	**B2**	4 477	★	0.31	–	1 650		•	•											
	A2	3 975		0.35	–	1 650		•	•											
	X1	3 485	★	0.40	–	1 650		•	•	•										
	W1	3 118		0.45	–	1 650		•	•	•										
	V1	2 768	★	0.51	–	1 650		•	•	•										
	U1	2 426		0.58	–	1 650		•	•	•										
	T1	2 133	★	0.66	–	1 650		•	•	•										
	S1	1 926		0.73	–	1 650		•	•	•	•									
	R1	1 679	★	0.83	–	1 650		•	•	•										
	Q1	1 508		0.93	–	1 650		•	•	•										
	P1	1 361	★	1.00	–	1 650		•	•	•	•									
	N1	1 234		1.10	–	1 650		•	•	•	•									
	M1	1 123	★	1.30	–	1 650		•	•	•	•									
	L1	993		1.40	–	1 650		•	•	•	•									
	K1	917	★	1.50	–	1 650		•	•	•	•									
	J1	789		1.80	–	1 650		•	•	•	•									
	H1	718	★	2.00	–	1 650		•	•	•	•									
	G1	652	★	2.20	–	1 650		•	•	•	•									
	F1	591		2.40	–	1 650		•	•	•	•									
	E1	538	★	2.60	–	1 650		•	•	•	•									
	D1	476		2.90	–	1 650		•	•	•	•									
	C1	439	★	3.20	–	1 650		•	•	•	•									
	B1	378		3.70	–	1 650		•	•	•	•									
	A1	344	★	4.10	–	1 650		•	•	•	•									

★ Preferred transmission ratio

[1] Only possible with integrated motor.

[2] Twisting angle applies to reduced-backlash gearboxes.

In the case of gearboxes of size 18 or 28, only possible with integrated motor or input unit KQ and KQS.

Calculation of maximum output torque T_{2max} for gearboxes with input units:

$T_{2max} = T_1 \times i_{tot}$, if $T_{2max} \leq T_{2N}$

If $T_{2max} \geq T_{2N}$ the max. output torque T_{2N} of the gearbox is the decisive factor.

© Siemens AG 2011

Selection and ordering data (continued)

Gearbox size	Ratio code Order No.	Transmis-sion ratio	Output speed	Twisting angle [2]	Nominal torque	Permissible input torque T_1 [Nm] 2.5x the value is permissible for a brief period (e.g. motor starting torque)													
Max. gearbox torque						3	3	5	10	20	26	61	98	198	198	291	356	580	1290
	15th and 16th position	i_{tot}	n_2 (50 Hz)	φ	T_{2N} (f_B=1)	Motor size													
Nm			rpm	arcmin	Nm	63	71	80	90	100	112	132	160	180	220	225	250	280	315
K.88	**M2**	302.68 ★	4.8	10	1 540	•	•	•	•										
651 ... 1 650	**L2**	272.95	5.3	10	1 650	•	•	•	•										
	K2	246.13 ★	5.9	10	1 650	•	•	•	•										
	J2	215.25	6.7	10	1 650	•	•	•	•	•									
	H2	193.24 ★	7.5	10	1 650	•	•	•	•	•	•								
	G2	176.50	8.2	10	1 650	•	•	•	•	•	•								
	F2	156.63 ★	9.3	10	1 650	•	•	•	•	•	•	•							
	E2	144.58	10.0	10	1 650	•	•	•	•	•	•	•							
	D2	130.77 ★	11.1	10	1 650	•	•	•	•	•	•	•							
	C2	120.42	12.0	10	1 650	•	•	•	•	•	•	•							
	B2	111.37 ★	13.0	10	1 650	•	•	•	•	•	•	•	• [1]						
	A2	103.38	14.0	10	1 650	•	•	•	•	•	•	•	• [1]						
	X1	91.22 ★	15.9	10	1 650	•	•	•	•	•	•	•	• [1]						
	W1	84.21	17.2	10	1 650	•	•	•	•	•	•	•	• [1]						
	V1	75.45 ★	19.2	10	1 650	•	•	•	•	•	•	•	• [1]						
	U1	69.57	21.0	10	1 650			•	•	•	•	•	• [1]						
	T1	58.37	25.0	10	1 650			•	•	•	•	•	• [1]						
	S1	49.80 ★	29.0	10	1 650			•	•	•	•	•	• [1]						
	Q1	41.50	35.0	10	1 650					•	•	•	• [1]						
	P1	34.40 ★	42.0	10	1 650					•	•	•	• [1]						
	N1	30.87 ★	47.0	12	1 650	•	•	•	•	•	•	•	• [1]						
	M1	28.50	51.0	12	1 650	•	•	•	•	•	•	•	• [1]						
	L1	25.53 ★	57.0	12	1 650	•	•	•	•	•	•	•	• [1]						
	K1	23.54	62.0	12	1 650			•	•	•	•	•	• [1]						
	J1	19.75	73.0	12	1 572			•	•	•	•	•	• [1]						
	H1	16.85 ★	86.0	12	1 498			•	•	•	•	•	• [1]						
	G1	14.04	103.0	12	1 417					•	•	•	• [1]						
	F1	11.64 ★	125.0	12	1 339					•	•	•	• [1]						
	E1	11.21	129.0	18	806			•	•	•	•	•	• [1]						
	D1	9.41	154.0	18	764			•	•	•	•	•	• [1]						
	C1	8.03 ★	181.0	19	728			•	•	•	•	•	• [1]						
	B1	6.69	217.0	19	689					•	•	•	• [1]						
	A1	5.54 ★	262.0	19	651					•	•	•	• [1]						

★ Preferred transmission ratio

[1] Only possible with integrated motor.

[2] Twisting angle applies to reduced-backlash gearboxes.

In the case of gearboxes of size 18 or 28, only possible with integrated motor or input unit KQ and KQS.

Calculation of maximum output torque T_{2max} for gearboxes with input units:

$T_{2max} = T_1 \times i_{tot}$, if $T_{2max} \leq T_{2N}$

If $T_{2max} \geq T_{2N}$ the max. output torque T_{2N} of the gearbox is the decisive factor.

© Siemens AG 2011

Transmission ratios and maxiumum torques

Selection and ordering data (continued)

Gearbox size	Ratio code Order No.	Transmis-sion ratio	Output speed	Twisting angle [2]	Nominal torque	Permissible input torque T_1 [Nm] 2.5x the value is permissible for a brief period (e.g. motor starting torque)													
Max. gearbox torque						3	3	5	10	20	26	61	98	198	198	291	356	580	1290
	15th and 16th position	i_{tot}	n_2 (50 Hz)	φ	T_{2N} (f_B=1)	Motor size													
Nm			rpm	arcmin	Nm	63	71	80	90	100	112	132	160	180	220	225	250	280	315
K.108-D38 3 000	**P1**	58 914	0.02	–	3 000	•	•	•											
	N1	52 306	0.03	–	3 000	•	•	•											
	M1	45 858	0.03	–	3 000	•	•	•	•										
	L1	41 037	0.04	–	3 000	•	•	•	•										
	K1	36 423	0.04	–	3 000	•	•	•	•										
	J1	31 918	0.05	–	3 000	•	•	•	•										
	H1	28 064	0.05	–	3 000	•	•	•	•										
	G1	25 354	0.06	–	3 000	•	•	•	•										
	F1	22 093	0.07	–	3 000	•	•	•	•										
	E1	19 842	0.07	–	3 000	•	•	•	•										
	D1	17 913	0.08	–	3 000	•	•	•	•										
	C1	16 241	0.09	–	3 000	•	•	•	•										
	B1	14 778	0.10	–	3 000	•	•	•	•										
	A1	13 066	0.11	–	3 000	•	•	•	•										
K.108-Z38 3 000	**W1**	13 556	0.11	–	3 000	•	•	•											
	V1	12 055	0.12	–	3 000	•	•	•											
	U1	10 457	0.14	–	3 000	•	•	•	•										
	T1	9 771	0.15	–	3 000	•	•	•	•										
	S1	8 593	0.17	–	3 000	•	•	•	•										
	R1	7 526	0.19	–	3 000	•	•	•	•	•									
	Q1	6 657	0.22	–	3 000	•	•	•	•	•									
	P1	6 033	0.24	–	3 000	•	•	•	•	•									
	N1	5 326	0.27	–	3 000	•	•	•	•	•									
	M1	4 804	0.30	–	3 000	•	•	•	•	•									
	L1	4 357	0.33	–	3 000	•	•	•	•	•									
	K1	3 970	0.37	–	3 000	•	•	•	•	•									
	J1	3 631	0.40	–	3 000	•	•	•	•	•									
	H1	3 247	0.45	–	3 000	•	•	•	•	•									
	G1	2 981	0.49	–	3 000	•	•	•	•	•									
	F1	2 687	0.54	–	3 000	•	•	•	•	•									
	E1	2 311	0.63	–	3 000	•	•	•	•	•									
	D1	2 060	0.70	–	3 000	•	•	•	•	•									
	C1	1 892	0.77	–	3 000	•	•	•	•	•									
	B1	1 705	0.85	–	3 000	•	•	•	•	•									
	A1	1 466	0.99	–	3 000	•	•	•	•	•									
K.108-Z48 3 000	**P1**	1 343	1.08	–	3 000	•	•	•	•	•	•								
	N1	1 233	1.18	–	3 000	•	•	•	•	•	•								
	M1	1 136	1.28	–	3 000	•	•	•	•	•	•								
	L1	1 031	1.41	–	3 000	•	•	•	•	•	•								
	K1	940	1.54	–	3 000	•	•	•	•	•	•								
	J1	861	1.68	–	3 000	•	•	•	•	•	•								
	H1	768	1.89	–	3 000	•	•	•	•	•	•								
	G1	685	2.12	–	3 000			•	•	•	•								
	F1	582	2.49	–	3 000			•	•	•	•								
	E1	485	2.99	–	3 000			•	•	•	•								
	D1	477	3.04	–	3 000	•	•	•	•	•	•								
	C1	426	3.40	–	3 000			•	•	•	•								
	B1	361	4.02	–	3 000			•	•	•	•								
	A1	301	4.82	–	3 000			•	•	•	•								

★ Preferred transmission ratio
[1] Only possible with integrated motor.
[2] Twisting angle applies to reduced-backlash gearboxes.
In the case of gearboxes of size 18 or 28, only possible with integrated motor or input unit KQ and KQS.
Calculation of maximum output torque T_{2max} for gearboxes with input units:
$T_{2max} = T_1 \times i_{tot}$, if $T_{2max} \leq T_{2N}$
If $T_{2max} \geq T_{2N}$ the max. output torque T_{2N} of the gearbox is the decisive factor.

© Siemens AG 2011

Selection and ordering data (continued)

Gearbox size	Ratio code Order No.	Transmis-sion ratio	Output speed	Twisting angle [2]	Nominal torque	Permissible input torque T_1 [Nm] 2.5x the value is permissible for a brief period (e.g. motor starting torque)													
Max. gearbox torque	15th and 16th position	i_{tot}	n_2 (50 Hz)	φ	T_{2N} (f_B=1)	3	3	5	10	20	26	61	98	198	198	291	356	580	1290
						Motor size													
Nm			rpm	arcmin	Nm	63	71	80	90	100	112	132	160	180	220	225	250	280	315
K.108	**K2**	307.24	4.70	10	2 906			•	•										
1 656 ... 3 000	**J2**	278.10 ★	5.20	10	2 830			•	•										
	H2	243.47	6.00	10	3 000			•	•	•									
	G2	219.64 ★	6.60	10	3 000			•	•	•	•								
	F2	201.11	7.20	10	3 000			•	•	•	•								
	E2	178.90 ★	8.10	10	3 000			•	•	•	•	•							
	D2	163.51	8.90	10	3 000			•	•	•	•	•							
	C2	150.31 ★	9.60	10	3 000			•	•	•	•	•							
	B2	138.87	10.40	10	3 000			•	•	•	•	•							
	A2	128.86 ★	11.30	10	3 000			•	•	•	•	•	•						
	X1	120.03	12.10	10	3 000			•	•	•	•	•	•						
	W1	108.52 ★	13.40	10	3 000			•	•	•	•	•	•	• [1]					
	V1	99.90	14.50	10	3 000			•	•	•	•	•	•	• [1]					
	U1	89.85 ★	16.10	10	3 000			•	•	•	•	•	•	• [1]					
	T1	82.90	17.50	10	3 000			•	•	•	•	•	•	• [1]					
	S1	70.24	21.00	10	3 000			•	•	•	•	•	•	• [1]					
	R1	61.22 ★	24.00	10	3 000			•	•	•	•	•	•	• [1]					
	Q1	52.08	28.00	10	3 000					•	•	•	•	• [1]					
	P1	44.44 ★	33.00	10	3 000					•	•	•	•	• [1]					
	N1	36.44 ★	40.00	10	2 832					•	•	•	•	• [1]					
	M1	33.87 ★	43.00	11	3 000			•	•	•	•	•	•	• [1]					
	L1	31.25	46.00	11	3 000			•	•	•	•	•	•	• [1]					
	K1	26.48	55.00	11	2 882			•	•	•	•	•	•	• [1]					
	J1	23.08 ★	63.00	11	2 764			•	•	•	•	•	•	• [1]					
	G1	19.63	74.00	11	2 632					•	•	•	•	• [1]					
	F1	16.75 ★	87.00	11	2 509					•	•	•	•	• [1]					
	E1	13.74 ★	106.00	11	2 362					•	•	•	•	• [1]					
	D1	12.90 ★	112.00	15	1 938			•	•	•	•	•	•	• [1]					
	C1	10.97	132.00	16	1 845					•	•	•	•	• [1]					
	B1	9.36 ★	155.00	16	1 759					•	•	•	•	• [1]					
	A1	7.68 ★	189.00	16	1 656					•	•	•	•	• [1]					

★ Preferred transmission ratio

[1] Only possible with integrated motor.

[2] Twisting angle applies to reduced-backlash gearboxes.

In the case of gearboxes of size 18 or 28, only possible with integrated motor or input unit KQ and KQS.

Calculation of maximum output torque T_{2max} for gearboxes with input units:

$T_{2max} = T_1 \times i_{tot}$, if $T_{2max} \leq T_{2N}$

If $T_{2max} \geq T_{2N}$ the max. output torque T_{2N} of the gearbox is the decisive factor.

© Siemens AG 2011

Transmission ratios and maxiumum torques

Selection and ordering data (continued)

Gearbox size	Ratio code Order No.	Transmis-sion ratio		Output speed	Twisting angle [2]	Nominal torque	Permissible input torque T_1 [Nm] 2.5x the value is permissible for a brief period (e.g. motor starting torque)													
Max. gearbox torque							3	3	5	10	20	26	61	98	198	198	291	356	580	1290
	15th and 16th position	i_{tot}		n_2 (50 Hz)	φ	T_{2N} (f_B=1)	Motor size													
Nm				rpm	arcmin	Nm	63	71	80	90	100	112	132	160	180	220	225	250	280	315
K.128-D38 4 700	**P1**	56 640	★	0.03	–	4 700	•	•	•											
	N1	50 287		0.03	–	4 700	•	•	•											
	M1	44 087	★	0.03	–	4 700	•	•	•	•										
	L1	39 453		0.04	–	4 700	•	•	•	•										
	K1	35 017	★	0.04	–	4 700	•	•	•	•										
	J1	30 686		0.05	–	4 700	•	•	•	•										
	H1	26 980	★	0.05	–	4 700	•	•	•	•										
	G1	24 375		0.06	–	4 700	•	•	•	•										
	F1	21 240	★	0.07	–	4 700	•	•	•	•										
	E1	19 076		0.08	–	4 700	•	•	•	•										
	D1	17 221	★	0.08	–	4 700	•	•	•	•										
	C1	15 614		0.09	–	4 700	•	•	•	•										
	B1	14 208	★	0.10	–	4 700	•	•	•	•										
	A1	12 562		0.12	–	4 700	•	•	•	•										
K.128-Z38 4 700	**W1**	13 032	★	0.11	–	4 700	•	•	•											
	V1	11 590		0.13	–	4 700	•	•	•											
	U1	10 054	★	0.14	–	4 700	•	•	•	•										
	T1	9 394		0.15	–	4 700	•	•	•	•										
	S1	8 262	★	0.18	–	4 700	•	•	•	•										
	R1	7 236		0.20	–	4 700	•	•	•	•	•									
	Q1	6 400	★	0.23	–	4 700	•	•	•	•	•									
	P1	5 800		0.25	–	4 700	•	•	•	•	•									
	N1	5 120	★	0.28	–	4 700	•	•	•	•	•									
	M1	4 619		0.31	–	4 700	•	•	•	•	•									
	L1	41 89	★	0.35	–	4 700	•	•	•	•	•									
	K1	3 817		0.38	–	4 700	•	•	•	•	•									
	J1	3 491	★	0.42	–	4 700	•	•	•	•	•									
	H1	3 121		0.46	–	4 700	•	•	•	•	•									
	G1	2 866	★	0.51	–	4 700	•	•	•	•	•									
	F1	2 583		0.56	–	4 700	•	•	•	•	•									
	E1	2 221	★	0.65	–	4 700	•	•	•	•	•									
	D1	1 981		0.73	–	4 700	•	•	•	•	•									
	C1	1 819	★	0.80	–	4 700	•	•	•	•	•									
	B1	1 639		0.88	–	4 700	•	•	•	•	•									
	A1	1 410	★	1.03	–	4 700	•	•	•	•	•									
K.128-Z48 4 700	**P1**	1 400		1.04	–	4 700	•	•	•	•	•	•								
	N1	1 284		1.13	–	4 700	•	•	•	•	•	•								
	M1	1 183		1.23	–	4 700	•	•	•	•	•	•								
	L1	1 074		1.35	–	4 700	•	•	•	•	•	•								
	K1	979		1.48	–	4 700	•	•	•	•	•	•								
	J1	897		1.62	–	4 700	•	•	•	•	•	•								
	H1	800		1.81	–	4 700	•	•	•	•	•	•								
	G1	714		2.03	–	4 700			•	•	•	•								
	F1	606		2.39	–	4 700			•	•	•	•								
	E1	505		2.87	–	4 700			•	•	•	•								
	D1	497		2.92	–	4 700	•	•	•	•	•	•								
	C1	443		3.27	–	4 700			•	•	•	•								
	B1	377		3.85	–	4 700			•	•	•	•								
	A1	313		4.63	–	4 700			•	•	•	•								

★ Preferred transmission ratio

[1] Only possible with integrated motor.

[2] Twisting angle applies to reduced-backlash gearboxes.

In the case of gearboxes of size 18 or 28, only possible with integrated motor or input unit KQ and KQS.

Calculation of maximum output torque T_{2max} for gearboxes with input units:

$T_{2max} = T_1 \times i_{tot}$, if $T_{2max} \leq T_{2N}$

If $T_{2max} \geq T_{2N}$ the max. output torque T_{2N} of the gearbox is the decisive factor.

© Siemens AG 2011

Selection and ordering data (continued)

Gearbox size	Ratio code Order No.	Transmis-sion ratio	Output speed	Twisting angle [2]	Nominal torque	Permissible input torque T_1 [Nm] 2.5x the value is permissible for a brief period (e.g. motor starting torque)													
Max. gearbox torque						3	3	5	10	20	26	61	98	198	198	291	356	580	1290
	15th and 16th position	i_{tot}	n_2 (50 Hz)	φ	T_{2N} (f_B=1)	Motor size													
Nm			rpm	arcmin	Nm	63	71	80	90	100	112	132	160	180	220	225	250	280	315
K.128	**L2**	295.38 ★	4.9	8	4 700				•	•	•								
2 707 ... 4 700	**K2**	270.90	5.4	8	4 700				•	•	•								
	J2	242.02 ★	6.0	8	4 700				•	•	•	•							
	H2	221.64	6.5	8	4 700				•	•	•	•							
	G2	204.18 ★	7.1	8	4 700				•	•	•	•							
	F2	189.04	7.7	8	4 700				•	•	•	•							
	E2	175.80 ★	8.2	8	4 700				•	•	•	•	•						
	D2	164.11	8.8	8	4 700				•	•	•	•	•						
	C2	146.84 ★	9.9	8	4 700				•	•	•	•	•	•	•				
	B2	136.06	10.7	8	4 700				•	•	•	•	•	•	•				
	A2	124.73 ★	11.6	8	4 700				•	•	•	•	•	•	•	• [1]			
	X1	114.34	12.7	8	4 700				•	•	•	•	•	•	•	• [1]			
	W1	97.44	14.9	8	4 700				•	•	•	•	•	•	•	• [1]			
	V1	85.98 ★	16.9	8	4 700				•	•	•	•	•	•	•	• [1]			
	U1	73.18	19.8	8	4 700					•	•	•	•	•	•	• [1]			
	T1	63.41 ★	23.0	8	4 700					•	•	•	•	•	•	• [1]			
	S1	53.36 ★	27.0	8	4 700					•	•	•	•	•	•	• [1]			
	R1	48.14	30.0	8	4 700							•	•	•	•	• [1]			
	Q1	41.38 ★	35.0	8	4 700							•	•	•	•	• [1]			
	P1	39.19 ★	37.0	9	4 700				•	•	•	•	•	•	•	• [1]			
	N1	35.92	40.0	9	4 700				•	•	•	•	•	•	•	• [1]			
	M1	30.61	47.0	9	4 700				•	•	•	•	•	•	•	• [1]			
	L1	27.02 ★	54.0	9	4 700				•	•	•	•	•	•	•	• [1]			
	K1	22.99	63.0	9	4 700					•	•	•	•	•	•	• [1]			
	J1	19.92 ★	73.0	9	4 700					•	•	•	•	•	•	• [1]			
	H1	16.76 ★	87.0	9	4 700					•	•	•	•	•	•	• [1]			
	G1	15.13	96.0	9	4 626							•	•	•	•	• [1]			
	F1	13.00 ★	112.0	10	4 419							•	•	•	•	• [1]			
	E1	12.56	115.0	13	3 217					•	•	•	•	•	•	• [1]			
	D1	10.88 ★	133.0	13	3 081					•	•	•	•	•	•	• [1]			
	C1	9.16 ★	158.0	13	2 924					•	•	•	•	•	•	• [1]			
	B1	8.26	176.0	14	2 834							•	•	•	•	• [1]			
	A1	7.10 ★	204.0	14	2 707							•	•	•	•	• [1]			

★ Preferred transmission ratio

[1] Only possible with integrated motor.

[2] Twisting angle applies to reduced-backlash gearboxes.

In the case of gearboxes of size 18 or 28, only possible with integrated motor or input unit KQ and KQS.

Calculation of maximum output torque T_{2max} for gearboxes with input units:

$T_{2max} = T_1 \times i_{tot}$, if $T_{2max} \leq T_{2N}$

If $T_{2max} \geq T_{2N}$ the max. output torque T_{2N} of the gearbox is the decisive factor.

© Siemens AG 2011

Transmission ratios and maxiumum torques

Selection and ordering data (continued)

Gearbox size	Ratio code Order No.	Transmis-sion ratio	Output speed	Twisting angle [2]	Nominal torque	Permissible input torque T_1 [Nm] 2.5x the value is permissible for a brief period (e.g. motor starting torque)													
Max. gearbox torque						3	3	5	10	20	26	61	98	198	198	291	356	580	1290
	15th and 16th position	i_{tot}	n_2 (50 Hz)	φ	T_{2N} (f_B=1)	Motor size													
Nm			rpm	arcmin	Nm	63	71	80	90	100	112	132	160	180	220	225	250	280	315
K.148-D38 8 000	**P1**	58 692	0.02	–	8 000	•	•	•											
	N1	52 109	0.03	–	8 000	•	•	•											
	M1	45 684	0.03	–	8 000	•	•	•	•										
	L1	40 882	0.04	–	8 000	•	•	•	•										
	K1	36 286	0.04	–	8 000	•	•	•	•										
	J1	31 797	0.05	–	8 000	•	•	•	•										
	H1	27 958	0.05	–	8 000	•	•	•	•										
	G1	25 258	0.06	–	8 000	•	•	•	•										
	F1	22 009	0.07	–	8 000	•	•	•	•										
	E1	19 767	0.07	–	8 000	•	•	•	•										
	D1	17 845	0.08	–	8 000	•	•	•	•										
	C1	16 180	0.09	–	8 000	•	•	•	•										
	B1	14 722	0.10	–	8 000	•	•	•	•										
	A1	13 017	0.11	–	8 000	•	•	•	•										
K.148-Z38 8 000	**W1**	13 505	0.11	–	8 000	•	•	•											
	V1	12 009	0.12	–	8 000	•	•	•											
	U1	10 418	0.14	–	8 000	•	•	•	•										
	T1	9 734	0.15	–	8 000	•	•	•	•										
	S1	8 561	0.17	–	8 000	•	•	•	•										
	R1	7 498	0.19	–	8 000	•	•	•	•	•									
	Q1	6 632	0.22	–	8 000	•	•	•	•	•									
	P1	6 010	0.24	–	8 000	•	•	•	•	•									
	N1	5 305	0.27	–	8 000	•	•	•	•	•									
	M1	4 786	0.30	–	8 000	•	•	•	•	•									
	L1	4 341	0.33	–	8 000	•	•	•	•	•									
	K1	3 955	0.37	–	8 000	•	•	•	•	•									
	J1	3 617	0.40	–	8 000	•	•	•	•	•									
	H1	3 234	0.45	–	8 000	•	•	•	•	•									
	G1	2 970	0.49	–	8 000	•	•	•	•	•									
	F1	2 677	0.54	–	8 000	•	•	•	•	•									
	E1	2 302	0.63	–	8 000	•	•	•	•	•									
	D1	2 053	0.71	–	8 000	•	•	•	•	•									
	C1	1 885	0.77	–	8 000	•	•	•	•	•									
	B1	1 699	0.85	–	8 000	•	•	•	•	•									
	A1	1 466	0.99	–	8 000	•	•	•	•	•									
K.148-Z68 8 000	**L1**	1 392	1.04	–	8 000	•	•	•	•	•	•	•							
	K1	1 247	1.16	–	8 000	•	•	•	•	•	•	•							
	J1	1 150	1.26	–	8 000			•	•	•	•	•							
	H1	965	1.50	–	8 000			•	•	•	•	•							
	G1	823	1.76	–	8 000			•	•	•	•	•							
	F1	686	2.11	–	8 000					•	•	•							
	E1	569	2.55	–	8 000					•	•	•							
	D1	502	2.89	–	8 000			•	•	•	•	•							
	C1	428	3.39	–	8 000			•	•	•	•	•							
	B1	357	4.06	–	8 000					•	•	•							
	A1	296	4.90	–	8 000					•	•	•							

★ Preferred transmission ratio
[1] Only possible with integrated motor.
[2] Twisting angle applies to reduced-backlash gearboxes.
In the case of gearboxes of size 18 or 28, only possible with integrated motor or input unit KQ and KQS.
Calculation of maximum output torque T_{2max} for gearboxes with input units:
$T_{2max} = T_1 \times i_{tot}$, if $T_{2max} \leq T_{2N}$
If $T_{2max} \geq T_{2N}$ the max. output torque T_{2N} of the gearbox is the decisive factor.

© Siemens AG 2011

Selection and ordering data (continued)

Gearbox size	Ratio code Order No.	Transmis-sion ratio	Output speed	Twisting angle [2]	Nominal torque	Permissible input torque T_1 [Nm] 2.5x the value is permissible for a brief period (e.g. motor starting torque)													
Max. gearbox torque	15th and 16th position	i_{tot}	n_2 (50 Hz)	φ	T_{2N} (f_B=1)	3	3	5	10	20	26	61	98	198	198	291	356	580	1290
						Motor size													
Nm			rpm	arcmin	Nm	63	71	80	90	100	112	132	160	180	220	225	250	280	315
K.148	**N2**	306.08	4.7	7	8 000					•	•								
3 320 ... 8 000	**M2**	274.42 ★	5.3	7	8 000					•	•	•							
	L2	251.55	5.8	7	8 000					•	•	•							
	K2	231.95 ★	6.3	7	8 000					•	•	•							
	J2	214.96	6.7	7	8 000					•	•	•							
	H2	204.38 ★	7.1	7	8 000					•	•	•	•						
	G2	191.02	7.6	7	8 000					•	•	•	•						
	F2	168.50 ★	8.6	7	8 000					•	•	•	•	•	•				
	E2	158.93	9.1	7	8 000					•	•	•	•	•	•				
	D2	142.41 ★	10.2	7	8 000					•	•	•	•	•	•	•			
	C2	131.49	11.0	7	8 000					•	•	•	•	•	•	•			
	B2	112.35	12.9	7	8 000					•	•	•	•	•	•	•	• [1]		
	A2	101.53 ★	14.3	7	8 000					•	•	•	•	•	•	•	• [1]		
	X1	97.82	14.8	7	8 000						•	•	•	•	•	•	• [1]		
	W1	84.61	17.1	7	8 000					•	•	•	•	•	•	•	• [1]		
	V1	73.80 ★	19.6	7	8 000					•	•	•	•	•	•	•	• [1]		
	U1	63.16 ★	23.0	7	8 000					•	•	•	•	•	•	•	• [1]		
	T1	56.57	26.0	7	8 000							•	•	•	•	•	• [1]		
	R1	47.91 ★	30.0	7	8 000							•	•	•	•	•	• [1]		
	Q1	41.38	35.0	7	8 000								•	•	•	•	• [1]		
	N1	31.10 ★	47.0	7	8 000								•	•	•	•	• [1]		
	M1	30.74	47.0	8	8 000						•	•	•	•	•	•	• [1]		
	L1	26.58	55.0	8	8 000					•	•	•	•	•	•	•	• [1]		
	K1	23.19 ★	63.0	8	8 000					•	•	•	•	•	•	•	• [1]		
	J1	19.84 ★	73.0	9	8 000					•	•	•	•	•	•	•	• [1]		
	H1	17.77	82.0	9	8 000							•	•	•	•	•	• [1]		
	G1	15.05 ★	96.0	9	7 603							•	•	•	•	•	• [1]		
	F1	13.00	112.0	9	7 273								•	•	•	•	• [1]		
	E1	9.77 ★	148.0	9	6 670								•	•	•	•	• [1]		
	D1	8.79	165.0	13	3 980							•	•	•	•	•	• [1]		
	C1	7.44 ★	195.0	13	3 785							•	•	•	•	•	• [1]		
	B1	6.43	226.0	13	3 620								•	•	•	•	• [1]		
	A1	4.83 ★	300.0	13	3 320								•	•	•	•	• [1]		

★ Preferred transmission ratio

[1] Only possible with integrated motor.

[2] Twisting angle applies to reduced-backlash gearboxes.

In the case of gearboxes of size 18 or 28, only possible with integrated motor or input unit KQ and KQS.

Calculation of maximum output torque T_{2max} for gearboxes with input units:

$T_{2max} = T_1 \times i_{tot}$, if $T_{2max} \leq T_{2N}$

If $T_{2max} \geq T_{2N}$ the max. output torque T_{2N} of the gearbox is the decisive factor.

© Siemens AG 2011

Transmission ratios and maxiumum torques

Selection and ordering data (continued)

Gearbox size	Ratio code Order No.	Transmis-sion ratio		Output speed	Twisting angle [2]	Nominal torque	Permissible input torque T_1 [Nm] 2.5x the value is permissible for a brief period (e.g. motor starting torque)													
Max. gearbox torque	15th and 16th position	i_{tot}		n_2 (50 Hz)	φ	T_{2N} (f_B=1)	3	3	5	10	20	26	61	98	198	198	291	356	580	1290
							Motor size													
Nm				rpm	arcmin	Nm	63	71	80	90	100	112	132	160	180	220	225	250	280	315
K.168-D48 13 500	**P1**	60 115	★	0.02	–	13 500	•	•	•											
	N1	53 459		0.03	–	13 500	•	•	•											
	M1	46 374	★	0.03	–	13 500	•	•	•	•										
	L1	43 330		0.03	–	13 500	•	•	•	•										
	K1	38 109	★	0.04	–	13 500	•	•	•	•										
	J1	33 375		0.04	–	13 500	•	•	•	•	•									
	H1	29 521	★	0.05	–	13 500	•	•	•	•	•									
	G1	26 754		0.05	–	13 500	•	•	•	•	•									
	F1	23 617	★	0.06	–	13 500	•	•	•	•	•									
	E1	21 304		0.07	–	13 500	•	•	•	•	•									
	D1	19 323	★	0.08	–	13 500	•	•	•	•	•									
	C1	17 605		0.08	–	13 500	•	•	•	•	•									
	B1	16 102	★	0.09	–	13 500	•	•	•	•	•									
	A1	14 397		0.10	–	13 500	•	•	•	•	•									
K.168-Z48 13 500	**A2**	14 767		0.10	–	13 500	•	•	•											
	X1	13 068	★	0.11	–	13 500	•	•	•	•										
	W1	11 880		0.12	–	13 500	•	•	•	•										
	V1	10 673	★	0.14	–	13 500	•	•	•	•										
	U1	9 148		0.16	–	13 500	•	•	•	•	•									
	T1	8 277	★	0.18	–	13 500	•	•	•	•	•	•								
	S1	7 640		0.19	–	13 500	•	•	•	•	•	•								
	R1	6 643	★	0.22	–	13 500	•	•	•	•	•	•								
	Q1	6 032		0.24	–	13 500	•	•	•	•	•	•								
	P1	5 507	★	0.26	–	13 500	•	•	•	•	•	•								
	N1	5 053		0.29	–	13 500	•	•	•	•	•	•								
	M1	4 656	★	0.31	–	13 500	•	•	•	•	•	•								
	L1	4 228		0.34	–	13 500	•	•	•	•	•	•								
	K1	3 852	★	0.38	–	13 500	•	•	•	•	•	•								
	J1	3 528		0.41	–	13 500	•	•	•	•	•	•								
	H1	3 148	★	0.46	–	13 500	•	•	•	•	•	•								
	G1	2 810		0.52	–	13 500	•	•	•	•	•	•								
	F1	2 386		0.61	–	13 500	•	•	•	•	•	•								
	E1	1 986	★	0.73	–	13 500	•	•	•	•	•	•								
	D1	1 955	★	0.74	–	13 500	•	•	•	•	•	•								
	C1	1 745		0.83	–	13 500			•	•	•	•								
	B1	1 482		0.98	–	13 500			•	•	•	•								
	A1	1 233	★	1.18	–	13 500			•	•	•	•								
K.168-Z68 13 500	**H1**	1 033		1.40	–	13 500			•	•	•	•	•							
	G1	881		1.65	–	13 500			•	•	•	•	•							
	F1	735		1.97	–	13 500					•	•	•							
	E1	609		2.38	–	13 500					•	•	•							
	D1	537		2.70	–	13 500			•	•	•	•	•							
	C1	458		3.17	–	13 500			•	•	•	•	•							
	B1	382		3.80	–	13 500					•	•	•							
	A1	317		4.57	–	13 500					•	•	•							

★ Preferred transmission ratio
[1] Only possible with integrated motor.
[2] Twisting angle applies to reduced-backlash gearboxes.
In the case of gearboxes of size 18 or 28, only possible with integrated motor or input unit KQ and KQS.
Calculation of maximum output torque T_{2max} for gearboxes with input units:
$T_{2max} = T_1 \times i_{tot}$, if $T_{2max} \leq T_{2N}$
If $T_{2max} \geq T_{2N}$ the max. output torque T_{2N} of the gearbox is the decisive factor.

© Siemens AG 2011

Selection and ordering data (continued)

Gearbox size	Ratio code Order No.	Transmis-sion ratio	Output speed	Twisting angle [2]	Nominal torque	Permissible input torque T_1 [Nm] 2.5x the value is permissible for a brief period (e.g. motor starting torque)													
Max. gearbox torque	15th and 16th position	i_{tot}	n_2 (50 Hz)	φ	T_{2N} (f_B=1)	3	3	5	10	20	26	61	98	198	198	291	356	580	1290
						Motor size													
Nm			rpm	arcmin	Nm	63	71	80	90	100	112	132	160	180	220	225	250	280	315
K.168	**H2**	287.95 ★	5.0	7	13 500							•							
5 870 ... 13 500	**G2**	264.18	5.5	7	13 500							•							
	F2	243.80 ★	5.9	7	13 500							•							
	E2	226.15	6.4	7	13 500							•							
	D2	213.33 ★	6.8	7	13 500							•	•						
	C2	199.54	7.3	7	13 500							•	•						
	B2	177.43 ★	8.2	7	13 500							•	•	•	•				
	A2	167.50	8.7	7	13 500							•	•	•	•				
	X1	150.36 ★	9.6	7	13 500							•	•	•	•	•			
	W1	138.00	10.5	7	13 500							•	•	•	•	•			
	V1	119.09	12.2	7	13 500							•	•	•	•	•	•		
	U1	104.18	13.9	7	13 500							•	•	•	•	•	•		
	T1	90.60	16.0	7	13 500							•	•	•	•	•	•		
	S1	79.49 ★	18.2	7	13 500							•	•	•	•	•	•		
	R1	67.22 ★	22.0	7	13 500							•	•	•	•	•	•		
	Q1	60.99	24.0	7	13 500							•	•	•	•	•	•		
	P1	53.18 ★	27.0	7	13 500							•	•	•	•	•	•		
	N1	45.15	32.0	7	13 500								•	•	•	•	•		
	M1	34.55 ★	42.0	7	13 500								•	•	•	•	•	• [1]	
	L1	32.53	45.0	8	13 500							•	•	•	•	•	•	• [1]	
	K1	28.54 ★	51.0	8	13 500							•	•	•	•	•	•	• [1]	
	J1	24.14 ★	60.0	8	13 500							•	•	•	•	•	•	• [1]	
	H1	21.90	66.0	8	13 086							•	•	•	•	•	•	• [1]	
	G1	19.09 ★	76.0	8	12 553							•	•	•	•	•	•	• [1]	
	F1	16.21	89.0	8	11 946								•	•	•	•	•	• [1]	
	E1	12.41 ★	117.0	8	11 016								•	•	•	•	•	• [1]	
	D1	11.67	124.0	12	6 973							•	•	•	•	•	•	• [1]	
	C1	10.17 ★	143.0	12	6 689							•	•	•	•	•	•	• [1]	
	B1	8.64	168.0	12	6 366								•	•	•	•	•	• [1]	
	A1	6.61 ★	219.0	12	5 870								•	•	•	•	•	• [1]	

★ Preferred transmission ratio

[1] Only possible with integrated motor.

[2] Twisting angle applies to reduced-backlash gearboxes.

In the case of gearboxes of size 18 or 28, only possible with integrated motor or input unit KQ and KQS.

Calculation of maximum output torque T_{2max} for gearboxes with input units:

$T_{2max} = T_1 \times i_{tot}$, if $T_{2max} \leq T_{2N}$

If $T_{2max} \geq T_{2N}$ the max. output torque T_{2N} of the gearbox is the decisive factor.

© Siemens AG 2011

Transmission ratios and maxiumum torques

Selection and ordering data (continued)

Gearbox size	Ratio code Order No.	Transmis-sion ratio		Output speed	Twisting angle [2]	Nominal torque	Permissible input torque T_1 [Nm] 2.5x the value is permissible for a brief period (e.g. motor starting torque)													
Max. gearbox torque	15th and 16th position	i_{tot}		n_2 (50 Hz)	φ	T_{2N} (f_B=1)	3	3	5	10	20	26	61	98	198	198	291	356	580	1290
							Motor size													
Nm				rpm	arcmin	Nm	63	71	80	90	100	112	132	160	180	220	225	250	280	315
K.188-D68 20 000	T1	53 767		0.03	–	20 000	•	•	•											
	S1	47 582	★	0.03	–	20 000	•	•	•	•										
	R1	43 256		0.03	–	20 000	•	•	•	•										
	Q1	38 858	★	0.04	–	20 000	•	•	•	•										
	P1	33 307		0.04	–	20 000	•	•	•	•	•									
	N1	30 135	★	0.05	–	20 000	•	•	•	•	•									
	M1	27 817		0.05	–	20 000	•	•	•	•	•									
	L1	24 187	★	0.06	–	20 000	•	•	•	•	•									
	K1	21 961		0.07	–	20 000	•	•	•	•	•									
	J1	20 052	★	0.07	–	20 000	•	•	•	•	•									
	H1	18 398		0.08	–	20 000	•	•	•	•	•									
	G1	16 951	★	0.09	–	20 000	•	•	•	•	•									
	F1	15 394		0.09	–	20 000	•	•	•	•	•									
	E1	14 024	★	0.10	–	20 000	•	•	•	•	•									
	D1	12 847		0.11	–	20 000	•	•	•	•	•									
	C1	11 463	★	0.13	–	20 000	•	•	•	•	•									
	B1	10 230		0.14	–	20 000			•	•	•									
	A1	8 689		0.17	–	20 000			•	•	•									
K.188-Z68 20 000	X1	9 201	★	0.16	–	20 000	•	•	•	•										
	W1	8 047		0.18	–	20 000	•	•	•	•	•									
	V1	7 224	★	0.20	–	20 000	•	•	•	•	•	•								
	U1	6 598		0.22	–	20 000	•	•	•	•	•	•								
	T1	5 855	★	0.25	–	20 000	•	•	•	•	•	•	•							
	S1	5 405		0.27	–	20 000	•	•	•	•	•	•	•							
	R1	4 889	★	0.30	–	20 000	•	•	•	•	•	•	•							
	Q1	4 502		0.32	–	20 000	•	•	•	•	•	•	•							
	P1	4 163	★	0.35	–	20 000	•	•	•	•	•	•	•							
	N1	3 865		0.38	–	20 000	•	•	•	•	•	•	•							
	M1	3 410	★	0.43	–	20 000	•	•	•	•	•	•	•							
	L1	3 148		0.46	–	20 000	•	•	•	•	•	•	•							
	K1	2 821	★	0.51	–	20 000	•	•	•	•	•	•	•							
	J1	2 601		0.56	–	20 000			•	•	•	•	•							
	H1	2 182		0.66	–	20 000			•	•	•	•	•							
	G1	1 862	★	0.78	–	20 000			•	•	•	•	•							
	F1	1 551		0.93	–	20 000					•	•	•							
	E1	1 286	★	1.10	–	20 000					•	•	•							
	D1	1 135		1.30	–	20 000			•	•	•	•	•							
	C1	968	★	1.50	–	20 000			•	•	•	•	•							
	B1	807		1.80	–	20 000					•	•	•							
	A1	669	★	2.20	–	20 000					•	•	•							
K.188-Z88 20 000	H1	669	★	2.2	–	20 000					•	•	•	•						
	G1	548	★	2.6	–	20 000					•	•	•	•						
	F1	503		2.9	–	20 000					•	•	•	•						
	E1	429	★	3.4	–	20 000					•	•	•	•						
	D1	352	★	4.1	–	20 000					•	•	•	•						
	C1	321		4.5	–	20 000					•	•	•	•						
	B1	274	★	5.3	–	20 000					•	•	•	•						
	A1	225	★	6.4	–	20 000					•	•	•	•						

★ Preferred transmission ratio

[1] Only possible with integrated motor.

[2] Twisting angle applies to reduced-backlash gearboxes.

In the case of gearboxes of size 18 or 28, only possible with integrated motor or input unit KQ and KQS.

Calculation of maximum output torque T_{2max} for gearboxes with input units:

$T_{2max} = T_1 \times i_{tot}$, if $T_{2max} \leq T_{2N}$

If $T_{2max} \geq T_{2N}$ the max. output torque T_{2N} of the gearbox is the decisive factor.

© Siemens AG 2011

Selection and ordering data (continued)

Gearbox size	Ratio code Order No.	Transmis-sion ratio	Output speed	Twisting angle [2]	Nominal torque	Permissible input torque T_1 [Nm] 2.5x the value is permissible for a brief period (e.g. motor starting torque)													
Max. gearbox torque	15th and 16th position	i_{tot}	n_2 (50 Hz)	φ	T_{2N} (f_B=1)	3	3	5	10	20	26	61	98	198	198	291	356	580	1290
						Motor size													
Nm			rpm	arcmin	Nm	63	71	80	90	100	112	132	160	180	220	225	250	280	315
K.188 17 500 ... 20 000	**U1**	191.34	7.6	6	20 000							•	•	•	•	•			
	T1	172.78	8.4	6	20 000									•	•	•			
	S1	161.92	9.0	6	20 000								•	•	•	•	•		
	R1	139.08 ★	10.4	6	20 000								•	•	•	•	•		
	Q1	120.16	12.1	6	20 000							•	•	•	•	•	•	•	
	P1	106.07	13.7	6	20 000							•	•	•	•	•	•	•	
	N1	95.48 ★	15.2	6	20 000							•	•	•	•	•	•	•	
	M1	79.23 ★	18.3	6	20 000							•	•	•	•	•	•	•	
	L1	72.24	20.0	6	20 000							•	•	•	•	•	•	•	
	K1	63.38 ★	23.0	6	20 000							•	•	•	•	•	•	•	
	J1	54.47	27.0	7	20 000								•	•	•	•	•	•	•
	H1	42.43 ★	34.0	7	20 000								•	•	•	•	•	•	•
	G1	34.28 ★	42.0	7	20 000							•	•	•	•	•	•	•	
	F1	28.45 ★	51.0	7	20 000							•	•	•	•	•	•	•	
	E1	25.94	56.0	7	20 000							•	•	•	•	•	•	•	
	D1	22.76 ★	64.0	7	20 000							•	•	•	•	•	•	•	
	C1	19.56	74.0	7	20 000								•	•	•	•	•	•	•
	B1	15.23 ★	95.0	7	19 000								•	•	•	•	•	•	•
	A1	12.10 ★	120.0	8	17 500									•	•	•	•	•	•

★ Preferred transmission ratio

[1] Only possible with integrated motor.

[2] Twisting angle applies to reduced-backlash gearboxes.

In the case of gearboxes of size 18 or 28, only possible with integrated motor or input unit KQ and KQS.

Calculation of maximum output torque T_{2max} for gearboxes with input units:

$T_{2max} = T_1 \times i_{tot}$, if $T_{2max} \leq T_{2N}$

If $T_{2max} \geq T_{2N}$ the max. output torque T_{2N} of the gearbox is the decisive factor.

© Siemens AG 2011

Mounting types

Selection and ordering data

Mounting type	Order No. 14th position	Code in type designation 2nd position for solid shaft, 3rd position for hollow shaft	Representation
Foot-mounted design	**A**	–	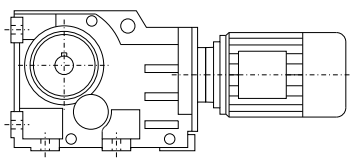
Housing flange (C-type)	**H**	Z	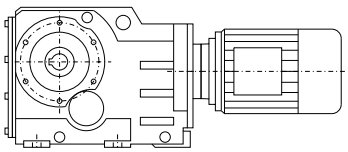
Design with torque arm	**D**	D	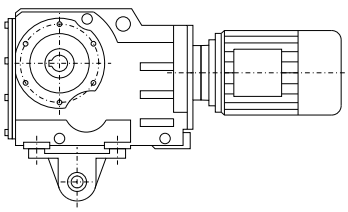
Flange-mounted design (A-type)	**F**	F	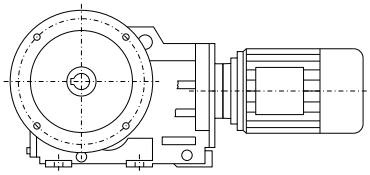
Mixer flange	**M**	M	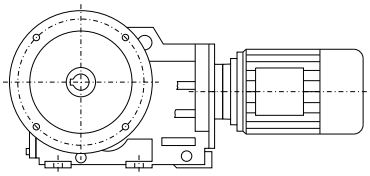
Extruder flange	**E**	E	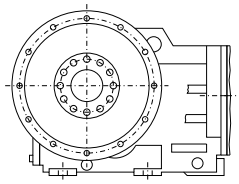

© Siemens AG 2011

Selection and ordering data (continued)

Bevel helical gearbox K with torque arm

The torque arm of bevel helical gearbox K is mounted on the underside of the housing. The rubber buffers (supplied loose) are used to flexibly support the gearbox on the torque arm.
The rubber buffers are suitable for all mounting positions and can withstand temperatures of between –40 °C and +80 °C.

Material: Natural rubber, hardness 70 ± 5 Shore A

Order No.: **D** in **14th position**

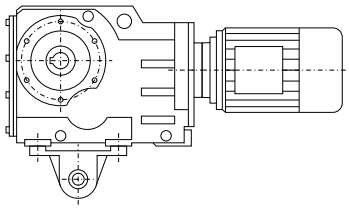

Bevel helical gearbox B with torque arm

The torque arm of bevel helical gearbox B consists of an arm with an eye; it can be screwed onto the gearbox housing at an angular pitch of 30° in any one of nine positions around the output.

Order No.: **D** in **14th position**

The shafts and mounting positions correspond to the design featuring a housing flange.

Order code:
Figure 1 **G09**
Figure 2 **G10**

Figure 1

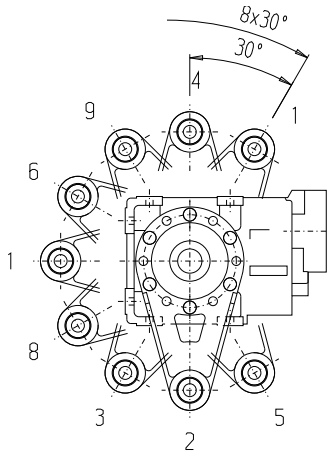

Figure 2

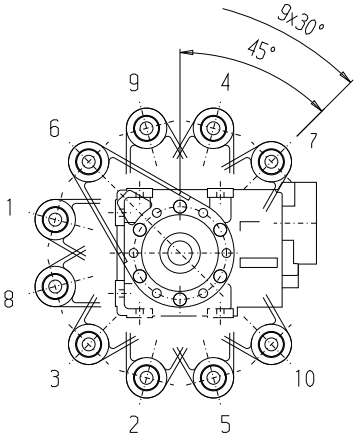

Bevel helical gearbox with mixer flange, sizes 88 to 168

The mixer flange is fitted with a heavy-duty output bearing with a sizable bearing span for absorbing large radial and axial forces.

The optimized design ensures that no axial forces are transferred to the gearbox housing.

Bearing life can be calculated on request or using the MOTOX Configurator calculation program.

© Siemens AG 2011

Mounting types

Selection and ordering data (continued)

Bevel helical gearbox with extruder flange, sizes 68 to 168

Gearboxes with an extruder flange are ideal for use in the extrusion industry, particularly in the low to medium performance range.

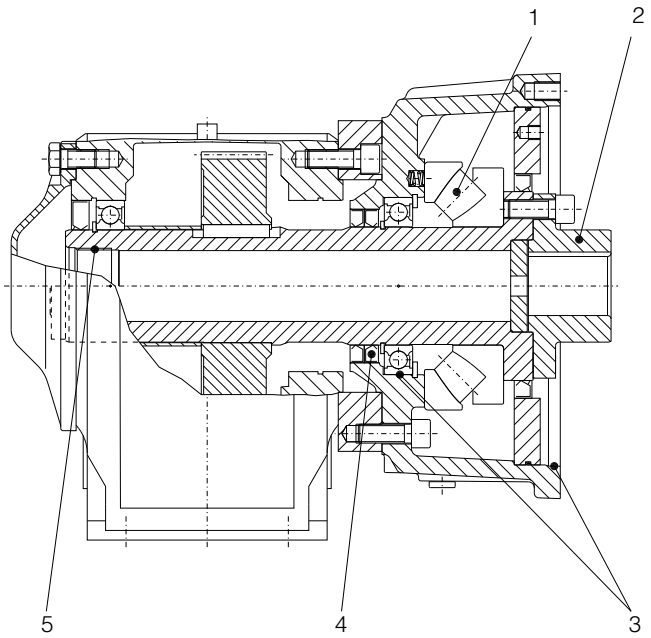

1. Large axial spherical roller bearing

294... series spherical roller bearing for heavy axial loads.

2. Simple, low-cost design

Flange hub supplied by customer, no grinding processes. Standard shaft-hub connection with feather key in acc. with DIN 6885/1.

3. Good radial eccentricity

Radial bearing hole and center hole created in one clamping operation and direction.

4. Optimum lubrication

Extruder oil chamber separate from gearbox oil chamber.

5. Standard connection

Metric thread for supporting the extruder worm (worm pulled out from rear).

Area of application

Parallel shaft gearbox		KAE 68	KAE 88	KAE 108	KAE 128	KAE 148	KAE 168
Max. power	[kW]	9.2	15	30	45	55	90
Transmission ratio/min./max	[3-stage]	5.36 / 243.72	5.54 / 302.68	7.68 / 307.24	7.1 / 295.38	4.83 / 306.08	6.61 / 287.95
Max. torque	[Nm]	820	1 650	3 000	4 700	8 000	13 500
Max. axial forces	[kN]	65	105	180	260	400	580
Spherical roller bearing	[.]	29414E	29417E	29420E	29424E	29426E	29432E

© Siemens AG 2011

Selection and ordering data

Shaft design	Order No. 8th position	Order No. suffix	Shaft dimensions					
Bevel helical gearboxes B and K, foot-mounted design								
Size			**B.28**	**B.38**	**K.38**	**K.48**	**K.68**	**K.88**
Solid shaft with feather key	**1**		V20 x 40 *)	V30 x 60 *)	V25 x 50 *)	V30 x 60 *)	V40 x 80 *)	V50 x 100 *)
	3				V35 x 70		V50 x 100	V70 x 140
	4					V40 x 80	V35 x 70	
Hollow shaft	**5**		H20 x 120 *)	H30 x 140 *)	H30 x 120 *)	H35 x 150 *)	H40 x 180 *)	H50 x 210 *)
	6		H25 x 120	H35 x 140		H40 x 150	H45 x 180	H60 x 210
	7			H40 x 140				
Hollow shaft with shrink disk	**9**	**H3A**	H20 x 142 *)	H30 x 166 *)	H30 x 146 *)	H40 x 177	H50 x 209	H60 x 241
	9	**H3B**		H35 x 166	H30/31 x 146	H40/41 x 177	H50/51 x 209	H60/61 x 241
	9	**H3C**				H35 x 177 *)	H40 x 209 *)	H50 x 241 *)
	9	**H3D**					H40/42 x 209	H50/52 x 241
Hollow shaft with splined shaft	**9**	**H4A**		N30x1.25x30x 22 x 140	N35x1.25x30x 26 x 9H x 120	N40x2x30x18x 9H x 150	N50x2x30x24x 9H x 180	N60x2x30x28 x 9H x 210
Size			**K.108**	**K.128**	**K.148**	**K.168**	**K.188**	
Solid shaft with feather key	**1**		V60 x 120 *)	V70 x 140 *)	V90 x 170 *)	V110 x 210 *)	V120 x 210 *)	
	3		V80 x 170	V90 x 170	V100 x 210	V120 x 210	V140 x 250	
Hollow shaft	**5**		H60 x 240 *)	H70 x 300 *)	H80 x 350	H100 x 410	H120 x 500 *)	
	6		H70 x 240	H80 x 300	H90 x 350 *)	H110 x 410 *)		
Hollow shaft with shrink disk	**9**	**H3A**	H70 x 280	H80 x 345	H95 x 404 *)	H105 x 483 *)	H125 x 580 *)	
	9	**H3B**	H70/71 x 280	H80/81 x 345	H95/96 x 404	H105/106 x 483	H125/126 x 580	
	9	**H3C**	H65 x 280	H75 x 345				
	9	**H3D**	H65/66 x 280	H75/76 x 345				
Hollow shaft with splined shaft	**9**	**H4A**	N70x2x30x34 x 9H x 240	N80x3x30x25 x 9H x 300	N90x3x30x28 x 9H x 350	N110x3x30x35 x9H x 410	N130x5x30x24x 9H x 500	
Bevel helical gearboxes B and K with housing flange								
Size			**B.Z28**	**B.Z38**	**K.Z38**	**K.Z48**	**K.Z68**	**K.Z88**
Solid shaft with feather key	**1**		V20 x 40 *)	V30 x 60 *)	V25 x 50 *)	V30 x 60 *)	V40 x 80 *)	V50 x 100 *)
	3				V35 x 70		V50 x 100	V70 x 140
	4					V40 x 80	V35 x 70	
Hollow shaft	**5**		H20 x 120 *)	H30 x 140 *)	H30 x 120 *)	H35 x 150 *)	H40 x 180 *)	H50 x 210 *)
	6		H25 x 120	H35 x 140		H40 x 150	H45 x 180	H60 x 210
	7			H40 x 140				
Hollow shaft with shrink disk	**9**	**H3A**	H20 x 142 *)	H30 x 166 *)	H30 x 146 *)	H40 x 177	H50 x 209	H60 x 241
	9	**H3B**		H35 x 166	H30/31 x 146	H40/41 x 177	H50/51 x 209	H60/61 x 241
	9	**H3C**				H35 x 177 *)	H40 x 209 *)	H50 x 241 *)
	9	**H3D**					H40/42 x 209	H50/52 x 241
Hollow shaft with splined shaft	**9**	**H4A**		N30x1.25x30x 22 x 140	N35x1.25x30x 26 x 9H x 120	N40x2x30x18x 9H x 150	N50x2x30x24x 9H x 180	N60x2x30x28 x 9H x 210
Size			**K.Z108**	**K.Z128**	**K.Z148**	**K.Z168**	**K.Z188**	
Solid shaft with feather key	**1**		V60 x 120 *)	V70 x 140 *)	V90 x 170 *)	V110 x 210 *)	V120 x 210 *)	
	3		V80 x 170	V90 x 170	V100 x 210	V120 x 210	V140 x 250	
Hollow shaft	**5**		H60 x 240 *)	H70 x 300 *)	H80 x 350	H100 x 410	H120 x 500 *)	
	6		H70 x 240	H80 x 300	H90 x 350 *)	H110 x 410 *)		
Hollow shaft with shrink disk	**9**	**H3A**	H70 x 280	H80 x 345	H95 x 404 *)	H105 x 483 *)	H125 x 580 *)	
	9	**H3B**	H70/71 x 280	H80/81 x 345	H95/96 x 404	H105/106 x 483	H125/126 x 580	
	9	**H3C**	H65 x 280	H75 x 345				
	9	**H3D**	H65/66 x 280	H75/76 x 345				
Hollow shaft with splined shaft	**9**	**H4A**	N70x2x30x34 x 9H x 240	N80x3x30x25 x 9H x 300	N90x3x30x28 x 9H x 350	N110x3x30x35 x9H x 410	N130x5x30x24x 9H x 500	

*) Preferred series

© Siemens AG 2011

Shaft designs

Selection and ordering data (continued)

Shaft design	Order No. 8th position	Order No. suffix	Shaft dimensions					
Bevel helical gearboxes B and K with torque arm								
Shaft design			**B.D28**	**B.D38**	**K.D38**	**K.D48**	**K.D68**	**K.D88**
Hollow shaft	**5**		H20 x 120 *)	H30 x 140 *)	H30 x 120 *)	H35 x 150 *)	H40 x 180 *)	H50 x 210 *)
	6		H25 x 120	H35 x 140		H40 x 150	H45 x 180	H60 x 210
	7			H40 x 140				
Hollow shaft with shrink disk	**9**	**H3A**	H20 x 142 *)	H30 x 166 *)	H30 x 146 *)	H40 x 177	H50 x 209	H60 x 241
	9	**H3B**		H35 x 166	H30/31 x 146	H40/41 x 177	H50/51 x 209	H60/61 x 241
	9	**H3C**				H35 x 177 *)	H40 x 209 *)	H50 x 241 *)
	9	**H3D**					H40/42 x 209	H50/52 x 241
Hollow shaft with splined shaft	**9**	**H4A**		N30x1.25x30x 22 x 140	N35x1.25x30x 26 x 9H x 120	N40x2x30x18x 9H x 150	N50x2x30x24x 9H x 180	N60x2x30x28 x 9H x 210
Size			**K.D108**	**K.D128**	**K.D148**	**K.D168**	**K.D188**	
Hollow shaft	**5**		H60 x 240 *)	H70 x 300 *)	H80 x 350	H100 x 410	H120 x 500 *)	
	6		H70 x 240	H80 x 300	H90 x 350 *)	H110 x 410 *)		
Hollow shaft with shrink disk	**9**	**H3A**	H70 x 280	H80 x 345	H95 x 404 *)	H105 x 483 *)	H125 x 580 *)	
	9	**H3B**	H70/71 x 280	H80/81 x 345	H95/96 x 404	H105/106 x 483	H125/126 x 580	
	9	**H3C**	H65 x 280	H75 x 345				
	9	**H3D**	H65/66 x 280	H75/76 x 345				
Hollow shaft with splined shaft	**9**	**H4A**	N70x2x30x34x 9H x 240	N80x3x30x25 x 9H x 300	N90x3x30x28 x 9H x 350	N110x3x30x35 x9H x 410	N130x5x30x24 x9H x 500	
Bevel helical gearboxes B and K, flange-mounted design (A-type)								
Size			**B.F28**	**B.F38**	**K.F38**	**K.F48**	**K.F68**	**K.F88**
Solid shaft with feather key	**2**		V20 x 40 (i2=I) *)	V30 x 60 (i2=I) *)	V25 x 50 (i2=I) *)	V30 x 60 (i2=I) *)	V40 x 80 (i2=I) *)	V50 x 100 (i2=I) *)
Hollow shaft	**5**		H20 x 120 *)	H30 x 140 *)	H30 x 120 *)	H35 x 150 *)	H40 x 180 *)	H50 x 210 *)
	6		H25 x 120	H35 x 140		H40 x 150	H45 x 180	H60 x 210
	7			H40 x 140				
Hollow shaft with shrink disk	**9**	**H3A**	H20 x 142 *)	H30 x 166 *)	H30 x 146 *)	H40 x 177	H50 x 209	H60 x 241
	9	**H3B**		H35 x 166	H30/31 x 146	H40/41 x 177	H50/51 x 209	H60/61 x 241
	9	**H3C**				H35 x 177 *)	H40 x 209 *)	H50 x 241 *)
	9	**H3D**					H40/42 x 209	H50/52 x 241
Hollow shaft with splined shaft	**9**	**H4A**		N30x1.25x30x 22 x 140	N35x1.25x30x 26 x 9H x 120	N40x2x30x18x 9H x 150	N50x2x30x24x 9H x 180	N60x2x30x28 x 9H x 210
Size			**K.F108**	**K.F128**	**K.F148**	**K.F168**	**K.F188**	
Solid shaft with feather key	**2**		V60 x 120 (i2=I) *)	V70 x 140 (i2=I) *)	V90 x 170 (i2=I) *)	V110 x 210 (i2=I) *)	V120 x 210 (i2=I) *)	
Hollow shaft	**5**		H60 x 240 *)	H70 x 300 *)	H80 x 350	H100 x 410	H120 x 500 *)	
	6		H70 x 240	H80 x 300	H90 x 350 *)	H110 x 410 *)		
Hollow shaft with shrink disk	**9**	**H3A**	H70 x 280	H80 x 345	H95 x 404 *)	H105 x 483 *)	H125 x 580 *)	
	9	**H3B**	H70/71 x 280	H80/81 x 345	H95/96 x 404	H105/106 x 483	H125/126 x 580	
	9	**H3C**	H65 x 280	H75 x 345				
	9	**H3D**	H65/66 x 280	H75/76 x 345				
Hollow shaft with splined shaft	**9**	**H4A**	N70x2x30x34x 9H x 240	N80x3x30x25 x 9H x 300	N90x3x30x28 x 9H x 350	N110x3x30x35 x9H x 410	N130x5x30x24 x9H x 500	

*) Preferred series

© Siemens AG 2011

Selection and ordering data (continued)

Shaft designs for bevel helical gearbox with mixer flange

Shaft design	Order No. 8th position	Order No. suffix.	Shaft dimensions				
Bevel helical gearbox K.M							
Size			**K.M88**	**K.M108**	**K.M128**	**K.M148**	**K.M168**
Solid shaft with feather key	**3**		V70 x 140	V80 x 170	V90 x 170	V100 x 210	V120 x 210
Hollow shaft	**9**	**H2F**	H60 x 321	H70 x 366	H80 x 456	H90 x 524	H110 x 609

Shaft designs for bevel helical gearbox with extruder flange

Shaft design	Order No. 8th position	Order No. suffix.	Shaft dimensions					
Bevel helical gearbox KAE								
Size			**KAE68**	**KAE88**	**KAE108**	**KAE128**	**KAE148**	**KAE168**
Hollow shaft	**9**	**H2A**	H20 x 48	H30 x 58	H40 x 71	H45 x 87	H60 x 95	H70 x 105
	9	**H2B**	H25 x 48	H35 x 58	H45 x 71	H50 x 87	H70 x 95	H80 x 105
	9	**H2C**	H30 x 48 *)	H40 x 58 *)	H50 x 71 *)	H60 x 87 *)	H75 x 95 *)	H90 x 105 *)

*) Preferred series

4

© Siemens AG 2011

Flange-mounted designs (A-type)

Selection and ordering data

Order code	Flange diameter										
Bevel helical gearboxes B and K											
Size	**B.F28**	**B.F38**	**K.F38**	**K.F48**	**K.F68**	**K.F88**	**K.F108**	**K.F128**	**K.F148**	**K.F168**	**K.F188**
H02	120		160			300	350		450		660
H03	160			200	250			450		550	
H04		160									
H05		200									

© Siemens AG 2011

Selection and ordering data

The mounting type / mounting position must be specified when you place your order to ensure that the gearbox is supplied with the correct quantity of oil.

Please contact customer service to discuss the oil quantity if you wish to use a mounting position which is not shown here.

Position of the terminal box

The terminal box of the motor can be mounted in four different positions. See Chapter 8 for an accurate representation of the terminal box position and the corresponding order codes

Bevel helical gearbox B, foot-mounted design, flange-mounted design, and with housing flange

Oil control valves:

- Size 28: These types are lubricated for life. No ventilation, oil level, or drain plugs are present.
- Size 38: Oil inlet Oil drain A, B position of the customer's solid/plug-in shaft

1 ... 4 Position of the terminal box, see Chapter 8.

1) Standard mounting type

B: B3-00 (IM B3-00) 1)
Order code: Output side A **D06**, output side B **D08**

BF, BZ: B5-01 (IM B5-01) 1)
Order code: Output side A **D22**, output side B **D24**

BA, BAF, BAZ: H-01 1)
Order code: Output side A **D76**, output side B **D77**

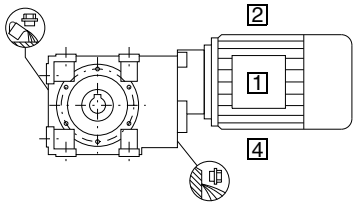

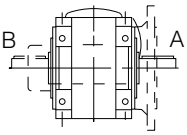

B: B8-00 (IM B8-00)
Order code: Output side A **D68**, output side B **D70**

BF, BZ: B5-03 (IM B5-03)
Order code: Output side A **D32**, output side B **D34**

BA, BAF, BAZ: H-02
Order code: Output side A **D78**, output side B **D79**

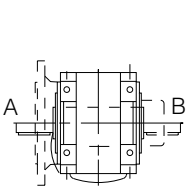

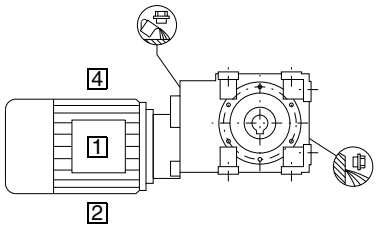

B: B6-00 (IM B6-00)
Order code: Output side A **D38**, output side B **D40**

BF, BZ: B5-00 (IM B5-00)
Order code: Output side A **D18**, output side B **D20**

BA, BAF, BAZ: H-04
Order code: Output side A **D82**, output side B **D83**

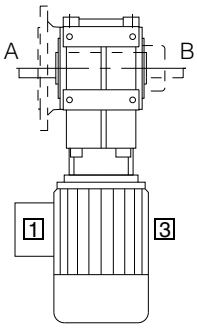

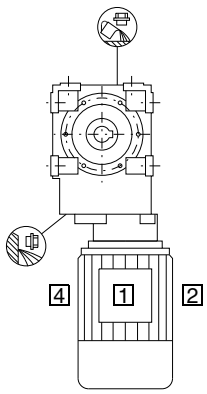

B: B7-00 (IM B7-00)
Order code: Output side A **D59**, output side B **D61**

BF, BZ: B5-02 (IM B5-02)
Order code: Output side A **D27**, output side B **D29**

BA, BAF, BAZ: H-03
Order code: Output side **D80**, output side B **D81**

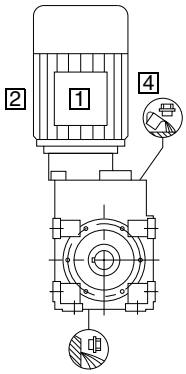

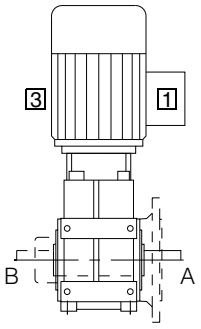

B: V5-00 (IM V5-00)
Order code: Output side A **E03**, output side B **E05**

BF, BZ: V1-00 (IM V1-00)
Order code: Output side A **D90**, output side B **D92**

BA, BAF, BAZ: H-05
Order code: Output side A **D84**, output side B **D85**

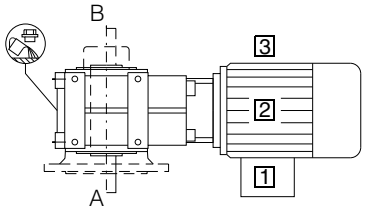

B: V6-00 (IM V6-00)
Order code: Output side A **E15**, output side B **E17**

BF, BZ: V3-00 (IM V3-00)
Order code: Output side A **D98**, output side B **E00**

BA, BAF, BAZ: H-06
Order code: Output side A **D86**, output side B **D87**

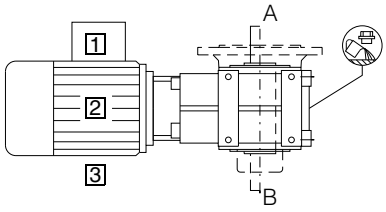

© Siemens AG 2011

Selection and ordering data (continued)

Bevel helical gearbox K, foot-mounted design

Oil control valves:

- Size 38: V Oil inlet/oil drain
- From size 48 up: Oil level Ventilation Oil drain * On opposite side

A,B position of the customer's solid/plug-in shaft

1 ... 4 Position of the terminal box, see Chapter 8.

1) Standard mounting type

K: B3-00 (IM B3-00) 1)
Order code: Output side A **D06**, output side B **D08**
KA: H-01 1)
Order code: Output side A **D76**, output side B **D77**

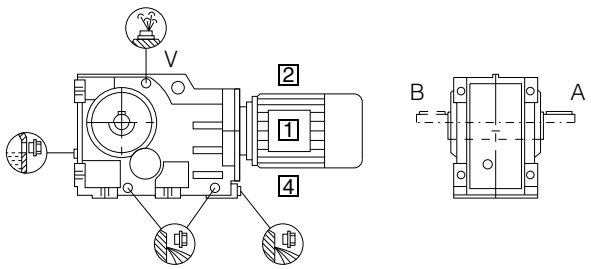

K: B8-00 (IM B8-00)
Order code: Output side A **D68**, output side B **D70**
KA: H-02
Order code: Output side A **D78**, output side B **D79**

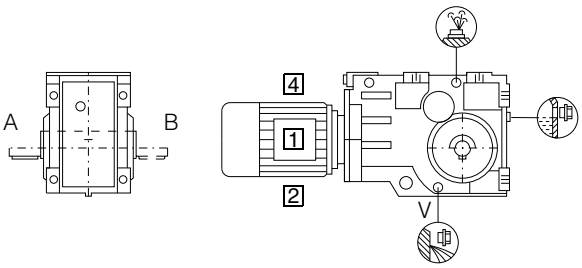

K: B6-00 (IM B6-00)
Order code: Output side A **D38**, output side B **D40**
KA: H-04
Order code: Output side A **D82**, output side B **D83**

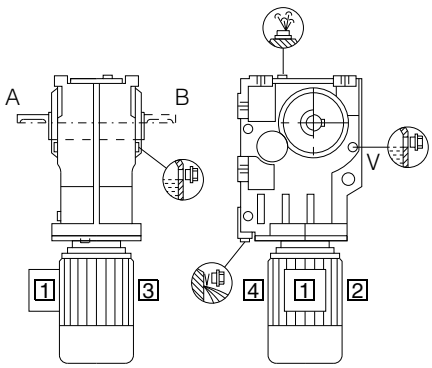

K: B7-00 (IM B7-00)
Order code: Output side A **D59**, output side B **D61**
KA: H-03
Order code: Output side A **D80**, output side B **D81**

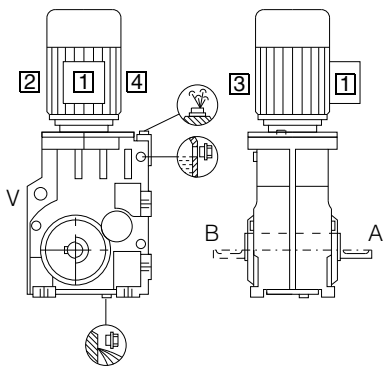

K: V5-00 (IM V5-00)
Order code: Output side A **E03**, output side B **E05**
KA: H-05
Order code: Output side A **D84**, output side B **D85**

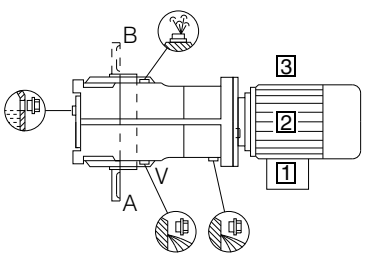

K: V6-00 (IM V6-00)
Order code: Output side A **E15**, output side B **E17**
KA: H-06
Order code: Output side A **D86**, output side B **D87**

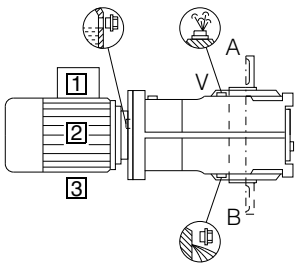

© Siemens AG 2011

Selection and ordering data (continued)

Bevel helical gearbox K, flange-mounted design (K.F), with housing flange (K.Z) or torque arm (K.D)

Oil control valves:

- Size 38: V Oil inlet/oil drain
- From size 48 up: Oil level Ventilation Oil drain * On opposite side

A,B position of the customer's solid/plug-in shaft

1 ... 4 Position of the terminal box, see Chapter 8.

1) Standard mounting type

KF: B5-01 (IM B5-01) 1)
Order code: Output side A **D22**, output side B **D24**
KAD, KAF, KAZ: H-01 1)
Order code: Output side A **D76**, output side B **D77**

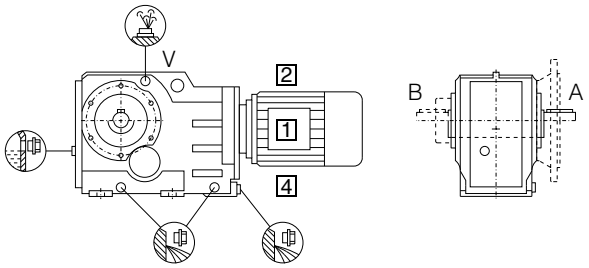

KF: B5-03 (IM B5-03)
Order code: Output side A **D32**, output side B **D34**
KAD, KAF, KAZ: H-02
Order code: Output side A **D78**, output side B **D79**

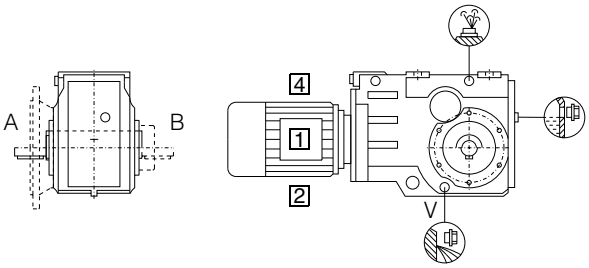

KF: B5-00 (IM B5-00)
Order code: Output side A **D18**, output side B **D20**
KAD, KAF, KAZ: H-04
Order code: Output side A **D82**, output side B **D83**

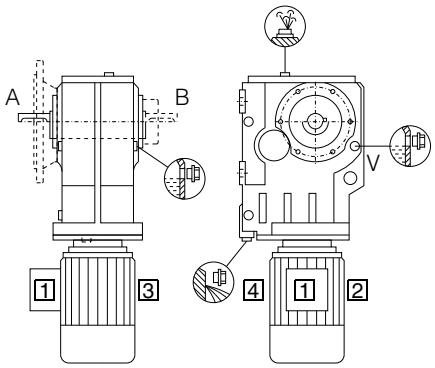

KF: B5-02 (IM B5-02)
Order code: Output side A **D68**, output side B **D29**
KAD, KAF, KAZ: H-03
Order code: Output side A **D80**, output side B **D81**

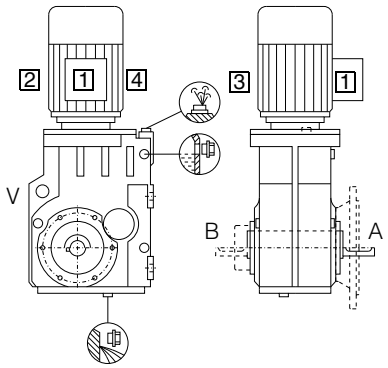

KF: V1-00 (IM V1-00)
Order code: Output side A **D90**, output side B **D92**
KAD, KAF, KAZ: H-05
Order code: Output side A **D84**, output side B **D85**

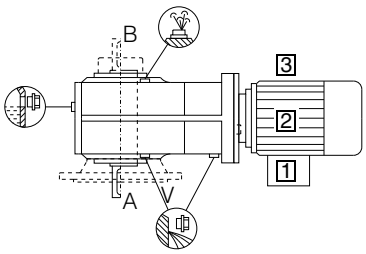

KF: V3-00 (IM V3-00)
Order code: Output side A **D98**, output side B **E00**
KAD, KAF, KAZ: H-06
Order code: Output side A **D86**, output side B **D87**

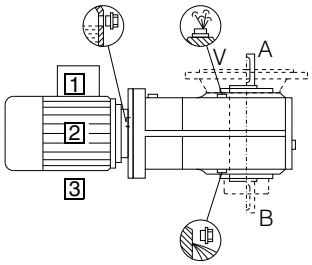

Bevel helical gearbox with extruder flange (KAE)

Mounting positions correspond to those of standard gearboxes with hollow shaft.

© Siemens AG 2011

Mounting types and mounting positions

Selection and ordering data (continued)

Bevel helical gearbox K with mixer flange (K.M)

Oil control valves:

Oil level Ventilation Oil drain * On opposite side

A,B position of the customer's solid/plug-in shaft

1 ... 4 Position of the terminal box, see Chapter 8.

1) Standard mounting type

KM: B5-01 (IM B5-01) [1)]
Order code: Output side B **D24**
KAM: H-01 [1)]
Order code: Output side B **D77**

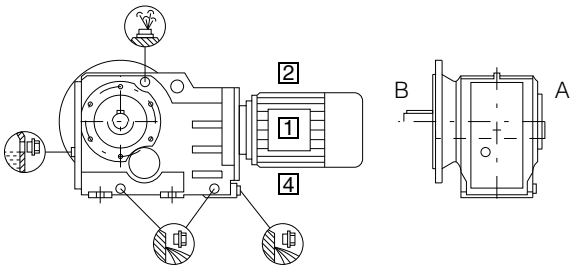

KM: B5-03 (IM B5-03)
Order code: Output side B **D34**
KAM: H-02
Order code: Output side B **D79**

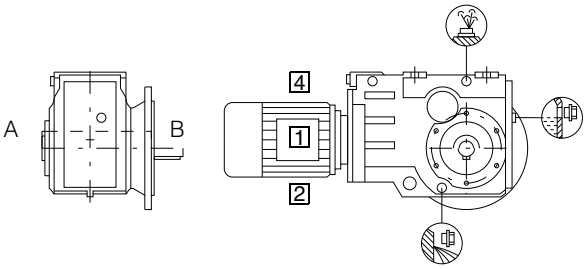

KM: B5-00 (IM B5-00)
Order code: Output side B **D20**
KAM: H-04
Order code: Output side B **D83**

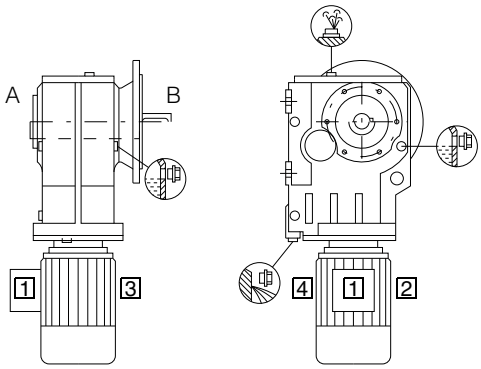

KM: B5-02 (IM B5-02)
Order code: Output side B **D29**
KAM: H-03
Order code: Output side B **D81**

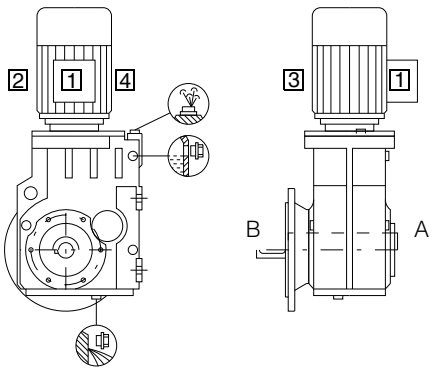

KM: V1-00 (IM V1-00)
Order code: Output side B **D92**
KAM: H-05
Order code: Output side B **D85**

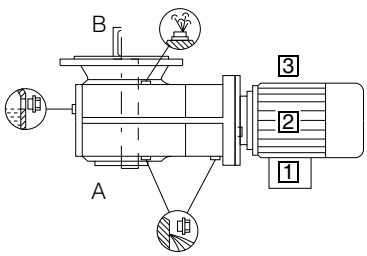

KM: V3-00 (IM V3-00)
Order code: Output side B **E00**
KAM: H-06
Order code: Output side B **D87**

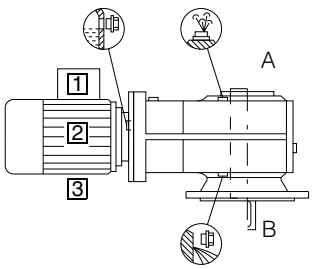

© Siemens AG 2011

Selection and ordering data (continued)

Bevel helical tandem gearbox

The mounting type / mounting position of the tandem gearbox corresponds to that of the main gearbox. The figures below are only designed to show the position of the oil control valves of the 2nd gearbox.

Note:

In a horizontal operating position the bulging part of the housing of the 2nd gearbox generally faces vertically downwards.

Oil control valves:

- Size 28/38 (2nd gearbox): These types are lubricated for life. No ventilation, oil level, or drain plugs are present.
- From size 48 up: Oil level Ventilation Oil drain * On opposite side

② 2-stage gearbox ③ 3-stage gearbox

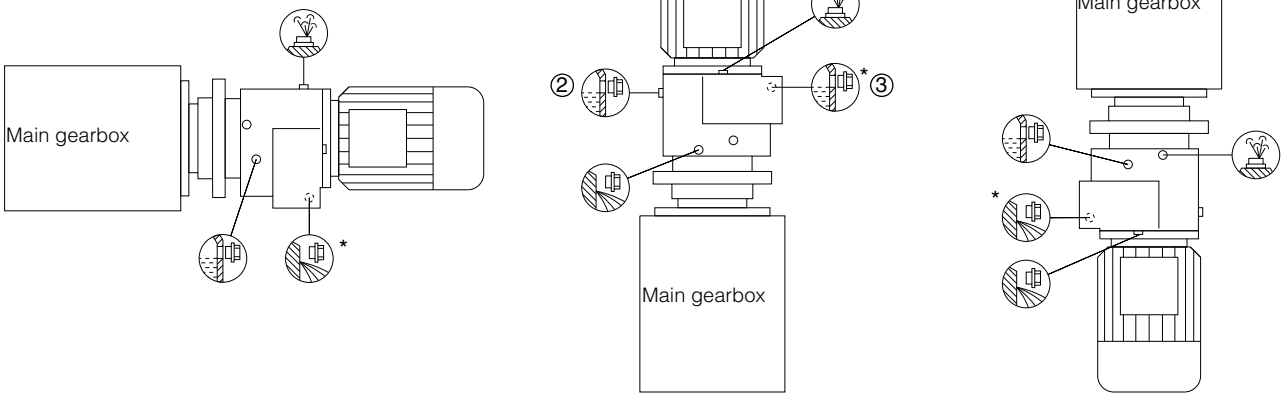

© Siemens AG 2011

Special versions

Lubricants

2-stage bevel helical gearbox B

Bevel helical gearboxes B.28 and B.38 are always filled with synthetic lubricant prior to dispatch. The rating plate contains information about the appropriate type of oil (PGLP) and ISO viscosity class.

If the gearbox is to be used in an application with special requirements, the lubricants listed in the table below can be used.

Area of application	Ambient temperature [1]	DIN ISO designation	Order code
Standard oils			
Standard temperature	0 … +60 °C	CLP ISO PG VG460	**K08**
Low temperature usage	-20 … +50 °C	CLP ISO PG VG220	**K07**
Lowest temperature usage	-40 … +40 °C	CLP ISO PAO VG220	[2]
Physiologically safe oils (for use in the food industry) in acc. with NSF(USDA)-H1			
Standard temperature	-30 … +40 °C	CLP ISO H1 VG460	**K11**
Biologically degradable oils			
Standard temperature	-20 … +40 °C	CLP ISO E VG220	**K10**

1) Recommendation
2) On request

3-stage bevel helical gearbox K

Bevel helical gearboxes K are filled with mineral oil as standard.

If the gearbox is to be used in an application with special requirements, the lubricants listed in the table below can be used.

Area of application	Ambient temperature [1]	DIN ISO designation	Order code
Standard oils			
Standard temperature	-10 … +40 °C	CLP ISO VG220	**K06**
Improved oil service life	-20 … +50 °C	CLP ISO PG VG220	**K07**
High temperature usage	0 … +60 °C	CLP ISO PG VG460	**K08**
Low temperature usage	-40 … +40 °C	CLP ISO PAO VG220	[2]
Lowest temperature usage	-40 … +10 °C	CLP ISO PAO VG68	[2]
Physiologically safe oils (for use in the food industry) in acc. with NSF(USDA)-H1			
Standard temperature	-30 … +40 °C	CLP ISO H1 VG460	**K11**
Biologically degradable oils			
Standard temperature	-20 … +40 °C	CLP ISO E VG220	**K10**

1) Recommendation
2) On request

Size 28 does not feature any ventilation, oil level, or drain plugs. The lubricant does not need to be changed, due to the low thermal load the gearbox is subjected to. Bevel helical gearboxes of size 38 have an oil screw; these gearboxes do not require ventilation or ventilation elements.

Gearboxes of sizes 48 to 188 are fitted with filler, oil level, and drain plugs as standard. The ventilation and vent filter, which is delivered loose, must be attached in place of the filler plug prior to startup.

© Siemens AG 2011

Oil level control

Oil sight glass

For size 48 and above, bevel helical gearbox K can be equipped with a visual oil level indicator (oil sight glass) for most mounting types and mounting positions.

Order code:
Oil sight glass **G34**

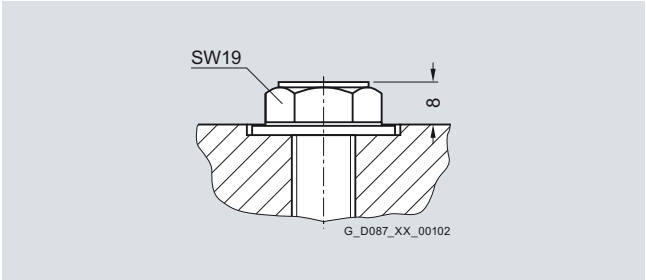

SW = Wrench width

Gearbox	Size
Bevel helical gearbox	K.48 … K.128

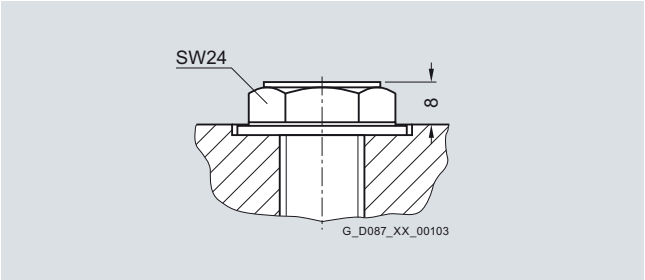

SW = Wrench width

Gearbox	Size
Bevel helical gearbox	K.148 … K.188

Electrical oil level monitoring system

If required, the gearbox can be supplied with an electrical oil level monitoring system, which enables the oil level of the gearbox to be monitored remotely. The oil level is monitored by a capacitive sensor only when the gearbox starts up; it is not measured continuously.

Gearbox ventilation

The positions of the ventilation and ventilation elements can be seen on the mounting position diagrams.

If required, a pressure ventilation valve can be used for bevel helical gearbox K, size 48 and above.

Order code	K.48 … K.128	K.148 … K.188
Vent filter Order code: **G44**	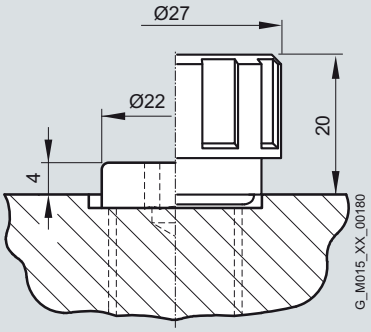	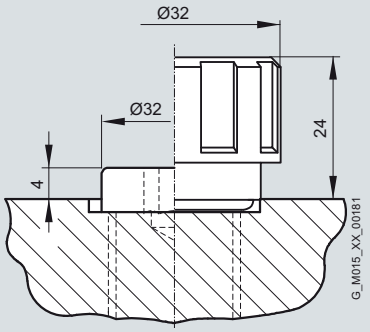
Pressure ventilation valve Order code: **G45**	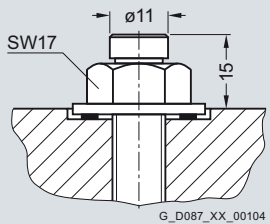	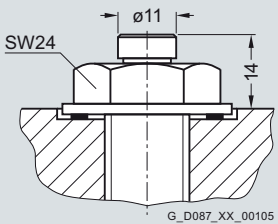

SW = Wrench width

© Siemens AG 2011

Special versions

Oil drain

Magnetic oil drain plug

A magnetic oil drain plug for inserting in the oil drainage hole is available on request for bevel helical gearboxes of size 48 and above. This serves to collect any grit contained in the gear lubricant.

Order code:
Magnetic oil drain plug **G53**

Oil drain valve

An oil drain valve is available on request for bevel helical gearboxes of size 48 and above.

The plug valve may be designed as a complete unit featuring a screw plug, depending on the corresponding mounting position.

Order code:
Oil drain valve, straight **G54**

An angled oil drain valve is also available on request.

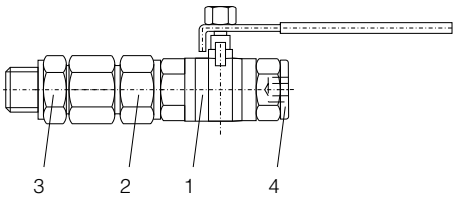

Pos.1 Oil drain valve
Pos.2 Screwed connection EGE
Pos.3 Screwed connection GE
Pos.4 Screw plug

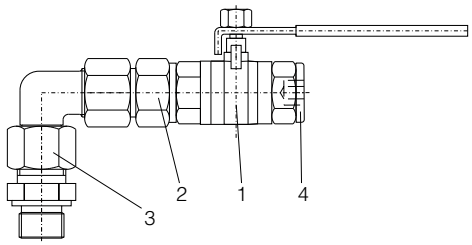

Pos.1 Oil drain valve
Pos.2 Screwed connection EGE
Pos.3 Screwed connection GE
Pos.4 Screw plug

Sealing

Combination shaft sealing

A combination shaft sealing, which helps to prevent oil from leaking, is available for bevel helical gearbox K of sizes 38 to 168.

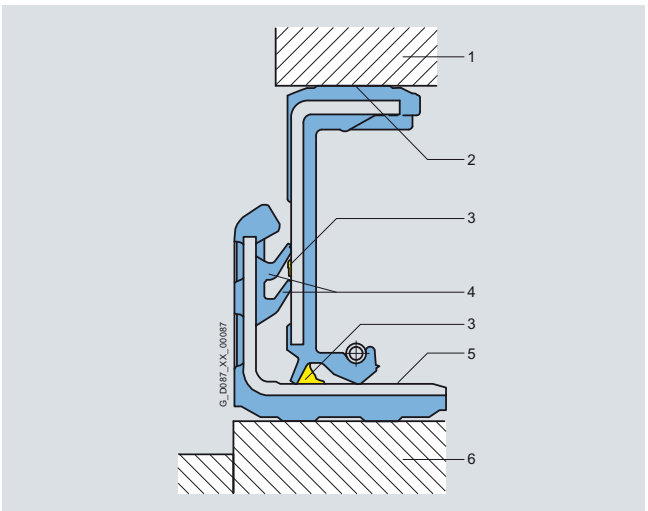

A combination shaft sealing is particularly well suited to external use.

Order code:
Combination shaft sealing **G24**

1 • Housing
2 • Rubberized inner and outer diameter
3 • Grease filling prevents dry running of the sealing lips
4 • Additional sealing lips to protect against dirt
• Decoupled sealing system prevents scoring of the shaft as a result of corrosion or dirt
5 • Protected running surface for radial shaft sealing ring
• No damage when mounting
6 • Shaft

Double sealing

Double sealing is possible for bevel helical gearboxes of sizes 28 and 188. Double sealing is particularly well suited to external use.

Order code:
Double sealing MSS1 (Sizes 18) **G23**
Double radial shaft seal (Sizes 188) **G22+G31**

High temperature resistant sealing

High temperature resistant sealing (Viton/fluorinated rubber) for high operating and ambient temperatures of +60 °C and above are available for bevel helical gearboxes.

Order code:
High temperature resistant sealing **G25**

© Siemens AG 2011

Hollow shaft cover (protection cover)

Gearboxes with hollow shaft are delivered with a plastic sealing cap as standard.

They can be fitted with a fixed protection cover on request. Gearboxes of size 28 are fitted as standard with a steel protection cover.

The steel protection cover is the only type of cover which can be used on gearboxes with hollow shaft and shrink disk.

For outdoor use we recommend the ATEX versions.

Order codes:

Protection cover	**G62**
Protection cover (ATEX)	**G63**
Steel protection cover	**G60**
Steel protection cover (ATEX)	**G61**

Protection cover

Protection cover Steel

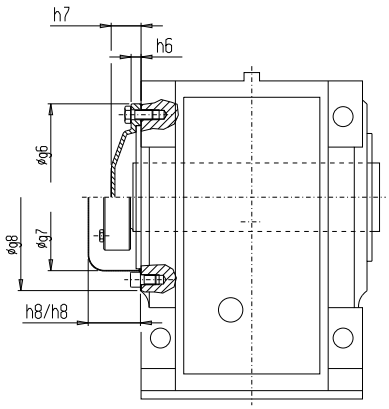

KA, KAS[1)], KAT

Gearbox type	Steel protection cover					Protection cover	
	g7	g8	h8*	h8	g6	h6	h7*
K.38	–	–	–	–	–	–	–
K.48	99.0	130	44.0	44.0	132	10	33
K.68	115.0	150	62.5	69.0	150	10	37
K.88	137.0	190	70.0	70.0	190	13	50
K.108	187.0	240	80.0	92.0	245	13	55
K.128	233.0	292	85.0	97.0	295	16	48
K.148	257.5	334	100.0	113.0	335	13	50
K.168	309.5	390	129.5	154.5	400	13	50
K.188	309.5	390	129.5	129.5	400	13	50

Protection cover

Protection cover Steel

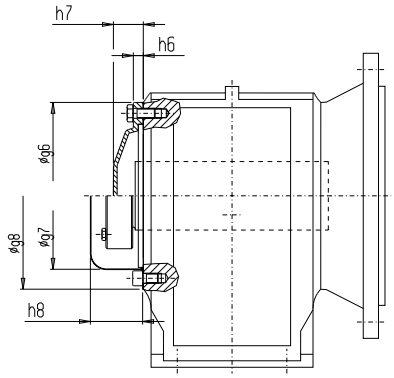

BAF, BAZ, BAFS, BAZS, BAFT, BAZT
KAF, KAZ, KAFS[1)], KAZS[1)], KAFT, KAZT

Gearbox type	Steel protection cover				Protection cover	
	g7	g8	h8	g6	h6	h7
B.28	58.0	102	33.5	–	–	–
B.38	99.0	130	44.0	132	10	33
K.38	82.2	115	40.0	120	10	33
K.48	99.0	130	44.0	132	10	33
K.68	115.0	150	62.5	150	10	37
K.88	137.0	190	70.0	190	13	50
K.108	187.0	240	80.0	245	13	55
K.128	233.0	292	85.0	295	16	48
K.148	257.5	334	100.0	335	13	50
K.168	309.5	390	129.5	400	13	50
K.188	309.5	390	129.5	400	13	50

1) Only a steel protection cover is available for KAS, KADS, KAFS, and KAZS; standard protection cover for size 28

h7* / h8* = Touch protection
h7 / h8 = Touch protection and dust proof

Radially reinforced output shaft bearings

The bearings of the MOTOX gearboxes are dimensioned such that they are strong enough to withstand most application cases.

However, the gearboxes can be fitted with a reinforced output shaft bearing arrangement for applications with particularly high radial forces.

Order code:
Radially reinforced output shaft bearing **G20**

© Siemens AG 2011

Special versions

2nd output shaft extension

If required, bevel helical gearboxes in a foot-mounted design with solid shaft are available with a 2nd shaft extension. See the dimension drawings for the corresponding design for the relevant dimensions.

Order code:
2nd output shaft extension **G73**

Bevel helical gearbox with backstop in the intermediate stage (K.X)

Bevel helical gearboxes of types KF, KAD, KAF, KAZ, KADS, KAFS, and KAZS can be supplied with a backstop in the intermediate stage.

The backstop can only be attached opposite the output side A or B.

Non-drive-end cover (protection cover) can not be attached on bevel helical gearboxes with backstop.

Order code:
Backstop **G72**

Note:

The direction of rotation of the output shaft must be specified for geared motors with a backstop. See also "Direction of rotation of geared motors", page 1/43.

Order codes:
Output shaft direction of rotation
Clockwise **K18**
Counterclockwise **K19**

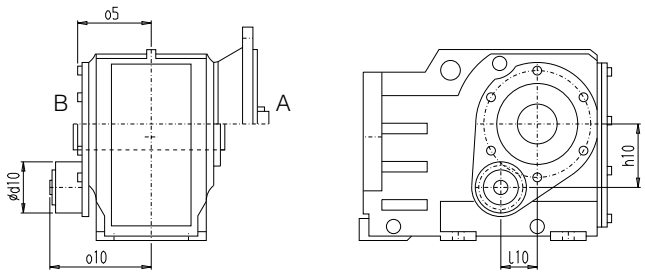

Gearbox	d10	o10	l10	h10	o5
K.X88	79	166.0	56.3	98	112
K.X108	110	192.5	70.8	112	131
K.X128	132	238.5	80.8	141	163
K.X148	145	276.5	71.0	173	191
K.X168	190	320.5	89.9	203	221

Configuring guide

Gearbox	Main gearbox transmission ratio		Max. permissible output torque of backstop at f_B=1 Nm	Oil quantity of backstop l
K.X88	5.54	… 11.21	2 036	0.04
	11.64	… 302.68	4 275 *)	
K.X108	7.68	… 12.90	3 828	0.06
	13.74	… 307.24	6 852 *)	
K.X128	7.10	… 12.56	7 595	0.09
	13.00	… 295.38	13 907 *)	
K.X148	4.83	… 8.79	10 450	0.11
	9.77	… 306.08	21 139 *)	
K.X168	6.61	… 11.67	16 386	0.44
	12.41	… 287.95	30 750 *)	

*) Data for tandem gearbox

© Siemens AG 2011

Mixer flange in dry-well design

The agitator flange can be fitted with an additional "V" ring (1) in mounting position V3-00 in order to drain off any leak oil to a safety chamber and protect the equipment against the effects of leakages.

The oil can either be viewed through a sight glass, or its presence indicated by an electrical sensor (2).

Order codes:

Dry-well design with sight glass	**G89**
Dry-well design with sensor	**G90**

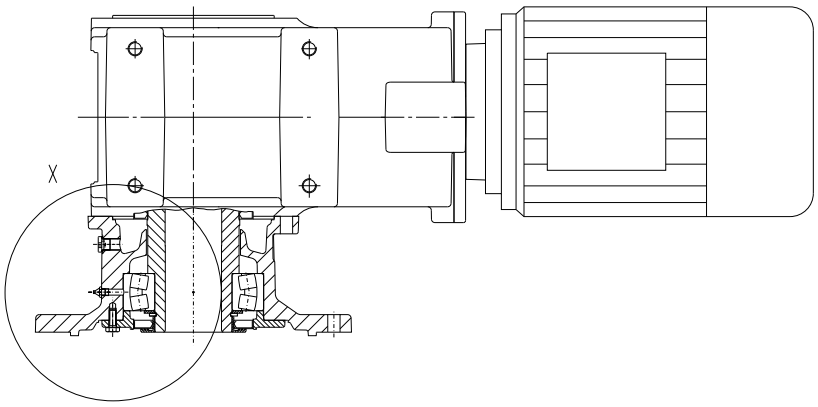

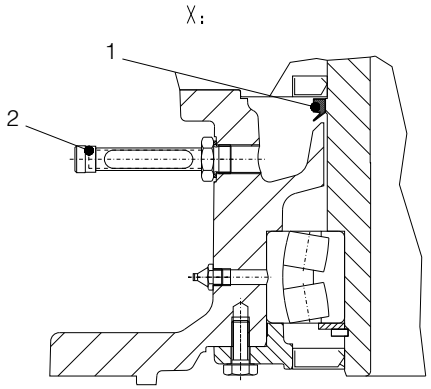

Regreasing device for the mixer flange

The agitator flange gearbox can be fitted with a regreasing device on request.

© Siemens AG 2011

Dimensions

Dimension drawing overview

Representation	Gearbox type	Dimension drawing on page
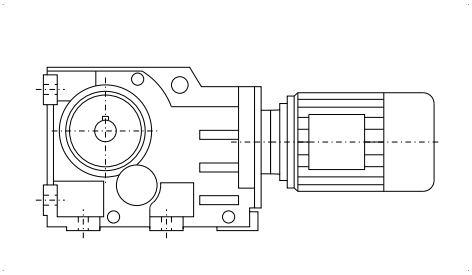	B28 / BZ28	4/102
	B38 / BZ38	4/110
	K38	4/118
	K48	4/128
	K68	4/138
	K88	4/148
	K108	4/158
	K128	4/168
	K148	4/178
	K168	4/188
	K188	4/198
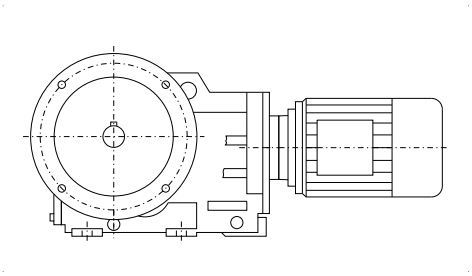	BF28	4/103
	BF38	4/111
	KF38	4/119
	KF48	4/129
	KF68	4/139
	KF88	4/149
	KF108	4/159
	KF128	4/169
	KF148	4/179
	KF168	4/189
	KF188	4/199
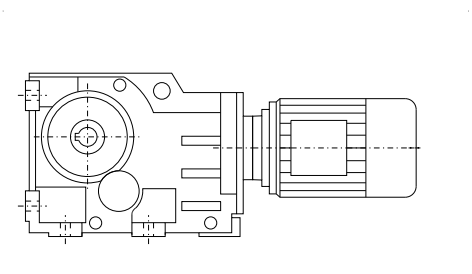	BA28 / BAZ28	4/104
	BA38 / BAZ38	4/112
	KA38	4/120
	KA48	4/130
	KA68	4/140
	KA88	4/150
	KA108	4/160
	KA128	4/170
	KA148	4/180
	KA168	4/190
	KA188	4/200
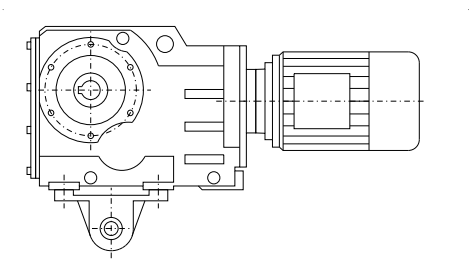	BAD28	4/105
	BAD38	4/113
	KAD38	4/121
	KAD48	4/131
	KAD68	4/141
	KAD88	4/151
	KAD108	4/161
	KAD128	4/171
	KAD148	4/181
	KAD168	4/191
	KAD188	4/201

© Siemens AG 2011

Dimension drawing overview (continued)

Representation	Gearbox type	Dimension drawing on page
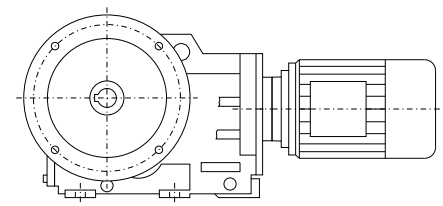	BAF28	4/106
	BAF38	4/114
	KAF38	4/122
	KAF48	4/132
	KAF68	4/142
	KAF88	4/152
	KAF108	4/162
	KAF128	4/172
	KAF148	4/182
	KAF168	4/192
	KAF188	4/202
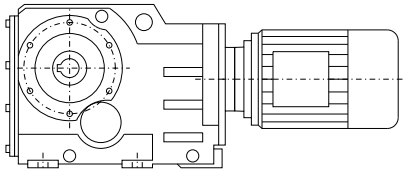	KAZ38	4/123
	KAZ48	4/133
	KAZ68	4/143
	KAZ88	4/153
	KAZ108	4/163
	KAZ128	4/173
	KAZ148	4/183
	KAZ168	4/193
	KAZ188	4/203
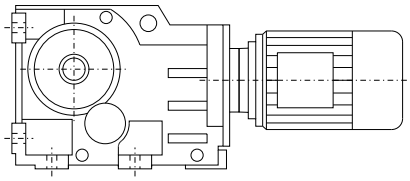	BAS28 / BAZS28	4/107
	BAS38 / BAZS38	4/115
	KAS38	4/124
	KAS48	4/134
	KAS68	4/144
	KAS88	4/154
	KAS108	4/164
	KAS128	4/174
	KAS148	4/184
	KAS168	4/194
	KAS188	4/204
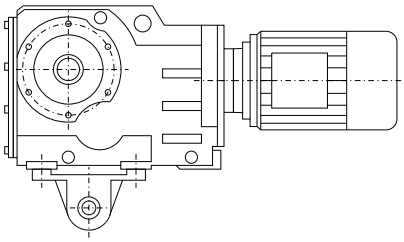	BADS28	4/108
	BADS38	4/116
	KADS38	4/125
	KADS48	4/135
	KADS68	4/145
	KADS88	4/155
	KADS108	4/165
	KADS128	4/175
	KADS148	4/185
	KADS168	4/195
	KADS188	4/205

© Siemens AG 2011

Dimensions

Dimension drawing overview (continued)

Representation	Gearbox type	Dimension drawing on page
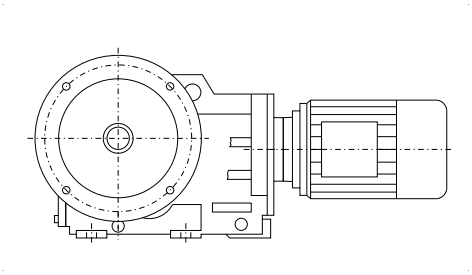	BAFS28	4/109
	BAFS38	4/117
	KAFS38	4/126
	KAFS48	4/136
	KAFS68	4/146
	KAFS88	4/156
	KAFS108	4/166
	KAFS128	4/176
	KAFS148	4/186
	KAFS168	4/196
	KAFS188	4/206
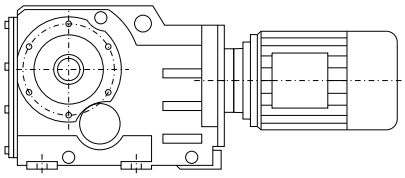	KAZS38	4/127
	KAZS48	4/137
	KAZS68	4/147
	KAZS88	4/157
	KAZS108	4/167
	KAZS128	4/177
	KAZS148	4/187
	KAZS168	4/197
	KAZS188	4/207
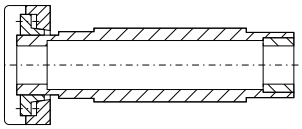	KA.S38 ... KA.S188	4/208
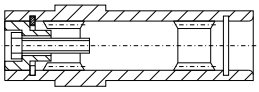	KA.T38 ... KA.T188	4/209
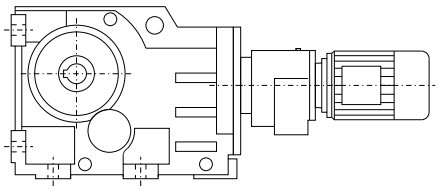	K.38-Z28 ... K.188-Z68	4/210

© Siemens AG 2011

Dimension drawing overview (continued)

Representation	Gearbox type	Dimension drawing on page
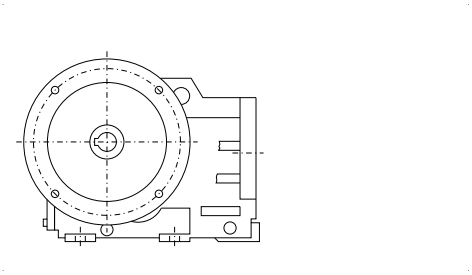	K.M88 ... K.M168	4/213
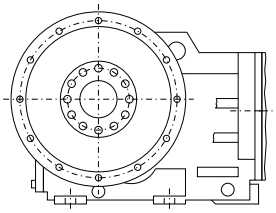	KAE88 ... KAE168	4/215
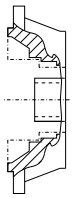	Additional flange-mounted design	4/217
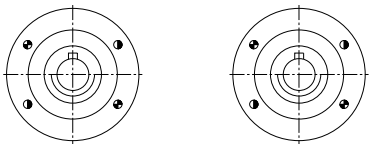	Pin holes	4/218

© Siemens AG 2011

Dimensions

Gearbox B/BZ28 (2-stage), housing-flange-mounted design (C-type)

B012
BZ012

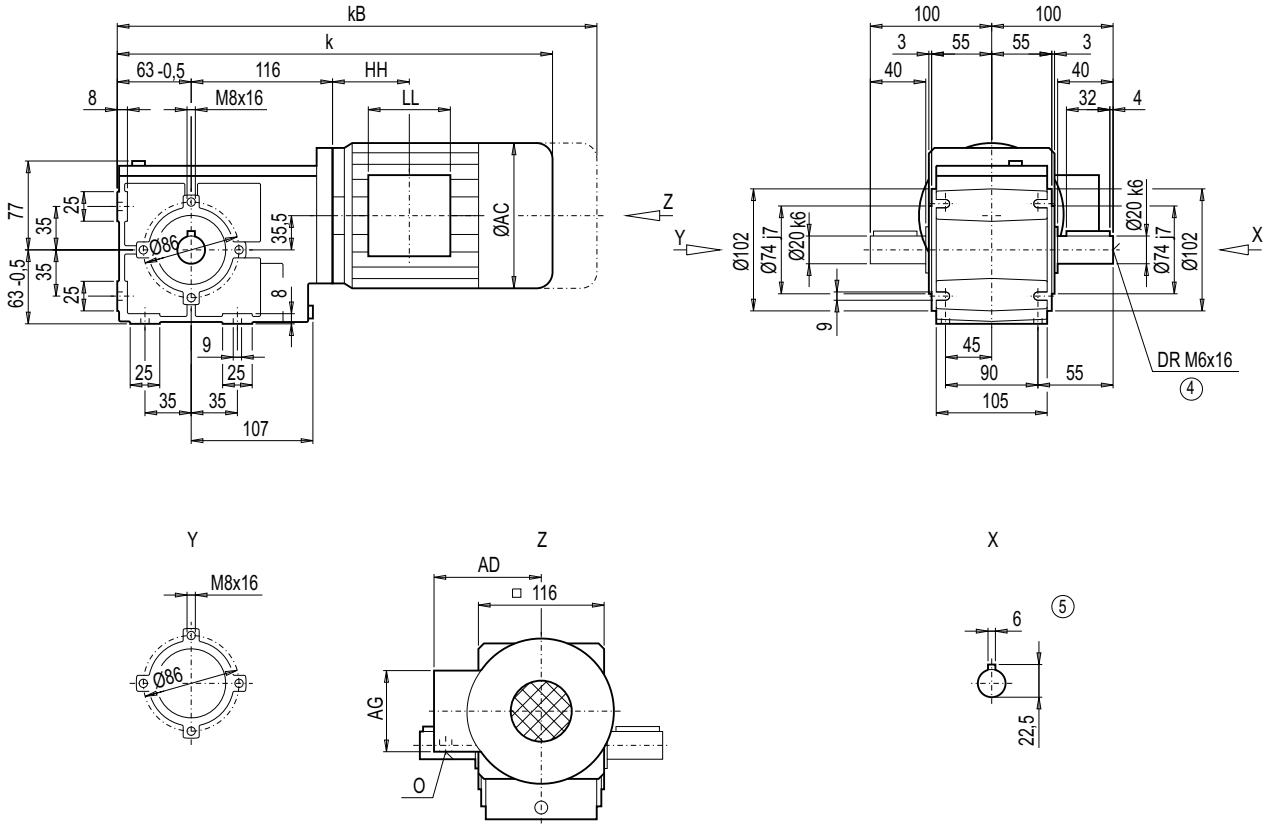

Motor	B.28 k	kB	AC	AD	AG	LL	HH	O	Weight B.28
LA71	381.5	436.5	139	146	90	90	58.5	M20x1.5/M25x1.5	10
LA71Z	400.5	455.5	139	146	90	90	58.5	M20x1.5/M25x1.5	10
LA90S/L	478.5	549.5	174	163	90	90	87.0	M20x1.5/M25x1.5	20
LA90ZL	523.5	594.5	174	163	90	90	211.0	M20x1.5/M25x1.5	28
LA100L	560.5	641.5	195	168	120	120	163.5	2xM32x1.5	29
LA100ZL	630.5	711.5	195	168	120	120	295.5	2xM32x1.5	39

④ DIN 332

⑤ Feather key / keyway DIN 6885

© Siemens AG 2011

Gearbox BF28 (2-stage), flange-mounted design (A-type)

BF012

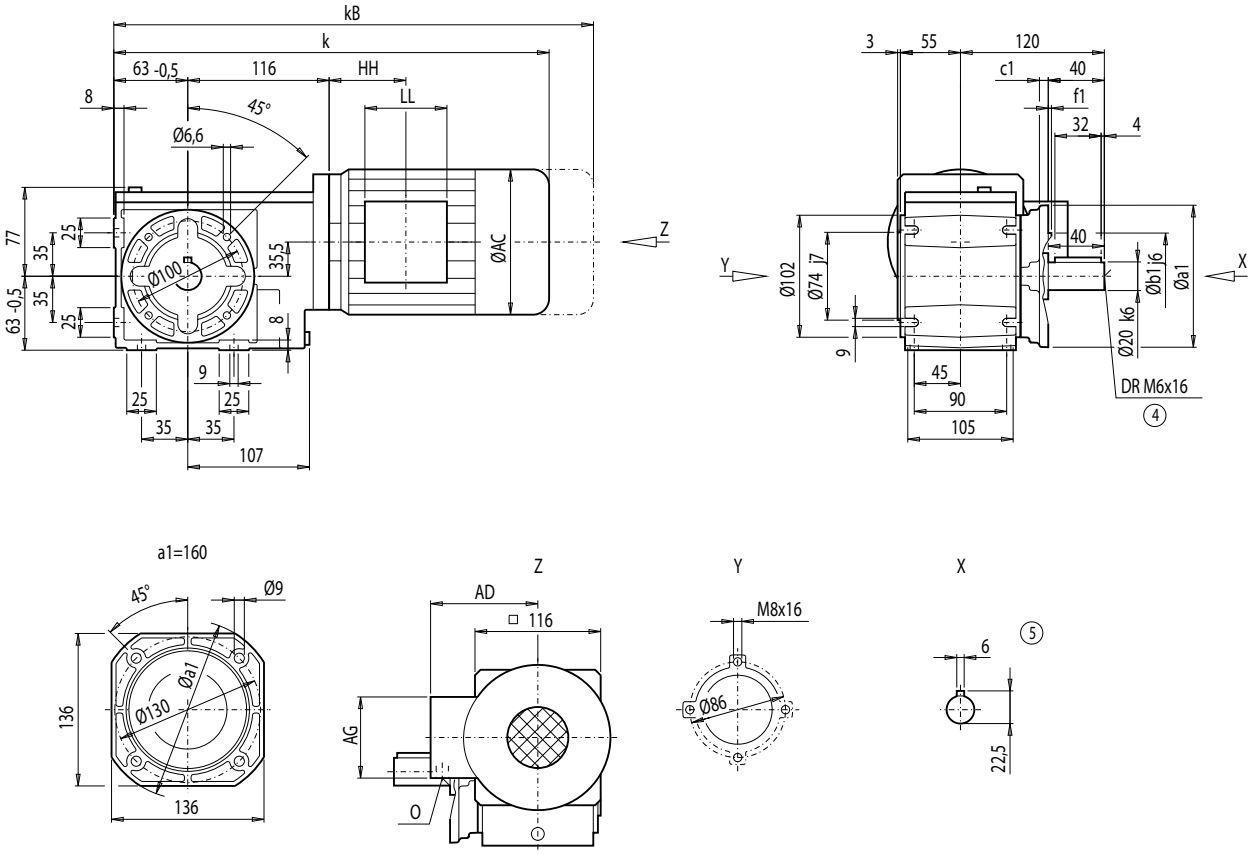

Flange	a1	b1	to2	c1	f1
A120	120	80	j6	8	3.0
A160	160	110	j6	9	3.5

	BF28								Weight
Motor	**k**	**kB**	**AC**	**AD**	**AG**	**LL**	**HH**	**O**	**BF28**
LA71	381.5	436.5	139	146	90	90	58.5	M20x1.5/M25x1.5	10
LA71Z	400.5	455.5	139	146	90	90	58.5	M20x1.5/M25x1.5	10
LA90S/L	478.5	549.5	174	163	90	90	87.0	M20x1.5/M25x1.5	20
LA90ZL	523.5	594.5	174	163	90	90	211.0	M20x1.5/M25x1.5	29
LA100L	560.5	641.5	195	168	120	120	163.5	2xM32x1.5	29
LA100ZL	630.5	711.5	195	168	120	120	295.5	2xM32x1.5	39

④ DIN 332

⑤ Feather key / keyway DIN 6885

© Siemens AG 2011

Dimensions

Gearbox BA/BAZ28 (2-stage), housing-flange-mounted design (C-type)

BA012
BAZ012

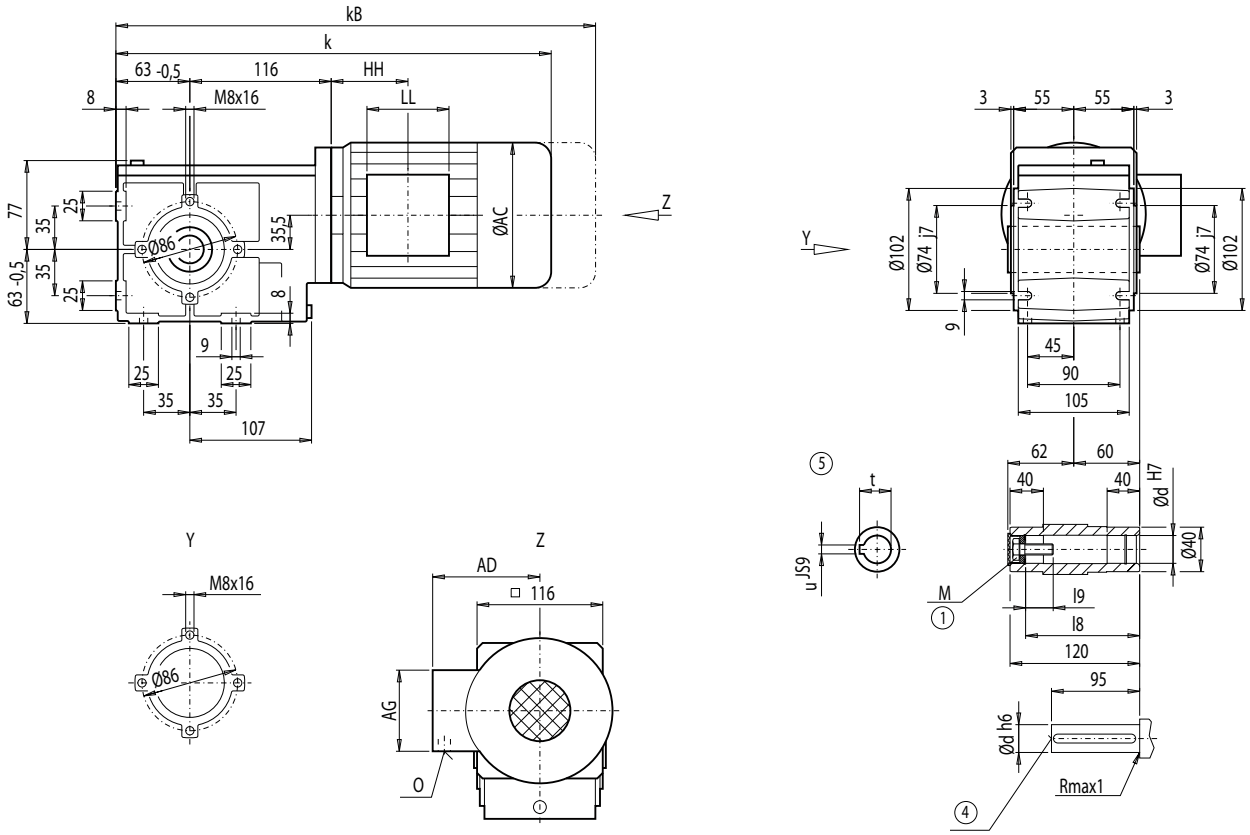

d	l9	l8	M	t	u
20 *)	23.4	106	M6	22.8	6
25	27.6	105	M10	28.3	8

*) Preferred series

Motor	BA.28 k	kB	AC	AD	AG	LL	HH	O	Weight BA.28
LA71	381.5	436.5	139	146	90	90	58.5	M20x1.5/M25x1.5	10
LA71Z	400.5	455.5	139	146	90	90	58.5	M20x1.5/M25x1.5	10
LA90S/L	478.5	549.5	174	163	90	90	87.0	M20x1.5/M25x1.5	19
LA90ZL	523.5	594.5	174	163	90	90	211.0	M20x1.5/M25x1.5	28
LA100L	560.5	641.5	195	168	120	120	163.5	2xM32x1.5	28
LA100ZL	630.5	711.5	195	168	120	120	295.5	2xM32x1.5	38

④ DIN 332 ⑤ Feather key / keyway DIN 6885 ① EN ISO 4014

© Siemens AG 2011

Gearbox BAD28 (2-stage), shaft-mounted design with torque arm

BAD012

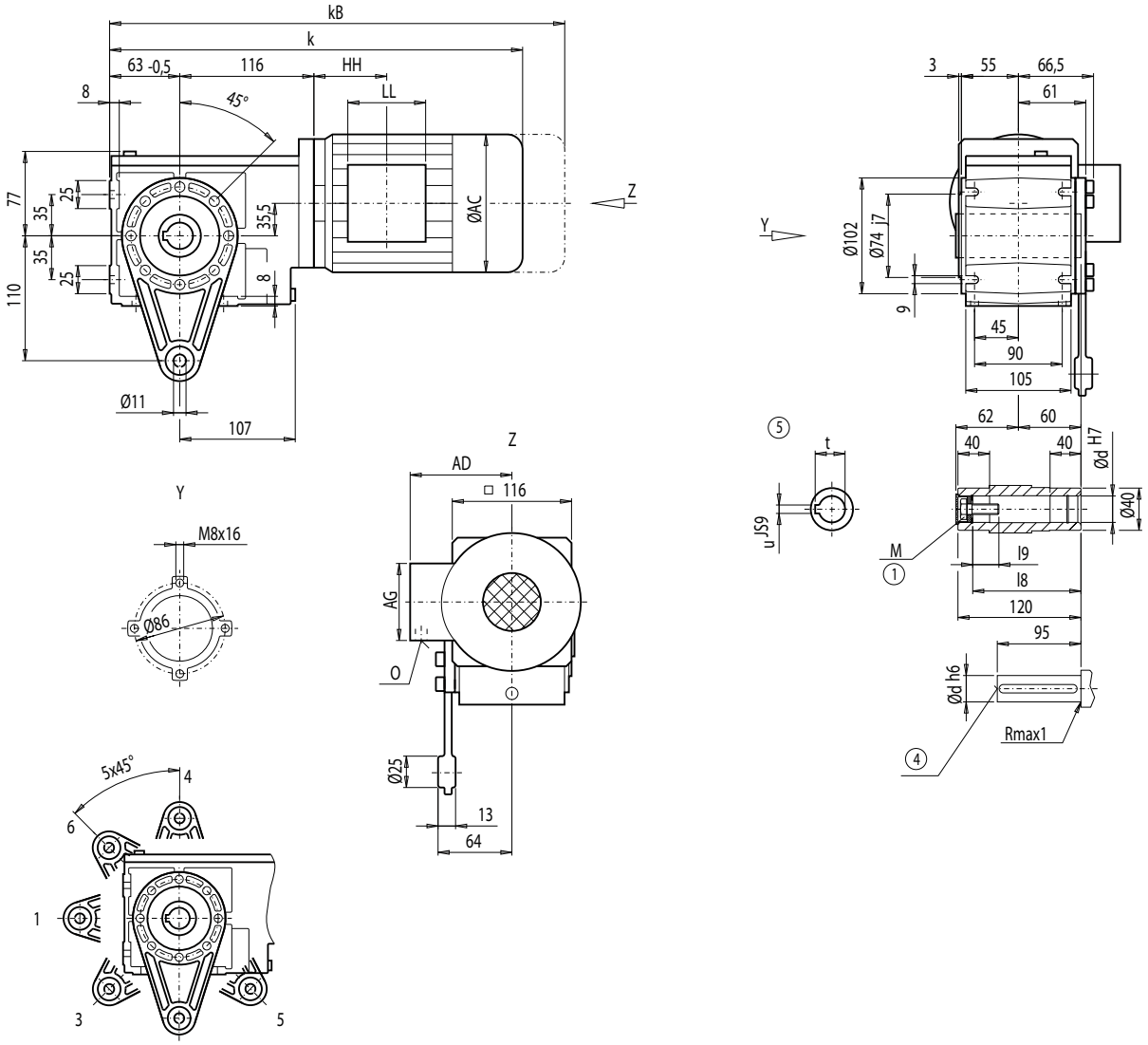

d	l9	l8	M	t	u
20 *)	23.4	106	M6	22.8	6
25	27.6	105	M10	28.3	8

*) Preferred series

Motor	BAD28 k	kB	AC	AD	AG	LL	HH	O	Weight BAD28
LA71	381.5	436.5	139	146	90	90	58.5	M20x1.5/M25x1.5	10
LA71Z	400.5	455.5	139	146	90	90	58.5	M20x1.5/M25x1.5	10
LA90S/L	478.5	549.5	174	163	90	90	87.0	M20x1.5/M25x1.5	19
LA90ZL	523.5	594.5	174	163	90	90	211.0	M20x1.5/M25x1.5	28
LA100L	560.5	641.5	195	168	120	120	163.5	2xM32x1.5	28
LA100ZL	630.5	711.5	195	168	120	120	295.5	2xM32x1.5	38

④ DIN 332 ⑤ Feather key / keyway DIN 6885 ① EN ISO 4014

© Siemens AG 2011

Dimensions

Gearbox BAF28 (2-stage), flange-mounted design

BAF012

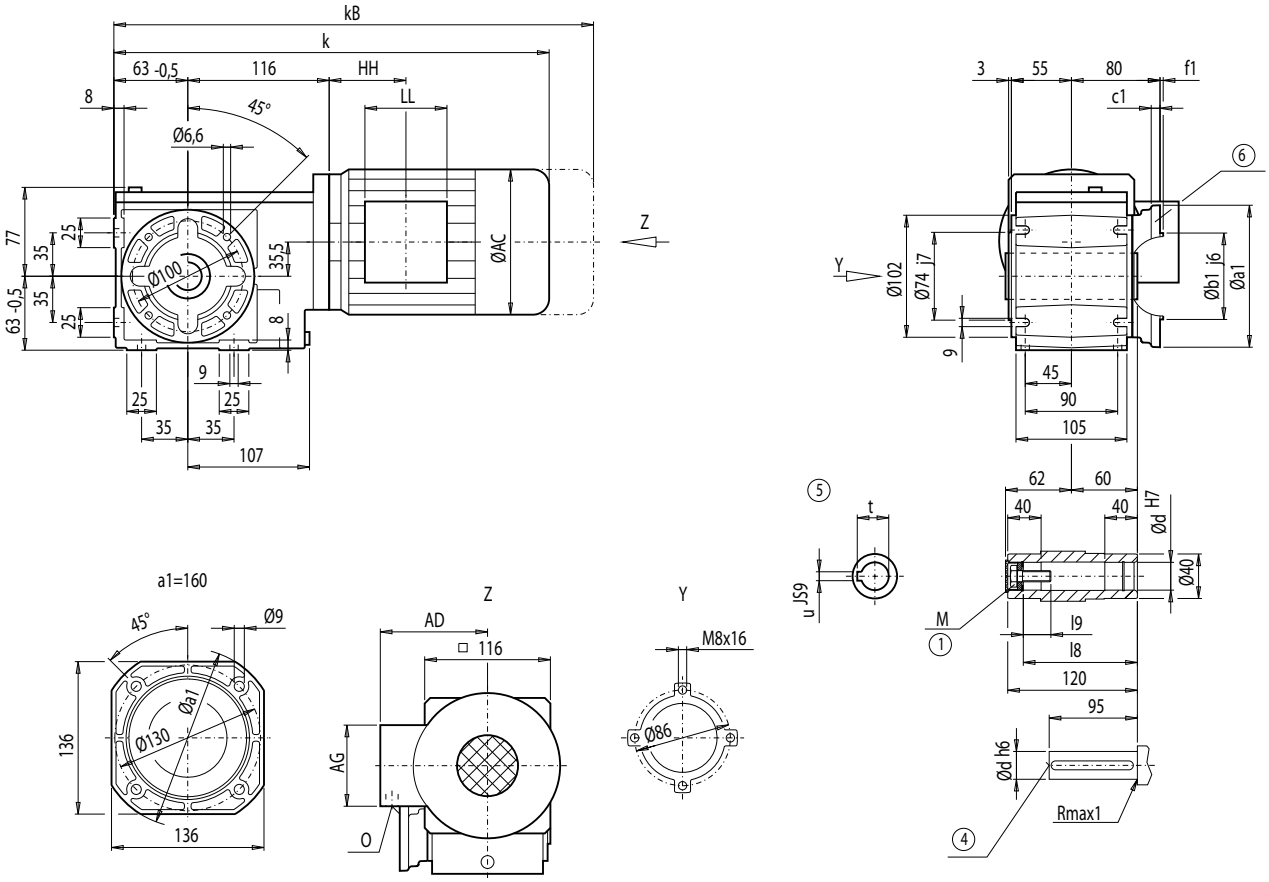

Flange	a1	b1	to2	c1	f1	d	M	l9	l8	t	u
A120	120	80	j6	8	3.0	20 *)	M6	23.4	106	22.8	6
						25	M10	27.6	105	28.3	8
A160	160	110	j6	9	3.5	20 *)	M6	23.4	106	22.8	6
						25	M10	27.6	105	28.3	8

*) Preferred series

	BAF28								Weight
Motor	k	kB	AC	AD	AG	LL	HH	O	BAF28
LA71	381.5	436.5	139	146	90	90	58.5	M20x1.5/M25x1.5	10
LA71Z	400.5	455.5	139	146	90	90	58.5	M20x1.5/M25x1.5	10
LA90S/L	478.5	549.5	174	163	90	90	87.0	M20x1.5/M25x1.5	19
LA90ZL	523.5	594.5	174	163	90	90	211.0	M20x1.5/M25x1.5	28
LA100L	560.5	641.5	195	168	120	120	163.5	2xM32x1.5	29
LA100ZL	630.5	711.5	195	168	120	120	295.5	2xM32x1.5	39

① EN ISO 4014 ④ DIN 332 ⑤ Feather key / keyway DIN 6885 ⑥ For note, see page 4/217

© Siemens AG 2011

Gearbox BAS/BAZS28 (2-stage), shaft-mounted design with housing flange (C-type) and shrink disk

BAS012
BAZS012

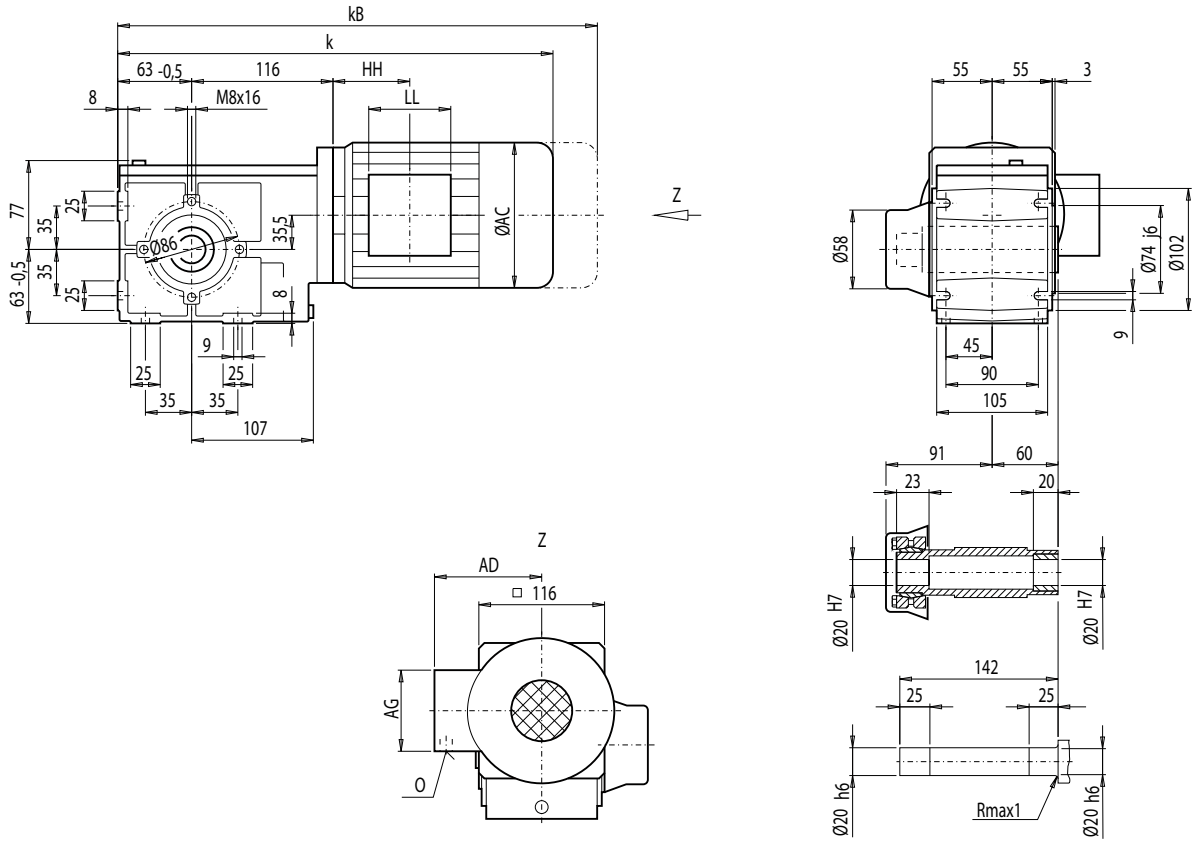

Motor	BA.S28 k	kB	AC	AD	AG	LL	HH	O	Weight BA.S28
LA71	381.5	436.5	139	146	90	90	58.5	M20x1.5/M25x1.5	10
LA71Z	400.5	455.5	139	146	90	90	58.5	M20x1.5/M25x1.5	10
LA90S/L	478.5	549.5	174	163	90	90	87.0	M20x1.5/M25x1.5	19
LA90ZL	523.5	594.5	174	163	90	90	211.0	M20x1.5/M25x1.5	28
LA100L	560.5	641.5	195	168	120	120	163.5	2xM32x1.5	29
LA100ZL	630.5	711.5	195	168	120	120	295.5	2xM32x1.5	39

© Siemens AG 2011

Dimensions

GGearbox BADS28 (2-stage), shaft-mounted design with torque arm and shrink disk

BADS012

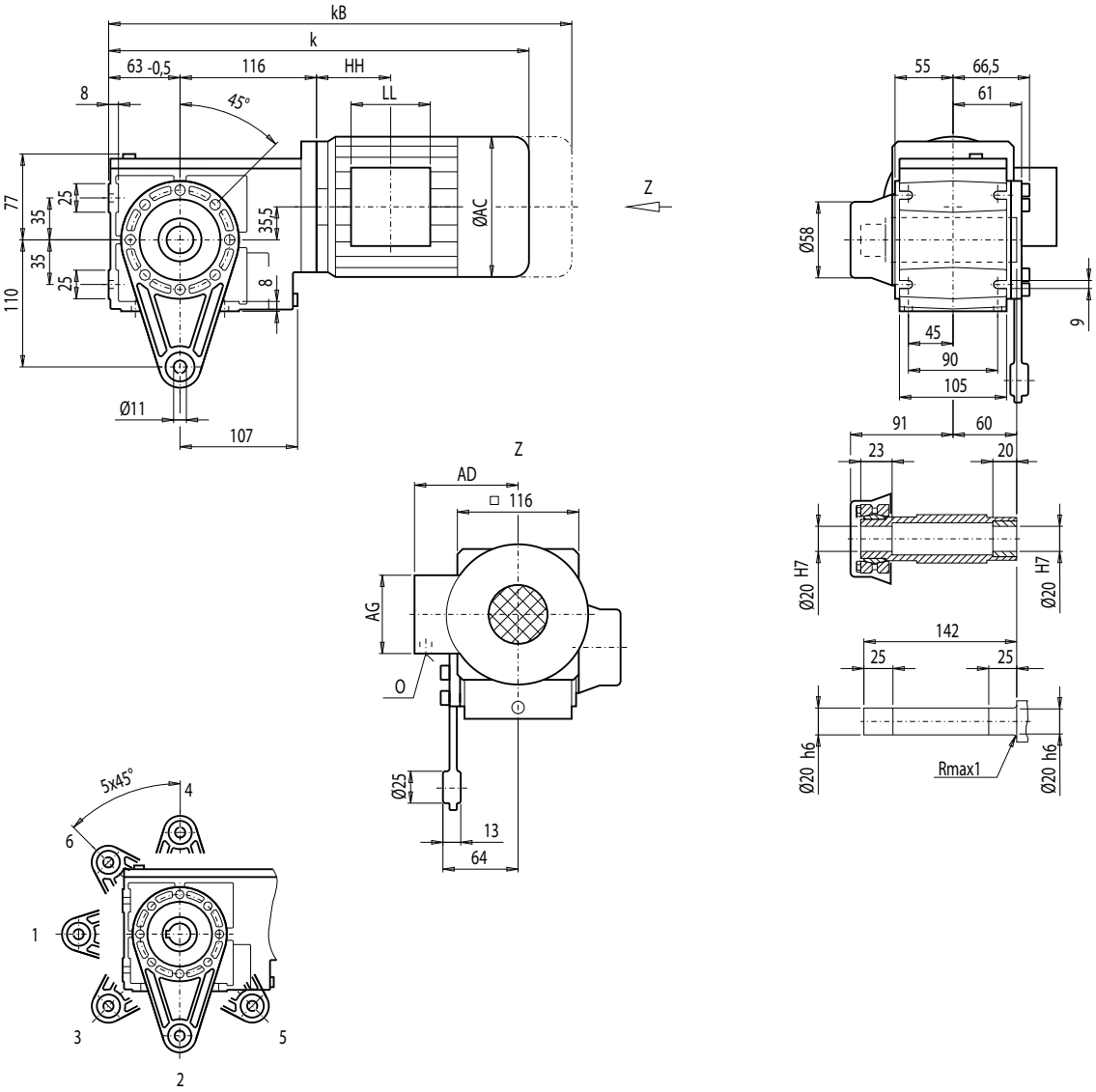

Motor	BADS28 k	kB	AC	AD	AG	LL	HH	O	Weight BADS28
LA71	381.5	436.5	139	146	90	90	58.5	M20x1.5/M25x1.5	10
LA71Z	400.5	455.5	139	146	90	90	58.5	M20x1.5/M25x1.5	10
LA90S/L	478.5	549.5	174	163	90	90	87.0	M20x1.5/M25x1.5	20
LA90ZL	523.5	594.5	174	163	90	90	211.0	M20x1.5/M25x1.5	29
LA100L	560.5	641.5	195	168	120	120	163.5	2xM32x1.5	29
LA100ZL	630.5	711.5	195	168	120	120	295.5	2xM32x1.5	39

© Siemens AG 2011

Gearbox BAFS28 (2-stage), flange-mounted design and shrink disk

BAFS012

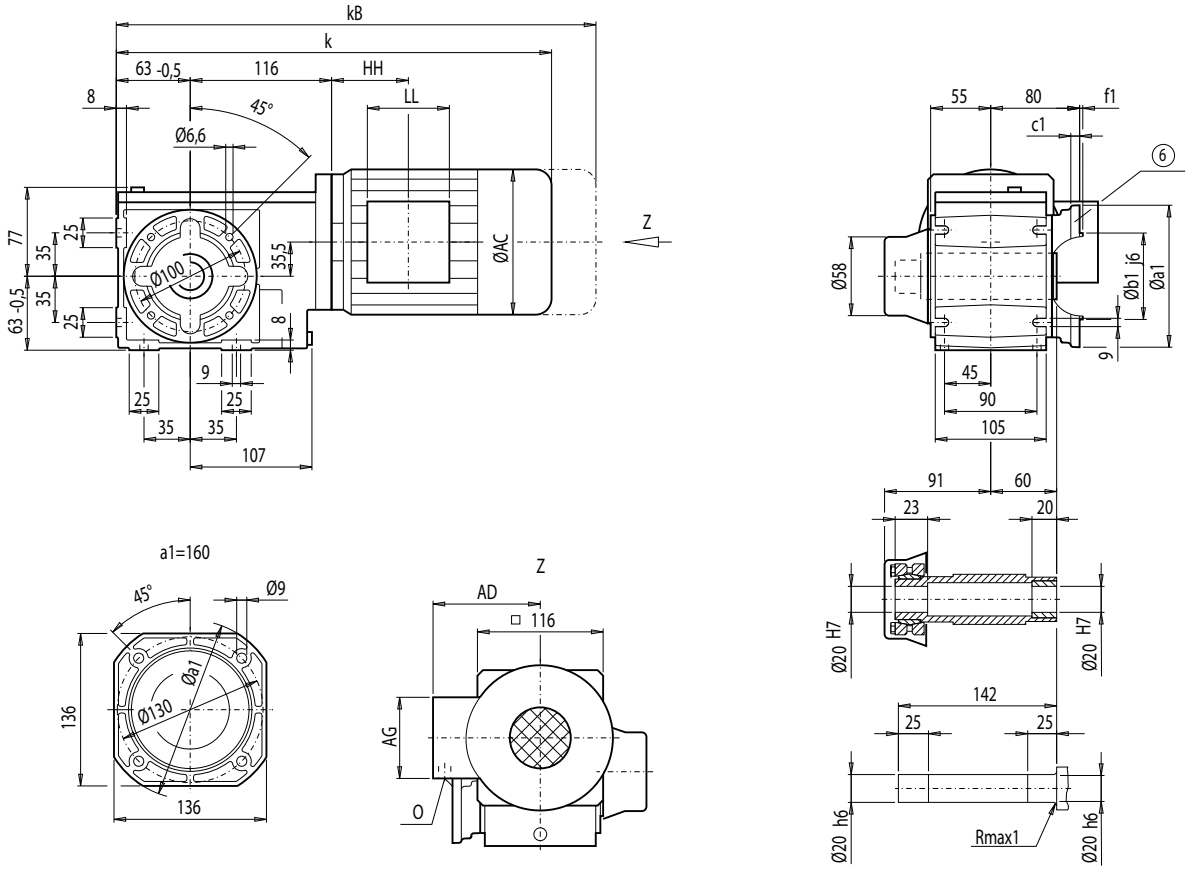

Flange	a1	b1	to2	c1	f1
A120	120	80	j6	8	3.0
A160	160	110	j6	9	3.5

	BAFS28								Weight
Motor	**k**	**kB**	**AC**	**AD**	**AG**	**LL**	**HH**	**O**	**BAFS28**
LA71	381.5	436.5	139	146	90	90	58.5	M20x1.5/M25x1.5	10
LA71Z	400.5	455.5	139	146	90	90	58.5	M20x1.5/M25x1.5	10
LA90S/L	478.5	549.5	174	163	90	90	87.0	M20x1.5/M25x1.5	20
LA90ZL	523.5	594.5	174	163	90	90	211.0	M20x1.5/M25x1.5	29
LA100L	560.5	641.5	195	168	120	120	163.5	2xM32x1.5	29
LA100ZL	630.5	711.5	195	168	120	120	295.5	2xM32x1.5	39

⑥ For note, see page 4/217

© Siemens AG 2011

Dimensions

Gearbox B/BZ38 (2-stage), housing-flange-mounted design (C-type)

B012
BZ012

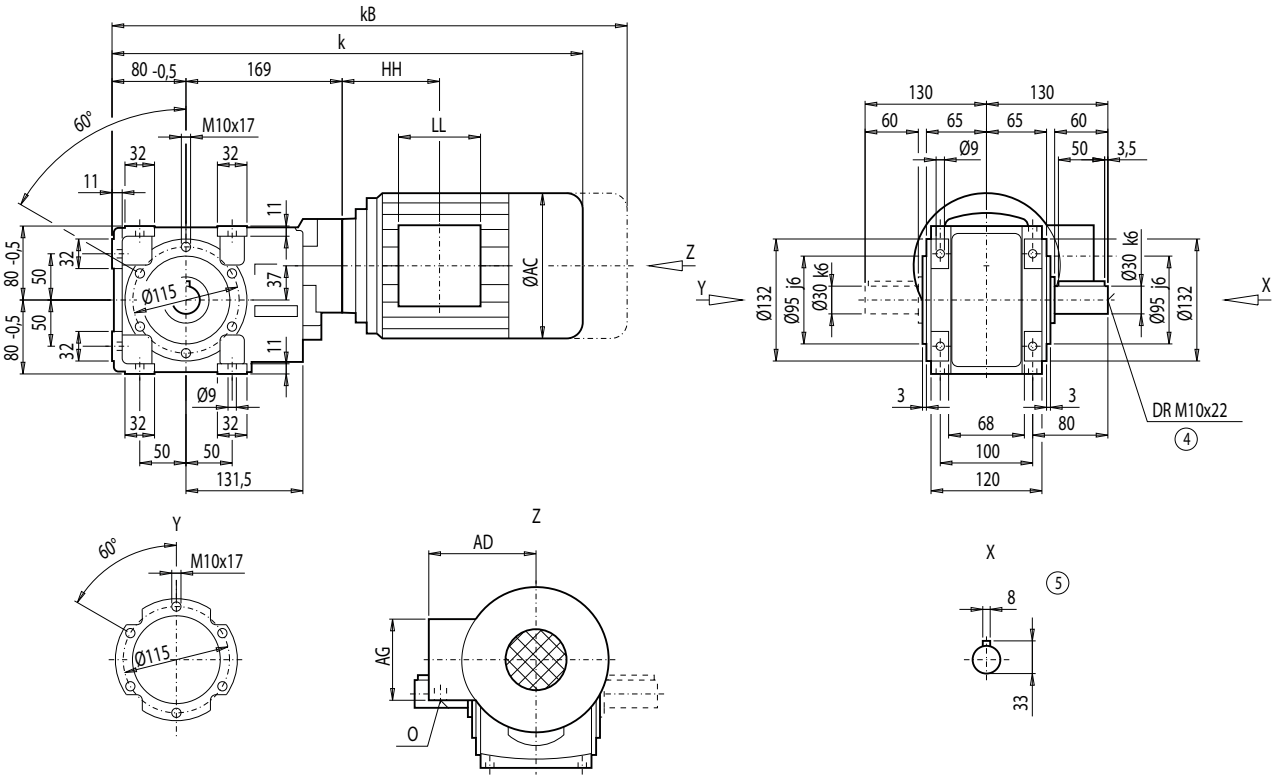

Motor	B.38 k	kB	AC	AD	AG	LL	HH	O	Weight B.38
LA71	482.0	537.0	139.0	146	90	90	89.0	M20x1.5/M25x1.5	21
LA71Z	501.0	556.0	139.0	146	90	90	89.0	M20x1.5/M25x1.5	21
LA80	519.0	582.5	156.5	155	90	90	88.5	M20x1.5/M25x1.5	26
LA80Z	541.5	605.0	156.5	155	90	90	161.5	M20x1.5/M25x1.5	30
LA90S/L	550.0	621.0	174.0	163	90	90	88.5	M20x1.5/M25x1.5	31
LA90ZL	595.0	666.0	174.0	163	90	90	212.5	M20x1.5/M25x1.5	37
LA100L	596.0	677.0	195.0	168	120	120	129.0	2xM32x1.5	40
LA100ZL	666.0	747.0	195.0	168	120	120	261.0	2xM32x1.5	50

④ DIN 332

⑤ Feather key / keyway DIN 6885

© Siemens AG 2011

Gearbox BF38 (2-stage), flange-mounted design (A-type)

BF012

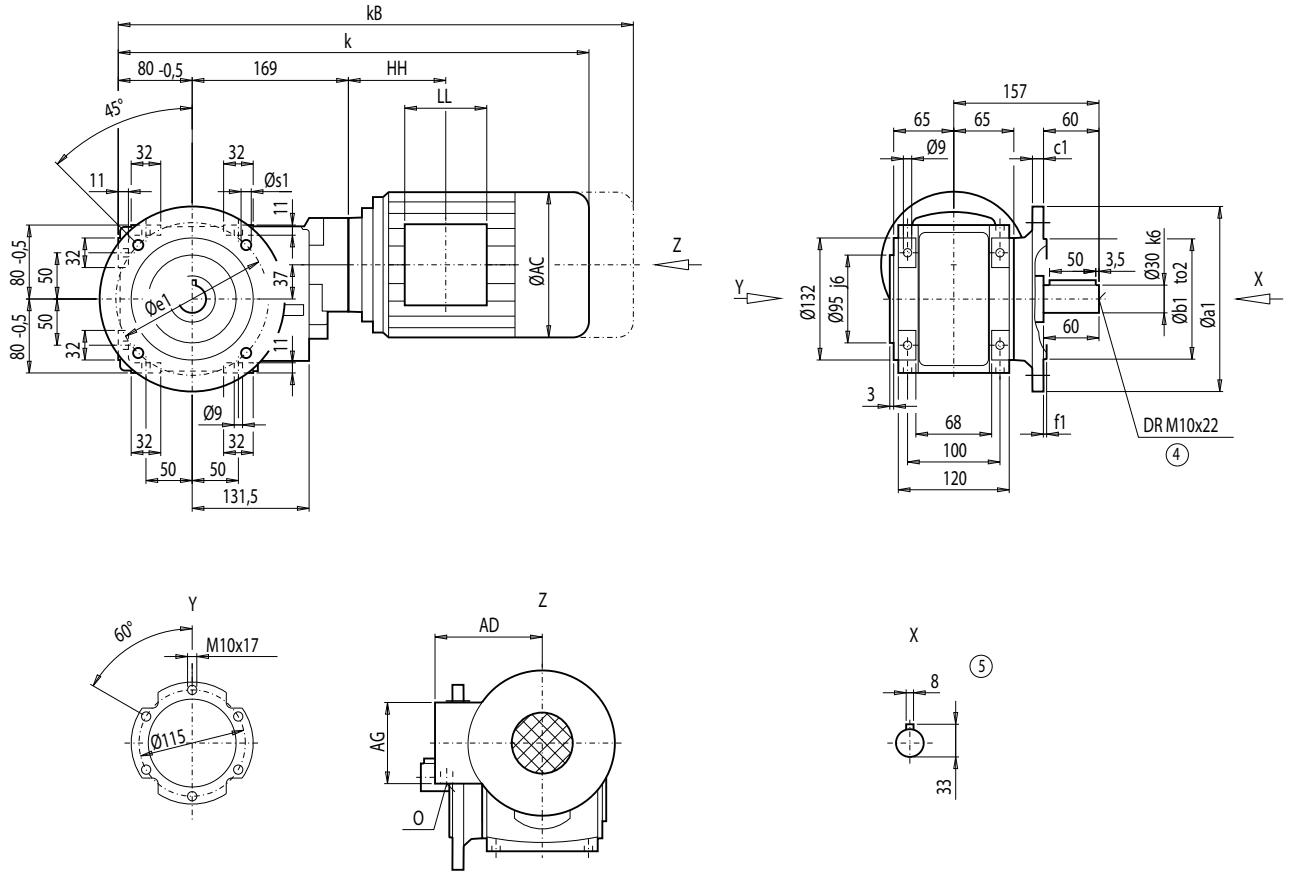

Flange	a1	b1	to2	c1	e1	f1	s1
A160	160	110	j6	10	130	3.0	9
A200	200	130	j6	12	165	3.5	11

	BF38								Weight
Motor	k	kB	AC	AD	AG	LL	HH	O	BF38
LA71	482.0	537.0	139.0	146	90	90	89.0	M20x1.5/M25x1.5	23
LA71Z	501.0	556.0	139.0	146	90	90	89.0	M20x1.5/M25x1.5	23
LA80	519.0	582.5	156.5	155	90	90	88.5	M20x1.5/M25x1.5	28
LA80Z	541.5	605.0	156.5	155	90	90	161.5	M20x1.5/M25x1.5	32
LA90S/L	550.0	621.0	174.0	163	90	90	88.5	M20x1.5/M25x1.5	32
LA90ZL	595.0	666.0	174.0	163	90	90	212.5	M20x1.5/M25x1.5	38
LA100L	596.0	677.0	195.0	168	120	120	129.0	2xM32x1.5	41
LA100ZL	666.0	747.0	195.0	168	120	120	261.0	2xM32x1.5	51

④ DIN 332

⑤ Feather key / keyway DIN 6885

© Siemens AG 2011

Dimensions

Gearbox BA/BAZ38 (2-stage), housing-flange-mounted design (C-type)

BA012
BAZ012

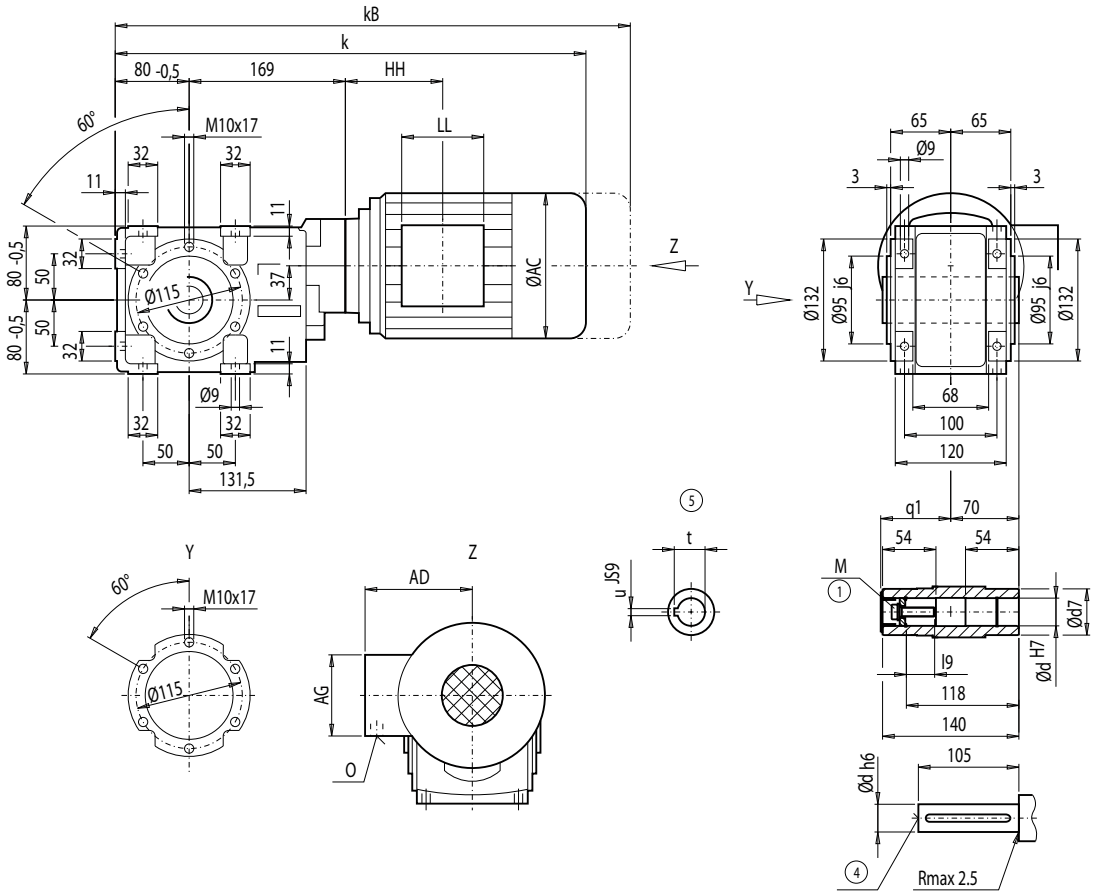

d	l9	M	t	u	d7	q1
30 *)	31	M10	33.3	8	50	72
35	40	M12	38.3	10	50	72
40	48	M16	43.3	12	55	73

*) Preferred series

	BA.38								Weight
Motor	k	kB	AC	AD	AG	LL	HH	O	BA.38
LA71	482.0	537.0	139.0	146	90	90	89.0	M20x1.5/M25x1.5	21
LA71Z	501.0	556.0	139.0	146	90	90	89.0	M20x1.5/M25x1.5	21
LA80	519.0	582.5	156.5	155	90	90	88.5	M20x1.5/M25x1.5	26
LA80Z	541.5	605.0	156.5	155	90	90	161.5	M20x1.5/M25x1.5	30
LA90S/L	550.0	621.0	174.0	163	90	90	88.5	M20x1.5/M25x1.5	30
LA90ZL	595.0	666.0	174.0	163	90	90	212.5	M20x1.5/M25x1.5	36
LA100L	596.0	677.0	195.0	168	120	120	129.0	2xM32x1.5	39
LA100ZL	666.0	747.0	195.0	168	120	120	261.0	2xM32x1.5	49

④ DIN 332 ⑤ Feather key / keyway DIN 6885 ① DIN 6912

© Siemens AG 2011

Gearbox BAD38 (2-stage), shaft-mounted design with torque arm

BAD012

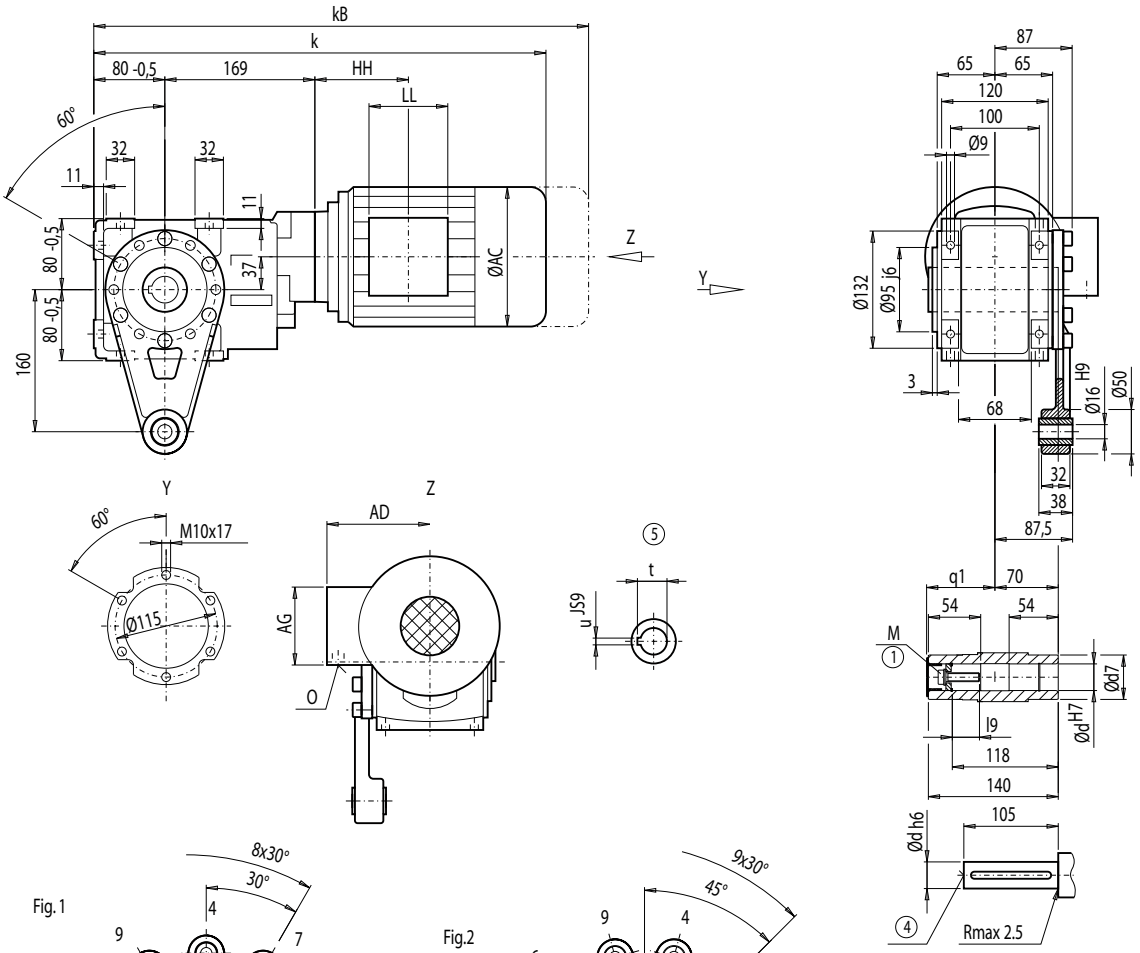

d	l9	M	t	u	d7	q1
30 *)	31	M10	33.3	8	50	72
35	40	M12	38.3	10	50	72
40	48	M16	43.3	12	55	73

*) Preferred series

	BAD38								Weight
Motor	k	kB	AC	AD	AG	LL	HH	O	BAD38
LA71	482.0	537.0	139.0	146	90	90	89.0	M20x1.5/M25x1.5	22
LA71Z	501.0	556.0	139.0	146	90	90	89.0	M20x1.5/M25x1.5	22
LA80	519.0	582.5	156.5	155	90	90	88.5	M20x1.5/M25x1.5	27
LA80Z	541.5	605.0	156.5	155	90	90	161.5	M20x1.5/M25x1.5	31
LA90S/L	550.0	621.0	174.0	163	90	90	88.5	M20x1.5/M25x1.5	32
LA90ZL	595.0	666.0	174.0	163	90	90	212.5	M20x1.5/M25x1.5	38
LA100L	596.0	677.0	195.0	168	120	120	129.0	2xM32x1.5	41
LA100ZL	666.0	747.0	195.0	168	120	120	261.0	2xM32x1.5	51

④ DIN 332 ⑤ Feather key / keyway DIN 6885 ① DIN 6912

© Siemens AG 2011

Dimensions

Gearbox BAF38 (2-stage), flange mounted design

BAF012

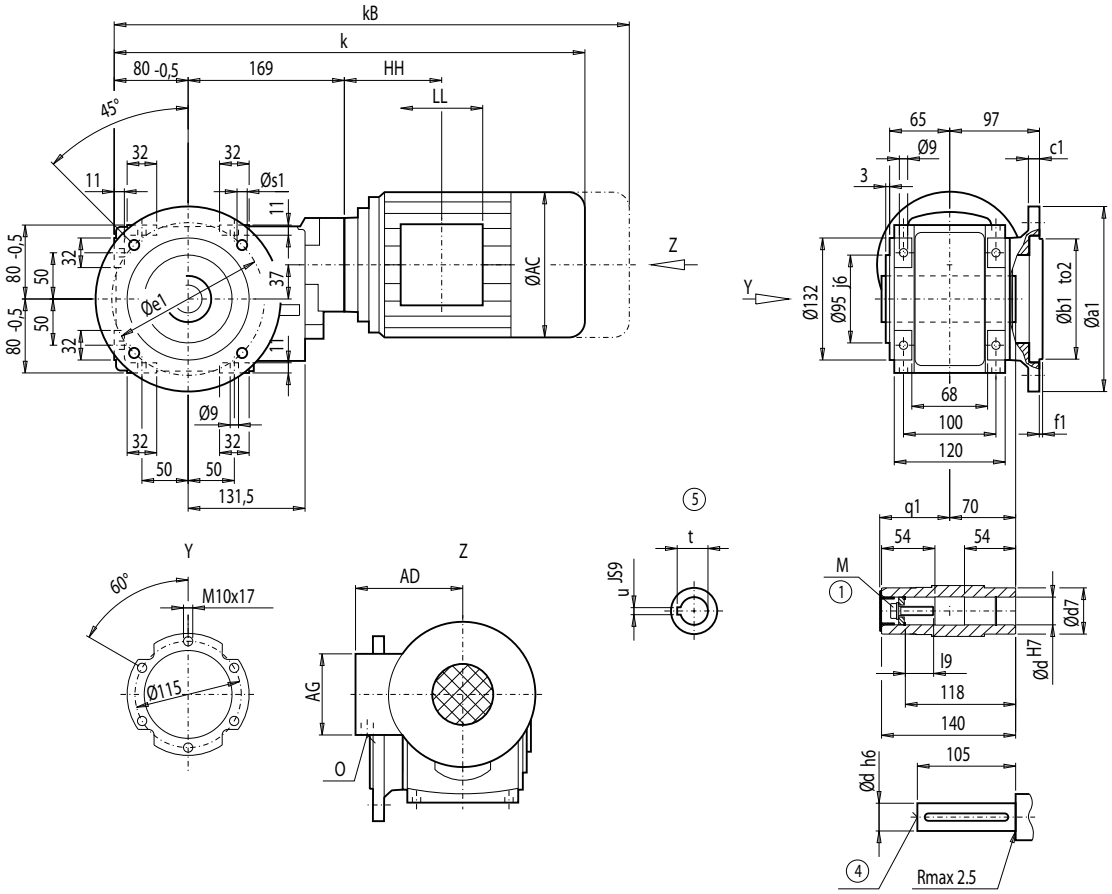

Flange	a1	b1	to2	c1	e1	f1	s1	d	l9	M	t	u	d7	q1
A160	160	110	j6	10	130	3.0	9	30 *)	31	M10	33.3	8	50	72
								35	40	M12	38.3	10	50	72
								40	48	M16	43.3	12	55	73
A200	200	130	j6	12	165	3.5	11	30 *)	31	M10	33.3	8	50	72
								35	40	M12	38.3	10	50	72
								40	48	M16	43.3	12	55	73

*) Preferred series

	BAF38								Weight
Motor	**k**	**kB**	**AC**	**AD**	**AG**	**LL**	**HH**	**O**	**BAF38**
LA71	482.0	537.0	139.0	146	90	90	89.0	M20x1.5/M25x1.5	22
LA71Z	501.0	556.0	139.0	146	90	90	89.0	M20x1.5/M25x1.5	22
LA80	519.0	582.5	156.5	155	90	90	88.5	M20x1.5/M25x1.5	27
LA80Z	541.5	605.0	156.5	155	90	90	161.5	M20x1.5/M25x1.5	31
LA90S/L	550.0	621.0	174.0	163	90	90	88.5	M20x1.5/M25x1.5	31
LA90ZL	595.0	666.0	174.0	163	90	90	212.5	M20x1.5/M25x1.5	37
LA100L	596.0	677.0	195.0	168	120	120	129.0	2xM32x1.5	40
LA100ZL	666.0	747.0	195.0	168	120	120	261.0	2xM32x1.5	50

④ DIN 332 ⑤ Feather key / keyway DIN 6885 ① DIN 6912 ⑥ For note, see page 4/217

© Siemens AG 2011

Gearbox BAS/BAZS38 (2-stage), shaft-mounted design with housing flange (C-type) and shrink disk

BAS012
BAZS012

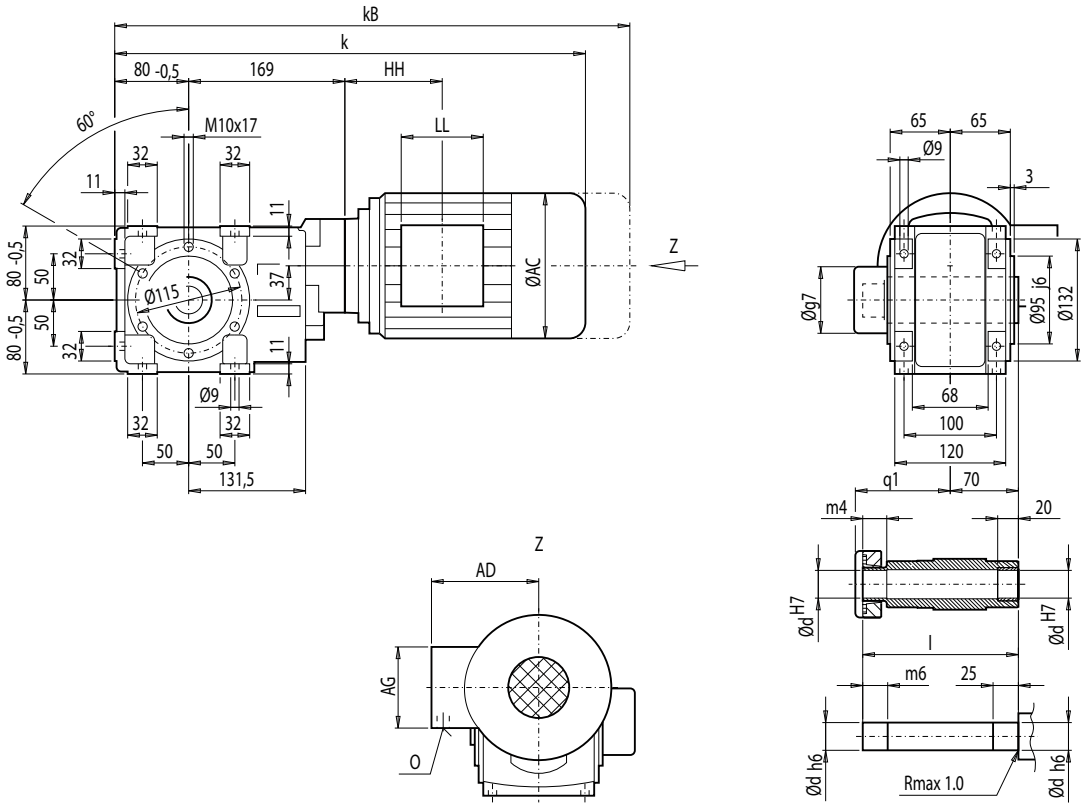

d	l	g7	m4	m6	q1
30 *)	166	77	27	32	104
35	168	85	27	32	106

*) Preferred series

	BA.S38								Weight
Motor	**k**	**kB**	**AC**	**AD**	**AG**	**LL**	**HH**	**O**	**BA.S38**
LA71	482.0	537.0	139.0	146	90	90	89.0	M20x1.5/M25x1.5	21
LA71Z	501.0	556.0	139.0	146	90	90	89.0	M20x1.5/M25x1.5	21
LA80	519.0	582.5	156.5	155	90	90	88.5	M20x1.5/M25x1.5	26
LA80Z	541.5	605.0	156.5	155	90	90	161.5	M20x1.5/M25x1.5	30
LA90S/L	550.0	621.0	174.0	163	90	90	88.5	M20x1.5/M25x1.5	31
LA90ZL	595.0	666.0	174.0	163	90	90	212.5	M20x1.5/M25x1.5	37
LA100L	596.0	677.0	195.0	168	120	120	129.0	2xM32x1.5	40
LA100ZL	666.0	747.0	195.0	168	120	120	261.0	2xM32x1.5	50

© Siemens AG 2011

Dimensions

Gearbox BADS38 (2-stage), shaft-mounted design with torque arm

BADS012

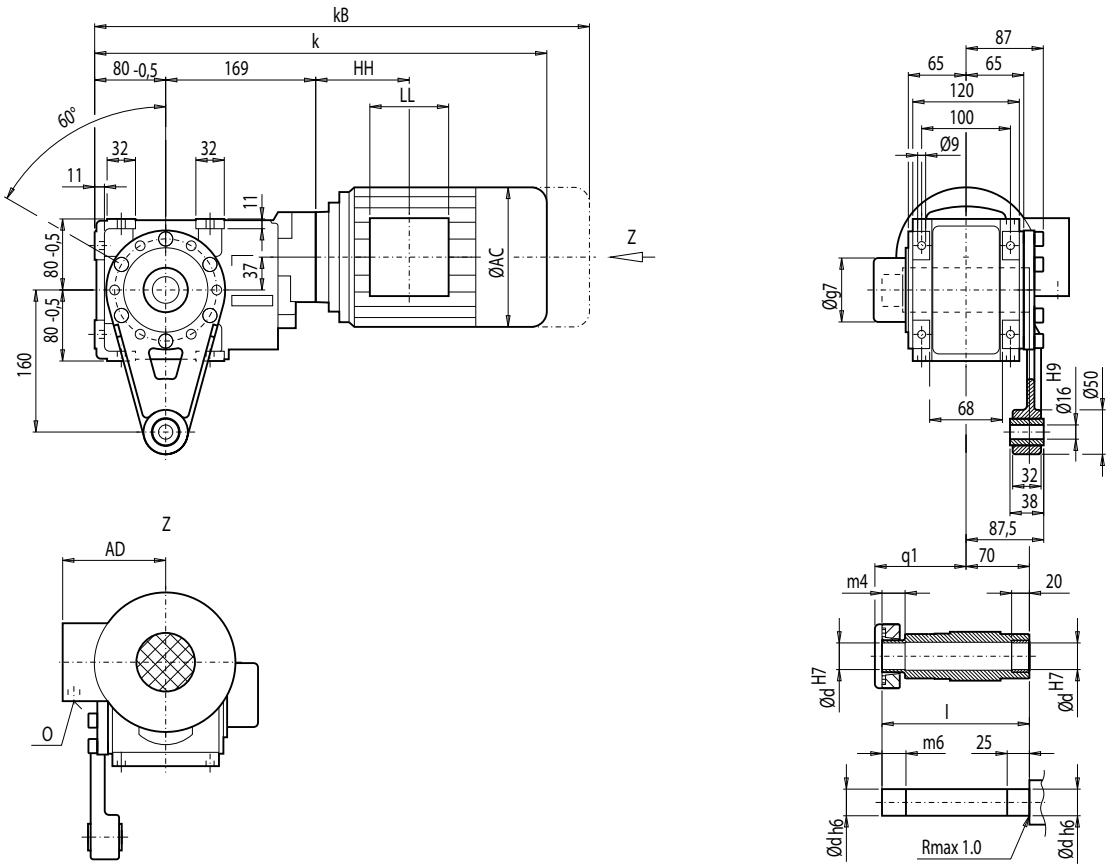

Fig.1

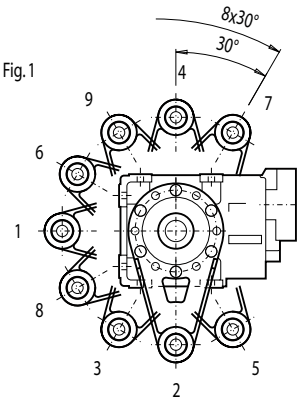

Fig.2

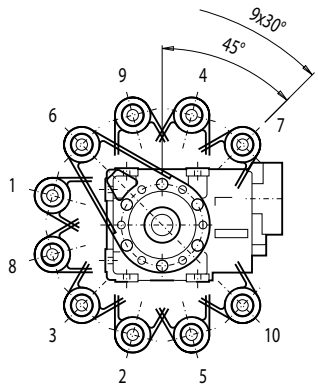

d	l	g7	m4	m6	q1
30 *)	166	77	27	32	104
35	168	85	27	32	106

*) Preferred series

	BADS38								Weight
Motor	**k**	**kB**	**AC**	**AD**	**AG**	**LL**	**HH**	**O**	**BADS38**
LA71	482.0	537.0	139.0	146	90	90	89.0	M20x1.5/M25x1.5	23
LA71Z	501.0	556.0	139.0	146	90	90	89.0	M20x1.5/M25x1.5	23
LA80	519.0	582.5	156.5	155	90	90	88.5	M20x1.5/M25x1.5	28
LA80Z	541.5	605.0	156.5	155	90	90	161.5	M20x1.5/M25x1.5	32
LA90S/L	550.0	621.0	174.0	163	90	90	88.5	M20x1.5/M25x1.5	32
LA90ZL	595.0	666.0	174.0	163	90	90	212.5	M20x1.5/M25x1.5	38
LA100L	596.0	677.0	195.0	168	120	120	129.0	2xM32x1.5	41
LA100ZL	666.0	747.0	195.0	168	120	120	261.0	2xM32x1.5	51

© Siemens AG 2011

Gearbox BAFS38 (2-stage), flange mounted design and shrink disk

BAFS012

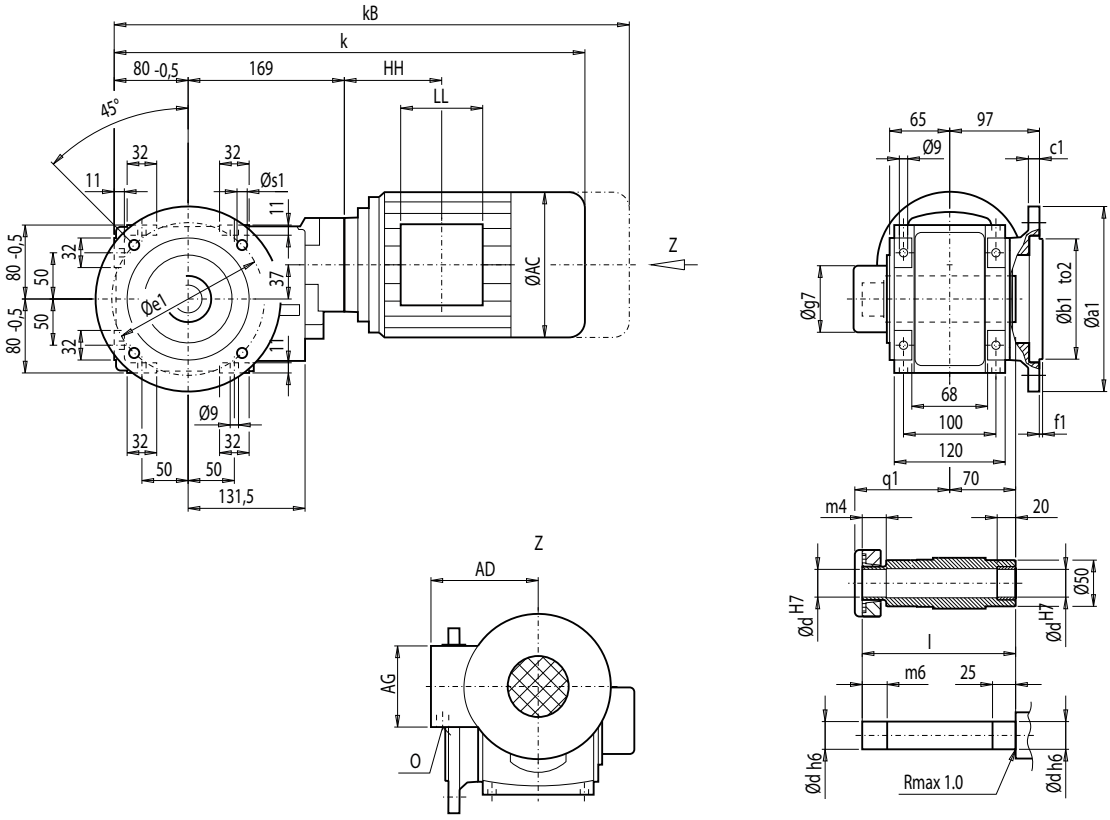

Flange	a1	b1	to2	c1	e1	f1	s1	d	l	g7	m4	m6	q1
A160	160	110	j6	10	130	3.0	9	30 *)	166	77	27	32	104
								35	168	85	27	32	106
A200	200	130	j6	12	165	3.5	11	30 *)	166	77	27	32	104
								35	168	85	27	32	106

*) Preferred series

	BAFS38								Weight
Motor	**k**	**kB**	**AC**	**AD**	**AG**	**LL**	**HH**	**O**	**BAFS38**
LA71	482.0	537.0	139.0	146	90	90	89.0	M20x1.5/M25x1.5	22
LA71Z	501.0	556.0	139.0	146	90	90	89.0	M20x1.5/M25x1.5	22
LA80	519.0	582.5	156.5	155	90	90	88.5	M20x1.5/M25x1.5	27
LA80Z	541.5	605.0	156.5	155	90	90	161.5	M20x1.5/M25x1.5	31
LA90S/L	550.0	621.0	174.0	163	90	90	88.5	M20x1.5/M25x1.5	32
LA90ZL	595.0	666.0	174.0	163	90	90	212.5	M20x1.5/M25x1.5	38
LA100L	596.0	677.0	195.0	168	120	120	129.0	2xM32x1.5	41
LA100ZL	666.0	747.0	195.0	168	120	120	261.0	2xM32x1.5	51

⑥ For note, see page 4/217

© Siemens AG 2011

Dimensions

Gearbox K38 (3-stage), housing-flange-mounted design (C-type)

K012

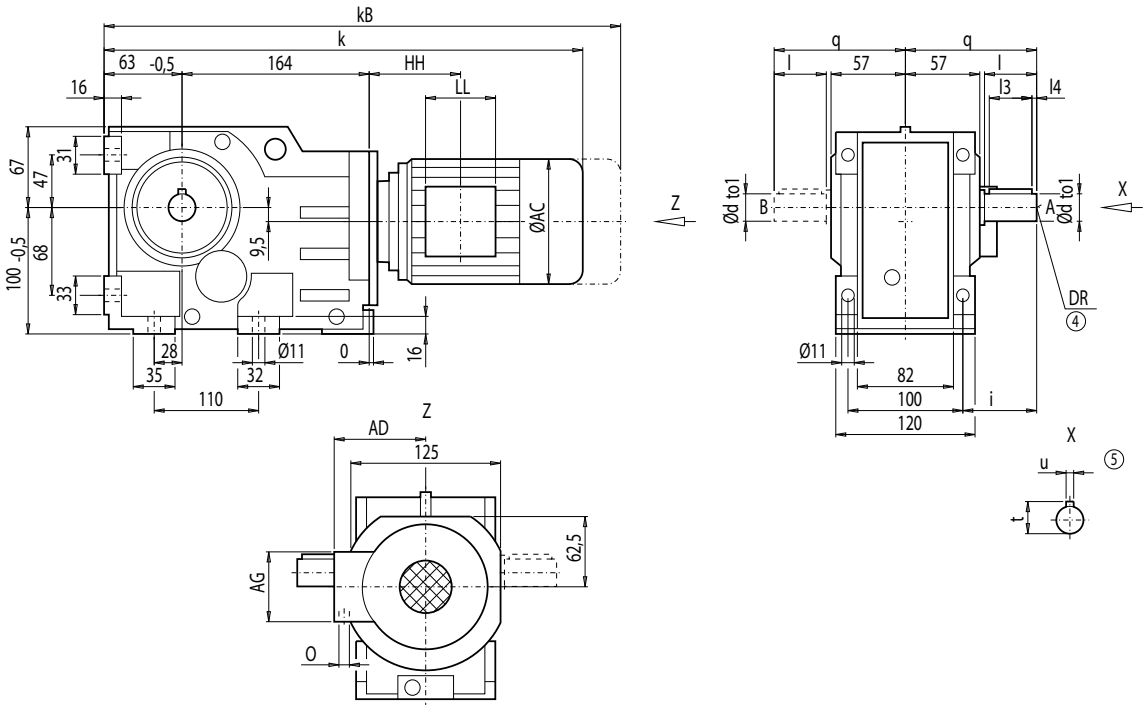

d	to1	l	l3	l4	t	u	i	q	DR
25 *)	k6	50	40	5	28	8	60	110	M10x22
35	k6	70	56	5	38	10	80	130	M12x28

*) Preferred series

	K38								Weight
Motor	**k**	**kB**	**AC**	**AD**	**AG**	**LL**	**HH**	**O**	**K38**
LA71	485.5	540.5	139.0	146	90	90	114.5	M20x1.5/M25x1.5	20
LA71Z	504.5	559.5	139.0	146	90	90	114.5	M20x1.5/M25x1.5	20
LA80	522.5	586.0	156.5	155	90	90	114.0	M20x1.5/M25x1.5	25
LA80Z	545.0	608.5	156.5	155	90	90	187.0	M20x1.5/M25x1.5	29
LA90S/L	553.5	624.5	174.0	163	90	90	114.0	M20x1.5/M25x1.5	29
LA90ZL	598.5	669.5	174.0	163	90	90	238.0	M20x1.5/M25x1.5	35
LA100L	599.5	680.5	195.0	168	120	120	154.5	2xM32x1.5	38
LA100ZL	669.5	750.5	195.0	168	120	120	286.5	2xM32x1.5	48
LA112M	629.0	710.0	219.0	181	120	120	160.0	2xM32x1.5	49
LA112ZM	657.0	738.0	219.0	181	120	120	264.0	2xM32x1.5	56

④ DIN 332

⑤ Feather key / keyway DIN 6885

© Siemens AG 2011

Gearbox KF38 (3-stage), flange-mounted design (A-type)

KF012

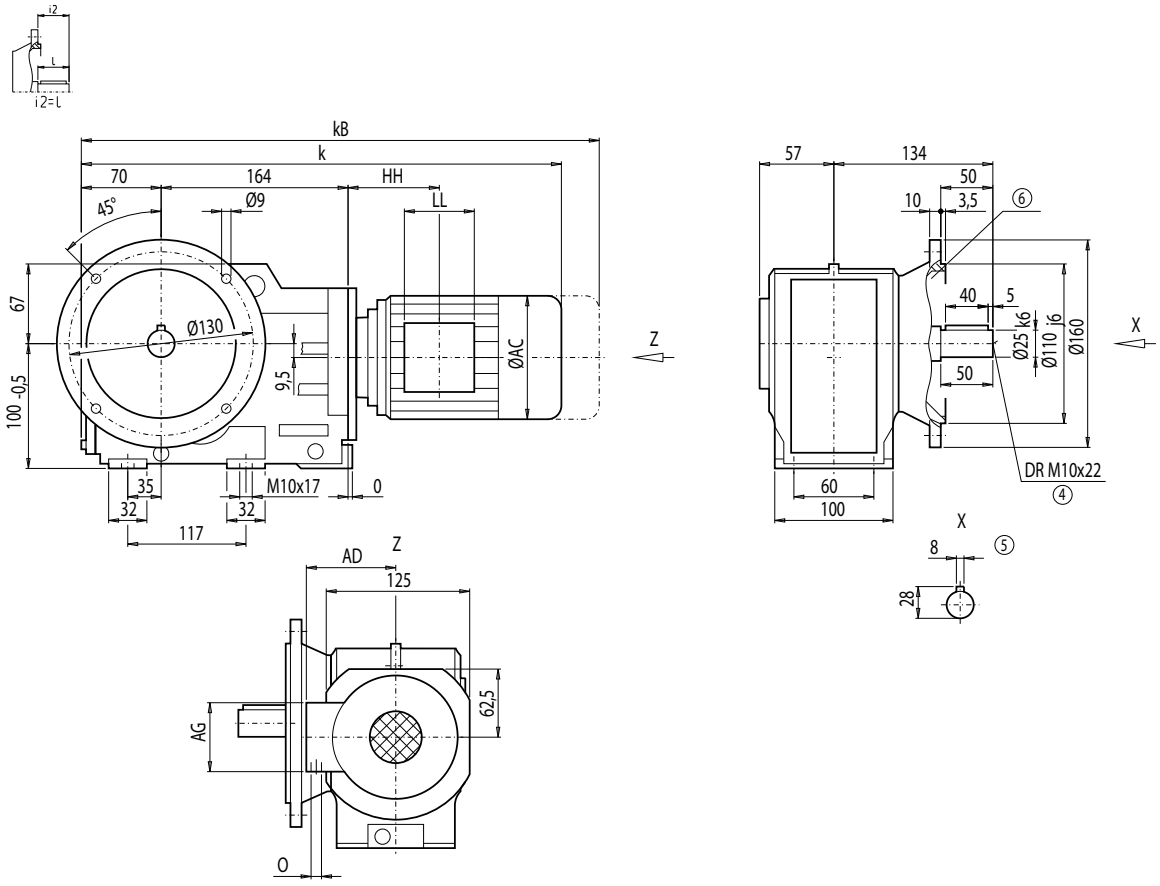

Motor	KF38 k	kB	AC	AD	AG	LL	HH	O	Weight KF38
LA71	492.5	547.5	139.0	146	90	90	114.5	M20x1.5/M25x1.5	21
LA71Z	511.5	566.5	139.0	146	90	90	114.5	M20x1.5/M25x1.5	21
LA80	529.5	593.0	156.5	155	90	90	114.0	M20x1.5/M25x1.5	26
LA80Z	552.0	615.5	156.5	155	90	90	187.0	M20x1.5/M25x1.5	30
LA90S/L	560.5	631.5	174.0	163	90	90	114.0	M20x1.5/M25x1.5	31
LA90ZL	605.5	676.5	174.0	163	90	90	238.0	M20x1.5/M25x1.5	37
LA100L	606.5	687.5	195.0	168	120	120	154.5	2xM32x1.5	40
LA100ZL	676.5	757.5	195.0	168	120	120	286.5	2xM32x1.5	50
LA112M	636.0	717.0	219.0	181	120	120	160.0	2xM32x1.5	50
LA112ZM	664.0	745.0	219.0	181	120	120	264.0	2xM32x1.5	57

④ DIN 332 ⑤ Feather key / keyway DIN 6885 ⑥ For note, see page 4/217

© Siemens AG 2011

Dimensions

Gearbox KA38 (3-stage), housing-flange-mounted design (C-type)

KA012

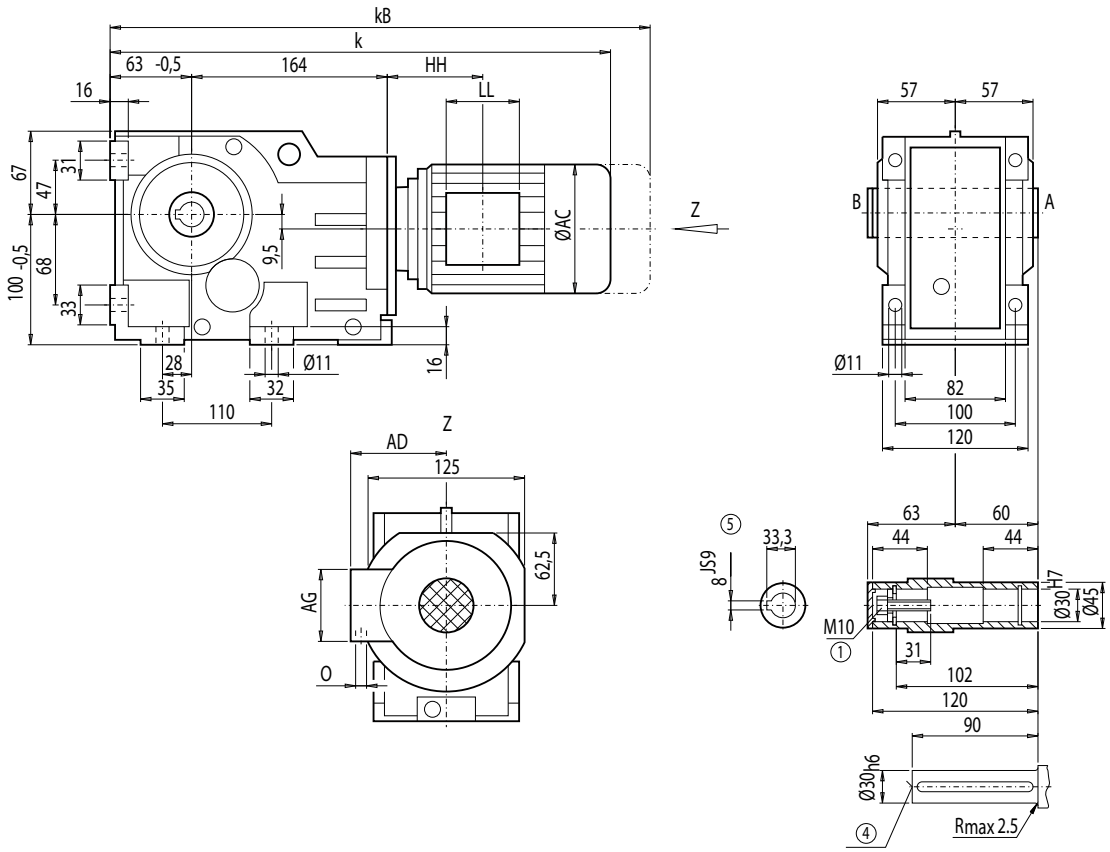

Motor	KA38 k	kB	AC	AD	AG	LL	HH	O	Weight KA38
LA71	485.5	540.5	139.0	146	90	90	114.5	M20x1.5/M25x1.5	18
LA71Z	504.5	559.5	139.0	146	90	90	114.5	M20x1.5/M25x1.5	18
LA80	522.5	586.0	156.5	155	90	90	114.0	M20x1.5/M25x1.5	23
LA80Z	545.0	608.5	156.5	155	90	90	187.0	M20x1.5/M25x1.5	27
LA90S/L	553.5	624.5	174.0	163	90	90	114.0	M20x1.5/M25x1.5	28
LA90ZL	598.5	669.5	174.0	163	90	90	238.0	M20x1.5/M25x1.5	34
LA100L	599.5	680.5	195.0	168	120	120	154.5	2xM32x1.5	37
LA100ZL	669.5	750.5	195.0	168	120	120	286.5	2xM32x1.5	47
LA112M	629.0	710.0	219.0	181	120	120	160.0	2xM32x1.5	48
LA112ZM	657.0	738.0	219.0	181	120	120	264.0	2xM32x1.5	55

④ DIN 332 ⑤ Feather key / keyway DIN 6885 ① DIN 6912

© Siemens AG 2011

Gearbox KAD38 (3-stage), shaft-mounted design with torque arm

KAD012

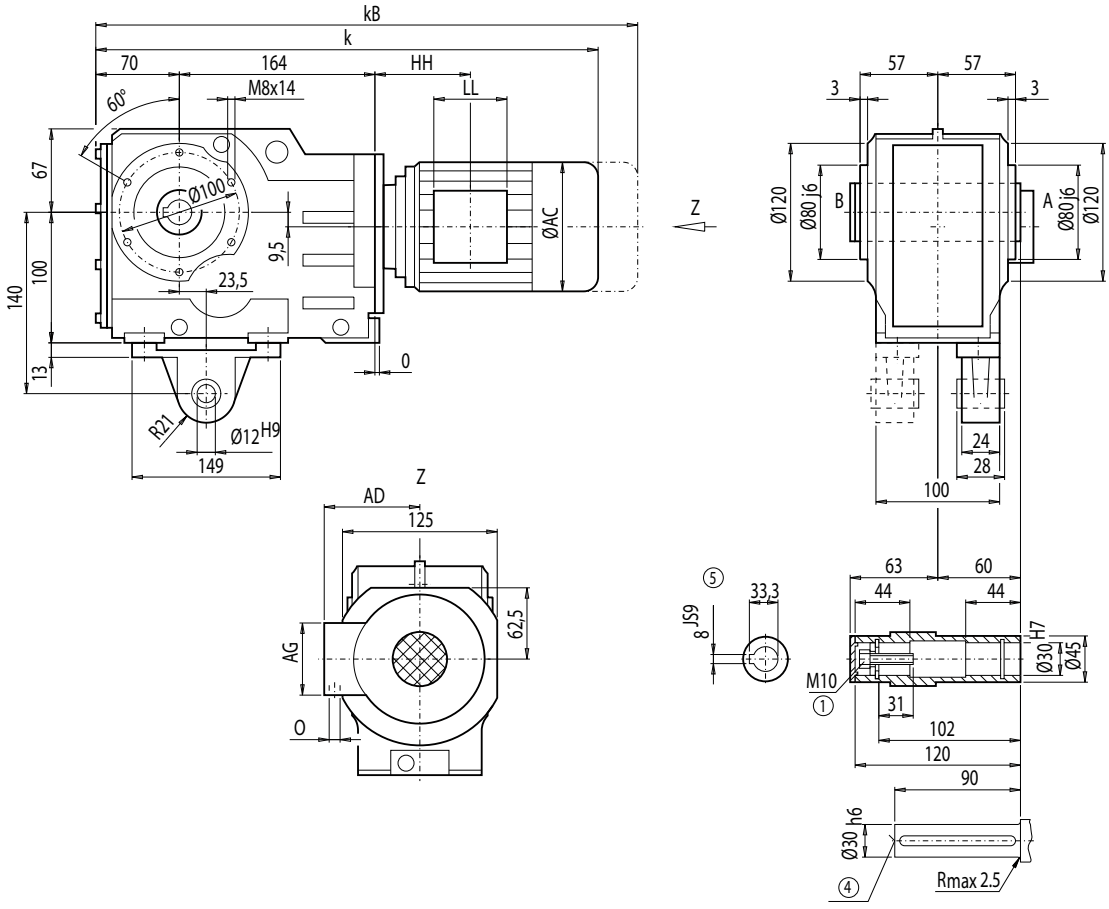

Motor	KAD38 k	kB	AC	AD	AG	LL	HH	O	Weight KAD38
LA71	492.5	547.5	139.0	146	90	90	114.5	M20x1.5/M25x1.5	19
LA71Z	511.5	566.5	139.0	146	90	90	114.5	M20x1.5/M25x1.5	19
LA80	529.5	593.0	156.5	155	90	90	114.0	M20x1.5/M25x1.5	24
LA80Z	552.0	615.5	156.5	155	90	90	187.0	M20x1.5/M25x1.5	28
LA90S/L	560.5	631.5	174.0	163	90	90	114.0	M20x1.5/M25x1.5	28
LA90ZL	605.5	676.5	174.0	163	90	90	238.0	M20x1.5/M25x1.5	34
LA100L	606.5	687.5	195.0	168	120	120	154.5	2xM32x1.5	38
LA100ZL	676.5	757.5	195.0	168	120	120	286.5	2xM32x1.5	48
LA112M	636.0	717.0	219.0	181	120	120	160.0	2xM32x1.5	48
LA112ZM	664.0	745.0	219.0	181	120	120	264.0	2xM32x1.5	55

④ DIN 332 ⑤ Feather key / keyway DIN 6885 ① DIN 6912

© Siemens AG 2011

Dimensions

Gearbox KAF38 (3-stage), flange-mounted design

KAF012

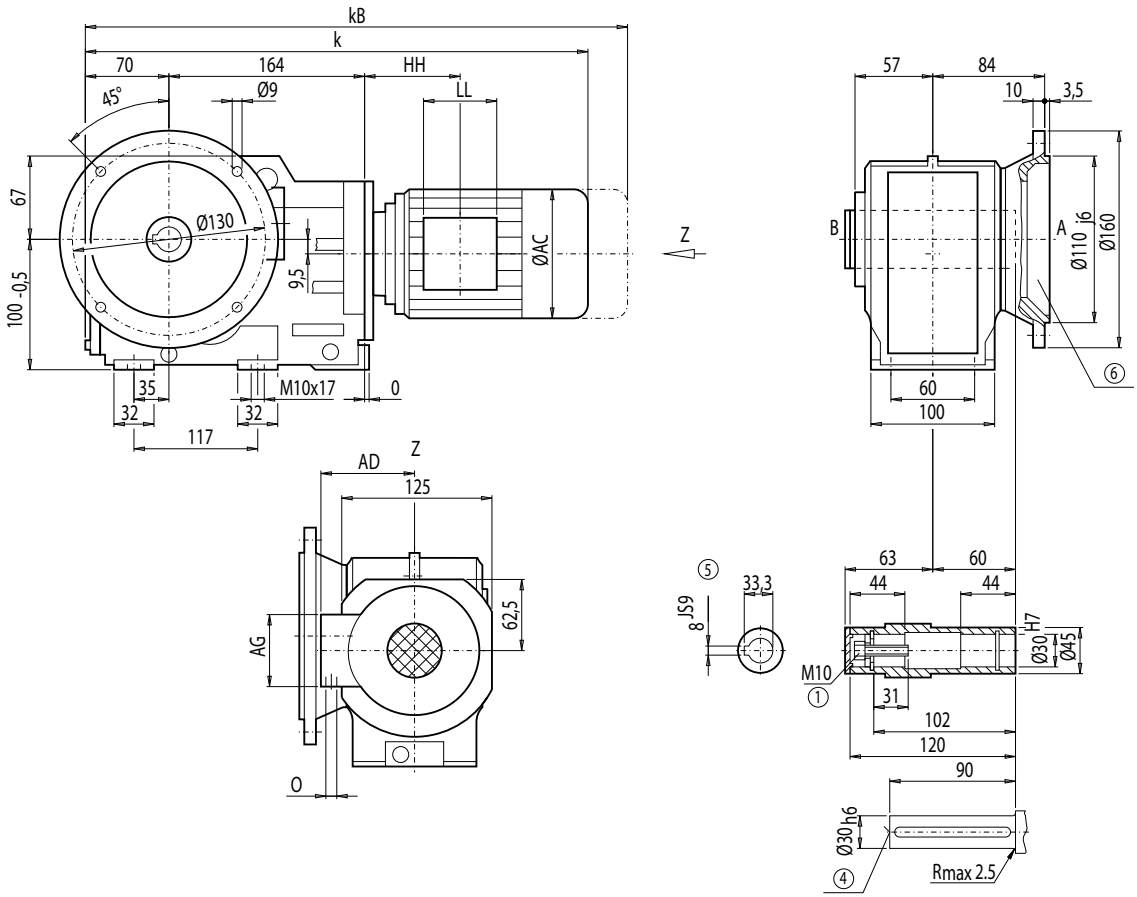

Motor	KAF38 k	kB	AC	AD	AG	LL	HH	O	Weight KAF38
LA71	492.5	547.5	139.0	146	90	90	114.5	M20x1.5/M25x1.5	20
LA71Z	511.5	566.5	139.0	146	90	90	114.5	M20x1.5/M25x1.5	20
LA80	529.5	593.0	156.5	155	90	90	114.0	M20x1.5/M25x1.5	25
LA80Z	552.0	615.5	156.5	155	90	90	187.0	M20x1.5/M25x1.5	29
LA90S/L	560.5	631.5	174.0	163	90	90	114.0	M20x1.5/M25x1.5	29
LA90ZL	605.5	676.5	174.0	163	90	90	238.0	M20x1.5/M25x1.5	35
LA100L	606.5	687.5	195.0	168	120	120	154.5	2xM32x1.5	39
LA100ZL	676.5	757.5	195.0	168	120	120	286.5	2xM32x1.5	49
LA112M	636.0	717.0	219.0	181	120	120	160.0	2xM32x1.5	49
LA112ZM	664.0	745.0	219.0	181	120	120	264.0	2xM32x1.5	56

④ DIN 332 ⑤ Feather key / keyway DIN 6885 ① DIN 6912 ⑥ For note, see page 4/217

© Siemens AG 2011

Gearbox KAZ38 (3-stage), shaft-mounted design with housing flange (C-type)

KAZ012

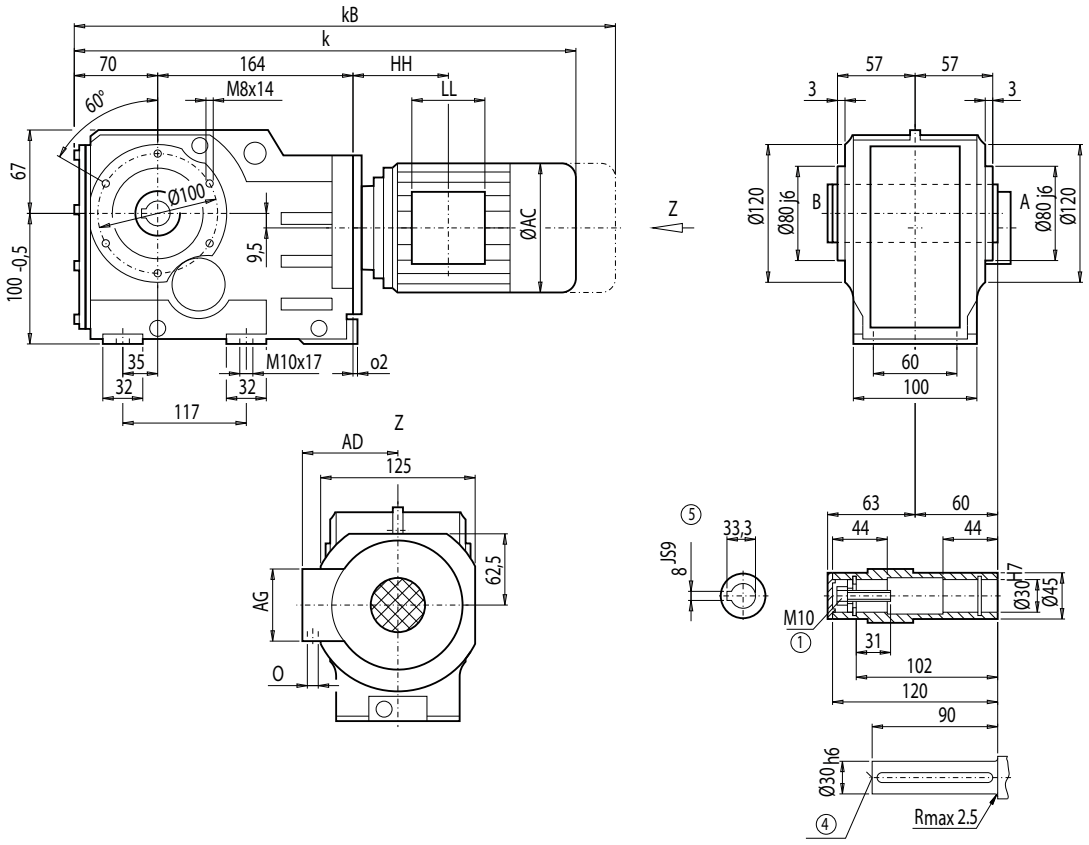

Motor	KAZ38 k	kB	AC	AD	AG	LL	HH	O	Weight KAZ38
LA71	492.5	547.5	139.0	146	90	90	114.5	M20x1.5/M25x1.5	18
LA71Z	511.5	566.5	139.0	146	90	90	114.5	M20x1.5/M25x1.5	18
LA80	529.5	593.0	156.5	155	90	90	114.0	M20x1.5/M25x1.5	23
LA80Z	552.0	615.5	156.5	155	90	90	187.0	M20x1.5/M25x1.5	27
LA90S/L	560.5	631.5	174.0	163	90	90	114.0	M20x1.5/M25x1.5	28
LA90ZL	605.5	676.5	174.0	163	90	90	238.0	M20x1.5/M25x1.5	34
LA100L	606.5	687.5	195.0	168	120	120	154.5	2xM32x1.5	37
LA100ZL	676.5	757.5	195.0	168	120	120	286.5	2xM32x1.5	47
LA112M	636.0	717.0	219.0	181	120	120	160.0	2xM32x1.5	48
LA112ZM	664.0	745.0	219.0	181	120	120	264.0	2xM32x1.5	55

④ DIN 332 ⑤ Feather key / keyway DIN 6885 ① DIN 6912

© Siemens AG 2011

Dimensions

Gearbox KAS38 (3-stage), shaft-mounted design with shrink disk

KAS012

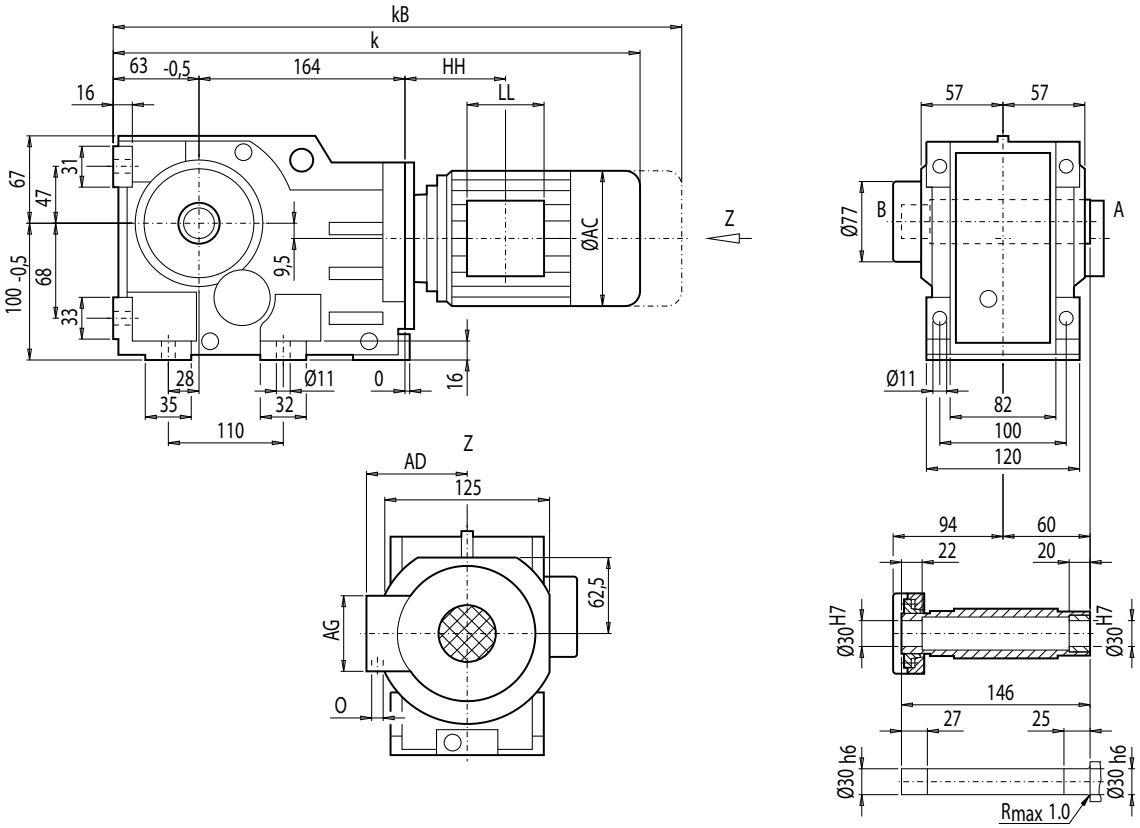

Motor	KAS38 k	kB	AC	AD	AG	LL	HH	O	Weight KAS38
LA71	485.5	540.5	139.0	146	90	90	114.5	M20x1.5/M25x1.5	19
LA71Z	504.5	559.5	139.0	146	90	90	114.5	M20x1.5/M25x1.5	19
LA80	522.5	586.0	156.5	155	90	90	114.0	M20x1.5/M25x1.5	24
LA80Z	545.0	608.5	156.5	155	90	90	187.0	M20x1.5/M25x1.5	28
LA90S/L	553.5	624.5	174.0	163	90	90	114.0	M20x1.5/M25x1.5	28
LA90ZL	598.5	669.5	174.0	163	90	90	238.0	M20x1.5/M25x1.5	34
LA100L	599.5	680.5	195.0	168	120	120	154.5	2xM32x1.5	38
LA100ZL	669.5	750.5	195.0	168	120	120	286.5	2xM32x1.5	48
LA112M	629.0	710.0	219.0	181	120	120	160.0	2xM32x1.5	48
LA112ZM	657.0	738.0	219.0	181	120	120	264.0	2xM32x1.5	55

© Siemens AG 2011

Gearbox KADS38 (3-stage), shaft-mounted design with torque arm and shrink disk

KADS012

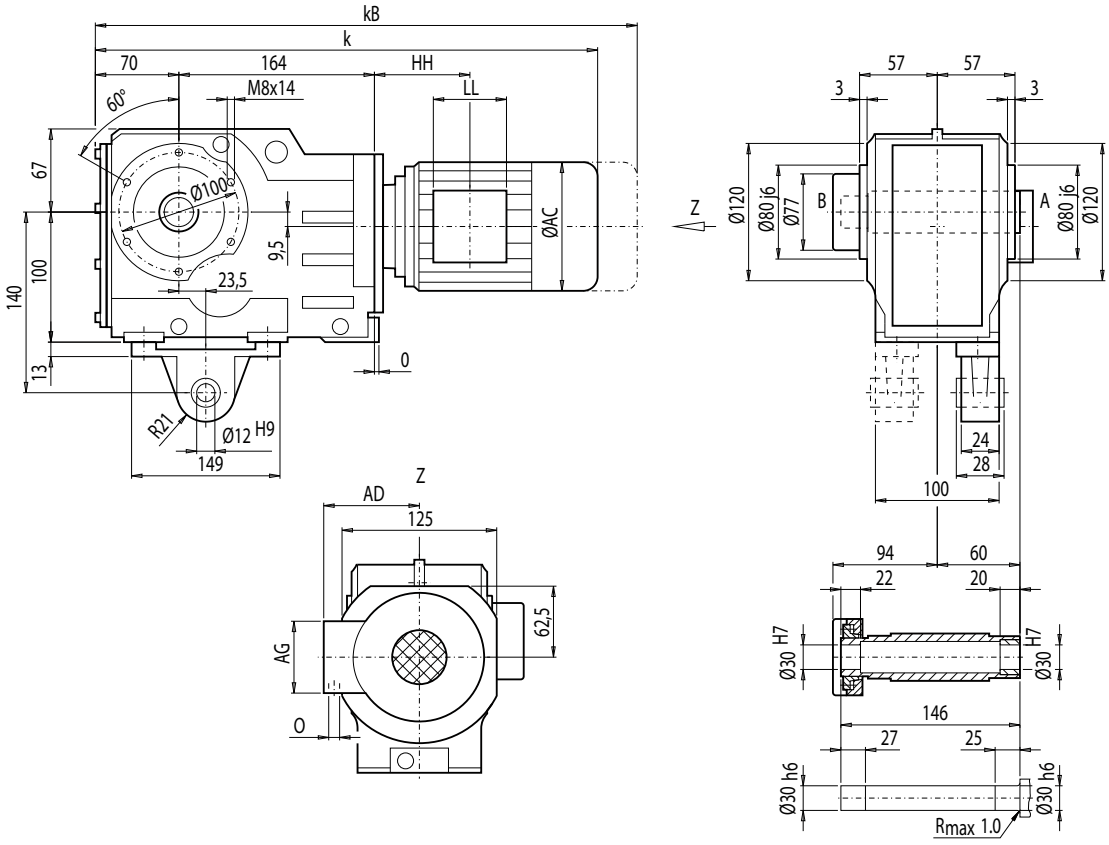

Motor	KADS38 k	kB	AC	AD	AG	LL	HH	O	Weight KADS38
LA71	492.5	547.5	139.0	146	90	90	114.5	M20x1.5/M25x1.5	20
LA71Z	511.5	566.5	139.0	146	90	90	114.5	M20x1.5/M25x1.5	20
LA80	529.5	593.0	156.5	155	90	90	114.0	M20x1.5/M25x1.5	24
LA80Z	552.0	615.5	156.5	155	90	90	187.0	M20x1.5/M25x1.5	28
LA90S/L	560.5	631.5	174.0	163	90	90	114.0	M20x1.5/M25x1.5	29
LA90ZL	605.5	676.5	174.0	163	90	90	238.0	M20x1.5/M25x1.5	35
LA100L	606.5	687.5	195.0	168	120	120	154.5	2xM32x1.5	38
LA100ZL	676.5	757.5	195.0	168	120	120	286.5	2xM32x1.5	48
LA112M	636.0	717.0	219.0	181	120	120	160.0	2xM32x1.5	49
LA112ZM	664.0	745.0	219.0	181	120	120	264.0	2xM32x1.5	56

© Siemens AG 2011

Dimensions

Gearbox KAFS38 (3-stage), flange-mounted design and shrink disk

KAFS012

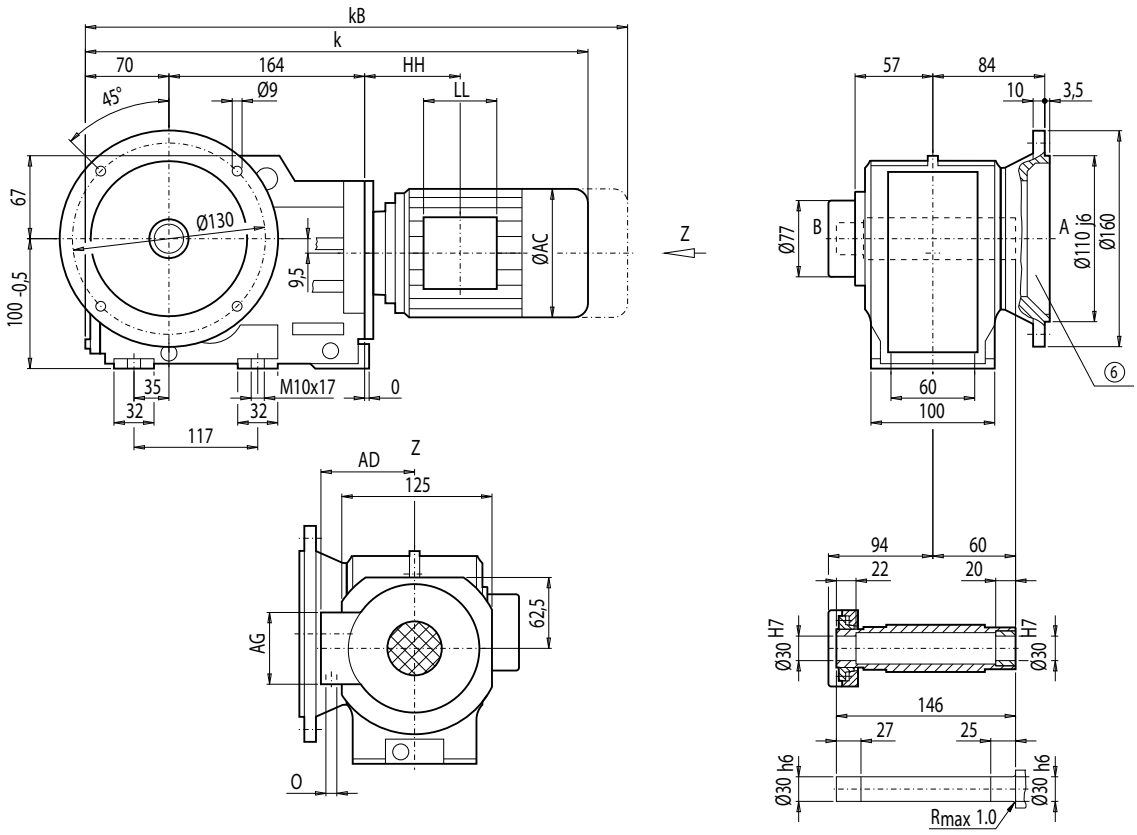

Motor	KAFS38 k	kB	AC	AD	AG	LL	HH	O	Weight KAFS38
LA71	492.5	547.5	139.0	146	90	90	114.5	M20x1.5/M25x1.5	20
LA71Z	511.5	566.5	139.0	146	90	90	114.5	M20x1.5/M25x1.5	20
LA80	529.5	593.0	156.5	155	90	90	114.0	M20x1.5/M25x1.5	25
LA80Z	552.0	615.5	156.5	155	90	90	187.0	M20x1.5/M25x1.5	29
LA90S/L	560.5	631.5	174.0	163	90	90	114.0	M20x1.5/M25x1.5	30
LA90ZL	605.5	676.5	174.0	163	90	90	238.0	M20x1.5/M25x1.5	36
LA100L	606.5	687.5	195.0	168	120	120	154.5	2xM32x1.5	39
LA100ZL	676.5	757.5	195.0	168	120	120	286.5	2xM32x1.5	49
LA112M	636.0	717.0	219.0	181	120	120	160.0	2xM32x1.5	49
LA112ZM	664.0	745.0	219.0	181	120	120	264.0	2xM32x1.5	56

⑥ For note, see page 4/217

© Siemens AG 2011

Gearbox KAZS38 (3-stage), shaft-mounted design with housing flange (C-type) and shrink disk

KAZS012

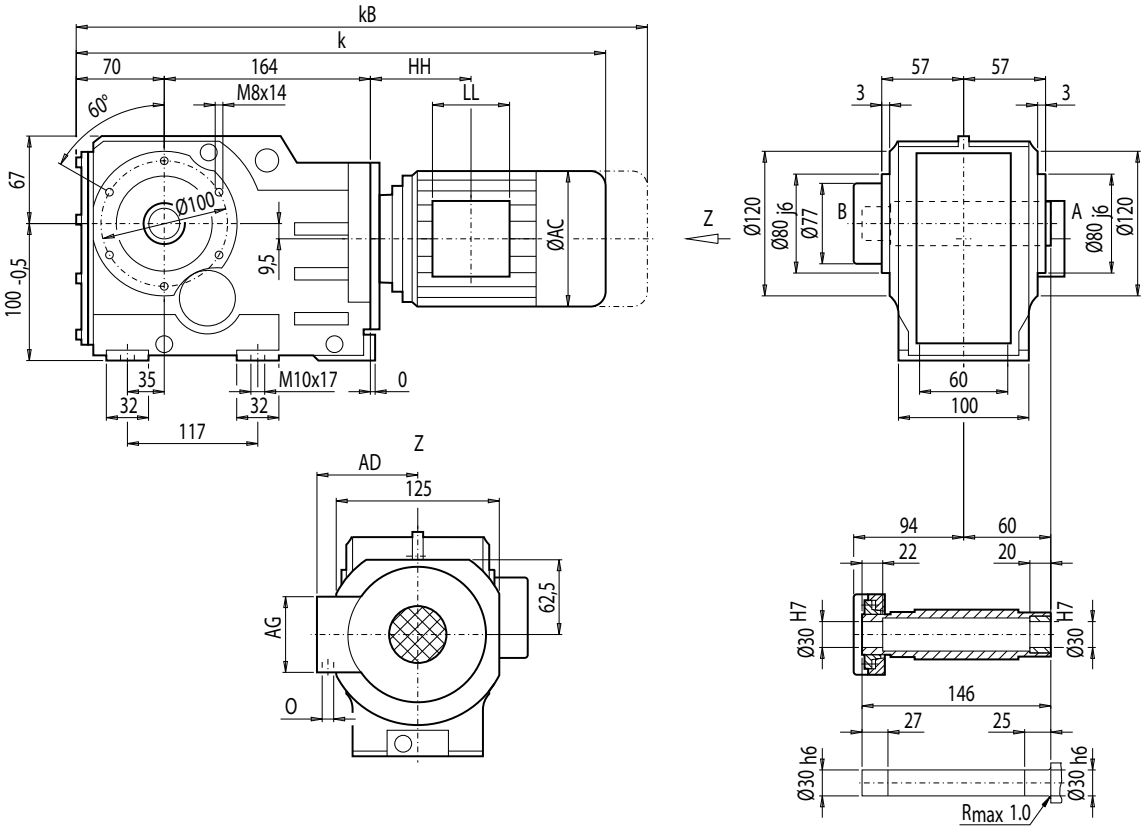

Motor	KAZS38 k	kB	AC	AD	AG	LL	HH	O	Weight KAZS38
LA71	492.5	547.5	139.0	146	90	90	114.5	M20x1.5/M25x1.5	19
LA71Z	511.5	566.5	139.0	146	90	90	114.5	M20x1.5/M25x1.5	19
LA80	529.5	593.0	156.5	155	90	90	114.0	M20x1.5/M25x1.5	24
LA80Z	552.0	615.5	156.5	155	90	90	187.0	M20x1.5/M25x1.5	28
LA90S/L	560.5	631.5	174.0	163	90	90	114.0	M20x1.5/M25x1.5	28
LA90ZL	605.5	676.5	174.0	163	90	90	238.0	M20x1.5/M25x1.5	34
LA100L	606.5	687.5	195.0	168	120	120	154.5	2xM32x1.5	37
LA100ZL	676.5	757.5	195.0	168	120	120	286.5	2xM32x1.5	47
LA112M	636.0	717.0	219.0	181	120	120	160.0	2xM32x1.5	48
LA112ZM	664.0	745.0	219.0	181	120	120	264.0	2xM32x1.5	55

© Siemens AG 2011

Dimensions

Gearbox K48 (3-stage), housing-flange-mounted design (C-type)

K012

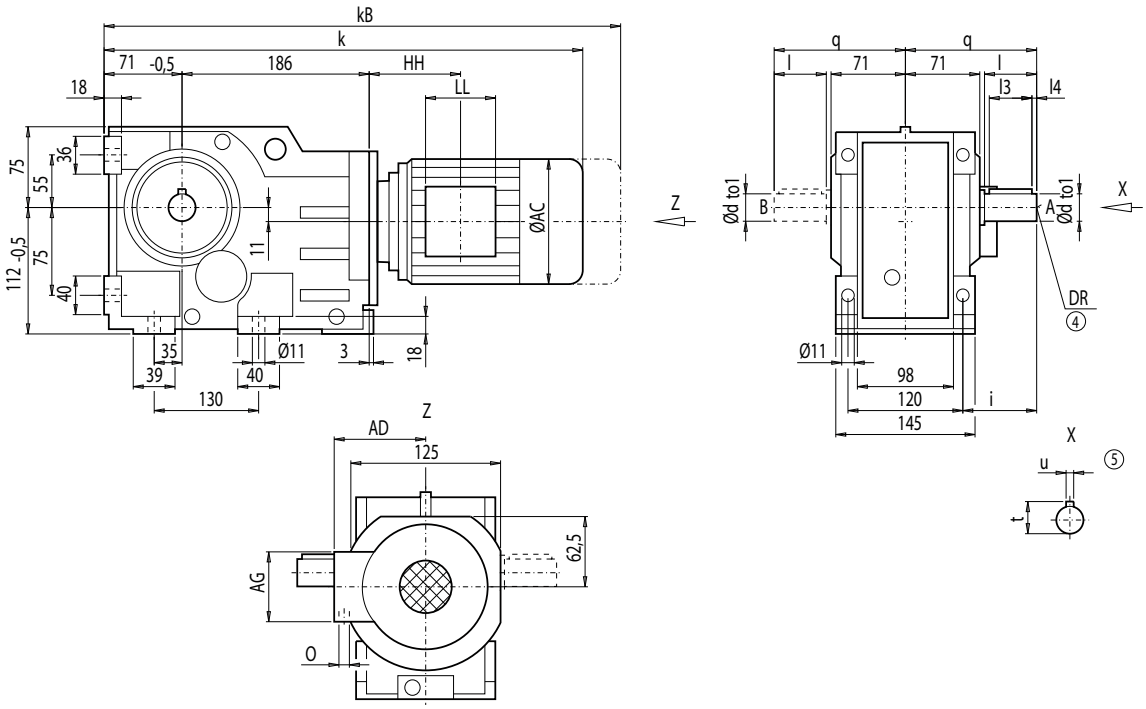

d	to1	l	l3	l4	t	u	i	q	DR
30 *)	k6	60	50	3.5	33	8	75	135	M10x22
40	k6	80	70	5.0	43	12	95	155	M16x36

*) Preferred series

	K48								Weight
Motor	**k**	**kB**	**AC**	**AD**	**AG**	**LL**	**HH**	**O**	**K48**
LA71	515.5	570.5	139.0	146	90	90	114.5	M20x1.5/M25x1.5	24
LA71Z	534.5	589.5	139.0	146	90	90	114.5	M20x1.5/M25x1.5	24
LA80	552.5	616.0	156.5	155	90	90	114.0	M20x1.5/M25x1.5	29
LA80Z	575.0	638.5	156.5	155	90	90	187.0	M20x1.5/M25x1.5	33
LA90S/L	583.5	654.5	174.0	163	90	90	114.0	M20x1.5/M25x1.5	34
LA90ZL	628.5	669.5	174.0	163	90	90	238.0	M20x1.5/M25x1.5	40
LA100L	629.5	710.5	195.0	168	120	120	154.5	2xM32x1.5	43
LA100ZL	699.5	780.5	195.0	168	120	120	286.5	2xM32x1.5	53
LA112M	659.0	740.0	219.0	181	120	120	160.0	2xM32x1.5	53
LA112ZM	687.0	768.0	219.0	181	120	120	264.0	2xM32x1.5	70

④ DIN 332

⑤ Feather key / keyway DIN 6885

© Siemens AG 2011

Gearbox KF48 (3-stage), flange-mounted design (A-type)

KF012

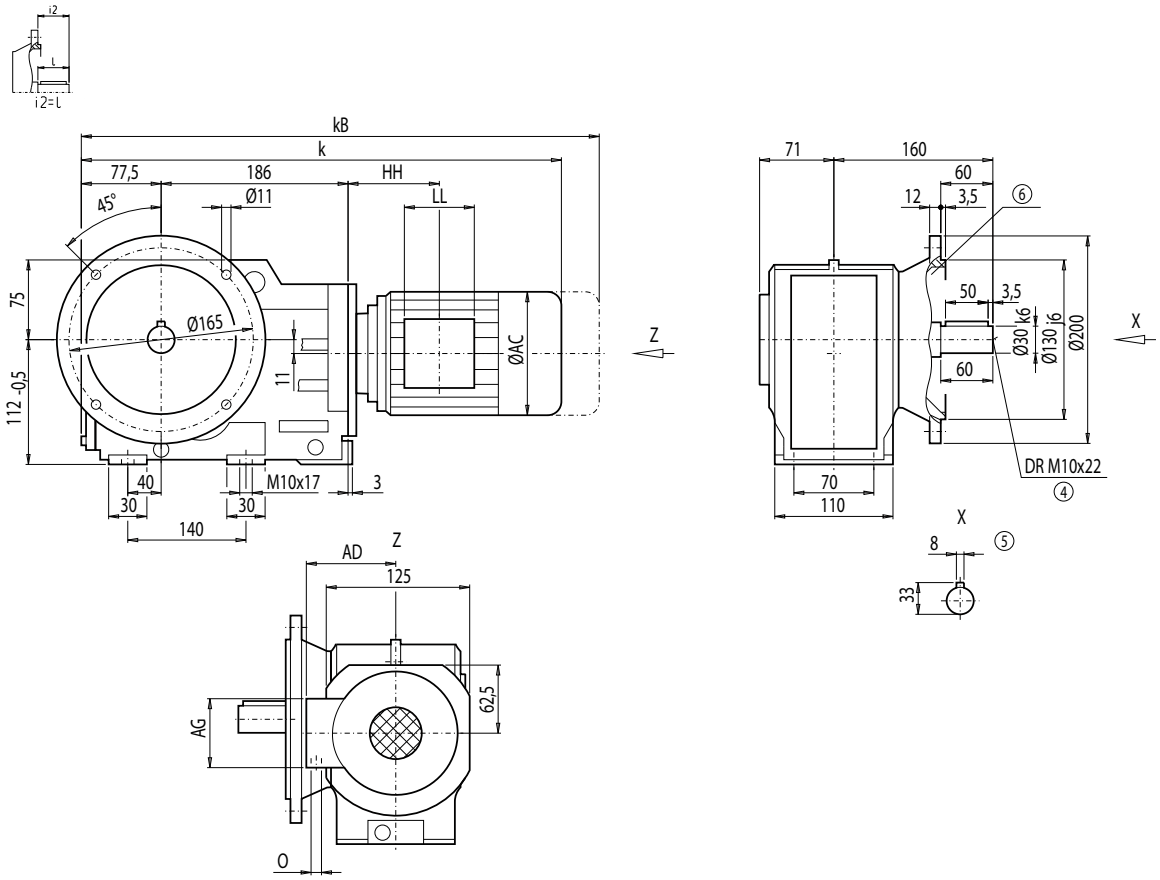

Motor	KF48 k	kB	AC	AD	AG	LL	HH	O	Weight KF48
LA71	522.0	577.0	139.0	146	90	90	114.5	M20x1.5/M25x1.5	26
LA71Z	541.0	596.0	139.0	146	90	90	114.5	M20x1.5/M25x1.5	26
LA80	559.0	622.5	156.5	155	90	90	114.0	M20x1.5/M25x1.5	31
LA80Z	581.5	645.0	156.5	155	90	90	187.0	M20x1.5/M25x1.5	31
LA90S/L	590.0	661.0	174.0	163	90	90	114.0	M20x1.5/M25x1.5	36
LA90ZL	635.0	706.0	174.0	163	90	90	238.0	M20x1.5/M25x1.5	36
LA100L	636.0	717.0	195.0	168	120	120	154.5	2xM32x1.5	45
LA100ZL	706.0	787.0	195.0	168	120	120	286.5	2xM32x1.5	45
LA112M	665.5	746.5	219.0	181	120	120	160.0	2xM32x1.5	56
LA112ZM	693.5	774.5	219.0	181	120	120	264.0	2xM32x1.5	56

④ DIN 332 ⑤ Feather key / keyway DIN 6885 ⑥ For note, see page 4/217

© Siemens AG 2011

Dimensions

Gearbox KA48 (3-stage), housing-flange-mounted design (C-type)

KA012

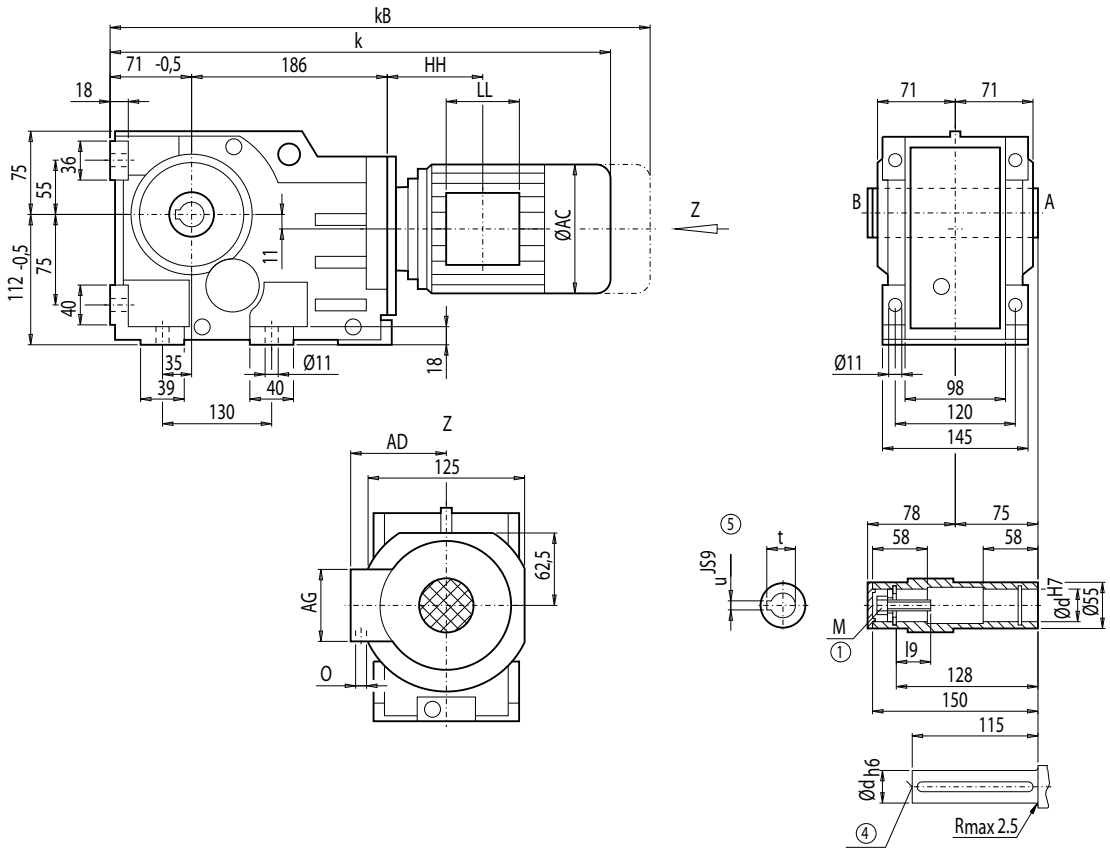

d	l9	M	t	u
35 *)	40	M12	38.3	10
40	48	M16	43.3	12

*) Preferred series

Motor	KA48 k	kB	AC	AD	AG	LL	HH	O	Weight KA48
LA71	515.5	570.5	139.0	146	90	90	114.5	M20x1.5/M25x1.5	23
LA71Z	534.5	589.5	139.0	146	90	90	114.5	M20x1.5/M25x1.5	23
LA80	552.5	616.0	156.5	155	90	90	114.0	M20x1.5/M25x1.5	28
LA80Z	575.0	638.5	156.5	155	90	90	187.0	M20x1.5/M25x1.5	32
LA90S/L	583.5	654.5	174.0	163	90	90	114.0	M20x1.5/M25x1.5	32
LA90ZL	628.5	669.5	174.0	163	90	90	238.0	M20x1.5/M25x1.5	38
LA100L	629.5	710.5	195.0	168	120	120	154.5	2xM32x1.5	41
LA100ZL	699.5	780.5	195.0	168	120	120	286.5	2xM32x1.5	51
LA112M	659.0	740.0	219.0	181	120	120	160.0	2xM32x1.5	52
LA112ZM	687.0	768.0	219.0	181	120	120	264.0	2xM32x1.5	59

④ DIN 332 ⑤ Feather key / keyway DIN 6885 ① DIN 6912

© Siemens AG 2011

Gearbox KAD48 (3-stage), shaft-mounted design with torque arm

KAD012

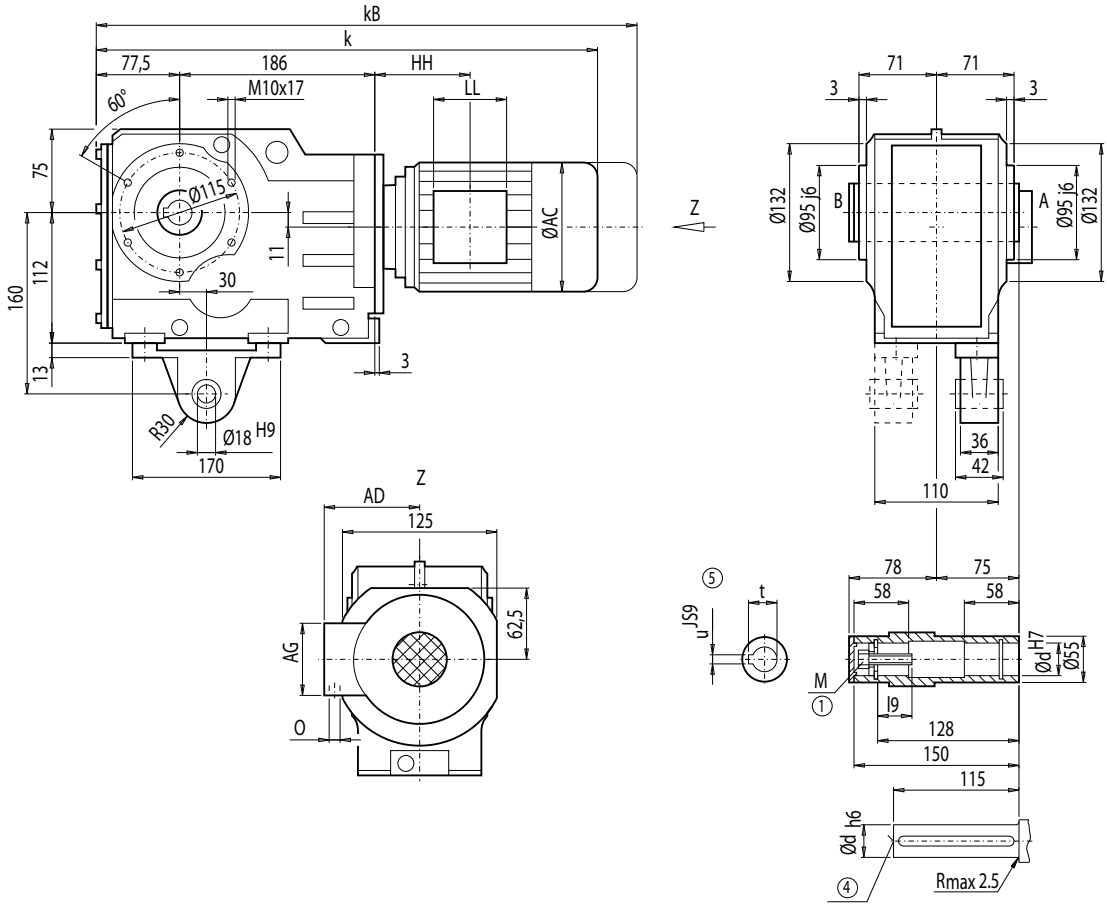

d	l9	M	t	u
35 *)	40	M12	38.3	10
40	48	M16	43.3	12

*) Preferred series

Motor	KAD48 k	kB	AC	AD	AG	LL	HH	O	Weight KAD48
LA71	522.0	577.0	139.0	146	90	90	114.5	M20x1.5/M25x1.5	24
LA71Z	541.0	596.0	139.0	146	90	90	114.5	M20x1.5/M25x1.5	24
LA80	559.0	622.5	156.5	155	90	90	114.0	M20x1.5/M25x1.5	29
LA80Z	581.5	645.0	156.5	155	90	90	187.0	M20x1.5/M25x1.5	33
LA90S/L	590.0	661.0	174.0	163	90	90	114.0	M20x1.5/M25x1.5	33
LA90ZL	635.0	706.0	174.0	163	90	90	238.0	M20x1.5/M25x1.5	39
LA100L	636.0	717.0	195.0	168	120	120	154.5	2xM32x1.5	42
LA100ZL	706.0	787.0	195.0	168	120	120	286.5	2xM32x1.5	52
LA112M	665.5	746.5	219.0	181	120	120	160.0	2xM32x1.5	53
LA112ZM	693.5	774.5	219.0	181	120	120	264.0	2xM32x1.5	60

④ DIN 332 ⑤ Feather key / keyway DIN 6885 ① DIN 6912

© Siemens AG 2011

Dimensions

Gearbox KAF48 (3-stage), flange-mounted design

KAF012

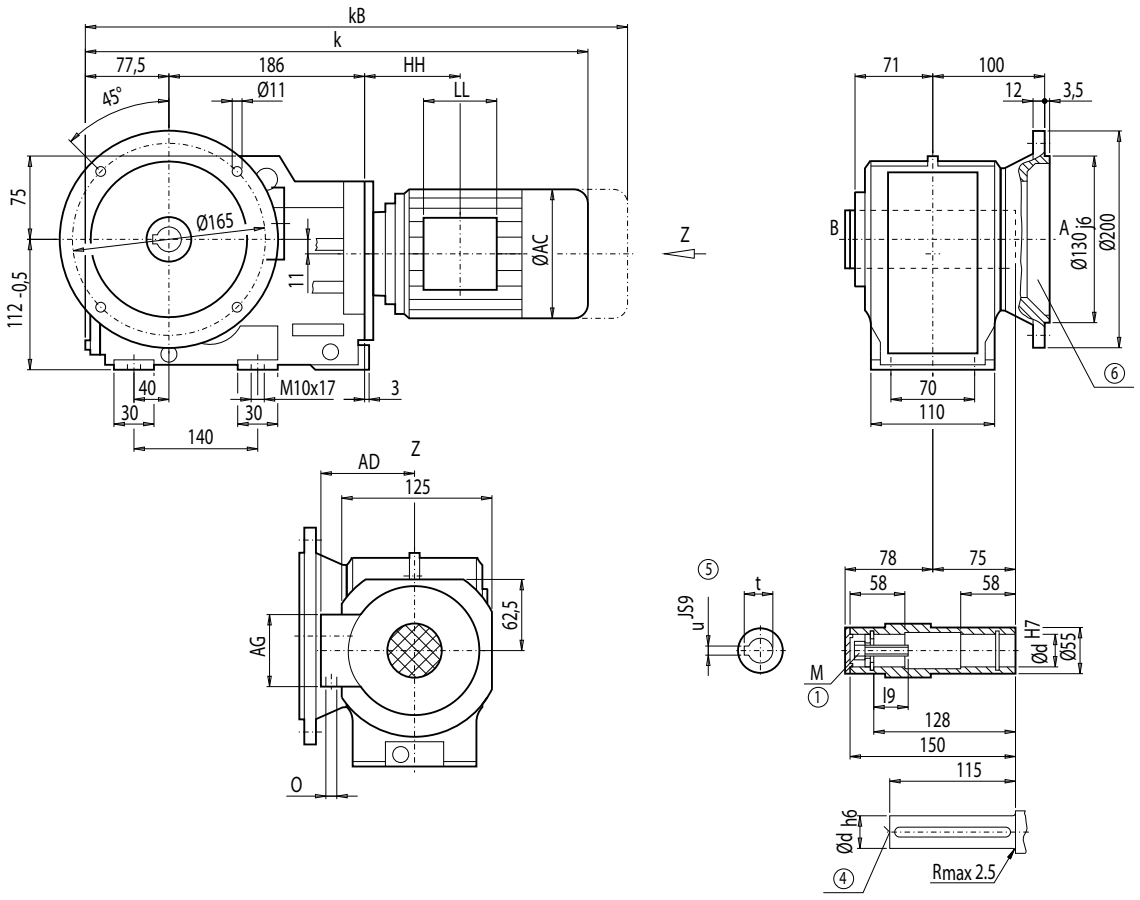

d	l9	M	t	u
35 *)	40	M12	38.3	10
40	48	M16	43.3	12

*) Preferred series

Motor	KAF48 k	kB	AC	AD	AG	LL	HH	O	Weight KAF48
LA71	522.0	577.0	139.0	146	90	90	114.5	M20x1.5/M25x1.5	25
LA71Z	541.0	596.0	139.0	146	90	90	114.5	M20x1.5/M25x1.5	25
LA80	559.0	622.5	156.5	155	90	90	114.0	M20x1.5/M25x1.5	30
LA80Z	581.5	645.0	156.5	155	90	90	187.0	M20x1.5/M25x1.5	34
LA90S/L	590.0	661.0	174.0	163	90	90	114.0	M20x1.5/M25x1.5	34
LA90ZL	635.0	706.0	174.0	163	90	90	238.0	M20x1.5/M25x1.5	40
LA100L	636.0	717.0	195.0	168	120	120	154.5	2xM32x1.5	44
LA100ZL	706.0	787.0	195.0	168	120	120	286.5	2xM32x1.5	54
LA112M	665.5	746.5	219.0	181	120	120	160.0	2xM32x1.5	54
LA112ZM	693.5	774.5	219.0	181	120	120	264.0	2xM32x1.5	61

④ DIN 332 ⑤ Feather key / keyway DIN 6885 ① DIN 6912 ⑥ For note, see page 4/217

© Siemens AG 2011

Gearbox KAZ48 (3-stage), shaft-mounted design with housing flange (C-type)

KAZ012

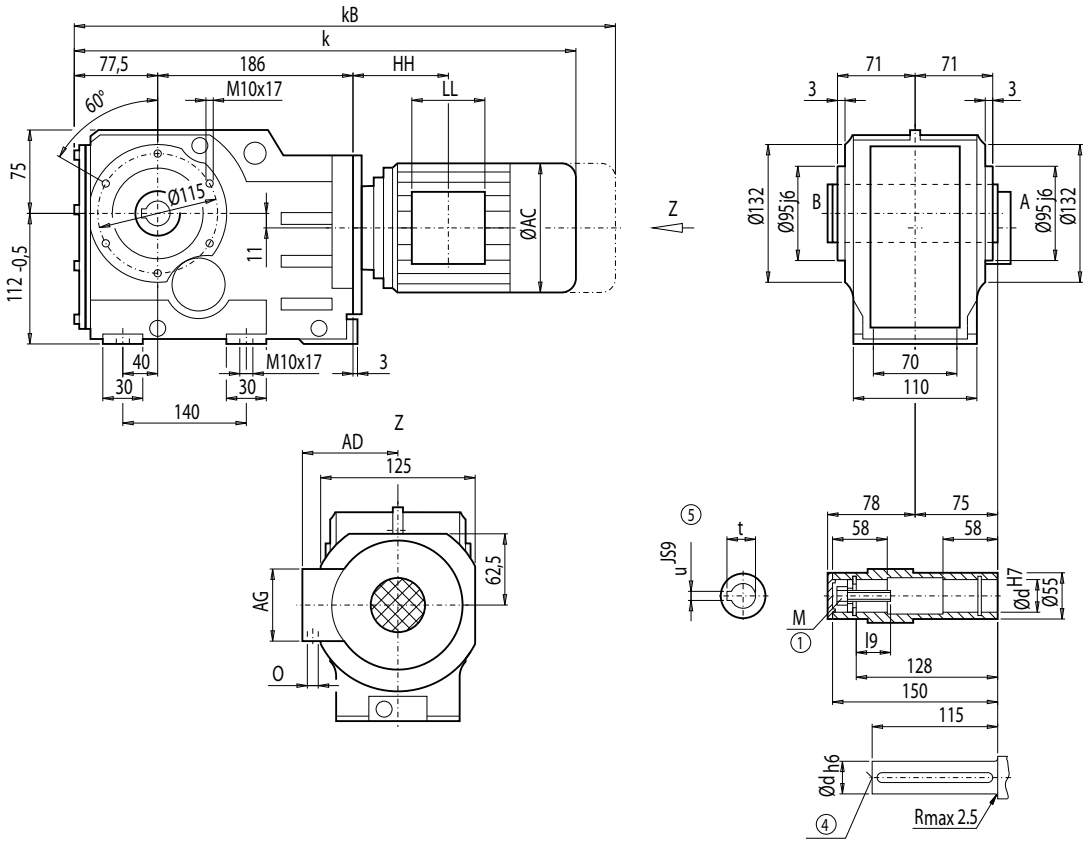

d	l9	M	t	u
35 *)	40	M12	38.3	10
40	48	M16	43.3	12

*) Preferred series

Motor	KAZ48 k	kB	AC	AD	AG	LL	HH	O	Weight KAZ48
LA71	522.0	577.0	139.0	146	90	90	114.5	M20x1.5/M25x1.5	22
LA71Z	541.0	596.0	139.0	146	90	90	114.5	M20x1.5/M25x1.5	22
LA80	559.0	622.5	156.5	155	90	90	114.0	M20x1.5/M25x1.5	27
LA80Z	581.5	645.0	156.5	155	90	90	187.0	M20x1.5/M25x1.5	31
LA90S/L	590.0	661.0	174.0	163	90	90	114.0	M20x1.5/M25x1.5	32
LA90ZL	635.0	706.0	174.0	163	90	90	238.0	M20x1.5/M25x1.5	38
LA100L	636.0	717.0	195.0	168	120	120	154.5	2xM32x1.5	41
LA100ZL	706.0	787.0	195.0	168	120	120	286.5	2xM32x1.5	51
LA112M	665.5	746.5	219.0	181	120	120	160.0	2xM32x1.5	52
LA112ZM	693.5	774.5	219.0	181	120	120	264.0	2xM32x1.5	59

④ DIN 332 ⑤ Feather key / keyway DIN 6885 ① DIN 6912

© Siemens AG 2011

Dimensions

Gearbox KAS48 (3-stage), shaft-mounted design with shrink disk

KAS012

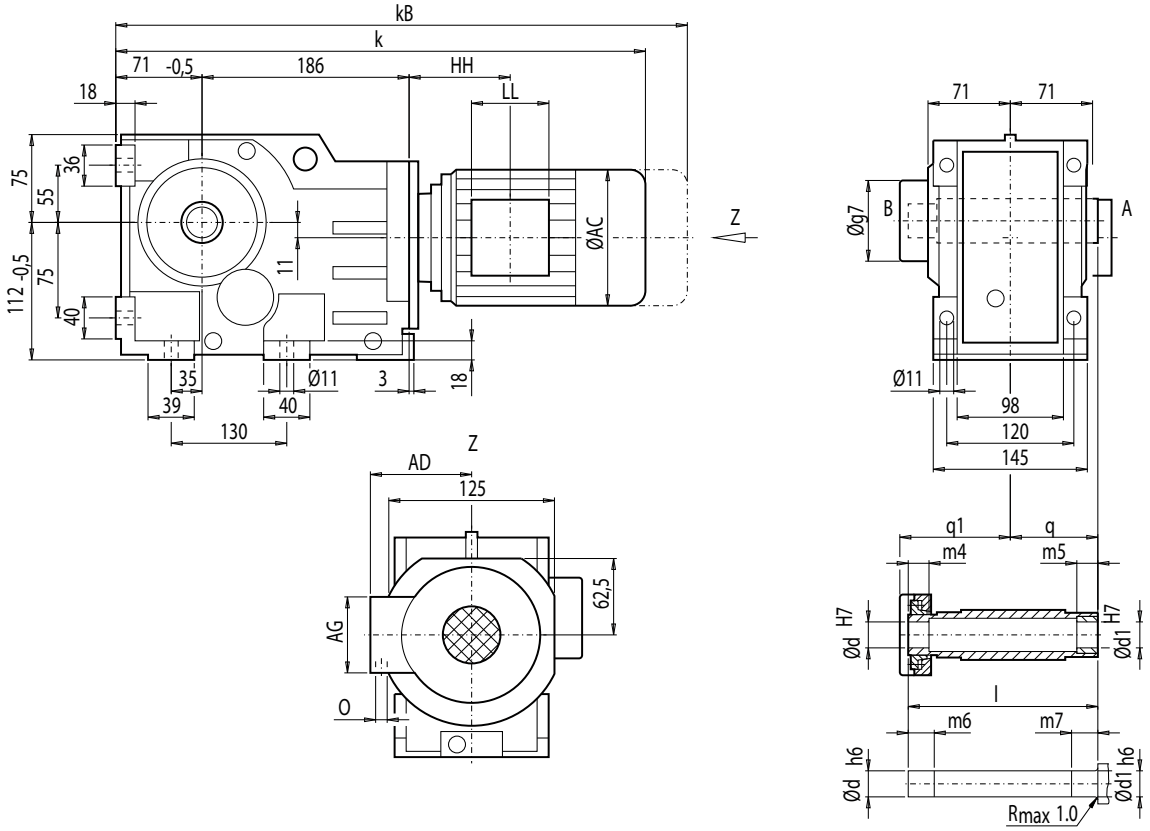

d	d1	l	m4	m5	m6	m7	q1	q	g7
35 *)	35	177	32	20	37	25	109	75	93
40	40	177	25	20	30	25	109	75	93

*) Preferred series

	KAS48								Weight
Motor	**k**	**kB**	**AC**	**AD**	**AG**	**LL**	**HH**	**O**	**KAS48**
LA71	515.5	570.5	139.0	146	90	90	114.5	M20x1.5/M25x1.5	23
LA71Z	534.5	589.5	139.0	146	90	90	114.5	M20x1.5/M25x1.5	23
LA80	552.5	616.0	156.5	155	90	90	114.0	M20x1.5/M25x1.5	28
LA80Z	575.0	638.5	156.5	155	90	90	187.0	M20x1.5/M25x1.5	32
LA90S/L	583.5	654.5	174.0	163	90	90	114.0	M20x1.5/M25x1.5	33
LA90ZL	628.5	669.5	174.0	163	90	90	238.0	M20x1.5/M25x1.5	39
LA100L	629.5	710.5	195.0	168	120	120	154.5	2xM32x1.5	42
LA100ZL	699.5	780.5	195.0	168	120	120	286.5	2xM32x1.5	52
LA112M	659.0	740.0	219.0	181	120	120	160.0	2xM32x1.5	53
LA112ZM	687.0	768.0	219.0	181	120	120	264.0	2xM32x1.5	60

© Siemens AG 2011

Gearbox KADS48 (3-stage), shaft-mounted design with torque arm and shrink disk

KADS012

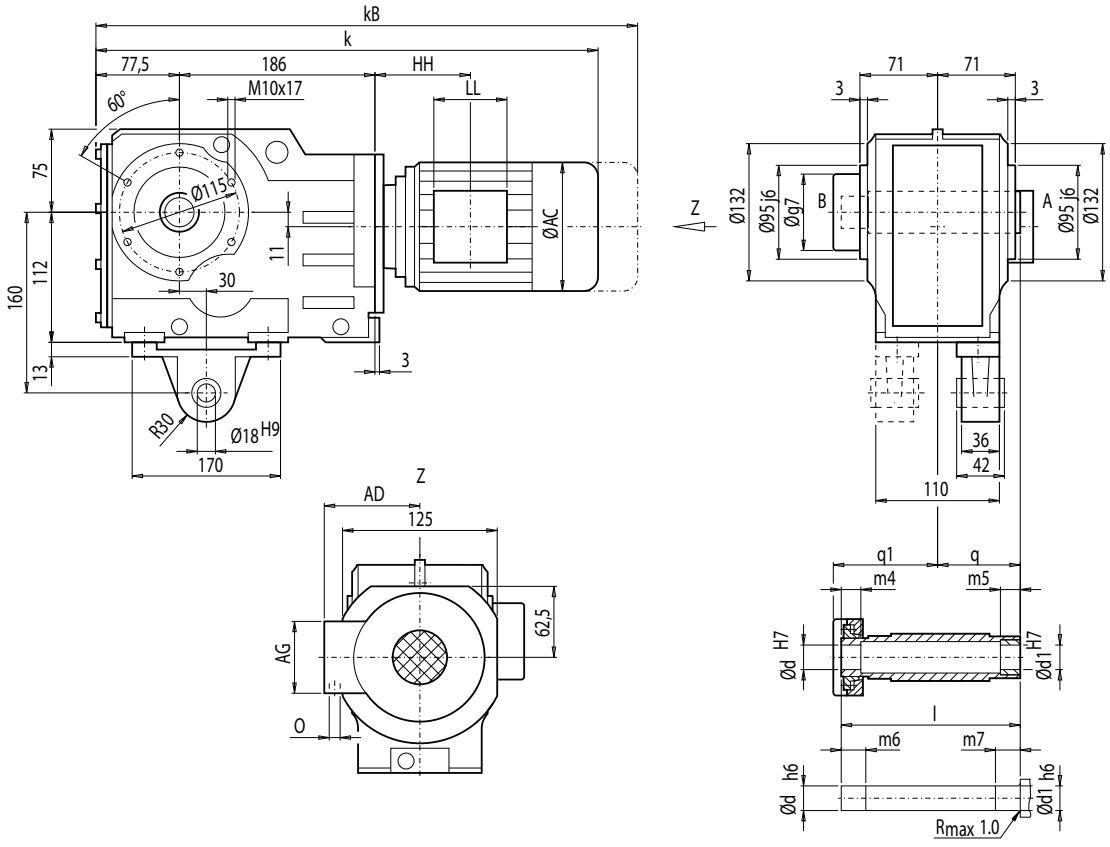

d	d1	l	m4	m5	m6	m7	q1	q	g7
35 *)	35	177	32	20	37	25	109	75	93
40	40	177	25	20	30	25	109	75	93

*) Preferred series

	KADS48								Weight
Motor	**k**	**kB**	**AC**	**AD**	**AG**	**LL**	**HH**	**O**	**KADS48**
LA71	522.0	577.0	139.0	146	90	90	114.5	M20x1.5/M25x1.5	24
LA71Z	541.0	596.0	139.0	146	90	90	114.5	M20x1.5/M25x1.5	24
LA80	559.0	622.5	156.5	155	90	90	114.0	M20x1.5/M25x1.5	29
LA80Z	581.5	645.0	156.5	155	90	90	187.0	M20x1.5/M25x1.5	33
LA90S/L	590.0	661.0	174.0	163	90	90	114.0	M20x1.5/M25x1.5	34
LA90ZL	635.0	706.0	174.0	163	90	90	238.0	M20x1.5/M25x1.5	40
LA100L	636.0	717.0	195.0	168	120	120	154.5	2xM32x1.5	43
LA100ZL	706.0	787.0	195.0	168	120	120	286.5	2xM32x1.5	53
LA112M	665.5	746.5	219.0	181	120	120	160.0	2xM32x1.5	54
LA112ZM	693.5	774.5	219.0	181	120	120	264.0	2xM32x1.5	61

© Siemens AG 2011

Dimensions

Gearbox KAFS48 (3-stage), flange-mounted design and shrink disk

KAFS012

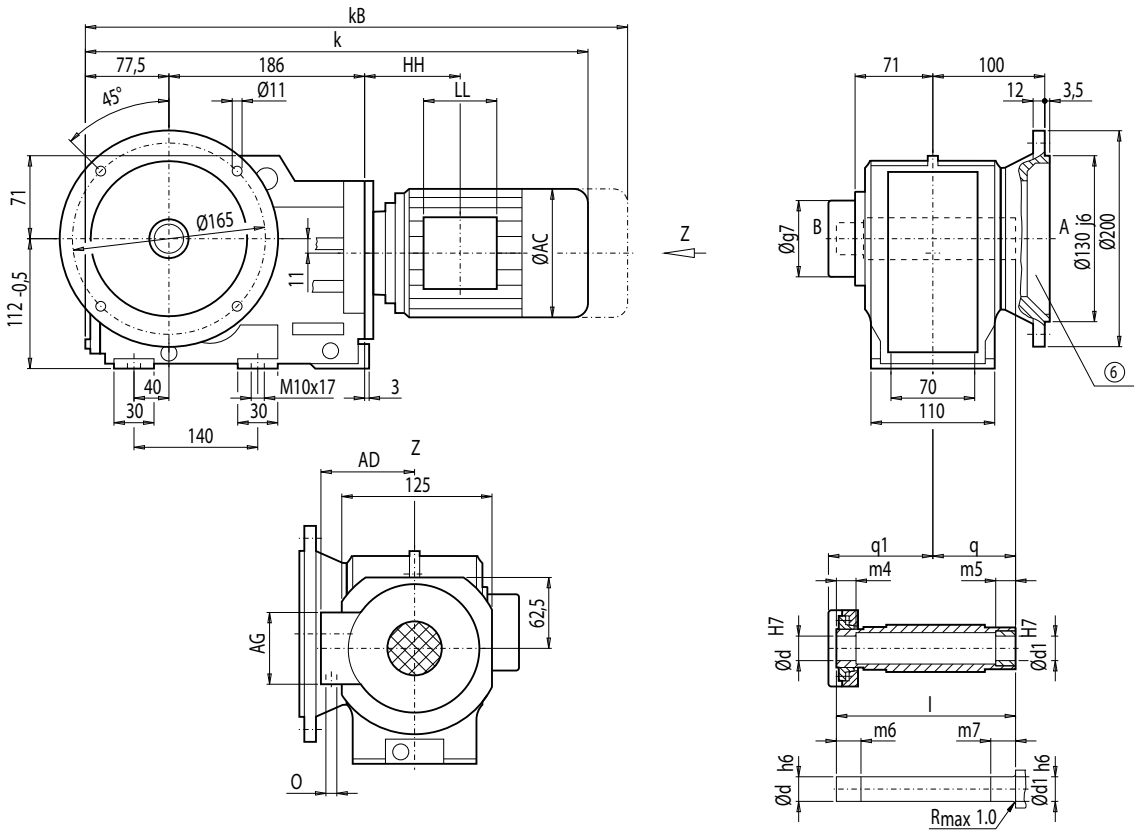

d	d1	l	m4	m5	m6	m7	q1	q	g7
35 *)	35	177	32	20	37	25	109	75	93
40	40	177	25	20	30	25	109	75	93

*) Preferred series

	KAFS48								Weight
Motor	**k**	**kB**	**AC**	**AD**	**AG**	**LL**	**HH**	**O**	**KAFS48**
LA71	522.0	577.0	139.0	146	90	90	114.5	M20x1.5/M25x1.5	26
LA71Z	541.0	596.0	139.0	146	90	90	114.5	M20x1.5/M25x1.5	26
LA80	559.0	622.5	156.5	155	90	90	114.0	M20x1.5/M25x1.5	31
LA80Z	581.5	645.0	156.5	155	90	90	187.0	M20x1.5/M25x1.5	35
LA90S/L	590.0	661.0	174.0	163	90	90	114.0	M20x1.5/M25x1.5	35
LA90ZL	635.0	706.0	174.0	163	90	90	238.0	M20x1.5/M25x1.5	41
LA100L	636.0	717.0	195.0	168	120	120	154.5	2xM32x1.5	44
LA100ZL	706.0	787.0	195.0	168	120	120	286.5	2xM32x1.5	54
LA112M	665.5	746.5	219.0	181	120	120	160.0	2xM32x1.5	55
LA112ZM	693.5	774.5	219.0	181	120	120	264.0	2xM32x1.5	65

⑥ For note, see page 4/217

© Siemens AG 2011

Gearbox KAZS48 (3-stage), shaft-mounted design with housing flange (C-type) and shrink disk

KAZS012

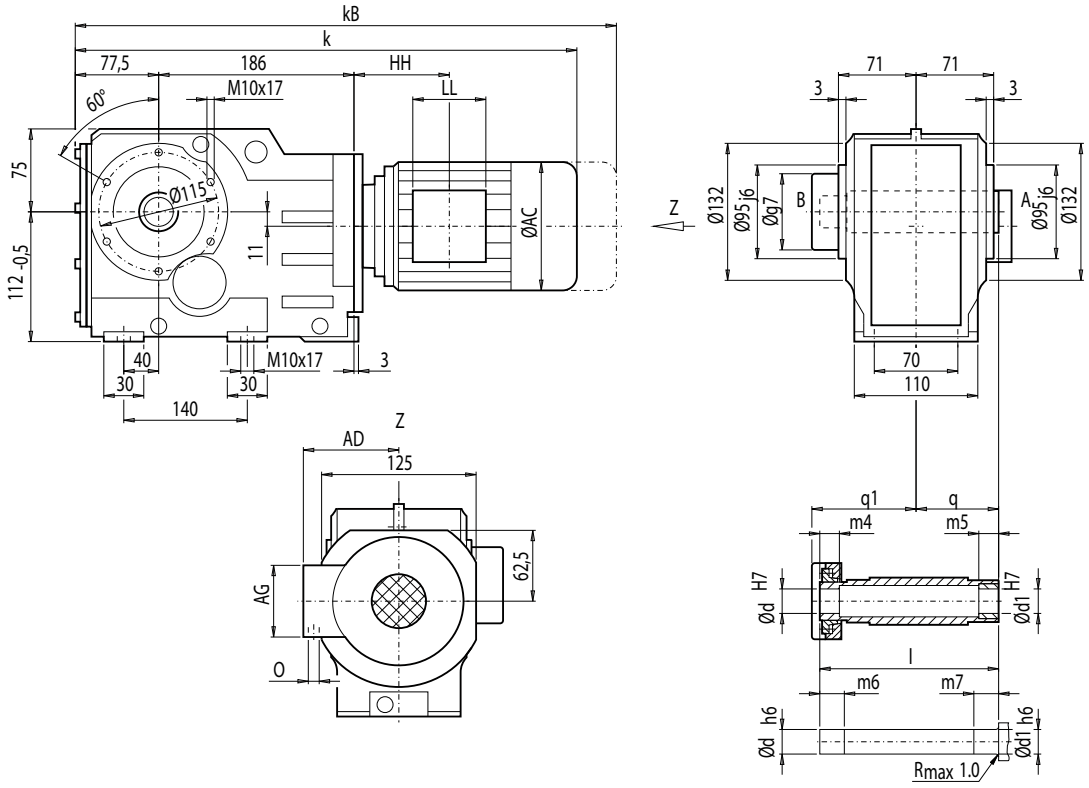

d	d1	l	m4	m5	m6	m7	q1	q	g7
35 *)	35	177	32	20	37	25	109	75	93
40	40	177	25	20	30	25	109	75	93

*) Preferred series

	KAZS48								Weight
Motor	**k**	**kB**	**AC**	**AD**	**AG**	**LL**	**HH**	**O**	**KAZS48**
LA71	522.0	577.0	139.0	146	90	90	114.5	M20x1.5/M25x1.5	23
LA71Z	541.0	596.0	139.0	146	90	90	114.5	M20x1.5/M25x1.5	23
LA80	559.0	622.5	156.5	155	90	90	114.0	M20x1.5/M25x1.5	28
LA80Z	581.5	645.0	156.5	155	90	90	187.0	M20x1.5/M25x1.5	32
LA90S/L	590.0	661.0	174.0	163	90	90	114.0	M20x1.5/M25x1.5	33
LA90ZL	635.0	706.0	174.0	163	90	90	238.0	M20x1.5/M25x1.5	39
LA100L	636.0	717.0	195.0	168	120	120	154.5	2xM32x1.5	42
LA100ZL	706.0	787.0	195.0	168	120	120	286.5	2xM32x1.5	52
LA112M	665.5	746.5	219.0	181	120	120	160.0	2xM32x1.5	52
LA112ZM	693.5	774.5	219.0	181	120	120	264.0	2xM32x1.5	59

© Siemens AG 2011

Dimensions

Gearbox K68 (3-stage), housing-flange-mounted design (C-type)

K012

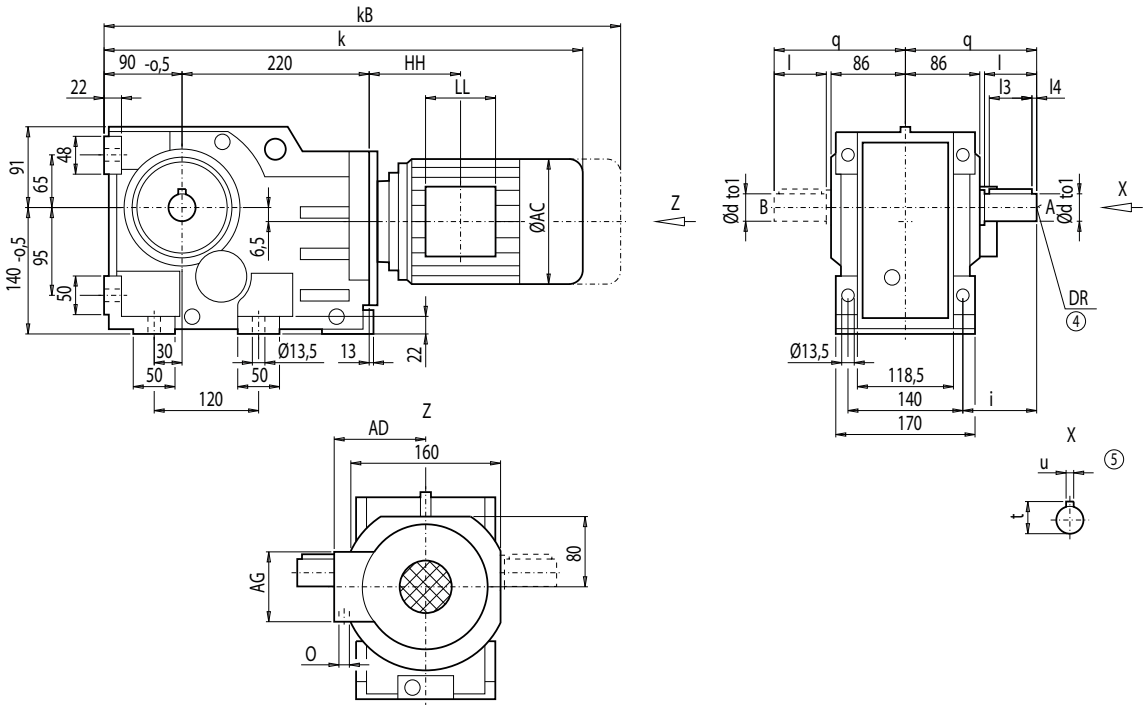

d	to1	l	l3	l4	t	u	i	q	DR
35	k6	70	56	5	38.0	10	90	160	M12x28
40 *)	k6	80	70	5	43.0	12	100	170	M16x36
50	k6	100	80	10	53.5	14	120	190	M16x36

*) Preferred series

	K68								Weight
Motor	**k**	**kB**	**AC**	**AD**	**AG**	**LL**	**HH**	**O**	**K68**
LA71	563.0	618.0	139.0	146	90	90	109.0	M20x1.5/M25x1.5	44
LA71Z	582.0	637.0	139.0	146	90	90	109.0	M20x1.5/M25x1.5	44
LA80	600.0	663.5	156.5	155	90	90	108.5	M20x1.5/M25x1.5	49
LA80Z	622.5	686.0	156.5	155	90	90	181.5	M20x1.5/M25x1.5	53
LA90S/L	631.0	702.0	174.0	163	90	90	108.5	M20x1.5/M25x1.5	53
LA90ZL	676.0	747.0	174.0	163	90	90	232.5	M20x1.5/M25x1.5	59
LA100L	677.0	758.0	195.0	168	120	120	149.0	2xM32x1.5	62
LA100ZL	747.0	828.0	195.0	168	120	120	281.0	2xM32x1.5	72
LA112M	706.0	787.0	219.0	181	120	120	154.0	2xM32x1.5	74
LA112ZM	734.0	815.0	219.0	181	120	120	258.0	2xM32x1.5	81
LA132S/M	768.0	870.0	259.0	195	140	140	196.5	2xM32x1.5	84
LA132ZM	814.0	916.0	259.0	195	140	140	304.5	2xM32x1.5	105

④ DIN 332

⑤ Feather key / keyway DIN 6885

© Siemens AG 2011

Gearbox KF68 (3-stage), flange-mounted design (A-type)

KF012

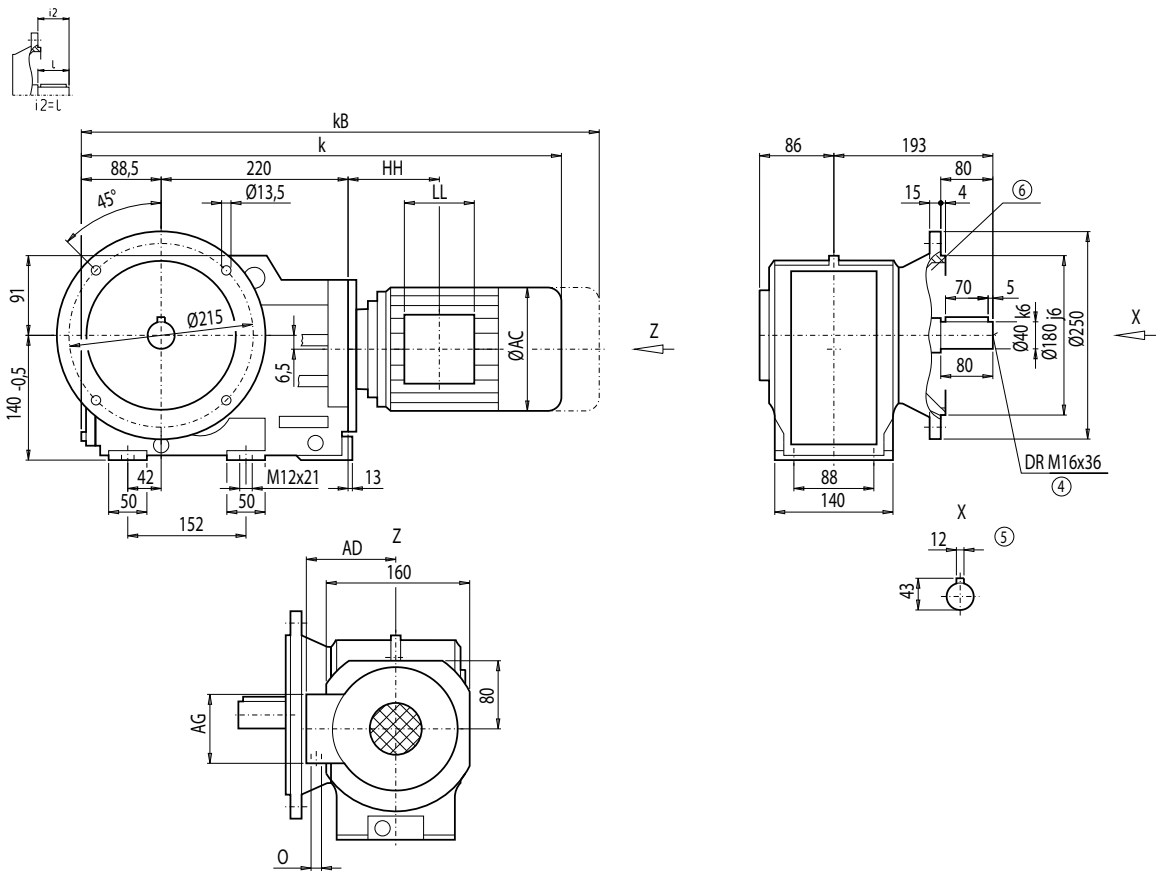

Motor	KF68 k	kB	AC	AD	AG	LL	HH	O	Weight KF68
LA71	561.5	616.5	139.0	146	90	90	109.0	M20x1.5/M25x1.5	49
LA71Z	580.5	635.5	139.0	146	90	90	109.0	M20x1.5/M25x1.5	49
LA80	598.5	662.0	156.5	155	90	90	108.5	M20x1.5/M25x1.5	54
LA80Z	621.0	684.5	156.5	155	90	90	181.5	M20x1.5/M25x1.5	58
LA90S/L	629.5	700.5	174.0	163	90	90	108.5	M20x1.5/M25x1.5	58
LA90ZL	674.5	745.5	174.0	163	90	90	232.5	M20x1.5/M25x1.5	64
LA100L	675.5	756.5	195.0	168	120	120	149.0	2xM32x1.5	67
LA100ZL	745.5	826.5	195.0	168	120	120	281.0	2xM32x1.5	77
LA112M	704.5	785.5	219.0	181	120	120	154.0	2xM32x1.5	79
LA112ZM	732.5	813.5	219.0	181	120	120	258.0	2xM32x1.5	86
LA132S/M	766.5	868.5	259.0	195	140	140	196.5	2xM32x1.5	89
LA132ZM	812.5	914.5	259.0	195	140	140	304.5	2xM32x1.5	110

④ DIN 332 ⑤ Feather key / keyway DIN 6885 ⑥ For note, see page 4/217

© Siemens AG 2011

Dimensions

Gearbox KA68 (3-stage), housing-flange-mounted design (C-type)

KA012

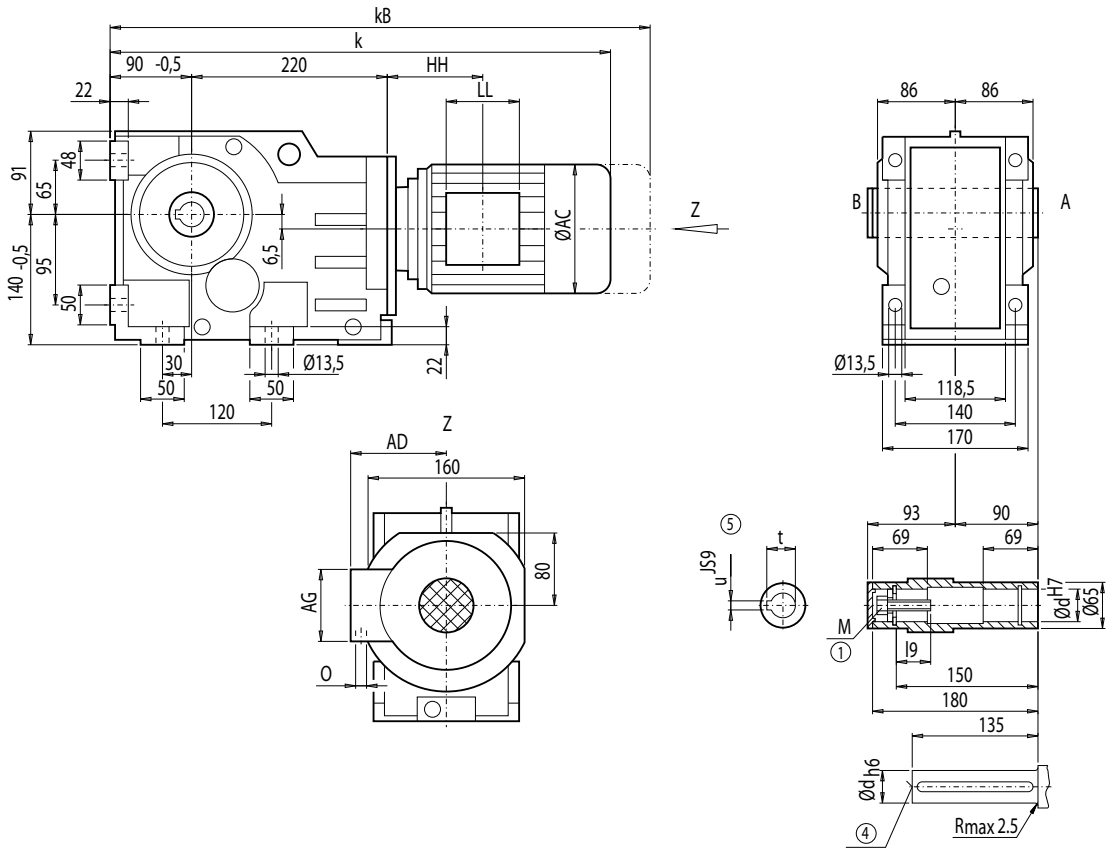

d	l9	M	t	u
40 *)	48	M16	43.3	12
45	47	M16	48.8	14

*) Preferred series

	KA68								Weight
Motor	**k**	**kB**	**AC**	**AD**	**AG**	**LL**	**HH**	**O**	**KA68**
LA71	563.0	618.0	139.0	146	90	90	109.0	M20x1.5/M25x1.5	40
LA71Z	582.0	637.0	139.0	146	90	90	109.0	M20x1.5/M25x1.5	40
LA80	600.0	663.5	156.5	155	90	90	108.5	M20x1.5/M25x1.5	45
LA80Z	622.5	686.0	156.5	155	90	90	181.5	M20x1.5/M25x1.5	49
LA90S/L	631.0	702.0	174.0	163	90	90	108.5	M20x1.5/M25x1.5	50
LA90ZL	676.0	747.0	174.0	163	90	90	232.5	M20x1.5/M25x1.5	56
LA100L	677.0	758.0	195.0	168	120	120	149.0	2xM32x1.5	59
LA100ZL	747.0	828.0	195.0	168	120	120	281.0	2xM32x1.5	69
LA112M	706.0	787.0	219.0	181	120	120	154.0	2xM32x1.5	70
LA112ZM	734.0	815.0	219.0	181	120	120	258.0	2xM32x1.5	77
LA132S/M	768.0	870.0	259.0	195	140	140	196.5	2xM32x1.5	80
LA132ZM	814.0	916.0	259.0	195	140	140	304.5	2xM32x1.5	102

④ DIN 332 ⑤ Feather key / keyway DIN 6885 ① DIN 6912

© Siemens AG 2011

Gearbox KAD68 (3-stage), shaft-mounted design with torque arm

KAD012

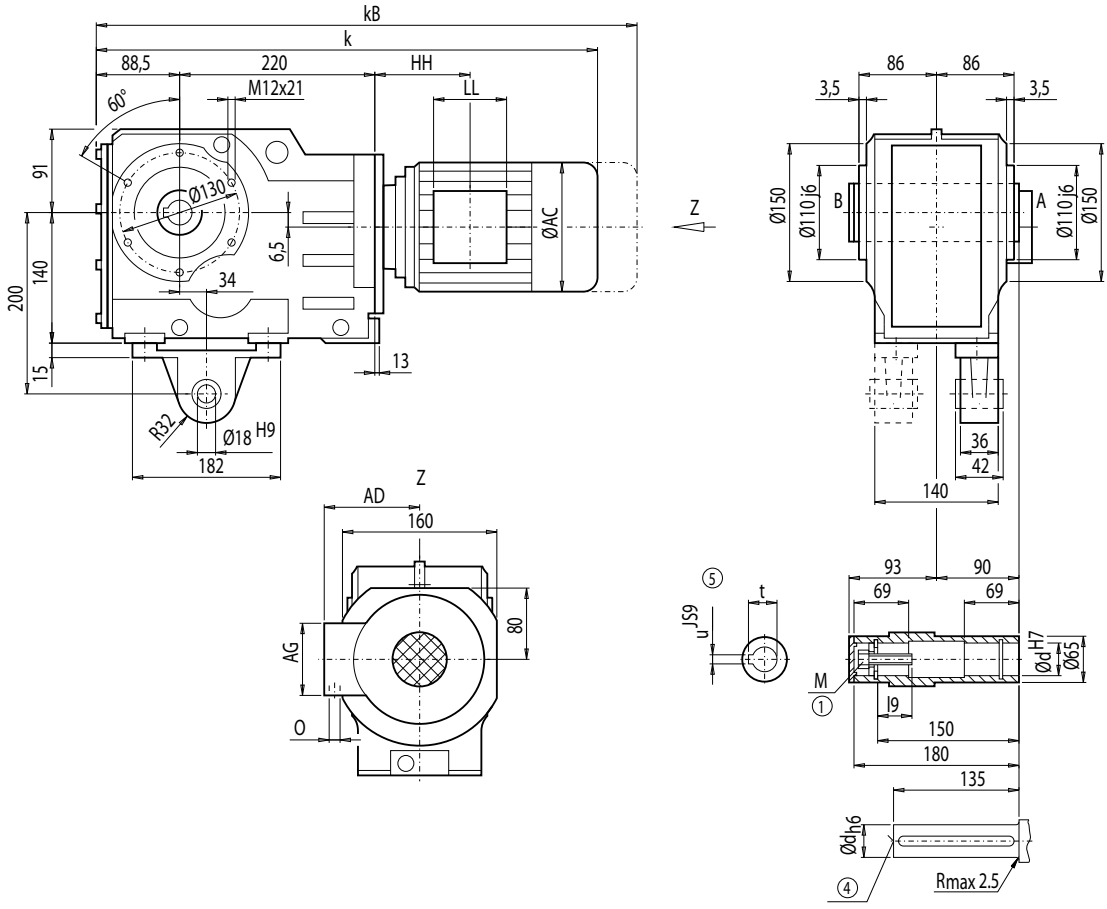

d	l9	M	t	u
40 *)	48	M16	43.3	12
45	47	M16	48.8	14

*) Preferred series

Motor	KAD68 k	kB	AC	AD	AG	LL	HH	O	Weight KAD68
LA71	561.5	616.5	139.0	146	90	90	109.0	M20x1.5/M25x1.5	42
LA71Z	580.5	635.5	139.0	146	90	90	109.0	M20x1.5/M25x1.5	42
LA80	598.5	662.0	156.5	155	90	90	108.5	M20x1.5/M25x1.5	47
LA80Z	621.0	684.5	156.5	155	90	90	181.5	M20x1.5/M25x1.5	51
LA90S/L	629.5	700.5	174.0	163	90	90	108.5	M20x1.5/M25x1.5	52
LA90ZL	674.5	745.5	174.0	163	90	90	232.5	M20x1.5/M25x1.5	58
LA100L	675.5	756.5	195.0	168	120	120	149.0	2xM32x1.5	61
LA100ZL	745.5	826.5	195.0	168	120	120	281.0	2xM32x1.5	71
LA112M	704.5	785.5	219.0	181	120	120	154.0	2xM32x1.5	72
LA112ZM	732.5	813.5	219.0	181	120	120	258.0	2xM32x1.5	79
LA132S/M	766.5	868.5	259.0	195	140	140	196.5	2xM32x1.5	82
LA132ZM	812.5	914.5	259.0	195	140	140	304.5	2xM32x1.5	104

④ DIN 332 ⑤ Feather key / keyway DIN 6885 ① DIN 6912

© Siemens AG 2011

Dimensions

Gearbox KAF68 (3-stage), flange-mounted design

KAF012

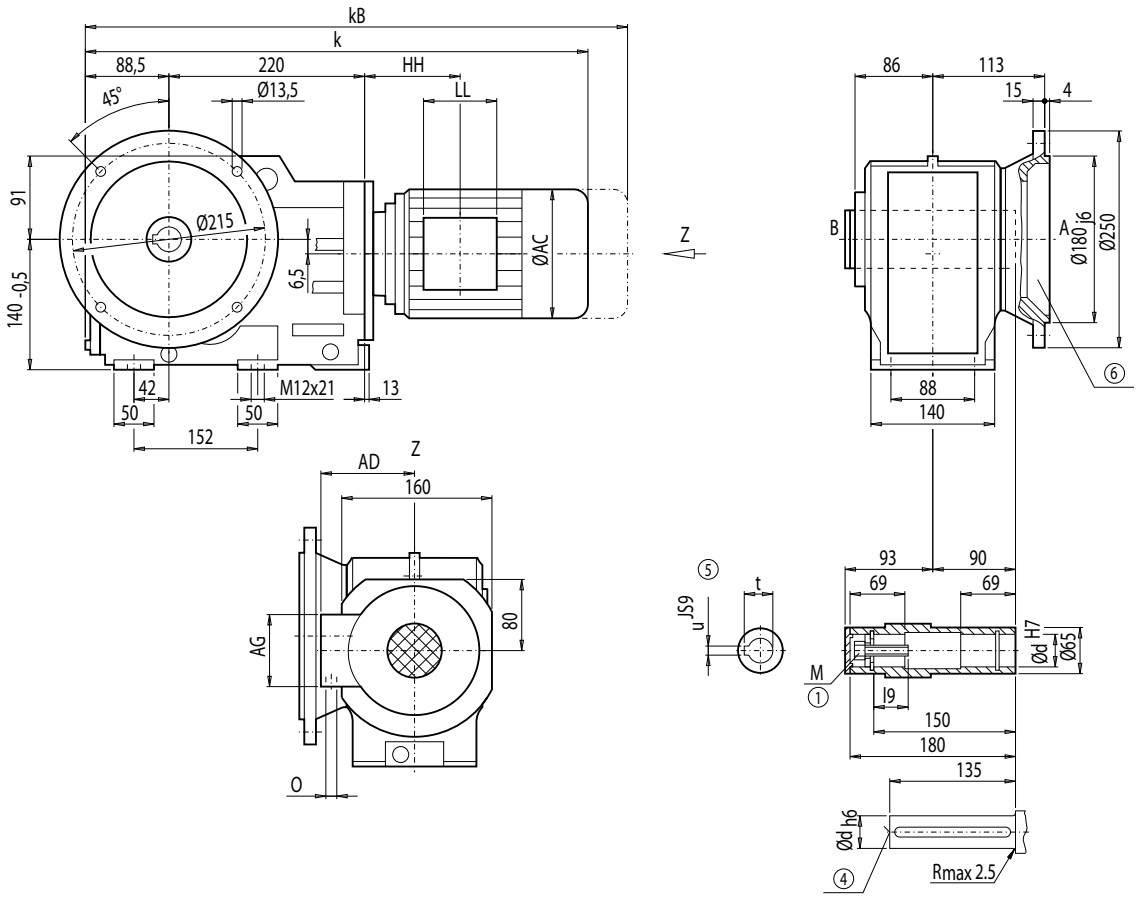

d	l9	M	t	u
40 *)	48	M16	43.3	12
45	47	M16	48.8	14

*) Preferred series

Motor	KAF68 k	kB	AC	AD	AG	LL	HH	O	Weight KAF68
LA71	561.5	616.5	139.0	146	90	90	109.0	M20x1.5/M25x1.5	45
LA71Z	580.5	635.5	139.0	146	90	90	109.0	M20x1.5/M25x1.5	45
LA80	598.5	662.0	156.5	155	90	90	108.5	M20x1.5/M25x1.5	50
LA80Z	621.0	684.5	156.5	155	90	90	181.5	M20x1.5/M25x1.5	54
LA90S/L	629.5	700.5	174.0	163	90	90	108.5	M20x1.5/M25x1.5	55
LA90ZL	674.5	745.5	174.0	163	90	90	232.5	M20x1.5/M25x1.5	61
LA100L	675.5	756.5	195.0	168	120	120	149.0	2xM32x1.5	64
LA100ZL	745.5	826.5	195.0	168	120	120	281.0	2xM32x1.5	74
LA112M	704.5	785.5	219.0	181	120	120	154.0	2xM32x1.5	75
LA112ZM	732.5	813.5	219.0	181	120	120	258.0	2xM32x1.5	82
LA132S/M	766.5	868.5	259.0	195	140	140	196.5	2xM32x1.5	85
LA132ZM	812.5	914.5	259.0	195	140	140	304.5	2xM32x1.5	107

④ DIN 332 ⑤ Feather key / keyway DIN 6885 ① DIN 6912 ⑥ For note, see page 4/217

© Siemens AG 2011

Gearbox KAZ68 (3-stage), shaft-mounted design with housing flange (C-type)

KAZ012

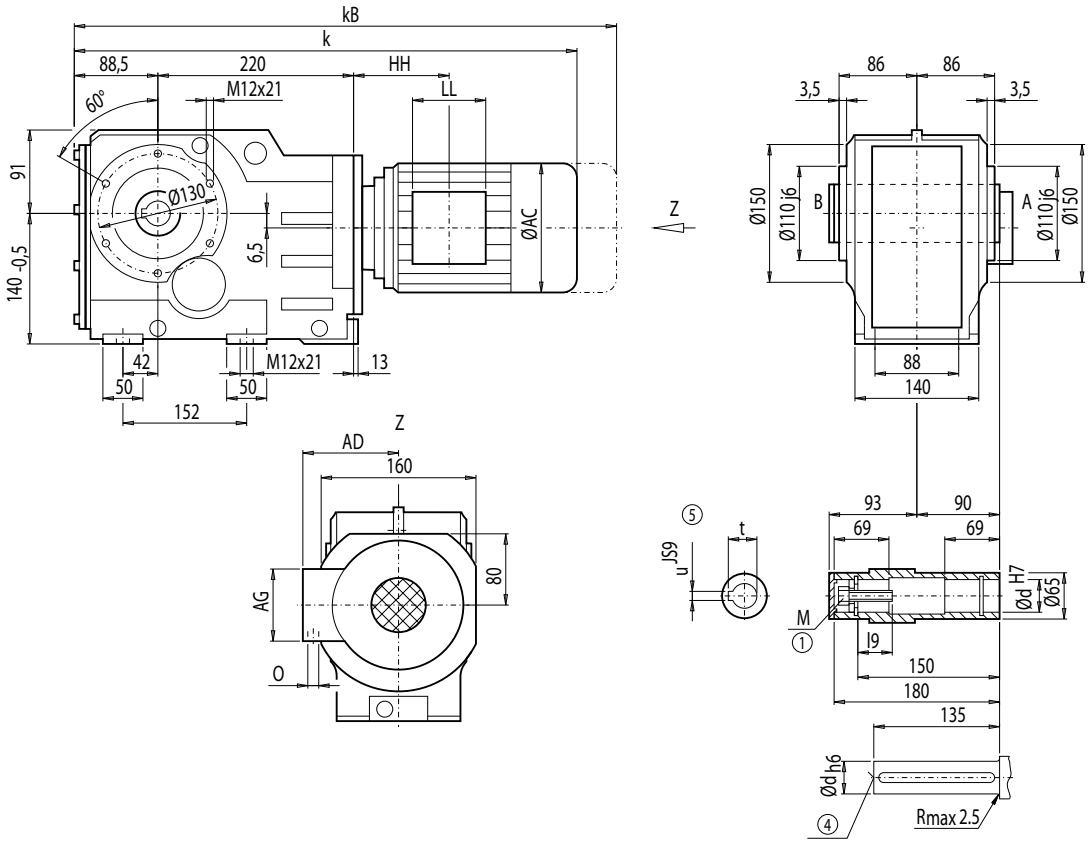

d	l9	M	t	u
40 *)	48	M16	43.3	12
45	47	M16	48.8	14

*) Preferred series

Motor	KAZ68 k	kB	AC	AD	AG	LL	HH	O	Weight KAZ68
LA71	561.5	616.5	139.0	146	90	90	109.0	M20x1.5/M25x1.5	41
LA71Z	580.5	635.5	139.0	146	90	90	109.0	M20x1.5/M25x1.5	41
LA80	598.5	662.0	156.5	155	90	90	108.5	M20x1.5/M25x1.5	46
LA80Z	621.0	684.5	156.5	155	90	90	181.5	M20x1.5/M25x1.5	50
LA90S/L	629.5	700.5	174.0	163	90	90	108.5	M20x1.5/M25x1.5	50
LA90ZL	674.5	745.5	174.0	163	90	90	232.5	M20x1.5/M25x1.5	56
LA100L	675.5	756.5	195.0	168	120	120	149.0	2xM32x1.5	59
LA100ZL	745.5	826.5	195.0	168	120	120	281.0	2xM32x1.5	69
LA112M	704.5	785.5	219.0	181	120	120	154.0	2xM32x1.5	71
LA112ZM	732.5	813.5	219.0	181	120	120	258.0	2xM32x1.5	78
LA132S/M	766.5	868.5	259.0	195	140	140	196.5	2xM32x1.5	81
LA132ZM	812.5	914.5	259.0	195	140	140	304.5	2xM32x1.5	102

④ DIN 332 ⑤ Feather key / keyway DIN 6885 ① DIN 6912

© Siemens AG 2011

Dimensions

Gearbox KAS68 (3-stage), shaft-mounted design with shrink disk

KAS012

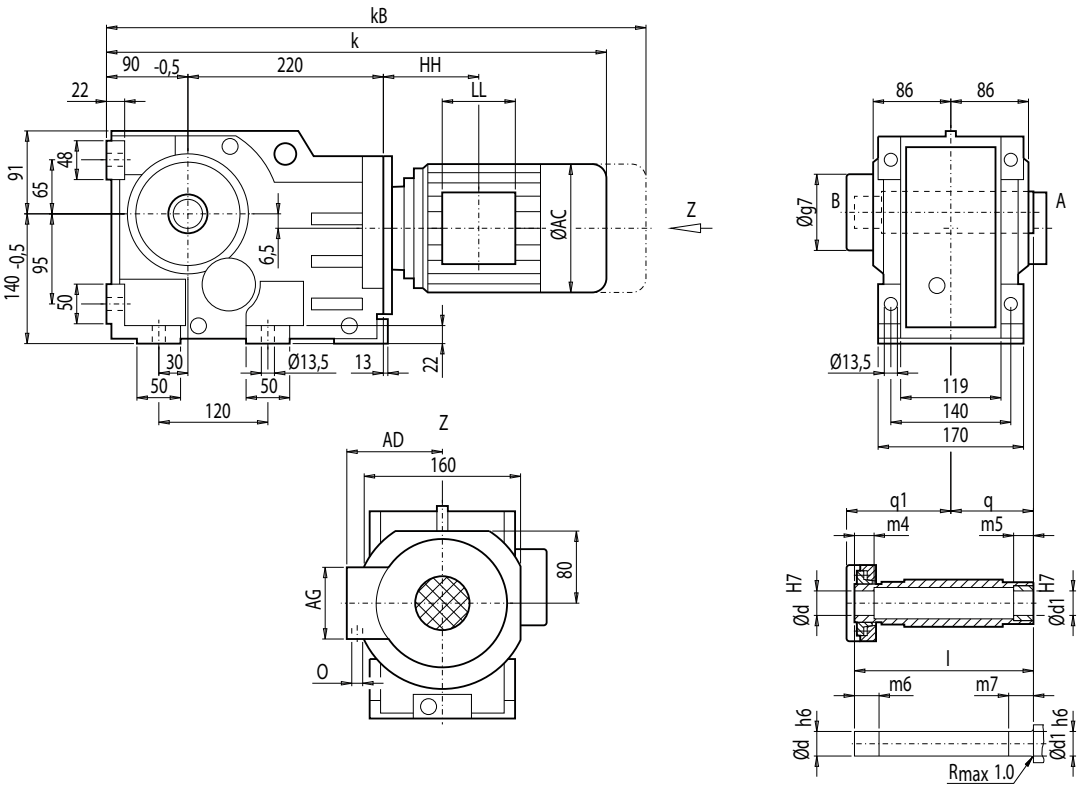

d	d1	l	m4	m5	m6	m7	q1	q	g7
40 *)	40	209	35	20	40	25	126	90	112
50	50	209	27	20	32	25	126	90	112

*) Preferred series

	KAS68								Weight
Motor	**k**	**kB**	**AC**	**AD**	**AG**	**LL**	**HH**	**O**	**KAS68**
LA71	563.0	618.0	139.0	146	90	90	109.0	M20x1.5/M25x1.5	42
LA71Z	582.0	637.0	139.0	146	90	90	109.0	M20x1.5/M25x1.5	42
LA80	600.0	663.5	156.5	155	90	90	108.5	M20x1.5/M25x1.5	47
LA80Z	622.5	686.0	156.5	155	90	90	181.5	M20x1.5/M25x1.5	51
LA90S/L	631.0	702.0	174.0	163	90	90	108.5	M20x1.5/M25x1.5	51
LA90ZL	676.0	747.0	174.0	163	90	90	232.5	M20x1.5/M25x1.5	57
LA100L	677.0	758.0	195.0	168	120	120	149.0	2xM32x1.5	60
LA100ZL	747.0	828.0	195.0	168	120	120	281.0	2xM32x1.5	70
LA112M	706.0	787.0	219.0	181	120	120	154.0	2xM32x1.5	72
LA112ZM	734.0	815.0	219.0	181	120	120	258.0	2xM32x1.5	79
LA132S/M	768.0	870.0	259.0	195	140	140	196.5	2xM32x1.5	82
LA132ZM	814.0	916.0	259.0	195	140	140	304.5	2xM32x1.5	103

© Siemens AG 2011

Gearbox KADS68 (3-stage), shaft-mounted design with torque arm and shrink disk

KADS012

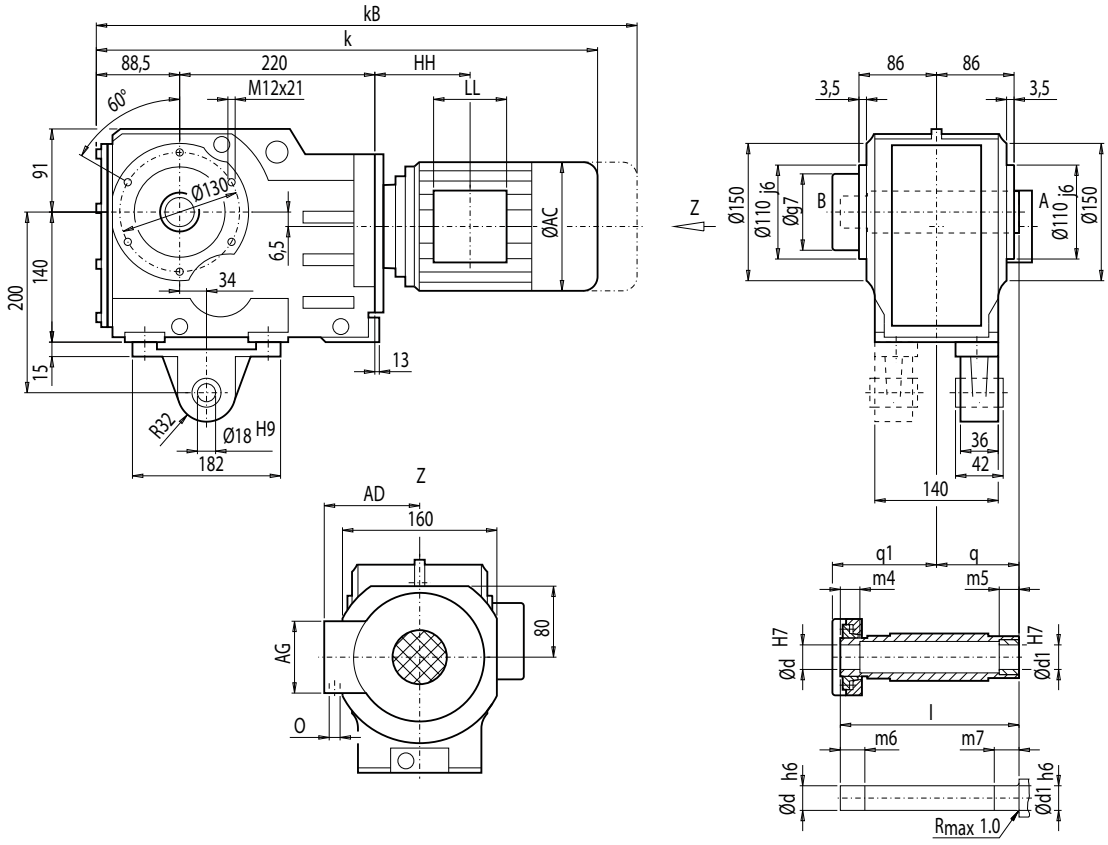

d	d1	l	m4	m5	m6	m7	q1	q	g7
40 *)	40	209	35	20	40	25	126	90	112
50	50	209	27	20	32	25	126	90	112

*) Preferred series

	KADS68								Weight
Motor	**k**	**kB**	**AC**	**AD**	**AG**	**LL**	**HH**	**O**	**KADS68**
LA71	561.5	616.5	139.0	146	90	90	109.0	M20x1.5/M25x1.5	44
LA71Z	580.5	635.5	139.0	146	90	90	109.0	M20x1.5/M25x1.5	44
LA80	598.5	662.0	156.5	155	90	90	108.5	M20x1.5/M25x1.5	49
LA80Z	621.0	684.5	156.5	155	90	90	181.5	M20x1.5/M25x1.5	54
LA90S/L	629.5	700.5	174.0	163	90	90	108.5	M20x1.5/M25x1.5	53
LA90ZL	674.5	745.5	174.0	163	90	90	232.5	M20x1.5/M25x1.5	59
LA100L	675.5	756.5	195.0	168	120	120	149.0	2xM32x1.5	62
LA100ZL	745.5	826.5	195.0	168	120	120	281.0	2xM32x1.5	72
LA112M	704.5	785.5	219.0	181	120	120	154.0	2xM32x1.5	74
LA112ZM	732.5	813.5	219.0	181	120	120	258.0	2xM32x1.5	81
LA132S/M	766.5	868.5	259.0	195	140	140	196.5	2xM32x1.5	84
LA132ZM	812.5	914.5	259.0	195	140	140	304.5	2xM32x1.5	105

© Siemens AG 2011

Dimensions

Gearbox KAFS68 (3-stage), flange-mounted design and shrink disk

KAFS012

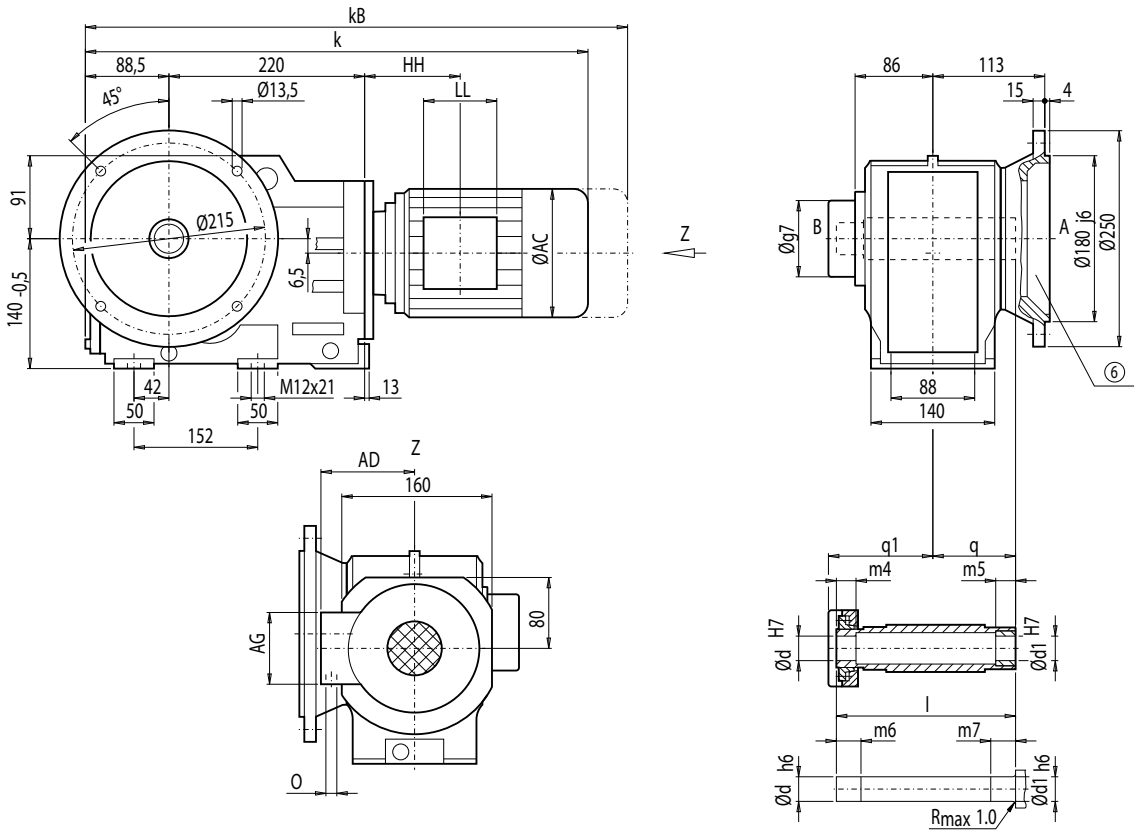

d	d1	l	m4	m5	m6	m7	q1	q	g7
40 *)	40	209	35	20	40	25	126	90	112
50	50	209	27	20	32	25	126	90	112

*) Preferred series

	KAFS68								Weight
Motor	**k**	**kB**	**AC**	**AD**	**AG**	**LL**	**HH**	**O**	**KAFS68**
LA71	561.5	616.5	139.0	146	90	90	109.0	M20x1.5/M25x1.5	47
LA71Z	580.5	635.5	139.0	146	90	90	109.0	M20x1.5/M25x1.5	47
LA80	598.5	662.0	156.5	155	90	90	108.5	M20x1.5/M25x1.5	52
LA80Z	621.0	684.5	156.5	155	90	90	181.5	M20x1.5/M25x1.5	56
LA90S/L	629.5	700.5	174.0	163	90	90	108.5	M20x1.5/M25x1.5	56
LA90ZL	674.5	745.5	174.0	163	90	90	232.5	M20x1.5/M25x1.5	62
LA100L	675.5	756.5	195.0	168	120	120	149.0	2xM32x1.5	65
LA100ZL	745.5	826.5	195.0	168	120	120	281.0	2xM32x1.5	75
LA112M	704.5	785.5	219.0	181	120	120	154.0	2xM32x1.5	77
LA112ZM	732.5	813.5	219.0	181	120	120	258.0	2xM32x1.5	84
LA132S/M	766.5	868.5	259.0	195	140	140	196.5	2xM32x1.5	87
LA132ZM	812.5	914.5	259.0	195	140	140	304.5	2xM32x1.5	108

⑥ For note, see page 4/217

© Siemens AG 2011

Gearbox KAZS68 (3-stage), shaft-mounted design with housing flange (C-type) and shrink disk

KAZS012

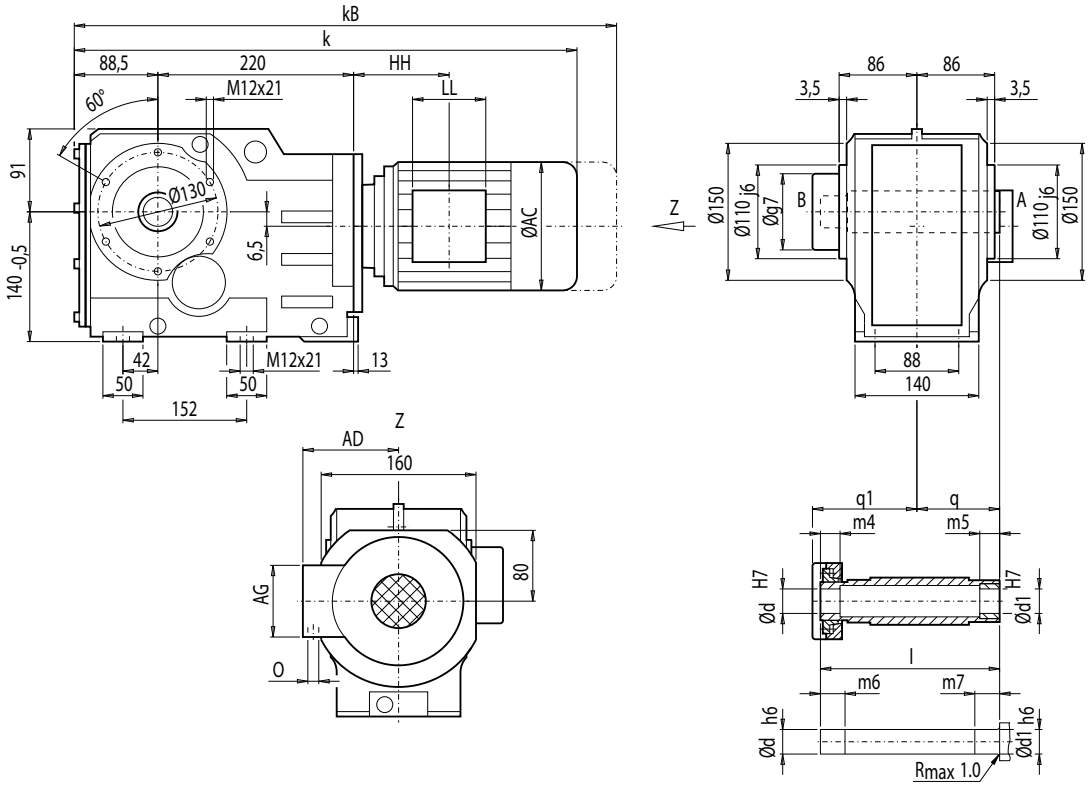

d	d1	l	m4	m5	m6	m7	q1	q	g7
40 *)	40	209	35	20	40	25	126	90	112
50	50	209	27	20	32	25	126	90	112

*) Preferred series

	KAZS68								Weight
Motor	**k**	**kB**	**AC**	**AD**	**AG**	**LL**	**HH**	**O**	**KAZS68**
LA71	561.5	616.5	139.0	146	90	90	109.0	M20x1.5/M25x1.5	42
LA71Z	580.5	635.5	139.0	146	90	90	109.0	M20x1.5/M25x1.5	42
LA80	598.5	662.0	156.5	155	90	90	108.5	M20x1.5/M25x1.5	47
LA80Z	621.0	684.5	156.5	155	90	90	181.5	M20x1.5/M25x1.5	51
LA90S/L	629.5	700.5	174.0	163	90	90	108.5	M20x1.5/M25x1.5	52
LA90ZL	674.5	745.5	174.0	163	90	90	232.5	M20x1.5/M25x1.5	58
LA100L	675.5	756.5	195.0	168	120	120	149.0	2xM32x1.5	61
LA100ZL	745.5	826.5	195.0	168	120	120	281.0	2xM32x1.5	71
LA112M	704.5	785.5	219.0	181	120	120	154.0	2xM32x1.5	72
LA112ZM	732.5	813.5	219.0	181	120	120	258.0	2xM32x1.5	79
LA132S/M	766.5	868.5	259.0	195	140	140	196.5	2xM32x1.5	82
LA132ZM	812.5	914.5	259.0	195	140	140	304.5	2xM32x1.5	103

© Siemens AG 2011

Dimensions

Gearbox K88 (3-stage), housing-flange-mounted design (C-type)

K012

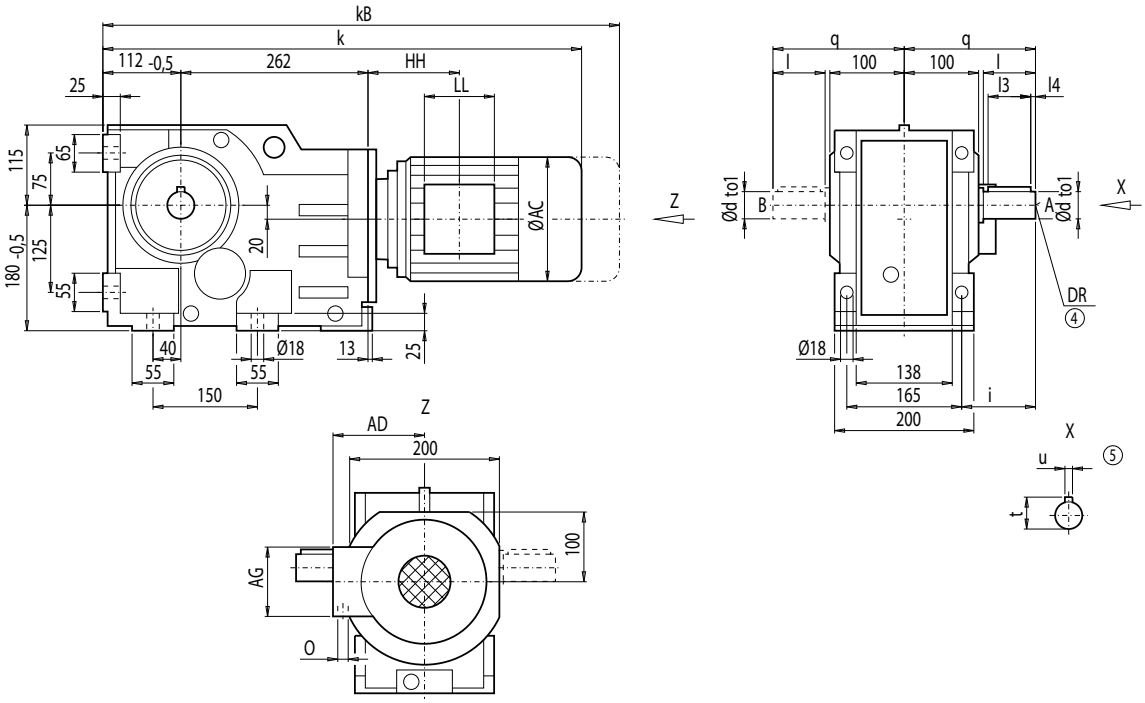

d	to1	l	l3	l4	t	u	i	q	DR
50 *)	k6	100	80	10	53.5	14	122.5	205	M16x36
70	m6	140	110	15	74.5	20	162.5	245	M20x42

*) Preferred series

	K88								Weight
Motor	k	kB	AC	AD	AG	LL	HH	O	K88
LA71	621.0	676.0	139.0	146	90	90	103.0	M20x1.5/M25x1.5	73
LA71Z	640.0	695.0	139.0	146	90	90	103.0	M20x1.5/M25x1.5	73
LA80	658.0	721.5	156.5	155	90	90	102.5	M20x1.5/M25x1.5	78
LA80Z	680.5	744.0	156.5	155	90	90	175.5	M20x1.5/M25x1.5	82
LA90S/L	689.0	760.0	174.0	163	90	90	102.5	M20x1.5/M25x1.5	83
LA90ZL	734.0	805.0	174.0	163	90	90	226.5	M20x1.5/M25x1.5	89
LA100L	735.0	816.0	195.0	168	120	120	143.0	2xM32x1.5	92
LA100ZL	805.0	886.0	195.0	168	120	120	275.0	2xM32x1.5	102
LA112M	762.0	843.0	219.0	181	120	120	146.0	2xM32x1.5	104
LA112ZM	790.0	871.0	219.0	181	120	120	250.0	2xM32x1.5	111
LA132S/M	822.0	924.0	259.0	195	140	140	186.5	2xM32x1.5	117
LA132ZM	868.0	970.0	259.0	195	140	140	294.5	2xM32x1.5	138
LA160M/L	924.5	1 043.0	313.5	227	165	165	212.0	2xM40x1.5	149
LA160ZL	972.5	1 091.0	313.5	227	165	165	365.0	2xM40x1.5	188

④ DIN 332

⑤ Feather key / keyway DIN 6885

© Siemens AG 2011

Gearbox KF88 (3-stage), flange-mounted design (A-type)

KF012

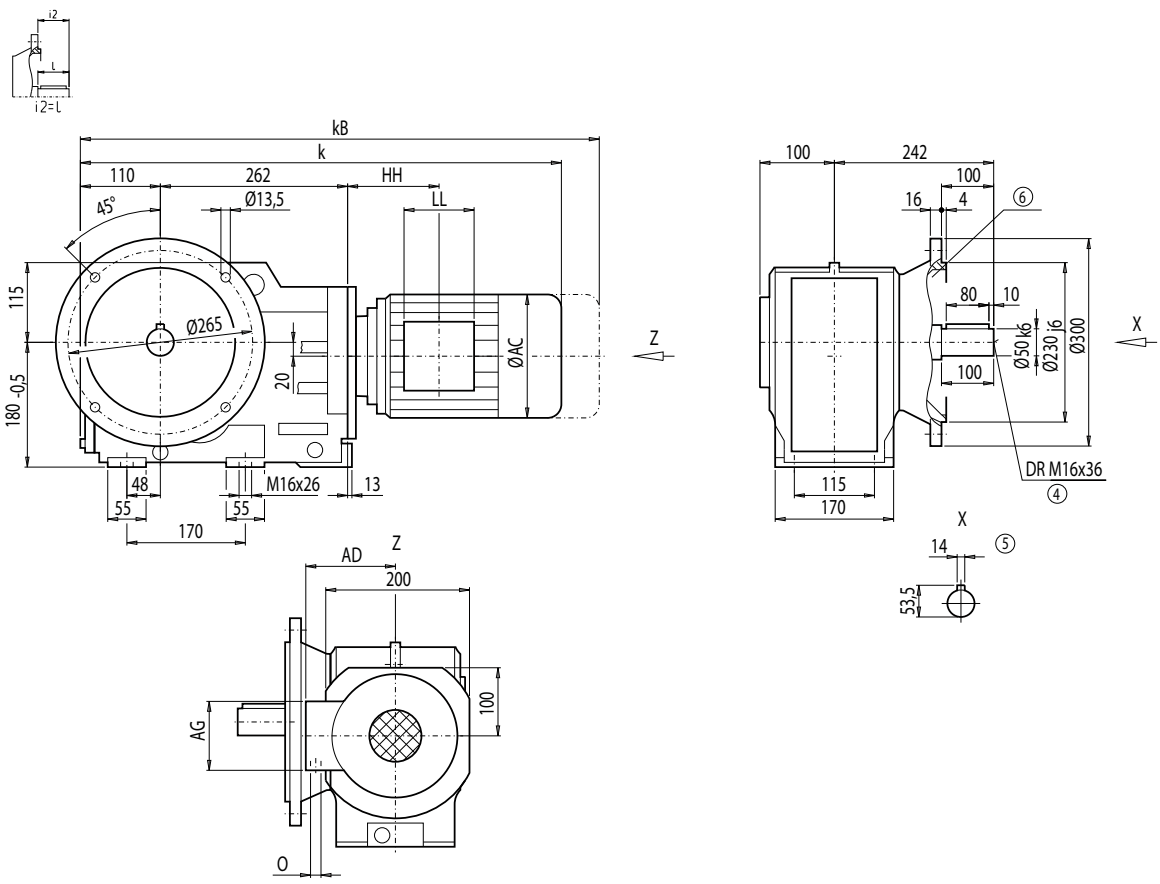

Motor	KF88 k	kB	AC	AD	AG	LL	HH	O	Weight KF88
LA71	619.0	674.0	139.0	146	90	90	103.0	M20x1.5/M25x1.5	80
LA71Z	638.0	693.0	139.0	146	90	90	103.0	M20x1.5/M25x1.5	80
LA80	656.0	719.5	156.5	155	90	90	102.5	M20x1.5/M25x1.5	85
LA80Z	678.5	742.0	156.5	155	90	90	175.5	M20x1.5/M25x1.5	89
LA90S/L	687.0	758.0	174.0	163	90	90	102.5	M20x1.5/M25x1.5	89
LA90ZL	732.0	803.0	174.0	163	90	90	226.5	M20x1.5/M25x1.5	95
LA100L	733.0	814.0	195.0	168	120	120	143.0	2xM32x1.5	99
LA100ZL	803.0	884.0	195.0	168	120	120	275.0	2xM32x1.5	109
LA112M	760.0	841.0	219.0	181	120	120	146.0	2xM32x1.5	110
LA112ZM	788.0	869.0	219.0	181	120	120	250.0	2xM32x1.5	117
LA132S/M	820.0	922.0	259.0	195	140	140	186.5	2xM32x1.5	123
LA132ZM	866.0	968.0	259.0	195	140	140	294.5	2xM32x1.5	144
LA160M/L	922.5	1 041.0	313.5	227	165	165	212.0	2xM40x1.5	156
LA160ZL	970.5	1 089.0	313.5	227	165	165	365.0	2xM40x1.5	195

④ DIN 332 ⑤ Feather key / keyway DIN 6885 ⑥ For note, see page 4/217

© Siemens AG 2011

Dimensions

Gearbox KA88 (3-stage), housing-flange-mounted design (C-type)

KA012

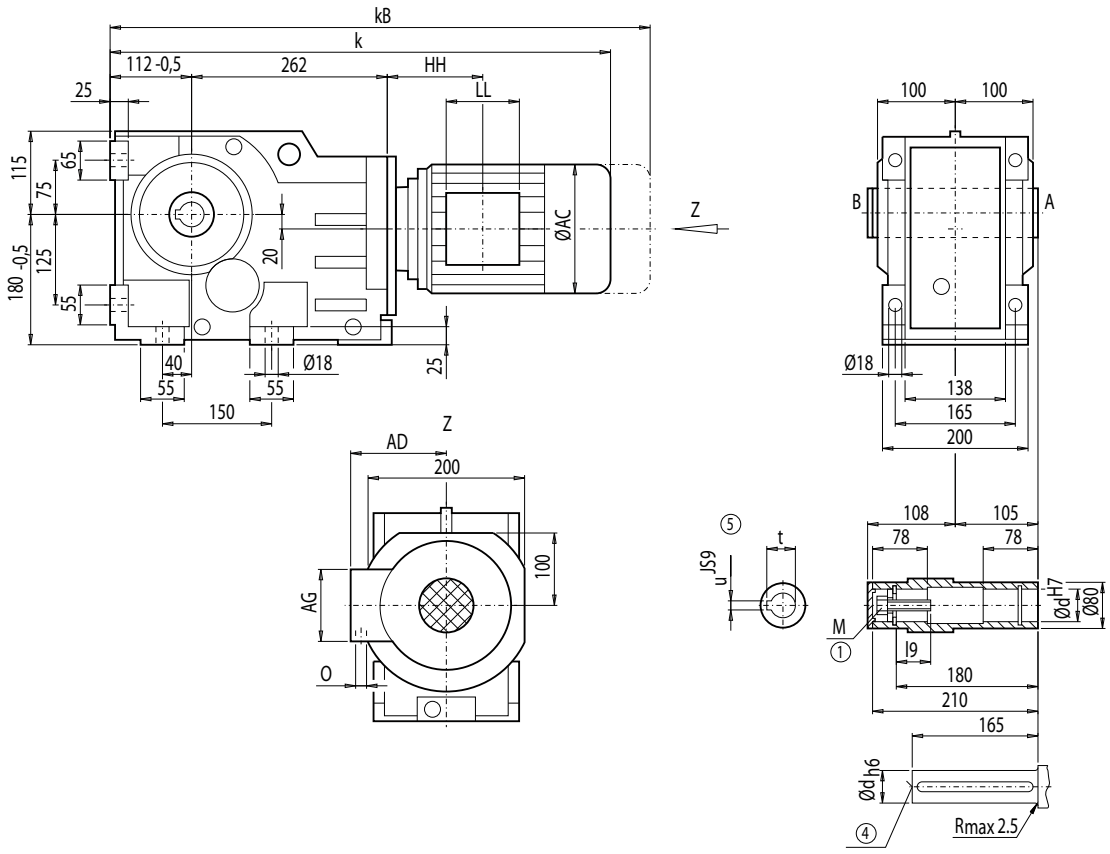

d	l9	M	t	u
50 *)	44.5	M16	53.8	14
60	54.0	M20	64.4	18

*) Preferred series

	KA88								Weight
Motor	**k**	**kB**	**AC**	**AD**	**AG**	**LL**	**HH**	**O**	**KA88**
LA71	621.0	676.0	139.0	146	90	90	103.0	M20x1.5/M25x1.5	65
LA71Z	640.0	695.0	139.0	146	90	90	103.0	M20x1.5/M25x1.5	65
LA80	658.0	721.5	156.5	155	90	90	102.5	M20x1.5/M25x1.5	70
LA80Z	680.5	744.0	156.5	155	90	90	175.5	M20x1.5/M25x1.5	74
LA90S/L	689.0	760.0	174.0	163	90	90	102.5	M20x1.5/M25x1.5	75
LA90ZL	734.0	805.0	174.0	163	90	90	226.5	M20x1.5/M25x1.5	81
LA100L	735.0	816.0	195.0	168	120	120	143.0	2xM32x1.5	84
LA100ZL	805.0	886.0	195.0	168	120	120	275.0	2xM32x1.5	94
LA112M	762.0	843.0	219.0	181	120	120	146.0	2xM32x1.5	96
LA112ZM	790.0	871.0	219.0	181	120	120	250.0	2xM32x1.5	103
LA132S/M	822.0	924.0	259.0	195	140	140	186.5	2xM32x1.5	109
LA132ZM	868.0	970.0	259.0	195	140	140	294.5	2xM32x1.5	130
LA160M/L	924.5	1 043.0	313.5	227	165	165	212.0	2xM40x1.5	141
LA160ZL	972.5	1 091.0	313.5	227	165	165	365.0	2xM40x1.5	180

④ DIN 332 ⑤ Feather key / keyway DIN 6885 ① DIN EN ISO 4014

© Siemens AG 2011

Gearbox KAD88 (3-stage), shaft-mounted design with torque arm

KAD012

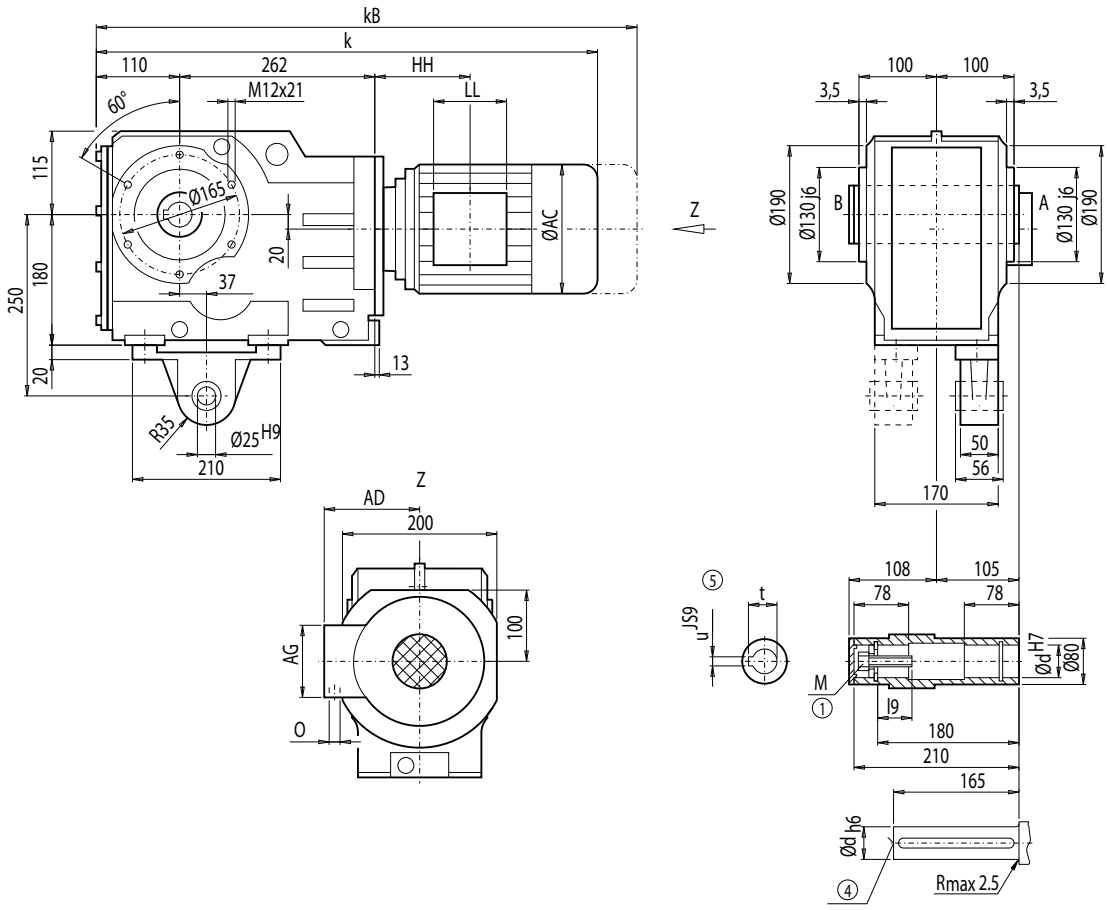

d	l9	M	t	u
50 *)	44.5	M16	53.8	14
60	54.0	M20	64.4	18

*) Preferred series

	KAD88								Weight
Motor	**k**	**kB**	**AC**	**AD**	**AG**	**LL**	**HH**	**O**	**KAD88**
LA71	619.0	674.0	139.0	146	90	90	103.0	M20x1.5/M25x1.5	68
LA71Z	638.0	693.0	139.0	146	90	90	103.0	M20x1.5/M25x1.5	68
LA80	656.0	719.5	156.5	155	90	90	102.5	M20x1.5/M25x1.5	73
LA80Z	678.5	742.0	156.5	155	90	90	175.5	M20x1.5/M25x1.5	77
LA90S/L	687.0	758.0	174.0	163	90	90	102.5	M20x1.5/M25x1.5	77
LA90ZL	732.0	803.0	174.0	163	90	90	226.5	M20x1.5/M25x1.5	83
LA100L	733.0	814.0	195.0	168	120	120	143.0	2xM32x1.5	86
LA100ZL	803.0	884.0	195.0	168	120	120	275.0	2xM32x1.5	96
LA112M	760.0	841.0	219.0	181	120	120	146.0	2xM32x1.5	98
LA112ZM	788.0	869.0	219.0	181	120	120	250.0	2xM32x1.5	105
LA132S/M	820.0	922.0	259.0	195	140	140	186.5	2xM32x1.5	111
LA132ZM	866.0	968.0	259.0	195	140	140	294.5	2xM32x1.5	132
LA160M/L	922.5	1 041.0	313.5	227	165	165	212.0	2xM40x1.5	140
LA160ZL	970.5	1 089.0	313.5	227	165	165	365.0	2xM40x1.5	179

④ DIN 332 ⑤ Feather key / keyway DIN 6885 ① DIN EN ISO 4014

© Siemens AG 2011

Dimensions

Gearbox KAF88 (3-stage), flange-mounted design

KAF012

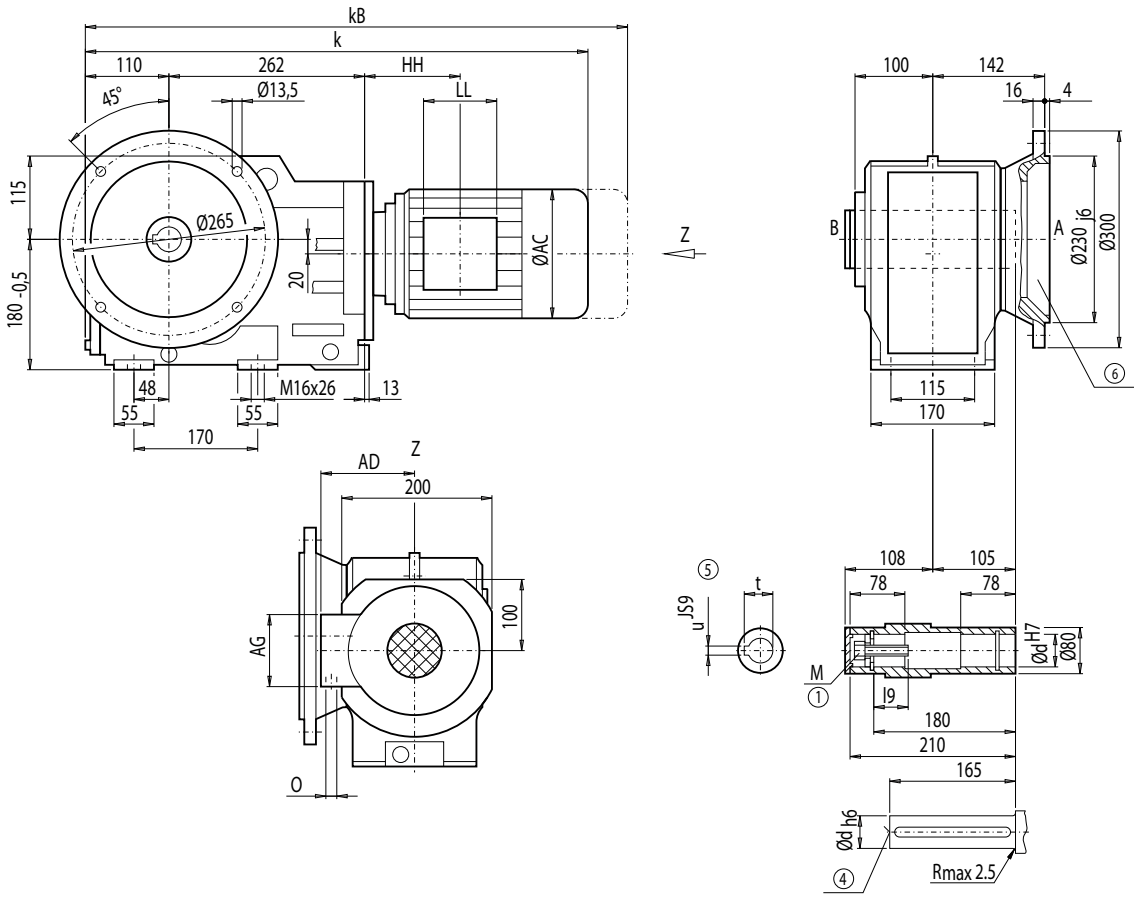

d	l9	M	t	u
50 *)	44.5	M16	53.8	14
60	54.0	M20	64.4	18

*) Preferred series

	KAF88								Weight
Motor	**k**	**kB**	**AC**	**AD**	**AG**	**LL**	**HH**	**O**	**KAF88**
LA71	619.0	674.0	139.0	146	90	90	103.0	M20x1.5/M25x1.5	72
LA71Z	638.0	693.0	139.0	146	90	90	103.0	M20x1.5/M25x1.5	72
LA80	656.0	719.5	156.5	155	90	90	102.5	M20x1.5/M25x1.5	77
LA80Z	678.5	742.0	156.5	155	90	90	175.5	M20x1.5/M25x1.5	81
LA90S/L	687.0	758.0	174.0	163	90	90	102.5	M20x1.5/M25x1.5	81
LA90ZL	732.0	803.0	174.0	163	90	90	226.5	M20x1.5/M25x1.5	87
LA100L	733.0	814.0	195.0	168	120	120	143.0	2xM32x1.5	90
LA100ZL	803.0	884.0	195.0	168	120	120	275.0	2xM32x1.5	100
LA112M	760.0	841.0	219.0	181	120	120	146.0	2xM32x1.5	102
LA112ZM	788.0	869.0	219.0	181	120	120	250.0	2xM32x1.5	109
LA132S/M	820.0	922.0	259.0	195	140	140	186.5	2xM32x1.5	115
LA132ZM	866.0	968.0	259.0	195	140	140	294.5	2xM32x1.5	136
LA160M/L	922.5	1 041.0	313.5	227	165	165	212.0	2xM40x1.5	148
LA160ZL	970.5	1 089.0	313.5	227	165	165	365.0	2xM40x1.5	187

④ DIN 332 ⑤ Feather key / keyway DIN 6885 ① DIN EN ISO 4014 ⑥ For note, see page 4/217

© Siemens AG 2011

Gearbox KAZ88 (3-stage), shaft-mounted design with housing flange (C-type)

KAZ012

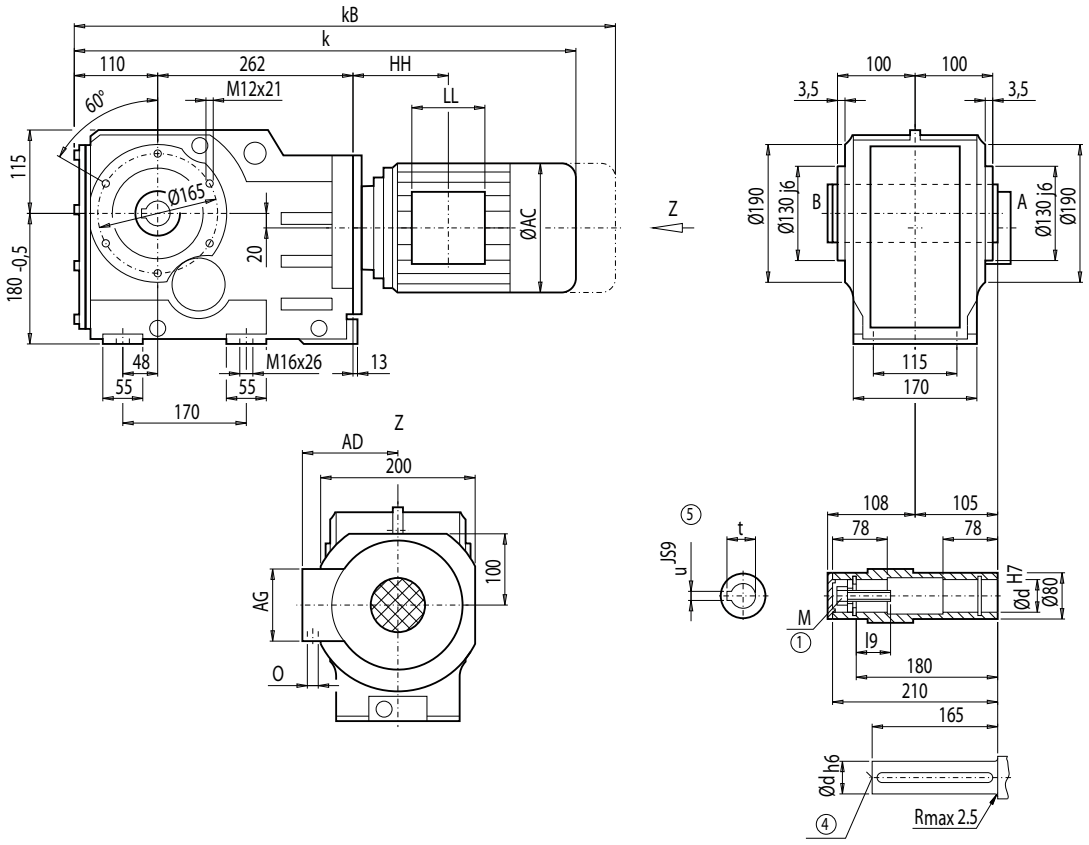

d	l9	M	t	u
50 *)	44.5	M16	53.8	14
60	54.0	M20	64.4	18

*) Preferred series

	KAZ88								Weight
Motor	**k**	**kB**	**AC**	**AD**	**AG**	**LL**	**HH**	**O**	**KAZ88**
LA71	619.0	674.0	139.0	146	90	90	103.0	M20x1.5/M25x1.5	65
LA71Z	638.0	693.0	139.0	146	90	90	103.0	M20x1.5/M25x1.5	65
LA80	656.0	719.5	156.5	155	90	90	102.5	M20x1.5/M25x1.5	70
LA80Z	678.5	742.0	156.5	155	90	90	175.5	M20x1.5/M25x1.5	74
LA90S/L	687.0	758.0	174.0	163	90	90	102.5	M20x1.5/M25x1.5	74
LA90ZL	732.0	803.0	174.0	163	90	90	226.5	M20x1.5/M25x1.5	80
LA100L	733.0	814.0	195.0	168	120	120	143.0	2xM32x1.5	84
LA100ZL	803.0	884.0	195.0	168	120	120	275.0	2xM32x1.5	94
LA112M	760.0	841.0	219.0	181	120	120	146.0	2xM32x1.5	95
LA112ZM	788.0	869.0	219.0	181	120	120	250.0	2xM32x1.5	102
LA132S/M	820.0	922.0	259.0	195	140	140	186.5	2xM32x1.5	108
LA132ZM	866.0	968.0	259.0	195	140	140	294.5	2xM32x1.5	129
LA160M/L	922.5	1 041.0	313.5	227	165	165	212.0	2xM40x1.5	141
LA160ZL	970.5	1 089.0	313.5	227	165	165	365.0	2xM40x1.5	180

④ DIN 332 ⑤ Feather key / keyway DIN 6885 ① DIN EN ISO 4014

© Siemens AG 2011

Dimensions

Gearbox KAS88 (3-stage), shaft-mounted design with shrink disk

KAS012

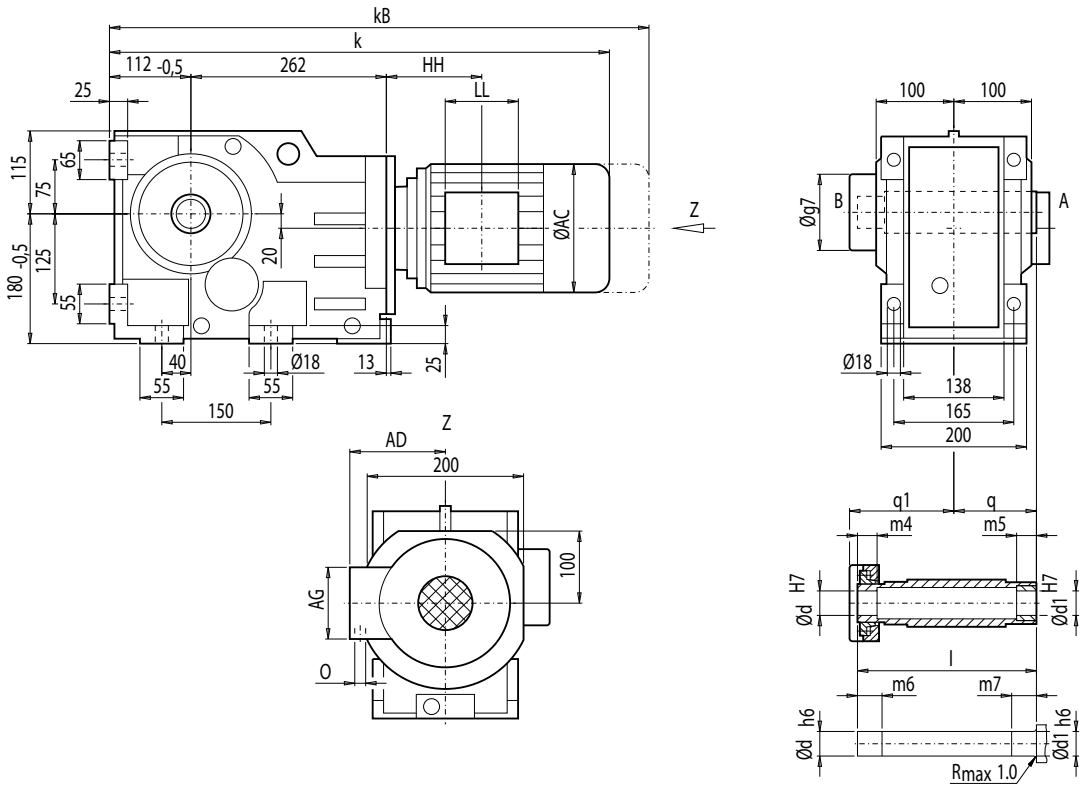

d	d1	l	m4	m5	m6	m7	q1	q	g7
50 *)	50	241	29	30	34	35	144	105	132
60	60	241	29	30	34	35	144	105	132

*) Preferred series

	KAS88								Weight
Motor	**k**	**kB**	**AC**	**AD**	**AG**	**LL**	**HH**	**O**	**KAS88**
LA71	621.0	676.0	139.0	146	90	90	103.0	M20x1.5/M25x1.5	67
LA71Z	640.0	695.0	139.0	146	90	90	103.0	M20x1.5/M25x1.5	67
LA80	658.0	721.5	156.5	155	90	90	102.5	M20x1.5/M25x1.5	72
LA80Z	680.5	744.0	156.5	155	90	90	175.5	M20x1.5/M25x1.5	76
LA90S/L	689.0	760.0	174.0	163	90	90	102.5	M20x1.5/M25x1.5	77
LA90ZL	734.0	805.0	174.0	163	90	90	226.5	M20x1.5/M25x1.5	83
LA100L	735.0	816.0	195.0	168	120	120	143.0	2xM32x1.5	86
LA100ZL	805.0	886.0	195.0	168	120	120	275.0	2xM32x1.5	96
LA112M	762.0	843.0	219.0	181	120	120	146.0	2xM32x1.5	97
LA112ZM	790.0	871.0	219.0	181	120	120	250.0	2xM32x1.5	104
LA132S/M	822.0	924.0	259.0	195	140	140	186.5	2xM32x1.5	110
LA132ZM	868.0	970.0	259.0	195	140	140	294.5	2xM32x1.5	132
LA160M/L	924.5	1 043.0	313.5	227	165	165	212.0	2xM40x1.5	143
LA160ZL	972.5	1 091.0	313.5	227	165	165	365.0	2xM40x1.5	182

© Siemens AG 2011

Gearbox KADS88 (3-stage), shaft-mounted design with torque arm and shrink disk

KADS012

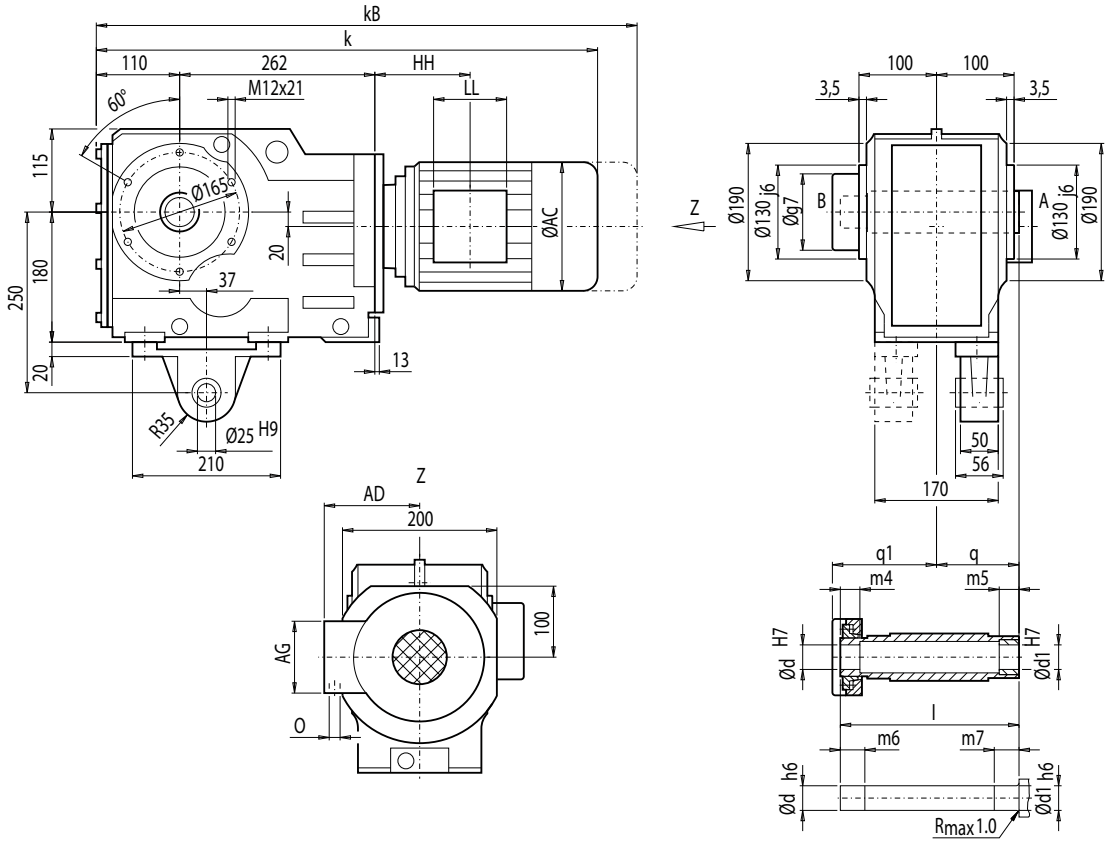

d	d1	l	m4	m5	m6	m7	q1	q	g7
50 *)	50	241	29	30	34	35	144	105	132
60	60	241	29	30	34	35	144	105	132

*) Preferred series

	KADS88								Weight
Motor	**k**	**kB**	**AC**	**AD**	**AG**	**LL**	**HH**	**O**	**KADS88**
LA71	619.0	674.0	139.0	146	90	90	103.0	M20x1.5/M25x1.5	70
LA71Z	638.0	693.0	139.0	146	90	90	103.0	M20x1.5/M25x1.5	70
LA80	656.0	719.5	156.5	155	90	90	102.5	M20x1.5/M25x1.5	75
LA80Z	678.5	742.0	156.5	155	90	90	175.5	M20x1.5/M25x1.5	79
LA90S/L	687.0	758.0	174.0	163	90	90	102.5	M20x1.5/M25x1.5	79
LA90ZL	732.0	803.0	174.0	163	90	90	226.5	M20x1.5/M25x1.5	85
LA100L	733.0	814.0	195.0	168	120	120	143.0	2xM32x1.5	88
LA100ZL	803.0	884.0	195.0	168	120	120	275.0	2xM32x1.5	98
LA112M	760.0	841.0	219.0	181	120	120	146.0	2xM32x1.5	100
LA112ZM	788.0	869.0	219.0	181	120	120	250.0	2xM32x1.5	107
LA132S/M	820.0	922.0	259.0	195	140	140	186.5	2xM32x1.5	113
LA132ZM	866.0	968.0	259.0	195	140	140	294.5	2xM32x1.5	134
LA160M/L	922.5	1 041.0	313.5	227	165	165	212.0	2xM40x1.5	146
LA160ZL	970.5	1 089.0	313.5	227	165	165	365.0	2xM40x1.5	185

© Siemens AG 2011

Dimensions

Gearbox KAFS88 (3-stage), flange-mounted design and shrink disk

KAFS012

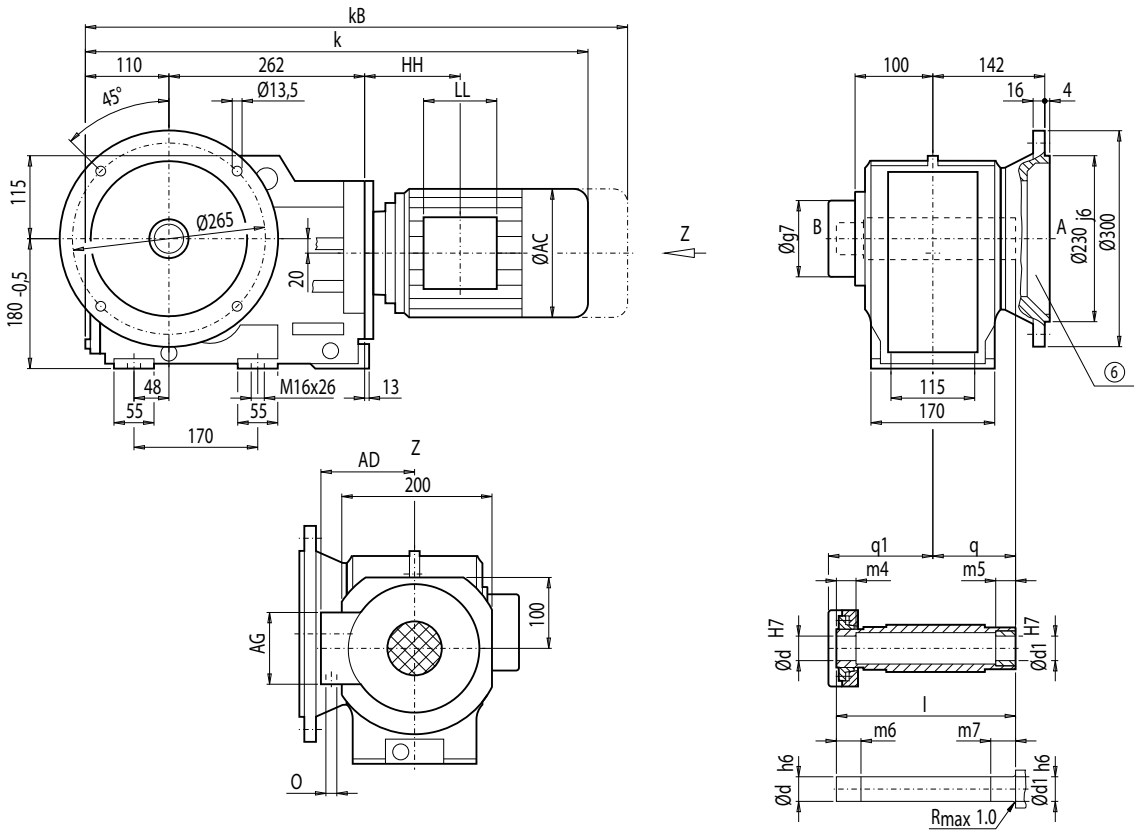

d	d1	l	m4	m5	m6	m7	q1	q	g7
50 *)	50	241	29	30	34	35	144	105	132
60	60	241	29	30	34	35	144	105	132

*) Preferred series

	KAFS88								Weight
Motor	**k**	**kB**	**AC**	**AD**	**AG**	**LL**	**HH**	**O**	**KAFS88**
LA71	619.0	674.0	139.0	146	90	90	103.0	M20x1.5/M25x1.5	74
LA71Z	638.0	693.0	139.0	146	90	90	103.0	M20x1.5/M25x1.5	74
LA80	656.0	719.5	156.5	155	90	90	102.5	M20x1.5/M25x1.5	79
LA80Z	678.5	742.0	156.5	155	90	90	175.5	M20x1.5/M25x1.5	83
LA90S/L	687.0	758.0	174.0	163	90	90	102.5	M20x1.5/M25x1.5	83
LA90ZL	732.0	803.0	174.0	163	90	90	226.5	M20x1.5/M25x1.5	89
LA100L	733.0	814.0	195.0	168	120	120	143.0	2xM32x1.5	92
LA100ZL	803.0	884.0	195.0	168	120	120	275.0	2xM32x1.5	102
LA112M	760.0	841.0	219.0	181	120	120	146.0	2xM32x1.5	104
LA112ZM	788.0	869.0	219.0	181	120	120	250.0	2xM32x1.5	111
LA132S/M	820.0	922.0	259.0	195	140	140	186.5	2xM32x1.5	117
LA132ZM	866.0	968.0	259.0	195	140	140	294.5	2xM32x1.5	138
LA160M/L	922.5	1 041.0	313.5	227	165	165	212.0	2xM40x1.5	150
LA160ZL	970.5	1 089.0	313.5	227	165	165	365.0	2xM40x1.5	189

④ DIN 332 ⑤ Feather key / keyway DIN 6885 ⑥ For note, see page 4/217

© Siemens AG 2011

Gearbox KAZS88 (3-stage), shaft-mounted design with housing flange (C-type) and shrink disk

KAZS012

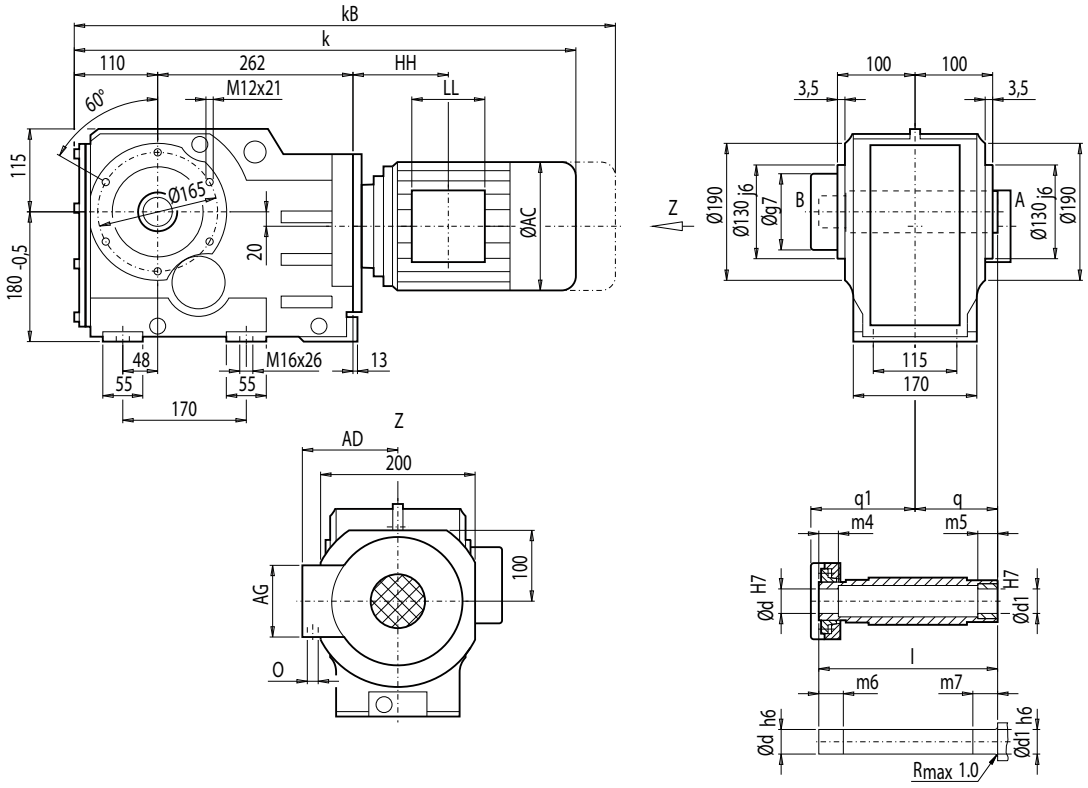

d	d1	l	m4	m5	m6	m7	q1	q	g7
50 *)	50	241	29	30	34	35	144	105	132
60	60	241	29	30	34	35	144	105	132

*) Preferred series

	KAZS88								Weight
Motor	**k**	**kB**	**AC**	**AD**	**AG**	**LL**	**HH**	**O**	**KAZS88**
LA71	619.0	674.0	139.0	146	90	90	103.0	M20x1.5/M25x1.5	67
LA71Z	638.0	693.0	139.0	146	90	90	103.0	M20x1.5/M25x1.5	67
LA80	656.0	719.5	156.5	155	90	90	102.5	M20x1.5/M25x1.5	72
LA80Z	678.5	742.0	156.5	155	90	90	175.5	M20x1.5/M25x1.5	76
LA90S/L	687.0	758.0	174.0	163	90	90	102.5	M20x1.5/M25x1.5	76
LA90ZL	732.0	803.0	174.0	163	90	90	226.5	M20x1.5/M25x1.5	82
LA100L	733.0	814.0	195.0	168	120	120	143.0	2xM32x1.5	85
LA100ZL	803.0	884.0	195.0	168	120	120	275.0	2xM32x1.5	95
LA112M	760.0	841.0	219.0	181	120	120	146.0	2xM32x1.5	97
LA112ZM	788.0	869.0	219.0	181	120	120	250.0	2xM32x1.5	104
LA132S/M	820.0	922.0	259.0	195	140	140	186.5	2xM32x1.5	110
LA132ZM	866.0	968.0	259.0	195	140	140	294.5	2xM32x1.5	131
LA160M/L	922.5	1 041.0	313.5	227	165	165	212.0	2xM40x1.5	143
LA160ZL	970.5	1 089.0	313.5	227	165	165	365.0	2xM40x1.5	182

© Siemens AG 2011

Dimensions

Gearbox K108 (3-stage), housing-flange-mounted design (C-type)

K012

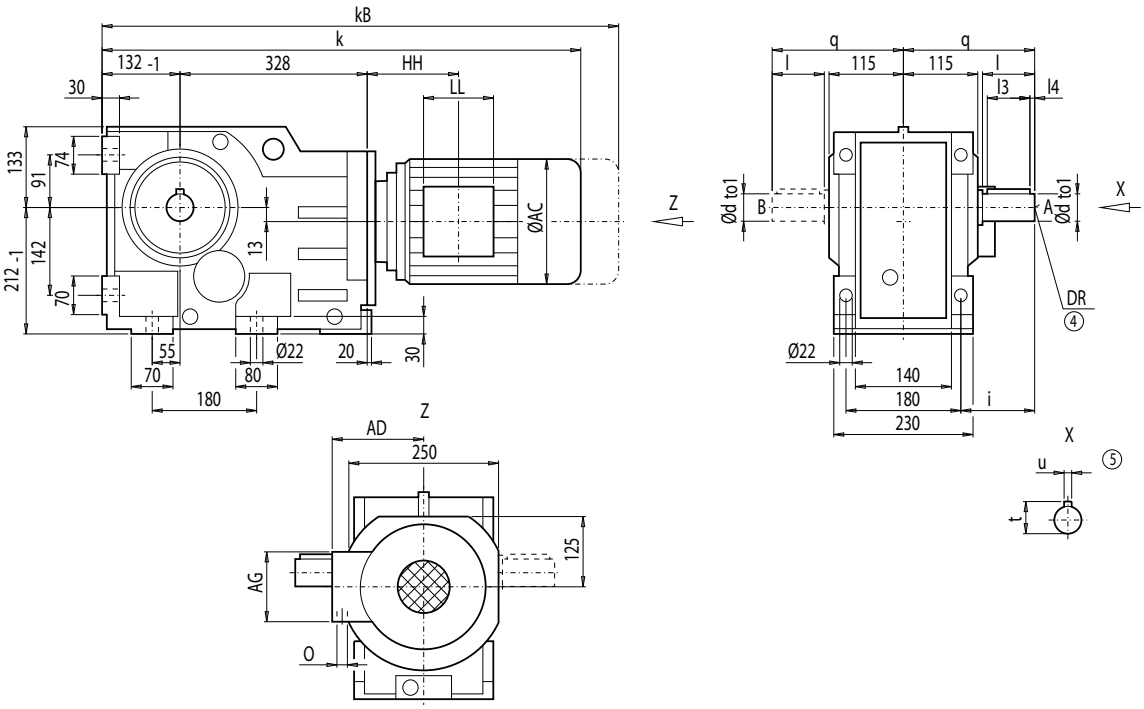

d	to1	l	l3	l4	t	u	i	q	DR
60 *)	m6	120	110	5	64	18	150	240	M20x42
80	m6	170	125	20	85	22	200	290	

*) Preferred series

	K108								Weight
Motor	**k**	**kB**	**AC**	**AD**	**AG**	**LL**	**HH**	**O**	**K108**
LA80	729.0	792.5	156.5	155.0	90	90	87.5	M20x1.5/M25x1.5	133
LA80Z	751.5	815.0	156.5	155.0	90	90	160.5	M20x1.5/M25x1.5	137
LA90S/L	760.0	831.0	174.0	163.0	90	90	87.5	M20x1.5/M25x1.5	138
LA90ZL	805.0	876.0	174.0	163.0	90	90	211.5	M20x1.5/M25x1.5	144
LA100L	803.5	884.5	195.0	168.0	120	120	125.5	2xM32x1.5	146
LA100ZL	873.5	954.5	195.0	168.0	120	120	257.5	2xM32x1.5	156
LA112M	829.5	910.5	219.0	181.0	120	120	127.5	2xM32x1.5	158
LA112ZM	857.5	938.5	219.0	181.0	120	120	231.5	2xM32x1.5	165
LA132S/M	889.5	991.5	259.0	195.0	140	140	168.0	2xM32x1.5	169
LA132ZM	935.5	1 037.5	259.0	195.0	140	140	276.0	2xM32x1.5	191
LA160M/L	994.0	1 112.5	313.5	227.0	165	165	195.5	2xM40x1.5	204
LA160ZL	1 042.0	1 160.5	313.5	227.0	165	165	348.5	2xM40x1.5	243
LG180M/L	1 053.5	1 175.5	348.0	322.5	260	192	212.5	2xM40x1.5	296
LG180ZM/ZL	1 104.5	1 226.5	348.0	322.5	260	192	212.5	2xM40x1.5	326

④ DIN 332

⑤ Feather key / keyway DIN 6885

© Siemens AG 2011

Gearbox KF108 (3-stage), flange-mounted design (A-type)

KF012

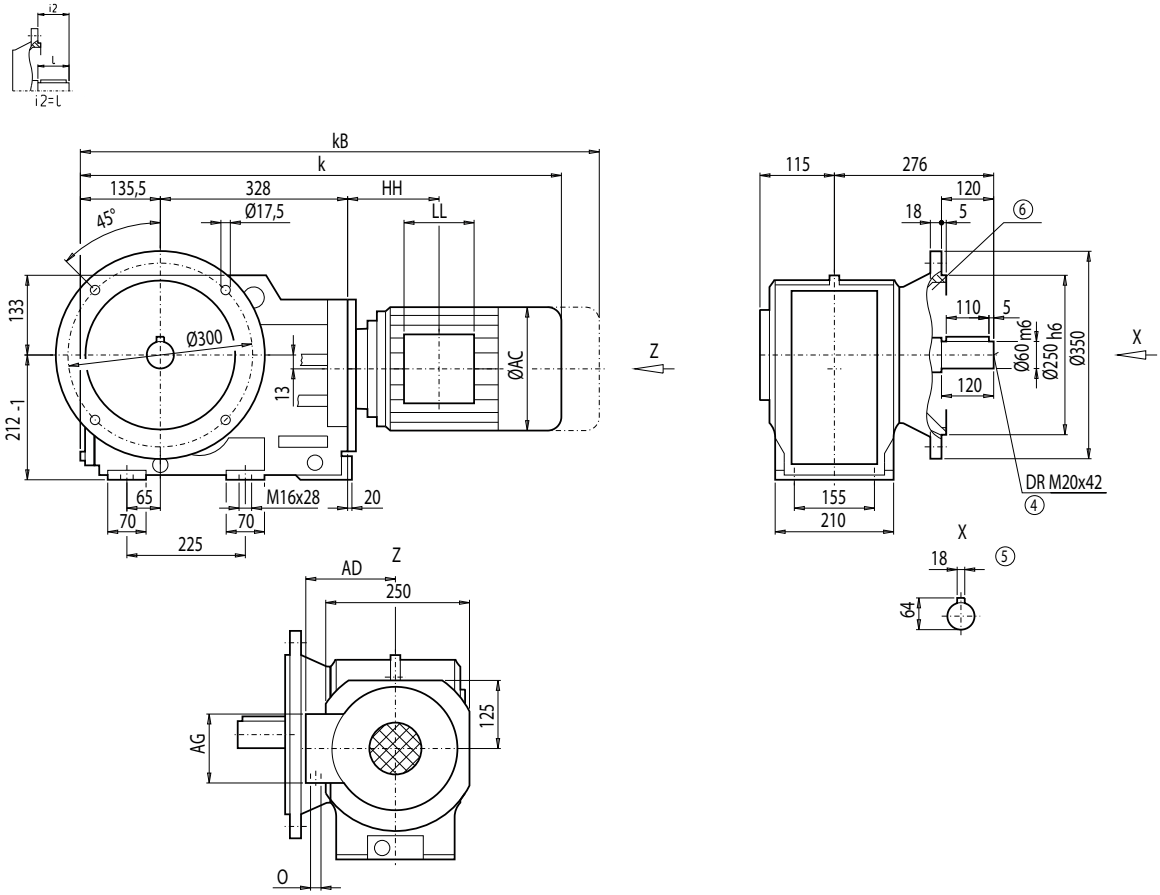

Motor	KF108 k	kB	AC	AD	AG	LL	HH	O	Weight KF108
LA80	732.5	796.0	156.5	155.0	90	90	87.5	M20x1.5/M25x1.5	146
LA80Z	755.0	818.5	156.5	155.0	90	90	160.5	M20x1.5/M25x1.5	150
LA90S/L	763.5	834.5	174.0	163.0	90	90	87.5	M20x1.5/M25x1.5	151
LA90ZL	808.5	879.5	174.0	163.0	90	90	211.5	M20x1.5/M25x1.5	157
LA100L	807.0	888.0	195.0	168.0	120	120	125.5	2xM32x1.5	159
LA100ZL	877.0	958.0	195.0	168.0	120	120	257.5	2xM32x1.5	169
LA112M	833.0	914.0	219.0	181.0	120	120	127.5	2xM32x1.5	171
LA112ZM	861.0	942.0	219.0	181.0	120	120	231.5	2xM32x1.5	178
LA132S/M	893.0	995.0	259.0	195.0	140	140	168.0	2xM32x1.5	183
LA132ZM	939.0	1 041.0	259.0	195.0	140	140	276.0	2xM32x1.5	204
LA160M/L	997.5	1 116.0	313.5	227.0	165	165	195.5	2xM40x1.5	217
LA160ZL	1 045.5	1 164.0	313.5	227.0	165	165	348.5	2xM40x1.5	256
LG180M/L	1 057.0	1 179.0	348.0	322.5	260	192	212.5	2xM40x1.5	309
LG180ZM/ZL	1 108.0	1 230.0	348.0	322.5	260	192	212.5	2xM40x1.5	339

④ DIN 332 ⑤ Feather key / keyway DIN 6885 ⑥ For note, see page 4/217

© Siemens AG 2011

Dimensions

Gearbox KA108 (3-stage), housing-flange-mounted design (C-type)

KA012

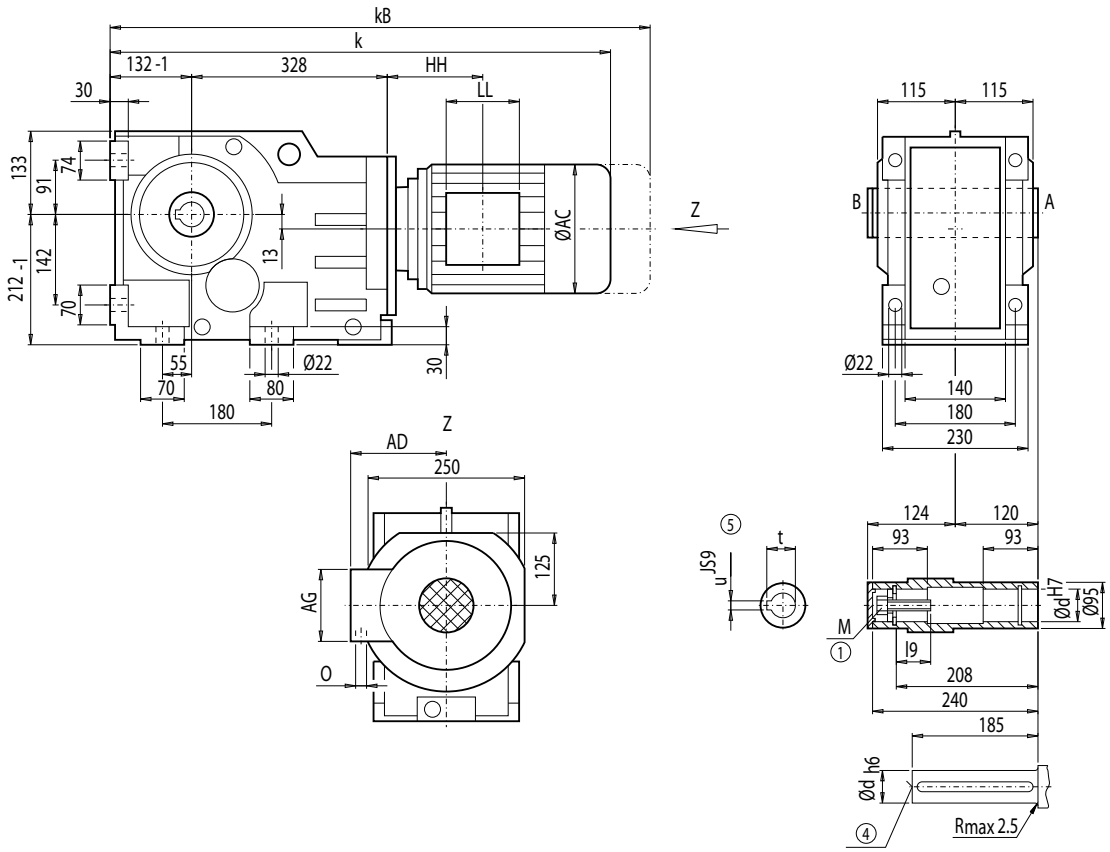

d	l9	M	t	u
60 *)	64.0	M20	64.4	18
70	63.5	M20	74.9	20

*) Preferred series

	KA108								Weight
Motor	**k**	**kB**	**AC**	**AD**	**AG**	**LL**	**HH**	**O**	**KA108**
LA80	729.0	792.5	156.5	155.0	90	90	87.5	M20x1.5/M25x1.5	120
LA80Z	751.5	815.0	156.5	155.0	90	90	160.5	M20x1.5/M25x1.5	124
LA90S/L	760.0	831.0	174.0	163.0	90	90	87.5	M20x1.5/M25x1.5	125
LA90ZL	805.0	876.0	174.0	163.0	90	90	211.5	M20x1.5/M25x1.5	131
LA100L	803.5	884.5	195.0	168.0	120	120	125.5	2xM32x1.5	133
LA100ZL	873.5	954.5	195.0	168.0	120	120	257.5	2xM32x1.5	143
LA112M	829.5	910.5	219.0	181.0	120	120	127.5	2xM32x1.5	145
LA112ZM	857.5	938.5	219.0	181.0	120	120	231.5	2xM32x1.5	152
LA132S/M	889.5	991.5	259.0	195.0	140	140	168.0	2xM32x1.5	157
LA132ZM	935.5	1 037.5	259.0	195.0	140	140	276.0	2xM32x1.5	178
LA160M/L	994.0	1 112.5	313.5	227.0	165	165	195.5	2xM40x1.5	191
LA160ZL	1 042.0	1 160.5	313.5	227.0	165	165	348.5	2xM40x1.5	230
LG180M/L	1 053.5	1 175.5	348.0	322.5	260	192	212.5	2xM40x1.5	283
LG180ZM/ZL	1 104.5	1 226.5	348.0	322.5	260	192	212.5	2xM40x1.5	313

④ DIN 332 ⑤ Feather key / keyway DIN 6885 ① DIN EN ISO 4014

© Siemens AG 2011

Gearbox KAD108 (3-stage), shaft-mounted design with torque arm

KAD012

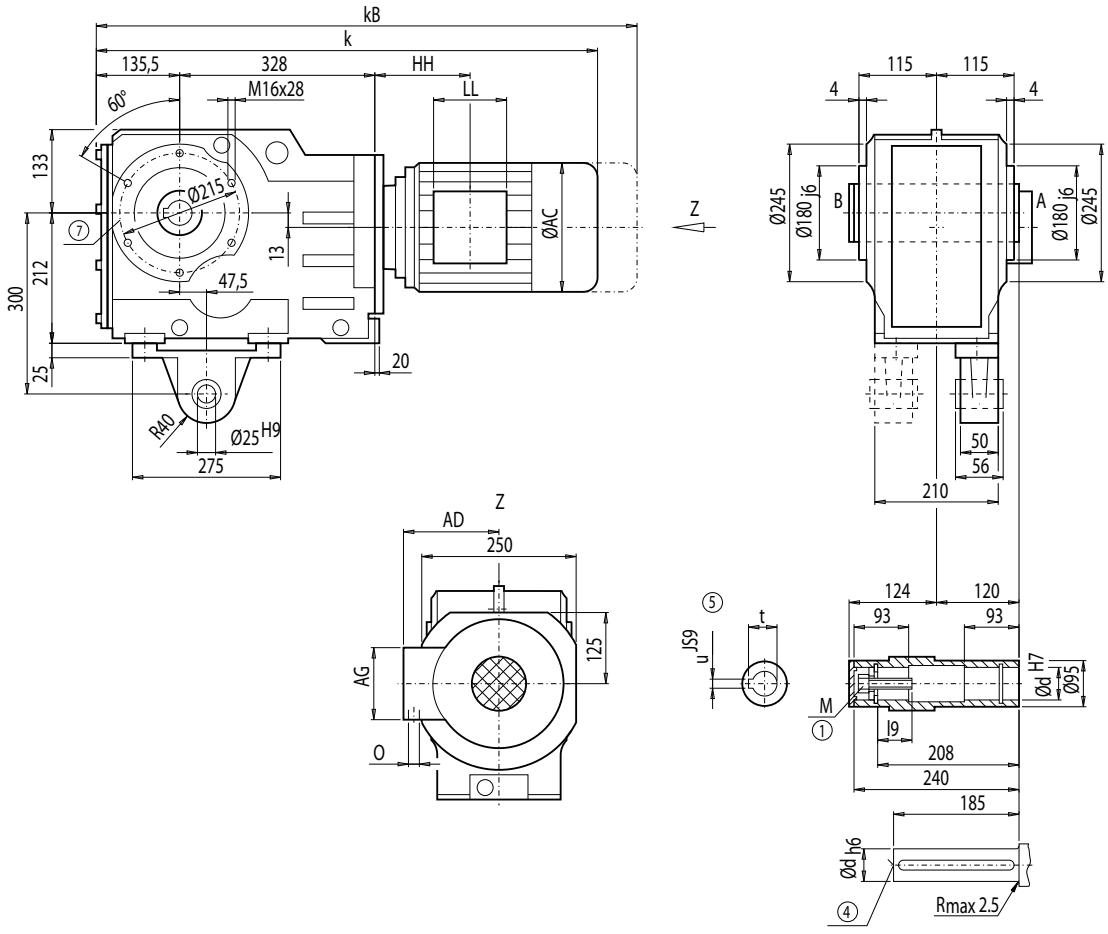

d	l9	M	t	u
60 *)	64.0	M20	64.4	18
70	63.5	M20	74.9	20

*) Preferred series

Motor	KAD108 k	kB	AC	AD	AG	LL	HH	O	Weight KAD108
LA80	732.5	796.0	156.5	155.0	90	90	87.5	M20x1.5/M25x1.5	128
LA80Z	755.0	818.5	156.5	155.0	90	90	160.5	M20x1.5/M25x1.5	132
LA90S/L	763.5	834.5	174.0	163.0	90	90	87.5	M20x1.5/M25x1.5	133
LA90ZL	808.5	879.5	174.0	163.0	90	90	211.5	M20x1.5/M25x1.5	139
LA100L	807.0	888.0	195.0	168.0	120	120	125.5	2xM32x1.5	141
LA100ZL	877.0	958.0	195.0	168.0	120	120	257.5	2xM32x1.5	151
LA112M	833.0	914.0	219.0	181.0	120	120	127.5	2xM32x1.5	153
LA112ZM	861.0	942.0	219.0	181.0	120	120	231.5	2xM32x1.5	160
LA132S/M	893.0	995.0	259.0	195.0	140	140	168.0	2xM32x1.5	164
LA132ZM	939.0	1 041.0	259.0	195.0	140	140	276.0	2xM32x1.5	186
LA160M/L	997.5	1 116.0	313.5	227.0	165	165	195.5	2xM40x1.5	199
LA160ZL	1 045.5	1 164.0	313.5	227.0	165	165	348.5	2xM40x1.5	238
LG180M/L	1 057.0	1 179.0	348.0	322.5	260	192	212.5	2xM40x1.5	291
LG180ZM/ZL	1 108.0	1 230.0	348.0	322.5	260	192	212.5	2xM40x1.5	321

④ DIN 332 ⑤ Feather key / keyway DIN 6885 ① DIN EN ISO 4014 ⑦ For note, see page 4/218

© Siemens AG 2011

Dimensions

Gearbox KAF108 (3-stage), flange-mounted design

KAF012

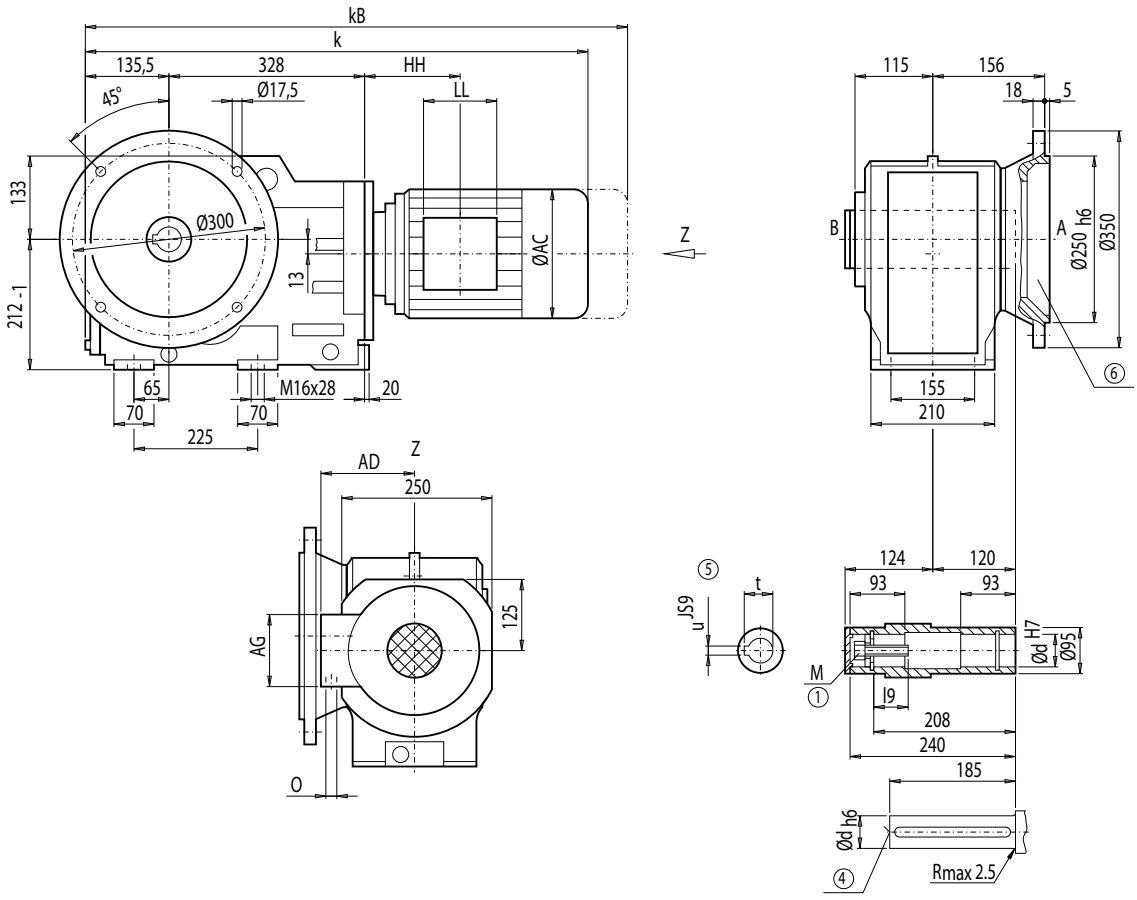

d	l9	M	t	u
60 *)	64.0	M20	64.4	18
70	63.5	M20	74.9	20

*) Preferred series

	KAF108								Weight
Motor	**k**	**kB**	**AC**	**AD**	**AG**	**LL**	**HH**	**O**	**KAF108**
LA80	732.5	796.0	156.5	155.0	90	90	87.5	M20x1.5/M25x1.5	133
LA80Z	755.0	818.5	156.5	155.0	90	90	160.5	M20x1.5/M25x1.5	137
LA90S/L	763.5	834.5	174.0	163.0	90	90	87.5	M20x1.5/M25x1.5	137
LA90ZL	808.5	879.5	174.0	163.0	90	90	211.5	M20x1.5/M25x1.5	143
LA100L	807.0	888.0	195.0	168.0	120	120	125.5	2xM32x1.5	145
LA100ZL	877.0	958.0	195.0	168.0	120	120	257.5	2xM32x1.5	155
LA112M	833.0	914.0	219.0	181.0	120	120	127.5	2xM32x1.5	158
LA112ZM	861.0	942.0	219.0	181.0	120	120	231.5	2xM32x1.5	165
LA132S/M	893.0	995.0	259.0	195.0	140	140	168.0	2xM32x1.5	169
LA132ZM	939.0	1 041.0	259.0	195.0	140	140	276.0	2xM32x1.5	190
LA160M/L	997.5	1 116.0	313.5	227.0	165	165	195.5	2xM40x1.5	204
LA160ZL	1 045.5	1 164.0	313.5	227.0	165	165	348.5	2xM40x1.5	243
LG180M/L	1 057.0	1 179.0	348.0	322.5	260	192	212.5	2xM40x1.5	296
LG180ZM/ZL	1 108.0	1 230.0	348.0	322.5	260	192	212.5	2xM40x1.5	326

④ DIN 332 ⑤ Feather key / keyway DIN 6885 ① DIN EN ISO 4014 ⑥ For note, see page 4/217

© Siemens AG 2011

Gearbox KAZ108 (3-stage), shaft-mounted design with housing flange (C-type)

KAZ012

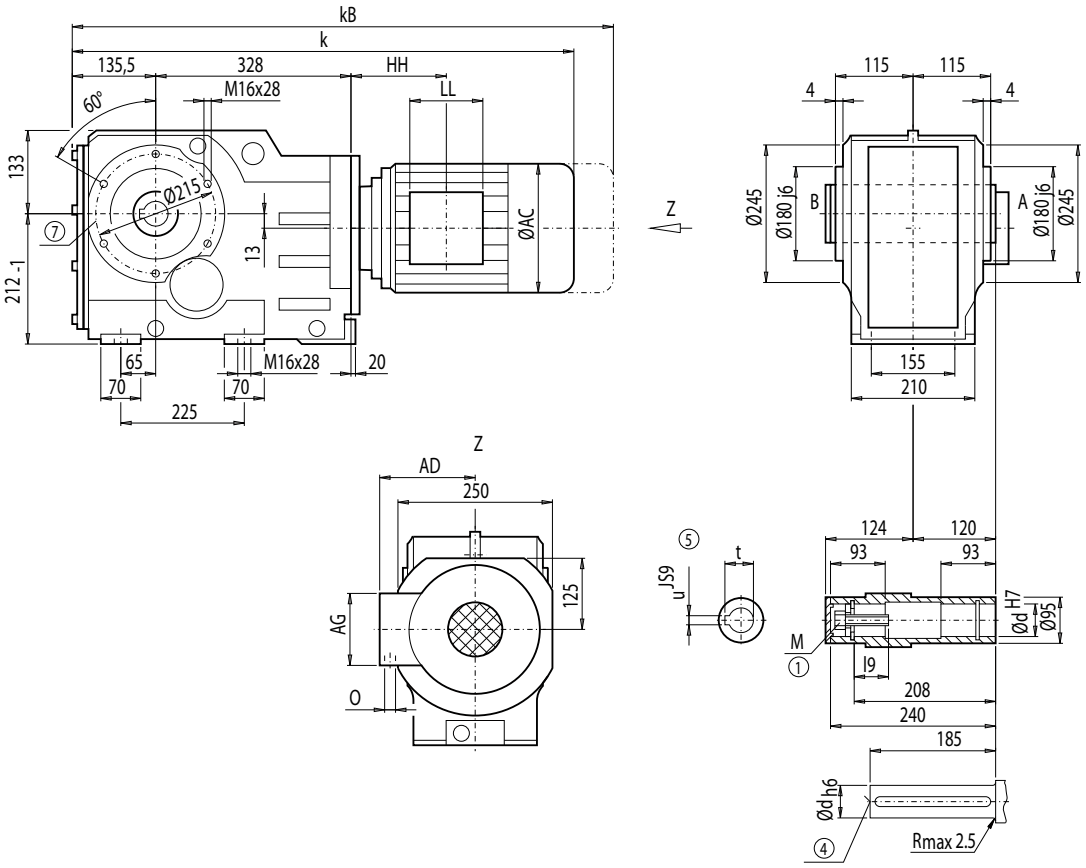

d	l9	M	t	u
60 *)	64.0	M20	64.4	18
70	63.5	M20	74.9	20

*) Preferred series

	KAZ108								Weight
Motor	**k**	**kB**	**AC**	**AD**	**AG**	**LL**	**HH**	**O**	**KAZ108**
LA80	732.5	796.0	156.5	155.0	90	90	87.5	M20x1.5/M25x1.5	123
LA80Z	755.0	818.5	156.5	155.0	90	90	160.5	M20x1.5/M25x1.5	127
LA90S/L	763.5	834.5	174.0	163.0	90	90	87.5	M20x1.5/M25x1.5	128
LA90ZL	808.5	879.5	174.0	163.0	90	90	211.5	M20x1.5/M25x1.5	134
LA100L	807.0	888.0	195.0	168.0	120	120	125.5	2xM32x1.5	136
LA100ZL	877.0	958.0	195.0	168.0	120	120	257.5	2xM32x1.5	146
LA112M	833.0	914.0	219.0	181.0	120	120	127.5	2xM32x1.5	148
LA112ZM	861.0	942.0	219.0	181.0	120	120	231.5	2xM32x1.5	155
LA132S/M	893.0	995.0	259.0	195.0	140	140	168.0	2xM32x1.5	160
LA132ZM	939.0	1 041.0	259.0	195.0	140	140	276.0	2xM32x1.5	181
LA160M/L	997.5	1 116.0	313.5	227.0	165	165	195.5	2xM40x1.5	194
LA160ZL	1 045.5	1 164.0	313.5	227.0	165	165	348.5	2xM40x1.5	233
LG180M/L	1 057.0	1 179.0	348.0	322.5	260	192	212.5	2xM40x1.5	286
LG180ZM/ZL	1 108.0	1 230.0	348.0	322.5	260	192	212.5	2xM40x1.5	316

④ DIN 332 ⑤ Feather key / keyway DIN 6885 ① DIN EN ISO 4014 ⑦ For note, see page 4/218

© Siemens AG 2011

Dimensions

Gearbox KAS108 (3-stage), shaft-mounted design with shrink disk

KAS012

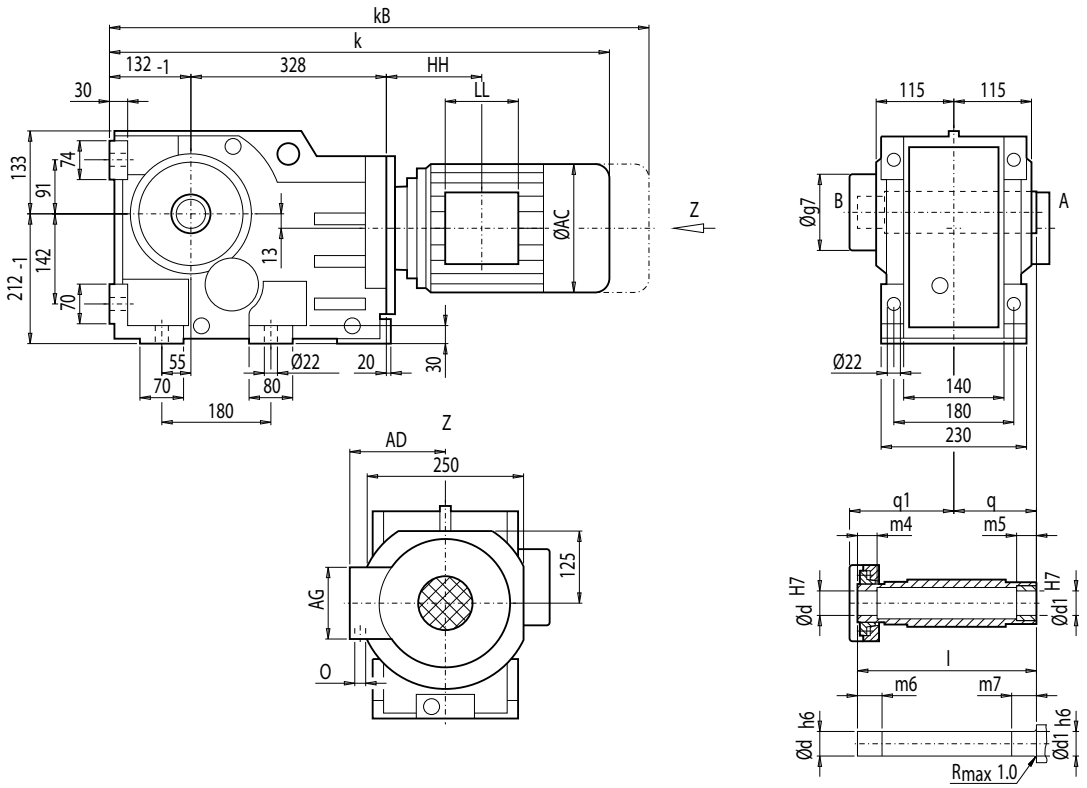

d	d1	l	m4	m5	m6	m7	q1	q	g7
65 *)	65	280	30	40	35	45	168	120	144
70	70	280	30	40	35	45	168	120	144

*) Preferred series

	KAS108								Weight
Motor	**k**	**kB**	**AC**	**AD**	**AG**	**LL**	**HH**	**O**	**KAS108**
LA80	729.0	792.5	156.5	155.0	90	90	87.5	M20x1.5/M25x1.5	123
LA80Z	751.5	815.0	156.5	155.0	90	90	160.5	M20x1.5/M25x1.5	127
LA90S/L	760.0	831.0	174.0	163.0	90	90	87.5	M20x1.5/M25x1.5	127
LA90ZL	805.0	876.0	174.0	163.0	90	90	211.5	M20x1.5/M25x1.5	133
LA100L	803.5	884.5	195.0	168.0	120	120	125.5	2xM32x1.5	135
LA100ZL	873.5	954.5	195.0	168.0	120	120	257.5	2xM32x1.5	145
LA112M	829.5	910.5	219.0	181.0	120	120	127.5	2xM32x1.5	147
LA112ZM	857.5	938.5	219.0	181.0	120	120	231.5	2xM32x1.5	154
LA132S/M	889.5	991.5	259.0	195.0	140	140	168.0	2xM32x1.5	159
LA132ZM	935.5	1 037.5	259.0	195.0	140	140	276.0	2xM32x1.5	170
LA160M/L	994.0	1 112.5	313.5	227.0	165	165	195.5	2xM40x1.5	194
LA160ZL	1 042.0	1 160.5	313.5	227.0	165	165	348.5	2xM40x1.5	233
LG180M/L	1 053.5	1 175.5	348.0	322.5	260	192	212.5	2xM40x1.5	286
LG180ZM/ZL	1 104.5	1 226.5	348.0	322.5	260	192	212.5	2xM40x1.5	316

© Siemens AG 2011

Gearbox KADS108 (3-stage), shaft-mounted design with torque arm and shrink disk

KADS012

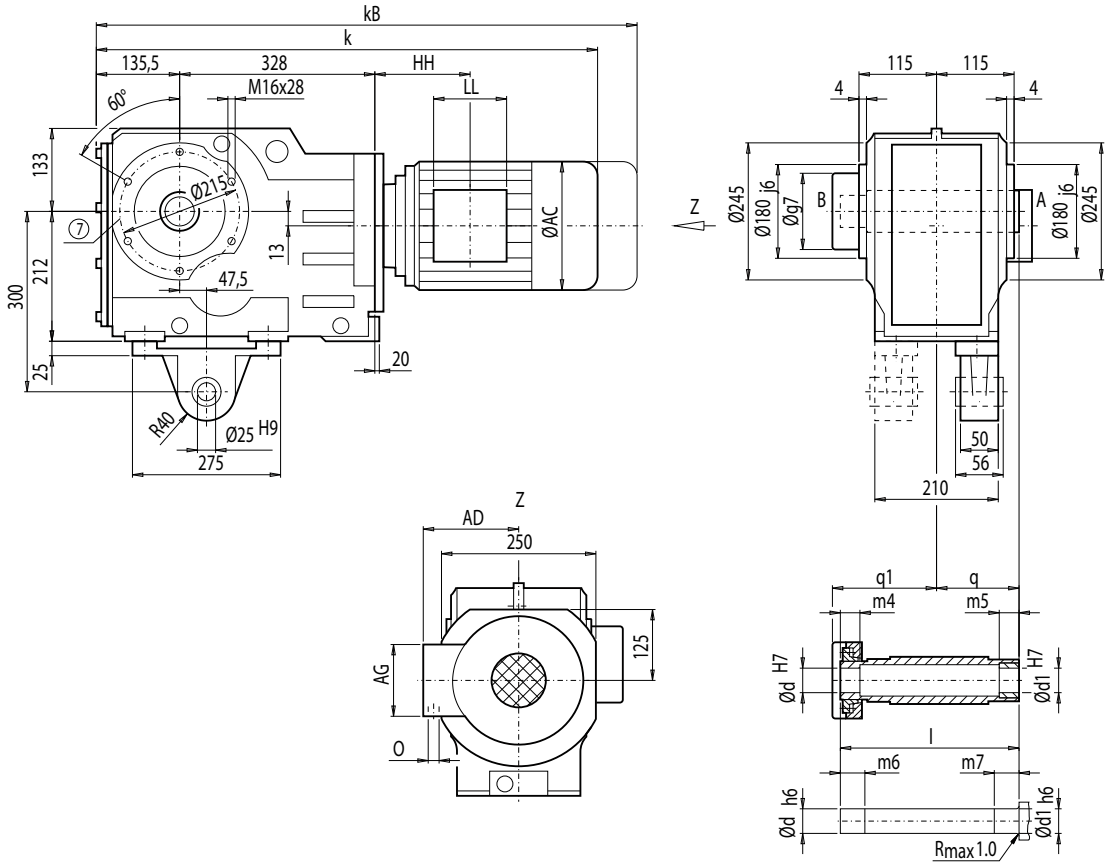

d	d1	l	m4	m5	m6	m7	q1	q	g7
65 *)	65	280	30	40	35	45	168	120	144
70	70	280	30	40	35	45	168	120	144

*) Preferred series

	KADS108								Weight
Motor	**k**	**kB**	**AC**	**AD**	**AG**	**LL**	**HH**	**O**	**KADS108**
LA80	732.5	796.0	156.5	155.0	90	90	87.5	M20x1.5/M25x1.5	130
LA80Z	755.0	818.5	156.5	155.0	90	90	160.5	M20x1.5/M25x1.5	134
LA90S/L	763.5	834.5	174.0	163.0	90	90	87.5	M20x1.5/M25x1.5	135
LA90ZL	808.5	879.5	174.0	163.0	90	90	211.5	M20x1.5/M25x1.5	141
LA100L	807.0	888.0	195.0	168.0	120	120	125.5	2xM32x1.5	143
LA100ZL	877.0	958.0	195.0	168.0	120	120	257.5	2xM32x1.5	153
LA112M	833.0	914.0	219.0	181.0	120	120	127.5	2xM32x1.5	155
LA112ZM	861.0	942.0	219.0	181.0	120	120	231.5	2xM32x1.5	162
LA132S/M	893.0	995.0	259.0	195.0	140	140	168.0	2xM32x1.5	167
LA132ZM	939.0	1 041.0	259.0	195.0	140	140	276.0	2xM32x1.5	188
LA160M/L	997.5	1 116.0	313.5	227.0	165	165	195.5	2xM40x1.5	201
LA160ZL	1 045.5	1 164.0	313.5	227.0	165	165	348.5	2xM40x1.5	240
LG180M/L	1 057.0	1 179.0	348.0	322.5	260	192	212.5	2xM40x1.5	293
LG180ZM/ZL	1 108.0	1 230.0	348.0	322.5	260	192	212.5	2xM40x1.5	323

⑦ For note, see page 4/218

© Siemens AG 2011

Dimensions

Gearbox KAFS108 (3-stage), flange-mounted design and shrink disk

KAFS012

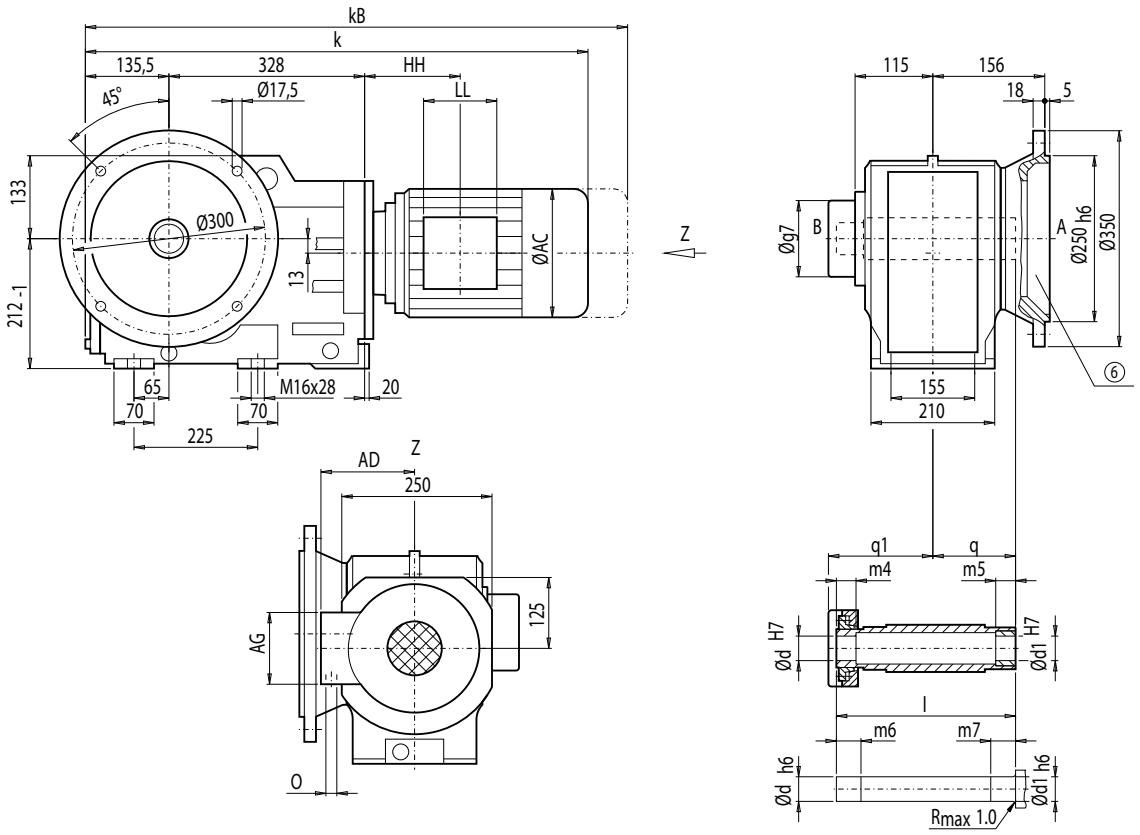

d	d1	l	m4	m5	m6	m7	q1	q	g7
65 *)	65	280	30	40	35	45	168	120	144
70	70	280	30	40	35	45	168	120	144

*) Preferred series

	KAFS108								Weight
Motor	**k**	**kB**	**AC**	**AD**	**AG**	**LL**	**HH**	**O**	**KAFS108**
LA80	732.5	796.0	156.5	155.0	90	90	87.5	M20x1.5/M25x1.5	136
LA80Z	755.0	818.5	156.5	155.0	90	90	160.5	M20x1.5/M25x1.5	140
LA90S/L	763.5	834.5	174.0	163.0	90	90	87.5	M20x1.5/M25x1.5	140
LA90ZL	808.5	879.5	174.0	163.0	90	90	211.5	M20x1.5/M25x1.5	146
LA100L	807.0	888.0	195.0	168.0	120	120	125.5	2xM32x1.5	148
LA100ZL	877.0	958.0	195.0	168.0	120	120	257.5	2xM32x1.5	158
LA112M	833.0	914.0	219.0	181.0	120	120	127.5	2xM32x1.5	161
LA112ZM	861.0	942.0	219.0	181.0	120	120	231.5	2xM32x1.5	168
LA132S/M	893.0	995.0	259.0	195.0	140	140	168.0	2xM32x1.5	172
LA132ZM	939.0	1 041.0	259.0	195.0	140	140	276.0	2xM32x1.5	193
LA160M/L	997.5	1 116.0	313.5	227.0	165	165	195.5	2xM40x1.5	207
LA160ZL	1 045.5	1 164.0	313.5	227.0	165	165	348.5	2xM40x1.5	246
LG180M/L	1 057.0	1 179.0	348.0	322.5	260	192	212.5	2xM40x1.5	299
LG180ZM/ZL	1 108.0	1 230.0	348.0	322.5	260	192	212.5	2xM40x1.5	329

⑥ For note, see page 4/217

© Siemens AG 2011

Gearbox KAZS108 (3-stage), shaft-mounted design with housing flange (C-type) and shrink disk

KAZS012

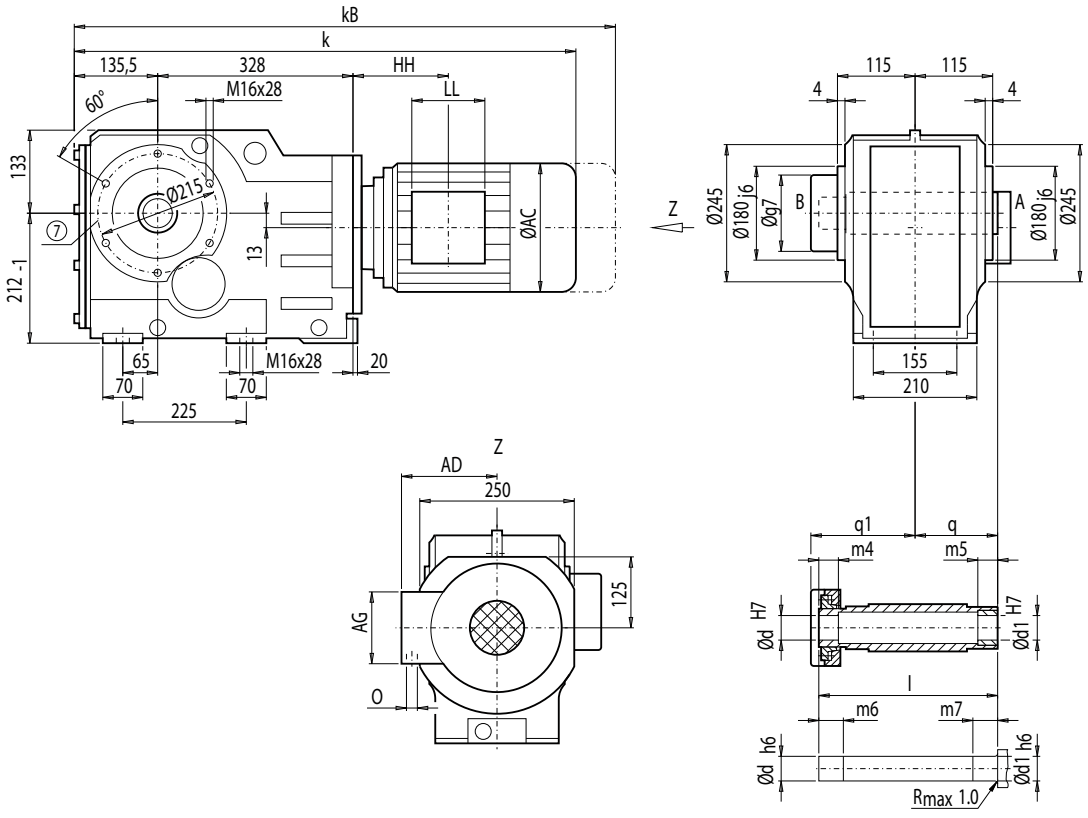

d	d1	l	m4	m5	m6	m7	q1	q	g7
65 *)	65	280	30	40	35	45	168	120	144
70	70	280	30	40	35	45	168	120	144

*) Preferred series

	KAZS108								Weight
Motor	**k**	**kB**	**AC**	**AD**	**AG**	**LL**	**HH**	**O**	**KAZS108**
LA80	732.5	796.0	156.5	155.0	90	90	87.5	M20x1.5/M25x1.5	116
LA80Z	755.0	818.5	156.5	155.0	90	90	160.5	M20x1.5/M25x1.5	120
LA90S/L	763.5	834.5	174.0	163.0	90	90	87.5	M20x1.5/M25x1.5	120
LA90ZL	808.5	879.5	174.0	163.0	90	90	211.5	M20x1.5/M25x1.5	126
LA100L	807.0	888.0	195.0	168.0	120	120	125.5	2xM32x1.5	128
LA100ZL	877.0	958.0	195.0	168.0	120	120	257.5	2xM32x1.5	138
LA112M	833.0	914.0	219.0	181.0	120	120	127.5	2xM32x1.5	140
LA112ZM	861.0	942.0	219.0	181.0	120	120	231.5	2xM32x1.5	147
LA132S/M	893.0	995.0	259.0	195.0	140	140	168.0	2xM32x1.5	152
LA132ZM	939.0	1 041.0	259.0	195.0	140	140	276.0	2xM32x1.5	173
LA160M/L	997.5	1 116.0	313.5	227.0	165	165	195.5	2xM40x1.5	187
LA160ZL	1 045.5	1 164.0	313.5	227.0	165	165	348.5	2xM40x1.5	226
LG180M/L	1 057.0	1 179.0	348.0	322.5	260	192	212.5	2xM40x1.5	279
LG180ZM/ZL	1 108.0	1 230.0	348.0	322.5	260	192	212.5	2xM40x1.5	309

⑦ For note, see page 4/218

© Siemens AG 2011

Dimensions

Gearbox K128 (3-stage), housing-flange-mounted design (C-type)

K012

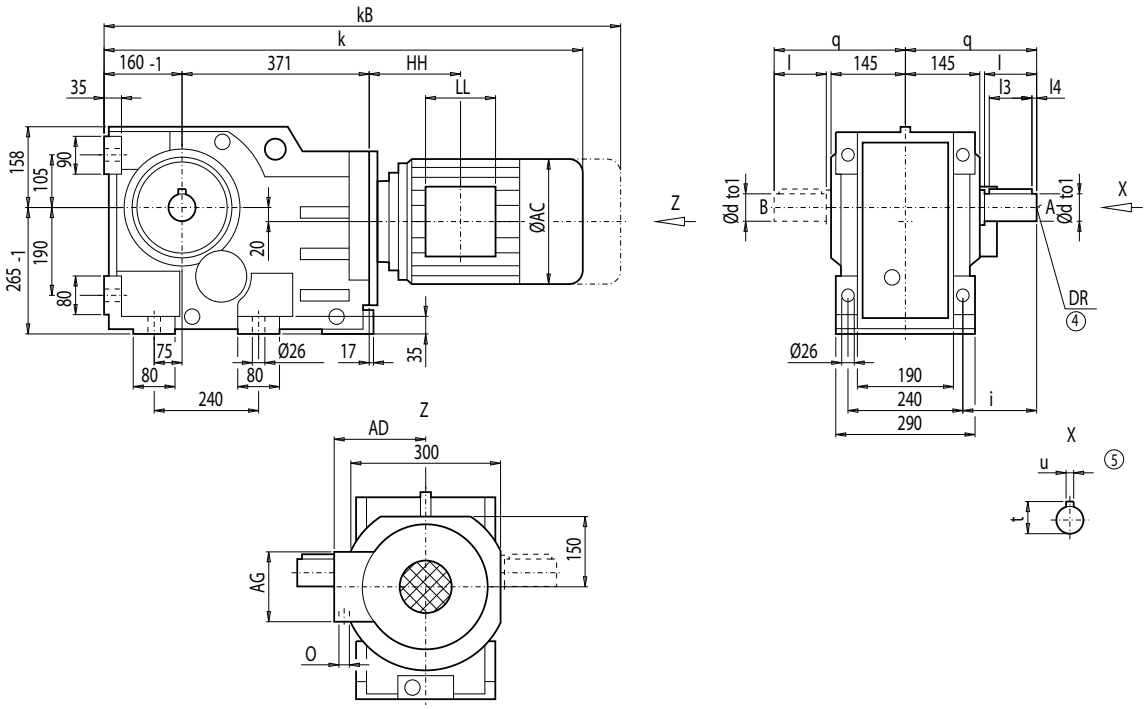

d	to1	l	l3	l4	t	u	i	q	DR
70 *)	m6	140	125	7.5	74.5	20	170	290	M20x42
90	m6	170	140	15.0	95.0	25	200	320	M24x50

*) Preferred series

	K128								Weight
Motor	**k**	**kB**	**AC**	**AD**	**AG**	**LL**	**HH**	**O**	**K128**
LA90S/L	819.5	890.5	174.0	163.0	90	90	76.0	M20x1.5/M25x1.5	210
LA90ZL	864.5	935.5	174.0	163.0	90	90	200.0	M20x1.5/M25x1.5	216
LA100L	862.5	943.5	195.0	168.0	120	120	113.5	2xM32x1.5	218
LA100ZL	932.5	1 013.5	195.0	168.0	120	120	245.5	2xM32x1.5	228
LA112M	889.0	970.0	219.0	181.0	120	120	116.0	2xM32x1.5	230
LA112ZM	917.0	998.0	219.0	181.0	120	120	220.0	2xM32x1.5	237
LA132S/M	948.0	1 050.0	259.0	195.0	140	140	155.5	2xM32x1.5	240
LA132ZM	994.0	1 096.0	259.0	195.0	140	140	263.5	2xM32x1.5	261
LA160M/L	1 053.5	1 172.0	313.5	227.0	165	165	184.0	2xM40x1.5	275
LA160ZL	1 101.5	1 220.0	313.5	227.0	165	165	337.0	2xM40x1.5	314
LG180M/L	1 110.0	1 232.0	348.0	322.5	260	192	198.0	2xM40x1.5	371
LG180ZM/ZL	1 161.0	1 283.0	348.0	322.5	260	192	198.0	2xM40x1.5	401
LG200L	1 166.0	1 292.0	385.0	301.0	260	192	228.0	2xM50x1.5	451
K4-LGI225S	1 426.5	1 665.5	442.0	325.0	260	192	443.0	2xM50x1.5	607
K4-LGI225M	1 426.5	1 665.5	442.0	325.0	260	192	443.0	2xM50x1.5	595
K4-LGI225ZM	1 486.5	1 725.5	442.0	325.0	260	192	443.0	2xM50x1.5	653

④ DIN 332

⑤ Feather key / keyway DIN 6885

© Siemens AG 2011

Gearbox KF128 (3-stage), flange-mounted design (A-type)

KF012

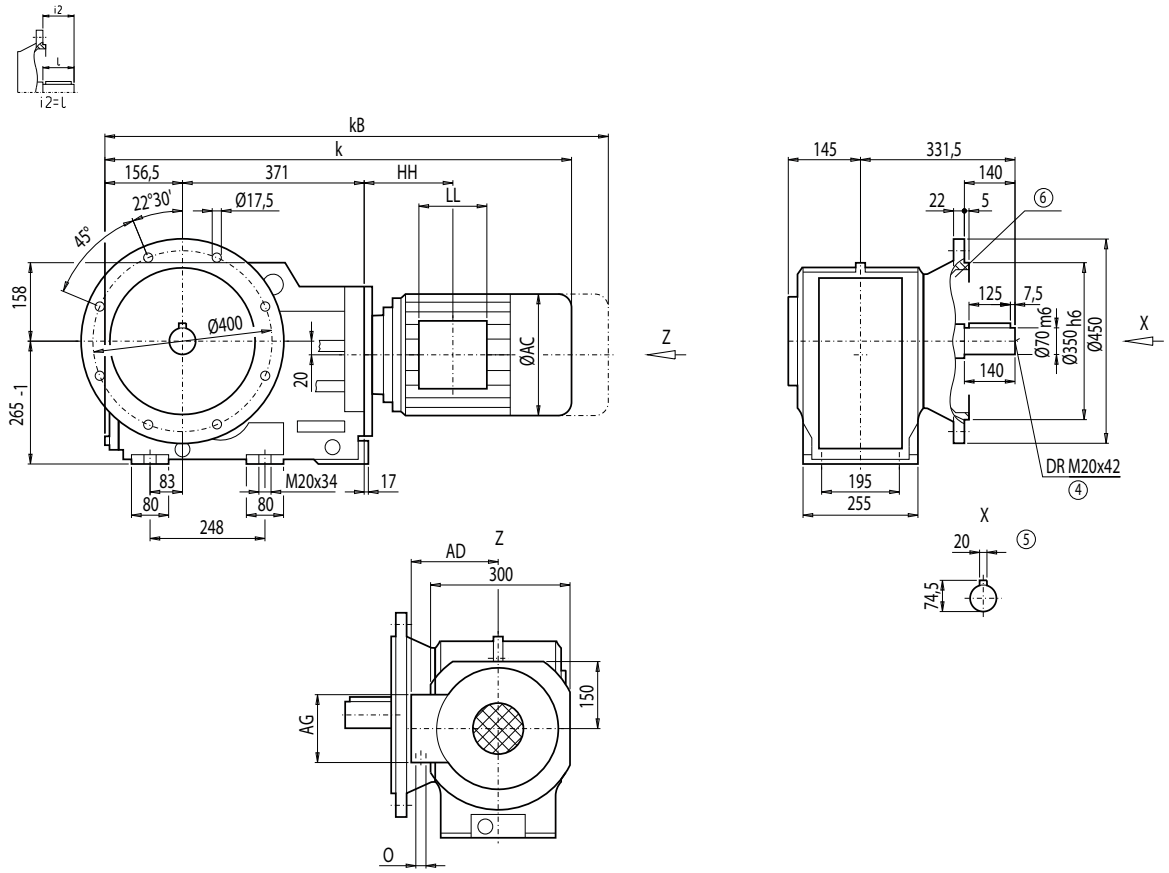

Motor	KF128 k	kB	AC	AD	AG	LL	HH	O	Weight KF128
LA90S/L	816.0	887.0	174.0	163.0	90	90	76.0	M20x1.5/M25x1.5	235
LA90ZL	861.0	932.0	174.0	163.0	90	90	200.0	M20x1.5/M25x1.5	241
LA100L	859.0	940.0	195.0	168.0	120	120	113.5	2xM32x1.5	243
LA100ZL	929.0	1 010.0	195.0	168.0	120	120	245.5	2xM32x1.5	253
LA112M	885.5	966.5	219.0	181.0	120	120	116.0	2xM32x1.5	255
LA112ZM	913.5	994.5	219.0	181.0	120	120	220.0	2xM32x1.5	262
LA132S/M	944.5	1 046.5	259.0	195.0	140	140	155.5	2xM32x1.5	265
LA132ZM	990.5	1 092.5	259.0	195.0	140	140	263.5	2xM32x1.5	287
LA160M/L	1 050.0	1 168.5	313.5	227.0	165	165	184.0	2xM40x1.5	300
LA160ZL	1 098.0	1 216.5	313.5	227.0	165	165	337.0	2xM40x1.5	339
LG180M/L	1 106.5	1 228.5	348.0	322.5	260	192	198.0	2xM40x1.5	397
LG180ZM/ZL	1 157.5	1 279.5	348.0	322.5	260	192	198.0	2xM40x1.5	427
LG200L	1 162.5	1 288.5	385.0	301.0	260	192	228.0	2xM50x1.5	477
K4-LGI225S	1 423.0	1 662.0	442.0	325.0	260	192	443.0	2xM50x1.5	633
K4-LGI225M	1 423.0	1 662.0	442.0	325.0	260	192	443.0	2xM50x1.5	621
K4-LGI225ZM	1 483.0	1 722.0	442.0	325.0	260	192	443.0	2xM50x1.5	679

④ DIN 332 ⑤ Feather key / keyway DIN 6885 ⑥ For note, see page 4/217

© Siemens AG 2011

Dimensions

Gearbox KA128 (3-stage), housing-flange-mounted design (C-type)

KA012

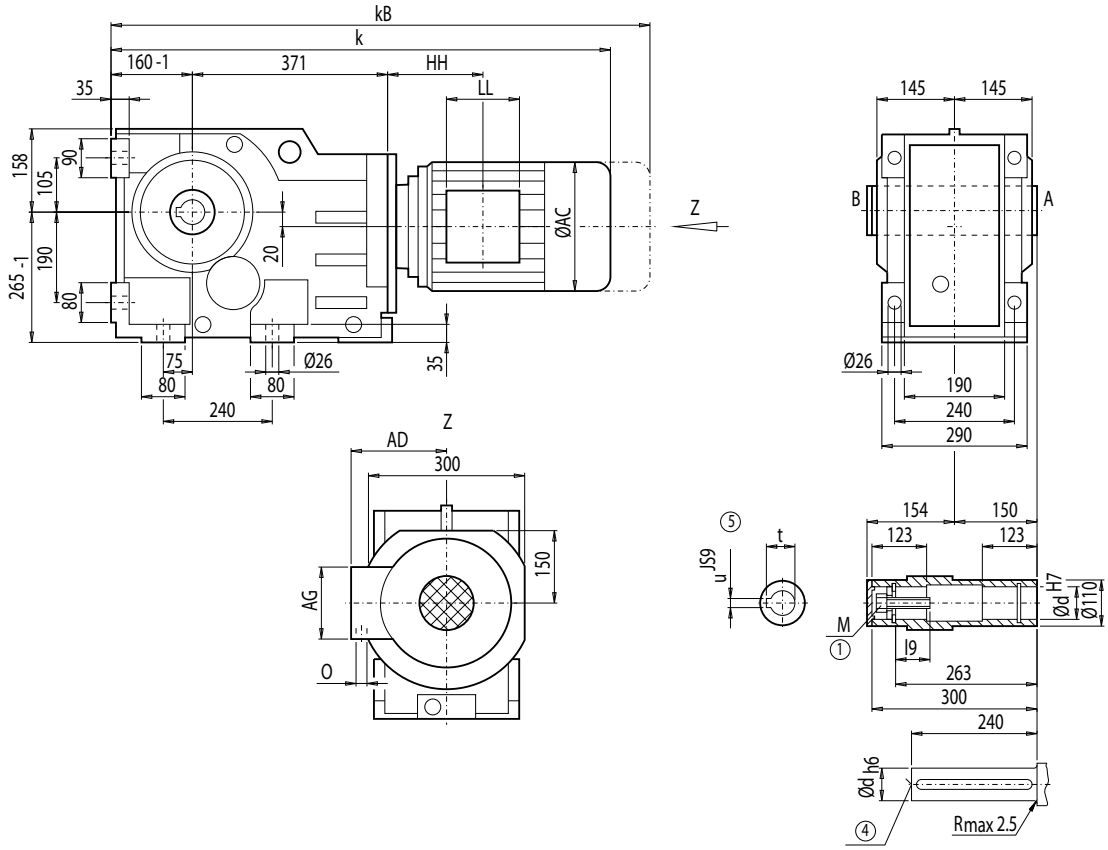

d	l9	M	t	u
70 *)	63.5	M20	74.9	20
80	63.5	M20	85.4	22

*) Preferred series

Motor	KA128 k	kB	AC	AD	AG	LL	HH	O	Weight KA128
LA90S/L	819.5	890.5	174.0	163.0	90	90	76.0	M20x1.5/M25x1.5	190
LA90ZL	864.5	935.5	174.0	163.0	90	90	200.0	M20x1.5/M25x1.5	196
LA100L	862.5	943.5	195.0	168.0	120	120	113.5	2xM32x1.5	198
LA100ZL	932.5	1 013.5	195.0	168.0	120	120	245.5	2xM32x1.5	208
LA112M	889.0	970.0	219.0	181.0	120	120	116.0	2xM32x1.5	210
LA112ZM	917.0	998.0	219.0	181.0	120	120	220.0	2xM32x1.5	217
LA132S/M	948.0	1 050.0	259.0	195.0	140	140	155.5	2xM32x1.5	220
LA132ZM	994.0	1 096.0	259.0	195.0	140	140	263.5	2xM32x1.5	242
LA160M/L	1 053.5	1 172.0	313.5	227.0	165	165	184.0	2xM40x1.5	255
LA160ZL	1 101.5	1 220.0	313.5	227.0	165	165	337.0	2xM40x1.5	294
LG180M/L	1 110.0	1 232.0	348.0	322.5	260	192	198.0	2xM40x1.5	352
LG180ZM/ZL	1 161.0	1 283.0	348.0	322.5	260	192	198.0	2xM40x1.5	382
LG200L	1 166.0	1 292.0	385.0	301.0	260	192	228.0	2xM50x1.5	432
K4-LGI225S	1 426.5	1 665.5	442.0	325.0	260	192	443.0	2xM50x1.5	588
K4-LGI225M	1 426.5	1 665.5	442.0	325.0	260	192	443.0	2xM50x1.5	576
K4-LGI225ZM	1 486.5	1 725.5	442.0	325.0	260	192	443.0	2xM50x1.5	634

④ DIN 332 ① DIN EN ISO 4014 ⑤ Feather key / keyway DIN 6885

© Siemens AG 2011

Gearbox KAD128 (3-stage), shaft-mounted design with torque arm

KAD012

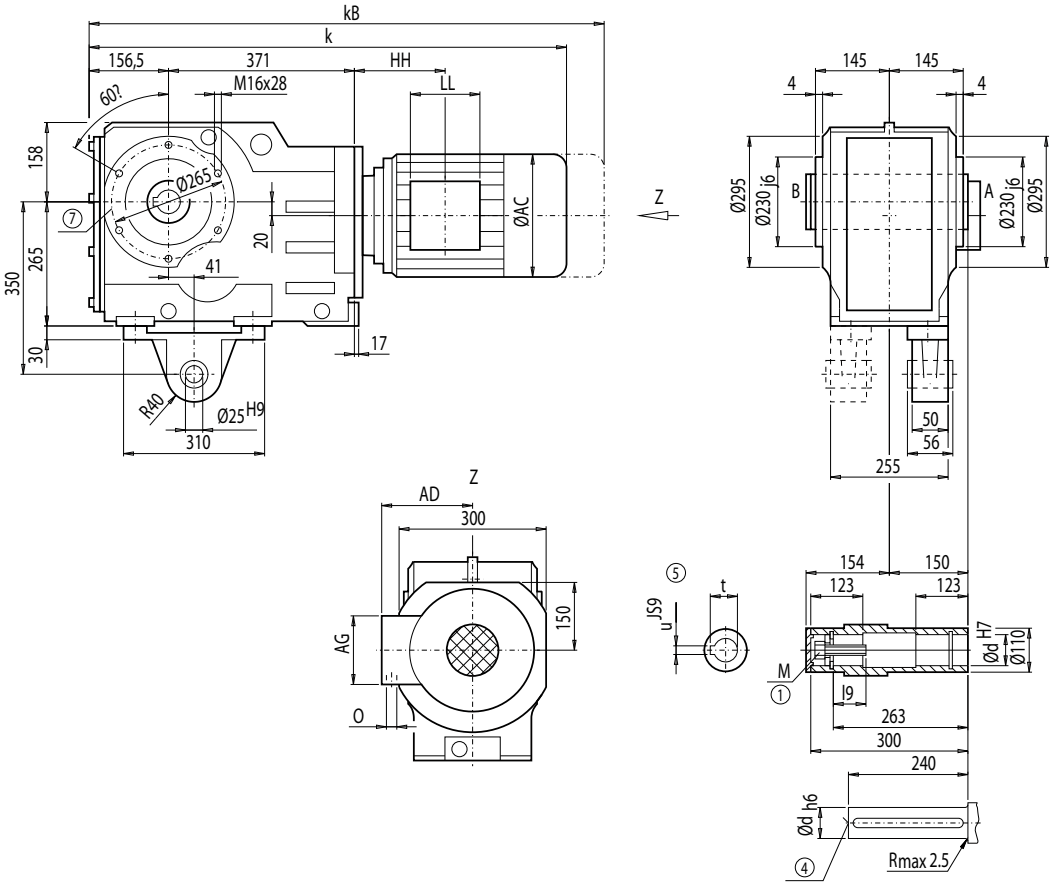

d	l9	M	t	u
70 *)	63.5	M20	74.9	20
80	63.5	M20	85.4	22

*) Preferred series

	KAD128								Weight
Motor	**k**	**kB**	**AC**	**AD**	**AG**	**LL**	**HH**	**O**	**KAD128**
LA90S/L	816.0	887.0	174.0	163.0	90	90	76.0	M20x1.5/M25x1.5	204
LA90ZL	861.0	932.0	174.0	163.0	90	90	200.0	M20x1.5/M25x1.5	210
LA100L	859.0	940.0	195.0	168.0	120	120	113.5	2xM32x1.5	212
LA100ZL	929.0	1 010.0	195.0	168.0	120	120	245.5	2xM32x1.5	222
LA112M	885.5	966.5	219.0	181.0	120	120	116.0	2xM32x1.5	224
LA112ZM	913.5	994.5	219.0	181.0	120	120	220.0	2xM32x1.5	231
LA132S/M	944.5	1 046.5	259.0	195.0	140	140	155.5	2xM32x1.5	235
LA132ZM	990.5	1 092.5	259.0	195.0	140	140	263.5	2xM32x1.5	256
LA160M/L	1 050.0	1 168.5	313.5	227.0	165	165	184.0	2xM40x1.5	269
LA160ZL	1 098.0	1 216.5	313.5	227.0	165	165	337.0	2xM40x1.5	308
LG180M/L	1 106.5	1 228.5	348.0	322.5	260	192	198.0	2xM40x1.5	366
LG180ZM/ZL	1 157.5	1 279.5	348.0	322.5	260	192	198.0	2xM40x1.5	396
LG200L	1 162.5	1 288.5	385.0	301.0	260	192	228.0	2xM50x1.5	446
K4-LGI225S	1 423.0	1 662.0	442.0	325.0	260	192	443.0	2xM50x1.5	602
K4-LGI225M	1 423.0	1 662.0	442.0	325.0	260	192	443.0	2xM50x1.5	590
K4-LGI225ZM	1 483.0	1 722.0	442.0	325.0	260	192	443.0	2xM50x1.5	648

④ DIN 332 ① DIN EN ISO 4014 ⑤ Feather key / keyway DIN 6885 ⑦ For note, see page 4/218

© Siemens AG 2011

Dimensions

Gearbox KAF128 (3-stage), flange-mounted design

KAF012

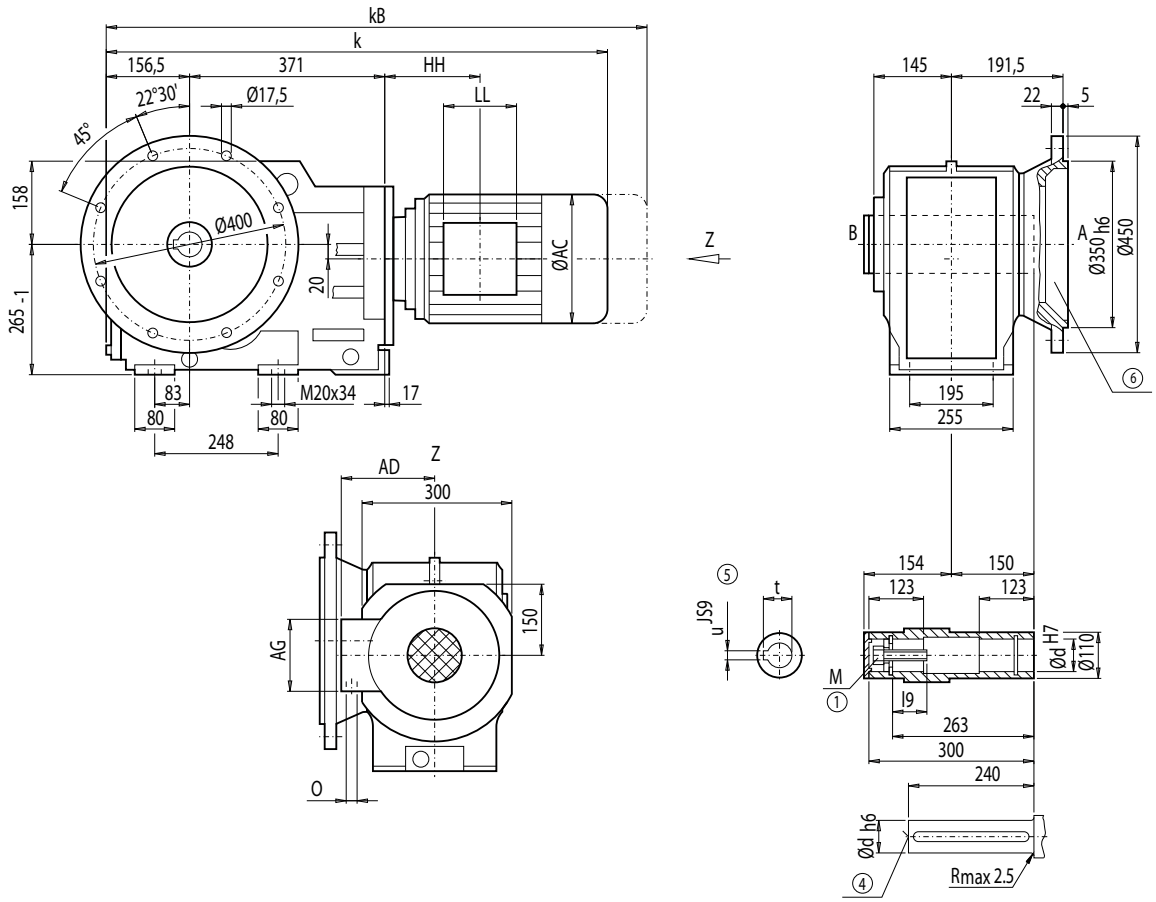

d	l9	M	t	u
70 *)	63.5	M20	74.9	20
80	63.5	M20	85.4	22

*) Preferred series

Motor	KAF128 k	kB	AC	AD	AG	LL	HH	O	Weight KAF128
LA90S/L	816.0	887.0	174.0	163.0	90	90	76.0	M20x1.5/M25x1.5	215
LA90ZL	861.0	932.0	174.0	163.0	90	90	200.0	M20x1.5/M25x1.5	221
LA100L	859.0	940.0	195.0	168.0	120	120	113.5	2xM32x1.5	223
LA100ZL	929.0	1 010.0	195.0	168.0	120	120	245.5	2xM32x1.5	233
LA112M	885.5	966.5	219.0	181.0	120	120	116.0	2xM32x1.5	235
LA112ZM	913.5	994.5	219.0	181.0	120	120	220.0	2xM32x1.5	242
LA132S/M	944.5	1 046.5	259.0	195.0	140	140	155.5	2xM32x1.5	246
LA132ZM	990.5	1 092.5	259.0	195.0	140	140	263.5	2xM32x1.5	267
LA160M/L	1 050.0	1 168.5	313.5	227.0	165	165	184.0	2xM40x1.5	280
LA160ZL	1 098.0	1 216.5	313.5	227.0	165	165	337.0	2xM40x1.5	319
LG180M/L	1 106.5	1 228.5	348.0	322.5	260	192	198.0	2xM40x1.5	377
LG180ZM/ZL	1 157.5	1 279.5	348.0	322.5	260	192	198.0	2xM40x1.5	407
LG200L	1 162.5	1 288.5	385.0	301.0	260	192	228.0	2xM50x1.5	457
K4-LGI225S	1 423.0	1 662.0	442.0	325.0	260	192	443.0	2xM50x1.5	603
K4-LGI225M	1 423.0	1 662.0	442.0	325.0	260	192	443.0	2xM50x1.5	601
K4-LGI225ZM	1 483.0	1 722.0	442.0	325.0	260	192	443.0	2xM50x1.5	659

④ DIN 332 ① DIN EN ISO 4014 ⑤ Feather key / keyway DIN 6885 ⑥ For note, see page 4/217

© Siemens AG 2011

Gearbox KAZ128 (3-stage), shaft-mounted design with housing flange (C-type)

KAZ012

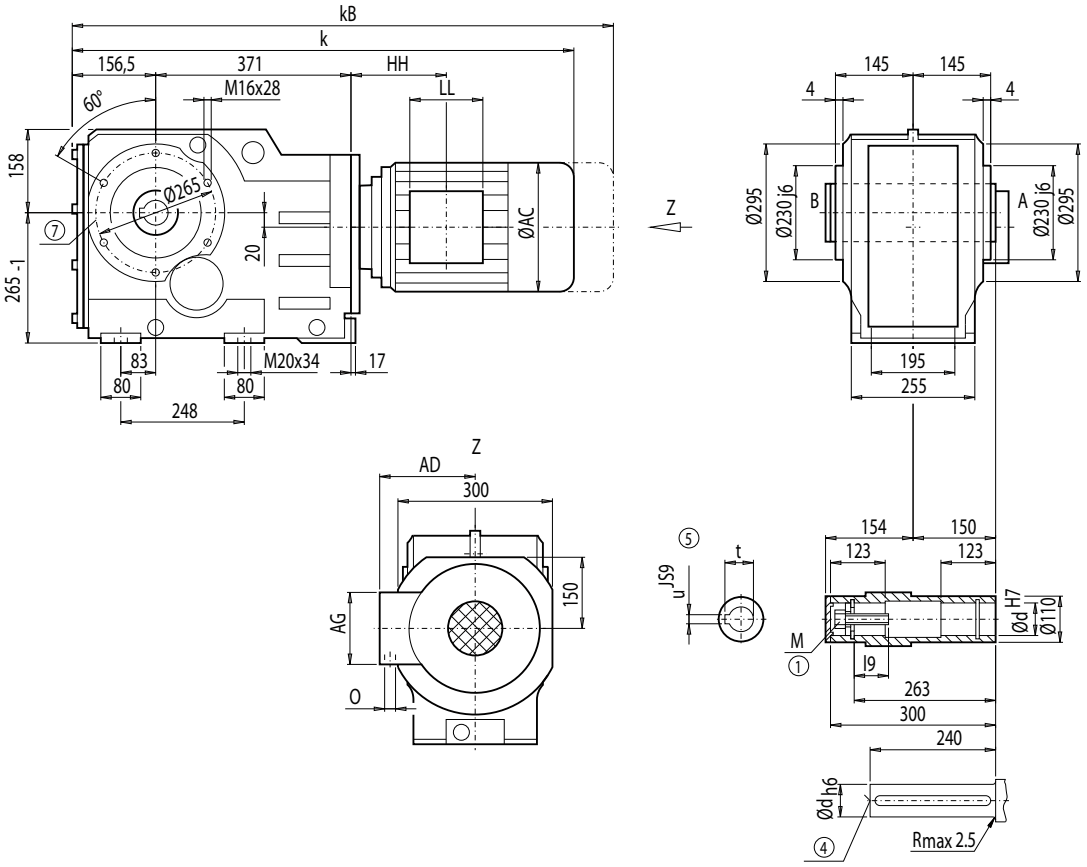

d	l9	M	t	u
70 *)	63.5	M20	74.9	20
80	63.5	M20	85.4	22

*) Preferred series

Motor	KAZ128 k	kB	AC	AD	AG	LL	HH	O	Weight KAZ128
LA90S/L	816.0	887.0	174.0	163.0	90	90	76.0	M20x1.5/M25x1.5	198
LA90ZL	861.0	932.0	174.0	163.0	90	90	200.0	M20x1.5/M25x1.5	204
LA100L	859.0	940.0	195.0	168.0	120	120	113.5	2xM32x1.5	206
LA100ZL	929.0	1 010.0	195.0	168.0	120	120	245.5	2xM32x1.5	216
LA112M	885.5	966.5	219.0	181.0	120	120	116.0	2xM32x1.5	218
LA112ZM	913.5	994.5	219.0	181.0	120	120	220.0	2xM32x1.5	225
LA132S/M	944.5	1 046.5	259.0	195.0	140	140	155.5	2xM32x1.5	228
LA132ZM	990.5	1 092.5	259.0	195.0	140	140	263.5	2xM32x1.5	250
LA160M/L	1 050.0	1 168.5	313.5	227.0	165	165	184.0	2xM40x1.5	263
LA160ZL	1 098.0	1 216.5	313.5	227.0	165	165	337.0	2xM40x1.5	302
LG180M/L	1 106.5	1 228.5	348.0	322.5	260	192	198.0	2xM40x1.5	360
LG180ZM/ZL	1 157.5	1 279.5	348.0	322.5	260	192	198.0	2xM40x1.5	390
LG200L	1 162.5	1 288.5	385.0	301.0	260	192	228.0	2xM50x1.5	440
K4-LGI225S	1 423.0	1 662.0	442.0	325.0	260	192	443.0	2xM50x1.5	596
K4-LGI225M	1 423.0	1 662.0	442.0	325.0	260	192	443.0	2xM50x1.5	584
K4-LGI225ZM	1 483.0	1 722.0	442.0	325.0	260	192	443.0	2xM50x1.5	642

④ DIN 332 ① DIN EN ISO 4014 ⑤ Feather key / keyway DIN 6885 ⑦ For note, see page 4/218

© Siemens AG 2011

Dimensions

Gearbox KAS128 (3-stage), shaft-mounted design with shrink disk

KAS012

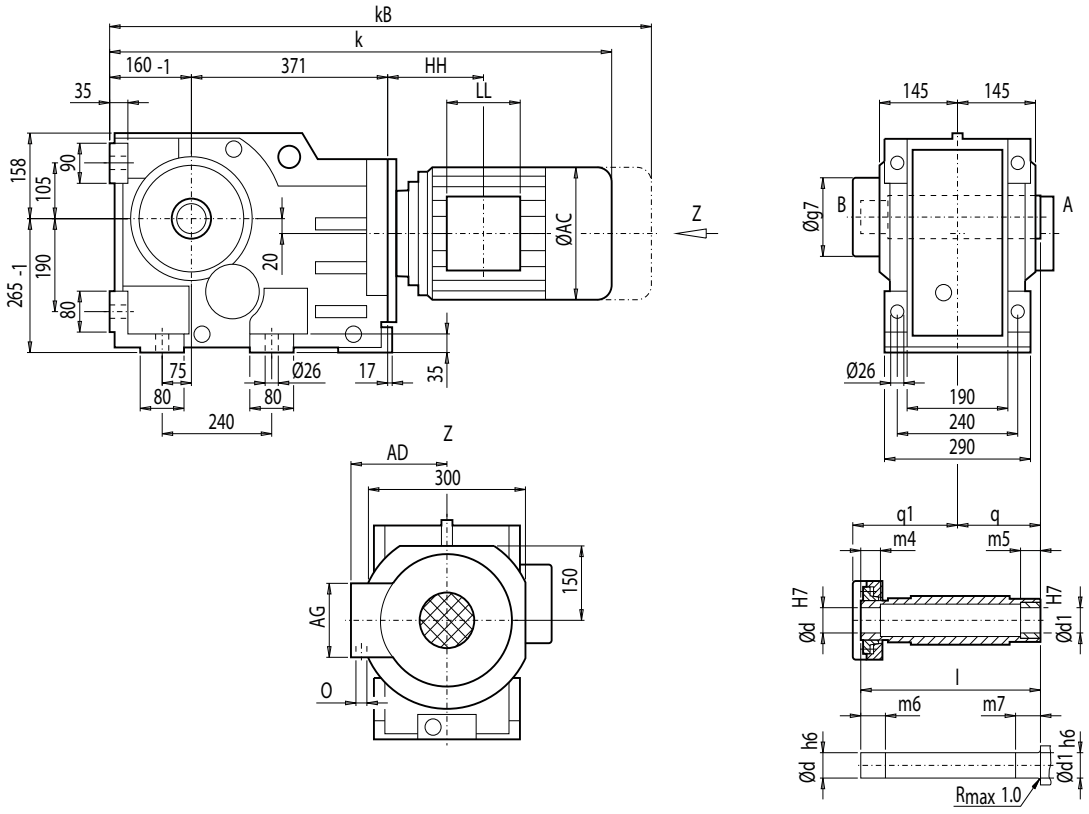

d	d1	l	m4	m5	m6	m7	q1	q	g7
75 *)	75	345	44	50	49	55	207	150	180
80	80	345	40	50	45	55	207	150	180

*) Preferred series

	KAS128								Weight
Motor	**k**	**kB**	**AC**	**AD**	**AG**	**LL**	**HH**	**O**	**KAS128**
LA90S/L	819.5	890.5	174.0	163.0	90	90	76.0	M20x1.5/M25x1.5	194
LA90ZL	864.5	935.5	174.0	163.0	90	90	200.0	M20x1.5/M25x1.5	200
LA100L	862.5	943.5	195.0	168.0	120	120	113.5	2xM32x1.5	202
LA100ZL	932.5	1 013.5	195.0	168.0	120	120	245.5	2xM32x1.5	212
LA112M	889.0	970.0	219.0	181.0	120	120	116.0	2xM32x1.5	214
LA112ZM	917.0	998.0	219.0	181.0	120	120	220.0	2xM32x1.5	221
LA132S/M	948.0	1 050.0	259.0	195.0	140	140	155.5	2xM32x1.5	225
LA132ZM	994.0	1 096.0	259.0	195.0	140	140	263.5	2xM32x1.5	246
LA160M/L	1 053.5	1 172.0	313.5	227.0	165	165	184.0	2xM40x1.5	259
LA160ZL	1 101.5	1 220.0	313.5	227.0	165	165	337.0	2xM40x1.5	299
LG180M/L	1 110.0	1 232.0	348.0	322.5	260	192	198.0	2xM40x1.5	356
LG180ZM/ZL	1 161.0	1 283.0	348.0	322.5	260	192	198.0	2xM40x1.5	386
LG200L	1 166.0	1 292.0	385.0	301.0	260	192	228.0	2xM50x1.5	436
K4-LGI225S	1 426.5	1 665.5	442.0	325.0	260	192	443.0	2xM50x1.5	592
K4-LGI225M	1 426.5	1 665.5	442.0	325.0	260	192	443.0	2xM50x1.5	580
K4-LGI225ZM	1 486.5	1 725.5	442.0	325.0	260	192	443.0	2xM50x1.5	638

© Siemens AG 2011

Gearbox KADS128 (3-stage), shaft-mounted design with torque arm and shrink disk

KADS012

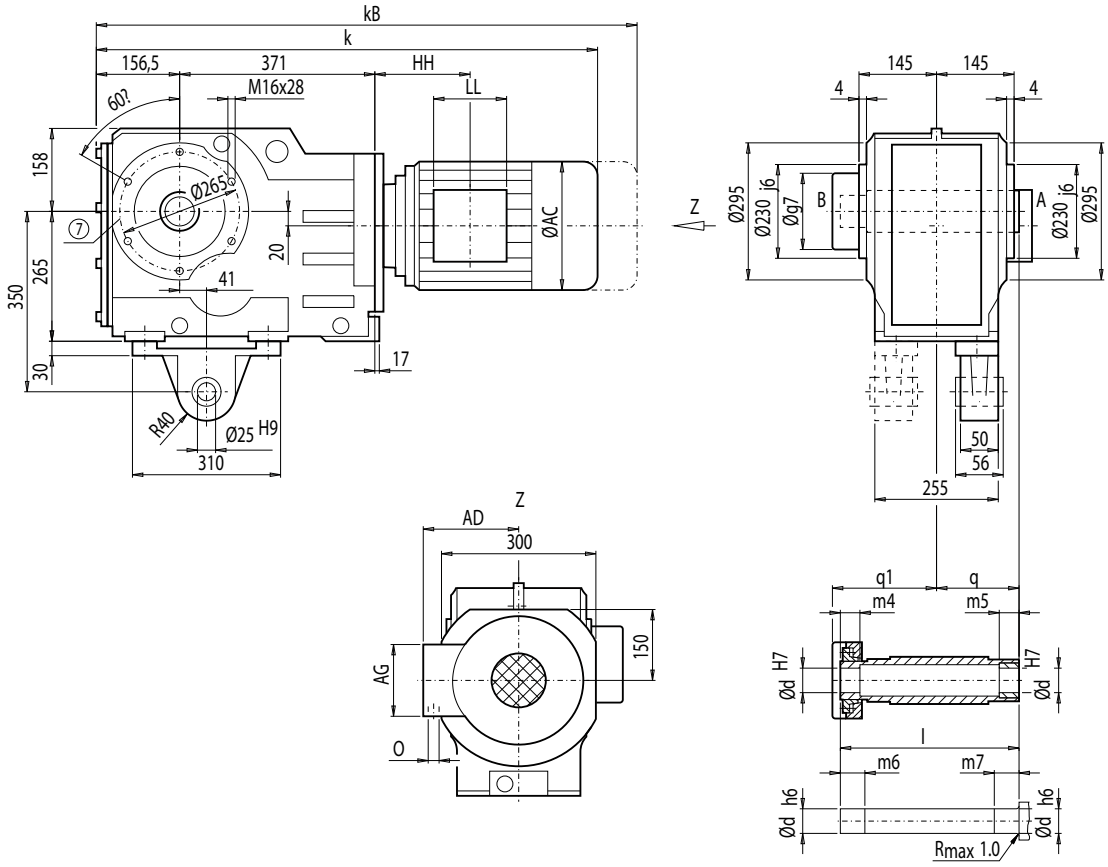

d	d1	l	m4	m5	m6	m7	q1	q	g7
75 *)	75	345	44	50	49	55	207	150	180
80	80	345	40	50	45	55	207	150	180

*) Preferred series

	KADS128								Weight
Motor	**k**	**kB**	**AC**	**AD**	**AG**	**LL**	**HH**	**O**	**KADS128**
LA90S/L	816.0	887.0	174.0	163.0	90	90	76.0	M20x1.5/M25x1.5	209
LA90ZL	861.0	932.0	174.0	163.0	90	90	200.0	M20x1.5/M25x1.5	215
LA100L	859.0	940.0	195.0	168.0	120	120	113.5	2xM32x1.5	217
LA100ZL	929.0	1 010.0	195.0	168.0	120	120	245.5	2xM32x1.5	227
LA112M	885.5	966.5	219.0	181.0	120	120	116.0	2xM32x1.5	228
LA112ZM	913.5	994.5	219.0	181.0	120	120	220.0	2xM32x1.5	235
LA132S/M	944.5	1 046.5	259.0	195.0	140	140	155.5	2xM32x1.5	239
LA132ZM	990.5	1 092.5	259.0	195.0	140	140	263.5	2xM32x1.5	260
LA160M/L	1 050.0	1 168.5	313.5	227.0	165	165	184.0	2xM40x1.5	274
LA160ZL	1 098.0	1 216.5	313.5	227.0	165	165	337.0	2xM40x1.5	313
LG180M/L	1 106.5	1 228.5	348.0	322.5	260	192	198.0	2xM40x1.5	370
LG180ZM/ZL	1 157.5	1 279.5	348.0	322.5	260	192	198.0	2xM40x1.5	400
LG200L	1 162.5	1 288.5	385.0	301.0	260	192	228.0	2xM50x1.5	450
K4-LGI225S	1 423.0	1 662.0	442.0	325.0	260	192	443.0	2xM50x1.5	606
K4-LGI225M	1 423.0	1 662.0	442.0	325.0	260	192	443.0	2xM50x1.5	594
K4-LGI225ZM	1 483.0	1 722.0	442.0	325.0	260	192	443.0	2xM50x1.5	652

⑦ For note, see page 4/218

© Siemens AG 2011

Dimensions

Gearbox KAFS128 (3-stage), flange-mounted design with flange and shrink disk

KAFS012

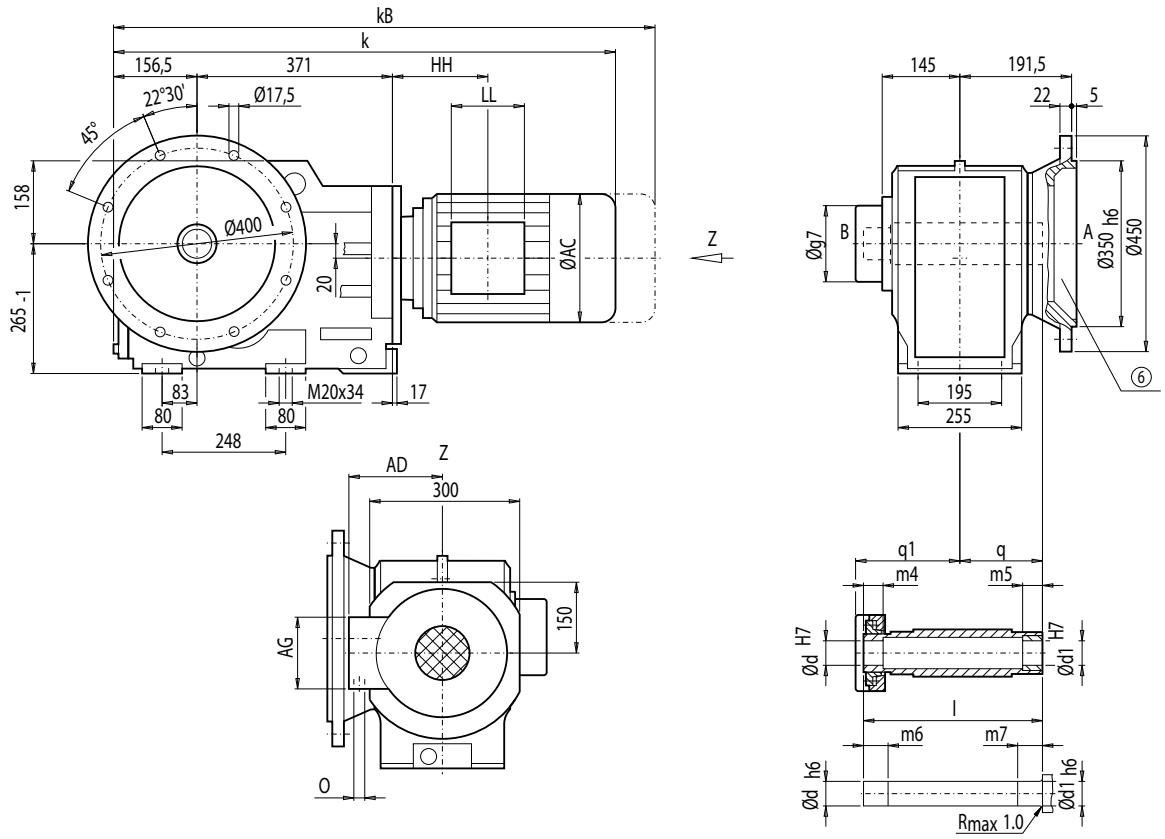

d	d1	l	m4	m5	m6	m7	q1	q	g7
75 *)	75	345	44	50	49	55	207	150	180
80	80	345	40	50	45	55	207	150	180

*) Preferred series

	KAFS128								Weight
Motor	**k**	**kB**	**AC**	**AD**	**AG**	**LL**	**HH**	**O**	**KAFS128**
LA90S/L	816.0	887.0	174.0	163.0	90	90	76.0	M20x1.5/M25x1.5	220
LA90ZL	861.0	932.0	174.0	163.0	90	90	200.0	M20x1.5/M25x1.5	226
LA100L	859.0	940.0	195.0	168.0	120	120	113.5	2xM32x1.5	228
LA100ZL	929.0	1 010.0	195.0	168.0	120	120	245.5	2xM32x1.5	238
LA112M	885.5	966.5	219.0	181.0	120	120	116.0	2xM32x1.5	239
LA112ZM	913.5	994.5	219.0	181.0	120	120	220.0	2xM32x1.5	246
LA132S/M	944.5	1 046.5	259.0	195.0	140	140	155.5	2xM32x1.5	250
LA132ZM	990.5	1 092.5	259.0	195.0	140	140	263.5	2xM32x1.5	271
LA160M/L	1 050.0	1 168.5	313.5	227.0	165	165	184.0	2xM40x1.5	285
LA160ZL	1 098.0	1 216.5	313.5	227.0	165	165	337.0	2xM40x1.5	324
LG180M/L	1 106.5	1 228.5	348.0	322.5	260	192	198.0	2xM40x1.5	381
LG180ZM/ZL	1 157.5	1 279.5	348.0	322.5	260	192	198.0	2xM40x1.5	411
LG200L	1 162.5	1 288.5	385.0	301.0	260	192	228.0	2xM50x1.5	461
K4-LGI225S	1 423.0	1 662.0	442.0	325.0	260	192	443.0	2xM50x1.5	617
K4-LGI225M	1 423.0	1 662.0	442.0	325.0	260	192	443.0	2xM50x1.5	605
K4-LGI225ZM	1 483.0	1 722.0	442.0	325.0	260	192	443.0	2xM50x1.5	663

⑥ For note, see page 4/217

© Siemens AG 2011

Gearbox KAZS128 (3-stage), shaft-mounted design with housing flange (C-type) and shrink disk

KAZS012

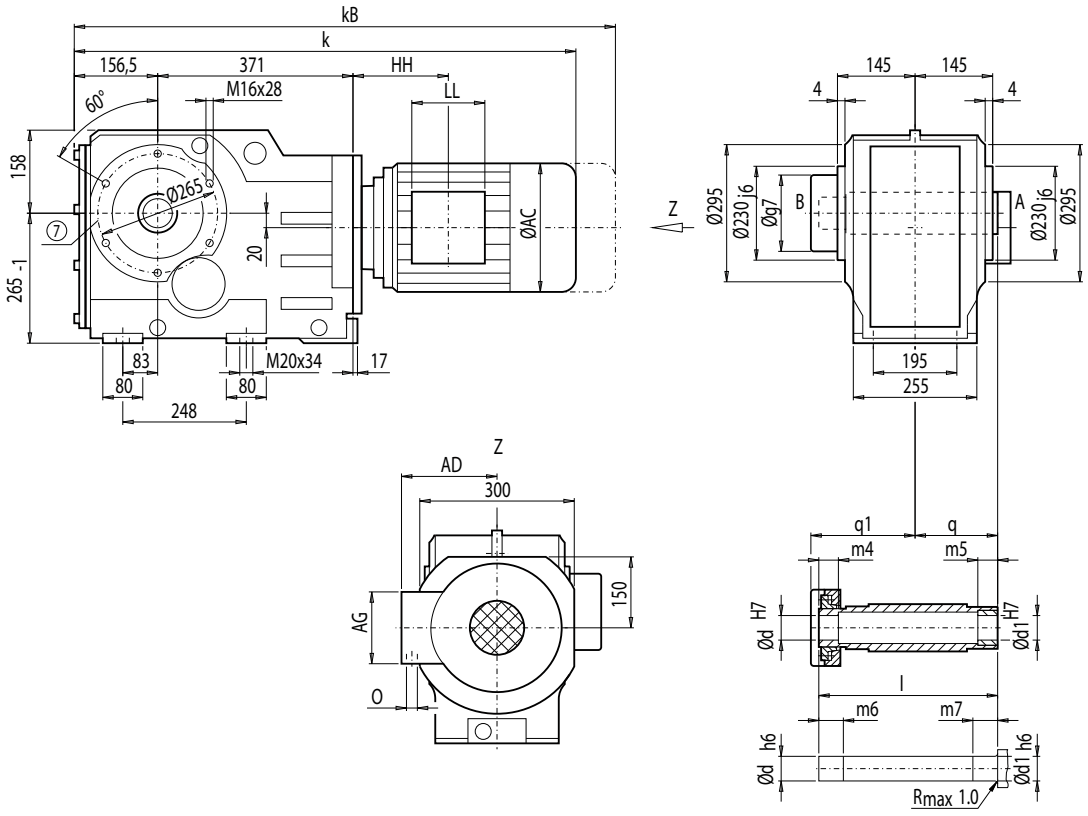

d	d1	l	m4	m5	m6	m7	q1	q	g7
75 *)	75	345	44	50	49	55	207	150	180
80	80	345	40	50	45	55	207	150	180

*) Preferred series

	KAZS128								Weight
Motor	**k**	**kB**	**AC**	**AD**	**AG**	**LL**	**HH**	**O**	**KAZS128**
LA90S/L	816.0	887.0	174.0	163.0	90	90	76.0	M20x1.5/M25x1.5	202
LA90ZL	861.0	932.0	174.0	163.0	90	90	200.0	M20x1.5/M25x1.5	208
LA100L	859.0	940.0	195.0	168.0	120	120	113.5	2xM32x1.5	210
LA100ZL	929.0	1 010.0	195.0	168.0	120	120	245.5	2xM32x1.5	220
LA112M	885.5	966.5	219.0	181.0	120	120	116.0	2xM32x1.5	222
LA112ZM	913.5	994.5	219.0	181.0	120	120	220.0	2xM32x1.5	229
LA132S/M	944.5	1 046.5	259.0	195.0	140	140	155.5	2xM32x1.5	233
LA132ZM	990.5	1 092.5	259.0	195.0	140	140	263.5	2xM32x1.5	254
LA160M/L	1 050.0	1 168.5	313.5	227.0	165	165	184.0	2xM40x1.5	267
LA160ZL	1 098.0	1 216.5	313.5	227.0	165	165	337.0	2xM40x1.5	306
LG180M/L	1 106.5	1 228.5	348.0	322.5	260	192	198.0	2xM40x1.5	364
LG180ZM/ZL	1 157.5	1 279.5	348.0	322.5	260	192	198.0	2xM40x1.5	394
LG200L	1 162.5	1 288.5	385.0	301.0	260	192	228.0	2xM50x1.5	444
K4-LGI225S	1 423.0	1 662.0	442.0	325.0	260	192	443.0	2xM50x1.5	600
K4-LGI225M	1 423.0	1 662.0	442.0	325.0	260	192	443.0	2xM50x1.5	588
K4-LGI225ZM	1 483.0	1 722.0	442.0	325.0	260	192	443.0	2xM50x1.5	646

⑦ For note, see page 4/218

© Siemens AG 2011

Dimensions

Gearbox K148 (3-stage), housing-flange-mounted design (C-type)

K012

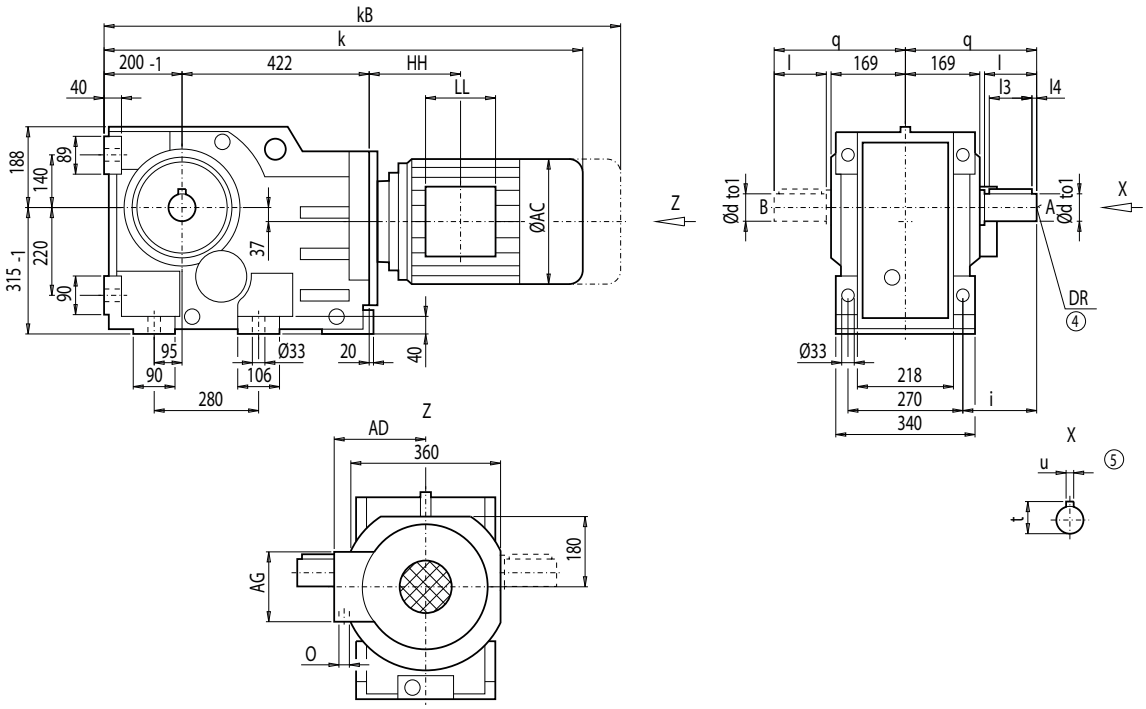

d	to1	l	l3	l4	t	u	i	q	DR
90 *)	m6	170	140	15	95	25	210	345	M24x50
100	m6	210	180	15	106	28	250	385	

*) Preferred series

	K148								Weight
Motor	**k**	**kB**	**AC**	**AD**	**AG**	**LL**	**HH**	**O**	**K148**
LA100L	944.0	1 025.0	195.0	168.0	120	120	104.0	2xM32x1.5	319
LA100ZL	1 014.0	1 095.0	195.0	168.0	120	120	236.0	2xM32x1.5	329
LA112M	969.5	1 050.5	219.0	181.0	120	120	105.5	2xM32x1.5	331
LA112ZM	997.5	1 078.5	219.0	181.0	120	120	209.5	2xM32x1.5	338
LA132S/M	1 028.5	1 130.5	259.0	195.0	140	140	145.0	2xM32x1.5	340
LA132ZM	1 074.5	1 176.5	259.0	195.0	140	140	253.0	2xM32x1.5	361
LA160M/L	1 128.0	1 246.5	313.5	227.0	165	165	167.5	2xM40x1.5	379
LA160ZL	1 176.0	1 294.5	313.5	227.0	165	165	320.5	2xM40x1.5	418
LG180M/L	1 187.5	1 309.5	348.0	322.5	260	192	184.5	2xM40x1.5	470
LG180ZM/ZL	1 238.5	1 360.5	348.0	322.5	260	192	184.5	2xM40x1.5	500
LG200L	1 243.5	1 369.5	385.0	301.0	260	192	214.5	2xM50x1.5	550
LG225S	1 314.5	1 553.5	442.0	325.0	260	192	250.5	2xM50x1.5	626
LG225M	1 314.5	1 553.5	442.0	325.0	260	192	250.5	2xM50x1.5	614
LG225ZM	1 374.5	1 613.5	442.0	325.0	260	192	250.5	2xM50x1.5	672
K4-LGI250M	1 601.5	1 826.5	495.0	392.0	300	236	469.5	2xM63x1.5	794
K4-LGI250ZM	1 671.5	1 896.5	495.0	392.0	300	236	469.5	2xM63x1.5	897

④ DIN 332

⑤ Feather key / keyway DIN 6885

© Siemens AG 2011

Gearbox KF148 (3-stage), flange-mounted design (A-type)

KF012

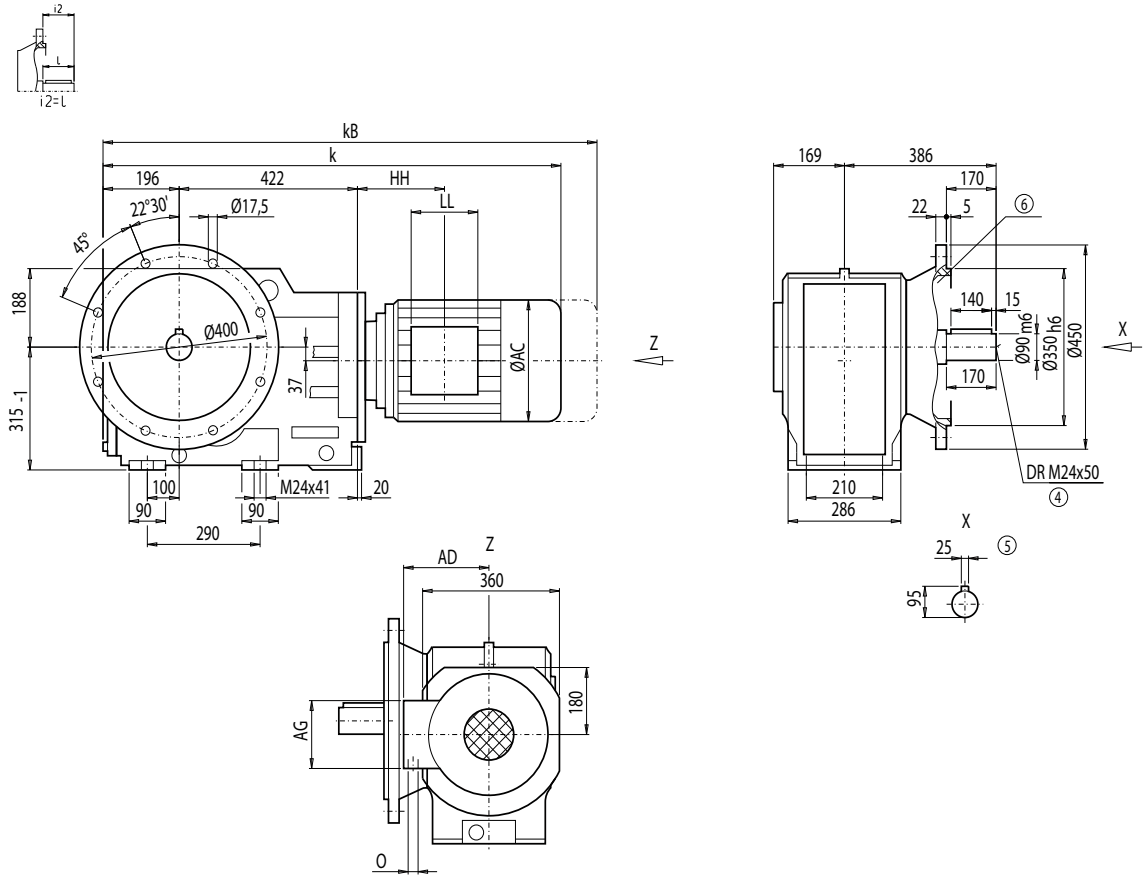

Motor	KF148 k	kB	AC	AD	AG	LL	HH	O	Weight KF148
LA100L	940.0	1 021.0	195.0	168.0	120	120	104.0	2xM32x1.5	349
LA100ZL	1 010.0	1 091.0	195.0	168.0	120	120	236.0	2xM32x1.5	359
LA112M	965.5	1 046.5	219.0	181.0	120	120	105.5	2xM32x1.5	361
LA112ZM	993.5	1 074.5	219.0	181.0	120	120	209.5	2xM32x1.5	368
LA132S/M	1 024.5	1 126.5	259.0	195.0	140	140	145.0	2xM32x1.5	370
LA132ZM	1 070.5	1 172.5	259.0	195.0	140	140	253.0	2xM32x1.5	391
LA160M/L	1 124.0	1 242.5	313.5	227.0	165	165	167.5	2xM40x1.5	409
LA160ZL	1 172.0	1 290.5	313.5	227.0	165	165	320.5	2xM40x1.5	448
LG180M/L	1 183.5	1 305.5	348.0	322.5	260	192	184.5	2xM40x1.5	500
LG180ZM/ZL	1 234.5	1 356.5	348.0	322.5	260	192	184.5	2xM40x1.5	530
LG200L	1 239.5	1 365.5	385.0	301.0	260	192	214.5	2xM50x1.5	580
LG225S	1 310.5	1 549.5	442.0	325.0	260	192	250.5	2xM50x1.5	656
LG225M	1 310.5	1 549.5	442.0	325.0	260	192	250.5	2xM50x1.5	644
LG225ZM	1 370.5	1 609.5	442.0	325.0	260	192	250.5	2xM50x1.5	702
K4-LGI250M	1 597.5	1 822.5	495.0	392.0	300	236	469.5	2xM63x1.5	824
K4-LGI250ZM	1 667.5	1 892.5	495.0	392.0	300	236	469.5	2xM63x1.5	927

④ DIN 332 ⑤ Feather key / keyway DIN 6885 ⑥ For note, see page 4/217

© Siemens AG 2011

Dimensions

Gearbox KA148 (3-stage), housing-flange-mounted design (C-type)

KA012

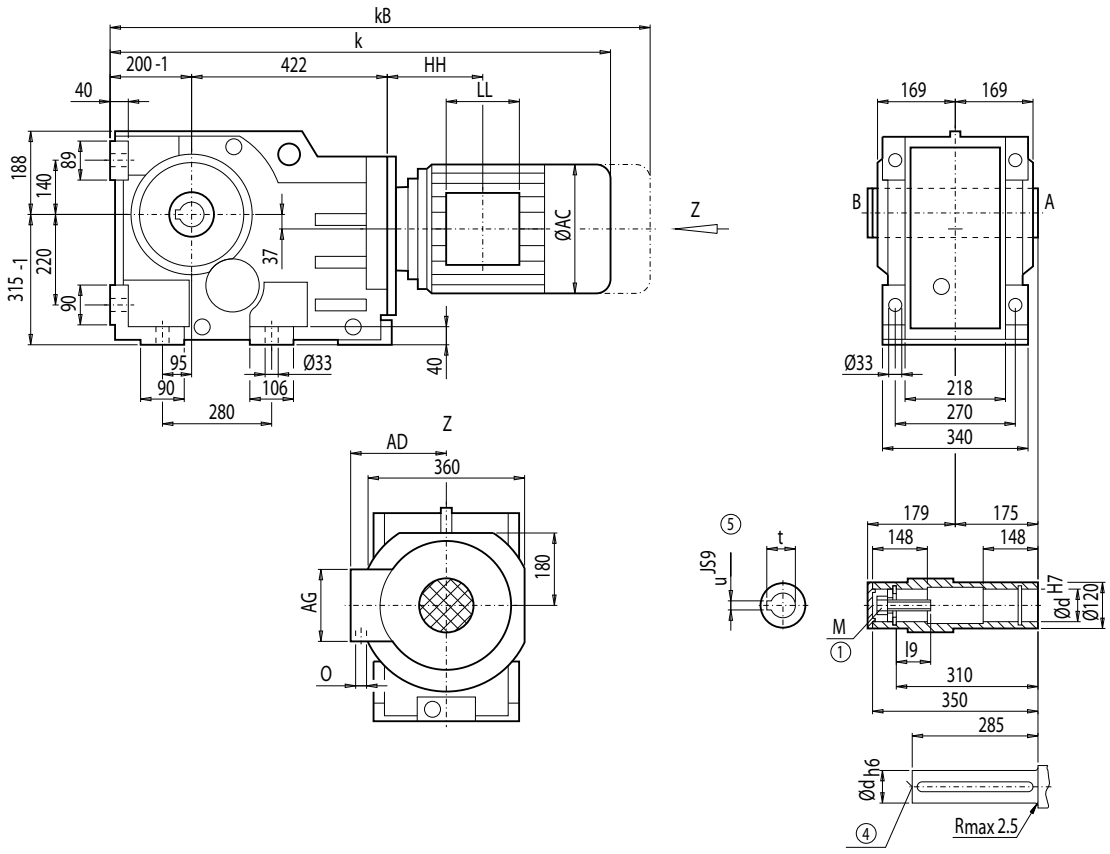

d	l9	M	t	u
80 *)	63.5	M20	85.4	22
90	72.0	M24	95.4	25

*) Preferred series

	KA148								Weight
Motor	**k**	**kB**	**AC**	**AD**	**AG**	**LL**	**HH**	**O**	**KA148**
LA100L	944.0	1 025.0	195.0	168.0	120	120	104.0	2xM32x1.5	291
LA100ZL	1 014.0	1 095.0	195.0	168.0	120	120	236.0	2xM32x1.5	301
LA112M	969.5	1 050.5	219.0	181.0	120	120	105.5	2xM32x1.5	303
LA112ZM	997.5	1 078.5	219.0	181.0	120	120	209.5	2xM32x1.5	310
LA132S/M	1 028.5	1 130.5	259.0	195.0	140	140	145.0	2xM32x1.5	312
LA132ZM	1 074.5	1 176.5	259.0	195.0	140	140	253.0	2xM32x1.5	333
LA160M/L	1 128.0	1 246.5	313.5	227.0	165	165	167.5	2xM40x1.5	351
LA160ZL	1 176.0	1 294.5	313.5	227.0	165	165	320.5	2xM40x1.5	390
LG180M/L	1 187.5	1 309.5	348.0	322.5	260	192	184.5	2xM40x1.5	442
LG180ZM/ZL	1 238.5	1 360.5	348.0	322.5	260	192	184.5	2xM40x1.5	472
LG200L	1 243.5	1 369.5	385.0	301.0	260	192	214.5	2xM50x1.5	522
LG225S	1 314.5	1 553.5	442.0	325.0	260	192	250.5	2xM50x1.5	598
LG225M	1 314.5	1 553.5	442.0	325.0	260	192	250.5	2xM50x1.5	586
LG225ZM	1 374.5	1 613.5	442.0	325.0	260	192	250.5	2xM50x1.5	644
K4-LGI250M	1 601.5	1 826.5	495.0	392.0	300	236	469.5	2xM63x1.5	766
K4-LGI250ZM	1 671.5	1 896.5	495.0	392.0	300	236	469.5	2xM63x1.5	869

① DIN EN ISO 4014 ④ DIN 332 ⑤ Feather key / keyway DIN 6885

© Siemens AG 2011

Gearbox KAD148 (3-stage), shaft-mounted design with torque arm

KAD012

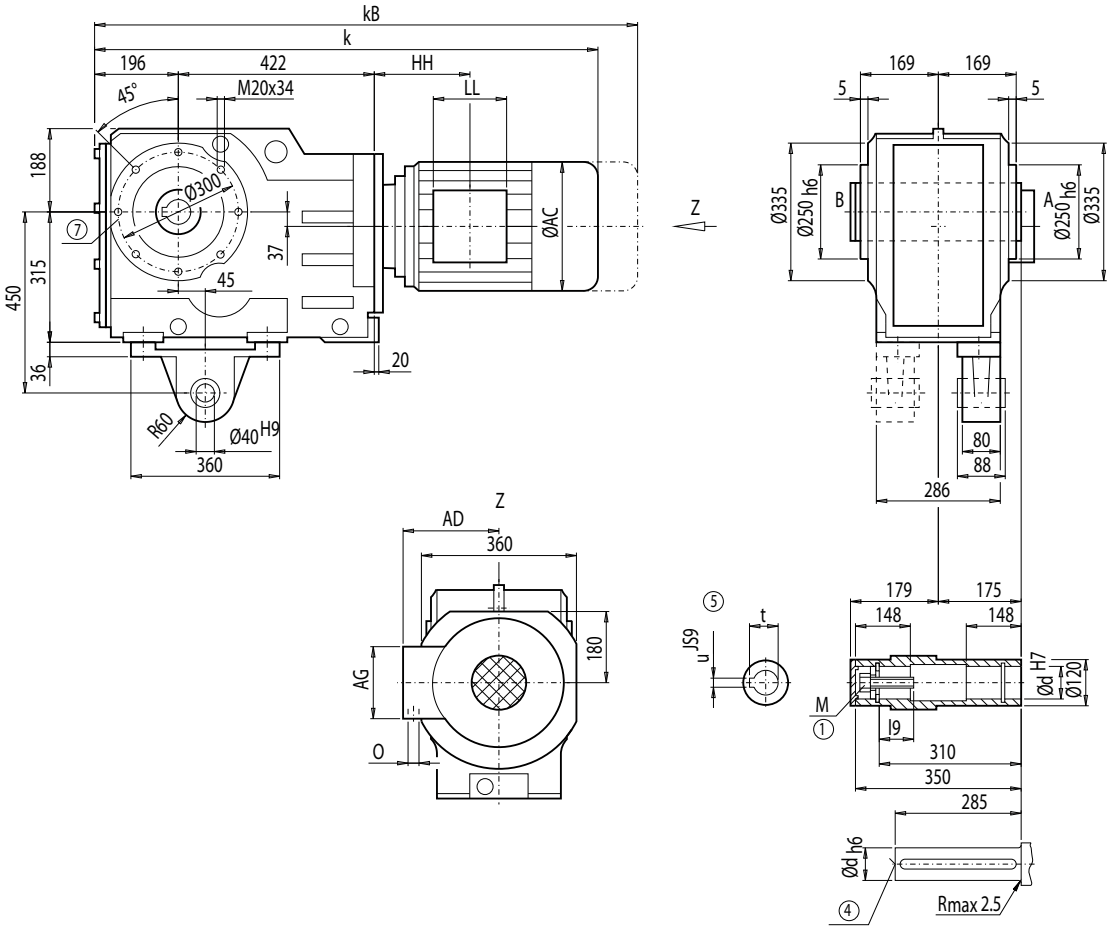

d	l9	M	t	u
80 *)	63.5	M20	85.4	22
90	72.0	M24	95.4	25

*) Preferred series

	KAD148								Weight
Motor	**k**	**kB**	**AC**	**AD**	**AG**	**LL**	**HH**	**O**	**KAD148**
LA100L	940.0	1 021.0	195.0	168.0	120	120	104.0	2xM32x1.5	319
LA100ZL	1 010.0	1 091.0	195.0	168.0	120	120	236.0	2xM32x1.5	329
LA112M	965.5	1 046.5	219.0	181.0	120	120	105.5	2xM32x1.5	330
LA112ZM	993.5	1 074.5	219.0	181.0	120	120	209.5	2xM32x1.5	337
LA132S/M	1 024.5	1 126.5	259.0	195.0	140	140	145.0	2xM32x1.5	339
LA132ZM	1 070.5	1 172.5	259.0	195.0	140	140	253.0	2xM32x1.5	361
LA160M/L	1 124.0	1 242.5	313.5	227.0	165	165	167.5	2xM40x1.5	379
LA160ZL	1 172.0	1 290.5	313.5	227.0	165	165	320.5	2xM40x1.5	418
LG180M/L	1 183.5	1 305.5	348.0	322.5	260	192	184.5	2xM40x1.5	470
LG180ZM/ZL	1 234.5	1 356.5	348.0	322.5	260	192	184.5	2xM40x1.5	500
LG200L	1 239.5	1 365.5	385.0	301.0	260	192	214.5	2xM50x1.5	550
LG225S	1 310.5	1 549.5	442.0	325.0	260	192	250.5	2xM50x1.5	626
LG225M	1 310.5	1 549.5	442.0	325.0	260	192	250.5	2xM50x1.5	614
LG225ZM	1 370.5	1 609.5	442.0	325.0	260	192	250.5	2xM50x1.5	672
K4-LGI250M	1 597.5	1 822.5	495.0	392.0	300	236	469.5	2xM63x1.5	794
K4-LGI250ZM	1 667.5	1 892.5	495.0	392.0	300	236	469.5	2xM63x1.5	897

④ DIN 332 ① DIN EN ISO 4014 ⑤ Feather key / keyway DIN 6885 ⑦ For note, see page 4/218

© Siemens AG 2011

Dimensions

Gearbox KAF148 (3-stage), flange-mounted design

KAF012

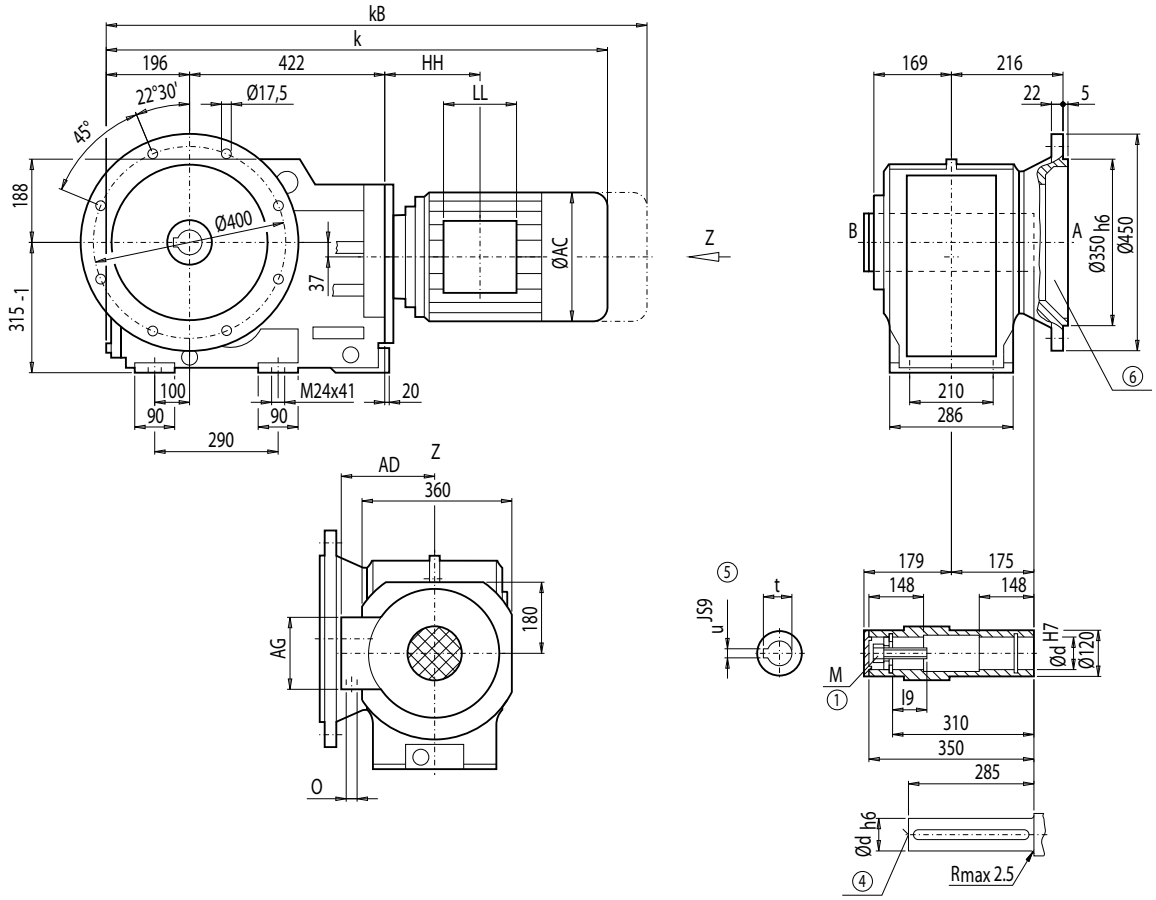

d	l9	M	t	u
80 *)	63.5	M20	85.4	22
90	72.0	M24	95.4	25

*) Preferred series

Motor	KAF148 k	kB	AC	AD	AG	LL	HH	O	Weight KAF148
LA100L	940.0	1 021.0	195.0	168.0	120	120	104.0	2xM32x1.5	321
LA100ZL	1 010.0	1 091.0	195.0	168.0	120	120	236.0	2xM32x1.5	331
LA112M	965.5	1 046.5	219.0	181.0	120	120	105.5	2xM32x1.5	333
LA112ZM	993.5	1 074.5	219.0	181.0	120	120	209.5	2xM32x1.5	340
LA132S/M	1 024.5	1 126.5	259.0	195.0	140	140	145.0	2xM32x1.5	342
LA132ZM	1 070.5	1 172.5	259.0	195.0	140	140	253.0	2xM32x1.5	363
LA160M/L	1 124.0	1 242.5	313.5	227.0	165	165	167.5	2xM40x1.5	381
LA160ZL	1 172.0	1 290.5	313.5	227.0	165	165	320.5	2xM40x1.5	420
LG180M/L	1 183.5	1 305.5	348.0	322.5	260	192	184.5	2xM40x1.5	472
LG180ZM/ZL	1 234.5	1 356.5	348.0	322.5	260	192	184.5	2xM40x1.5	502
LG200L	1 239.5	1 365.5	385.0	301.0	260	192	214.5	2xM50x1.5	552
LG225S	1 310.5	1 549.5	442.0	325.0	260	192	250.5	2xM50x1.5	628
LG225M	1 310.5	1 549.5	442.0	325.0	260	192	250.5	2xM50x1.5	616
LG225ZM	1 370.5	1 609.5	442.0	325.0	260	192	250.5	2xM50x1.5	674
K4-LGI250M	1 597.5	1 822.5	495.0	392.0	300	236	469.5	2xM63x1.5	796
K4-LGI250ZM	1 667.5	1 892.5	495.0	392.0	300	236	469.5	2xM63x1.5	899

④ DIN 332 ① DIN EN ISO 4014 ⑤ Feather key / keyway DIN 6885 ⑥ For note, see page 4/217

© Siemens AG 2011

Gearbox KAZ148 (3-stage), shaft-mounted design with housing flange (C-type)

KAZ012

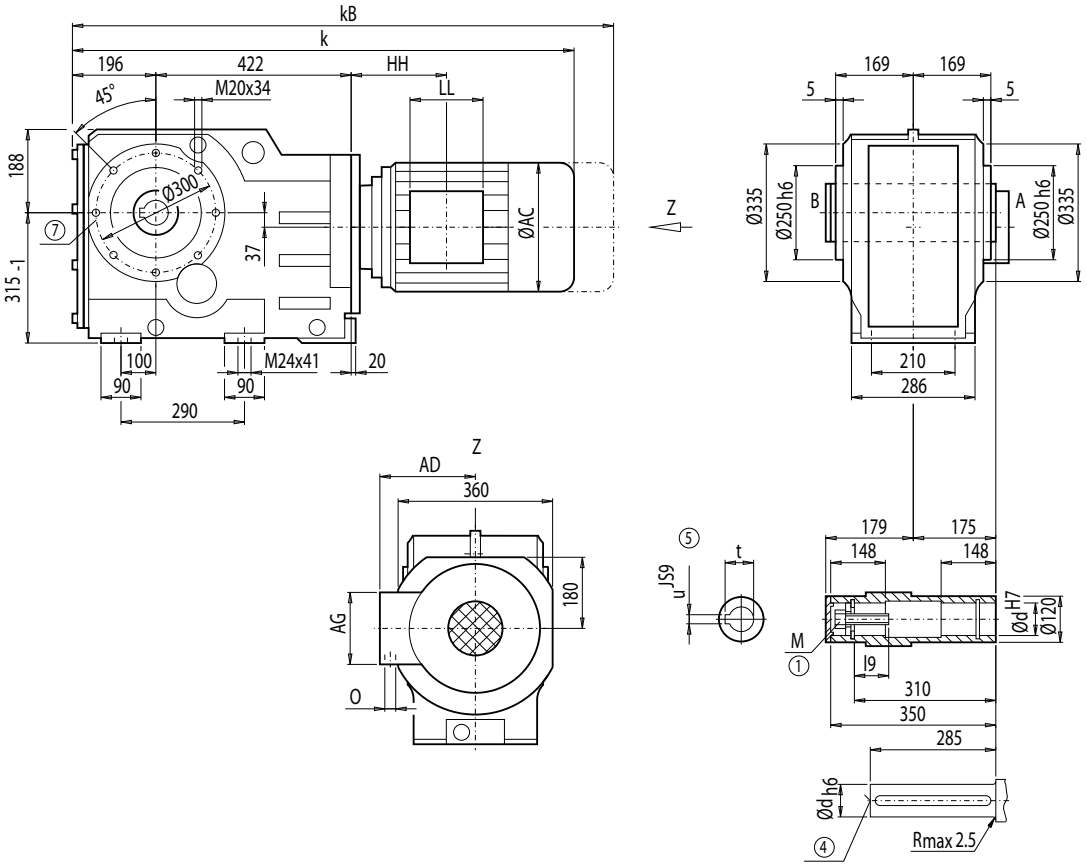

d	l9	M	t	u
80 *)	63.5	M20	85.4	22
90	72.0	M24	95.4	25

*) Preferred series

	KAZ148								Weight
Motor	**k**	**kB**	**AC**	**AD**	**AG**	**LL**	**HH**	**O**	**KAZ148**
LA100L	940.0	1 021.0	195.0	168.0	120	120	104.0	2xM32x1.5	302
LA100ZL	1 010.0	1 091.0	195.0	168.0	120	120	236.0	2xM32x1.5	312
LA112M	965.5	1 046.5	219.0	181.0	120	120	105.5	2xM32x1.5	314
LA112ZM	993.5	1 074.5	219.0	181.0	120	120	209.5	2xM32x1.5	321
LA132S/M	1 024.5	1 126.5	259.0	195.0	140	140	145.0	2xM32x1.5	323
LA132ZM	1 070.5	1 172.5	259.0	195.0	140	140	253.0	2xM32x1.5	344
LA160M/L	1 124.0	1 242.5	313.5	227.0	165	165	167.5	2xM40x1.5	362
LA160ZL	1 172.0	1 290.5	313.5	227.0	165	165	320.5	2xM40x1.5	401
LG180M/L	1 183.5	1 305.5	348.0	322.5	260	192	184.5	2xM40x1.5	453
LG180ZM/ZL	1 234.5	1 356.5	348.0	322.5	260	192	184.5	2xM40x1.5	483
LG200L	1 239.5	1 365.5	385.0	301.0	260	192	214.5	2xM50x1.5	533
LG225S	1 310.5	1 549.5	442.0	325.0	260	192	250.5	2xM50x1.5	609
LG225M	1 310.5	1 549.5	442.0	325.0	260	192	250.5	2xM50x1.5	597
LG225ZM	1 370.5	1 609.5	442.0	325.0	260	192	250.5	2xM50x1.5	655
K4-LGI250M	1 597.5	1 822.5	495.0	392.0	300	236	469.5	2xM63x1.5	777
K4-LGI250ZM	1 667.5	1 892.5	495.0	392.0	300	236	469.5	2xM63x1.5	880

④ DIN 332 ① DIN EN ISO 4014 ⑤ Feather key / keyway DIN 6885 ⑦ For note, see page 4/218

© Siemens AG 2011

Dimensions

Gearbox KAS148 (3-stage), shaft-mounted design with shrink disk

KAS012

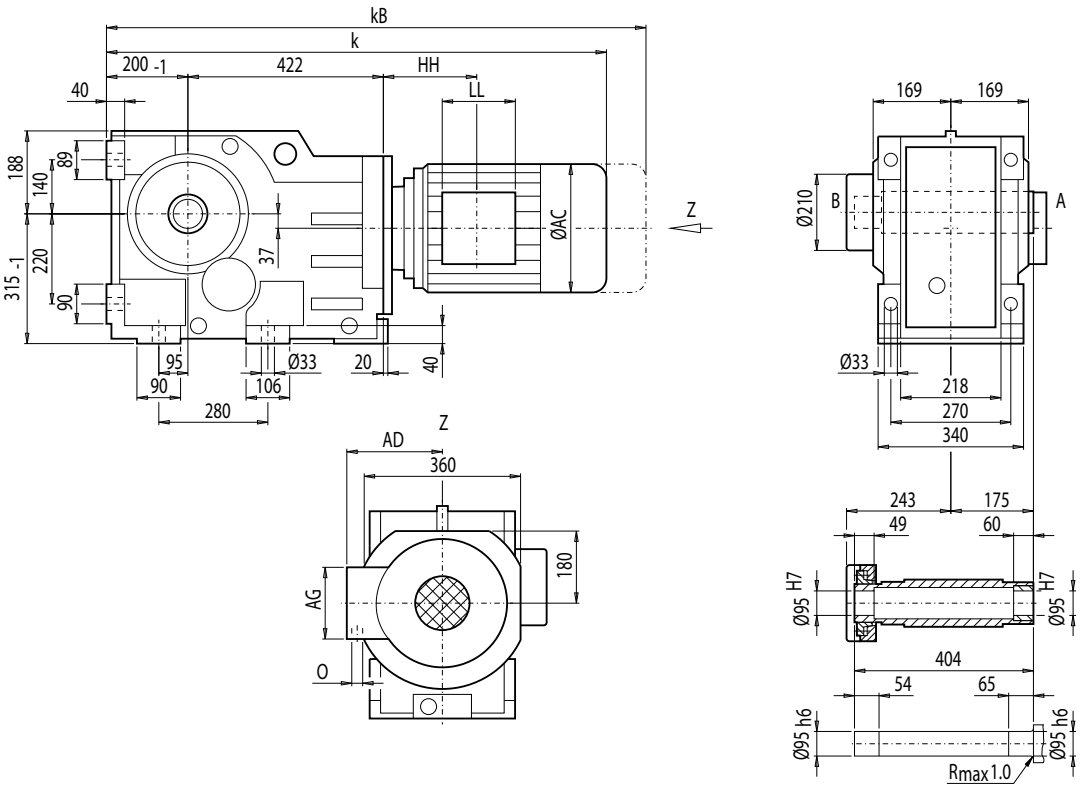

Motor	KAS148 k	kB	AC	AD	AG	LL	HH	O	Weight KAS148
LA100L	944.0	1 025.0	195.0	168.0	120	120	104.0	2xM32x1.5	298
LA100ZL	1 014.0	1 095.0	195.0	168.0	120	120	236.0	2xM32x1.5	308
LA112M	969.5	1 050.5	219.0	181.0	120	120	105.5	2xM32x1.5	310
LA112ZM	997.5	1 078.5	219.0	181.0	120	120	209.5	2xM32x1.5	317
LA132S/M	1 028.5	1 130.5	259.0	195.0	140	140	145.0	2xM32x1.5	319
LA132ZM	1 074.5	1 176.5	259.0	195.0	140	140	253.0	2xM32x1.5	340
LA160M/L	1 128.0	1 246.5	313.5	227.0	165	165	167.5	2xM40x1.5	358
LA160ZL	1 176.0	1 294.5	313.5	227.0	165	165	320.5	2xM40x1.5	397
LG180M/L	1 187.5	1 309.5	348.0	322.5	260	192	184.5	2xM40x1.5	449
LG180ZM/ZL	1 238.5	1 360.5	348.0	322.5	260	192	184.5	2xM40x1.5	479
LG200L	1 243.5	1 369.5	385.0	301.0	260	192	214.5	2xM50x1.5	529
LG225S	1 314.5	1 553.5	442.0	325.0	260	192	250.5	2xM50x1.5	605
LG225M	1 314.5	1 553.5	442.0	325.0	260	192	250.5	2xM50x1.5	593
LG225ZM	1 374.5	1 613.5	442.0	325.0	260	192	250.5	2xM50x1.5	651
K4-LGI250M	1 601.5	1 826.5	495.0	392.0	300	236	469.5	2xM63x1.5	773
K4-LGI250ZM	1 671.5	1 896.5	495.0	392.0	300	236	469.5	2xM63x1.5	876

© Siemens AG 2011

Gearbox KADS148 (3-stage), shaft-mounted design with torque arm and shrink disk

KADS012

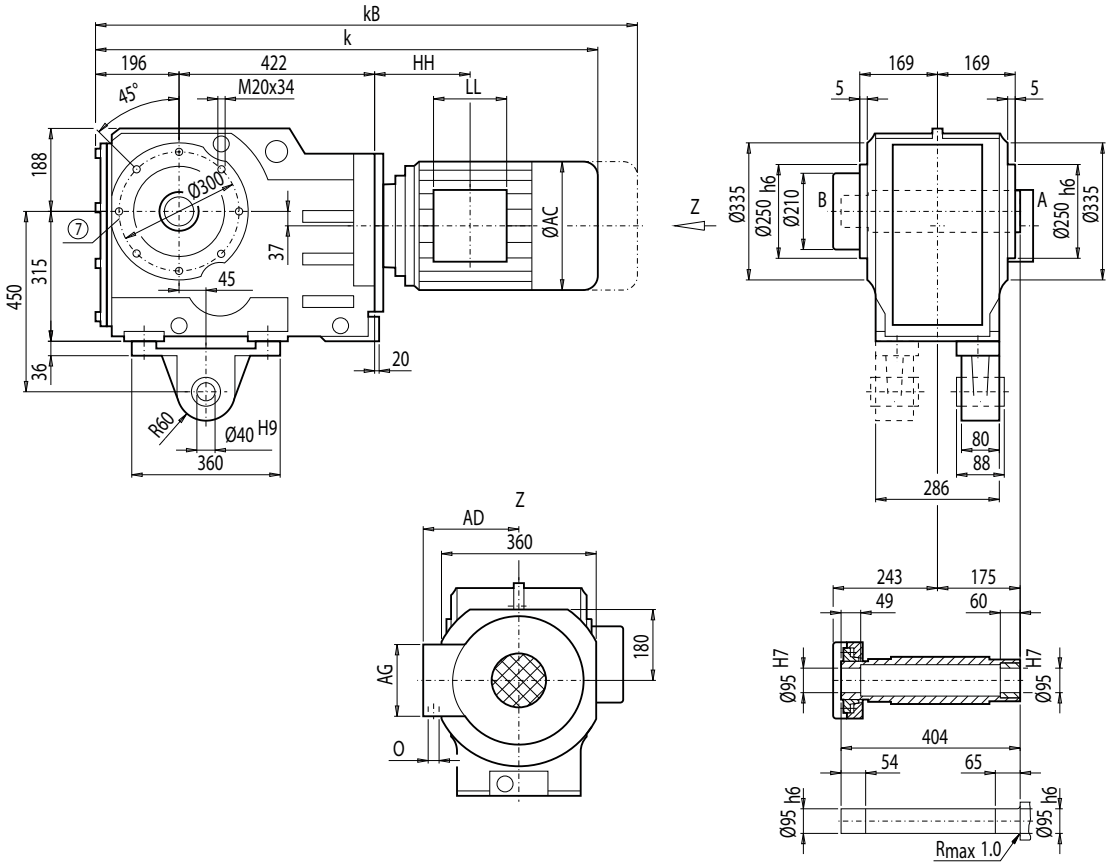

Motor	KADS148 k	kB	AC	AD	AG	LL	HH	O	Weight KADS148
LA100L	940.0	1 021.0	195.0	168.0	120	120	104.0	2xM32x1.5	326
LA100ZL	1 010.0	1 091.0	195.0	168.0	120	120	236.0	2xM32x1.5	336
LA112M	965.5	1 046.5	219.0	181.0	120	120	105.5	2xM32x1.5	337
LA112ZM	993.5	1 074.5	219.0	181.0	120	120	209.5	2xM32x1.5	344
LA132S/M	1 024.5	1 126.5	259.0	195.0	140	140	145.0	2xM32x1.5	346
LA132ZM	1 070.5	1 172.5	259.0	195.0	140	140	253.0	2xM32x1.5	368
LA160M/L	1 124.0	1 242.5	313.5	227.0	165	165	167.5	2xM40x1.5	386
LA160ZL	1 172.0	1 290.5	313.5	227.0	165	165	320.5	2xM40x1.5	425
LG180M/L	1 183.5	1 305.5	348.0	322.5	260	192	184.5	2xM40x1.5	477
LG180ZM/ZL	1 234.5	1 356.5	348.0	322.5	260	192	184.5	2xM40x1.5	507
LG200L	1 239.5	1 365.5	385.0	301.0	260	192	214.5	2xM50x1.5	557
LG225S	1 310.5	1 549.5	442.0	325.0	260	192	250.5	2xM50x1.5	633
LG225M	1 310.5	1 549.5	442.0	325.0	260	192	250.5	2xM50x1.5	621
LG225ZM	1 370.5	1 609.5	442.0	325.0	260	192	250.5	2xM50x1.5	679
K4-LGI250M	1 597.5	1 822.5	495.0	392.0	300	236	469.5	2xM63x1.5	801
K4-LGI250ZM	1 667.5	1 892.5	495.0	392.0	300	236	469.5	2xM63x1.5	904

⑦ For note, see page 4/218

© Siemens AG 2011

Dimensions

Gearbox KAFS148 (3-stage), flange-mounted design and shrink disk

KAFS012

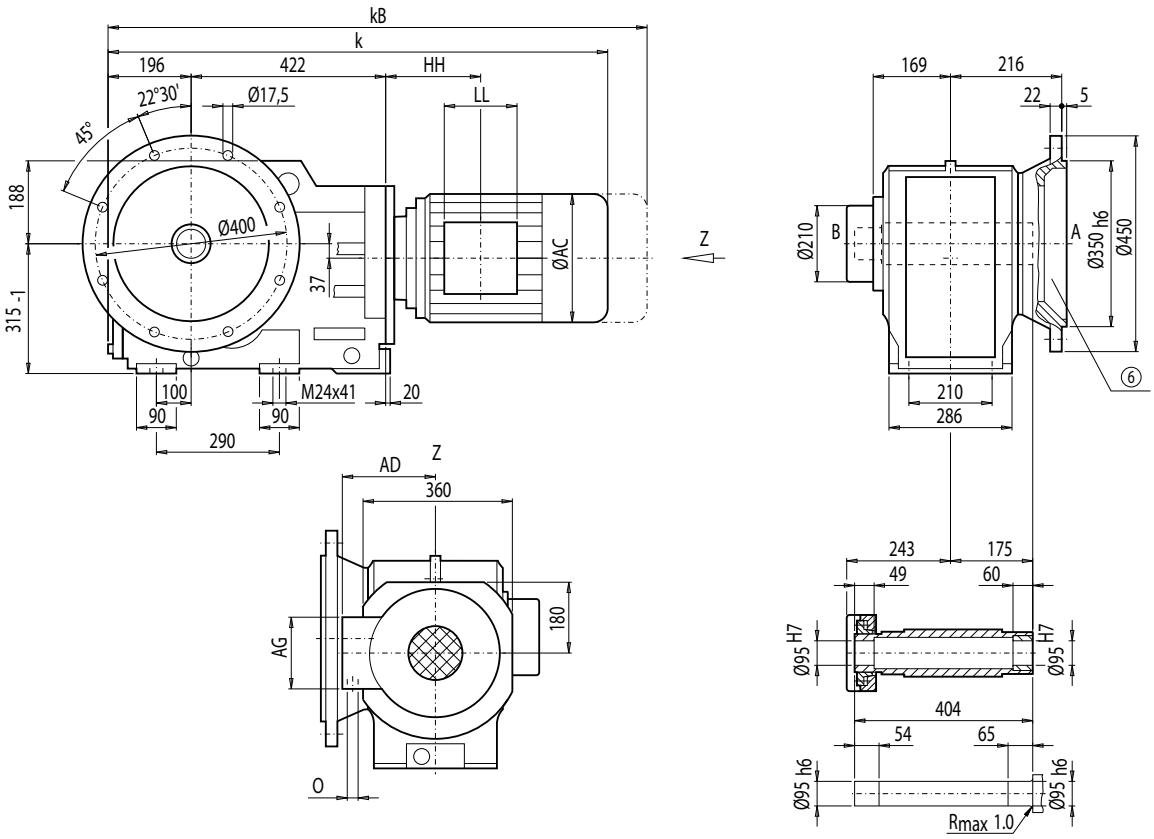

Motor	KAFS148 k	kB	AC	AD	AG	LL	HH	O	Weight KAFS148
LA100L	940.0	1 021.0	195.0	168.0	120	120	104.0	2xM32x1.5	328
LA100ZL	1 010.0	1 091.0	195.0	168.0	120	120	236.0	2xM32x1.5	338
LA112M	965.5	1 046.5	219.0	181.0	120	120	105.5	2xM32x1.5	340
LA112ZM	993.5	1 074.5	219.0	181.0	120	120	209.5	2xM32x1.5	347
LA132S/M	1 024.5	1 126.5	259.0	195.0	140	140	145.0	2xM32x1.5	349
LA132ZM	1 070.5	1 172.5	259.0	195.0	140	140	253.0	2xM32x1.5	360
LA160M/L	1 124.0	1 242.5	313.5	227.0	165	165	167.5	2xM40x1.5	388
LA160ZL	1 172.0	1 290.5	313.5	227.0	165	165	320.5	2xM40x1.5	427
LG180M/L	1 183.5	1 305.5	348.0	322.5	260	192	184.5	2xM40x1.5	479
LG180ZM/ZL	1 234.5	1 356.5	348.0	322.5	260	192	184.5	2xM40x1.5	509
LG200L	1 239.5	1 365.5	385.0	301.0	260	192	214.5	2xM50x1.5	559
LG225S	1 310.5	1 549.5	442.0	325.0	260	192	250.5	2xM50x1.5	635
LG225M	1 310.5	1 549.5	442.0	325.0	260	192	250.5	2xM50x1.5	623
LG225ZM	1 370.5	1 609.5	442.0	325.0	260	192	250.5	2xM50x1.5	681
K4-LGI250M	1 597.5	1 822.5	495.0	392.0	300	236	469.5	2xM63x1.5	803
K4-LGI250ZM	1 667.5	1 892.5	495.0	392.0	300	236	469.5	2xM63x1.5	906

⑥ For note, see page 4/217

© Siemens AG 2011

Gearbox KAZS148 (3-stage), shaft-mounted design with housing flange (C-type) and shrink disk

KAZS012

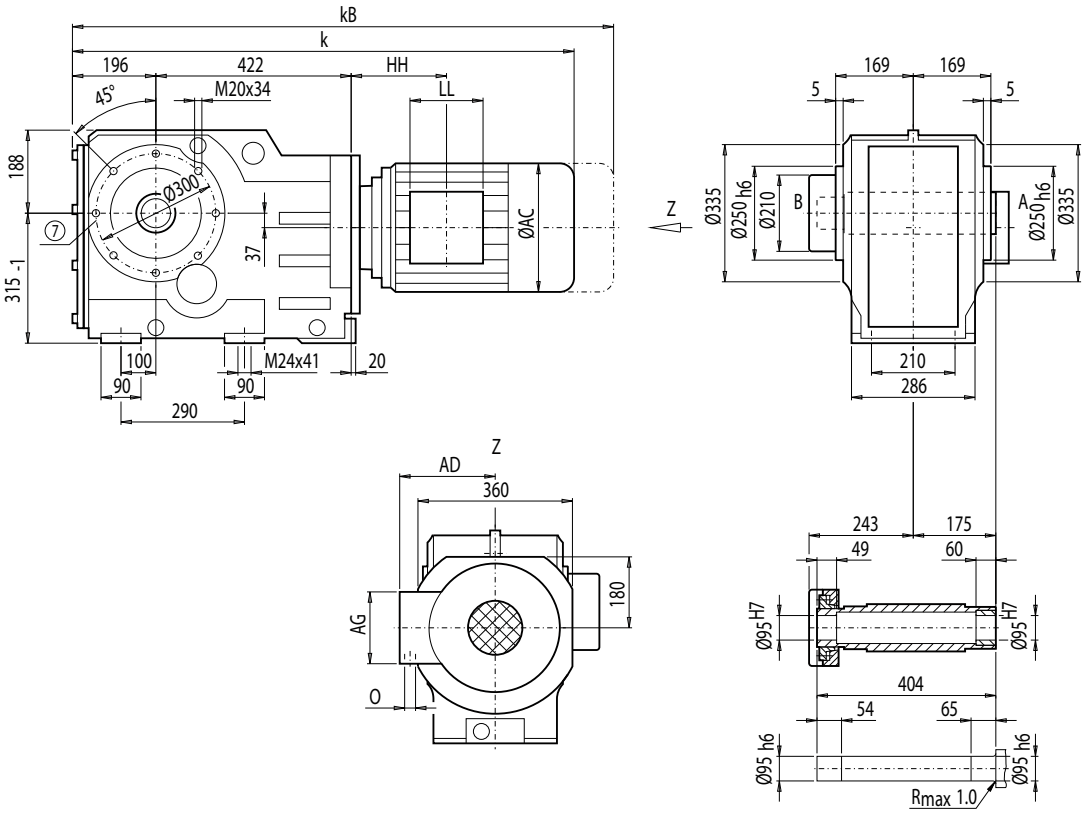

	KAZS148								Weight
Motor	k	kB	AC	AD	AG	LL	HH	O	KAZS148
LA100L	940.0	1 021.0	195.0	168.0	120	120	104.0	2xM32x1.5	309
LA100ZL	1 010.0	1 091.0	195.0	168.0	120	120	236.0	2xM32x1.5	319
LA112M	965.5	1 046.5	219.0	181.0	120	120	105.5	2xM32x1.5	321
LA112ZM	993.5	1 074.5	219.0	181.0	120	120	209.5	2xM32x1.5	328
LA132S/M	1 024.5	1 126.5	259.0	195.0	140	140	145.0	2xM32x1.5	330
LA132ZM	1 070.5	1 172.5	259.0	195.0	140	140	253.0	2xM32x1.5	351
LA160M/L	1 124.0	1 242.5	313.5	227.0	165	165	167.5	2xM40x1.5	369
LA160ZL	1 172.0	1 290.5	313.5	227.0	165	165	320.5	2xM40x1.5	408
LG180M/L	1 183.5	1 305.5	348.0	322.5	260	192	184.5	2xM40x1.5	460
LG180ZM/ZL	1 234.5	1 356.5	348.0	322.5	260	192	184.5	2xM40x1.5	490
LG200L	1 239.5	1 365.5	385.0	301.0	260	192	214.5	2xM50x1.5	540
LG225S	1 310.5	1 549.5	442.0	325.0	260	192	250.5	2xM50x1.5	616
LG225M	1 310.5	1 549.5	442.0	325.0	260	192	250.5	2xM50x1.5	604
LG225ZM	1 370.5	1 609.5	442.0	325.0	260	192	250.5	2xM50x1.5	662
K4-LGI250M	1 597.5	1 822.5	495.0	392.0	300	236	469.5	2xM63x1.5	784
K4-LGI250ZM	1 667.5	1 892.5	495.0	392.0	300	236	469.5	2xM63x1.5	887

⑦ For note, see page 4/218

© Siemens AG 2011

Dimensions

Gearbox K168 (3-stage), housing-flange-mounted design (C-type)

K012

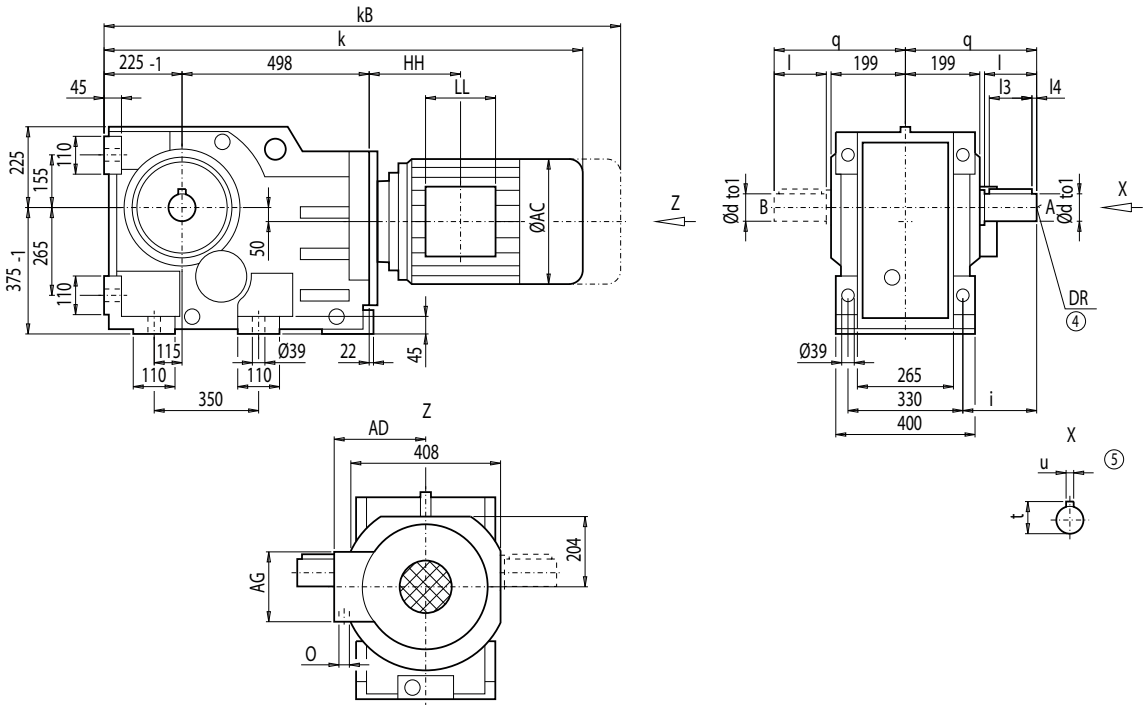

d	to1	l	l3	l4	t	u	i	q	DR
110 *)	m6	210	180	15	116	28	250	415	M24x50
120	m6	210	180	15	127	32	250	415	

*) Preferred series

	K168								Weight
Motor	**k**	**kB**	**AC**	**AD**	**AG**	**LL**	**HH**	**O**	**K168**
LA132S/M	1 121.5	1 223.5	259.0	195.0	140	140	137.0	2xM32x1.5	511
LA132ZM	1 167.5	1 269.5	259.0	195.0	140	140	245.0	2xM32x1.5	532
LA160M/L	1 221.5	1 340.0	313.5	227.0	165	165	160.0	2xM40x1.5	545
LA160ZL	1 269.5	1 388.0	313.5	227.0	165	165	313.0	2xM40x1.5	584
LG180M/L	1 281.0	1 403.0	348.0	322.5	260	192	177.0	2xM40x1.5	641
LG180ZM/ZL	1 332.0	1 454.0	348.0	322.5	260	192	177.0	2xM40x1.5	671
LG200L	1 337.0	1 463.0	385.0	301.0	260	192	207.0	2xM50x1.5	721
LG225S	1 408.0	1 647.0	442.0	325.0	260	192	243.0	2xM50x1.5	794
LG225M	1 408.0	1 647.0	442.0	325.0	260	192	243.0	2xM50x1.5	782
LG225ZM	1 468.0	1 707.0	442.0	325.0	260	192	243.0	2xM50x1.5	840
LG250M	1 501.5	1 726.5	495.0	392.0	300	236	278.5	2xM63x1.5	884
LG250ZM	1 571.5	1 797.0	495.0	392.0	300	236	278.5	2xM63x1.5	987
K4-LGI280S	1 780.5	2 007.5	555.0	432.0	300	236	489.5	2xM63x1.5	1 115
K4-LGI280M	1 780.5	2 007.5	555.0	432.0	300	236	489.5	2xM63x1.5	1 127
K4-LGI280ZM	1 890.5	2 117.5	555.0	432.0	300	236	489.5	2xM63x1.5	1 215

④ DIN 332

⑤ Feather key / keyway DIN 6885

© Siemens AG 2011

Gearbox KF168 (3-stage), flange-mounted design (A-type)

KF012

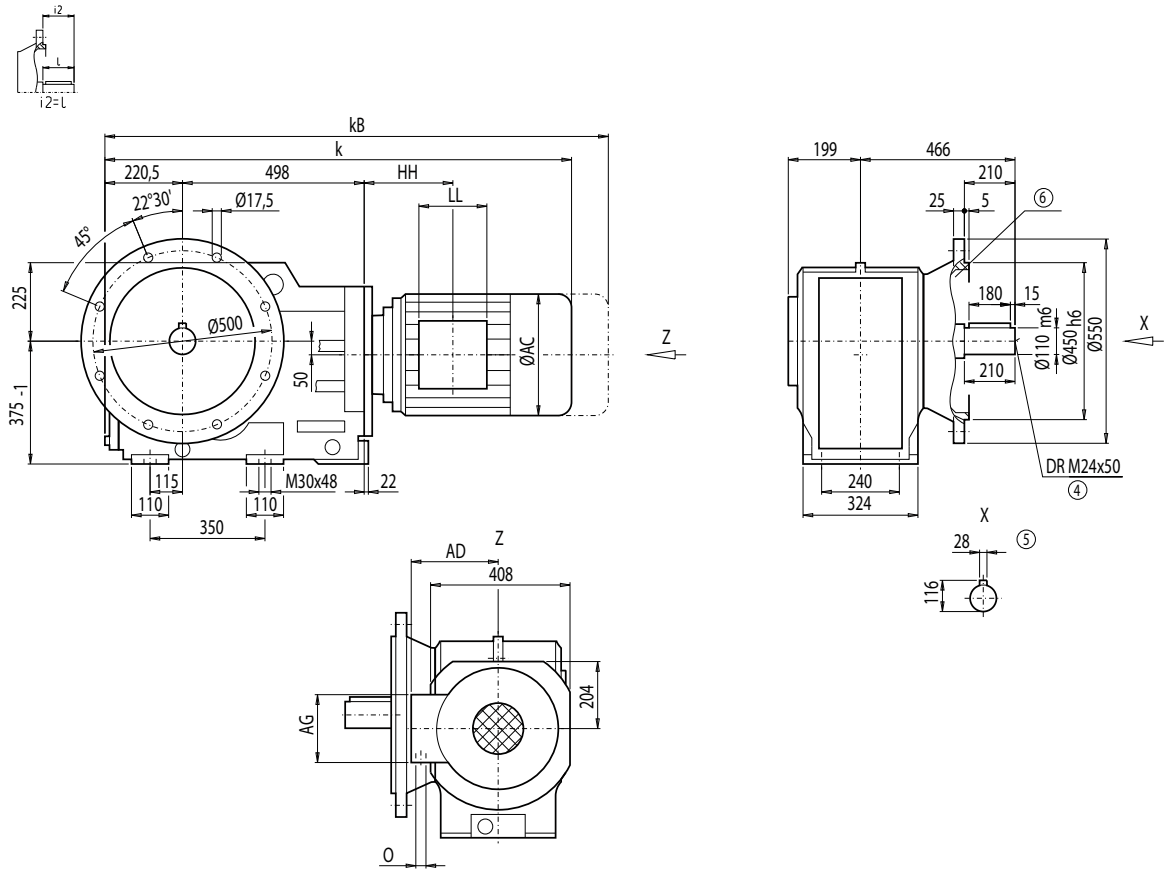

Motor	KF168 k	kB	AC	AD	AG	LL	HH	O	Weight KF168
LA132S/M	1 117.0	1 219.0	259.0	195.0	140	140	137.0	2xM32x1.5	573
LA132ZM	1 163.0	1 265.0	259.0	195.0	140	140	245.0	2xM32x1.5	594
LA160M/L	1 217.0	1 335.5	313.5	227.0	165	165	160.0	2xM40x1.5	607
LA160ZL	1 265.0	1 383.5	313.5	227.0	165	165	313.0	2xM40x1.5	646
LG180M/L	1 276.5	1 398.5	348.0	322.5	260	192	177.0	2xM40x1.5	703
LG180ZM/ZL	1 327.5	1 449.5	348.0	322.5	260	192	177.0	2xM40x1.5	733
LG200L	1 332.5	1 458.5	385.0	301.0	260	192	207.0	2xM50x1.5	783
LG225S	1 403.5	1 642.5	442.0	325.0	260	192	243.0	2xM50x1.5	856
LG225M	1 403.5	1 642.5	442.0	325.0	260	192	243.0	2xM50x1.5	845
LG225ZM	1 463.5	1 702.5	442.0	325.0	260	192	243.0	2xM50x1.5	903
LG250M	1 497.0	1 722.0	495.0	392.0	300	236	278.5	2xM63x1.5	947
LG250ZM	1 567.0	1 792.5	495.0	392.0	300	236	278.5	2xM63x1.5	1 050
K4-LGI280S	1 776.0	2 003.0	555.0	432.0	300	236	489.5	2xM63x1.5	1 180
K4-LGI280M	1 776.0	2 003.0	555.0	432.0	300	236	489.5	2xM63x1.5	1 190
K4-LGI280ZM	1 886.0	2 113.0	555.0	432.0	300	236	489.5	2xM63x1.5	1 278

④ DIN 332 ⑤ Feather key / keyway DIN 6885 ⑥ For note, see page 4/217

© Siemens AG 2011

Dimensions

Gearbox KA168 (3-stage), housing-flange-mounted design (C-type)

KA012

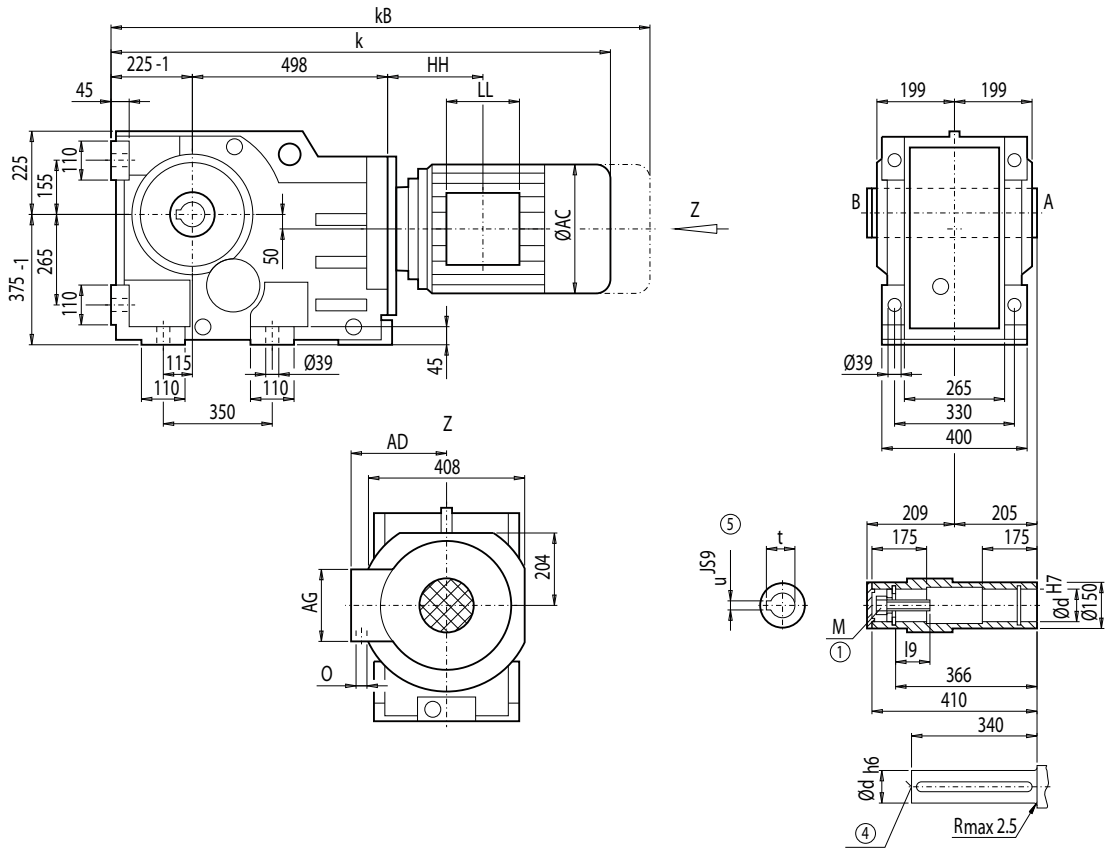

d	l9	M	t	u
100 *)	72	M24	106.4	28
110	73	M24	116.4	28

*) Preferred series

Motor	KA168 k	kB	AC	AD	AG	LL	HH	O	Weight KA168
LA132S/M	1 121.5	1 223.5	259.0	195.0	140	140	137.0	2xM32x1.5	483
LA132ZM	1 167.5	1 269.5	259.0	195.0	140	140	245.0	2xM32x1.5	504
LA160M/L	1 221.5	1 340.0	313.5	227.0	165	165	160.0	2xM40x1.5	517
LA160ZL	1 269.5	1 388.0	313.5	227.0	165	165	313.0	2xM40x1.5	556
LG180M/L	1 281.0	1 403.0	348.0	322.5	260	192	177.0	2xM40x1.5	613
LG180ZM/ZL	1 332.0	1 454.0	348.0	322.5	260	192	177.0	2xM40x1.5	643
LG200L	1 337.0	1 463.0	385.0	301.0	260	192	207.0	2xM50x1.5	693
LG225S	1 408.0	1 647.0	442.0	325.0	260	192	243.0	2xM50x1.5	766
LG225M	1 408.0	1 647.0	442.0	325.0	260	192	243.0	2xM50x1.5	754
LG225ZM	1 468.0	1 707.0	442.0	325.0	260	192	243.0	2xM50x1.5	712
LG250M	1 501.5	1 726.5	495.0	392.0	300	236	278.5	2xM63x1.5	856
LG250ZM	1 571.5	1 797.0	495.0	392.0	300	236	278.5	2xM63x1.5	959
K4-LGI280S	1 780.5	2 007.5	555.0	432.0	300	236	489.5	2xM63x1.5	1 087
K4-LGI280M	1 780.5	2 007.5	555.0	432.0	300	236	489.5	2xM63x1.5	1 099
K4-LGI280ZM	1 890.5	2 117.5	555.0	432.0	300	236	489.5	2xM63x1.5	1 187

④ DIN 332 ① DIN EN ISO 4014 ⑤ Feather key / keyway DIN 6885

© Siemens AG 2011

Gearbox KAD168 (3-stage), shaft-mounted design with torque arm

KAD012

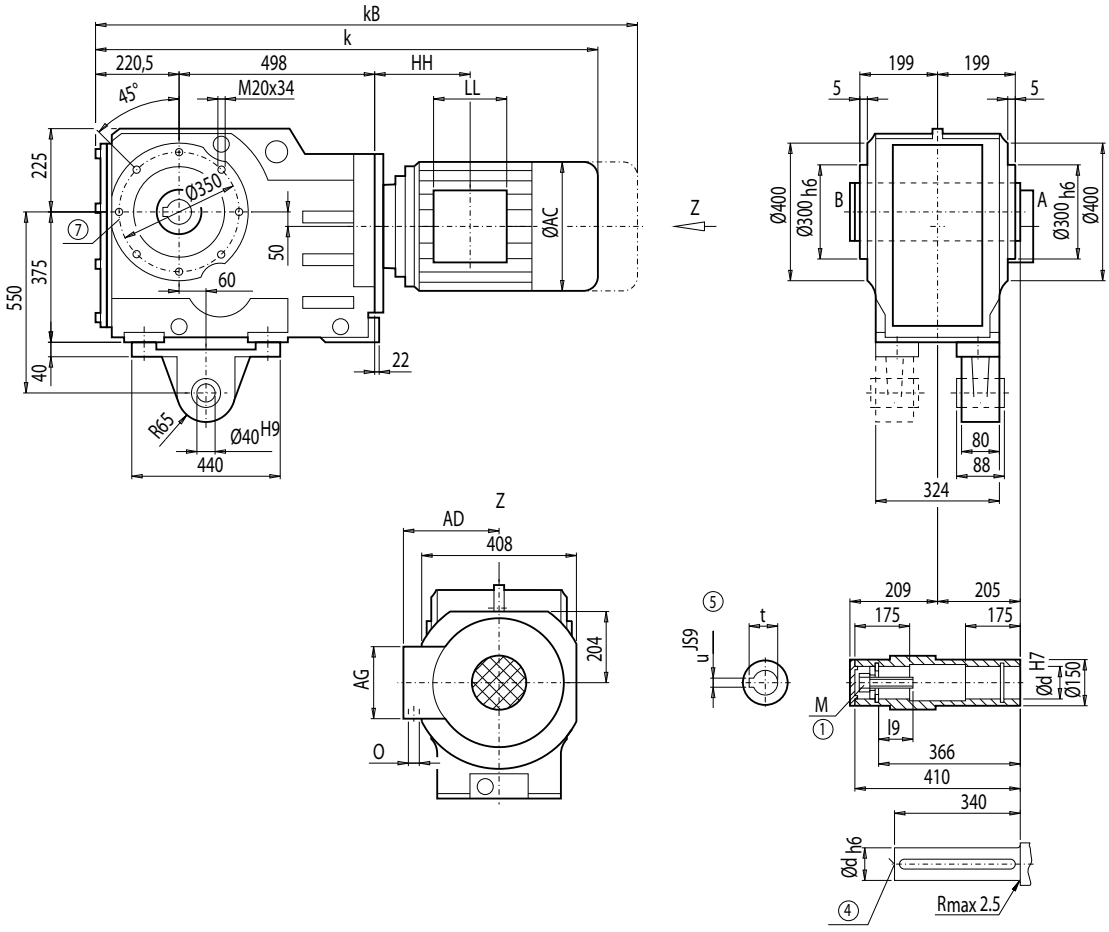

d	l9	M	t	u
100 *)	72	M24	106.4	28
110	73	M24	116.4	28

*) Preferred series

	KAD168								Weight
Motor	**k**	**kB**	**AC**	**AD**	**AG**	**LL**	**HH**	**O**	**KAD168**
LA132S/M	1 117.0	1 219.0	259.0	195.0	140	140	137.0	2xM32x1.5	519
LA132ZM	1 163.0	1 265.0	259.0	195.0	140	140	245.0	2xM32x1.5	541
LA160M/L	1 217.0	1 335.5	313.5	227.0	165	165	160.0	2xM40x1.5	553
LA160ZL	1 265.0	1 383.5	313.5	227.0	165	165	313.0	2xM40x1.5	592
LG180M/L	1 276.5	1 398.5	348.0	322.5	260	192	177.0	2xM40x1.5	649
LG180ZM/ZL	1 327.5	1 449.5	348.0	322.5	260	192	177.0	2xM40x1.5	679
LG200L	1 332.5	1 458.5	385.0	301.0	260	192	207.0	2xM50x1.5	729
LG225S	1 403.5	1 642.5	442.0	325.0	260	192	243.0	2xM50x1.5	802
LG225M	1 403.5	1 642.5	442.0	325.0	260	192	243.0	2xM50x1.5	791
LG225ZM	1 463.5	1 702.5	442.0	325.0	260	192	243.0	2xM50x1.5	851
LG250M	1 497.0	1 722.0	495.0	392.0	300	236	278.5	2xM63x1.5	893
LG250ZM	1 567.0	1 792.5	495.0	392.0	300	236	278.5	2xM63x1.5	996
K4-LGI280S	1 776.0	2 003.0	555.0	432.0	300	236	489.5	2xM63x1.5	1 126
K4-LGI280M	1 776.0	2 003.0	555.0	432.0	300	236	489.5	2xM63x1.5	1 136
K4-LGI280ZM	1 886.0	2 113.0	555.0	432.0	300	236	489.5	2xM63x1.5	1 224

④ DIN 332 ① DIN EN ISO 4014 ⑤ Feather key / keyway DIN 6885 ⑦ For note, see page 4/218

© Siemens AG 2011

Dimensions

Gearbox KAF168 (3-stage), flange-mounted design

KAF012

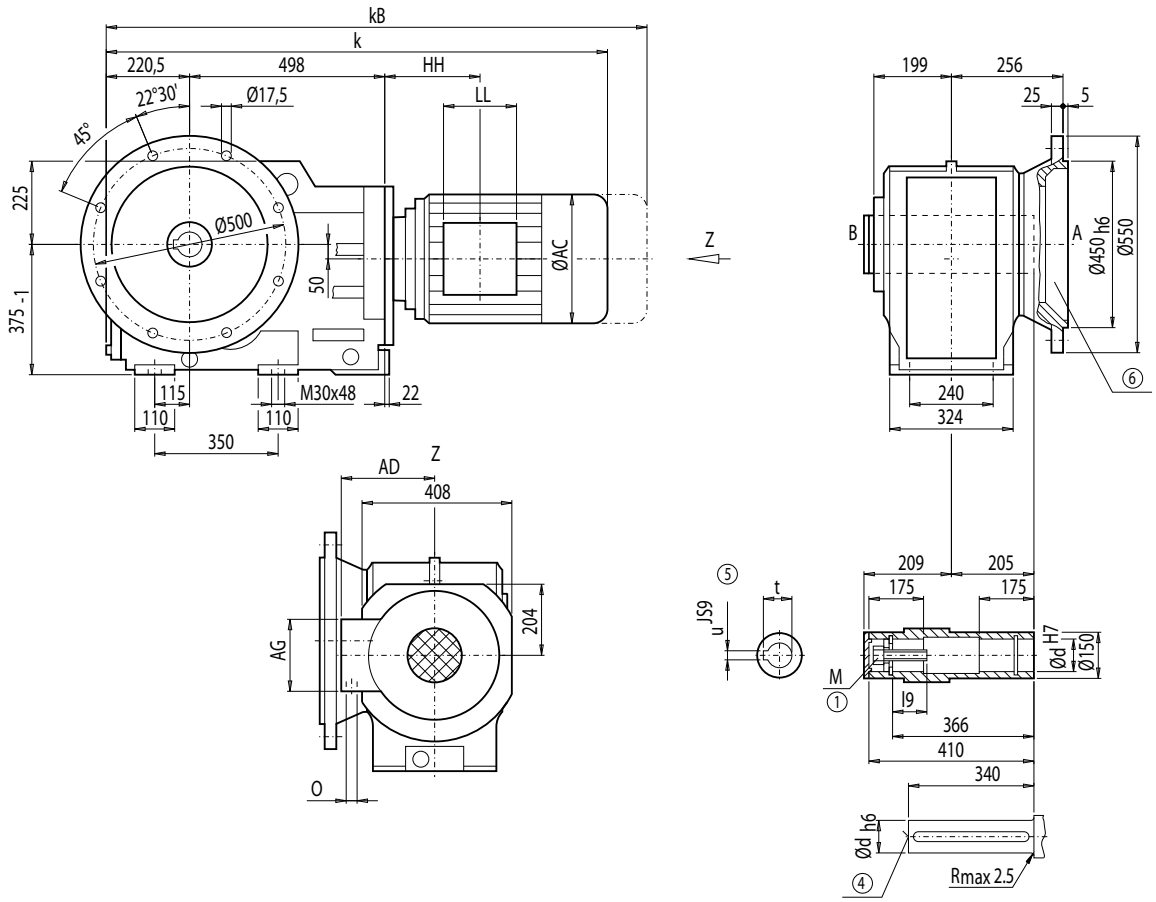

d	l9	M	t	u
100 *)	72	M24	106.4	28
110	73	M24	116.4	28

*) Preferred series

Motor	KAF168 k	kB	AC	AD	AG	LL	HH	O	Weight KAF168
LA132S/M	1 117.0	1 219.0	259.0	195.0	140	140	137.0	2xM32x1.5	528
LA132ZM	1 163.0	1 265.0	259.0	195.0	140	140	245.0	2xM32x1.5	549
LA160M/L	1 217.0	1 335.5	313.5	227.0	165	165	160.0	2xM40x1.5	562
LA160ZL	1 265.0	1 383.5	313.5	227.0	165	165	313.0	2xM40x1.5	601
LG180M/L	1 276.5	1 398.5	348.0	322.5	260	192	177.0	2xM40x1.5	658
LG180ZM/ZL	1 327.5	1 449.5	348.0	322.5	260	192	177.0	2xM40x1.5	688
LG200L	1 332.5	1 458.5	385.0	301.0	260	192	207.0	2xM50x1.5	738
LG225S	1 403.5	1 642.5	442.0	325.0	260	192	243.0	2xM50x1.5	811
LG225M	1 403.5	1 642.5	442.0	325.0	260	192	243.0	2xM50x1.5	800
LG225ZM	1 463.5	1 702.5	442.0	325.0	260	192	243.0	2xM50x1.5	858
LG250M	1 497.0	1 722.0	495.0	392.0	300	236	278.5	2xM63x1.5	902
LG250ZM	1 567.0	1 792.5	495.0	392.0	300	236	278.5	2xM63x1.5	1 005
K4-LGI280S	1 776.0	2 003.0	555.0	432.0	300	236	489.5	2xM63x1.5	1 135
K4-LGI280M	1 776.0	2 003.0	555.0	432.0	300	236	489.5	2xM63x1.5	1 145
K4-LGI280ZM	1 886.0	2 113.0	555.0	432.0	300	236	489.5	2xM63x1.5	1 233

④ DIN 332 ① DIN EN ISO 4014 ⑤ Feather key / keyway DIN 6885 ⑥ For note, see page 4/217

© Siemens AG 2011

Gearbox KAZ168 (3-stage), shaft-mounted design with housing flange (C-type)

KAZ012

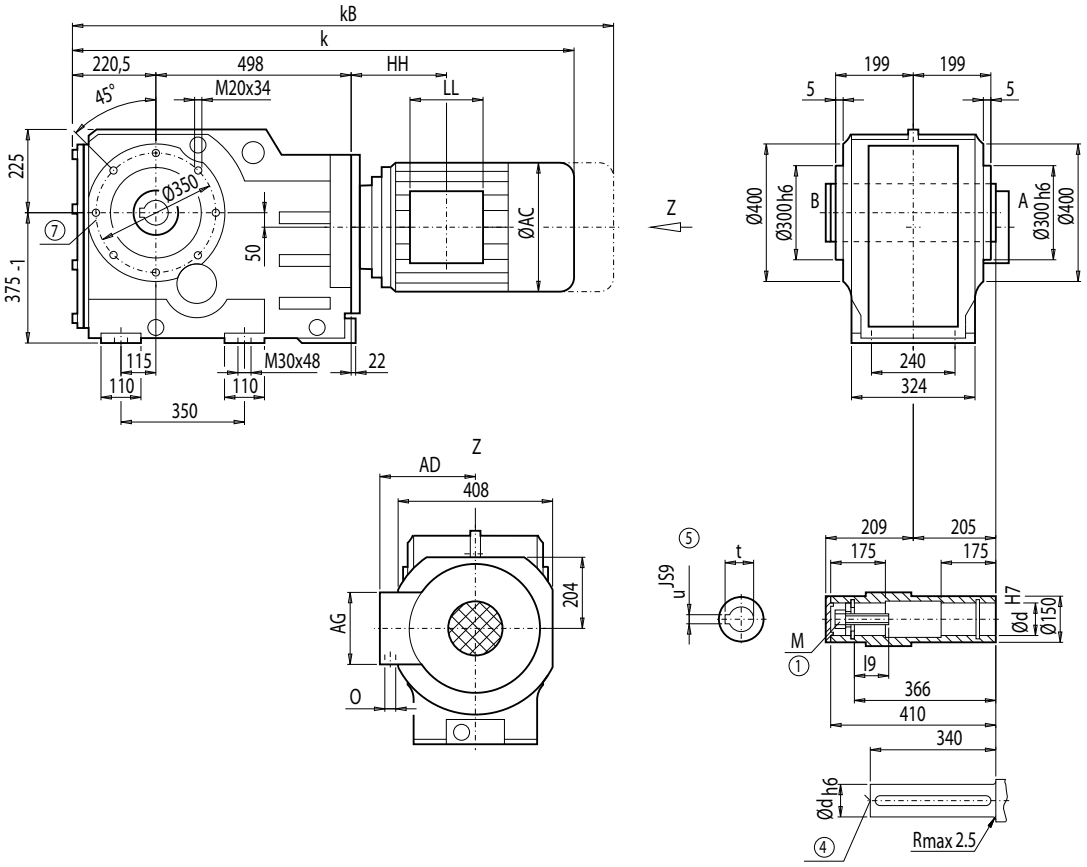

d	l9	M	t	u
100 *)	72	M24	106.4	28
110	73	M24	116.4	28

*) Preferred series

Motor	KAZ168 k	kB	AC	AD	AG	LL	HH	O	Weight KAZ168
LA132S/M	1 117.0	1 219.0	259.0	195.0	140	140	137.0	2xM32x1.5	496
LA132ZM	1 163.0	1 265.0	259.0	195.0	140	140	245.0	2xM32x1.5	517
LA160M/L	1 217.0	1 335.5	313.5	227.0	165	165	160.0	2xM40x1.5	530
LA160ZL	1 265.0	1 383.5	313.5	227.0	165	165	313.0	2xM40x1.5	569
LG180M/L	1 276.5	1 398.5	348.0	322.5	260	192	177.0	2xM40x1.5	625
LG180ZM/ZL	1 327.5	1 449.5	348.0	322.5	260	192	177.0	2xM40x1.5	655
LG200L	1 332.5	1 458.5	385.0	301.0	260	192	207.0	2xM50x1.5	705
LG225S	1 403.5	1 642.5	442.0	325.0	260	192	243.0	2xM50x1.5	778
LG225M	1 403.5	1 642.5	442.0	325.0	260	192	243.0	2xM50x1.5	767
LG225ZM	1 463.5	1 702.5	442.0	325.0	260	192	243.0	2xM50x1.5	825
LG250M	1 497.0	1 722.0	495.0	392.0	300	236	278.5	2xM63x1.5	869
LG250ZM	1 567.0	1 792.5	495.0	392.0	300	236	278.5	2xM63x1.5	972
K4-LGI280S	1 776.0	2 003.0	555.0	432.0	300	236	489.5	2xM63x1.5	1 102
K4-LGI280M	1 776.0	2 003.0	555.0	432.0	300	236	489.5	2xM63x1.5	1 112
K4-LGI280ZM	1 886.0	2 113.0	555.0	432.0	300	236	489.5	2xM63x1.5	1 200

④ DIN 332 ① DIN EN ISO 4014 ⑤ Feather key / keyway DIN 6885 ⑦ For note, see page 4/218

© Siemens AG 2011

Dimensions

Gearbox KAS168 (3-stage), shaft-mounted design with shrink disk

KAS012

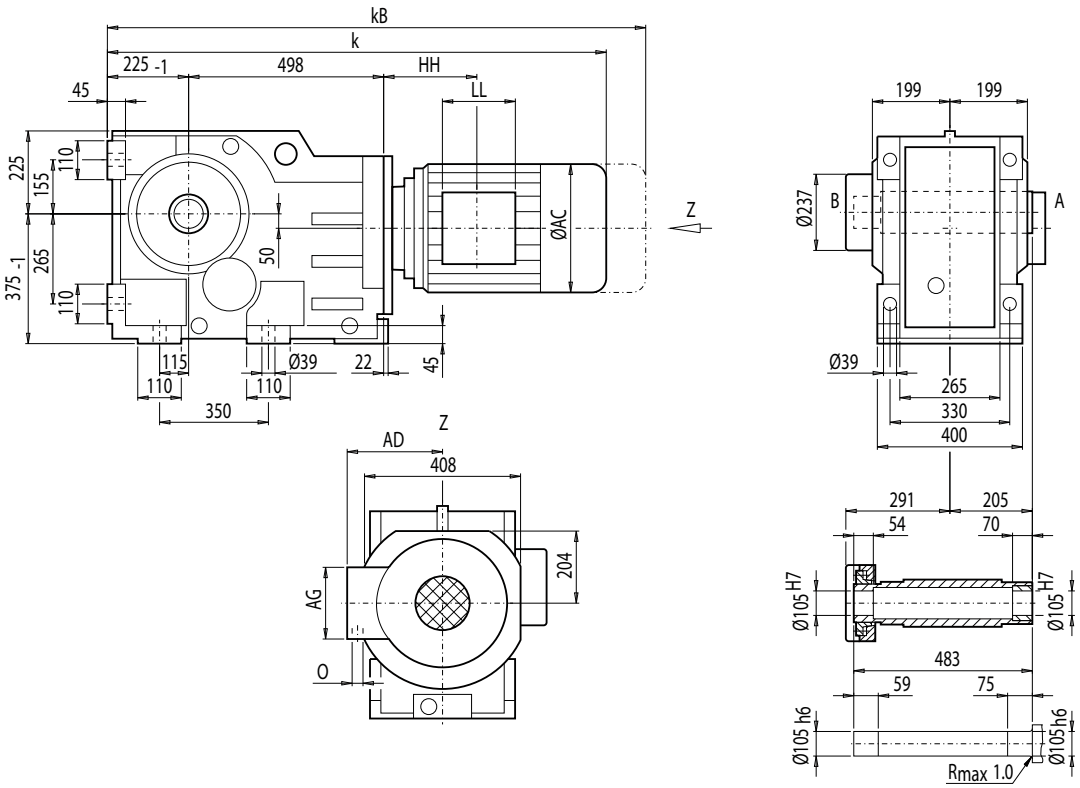

Motor	KAS168 k	kB	AC	AD	AG	LL	HH	O	Weight KAS168
LA132S/M	1 121.5	1 223.5	259.0	195.0	140	140	137.0	2xM32x1.5	493
LA132ZM	1 167.5	1 269.5	259.0	195.0	140	140	245.0	2xM32x1.5	515
LA160M/L	1 221.5	1 340.0	313.5	227.0	165	165	160.0	2xM40x1.5	527
LA160ZL	1 269.5	1 388.0	313.5	227.0	165	165	313.0	2xM40x1.5	566
LG180M/L	1 281.0	1 403.0	348.0	322.5	260	192	177.0	2xM40x1.5	623
LG180ZM/ZL	1 332.0	1 454.0	348.0	322.5	260	192	177.0	2xM40x1.5	653
LG200L	1 337.0	1 463.0	385.0	301.0	260	192	207.0	2xM50x1.5	703
LG225S	1 408.0	1 647.0	442.0	325.0	260	192	243.0	2xM50x1.5	776
LG225M	1 408.0	1 647.0	442.0	325.0	260	192	243.0	2xM50x1.5	764
LG225ZM	1 468.0	1 707.0	442.0	325.0	260	192	243.0	2xM50x1.5	822
LG250M	1 501.5	1 726.5	495.0	392.0	300	236	278.5	2xM63x1.5	866
LG250ZM	1 571.5	1 797.0	495.0	392.0	300	236	278.5	2xM63x1.5	969
K4-LGI280S	1 780.5	2 007.5	555.0	432.0	300	236	489.5	2xM63x1.5	1 097
K4-LGI280M	1 780.5	2 007.5	555.0	432.0	300	236	489.5	2xM63x1.5	1 109
K4-LGI280ZM	1 890.5	2 117.5	555.0	432.0	300	236	489.5	2xM63x1.5	1 197

© Siemens AG 2011

Gearbox KADS168 (3-stage), shaft-mounted design with torque arm and shrink disk

KADS012

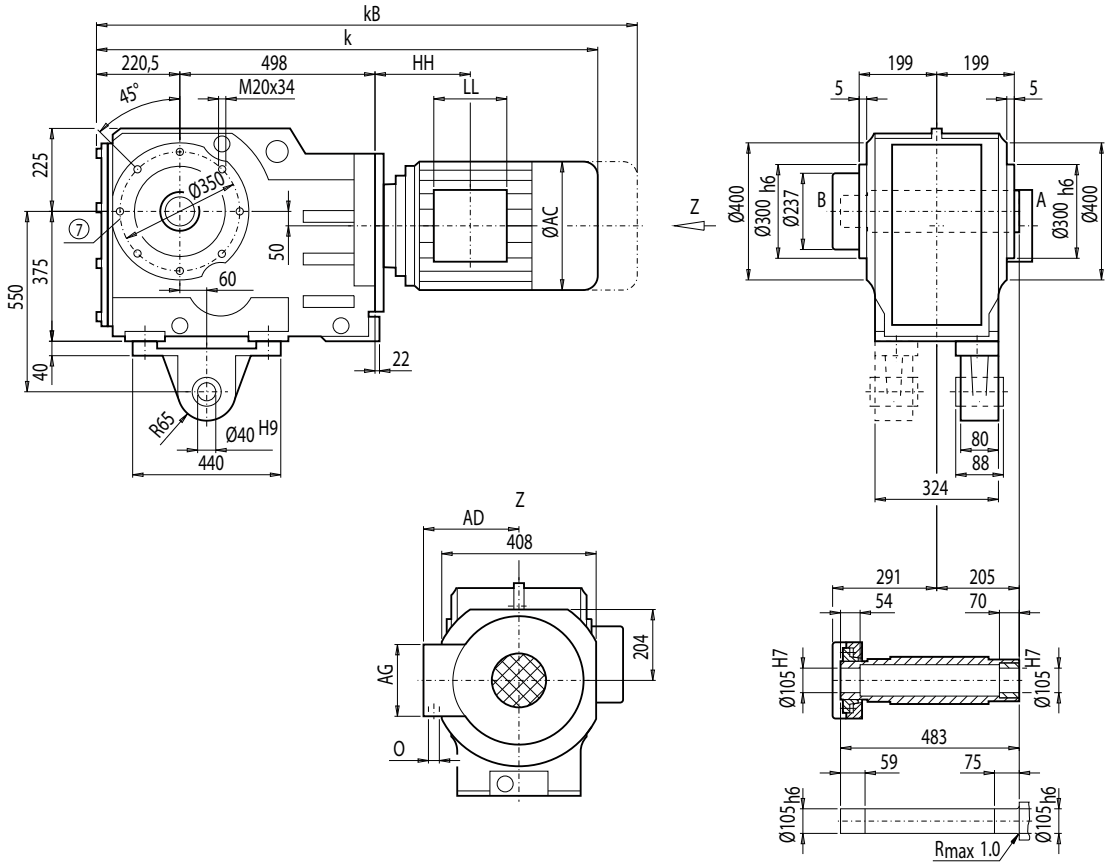

Motor	KADS168 k	kB	AC	AD	AG	LL	HH	O	Weight KADS168
LA132S/M	1 117.0	1 219.0	259.0	195.0	140	140	137.0	2xM32x1.5	530
LA132ZM	1 163.0	1 265.0	259.0	195.0	140	140	245.0	2xM32x1.5	551
LA160M/L	1 217.0	1 335.5	313.5	227.0	165	165	160.0	2xM40x1.5	564
LA160ZL	1 265.0	1 383.5	313.5	227.0	165	165	313.0	2xM40x1.5	603
LG180M/L	1 276.5	1 398.5	348.0	322.5	260	192	177.0	2xM40x1.5	659
LG180ZM/ZL	1 327.5	1 449.5	348.0	322.5	260	192	177.0	2xM40x1.5	689
LG200L	1 332.5	1 458.5	385.0	301.0	260	192	207.0	2xM50x1.5	739
LG225S	1 403.5	1 642.5	442.0	325.0	260	192	243.0	2xM50x1.5	812
LG225M	1 403.5	1 642.5	442.0	325.0	260	192	243.0	2xM50x1.5	801
LG225ZM	1 463.5	1 702.5	442.0	325.0	260	192	243.0	2xM50x1.5	859
LG250M	1 497.0	1 722.0	495.0	392.0	300	236	278.5	2xM63x1.5	903
LG250ZM	1 567.0	1 792.5	495.0	392.0	300	236	278.5	2xM63x1.5	1 006
K4-LGI280S	1 776.0	2 003.0	555.0	432.0	300	236	489.5	2xM63x1.5	1 136
K4-LGI280M	1 776.0	2 003.0	555.0	432.0	300	236	489.5	2xM63x1.5	1 146
K4-LGI280ZM	1 886.0	2 113.0	555.0	432.0	300	236	489.5	2xM63x1.5	1 234

⑦ For note, see page 4/218

© Siemens AG 2011

Dimensions

Gearbox KAFS168 (3-stage), flange-mounted design and shrink disk

KAFS012

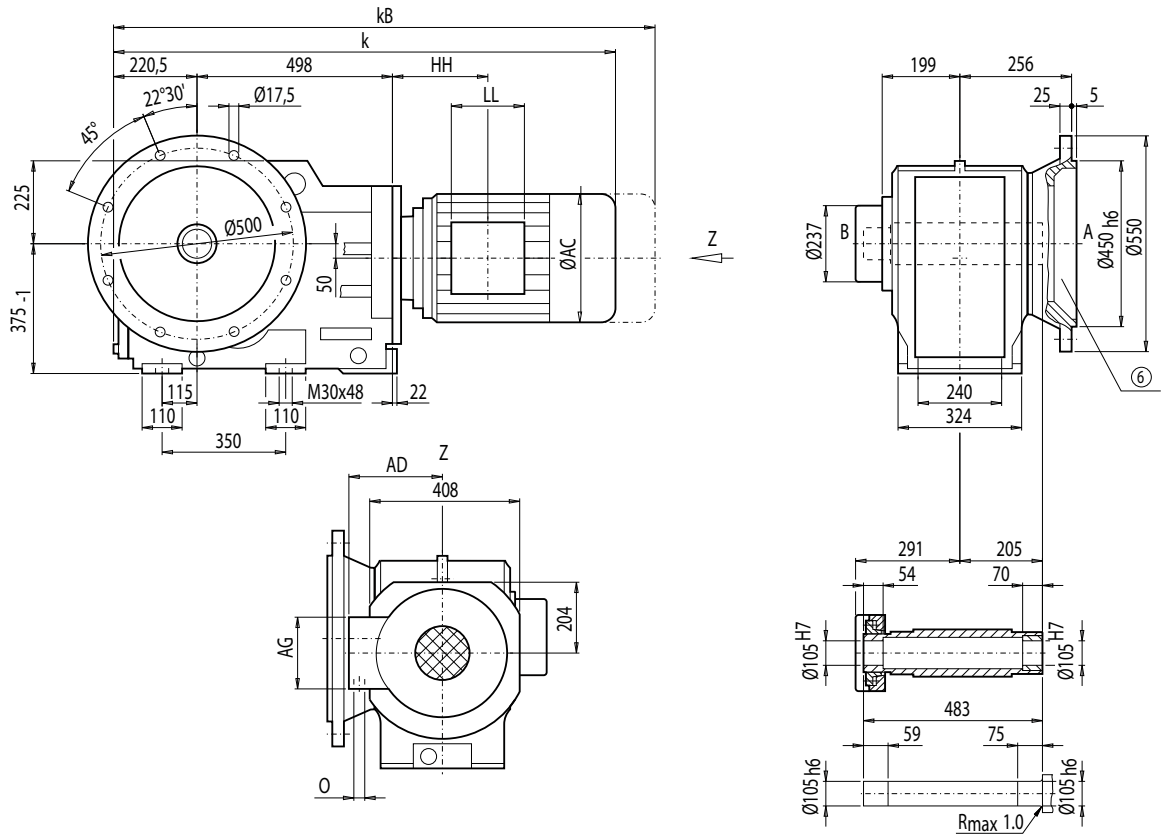

Motor	KAFS168 k	kB	AC	AD	AG	LL	HH	O	Weight KAFS168
LA132S/M	1 117.0	1 219.0	259.0	195.0	140	140	137.0	2xM32x1.5	538
LA132ZM	1 163.0	1 265.0	259.0	195.0	140	140	245.0	2xM32x1.5	560
LA160M/L	1 217.0	1 335.5	313.5	227.0	165	165	160.0	2xM40x1.5	572
LA160ZL	1 265.0	1 383.5	313.5	227.0	165	165	313.0	2xM40x1.5	611
LG180M/L	1 276.5	1 398.5	348.0	322.5	260	192	177.0	2xM40x1.5	668
LG180ZM/ZL	1 327.5	1 449.5	348.0	322.5	260	192	177.0	2xM40x1.5	698
LG200L	1 332.5	1 458.5	385.0	301.0	260	192	207.0	2xM50x1.5	748
LG225S	1 403.5	1 642.5	442.0	325.0	260	192	243.0	2xM50x1.5	821
LG225M	1 403.5	1 642.5	442.0	325.0	260	192	243.0	2xM50x1.5	810
LG225ZM	1 463.5	1 702.5	442.0	325.0	260	192	243.0	2xM50x1.5	868
LG250M	1 497.0	1 722.0	495.0	392.0	300	236	278.5	2xM63x1.5	912
LG250ZM	1 567.0	1 792.5	495.0	392.0	300	236	278.5	2xM63x1.5	1 015
K4-LGI280S	1 776.0	2 003.0	555.0	432.0	300	236	489.5	2xM63x1.5	1 145
K4-LGI280M	1 776.0	2 003.0	555.0	432.0	300	236	489.5	2xM63x1.5	1 155
K4-LGI280ZM	1 886.0	2 113.0	555.0	432.0	300	236	489.5	2xM63x1.5	1 243

⑥ For note, see page 4/217

© Siemens AG 2011

Gearbox KAZS168 (3-stage), shaft-mounted design with housing flange (C-type) and shrink disk

KAZS012

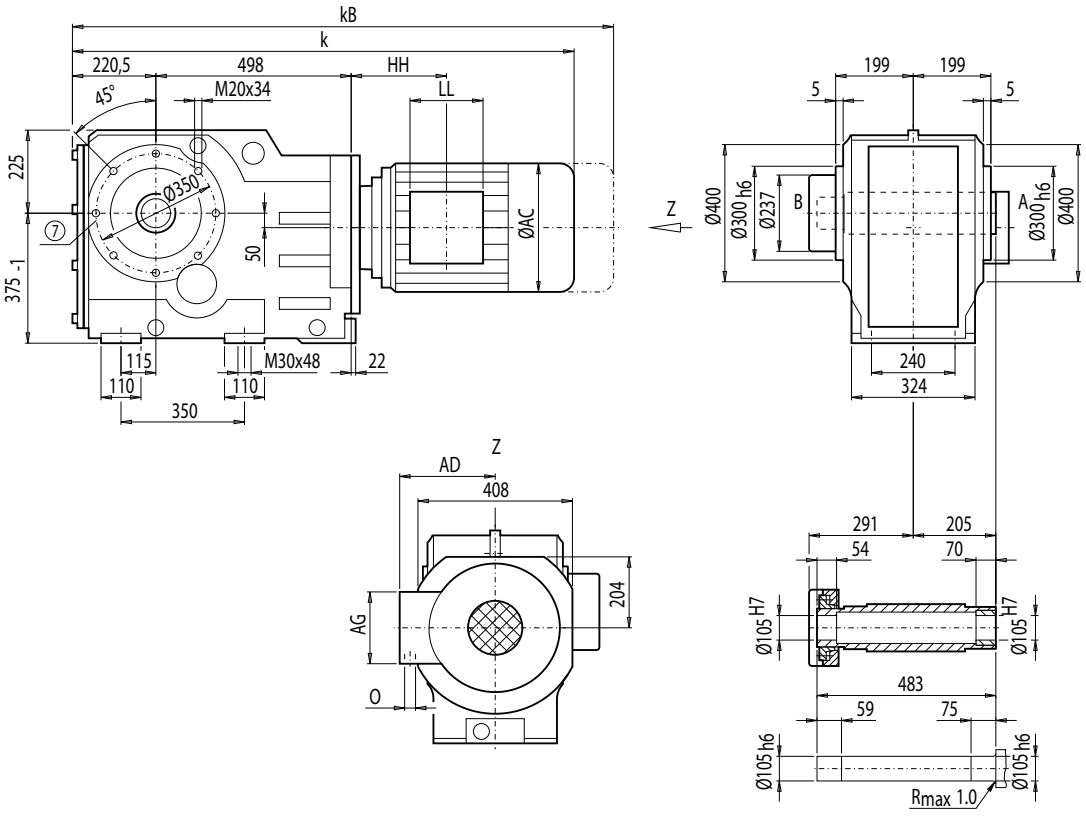

Motor	KAZS168 k	kB	AC	AD	AG	LL	HH	O	Weight KAZS168
LA132S/M	1 117.0	1 219.0	259.0	195.0	140	140	137.0	2xM32x1.5	506
LA132ZM	1 163.0	1 265.0	259.0	195.0	140	140	245.0	2xM32x1.5	527
LA160M/L	1 217.0	1 335.5	313.5	227.0	165	165	160.0	2xM40x1.5	540
LA160ZL	1 265.0	1 383.5	313.5	227.0	165	165	313.0	2xM40x1.5	579
LG180M/L	1 276.5	1 398.5	348.0	322.5	260	192	177.0	2xM40x1.5	636
LG180ZM/ZL	1 327.5	1 449.5	348.0	322.5	260	192	177.0	2xM40x1.5	666
LG200L	1 332.5	1 458.5	385.0	301.0	260	192	207.0	2xM50x1.5	716
LG225S	1 403.5	1 642.5	442.0	325.0	260	192	243.0	2xM50x1.5	789
LG225M	1 403.5	1 642.5	442.0	325.0	260	192	243.0	2xM50x1.5	778
LG225ZM	1 463.5	1 702.5	442.0	325.0	260	192	243.0	2xM50x1.5	836
LG250M	1 497.0	1 722.0	495.0	392.0	300	236	278.5	2xM63x1.5	880
LG250ZM	1 567.0	1 792.5	495.0	392.0	300	236	278.5	2xM63x1.5	983
K4-LGI280S	1 776.0	2 003.0	555.0	432.0	300	236	489.5	2xM63x1.5	1 113
K4-LGI280M	1 776.0	2 003.0	555.0	432.0	300	236	489.5	2xM63x1.5	1 123
K4-LGI280ZM	1 886.0	2 113.0	555.0	432.0	300	236	489.5	2xM63x1.5	1 211

⑦ For note, see page 4/218

© Siemens AG 2011

Dimensions

Gearbox K188 (3-stage), housing-flange-mounted design (C-type)

K012

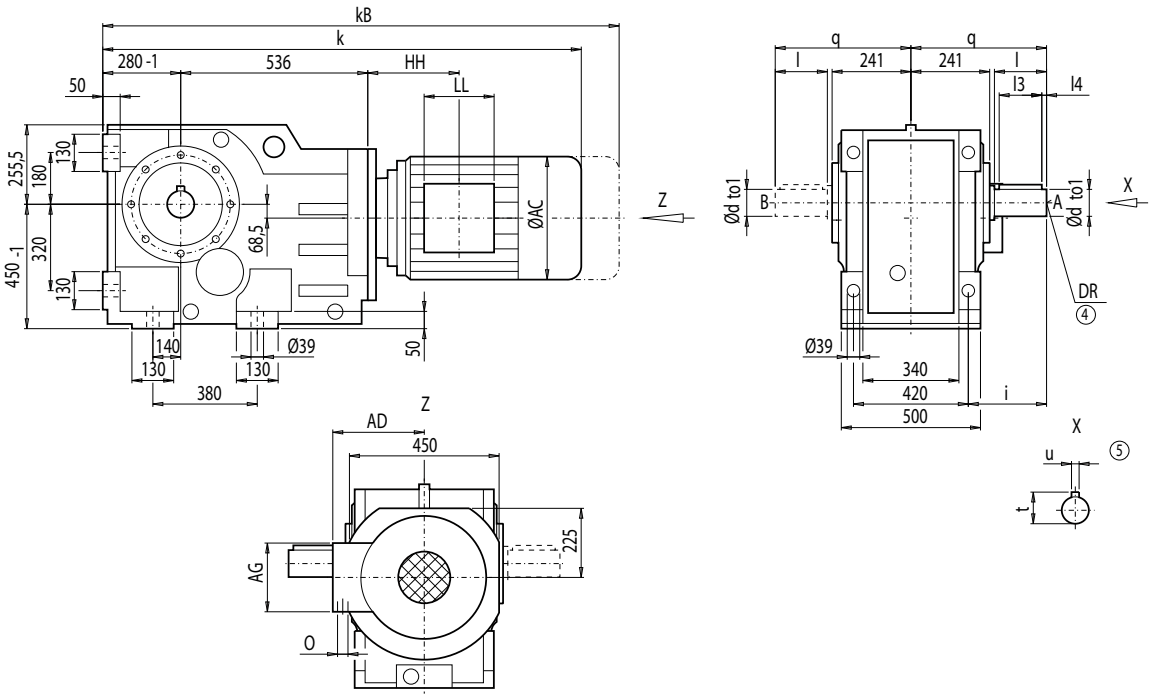

d	to1	l	l3	l4	t	u	i	q	DR
120 *)	m6	210	180	15	127	32	250	460	M24x50
140	m6	250	220	10	148	36	290	500	

*) Preferred series

	K188								Weight
Motor	**k**	**kB**	**AC**	**AD**	**AG**	**LL**	**HH**	**O**	**K188**
LA132S/M	1 200.0	1 302.0	259.0	195.0	140	140	122.5	2xM32x1.5	777
LA132ZM	1 246.0	1 348.0	259.0	195.0	140	140	230.5	2xM32x1.5	799
LA160M/L	1 300.0	1 418.5	313.5	227.0	165	165	145.5	2xM40x1.5	811
LA160ZL	1 348.0	1 466.5	313.5	227.0	165	165	298.5	2xM40x1.5	850
LG180M/L	1 359.5	1 481.5	348.0	322.5	260	192	162.5	2xM40x1.5	907
LG180ZM/ZL	1 410.5	1 532.5	348.0	322.5	260	192	162.5	2xM40x1.5	937
LG200L	1 415.5	1 541.5	385.0	301.0	260	192	192.5	2xM50x1.5	987
LG225S	1 486.5	1 725.5	442.0	325.0	260	192	228.5	2xM50x1.5	1 059
LG225M	1 486.5	1 725.5	442.0	325.0	260	192	228.5	2xM50x1.5	1 047
LG225ZM	1 546.5	1 785.5	442.0	325.0	260	192	228.5	2xM50x1.5	1 105
LG250M	1 580.0	1 805.0	495.0	392.0	300	236	264.0	2xM63x1.5	1 149
LG250ZM	1 650.0	1 875.5	495.0	392.0	300	236	264.0	2xM63x1.5	1 252
K4-LGI280S	1 859.5	2 086.5	555.0	432.0	300	236	475.5	2xM63x1.5	1 278
K4-LGI280M	1 859.5	2 086.5	555.0	432.0	300	236	475.5	2xM63x1.5	1 384
K4-LGI280ZM	1 969.5	2 196.5	555.0	432.0	300	236	475.5	2xM63x1.5	1 472
K2-LGI315S/M	2 047.5	2 312.5	610.0	500.0	380	307	584.5	2xM63x1.5	1 513
K2-LGI315ZM	2 207.5	2 472.5	610.0	500.0	380	307	584.5	2xM63x1.5	1 668
K2-LGI315L	2 207.5	2 472.5	610.0	500.0	380	307	584.5	2xM63x1.5	1 808
K2-LGI315ZL	2 347.5	2 612.5	610.0	500.0	380	307	584.5	2xM63x1.5	2 008

④ DIN 332

⑤ Feather key / keyway DIN 6885

© Siemens AG 2011

Gearbox KF188 (3-stage), flange-mounted design (A-type)

KF012

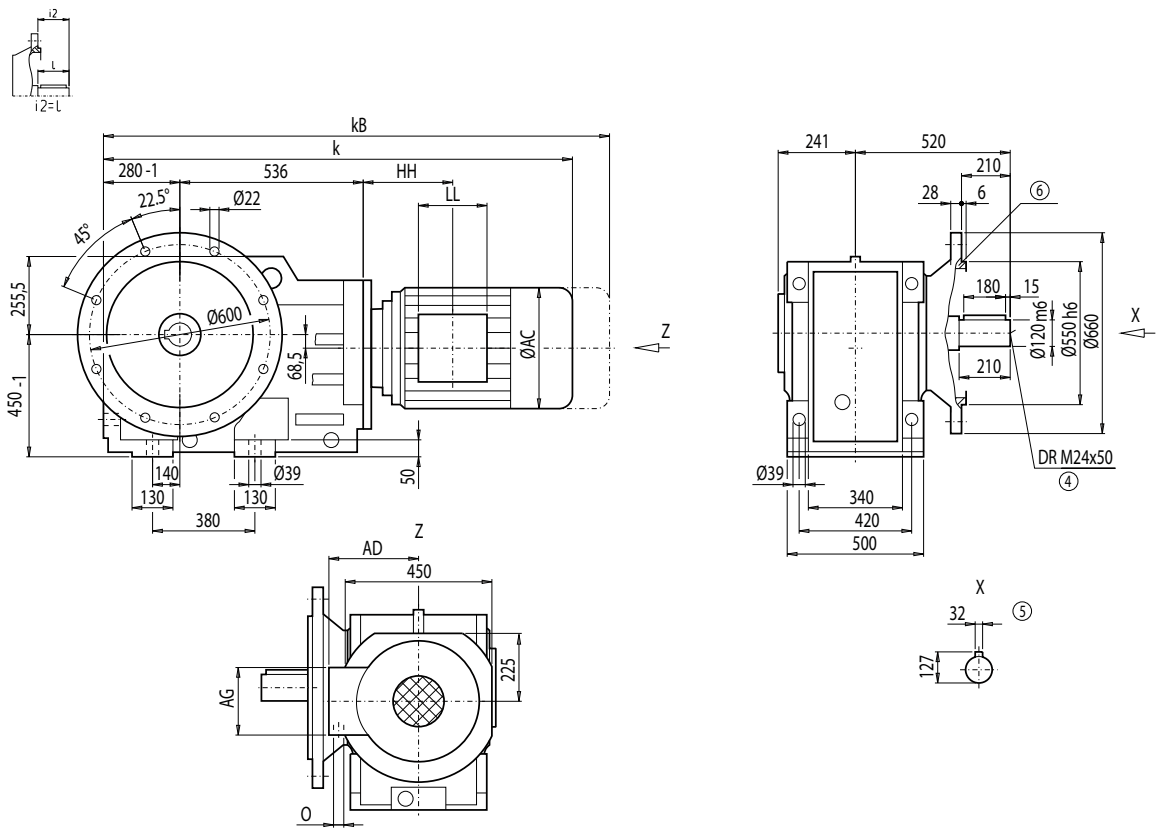

Motor	KF188 k	kB	AC	AD	AG	LL	HH	O	Weight KF188
LA132S/M	1 200.0	1 302.0	259.0	195.0	140	140	122.5	2xM32x1.5	832
LA132ZM	1 246.0	1 348.0	259.0	195.0	140	140	230.5	2xM32x1.5	853
LA160M/L	1 300.0	1 418.5	313.5	227.0	165	165	145.5	2xM40x1.5	866
LA160ZL	1 348.0	1 466.5	313.5	227.0	165	165	298.5	2xM40x1.5	905
LG180M/L	1 359.5	1 481.5	348.0	322.5	260	192	162.5	2xM40x1.5	961
LG180ZM/ZL	1 410.5	1 532.5	348.0	322.5	260	192	162.5	2xM40x1.5	991
LG200L	1 415.5	1 541.5	385.0	301.0	260	192	192.5	2xM50x1.5	1 041
LG225S	1 486.5	1 725.5	442.0	325.0	260	192	228.5	2xM50x1.5	1 113
LG225M	1 486.5	1 725.5	442.0	325.0	260	192	228.5	2xM50x1.5	1 101
LG225ZM	1 546.5	1 785.5	442.0	325.0	260	192	228.5	2xM50x1.5	1 159
LG250M	1 580.0	1 805.0	495.0	392.0	300	236	264.0	2xM63x1.5	1 203
LG250ZM	1 650.0	1 875.5	495.0	392.0	300	236	264.0	2xM63x1.5	1 306
K4-LG280S	1 859.5	2 086.5	555.0	432.0	300	236	475.5	2xM63x1.5	1 332
K4-LG280M	1 859.5	2 086.5	555.0	432.0	300	236	475.5	2xM63x1.5	1 438
K4-LG280ZM	1 969.5	2 196.5	555.0	432.0	300	236	475.5	2xM63x1.5	1 526
K2-LGI315S/M	2 047.5	2 312.5	610.0	500.0	380	307	584.5	2xM63x1.5	1 567
K2-LGI315ZM	2 207.5	2 472.5	610.0	500.0	380	307	584.5	2xM63x1.5	1 722
K4-LG315L	2 207.5	2 472.5	610.0	500.0	380	307	584.5	2xM63x1.5	1 862
K4-LG315ZL	2 347.5	2 612.5	610.0	500.0	380	307	584.5	2xM63x1.5	2 062

④ DIN 332 ⑤ Feather key / keyway DIN 6885 ⑥ For note, see page 4/217

© Siemens AG 2011

Dimensions

Gearbox KA188 (3-stage), housing-flange-mounted design (C-type)

KA012

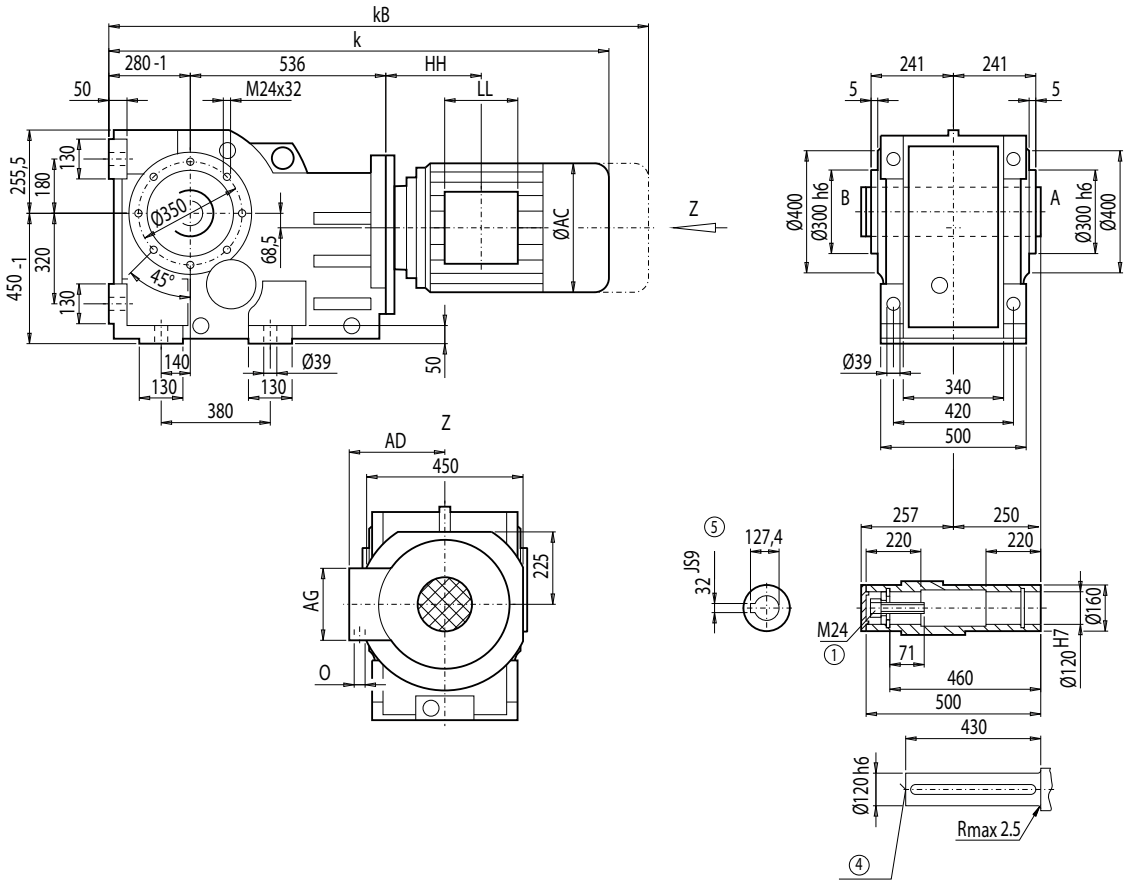

Motor	KA188 k	kB	AC	AD	AG	LL	HH	O	Weight KA188
LA132S/M	1 200.0	1 302.0	259.0	195.0	140	140	122.5	2xM32x1.5	674
LA132ZM	1 246.0	1 348.0	259.0	195.0	140	140	230.5	2xM32x1.5	695
LA160M/L	1 300.0	1 418.5	313.5	227.0	165	165	145.5	2xM40x1.5	707
LA160ZL	1 348.0	1 466.5	313.5	227.0	165	165	298.5	2xM40x1.5	746
LG180M/L	1 359.5	1 481.5	348.0	322.5	260	192	162.5	2xM40x1.5	803
LG180ZM/ZL	1 410.5	1 532.5	348.0	322.5	260	192	162.5	2xM40x1.5	833
LG200L	1 415.5	1 541.5	385.0	301.0	260	192	192.5	2xM50x1.5	883
LG225S	1 486.5	1 725.5	442.0	325.0	260	192	228.5	2xM50x1.5	955
LG225M	1 486.5	1 725.5	442.0	325.0	260	192	228.5	2xM50x1.5	943
LG225ZM	1 546.5	1 785.5	442.0	325.0	260	192	228.5	2xM50x1.5	1 001
LG250M	1 580.0	1 805.0	495.0	392.0	300	236	264.0	2xM63x1.5	1 045
LG250ZM	1 650.0	1 875.5	495.0	392.0	300	236	264.0	2xM63x1.5	1 148
K4-LG280S	1 859.5	2 086.5	555.0	432.0	300	236	475.5	2xM63x1.5	1 174
K4-LG280M	1 859.5	2 086.5	555.0	432.0	300	236	475.5	2xM63x1.5	1 280
K4-LG280ZM	1 969.5	2 196.5	555.0	432.0	300	236	475.5	2xM63x1.5	1 368
K2-LGI315S/M	2 047.5	2 312.5	610.0	500.0	380	307	584.5	2xM63x1.5	1 409
K2-LGI315ZM	2 207.5	2 472.5	610.0	500.0	380	307	584.5	2xM63x1.5	1 564
K4-LG315L	2 207.5	2 472.5	610.0	500.0	380	307	584.5	2xM63x1.5	1 704
K4-LG315ZL	2 347.5	2 612.5	610.0	500.0	380	307	584.5	2xM63x1.5	1 904

④ DIN 332 ① DIN EN ISO 4014 ⑤ Feather key / keyway DIN 6885

© Siemens AG 2011

Gearbox KAD188 (3-stage), shaft-mounted design with torque arm

KAD012

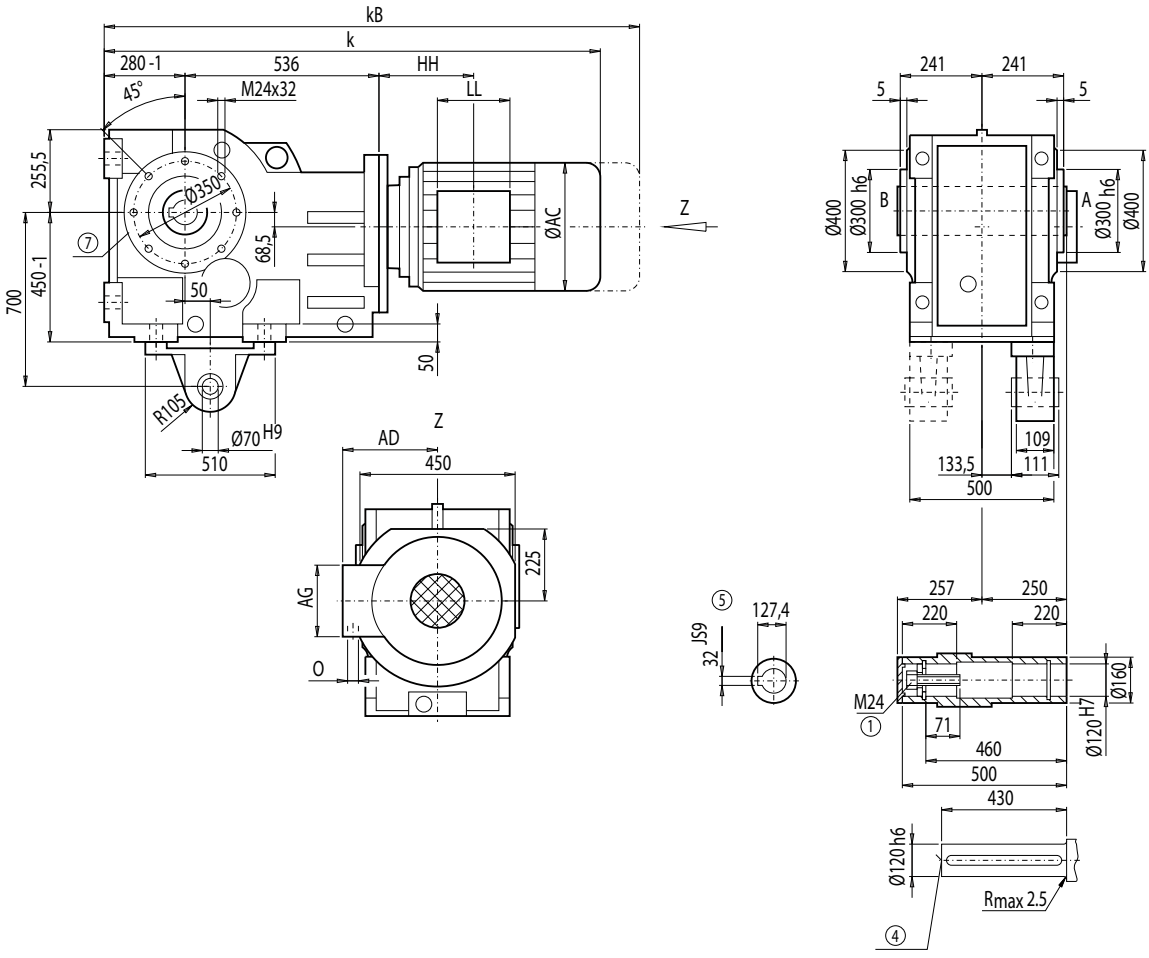

Motor	KAD188 k	kB	AC	AD	AG	LL	HH	O	Weight KAD188
LA132S/M	1 200.0	1 302.0	259.0	195.0	140	140	122.5	2xM32x1.5	697
LA132ZM	1 246.0	1 348.0	259.0	195.0	140	140	230.5	2xM32x1.5	718
LA160M/L	1 300.0	1 418.5	313.5	227.0	165	165	145.5	2xM40x1.5	731
LA160ZL	1 348.0	1 466.5	313.5	227.0	165	165	298.5	2xM40x1.5	770
LG180M/L	1 359.5	1 481.5	348.0	322.5	260	192	162.5	2xM40x1.5	826
LG180ZM/ZL	1 410.5	1 532.5	348.0	322.5	260	192	162.5	2xM40x1.5	856
LG200L	1 415.5	1 541.5	385.0	301.0	260	192	192.5	2xM50x1.5	906
LG225S	1 486.5	1 725.5	442.0	325.0	260	192	228.5	2xM50x1.5	978
LG225M	1 486.5	1 725.5	442.0	325.0	260	192	228.5	2xM50x1.5	966
LG225ZM	1 546.5	1 785.5	442.0	325.0	260	192	228.5	2xM50x1.5	1 024
LG250M	1 580.0	1 805.0	495.0	392.0	300	236	264.0	2xM63x1.5	1 068
LG250ZM	1 650.0	1 875.5	495.0	392.0	300	236	264.0	2xM63x1.5	1 171
K4-LG280S	1 859.5	2 086.5	555.0	432.0	300	236	475.5	2xM63x1.5	1 197
K4-LG280M	1 859.5	2 086.5	555.0	432.0	300	236	475.5	2xM63x1.5	1 303
K4-LG280ZM	1 969.5	2 196.5	555.0	432.0	300	236	475.5	2xM63x1.5	1 391
K2-LGI315S/M	2 047.5	2 312.5	610.0	500.0	380	307	584.5	2xM63x1.5	1 432
K2-LGI315ZM	2 207.5	2 472.5	610.0	500.0	380	307	584.5	2xM63x1.5	1 587
K4-LG315L	2 207.5	2 472.5	610.0	500.0	380	307	584.5	2xM63x1.5	1 727
K4-LG315ZL	2 347.5	2 612.5	610.0	500.0	380	307	584.5	2xM63x1.5	1 927

④ DIN 332 ① DIN EN ISO 4014 ⑤ Feather key / keyway DIN 6885 ⑦ For note, see page 4/218

© Siemens AG 2011

Dimensions

Gearbox KAF188 (3-stage), flange-mounted design

KAF012

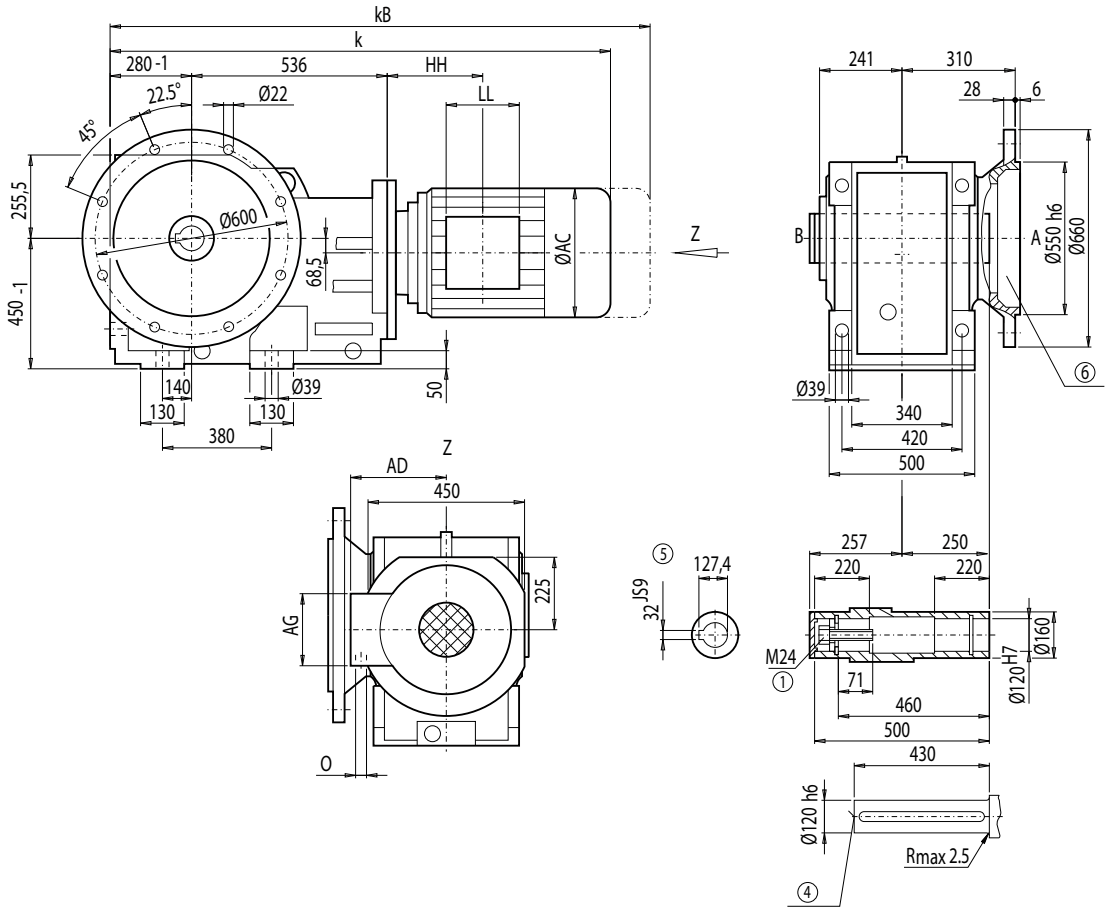

Motor	KAF188 k	kB	AC	AD	AG	LL	HH	O	Weight KAF188
LA132S/M	1 200.0	1 302.0	259.0	195.0	140	140	122.5	2xM32x1.5	706
LA132ZM	1 246.0	1 348.0	259.0	195.0	140	140	230.5	2xM32x1.5	727
LA160M/L	1 300.0	1 418.5	313.5	227.0	165	165	145.5	2xM40x1.5	740
LA160ZL	1 348.0	1 466.5	313.5	227.0	165	165	298.5	2xM40x1.5	779
LG180M/L	1 359.5	1 481.5	348.0	322.5	260	192	162.5	2xM40x1.5	835
LG180ZM/ZL	1 410.5	1 532.5	348.0	322.5	260	192	162.5	2xM40x1.5	865
LG200L	1 415.5	1 541.5	385.0	301.0	260	192	192.5	2xM50x1.5	915
LG225S	1 486.5	1 725.5	442.0	325.0	260	192	228.5	2xM50x1.5	987
LG225M	1 486.5	1 725.5	442.0	325.0	260	192	228.5	2xM50x1.5	975
LG225ZM	1 546.5	1 785.5	442.0	325.0	260	192	228.5	2xM50x1.5	1 033
LG250M	1 580.0	1 805.0	495.0	392.0	300	236	264.0	2xM63x1.5	1 077
LG250ZM	1 650.0	1 875.5	495.0	392.0	300	236	264.0	2xM63x1.5	1 180
K4-LG280S	1 859.5	2 086.5	555.0	432.0	300	236	475.5	2xM63x1.5	1 206
K4-LG280M	1 859.5	2 086.5	555.0	432.0	300	236	475.5	2xM63x1.5	1 312
K4-LG280ZM	1 969.5	2 196.5	555.0	432.0	300	236	475.5	2xM63x1.5	1 400
K4-LG315S/M	2 047.5	2 312.5	610.0	500.0	380	307	584.5	2xM63x1.5	1 441
K4-LG315ZM	2 207.5	2 472.5	610.0	500.0	380	307	584.5	2xM63x1.5	1 596
K4-LG315L	2 207.5	2 472.5	610.0	500.0	380	307	584.5	2xM63x1.5	1 736
K4-LG315ZL	2 347.5	2 612.5	610.0	500.0	380	307	584.5	2xM63x1.5	1 936

④ DIN 332 ① DIN EN ISO 4014 ⑤ Feather key / keyway DIN 6885 ⑥ For note, see page 4/217

© Siemens AG 2011

Gearbox KAZ188 (3-stage), shaft-mounted design with housing flange (C-type)

KAZ012

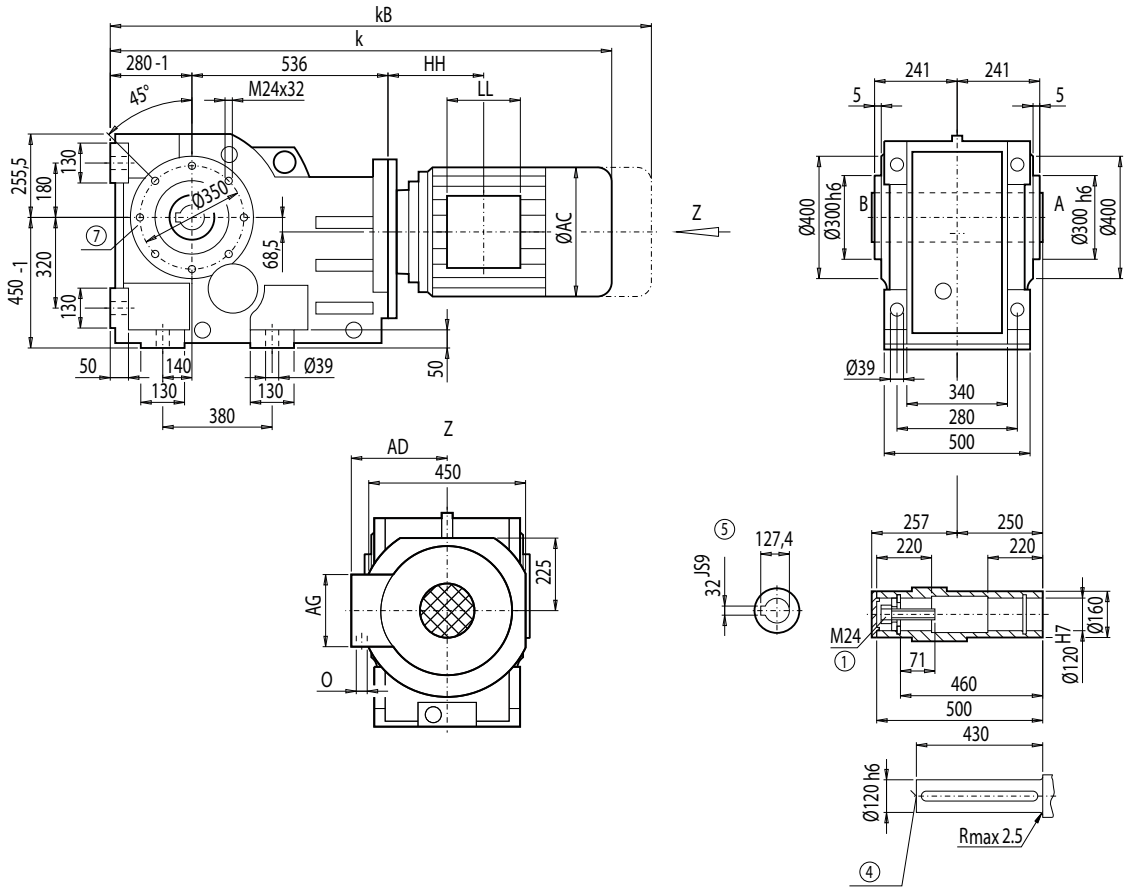

Motor	KAZ188 k	kB	AC	AD	AG	LL	HH	O	Weight KAZ188
LA132S/M	1 200.0	1 302.0	259.0	195.0	140	140	122.5	2xM32x1.5	674
LA132ZM	1 246.0	1 348.0	259.0	195.0	140	140	230.5	2xM32x1.5	695
LA160M/L	1 300.0	1 418.5	313.5	227.0	165	165	145.5	2xM40x1.5	707
LA160ZL	1 348.0	1 466.5	313.5	227.0	165	165	298.5	2xM40x1.5	746
LG180M/L	1 359.5	1 481.5	348.0	322.5	260	192	162.5	2xM40x1.5	803
LG180ZM/ZL	1 410.5	1 532.5	348.0	322.5	260	192	162.5	2xM40x1.5	833
LG200L	1 415.5	1 541.5	385.0	301.0	260	192	192.5	2xM50x1.5	883
LG225S	1 486.5	1 725.5	442.0	325.0	260	192	228.5	2xM50x1.5	954
LG225M	1 486.5	1 725.5	442.0	325.0	260	192	228.5	2xM50x1.5	943
LG225ZM	1 546.5	1 785.5	442.0	325.0	260	192	228.5	2xM50x1.5	1 001
LG250M	1 580.0	1 805.0	495.0	392.0	300	236	264.0	2xM63x1.5	1 045
LG250ZM	1 650.0	1 875.5	495.0	392.0	300	236	264.0	2xM63x1.5	1 148
K4-LG280S	1 859.5	2 086.5	555.0	432.0	300	236	475.5	2xM63x1.5	1 174
K4-LG280M	1 859.5	2 086.5	555.0	432.0	300	236	475.5	2xM63x1.5	1 280
K4-LG280ZM	1 969.5	2 196.5	555.0	432.0	300	236	475.5	2xM63x1.5	1 368
K4-LG315S/M	2 047.5	2 312.5	610.0	500.0	380	307	584.5	2xM63x1.5	1 409
K4-LG315ZM	2 207.5	2 472.5	610.0	500.0	380	307	584.5	2xM63x1.5	1 564
K4-LG315L	2 207.5	2 472.5	610.0	500.0	380	307	584.5	2xM63x1.5	1 704
K4-LG315ZL	2 347.5	2 612.5	610.0	500.0	380	307	584.5	2xM63x1.5	1 904

④ DIN 332 ① DIN EN ISO 4014 ⑤ Feather key / keyway DIN 6885 ⑦ For note, see page 4/218

© Siemens AG 2011

Dimensions

Gearbox KAS188 (3-stage), shaft-mounted design with shrink disk

KAS012

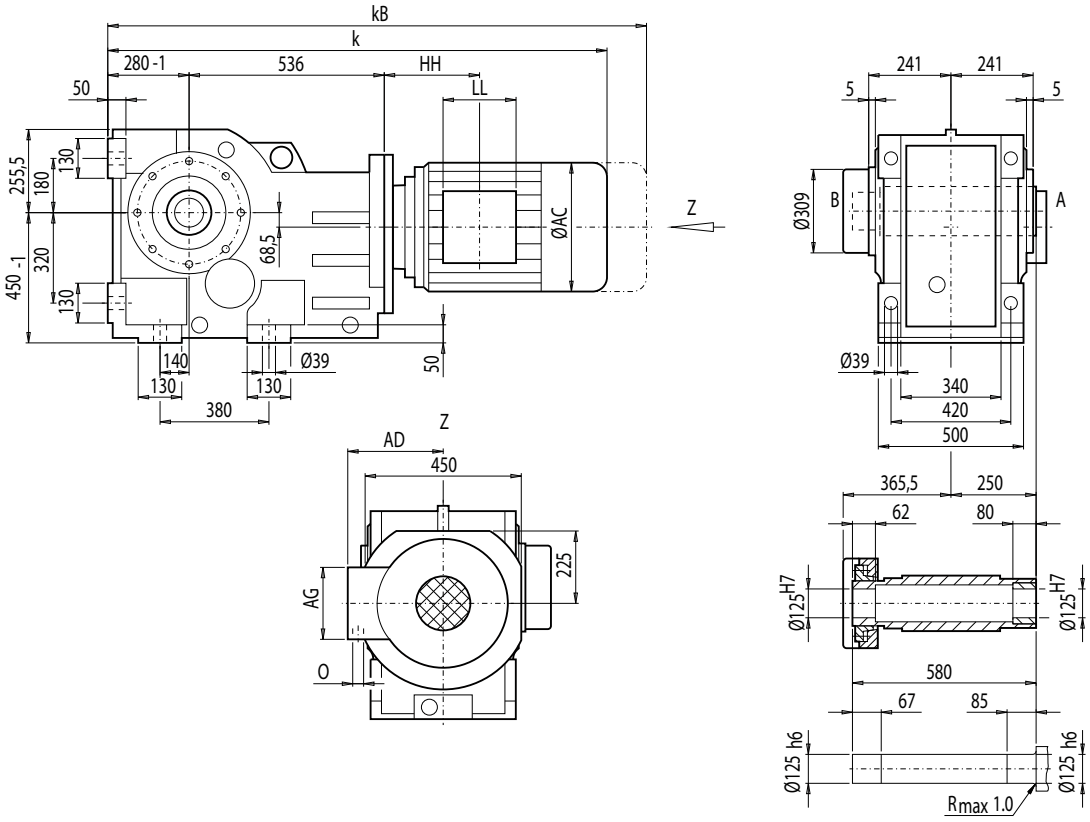

Motor	KAS188 k	kB	AC	AD	AG	LL	HH	O	Weight KAS188
LA132S/M	1 200.0	1 302.0	259.0	195.0	140	140	122.5	2xM32x1.5	684
LA132ZM	1 246.0	1 348.0	259.0	195.0	140	140	230.5	2xM32x1.5	705
LA160M/L	1 300.0	1 418.5	313.5	227.0	165	165	145.5	2xM40x1.5	718
LA160ZL	1 348.0	1 466.5	313.5	227.0	165	165	298.5	2xM40x1.5	757
LG180M/L	1 359.5	1 481.5	348.0	322.5	260	192	162.5	2xM40x1.5	813
LG180ZM/ZL	1 410.5	1 532.5	348.0	322.5	260	192	162.5	2xM40x1.5	843
LG200L	1 415.5	1 541.5	385.0	301.0	260	192	192.5	2xM50x1.5	893
LG225S	1 486.5	1 725.5	442.0	325.0	260	192	228.5	2xM50x1.5	965
LG225M	1 486.5	1 725.5	442.0	325.0	260	192	228.5	2xM50x1.5	953
LG225ZM	1 546.5	1 785.5	442.0	325.0	260	192	228.5	2xM50x1.5	1 011
LG250M	1 580.0	1 805.0	495.0	392.0	300	236	264.0	2xM63x1.5	1 055
LG250ZM	1 650.0	1 875.5	495.0	392.0	300	236	264.0	2xM63x1.5	1 158
K4-LG280S	1 859.5	2 086.5	555.0	432.0	300	236	475.5	2xM63x1.5	1 184
K4-LG280M	1 859.5	2 086.5	555.0	432.0	300	236	475.5	2xM63x1.5	1 290
K4-LG280ZM	1 969.5	2 196.5	555.0	432.0	300	236	475.5	2xM63x1.5	1 378
K4-LG315S/M	2 047.5	2 312.5	610.0	500.0	380	307	584.5	2xM63x1.5	1 419
K4-LG315ZM	2 207.5	2 472.5	610.0	500.0	380	307	584.5	2xM63x1.5	1 574
K4-LG315L	2 207.5	2 472.5	610.0	500.0	380	307	584.5	2xM63x1.5	1 714
K4-LG315ZL	2 347.5	2 612.5	610.0	500.0	380	307	584.5	2xM63x1.5	1 914

© Siemens AG 2011

Gearbox KADS188 (3-stage), shaft-mounted design with torque arm and shrink disk

KADS012

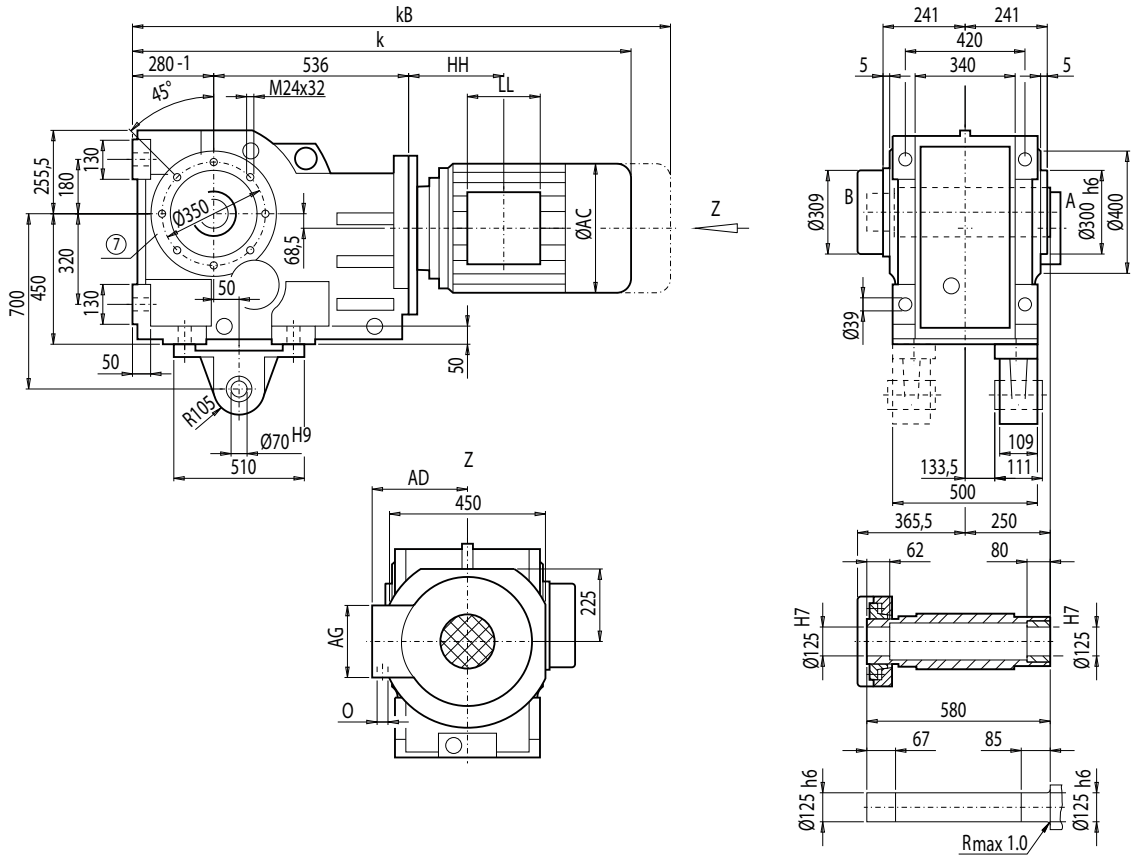

Motor	KADS188 k	kB	AC	AD	AG	LL	HH	O	Weight KADS188
LA132S/M	1 200.0	1 302.0	259.0	195.0	140	140	122.5	2xM32x1.5	708
LA132ZM	1 246.0	1 348.0	259.0	195.0	140	140	230.5	2xM32x1.5	729
LA160M/L	1 300.0	1 418.5	313.5	227.0	165	165	145.5	2xM40x1.5	741
LA160ZL	1 348.0	1 466.5	313.5	227.0	165	165	298.5	2xM40x1.5	780
LG180M/L	1 359.5	1 481.5	348.0	322.5	260	192	162.5	2xM40x1.5	837
LG180ZM/ZL	1 410.5	1 532.5	348.0	322.5	260	192	162.5	2xM40x1.5	867
LG200L	1 415.5	1 541.5	385.0	301.0	260	192	192.5	2xM50x1.5	917
LG225S	1 486.5	1 725.5	442.0	325.0	260	192	228.5	2xM50x1.5	989
LG225M	1 486.5	1 725.5	442.0	325.0	260	192	228.5	2xM50x1.5	977
LG225ZM	1 546.5	1 785.5	442.0	325.0	260	192	228.5	2xM50x1.5	1 035
LG250M	1 580.0	1 805.0	495.0	392.0	300	236	264.0	2xM63x1.5	1 079
LG250ZM	1 650.0	1 875.5	495.0	392.0	300	236	264.0	2xM63x1.5	1 182
K4-LG280S	1 859.5	2 086.5	555.0	432.0	300	236	475.5	2xM63x1.5	1 208
K4-LG280M	1 859.5	2 086.5	555.0	432.0	300	236	475.5	2xM63x1.5	1 314
K4-LG280ZM	1 969.5	2 196.5	555.0	432.0	300	236	475.5	2xM63x1.5	1 402
K4-LG315S/M	2 047.5	2 312.5	610.0	500.0	380	307	584.5	2xM63x1.5	1 443
K4-LG315ZM	2 207.5	2 472.5	610.0	500.0	380	307	584.5	2xM63x1.5	1 598
K4-LG315L	2 207.5	2 472.5	610.0	500.0	380	307	584.5	2xM63x1.5	1 738
K4-LG315ZL	2 347.5	2 612.5	610.0	500.0	380	307	584.5	2xM63x1.5	1 938

⑦ For note, see page 4/218

© Siemens AG 2011

Dimensions

Gearbox KAFS188 (3-stage), flange-mounted design and shrink disk

KAFS012

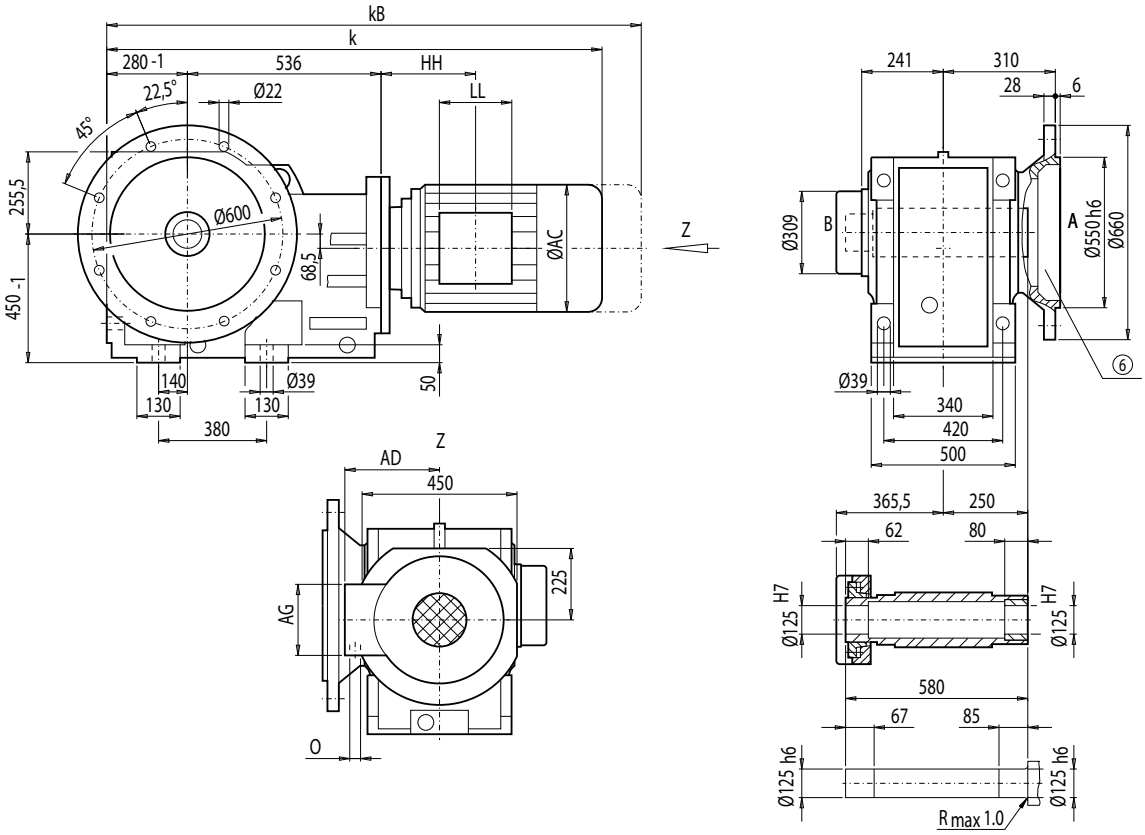

Motor	KAFS188 k	kB	AC	AD	AG	LL	HH	O	Weight KAFS188
LA132S/M	1 200.0	1 302.0	259.0	195.0	140	140	122.5	2xM32x1.5	716
LA132ZM	1 246.0	1 348.0	259.0	195.0	140	140	230.5	2xM32x1.5	737
LA160M/L	1 300.0	1 418.5	313.5	227.0	165	165	145.5	2xM40x1.5	750
LA160ZL	1 348.0	1 466.5	313.5	227.0	165	165	298.5	2xM40x1.5	789
LG180M/L	1 359.5	1 481.5	348.0	322.5	260	192	162.5	2xM40x1.5	845
LG180ZM/ZL	1 410.5	1 532.5	348.0	322.5	260	192	162.5	2xM40x1.5	875
LG200L	1 415.5	1 541.5	385.0	301.0	260	192	192.5	2xM50x1.5	925
LG225S	1 486.5	1 725.5	442.0	325.0	260	192	228.5	2xM50x1.5	997
LG225M	1 486.5	1 725.5	442.0	325.0	260	192	228.5	2xM50x1.5	985
LG225ZM	1 546.5	1 785.5	442.0	325.0	260	192	228.5	2xM50x1.5	1 043
LG250M	1 580.0	1 805.0	495.0	392.0	300	236	264.0	2xM63x1.5	1 087
LG250ZM	1 650.0	1 875.5	495.0	392.0	300	236	264.0	2xM63x1.5	1 190
K4-LG280S	1 859.5	2 086.5	555.0	432.0	300	236	475.5	2xM63x1.5	1 216
K4-LG280M	1 859.5	2 086.5	555.0	432.0	300	236	475.5	2xM63x1.5	1 322
K4-LG280ZM	1 969.5	2 196.5	555.0	432.0	300	236	475.5	2xM63x1.5	1 410
K4-LG315S/M	2 047.5	2 312.5	610.0	500.0	380	307	584.5	2xM63x1.5	1 451
K4-LG315ZM	2 207.5	2 472.5	610.0	500.0	380	307	584.5	2xM63x1.5	1 606
K4-LG315L	2 207.5	2 472.5	610.0	500.0	380	307	584.5	2xM63x1.5	1 746
K4-LG315ZL	2 347.5	2 612.5	610.0	500.0	380	307	584.5	2xM63x1.5	1 946

⑥ For note, see page 4/217

© Siemens AG 2011

Gearbox KAZS188 (3-stage), shaft-mounted design with housing flange (C-type) and shrink disk

KAZS012

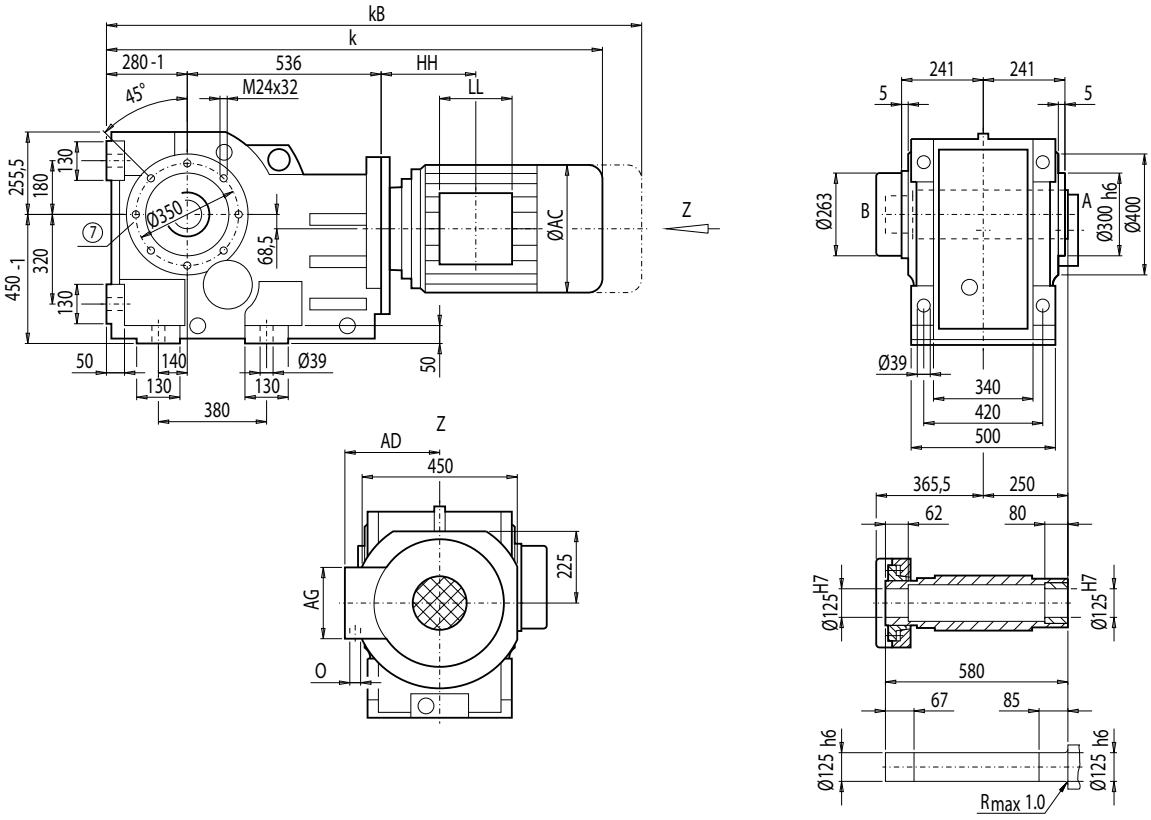

Motor	KAZS188 k	kB	AC	AD	AG	LL	HH	O	Weight KAZS188
LA132S/M	1 200.0	1 302.0	259.0	195.0	140	140	122.5	2xM32x1.5	684
LA132ZM	1 246.0	1 348.0	259.0	195.0	140	140	230.5	2xM32x1.5	705
LA160M/L	1 300.0	1 418.5	313.5	227.0	165	165	145.5	2xM40x1.5	718
LA160ZL	1 348.0	1 466.5	313.5	227.0	165	165	298.5	2xM40x1.5	757
LG180M/L	1 359.5	1 481.5	348.0	322.5	260	192	162.5	2xM40x1.5	813
LG180ZM/ZL	1 410.5	1 532.5	348.0	322.5	260	192	162.5	2xM40x1.5	843
LG200L	1 415.5	1 541.5	385.0	301.0	260	192	192.5	2xM50x1.5	893
LG225S	1 486.5	1 725.5	442.0	325.0	260	192	228.5	2xM50x1.5	965
LG225M	1 486.5	1 725.5	442.0	325.0	260	192	228.5	2xM50x1.5	953
LG225ZM	1 546.5	1 785.5	442.0	325.0	260	192	228.5	2xM50x1.5	1 011
LG250M	1 580.0	1 805.0	495.0	392.0	300	236	264.0	2xM63x1.5	1 055
LG250ZM	1 650.0	1 875.5	495.0	392.0	300	236	264.0	2xM63x1.5	1 158
K4-LG280S	1 859.5	2 086.5	555.0	432.0	300	236	475.5	2xM63x1.5	1 184
K4-LG280M	1 859.5	2 086.5	555.0	432.0	300	236	475.5	2xM63x1.5	1 290
K4-LG280ZM	1 969.5	2 196.5	555.0	432.0	300	236	475.5	2xM63x1.5	1 378
K4-LG315S/M	2 047.5	2 312.5	610.0	500.0	380	307	584.5	2xM63x1.5	1 419
K4-LG315ZM	2 207.5	2 472.5	610.0	500.0	380	307	584.5	2xM63x1.5	1 574
K4-LG315L	2 207.5	2 472.5	610.0	500.0	380	307	584.5	2xM63x1.5	1 714
K4-LG315ZL	2 347.5	2 612.5	610.0	500.0	380	307	584.5	2xM63x1.5	1 914

⑥ For note, see page 4/218

© Siemens AG 2011

Dimensions

Offset hollow shafts with shrink disk

Optional hollow shafts for bevel helical gearboxes with shrink disk

KA.S

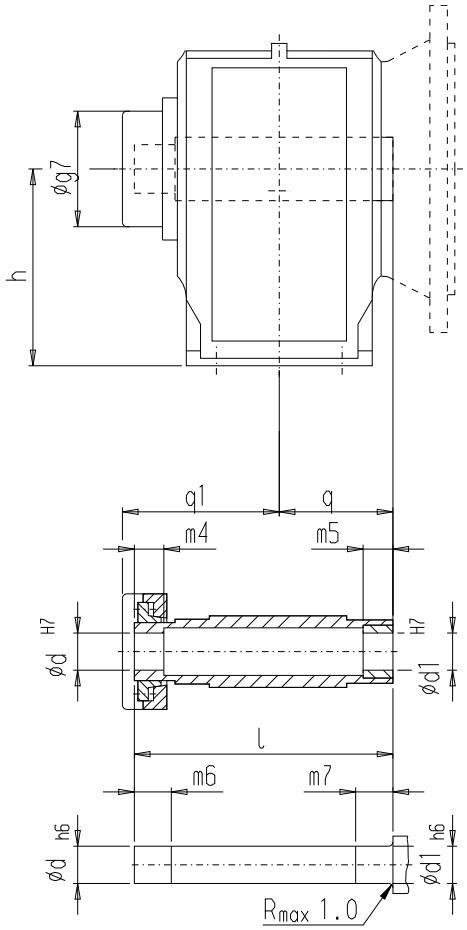

Gearbox	d	d1	l	m4	m5	m6	m7	q1	q	g7	h
KAS/KAFS38	30	31	146	22	20	27	25	94	60	77	100
KAS/KAFS48	40	41	177	25	20	30	25	109	75	93	112
KAS/KAFS68	40	42	209	35	20	37	25	126	90	112	140
	50	51	209	27	20	32	25	126	90	112	140
KAS/KAFS88	50	52	241	29	30	34	35	144	105	132	180
	60	61	241	29	30	34	35	144	105	132	180
KAS/KAFS108	65	66	280	30	40	35	45	168	120	144	212
	70	71	280	30	40	35	45	168	120	144	212
KAS/KAFS128	75	76	345	44	50	49	55	207	150	180	265
	80	81	345	40	50	45	55	207	150	180	265
KAS/KAFS148	95	96	404	49	60	54	65	243	175	210	315
KAS/KAFS168	105	106	483	54	70	59	75	291	205	237	375
KAS/KAFS188	125	126	580	62	80	67	85	342	250	263	450

© Siemens AG 2011

Shaft-mounted design with splined shaft in acc. with DIN 5480

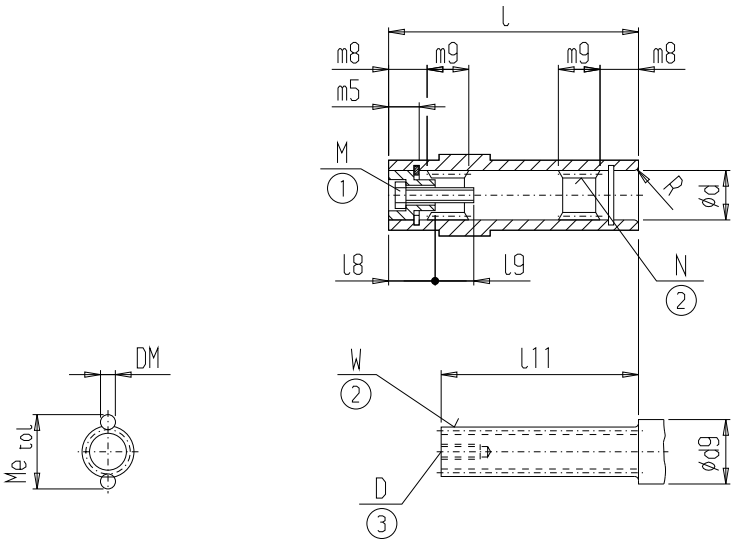

Gearbox	d	l	d9 min.	l11	W	D	R	m8	m9
BA.T38	30	140	45	115	W30x1.25x30x22 8f	M10	R3	20.0	30
KA.T38	35	120	45	95	W35x1.25x30x26 8f	M10	R2	17.0	27
KA.T48	40	150	52	120	W40x2x30x18 8f	M12	R3	22.0	34
KA.T68	55	180	65	142	W50x2x30x24 8f	M16	R2	21.0	40
KA.T88	65	210	80	172	W60x2x30x28 8f	M16	R2	22.5	49
KA.T108	72	240	85	201	W70x2x30x34 8f	M20	R2	22.5	56
KA.T128	90	300	105	257	W80x3x30x25 8f	M20	R2	24.0	71
KA.T148	90	350	110	306	W90x3x30x28 8f	M20	R3	25.0	88
KA.T168	110	410	130	350	W110x3x30x35 8f	M24	R3	32.0	99
KA.T188	135	500	145	445	W130x5x30x24 8f	M24	R4	42.0	120

Gearbox	N	m5	l8	l9	M	DM	Me	tol
BA.T38	N30x1.25x30x22 9H	12.0	18	27.0	M10x35	2.75	33.015	-0.056
KA.T38	N35x1.25x30x26 9H	12.0	18	27.0	M10x35	2.50	37.423	-0.041
KA.T48	N40x2x30x18 9H	14.0	20	37.0	M12x45	4.50	45.083	-0.043
KA.T68	N50x2x30x24 9H	16.0	23	49.5	M16x55	4.00	54.156	-0.049
KA.T88	N60x2x30x28 9H	16.5	26	46.5	M16x55	4.00	63.918	-0.053
KA.T108	N70x2x30x34 9H	16.5	28	51.0	M20x60	4.00	74.181	-0.057
KA.T128	N80x3x30x25 9H	17.0	31	46.0	M20x60	6.00	85.856	-0.053
KA.T148	N90x3x30x28 9H	17.0	31	51.0	M20x60	6.00	95.911	-0.053
KA.T168	N110x3x30x35 9H	20.0	41	65.5	M24x80	6.00	115.998	-0.061
KA.T188	N130x5x30x24 9H	20.0	50	35.5	M24x60	10.00	139.848	-0.061

① DIN 912 ② DIN 5480 ③ DIN 332-D

© Siemens AG 2011

Dimensions

Bevel helical tandem gearbox

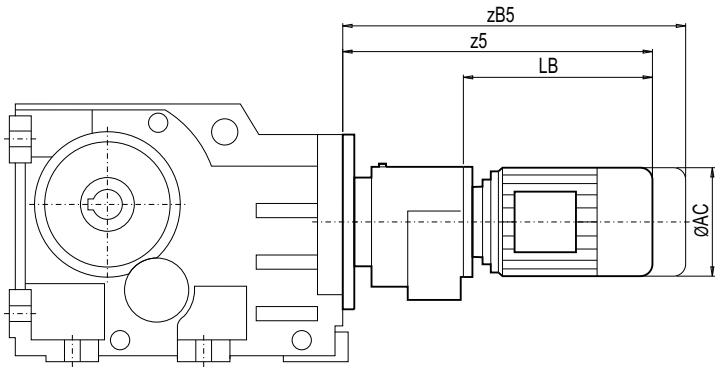

Gearbox	Motor	AC	z5	zB5	LB
K.38-Z28	LA71	139.0	363.0	418.0	202.5
	LA71Z	139.0	382.0	437.0	221.5
	LA80	156.5	465.0	528.5	304.5
	LA80Z	156.5	487.5	551.0	327.0
	LA90S/L	174.0	460.0	531.0	299.5
	LA90ZL	174.0	505.0	576.0	344.5
	LA100L	195.0	542.0	623.0	381.5
	LA100ZL	195.0	612.0	693.0	451.5
K.38-D28	LA71	139.0	363.0	418.0	202.5
	LA71Z	139.0	382.0	437.0	221.5
	LA80	156.5	465.0	528.5	304.5
	LA80Z	156.5	487.5	551.0	327.0
	LA90S/L	174.0	460.0	531.0	299.5
	LA90ZL	174.0	505.0	576.0	344.5
K.48-Z28	LA71	139.0	363.0	418.0	202.5
	LA71Z	139.0	382.0	437.0	221.5
	LA80	156.5	465.0	528.5	304.5
	LA80Z	156.5	487.5	551.0	327.0
	LA90S/L	174.0	460.0	531.0	299.5
	LA90ZL	174.0	505.0	576.0	344.5
	LA100L	195.0	542.0	623.0	381.5
	LA100ZL	195.0	612.0	693.0	451.5
K.48-D28	LA71	139.0	363.0	418.0	202.5
	LA71Z	139.0	382.0	437.0	221.5
	LA80	156.5	465.0	528.5	304.5
	LA80Z	156.5	487.5	551.0	327.0
	LA90S/L	174.0	460.0	531.0	299.5
	LA90ZL	174.0	505.0	576.0	344.5
K.68-Z28	LA71	139.0	357.5	412.5	202.5
	LA71Z	139.0	376.5	431.5	221.5
	LA80	156.5	459.5	523.0	304.5
	LA80Z	156.5	482.0	545.5	327.0
	LA90S/L	174.0	454.5	525.5	299.5
	LA90ZL	174.0	499.5	570.5	344.5
	LA100L	195.0	536.5	617.5	381.5
	LA100ZL	195.0	606.5	687.5	451.5

Gearbox	Motor	AC	z5	zB5	LB
K.68-D28	LA71	139.0	357.5	412.5	202.5
	LA71Z	139.0	376.5	431.5	221.5
	LA80	156.5	459.5	523.0	304.5
	LA80Z	156.5	482.0	545.5	327.0
	LA90S/L	174.0	454.5	525.5	299.5
	LA90ZL	174.0	499.5	570.5	344.5
K.88-Z28	LA71	139.0	351.5	406.5	202.5
	LA71Z	139.0	370.5	425.5	221.5
	LA80	156.5	453.5	517.0	304.5
	LA80Z	156.5	476.0	539.5	327.0
	LA90S/L	174.0	448.5	519.5	299.5
	LA90ZL	174.0	493.5	564.5	344.5
	LA100L	195.0	530.5	611.5	381.5
	LA100ZL	195.0	600.5	681.5	451.5
K.88-D28	LA71	139.0	351.5	406.5	202.5
	LA71Z	139.0	370.5	425.5	221.5
	LA80	156.5	453.5	517.0	304.5
	LA80Z	156.5	476.0	539.5	327.0
	LA90S/L	174.0	448.5	519.5	299.5
	LA90ZL	174.0	493.5	564.5	344.5
K.108-Z38	LA71	139.0	465.5	520.5	258.5
	LA71Z	139.0	484.5	539.5	277.5
	LA80	156.5	502.5	566.0	295.5
	LA80Z	156.5	525.0	588.5	318.0
	LA90S	174.0	533.5	604.5	326.5
	LA90L	174.0	533.5	604.5	326.5
	LA90ZL	174.0	578.5	649.5	371.5
	LA100L	195.0	579.5	660.5	372.5
	LA100ZL	195.0	649.5	730.5	442.5
	LA112M	219.0	609.0	690.0	402.0
	LA112ZM	219.0	637.0	718.0	430.0
K.108-D38	LA71	139.0	480.5	535.5	273.5
	LA71Z	139.0	499.5	554.5	292.5
	LA80	156.5	517.5	581.0	310.5
	LA80Z	156.5	540.0	603.5	333.0
	LA90S/L	174.0	548.5	619.5	341.5
	LA90ZL	174.0	593.5	664.5	386.5

© Siemens AG 2011

Bevel helical tandem gearbox (continued)

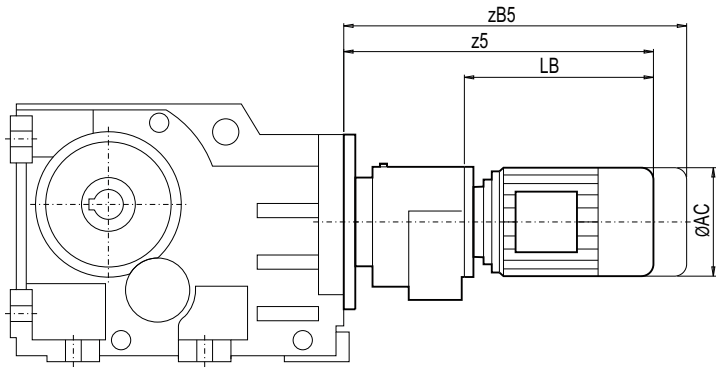

Gearbox	Motor	AC	z5	zB5	LB
K.108-Z48	LA71	139.0	544.5	599.5	253.0
	LA71Z	139.0	563.5	618.5	272.0
	LA80	156.5	581.5	645.0	290.0
	LA80Z	156.5	604.0	667.5	312.5
	LA90S/L	174.0	612.5	683.5	321.0
	LA90ZL	174.0	657.5	728.5	366.0
	LA100L	195.0	658.5	739.5	367.0
	LA100ZL	195.0	728.5	809.5	437.0
	LA112M	219.0	687.5	768.5	396.0
	LA112ZM	219.0	715.5	796.5	424.0
	LA132S/M	259.0	749.5	851.5	458.0
	LA132ZM	259.0	795.5	897.5	504.0
K.128-Z38	LA71	139.0	458.5	513.5	258.5
	LA71Z	139.0	477.5	532.5	277.5
	LA80	156.5	495.5	559.0	295.5
	LA80Z	156.5	518.0	581.5	318.0
	LA90S/L	174.0	526.5	597.5	326.5
	LA90ZL	174.0	571.5	642.5	371.5
	LA100L	195.0	572.5	653.5	372.5
	LA100ZL	195.0	642.5	723.5	442.5
	LA112M	219.0	602.0	683.0	402.0
	LA112ZM	219.0	630.0	711.0	430.0
K.128-D38	LA71	139.0	473.5	528.5	273.5
	LA71Z	139.0	492.5	547.5	292.5
	LA80	156.5	510.5	574.0	310.5
	LA80Z	156.5	533.0	596.5	333.0
	LA90S/L	174.0	541.5	612.5	341.5
	LA90ZL	174.0	586.5	657.5	386.5
K.128-Z48	LA71	139.0	532.0	587.0	253.0
	LA71Z	139.0	551.0	606.0	272.0
	LA80	156.5	569.0	632.5	290.0
	LA80Z	156.5	591.5	655.0	312.5
	LA90S/L	174.0	600.0	671.0	321.0
	LA90ZL	174.0	645.0	716.0	366.0
	LA100L	195.0	646.0	727.0	367.0
	LA100ZL	195.0	716.0	797.0	437.0

Gearbox	Motor	AC	z5	zB5	LB
K.128-Z48	LA112M	219.0	675.0	756.0	396.0
	LA112ZM	219.0	703.0	784.0	424.0
	LA132S/M	259.0	737.0	839.0	458.0
	LA132ZM	259.0	783.0	885.0	504.0
K.148-Z38	LA71	139.0	454.0	509.0	258.5
	LA71Z	139.0	473.0	528.0	277.5
	LA80	156.5	491.0	554.5	295.5
	LA80Z	156.5	513.5	577.0	318.0
	LA90S/L	174.0	522.0	593.0	326.5
	LA90ZL	174.0	567.0	638.0	371.5
	LA100L	195.0	568.0	649.0	372.5
	LA100ZL	195.0	638.0	719.0	442.5
	LA112M	219.0	597.5	678.5	402.0
	LA112ZM	219.0	625.5	706.5	430.0
K.148-D38	LA71	139.0	469.0	524.0	273.5
	LA71Z	139.0	488.0	543.0	292.5
	LA80	156.5	506.0	569.5	310.5
	LA80Z	156.5	528.5	592.0	333.0
	LA90S/L	174.0	537.0	608.0	341.5
	LA90ZL	174.0	582.0	653.0	386.5
K.148-Z68	LA71	139.0	590.5	645.5	247.0
	LA71Z	139.0	609.5	664.5	266.0
	LA80	156.5	627.5	691.0	284.0
	LA80Z	156.5	650.0	713.5	306.5
	LA90S/L	174.0	658.5	729.5	315.0
	LA90ZL	174.0	703.5	774.5	360.0
	LA100L	195.0	704.5	785.5	361.0
	LA100ZL	195.0	774.5	855.5	431.0
	LA112M	219.0	731.5	812.5	388.0
	LA112ZM	219.0	759.5	840.5	416.0
	LA132S/M	259.0	791.5	893.5	448.0
	LA132ZM	259.0	837.5	939.5	494.0
	LA160M/L	313.5	894.0	1 012.5	550.5
	LA160ZL	313.5	942.0	1 060.5	598.5

© Siemens AG 2011

Dimensions

Bevel helical tandem gearbox (continued)

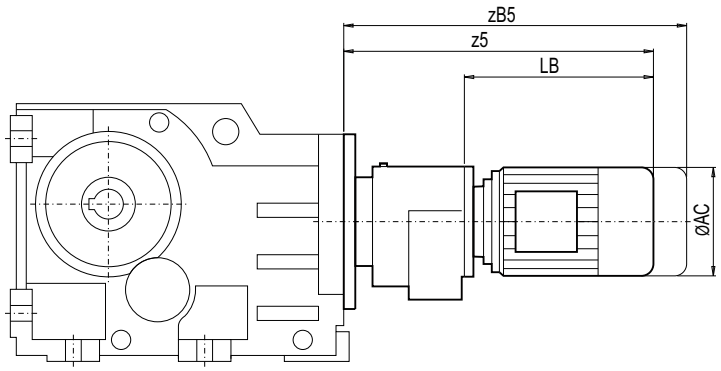

Gearbox	Motor	AC	z5	zB5	LB
K.168-Z48	LA71	139.0	513.5	568.5	253.0
	LA71Z	139.0	532.5	587.5	272.0
	LA80	156.5	550.5	614.0	290.0
	LA80Z	156.5	573.0	636.5	312.5
	LA90S/L	174.0	581.5	652.5	321.0
	LA90ZL	174.0	626.5	697.5	366.0
	LA100L	195.0	627.5	708.5	367.0
	LA100ZL	195.0	697.5	778.5	437.0
	LA112M	219.0	656.5	737.5	396.0
	LA112ZM	219.0	684.5	765.5	424.0
	LA132S/M	259.0	718.5	820.5	458.0
	LA132ZM	259.0	764.5	866.5	504.0
K.168-D48	LA71	139.0	530.5	585.5	270.0
	LA71Z	139.0	549.5	604.5	289.0
	LA80	156.5	567.5	631.0	307.0
	LA80Z	156.5	590.0	653.5	329.5
	LA90S/L	174.0	598.5	669.5	338.0
	LA90ZL	174.0	643.5	714.5	383.0
	LA100L	195.0	644.5	725.5	384.0
	LA100ZL	195.0	714.5	795.5	454.0
K.168-Z68	LA71	139.0	599.5	654.5	247.0
	LA71Z	139.0	618.5	673.5	266.0
	LA80	156.5	636.5	700.0	284.0
	LA80Z	156.5	659.0	722.5	306.5
	LA90S	174.0	667.5	738.5	315.0
	LA90L	174.0	667.5	738.5	315.0
	LA90ZL	174.0	712.5	783.5	360.0
	LA100L	195.0	713.5	794.5	361.0
	LA100ZL	195.0	783.5	864.5	431.0
	LA132S	259.0	800.5	902.5	448.0
	LA132M	259.0	800.5	902.5	448.0
	LA132ZM	259.0	846.5	948.5	494.0
	LA160M	313.5	903.0	1 021.5	550.5
	LA160L	313.5	903.0	1 021.5	550.5
	LA160ZL	313.5	951.0	1 069.5	598.5

Gearbox	Motor	AC	z5	zB5	LB
K.188-Z68	LA71	139.0	568.5	623.5	247.0
	LA71Z	139.0	587.5	642.5	266.0
	LA80	156.5	605.5	669.0	284.0
	LA80Z	156.5	628.0	691.5	306.5
	LA90S/L	174.0	636.5	707.5	315.0
	LA90ZL	174.0	681.5	752.5	360.0
	LA100L	195.0	682.5	763.5	361.0
	LA100ZL	195.0	752.5	833.5	431.0
	LA112M	219.0	709.5	790.5	388.0
	LA112ZM	219.0	737.5	818.5	416.0
	LA132S/M	259.0	769.5	871.5	448.0
	LA132ZM	259.0	815.5	917.5	494.0
	LA160M/L	313.5	872.0	990.5	550.5
	LA160ZL	313.5	920.0	1 038.5	598.5
K.188-D68	LA71	139.0	587.0	642.0	265.5
	LA71Z	139.0	606.0	661.0	284.5
	LA80	156.5	624.0	687.5	302.5
	LA80Z	156.5	646.5	710.0	325.0
	LA90S/L	174.0	655.0	726.0	333.5
	LA90ZL	174.0	700.0	771.0	378.5
	LA100L	195.0	701.0	782.0	379.5
	LA100ZL	195.0	771.0	852.0	449.5
K.188-Z88	LA90S/L	174.0	776.5	847.5	300.0
	LA90ZL	174.0	821.5	892.5	345.0
	LA100L	195.0	820.0	901.0	343.5
	LA100ZL	195.0	890.0	971.0	413.5
	LA112M	219.0	846.0	927.0	369.5
	LA112ZM	219.0	874.0	955.0	397.5
	LA132S/M	259.0	906.0	1 008.0	429.5
	LA132ZM	259.0	952.0	1 054.0	475.5
	LA160M/L	313.5	1 010.5	1 129.0	534.0
	LA160ZL	313.5	1 058.5	1 177.0	582.0
	LG180M/L	348.0	1 070.0	1 192.0	593.5
	LG180ZM/ZL	348.0	1 121.0	1 243.0	644.5

© Siemens AG 2011

Flange design for mixers

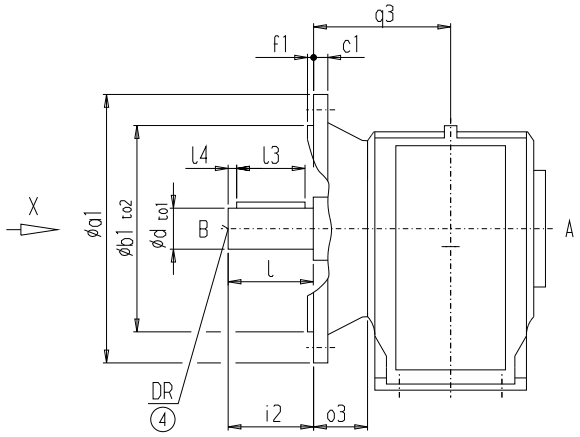

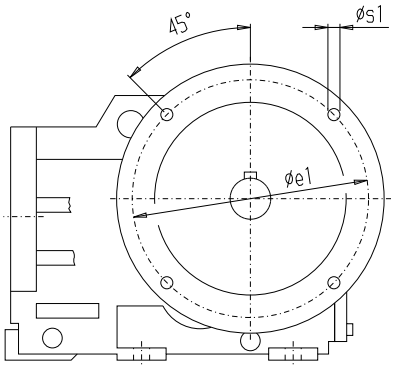

a1 ≥ 450

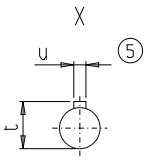

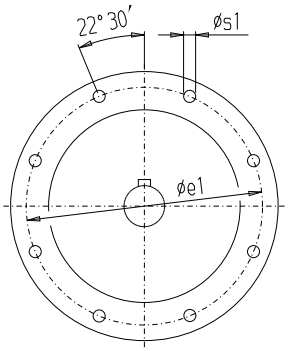

Gearbox	a1	b1	to2	c1	e1	f1	s1	o3	q3	i2
KM88	300	230	j6	20	265	4	13.5	120	216.5	140
KM108	350	250	h6	20	300	5	17.5	135	246.0	170
KM128	450	350	h6	25	400	5	17.5	165	306.0	170
KM148	450	350	h6	25	400	5	17.5	185	349.0	210
KM168	550	450	h6	28	500	5	17.5	210	404.0	210

Gearbox	d	to1	l	l3	l4	t	u	DR	Weight
KM88	70	m6	140	110	15	74.5	20	M20x42	84
KM108	80	m6	170	125	20	85.0	22	M20x42	150
KM128	90	m6	170	140	15	95.0	25	M24x50	248
KM148	100	m6	210	180	15	106.0	28	M24x50	357
KM168	120	m6	210	180	15	127.0	32	M24x50	584

④ DIN 332

⑤ Feather key / keyway DIN 6885

© Siemens AG 2011

Dimensions

Flange design for mixers

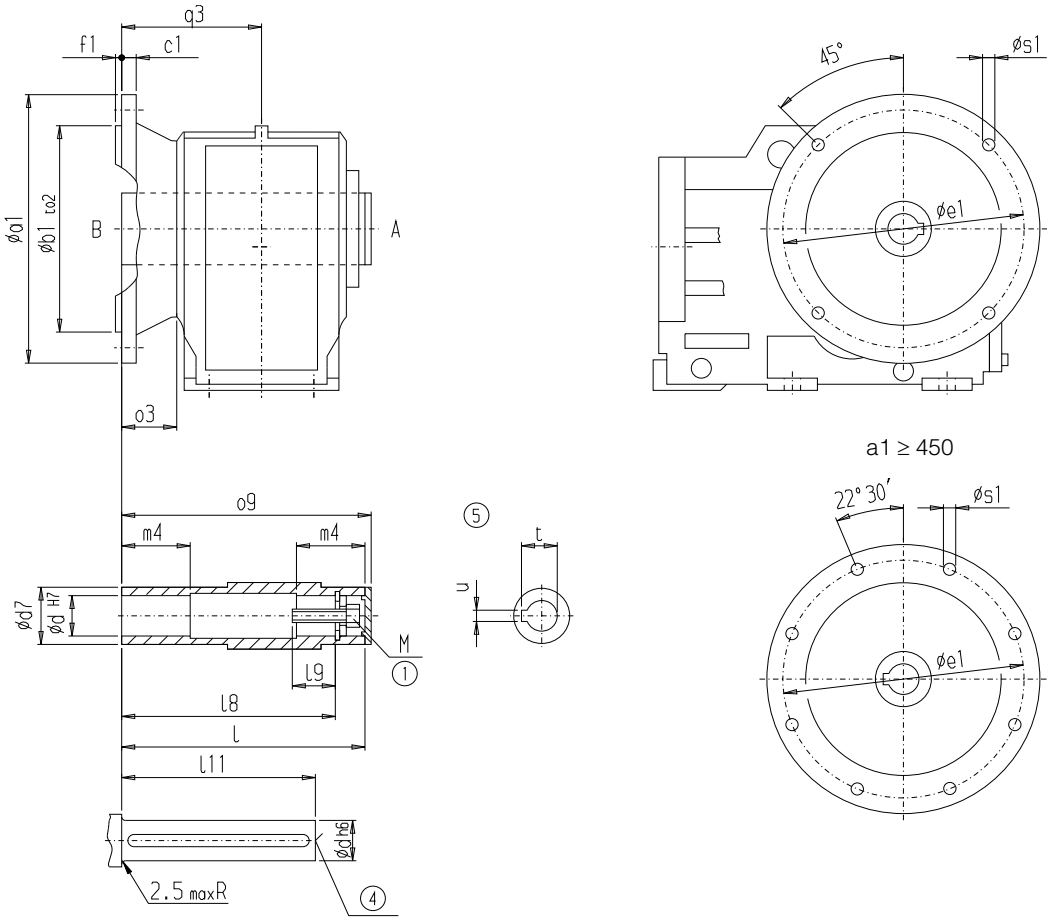

Gearbox	a1	b1	to2	c1	e1	f1	s1	o3	q3	o9
KAM88	300	230	j6	20	265	4	13.5	120	216.5	324.0
KAM108	350	250	h6	20	300	5	17.5	135	246.0	369.5
KAM128	450	350	h6	25	400	5	17.5	165	306.0	458.0
KAM148	450	350	h6	25	400	5	17.5	185	349.0	526.0
KAM168	550	450	h6	28	500	5	17.5	210	404.0	611.0

Gearbox	d	d7	l	m4	l8	l9	l11	t	u	M	Weight
KAM88	60	80	321	78	291	54.0	275	64.4	18	M20	76
KAM108	70	95	366	93	334	63.5	310	74.9	20	M20	137
KAM128	80	110	456	123	419	63.5	395	85.4	22	M20	228
KAM148	90	120	524	148	484	72.0	460	95.4	25	M24	329
KAM168	110	150	609	175	565	73.0	540	116.4	28	M24	539

④ DIN 332

⑤ Feather key / keyway DIN 6885

© Siemens AG 2011

Flange design for extruder drives

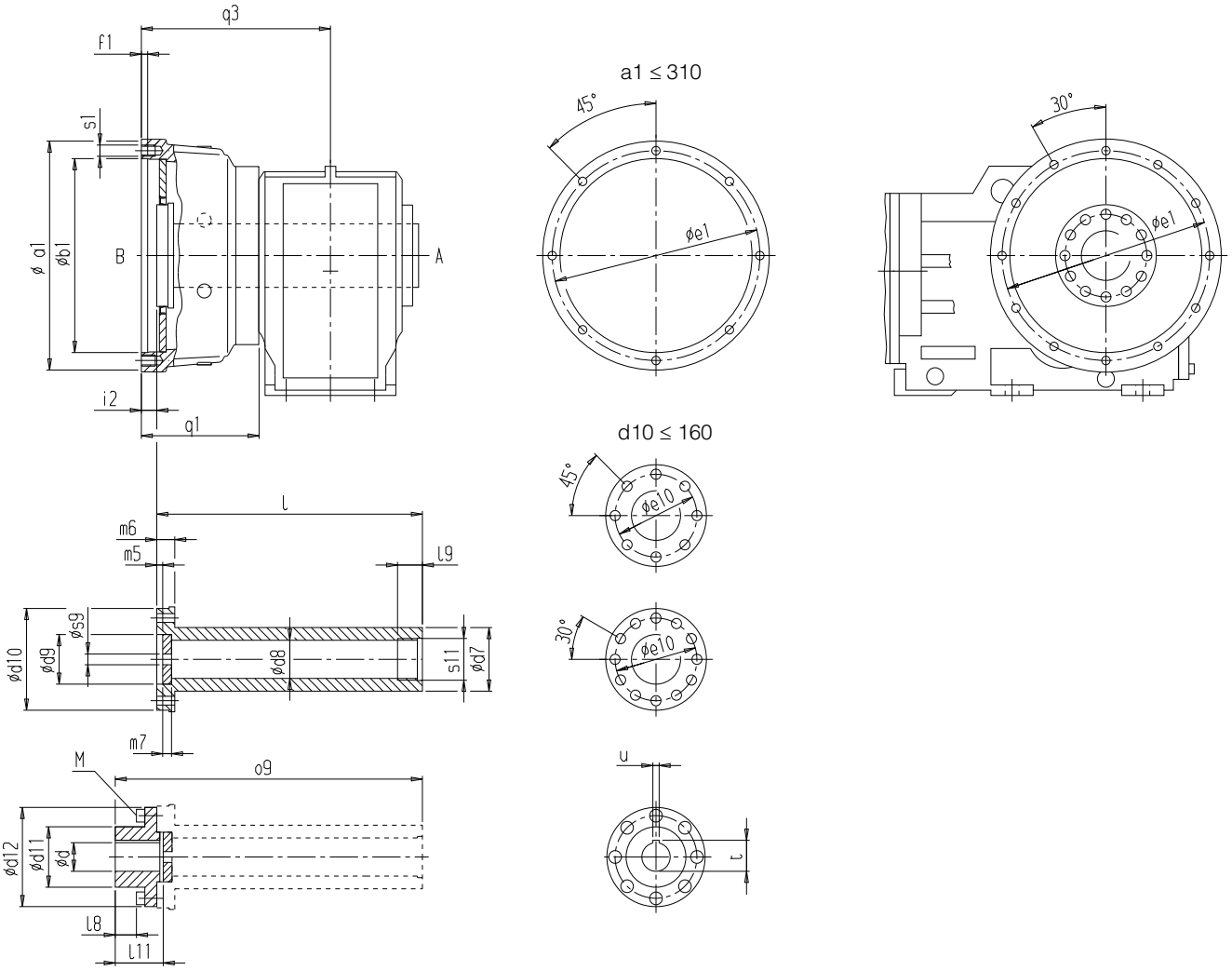

Gearbox	a1	b1		e1	f1	s1	q1	i2	q3
KAE68	260	220	+0.046 / 0	236	10	M12x17	147.5	15.0	230.0
KAE88	310	255	+0.052 / 0	280	10	M16x22	171.0	15.5	267.5
KAE108	360	305	+0.052 / 0	330	10	M16x22	188.0	23.0	229.0
KAE128	420	345	+0.057 / 0	380	10	M20x27	206.0	25.0	347.0
KAE148	450	360	+0.057 / 0	400	10	M24x32	225.0	27.0	389.0
KAE168	510	420	+0.063 / 0	460	15	M24x32	262.0	38.0	456.0

© Siemens AG 2011

Dimensions

Flange design for extruder drives (continued)

Gearbox	d	l11	d7	d8	l9	s11	o9 l	d10 d12	m6	e10
KAE68	20	48	65	38	30	M42x2	349.0	105	14	88
	25									
	30						305.0	104		
KAE88	30	58	80	49	39	M56x2	410.5	130	23	110
	35									
	40						357.0	129		
KAE108	40	71	95	60	39	M64x2	462.0	160	25	130
	45									
	50						396.0	156		
KAE128	45	87	110	71	49	M80x3	554.0	175	31	150
	50									
	60						472.0	174		
KAE148	60	95	120	88	52	M95x3	626.0	190	33	160
	70									
	75						537.0	189		
KAE168	70	105	150	104	57	M110x3	722.0	230	42	195
	80									
	90						623.0	229		

Gearbox	d	d9		s9	m7	d11	m5	l8	M	t	u
KAE68	20	48	+0.025 / 0	11	11	65	4.0	20.0	M10x25	22.8	6
	25									28.3	8
	30									33.3	8
KAE88	30	63	+0.030 / 0	17	12	80	4.5	23.5	M12x35	33.3	8
	35									38.3	10
	40									43.3	12
KAE108	40	78	+0.030 / 0	17	14	95	5.0	31.0	M16x40	43.3	12
	45									48.8	14
	50									53.8	14
KAE128	45	88	+0.035 / 0	22	17	110	5.0	42.0	M16x45	48.8	14
	50									53.8	14
	60									64.4	18
KAE148	60	105	+0.035 / 0	22	20	120	6.0	45.0	M16x55	64.4	18
	70									74.9	20
	75									79.9	20
KAE168	70	125	+0.040 / 0	25	22	150	6.0	49.0	M20x55	74.9	20
	80									85.4	22
	90									95.4	25

© Siemens AG 2011

Inside contour of the flange-mounted design (A-type)

Design notes for the customer's interface, e.g. plug-in shaft for hollow shaft design.

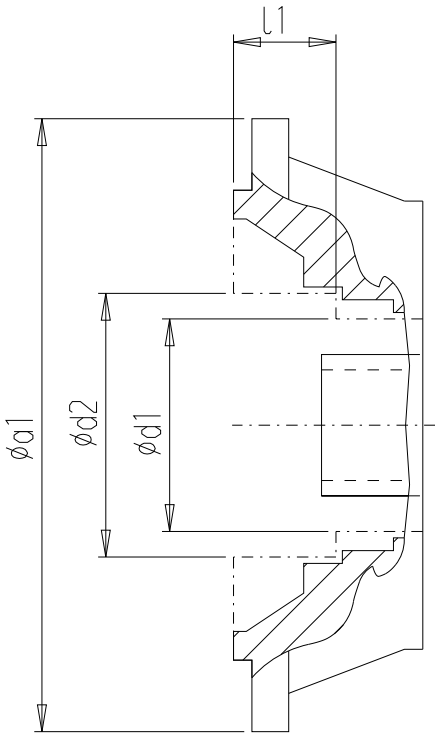

Gearbox	a1	d1	d2	l1
B.F.28	120	70	72	24.0
B.F.28	160	70	103	8.5
B.F.38	160	95	98	27.0
B.F.38	200	84	90	22.5
K.F.38	160	70	77	20.0
K.F.48	200	84	90	22.5
K.F.68	250	96	96	–
K.F.88	300	126	138	31.0
K.F.108	350	176	185	32.0
K.F.128	450	226	234	38.5
K.F.148	450	246	262	34.0
K.F.168	550	296	313	39.0
K.F.188	660	296	296	–

© Siemens AG 2011

Dimensions

Pin holes

In the case of sizes K.Z.108 - 188, the customer's interface can be pinned on the housing flange (C-type).

The output flanges have been designed to ensure the reliable transmission of the permissible torques and radial forces by the bolt connections.

If an additional fuse, e. g. for high shock loads, is required, the existing pin holes can be used.

The gearbox and the machine can be drilled and pinned together. To do so, the provided dimensions must be observed.

K.Z.108

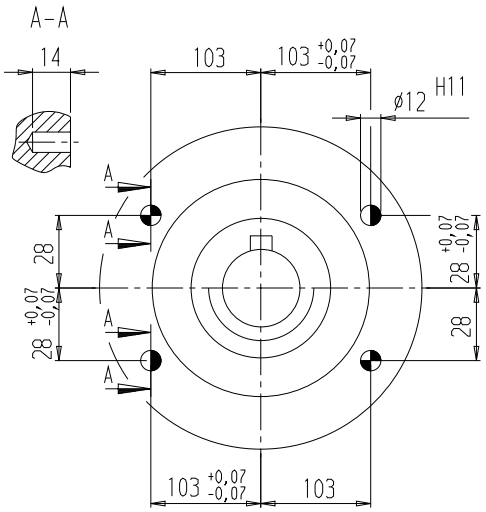

K.Z.128

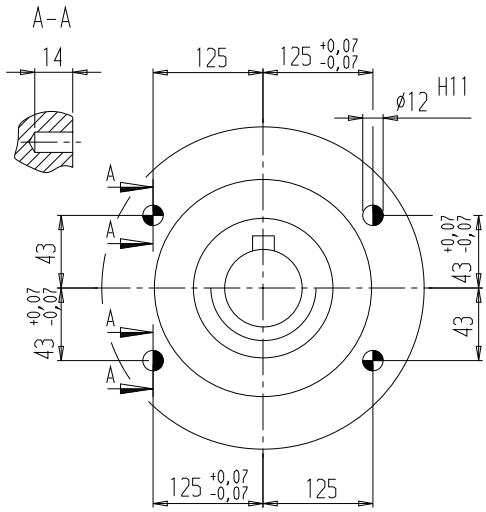

K.Z.148

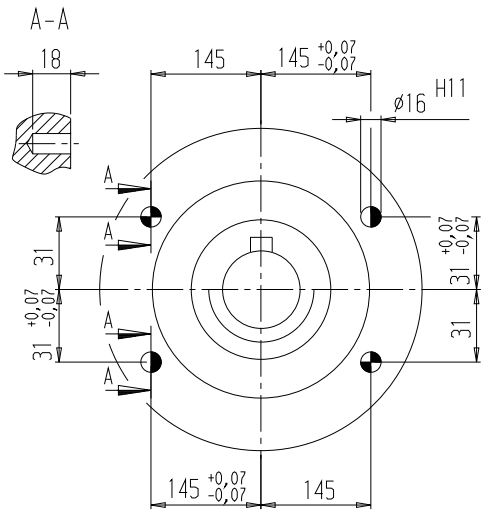

K.Z.168, K.Z.188

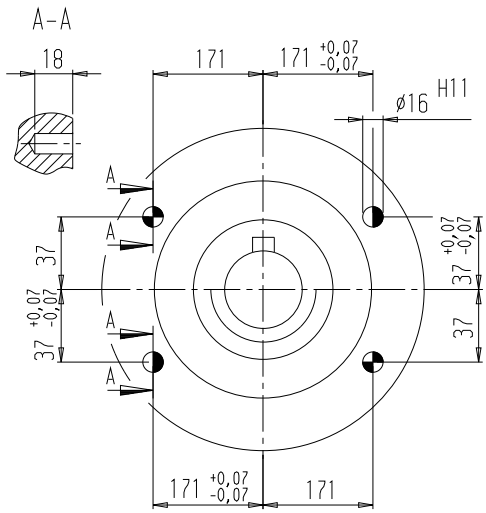

◑ Spring pins, heavy-duty design, to DIN 1481: Use pin holes provided in the housing flange.

◕ Grooved cylindrical pins with chamfer to DIN EN 28740/ISO 8740: Drill connecting component together with housing.

© Siemens AG 2011

Helical worm geared motors

5



Orientation
5/2 Overview
5/5 Modular system

General technical data
5/6 Permissible radial force

Geared motors up to 11 kW
5/7 Selection and ordering data

Transmission ratios and maximum torques
5/25 Selection and ordering data

Mounting types
5/43 Selection and ordering data

Shaft designs
5/45 Selection and ordering data

Flange-mounted designs
5/46 Selection and ordering data

Mounting types and mounting positions
5/47 Selection and ordering data

Special versions
5/50 Lubricants
5/50 Oil level control
5/51 Gearbox ventilation
5/51 Oil drain
5/52 Sealing
5/52 Hollow shaft cover (protection cover)
5/53 Radially reinforced output shaft bearings
5/53 2nd output shaft extension

Dimensions
5/54 Dimension drawing overview
5/57 Dimension drawings

© Siemens AG 2011

Orientation

Overview



MOTOX helical worm gearboxes are part of the MOTOX modular system. With helical, bevel helical, helical worm, or variable speed gearboxes and three-phase AC motors with or without brakes, this system covers all possible drive combinations, right up to electronic variable speed drives.

MOTOX helical worm gearboxes are designed for continuous duty. The sealed gearbox housings, made from gray cast iron or aluminum, are strong and absorb vibrations. A housing cover is not required for installing toothed components, which means that the housings are extremely rigid. Radial shaft seals with dust-protection lips prevent oil from leaking out of the housing and dust and water from entering it.
The gear wheels of the helical gear stages are milled and their surfaces hardened. The tooth flanks are ground or honed so that they are convex and corrected in terms of the profile.

© Siemens AG 2011

Overview (continued)

Helical worm gearboxes are designated as follows:

Gearbox type:

C Helical worm gearbox

Transmission stage
(-) Unspecified

Type:

Shaft
(-) Solid shaft
A Hollow shaft

Mounting
(-) Foot-mounted design
F Flange-mounted design (A-type)
Z Housing flange (C-type)
D Torque arm
G Flange (A-type) on opposite side to output shaft

Connections
(-) Feather key
S Shrink disk
T Hollow shaft with splined shaft

Type of intermediate gearbox

(-) Helical gearbox

Transmission stage
Z 2-stage
D 3-stage

Input unit

K2 Coupling lantern with flexible coupling for connecting an IEC motor

K2TC Coupling lantern with flexible coupling for connecting a NEMA motor [1)]

K4 Short coupling lantern with clamp connection for connecting an IEC motor

K5 Short coupling lantern with clamp connection for connecting a NEMA motor [1)]

KQ Lantern for servomotor with feather key and zero-backlash flexible coupling for connecting a servomotor

KQS Lantern for servomotor without feather key and zero-backlash flexible coupling for connecting a servomotor

A Input unit with free input shaft

A5 Input unit with free input shaft (NEMA design) [1)]

P Input unit with free input shaft and piggy back for connecting an IEC motor

P5 Input unit with free input shaft and piggy back for connecting a NEMA motor [1)]

PS Input unit with free input shaft and piggy back with protection cover

Example:

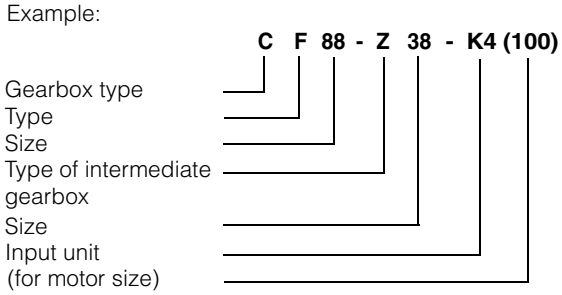

The series currently comprises 4 gearbox sizes.

Helical worm gearboxes are available in a 2-stage version.

5

[1)] These designs can be selected from our MOTOX Configurator electronic catalog.

© Siemens AG 2011

Overview (continued)

Worm and wheel sets with CAVEX gearing

CAVEX concave-profile worm and wheel sets are used for size 38 and above. The concave-profile cylindrical worm with its enveloping worm wheel is very much different to conventional designs. The worm threads have a concave profile instead of an involute or convex one.

The concave-profile teeth are subject to only low specific tooth pressure. The retention of a separating oil film between the tooth flanks is facilitated in particular, as the hollow flanks are in contact with convex mating flanks. Therefore, profile contact is much more favorable than in conventional gear teeth systems.

The concave-profile teeth provide a particularly favorable position for the instantaneous axes, which extend mainly at right angles to the sliding direction. This assists the build-up of lubricating pressure, i.e. the generation of an oil film between the tooth flanks.

The tooth flanks on new gearboxes will not yet be fully smoothed, meaning that the friction angle will be greater and efficiency lower during initial operation. The smaller the lead angle or, in other words, the higher the transmission ratio, the more pronounced the effect. The run-in procedure should take approximately 24 to 30 hours of operation at full load.

Starting efficiency is never as great as the efficiency at operating speed. This fact should be taken into account when starting a machine at full load, depending on the starting characteristics of the motor.

Attention: In respect of torque driving back from the output shaft, please take into account the reduced gear tooth efficiency $\eta' = 2 - 1/\eta$, particularly with high transmission ratios of the worm gear stage (η = efficiency with driving worm).

Self-locking only occurs at high worm transmission ratios, which are not used for sizes 28 to 88.

© Siemens AG 2011

Modular system

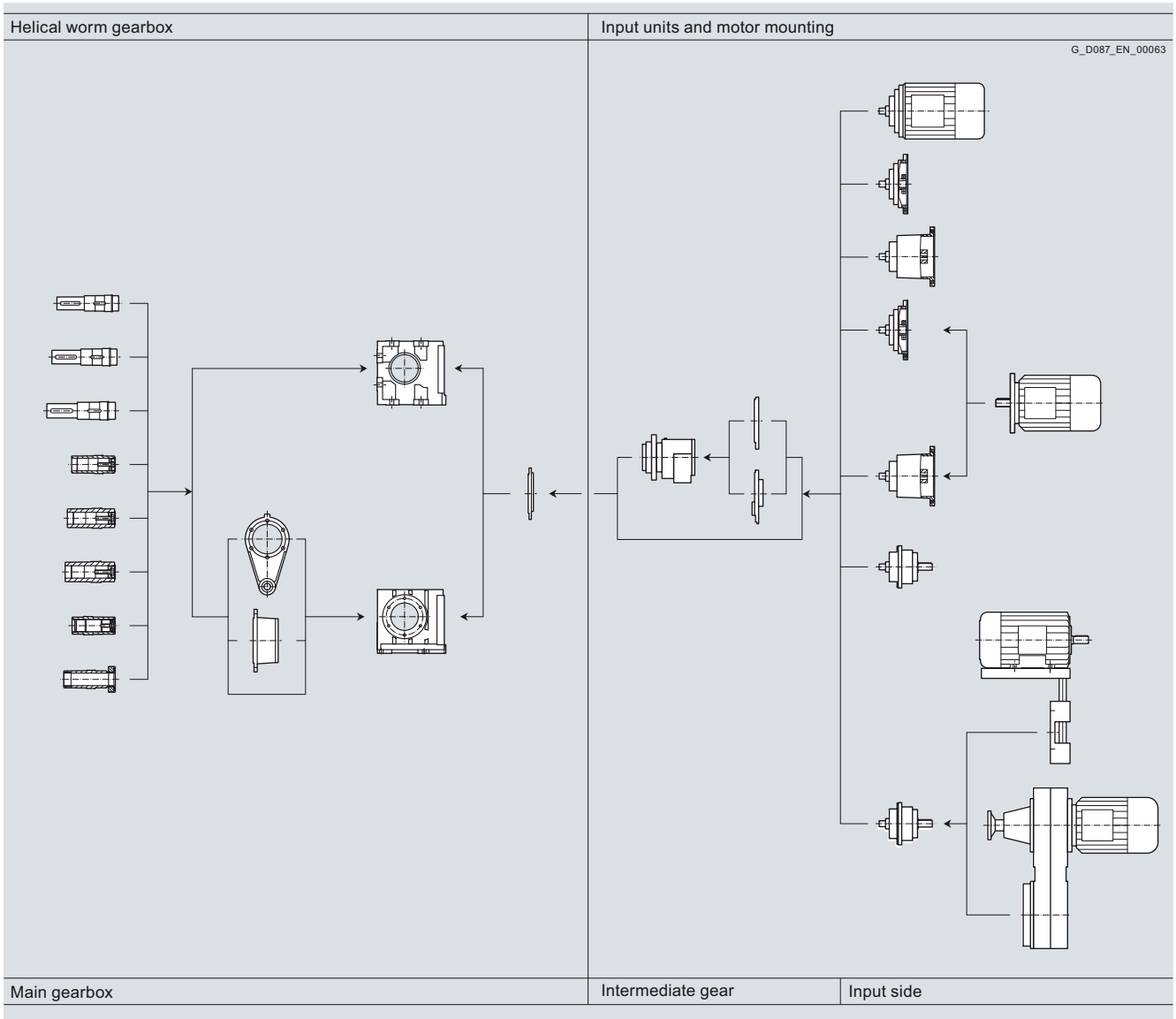

Use

MOTOX helical worm gearboxes are also ideal in difficult installation conditions. They reach high transmission ratios despite their extremely compact dimensions.

Helical worm gearboxes allow output flanges or torque arms to be attached in accordance with the relevant requirements.

Output shafts are available in different versions and diameters, as solid or hollow shafts.

Helical worm gearboxes are characterized by their very low noise emissions.

Oil quantities

The oil quantities corresponding to the applicable mounting positions are specified in the operating instructions and on the rating plate.

© Siemens AG 2011

Permissible radial force F_{Rperm1}

2-stage helical worm gearbox – standard bearing arrangement

Gearbox type	d mm	l mm	y mm	z mm	a kNmm	F_{Rperm} in N with x = l/2 for output speeds n_2 in rpm: Direction of rotation when viewing the output shaft	≤ 16	≤ 25	≤ 40	≤ 63	≤ 100	≤ 160
CF28	20	40	138	118	64.2	Left	3 210	3 210	3 210	3 210	–	–
						Right	3 210	3 210	3 210	3 210	–	–
CF38	25	50	146	121	152.5	Left	5 240	5 380	4 060	3 440	2 800	2 420
						Right	5 540	5 570	4 560	3 940	3 260	2 800
CF48	30	60	176	146	255.0	Left	8 500	8 500	6 700	5 500	4 730	4 090
						Right	8 500	8 500	7 350	6 010	5 190	4 480
CF68	40	80	213	173	440.0	Left	10 060	7 830	6 660	5 750	4 630	4 670
						Right	10 450	8 650	7 410	6 390	5 330	5 220
CF88	50	100	262	212	845.0	Left	13 980	12 390	10 560	9 040	7 460	6 820
						Right	14 640	13 270	11 300	9 680	8 400	7 620

5

2-stage helical worm gearbox – reinforced bearing arrangement

Gearbox type	d mm	l mm	y mm	z mm	a kNmm	F_{Rperm} in N with x = l/2 for output speeds n_2 in rpm: Direction of rotation when viewing the output shaft	≤ 16	≤ 25	≤ 40	≤ 63	≤ 100	≤ 160
CF68	40	80	213	173	440	Left	11 000	11 000	11 000	11 000	11 000	11 000
						Right	11 000	11 000	11 000	11 000	11 000	11 000
CF88	50	100	262	212	845	Left	16 900	16 900	16 900	16 900	16 900	16 900
						Right	16 900	16 900	16 900	16 900	16 900	16 900

The values in the table apply to the worst-case scenario.
The output shaft bearing arrangement can be calculated using our MOTOX Configurator electronic catalog.
See Chapter 1 of the configuring guide for more information on calculating the permissible radial force.

For worm gearboxes, the values are the same whether they refer to a "clockwise" or "counterclockwise" direction of rotation, when viewing the output shaft.

The calculation does not include additional axial forces.
If the direction of rotation of the output shaft and the additional axial forces are known or the values in the table are insufficient, a calculation can be performed on request.

© Siemens AG 2011

Selection and ordering data

The selection tables show the most common variants and combinations. Other combinations can be selected using our MOTOX Configurator or made available on request.

At an identical power rating and output speed, priority is given in the selection tables to 4-pole geared motors.

At the available transmission ratios, they cover the majority of output speeds.

Due to their prevalence, 4-pole geared motors are easily available, with short delivery times and at a low cost. They also feature a favorable size / power ratio.

Power rating P_{Motor} kW (50 Hz)	Output speed n_2 (50 Hz) rpm	Output torque T_2 Nm	Service factor f_B	Gearbox ratio i_{tot}		Order No.	Order code (No. of poles)	Weight *) kg
0.09	**C.48-LA71M8**							
	2.0	241	1.5	320.67	★	**2KJ1602 - ■CE13 - ■■K2**	**P02**	30
	2.2	217	1.7	284.7		**2KJ1602 - ■CE13 - ■■J2**	**P02**	30
	2.5	194	1.9	249.6	★	**2KJ1602 - ■CE13 - ■■H2**	**P02**	30
	C.38-LA71M8							
	2.0	230	0.97	320.67	★	**2KJ1601 - ■CE13 - ■■K2**	**P02**	22
	2.2	207	1.1	284.7		**2KJ1601 - ■CE13 - ■■J2**	**P02**	22
	2.5	185	1.2	249.6	★	**2KJ1601 - ■CE13 - ■■H2**	**P02**	22
	C.38-LA71B6							
	2.8	170	1.3	320.67	★	**2KJ1601 - ■CB13 - ■■K2**	**P01**	22
	3.1	153	1.5	284.7		**2KJ1601 - ■CB13 - ■■J2**	**P01**	22
	3.6	137	1.6	249.6	★	**2KJ1601 - ■CB13 - ■■H2**	**P01**	22
	4.0	125	1.8	223.36		**2KJ1601 - ■CB13 - ■■G2**	**P01**	22
0.12	**C.88-D28-LA71B4**							
	0.21	1 913	0.83	6 722		**2KJ1615 - ■CB13 - ■■A1**		77
	C.88-Z28-LA71B4							
	0.23	1 739	0.91	6 016	★	**2KJ1614 - ■CB13 - ■■B2**		76
	0.26	1 554	1.0	5 342		**2KJ1614 - ■CB13 - ■■A2**		76
	0.30	1 374	1.2	4 683	★	**2KJ1614 - ■CB13 - ■■X1**		76
	0.33	1 239	1.3	4 191		**2KJ1614 - ■CB13 - ■■W1**		76
	0.38	1 109	1.4	3 719	★	**2KJ1614 - ■CB13 - ■■V1**		76
	0.43	983	1.6	3 260		**2KJ1614 - ■CB13 - ■■U1**		76
	0.49	874	1.8	2 866	★	**2KJ1614 - ■CB13 - ■■T1**		76
	0.54	798	2.0	2 589		**2KJ1614 - ■CB13 - ■■S1**		76
	C.68-Z28-LA71B4							
	0.51	846	0.80	2 745		**2KJ1610 - ■CB13 - ■■U1**		49
	0.58	751	0.90	2 414	★	**2KJ1610 - ■CB13 - ■■T1**		49
	0.64	683	0.99	2 180		**2KJ1610 - ■CB13 - ■■S1**		49
	0.74	602	1.1	1 900	★	**2KJ1610 - ■CB13 - ■■R1**		49
	0.82	545	1.2	1 706		**2KJ1610 - ■CB13 - ■■Q1**		49
	0.91	497	1.4	1 541	★	**2KJ1610 - ■CB13 - ■■P1**		49
	1.0	455	1.5	1 397		**2KJ1610 - ■CB13 - ■■N1**		49
	1.1	419	1.6	1 271	★	**2KJ1610 - ■CB13 - ■■M1**		49
	1.2	376	1.8	1 124		**2KJ1610 - ■CB13 - ■■L1**		49
	1.3	350	1.9	1 038	★	**2KJ1610 - ■CB13 - ■■K1**		49
	C.68-LA71MB8							
	1.8	380	1.8	364	★	**2KJ1603 - ■CF13 - ■■U2**	**P02**	47
	2.0	344	2.0	323.7		**2KJ1603 - ■CF13 - ■■T2**	**P02**	47

★ Preferred transmission ratio

Shaft designs, see page 5/45 — **1 to 9**

Frequency and voltage, see page 8/20 — **1 to 9**

Gearbox housing mounting position, see page 5/47 — **A, D, F or H**

*) For mounting type B3

© Siemens AG 2011

Selection and ordering data (continued)

Power rating P_{Motor} kW	Output speed n_2 (50 Hz) rpm	Output torque T_2 Nm	Service factor f_B	Gearbox ratio i_{tot}		Order No.	Order code (No. of poles)	Weight *) kg
0.12	**C.48-Z28-LA71B4**							
	0.98	432	0.84	1 422		**2KJ1607 - ■CB13 - ■■Q1**		34
	1.1	394	0.93	1 284	★	**2KJ1607 - ■CB13 - ■■P1**		34
	1.2	360	1.0	1 164		**2KJ1607 - ■CB13 - ■■N1**		34
	1.3	331	1.1	1 059	★	**2KJ1607 - ■CB13 - ■■M1**		34
	1.5	297	1.2	937		**2KJ1607 - ■CB13 - ■■L1**		34
	1.6	277	1.3	865	★	**2KJ1607 - ■CB13 - ■■K1**		34
	1.9	243	1.5	745		**2KJ1607 - ■CB13 - ■■J1**		34
	C.48-LA71MB8							
	2.0	315	1.2	320.67	★	**2KJ1602 - ■CF13 - ■■K2**	**P02**	30
	2.3	284	1.3	284.7		**2KJ1602 - ■CF13 - ■■J2**	**P02**	30
	2.6	254	1.4	249.6	★	**2KJ1602 - ■CF13 - ■■H2**	**P02**	30
	C.48-LA71C6							
	2.7	246	1.5	320.67	★	**2KJ1602 - ■CC13 - ■■K2**	**P01**	30
	3.0	223	1.6	284.7		**2KJ1602 - ■CC13 - ■■J2**	**P01**	30
	3.4	200	1.8	249.6	★	**2KJ1602 - ■CC13 - ■■H2**	**P01**	30
	3.9	182	2.0	223.36		**2KJ1602 - ■CC13 - ■■G2**	**P01**	30
	C.38-Z28-LA71B4							
	1.6	264	0.84	865	★	**2KJ1605 - ■CB13 - ■■K1**		25
	1.9	231	0.96	745		**2KJ1605 - ■CB13 - ■■J1**		25
	C.38-LA71MB8							
	2.3	271	0.83	284.7		**2KJ1601 - ■CF13 - ■■J2**	**P02**	22
	2.6	242	0.93	249.6	★	**2KJ1601 - ■CF13 - ■■H2**	**P02**	22
	C.38-LA71C6							
	2.7	234	0.96	320.67	★	**2KJ1601 - ■CC13 - ■■K2**	**P01**	22
	3.0	212	1.1	284.7		**2KJ1601 - ■CC13 - ■■J2**	**P01**	22
	3.4	189	1.2	249.6	★	**2KJ1601 - ■CC13 - ■■H2**	**P01**	22
	3.9	173	1.3	223.36		**2KJ1601 - ■CC13 - ■■G2**	**P01**	22
	C.38-LA71B4							
	4.4	155	1.4	320.67	★	**2KJ1601 - ■CB13 - ■■K2**		22
	4.9	141	1.6	284.7		**2KJ1601 - ■CB13 - ■■J2**		22
	5.6	126	1.8	249.6	★	**2KJ1601 - ■CB13 - ■■H2**		22
	6.3	114	2.0	223.36		**2KJ1601 - ■CB13 - ■■G2**		22
	C.28-LA71B4							
	5.6	134	0.88	248		**2KJ1600 - ■CB13 - ■■M1**		10
	6.9	109	0.91	202.24		**2KJ1600 - ■CB13 - ■■L1**		10
	9.0	94	1.2	155		**2KJ1600 - ■CB13 - ■■K1**		10
	11.1	77	1.2	126.4		**2KJ1600 - ■CB13 - ■■J1**		10
	15.1	63	1.9	93		**2KJ1600 - ■CB13 - ■■H1**		10
	18.5	51	1.9	75.84		**2KJ1600 - ■CB13 - ■■G1**		10
	23	44	2.7	62		**2KJ1600 - ■CB13 - ■■F1**		10
	28	36	2.6	50.56		**2KJ1600 - ■CB13 - ■■E1**		10
	30	34	3.2	46.5		**2KJ1600 - ■CB13 - ■■D1**		10

★ Preferred transmission ratio

Shaft designs, see page 5/45 — **1 to 9**

Frequency and voltage, see page 8/20 — **1 to 9**

Gearbox housing mounting position, see page 5/47 — **A, D, F or H**

*) For mounting type B3

© Siemens AG 2011

Selection and ordering data (continued)

Power rating P_{Motor} kW	Output speed n_2 (50 Hz) rpm	Output torque T_2 Nm	Service factor f_B	Gearbox ratio i_{tot}		Order No.	Order code (No. of poles)	Weight *) kg
0.12	**C.28-LA71B4**							
	37	28	3.2	37.92		**2KJ1600 - ■CB13 - ■■C1**		10
	45	23	4.3	31		**2KJ1600 - ■CB13 - ■■B1**		10
	55	19	4.3	25.28		**2KJ1600 - ■CB13 - ■■A1**		10
0.18	**C.88-Z28-LA71C4**							
	0.37	1 885	0.84	3 719	★	**2KJ1614 - ■CC13 - ■■V1**		76
	0.42	1 671	0.95	3 260		**2KJ1614 - ■CC13 - ■■U1**		76
	0.48	1 486	1.1	2 866	★	**2KJ1614 - ■CC13 - ■■T1**		76
	0.53	1 356	1.2	2 589		**2KJ1614 - ■CC13 - ■■S1**		76
	0.61	1 199	1.3	2 256	★	**2KJ1614 - ■CC13 - ■■R1**		76
	0.68	1 091	1.5	2 026		**2KJ1614 - ■CC13 - ■■Q1**		76
	0.75	998	1.6	1 829	★	**2KJ1614 - ■CC13 - ■■P1**		76
	0.83	917	1.7	1 659		**2KJ1614 - ■CC13 - ■■N1**		76
	0.91	846	1.9	1 510	★	**2KJ1614 - ■CC13 - ■■M1**		76
	C.68-Z28-LA71C4							
	0.89	845	0.80	1 541	★	**2KJ1610 - ■CC13 - ■■P1**		49
	0.98	774	0.87	1 397		**2KJ1610 - ■CC13 - ■■N1**		49
	1.1	711	0.95	1 271	★	**2KJ1610 - ■CC13 - ■■M1**		49
	1.2	638	1.1	1 124		**2KJ1610 - ■CC13 - ■■L1**		49
	1.3	595	1.1	1 038	★	**2KJ1610 - ■CC13 - ■■K1**		49
	1.5	522	1.3	893		**2KJ1610 - ■CC13 - ■■J1**		49
	1.7	481	1.4	812	★	**2KJ1610 - ■CC13 - ■■H1**		49
	C.68-LA80S8							
	2.1	497	1.4	323.7		**2KJ1603 - ■DB13 - ■■T2**	**P02**	51
	C.68-LA71S6							
	2.3	452	1.5	364	★	**2KJ1603 - ■CD13 - ■■U2**	**P01**	47
	2.6	409	1.7	323.7		**2KJ1603 - ■CD13 - ■■T2**	**P01**	47
	3.0	363	1.9	280.8	★	**2KJ1603 - ■CD13 - ■■S2**	**P01**	47
	3.2	343	2.0	262.36		**2KJ1603 - ■CD13 - ■■R2**	**P01**	47
	C.48-Z28-LA71C4							
	1.8	412	0.89	745		**2KJ1607 - ■CC13 - ■■J1**		34
	C.48-LA80S8							
	2.1	454	0.81	320.67	★	**2KJ1602 - ■DB13 - ■■K2**	**P02**	34
	2.4	410	0.89	284.7		**2KJ1602 - ■DB13 - ■■J2**	**P02**	34
	C.48-LA71S6							
	2.7	373	0.98	320.67	★	**2KJ1602 - ■CD13 - ■■K2**	**P01**	30
	3.0	337	1.1	284.7		**2KJ1602 - ■CD13 - ■■J2**	**P01**	30
	3.4	302	1.2	249.6	★	**2KJ1602 - ■CD13 - ■■H2**	**P01**	30
	3.8	275	1.3	223.36		**2KJ1602 - ■CD13 - ■■G2**	**P01**	30
	C.48-LA71C4							
	4.3	250	1.5	320.67	★	**2KJ1602 - ■CC13 - ■■K2**		30
	4.8	226	1.6	284.7		**2KJ1602 - ■CC13 - ■■J2**		30
	5.5	202	1.8	249.6	★	**2KJ1602 - ■CC13 - ■■H2**		30

★ Preferred transmission ratio

Shaft designs, see page 5/45 — **1 to 9**

Frequency and voltage, see page 8/20 — **1 to 9**

Gearbox housing mounting position, see page 5/47 — **A, D, F or H**

*) For mounting type B3

© Siemens AG 2011

Selection and ordering data (continued)

Power rating P_{Motor} kW	Output speed n_2 (50 Hz) rpm	Output torque T_2 Nm	Service factor f_B	Gearbox ratio i_{tot}		Order No.	Order code (No. of poles)	Weight *) kg
0.18	**C.48-LA71C4**							
	6.1	184	2.0	223.36		**2KJ1602 - ■CC13 - ■■G2**		30
	C.38-LA71S6							
	3.8	261	0.86	223.36		**2KJ1601 - ■CD13 - ■■G2**	**P01**	22
	C.38-LA71C4							
	4.3	237	0.95	320.67	★	**2KJ1601 - ■CC13 - ■■K2**		22
	4.8	215	1.0	284.7		**2KJ1601 - ■CC13 - ■■J2**		22
	5.5	192	1.2	249.6	★	**2KJ1601 - ■CC13 - ■■H2**		22
	6.1	175	1.3	223.36		**2KJ1601 - ■CC13 - ■■G2**		22
	6.9	158	1.4	198.25	★	**2KJ1601 - ■CC13 - ■■F2**		22
	7.9	140	1.6	173.73		**2KJ1601 - ■CC13 - ■■E2**		22
	9.0	125	1.8	152.75	★	**2KJ1601 - ■CC13 - ■■D2**		22
	9.9	114	2.0	138		**2KJ1601 - ■CC13 - ■■C2**		22
	C.28-LA71C4							
	8.8	144	0.81	155		**2KJ1600 - ■CC13 - ■■K1**		10
	10.8	118	0.8	126.4		**2KJ1600 - ■CC13 - ■■J1**		10
	14.7	96	1.2	93		**2KJ1600 - ■CC13 - ■■H1**		10
	18.1	78	1.2	75.84		**2KJ1600 - ■CC13 - ■■G1**		10
	22	68	1.7	62		**2KJ1600 - ■CC13 - ■■F1**		10
	27	55	1.7	50.56		**2KJ1600 - ■CC13 - ■■E1**		10
	30	52	2.1	46.5		**2KJ1600 - ■CC13 - ■■D1**		10
	36	43	2.1	37.92		**2KJ1600 - ■CC13 - ■■C1**		10
	44	36	2.8	31		**2KJ1600 - ■CC13 - ■■B1**		10
	54	29	2.8	25.28		**2KJ1600 - ■CC13 - ■■A1**		10
0.25	**C.88-Z28-LA71S4**							
	0.60	1 782	0.89	2 256	★	**2KJ1614 - ■CD13 - ■■R1**		76
	0.67	1 621	0.98	2 026		**2KJ1614 - ■CD13 - ■■Q1**		76
	0.74	1 482	1.1	1 829	★	**2KJ1614 - ■CD13 - ■■P1**		76
	0.81	1 362	1.2	1 659		**2KJ1614 - ■CD13 - ■■N1**		76
	0.89	1 257	1.3	1 510	★	**2KJ1614 - ■CD13 - ■■M1**		76
	1.0	1 132	1.4	1 335		**2KJ1614 - ■CD13 - ■■L1**		76
	1.1	1 058	1.5	1 232	★	**2KJ1614 - ■CD13 - ■■K1**		76
	1.3	934	1.7	1 061		**2KJ1614 - ■CD13 - ■■J1**		76
	1.4	863	1.8	964	★	**2KJ1614 - ■CD13 - ■■H1**		76
	1.5	894	1.8	877	★	**2KJ1614 - ■CD13 - ■■G1**		76
	C.88-LA80M8							
	1.6	928	1.6	440.7		**2KJ1604 - ■DC13 - ■■T2**	**P02**	78
	1.8	840	1.9	390	★	**2KJ1604 - ■DC13 - ■■S2**	**P02**	78
	1.9	777	2.0	354.55		**2KJ1604 - ■DC13 - ■■R2**	**P02**	78
	C.88-LA71M6							
	2.0	771	2.0	440.7		**2KJ1604 - ■CE13 - ■■T2**	**P01**	74
	C.68-Z28-LA71S4							
	1.5	775	0.87	893		**2KJ1610 - ■CD13 - ■■J1**		49
	1.7	714	0.95	812	★	**2KJ1610 - ■CD13 - ■■H1**		49

★ Preferred transmission ratio

Shaft designs, see page 5/45 — **1 to 9**
Frequency and voltage, see page 8/20 — **1 to 9**
Gearbox housing mounting position, see page 5/47 — **A, D, F or H**

*) For mounting type B3

© Siemens AG 2011

Selection and ordering data (continued)

Power rating P_{Motor} kW	Output speed n_2 (50 Hz) rpm	Output torque T_2 Nm	Service factor f_B	Gearbox ratio i_{tot}		Order No.	Order code (No. of poles)	Weight *) kg
0.25	**C.68-LA80M8**							
	2.1	681	0.99	323.7		**2KJ1603 - ■DC13 - ■■T2**	**P02**	51
	C.68-LA71M6							
	2.4	621	1.1	364	★	**2KJ1603 - ■CE13 - ■■U2**	**P01**	47
	2.7	563	1.2	323.7		**2KJ1603 - ■CE13 - ■■T2**	**P01**	47
	3.1	499	1.4	280.8	★	**2KJ1603 - ■CE13 - ■■S2**	**P01**	47
	3.3	472	1.4	262.36		**2KJ1603 - ■CE13 - ■■R2**	**P01**	47
	C.68-LA71S4							
	3.7	425	1.6	364	★	**2KJ1603 - ■CD13 - ■■U2**		47
	4.2	385	1.8	323.7		**2KJ1603 - ■CD13 - ■■T2**		47
	4.8	340	2.0	280.8	★	**2KJ1603 - ■CD13 - ■■S2**		47
	5.1	321	2.1	262.36		**2KJ1603 - ■CD13 - ■■R2**		47
	C.48-LA71M6							
	3.4	416	0.88	249.6	★	**2KJ1602 - ■CE13 - ■■H2**	**P01**	30
	3.9	379	0.97	223.36		**2KJ1602 - ■CE13 - ■■G2**	**P01**	30
	C.48-LA71S4							
	4.2	352	1.0	320.67	★	**2KJ1602 - ■CD13 - ■■K2**		30
	4.7	318	1.2	284.7		**2KJ1602 - ■CD13 - ■■J2**		30
	5.4	285	1.3	249.6	★	**2KJ1602 - ■CD13 - ■■H2**		30
	6.0	259	1.4	223.36		**2KJ1602 - ■CD13 - ■■G2**		30
	6.8	234	1.6	198.25	★	**2KJ1602 - ■CD13 - ■■F2**		30
	7.8	208	1.8	173.73		**2KJ1602 - ■CD13 - ■■E2**		30
	8.8	185	2.0	152.75	★	**2KJ1602 - ■CD13 - ■■D2**		30
	C.38-LA71S4							
	5.4	270	0.83	249.6	★	**2KJ1601 - ■CD13 - ■■H2**		22
	6.0	246	0.92	223.36		**2KJ1601 - ■CD13 - ■■G2**		22
	6.8	222	1.0	198.25	★	**2KJ1601 - ■CD13 - ■■F2**		22
	7.8	198	1.1	173.73		**2KJ1601 - ■CD13 - ■■E2**		22
	8.8	176	1.3	152.75	★	**2KJ1601 - ■CD13 - ■■D2**		22
	9.8	161	1.4	138		**2KJ1601 - ■CD13 - ■■C2**		22
	11.2	141	1.6	120.25	★	**2KJ1601 - ■CD13 - ■■B2**		22
	12.5	128	1.8	108		**2KJ1601 - ■CD13 - ■■A2**		22
	13.8	116	2.0	97.5	★	**2KJ1601 - ■CD13 - ■■X1**		22
	15.3	105	2.1	88.4		**2KJ1601 - ■CD13 - ■■W1**		22
	16.8	96	2.3	80.44	★	**2KJ1601 - ■CD13 - ■■V1**		22
	22	91	2.2	60.3	★	**2KJ1601 - ■CD13 - ■■S1**		22
	C.28-LA71S4							
	14.5	136	0.87	93		**2KJ1600 - ■CD13 - ■■H1**		10
	17.8	111	0.86	75.84		**2KJ1600 - ■CD13 - ■■G1**		10
	22	95	1.2	62		**2KJ1600 - ■CD13 - ■■F1**		10
	27	78	1.2	50.56		**2KJ1600 - ■CD13 - ■■E1**		10
	29	74	1.5	46.5		**2KJ1600 - ■CD13 - ■■D1**		10
	36	60	1.5	37.92		**2KJ1600 - ■CD13 - ■■C1**		10
	44	50	2.0	31		**2KJ1600 - ■CD13 - ■■B1**		10

★ Preferred transmission ratio

Shaft designs, see page 5/45 — **1 to 9**

Frequency and voltage, see page 8/20 — **1 to 9**

Gearbox housing mounting position, see page 5/47 — **A, D, F or H**

*) For mounting type B3

© Siemens AG 2011

Selection and ordering data (continued)

Power rating P_{Motor} kW	Output speed n_2 (50 Hz) rpm	Output torque T_2 Nm	Service factor f_B	Gearbox ratio i_{tot}		Order No.	Order code (No. of poles)	Weight *) kg
0.25	**C.28-LA71S4**							
	53	41	2.0	25.28		**2KJ1600 - ■CD13 - ■■A1**		10
0.37	**C.88-Z28-LA71M4**							
	0.91	1 918	0.83	1 510	★	**2KJ1614 - ■CE13 - ■■M1**		76
	1.0	1 728	0.92	1 335		**2KJ1614 - ■CE13 - ■■L1**		76
	1.1	1 615	0.98	1 232	★	**2KJ1614 - ■CE13 - ■■K1**		76
	1.3	1 426	1.1	1 061		**2KJ1614 - ■CE13 - ■■J1**		76
	1.4	1 318	1.2	964	★	**2KJ1614 - ■CE13 - ■■H1**		76
	C.88-LA90SA8							
	1.7	1 258	1.3	390	★	**2KJ1604 - ■EB13 - ■■S2**	**P02**	81
	1.9	1 164	1.4	354.55		**2KJ1604 - ■EB13 - ■■R2**	**P02**	81
	C.88-LA80S6							
	2.1	1 079	1.4	440.7		**2KJ1604 - ■DB13 - ■■T2**	**P01**	78
	2.4	976	1.6	390	★	**2KJ1604 - ■DB13 - ■■S2**	**P01**	78
	2.6	902	1.8	354.55		**2KJ1604 - ■DB13 - ■■R2**	**P01**	78
	2.9	824	1.9	318.5	★	**2KJ1604 - ■DB13 - ■■Q2**	**P01**	78
	C.68-LA80S6							
	2.8	787	0.86	323.7		**2KJ1603 - ■DB13 - ■■T2**	**P01**	51
	3.3	698	0.97	280.8	★	**2KJ1603 - ■DB13 - ■■S2**	**P01**	51
	3.5	659	1.0	262.36		**2KJ1603 - ■DB13 - ■■R2**	**P01**	51
	C.68-LA71M4							
	3.8	621	1.1	364	★	**2KJ1603 - ■CE13 - ■■U2**		47
	4.2	562	1.2	323.7		**2KJ1603 - ■CE13 - ■■T2**		47
	4.9	497	1.4	280.8	★	**2KJ1603 - ■CE13 - ■■S2**		47
	5.2	468	1.5	262.36		**2KJ1603 - ■CE13 - ■■R2**		47
	5.9	418	1.6	230.75	★	**2KJ1603 - ■CE13 - ■■Q2**		47
	6.8	370	1.8	202.09		**2KJ1603 - ■CE13 - ■■P2**		47
	7.7	331	2.0	178.75	★	**2KJ1603 - ■CE13 - ■■N2**		47
	8.5	301	2.1	162		**2KJ1603 - ■CE13 - ■■M2**		47
	C.48-LA71M4							
	5.5	416	0.89	249.6	★	**2KJ1602 - ■CE13 - ■■H2**		30
	6.1	378	0.98	223.36		**2KJ1602 - ■CE13 - ■■G2**		30
	6.9	341	1.1	198.25	★	**2KJ1602 - ■CE13 - ■■F2**		30
	7.9	304	1.2	173.73		**2KJ1602 - ■CE13 - ■■E2**		30
	9.0	270	1.4	152.75	★	**2KJ1602 - ■CE13 - ■■D2**		30
	9.9	246	1.5	138		**2KJ1602 - ■CE13 - ■■C2**		30
	11.4	217	1.7	120.25	★	**2KJ1602 - ■CE13 - ■■B2**		30
	12.7	195	1.9	108		**2KJ1602 - ■CE13 - ■■A2**		30
	14.1	177	2.1	97.5	★	**2KJ1602 - ■CE13 - ■■X1**		30
	15.5	161	2.2	88.4		**2KJ1602 - ■CE13 - ■■W1**		30
	17.0	147	2.3	80.44	★	**2KJ1602 - ■CE13 - ■■V1**		30
	C.38-LA71M4							
	9.0	257	0.88	152.75	★	**2KJ1601 - ■CE13 - ■■D2**		22
	9.9	234	0.97	138		**2KJ1601 - ■CE13 - ■■C2**		22

★ Preferred transmission ratio

Shaft designs, see page 5/45 — **1 to 9**

Frequency and voltage, see page 8/20 — **1 to 9**

Gearbox housing mounting position, see page 5/47 — **A, D, F or H**

*) For mounting type B3

© Siemens AG 2011

Selection and ordering data (continued)

Power rating P_{Motor} kW	Output speed n_2 (50 Hz) rpm	Output torque T_2 Nm	Service factor f_B	Gearbox ratio i_{tot}		Order No.	Order code (No. of poles)	Weight *) kg
0.37	**C.38-LA71M4**							
	11.4	206	1.1	120.25	★	**2KJ1601 - ■CE13 - ■■B2**		22
	12.7	186	1.2	108		**2KJ1601 - ■CE13 - ■■A2**		22
	14.1	169	1.4	97.5	★	**2KJ1601 - ■CE13 - ■■X1**		22
	15.5	154	1.5	88.4		**2KJ1601 - ■CE13 - ■■W1**		22
	17.0	140	1.6	80.44	★	**2KJ1601 - ■CE13 - ■■V1**		22
	19.3	124	1.7	71.12		**2KJ1601 - ■CE13 - ■■U1**		22
	21	115	1.8	65.68	★	**2KJ1601 - ■CE13 - ■■T1**		22
	23	132	1.5	60.3	★	**2KJ1601 - ■CE13 - ■■S1**		22
	26	118	2.0	53.53		**2KJ1601 - ■CE13 - ■■R1**		22
	29	104	2.2	46.93	★	**2KJ1601 - ■CE13 - ■■Q1**		22
	33	94	2.3	42		**2KJ1601 - ■CE13 - ■■P1**		22
	42	74	2.6	32.67		**2KJ1601 - ■CE13 - ■■M1**		22
	C.28-LA71M4							
	22	139	0.84	62		**2KJ1600 - ■CE13 - ■■F1**		10
	27	113	0.83	50.56		**2KJ1600 - ■CE13 - ■■E1**		10
	30	108	1.0	46.5		**2KJ1600 - ■CE13 - ■■D1**		10
	36	88	1.0	37.92		**2KJ1600 - ■CE13 - ■■C1**		10
	44	73	1.4	31		**2KJ1600 - ■CE13 - ■■B1**		10
	54	60	1.4	25.28		**2KJ1600 - ■CE13 - ■■A1**		10
0.55	**C.88-LA90LA8**							
	1.7	1 870	0.85	390	★	**2KJ1604 - ■EE13 - ■■S2**	**P02**	84
	1.9	1 730	0.92	354.55		**2KJ1604 - ■EE13 - ■■R2**	**P02**	84
	C.88-LA80M6							
	2.1	1 618	0.94	440.7		**2KJ1604 - ■DC13 - ■■T2**	**P01**	78
	2.3	1 464	1.1	390	★	**2KJ1604 - ■DC13 - ■■S2**	**P01**	78
	2.6	1 353	1.2	354.55		**2KJ1604 - ■DC13 - ■■R2**	**P01**	78
	2.9	1 236	1.3	318.5	★	**2KJ1604 - ■DC13 - ■■Q2**	**P01**	78
	C.88-LA71ZMP4							
	3.1	1 151	1.4	440.7		**2KJ1604 - ■CG13 - ■■T2**		74
	3.5	1 036	1.5	390	★	**2KJ1604 - ■CG13 - ■■S2**		74
	3.9	953	1.7	354.55		**2KJ1604 - ■CG13 - ■■R2**		74
	4.3	865	1.8	318.5	★	**2KJ1604 - ■CG13 - ■■Q2**		74
	5.0	751	2.0	273		**2KJ1604 - ■CG13 - ■■P2**		74
	5.5	684	2.1	247	★	**2KJ1604 - ■CG13 - ■■N2**		74
	C.68-LA71ZMP4							
	4.2	835	0.81	323.7		**2KJ1603 - ■CG13 - ■■T2**		47
	4.9	739	0.92	280.8	★	**2KJ1603 - ■CG13 - ■■S2**		47
	5.2	696	0.98	262.36		**2KJ1603 - ■CG13 - ■■R2**		47
	5.9	621	1.1	230.75	★	**2KJ1603 - ■CG13 - ■■Q2**		47
	6.8	551	1.2	202.09		**2KJ1603 - ■CG13 - ■■P2**		47
	7.7	492	1.3	178.75	★	**2KJ1603 - ■CG13 - ■■N2**		47
	8.5	448	1.4	162		**2KJ1603 - ■CG13 - ■■M2**		47
	9.6	398	1.5	143	★	**2KJ1603 - ■CG13 - ■■L2**		47

★ Preferred transmission ratio

Shaft designs, see page 5/45 — **1 to 9**

Frequency and voltage, see page 8/20 — **1 to 9**

Gearbox housing mounting position, see page 5/47 — **A, D, F or H**

*) For mounting type B3

© Siemens AG 2011

Selection and ordering data (continued)

Power rating P_{Motor} kW	Output speed n_2 (50 Hz) rpm	Output torque T_2 Nm	Service factor f_B	Gearbox ratio i_{tot}		Order No.	Order code (No. of poles)	Weight *) kg
0.55	**C.68-LA71ZMP4**							
	10.6	360	1.7	129		**2KJ1603 - ■CG13 - ■■K2**		47
	11.7	327	1.8	117	★	**2KJ1603 - ■CG13 - ■■J2**		47
	12.9	299	1.9	106.6		**2KJ1603 - ■CG13 - ■■H2**		47
	14.1	273	2.0	97.5	★	**2KJ1603 - ■CG13 - ■■G2**		47
	15.2	294	2.1	90	★	**2KJ1603 - ■CG13 - ■■F2**		47
	16.3	276	2.3	84.09		**2KJ1603 - ■CG13 - ■■E2**		47
	C.48-LA71ZMP4							
	7.9	451	0.82	173.73		**2KJ1602 - ■CG13 - ■■E2**		30
	9.0	402	0.93	152.75	★	**2KJ1602 - ■CG13 - ■■D2**		30
	9.9	366	1.0	138		**2KJ1602 - ■CG13 - ■■C2**		30
	11.4	322	1.2	120.25	★	**2KJ1602 - ■CG13 - ■■B2**		30
	12.7	291	1.3	108		**2KJ1602 - ■CG13 - ■■A2**		30
	14.1	263	1.4	97.5	★	**2KJ1602 - ■CG13 - ■■X1**		30
	15.5	239	1.5	88.4		**2KJ1602 - ■CG13 - ■■W1**		30
	17.0	218	1.6	80.44	★	**2KJ1602 - ■CG13 - ■■V1**		30
	19.3	193	1.7	71.12		**2KJ1602 - ■CG13 - ■■U1**		30
	21	178	1.8	65.68	★	**2KJ1602 - ■CG13 - ■■T1**		30
	24	154	2.0	56.55		**2KJ1602 - ■CG13 - ■■S1**		30
	27	140	2.1	51.41	★	**2KJ1602 - ■CG13 - ■■R1**		30
	29	157	1.8	46.93	★	**2KJ1602 - ■CG13 - ■■Q1**		30
	33	141	2.2	42		**2KJ1602 - ■CG13 - ■■P1**		30
	37	126	2.1	37.28	★	**2KJ1602 - ■CG13 - ■■N1**		30
	42	110	2.4	32.67		**2KJ1602 - ■CG13 - ■■M1**		30
	C.38-LA71ZMP4							
	12.7	277	0.83	108		**2KJ1601 - ■CG13 - ■■A2**		22
	14.1	251	0.91	97.5	★	**2KJ1601 - ■CG13 - ■■X1**		22
	15.5	228	0.98	88.4		**2KJ1601 - ■CG13 - ■■W1**		22
	17.0	208	1.0	80.44	★	**2KJ1601 - ■CG13 - ■■V1**		22
	19.3	185	1.1	71.12		**2KJ1601 - ■CG13 - ■■U1**		22
	21	171	1.2	65.68	★	**2KJ1601 - ■CG13 - ■■T1**		22
	23	197	1.0	60.3	★	**2KJ1601 - ■CG13 - ■■S1**		22
	26	176	1.4	53.53		**2KJ1601 - ■CG13 - ■■R1**		22
	29	155	1.5	46.93	★	**2KJ1601 - ■CG13 - ■■Q1**		22
	33	140	1.6	42		**2KJ1601 - ■CG13 - ■■P1**		22
	37	124	1.8	37.28	★	**2KJ1601 - ■CG13 - ■■N1**		22
	42	109	1.7	32.67		**2KJ1601 - ■CG13 - ■■M1**		22
	48	96	2.1	28.72	★	**2KJ1601 - ■CG13 - ■■L1**		22
	53	87	2.3	25.95		**2KJ1601 - ■CG13 - ■■K1**		22
	61	76	2.7	22.61	★	**2KJ1601 - ■CG13 - ■■J1**		22
	68	68	2.8	20.31		**2KJ1601 - ■CG13 - ■■H1**		22
	C.28-LA71ZMP4							
	44	109	0.91	31		**2KJ1600 - ■CG13 - ■■B1**		10
	54	89	0.91	25.28		**2KJ1600 - ■CG13 - ■■A1**		10

★ Preferred transmission ratio

Shaft designs, see page 5/45 — **1 to 9**

Frequency and voltage, see page 8/20 — **1 to 9**

Gearbox housing mounting position, see page 5/47 — **A, D, F or H**

*) For mounting type B3

© Siemens AG 2011

Selection and ordering data (continued)

Power rating P_{Motor}	Output speed	Output torque	Service factor	Gearbox ratio		Order No.	Order code	Weight *)
kW	n_2 (50 Hz) rpm	T_2 Nm	f_B	i_{tot}			(No. of poles)	kg
0.75	**C.88-LA90SB6E**							
	2.4	1 969	0.81	390	★	**2KJ1604 - ■ED13 - ■■S2**	**P01**	81
	2.6	1 819	0.87	354.55		**2KJ1604 - ■ED13 - ■■R2**	**P01**	81
	2.9	1 663	0.96	318.5	★	**2KJ1604 - ■ED13 - ■■Q2**	**P01**	81
	C.88-LA80ZMB4E							
	3.2	1 541	1.0	440.7		**2KJ1604 - ■DE13 - ■■T2**		78
	3.6	1 386	1.1	390	★	**2KJ1604 - ■DE13 - ■■S2**		78
	3.9	1 274	1.2	354.55		**2KJ1604 - ■DE13 - ■■R2**		78
	4.4	1 157	1.4	318.5	★	**2KJ1604 - ■DE13 - ■■Q2**		78
	5.1	1 004	1.5	273		**2KJ1604 - ■DE13 - ■■P2**		78
	5.7	914	1.6	247	★	**2KJ1604 - ■DE13 - ■■N2**		78
	6.1	847	1.6	228		**2KJ1604 - ■DE13 - ■■M2**		78
	7.1	740	1.8	198.25	★	**2KJ1604 - ■DE13 - ■■L2**		78
	7.8	673	1.9	180		**2KJ1604 - ■DE13 - ■■K2**		78
	8.5	615	2.0	164.36	★	**2KJ1604 - ■DE13 - ■■J2**		78
	9.3	565	2.1	150.8		**2KJ1604 - ■DE13 - ■■H2**		78
	C.68-LA80ZMB4E							
	6.1	831	0.82	230.75	★	**2KJ1603 - ■DE13 - ■■Q2**		51
	6.9	736	0.93	202.09		**2KJ1603 - ■DE13 - ■■P2**		51
	7.8	657	1.0	178.75	★	**2KJ1603 - ■DE13 - ■■N2**		51
	8.6	599	1.1	162		**2KJ1603 - ■DE13 - ■■M2**		51
	9.8	531	1.2	143	★	**2KJ1603 - ■DE13 - ■■L2**		51
	10.9	481	1.2	129		**2KJ1603 - ■DE13 - ■■K2**		51
	12.0	437	1.3	117	★	**2KJ1603 - ■DE13 - ■■J2**		51
	13.1	399	1.4	106.6		**2KJ1603 - ■DE13 - ■■H2**		51
	14.4	365	1.5	97.5	★	**2KJ1603 - ■DE13 - ■■G2**		51
	15.6	393	1.6	90	★	**2KJ1603 - ■DE13 - ■■F2**		51
	16.6	369	1.7	84.09		**2KJ1603 - ■DE13 - ■■E2**		51
	18.9	326	1.8	73.96	★	**2KJ1603 - ■DE13 - ■■D2**		51
	22	287	2.2	64.77		**2KJ1603 - ■DE13 - ■■C2**		51
	37	172	2.5	38		**2KJ1603 - ■DE13 - ■■V1**		51
	46	138	2.8	30.46		**2KJ1603 - ■DE13 - ■■Q1**		51
	C.48-LA80ZMB4E							
	11.6	430	0.87	120.25	★	**2KJ1602 - ■DE13 - ■■B2**		34
	13.0	388	0.96	108		**2KJ1602 - ■DE13 - ■■A2**		34
	14.4	351	1.0	97.5	★	**2KJ1602 - ■DE13 - ■■X1**		34
	15.8	319	1.1	88.4		**2KJ1602 - ■DE13 - ■■W1**		34
	17.4	291	1.2	80.44	★	**2KJ1602 - ■DE13 - ■■V1**		34
	19.7	258	1.3	71.12		**2KJ1602 - ■DE13 - ■■U1**		34
	21	238	1.3	65.68	★	**2KJ1602 - ■DE13 - ■■T1**		34
	25	205	1.5	56.55		**2KJ1602 - ■DE13 - ■■S1**		34
	27	186	1.6	51.41	★	**2KJ1602 - ■DE13 - ■■R1**		34
	30	210	1.4	46.93	★	**2KJ1602 - ■DE13 - ■■Q1**		34
	33	188	1.7	42		**2KJ1602 - ■DE13 - ■■P1**		34

★ Preferred transmission ratio

Shaft designs, see page 5/45 — **1 to 9**

Frequency and voltage, see page 8/20 — **1 to 9**

Gearbox housing mounting position, see page 5/47 — **A, D, F or H**

*) For mounting type B3

© Siemens AG 2011

Selection and ordering data (continued)

Power rating P_{Motor} kW	Output speed n_2 (50 Hz) rpm	Output torque T_2 Nm	Service factor f_B	Gearbox ratio i_{tot}		Order No.	Order code (No. of poles)	Weight *) kg
0.75	**C.48-LA80ZMB4E**							
	38	168	1.6	37.28	★	**2KJ1602 - ■DE13 - ■■N1**		34
	43	147	1.8	32.67		**2KJ1602 - ■DE13 - ■■M1**		34
	49	130	2.2	28.72	★	**2KJ1602 - ■DE13 - ■■L1**		34
	54	117	2.3	25.95		**2KJ1602 - ■DE13 - ■■K1**		34
	62	102	2.6	22.61	★	**2KJ1602 - ■DE13 - ■■J1**		34
	69	92	3.0	20.31		**2KJ1602 - ■DE13 - ■■H1**		34
	C.38-LA80ZMB4E							
	19.7	246	0.85	71.12		**2KJ1601 - ■DE13 - ■■U1**		26
	21	228	0.89	65.68	★	**2KJ1601 - ■DE13 - ■■T1**		26
	26	235	1.0	53.53		**2KJ1601 - ■DE13 - ■■R1**		26
	30	207	1.1	46.93	★	**2KJ1601 - ■DE13 - ■■Q1**		26
	33	186	1.2	42		**2KJ1601 - ■DE13 - ■■P1**		26
	38	166	1.4	37.28	★	**2KJ1601 - ■DE13 - ■■N1**		26
	43	146	1.3	32.67		**2KJ1601 - ■DE13 - ■■M1**		26
	49	129	1.6	28.72	★	**2KJ1601 - ■DE13 - ■■L1**		26
	54	117	1.8	25.95		**2KJ1601 - ■DE13 - ■■K1**		26
	62	102	2.0	22.61	★	**2KJ1601 - ■DE13 - ■■J1**		26
	69	91	2.1	20.31		**2KJ1601 - ■DE13 - ■■H1**		26
	76	83	2.5	18.33	★	**2KJ1601 - ■DE13 - ■■G1**		26
	84	75	2.6	16.62		**2KJ1601 - ■DE13 - ■■F1**		26
	92	68	2.7	15.13	★	**2KJ1601 - ■DE13 - ■■E1**		26
	105	60	2.7	13.37		**2KJ1601 - ■DE13 - ■■D1**		26
	113	56	3.0	12.35	★	**2KJ1601 - ■DE13 - ■■C1**		26
	132	48	3.6	10.63		**2KJ1601 - ■DE13 - ■■B1**		26
	145	44	3.8	9.67	★	**2KJ1601 - ■DE13 - ■■A1**		26
1.1	**C.88-LA90SB4E**							
	3.7	1 983	0.80	390	★	**2KJ1604 - ■EM13 - ■■S2**		81
	4.1	1 822	0.87	354.55		**2KJ1604 - ■EM13 - ■■R2**		81
	4.5	1 654	0.95	318.5	★	**2KJ1604 - ■EM13 - ■■Q2**		81
	5.3	1 434	1.0	273		**2KJ1604 - ■EM13 - ■■P2**		81
	5.8	1 305	1.1	247	★	**2KJ1604 - ■EM13 - ■■N2**		81
	6.3	1 209	1.1	228		**2KJ1604 - ■EM13 - ■■M2**		81
	7.3	1 056	1.2	198.25	★	**2KJ1604 - ■EM13 - ■■L2**		81
	8.0	960	1.3	180		**2KJ1604 - ■EM13 - ■■K2**		81
	8.8	878	1.4	164.36	★	**2KJ1604 - ■EM13 - ■■J2**		81
	9.5	806	1.5	150.8		**2KJ1604 - ■EM13 - ■■H2**		81
	10.4	743	1.6	138.94	★	**2KJ1604 - ■EM13 - ■■G2**		81
	11.4	675	1.7	126.18		**2KJ1604 - ■EM13 - ■■F2**		81
	12.5	615	1.8	114.95	★	**2KJ1604 - ■EM13 - ■■E2**		81
	13.3	672	2.0	108.5		**2KJ1604 - ■EM13 - ■■D2**		81
	15.9	564	2.2	90.62		**2KJ1604 - ■EM13 - ■■B2**		81
	C.68-LA90SB4E							
	10.1	758	0.80	143	★	**2KJ1603 - ■EM13 - ■■L2**		54

★ Preferred transmission ratio

Shaft designs, see page 5/45 — **1 to 9**

Frequency and voltage, see page 8/20 — **1 to 9**

Gearbox housing mounting position, see page 5/47 — **A, D, F or H**

*) For mounting type B3

© Siemens AG 2011

Selection and ordering data (continued)

Power rating P_{Motor} kW	Output speed n_2 (50 Hz) rpm	Output torque T_2 Nm	Service factor f_B	Gearbox ratio i_{tot}		Order No.	Order code (No. of poles)	Weight *) kg
1.1	**C.68-LA90SB4E**							
	11.2	686	0.86	129		**2KJ1603 - ■EM13 - ■■K2**		54
	12.3	623	0.91	117	★	**2KJ1603 - ■EM13 - ■■J2**		54
	13.5	569	0.97	106.6		**2KJ1603 - ■EM13 - ■■H2**		54
	14.8	520	1.0	97.5	★	**2KJ1603 - ■EM13 - ■■G2**		54
	16.0	562	1.1	90	★	**2KJ1603 - ■EM13 - ■■F2**		54
	17.1	526	1.2	84.09		**2KJ1603 - ■EM13 - ■■E2**		54
	19.5	465	1.3	73.96	★	**2KJ1603 - ■EM13 - ■■D2**		54
	22	409	1.5	64.77		**2KJ1603 - ■EM13 - ■■C2**		54
	25	363	1.8	57.29	★	**2KJ1603 - ■EM13 - ■■B2**		54
	28	329	1.9	51.92		**2KJ1603 - ■EM13 - ■■A2**		54
	31	291	2.1	45.83	★	**2KJ1603 - ■EM13 - ■■X1**		54
	35	263	2.2	41.35		**2KJ1603 - ■EM13 - ■■W1**		54
	38	238	2.4	37.5	★	**2KJ1603 - ■EM13 - ■■U1**		54
	38	245	1.8	38		**2KJ1603 - ■EM13 - ■■V1**		54
	42	217	2.5	34.17		**2KJ1603 - ■EM13 - ■■T1**		54
	43	217	2.0	33.61	★	**2KJ1603 - ■EM13 - ■■S1**		54
	46	199	2.7	31.25	★	**2KJ1603 - ■EM13 - ■■R1**		54
	47	197	2.0	30.46		**2KJ1603 - ■EM13 - ■■Q1**		54
	52	178	2.9	27.94		**2KJ1603 - ■EM13 - ■■P1**		54
	54	174	2.3	26.89	★	**2KJ1603 - ■EM13 - ■■N1**		54
	59	157	2.5	24.26		**2KJ1603 - ■EM13 - ■■L1**		54
	66	142	3.0	22	★	**2KJ1603 - ■EM13 - ■■J1**		54
	C.48-LA90SB4E							
	17.9	415	0.82	80.44	★	**2KJ1602 - ■EM13 - ■■V1**		37
	20	367	0.89	71.12		**2KJ1602 - ■EM13 - ■■U1**		37
	22	339	0.93	65.68	★	**2KJ1602 - ■EM13 - ■■T1**		37
	26	292	1.0	56.55		**2KJ1602 - ■EM13 - ■■S1**		37
	28	266	1.1	51.41	★	**2KJ1602 - ■EM13 - ■■R1**		37
	31	300	0.96	46.93	★	**2KJ1602 - ■EM13 - ■■Q1**		37
	34	269	1.2	42		**2KJ1602 - ■EM13 - ■■P1**		37
	39	239	1.1	37.28	★	**2KJ1602 - ■EM13 - ■■N1**		37
	44	210	1.2	32.67		**2KJ1602 - ■EM13 - ■■M1**		37
	50	185	1.5	28.72	★	**2KJ1602 - ■EM13 - ■■L1**		37
	56	167	1.6	25.95		**2KJ1602 - ■EM13 - ■■K1**		37
	64	146	1.8	22.61	★	**2KJ1602 - ■EM13 - ■■J1**		37
	71	131	2.1	20.31		**2KJ1602 - ■EM13 - ■■H1**		37
	79	118	2.5	18.33	★	**2KJ1602 - ■EM13 - ■■G1**		37
	87	107	2.7	16.62		**2KJ1602 - ■EM13 - ■■F1**		37
	95	98	2.7	15.13	★	**2KJ1602 - ■EM13 - ■■E1**		37
	108	86	2.7	13.37		**2KJ1602 - ■EM13 - ■■D1**		37
	117	80	3.1	12.35	★	**2KJ1602 - ■EM13 - ■■C1**		37
	135	69	3.6	10.63		**2KJ1602 - ■EM13 - ■■B1**		37
	149	62	3.8	9.67	★	**2KJ1602 - ■EM13 - ■■A1**		37

★ Preferred transmission ratio

Shaft designs, see page 5/45 — 1 to 9
Frequency and voltage, see page 8/20 — 1 to 9
Gearbox housing mounting position, see page 5/47 — A, D, F or H

*) For mounting type B3

© Siemens AG 2011

Selection and ordering data (continued)

Power rating P_{Motor} kW	Output speed n_2 (50 Hz) rpm	Output torque T_2 Nm	Service factor f_B	Gearbox ratio i_{tot}		Order No.	Order code (No. of poles)	Weight *) kg
1.1	**C.38-LA90SB4E**							
	34	266	0.82	42		**2KJ1601 - ■EM13 - ■■P1**		29
	39	237	0.96	37.28	★	**2KJ1601 - ■EM13 - ■■N1**		29
	44	209	0.90	32.67		**2KJ1601 - ■EM13 - ■■M1**		29
	50	184	1.1	28.72	★	**2KJ1601 - ■EM13 - ■■L1**		29
	56	166	1.2	25.95		**2KJ1601 - ■EM13 - ■■K1**		29
	64	145	1.4	22.61	★	**2KJ1601 - ■EM13 - ■■J1**		29
	71	130	1.5	20.31		**2KJ1601 - ■EM13 - ■■H1**		29
	79	118	1.7	18.33	★	**2KJ1601 - ■EM13 - ■■G1**		29
	87	107	1.8	16.62		**2KJ1601 - ■EM13 - ■■F1**		29
	95	97	1.9	15.13	★	**2KJ1601 - ■EM13 - ■■E1**		29
	108	86	1.9	13.37		**2KJ1601 - ■EM13 - ■■D1**		29
	117	79	2.1	12.35	★	**2KJ1601 - ■EM13 - ■■C1**		29
	135	68	2.5	10.63		**2KJ1601 - ■EM13 - ■■B1**		29
	149	62	2.7	9.67	★	**2KJ1601 - ■EM13 - ■■A1**		29
1.5	**C.88-LA90ZLB4E**							
	5.8	1 779	0.80	247	★	**2KJ1604 - ■EQ13 - ■■N2**		84
	6.3	1 648	0.84	228		**2KJ1604 - ■EQ13 - ■■M2**		84
	7.3	1 439	0.92	198.25	★	**2KJ1604 - ■EQ13 - ■■L2**		84
	8.0	1 309	0.98	180		**2KJ1604 - ■EQ13 - ■■K2**		84
	8.8	1 197	1.0	164.36	★	**2KJ1604 - ■EQ13 - ■■J2**		84
	9.5	1 099	1.1	150.8		**2KJ1604 - ■EQ13 - ■■H2**		84
	10.4	1 013	1.2	138.94	★	**2KJ1604 - ■EQ13 - ■■G2**		84
	11.4	920	1.2	126.18		**2KJ1604 - ■EQ13 - ■■F2**		84
	12.5	839	1.3	114.95	★	**2KJ1604 - ■EQ13 - ■■E2**		84
	13.3	917	1.4	108.5		**2KJ1604 - ■EQ13 - ■■D2**		84
	14.7	831	1.7	98.17	★	**2KJ1604 - ■EQ13 - ■■C2**		84
	15.9	769	1.6	90.62		**2KJ1604 - ■EQ13 - ■■B2**		84
	18.3	669	1.9	78.79	★	**2KJ1604 - ■EQ13 - ■■A2**		84
	20	608	2.1	71.54		**2KJ1604 - ■EQ13 - ■■X1**		84
	22	556	2.2	65.32	★	**2KJ1604 - ■EQ13 - ■■W1**		84
	24	510	2.3	59.93		**2KJ1604 - ■EQ13 - ■■V1**		84
	42	305	2.6	33.85		**2KJ1604 - ■EQ13 - ■■P1**		84
	C.68-LA90ZLB4E							
	16.0	766	0.80	90	★	**2KJ1603 - ■EQ13 - ■■F2**		57
	17.1	718	0.87	84.09		**2KJ1603 - ■EQ13 - ■■E2**		57
	19.5	635	0.94	73.96	★	**2KJ1603 - ■EQ13 - ■■D2**		57
	22	558	1.1	64.77		**2KJ1603 - ■EQ13 - ■■C2**		57
	25	495	1.3	57.29	★	**2KJ1603 - ■EQ13 - ■■B2**		57
	28	449	1.4	51.92		**2KJ1603 - ■EQ13 - ■■A2**		57
	31	397	1.5	45.83	★	**2KJ1603 - ■EQ13 - ■■X1**		57
	35	358	1.6	41.35		**2KJ1603 - ■EQ13 - ■■W1**		57
	38	325	1.7	37.5	★	**2KJ1603 - ■EQ13 - ■■U1**		57
	38	334	1.3	38		**2KJ1603 - ■EQ13 - ■■V1**		57

★ Preferred transmission ratio

Shaft designs, see page 5/45 — **1 to 9**

Frequency and voltage, see page 8/20 — **1 to 9**

Gearbox housing mounting position, see page 5/47 — **A, D, F or H**

*) For mounting type B3

© Siemens AG 2011

Selection and ordering data (continued)

Power rating P_{Motor} kW	Output speed n_2 (50 Hz) rpm	Output torque T_2 Nm	Service factor f_B	Gearbox ratio i_{tot}		Order No.	Order code (No. of poles)	Weight *) kg
1.5	**C.68-LA90ZLB4E**							
	42	296	1.9	34.17		**2KJ1603 - ■EQ13 - ■■T1**		57
	43	296	1.4	33.61	★	**2KJ1603 - ■EQ13 - ■■S1**		57
	46	271	2.0	31.25	★	**2KJ1603 - ■EQ13 - ■■R1**		57
	47	268	1.4	30.46		**2KJ1603 - ■EQ13 - ■■Q1**		57
	52	242	2.1	27.94		**2KJ1603 - ■EQ13 - ■■P1**		57
	54	237	1.7	26.89	★	**2KJ1603 - ■EQ13 - ■■N1**		57
	56	223	2.3	25.66	★	**2KJ1603 - ■EQ13 - ■■M1**		57
	59	214	1.8	24.26		**2KJ1603 - ■EQ13 - ■■L1**		57
	62	201	2.4	23.13		**2KJ1603 - ■EQ13 - ■■K1**		57
	66	194	2.2	22	★	**2KJ1603 - ■EQ13 - ■■J1**		57
	72	173	2.7	19.89	★	**2KJ1603 - ■EQ13 - ■■G1**		57
	72	177	2.4	20.04		**2KJ1603 - ■EQ13 - ■■H1**		57
	79	161	2.6	18.33	★	**2KJ1603 - ■EQ13 - ■■F1**		57
	88	144	2.7	16.39		**2KJ1603 - ■EQ13 - ■■E1**		57
	96	133	3.0	15.05	★	**2KJ1603 - ■EQ13 - ■■D1**		57
	106	120	3.5	13.57		**2KJ1603 - ■EQ13 - ■■C1**		57
	123	103	3.6	11.67	★	**2KJ1603 - ■EQ13 - ■■B1**		57
	C.48-LA90ZLB4E							
	28	363	0.81	51.41	★	**2KJ1602 - ■EQ13 - ■■R1**		40
	34	367	0.85	42		**2KJ1602 - ■EQ13 - ■■P1**		40
	39	327	0.80	37.28	★	**2KJ1602 - ■EQ13 - ■■N1**		40
	44	287	0.91	32.67		**2KJ1602 - ■EQ13 - ■■M1**		40
	50	252	1.1	28.72	★	**2KJ1602 - ■EQ13 - ■■L1**		40
	56	228	1.2	25.95		**2KJ1602 - ■EQ13 - ■■K1**		40
	64	199	1.3	22.61	★	**2KJ1602 - ■EQ13 - ■■J1**		40
	71	179	1.5	20.31		**2KJ1602 - ■EQ13 - ■■H1**		40
	79	161	1.8	18.33	★	**2KJ1602 - ■EQ13 - ■■G1**		40
	87	146	2.0	16.62		**2KJ1602 - ■EQ13 - ■■F1**		40
	95	133	2.0	15.13	★	**2KJ1602 - ■EQ13 - ■■E1**		40
	108	118	2.0	13.37		**2KJ1602 - ■EQ13 - ■■D1**		40
	117	109	2.3	12.35	★	**2KJ1602 - ■EQ13 - ■■C1**		40
	135	94	2.7	10.63		**2KJ1602 - ■EQ13 - ■■B1**		40
	149	85	2.8	9.67	★	**2KJ1602 - ■EQ13 - ■■A1**		40
	C.38-LA90ZLB4E							
	50	251	0.81	28.72	★	**2KJ1601 - ■EQ13 - ■■L1**		32
	56	227	0.90	25.95		**2KJ1601 - ■EQ13 - ■■K1**		32
	64	198	1.0	22.61	★	**2KJ1601 - ■EQ13 - ■■J1**		32
	71	178	1.1	20.31		**2KJ1601 - ■EQ13 - ■■H1**		32
	79	161	1.3	18.33	★	**2KJ1601 - ■EQ13 - ■■G1**		32
	87	146	1.3	16.62		**2KJ1601 - ■EQ13 - ■■F1**		32
	95	133	1.4	15.13	★	**2KJ1601 - ■EQ13 - ■■E1**		32
	108	117	1.4	13.37		**2KJ1601 - ■EQ13 - ■■D1**		32
	117	108	1.6	12.35	★	**2KJ1601 - ■EQ13 - ■■C1**		32

★ Preferred transmission ratio

Shaft designs, see page 5/45 — **1 to 9**

Frequency and voltage, see page 8/20 — **1 to 9**

Gearbox housing mounting position, see page 5/47 — **A, D, F or H**

*) For mounting type B3

© Siemens AG 2011

Selection and ordering data (continued)

Power rating P_{Motor} kW	Output speed n_2 (50 Hz) rpm	Output torque T_2 Nm	Service factor f_B	Gearbox ratio i_{tot}		Order No.	Order code (No. of poles)	Weight *) kg
1.5	**C.38-LA90ZLB4E**							
	135	93	1.8	10.63		**2KJ1601 - ■EQ13 - ■■B1**		32
	149	85	2.0	9.67	★	**2KJ1601 - ■EQ13 - ■■A1**		32
2.2	**C.88-LA100ZLP4E**							
	11.4	1 355	0.84	126.18		**2KJ1604 - ■FM13 - ■■F2**		92
	12.5	1 234	0.89	114.95	★	**2KJ1604 - ■FM13 - ■■E2**		92
	13.2	1 349	0.98	108.5		**2KJ1604 - ■FM13 - ■■D2**		92
	14.6	1 224	1.1	98.17	★	**2KJ1604 - ■FM13 - ■■C2**		92
	15.8	1 131	1.1	90.62		**2KJ1604 - ■FM13 - ■■B2**		92
	18.2	985	1.3	78.79	★	**2KJ1604 - ■FM13 - ■■A2**		92
	20	895	1.4	71.54		**2KJ1604 - ■FM13 - ■■X1**		92
	22	818	1.5	65.32	★	**2KJ1604 - ■FM13 - ■■W1**		92
	24	751	1.6	59.93		**2KJ1604 - ■FM13 - ■■V1**		92
	26	692	1.7	55.22	★	**2KJ1604 - ■FM13 - ■■U1**		92
	29	628	1.8	50.15		**2KJ1604 - ■FM13 - ■■T1**		92
	31	572	1.9	45.68	★	**2KJ1604 - ■FM13 - ■■S1**		92
	34	524	2.0	41.85		**2KJ1604 - ■FM13 - ■■R1**		92
	38	468	2.2	37.34	★	**2KJ1604 - ■FM13 - ■■Q1**		92
	42	448	1.8	33.85		**2KJ1604 - ■FM13 - ■■P1**		92
	43	418	2.3	33.33		**2KJ1604 - ■FM13 - ■■N1**		92
	46	409	2.0	30.9	★	**2KJ1604 - ■FM13 - ■■M1**		92
	51	355	2.6	28.3		**2KJ1604 - ■FM13 - ■■K1**		92
	51	376	2.1	28.36		**2KJ1604 - ■FM13 - ■■L1**		92
	55	346	2.3	26.13	★	**2KJ1604 - ■FM13 - ■■J1**		92
	60	314	2.4	23.73		**2KJ1604 - ■FM13 - ■■H1**		92
	61	295	2.9	23.56	★	**2KJ1604 - ■FM13 - ■■G1**		92
	66	286	2.8	21.61	★	**2KJ1604 - ■FM13 - ■■F1**		92
	72	262	3.0	19.8		**2KJ1604 - ■FM13 - ■■E1**		92
	81	234	3.3	17.67	★	**2KJ1604 - ■FM13 - ■■D1**		92
	C.68-LA100ZLP4E							
	25	728	0.89	57.29	★	**2KJ1603 - ■FM13 - ■■B2**		65
	28	661	0.95	51.92		**2KJ1603 - ■FM13 - ■■A2**		65
	31	584	1.0	45.83	★	**2KJ1603 - ■FM13 - ■■X1**		65
	35	527	1.1	41.35		**2KJ1603 - ■FM13 - ■■W1**		65
	38	479	1.2	37.5	★	**2KJ1603 - ■FM13 - ■■U1**		65
	38	492	0.87	38		**2KJ1603 - ■FM13 - ■■V1**		65
	42	436	1.3	34.17		**2KJ1603 - ■FM13 - ■■T1**		65
	43	435	0.98	33.61	★	**2KJ1603 - ■FM13 - ■■S1**		65
	46	399	1.3	31.25	★	**2KJ1603 - ■FM13 - ■■R1**		65
	47	395	0.98	30.46		**2KJ1603 - ■FM13 - ■■Q1**		65
	51	357	1.5	27.94		**2KJ1603 - ■FM13 - ■■P1**		65
	53	348	1.1	26.89	★	**2KJ1603 - ■FM13 - ■■N1**		65
	56	328	1.5	25.66	★	**2KJ1603 - ■FM13 - ■■M1**		65
	59	314	1.3	24.26		**2KJ1603 - ■FM13 - ■■L1**		65

★ Preferred transmission ratio

Shaft designs, see page 5/45 — **1 to 9**

Frequency and voltage, see page 8/20 — **1 to 9**

Gearbox housing mounting position, see page 5/47 — **A, D, F or H**

*) For mounting type B3

© Siemens AG 2011

Selection and ordering data (continued)

Power rating P_{Motor} kW	Output speed n_2 (50 Hz) rpm	Output torque T_2 Nm	Service factor f_B	Gearbox ratio i_{tot}		Order No.	Order code (No. of poles)	Weight *) kg
2.2	**C.68-LA100ZLP4E**							
	62	295	1.7	23.13		**2KJ1603 - ■FM13 - ■■K1**		65
	65	285	1.5	22	★	**2KJ1603 - ■FM13 - ■■J1**		65
	72	254	1.8	19.89	★	**2KJ1603 - ■FM13 - ■■G1**		65
	72	260	1.6	20.04		**2KJ1603 - ■FM13 - ■■H1**		65
	78	238	1.7	18.33	★	**2KJ1603 - ■FM13 - ■■F1**		65
	88	212	1.9	16.39		**2KJ1603 - ■FM13 - ■■E1**		65
	95	195	2.0	15.05	★	**2KJ1603 - ■FM13 - ■■D1**		65
	106	176	2.3	13.57		**2KJ1603 - ■FM13 - ■■C1**		65
	123	151	2.5	11.67	★	**2KJ1603 - ■FM13 - ■■B1**		65
	C.48-LA100ZLP4E							
	78	238	1.2	18.33	★	**2KJ1602 - ■FM13 - ■■G1**		48
	86	215	1.3	16.62		**2KJ1602 - ■FM13 - ■■F1**		48
	95	196	1.3	15.13	★	**2KJ1602 - ■FM13 - ■■E1**		48
	107	173	1.3	13.37		**2KJ1602 - ■FM13 - ■■D1**		48
	116	160	1.5	12.35	★	**2KJ1602 - ■FM13 - ■■C1**		48
	135	138	1.8	10.63		**2KJ1602 - ■FM13 - ■■B1**		48
	148	125	1.9	9.67	★	**2KJ1602 - ■FM13 - ■■A1**		48
	C.38-LA100ZLP4E							
	78	236	0.86	18.33	★	**2KJ1601 - ■FM13 - ■■G1**		40
	86	214	0.90	16.62		**2KJ1601 - ■FM13 - ■■F1**		40
	95	195	0.94	15.13	★	**2KJ1601 - ■FM13 - ■■E1**		40
	107	172	0.94	13.37		**2KJ1601 - ■FM13 - ■■D1**		40
	116	159	1.1	12.35	★	**2KJ1601 - ■FM13 - ■■C1**		40
	135	137	1.2	10.63		**2KJ1601 - ■FM13 - ■■B1**		40
	148	125	1.3	9.67	★	**2KJ1601 - ■FM13 - ■■A1**		40
3	**C.88-LA100ZLD4E**							
	14.6	1 668	0.84	98.17	★	**2KJ1604 - ■FP13 - ■■C2**		92
	15.8	1 542	0.80	90.62		**2KJ1604 - ■FP13 - ■■B2**		92
	18.2	1 344	0.97	78.79	★	**2KJ1604 - ■FP13 - ■■A2**		92
	20	1 221	1.0	71.54		**2KJ1604 - ■FP13 - ■■X1**		92
	22	1 115	1.1	65.32	★	**2KJ1604 - ■FP13 - ■■W1**		92
	24	1 023	1.2	59.93		**2KJ1604 - ■FP13 - ■■V1**		92
	26	943	1.2	55.22	★	**2KJ1604 - ■FP13 - ■■U1**		92
	29	857	1.3	50.15		**2KJ1604 - ■FP13 - ■■T1**		92
	31	780	1.4	45.68	★	**2KJ1604 - ■FP13 - ■■S1**		92
	34	715	1.5	41.85		**2KJ1604 - ■FP13 - ■■R1**		92
	38	638	1.6	37.34	★	**2KJ1604 - ■FP13 - ■■Q1**		92
	42	611	1.3	33.85		**2KJ1604 - ■FP13 - ■■P1**		92
	43	569	1.7	33.33		**2KJ1604 - ■FP13 - ■■N1**		92
	46	558	1.4	30.9	★	**2KJ1604 - ■FP13 - ■■M1**		92
	51	483	1.9	28.3		**2KJ1604 - ■FP13 - ■■K1**		92
	51	512	1.6	28.36		**2KJ1604 - ■FP13 - ■■L1**		92
	55	472	1.7	26.13	★	**2KJ1604 - ■FP13 - ■■J1**		92

★ Preferred transmission ratio

Shaft designs, see page 5/45 — **1 to 9**

Frequency and voltage, see page 8/20 — **1 to 9**

Gearbox housing mounting position, see page 5/47 — **A, D, F or H**

*) For mounting type B3

© Siemens AG 2011

Selection and ordering data (continued)

Power rating P_{Motor} kW	Output speed n_2 (50 Hz) rpm	Output torque T_2 Nm	Service factor f_B	Gearbox ratio i_{tot}		Order No.	Order code (No. of poles)	Weight *) kg
3	**C.88-LA100ZLD4E**							
	60	429	1.8	23.73		**2KJ1604 - ■FP13 - ■■H1**		92
	61	403	2.2	23.56	★	**2KJ1604 - ■FP13 - ■■G1**		92
	66	390	2.1	21.61	★	**2KJ1604 - ■FP13 - ■■F1**		92
	72	358	2.2	19.8		**2KJ1604 - ■FP13 - ■■E1**		92
	81	319	2.5	17.67	★	**2KJ1604 - ■FP13 - ■■D1**		92
	91	285	2.7	15.77		**2KJ1604 - ■FP13 - ■■C1**		92
	107	242	3.2	13.39		**2KJ1604 - ■FP13 - ■■B1**		92
	129	201	3.3	11.15	★	**2KJ1604 - ■FP13 - ■■A1**		92
	C.68-LA100ZLD4E							
	35	719	0.82	41.35		**2KJ1603 - ■FP13 - ■■W1**		65
	38	653	0.87	37.5	★	**2KJ1603 - ■FP13 - ■■U1**		65
	42	595	0.93	34.17		**2KJ1603 - ■FP13 - ■■T1**		65
	46	544	0.99	31.25	★	**2KJ1603 - ■FP13 - ■■R1**		65
	51	486	1.1	27.94		**2KJ1603 - ■FP13 - ■■P1**		65
	53	475	0.84	26.89	★	**2KJ1603 - ■FP13 - ■■N1**		65
	56	447	1.1	25.66	★	**2KJ1603 - ■FP13 - ■■M1**		65
	59	429	0.92	24.26		**2KJ1603 - ■FP13 - ■■L1**		65
	62	403	1.2	23.13		**2KJ1603 - ■FP13 - ■■K1**		65
	65	389	1.1	22	★	**2KJ1603 - ■FP13 - ■■J1**		65
	72	346	1.4	19.89	★	**2KJ1603 - ■FP13 - ■■G1**		65
	72	354	1.2	20.04		**2KJ1603 - ■FP13 - ■■H1**		65
	78	324	1.3	18.33	★	**2KJ1603 - ■FP13 - ■■F1**		65
	88	290	1.4	16.39		**2KJ1603 - ■FP13 - ■■E1**		65
	95	266	1.5	15.05	★	**2KJ1603 - ■FP13 - ■■D1**		65
	106	240	1.7	13.57		**2KJ1603 - ■FP13 - ■■C1**		65
	123	206	1.8	11.67	★	**2KJ1603 - ■FP13 - ■■B1**		65
	C.48-LA100ZLD4E							
	78	324	0.91	18.33	★	**2KJ1602 - ■FP13 - ■■G1**		48
	86	294	0.98	16.62		**2KJ1602 - ■FP13 - ■■F1**		48
	95	267	0.98	15.13	★	**2KJ1602 - ■FP13 - ■■E1**		48
	107	236	0.98	13.37		**2KJ1602 - ■FP13 - ■■D1**		48
	116	218	1.1	12.35	★	**2KJ1602 - ■FP13 - ■■C1**		48
	135	188	1.3	10.63		**2KJ1602 - ■FP13 - ■■B1**		48
	148	171	1.4	9.67	★	**2KJ1602 - ■FP13 - ■■A1**		48
	C.38-LA100ZLD4E							
	135	187	0.91	10.63		**2KJ1601 - ■FP13 - ■■B1**		40
	148	170	0.97	9.67	★	**2KJ1601 - ■FP13 - ■■A1**		40
4	**C.88-LA112ZMP4E**							
	22	1 482	0.82	65.32	★	**2KJ1604 - ■GJ13 - ■■W1**		99
	24	1 360	0.87	59.93		**2KJ1604 - ■GJ13 - ■■V1**		99
	26	1 253	0.92	55.22	★	**2KJ1604 - ■GJ13 - ■■U1**		99
	29	1 138	0.98	50.15		**2KJ1604 - ■GJ13 - ■■T1**		99
	32	1 037	1.0	45.68	★	**2KJ1604 - ■GJ13 - ■■S1**		99

★ Preferred transmission ratio

Shaft designs, see page 5/45 — **1 to 9**

Frequency and voltage, see page 8/20 — **1 to 9**

Gearbox housing mounting position, see page 5/47 — **A, D, F or H**

*) For mounting type B3

© Siemens AG 2011

Selection and ordering data (continued)

Power rating P_{Motor}	Output speed	Output torque	Service factor	Gearbox ratio		Order No.	Order code	Weight *)
kW	n_2 (50 Hz) rpm	T_2 Nm	f_B	i_{tot}			(No. of poles)	kg
4	**C.88-LA112ZMP4E**							
	34	950	1.1	41.85		**2KJ1604 - ■GJ13 - ■■R1**		99
	39	848	1.2	37.34	★	**2KJ1604 - ■GJ13 - ■■Q1**		99
	42	812	0.99	33.85		**2KJ1604 - ■GJ13 - ■■P1**		99
	43	757	1.3	33.33		**2KJ1604 - ■GJ13 - ■■N1**		99
	47	742	1.1	30.9	★	**2KJ1604 - ■GJ13 - ■■M1**		99
	51	642	1.4	28.3		**2KJ1604 - ■GJ13 - ■■K1**		99
	51	681	1.2	28.36		**2KJ1604 - ■GJ13 - ■■L1**		99
	55	627	1.3	26.13	★	**2KJ1604 - ■GJ13 - ■■J1**		99
	61	535	1.6	23.56	★	**2KJ1604 - ■GJ13 - ■■G1**		99
	61	570	1.3	23.73		**2KJ1604 - ■GJ13 - ■■H1**		99
	67	519	1.5	21.61	★	**2KJ1604 - ■GJ13 - ■■F1**		99
	73	475	1.7	19.8		**2KJ1604 - ■GJ13 - ■■E1**		99
	82	424	1.8	17.67	★	**2KJ1604 - ■GJ13 - ■■D1**		99
	91	379	2.0	15.77		**2KJ1604 - ■GJ13 - ■■C1**		99
	108	321	2.4	13.39		**2KJ1604 - ■GJ13 - ■■B1**		99
	129	268	2.5	11.15	★	**2KJ1604 - ■GJ13 - ■■A1**		99
	C.68-LA112ZMP4E							
	52	646	0.80	27.94		**2KJ1603 - ■GJ13 - ■■P1**		72
	56	594	0.85	25.66	★	**2KJ1603 - ■GJ13 - ■■M1**		72
	62	535	0.91	23.13		**2KJ1603 - ■GJ13 - ■■K1**		72
	66	517	0.81	22	★	**2KJ1603 - ■GJ13 - ■■J1**		72
	72	460	1.0	19.89	★	**2KJ1603 - ■GJ13 - ■■G1**		72
	72	471	0.90	20.04		**2KJ1603 - ■GJ13 - ■■H1**		72
	79	431	0.97	18.33	★	**2KJ1603 - ■GJ13 - ■■F1**		72
	88	385	1.0	16.39		**2KJ1603 - ■GJ13 - ■■E1**		72
	96	353	1.1	15.05	★	**2KJ1603 - ■GJ13 - ■■D1**		72
	106	319	1.3	13.57		**2KJ1603 - ■GJ13 - ■■C1**		72
	123	274	1.4	11.67	★	**2KJ1603 - ■GJ13 - ■■B1**		72
	C.48-LA112ZMP4E							
	117	290	0.84	12.35	★	**2KJ1602 - ■GJ13 - ■■C1**		55
	135	250	1	10.63		**2KJ1602 - ■GJ13 - ■■B1**		55
	149	227	1.1	9.67	★	**2KJ1602 - ■GJ13 - ■■A1**		55
5.5	**C.88-LA132SP4E**							
	34	1 302	0.81	41.85		**2KJ1604 - ■HG13 - ■■R1**		117
	39	1 161	0.87	37.34	★	**2KJ1604 - ■HG13 - ■■Q1**		117
	43	1 037	0.94	33.33		**2KJ1604 - ■HG13 - ■■N1**		117
	51	880	1.1	28.3		**2KJ1604 - ■HG13 - ■■K1**		117
	51	933	0.86	28.36		**2KJ1604 - ■HG13 - ■■L1**		117
	55	859	0.93	26.13	★	**2KJ1604 - ■HG13 - ■■J1**		117
	61	733	1.2	23.56	★	**2KJ1604 - ■HG13 - ■■G1**		117
	61	781	0.96	23.73		**2KJ1604 - ■HG13 - ■■H1**		117
	67	711	1.1	21.61	★	**2KJ1604 - ■HG13 - ■■F1**		117
	73	651	1.2	19.8		**2KJ1604 - ■HG13 - ■■E1**		117

★ Preferred transmission ratio

Shaft designs, see page 5/45 — **1 to 9**

Frequency and voltage, see page 8/20 — **1 to 9**

Gearbox housing mounting position, see page 5/47 — **A, D, F or H**

*) For mounting type B3

© Siemens AG 2011

Selection and ordering data (continued)

Power rating P_{Motor} kW	Output speed n_2 (50 Hz) rpm	Output torque T_2 Nm	Service factor f_B	Gearbox ratio i_{tot}		Order No.	Order code (No. of poles)	Weight *) kg
5.5	**C.88-LA132SP4E**							
	82	581	1.3	17.67	★	**2KJ1604 - ■HG13 - ■■D1**		117
	92	519	1.5	15.77		**2KJ1604 - ■HG13 - ■■C1**		117
	108	440	1.7	13.39		**2KJ1604 - ■HG13 - ■■B1**		117
	130	367	1.8	11.15	★	**2KJ1604 - ■HG13 - ■■A1**		117
	C.68-LA132SP4E							
	96	484	0.81	15.05	★	**2KJ1603 - ■HG13 - ■■D1**		90
	106	437	0.95	13.57		**2KJ1603 - ■HG13 - ■■C1**		90
	124	376	0.99	11.67	★	**2KJ1603 - ■HG13 - ■■B1**		90
7.5	**C.88-LA132ZMP4E**							
	62	992	0.87	23.56	★	**2KJ1604 - ■HK13 - ■■G1**		117
	67	963	0.83	21.61	★	**2KJ1604 - ■HK13 - ■■F1**		117
	74	882	0.9	19.8		**2KJ1604 - ■HK13 - ■■E1**		117
	82	787	1.0	17.67	★	**2KJ1604 - ■HK13 - ■■D1**		117
	92	702	1.1	15.77		**2KJ1604 - ■HK13 - ■■C1**		117
	109	596	1.3	13.39		**2KJ1604 - ■HK13 - ■■B1**		117
	130	497	1.4	11.15	★	**2KJ1604 - ■HK13 - ■■A1**		117
9.2	**C.88-LA160MB4E**							
	109	732	1.0	13.39		**2KJ1604 - ■JP13 - ■■B1**		141
	130	609	1.1	11.15	★	**2KJ1604 - ■JP13 - ■■A1**		141
11	**C.88-LA160MB4E**							
	109	872	0.87	13.39		**2KJ1604 - ■JQ13 - ■■B1**		141
	131	726	0.92	11.15	★	**2KJ1604 - ■JQ13 - ■■A1**		141

★ Preferred transmission ratio

Shaft designs, see page 5/45 — **1 to 9**

Frequency and voltage, see page 8/20 — **1 to 9**

Gearbox housing mounting position, see page 5/47 — **A, D, F or H**

*) For mounting type B3

© Siemens AG 2011

Selection and ordering data

Efficiency table C.28

Transmission ratio	Ratio code	Output speed n_{mot} = 2 500 rpm				Output speed n_{mot} = 1750 rpm				Output speed n_{mot} = 1 450 rpm				Size for motor and input units							
i_{tot}	Order No. 15th and 16th position	n_2	T_2	P_{mot}	h	n_2	T_2	P_{mot}	h	n_2	T_2	P_{mot}	h								
		rpm	Nm	kW	%	rpm	Nm	kW	%	rpm	Nm	kW	%	63	71	80	90	100	112	132	160
372.00	**P1**	6.7	119	0.15	56	4.7	119	0.10	56	3.9	118	0.09	56		•						
303.36	**N1**	8.2	109	0.17	56	5.8	109	0.12	56	4.8	108	0.10	56		•						
248.00	**M1**	10.1	118	0.19	66	7.1	118	0.13	66	5.8	118	0.11	66		•						
202.24	**L1**	12.4	100	0.20	66	8.7	100	0.14	66	7.2	100	0.11	66		•						
155.00	**K1**	16.1	116	0.26	74	11.3	116	0.19	74	9.4	116	0.15	74		•						
126.40	**J1**	19.8	94	0.26	74	13.8	95	0.18	74	11.5	95	0.15	74		•						
93.00	**H1**	27.0	118	0.40	83	18.8	118	0.28	83	15.6	118	0.23	83		•						
75.84	**G1**	33.0	96	0.40	83	23.0	96	0.28	83	19.1	96	0.23	83		•						
62.00	**F1**	40.0	117	0.57	87	28.0	117	0.40	87	23.0	117	0.32	87		•						
50.56	**E1**	49.0	94	0.56	87	35.0	95	0.40	87	29.0	95	0.33	87		•						
46.50	**D1**	54.0	110	0.70	90	38.0	110	0.49	90	31.0	110	0.40	90		•						
37.92	**C1**	66.0	90	0.69	90	46.0	90	0.48	90	38.0	90	0.40	90		•						
31.00	**B1**	81.0	99	0.92	92	56.0	100	0.64	92	47.0	99	0.53	92		•						
25.28	**A1**	99.0	81	0.91	92	69.0	81	0.64	92	57.0	81	0.53	92		•						

★ Preferred transmission ratio
In the case of gearboxes of size 28, only possible with integrated motor or input unit KQ and KQS.

5

Efficiency table C.28

Transmission ratio	Ratio code	Output speed n_{mot} = 1 150 rpm				Output speed n_{mot} = 950 rpm				Size for motor and input units								
i_{tot}	Order No. 15th and 16th position	n_2	T_2	P_{mot}	h	n_2	T_2	P_{mot}	h									
		rpm	Nm	kW	%	rpm	Nm	kW	%	63	71	80	90	100	112	132	160
372.00	**P1**	3.1	117	0.07	55	2.6	116	0.06	55		•						
303.36	**N1**	3.8	108	0.08	55	3.1	107	0.06	55		•						
248.00	**M1**	4.6	118	0.09	66	3.8	117	0.07	65		•						
202.24	**L1**	5.7	99	0.09	66	4.7	99	0.07	65		•						
155.00	**K1**	7.4	116	0.12	74	6.1	116	0.10	74		•						
126.40	**J1**	9.1	94	0.12	74	7.5	94	0.10	74		•						
93.00	**H1**	12.4	118	0.19	83	10.2	118	0.15	82		•						
75.84	**G1**	15.2	95	0.18	83	12.5	95	0.15	82		•						
62.00	**F1**	18.5	117	0.26	87	15.3	117	0.22	87		•						
50.56	**E1**	23.0	94	0.26	87	18.8	94	0.21	87		•						
46.50	**D1**	25.0	110	0.32	90	20.0	110	0.26	89		•						
37.92	**C1**	30.0	90	0.31	90	25.0	89	0.26	89		•						
31.00	**B1**	37.0	99	0.42	92	31.0	99	0.35	92		•						
25.28	**A1**	45.0	81	0.42	92	38.0	81	0.35	92		•						

★ Preferred transmission ratio
In the case of gearboxes of size 28, only possible with integrated motor or input unit KQ and KQS.

© Siemens AG 2011

Selection and ordering data (continued)

Efficiency table C.28

Transmission ratio	Ratio code	Output speed n_{mot} = 850 rpm				Output speed n_{mot} = 700 rpm				Size for motor and input units							
i_{tot}	Order No. 15th and 16th position	n_2 rpm	T_2 Nm	P_{mot} kW	h %	n_2 rpm	T_2 Nm	P_{mot} kW	h %	63	71	80	90	100	112	132	160
372.00	**P1**	2.3	116	0.05	54	1.9	114	<0.05	54		•						
303.36	**N1**	2.8	106	0.06	54	2.3	104	<0.05	54		•						
248.00	**M1**	3.4	117	0.06	65	2.8	116	0.05	65		•						
202.24	**L1**	4.2	98	0.07	65	3.5	97	0.06	65		•						
155.00	**K1**	5.5	115	0.09	73	4.5	115	0.07	73		•						
126.40	**J1**	6.7	94	0.09	73	5.5	93	0.07	73		•						
93.00	**H1**	9.1	118	0.14	82	7.5	117	0.11	82		•						
75.84	**G1**	11.2	95	0.14	82	9.2	95	0.11	82		•						
62.00	**F1**	13.7	117	0.19	87	11.3	117	0.16	86		•						
50.56	**E1**	16.8	94	0.19	87	13.8	94	0.16	86		•						
46.50	**D1**	18.3	110	0.24	89	15.1	110	0.19	89		•						
37.92	**C1**	22.0	89	0.23	89	18.5	89	0.19	89		•						
31.00	**B1**	27.0	99	0.31	91	23.0	99	0.26	91		•						
25.28	**A1**	34.0	81	0.31	91	28.0	80	0.26	91		•						

★ Preferred transmission ratio
In the case of gearboxes of size 28, only possible with integrated motor or input unit KQ and KQS.

© Siemens AG 2011

Selection and ordering data (continued)

Efficiency table C.38-D/Z28

Transmission ratio	Ratio code	Output speed n_{mot} = 1 750 rpm				Output speed n_{mot} = 1 450 rpm				Size for motor and input units							
i_{tot}	Order No. 15th and 16th position	n_2 rpm	T_2 Nm	P_{mot} kW	h %	n_2 rpm	T_2 Nm	P_{mot} kW	h %	63	71	80	90	100	112	132	160
23 503	**N1**	0.07	222	<0.06	45	0.06	222	<0.06	45		•						
20 276	**M1**	0.09	222	<0.06	45	0.07	222	<0.06	45		•						
17 420	**L1**	0.10	222	<0.06	45	0.08	222	<0.06	45		•						
16 037	**K1**	0.11	222	<0.06	45	0.09	222	<0.06	45		•						
14 579	**J1**	0.12	222	<0.06	45	0.10	222	<0.06	45		•						
12 904	**H1**	0.14	222	<0.06	45	0.11	222	<0.06	45		•						
10 808	**G1**	0.16	222	<0.06	45	0.13	222	<0.06	45		•						
9 216	**F1**	0.19	222	<0.06	46	0.16	222	<0.06	45		•						
7 833	**E1**	0.22	222	<0.06	46	0.19	222	<0.06	46		•						
6 807	**D1**	0.26	222	<0.06	46	0.21	222	<0.06	46		•						
5 925	**C1**	0.30	222	<0.06	46	0.24	222	<0.06	46		•						
5 345	**B1**	0.33	222	<0.06	46	0.27	222	<0.06	46		•						
4 717	**A1**	0.37	222	<0.06	46	0.31	222	<0.06	46		•						
4 222	**B2**	0.41	222	<0.06	47	0.34	222	<0.06	46		•						
3 749	**A2**	0.47	222	<0.06	47	0.39	222	<0.06	46		•						
3 286	**X1**	0.53	222	<0.06	47	0.44	222	<0.06	47		•						
2 941	**W1**	0.60	222	<0.06	47	0.49	222	<0.06	47		•						
2 610	**V1**	0.67	222	<0.06	48	0.56	222	<0.06	47		•						
2 288	**U1**	0.76	223	<0.06	48	0.63	222	<0.06	47		•						
2 011	**T1**	0.87	223	<0.06	48	0.72	222	<0.06	48		•						
1 817	**S1**	0.96	223	<0.06	49	0.80	223	<0.06	48		•						
1 583	**R1**	1.11	223	<0.06	49	0.92	223	<0.06	49		•						
1 422	**Q1**	1.23	223	<0.06	50	1.02	223	<0.06	49		•						
1 284	**P1**	1.36	223	0.06	50	1.13	223	<0.06	49		•						
1 164	**N1**	1.50	223	0.07	51	1.25	223	<0.06	50		•						
1 059	**M1**	1.65	223	0.08	51	1.37	223	0.06	50		•						
937	**L1**	1.87	223	0.08	52	1.55	223	0.07	51		•						
865	**K1**	2.02	223	0.09	53	1.68	223	0.08	51		•						
745	**J1**	2.35	223	0.10	54	1.95	223	0.09	52		•						
677	**H1**	2.59	224	0.11	54	2.14	223	0.09	53		•						
615	**G1**	2.84	224	0.12	55	2.36	223	0.10	54		•						
558	**F1**	3.14	224	0.13	56	2.60	224	0.11	55		•						
508	**E1**	3.45	224	0.14	57	2.86	224	0.12	55		•						
449	**D1**	3.90	224	0.16	58	3.23	224	0.13	56		•						
414	**C1**	4.22	225	0.17	59	3.50	224	0.14	57		•						
357	**B1**	4.90	225	0.19	60	4.06	225	0.16	58		•						
324	**A1**	5.40	225	0.21	61	4.47	225	0.18	59		•						

★ Preferred transmission ratio
In the case of gearboxes of size 28, only possible with integrated motor or input unit KQ and KQS.

© Siemens AG 2011

Selection and ordering data (continued)

Efficiency table C.38

Transmission ratio		Ratio code	Output speed n_{mot} = 1 750 rpm				Output speed n_{mot} = 1 450 rpm				Output speed n_{mot} = 1 150 rpm				Size for motor and input units							
i_{tot}		Order No. 15th and 16th position	n_2 rpm	T_2 Nm	P_{mot} kW	h %	n_2 rpm	T_2 Nm	P_{mot} kW	h %	n_2 rpm	T_2 Nm	P_{mot} kW	h %	63	71	80	90	100	112	132	160
320.67	★	**K2**	5.5	225	0.21	62	4.5	225	0.18	60	3.6	224	0.15	58	•	•	•					
284.70		**J2**	6.1	226	0.23	63	5.1	225	0.20	62	4.0	224	0.16	59	•	•	•					
249.60	★	**H2**	7.0	226	0.26	64	5.8	226	0.22	63	4.6	225	0.18	61	•	•	•	•				
223.36		**G2**	7.8	227	0.28	65	6.5	226	0.24	64	5.1	225	0.20	62	•	•	•	•				
198.25	★	**F2**	8.8	227	0.32	66	7.3	226	0.27	65	5.8	225	0.22	63	•	•	•	•				
173.73		**E2**	10.1	228	0.36	67	8.3	227	0.30	66	6.6	226	0.24	64	•	•	•	•				
152.75	★	**D2**	11.5	228	0.41	68	9.5	227	0.34	67	7.5	226	0.27	65	•	•	•	•				
138.00		**C2**	12.7	229	0.45	68	10.5	228	0.37	67	8.3	227	0.30	66	•	•	•	•				
120.25	★	**B2**	14.6	230	0.51	68	12.1	229	0.43	68	9.6	228	0.34	67	•	•	•	•				
108.00		**A2**	16.2	226	0.56	69	13.4	229	0.47	68	10.6	228	0.38	67	•	•	•	•				
97.50	★	**X1**	17.9	219	0.60	69	14.9	230	0.53	68	11.8	229	0.42	68	•	•	•	•	•			
88.40		**W1**	19.8	211	0.64	69	16.4	224	0.56	69	13.0	229	0.46	68	•	•	•	•	•			
80.44	★	**V1**	22.0	203	0.68	69	18.0	217	0.60	69	14.3	230	0.50	68	•	•	•	•	•			
71.12		**U1**	25.0	195	0.74	69	20.0	210	0.64	69	16.2	225	0.56	69	•	•	•	•	•			
65.68	★	**T1**	27.0	191	0.78	69	22.0	204	0.68	69	17.5	220	0.59	69	•	•	•	•	•			
60.30	★	**S1**	29.0	204	0.71	87	24.0	202	0.59	87	19.1	199	0.47	85	•	•	•					
53.53		**R1**	33.0	245	0.96	88	27.0	243	0.79	87	21.0	239	0.61	86	•	•	•					
46.93	★	**Q1**	37.0	232	1.02	88	31.0	231	0.85	88	25.0	228	0.69	87	•	•	•	•				
42.00		**P1**	42.0	222	1.10	89	35.0	220	0.92	88	27.0	218	0.71	87	•	•	•	•				
37.28	★	**N1**	47.0	232	1.28	89	39.0	231	1.07	89	31.0	229	0.85	88	•	•	•	•				
32.67		**M1**	54.0	192	1.22	89	44.0	192	0.99	89	35.0	190	0.79	88	•	•	•	•				
28.72	★	**L1**	61.0	208	1.49	89	50.0	207	1.22	89	40.0	206	0.97	89	•	•	•	•				
25.95		**K1**	67.0	209	1.64	89	56.0	208	1.37	89	44.0	207	1.08	89	•	•	•	•				
22.61	★	**J1**	77.0	206	1.86	89	64.0	206	1.55	89	51.0	205	1.23	89	•	•	•	•				
20.31		**H1**	86.0	196	1.98	89	71.0	196	1.63	89	57.0	196	1.31	89	•	•	•	•				
18.33	★	**G1**	95.0	199	2.21	89	79.0	206	1.91	89	63.0	206	1.52	89	•	•	•	•	•			
16.62		**F1**	105.0	191	2.34	89	87.0	196	2.00	89	69.0	196	1.59	89	•	•	•	•	•			
15.13	★	**E1**	116.0	183	2.49	89	96.0	187	2.10	89	76.0	187	1.66	89	•	•	•	•	•			
13.37		**D1**	131.0	165	2.53	89	108.0	165	2.09	89	86.0	165	1.66	89	•	•	•	•	•			
12.35	★	**C1**	142.0	169	2.81	89	117.0	172	2.36	89	93.0	172	1.88	89	•	•	•	•	•			
10.63		**B1**	165.0	155	3.00	89	136.0	173	2.76	89	108.0	183	2.31	89	•	•	•	•	•			
9.67	★	**A1**	181.0	141	3.00	89	150.0	170	3.00	89	119.0	176	2.46	89	•	•	•	•	•			

★ Preferred transmission ratio
In the case of gearboxes of size 28, only possible with integrated motor or input unit KQ and KQS.

© Siemens AG 2011

Selection and ordering data (continued)

Efficiency table C.38

Transmission ratio		Ratio code	Output speed n_{mot} = 950 rpm				Output speed n_{mot} = 850 rpm				Output speed n_{mot} = 700 rpm				Size for motor and input units							
i_{tot}		Order No. 15th and 16th position	n_2 rpm	T_2 Nm	P_{mot} kW	h %	n_2 rpm	T_2 Nm	P_{mot} kW	h %	n_2 rpm	T_2 Nm	P_{mot} kW	h %	63	71	80	90	100	112	132	160
320.67	★	**K2**	3.0	224	0.12	56	2.7	224	0.11	56	2.2	223	0.10	54	•	•	•					
284.70		**J2**	3.3	224	0.13	58	3.0	224	0.12	57	2.5	224	0.11	55	•	•	•					
249.60	★	**H2**	3.8	224	0.15	59	3.4	224	0.14	58	2.8	224	0.12	56	•	•	•	•				
223.36		**G2**	4.3	225	0.17	60	3.8	224	0.15	59	3.1	224	0.13	57	•	•	•	•				
198.25	★	**F2**	4.8	225	0.19	61	4.3	225	0.17	60	3.5	224	0.14	58	•	•	•	•				
173.73		**E2**	5.5	225	0.21	62	4.9	225	0.19	61	4.0	224	0.16	59	•	•	•	•				
152.75	★	**D2**	6.2	226	0.23	63	5.6	225	0.21	62	4.6	225	0.18	61	•	•	•	•				
138.00		**C2**	6.9	226	0.25	64	6.2	226	0.23	63	5.1	225	0.20	62	•	•	•	•				
120.25	★	**B2**	7.9	227	0.29	65	7.1	226	0.26	65	5.8	226	0.22	63	•	•	•	•				
108.00		**A2**	8.8	227	0.32	66	7.9	227	0.29	65	6.5	226	0.24	64	•	•	•	•				
97.50	★	**X1**	9.7	228	0.35	67	8.7	227	0.31	66	7.2	226	0.26	65	•	•	•	•	•			
88.40		**W1**	10.7	228	0.38	67	9.6	228	0.34	67	7.9	227	0.29	65	•	•	•	•	•			
80.44	★	**V1**	11.8	229	0.42	68	10.6	228	0.38	67	8.7	227	0.31	66	•	•	•	•	•			
71.12		**U1**	13.4	229	0.47	68	12.0	229	0.42	68	9.8	228	0.35	67	•	•	•	•	•			
65.68	★	**T1**	14.5	230	0.51	68	12.9	229	0.46	68	10.7	228	0.38	67	•	•	•	•	•			
60.30	★	**S1**	15.8	196	0.39	84	14.1	195	0.34	84	11.6	192	0.28	82	•	•	•					
53.53		**R1**	17.7	236	0.52	85	15.9	234	0.46	84	13.1	231	0.38	83	•	•	•					
46.93	★	**Q1**	20.0	225	0.55	86	18.1	223	0.50	85	14.9	220	0.41	84	•	•	•	•				
42.00		**P1**	23.0	216	0.60	86	20.0	214	0.52	86	16.7	211	0.44	85	•	•	•	•				
37.28	★	**N1**	25.0	227	0.68	87	23.0	225	0.63	86	18.8	222	0.51	85	•	•	•	•				
32.67		**M1**	29.0	189	0.65	87	26.0	188	0.59	87	21.0	185	0.47	86	•	•	•	•				
28.72	★	**L1**	33.0	205	0.80	88	30.0	204	0.73	88	24.0	202	0.58	87	•	•	•	•				
25.95		**K1**	37.0	206	0.90	88	33.0	205	0.81	88	27.0	204	0.66	87	•	•	•	•				
22.61	★	**J1**	42.0	205	1.01	89	38.0	204	0.92	88	31.0	202	0.75	88	•	•	•	•				
20.31		**H1**	47.0	195	1.08	89	42.0	195	0.96	89	34.0	193	0.78	88	•	•	•	•				
18.33	★	**G1**	52.0	206	1.26	89	46.0	205	1.11	89	38.0	204	0.92	88	•	•	•	•	•			
16.62		**F1**	57.0	196	1.31	89	51.0	195	1.17	89	42.0	195	0.96	89	•	•	•	•	•			
15.13	★	**E1**	63.0	186	1.38	89	56.0	186	1.22	89	46.0	186	1.01	89	•	•	•	•	•			
13.37		**D1**	71.0	165	1.37	89	64.0	165	1.24	89	52.0	164	1.00	89	•	•	•	•	•			
12.35	★	**C1**	77.0	172	1.55	89	69.0	172	1.39	89	57.0	172	1.15	89	•	•	•	•	•			
10.63		**B1**	89.0	183	1.90	89	80.0	183	1.71	89	66.0	182	1.41	89	•	•	•	•	•			
9.67	★	**A1**	98.0	176	2.02	89	88.0	176	1.82	89	72.0	176	1.49	89	•	•	•	•	•			

★ Preferred transmission ratio
In the case of gearboxes of size 28, only possible with integrated motor or input unit KQ and KQS.

© Siemens AG 2011

Transmission ratios and maximum torques

Selection and ordering data (continued)

Efficiency table C.38

Transmission ratio		Ratio code	Output speed n_{mot} = 500 rpm				Output speed n_{mot} = 250 rpm				Output speed n_{mot} = 10 rpm				Size for motor and input units							
i_{tot}		Order No. 15th and 16th position	n_2 rpm	T_2 Nm	P_{mot} kW	h %	n_2 rpm	T_2 Nm	P_{mot} kW	h %	n_2 rpm	T_2 Nm	P_{mot} kW	h %	63	71	80	90	100	112	132	160
320.67	★	**K2**	1.6	223	0.07	52	0.78	223	<0.05	49	0.031	222	<0.05	46	•	•	•					
284.70		**J2**	1.8	223	0.08	53	0.88	223	<0.05	49	0.035	222	<0.05	46	•	•	•					
249.60	★	**H2**	2.0	223	0.09	53	1.00	223	<0.05	50	0.040	222	<0.05	46	•	•	•	•				
223.36		**G2**	2.2	223	0.09	54	1.10	223	0.05	50	0.045	222	<0.05	46	•	•	•	•				
198.25	★	**F2**	2.5	224	0.11	55	1.30	223	0.06	51	0.050	222	<0.05	46	•	•	•	•				
173.73		**E2**	2.9	224	0.12	56	1.40	223	0.06	51	0.058	222	<0.05	46	•	•	•	•				
152.75	★	**D2**	3.3	224	0.13	57	1.60	223	0.07	52	0.065	222	<0.05	46	•	•	•	•				
138.00		**C2**	3.6	224	0.15	58	1.80	223	0.08	53	0.072	222	<0.05	46	•	•	•	•				
120.25	★	**B2**	4.2	225	0.17	60	2.10	223	0.09	54	0.083	222	<0.05	46	•	•	•	•				
108.00		**A2**	4.6	225	0.18	61	2.30	223	0.10	54	0.093	222	<0.05	46	•	•	•	•				
97.50	★	**X1**	5.1	225	0.20	62	2.60	224	0.11	55	0.100	222	<0.05	46	•	•	•	•	•			
88.40		**W1**	5.7	225	0.22	63	2.80	224	0.12	56	0.110	222	<0.05	46	•	•	•	•	•			
80.44	★	**V1**	6.2	226	0.23	63	3.10	224	0.13	57	0.120	222	<0.05	46	•	•	•	•	•			
71.12		**U1**	7.0	226	0.26	64	3.50	224	0.14	58	0.140	222	<0.05	46	•	•	•	•	•			
65.68	★	**T1**	7.6	226	0.28	65	3.80	224	0.15	59	0.150	222	<0.05	46	•	•	•	•	•			
60.30	★	**S1**	8.3	188	0.20	80	4.10	181	0.10	78	0.170	173	<0.05	74	•	•	•					
53.53		**R1**	9.3	226	0.27	81	4.70	217	0.14	78	0.190	206	<0.05	74	•	•	•					
46.93	★	**Q1**	10.7	215	0.29	82	5.30	206	0.15	78	0.210	194	<0.05	74	•	•	•	•				
42.00		**P1**	11.9	206	0.31	82	6.00	197	0.16	79	0.240	185	<0.05	74	•	•	•	•				
37.28	★	**N1**	13.4	217	0.37	83	6.70	207	0.18	79	0.270	193	<0.05	74	•	•	•	•				
32.67		**M1**	15.3	181	0.35	84	7.70	173	0.17	80	0.310	160	<0.05	74	•	•	•	•				
28.72	★	**L1**	17.4	197	0.42	85	8.70	188	0.21	81	0.350	172	<0.05	74	•	•	•	•				
25.95		**K1**	19.3	199	0.47	85	9.60	190	0.23	81	0.390	173	<0.05	74	•	•	•	•				
22.61	★	**J1**	22.0	199	0.53	86	11.10	189	0.27	82	0.440	171	<0.05	74	•	•	•	•				
20.31		**H1**	25.0	190	0.57	87	12.30	181	0.28	83	0.490	163	<0.05	74	•	•	•	•				
18.33	★	**G1**	27.0	201	0.65	87	13.60	192	0.33	83	0.550	172	<0.05	74	•	•	•	•	•			
16.62		**F1**	30.0	192	0.69	88	15.00	184	0.34	84	0.600	163	<0.05	74	•	•	•	•	•			
15.13	★	**E1**	33.0	184	0.72	88	16.50	176	0.36	84	0.660	155	<0.05	74	•	•	•	•	•			
13.37		**D1**	37.0	163	0.71	88	18.70	157	0.36	85	0.750	138	<0.05	75	•	•	•	•	•			
12.35	★	**C1**	40.0	171	0.81	89	20.00	165	0.40	86	0.810	144	<0.05	75	•	•	•	•	•			
10.63		**B1**	47.0	182	1.00	89	24.00	177	0.51	86	0.940	153	<0.05	75	•	•	•	•	•			
9.67	★	**A1**	52.0	176	1.07	89	26.00	171	0.54	87	1.000	147	<0.05	75	•	•	•	•	•			

★ Preferred transmission ratio
In the case of gearboxes of size 28, only possible with integrated motor or input unit KQ and KQS.

© Siemens AG 2011

Selection and ordering data (continued)

Efficiency table C.48-D/Z28

Transmission ratio	Ratio code	Output speed n_{mot} = 1 750 rpm				Output speed n_{mot} = 1 450 rpm				Size for motor and input units							
i_{tot}	Order No. 15th and 16th position	n_2 rpm	T_2 Nm	P_{mot} kW	h %	n_2 rpm	T_2 Nm	P_{mot} kW	h %	63	71	80	90	100	112	132	160
23 503	**N1**	0.07	364	<0.06	47	0.06	364	<0.06	47		•						
20 276	**M1**	0.09	364	<0.06	47	0.07	364	<0.06	47		•						
17 420	**L1**	0.10	364	<0.06	47	0.08	364	<0.06	47		•						
16 037	**K1**	0.11	364	<0.06	47	0.09	364	<0.06	47		•						
14 579	**J1**	0.12	364	<0.06	47	0.10	364	<0.06	47		•						
12 904	**H1**	0.14	364	<0.06	47	0.11	364	<0.06	47		•						
10 808	**G1**	0.16	364	<0.06	47	0.13	364	<0.06	47		•						
9 216	**F1**	0.19	364	<0.06	47	0.16	364	<0.06	47		•						
7 833	**E1**	0.22	364	<0.06	48	0.19	364	<0.06	47		•						
6 807	**D1**	0.26	364	<0.06	48	0.21	364	<0.06	47		•						
5 925	**C1**	0.30	364	<0.06	48	0.24	364	<0.06	48		•						
5 345	**B1**	0.33	364	<0.06	48	0.27	364	<0.06	48		•						
4 717	**A1**	0.37	364	<0.06	48	0.31	364	<0.06	48		•						
4 222	**B2**	0.41	364	<0.06	48	0.34	364	<0.06	48		•						
3 749	**A2**	0.47	364	<0.06	49	0.39	364	<0.06	48		•						
3 286	**X1**	0.53	364	<0.06	49	0.44	364	<0.06	49		•						
2 941	**W1**	0.60	364	<0.06	49	0.49	364	<0.06	49		•						
2 610	**V1**	0.67	364	<0.06	50	0.56	364	<0.06	49		•						
2 288	**U1**	0.76	365	<0.06	50	0.63	364	<0.06	49		•						
2 011	**T1**	0.87	365	0.07	51	0.72	364	<0.06	50		•						
1 817	**S1**	0.96	365	0.07	51	0.80	365	0.06	50		•						
1 583	**R1**	1.11	365	0.08	52	0.92	365	0.07	51		•						
1 422	**Q1**	1.23	365	0.09	52	1.02	365	0.08	51		•						
1 284	**P1**	1.36	365	0.10	53	1.13	365	0.08	52		•						
1 164	**N1**	1.50	365	0.11	53	1.25	365	0.09	52		•						
1 059	**M1**	1.65	366	0.12	54	1.37	365	0.10	53		•						
937	**L1**	1.87	366	0.13	55	1.55	365	0.11	53		•						
865	**K1**	2.02	366	0.14	55	1.68	366	0.12	54		•						
745	**J1**	2.35	366	0.16	56	1.95	366	0.14	55		•						
677	**H1**	2.59	367	0.17	57	2.14	366	0.15	56		•						
615	**G1**	2.84	367	0.19	58	2.36	366	0.16	57		•						
558	**F1**	3.14	367	0.20	59	2.60	367	0.17	57		•						
508	**E1**	3.45	368	0.22	60	2.86	367	0.19	58		•						
449	**D1**	3.90	368	0.25	61	3.23	367	0.21	59		•						
414	**C1**	4.22	368	0.26	62	3.50	368	0.22	60		•						
357	**B1**	4.90	369	0.30	64	4.06	368	0.25	62		•						
324	**A1**	5.40	370	0.32	64	4.47	369	0.28	63		•						

★ Preferred transmission ratio
In the case of gearboxes of size 28, only possible with integrated motor or input unit KQ and KQS.

© Siemens AG 2011

Transmission ratios and maximum torques

Selection and ordering data (continued)

Efficiency table C.48

Transmission ratio		Ratio code	Output speed n_{mot} = 1 750 rpm				Output speed n_{mot} = 1 450 rpm				Output speed n_{mot} = 1 150 rpm				Size for motor and input units							
i_{tot}		Order No. 15th and 16th position	n_2 rpm	T_2 Nm	P_{mot} kW	h %	n_2 rpm	T_2 Nm	P_{mot} kW	h %	n_2 rpm	T_2 Nm	P_{mot} kW	h %	63	71	80	90	100	112	132	160
320.67	★	**K2**	5.5	370	0.32	66	4.5	369	0.27	64	3.6	368	0.23	61	•	•	•					
284.70		**J2**	6.1	370	0.35	67	5.1	369	0.30	65	4.0	368	0.25	63	•	•	•					
249.60	★	**H2**	7.0	371	0.40	68	5.8	370	0.34	66	4.6	369	0.28	64	•	•	•	•				
223.36		**G2**	7.8	372	0.44	69	6.5	371	0.38	67	5.1	369	0.30	65	•	•	•	•				
198.25	★	**F2**	8.8	373	0.49	70	7.3	372	0.42	68	5.8	370	0.34	66	•	•	•	•				
173.73		**E2**	10.1	374	0.56	70	8.3	373	0.47	69	6.6	371	0.38	67	•	•	•	•				
152.75	★	**D2**	11.5	375	0.64	71	9.5	374	0.53	70	7.5	372	0.43	68	•	•	•	•				
138.00		**C2**	12.7	377	0.70	71	10.5	375	0.58	71	8.3	373	0.47	69	•	•	•	•				
120.25	★	**B2**	14.6	363	0.78	72	12.1	376	0.67	71	9.6	374	0.54	70	•	•	•	•				
108.00		**A2**	16.2	350	0.83	72	13.4	377	0.74	71	10.6	375	0.59	71	•	•	•	•				
97.50	★	**X1**	17.9	339	0.88	72	14.9	378	0.82	72	11.8	376	0.65	71	•	•	•	•	•			
88.40		**W1**	19.8	329	0.95	72	16.4	380	0.91	72	13.0	375	0.72	71	•	•	•	•	•			
80.44	★	**V1**	22.0	318	1.02	72	18.0	381	1.00	72	14.3	365	0.76	72	•	•	•	•	•			
71.12		**U1**	25.0	305	1.11	72	20.0	382	1.11	72	16.2	352	0.83	72	•	•	•	•	•			
65.68	★	**T1**	27.0	297	1.17	72	22.0	384	1.23	72	17.5	343	0.87	72	•	•	•	•	•			
56.55	★	**S1**	31.0	285	1.28	72	26.0	386	1.46	72	20.0	329	0.96	72	•	•	•	•	•			
51.41		**R1**	34.0	276	1.37	72	28.0	387	1.58	72	22.0	319	1.02	72	•	•	•	•	•			
46.93	★	**Q1**	37.0	293	1.27	89	31.0	292	1.07	89	25.0	289	0.86	88	•	•	•	•				
42.00		**P1**	42.0	320	1.57	90	35.0	318	1.31	89	27.0	316	1.01	88	•	•	•	•				
37.28	★	**N1**	47.0	267	1.47	90	39.0	267	1.22	89	31.0	265	0.97	89	•	•	•	•				
32.67		**M1**	54.0	267	1.68	90	44.0	266	1.37	90	35.0	265	1.09	89	•	•	•	•				
28.72	★	**L1**	61.0	289	2.05	90	50.0	289	1.68	90	40.0	288	1.35	89	•	•	•	•				
25.95		**K1**	67.0	277	2.17	90	56.0	277	1.81	90	44.0	277	1.42	90	•	•	•	•				
22.61	★	**J1**	77.0	270	2.42	90	64.0	270	2.02	90	51.0	270	1.61	90	•	•	•	•				
20.31		**H1**	86.0	281	2.82	90	71.0	281	2.33	90	57.0	281	1.87	90	•	•	•	•				
18.33	★	**G1**	95.0	300	3.32	90	79.0	300	2.76	90	63.0	300	2.20	90	•	•	•	•	•			
16.62		**F1**	105.0	291	3.56	90	87.0	293	2.97	90	69.0	293	2.35	90	•	•	•	•	•			
15.13	★	**E1**	116.0	266	3.60	90	96.0	266	2.98	90	76.0	266	2.36	90	•	•	•	•	•			
13.37		**D1**	131.0	236	3.60	90	108.0	236	2.96	90	86.0	236	2.36	90	•	•	•	•	•			
12.35	★	**C1**	142.0	242	4.00	90	117.0	249	3.39	90	93.0	249	2.69	90	•	•	•	•	•			
10.63		**B1**	165.0	208	4.00	90	136.0	252	4.00	90	108.0	254	3.20	90	•	•	•	•	•			
9.67	★	**A1**	181.0	189	4.00	90	150.0	229	4.00	90	119.0	243	3.37	90	•	•	•	•	•			

★ Preferred transmission ratio
In the case of gearboxes of size 28, only possible with integrated motor or input unit KQ and KQS.

© Siemens AG 2011

Selection and ordering data (continued)

Efficiency table C.48

Transmission ratio		Ratio code	Output speed n_{mot} = 950 rpm				Output speed n_{mot} = 850 rpm				Output speed n_{mot} = 750 rpm				Size for motor and input units							
i_{tot}		Order No. 15th and 16th position	n_2 rpm	T_2 Nm	P_{mot} kW	h %	n_2 rpm	T_2 Nm	P_{mot} kW	h %	n_2 rpm	T_2 Nm	P_{mot} kW	h %	63	71	80	90	100	112	132	160
320.67	★	**K2**	3.0	367	0.19	59	2.7	367	0.18	58	2.2	366	0.15	57	•	•	•					
284.70		**J2**	3.3	367	0.21	61	3.0	367	0.19	59	2.5	366	0.17	58	•	•	•					
249.60	★	**H2**	3.8	368	0.24	62	3.4	368	0.22	61	2.8	367	0.18	59	•	•	•	•				
223.36		**G2**	4.3	368	0.26	63	3.8	368	0.24	62	3.1	367	0.20	60	•	•	•	•				
198.25	★	**F2**	4.8	369	0.29	64	4.3	368	0.26	63	3.5	368	0.22	61	•	•	•	•				
173.73		**E2**	5.5	370	0.32	66	4.9	369	0.29	64	4.0	368	0.25	62	•	•	•	•				
152.75	★	**D2**	6.2	370	0.36	67	5.6	370	0.33	66	4.6	369	0.28	64	•	•	•	•				
138.00		**C2**	6.9	371	0.40	68	6.2	370	0.36	67	5.1	369	0.30	65	•	•	•	•				
120.25	★	**B2**	7.9	372	0.45	69	7.1	371	0.41	68	5.8	370	0.34	66	•	•	•	•				
108.00		**A2**	8.8	373	0.49	70	7.9	372	0.45	69	6.5	371	0.38	67	•	•	•	•				
97.50	★	**X1**	9.7	374	0.54	70	8.7	373	0.49	69	7.2	371	0.41	68	•	•	•	•	•			
88.40		**W1**	10.7	375	0.59	71	9.6	374	0.54	70	7.9	372	0.45	69	•	•	•	•	•			
80.44	★	**V1**	11.8	376	0.65	71	10.6	375	0.59	71	8.7	373	0.49	69	•	•	•	•	•			
71.12		**U1**	13.4	373	0.73	71	12.0	376	0.66	71	9.8	374	0.55	70	•	•	•	•	•			
65.68	★	**T1**	14.5	363	0.77	72	12.9	377	0.71	71	10.7	375	0.59	71	•	•	•	•	•			
56.55	★	**S1**	16.8	348	0.85	72	15.0	361	0.79	72	12.4	376	0.69	71	•	•	•	•	•			
51.41		**R1**	18.5	338	0.91	72	16.5	350	0.84	72	13.6	372	0.74	71	•	•	•	•	•			
46.93	★	**Q1**	20.0	286	0.69	87	18.1	284	0.62	86	14.9	280	0.51	85	•	•	•	•				
42.00		**P1**	23.0	313	0.86	88	20.0	311	0.75	87	16.7	306	0.62	86	•	•	•	•				
37.28	★	**N1**	25.0	263	0.78	88	23.0	261	0.72	90	18.8	258	0.59	87	•	•	•	•				
32.67		**M1**	29.0	263	0.90	89	26.0	262	0.81	88	21.0	259	0.65	87	•	•	•	•				
28.72	★	**L1**	33.0	286	1.11	89	30.0	285	1.01	89	24.0	283	0.81	88	•	•	•	•				
25.95		**K1**	37.0	276	1.20	89	33.0	275	1.07	89	27.0	273	0.87	88	•	•	•	•				
22.61	★	**J1**	42.0	269	1.32	90	38.0	269	1.20	89	31.0	267	0.98	89	•	•	•	•				
20.31		**H1**	47.0	280	1.54	90	42.0	280	1.38	90	34.0	279	1.11	89	•	•	•	•				
18.33	★	**G1**	52.0	299	1.82	90	46.0	299	1.61	90	38.0	298	1.33	89	•	•	•	•	•			
16.62		**F1**	57.0	293	1.94	90	51.0	292	1.74	90	42.0	292	1.43	90	•	•	•	•	•			
15.13	★	**E1**	63.0	266	1.96	90	56.0	266	1.74	90	46.0	266	1.43	90	•	•	•	•	•			
13.37		**D1**	71.0	235	1.95	90	64.0	235	1.76	90	52.0	235	1.43	90	•	•	•	•	•			
12.35	★	**C1**	77.0	249	2.23	90	69.0	249	2.00	90	57.0	248	1.65	90	•	•	•	•	•			
10.63		**B1**	89.0	254	2.64	90	80.0	254	2.37	90	66.0	254	1.95	90	•	•	•	•	•			
9.67	★	**A1**	98.0	243	2.78	90	88.0	243	2.49	90	72.0	243	2.04	90	•	•	•	•	•			

★ Preferred transmission ratio
In the case of gearboxes of size 28, only possible with integrated motor or input unit KQ and KQS.

© Siemens AG 2011

Transmission ratios and maximum torques

Selection and ordering data (continued)

Efficiency table C.48

Transmission ratio	Ratio code	Output speed n_{mot} = 500 rpm				Output speed n_{mot} = 250 rpm				Output speed n_{mot} = 10 rpm				Size for motor and input units							
i_{tot}	Order No. 15th and 16th position	n_2 rpm	T_2 Nm	P_{mot} kW	h %	n_2 rpm	T_2 Nm	P_{mot} kW	h %	n_2 rpm	T_2 Nm	P_{mot} kW	h %	63	71	80	90	100	112	132	160
320.67 ★	**K2**	1.6	365	0.11	54	0.78	365	0.06	51	0.031	364	<0.05	47	•	•	•					
284.70	**J2**	1.8	366	0.13	55	0.88	365	0.07	51	0.035	364	<0.05	47	•	•	•					
249.60 ★	**H2**	2.0	366	0.14	56	1.00	365	0.07	52	0.040	364	<0.05	47	•	•	•	•				
223.36	**G2**	2.2	366	0.15	57	1.10	365	0.08	52	0.045	364	<0.05	47	•	•	•	•				
198.25 ★	**F2**	2.5	367	0.17	58	1.30	365	0.09	53	0.050	364	<0.05	47	•	•	•	•				
173.73	**E2**	2.9	367	0.19	59	1.40	365	0.10	54	0.058	364	<0.05	47	•	•	•	•				
152.75 ★	**D2**	3.3	367	0.21	60	1.60	366	0.11	55	0.065	364	<0.05	47	•	•	•	•				
138.00	**C2**	3.6	368	0.23	61	1.80	366	0.12	55	0.072	364	<0.05	47	•	•	•	•				
120.25 ★	**B2**	4.2	368	0.26	63	2.10	366	0.14	56	0.083	364	<0.05	48	•	•	•	•				
108.00	**A2**	4.6	369	0.28	64	2.30	366	0.15	57	0.093	364	<0.05	48	•	•	•	•				
97.50 ★	**X1**	5.1	369	0.30	65	2.60	367	0.17	58	0.100	364	<0.05	48	•	•	•	•	•			
88.40	**W1**	5.7	370	0.33	66	2.80	367	0.18	59	0.110	364	<0.05	48	•	•	•	•	•			
80.44 ★	**V1**	6.2	370	0.36	67	3.10	367	0.20	60	0.120	364	<0.05	48	•	•	•	•	•			
71.12	**U1**	7.0	371	0.40	68	3.50	368	0.22	61	0.140	364	<0.05	48	•	•	•	•	•			
65.68 ★	**T1**	7.6	372	0.43	69	3.80	368	0.24	62	0.150	364	<0.05	48	•	•	•	•	•			
56.55 ★	**S1**	8.8	373	0.49	70	4.40	369	0.27	63	0.180	364	<0.05	48	•	•	•	•	•			
51.41	**R1**	9.7	374	0.54	70	4.90	369	0.29	64	0.190	364	<0.05	48	•	•	•	•	•			
46.93 ★	**Q1**	10.7	272	0.37	83	5.30	258	0.18	78	0.210	238	<0.05	72	•	•	•	•				
42.00	**P1**	11.9	298	0.44	84	6.00	282	0.22	79	0.240	259	<0.05	72	•	•	•	•				
37.28 ★	**N1**	13.4	252	0.42	84	6.70	238	0.21	80	0.270	216	<0.05	72	•	•	•	•				
32.67	**M1**	15.3	253	0.48	85	7.70	240	0.24	81	0.310	216	<0.05	73	•	•	•	•				
28.72 ★	**L1**	17.4	277	0.59	86	8.70	262	0.29	81	0.350	234	<0.05	73	•	•	•	•				
25.95	**K1**	19.3	268	0.62	87	9.60	253	0.31	82	0.390	224	<0.05	73	•	•	•	•				
22.61 ★	**J1**	22.0	263	0.69	87	11.10	250	0.35	83	0.440	219	<0.05	73	•	•	•	•				
20.31	**H1**	25.0	275	0.82	88	12.30	262	0.40	84	0.490	228	<0.05	73	•	•	•	•				
18.33 ★	**G1**	27.0	295	0.94	88	13.60	282	0.48	84	0.550	243	<0.05	73	•	•	•	•	•			
16.62	**F1**	30.0	289	1.02	89	15.00	277	0.51	85	0.600	238	<0.05	73	•	•	•	•	•			
15.13 ★	**E1**	33.0	264	1.02	89	16.50	254	0.51	86	0.660	217	<0.05	73	•	•	•	•	•			
13.37	**D1**	37.0	234	1.02	89	18.70	227	0.51	87	0.750	192	<0.05	73	•	•	•	•	•			
12.35 ★	**C1**	40.0	247	1.16	89	20.00	241	0.58	87	0.810	203	<0.05	73	•	•	•	•	•			
10.63	**B1**	47.0	254	1.39	90	24.00	248	0.71	88	0.940	208	<0.05	73	•	•	•	•	•			
9.67 ★	**A1**	52.0	243	1.47	90	26.00	239	0.74	88	1.000	199	<0.05	74	•	•	•	•	•			

★ Preferred transmission ratio
In the case of gearboxes of size 28, only possible with integrated motor or input unit KQ and KQS.

© Siemens AG 2011

Selection and ordering data (continued)

Efficiency table C.68-D/Z28

Transmission ratio	Ratio code	Output speed n_{mot} = 1 750 rpm				Output speed n_{mot} = 1 450 rpm				Size for motor and input units							
i_{tot}	Order No. 15th and 16th position	n_2 rpm	T_2 Nm	P_{mot} kW	h %	n_2 rpm	T_2 Nm	P_{mot} kW	h %	63	71	80	90	100	112	132	160
28 203	**N1**	0.06	675	<0.06	49	0.05	675	<0.06	49		•						
24 331	**M1**	0.07	675	<0.06	49	0.06	675	<0.06	49		•						
20 903	**L1**	0.08	675	<0.06	49	0.07	675	<0.06	49		•						
19 244	**K1**	0.09	675	<0.06	49	0.08	675	<0.06	49		•						
17 495	**J1**	0.10	675	<0.06	49	0.08	675	<0.06	49		•						
15 485	**H1**	0.11	675	<0.06	49	0.09	675	<0.06	49		•						
12 970	**G1**	0.13	675	<0.06	49	0.11	675	<0.06	49		•						
11 059	**F1**	0.16	675	<0.06	49	0.13	675	<0.06	49		•						
9 400	**E1**	0.19	675	<0.06	50	0.15	675	<0.06	49		•						
8 169	**D1**	0.21	675	<0.06	50	0.18	675	<0.06	50		•						
7 110	**C1**	0.25	675	<0.06	50	0.20	675	<0.06	50		•						
6 414	**B1**	0.27	675	<0.06	50	0.23	675	<0.06	50		•						
5 661	**A1**	0.31	675	<0.06	50	0.26	675	<0.06	50		•						
5 066	**B2**	0.35	675	<0.06	51	0.29	675	<0.06	50		•						
4 498	**A2**	0.39	675	<0.06	51	0.32	675	< 0.06	51		•						
3 944	**X1**	0.44	675	0.06	51	0.37	675	<0.06	51		•						
3 529	**W1**	0.50	675	0.07	52	0.41	675	<0.06	51		•						
3 132	**V1**	0.56	675	0.08	52	0.46	675	0.06	51		•						
2 745	**U1**	0.64	675	0.09	53	0.53	675	0.07	52		•						
2 414	**T1**	0.73	676	0.10	53	0.60	675	0.08	52		•						
2 180	**S1**	0.80	676	0.11	54	0.67	675	0.09	53		•						
1 900	**R1**	0.92	676	0.12	54	0.76	676	0.10	53		•						
1 706	**Q1**	1.03	676	0.13	55	0.85	676	0.11	54		•						
1 541	**P1**	1.14	676	0.14	56	0.94	676	0.12	54		•						
1 397	**N1**	1.25	676	0.16	56	1.04	676	0.13	55		•						
1 271	**M1**	1.38	677	0.17	57	1.14	676	0.15	56		•						
1 124	**L1**	1.56	677	0.19	58	1.29	676	0.16	56		•						
1 038	**K1**	1.69	677	0.20	58	1.40	677	0.17	57		•						
893	**J1**	1.96	677	0.23	60	1.62	677	0.20	58		•						
812	**H1**	2.15	678	0.25	61	1.79	677	0.22	59		•						
738	**G1**	2.37	678	0.27	61	1.96	677	0.23	60		•						
669	**F1**	2.61	678	0.30	62	2.17	678	0.25	61		•						
609	**E1**	2.87	679	0.32	63	2.38	678	0.27	62		•						
539	**D1**	3.25	679	0.36	65	2.69	679	0.30	63		•						
497	**C1**	3.52	680	0.38	65	2.92	679	0.33	64		•						
428	**B1**	4.09	681	0.43	67	3.39	680	0.37	65		•						
389	**A1**	4.50	681	0.47	68	3.73	680	0.40	66		•						

★ Preferred transmission ratio
In the case of gearboxes of size 18 or 28, only possible with integrated motor or input unit KQ and KQS.

© Siemens AG 2011

Transmission ratios and maximum torques

Selection and ordering data (continued)

Efficiency table C.68

Transmission ratio	Ratio code	Output speed n_{mot} = 1 750 rpm				Output speed n_{mot} = 1 450 rpm				Output speed n_{mot} = 1 150 rpm				Size for motor and input units							
i_{tot}	Order No. 15th and 16th position	n_2 rpm	T_2 Nm	P_{mot} kW	h %	n_2 rpm	T_2 Nm	P_{mot} kW	h %	n_2 rpm	T_2 Nm	P_{mot} kW	h %	63	71	80	90	100	112	132	160
364.00 ★	**U2**	4.8	682	0.49	70	4.0	680	0.42	68	3.2	679	0.35	65	•	•						
323.70	**T2**	5.4	682	0.55	71	4.5	681	0.47	69	3.6	680	0.38	67	•	•	•					
280.80 ★	**S2**	6.2	684	0.62	72	5.2	682	0.53	70	4.1	681	0.43	68	•	•	•	•				
262.36	**R2**	6.7	684	0.67	72	5.5	683	0.56	71	4.4	681	0.46	69	•	•	•	•				
230.75 ★	**Q2**	7.6	685	0.75	73	6.3	684	0.63	72	5.0	682	0.51	70	•	•	•	•				
202.09	**P2**	8.7	654	0.81	73	7.2	685	0.71	72	5.7	683	0.57	71	•	•	•	•	•			
178.75 ★	**N2**	9.8	627	0.87	74	8.1	662	0.77	73	6.4	684	0.64	72	•	•	•	•	•	•		
162.00	**M2**	10.8	606	0.93	74	9.0	687	0.88	73	7.1	683	0.70	72	•	•	•	•	•	•		
143.00 ★	**L2**	12.2	581	1.00	74	10.1	616	0.88	74	8.0	659	0.76	73	•	•	•	•	•	•		
129.00	**K2**	13.6	560	1.07	74	11.2	595	0.94	74	8.9	638	0.81	73	•	•	•	•	•	•		
117.00 ★	**J2**	15.0	542	1.15	74	12.4	691	1.21	74	9.8	619	0.86	74	•	•	•	•	•	•		
106.60	**H2**	16.4	526	1.21	74	13.6	559	1.07	74	10.8	601	0.92	74	•	•	•	•	•	•		
97.50 ★	**G2**	17.9	511	1.29	74	14.9	694	1.46	74	11.8	585	0.98	74	•	•	•	•	•	•		
90.00 ★	**F2**	19.4	347	0.80	88	16.1	344	0.67	87	12.8	339	0.53	86	•	•	•	•				
84.09	**E2**	21.0	531	1.33	88	17.2	528	1.09	87	13.7	521	0.87	86	•	•	•	•				
73.96 ★	**D2**	24.0	547	1.56	88	19.6	544	1.28	88	15.5	539	1.01	87	•	•	•	•				
64.77	**C2**	27.0	640	2.05	88	22.0	638	1.67	88	17.8	633	1.35	87	•	•	•	•	•			
57.29 ★	**B2**	31.0	617	2.27	88	25.0	661	1.96	88	20.0	709	1.69	88	•	•	•	•	•	•		
51.92	**A2**	34.0	599	2.41	88	28.0	660	2.19	88	22.0	657	1.72	88	•	•	•	•	•	•		
45.83 ★	**X1**	38.0	578	2.60	88	32.0	681	2.58	88	25.0	661	1.96	88	•	•	•	•	•	•		
41.35	**W1**	42.0	559	2.78	89	35.0	594	2.46	88	28.0	639	2.12	88	•	•	•	•	•	•		
37.50 ★	**U1**	47.0	540	3.00	89	39.0	645	2.98	88	31.0	619	2.27	88	•	•	•	•	•	•		
34.17	**T1**	51.0	526	3.17	89	42.0	561	2.79	89	34.0	601	2.42	88	•	•	•	•	•	•		
31.25 ★	**R1**	56.0	511	3.38	89	46.0	545	2.97	89	37.0	586	2.57	88	•	•	•	•	•	•		
27.94	**P1**	63.0	493	3.67	89	52.0	593	3.65	89	41.0	569	2.76	89	•	•	•	•	•	•		
25.66 ★	**M1**	68.0	480	3.86	89	57.0	571	3.85	89	45.0	550	2.93	89	•	•	•	•	•	•		
23.13	**K1**	76.0	464	4.17	89	63.0	557	4.15	89	50.0	534	3.16	89	•	•	•	•	•	•		
19.89 ★	**G1**	88.0	444	4.63	89	73.0	534	4.61	89	58.0	511	3.50	89	•	•	•	•	•	•		
38.00	**V1**	46.0	437	2.34	90	38.0	436	1.94	90	30.0	435	1.53	89	•	•	•	•	•			
33.61 ★	**S1**	52.0	435	2.64	90	43.0	435	2.18	90	34.0	434	1.72	90	•	•	•	•	•	•		
30.46	**Q1**	57.0	394	2.62	90	48.0	394	2.20	90	38.0	393	1.75	90	•	•	•	•	•	•		
26.89 ★	**N1**	65.0	406	3.07	90	54.0	406	2.55	90	43.0	406	2.03	90	•	•	•	•	•	•		
24.26	**L1**	72.0	401	3.36	90	60.0	401	2.80	90	47.0	401	2.20	90	•	•	•	•	•	•		
22.00 ★	**J1**	80.0	427	3.98	90	66.0	427	3.28	90	52.0	427	2.59	90	•	•	•	•	•	•		
20.04	**H1**	87.0	432	4.38	90	72.0	432	3.63	90	57.0	432	2.87	90	•	•	•	•	•	•		
18.33 ★	**F1**	95.0	422	4.67	90	79.0	422	3.88	90	63.0	422	3.10	90	•	•	•	•	•	•		
16.39	**E1**	107.0	401	5.00	90	88.0	401	4.11	90	70.0	401	3.27	90	•	•	•	•	•	•		
15.05 ★	**D1**	116.0	401	5.41	90	96.0	401	4.48	90	76.0	401	3.55	90	•	•	•	•	•	•		
13.57	**C1**	129.0	366	5.50	90	107.0	420	5.23	90	85.0	420	4.15	90	•	•	•	•	•	•		
11.67 ★	**B1**	150.0	315	5.50	90	124.0	378	5.45	90	99.0	378	4.35	90	•	•	•	•	•	•		

★ Preferred transmission ratio
In the case of gearboxes of size 18 or 28, only possible with integrated motor or input unit KQ and KQS.

© Siemens AG 2011

Selection and ordering data (continued)

Efficiency table C.68

Transmission ratio	Ratio code	Output speed n_{mot} = 950 rpm				Output speed n_{mot} = 850 rpm				Output speed n_{mot} = 700 rpm				Size for motor and input units							
i_{tot}	Order No. 15th and 16th position	n_2 rpm	T_2 Nm	P_{mot} kW	h %	n_2 rpm	T_2 Nm	P_{mot} kW	h %	n_2 rpm	T_2 Nm	P_{mot} kW	h %	63	71	80	90	100	112	132	160
364.00 ★	**U2**	2.6	678	0.29	63	2.3	678	0.26	62	1.9	677	0.22	60	•	•						
323.70	**T2**	2.9	679	0.32	65	2.6	678	0.29	63	2.2	678	0.25	62	•	•	•					
280.80 ★	**S2**	3.4	680	0.37	66	3.0	679	0.33	65	2.5	678	0.28	63	•	•	•	•				
262.36	**R2**	3.6	680	0.38	67	3.2	679	0.35	66	2.7	678	0.30	64	•	•	•	•				
230.75 ★	**Q2**	4.1	681	0.43	68	3.7	680	0.39	67	3.0	679	0.33	65	•	•	•	•				
202.09	**P2**	4.7	681	0.48	69	4.2	681	0.44	68	3.5	680	0.38	66	•	•	•	•	•			
178.75 ★	**N2**	5.3	682	0.54	70	4.8	681	0.49	69	3.9	680	0.41	68	•	•	•	•	•	•		
162.00	**M2**	5.9	683	0.59	71	5.2	682	0.53	70	4.3	681	0.45	69	•	•	•	•	•	•		
143.00 ★	**L2**	6.6	684	0.66	72	5.9	683	0.59	71	4.9	682	0.50	70	•	•	•	•	•	•		
129.00	**K2**	7.4	671	0.72	73	6.6	684	0.66	72	5.4	682	0.55	71	•	•	•	•	•	•		
117.00 ★	**J2**	8.1	654	0.76	73	7.3	672	0.71	73	6.0	683	0.60	71	•	•	•	•	•	•		
106.60	**H2**	8.9	637	0.81	73	8.0	656	0.75	73	6.6	684	0.66	72	•	•	•	•	•	•		
97.50 ★	**G2**	9.7	621	0.86	74	8.7	641	0.80	73	7.2	675	0.70	72	•	•	•	•	•	•		
90.00 ★	**F2**	10.6	335	0.44	85	9.4	332	0.39	84	7.8	326	0.32	82	•	•	•	•				
84.09	**E2**	11.3	515	0.72	85	10.1	510	0.64	84	8.3	502	0.53	83	•	•	•	•				
73.96 ★	**D2**	12.8	533	0.83	86	11.5	529	0.75	85	9.5	521	0.62	84	•	•	•	•				
64.77	**C2**	14.7	627	1.12	86	13.1	623	1.00	86	10.8	614	0.82	85	•	•	•	•	•			
57.29 ★	**B2**	16.6	718	1.43	87	14.8	714	1.28	86	12.2	705	1.05	85	•	•	•	•	•	•		
51.92	**A2**	18.3	653	1.43	87	16.4	650	1.28	87	13.5	643	1.06	86	•	•	•	•	•	•		
45.83 ★	**X1**	21.0	676	1.69	88	18.5	673	1.49	87	15.3	667	1.23	87	•	•	•	•	•	•		
41.35	**W1**	23.0	669	1.83	88	21.0	667	1.67	88	16.9	662	1.35	87	•	•	•	•	•	•		
37.50 ★	**U1**	25.0	663	1.97	88	23.0	680	1.86	88	18.7	708	1.59	87	•	•	•	•	•	•		
34.17	**T1**	28.0	641	2.13	88	25.0	664	1.97	88	20.0	712	1.70	88	•	•	•	•	•	•		
31.25 ★	**R1**	30.0	628	2.23	88	27.0	649	2.08	88	22.0	693	1.81	88	•	•	•	•	•	•		
27.94	**P1**	34.0	605	2.44	88	30.0	630	2.24	88	25.0	668	1.98	88	•	•	•	•	•	•		
25.66 ★	**M1**	37.0	587	2.57	88	33.0	610	2.38	88	27.0	651	2.08	88	•	•	•	•	•	•		
23.13	**K1**	41.0	570	2.77	89	37.0	590	2.58	88	30.0	632	2.25	88	•	•	•	•	•	•		
19.89 ★	**G1**	48.0	544	3.09	89	43.0	564	2.87	89	35.0	604	2.50	88	•	•	•	•	•	•		
38.00	**V1**	25.0	433	1.27	89	22.0	431	1.12	89	18.4	427	0.94	88	•	•	•	•	•			
33.61 ★	**S1**	28.0	432	1.42	89	25.0	431	1.27	89	21.0	428	1.06	88	•	•	•	•	•	•		
30.46	**Q1**	31.0	392	1.42	89	28.0	391	1.29	89	23.0	389	1.06	89	•	•	•	•	•	•		
26.89 ★	**N1**	35.0	405	1.66	90	32.0	404	1.51	89	26.0	402	1.23	89	•	•	•	•	•	•		
24.26	**L1**	39.0	400	1.82	90	35.0	400	1.64	90	29.0,	399	1.36	89	•	•	•	•	•	•		
22.00 ★	**J1**	43.0	427	2.14	90	39.0	426	1.94	90	32.0	425	1.59	89	•	•	•	•	•	•		
20.04	**H1**	47.0	432	2.37	90	42.0	432	2.12	90	35.0	431	1.76	90	•	•	•	•	•	•		
18.33 ★	**F1**	52.0	422	2.56	90	46.0	422	2.26	90	38.0	421	1.87	90	•	•	•	•	•	•		
16.39	**E1**	58.0	401	2.71	90	52.0	401	2.43	90	43.0	400	2.01	90	•	•	•	•	•	•		
15.05 ★	**D1**	63.0	400	2.94	90	56.0	400	2.61	90	47.0	400	2.19	90	•	•	•	•	•	•		
13.57	**C1**	70.0	419	3.42	90	63.0	419	3.08	90	52.0	419	2.54	90	•	•	•	•	•	•		
11.67 ★	**B1**	81.0	378	3.56	90	73.0	378	3.21	90	60.0	377	2.64	90	•	•	•	•	•	•		

★ Preferred transmission ratio
In the case of gearboxes of size 18 or 28, only possible with integrated motor or input unit KQ and KQS.

© Siemens AG 2011

Transmission ratios and maximum torques

Selection and ordering data (continued)

Efficiency table C.68

Transmission ratio	Ratio code	Output speed n_{mot} = 500 rpm				Output speed n_{mot} = 250 rpm				Output speed n_{mot} = 10 rpm				Size for motor and input units							
i_{tot}	Order No. 15th and 16th position	n_2 rpm	T_2 Nm	P_{mot} kW	h %	n_2 rpm	T_2 Nm	P_{mot} kW	h %	n_2 rpm	T_2 Nm	P_{mot} kW	h %	63	71	80	90	100	112	132	160
364.00 ★	**U2**	1.4	677	0.17	58	0.69	676	0.09	54	0.027	674	<0.05	49	•	•						
323.70	**T2**	1.5	677	0.18	59	0.77	676	0.10	54	0.031	674	<0.05	49	•	•	•					
280.80 ★	**S2**	1.8	677	0.21	60	0.89	676	0.11	55	0.036	610	<0.05	49	•	•	•	•				
262.36	**R2**	1.9	677	0.22	60	0.95	676	0.12	55	0.038	674	<0.05	49	•	•	•	•				
230.75 ★	**Q2**	2.2	678	0.25	62	1.10	676	0.14	56	0.043	675	<0.05	49	•	•	•	•				
202.09	**P2**	2.5	678	0.28	63	1.20	676	0.15	57	0.049	675	<0.05	49	•	•	•	•	•			
178.75 ★	**N2**	2.8	679	0.31	64	1.40	677	0.17	58	0.056	675	<0.05	50	•	•	•	•	•	•		
162.00	**M2**	3.1	679	0.34	65	1.50	677	0.18	59	0.062	675	<0.05	50	•	•	•	•	•	•		
143.00 ★	**L2**	3.5	680	0.38	66	1.70	677	0.20	60	0.070	675	<0.05	50	•	•	•	•	•	•		
129.00	**K2**	3.9	680	0.41	67	1.90	677	0.22	61	0.078	675	<0.05	50	•	•	•	•	•	•		
117.00 ★	**J2**	4.3	681	0.45	68	2.10	678	0.24	61	0.085	675	<0.05	50	•	•	•	•	•	•		
106.60	**H2**	4.7	681	0.48	69	2.30	678	0.26	62	0.094	675	<0.05	50	•	•	•	•	•	•		
97.50 ★	**G2**	5.1	682	0.52	70	2.60	678	0.29	63	0.100	675	<0.05	50	•	•	•	•	•	•		
90.00 ★	**F2**	5.6	317	0.23	80	2.80	300	0.12	76	0.110	279	<0.05	70	•	•	•	•				
84.09	**E2**	5.9	487	0.37	80	3.00	461	0.19	76	0.120	426	<0.05	70	•	•	•	•				
73.96 ★	**D2**	6.8	506	0.44	81	3.40	478	0.22	77	0.140	438	<0.05	70	•	•	•	•				
64.77	**C2**	7.7	598	0.58	82	3.90	563	0.30	78	0.150	511	<0.05	70	•	•	•	•	•			
57.29 ★	**B2**	8.7	687	0.75	83	4.40	647	0.38	78	0.170	582	<0.05	71	•	•	•	•	•	•		
51.92	**A2**	9.6	628	0.75	84	4.80	591	0.38	79	0.190	528	<0.05	71	•	•	•	•	•	•		
45.83 ★	**X1**	10.9	653	0.88	85	5.50	615	0.44	80	0.220	544	<0.05	71	•	•	•	•	•	•		
41.35	**W1**	12.1	650	0.96	85	6.00	613	0.48	81	0.240	538	<0.05	71	•	•	•	•	•	•		
37.50 ★	**U1**	13.3	696	1.13	86	6.70	659	0.57	81	0.270	573	<0.05	71	•	•	•	•	•	•		
34.17	**T1**	14.6	709	1.25	86	7.30	672	0.63	82	0.290	581	<0.05	71	•	•	•	•	•	•		
31.25 ★	**R1**	16.0	695	1.34	87	8.00	661	0.67	83	0.320	567	<0.05	71	•	•	•	•	•	•		
27.94	**P1**	17.9	663	1.42	87	8.90	634	0.71	83	0.360	539	<0.05	71	•	•	•	•	•	•		
25.66 ★	**M1**	19.5	665	1.55	88	9.70	638	0.77	84	0.390	539	<0.05	71	•	•	•	•	•	•		
23.13	**K1**	22.0	696	1.83	88	10.80	674	0.90	85	0.430	566	<0.05	71	•	•	•	•	•	•		
19.89 ★	**G1**	25.0	631	1.87	88	12.60	613	0.94	86	0.500	510	<0.05	71	•	•	•	•	•	•		
38.00	**V1**	13.2	419	0.67	86	6.60	399	0.34	82	0.260	362	<0.05	75	•	•	•	•	•			
33.61 ★	**S1**	14.9	420	0.76	87	7.40	400	0.38	83	0.300	361	<0.05	75	•	•	•	•	•	•		
30.46	**Q1**	16.4	383	0.75	87	8.20	365	0.38	83	0.330	327	<0.05	75	•	•	•	•	•	•		
26.89 ★	**N1**	18.6	397	0.88	88	9.30	380	0.44	84	0.370	337	<0.05	75	•	•	•	•	•	•		
24.26	**L1**	21.0	394	0.98	88	10.30	378	0.48	85	0.410	334	<0.05	75	•	•	•	•	•	•		
22.00 ★	**J1**	23.0	421	1.14	89	11.40	405	0.57	85	0.450	355	<0.05	75	•	•	•	•	•	•		
20.04	**H1**	25.0	428	1.26	89	12.50	413	0.63	86	0.500	360	<0.05	75	•	•	•	•	•	•		
18.33 ★	**F1**	27.0	419	1.33	89	13.60	405	0.67	86	0.550	352	<0.05	75	•	•	•	•	•	•		
16.39	**E1**	31.0	399	1.45	89	15.30	388	0.71	87	0.610	335	<0.05	75	•	•	•	•	•	•		
15.05 ★	**D1**	33.0	399	1.54	90	16.60	389	0.77	87	0.660	335	<0.05	75	•	•	•	•	•	•		
13.57	**C1**	37.0	418	1.81	90	18.40	410	0.90	88	0.740	351	<0.05	75	•	•	•	•	•	•		
11.67 ★	**B1**	43.0	377	1.89	90	21.00	372	0.92	88	0.860	317	<0.05	75	•	•	•	•	•	•		

★ Preferred transmission ratio
In the case of gearboxes of size 18 or 28, only possible with integrated motor or input unit KQ and KQS.

© Siemens AG 2011

Selection and ordering data (continued)

Efficiency table C.88-D/Z28

Transmission ratio	Ratio code	Output speed n_{mot} = 1 750 rpm				Output speed n_{mot} = 1 450 rpm				Size for motor and input units							
i_{tot}	Order No. 15th and 16th position	n_2 rpm	T_2 Nm	P_{mot} kW	h %	n_2 rpm	T_2 Nm	P_{mot} kW	h %	63	71	80	90	100	112	132	160
33 491	**N1**	0.05	1 590	<0.06	47	0.04	1 590	<0.06	46		•						
28 893	**M1**	0.06	1 590	<0.06	47	0.05	1 590	<0.06	47		•						
24 823	**L1**	0.07	1 590	<0.06	47	0.06	1 590	<0.06	47		•						
22 853	**K1**	0.08	1 590	<0.06	47	0.06	1 590	<0.06	47		•						
20 775	**J1**	0.08	1 590	<0.06	47	0.07	1 590	<0.06	47		•						
18 389	**H1**	0.10	1 590	<0.06	47	0.08	1 590	<0.06	47		•						
15 402	**G1**	0.11	1 590	<0.06	47	0.09	1 590	<0.06	47		•						
13 132	**F1**	0.13	1 590	<0.06	47	0.11	1 590	<0.06	47		•						
11 162	**E1**	0.16	1 590	<0.06	48	0.13	1 590	<0.06	47		•						
9 701	**D1**	0.18	1 590	0.06	48	0.15	1 590	<0.06	48		•						
8 444	**C1**	0.21	1 590	0.07	48	0.17	1 590	<0.06	48		•						
7 616	**B1**	0.23	1 590	0.08	49	0.19	1 590	0.07	48		•						
6 722	**A1**	0.26	1 590	0.09	49	0.22	1 590	0.07	48		•						
6 016	**B2**	0.29	1 590	0.10	49	0.24	1 590	0.08	49		•						
5 342	**A2**	0.33	1 590	0.11	50	0.27	1 590	0.09	49		•						
4 683	**X1**	0.37	1 590	0.12	50	0.31	1 590	0.10	49		•						
4 191	**W1**	0.42	1 590	0.14	51	0.35	1 590	0.12	50		•						
3 719	**V1**	0.47	1 590	0.15	51	0.39	1 590	0.13	50		•						
3 260	**U1**	0.54	1 590	0.17	52	0.44	1 590	0.15	51		•						
2 866	**T1**	0.61	1 590	0.19	52	0.51	1 590	0.16	51		•						
2 589	**S1**	0.68	1 590	0.21	53	0.56	1 590	0.18	52		•						
2 256	**R1**	0.78	1 590	0.24	54	0.64	1 590	0.20	53		•						
2 026	**Q1**	0.86	1 590	0.26	55	0.72	1 590	0.22	53		•						
1 829	**P1**	0.96	1 590	0.29	56	0.79	1 590	0.24	54		•						
1 659	**N1**	1.05	1 590	0.31	57	0.87	1 590	0.26	55		•						
1 510	**M1**	1.16	1 590	0.34	57	0.96	1 590	0.29	56		•						
1 335	**L1**	1.31	1 590	0.37	59	1.09	1 590	0.32	57		•						
1 232	**K1**	1.42	1 590	0.40	59	1.18	1 590	0.34	58		•						
1 061	**J1**	1.65	1 590	0.45	61	1.37	1 590	0.39	59		•						
964	**H1**	1.81	1 590	0.49	62	1.50	1 590	0.42	60		•						
877	**G1**	2.00	1 590	0.53	63	1.65	1 590	0.45	61		•						
795	**F1**	2.20	1 590	0.57	64	1.82	1 590	0.49	62		•						
723	**E1**	2.42	1 590	0.62	65	2.00	1 590	0.53	63		•						
640	**D1**	2.74	1 590	0.68	67	2.27	1 590	0.58	65		•						
590	**C1**	2.96	1 590	0.73	68	2.46	1 590	0.62	66		•						
508	**B1**	3.44	1 590	0.83	69	2.85	1 590	0.71	67		•						
462	**A1**	3.79	1 590	0.90	70	3.14	1 590	0.77	68		•						

★ Preferred transmission ratio
In the case of gearboxes of size 18 or 28, only possible with integrated motor or input unit KQ and KQS.

© Siemens AG 2011

Selection and ordering data (continued)

Efficiency table C.88

Transmission ratio	Ratio code	Output speed n_{mot} = 1 750 rpm				Output speed n_{mot} = 1 450 rpm				Output speed n_{mot} = 1 150 rpm				Size for motor and input units							
i_{tot}	Order No. 15th and 16th position	n_2 rpm	T_2 Nm	P_{mot} kW	h %	n_2 rpm	T_2 Nm	P_{mot} kW	h %	n_2 rpm	T_2 Nm	P_{mot} kW	h %	63	71	80	90	100	112	132	160
440.70	**T2**	4.0	1 590	0.93	71	3.3	1 590	0.79	70	2.6	1 590	0.64	67	•	•	•					
390.00 ★	**S2**	4.5	1 591	1.04	72	3.7	1 590	0.87	71	2.9	1 590	0.70	69	•	•	•	•				
354.55	**R2**	4.9	1 582	1.11	73	4.1	1 590	0.95	72	3.2	1 590	0.77	70	•	•	•	•				
318.50 ★	**Q2**	5.5	1 517	1.19	73	4.6	1 588	1.06	72	3.6	1 590	0.85	71	•	•	•	•				
273.00	**P2**	6.4	1 427	1.30	74	5.3	1 506	1.14	73	4.2	1 591	0.97	72	•	•	•	•	•			
247.00 ★	**N2**	7.1	1 366	1.37	74	5.9	1 443	1.34	74	4.7	1 534	1.04	72	•	•	•	•	•	•		
228.00	**M2**	7.7	1 317	1.43	74	6.4	1 394	1.44	74	5.0	1 495	1.07	73	•	•	•	•	•	•	•	
198.25 ★	**L2**	8.8	1 260	1.56	74	7.3	1 337	1.38	74	5.8	1 431	1.18	74	•	•	•	•	•	•	•	
180.00	**K2**	9.7	1 219	1.66	74	8.1	1 292	1.82	74	6.4	1 389	1.26	74	•	•	•	•	•	•	•	
164.36 ★	**J2**	10.6	1 182	1.76	74	8.8	1 257	1.56	74	7.0	1 351	1.34	74	•	•	•	•	•	•	•	
150.80	**H2**	11.6	1 146	1.87	74	9.6	1 220	1.65	74	7.6	1 315	1.41	74	•	•	•	•	•	•	•	
138.94 ★	**G2**	12.6	1 114	1.97	74	10.4	1 187	1.74	74	8.3	1 277	1.49	74	•	•	•	•	•	•	•	
126.18	**F2**	13.9	1 077	2.10	74	11.5	1 146	2.49	74	9.1	1 238	1.59	74	•	•	•	•	•	•	•	
114.95 ★	**E2**	15.2	1 042	2.23	74	12.6	1 109	1.97	74	10.0	1 197	1.68	74	•	•	•	•	•			
108.50	**D2**	16.1	1 353	2.63	87	13.4	1 347	2.19	86	10.6	1 336	1.73	85	•	•	•	•	•	•		
98.17 ★	**C2**	17.8	1 339	2.88	87	14.8	1 420	2.56	86	11.7	1 416	2.02	86	•	•	•	•	•	•		
90.62	**B2**	19.3	1 258	2.93	87	16.0	1 255	2.43	87	12.7	1 248	1.93	86	•	•	•	•	•	•	•	
78.79 ★	**A2**	22.0	1 243	3.30	87	18.4	1 318	2.93	87	14.6	1 362	2.41	86	•	•	•	•	•	•	•	
71.54	**X1**	24.0	1 207	3.49	87	20.0	1 282	3.09	87	16.1	1 301	2.53	87	•	•	•	•	•	•	•	
65.32 ★	**W1**	27.0	1 161	3.78	87	22.0	1 242	3.30	87	17.6	1 336	2.84	87	•	•	•	•	•	•	•	
59.93	**V1**	29.0	1 133	3.96	87	24.0	1 206	3.49	87	19.2	1 298	3.01	87	•	•	•	•	•	•	•	
55.22 ★	**U1**	32.0	1 096	4.23	87	26.0	1 174	3.68	87	21.0	1 260	3.19	87	•	•	•	•	•	•	•	
50.15	**T1**	35.0	1 064	4.49	87	29.0	1 132	4.55	87	23.0	1 223	3.39	87	•	•	•	•	•	•	•	
45.68 ★	**S1**	38.0	1 031	4.72	87	32.0	1 092	4.82	87	25.0	1 186	3.57	87	•	•	•	•	•	•	•	
41.85	**R1**	42.0	999	5.06	87	35.0	1 062	5.12	87	27.0	1 158	3.77	87	•	•	•	•	•	•	•	
37.34 ★	**Q1**	47.0	964	5.46	87	39.0	1 026	5.53	87	31.0	1 107	4.14	87	•	•	•	•	•	•	•	
33.33	**N1**	53.0	929	5.94	87	44.0	989	5.99	87	35.0	1 067	4.50	87	•		•	•	•	•	•	
28.30	**K1**	62.0	883	6.60	87	51.0	943	5.80	87	41.0	1 014	5.01	87	•		•	•	•	•	•	
23.56 ★	**G1**	74.0	823	7.34	87	62.0	873	7.48	87	49.0	945	5.58	87	•		•	•	•		•	
33.85	**P1**	52.0	817	4.84	92	43.0	817	4.00	92	34.0	816	3.17	92	•	•	•	•	•	•	•	
30.90 ★	**M1**	57.0	817	5.31	92	47.0	817	4.38	92	37.0	817	3.44	92	•	•	•	•	•	•	•	
28.36	**L1**	62.0	815	5.76	92	51.0	815	4.74	92	41.0	815	3.81	92	•	•	•	•	•	•	•	
26.13 ★	**J1**	67.0	815	6.22	92	56.0	815	5.20	92	44.0	815	4.09	92	•	•	•	•	•	•	•	
23.73	**H1**	74.0	763	6.43	92	61.0	763	5.30	92	48.0	763	4.17	92	•	•	•	•	•	•	•	
21.61 ★	**F1**	81.0	814	7.51	92	67.0	814	6.21	92	53.0	814	4.92	92	•	•	•	•	•	•	•	
19.80	**E1**	88.0	802	8.05	92	73.0	802	6.67	92	58.0	802	5.30	92	•	•	•	•	•	•	•	
17.67 ★	**D1**	99.0	795	8.97	92	82.0	795	7.43	92	65.0	795	5.89	92	•	•	•	•	•	•	•	
15.77	**C1**	111.0	776	9.81	92	92.0	781	8.19	92	73.0	781	6.50	92	•		•	•	•	•	•	
13.39	**B1**	131.0	727	10.86	92	108.0	776	9.55	92	86.0	806	7.90	92	•		•	•	•	•	•	
11.15 ★	**A1**	157.0	656	11.00	92	130.0	681	10.09	92	103.0	681	7.99	92	•		•	•	•	•	•	

★ Preferred transmission ratio
In the case of gearboxes of size 18 or 28, only possible with integrated motor or input unit KQ and KQS.

© Siemens AG 2011

Selection and ordering data (continued)

Efficiency table C.88

Transmission ratio		Ratio code	Output speed n_{mot} = 950 rpm				Output speed n_{mot} = 850 rpm				Output speed n_{mot} = 700 rpm				Size for motor and input units							
i_{tot}		Order No. 15th and 16th position	n_2 rpm	T_2 Nm	P_{mot} kW	h %	n_2 rpm	T_2 Nm	P_{mot} kW	h %	n_2 rpm	T_2 Nm	P_{mot} kW	h %	63	71	80	90	100	112	132	160
440.70		**T2**	2.2	1 555	0.55	65	1.9	1 524	0.48	64	1.6	1 471	0.40	62	•	•	•					
390.00	★	**S2**	2.4	1 590	0.60	67	2.2	1 590	0.56	65	1.8	1 590	0.48	63	•	•	•	•				
354.55		**R2**	2.7	1 590	0.67	68	2.4	1 590	0.60	66	2.0	1 590	0.52	64	•	•	•	•				
318.50	★	**Q2**	3.0	1 590	0.73	69	2.7	1 590	0.67	68	2.2	1 590	0.56	65	•	•	•	•				
273.00		**P2**	3.5	1 590	0.83	70	3.1	1 590	0.75	69	2.6	1 590	0.65	67	•	•	•	•	•			
247.00	★	**N2**	3.8	1 590	0.89	71	3.4	1 590	0.81	70	2.8	1 590	0.68	68	•	•	•	•	•	•		
228.00		**M2**	4.2	1 559	0.96	72	3.7	1 590	0.87	71	3.1	1 590	0.75	69	•	•	•	•	•	•	•	
198.25	★	**L2**	4.8	1 506	1.04	73	4.3	1 547	0.97	72	3.5	1 590	0.83	70	•	•	•	•	•	•	•	
180.00		**K2**	5.3	1 466	1.11	73	4.7	1 513	1.03	73	3.9	1 581	0.91	71	•	•	•	•	•	•	•	
164.36	★	**J2**	5.8	1 428	1.18	73	5.2	1 471	1.10	73	4.3	1 543	0.97	72	•	•	•	•	•	•	•	
150.80		**H2**	6.3	1 392	1.24	74	5.6	1 441	1.15	73	4.6	1 518	1.01	72	•	•	•	•	•	•	•	
138.94	★	**G2**	6.8	1 359	1.31	74	6.1	1 404	1.22	74	5.0	1 484	1.07	73	•	•	•	•	•	•	•	
126.18		**F2**	7.5	1 317	1.39	74	6.7	1 363	1.29	74	5.5	1 444	1.13	73	•	•	•	•	•	•	•	
114.95	★	**E2**	8.3	1 271	1.49	74	7.4	1 318	1.38	74	6.1	1 397	1.21	74	•	•	•	•	•			
108.50		**D2**	8.8	1 321	1.44	85	7.8	1 311	1.28	84	6.5	1 290	1.06	83	•	•	•	•	•	•		
98.17	★	**C2**	9.7	1 403	1.68	85	8.7	1 394	1.50	85	7.1	1 373	1.23	83	•	•	•	•	•	•		
90.62		**B2**	10.5	1 239	1.59	85	9.4	1 231	1.43	85	7.7	1 215	1.17	84	•	•	•	•	•	•	•	
78.79	★	**A2**	12.1	1 354	2.00	86	10.8	1 348	1.78	86	8.9	1 334	1.47	85	•	•	•	•	•	•	•	
71.54		**X1**	13.3	1 295	2.09	86	11.9	1 290	1.87	86	9.8	1 279	1.54	85	•	•	•	•	•	•	•	
65.32	★	**W1**	14.5	1 420	2.50	86	13.0	1 469	2.32	86	10.7	1 556	2.04	86	•	•	•	•	•	•	•	
59.93		**V1**	15.9	1 379	2.65	87	14.2	1 429	2.46	86	11.7	1 515	2.16	86	•	•	•	•	•	•	•	
55.22	★	**U1**	17.2	1 344	2.79	87	15.4	1 392	2.60	87	12.7	1 431	2.21	86	•	•	•	•	•	•	•	
50.15		**T1**	18.9	1 304	2.98	87	17.0	1 349	2.77	87	14.0	1 434	2.44	86	•	•	•	•	•	•	•	
45.68	★	**S1**	21.0	1 256	3.18	87	18.6	1 307	2.93	87	15.3	1 391	2.58	87	•	•	•	•	•	•	•	
41.85		**R1**	23.0	1 221	3.39	87	20.0	1 279	3.09	87	16.7	1 355	2.74	87	•	•	•	•	•	•	•	
37.34	★	**Q1**	25.0	1 189	3.58	87	23.0	1 222	3.39	87	18.7	1 308	2.95	87	•	•	•	•	•	•	•	
33.33		**N1**	29.0	1 136	3.97	87	26.0	1 178	3.69	87	21.0	1 264	3.20	87	•		•	•	•	•	•	
28.30		**K1**	34.0	1 079	4.42	87	30.0	1 125	4.07	87	25.0	1 195	3.60	87	•		•	•	•	•	•	
23.56	★	**G1**	40.0	1 011	4.87	87	36.0,	1 047	4.54	87	30.0	1 112	4.02	87	•		•	•	•		•	
33.85		**P1**	28.0	815	2.61	92	25.0	814	2.33	92	21.0	812	1.96	91	•	•	•	•	•	•	•	
30.90	★	**M1**	31.0	816	2.89	92	28.0	815	2.61	92	23.0	813	2.14	91	•	•	•	•	•	•	•	
28.36		**L1**	34.0	814	3.16	92	30.0	814	2.79	92	25.0	812	2.32	92	•	•	•	•	•	•	•	
26.13	★	**J1**	36.0	814	3.34	92	33.0	814	3.06	92	27.0	813	2.51	92	•	•	•	•	•	•	•	
23.73		**H1**	40.0	763	3.48	92	36.0	762	3.13	92	30.0	762	2.61	92	•	•	•	•	•	•	•	
21.61	★	**F1**	44.0	814	4.08	92	39.0	813	3.62	92	32.0	813	2.97	92	•	•	•	•	•	•	•	
19.80		**E1**	48.0	802	4.39	92	43.0	802	3.93	92	35.0	802	3.20	92	•	•	•	•	•	•	•	
17.67	★	**D1**	54.0	795	4.89	92	48.0	795	4.35	92	40.0	795	3.63	92	•	•	•	•	•	•	•	
15.77		**C1**	60.0	781	5.34	92	54.0	781	4.81	92	44.0	781	3.92	92	•		•	•	•	•	•	
13.39		**B1**	71.0	806	6.53	92	63.0	806	5.79	92	52.0	806	4.78	92	•		•	•	•	•	•	
11.15	★	**A1**	85.0	681	6.60	92	76.0	681	5.90	92	63.0	681	4.89	92	•		•	•	•	•	•	

★ Preferred transmission ratio
In the case of gearboxes of size 18 or 28, only possible with integrated motor or input unit KQ and KQS.

© Siemens AG 2011

Transmission ratios and maximum torques

Selection and ordering data (continued)

Efficiency table C.88

Transmission ratio	Ratio code	Output speed n_{mot} = 500 rpm				Output speed n_{mot} = 250 rpm				Output speed n_{mot} = 10 rpm				Size for motor and input units							
i_{tot}	Order No. 15th and 16th position	n_2 rpm	T_2 Nm	P_{mot} kW	h %	n_2 rpm	T_2 Nm	P_{mot} kW	h %	n_2 rpm	T_2 Nm	P_{mot} kW	h %	63	71	80	90	100	112	132	160
440.70	**T2**	1.1	1 387	0.28	58	0.57	1 262	0.14	53	0.023	1 121	<0.05	47	•	•	•					
390.00 ★	**S2**	1.3	1 590	0.37	59	0.64	1 590	0.20	54	0.026	1 450	<0.05	47	•	•	•	•				
354.55	**R2**	1.4	1 590	0.39	60	0.71	1 590	0.22	54	0.028	1 590	<0.05	47	•	•	•	•				
318.50 ★	**Q2**	1.6	1 590	0.43	61	0.78	1 590	0.24	55	0.031	1 459	<0.05	47	•	•	•	•				
273.00	**P2**	1.8	1 590	0.47	63	0.92	1 590	0.27	56	0.037	1 440	<0.05	47	•	•	•	•	•			
247.00 ★	**N2**	2.0	1 590	0.52	64	1.0	1 590	0.29	57	0.040	1 590	<0.05	47	•	•	•	•	•	•		
228.00	**M2**	2.2	1 590	0.56	65	1.1	1 590	0.32	58	0.044	1 506	<0.05	47	•	•	•	•	•	•	•	
198.25 ★	**L2**	2.5	1 590	0.62	67	1.3	1 590	0.37	59	0.05	1 590	<0.05	47	•	•	•	•	•	•	•	
180.00	**K2**	2.8	1 590	0.69	68	1.4	1 590	0.39	60	0.056	1 590	<0.05	47	•	•	•	•	•	•	•	
164.36 ★	**J2**	3.0	1 590	0.72	69	1.5	1 590	0.41	61	0.061	1 590	<0.05	47	•	•	•	•	•	•	•	
150.80	**H2**	3.3	1 590	0.79	70	1.7	1 590	0.46	62	0.066	1 590	<0.05	47	•	•	•	•	•	•	•	
138.94 ★	**G2**	3.6	1 590	0.85	71	1.8	1 590	0.48	63	0.072	1 590	<0.05	47	•	•	•	•	•	•	•	
126.18	**F2**	4.0	1 562	0.92	71	2.0	1 590	0.52	64	0.079	1 590	<0.05	48	•	•	•	•	•	•	•	
114.95 ★	**E2**	4.3	1 535	0.96	72	2.2	1 590	0.56	65	0.087	1590	<0.05	48	•	•	•	•	•			
108.50	**D2**	4.6	1 248	0.75	80	2.3	1 162	0.38	74	0.092	1 034	<0.05	66	•	•	•	•	•	•		
98.17 ★	**C2**	5.1	1 331	0.88	81	2.5	1 239	0.43	75	0.10	1 092	<0.05	66	•	•	•	•	•	•		
90.62	**B2**	5.5	1 179	0.83	81	2.8	1 097	0.43	76	0.11	961	<0.05	66	•	•	•	•	•	•	•	
78.79 ★	**A2**	6.3	1 299	1.04	82	3.2	1 210	0.53	77	0.13	1 045	<0.05	66	•	•	•	•	•	•	•	
71.54	**X1**	7.0	1 249	1.1	83	3.5	1 165	0.55	78	0.14	997	<0.05	66	•	•	•	•	•	•	•	
65.32 ★	**W1**	7.7	1 532	1.47	84	3.8	1 432	0.73	78	0.15	1 215	<0.05	66	•	•	•	•	•	•	•	
59.93	**V1**	8.3	1 580	1.63	84	4.2	1 481	0.82	79	0.17	1 247	<0.05	67	•	•	•	•	•	•	•	
55.22 ★	**U1**	9.1	1 409	1.58	85	4.5	1 325	0.78	80	0.18	1 106	<0.05	67	•	•	•	•	•	•	•	
50.15	**T1**	10.0	1 496	1.84	85	5.0	1 413	0.92	81	0.20	1 170	<0.05	67	•	•	•	•	•	•	•	
45.68 ★	**S1**	10.9	1 541	2.05	86	5.5	1 522	1.08	81	0.22	1 249	<0.05	67	•	•	•	•	•	•	•	
41.85	**R1**	11.9	1 505	2.18	86	6.0	1 513	1.16	82	0.24	1 233	<0.05	67	•	•	•	•	•	•	•	
37.34 ★	**Q1**	13.4	1 454	2.37	86	6.7	1 516	1.28	83	0.27	1 225	0.05	67	•	•	•	•	•	•	•	
33.33	**N1**	15.0	1 409	2.56	86	7.5	1 502	1.41	84	0.30	1 205	0.06	67	•		•	•	•	•	•	
28.30	**K1**	17.7	1 339	2.86	87	8.8	1 570	1.71	85	0.35	1 249	0.07	67	•		•	•	•	•	•	
23.56 ★	**G1**	21.0	1 252	3.17	87	10.6	1 339	1.74	85	0.42	1 059	0.07	68	•		•	•	•		•	
33.85	**P1**	14.8	803	1.38	90	7.4	772	0.69	87	0.30	688	<0.05	77	•	•	•	•	•	•	•	
30.90 ★	**M1**	16.2	806	1.51	91	8.1	777	0.75	87	0.32	688	<0.05	77	•	•	•	•	•	•	•	
28.36	**L1**	17.6	806	1.63	91	8.8	779	0.82	88	0.35	687	<0.05	77	•	•	•	•	•	•	•	
26.13 ★	**J1**	19.1	808	1.77	91	9.6	783	0.89	88	0.38	688	<0.05	78	•	•	•	•	•	•	•	
23.73	**H1**	21.0	758	1.83	91	10.5	738	0.91	89	0.42	644	<0.05	78	•	•	•	•	•	•	•	
21.61 ★	**F1**	23.0	810	2.13	91	11.6	791	1.08	89	0.46	688	<0.05	78	•	•	•	•	•	•	•	
19.80	**E1**	25.0	800	2.29	92	12.6	783	1.15	90	0.51	679	<0.05	78	•	•	•	•	•	•	•	
17.67 ★	**D1**	28.0	794	2.54	92	14.2	781	1.29	90	0.57	674	0.05	78	•	•	•	•	•	•	•	
15.77	**C1**	32.0	780	2.85	92	15.9	770	1.41	91	0.63	663	0.06	78	•		•	•	•	•	•	
13.39	**B1**	37.0	806	3.4	92	18.7	799	1.72	91	0.75	687	0.07	78	•		•	•	•	•	•	
11.15 ★	**A1**	45.0	681	3.49	92	22.0	678	1.71	91	0.90	582	0.07	79	•		•	•	•	•	•	

★ Preferred transmission ratio
In the case of gearboxes of size 18 or 28, only possible with integrated motor or input unit KQ and KQS.

© Siemens AG 2011

Selection and ordering data

Mounting type	Order No. 14th position	Code in type designation 2nd position for solid shaft, 3rd position for hollow shaft	Representation
Foot-mounted design	**A**	–	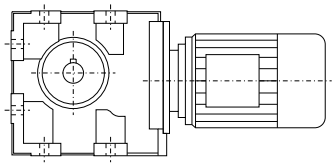
Housing flange (C-type)	**H**	Z	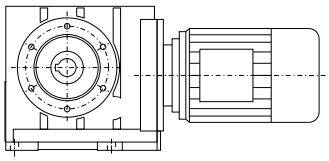
Design with torque arm	**D**	D	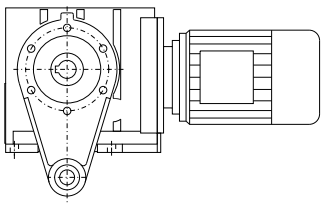
Flange-mounted design (A-type)	**F**	F	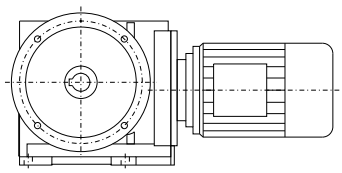

© Siemens AG 2011

Selection and ordering data (continued)

Helical worm gearbox with torque arm

The torque arm consists of an arm with an eye; it can be screwed onto the gearbox housing at an angular pitch of 30° in any one of nine positions around the output.

The basic material of the torque arm is natural rubber with 60° Shore A, so it is suitable for all mounting positions and can withstand temperatures of between –45 °C and +70 °C.

See the dimension drawings in the Dimensions section for the torque arm dimensions.

If **D** appears in the **14th position** of the order number, the torque arm will be delivered loose.

The shafts and mounting positions correspond to the design featuring a housing flange.

Order code:
Figure 1 **G09**
Figure 2 **G10**

Figure 1

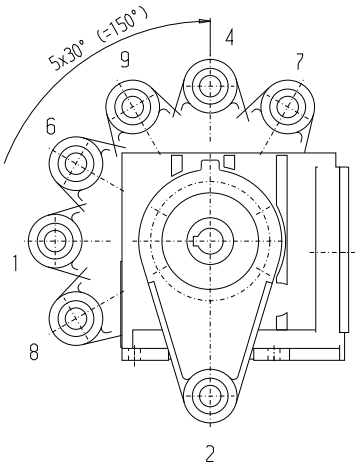

Figure 2

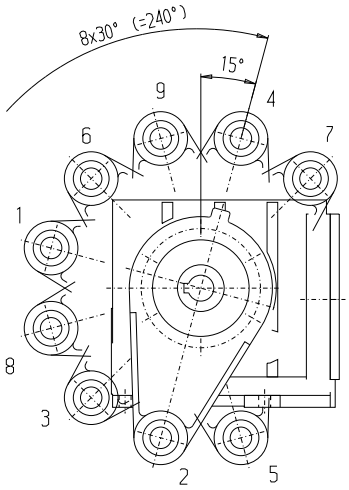

© Siemens AG 2011

Selection and ordering data

Shaft design	Order No. 8th position	Order No. suffix	Shaft dimensions				
Helical worm gearbox C, foot-mounted design							
Size			**C.28**	**C.38**	**C.48**	**C.68**	**C.88**
Solid shaft with feather key	**1**		V20 x 40 *)	V25 x 50 *)	V30 x 60 *)	V35 x 70 *)	V45 x 90 *)
	3			V35 x 70	V40 x 80	V40 x 80	V50 x 100
	4					V50 x 100	V70 x 140
Hollow shaft	**5**		H20 x 120 *)	H25 x 120 *)	H30 x 150 *)	H40 x 180 *)	H50 x 210 *)
	6		H25 x 120	H30 x 120	H35 x 150	H45 x 180	H60 x 210
	7				H40 x 150		
Hollow shaft with shrink disk	**9**	**H3A**	H20 x 142 *)	H30 x 146 *)	H40 x 177	H50 x 209	H60 x 241
	9	**H3C**			H35 x 177	H40 x 209	H50 x 241
	9	**H3D**				H40/42 x 209	H50/52 x 241
Hollow shaft with splined shaft	**9**	**H4A**		N35x1.25x30x26x 9Hx 120	N40x2x30x18x 9H x 150	N50x2x30x24x 9H x 180	N60x2x30x28x 9H x 210
Helical worm gearbox C with housing flange							
Size			**C.28**	**C.38**	**C.48**	**C.68**	**C.88**
Solid shaft with feather key	**1**		V20 x 40 *)	V25 x 50 *)	V30 x 60 *)	V35 x 70 *)	V45 x 90 *)
	3			V35 x 70	V40 x 80	V40 x 80	V50 x 100
	4					V50 x 100	V70 x 140
Hollow shaft	**5**		H20 x 120 *)	H25 x 120 *)	H30 x 150 *)	H40 x 180 *)	H50 x 210 *)
	6		H25 x 120	H30 x 120	H35 x 150	H45 x 180	H60 x 210
	7				H40 x 150		
Hollow shaft with shrink disk	**9**	**H3A**	H20 x 142 *)	H30 x 146 *)	H40 x 177	H50 x 209	H60 x 241
	9	**H3C**			H35 x 177	H40 x 209	H50 x 241
	9	**H3D**				H40/42 x 209	H50/52 x 241
Hollow shaft with splined shaft	**9**	**H4A**		N35x1.25x30x26x 9Hx 120	N40x2x30x18x 9H x 150	N50x2x30x24x 9H x 180	N60x2x30x28x 9H x 210
Helical worm gearbox C with torque arm							
Size			**C.28**	**C.38**	**C.48**	**C.68**	**C.88**
Hollow shaft	**5**		H20 x 120 *)	H25 x 120 *)	H30 x 150 *)	H40 x 180 *)	H50 x 210 *)
	6		H25 x 120	H30 x 120	H35 x 150	H45 x 180	H60 x 210
	7				H40 x 150		
Hollow shaft with shrink disk	**9**	**H3A**	H20 x 142 *)	H30 x 146 *)	H40 x 177	H50 x 209	H60 x 241
	9	**H3C**			H35 x 177	H40 x 209	H50 x 241
	9	**H3D**				H40/42 x 209	H50/52 x 241
Hollow shaft with splined shaft	**9**	**H4A**		N35x1.25x30x26x 9Hx 120	N40x2x30x18x 9H x 150	N50x2x30x24x 9H x 180	N60x2x30x28x 9H x 210
Helical worm gearbox C, flange-mounted design (A-type)							
Size			**C.28**	**C.38**	**C.48**	**C.68**	**C.88**
Solid shaft with feather key	**2**		V20 x 40 (i2=I) *)	V25 x 50 (i2=I) *)	V30 x 60 (i2=I) *)	V35 x 70 (i2=I) *)	V45 x 90 (i2=I) *)
	7					V40 x 80 (i2=I)	V50 x 100 (i2=I)
Hollow shaft	**5**		H20 x 120 *)	H25 x 120 *)	H30 x 150 *)	H40 x 180 *)	H50 x 210 *)
	6		H25 x 120	H30 x 120	H35 x 150	H45 x 180	H60 x 210
	7				H40 x 150		
Hollow shaft with shrink disk	**9**	**H3A**	H20 x 142 *)	H30 x 146 *)	H40 x 177	H50 x 209	H60 x 241
	9	**H3C**			H35 x 177	H40 x 209	H50 x 241
	9	**H3D**				H40/42 x 209	H50/52 x 241
Hollow shaft with splined shaft	**9**	**H4A**		N35x1.25x30x26x 9Hx 120	N40x2x30x18x 9H x 150	N50x2x30x24x 9H x 180	N60x2x30x28x 9H x 210

*) Preferred series

© Siemens AG 2011

Flange-mounted designs (A-type)

Selection and ordering data

Order code	Flange diameter				
Size	**C.28**	**C.38**	**C.48**	**C.68**	**C.88**
H02		160		200	250
H03	120		200		300
H04	160			250	
H05					

© Siemens AG 2011

Selection and ordering data

The mounting type / mounting position must be specified when you place your order to ensure that the gearbox is supplied with the correct quantity of oil.

Please contact customer service to discuss the oil quantity if you wish to use a mounting position which is not shown here.

Position of the terminal box

The terminal box of the motor can be mounted in four different positions. See Chapter 8 for an accurate representation of the terminal box position and the corresponding order codes.

Helical worm gearbox C, foot-mounted design

Oil control valves:

- Size 28: These types are lubricated for life. No ventilation, oil level, or drain plugs are present.
- From size 38 up: Oil level Ventilation Oil drain * On opposite side

A,B position of the customer's solid/plug-in shaft

1 ... 4 Position of the terminal box, see Chapter 8

1) Standard mounting type

C: B3-00 (IM B3-00) 1)
Order code: Output side A **D06**, output side B **D08**
CA: H-01 1)
Order code: Output side A **D76**, output side B **D77**

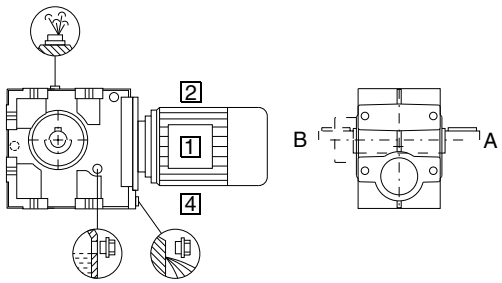

C: B8-00 (IM B8-00)
Order code: Output side A **D68**, output side B **D70**
CA: H-02
Order code: Output side A **D78**, output side B **D79**

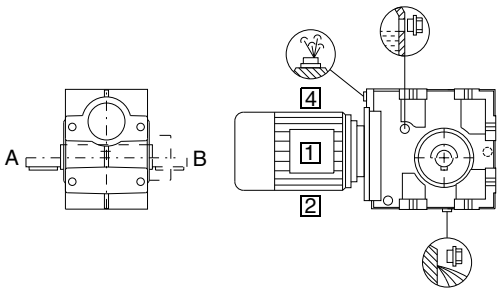

C: B6-00 (IM B6-00)
Order code: Output side A **D38**, output side B **D40**
CA: H-04
Order code: Output side A **D82**, output side B **D83**

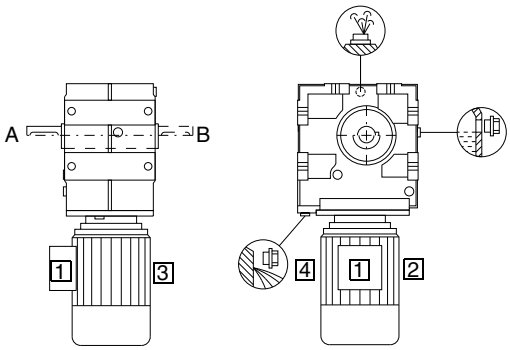

C: B7-00 (IM B7-00)
Order code: Output side A **D59**, output side B **D61**
CA: H-03
Order code: Output side A **D80**, output side B **D81**

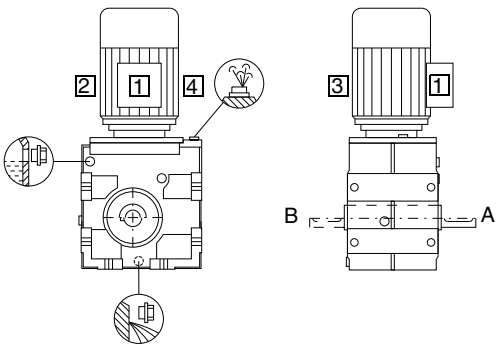

C: V5-00 (IM V5-00)
Order code: Output side A **E03**, output side B **E05**
CA: H-05
Order code: Output side A **D84**, output side B **D85**

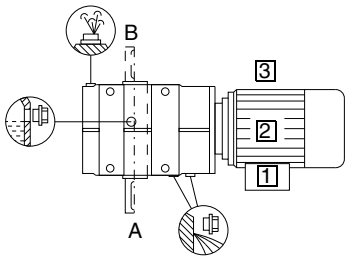

C: V6-00 (IM V6-00)
Order code: Output side A **E15**, output side B **E17**
CA: H-06
Order code: Output side A **D86**, output side B **D87**

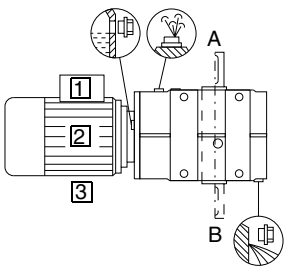

5

© Siemens AG 2011

Mounting types and mounting positions

Selection and ordering data (continued)

Helical worm gearbox C, flange-mounted design (C.F), with housing flange (C.Z) or torque arm (C.D)

Oil control valves:

- Size 28: These types are lubricated for life. No ventilation, oil level, or drain plugs are present.
- From size 38 up: Oil level Ventilation Oil drain * On opposite side

A,B position of the customer's solid/plug-in shaft

1 ... 4 Position of the terminal box, see Chapter 8

1) Standard mounting type

CF: B5-01 (IM B5-01) 1)
Order code: Output side A **D22**, output side B **D24**
CAD, CAF, CAZ: H-01 1)
Order code: Output side A **D76**, output side B **D77**

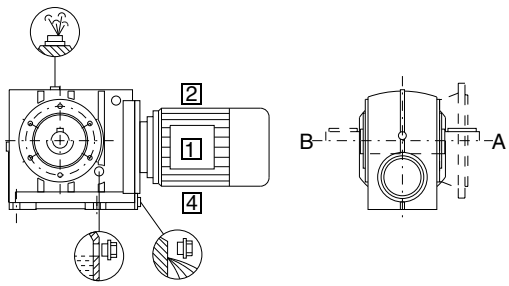

CF: B5-03 (IM B5-03)
Order code: Output side A **D32**, output side B **D34**
CAD, CAF, CAZ: H-02
Order code: Output side A **D78**, output side B **D79**

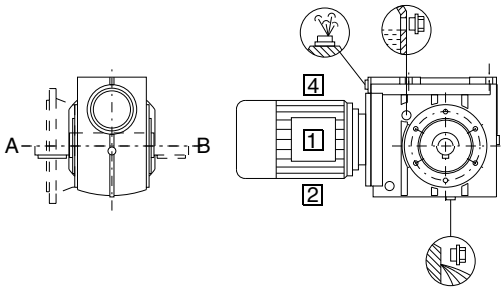

CF: B5-00 (IM B5-00)
Order code: Output side A **D18**, output side B **D20**
CAD, CAF, CAZ: H-04
Order code: Output side A **D82**, output side B **D83**

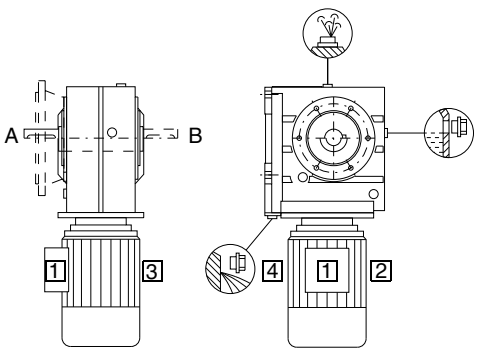

CF: B5-02 (IM B5-02)
Order code: Output side A **D68**, output side B **D29**
CAD, CAF, CAZ: H-03
Order code: Output side A **D80**, output side B **D81**

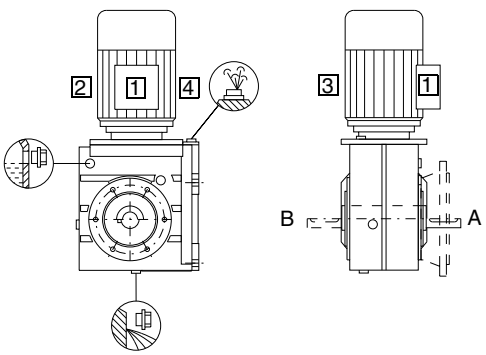

CF: V1-00 (IM V1-00)
Order code: Output side A **D90**, output side B **D92**
CAD, CAF, CAZ: H-05
Order code: Output side A **D84**, output side B **D85**

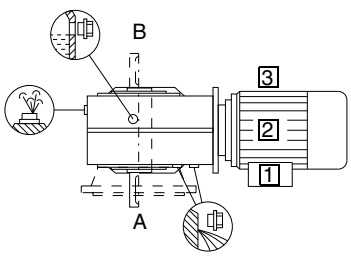

CF: V3-00 (IM V3-00)
Order code: Output side A **D98**, output side B **E00**
CAD, CAF, CAZ: H-06
Order code: Output side A **D86**, output side B **D87**

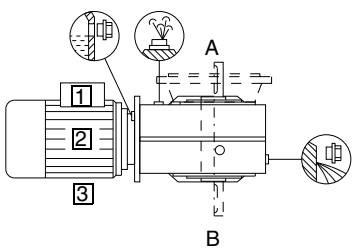

© Siemens AG 2011

Selection and ordering data (continued)

Helical worm tandem gearbox

The mounting type / mounting position of the tandem gearbox corresponds to that of the main gearbox.
The figures below are only designed to show the position of the oil control valves of the 2nd gearbox.

Note:

In a horizontal operating position the bulging part of the housing of the 2nd gearbox generally faces vertically downwards.

Oil control valves:

- Size 28: These types are lubricated for life. No ventilation, oil level, or drain plugs are present.

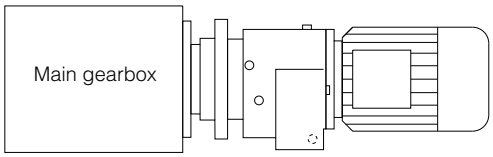

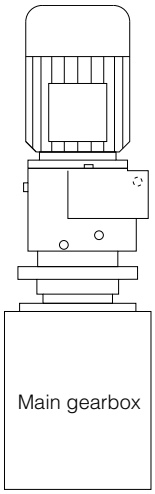

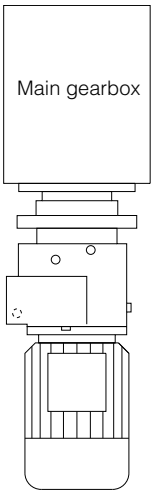

© Siemens AG 2011

Special versions

Lubricants

Helical worm gearbox C is always filled with synthetic lubricant prior to despatch and is supplied ready for use. The rating plate contains information about the appropriate type of oil (PGLP) and ISO viscosity class.

If the gearbox is to be used in an application with special requirements, the lubricants listed in the table below can be used.

Area of application	Ambient temperature [1]			DIN ISO designation	Order code
Standard oils					
Standard temperature	0	…	+60 °C	CLP ISO PG VG460	**K08**
Low temperature usage	-20	…	+50 °C	CLP ISO PG VG220	**K07**
Lowest temperature usage	-40	…	+40 °C	CLP ISO PAO VG220	[2]
Physiologically safe oils (for use in the food industry) in acc. with NSF(USDA)-H1					
Standard temperature	-30	…	+40 °C	CLP ISO H1 VG460	**K11**
Biologically degradable oils					
Standard temperature	-20	…	+40 °C	CLP ISO E VG220	**K10**

1) Recommendation
2) On request

Size 28 does not feature any ventilation, oil level, or drain plugs. The lubricant does not need to be changed, due to the low thermal load the gearbox is subjected to.

Gearboxes of sizes 38 to 88 are fitted with filler, oil level, and drain plugs as standard. The ventilation and vent filter, which is delivered loose, must be attached in place of the filler plug prior to startup.

5

Oil level control

Oil sight glass

For size 38 and above, helical worm gearbox C can be equipped with a visual oil level indicator (oil sight glass) for most mounting types and mounting positions.

Order code:
Oil sight glass **G34**

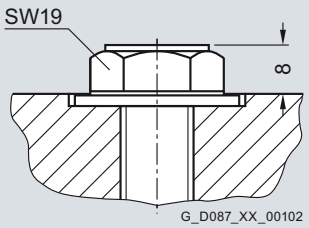

SW = Wrench width

Gearbox	Size
Helical worm gearbox	C.38 … C.88

Electrical oil level monitoring system

If required, the gearbox can be supplied with an electrical oil level monitoring system, which enables the oil level of the gearbox to be monitored remotely. The oil level is monitored by a capacitive sensor only when the gearbox starts up; it is not measured continuously during operation.

© Siemens AG 2011

Gearbox ventilation

The positions of the ventilation and ventilation elements can be seen on the mounting position diagrams.

If required, a pressure ventilation valve can be used for helical worm gearbox C, size 38 and above.

Vent filter

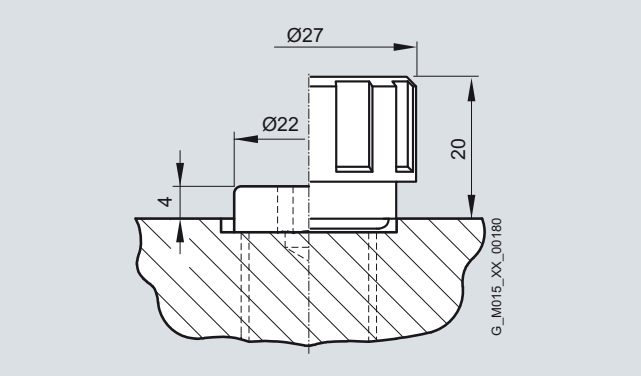

Order code:
Vent filter **G44**

Pressure ventilation valve

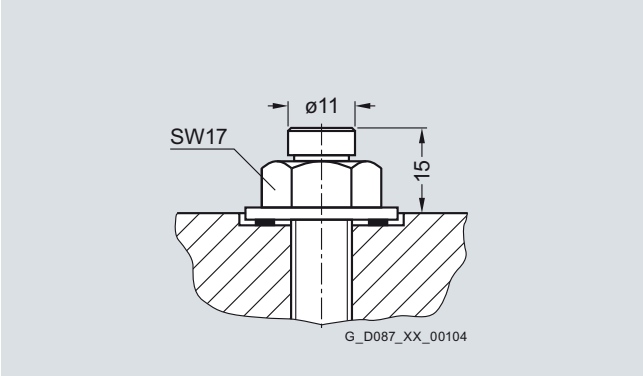

SW = Wrench width

Order code:
Pressure ventilation valve **G45**

Oil drain

Magnetic oil drain plug

A magnetic oil drain plug for inserting in the oil drainage hole is available for helical worm gearboxes of size 48 and above. This serves to collect any grit contained in the gear lubricant.

Order code:
Magnetic oil drain plug **G53**

Oil drain valve

An oil drain valve is available for helical worm gearboxes of size 48 and above.

The oil drain valve may be designed as a complete unit featuring a screw plug, depending on the corresponding mounting position.

Order code:
Oil drain valve, straight **G54**

An angled oil drain valve is also available on request.

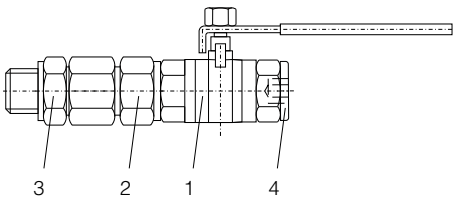

Item 1 Oil drain valve
Item 2 Screwed connection EGE
Item 3 Screwed connection GE
Item 4 Screw plug

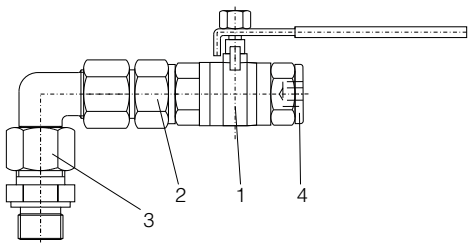

Item 1 Oil drain valve
Item 2 Screwed connection EGE
Item 3 Screwed connection GE
Item 4 Screw plug

© Siemens AG 2011

Special versions

Sealing

Combination shaft sealing

A combination shaft sealing, which helps to prevent oil from leaking, is available for helical worm gearboxes of sizes 38 to 88.

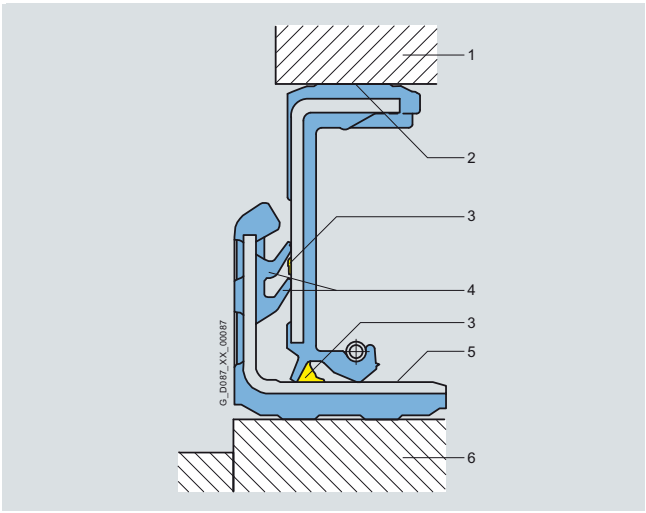

A combination shaft sealing is particularly well suited to external use.

Order code:
Combination shaft sealing **G24**

1 • Housing
2 • Rubberized inner and outer diameter
3 • Grease filling prevents dry running of the sealing lips
4 • Additional sealing lips to protect against dirt
• Decoupled sealing system prevents scoring of the shaft as a result of corrosion or dirt
5 • Protected running surface for radial shaft sealing ring
• No damage when mounting
6 • Shaft

Double sealing

Double sealing is possible for helical worm gearboxes of size 28. Double sealing is particularly well suited to external use.

Order code:
Double sealing MSS1 (size 28) **G23**

High temperature resistant sealing

High temperature resistant sealing (Viton/fluorinated rubber) for higher operating temperatures of +60 °C and above are available for helical worm gearboxes.

Order code:
High temperature resistant sealing **G25**

Hollow shaft cover (protection cover)

Gearboxes with hollow shafts can be fitted with a fixed protection cover. Gearboxes of size 28 are fitted with a steel protection cover as standard.

The steel protection cover can only be used for gearboxes with hollow shaft and shrink disk.

For outdoor applications we recommend the ATEX versions.

Order codes:

Protection cover	**G62**
Protection cover (ATEX)	**G63**
Steel protection cover	**G60**
Steel protection cover (ATEX)	**G61**

Protection cover

Protection cover Steel

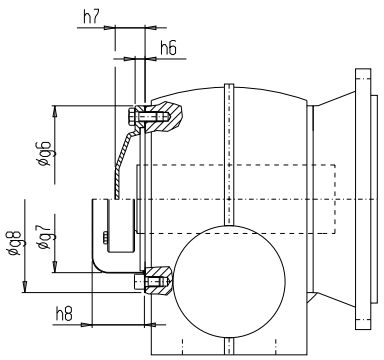

Gearbox type	Steel protection cover			Protection cover		
	g7	g8	h8	g6	h6	h7
C.28	58.0	102	36.0	–	–	–
C.38	82.2	115	40.0	120	10	33
C.48	99.0	130	44.0	132	10	33
C.68	115.0	150	62.5	150	10	37
C.88	137.0	190	70.0	190	13	50

CAF, CAZ, CAD, CAFS[1)], CAZS[1)], CADS[1)], CAFT, CAZT, CADT

1) Only a steel protection cover is available for CAFS, CAZS, and CADS

© Siemens AG 2011

Radially reinforced output shaft bearings

The bearings of the MOTOX gearboxes are dimensioned such that they are strong enough to withstand most application cases.

However, the gearboxes can be fitted with a radially reinforced output shaft bearing arrangement for applications with particularly high radial forces.

Order code:
Radially reinforced output shaft bearings **G20**

2nd output shaft extension

If required, helical worms in a foot-mounted design with solid shaft are available with a 2nd shaft extension.

See the dimension drawings for the corresponding design for the relevant dimensions.

Order code:
2nd output shaft extension **G73**

© Siemens AG 2011

Dimensions

Dimension drawing overview

Representation	Gearbox type	Dimension drawing on page
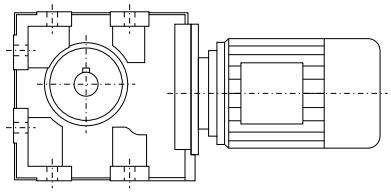	C28 / CZ28	5/57
	C38	5/65
	C48	5/75
	C68	5/85
	C88	5/95
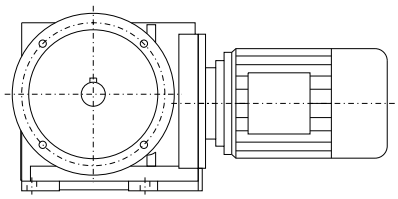	CF28	5/58
	CF38	5/66
	CF48	5/76
	CF68	5/86
	CF88	5/96
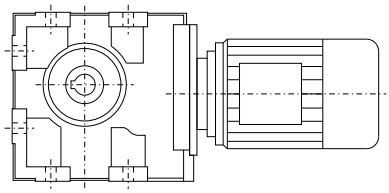	CA28 / CAZ28	5/59
	CA38	5/67
	CA48	5/77
	CA68	5/87
	CA88	5/97
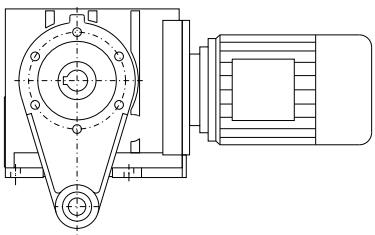	CAD28	5/60
	CAD38	5/68
	CAD48	5/78
	CAD68	5/88
	CAD88	5/98
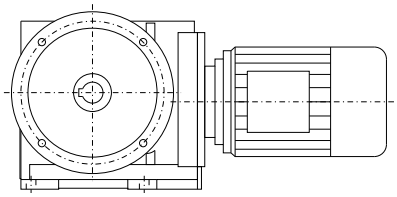	CAF28	5/61
	CAF38	5/69
	CAF48	5/79
	CAF68	5/89
	CAF88	5/99

© Siemens AG 2011

Dimension drawing overview (continued)

Representation	Gearbox type	Dimension drawing on page
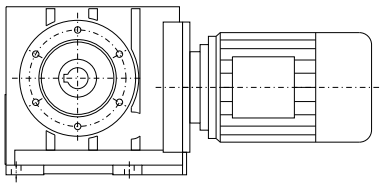	CAZ38	5/70
	CAZ48	5/80
	CAZ68	5/90
	CAZ88	5/100
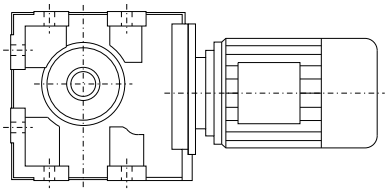	CAS28 / CAZS28	5/62
	CAS38	5/71
	CAS48	5/81
	CAS68	5/91
	CAS88	5/101
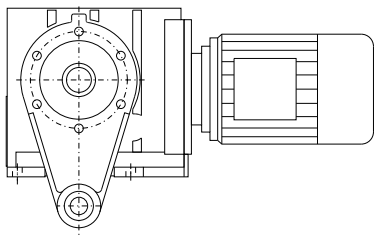	CADS28	5/63
	CADS38	5/72
	CADS48	5/82
	CADS68	5/92
	CADS88	5/102
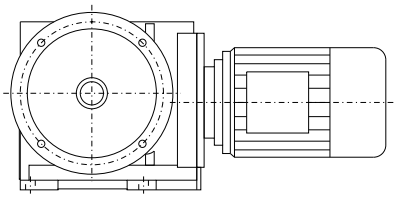	CAFS28	5/64
	CAFS38	5/73
	CAFS48	5/83
	CAFS68	5/93
	CAFS88	5/103
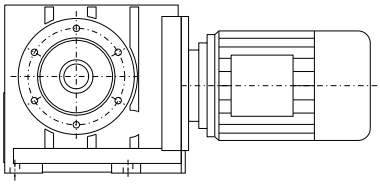	CAZS38	5/74
	CAZS48	5/84
	CAZS68	5/94
	CAZS88	5/104

© Siemens AG 2011

Dimensions

Dimension drawing overview (continued)

Representation	Gearbox type	Dimension drawing on page
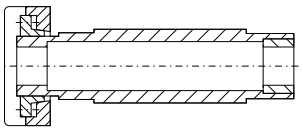	CA.S38 ... CA.S88	5/105
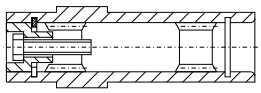	CA.T38 ... CA.T88	5/106
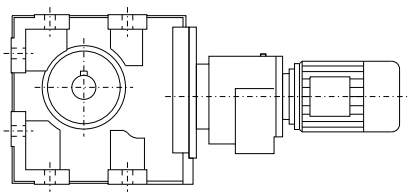	C.38-Z28 ... C.88-D/Z38	5/107
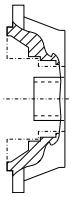	Additional flange-mounted design	5/108

© Siemens AG 2011

Gearbox C/CZ28, foot- and housing-flange-mounted designs (C-type)

C012
CZ012

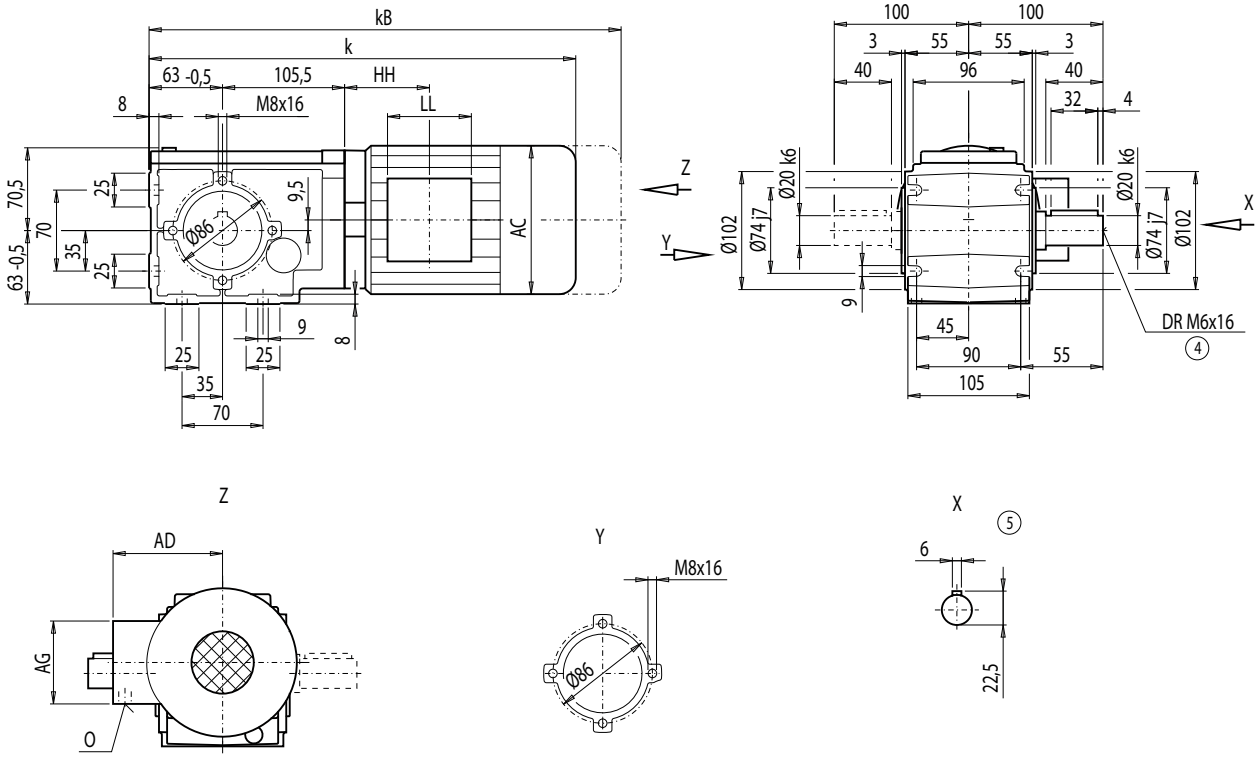

Motor	C.28 k	kB	AC	AD	AG	LL	HH	O	Weight C.28
LA71	353	408	139	146	90	90	40.5	M20x1.5/M25x1.5	10
LA71Z	372	427	139	146	90	90	40.5	M20x1.5/M25x1.5	11

④ DIN 332

⑤ Feather key / keyway DIN 6885

© Siemens AG 2011

Dimensions

Gearbox CF28, flange-mounted design (A-type)

CF012

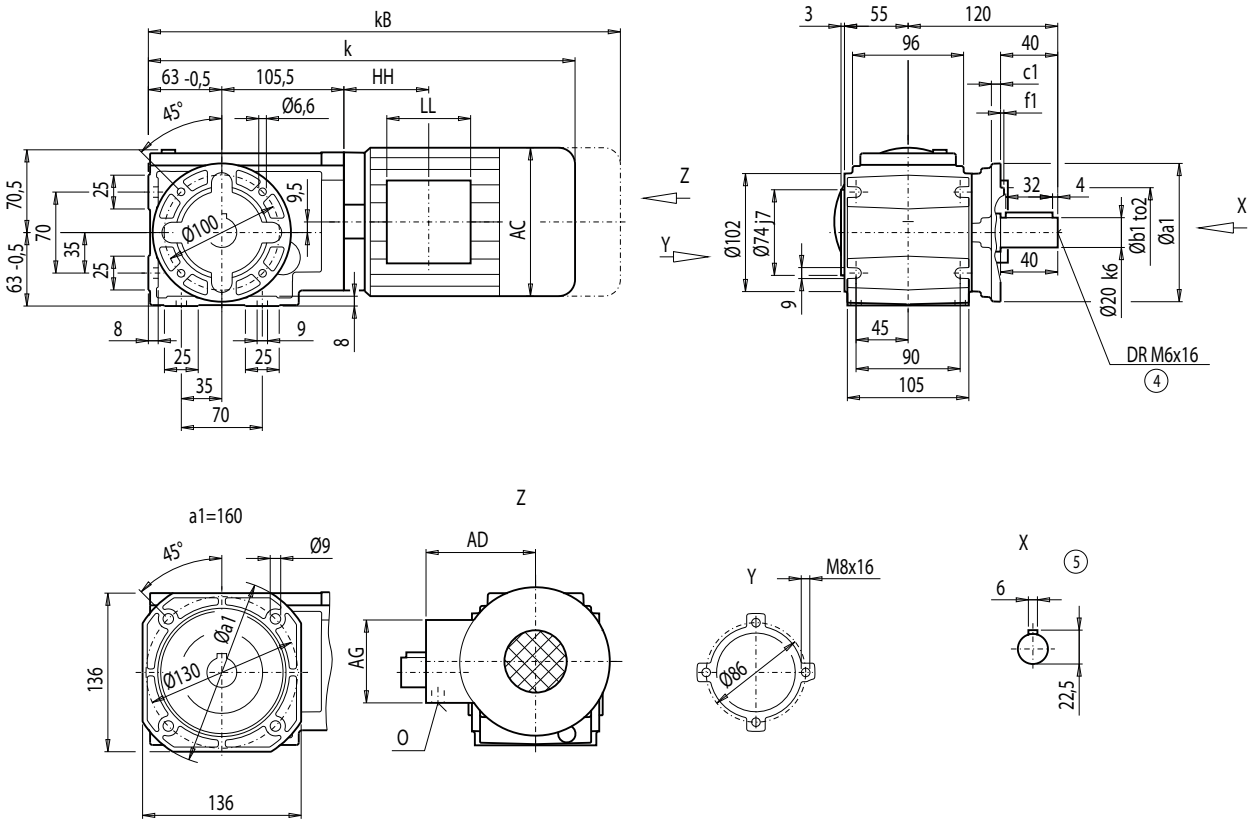

Flange	a1	b1	to2	c1	f1
A120	120	80	j6	8	3.0
A160	160	110	j6	9	3.5

Motor	CF28 k	kB	AC	AD	AG	LL	HH	O	Weight CF28
LA71	353	408	139	146	90	90	40.5	M20x1.5/M25x1.5	12
LA71Z	372	427	139	146	90	90	40.5	M20x1.5/M25x1.5	12

④ DIN 332

⑤ Feather key / keyway DIN 6885

© Siemens AG 2011

Gearbox CA/CAZ28, housing-flange-mounted design (C-type)

CA012
CAZ012

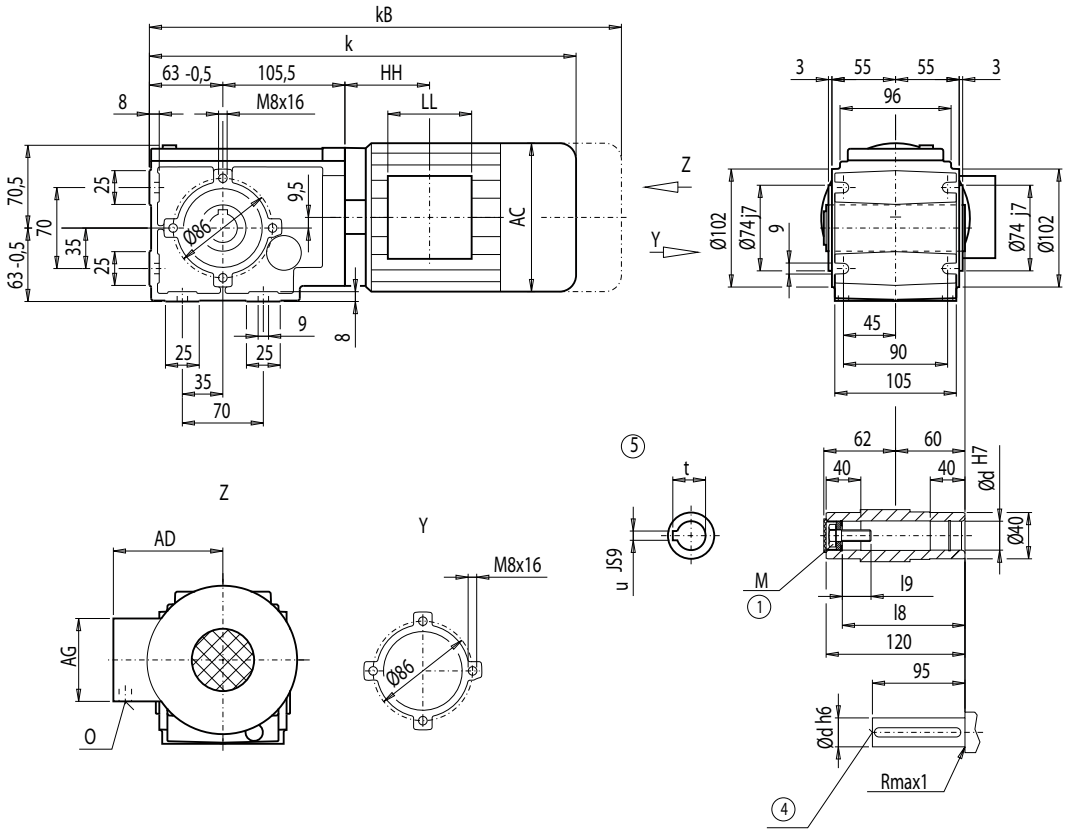

d	l9	l8	M	t	u
20 *)	23.4	106	M6	22.8	6
25	27.6	105	M10	28.3	8

*) Preferred series

Motor	CA.28 k	kB	AC	AD	AG	LL	HH	O	Weight CA.28
LA71	353	408	139	146	90	90	40.5	M20x1.5/M25x1.5	9
LA71Z	372	427	139	146	90	90	40.5	M20x1.5/M25x1.5	10

④ DIN 332 ⑤ Feather key / keyway DIN 6885 ① EN ISO 4014

© Siemens AG 2011

Dimensions

Gearbox CAD28, shaft-mounted design with torque arm

CAD012

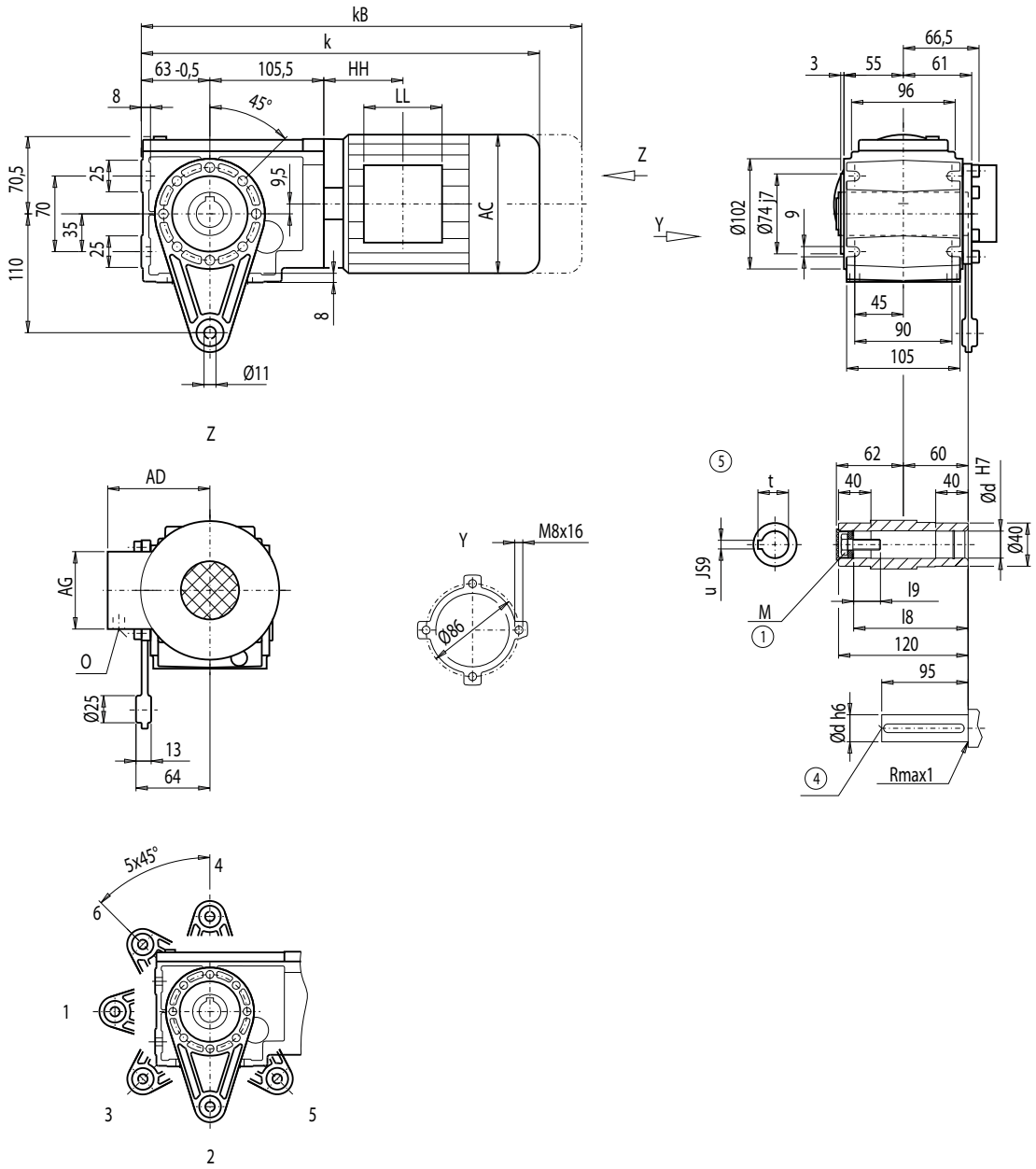

d	l9	l8	M	t	u
20 *)	23.4	106	M6	22.8	6
25	27.6	105	M10	28.3	8

*) Preferred series

	CAD28								Weight
Motor	**k**	**kB**	**AC**	**AD**	**AG**	**LL**	**HH**	**O**	**CAD28**
LA71	353	408	139	146	90	90	40.5	M20x1.5/M25x1.5	10
LA71Z	372	427	139	146	90	90	40.5	M20x1.5/M25x1.5	11

④ DIN 332 ⑤ Feather key / keyway DIN 6885 ① EN ISO 4014

© Siemens AG 2011

Gearbox CAF28, flange-mounted design

CAF012

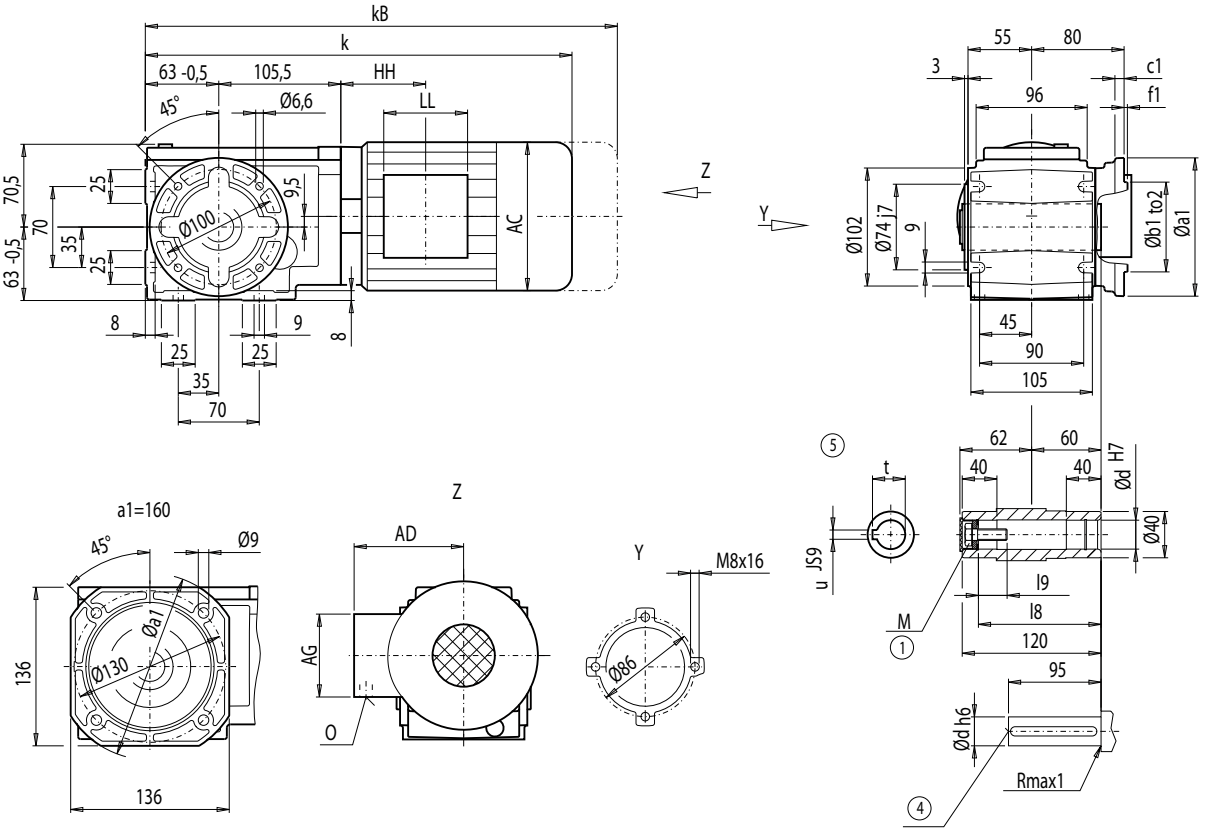

Flange	a1	b1	to2	c1	f1	d	M	l9	l8	t	u
A120	120	80	j6	8	3.0	20 *)	M6	23.4	106	22.8	6
						25	M10	27.6	105	28.3	8
A160	160	110	j6	9	3.5	20 *)	M6	23.4	106	22.8	6
						25	M10	27.6	105	28.3	8

*) Preferred series

	CAF28								Weight
Motor	**k**	**kB**	**AC**	**AD**	**AG**	**LL**	**HH**	**O**	**CAF28**
LA71	353	408	139	146	90	90	40.5	M20x1.5/M25x1.5	11
LA71Z	372	427	139	146	90	90	40.5	M20x1.5/M25x1.5	12

④ DIN 332 ⑤ Feather key / keyway DIN 6885 ① EN ISO 4014

© Siemens AG 2011

Dimensions

Gearbox CAS/CAZS28, shaft-mounted design with housing flange (C-type) and shrink disk

CAS012
CAZS012

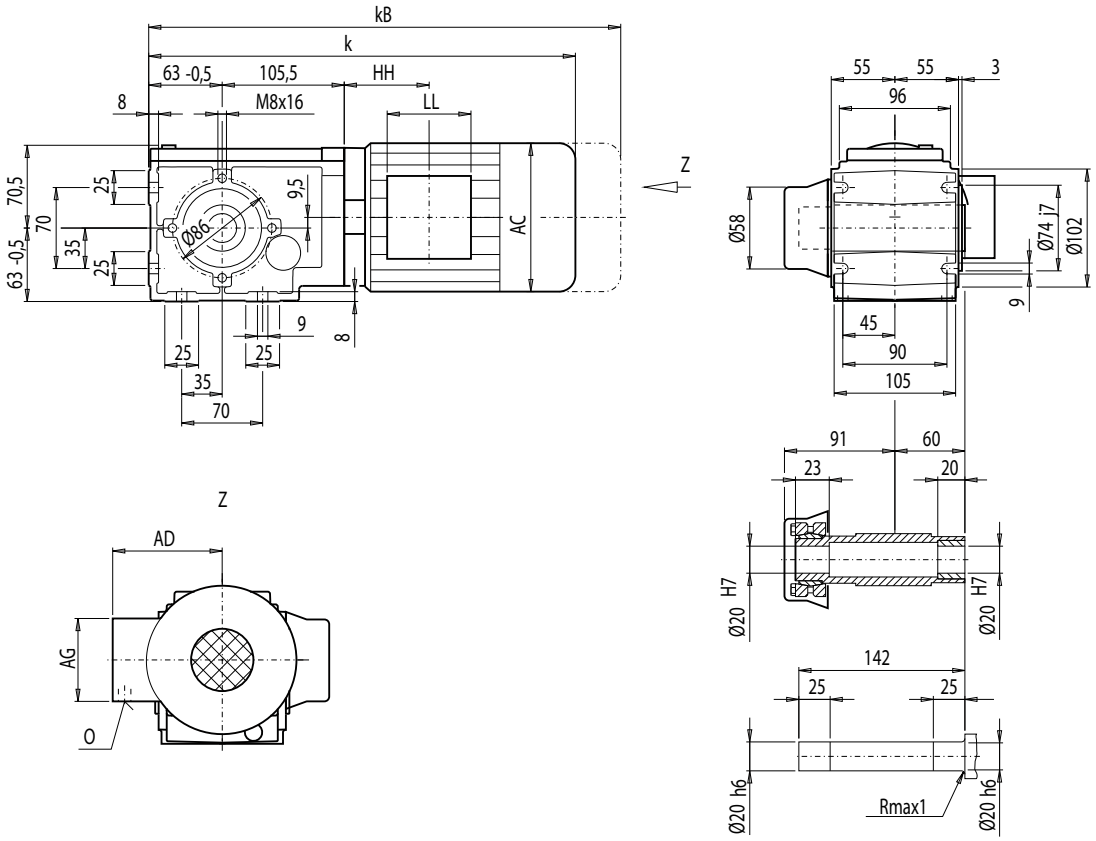

Motor	CA.S28 k	kB	AC	AD	AG	LL	HH	O	Weight CA.S28
LA71	353	408	139	146	90	90	40.5	M20x1.5/M25x1.5	9
LA71Z	372	427	139	146	90	90	40.5	M20x1.5/M25x1.5	10

© Siemens AG 2011

Gearbox CADS28, shaft-mounted design with torque arm and shrink disk

CADS012

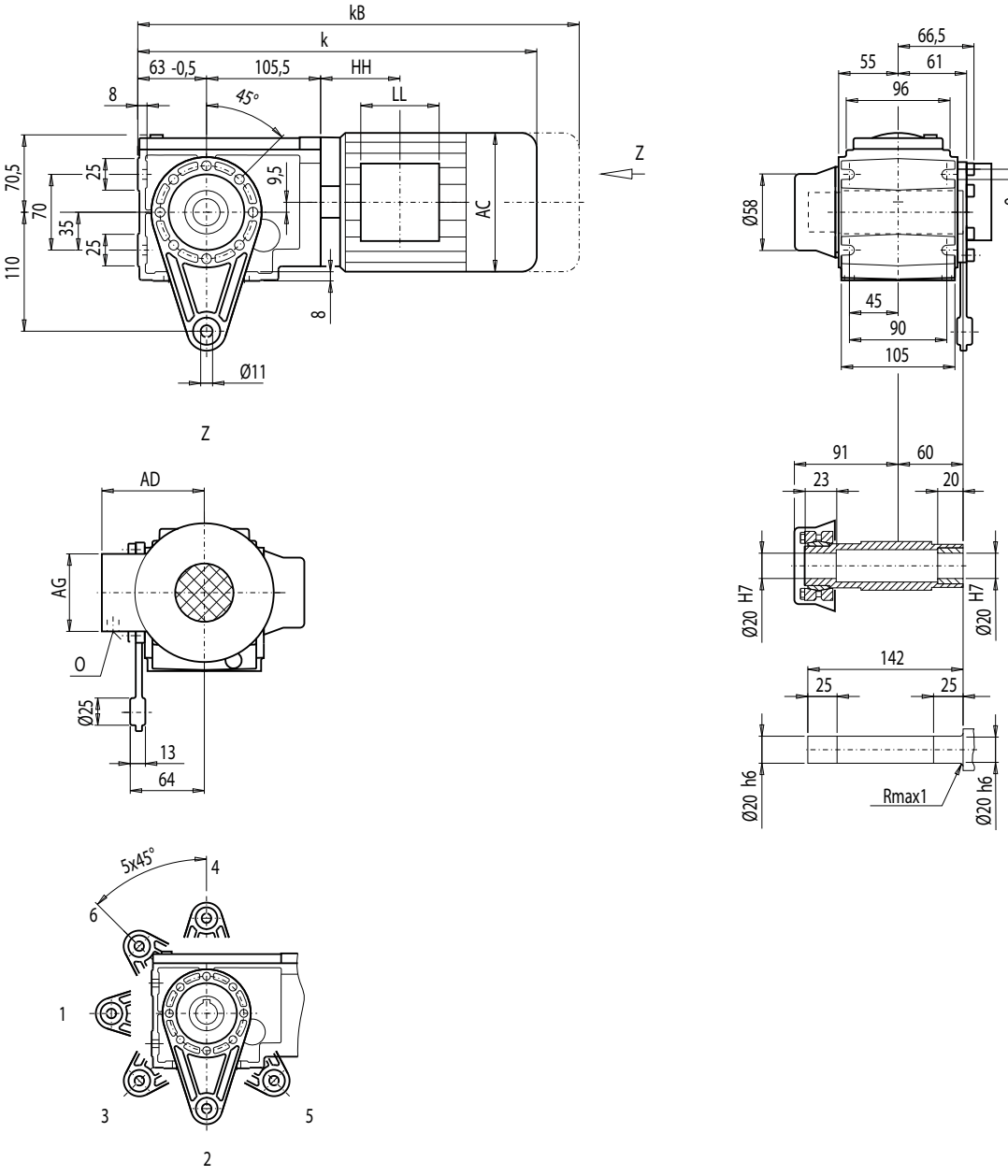

Motor	CADS28 k	kB	AC	AD	AG	LL	HH	O	Weight CADS28
LA71	353	408	139	146	90	90	40.5	M20x1.5/M25x1.5	10
LA71Z	372	427	139	146	90	90	40.5	M20x1.5/M25x1.5	11

© Siemens AG 2011

Dimensions

Gearbox CAFS28, flange-mounted design and shrink disk

CAFS012

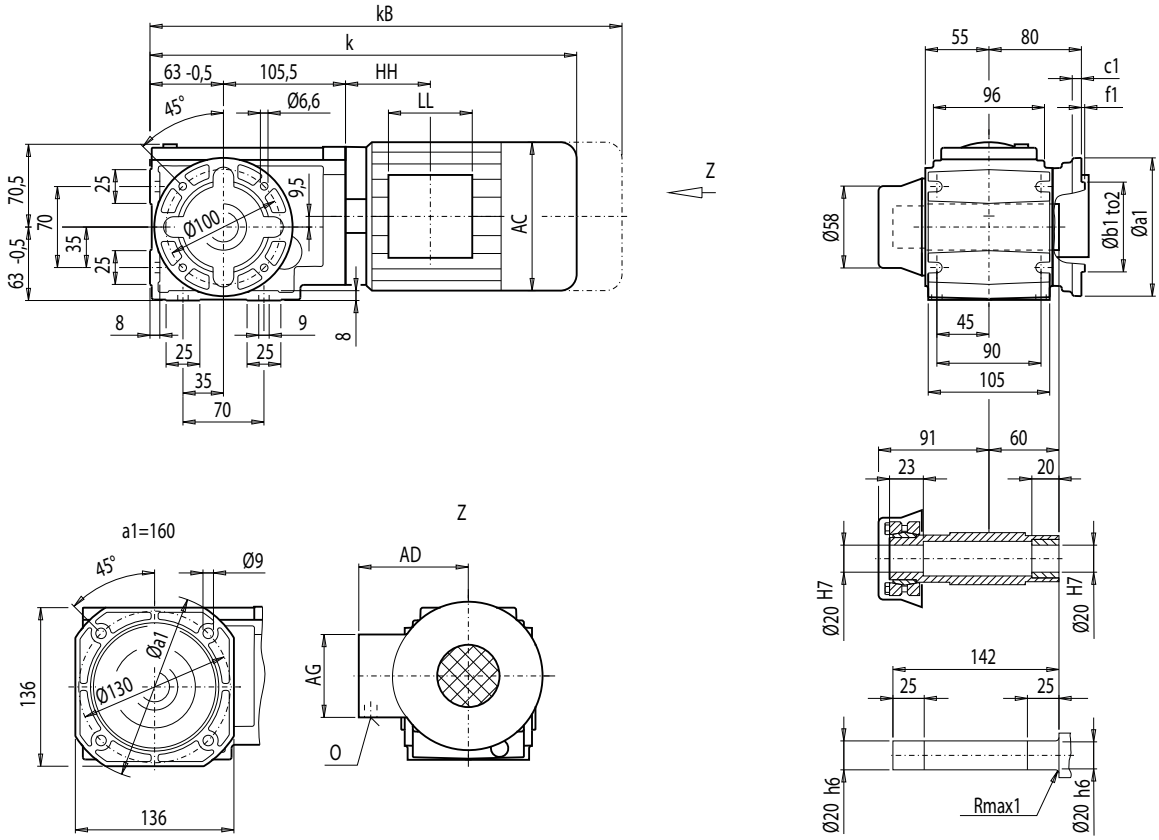

Flange	a1	b1	to2	c1	f1
A120	120	80	j6	8	3.0
A160	160	110	j6	9	3.5

Motor	CAFS28 k	kB	AC	AD	AG	LL	HH	O	Weight CAFS28
LA71	353	408	139	146	90	90	40.5	M20x1.5/M25x1.5	11
LA71Z	372	427	139	146	90	90	40.5	M20x1.5/M25x1.5	12

© Siemens AG 2011

Gearbox C38, foot- and housing-flange-mounted designs (C-type)

C012

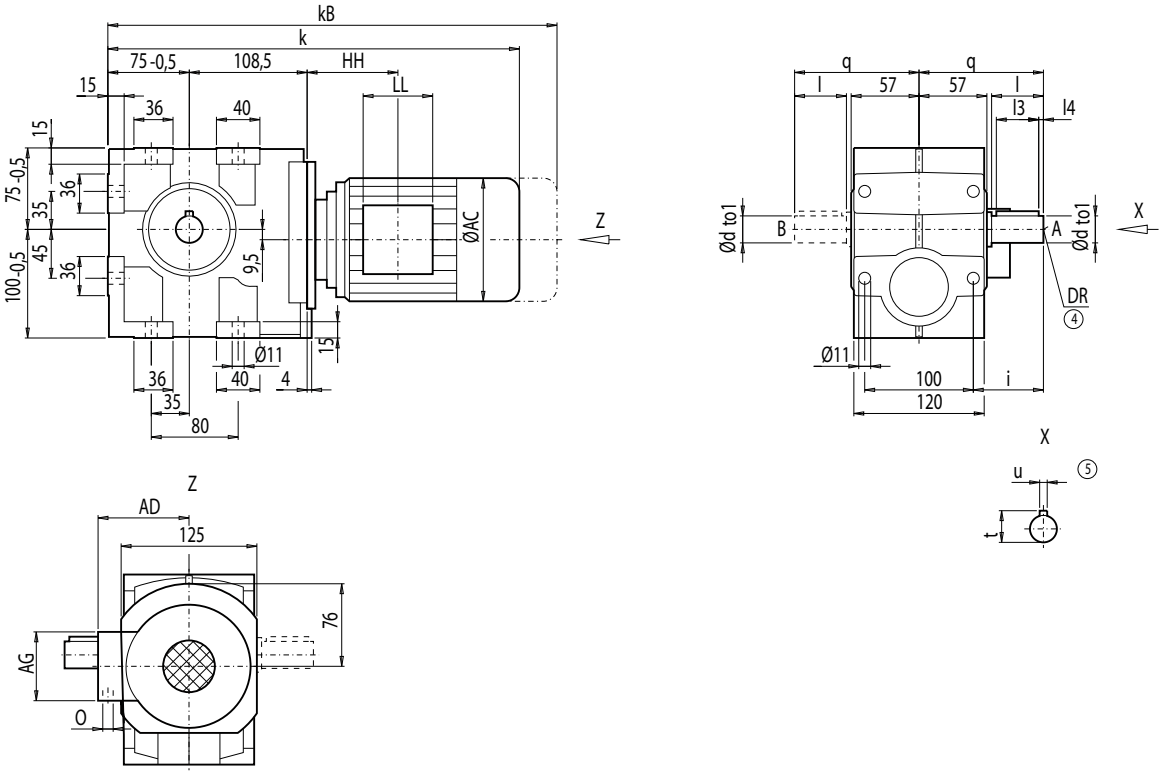

d	to1	l	l3	l4	t	u	i	q	DR
25 *)	k6	50	40	5	28	8	60	110	M10x22
35	k6	70	56	5	38	10	80	130	M12x28

*) Preferred series

	C38								Weight
Motor	**k**	**kB**	**AC**	**AD**	**AG**	**LL**	**HH**	**O**	**C38**
LA71	442.0	497.0	139.0	146	90	90	114.5	M20x1.5/M25x1.5	21
LA71Z	461.0	516.0	139.0	146	90	90	114.5	M20x1.5/M25x1.5	21
LA80	479.0	542.5	156.5	155	90	90	114.0	M20x1.5/M25x1.5	26
LA80Z	501.5	565.0	156.5	155	90	90	187.0	M20x1.5/M25x1.5	30
LA90S/L	510.0	581.0	174.0	163	90	90	114.0	M20x1.5/M25x1.5	31
LA90ZL	555.0	626.0	174.0	163	90	90	238.0	M20x1.5/M25x1.5	37
LA100L	556.0	637.0	195.0	168	120	120	154.5	2xM32x1.5	40
LA100ZL	626.0	707.0	195.0	168	120	120	286.5	2xM32x1.5	50
LA112M	585.5	666.5	219.0	181	120	120	160.0	2xM32x1.5	50
LA112ZM	613.5	694.5	219.0	181	120	120	264.0	2xM32x1.5	57

④ DIN 332

⑤ Feather key / keyway DIN 6885

© Siemens AG 2011

Dimensions

Gearbox CF38, flange-mounted design (A-type)

CF012

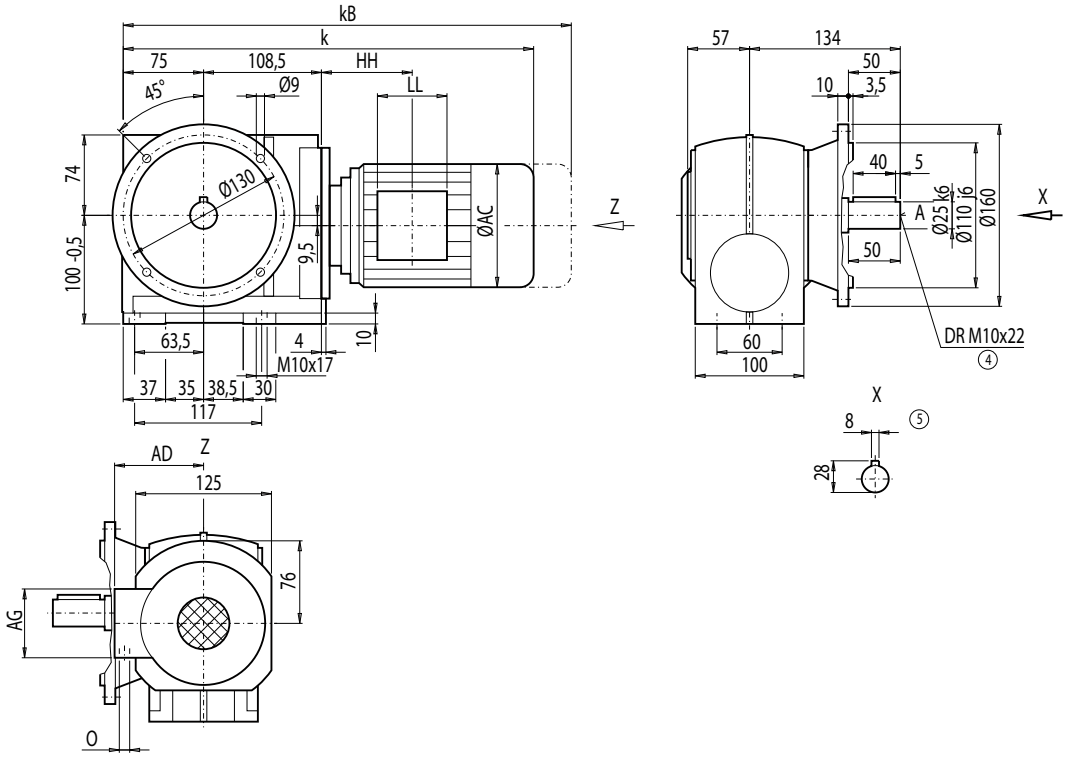

Motor	CF38 k	kB	AC	AD	AG	LL	HH	O	Weight CF38
LA71	442.0	497.0	139.0	146	90	90	114.5	M20x1.5/M25x1.5	25
LA71Z	461.0	516.0	139.0	146	90	90	114.5	M20x1.5/M25x1.5	25
LA80	479.0	542.5	156.5	155	90	90	114.0	M20x1.5/M25x1.5	30
LA80Z	501.5	565.0	156.5	155	90	90	187.0	M20x1.5/M25x1.5	34
LA90S/L	510.0	581.0	174.0	163	90	90	114.0	M20x1.5/M25x1.5	34
LA90ZL	555.0	626.0	174.0	163	90	90	238.0	M20x1.5/M25x1.5	40
LA100L	556.0	637.0	195.0	168	120	120	154.5	2xM32x1.5	44
LA100ZL	626.0	707.0	195.0	168	120	120	286.5	2xM32x1.5	54
LA112M	585.5	666.5	219.0	181	120	120	160.0	2xM32x1.5	54
LA112ZM	613.5	694.5	219.0	181	120	120	264.0	2xM32x1.5	61

④ DIN 332

⑤ Feather key / keyway DIN 6885

© Siemens AG 2011

Gearbox CA38, shaft-mounted design

CA012

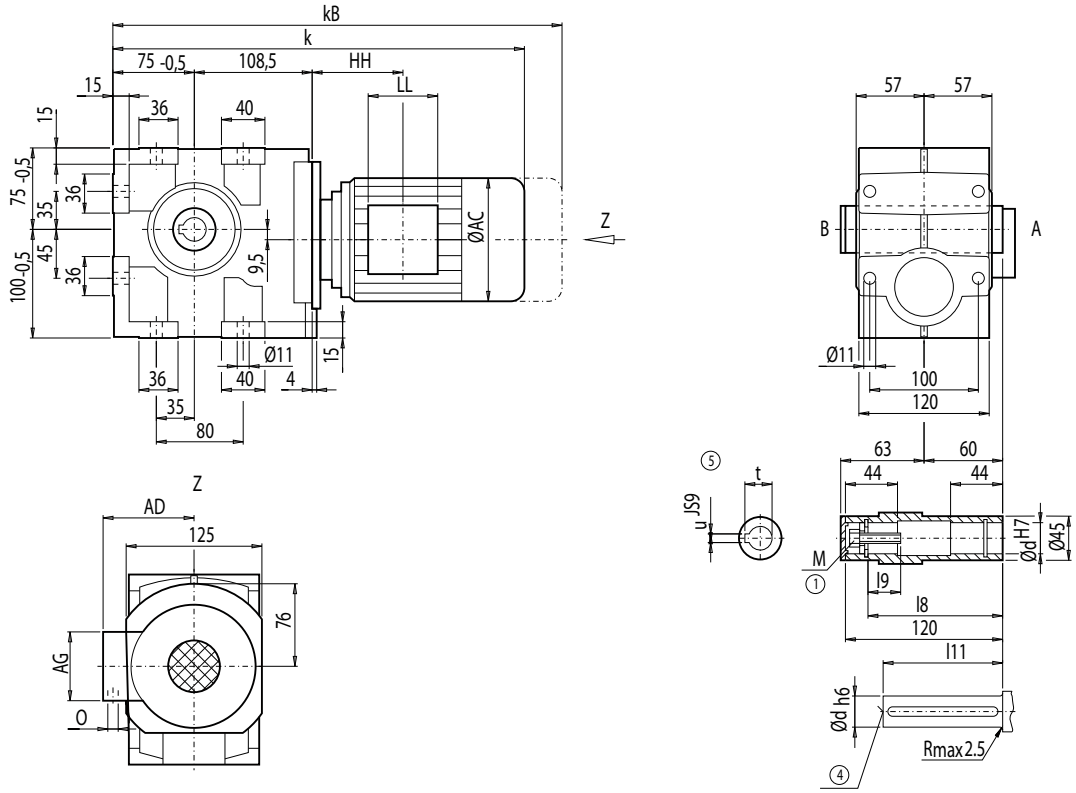

d	l9	l8	l11	M	t	u
25 *)	17	105	100	M10	28.3	8
30	31	102	90	M10	33.3	8

*) Preferred series

Motor	CA38 k	kB	AC	AD	AG	LL	HH	O	Weight CA38
LA71	442.0	497.0	139.0	146	90	90	114.5	M20x1.5/M25x1.5	20
LA71Z	461.0	516.0	139.0	146	90	90	114.5	M20x1.5/M25x1.5	20
LA80	479.0	542.5	156.5	155	90	90	114.0	M20x1.5/M25x1.5	25
LA80Z	501.5	565.0	156.5	155	90	90	187.0	M20x1.5/M25x1.5	29
LA90S/L	510.0	581.0	174.0	163	90	90	114.0	M20x1.5/M25x1.5	30
LA90ZL	555.0	626.0	174.0	163	90	90	238.0	M20x1.5/M25x1.5	36
LA100L	556.0	637.0	195.0	168	120	120	154.5	2xM32x1.5	39
LA100ZL	626.0	707.0	195.0	168	120	120	286.5	2xM32x1.5	49
LA112M	585.5	666.5	219.0	181	120	120	160.0	2xM32x1.5	49
LA112ZM	613.5	694.5	219.0	181	120	120	264.0	2xM32x1.5	56

④ DIN 332 ⑤ Feather key / keyway DIN 6885 ① EN ISO 4014

© Siemens AG 2011

Dimensions

Gearbox CAD38, shaft-mounted design with torque arm

CAD012

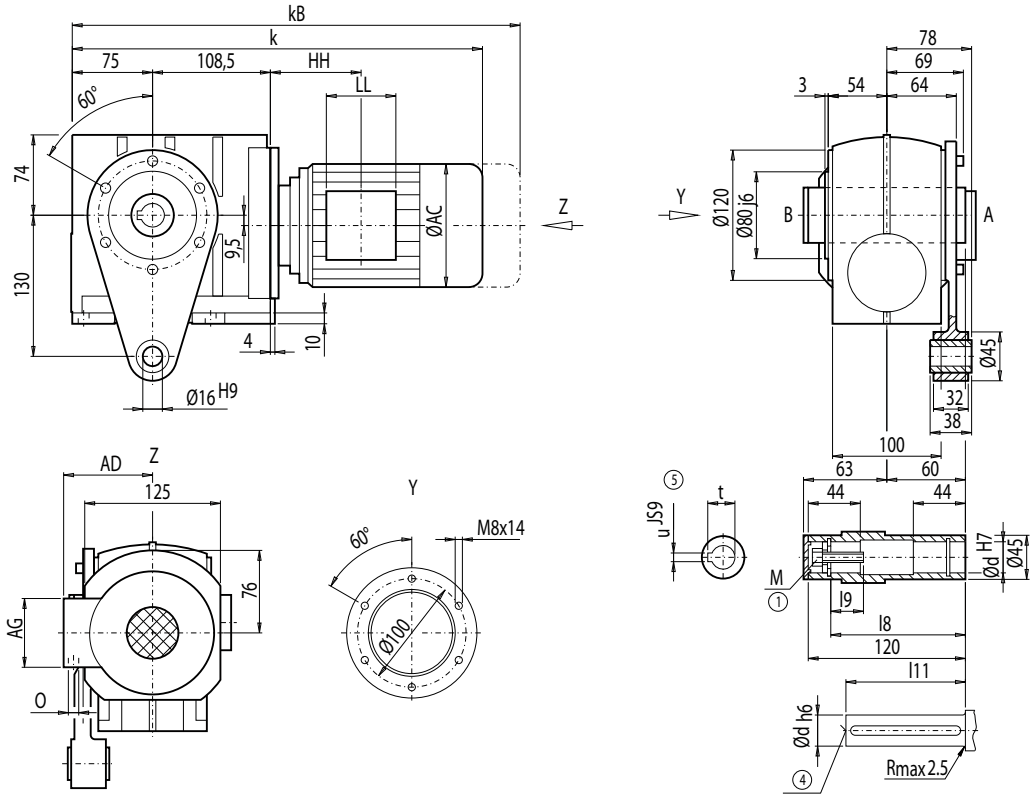

Fig.1

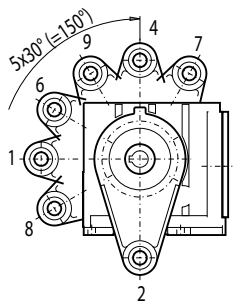

Fig.2

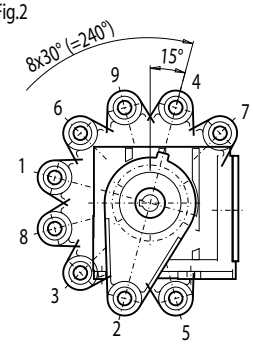

d	l9	l8	l11	M	t	u
25 *)	17	105	100	M10	28.3	8
30	31	102	90	M10	33.3	8

*) Preferred series

	CAD38								Weight
Motor	**k**	**kB**	**AC**	**AD**	**AG**	**LL**	**HH**	**O**	**CAD38**
LA71	442.0	497.0	139.0	146	90	90	114.5	M20x1.5/M25x1.5	23
LA71Z	461.0	516.0	139.0	146	90	90	114.5	M20x1.5/M25x1.5	23
LA80	479.0	542.5	156.5	155	90	90	114.0	M20x1.5/M25x1.5	28
LA80Z	501.5	565.0	156.5	155	90	90	187.0	M20x1.5/M25x1.5	32
LA90S/L	510.0	581.0	174.0	163	90	90	114.0	M20x1.5/M25x1.5	32
LA90ZL	555.0	626.0	174.0	163	90	90	238.0	M20x1.5/M25x1.5	38
LA100L	556.0	637.0	195.0	168	120	120	154.5	2xM32x1.5	41
LA100ZL	626.0	707.0	195.0	168	120	120	286.5	2xM32x1.5	51
LA112M	585.5	666.5	219.0	181	120	120	160.0	2xM32x1.5	52
LA112ZM	613.5	694.5	219.0	181	120	120	264.0	2xM32x1.5	59

④ DIN 332 ⑤ Feather key / keyway DIN 6885 ① EN ISO 4014

© Siemens AG 2011

Gearbox CAF38, flange-mounted design

CAF012

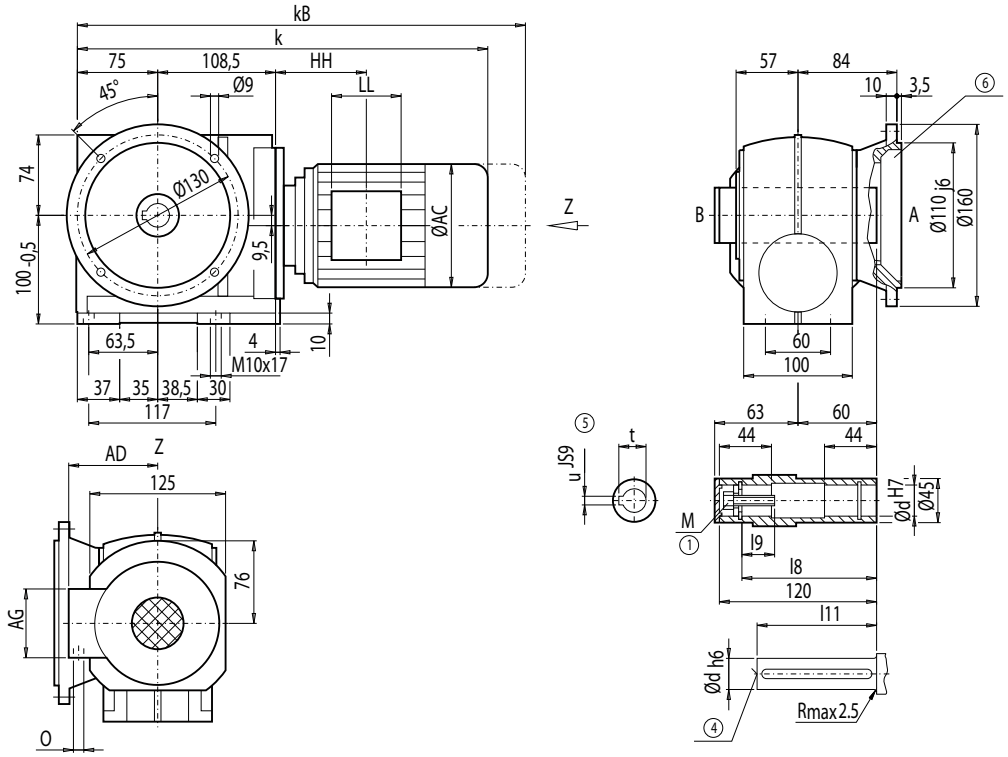

d	l9	l8	l11	M	t	u
25 *)	17	105	100	M10	28.3	8
30	31	102	90	M10	33.3	8

*) Preferred series

Motor	CAF38 k	kB	AC	AD	AG	LL	HH	O	Weight CAF38
LA71	442.0	497.0	139.0	146	90	90	114.5	M20x1.5/M25x1.5	24
LA71Z	461.0	516.0	139.0	146	90	90	114.5	M20x1.5/M25x1.5	24
LA80	479.0	542.5	156.5	155	90	90	114.0	M20x1.5/M25x1.5	29
LA80Z	501.5	565.0	156.5	155	90	90	187.0	M20x1.5/M25x1.5	33
LA90S/L	510.0	581.0	174.0	163	90	90	114.0	M20x1.5/M25x1.5	33
LA90ZL	555.0	626.0	174.0	163	90	90	238.0	M20x1.5/M25x1.5	39
LA100L	556.0	637.0	195.0	168	120	120	154.5	2xM32x1.5	42
LA100ZL	626.0	707.0	195.0	168	120	120	286.5	2xM32x1.5	52
LA112M	585.5	666.5	219.0	181	120	120	160.0	2xM32x1.5	53
LA112ZM	613.5	694.5	219.0	181	120	120	264.0	2xM32x1.5	60

④ DIN 332 ⑤ Feather key / keyway DIN 6885 ① EN ISO 4014 ⑥ For note, see page 5/108

© Siemens AG 2011

Dimensions

Gearbox CAZ38, shaft-mounted design with housing flange (C-type)

CAZ012

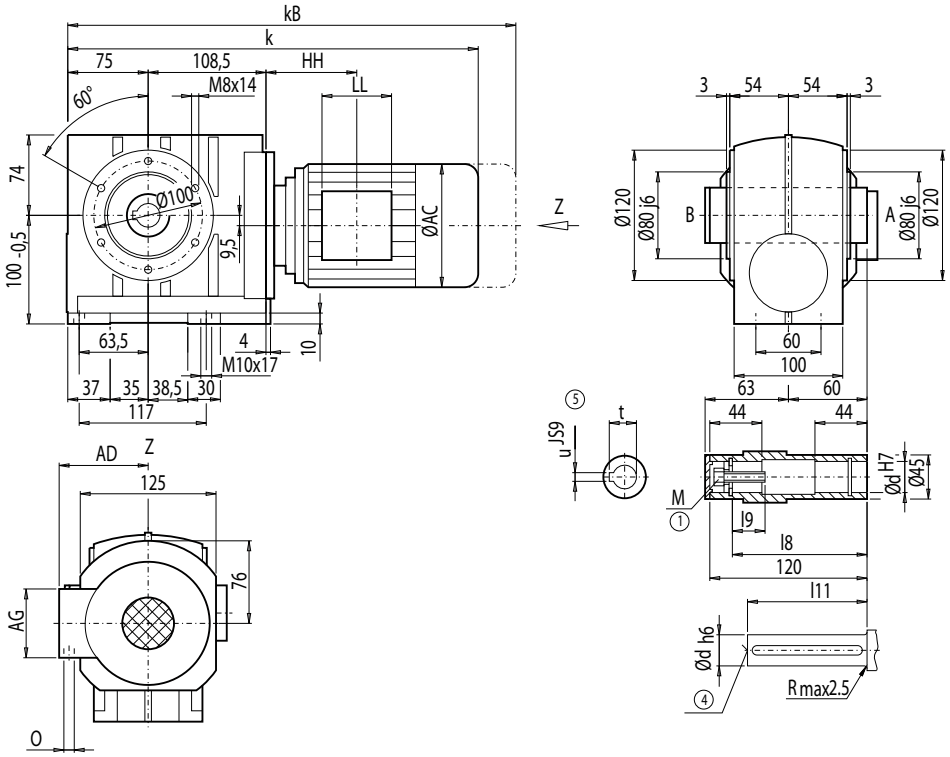

d	l9	l8	l11	M	t	u
25 *)	17	105	100	M10	28.3	8
30	31	102	90	M10	33.3	8

*) Preferred series

Motor	CAZ38 k	kB	AC	AD	AG	LL	HH	O	Weight CAZ38
LA71	442.0	497.0	139.0	146	90	90	114.5	M20x1.5/M25x1.5	22
LA71Z	461.0	516.0	139.0	146	90	90	114.5	M20x1.5/M25x1.5	22
LA80	479.0	542.5	156.5	155	90	90	114.0	M20x1.5/M25x1.5	27
LA80Z	501.5	565.0	156.5	155	90	90	187.0	M20x1.5/M25x1.5	31
LA90S/L	510.0	581.0	174.0	163	90	90	114.0	M20x1.5/M25x1.5	32
LA90ZL	555.0	626.0	174.0	163	90	90	238.0	M20x1.5/M25x1.5	38
LA100L	556.0	637.0	195.0	168	120	120	154.5	2xM32x1.5	41
LA100ZL	626.0	707.0	195.0	168	120	120	286.5	2xM32x1.5	51
LA112M	585.5	666.5	219.0	181	120	120	160.0	2xM32x1.5	51
LA112ZM	613.5	694.5	219.0	181	120	120	264.0	2xM32x1.5	58

© Siemens AG 2011

Gearbox CAS38, shaft-mounted design with shrink disk

CAS012

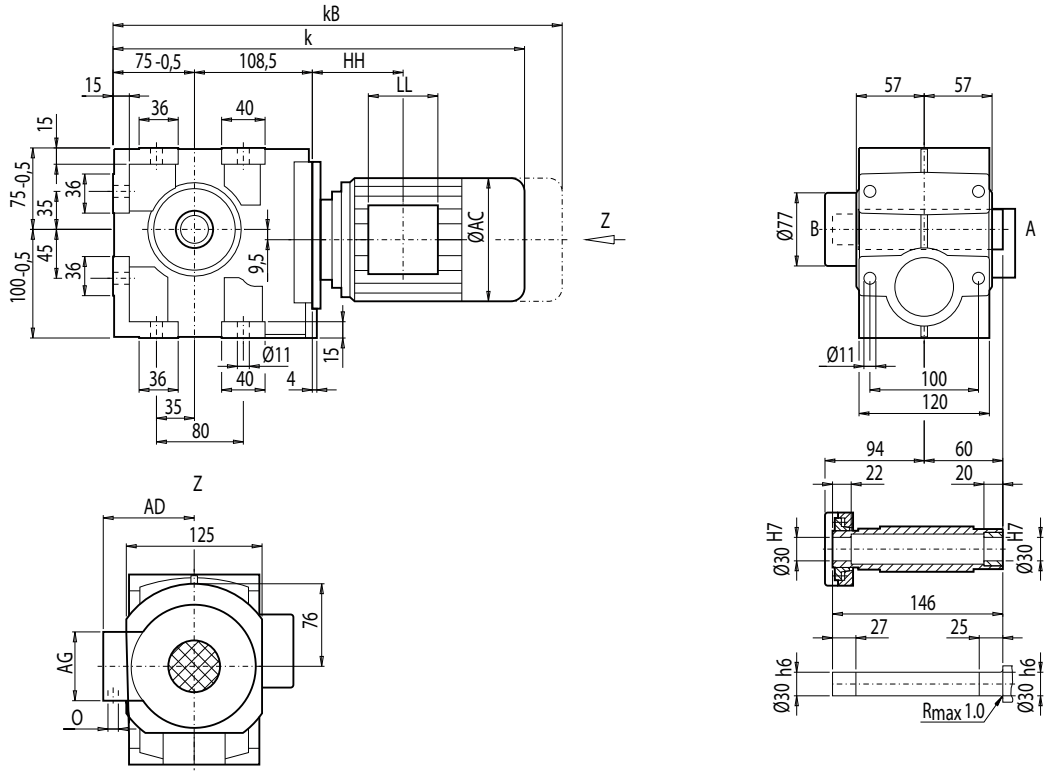

Motor	CAS38 k	kB	AC	AD	AG	LL	HH	O	Weight CAS38
LA71	442.0	497.0	139.0	146	90	90	114.5	M20x1.5/M25x1.5	21
LA71Z	461.0	516.0	139.0	146	90	90	114.5	M20x1.5/M25x1.5	21
LA80	479.0	542.5	156.5	155	90	90	114.0	M20x1.5/M25x1.5	25
LA80Z	501.5	565.0	156.5	155	90	90	187.0	M20x1.5/M25x1.5	29
LA90S/L	510.0	581.0	174.0	163	90	90	114.0	M20x1.5/M25x1.5	30
LA90ZL	555.0	626.0	174.0	163	90	90	238.0	M20x1.5/M25x1.5	26
LA100L	556.0	637.0	195.0	168	120	120	154.5	2xM32x1.5	39
LA100ZL	626.0	707.0	195.0	168	120	120	286.5	2xM32x1.5	49
LA112M	585.5	666.5	219.0	181	120	120	160.0	2xM32x1.5	50
LA112ZM	613.5	694.5	219.0	181	120	120	264.0	2xM32x1.5	57

© Siemens AG 2011

Dimensions

Gearbox CADS38, shaft-mounted design with torque arm and shrink disk

CADS012

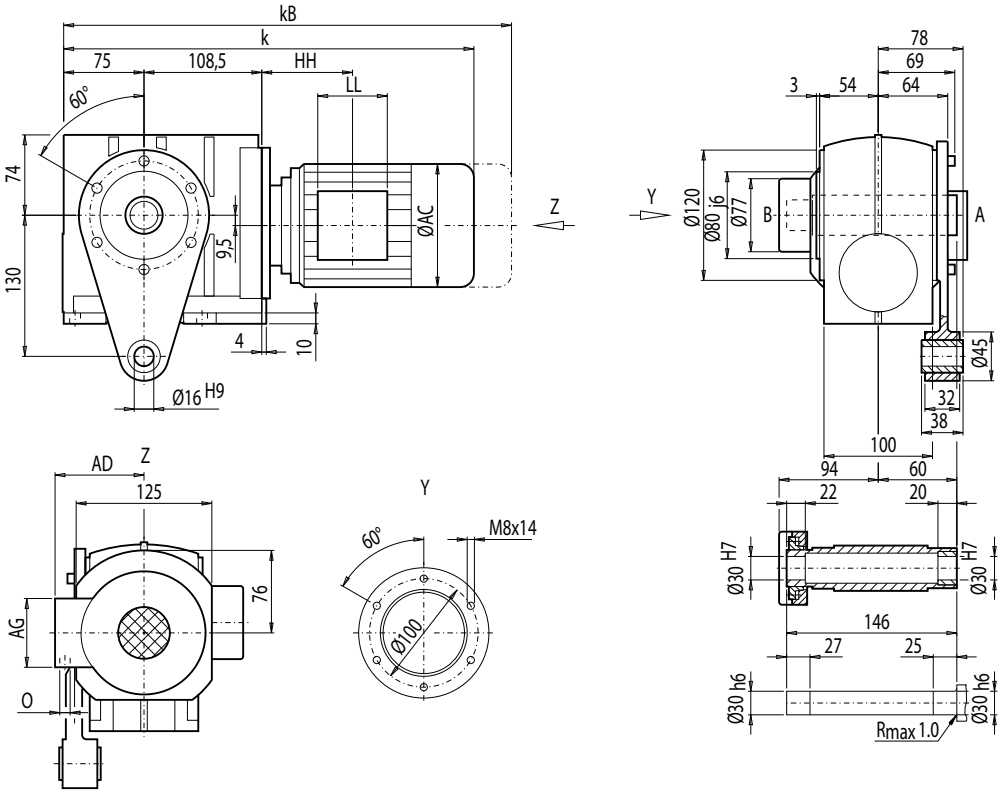

Fig.1

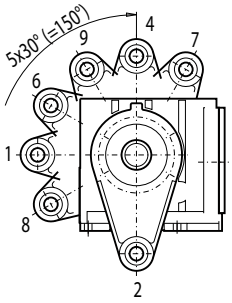

Fig.2

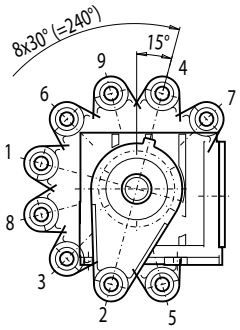

	CADS38								Weight
Motor	k	kB	AC	AD	AG	LL	HH	O	CADS38
LA71	442.0	497.0	139.0	146	90	90	114.5	M20x1.5/M25x1.5	23
LA71Z	461.0	516.0	139.0	146	90	90	114.5	M20x1.5/M25x1.5	23
LA80	479.0	542.5	156.5	155	90	90	114.0	M20x1.5/M25x1.5	28
LA80Z	501.5	565.0	156.5	155	90	90	187.0	M20x1.5/M25x1.5	32
LA90S/L	510.0	581.0	174.0	163	90	90	114.0	M20x1.5/M25x1.5	33
LA90ZL	555.0	626.0	174.0	163	90	90	238.0	M20x1.5/M25x1.5	39
LA100L	556.0	637.0	195.0	168	120	120	154.5	2xM32x1.5	42
LA100ZL	626.0	707.0	195.0	168	120	120	286.5	2xM32x1.5	52
LA112M	585.5	666.5	219.0	181	120	120	160.0	2xM32x1.5	52
LA112ZM	613.5	694.5	219.0	181	120	120	264.0	2xM32x1.5	59

© Siemens AG 2011

Gearbox CAFS38, flange-mounted design and shrink disk

CAFS012

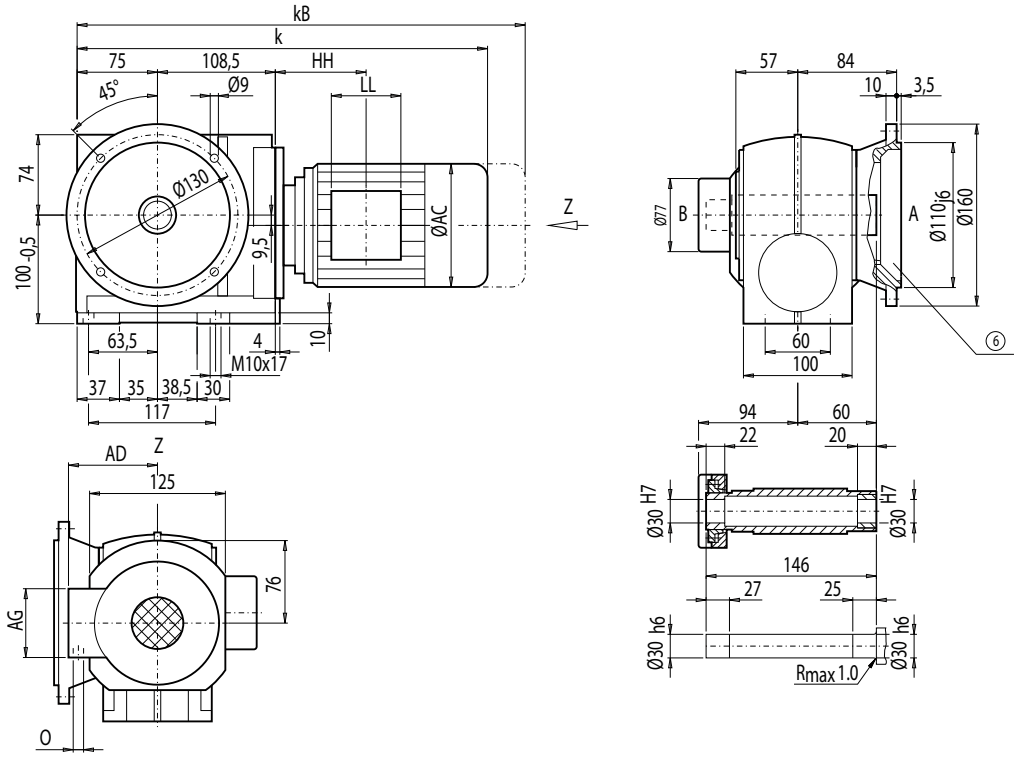

Motor	CAFS38 k	kB	AC	AD	AG	LL	HH	O	Weight CAFS38
LA71	442.0	497.0	139.0	146	90	90	114.5	M20x1.5/M25x1.5	24
LA71Z	461.0	516.0	139.0	146	90	90	114.5	M20x1.5/M25x1.5	24
LA80	479.0	542.5	156.5	155	90	90	114.0	M20x1.5/M25x1.5	29
LA80Z	501.5	565.0	156.5	155	90	90	187.0	M20x1.5/M25x1.5	33
LA90S/L	510.0	581.0	174.0	163	90	90	114.0	M20x1.5/M25x1.5	34
LA90ZL	555.0	626.0	174.0	163	90	90	238.0	M20x1.5/M25x1.5	40
LA100L	556.0	637.0	195.0	168	120	120	154.5	2xM32x1.5	43
LA100ZL	626.0	707.0	195.0	168	120	120	286.5	2xM32x1.5	53
LA112M	585.5	666.5	219.0	181	120	120	160.0	2xM32x1.5	53
LA112ZM	613.5	694.5	219.0	181	120	120	264.0	2xM32x1.5	60

⑥ For note, see page 5/108

© Siemens AG 2011

Dimensions

Gearbox CAZS38, shaft-mounted design with housing flange (C-type) and shrink disk

CAZS012

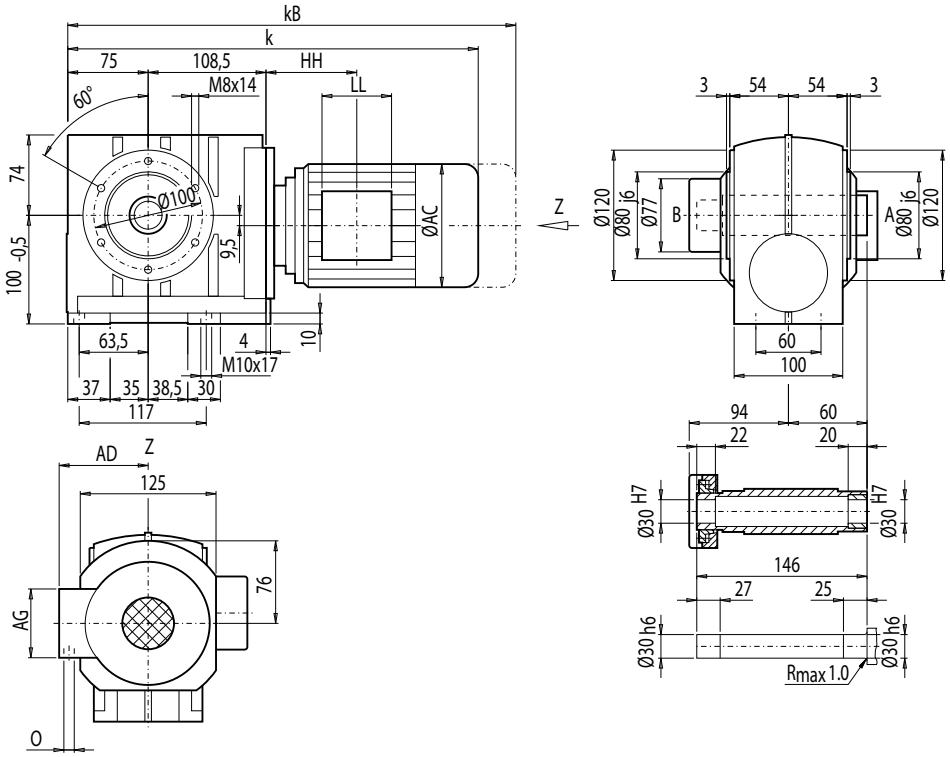

Motor	CAZS38 k	kB	AC	AD	AG	LL	HH	O	Weight CAZS38
LA71	442.0	497.0	139.0	146	90	90	114.5	M20x1.5/M25x1.5	23
LA71Z	461.0	516.0	139.0	146	90	90	114.5	M20x1.5/M25x1.5	23
LA80	479.0	542.5	156.5	155	90	90	114.0	M20x1.5/M25x1.5	27
LA80Z	501.5	565.0	156.5	155	90	90	187.0	M20x1.5/M25x1.5	31
LA90S/L	510.0	581.0	174.0	163	90	90	114.0	M20x1.5/M25x1.5	32
LA90ZL	555.0	626.0	174.0	163	90	90	238.0	M20x1.5/M25x1.5	38
LA100L	556.0	637.0	195.0	168	120	120	154.5	2xM32x1.5	41
LA100ZL	626.0	707.0	195.0	168	120	120	286.5	2xM32x1.5	51
LA112M	585.5	666.5	219.0	181	120	120	160.0	2xM32x1.5	52
LA112ZM	613.5	694.5	219.0	181	120	120	264.0	2xM32x1.5	59

© Siemens AG 2011

Gearbox C48, foot- and housing-flange-mounted designs (C-type)

C012

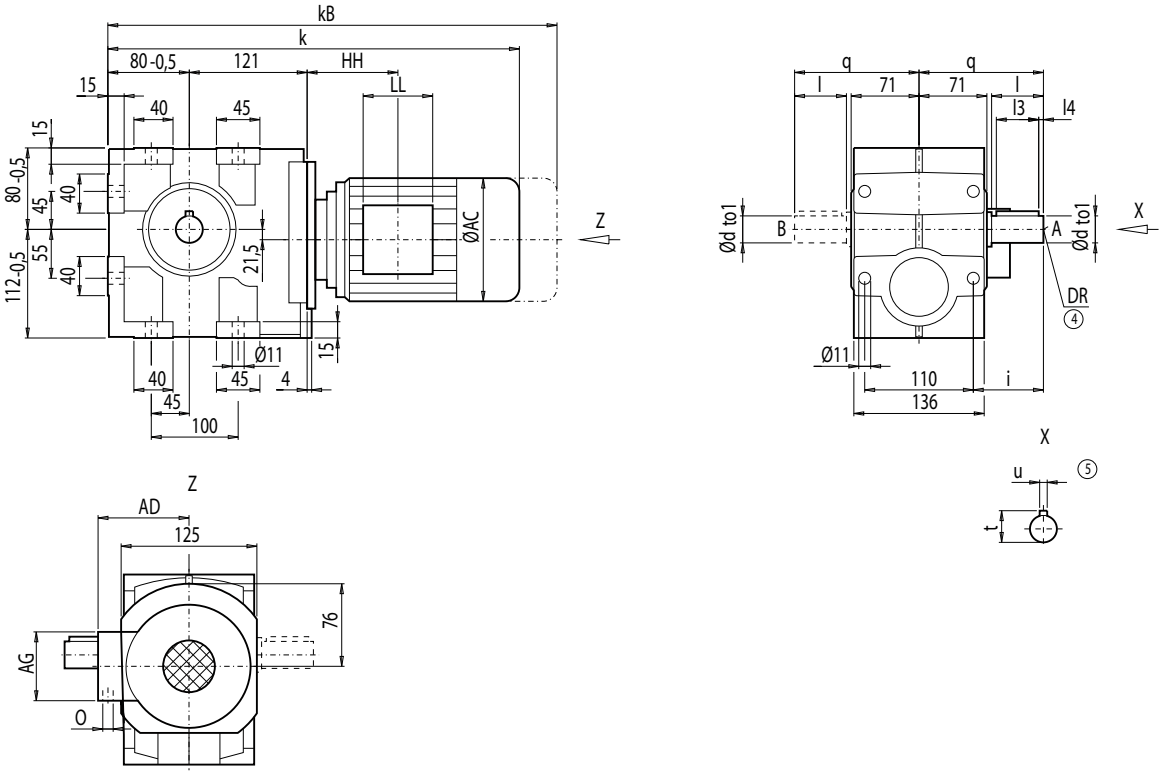

d	to1	l	l3	l4	t	u	i	q	DR
30 *)	k6	60	50	3.5	33	8	80	135	M10x22
40	k6	80	70	5.0	43	12	100	155	M16x36

*) Preferred series

	C48								Weight
Motor	**k**	**kB**	**AC**	**AD**	**AG**	**LL**	**HH**	**O**	**C48**
LA71	459.5	514.5	139.0	146	90	90	114.5	M20x1.5/M25x1.5	30
LA71Z	478.5	533.5	139.0	146	90	90	114.5	M20x1.5/M25x1.5	30
LA80	496.5	560.0	156.5	155	90	90	114.0	M20x1.5/M25x1.5	34
LA80Z	519.0	582.5	156.5	155	90	90	187.0	M20x1.5/M25x1.5	38
LA90S/L	527.5	598.5	174.0	163	90	90	114.0	M20x1.5/M25x1.5	39
LA90ZL	572.5	643.5	174.0	163	90	90	238.0	M20x1.5/M25x1.5	45
LA100L	573.5	654.5	195.0	168	120	120	154.5	2xM32x1.5	48
LA100ZL	643.5	724.5	195.0	168	120	120	286.5	2xM32x1.5	58
LA112M	603.0	684.0	219.0	181	120	120	160.0	2xM32x1.5	59
LA112ZM	631.0	712.0	219.0	181	120	120	264.0	2xM32x1.5	66

④ DIN 332

⑤ Feather key / keyway DIN 6885

© Siemens AG 2011

Dimensions

Gearbox CF48, flange-mounted design (A-type)

CF012

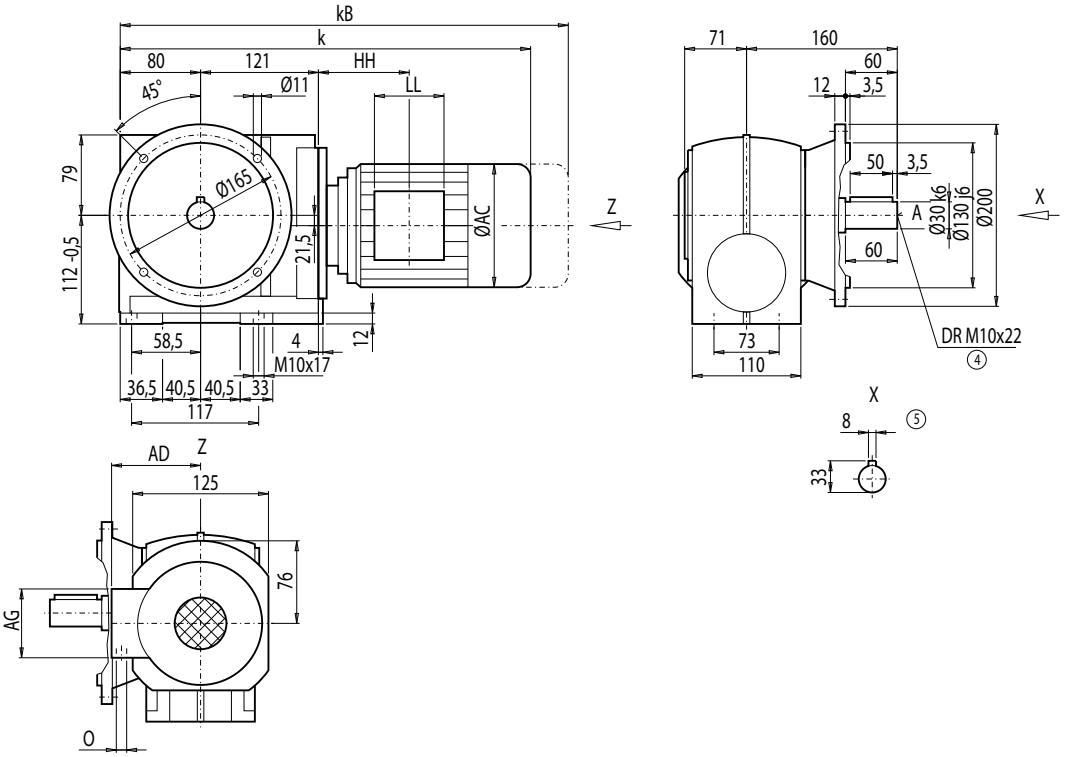

Motor	CF48 k	kB	AC	AD	AG	LL	HH	O	Weight CF48
LA71	459.5	514.5	139.0	146	90	90	114.5	M20x1.5/M25x1.5	34
LA71Z	478.5	533.5	139.0	146	90	90	114.5	M20x1.5/M25x1.5	34
LA80	496.5	560.0	156.5	155	90	90	114.0	M20x1.5/M25x1.5	39
LA80Z	519.0	582.5	156.5	155	90	90	187.0	M20x1.5/M25x1.5	43
LA90S/L	527.5	598.5	174.0	163	90	90	114.0	M20x1.5/M25x1.5	43
LA90ZL	572.5	643.5	174.0	163	90	90	238.0	M20x1.5/M25x1.5	49
LA100L	573.5	654.5	195.0	168	120	120	154.5	2xM32x1.5	52
LA100ZL	643.5	724.5	195.0	168	120	120	286.5	2xM32x1.5	62
LA112M	603.0	684.0	219.0	181	120	120	160.0	2xM32x1.5	63
LA112ZM	631.0	712.0	219.0	181	120	120	264.0	2xM32x1.5	70

④ DIN 332

⑤ Feather key / keyway DIN 6885

© Siemens AG 2011

Gearbox CA48, shaft-mounted design

CA012

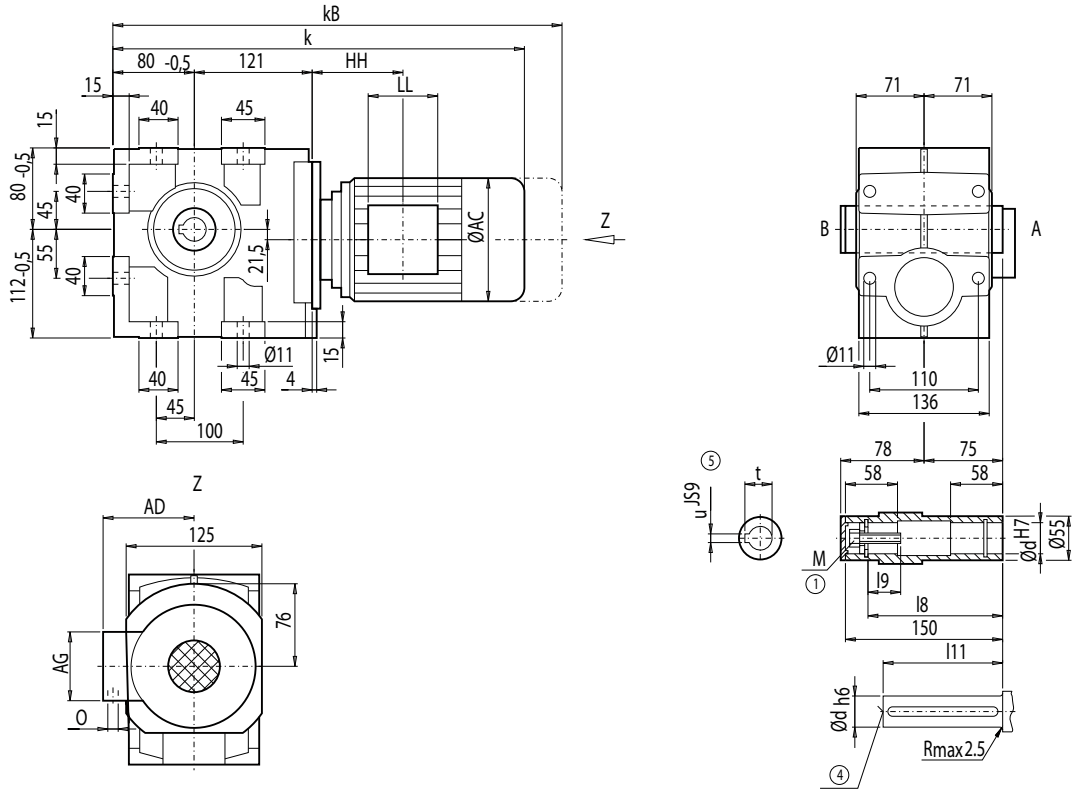

d	l9	l8	l11	M	t	u
30 *)	17	132	127	M10	33.3	8
35	40	128	115	M12	38.3	10
40	48	128	115	M16	43.3	12

*) Preferred series

	CA48								Weight
Motor	k	kB	AC	AD	AG	LL	HH	O	CA48
LA71	459.5	514.5	139.0	146	90	90	114.5	M20x1.5/M25x1.5	28
LA71Z	478.5	533.5	139.0	146	90	90	114.5	M20x1.5/M25x1.5	28
LA80	496.5	560.0	156.5	155	90	90	114.0	M20x1.5/M25x1.5	33
LA80Z	519.0	582.5	156.5	155	90	90	187.0	M20x1.5/M25x1.5	37
LA90S/L	527.5	598.5	174.0	163	90	90	114.0	M20x1.5/M25x1.5	38
LA90ZL	572.5	643.5	174.0	163	90	90	238.0	M20x1.5/M25x1.5	44
LA100L	573.5	654.5	195.0	168	120	120	154.5	2xM32x1.5	47
LA100ZL	643.5	724.5	195.0	168	120	120	286.5	2xM32x1.5	57
LA112M	603.0	684.0	219.0	181	120	120	160.0	2xM32x1.5	57
LA112ZM	631.0	712.0	219.0	181	120	120	264.0	2xM32x1.5	64

④ DIN 332 ⑤ Feather key / keyway DIN 6885 ① EN ISO 4014

© Siemens AG 2011

Dimensions

Gearbox CAD48, shaft-mounted design with torque arm

CAD012

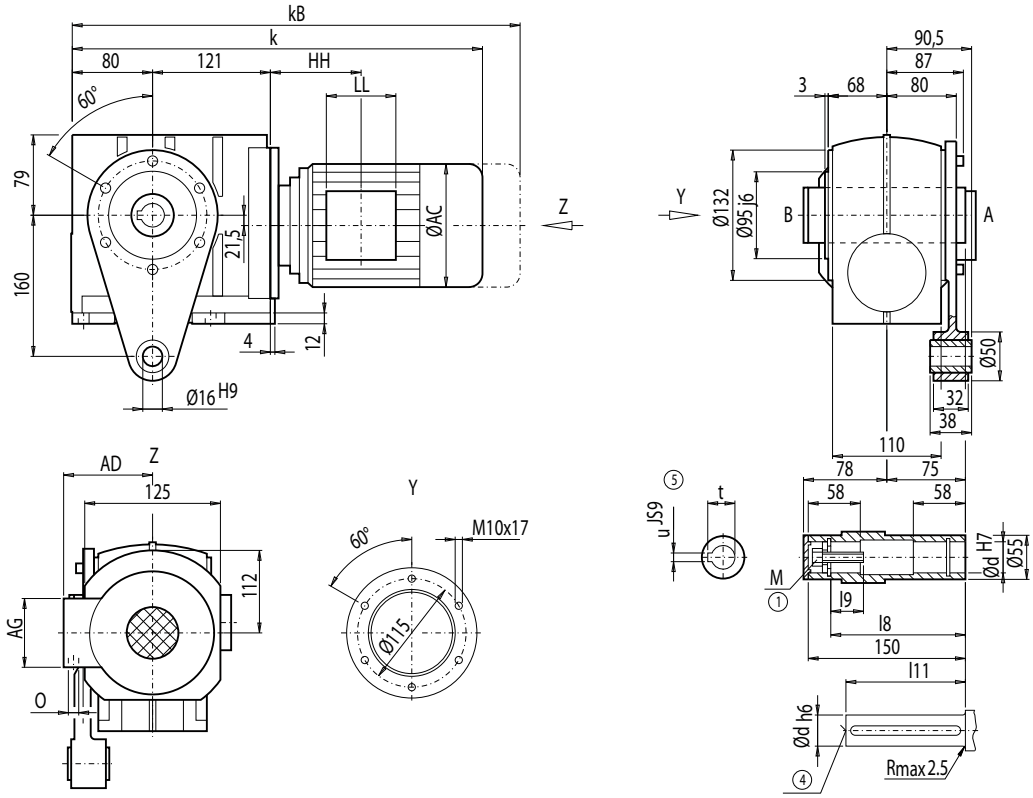

Fig.1

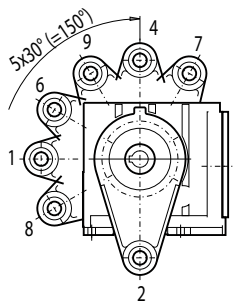

Fig.2

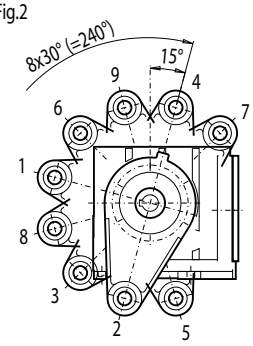

d	l9	l8	l11	M	t	u
30 *)	17	132	127	M10	33.3	8
35	40	128	115	M12	38.3	10
40	48	128	115	M16	43.3	12

*) Preferred series

	CAD48								Weight
Motor	**k**	**kB**	**AC**	**AD**	**AG**	**LL**	**HH**	**O**	**CAD48**
LA71	459.5	514.5	139.0	146	90	90	114.5	M20x1.5/M25x1.5	31
LA71Z	478.5	533.5	139.0	146	90	90	114.5	M20x1.5/M25x1.5	31
LA80	496.5	560.0	156.5	155	90	90	114.0	M20x1.5/M25x1.5	36
LA80Z	519.0	582.5	156.5	155	90	90	187.0	M20x1.5/M25x1.5	40
LA90S/L	527.5	598.5	174.0	163	90	90	114.0	M20x1.5/M25x1.5	40
LA90ZL	572.5	643.5	174.0	163	90	90	238.0	M20x1.5/M25x1.5	46
LA100L	573.5	654.5	195.0	168	120	120	154.5	2xM32x1.5	49
LA100ZL	643.5	724.5	195.0	168	120	120	286.5	2xM32x1.5	59
LA112M	603.0	684.0	219.0	181	120	120	160.0	2xM32x1.5	60
LA112ZM	631.0	712.0	219.0	181	120	120	264.0	2xM32x1.5	67

④ DIN 332 ⑤ Feather key / keyway DIN 6885 ① EN ISO 4014

© Siemens AG 2011

Gearbox CAF48, flange-mounted design

CAF012

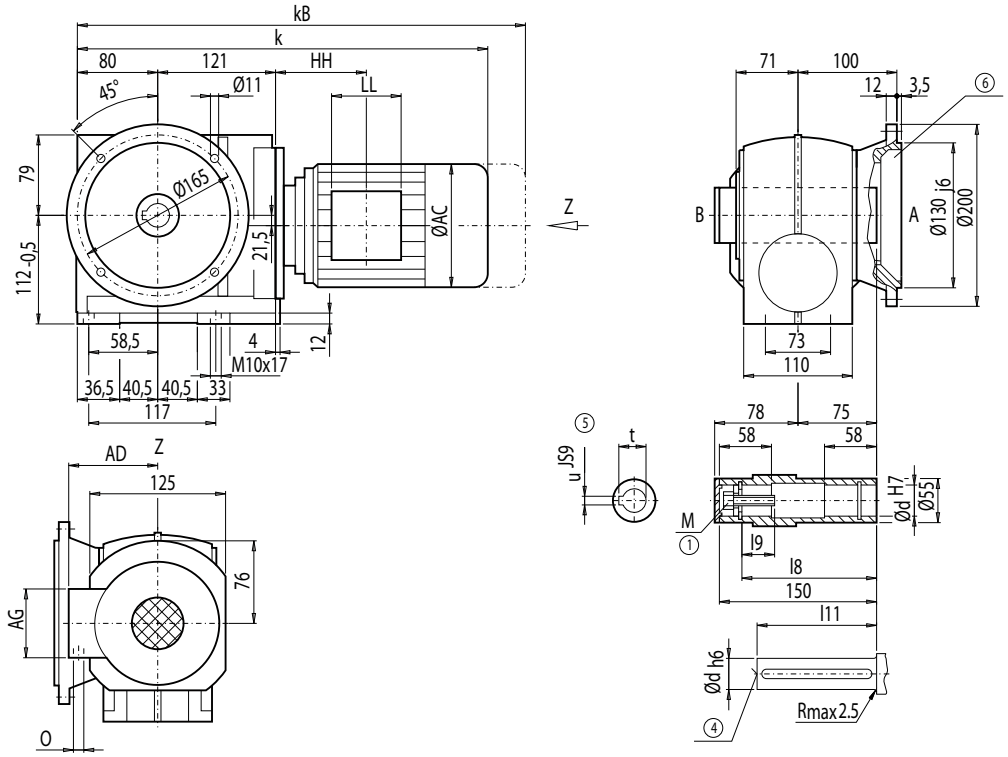

d	l9	l8	l11	M	t	u
30 *)	17	132	127	M10	33.3	8
35	40	128	115	M12	38.3	10
40	48	128	115	M16	43.3	12

*) Preferred series

	CAF48								Weight
Motor	**k**	**kB**	**AC**	**AD**	**AG**	**LL**	**HH**	**O**	**CAF48**
LA71	459.5	514.5	139.0	146	90	90	114.5	M20x1.5/M25x1.5	32
LA71Z	478.5	533.5	139.0	146	90	90	114.5	M20x1.5/M25x1.5	32
LA80	496.5	560.0	156.5	155	90	90	114.0	M20x1.5/M25x1.5	37
LA80Z	519.0	582.5	156.5	155	90	90	187.0	M20x1.5/M25x1.5	41
LA90S/L	527.5	598.5	174.0	163	90	90	114.0	M20x1.5/M25x1.5	42
LA90ZL	572.5	643.5	174.0	163	90	90	238.0	M20x1.5/M25x1.5	48
LA100L	573.5	654.5	195.0	168	120	120	154.5	2xM32x1.5	51
LA100ZL	643.5	724.5	195.0	168	120	120	286.5	2xM32x1.5	61
LA112M	603.0	684.0	219.0	181	120	120	160.0	2xM32x1.5	61
LA112ZM	631.0	712.0	219.0	181	120	120	264.0	2xM32x1.5	68

① EN ISO 4014 ④ DIN 332 ⑤ Feather key / keyway DIN 6885 ⑥ For note, see page 5/108

© Siemens AG 2011

Dimensions

Gearbox CAZ48, shaft-mounted design with housing flange (C-type)

CAZ012

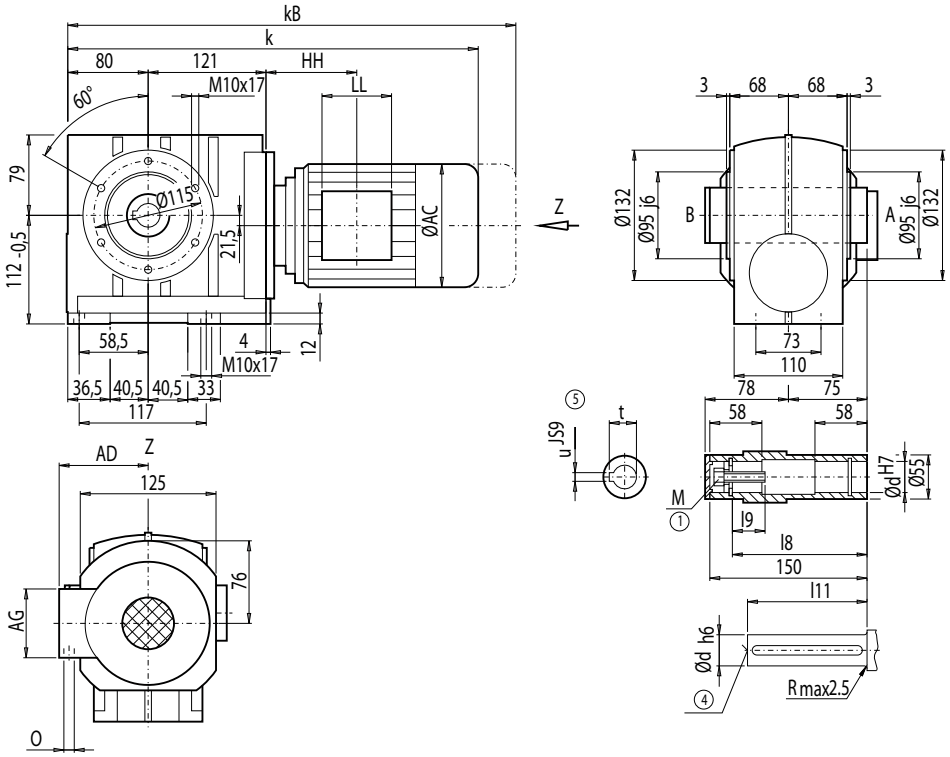

d	l9	l8	l11	M	t	u
30 *)	17	132	127	M10	33.3	8
35	40	128	115	M12	38.3	10
40	48	128	115	M16	43.3	12

*) Preferred series

	CAZ48								Weight
Motor	**k**	**kB**	**AC**	**AD**	**AG**	**LL**	**HH**	**O**	**CAZ48**
LA71	459.5	514.5	139.0	146	90	90	114.5	M20x1.5/M25x1.5	30
LA71Z	478.5	533.5	139.0	146	90	90	114.5	M20x1.5/M25x1.5	30
LA80	496.5	560.0	156.5	155	90	90	114.0	M20x1.5/M25x1.5	34
LA80Z	519.0	582.5	156.5	155	90	90	187.0	M20x1.5/M25x1.5	38
LA90S/L	527.5	598.5	174.0	163	90	90	114.0	M20x1.5/M25x1.5	39
LA90ZL	572.5	643.5	174.0	163	90	90	238.0	M20x1.5/M25x1.5	45
LA100L	573.5	654.5	195.0	168	120	120	154.5	2xM32x1.5	48
LA100ZL	643.5	724.5	195.0	168	120	120	286.5	2xM32x1.5	58
LA112M	603.0	684.0	219.0	181	120	120	160.0	2xM32x1.5	59
LA112ZM	631.0	712.0	219.0	181	120	120	264.0	2xM32x1.5	66

① EN ISO 4014 ④ DIN 332 ⑤ Feather key / keyway DIN 6885

© Siemens AG 2011

Gearbox CAS48, shaft-mounted design with shrink disk

CAS012

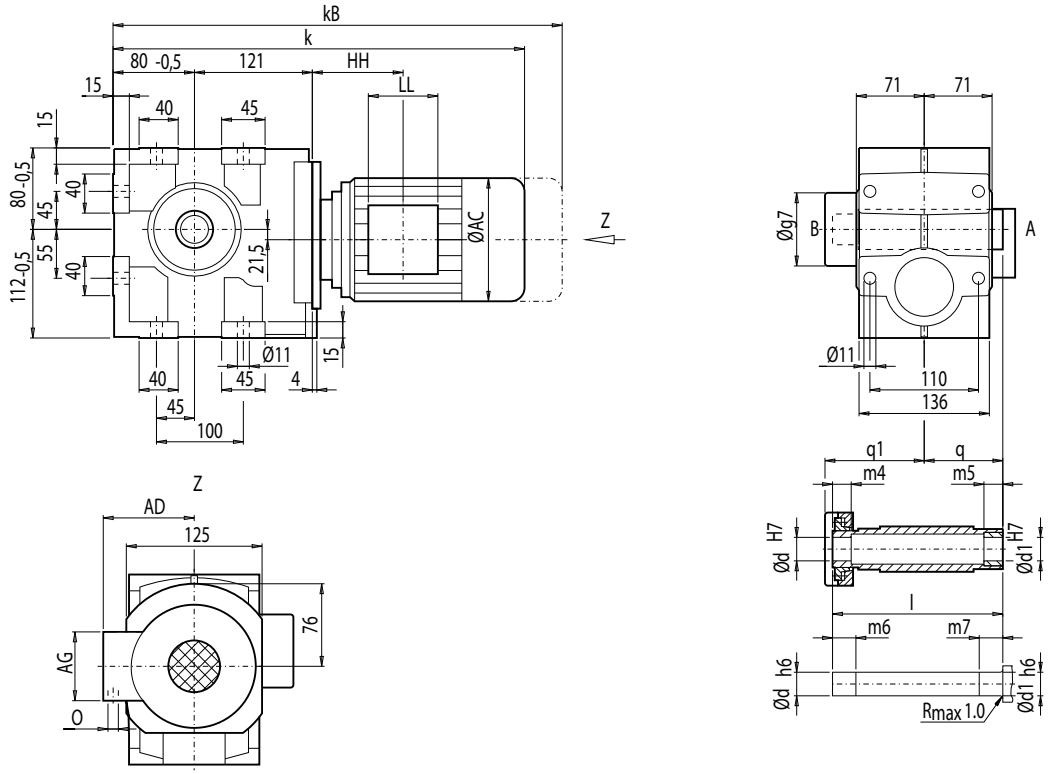

d	d1	l	m4	m5	m6	m7	q1	q	g7
35 *)	35	177	32	20	37	25	109	75	93
40	40	177	25	20	30	25	109	75	93

*) Preferred series

Motor	CAS48 k	kB	AC	AD	AG	LL	HH	O	Weight CAS48
LA71	459.5	514.5	139.0	146	90	90	114.5	M20x1.5/M25x1.5	29
LA71Z	478.5	533.5	139.0	146	90	90	114.5	M20x1.5/M25x1.5	29
LA80	496.5	560.0	156.5	155	90	90	114.0	M20x1.5/M25x1.5	34
LA80Z	519.0	582.5	156.5	155	90	90	187.0	M20x1.5/M25x1.5	38
LA90S/L	527.5	598.5	174.0	163	90	90	114.0	M20x1.5/M25x1.5	38
LA90ZL	572.5	643.5	174.0	163	90	90	238.0	M20x1.5/M25x1.5	44
LA100L	573.5	654.5	195.0	168	120	120	154.5	2xM32x1.5	47
LA100ZL	643.5	724.5	195.0	168	120	120	286.5	2xM32x1.5	57
LA112M	603.0	684.0	219.0	181	120	120	160.0	2xM32x1.5	58
LA112ZM	631.0	712.0	219.0	181	120	120	264.0	2xM32x1.5	65

© Siemens AG 2011

Dimensions

Gearbox CADS48, shaft-mounted design with torque arm and shrink disk

CADS012

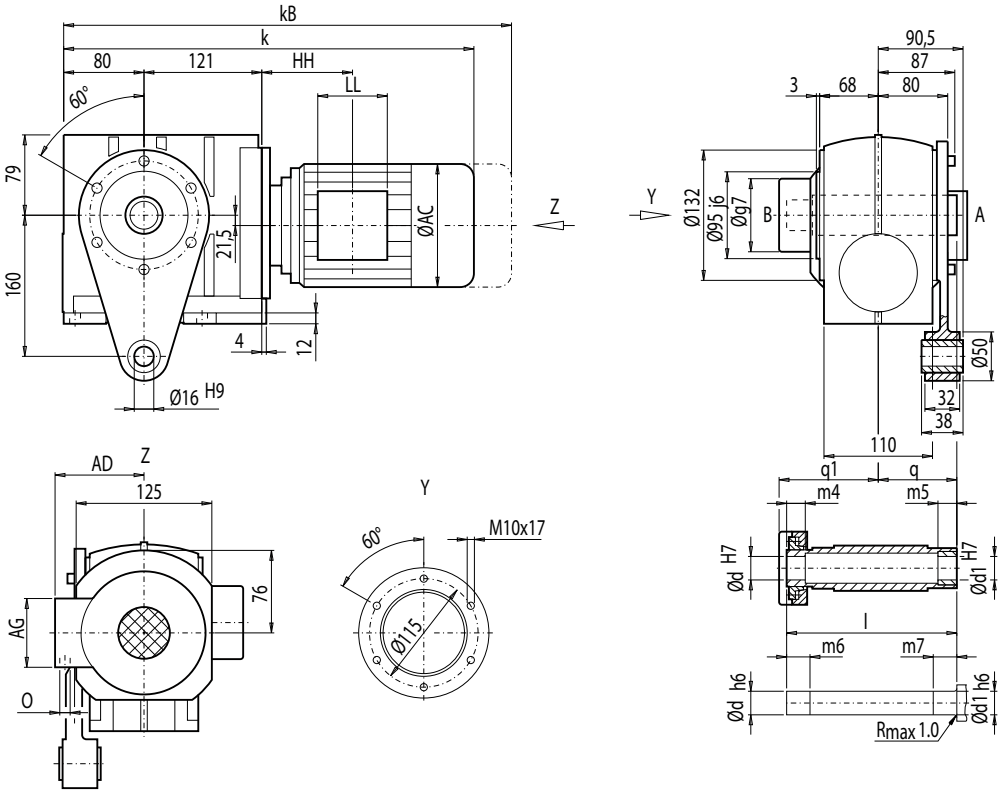

Fig.1

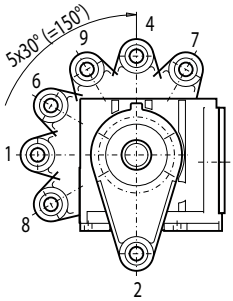

Fig.2

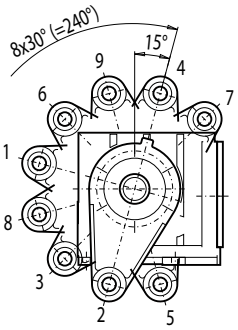

d	d1	l	m4	m5	m6	m7	q1	q	g7
35 *)	35	177	32	20	37	25	109	75	93
40	40	177	25	20	30	25	109	75	93

*) Preferred series

	CADS48								Weight
Motor	**k**	**kB**	**AC**	**AD**	**AG**	**LL**	**HH**	**O**	**CADS48**
LA71	459.5	514.5	139.0	146	90	90	114.5	M20x1.5/M25x1.5	32
LA71Z	478.5	533.5	139.0	146	90	90	114.5	M20x1.5/M25x1.5	32
LA80	496.5	560.0	156.5	155	90	90	114.0	M20x1.5/M25x1.5	37
LA80Z	519.0	582.5	156.5	155	90	90	187.0	M20x1.5/M25x1.5	41
LA90S/L	527.5	598.5	174.0	163	90	90	114.0	M20x1.5/M25x1.5	41
LA90ZL	572.5	643.5	174.0	163	90	90	238.0	M20x1.5/M25x1.5	47
LA100L	573.5	654.5	195.0	168	120	120	154.5	2xM32x1.5	50
LA100ZL	643.5	724.5	195.0	168	120	120	286.5	2xM32x1.5	60
LA112M	603.0	684.0	219.0	181	120	120	160.0	2xM32x1.5	61
LA112ZM	631.0	712.0	219.0	181	120	120	264.0	2xM32x1.5	68

© Siemens AG 2011

Gearbox CAFS48, flange-mounted design and shrink disk

CAFS012

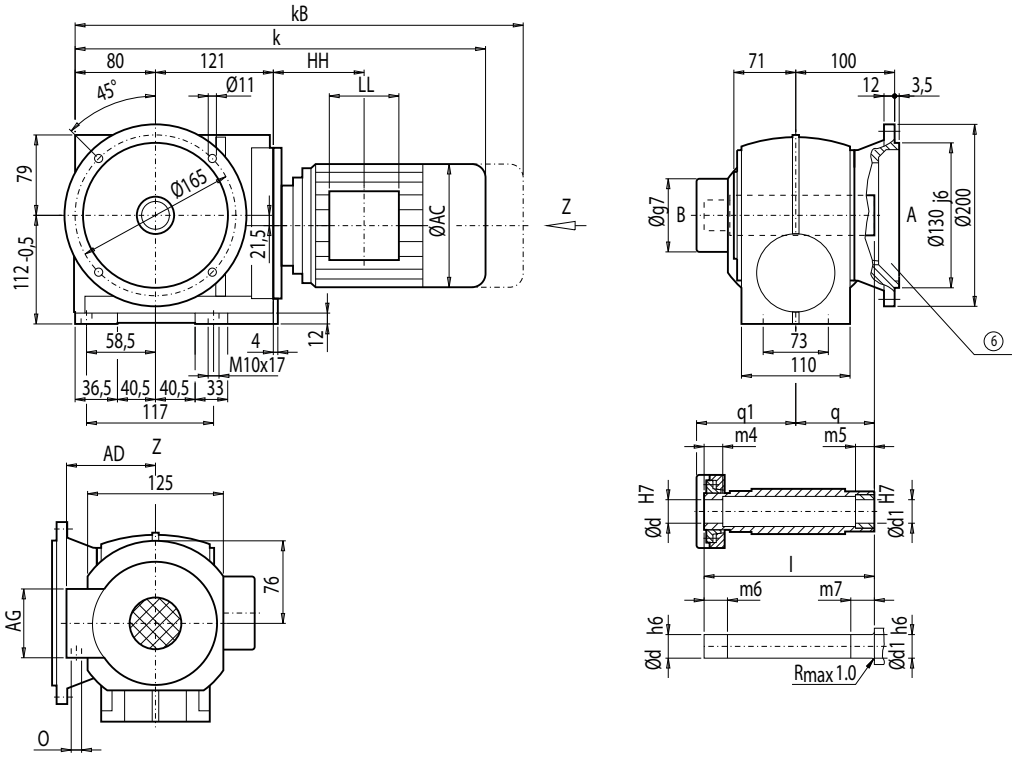

d	d1	l	m4	m5	m6	m7	q1	q	g7
35 *)	35	177	32	20	37	25	109	75	93
40	40	177	25	20	30	25	109	75	93

*) Preferred series

	CAFS48								Weight
Motor	**k**	**kB**	**AC**	**AD**	**AG**	**LL**	**HH**	**O**	**CAFS48**
LA71	459.5	514.5	139.0	146	90	90	114.5	M20x1.5/M25x1.5	33
LA71Z	478.5	533.5	139.0	146	90	90	114.5	M20x1.5/M25x1.5	33
LA80	496.5	560.0	156.5	155	90	90	114.0	M20x1.5/M25x1.5	38
LA80Z	519.0	582.5	156.5	155	90	90	187.0	M20x1.5/M25x1.5	42
LA90S/L	527.5	598.5	174.0	163	90	90	114.0	M20x1.5/M25x1.5	42
LA90ZL	572.5	643.5	174.0	163	90	90	238.0	M20x1.5/M25x1.5	48
LA100L	573.5	654.5	195.0	168	120	120	154.5	2xM32x1.5	52
LA100ZL	643.5	724.5	195.0	168	120	120	286.5	2xM32x1.5	62
LA112M	603.0	684.0	219.0	181	120	120	160.0	2xM32x1.5	62
LA112ZM	631.0	712.0	219.0	181	120	120	264.0	2xM32x1.5	69

⑥ For note, see page 5/108

© Siemens AG 2011

Dimensions

Gearbox CAZS48, shaft-mounted design with housing flange (C-type) and shrink disk

CAZS012

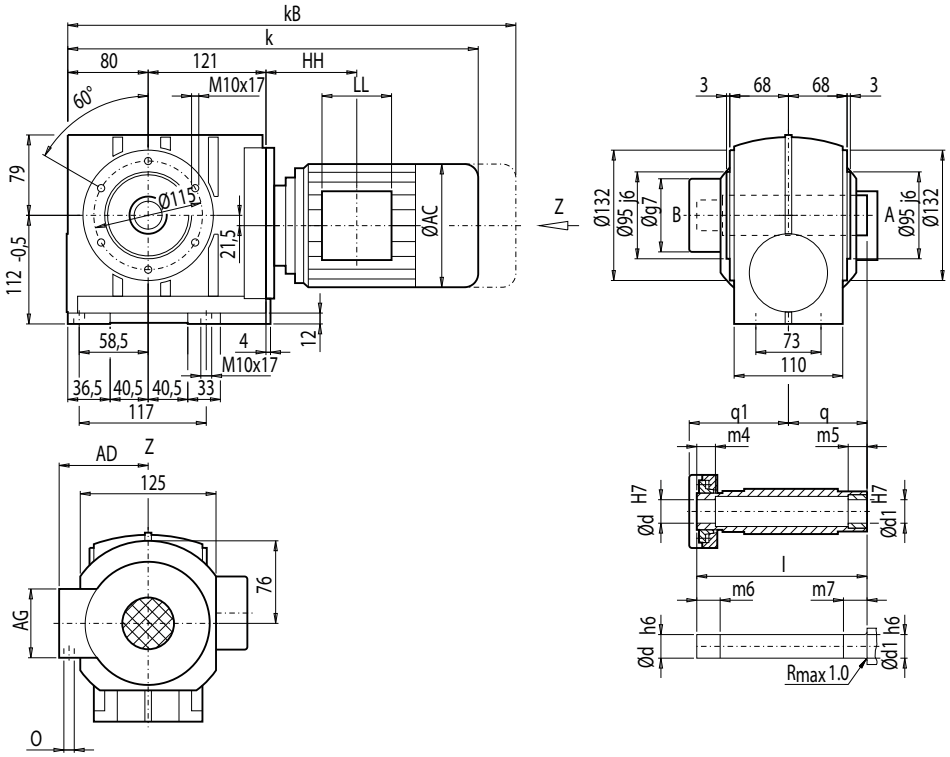

d	d1	l	m4	m5	m6	m7	q1	q	g7
35 *)	35	177	32	20	37	25	109	75	93
40	40	177	25	20	30	25	109	75	93

*) Preferred series

	CAZS48								Weight
Motor	**k**	**kB**	**AC**	**AD**	**AG**	**LL**	**HH**	**O**	**CAZS48**
LA71	459.5	514.5	139.0	146	90	90	114.5	M20x1.5/M25x1.5	30
LA71Z	478.5	533.5	139.0	146	90	90	114.5	M20x1.5/M25x1.5	30
LA80	496.5	560.0	156.5	155	90	90	114.0	M20x1.5/M25x1.5	35
LA80Z	519.0	582.5	156.5	155	90	90	187.0	M20x1.5/M25x1.5	39
LA90S/L	527.5	598.5	174.0	163	90	90	114.0	M20x1.5/M25x1.5	40
LA90ZL	572.5	643.5	174.0	163	90	90	238.0	M20x1.5/M25x1.5	46
LA100L	573.5	654.5	195.0	168	120	120	154.5	2xM32x1.5	49
LA100ZL	643.5	724.5	195.0	168	120	120	286.5	2xM32x1.5	59
LA112M	603.0	684.0	219.0	181	120	120	160.0	2xM32x1.5	60
LA112ZM	631.0	712.0	219.0	181	120	120	264.0	2xM32x1.5	67

© Siemens AG 2011

Gearbox C68, foot- and housing-flange-mounted designs (C-type)

C012

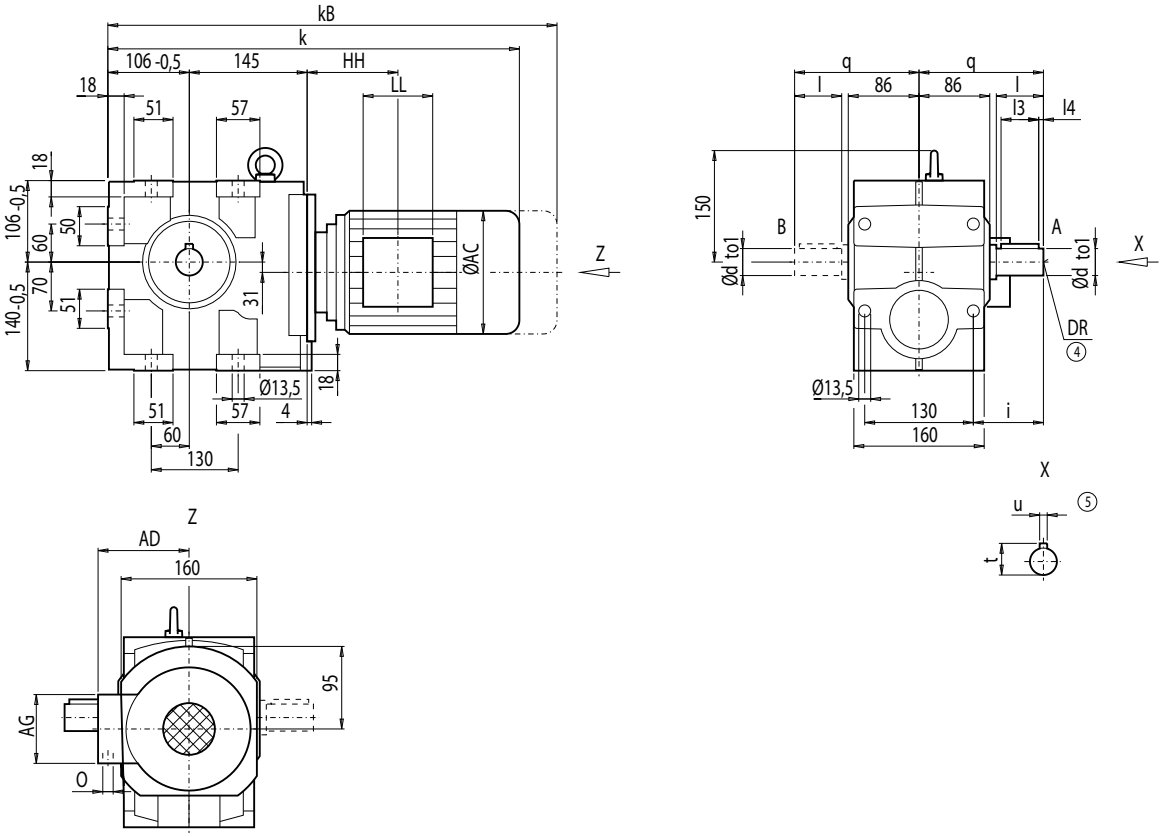

d	to1	l	l3	l4	t	u	i	q	DR
35 *)	k6	70	56	5	38.0	10	95	160	M12x28
40	k6	80	70	5	43.0	12	105	170	M16x36
50	k6	100	80	10	53.5	14	125	190	M16x36

*) Preferred series

	C68								Weight
Motor	**k**	**kB**	**AC**	**AD**	**AG**	**LL**	**HH**	**O**	**C68**
LA71	504.0	559.0	139.0	146	90	90	109.0	M20x1.5/M25x1.5	46
LA71Z	523.0	578.0	139.0	146	90	90	109.0	M20x1.5/M25x1.5	46
LA80	541.0	604.5	156.5	155	90	90	108.5	M20x1.5/M25x1.5	51
LA80Z	563.5	627.0	156.5	155	90	90	181.5	M20x1.5/M25x1.5	55
LA90S/L	572.0	643.0	174.0	163	90	90	108.5	M20x1.5/M25x1.5	56
LA90ZL	617.0	688.0	174.0	163	90	90	232.5	M20x1.5/M25x1.5	62
LA100L	618.0	699.0	195.0	168	120	120	149.0	2xM32x1.5	65
LA100ZL	688.0	769.0	195.0	168	120	120	281.0	2xM32x1.5	75
LA112M	647.0	728.0	219.0	181	120	120	154.0	2xM32x1.5	76
LA112ZM	675.0	756.0	219.0	181	120	120	258.0	2xM32x1.5	83
LA132S/M	709.0	811.0	259.0	195	140	140	196.5	2xM32x1.5	86
LA132ZM	755.0	857.0	259.0	195	140	140	304.5	2xM32x1.5	107

④ DIN 332

⑤ Feather key / keyway DIN 6885

© Siemens AG 2011

Dimensions

Gearbox CF68, flange-mounted design (A-type)

CF012

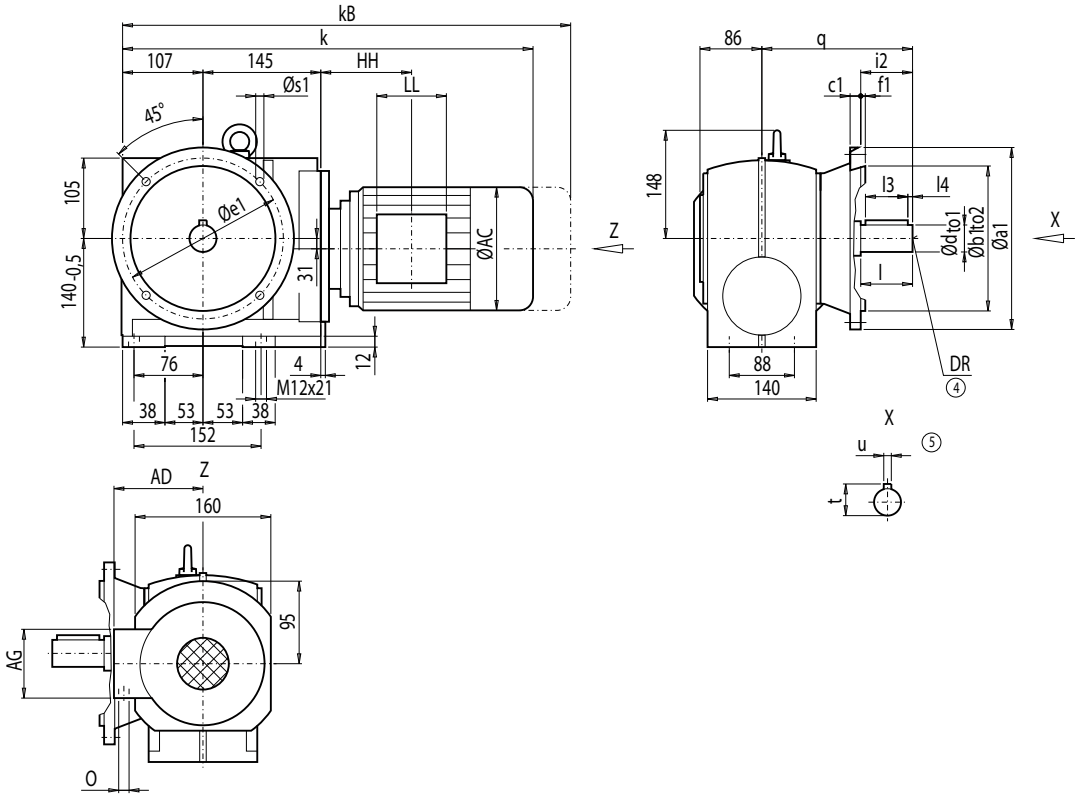

Flange	a1	b1	to2	c1	e1	f1	s1	d	to1	l	l3	l4	t	u	i2	q	DR
A200	200	130	j6	12	165	4	11.0	35 *)	k6	70	56	5	38	10	70	202.5	M12x28
A250	250	180	j6	15	215	4	13.5	40	k6	80	70	5	43	12	80	193.0	M16x36

*) Preferred series

	CF68								Weight
Motor	**k**	**kB**	**AC**	**AD**	**AG**	**LL**	**HH**	**O**	**CF68**
LA71	505.0	560.0	139.0	146	90	90	109.0	M20x1.5/M25x1.5	55
LA71Z	524.0	579.0	139.0	146	90	90	109.0	M20x1.5/M25x1.5	55
LA80	542.0	605.5	156.5	155	90	90	108.5	M20x1.5/M25x1.5	60
LA80Z	564.5	628.0	156.5	155	90	90	181.5	M20x1.5/M25x1.5	64
LA90S/L	573.0	644.0	174.0	163	90	90	108.5	M20x1.5/M25x1.5	65
LA90ZL	618.0	689.0	174.0	163	90	90	232.5	M20x1.5/M25x1.5	71
LA100L	619.0	700.0	195.0	168	120	120	149.0	2xM32x1.5	74
LA100ZL	689.0	770.0	195.0	168	120	120	281.0	2xM32x1.5	84
LA112M	648.0	729.0	219.0	181	120	120	154.0	2xM32x1.5	85
LA112ZM	676.0	757.0	219.0	181	120	120	258.0	2xM32x1.5	92
LA132S/M	710.5	812.5	259.0	195	140	140	196.5	2xM32x1.5	95
LA132ZM	756.5	858.5	259.0	195	140	140	304.5	2xM32x1.5	116

④ DIN 332

⑤ Feather key / keyway DIN 6885

© Siemens AG 2011

Gearbox CA68, shaft-mounted design

CA012

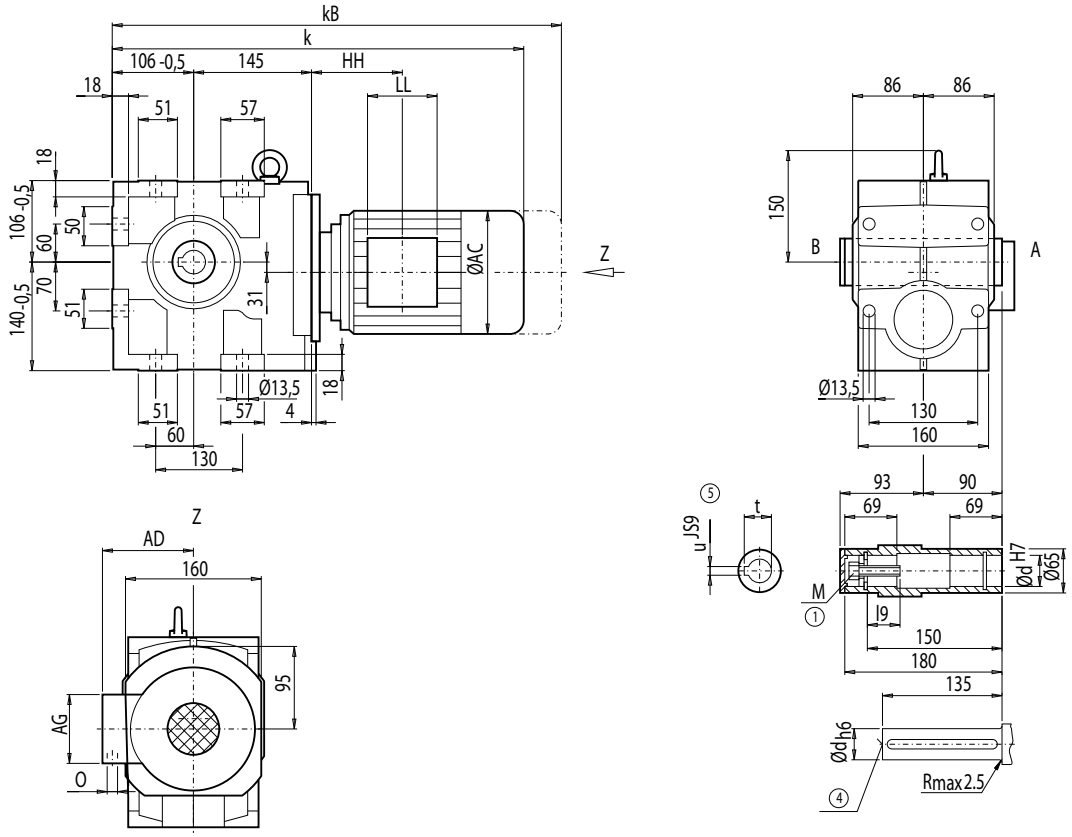

d	l9	M	t	u
40 *)	48	M16	43.3	12
45	47	M16	48.3	14

*) Preferred series

Motor	CA68 k	kB	AC	AD	AG	LL	HH	O	Weight CA68
LA71	504.0	559.0	139.0	146	90	90	109.0	M20x1.5/M25x1.5	43
LA71Z	523.0	578.0	139.0	146	90	90	109.0	M20x1.5/M25x1.5	43
LA80	541.0	604.5	156.5	155	90	90	108.5	M20x1.5/M25x1.5	48
LA80Z	563.5	627.0	156.5	155	90	90	181.5	M20x1.5/M25x1.5	52
LA90S/L	572.0	643.0	174.0	163	90	90	108.5	M20x1.5/M25x1.5	52
LA90ZL	617.0	688.0	174.0	163	90	90	232.5	M20x1.5/M25x1.5	58
LA100L	618.0	699.0	195.0	168	120	120	149.0	2xM32x1.5	61
LA100ZL	688.0	769.0	195.0	168	120	120	281.0	2xM32x1.5	71
LA112M	647.0	728.0	219.0	181	120	120	154.0	2xM32x1.5	73
LA112ZM	675.0	756.0	219.0	181	120	120	258.0	2xM32x1.5	80
LA132S/M	709.0	811.0	259.0	195	140	140	196.5	2xM32x1.5	83
LA132ZM	755.0	857.0	259.0	195	140	140	304.5	2xM32x1.5	104

④ DIN 332 ⑤ Feather key / keyway DIN 6885 ① EN ISO 4014

© Siemens AG 2011

Dimensions

Gearbox CAD68, shaft-mounted design with torque arm

CAD012

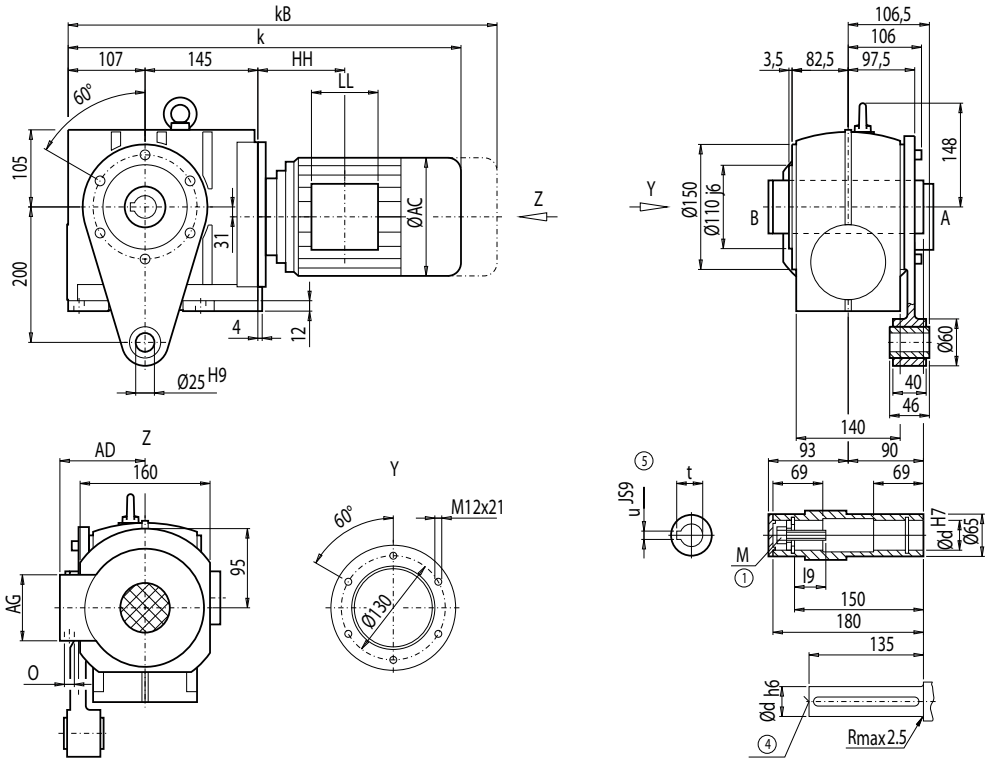

Fig.1

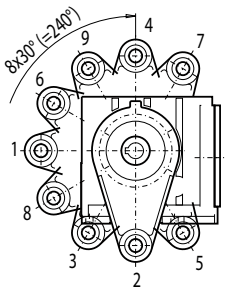

Fig.2

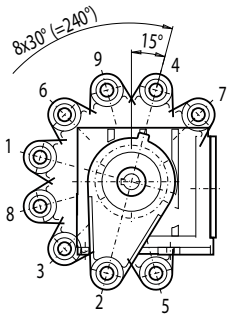

d	l9	M	t	u
40 *)	48	M16	43.3	12
45	47	M16	48.3	14

*) Preferred series

	CAD68								Weight
Motor	**k**	**kB**	**AC**	**AD**	**AG**	**LL**	**HH**	**O**	**CAD68**
LA71	505.0	560.0	139.0	146	90	90	109.0	M20x1.5/M25x1.5	48
LA71Z	524.0	579.0	139.0	146	90	90	109.0	M20x1.5/M25x1.5	48
LA80	542.0	605.5	156.5	155	90	90	108.5	M20x1.5/M25x1.5	53
LA80Z	564.5	628.0	156.5	155	90	90	181.5	M20x1.5/M25x1.5	57
LA90S/L	573.0	644.0	174.0	163	90	90	108.5	M20x1.5/M25x1.5	57
LA90ZL	618.0	689.0	174.0	163	90	90	232.5	M20x1.5/M25x1.5	63
LA100L	619.0	700.0	195.0	168	120	120	149.0	2xM32x1.5	67
LA100ZL	689.0	770.0	195.0	168	120	120	281.0	2xM32x1.5	77
LA112M	648.0	729.0	219.0	181	120	120	154.0	2xM32x1.5	78
LA112ZM	676.0	757.0	219.0	181	120	120	258.0	2xM32x1.5	85
LA132S/M	710.5	812.5	259.0	195	140	140	196.5	2xM32x1.5	88
LA132ZM	756.5	858.5	259.0	195	140	140	304.5	2xM32x1.5	109

④ DIN 332 ⑤ Feather key / keyway DIN 6885 ① EN ISO 4014

© Siemens AG 2011

Gearbox CAF68, flange-mounted design

CAF012

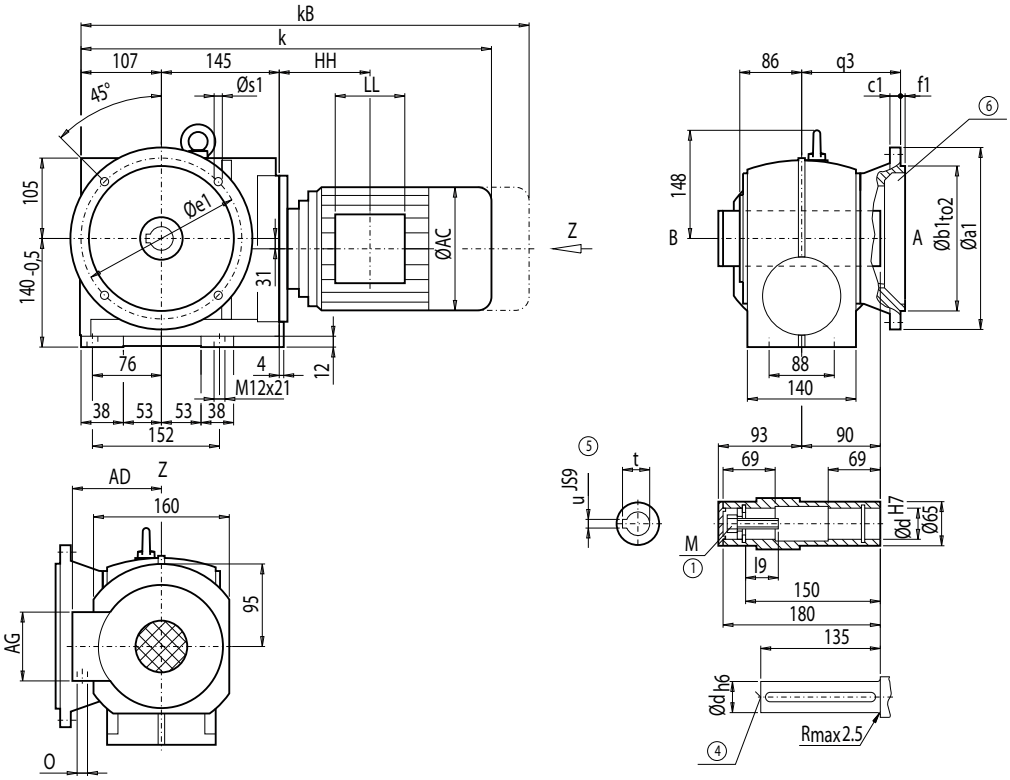

Flange	a1	b1	to2	c1	e1	f1	s1	q3	d	l9	M	t	u
A200	200	130	j6	12	165	4	11.0	132.5	40 *)	48	M16	43.3	12
									45	47	M16	48.3	14
A250	250	180	j6	15	215	4	13.5	113.0	40 *)	48	M16	43.3	12
									45	47	M16	48.3	14

*) Preferred series

	CAF68								Weight
Motor	**k**	**kB**	**AC**	**AD**	**AG**	**LL**	**HH**	**O**	**CAF68**
LA71	505.0	560.0	139.0	146	90	90	109.0	M20x1.5/M25x1.5	52
LA71Z	524.0	579.0	139.0	146	90	90	109.0	M20x1.5/M25x1.5	52
LA80	542.0	605.5	156.5	155	90	90	108.5	M20x1.5/M25x1.5	57
LA80Z	564.5	628.0	156.5	155	90	90	181.5	M20x1.5/M25x1.5	61
LA90S/L	573.0	644.0	174.0	163	90	90	108.5	M20x1.5/M25x1.5	61
LA90ZL	618.0	689.0	174.0	163	90	90	232.5	M20x1.5/M25x1.5	68
LA100L	619.0	700.0	195.0	168	120	120	149.0	2xM32x1.5	70
LA100ZL	689.0	770.0	195.0	168	120	120	281.0	2xM32x1.5	80
LA112M	648.0	729.0	219.0	181	120	120	154.0	2xM32x1.5	82
LA112ZM	676.0	757.0	219.0	181	120	120	258.0	2xM32x1.5	89
LA132S/M	710.5	812.5	259.0	195	140	140	196.5	2xM32x1.5	92
LA132ZM	756.5	858.5	259.0	195	140	140	304.5	2xM32x1.5	113

④ DIN 332 ⑤ Feather key / keyway DIN 6885 ① EN ISO 4014 ⑥ For note, see page 5/108

© Siemens AG 2011

Dimensions

Gearbox CAZ68, shaft-mounted design with housing flange (C-type)

CAZ012

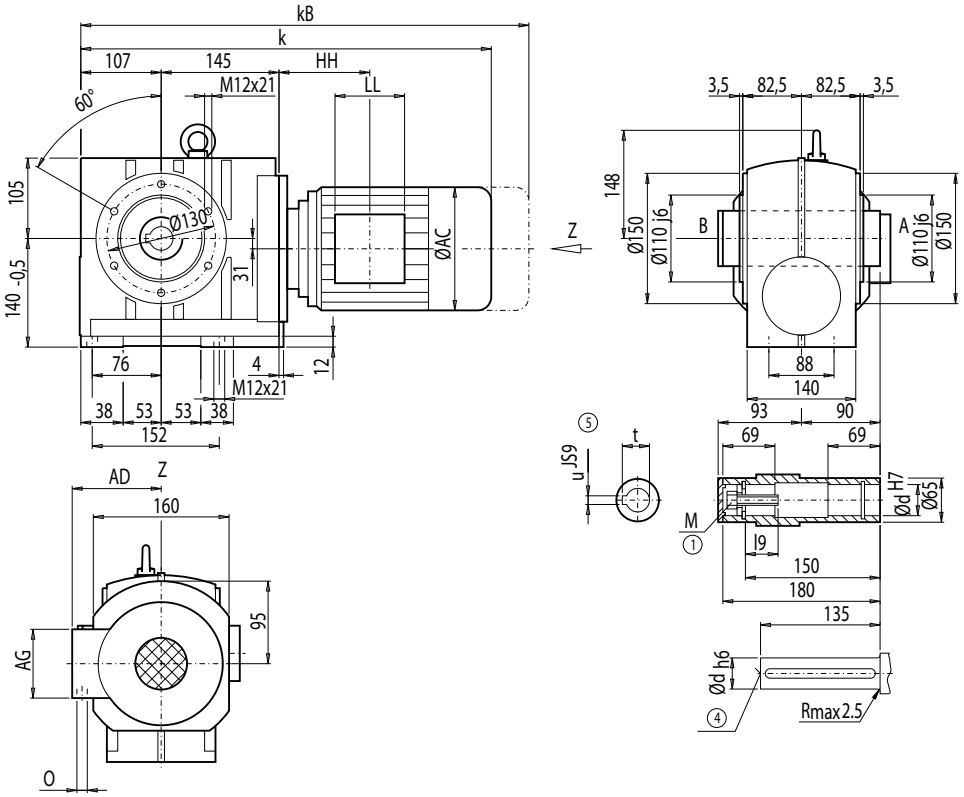

d	l9	M	t	u
40 *)	48	M16	43.3	12
45	47	M16	48.3	14

*) Preferred series

Motor	CAZ68 k	kB	AC	AD	AG	LL	HH	O	Weight CAZ68
LA71	505.0	560.0	139.0	146	90	90	109.0	M20x1.5/M25x1.5	47
LA71Z	524.0	579.0	139.0	146	90	90	109.0	M20x1.5/M25x1.5	47
LA80	542.0	605.5	156.5	155	90	90	108.5	M20x1.5/M25x1.5	52
LA80Z	564.5	628.0	156.5	155	90	90	181.5	M20x1.5/M25x1.5	56
LA90S/L	573.0	644.0	174.0	163	90	90	108.5	M20x1.5/M25x1.5	57
LA90ZL	618.0	689.0	174.0	163	90	90	232.5	M20x1.5/M25x1.5	63
LA100L	619.0	700.0	195.0	168	120	120	149.0	2xM32x1.5	66
LA100ZL	689.0	770.0	195.0	168	120	120	281.0	2xM32x1.5	76
LA112M	648.0	729.0	219.0	181	120	120	154.0	2xM32x1.5	77
LA112ZM	676.0	757.0	219.0	181	120	120	258.0	2xM32x1.5	84
LA132S/M	710.5	812.5	259.0	195	140	140	196.5	2xM32x1.5	87
LA132ZM	756.5	858.5	259.0	195	140	140	304.5	2xM32x1.5	108

① EN ISO 4014 ④ DIN 332 ⑤ Feather key / keyway DIN 6885

© Siemens AG 2011

Gearbox CAS68, shaft-mounted design with shrink disk

CAS012

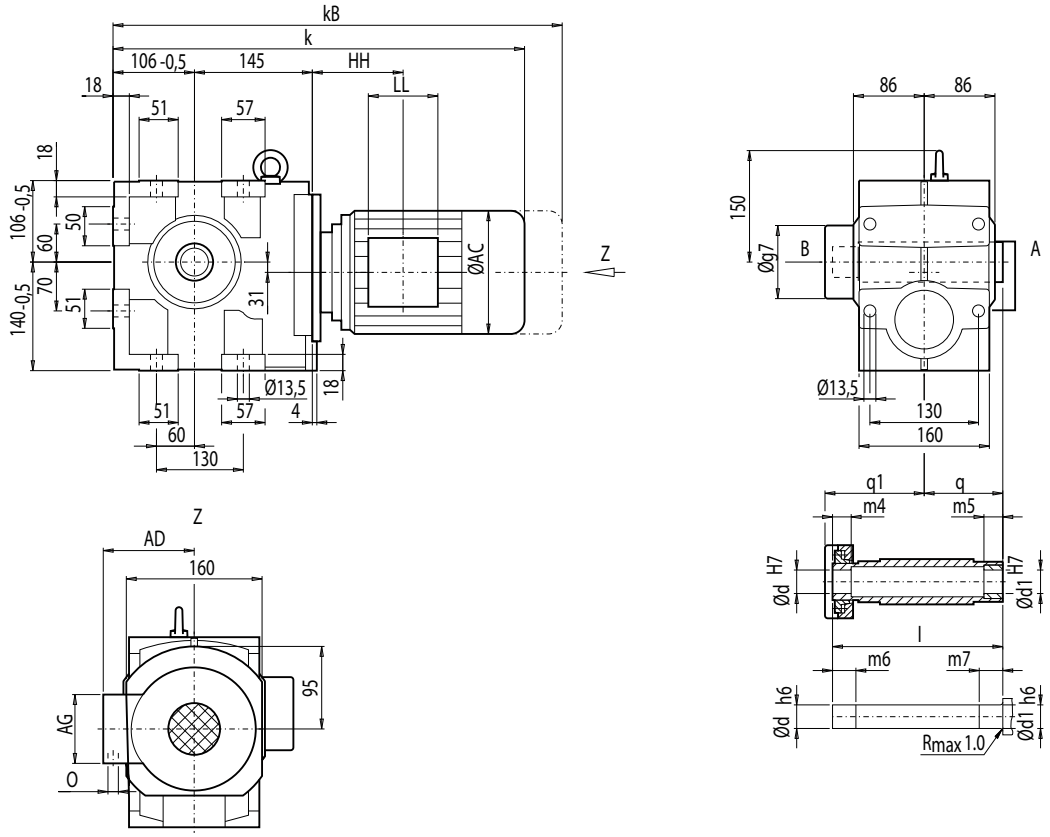

d	d1	l	m4	m5	m6	m7	q1	q	g7
40 *)	40	209	35	20	40	25	126	90	112
50	50	209	27	20	32	25	126	90	112

*) Preferred series

	CAS68								Weight
Motor	**k**	**kB**	**AC**	**AD**	**AG**	**LL**	**HH**	**O**	**CAS68**
LA71	505.0	560.0	139.0	146	90	90	109.0	M20x1.5/M25x1.5	44
LA71Z	524.0	579.0	139.0	146	90	90	109.0	M20x1.5/M25x1.5	44
LA80	542.0	605.5	156.5	155	90	90	108.5	M20x1.5/M25x1.5	49
LA80Z	564.5	628.0	156.5	155	90	90	181.5	M20x1.5/M25x1.5	53
LA90S/L	573.0	644.0	174.0	163	90	90	108.5	M20x1.5/M25x1.5	54
LA90ZL	618.0	689.0	174.0	163	90	90	232.5	M20x1.5/M25x1.5	60
LA100L	619.0	700.0	195.0	168	120	120	149.0	2xM32x1.5	63
LA100ZL	689.0	770.0	195.0	168	120	120	281.0	2xM32x1.5	73
LA112M	648.0	729.0	219.0	181	120	120	154.0	2xM32x1.5	74
LA112ZM	676.0	757.0	219.0	181	120	120	258.0	2xM32x1.5	81
LA132S/M	710.5	812.5	259.0	195	140	140	196.5	2xM32x1.5	84
LA132ZM	756.5	858.5	259.0	195	140	140	304.5	2xM32x1.5	105

© Siemens AG 2011

Dimensions

Gearbox CADS68, shaft-mounted design with torque arm and shrink disk

CADS012

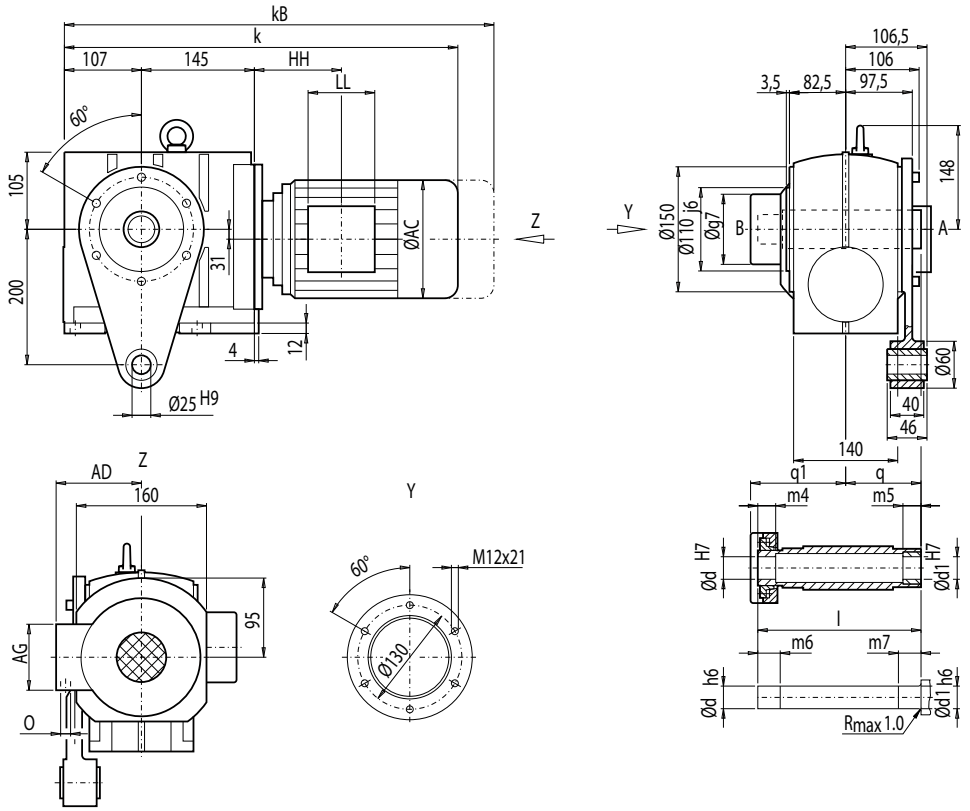

Fig.1

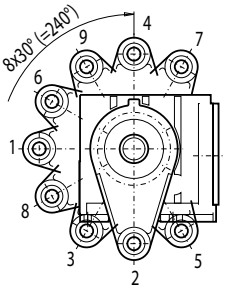

Fig.2

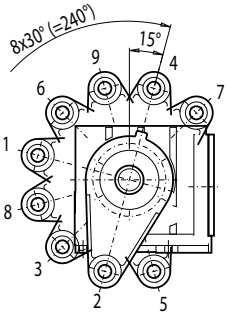

d	d1	l	m4	m5	m6	m7	q1	q	g7
40 *)	40	209	35	20	40	25	126	90	112
50	50	209	27	20	32	25	126	90	112

*) Preferred series

	CADS68								Weight
Motor	**k**	**kB**	**AC**	**AD**	**AG**	**LL**	**HH**	**O**	**CADS68**
LA71	505.0	560.0	139.0	146	90	90	109.0	M20x1.5/M25x1.5	50
LA71Z	524.0	579.0	139.0	146	90	90	109.0	M20x1.5/M25x1.5	50
LA80	542.0	605.5	156.5	155	90	90	108.5	M20x1.5/M25x1.5	55
LA80Z	564.5	628.0	156.5	155	90	90	181.5	M20x1.5/M25x1.5	59
LA90S/L	573.0	644.0	174.0	163	90	90	108.5	M20x1.5/M25x1.5	60
LA90ZL	618.0	689.0	174.0	163	90	90	232.5	M20x1.5/M25x1.5	66
LA100L	619.0	700.0	195.0	168	120	120	149.0	2xM32x1.5	69
LA100ZL	689.0	770.0	195.0	168	120	120	281.0	2xM32x1.5	79
LA112M	648.0	729.0	219.0	181	120	120	154.0	2xM32x1.5	80
LA112ZM	676.0	757.0	219.0	181	120	120	258.0	2xM32x1.5	87
LA132S/M	710.5	812.5	259.0	195	140	140	196.5	2xM32x1.5	90
LA132ZM	756.5	858.5	259.0	195	140	140	304.5	2xM32x1.5	111

© Siemens AG 2011

Gearbox CAFS68, flange-mounted design and shrink disk

CAFS012

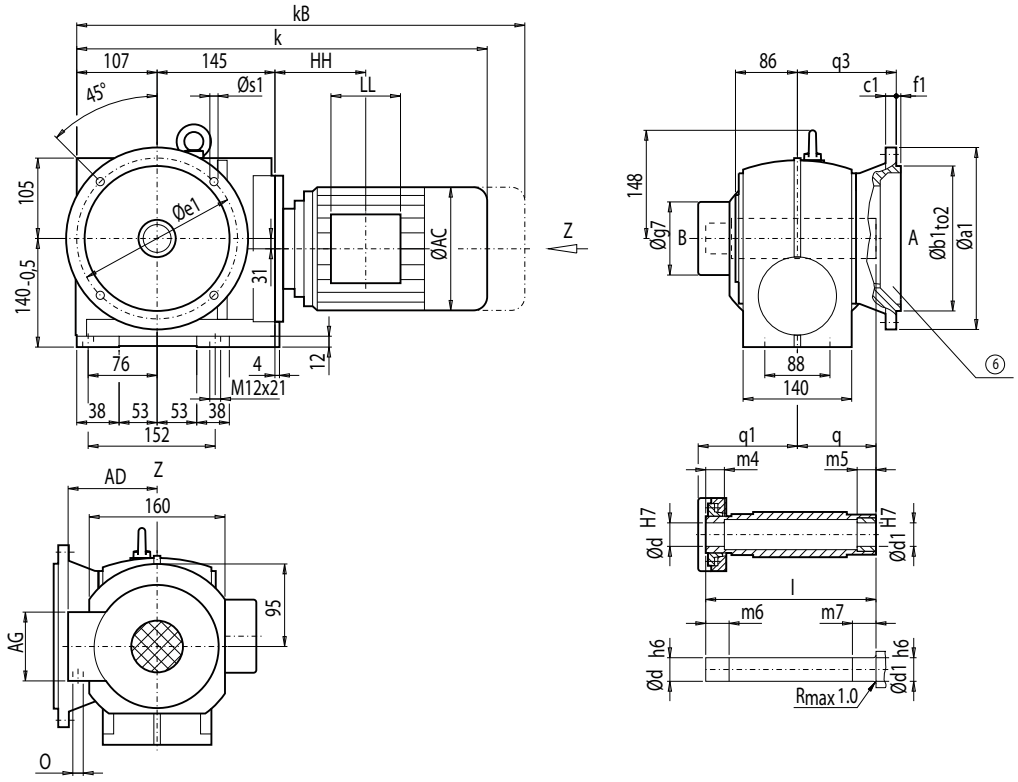

Flange	a1	b1	to2	c1	e1	f1	s1	q3	d	d1	l	m4	m5	m6	m7	q1	q	g7
A200	200	130	j6	12	165	4	11.0	132.5	40 *)	40	209	35	20	40	25	126	90	112
									50	50	209	27	20	32	25	126	90	112
A250	250	180	j6	15	215	4	13.5	113.0	40 *)	40	209	35	20	40	25	126	90	112
									50	50	209	27	20	32	25	126	90	112

*) Preferred series

	CAFS68								Weight
Motor	**k**	**kB**	**AC**	**AD**	**AG**	**LL**	**HH**	**O**	**CAFS68**
LA71	505.0	560.0	139.0	146	90	90	109.0	M20x1.5/M25x1.5	53
LA71Z	524.0	579.0	139.0	146	90	90	109.0	M20x1.5/M25x1.5	53
LA80	542.0	605.5	156.5	155	90	90	108.5	M20x1.5/M25x1.5	58
LA80Z	564.5	628.0	156.5	155	90	90	181.5	M20x1.5/M25x1.5	62
LA90S/L	573.0	644.0	174.0	163	90	90	108.5	M20x1.5/M25x1.5	63
LA90ZL	618.0	689.0	174.0	163	90	90	232.5	M20x1.5/M25x1.5	69
LA100L	619.0	700.0	195.0	168	120	120	149.0	2xM32x1.5	72
LA100ZL	689.0	770.0	195.0	168	120	120	281.0	2xM32x1.5	82
LA112M	648.0	729.0	219.0	181	120	120	154.0	2xM32x1.5	83
LA112ZM	676.0	757.0	219.0	181	120	120	258.0	2xM32x1.5	90
LA132S/M	710.5	812.5	259.0	195	140	140	196.5	2xM32x1.5	93
LA132ZM	756.5	858.5	259.0	195	140	140	304.5	2xM32x1.5	114

⑥ For note, see page 5/108

© Siemens AG 2011

Dimensions

Gearbox CAZS68, shaft-mounted design with housing flange (C-type) and shrink disk

CAZS012

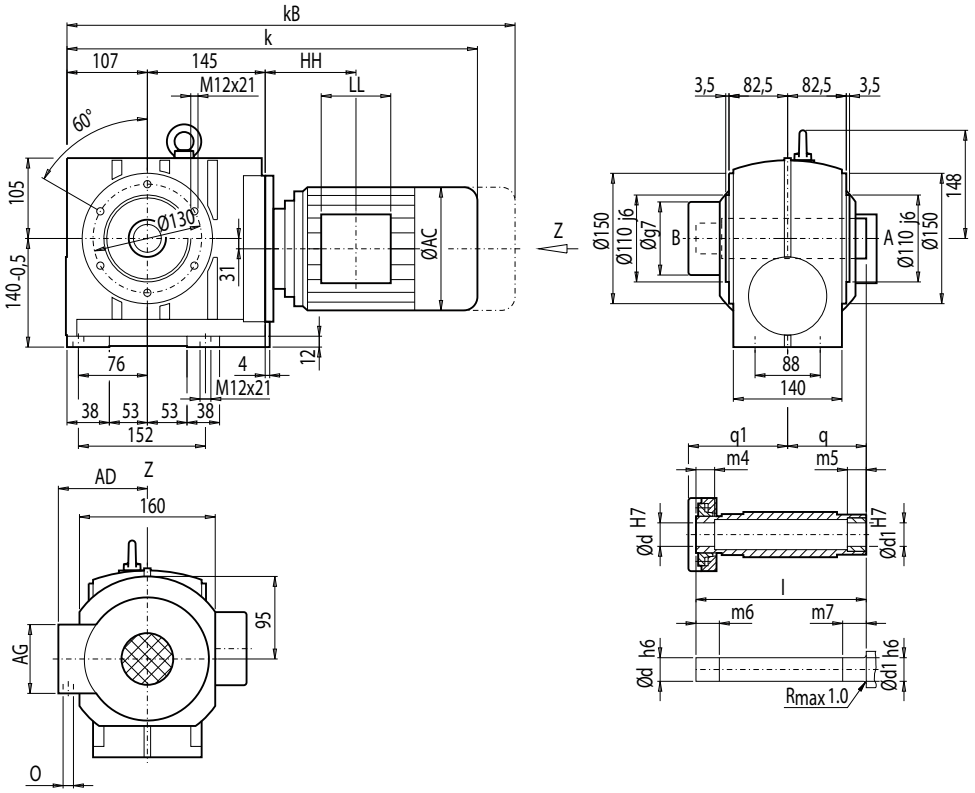

d	d1	l	m4	m5	m6	m7	q1	q	g7
40 *)	40	209	35	20	40	25	126	90	112
50	50	209	27	20	32	25	126	90	112

*) Preferred series

	CAZS68								Weight
Motor	**k**	**kB**	**AC**	**AD**	**AG**	**LL**	**HH**	**O**	**CAZS68**
LA71	505.0	560.0	139.0	146	90	90	109.0	M20x1.5/M25x1.5	49
LA71Z	524.0	579.0	139.0	146	90	90	109.0	M20x1.5/M25x1.5	49
LA80	542.0	605.5	156.5	155	90	90	108.5	M20x1.5/M25x1.5	53
LA80Z	564.5	628.0	156.5	155	90	90	181.5	M20x1.5/M25x1.5	57
LA90S/L	573.0	644.0	174.0	163	90	90	108.5	M20x1.5/M25x1.5	58
LA90ZL	618.0	689.0	174.0	163	90	90	232.5	M20x1.5/M25x1.5	64
LA100L	619.0	700.0	195.0	168	120	120	149.0	2xM32x1.5	67
LA100ZL	689.0	770.0	195.0	168	120	120	281.0	2xM32x1.5	77
LA112M	648.0	729.0	219.0	181	120	120	154.0	2xM32x1.5	79
LA112ZM	676.0	757.0	219.0	181	120	120	258.0	2xM32x1.5	86
LA132S/M	710.5	812.5	259.0	195	140	140	196.5	2xM32x1.5	89
LA132ZM	756.5	858.5	259.0	195	140	140	304.5	2xM32x1.5	110

© Siemens AG 2011

Gearbox C88, foot- and housing-flange-mounted designs (C-type)

C012

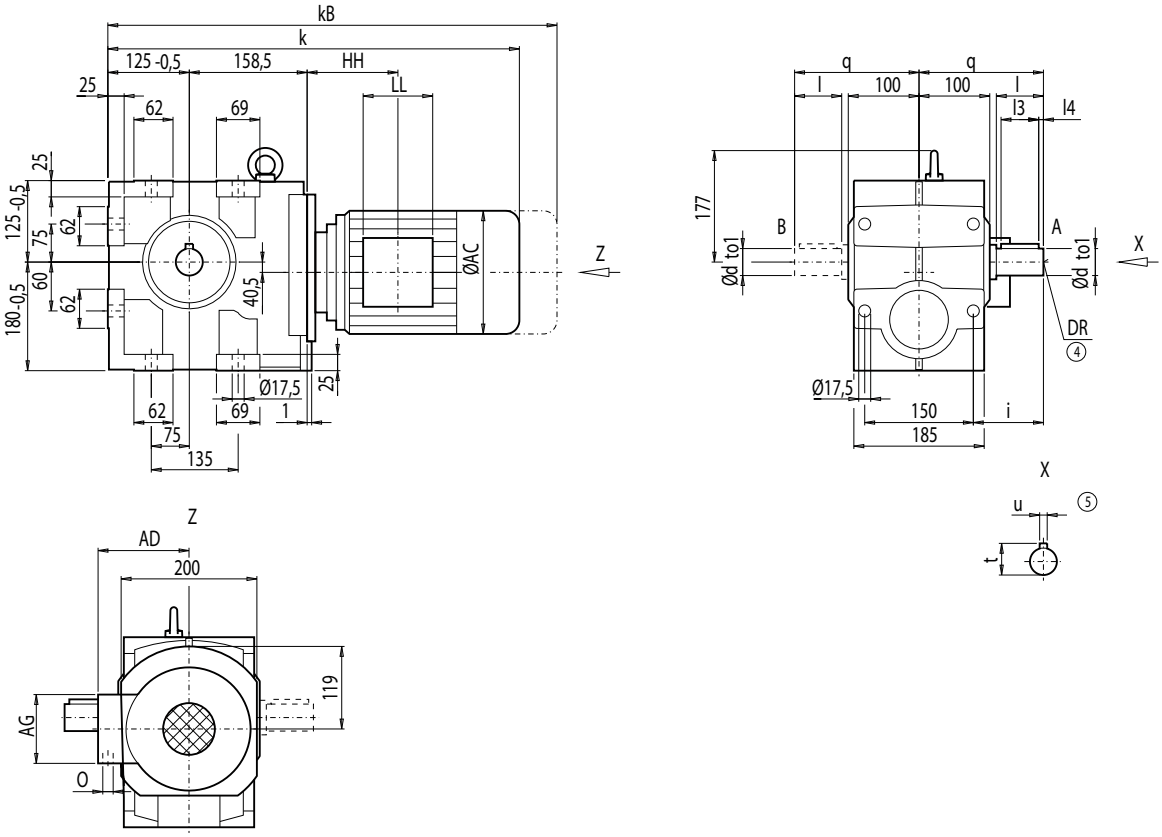

d	to1	l	l3	l4	t	u	i	q	DR
45 *)	k6	90	80	2.5	48.0	14	120	195	M16x36
50	k6	100	80	10.0	53.5	14	130	205	M16x36
70	m6	140	110	15.0	74.5	20	170	245	M20x42

*) Preferred series

	C88								Weight
Motor	**k**	**kB**	**AC**	**AD**	**AG**	**LL**	**HH**	**O**	**C88**
LA71	530.5	585.5	139.0	146	90	90	103.0	M20x1.5/M25x1.5	74
LA71Z	549.5	604.5	139.0	146	90	90	103.0	M20x1.5/M25x1.5	74
LA80	567.5	631.0	156.5	155	90	90	102.5	M20x1.5/M25x1.5	78
LA80Z	590.0	653.5	156.5	155	90	90	175.5	M20x1.5/M25x1.5	82
LA90S/L	598.5	669.5	174.0	163	90	90	102.5	M20x1.5/M25x1.5	83
LA90ZL	643.5	714.5	174.0	163	90	90	226.5	M20x1.5/M25x1.5	89
LA100L	644.5	725.5	195.0	168	120	120	143.0	2xM32x1.5	92
LA100ZL	714.5	795.5	195.0	168	120	120	275.0	2xM32x1.5	102
LA112M	671.5	752.5	219.0	181	120	120	146.0	2xM32x1.5	104
LA112ZM	699.5	780.5	219.0	181	120	120	250.0	2xM32x1.5	111
LA132S/M	731.5	833.5	259.0	195	140	140	186.5	2xM32x1.5	117
LA132ZM	777.5	879.5	259.0	195	140	140	294.5	2xM32x1.5	138
LA160M/L	834.0	952.5	313.5	227	165	165	212.0	2xM40x1.5	150
LA160ZL	882.0	1 000.5	313.5	227	165	165	365.0	2xM40x1.5	189

④ DIN 332

⑤ Feather key / keyway DIN 6885

© Siemens AG 2011

Dimensions

Gearbox CF88, flange-mounted design (A-type)

CF012

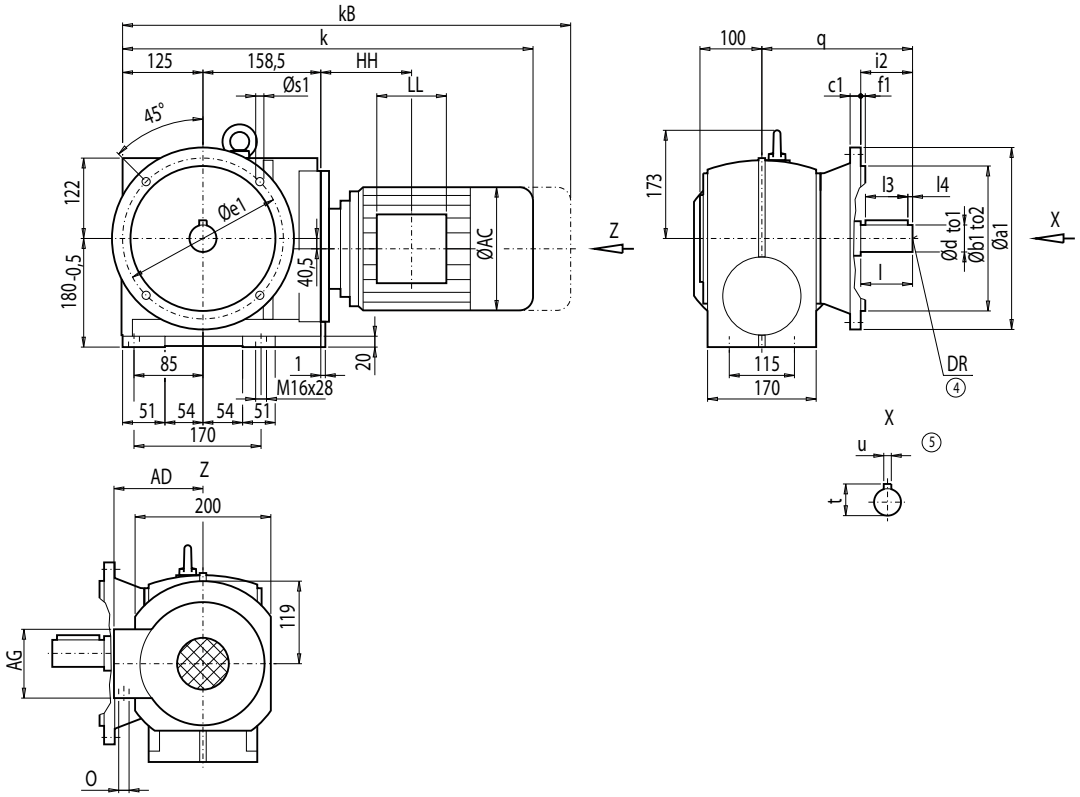

Flange	a1	b1	to2	c1	e1	f1	s1	d	to1	l	l3	l4	t	u	i2	q	DR
A250	250	180	j6	15	215	4	13.5	45 *)	k6	90	80	2.5	48.0	14	90	240.5	M16x36
A300	300	230	j6	16	265	4	13.5	50	k6	100	80	10.0	53.5	14	100	242.0	M16x36

*) Preferred series

	CF88								Weight
Motor	**k**	**kB**	**AC**	**AD**	**AG**	**LL**	**HH**	**O**	**CF88**
LA71	530.5	585.5	139.0	146	90	90	103.0	M20x1.5/M25x1.5	87
LA71Z	549.5	604.5	139.0	146	90	90	103.0	M20x1.5/M25x1.5	87
LA80	567.5	631.0	156.5	155	90	90	102.5	M20x1.5/M25x1.5	92
LA80Z	590.0	653.5	156.5	155	90	90	175.5	M20x1.5/M25x1.5	96
LA90S/L	598.5	669.5	174.0	163	90	90	102.5	M20x1.5/M25x1.5	97
LA90ZL	643.5	714.5	174.0	163	90	90	226.5	M20x1.5/M25x1.5	103
LA100L	644.5	725.5	195.0	168	120	120	143.0	2xM32x1.5	106
LA100ZL	714.5	795.5	195.0	168	120	120	275.0	2xM32x1.5	116
LA112M	671.5	752.5	219.0	181	120	120	146.0	2xM32x1.5	118
LA112ZM	699.5	780.5	219.0	181	120	120	250.0	2xM32x1.5	125
LA132S/M	731.5	833.5	259.0	195	140	140	186.5	2xM32x1.5	131
LA132ZM	777.5	879.5	259.0	195	140	140	294.5	2xM32x1.5	152
LA160M/L	834.0	952.5	313.5	227	165	165	212.0	2xM40x1.5	164
LA160ZL	882.0	1 000.5	313.5	227	165	165	365.0	2xM40x1.5	203

④ DIN 332

⑤ Feather key / keyway DIN 6885

© Siemens AG 2011

Gearbox CA88, shaft-mounted design

CA012

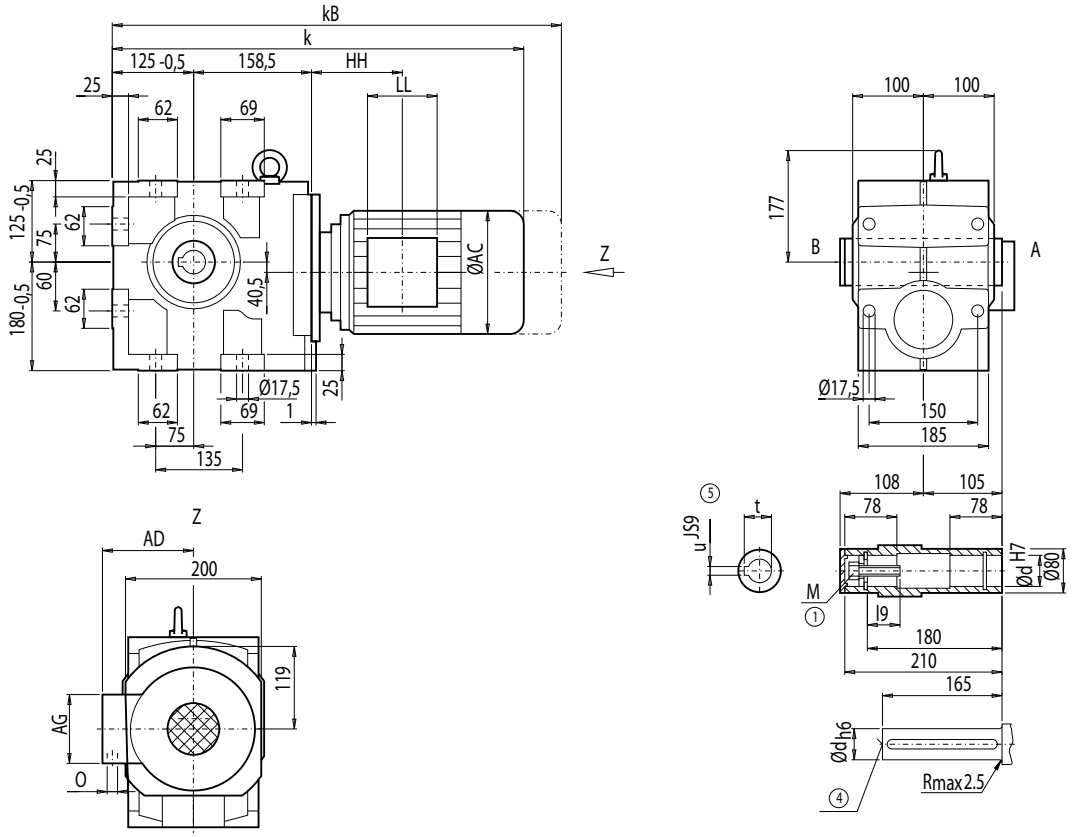

d	l9	M	t	u
50 *)	44.5	M16	53.8	14
60	54.0	M20	64.4	18

*) Preferred series

Motor	CA88 k	kB	AC	AD	AG	LL	HH	O	Weight CA88
LA71	530.5	585.5	139.0	146	90	90	103.0	M20x1.5/M25x1.5	65
LA71Z	549.5	604.5	139.0	146	90	90	103.0	M20x1.5/M25x1.5	65
LA80	567.5	631.0	156.5	155	90	90	102.5	M20x1.5/M25x1.5	70
LA80Z	590.0	653.5	156.5	155	90	90	175.5	M20x1.5/M25x1.5	74
LA90S/L	598.5	669.5	174.0	163	90	90	102.5	M20x1.5/M25x1.5	75
LA90ZL	643.5	714.5	174.0	163	90	90	226.5	M20x1.5/M25x1.5	81
LA100L	644.5	725.5	195.0	168	120	120	143.0	2xM32x1.5	84
LA100ZL	714.5	795.5	195.0	168	120	120	275.0	2xM32x1.5	94
LA112M	671.5	752.5	219.0	181	120	120	146.0	2xM32x1.5	96
LA112ZM	699.5	780.5	219.0	181	120	120	250.0	2xM32x1.5	103
LA132S/M	731.5	833.5	259.0	195	140	140	186.5	2xM32x1.5	109
LA132ZM	777.5	879.5	259.0	195	140	140	294.5	2xM32x1.5	130
LA160M/L	834.0	952.5	313.5	227	165	165	212.0	2xM40x1.5	142
LA160ZL	882.0	1 000.5	313.5	227	165	165	365.0	2xM40x1.5	181

④ DIN 332 ⑤ Feather key / keyway DIN 6885 ① EN ISO 4014

© Siemens AG 2011

Dimensions

Gearbox CAD88, shaft-mounted design with torque arm

CAD012

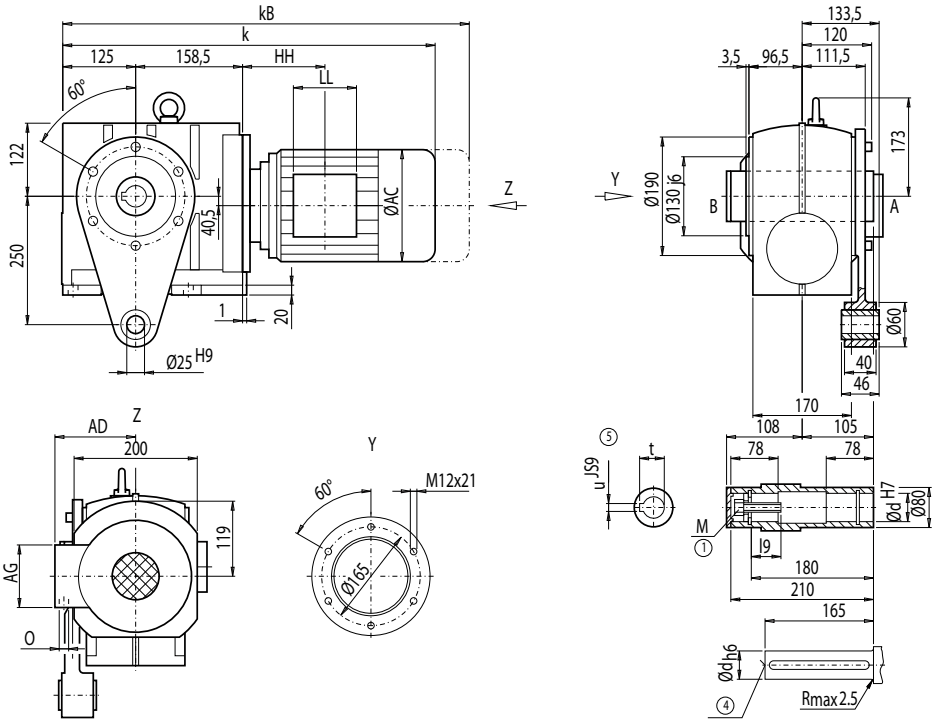

Fig.1

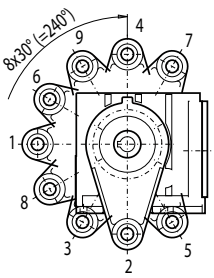

Fig.2

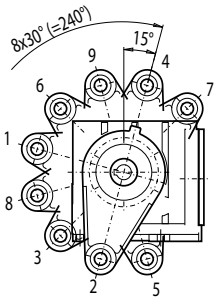

d	l9	M	t	u
50 *)	44.5	M16	53.8	14
60	54.0	M20	64.4	18

*) Preferred series

Motor	CAD88 k	kB	AC	AD	AG	LL	HH	O	Weight CAD88
LA71	530.5	585.5	139.0	146	90	90	103.0	M20x1.5/M25x1.5	75
LA71Z	549.5	604.5	139.0	146	90	90	103.0	M20x1.5/M25x1.5	75
LA80	567.5	631.0	156.5	155	90	90	102.5	M20x1.5/M25x1.5	80
LA80Z	590.0	653.5	156.5	155	90	90	175.5	M20x1.5/M25x1.5	84
LA90S/L	598.5	669.5	174.0	163	90	90	102.5	M20x1.5/M25x1.5	85
LA90ZL	643.5	714.5	174.0	163	90	90	226.5	M20x1.5/M25x1.5	91
LA100L	644.5	725.5	195.0	168	120	120	143.0	2xM32x1.5	94
LA100ZL	714.5	795.5	195.0	168	120	120	275.0	2xM32x1.5	104
LA112M	671.5	752.5	219.0	181	120	120	146.0	2xM32x1.5	106
LA112ZM	699.5	780.5	219.0	181	120	120	250.0	2xM32x1.5	113
LA132S/M	731.5	833.5	259.0	195	140	140	186.5	2xM32x1.5	119
LA132ZM	777.5	879.5	259.0	195	140	140	294.5	2xM32x1.5	140
LA160M/L	834.0	952.5	313.5	227	165	165	212.0	2xM40x1.5	151
LA160ZL	882.0	1 000.5	313.5	227	165	165	365.0	2xM40x1.5	190

④ DIN 332 ⑤ Feather key / keyway DIN 6885 ① EN ISO 4014

© Siemens AG 2011

Gearbox CAF88, flange-mounted design

CAF012

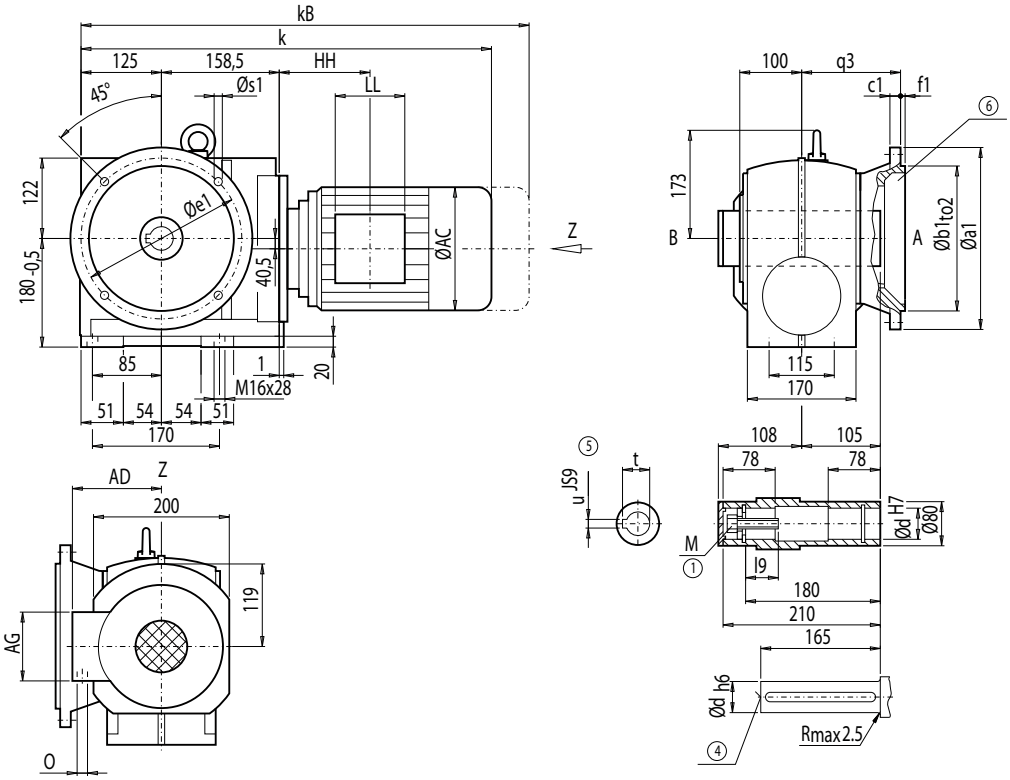

Flange	a1	b1	to2	c1	e1	f1	q3	s1	d	l9	M	t	u
A250	250	180	j6	15	215	4	150.5	13.5	50 *)	44.5	M16	53.8	14
									60	54.0	M20	64.4	18
A300	300	230	j6	16	265	4	142.0	13.5	50*)	44.5	M16	53.8	14
									60	54.0	M20	64.4	18

*) Preferred series

	CAF88								Weight
Motor	**k**	**kB**	**AC**	**AD**	**AG**	**LL**	**HH**	**O**	**CAF88**
LA71	530.5	585.5	139.0	146	90	90	103.0	M20x1.5/M25x1.5	79
LA71Z	549.5	604.5	139.0	146	90	90	103.0	M20x1.5/M25x1.5	79
LA80	567.5	631.0	156.5	155	90	90	102.5	M20x1.5/M25x1.5	84
LA80Z	590.0	653.5	156.5	155	90	90	175.5	M20x1.5/M25x1.5	88
LA90S/L	598.5	669.5	174.0	163	90	90	102.5	M20x1.5/M25x1.5	89
LA90ZL	643.5	714.5	174.0	163	90	90	226.5	M20x1.5/M25x1.5	95
LA100L	644.5	725.5	195.0	168	120	120	143.0	2xM32x1.5	98
LA100ZL	714.5	795.5	195.0	168	120	120	275.0	2xM32x1.5	108
LA112M	671.5	752.5	219.0	181	120	120	146.0	2xM32x1.5	110
LA112ZM	699.5	780.5	219.0	181	120	120	250.0	2xM32x1.5	117
LA132S/M	731.5	833.5	259.0	195	140	140	186.5	2xM32x1.5	123
LA132ZM	777.5	879.5	259.0	195	140	140	294.5	2xM32x1.5	144
LA160M/L	834.0	952.5	313.5	227	165	165	212.0	2xM40x1.5	155
LA160ZL	882.0	1 000.5	313.5	227	165	165	365.0	2xM40x1.5	194

④ DIN 332 ⑤ Feather key / keyway DIN 6885 ① EN ISO 4014 ⑥ For note, see page 5/108

© Siemens AG 2011

Dimensions

Gearbox CAZ88, shaft-mounted design with housing flange (C-type)

CAZ012

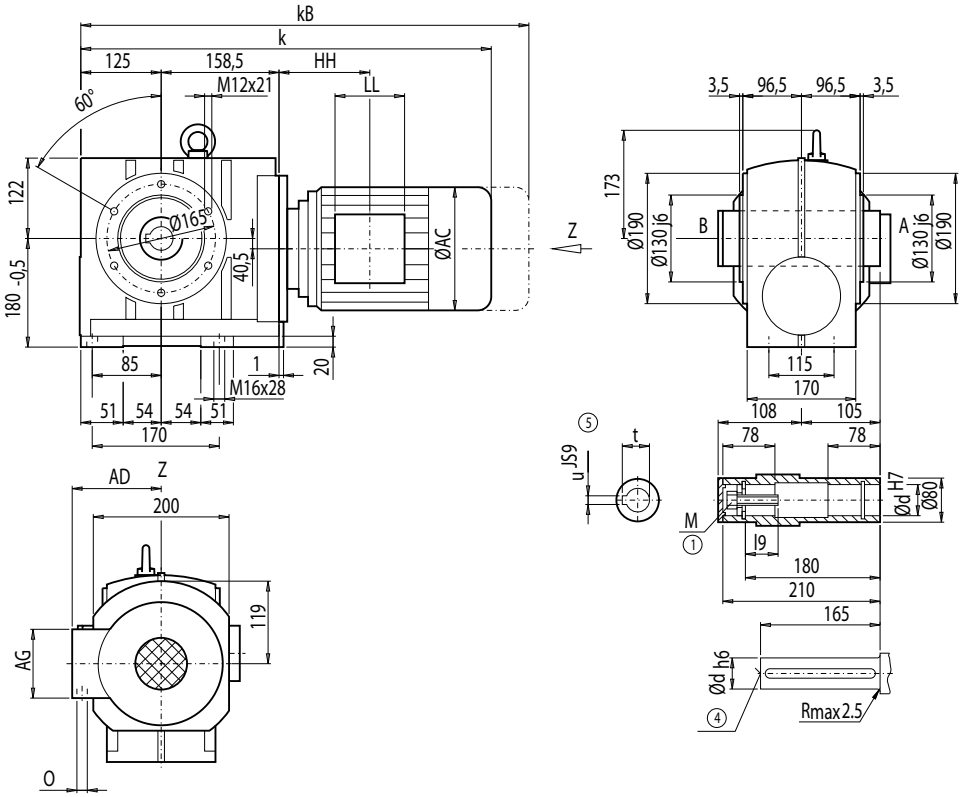

d	l9	M	t	u
50 *)	44.5	M16	53.8	14
60	54.0	M20	64.4	18

*) Preferred series

Motor	CAZ88 k	kB	AC	AD	AG	LL	HH	O	Weight CAZ88
LA71	530.5	585.5	139.0	146	90	90	103.0	M20x1.5/M25x1.5	72
LA71Z	549.5	604.5	139.0	146	90	90	103.0	M20x1.5/M25x1.5	72
LA80	567.5	631.0	156.5	155	90	90	102.5	M20x1.5/M25x1.5	77
LA80Z	590.0	653.5	156.5	155	90	90	175.5	M20x1.5/M25x1.5	81
LA90S/L	598.5	669.5	174.0	163	90	90	102.5	M20x1.5/M25x1.5	82
LA90ZL	643.5	714.5	174.0	163	90	90	226.5	M20x1.5/M25x1.5	88
LA100L	644.5	725.5	195.0	168	120	120	143.0	2xM32x1.5	91
LA100ZL	714.5	795.5	195.0	168	120	120	275.0	2xM32x1.5	101
LA112M	671.5	752.5	219.0	181	120	120	146.0	2xM32x1.5	103
LA112ZM	699.5	780.5	219.0	181	120	120	250.0	2xM32x1.5	110
LA132S/M	731.5	833.5	259.0	195	140	140	186.5	2xM32x1.5	116
LA132ZM	777.5	879.5	259.0	195	140	140	294.5	2xM32x1.5	137
LA160M/L	834.0	952.5	313.5	227	165	165	212.0	2xM40x1.5	149
LA160ZL	882.0	1 000.5	313.5	227	165	165	365.0	2xM40x1.5	188

① EN ISO 4014 ④ DIN 332 ⑤ Feather key / keyway DIN 6885

© Siemens AG 2011

Gearbox CAS88, shaft-mounted design with shrink disk

CAS012

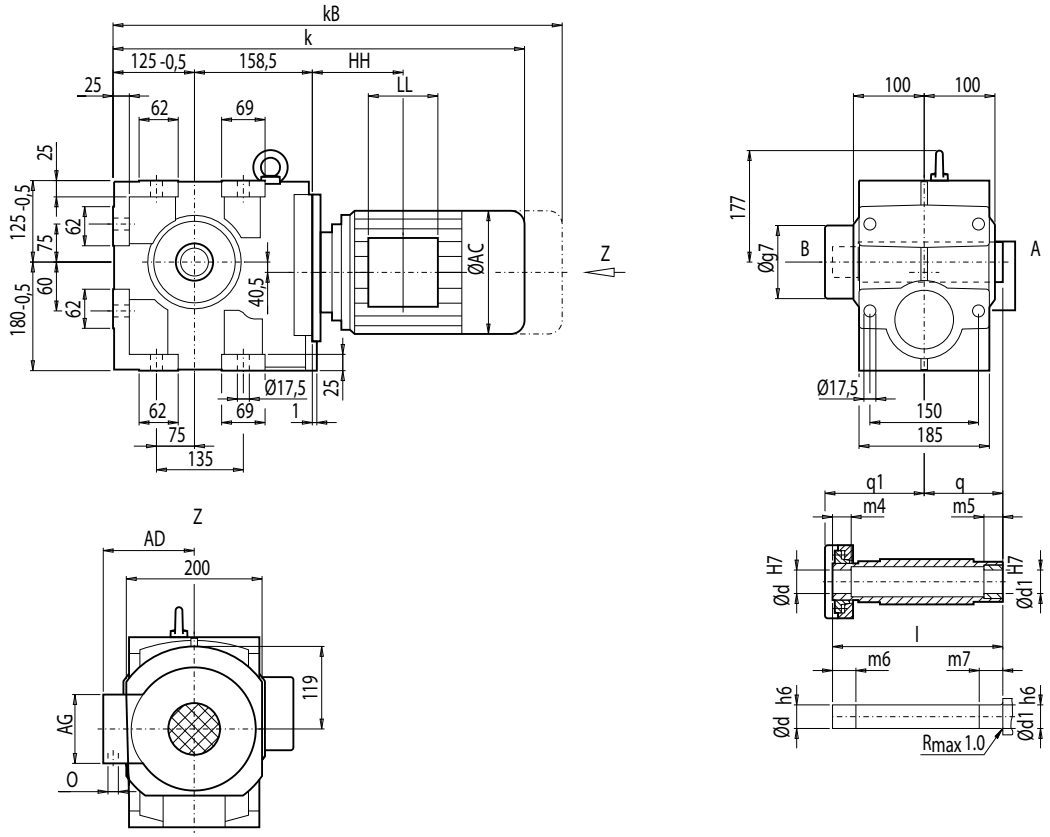

d	d1	l	m4	m5	m6	m7	q1	q	g7
50 *)	50	241	29	30	34	35	144	105	132
60	60	241	29	30	34	35	144	105	132

*) Preferred series

	CAS88								Weight
Motor	**k**	**kB**	**AC**	**AD**	**AG**	**LL**	**HH**	**O**	**CAS88**
LA71	530.5	585.5	139.0	146	90	90	103.0	M20x1.5/M25x1.5	67
LA71Z	549.5	604.5	139.0	146	90	90	103.0	M20x1.5/M25x1.5	67
LA80	567.5	631.0	156.5	155	90	90	102.5	M20x1.5/M25x1.5	72
LA80Z	590.0	653.5	156.5	155	90	90	175.5	M20x1.5/M25x1.5	76
LA90S/L	598.5	669.5	174.0	163	90	90	102.5	M20x1.5/M25x1.5	77
LA90ZL	643.5	714.5	174.0	163	90	90	226.5	M20x1.5/M25x1.5	83
LA100L	644.5	725.5	195.0	168	120	120	143.0	2xM32x1.5	86
LA100ZL	714.5	795.5	195.0	168	120	120	275.0	2xM32x1.5	96
LA112M	671.5	752.5	219.0	181	120	120	146.0	2xM32x1.5	98
LA112ZM	699.5	780.5	219.0	181	120	120	250.0	2xM32x1.5	105
LA132S/M	731.5	833.5	259.0	195	140	140	186.5	2xM32x1.5	111
LA132ZM	777.5	879.5	259.0	195	140	140	294.5	2xM32x1.5	132
LA160M/L	834.0	952.5	313.5	227	165	165	212.0	2xM40x1.5	143
LA160ZL	882.0	1 000.5	313.5	227	165	165	365.0	2xM40x1.5	182

© Siemens AG 2011

Dimensions

Gearbox CADS88, shaft-mounted design with torque arm and shrink disk

CADS012

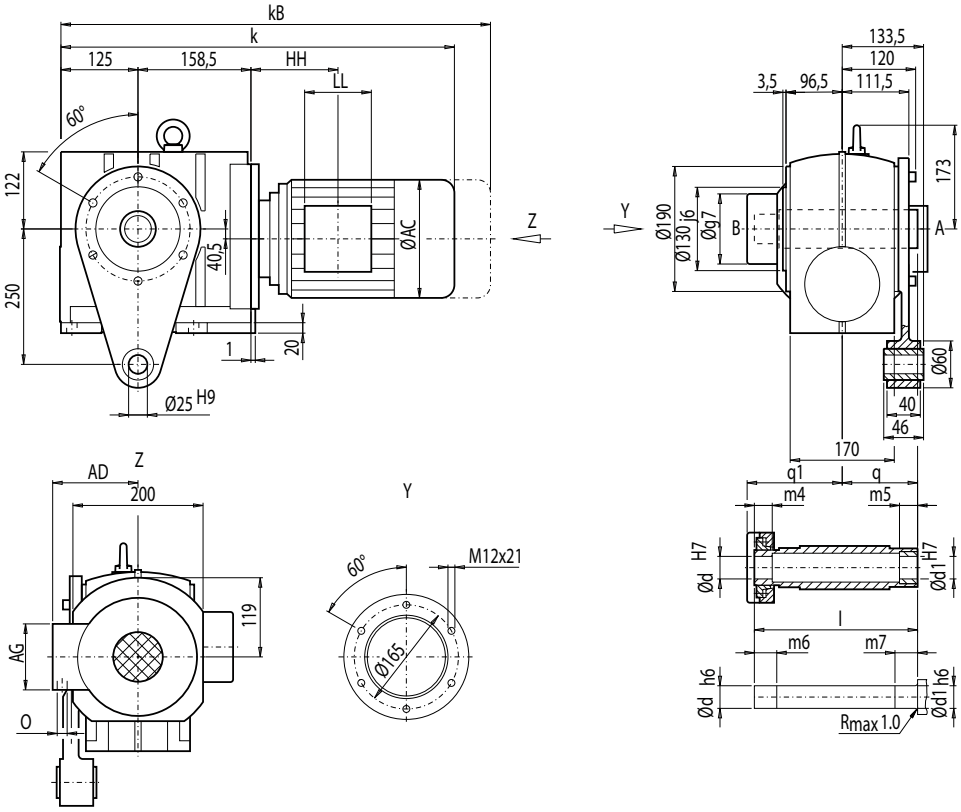

Fig.1

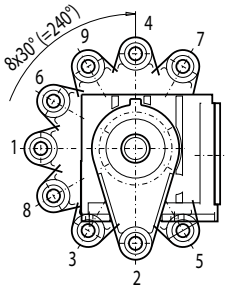

Fig.2

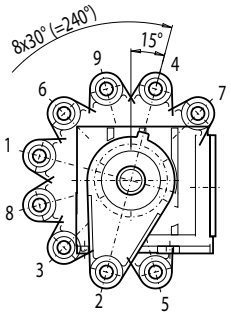

d	d1	l	m4	m5	m6	m7	q1	q	g7
50 *)	50	241	29	30	34	35	144	105	132
60	60	241	29	30	34	35	144	105	132

*) Preferred series

Motor	CADS88 k	kB	AC	AD	AG	LL	HH	O	Weight CADS88
LA71	530.5	585.5	139.0	146	90	90	103.0	M20x1.5/M25x1.5	77
LA71Z	549.5	604.5	139.0	146	90	90	103.0	M20x1.5/M25x1.5	77
LA80	567.5	631.0	156.5	155	90	90	102.5	M20x1.5/M25x1.5	82
LA80Z	590.0	653.5	156.5	155	90	90	175.5	M20x1.5/M25x1.5	86
LA90S/L	598.5	669.5	174.0	163	90	90	102.5	M20x1.5/M25x1.5	87
LA90ZL	643.5	714.5	174.0	163	90	90	226.5	M20x1.5/M25x1.5	93
LA100L	644.5	725.5	195.0	168	120	120	143.0	2xM32x1.5	96
LA100ZL	714.5	795.5	195.0	168	120	120	275.0	2xM32x1.5	106
LA112M	671.5	752.5	219.0	181	120	120	146.0	2xM32x1.5	108
LA112ZM	699.5	780.5	219.0	181	120	120	250.0	2xM32x1.5	115
LA132S/M	731.5	833.5	259.0	195	140	140	186.5	2xM32x1.5	121
LA132ZM	777.5	879.5	259.0	195	140	140	294.5	2xM32x1.5	142
LA160M/L	834.0	952.5	313.5	227	165	165	212.0	2xM40x1.5	153
LA160ZL	882.0	1 000.5	313.5	227	165	165	365.0	2xM40x1.5	192

© Siemens AG 2011

Gearbox CAFS88, flange-mounted design and shrink disk

CAFS012

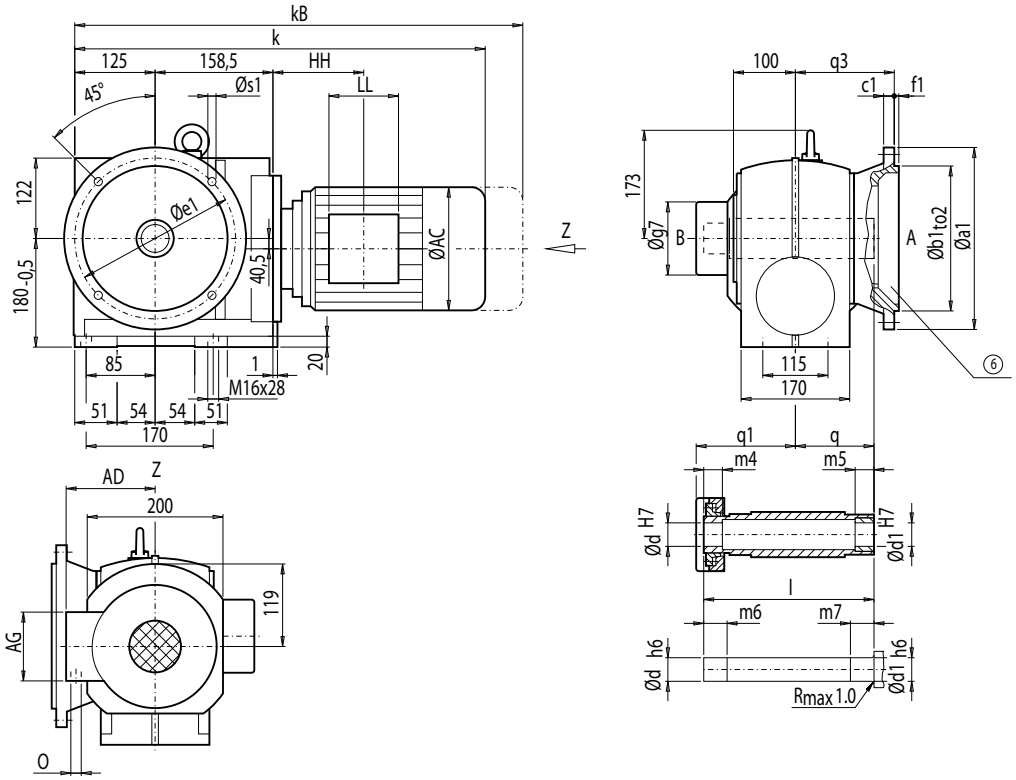

Flange	a1	b1	to2	c1	e1	f1	s1	q3	d	d1	l	m4	m5	m6	m7	q1	q	g7
A250	250	180	j6	15	215	4	13.5	150.5	50 *)	50	241	29	30	34	35	144	105	132
									60	60	241	29	30	34	35	144	105	132
A300	300	230	j6	16	265	4	13.5	142.0	50 *)	50	241	29	30	34	35	144	105	132
									60	60	241	29	30	34	35	144	105	132

*) Preferred series

	CAFS88								Weight
Motor	**k**	**kB**	**AC**	**AD**	**AG**	**LL**	**HH**	**O**	**CAFS88**
LA71	530.5	585.5	139.0	146	90	90	103.0	M20x1.5/M25x1.5	81
LA71Z	549.5	604.5	139.0	146	90	90	103.0	M20x1.5/M25x1.5	81
LA80	567.5	631.0	156.5	155	90	90	102.5	M20x1.5/M25x1.5	86
LA80Z	590.0	653.5	156.5	155	90	90	175.5	M20x1.5/M25x1.5	90
LA90S/L	598.5	669.5	174.0	163	90	90	102.5	M20x1.5/M25x1.5	91
LA90ZL	643.5	714.5	174.0	163	90	90	226.5	M20x1.5/M25x1.5	97
LA100L	644.5	725.5	195.0	168	120	120	143.0	2xM32x1.5	100
LA100ZL	714.5	795.5	195.0	168	120	120	275.0	2xM32x1.5	110
LA112M	671.5	752.5	219.0	181	120	120	146.0	2xM32x1.5	112
LA112ZM	699.5	780.5	219.0	181	120	120	250.0	2xM32x1.5	119
LA132S/M	731.5	833.5	259.0	195	140	140	186.5	2xM32x1.5	125
LA132ZM	777.5	879.5	259.0	195	140	140	294.5	2xM32x1.5	146
LA160M/L	834.0	952.5	313.5	227	165	165	212.0	2xM40x1.5	157
LA160ZL	882.0	1 000.5	313.5	227	165	165	365.0	2xM40x1.5	196

⑥ For note, see page 5/108

© Siemens AG 2011

Dimensions

Gearbox CAZS88, shaft-mounted design with housing flange (C-type) and shrink disk

CAZS012

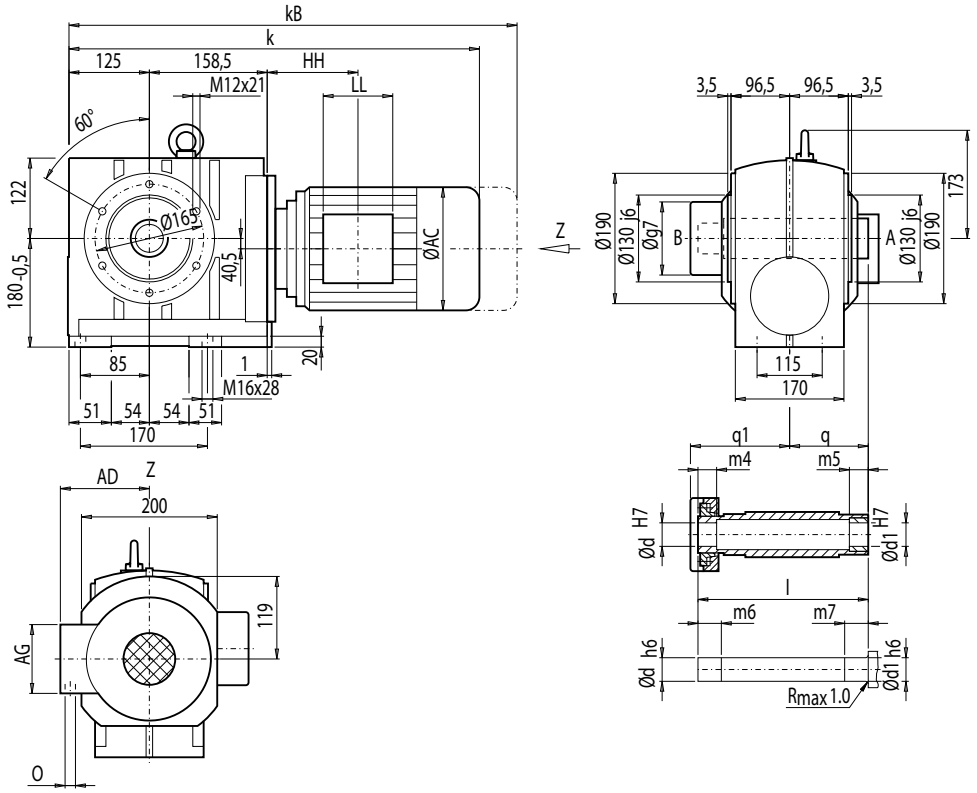

d	d1	l	m4	m5	m6	m7	q1	q	g7
50 *)	50	241	29	30	34	35	144	105	132
60	60	241	29	30	34	35	144	105	132

*) Preferred series

	CAZS88								Weight
Motor	**k**	**kB**	**AC**	**AD**	**AG**	**LL**	**HH**	**O**	**CAZS88**
LA71	530.5	585.5	139.0	146	90	90	103.0	M20x1.5/M25x1.5	74
LA71Z	549.5	604.5	139.0	146	90	90	103.0	M20x1.5/M25x1.5	74
LA80	567.5	631.0	156.5	155	90	90	102.5	M20x1.5/M25x1.5	79
LA80Z	590.0	653.5	156.5	155	90	90	175.5	M20x1.5/M25x1.5	83
LA90S/L	598.5	669.5	174.0	163	90	90	102.5	M20x1.5/M25x1.5	84
LA90ZL	643.5	714.5	174.0	163	90	90	226.5	M20x1.5/M25x1.5	90
LA100L	644.5	725.5	195.0	168	120	120	143.0	2xM32x1.5	93
LA100ZL	714.5	795.5	195.0	168	120	120	275.0	2xM32x1.5	103
LA112M	671.5	752.5	219.0	181	120	120	146.0	2xM32x1.5	105
LA112ZM	699.5	780.5	219.0	181	120	120	250.0	2xM32x1.5	112
LA132S/M	731.5	833.5	259.0	195	140	140	186.5	2xM32x1.5	118
LA132ZM	777.5	879.5	259.0	195	140	140	294.5	2xM32x1.5	139
LA160M/L	834.0	952.5	313.5	227	165	165	212.0	2xM40x1.5	150
LA160ZL	882.0	1 000.5	313.5	227	165	165	365.0	2xM40x1.5	189

© Siemens AG 2011

Offset hollow shafts with shrink disk

Optional hollow shafts for helical worm gearbox with shrink disk.

CA.S

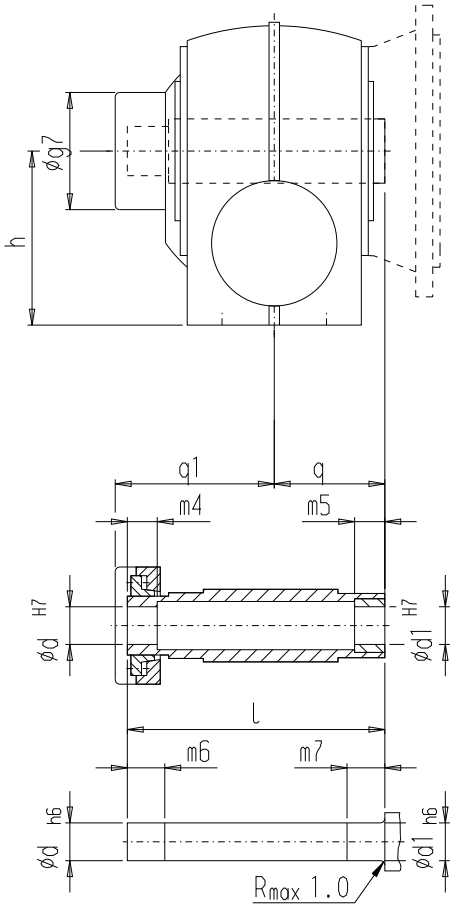

Gearbox	d	d1	l	m4	m5	m6	m7	q1	q	g7	h
CAS/CAFS38	30	31	146	22	20	27	25	94	60	77	100
CAS/CAFS48	40	41	177	25	20	30	25	109	75	93	112
CAS/CAFS68	40	42	209	35	20	40	25	126	90	112	140
	50	51	209	27	20	32	25	126	90	112	140
CAS/CAFS88	50	52	241	29	30	34	35	144	105	132	180
	60	61	241	29	30	34	35	144	105	132	180

© Siemens AG 2011

Dimensions

Shaft-mounted design with splined shaft in acc. with DIN 5480

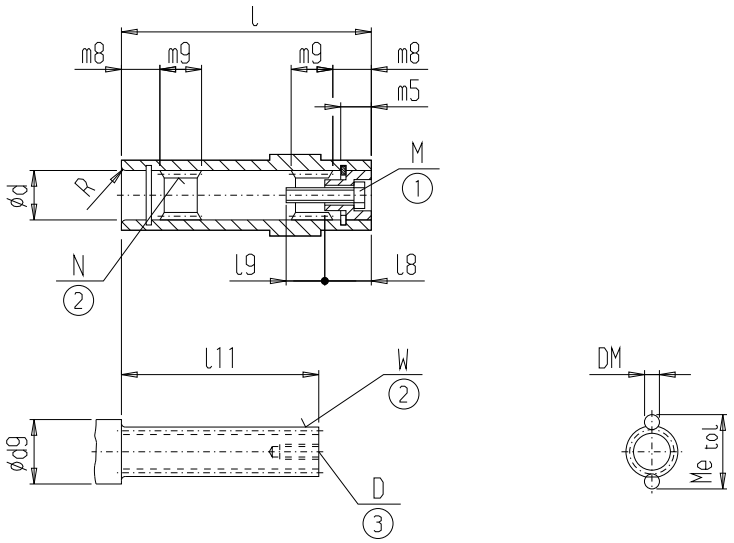

Gearbox type	d	l	d9 min.	l11	W	D	R	m8	m9
CA.T38	35	120	45	95	W35x1.25x30x26 8f	M10	R2	17.0	27
CA.T48	40	150	52	120	W40x2x30x18 8f	M12	R3	22.0	34
CA.T68	55	180	65	142	W50x2x30x24 8f	M16	R2	21.0	40
CA.T88	65	210	80	172	W60x2x30x28 8f	M16	R2	22.5	49

Gearbox type	N	m5	l8	l9	M	DM	Me	tol
CA.T38	N35x1.25x30x26 9H	12.0	18	27.0	M10x35	2.5	37.423	- 0.041
CA.T48	N40x2x30x18 9H	14.0	20	37.0	M12x45	4.5	45.083	- 0.043
CA.T68	N50x2x30x24 9H	16.0	23	49.5	M16x55	4.0	54.156	- 0.049
CA.T88	N60x2x30x28 9H	16.5	26	46.5	M16x55	4.0	63.918	- 0.053

① DIN 912 ② DIN 5480 ③ DIN 332-D

© Siemens AG 2011

Helical worm tandem gearbox

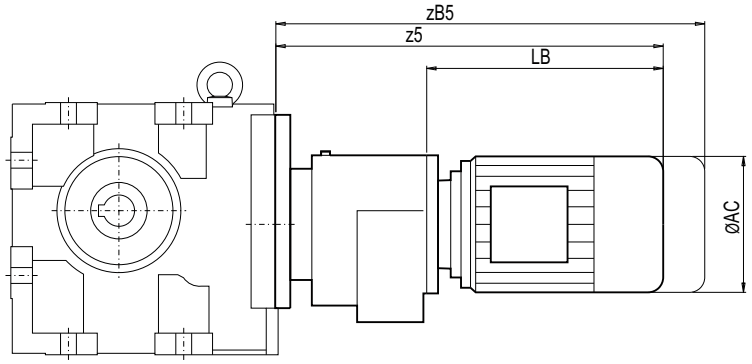

Gearbox	Motor	AC	z5	zB5	LB
C.38-Z28	LA71	139.0	363.0	418.0	202.5
	LA71Z	139.0	382.0	437.0	221.5
	LA80	156.5	465.0	528.5	304.5
	LA80Z	156.5	487.5	551.0	327.0
	LA90S/L	174.0	460.0	531.0	299.5
	LA90ZL	174.0	505.0	576.0	344.5
	LA100L	195.0	542.0	623.0	381.5
	LA100ZL	195.0	612.0	693.0	451.5
C.38-D28	LA71	139.0	363.0	418.0	202.5
	LA71Z	139.0	382.0	437.0	221.5
	LA80	156.5	465.0	528.5	304.5
	LA80Z	156.5	487.5	551.0	327.0
	LA90S/L	174.0	460.0	531.0	299.5
	LA90ZL	174.0	505.0	576.0	344.5
C_48-Z28	LA71	139.0	363.0	418.0	202.5
	LA71Z	139.0	382.0	437.0	221.5
	LA80	156.5	465.0	528.5	304.5
	LA80Z	156.5	487.5	551.0	327.0
	LA90S/L	174.0	460.0	531.0	299.5
	LA90ZL	174.0	505.0	576.0	344.5
	LA100L	195.0	542.0	623.0	381.5
	LA100ZL	195.0	612.0	693.0	451.5
C.48-D28	LA71	139.0	363.0	418.0	202.5
	LA71Z	139.0	382.0	437.0	221.5
	LA80	156.5	465.0	528.5	304.5
	LA80Z	156.5	487.5	551.0	327.0
	LA90S/L	174.0	460.0	531.0	299.5
	LA90ZL	174.0	505.0	576.0	344.5

Gearbox	Motor	AC	z5	zB5	LB
C.68-Z28	LA71	139.0	357.5	412.5	202.5
	LA71Z	139.0	376.5	431.5	221.5
	LA80	156.5	459.5	523.0	304.5
	LA80Z	156.5	482.0	545.5	327.0
	LA90S/L	174.0	454.5	525.5	299.5
	LA90ZL	174.0	499.5	570.5	344.5
	LA100L	195.0	536.5	617.5	381.5
	LA100ZL	195.0	606.5	687.5	451.5
C.68-D28	LA71	139.0	357.5	412.5	202.5
	LA71Z	139.0	376.5	431.5	221.5
	LA80	156.5	459.5	523.0	304.5
	LA80Z	156.5	482.0	545.5	327.0
	LA90S/L	174.0	454.5	525.5	299.5
	LA90ZL	174.0	499.5	570.5	344.5
C.88-Z28	LA71	139.0	351.5	406.5	202.5
	LA71Z	139.0	370.5	425.5	221.5
	LA80	156.5	453.5	517.0	304.5
	LA80Z	156.5	476.0	539.5	327.0
	LA90S/L	174.0	448.5	519.5	299.5
	LA90ZL	174.0	493.5	564.5	344.5
	LA100L	195.0	530.5	611.5	381.5
	LA100ZL	195.0	600.5	681.5	451.5
C.88-D28	LA71	139.0	351.5	406.5	202.5
	LA71Z	139.0	370.5	425.5	221.5
	LA80	156.5	453.5	517.0	304.5
	LA80Z	156.5	476.0	539.5	327.0
	LA90S/L	174.0	448.5	519.5	299.5
	LA90ZL	174.0	493.5	564.5	344.5

© Siemens AG 2011

Dimensions

Inside contour of the flange-mounted design (A-type)

Design notes for the customer's interface, e.g. plug-in shaft for hollow shaft design

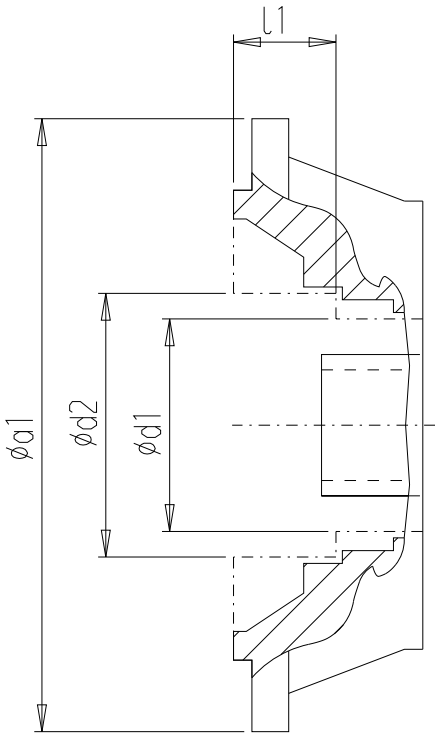

Gearbox	a1	d1	d2	l1
CAF.28	120	70	72	24.0
CAF.28	160	70	103	8.5
CAF.38	160	70	77	20.0
CAF.48	200	84	90	22.5
CAF.68	200	100	100	–
CAF.68	250	96	96	–
CAF.88	250	124	124	–
CAF.88	300	126	138	31.0

© Siemens AG 2011

Worm geared motors

6



Orientation
6/2 Overview
6/3 Modular system

General technical data
6/4 Permissible radial force

Geared motors up to 1.1 kW
6/5 Selection and ordering data

Transmission ratios and maximum torques
6/10 Selection and ordering data

Mounting types
6/12 Selection and ordering data

Shaft designs
6/13 Selection and ordering data

Flange-mounted designs
6/14 Selection and ordering data

Mounting types and mounting positions
6/15 Selection and ordering data

Special versions
6/16 Lubricants
6/16 2nd output shaft extension
6/16 Plug-in shaft

Dimensions
6/17 Dimension drawing overview
6/18 Dimension drawings

© Siemens AG 2011

Orientation

Overview



The worm gearbox series S is designed for different mechanical engineering tasks for the lower torque range. Thanks to the small dimensions and low weight, the products are suitable for a wide range of different applications.

The compact MOTOX S worm gearboxes have worm gear teeth that are characterized by particularly low-noise operating characteristics at high levels of efficiency. The mounting position and the position of the output shafts can be freely selected. At the output, solid shafts and hollow shafts are available as alternatives. The gearbox housings have a centering edge at both output sides by default. They can also be secured with a flange or torque arm. Foot mounting is possible on three sides.

The worm gearboxes of the S series are single-stage worm gearboxes. The worm toothing has been manufactured in accordance with the latest technical know-how and is based on the worm form ZK, whereby the best gliding properties are achieved using worm gears made of high-quality bronze and worm shafts made of steel. The worm shafts undergo additional grinding to ensure that the gearbox performs its task with as little noise and as few losses as possible. The highly stable and light cast-metal housings are made from high-quality aluminum alloy. This means that the gearboxes have low surface temperatures.

The gear teeth and the rolling-contact bearings are lubricated with synthetic lubricant in all of the types of construction. The oil fill level is optimized for every mounting angle and the gearbox can be operated as required in any mounting angle. The gearboxes are permanently lubricated, an oil change is not required. No oil control or drain plugs are required.

Worm gearboxes S are designated as follows:

Gearbox type:

S Worm gearbox

Transmission stage (-) Unspecified

Type:

Shaft
(-) Solid shaft
- With one shaft extension (position A or B)
- With two shaft extensions (pos. AB)

A Hollow shaft

Mounting
(-) Foot-mounted design
F Flange-mounted design (A-type)
Z Housing flange (C-type), on both sides
D Torque arm

Input unit:

K4 Short coupling lantern with clamp connection for connecting an IEC motor

Example: **S F 08 - K4 (71)**

- Gearbox type
- Type
- Size
- Input unit
- (for motor size)

© Siemens AG 2011

Overview (continued)

Modular system

The MOTOX S worm gearboxes are supplied in a basic version. With further components, the gearboxes can be mounted in the installation with a flange or torque arm. The mounting surfaces on the housing can be utilized for the foot mounting.

The geared motors are delivered completely assembled. The torque arm is supplied loose to enable it to be mounted as required on site. The position of the torque arm can be freely selected.

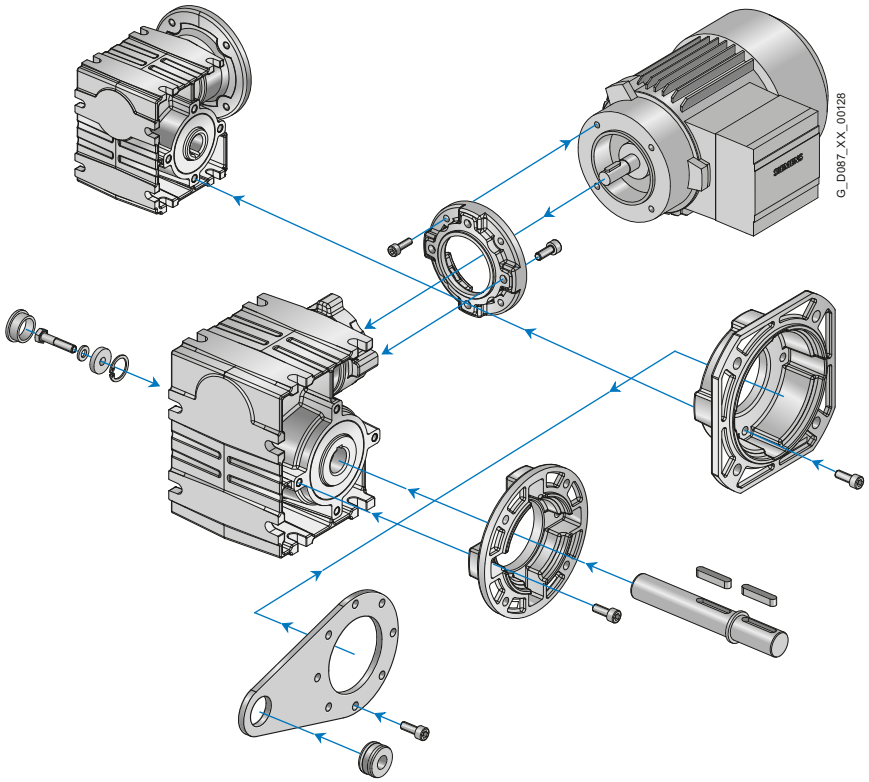

Use

MOTOX S worm gearboxes are characterized by high throughput in a very small space and a high transmission ratio in a single stage. Thanks to their compact design, worm gearboxes are an ideal solution when installation space is at a premium and they offer a range of mounting options due to their flange, foot, and torque-arm housing designs.

Output shafts are available in different versions and diameters, as solid or hollow shafts. The gearbox housings, made from die-cast aluminum with good thermal conductivity, are strong and absorb vibrations.

© Siemens AG 2011

General technical data

Permissible radial force F_{Rperm}

						F_{Rperm} in N with x = l/2 for output speeds n_2 in rpm							
Gearbox type	**d** mm	**l** mm	**y** mm	**z** mm	**a** kNmm	≤ 16	≤ 25	≤ 40	≤ 63	≤ 100	≤ 160	≤ 250	≤ 400
S08	16	40	83.5	63.5	36 000	1 800	1 800	1 800	1 800	1 800	1 690	1 400	1 120
SF08			106.0	86.0		1 800	1 800	1 800	1 800	1 620	1 330	1 100	880
S18	20	40	98.0	78.0	76 000	3 800	3 800	3 800	3 200	2 650	2 180	1 780	1 420
SF18			128.0	108.0		3 200	3 120	2 920	2 450	2 030	1 670	1 360	1 090
S28	20	40	120.5	100.5	72 000	3 600	3 600	3 600	3 600	3 600	3 290	2 680	2 120
SF28			153.5	133.5		3 600	3 600	3 600	3 600	3 150	2 580	2 110	1 660

© Siemens AG 2011

Selection and ordering data

The selection tables show the most common variants and combinations. Other combinations can be selected using our MOTOX Configurator or made available on request.

Power rating P_{Motor} kW (50 Hz)	Output speed n_2 (50 Hz) rpm	Output torque T_2 Nm	Service factor f_B	Gearbox ratio i_{tot}	Order No.	Order code (No. of poles)	Weight *) kg
0.09	**S.28-LAI63M6**						
	8.5	46.2	1.6	100	**2KJ1732 - ■BE13 - ■■A1**	**P01**	8
	10.6	41.0	2.1	80	**2KJ1732 - ■BE13 - ■■B1**	**P01**	8
	14.2	34.5	2.8	60	**2KJ1732 - ■BE13 - ■■C1**	**P01**	8
	S.18-LAI63M6						
	10.6	39.6	0.9	80	**2KJ1731 - ■BE13 - ■■B1**	**P01**	6
	14.2	33.8	1.4	60	**2KJ1731 - ■BE13 - ■■C1**	**P01**	6
	17	30.0	1.7	50	**2KJ1731 - ■BE13 - ■■D1**	**P01**	6
	S.08-LAI63M6						
	14.2	29.9	0.8	60	**2KJ1730 - ■BE13 - ■■C1**	**P01**	5
	17.0	26.8	1	50	**2KJ1730 - ■BE13 - ■■D1**	**P01**	5
	21.2	23.5	1.3	40	**2KJ1730 - ■BE13 - ■■E1**	**P01**	5
0.12	**S.28-LAI63S4**						
	13.5	40.3	1.7	100	**2KJ1732 - ■BC13 - ■■A1**		8
	16.9	35.7	2.3	80	**2KJ1732 - ■BC13 - ■■B1**		8
	22.5	29.9	2.7	60	**2KJ1732 - ■BC13 - ■■C1**		8
	27	26.5	3	50	**2KJ1732 - ■BC13 - ■■D1**		8
	33.8	22.9	3.4	40	**2KJ1732 - ■BC13 - ■■E1**		8
	45	18.5	4.1	30	**2KJ1732 - ■BC13 - ■■F1**		8
	S.18-LAI63S4						
	16.9	34.8	1	80	**2KJ1731 - ■BC13 - ■■B1**		6
	22.5	29.5	1.5	60	**2KJ1731 - ■BC13 - ■■C1**		6
	27	26.2	1.7	50	**2KJ1731 - ■BC13 - ■■D1**		6
	33.8	22.6	2	40	**2KJ1731 - ■BC13 - ■■E1**		6
	45	18.2	2.4	30	**2KJ1731 - ■BC13 - ■■F1**		6
	54	15.9	2.5	25	**2KJ1731 - ■BC13 - ■■G1**		6
	67.5	13.5	3.2	20	**2KJ1731 - ■BC13 - ■■H1**		6
	90	10.6	4.1	15	**2KJ1731 - ■BC13 - ■■J1**		6
	135	7.4	5.7	10	**2KJ1731 - ■BC13 - ■■K1**		6
	193	5.4	7.6	7	**2KJ1731 - ■BC13 - ■■L1**		6
	270	3.9	10	5	**2KJ1731 - ■BC13 - ■■M1**		6
	S.08-LAI63S4						
	22.5	26.4	0.88	60	**2KJ1730 - ■BC13 - ■■C1**		5
	27.0	23.5	1.1	50	**2KJ1730 - ■BC13 - ■■D1**		5
	33.8	20.5	1.4	40	**2KJ1730 - ■BC13 - ■■E1**		5
	45.0	16.9	1.7	30	**2KJ1730 - ■BC13 - ■■F1**		5
	54.0	14.8	1.9	25	**2KJ1730 - ■BC13 - ■■G1**		5
	67.5	12.7	2.2	20	**2KJ1730 - ■BC13 - ■■H1**		5

Shaft designs, see page 6/13 — **1, 5 or 6**

Frequency and voltage, see page 8/20 — **1 to 9**

Gearbox housing mounting position, see page 6/15 — **A, D, F or H**

*) Design: worm gearbox S with solid shaft

© Siemens AG 2011

Selection and ordering data (continued)

Power rating P_{Motor} kW (50 Hz)	Output speed n_2 (50 Hz) rpm	Output torque T_2 Nm	Service factor f_B	Gearbox ratio i_{tot}	Order No.	Order code (No. of poles)	Weight *) kg
0.12	**S.08-LAI63S4**						
	90	10.1	2.7	15	**2KJ1730 - ■BC13 - ■■J1**		5
	135	7.2	3.9	10	**2KJ1730 - ■BC13 - ■■K1**		5
	193	5.2	5.3	7	**2KJ1730 - ■BC13 - ■■L1**		5
	270	3.8	6.7	5	**2KJ1730 - ■BC13 - ■■M1**		5
0.18	**S.28-LAI71S6**						
	10.6	82	1.1	80	**2KJ1732 - ■CD13 - ■■B1**	**P01**	10
	14.2	69.1	1.4	60	**2KJ1732 - ■CD13 - ■■C1**	**P01**	10
	17	61.5	1.5	50	**2KJ1732 - ■CD13 - ■■D1**	**P01**	10
	21.2	53.2	1.8	40	**2KJ1732 - ■CD13 - ■■E1**	**P01**	10
	28.3	43.3	2.1	30	**2KJ1732 - ■CD13 - ■■F1**	**P01**	10
	S.28-LAI63M4						
	13.5	60.4	1.2	100	**2KJ1732 - ■BE13 - ■■A1**		8
	16.9	53.5	1.5	80	**2KJ1732 - ■BE13 - ■■B1**		8
	22.5	44.8	1.8	60	**2KJ1732 - ■BE13 - ■■C1**		8
	27	39.8	2	50	**2KJ1732 - ■BE13 - ■■D1**		8
	33.8	34.3	2.3	40	**2KJ1732 - ■BE13 - ■■E1**		8
	45	27.7	2.8	30	**2KJ1732 - ■BE13 - ■■F1**		8
	54	24	3.1	25	**2KJ1732 - ■BE13 - ■■G1**		8
	67.5	20.4	3.7	20	**2KJ1732 - ■BE13 - ■■H1**		8
	S.28-LAI63S2						
	282	5.4	9.9	10	**2KJ1732 - ■BC13 - ■■K1**	**P00**	8
	403	3.9	13.4	7	**2KJ1732 - ■BC13 - ■■L1**	**P00**	8
	564	2.8	18.1	5	**2KJ1732 - ■BC13 - ■■M1**	**P00**	8
	S.18-LAI71S6						
	17	60.1	0.86	50	**2KJ1731 - ■CD13 - ■■D1**	**P01**	8
	21.2	52.4	1	40	**2KJ1731 - ■CD13 - ■■E1**	**P01**	8
	S.18-LAI63M4						
	22.5	44.3	1	60	**2KJ1731 - ■BE13 - ■■C1**		6
	27	39.2	1.1	50	**2KJ1731 - ■BE13 - ■■D1**		6
	33.8	34	1.3	40	**2KJ1731 - ■BE13 - ■■E1**		6
	45	27.4	1.6	30	**2KJ1731 - ■BE13 - ■■F1**		6
	54	23.8	1.6	25	**2KJ1731 - ■BE13 - ■■G1**		6
	67.5	20.3	2.2	20	**2KJ1731 - ■BE13 - ■■H1**		6
	90	15.9	2.7	15	**2KJ1731 - ■BE13 - ■■J1**		6
	135	11.1	3.8	10	**2KJ1731 - ■BE13 - ■■K1**		6
	193	8	5.1	7	**2KJ1731 - ■BE13 - ■■L1**		6
	270	5.8	6.7	5	**2KJ1731 - ■BE13 - ■■M1**		6
	S.18-LAI63S2						
	282	5.4	5.6	10	**2KJ1731 - ■BC13 - ■■K1**	**P00**	6
	403	3.9	7.5	7	**2KJ1731 - ■BC13 - ■■L1**	**P00**	6
	564	2.8	9.9	5	**2KJ1731 - ■BC13 - ■■M1**	**P00**	6

Shaft designs, see page 6/13 — **1, 5 or 6**

Frequency and voltage, see page 8/20 — **1 to 9**

Gearbox housing mounting position, see page 6/15 — **A, D, F or H**

*) Design: worm gearbox S with solid shaft

© Siemens AG 2011

Selection and ordering data (continued)

Power rating P_{Motor} kW (50 Hz)	Output speed n_2 (50 Hz) rpm	Output torque T_2 Nm	Service factor f_B	Gearbox ratio i_{tot}	Order No.	Order code (No. of poles)	Weight *) kg
0.18	**S.08-LAI63M4**						
	33.8	30.7	0.91	40	**2KJ1730 - ■BE13 - ■■E1**		5
	45.0	25.3	1.1	30	**2KJ1730 - ■BE13 - ■■F1**		5
	54.0	22.2	1.3	25	**2KJ1730 - ■BE13 - ■■G1**		5
	67.5	19.1	1.4	20	**2KJ1730 - ■BE13 - ■■H1**		5
	90	15.2	1.8	15	**2KJ1730 - ■BE13 - ■■J1**		5
	135	10.8	2.6	10	**2KJ1730 - ■BE13 - ■■K1**		5
	193	7.8	3.5	7	**2KJ1730 - ■BE13 - ■■L1**		5
	270	5.8	4.5	5	**2KJ1730 - ■BE13 - ■■M1**		5
	S.08-LAI63S2						
	282	5.2	3.9	10	**2KJ1730 - ■BC13 - ■■K1**	**P00**	5
	403	3.8	5.3	7	**2KJ1730 - ■BC13 - ■■L1**	**P00**	5
	564	2.8	7	5	**2KJ1730 - ■BC13 - ■■M1**	**P00**	5
0.25	**S.28-LAI71M6**						
	14.3	94.9	1	60	**2KJ1732 - ■CE13 - ■■C1**	**P01**	10
	17.2	84.5	1.1	50	**2KJ1732 - ■CE13 - ■■D1**	**P01**	10
	S.28-LAI71S4						
	16.9	74.3	1.1	80	**2KJ1732 - ■CD13 - ■■B1**		10
	22.5	62.3	1.3	60	**2KJ1732 - ■CD13 - ■■C1**		10
	27	55.3	1.4	50	**2KJ1732 - ■CD13 - ■■D1**		10
	33.8	47.6	1.7	40	**2KJ1732 - ■CD13 - ■■E1**		10
	45	38.5	2	30	**2KJ1732 - ■CD13 - ■■F1**		10
	54	33.4	2.3	25	**2KJ1732 - ■CD13 - ■■G1**		10
	S.28-LAI63M2						
	283	7.4	7.1	10	**2KJ1732 - ■BE13 - ■■K1**	**P00**	8
	404	5.4	9.7	7	**2KJ1732 - ■BE13 - ■■L1**	**P00**	8
	566	3.9	13.1	5	**2KJ1732 - ■BE13 - ■■M1**	**P00**	8
	S.18-LAI71S4						
	27	54.5	0.82	50	**2KJ1731 - ■CD13 - ■■D1**		8
	33.8	47.2	0.95	40	**2KJ1731 - ■CD13 - ■■E1**		8
	45	38	1.2	30	**2KJ1731 - ■CD13 - ■■F1**		8
	54	33.1	1.2	25	**2KJ1731 - ■CD13 - ■■G1**		8
	67.5	28.1	1.5	20	**2KJ1731 - ■CD13 - ■■H1**		8
	90	22.1	2	15	**2KJ1731 - ■CD13 - ■■J1**		8
	135	15.5	2.8	10	**2KJ1731 - ■CD13 - ■■K1**		8
	193	11.2	3.7	7	**2KJ1731 - ■CD13 - ■■L1**		8
	270	8.1	4.8	5	**2KJ1731 - ■CD13 - ■■M1**		8
	S.18-LAI63M2						
	283	7.4	4	10	**2KJ1731 - ■BE13 - ■■K1**	**P00**	6
	404	5.4	5.4	7	**2KJ1731 - ■BE13 - ■■L1**	**P00**	6
	566	3.9	7.1	5	**2KJ1731 - ■BE13 - ■■M1**	**P00**	6
	S.08-LAI63M2						
	70.8	21.3	1	40	**2KJ1730 - ■BE13 - ■■E1**	**P00**	5
	94.3	17.2	1.2	30	**2KJ1730 - ■BE13 - ■■F1**	**P00**	5

Shaft designs, see page 6/13 — **1, 5 or 6**
Frequency and voltage, see page 8/20 — **1 to 9**
Gearbox housing mounting position, see page 6/15 — **A, D, F or H**

*) Design: worm gearbox S with solid shaft

© Siemens AG 2011

Selection and ordering data (continued)

Power rating P_{Motor} kW (50 Hz)	Output speed n_2 (50 Hz) rpm	Output torque T_2 Nm	Service factor f_B	Gearbox ratio i_{tot}	Order No.	Order code (No. of poles)	Weight *) kg
0.25	**S.08-LAI63M2**						
	113	15.2	1.4	25	**2KJ1730 - ■BE13 - ■■G1**	**P00**	5
	142	13	1.6	20	**2KJ1730 - ■BE13 - ■■H1**	**P00**	5
	189	10.3	2	15	**2KJ1730 - ■BE13 - ■■J1**	**P00**	5
	283	7.3	2.8	10	**2KJ1730 - ■BE13 - ■■K1**	**P00**	5
	404	5.3	3.8	7	**2KJ1730 - ■BE13 - ■■L1**	**P00**	5
	566	3.8	5	5	**2KJ1730 - ■BE13 - ■■M1**	**P00**	5
0.37	**S.28-LAI71M4**						
	22.8	90.9	0.89	60	**2KJ1732 - ■CE13 - ■■C1**		10
	27.4	80.7	0.98	50	**2KJ1732 - ■CE13 - ■■D1**		10
	34.2	69.5	1.1	40	**2KJ1732 - ■CE13 - ■■E1**		10
	45.7	56.2	1.4	30	**2KJ1732 - ■CE13 - ■■F1**		10
	54.8	48.7	1.5	25	**2KJ1732 - ■CE13 - ■■G1**		10
	68.5	41.3	1.8	20	**2KJ1732 - ■CE13 - ■■H1**		10
	S.28-LAI71S2						
	274	11.4	4.8	10	**2KJ1732 - ■CD13 - ■■K1**	**P00**	10
	391	8.2	6.5	7	**2KJ1732 - ■CD13 - ■■L1**	**P00**	10
	548	6	8.7	5	**2KJ1732 - ■CD13 - ■■M1**	**P00**	10
	S.18-LAI71M4						
	54.8	48.3	0.81	25	**2KJ1731 - ■CE13 - ■■G1**		8
	68.5	41.1	1.1	20	**2KJ1731 - ■CE13 - ■■H1**		8
	91.3	32.2	1.3	15	**2KJ1731 - ■CE13 - ■■J1**		8
	137	22.6	1.9	10	**2KJ1731 - ■CE13 - ■■K1**		8
	196	16.3	2.5	7	**2KJ1731 - ■CE13 - ■■L1**		8
	274	11.8	3.3	5	**2KJ1731 - ■CE13 - ■■M1**		8
	S.18-LAI71S2						
	274	11.4	2.7	10	**2KJ1731 - ■CD13 - ■■K1**	**P00**	8
	391	8.2	3.6	7	**2KJ1731 - ■CD13 - ■■L1**	**P00**	8
	548	5.9	4.7	5	**2KJ1731 - ■CD13 - ■■M1**	**P00**	8
0.55	**S.28-LAI80S4**						
	46.5	82.1	0.92	30	**2KJ1732 - ■DB13 - ■■F1**		14
	55.8	71.1	1	25	**2KJ1732 - ■DB13 - ■■G1**		14
	69.8	60.3	1.2	20	**2KJ1732 - ■DB13 - ■■H1**		14
	93	47.3	1.6	15	**2KJ1732 - ■DB13 - ■■J1**		14
	140	33.1	2.3	10	**2KJ1732 - ■DB13 - ■■K1**		14
	199	23.9	3.1	7	**2KJ1732 - ■DB13 - ■■L1**		14
	279	17.4	4	5	**2KJ1732 - ■DB13 - ■■M1**		14
	S.28-LAI71M2						
	280	16.5	3.2	10	**2KJ1732 - ■CE13 - ■■K1**	**P00**	10
	400	11.9	4.4	7	**2KJ1732 - ■CE13 - ■■L1**	**P00**	10
	560	8.7	5.9	5	**2KJ1732 - ■CE13 - ■■M1**	**P00**	10
	S.18-LAI71M2						
	112	35.8	0.83	25	**2KJ1731 - ■CE13 - ■■G1**	**P00**	8
	140	30.4	1	20	**2KJ1731 - ■CE13 - ■■H1**	**P00**	8

Shaft designs, see page 6/13 — **1, 5 or 6**
Frequency and voltage, see page 8/20 — **1 to 9**
Gearbox housing mounting position, see page 6/15 — **A, D, F or H**

*) Design: worm gearbox S with solid shaft

© Siemens AG 2011

Selection and ordering data (continued)

Power rating P_{Motor} kW (50 Hz)	Output speed n_2 (50 Hz) rpm	Output torque T_2 Nm	Service factor f_B	Gearbox ratio i_{tot}	Order No.	Order code (No. of poles)	Weight *) kg
0.55	**S.18-LAI71M2**						
	187	23.7	1.3	15	**2KJ1731 - ■CE13 - ■■J1**		8
	280	16.5	1.8	10	**2KJ1731 - ■CE13 - ■■K1**		8
	400	11.9	2.4	7	**2KJ1731 - ■CE13 - ■■L1**		8
	560	8.6	3.2	5	**2KJ1731 - ■CE13 - ■■M1**		8
0.75	**S.28-LAI80ZMB4**						
	70	81.9	0.92	20	**2KJ1732 - ■DE13 - ■■H1**		14
	93.3	64.3	1.2	15	**2KJ1732 - ■DE13 - ■■J1**		14
	140	45	1.7	10	**2KJ1732 - ■DE13 - ■■K1**		14
	200	32.5	2.3	7	**2KJ1732 - ■DE13 - ■■L1**		14
	280	23.7	3	5	**2KJ1732 - ■DE13 - ■■M1**		14
	S.28-LAI80M2						
	95.7	54.9	0.97	30	**2KJ1732 - ■DC13 - ■■F1**	**P00**	14
	115	47.5	1.1	25	**2KJ1732 - ■DC13 - ■■G1**	**P00**	14
	144	40.3	1.3	20	**2KJ1732 - ■DC13 - ■■H1**	**P00**	14
	191	31.5	1.7	15	**2KJ1732 - ■DC13 - ■■J1**	**P00**	14
	287	22	2.4	10	**2KJ1732 - ■DC13 - ■■K1**	**P00**	14
	410	15.9	3.3	7	**2KJ1732 - ■DC13 - ■■L1**	**P00**	14
	574	11.6	4.4	5	**2KJ1732 - ■DC13 - ■■M1**	**P00**	14
1.1	**S.28-LAI80ZMB2**						
	143	59.4	0.91	20	**2KJ1732 - ■DN13 - ■■H1**	**P00**	14
	191	46.4	1.1	15	**2KJ1732 - ■DN13 - ■■J1**	**P00**	14
	286	32.4	1.6	10	**2KJ1732 - ■DN13 - ■■K1**	**P00**	14
	409	23.4	2.2	7	**2KJ1732 - ■DN13 - ■■L1**	**P00**	14
	572	17.0	3	5	**2KJ1732 - ■DN13 - ■■M1**	**P00**	14

Shaft designs, see page 6/13 — **1, 5 or 6**

Frequency and voltage, see page 8/20 — **1 to 9**

Gearbox housing mounting position, see page 6/15 — **A, D, F or H**

*) Design: worm gearbox S with solid shaft

© Siemens AG 2011

Transmission ratios and maximum torques

Selection and ordering data

Gearbox size	Ratio code Order No. 15th and 16th position	Gearbox ratio i_{tot}	Lead angle of the worm γ_m °	Output speed n_1 = 2 800 rpm n_2 rpm	T_2 Nm	P_{1N} kW	η %	Output speed n_1 = 1 400 rpm n_2 rpm	T_2 Nm	P_{1N} kW	η %	IEC motor size 63	71	80
S08	**B1**	80	2.1	35.0	18	0.14	48	17.5	19	0.07	47	•		
	C1	60	2.7	46.7	22	0.20	55	23.3	24	0.11	52	•		
	D1	50	3.2	56.0	21	0.21	58	28.0	27	0.14	56	•		
	E1	40	3.8	70.0	21	0.24	63	35.0	28	0.17	61	•		
	F1	30	4.6	93.3	20	0.29	68	46.7	28	0.20	67	•		
	G1	25	5.2	112.0	20	0.33	72	56.0	27	0.23	70	•		
	H1	20	7.4	140.0	21	0.40	77	70.0	27	0.26	75	•		
	J1	15	9.2	186.7	20	0.48	81	93.3	27	0.33	80	•		
	K1	10	14	280.0	20	0.68	86	140.0	27	0.47	85	•		
	L1	7	19	400.0	19	0.89	89	200.0	26	0.62	88	•		
	M1	5	25	560.0	19	1.22	91	280.0	25	0.81	91	•		
S18	**B1**	80	3.5	35.0	33	0.22	55	17.5	35	0.12	54	•		
	C1	60	3.5	46.7	33	0.26	61	23.3	44	0.18	59	•		
	D1	50	4.0	56.0	33	0.30	64	28.0	44	0.20	63	•	•	
	E1	40	4.5	70.0	31	0.33	68	35.0	43	0.24	67	•	•	
	F1	30	5.5	93.3	31	0.42	73	46.7	41	0.28	72	•	•	
	G1	25	6.5	112.0	31	0.48	76	56.0	41	0.32	75	•	•	
	H1	20	9.5	140.0	31	0.56	81	70.0	41	0.38	80	•	•	
	J1	15	11	186.7	30	0.70	84	93.3	41	0.48	84	•	•	
	K1	10	17	280.0	30	1.00	88	140.0	40	0.67	88	•	•	
	L1	7	17	400.0	29	1.33	91	200.0	39	0.91	90	•	•	
	M1	5	23	560.0	28	1.78	92	280.0	37	1.18	92	•	•	
S28	**A1**	100	2.0	28.0	57	0.33	50	14.0	72	0.22	49	•		
	B1	80	2.5	35.0	57	0.39	54	17.5	80	0.27	54	•	•	
	C1	60	3.0	46.7	57	0.46	60	23.3	78	0.32	59	•	•	
	D1	50	3.5	56.0	55	0.50	64	28.0	75	0.35	63	•	•	
	E1	40	4.5	70.0	55	0.59	68	35.0	74	0.40	68	•	•	
	F1	30	5.0	93.3	53	0.71	73	46.7	73	0.49	73	•	•	•
	G1	25	6.0	112.0	53	0.82	76	56.0	73	0.56	76	•	•	•
	H1	20	8.5	140.0	53	0.96	81	70.0	73	0.67	80	•	•	•
	J1	15	10	186.7	53	1.23	84	93.3	72	0.84	84	•	•	•
	K1	10	15	280.0	53	1.77	88	140.0	72	1.20	88	•	•	•
	L1	7	15	400.0	53	2.44	91	200.0	71	1.63	91	•	•	•
	M1	5	21	560.0	51	3.22	93	280.0	69	2.18	93	•	•	•

© Siemens AG 2011

Selection and ordering data (continued)

Gearbox size	Ratio code Order No. 15th and 16th position	Gearbox ratio i_{tot}	Lead angle of the worm γ_m °	Output speed n_1 = 900 rpm n_2 rpm	T_2 Nm	P_{1N} kW	η %	Output speed n_1 = 500 rpm n_2 rpm	T_2 Nm	P_{1N} kW	η %	IEC motor size 63	71	80
S08	**B1**	80	2.1	11.3	19	0.05	44	6.3	20	0.03	40	•		
	C1	60	2.7	15.0	24	0.08	50	8.3	24	0.05	45	•		
	D1	50	3.2	18.0	27	0.10	53	10.0	28	0.06	49	•		
	E1	40	3.8	22.5	31	0.13	58	12.5	31	0.08	54	•		
	F1	30	4.6	30.0	32	0.16	64	16.7	33	0.10	60	•		
	G1	25	5.2	36.0	32	0.18	68	20.0	32	0.10	64	•		
	H1	20	7.4	45.0	31	0.20	73	25.0	31	0.12	70	•		
	J1	15	9.2	60.0	33	0.27	78	33.3	33	0.15	75	•		
	K1	10	14	90.0	32	0.36	84	50.0	33	0.21	81	•		
	L1	7	19	128.6	31	0.48	87	71.4	33	0.29	85	•		
	M1	5	25	180.0	30	0.63	90	100.0	33	0.39	88	•		
S18	**B1**	80	3.5	11.3	35	0.08	51	6.3	36	0.05	47	•		
	C1	60	3.5	15.0	49	0.14	57	8.3	51	0.09	52	•		
	D1	50	4.0	18.0	51	0.16	61	10.0	59	0.11	56	•	•	
	E1	40	4.5	22.5	51	0.18	65	12.5	64	0.14	61	•	•	
	F1	30	5.5	30.0	50	0.22	70	16.7	63	0.17	66	•	•	
	G1	25	6.5	36.0	49	0.25	74	20.0	62	0.19	70	•	•	
	H1	20	9.5	45.0	50	0.30	78	25.0	62	0.22	75	•	•	
	J1	15	11	60.0	50	0.38	82	33.3	62	0.27	79	•	•	
	K1	10	17	90.0	49	0.53	87	50.0	61	0.38	85	•	•	
	L1	7	17	128.6	47	0.70	90	71.4	58	0.49	88	•	•	
	M1	5	23	180.0	44	0.91	91	100.0	56	0.65	90	•	•	
S28	**A1**	100	2.0	9.0	72	0.14	47	5.0	72	0.09	43	•		
	B1	80	2.5	11.3	92	0.21	52	6.3	93	0.13	48	•	•	
	C1	60	3.0	15.0	93	0.26	57	8.3	116	0.19	53	•	•	
	D1	50	3.5	18.0	90	0.28	61	10.0	115	0.21	57	•	•	
	E1	40	4.5	22.5	90	0.32	66	12.5	113	0.24	62	•	•	
	F1	30	5.0	30.0	86	0.38	72	16.7	110	0.28	68	•	•	•
	G1	25	6.0	36.0	85	0.43	75	20.0	109	0.32	71	•	•	•
	H1	20	8.5	45.0	85	0.51	79	25.0	109	0.38	76	•	•	•
	J1	15	10	60.0	85	0.64	83	33.3	109	0.47	81	•	•	•
	K1	10	15	90.0	85	0.92	87	50.0	109	0.66	86	•	•	•
	L1	7	15	128.6	84	1.26	90	71.4	107	0.90	89	•	•	•
	M1	5	21	180.0	82	1.68	92	100.0	105	1.21	91	•	•	•

© Siemens AG 2011

Mounting types

Selection and ordering data

Mounting type	Order No. 14th position	Code in type designation 4th position	Representation
Housing flange (C-type)	**H**	Z	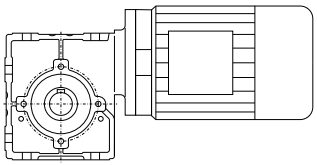
Design with torque arm	**D**	D	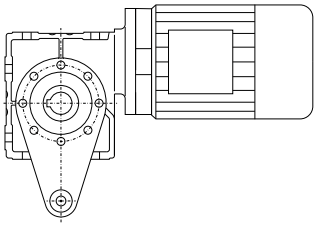
Flange-mounted design (A-type)	**F**	F	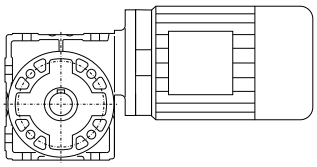

Worm gearbox with torque arm

The torque arm consists of an arm with an eye; it can be screwed onto the gearbox housing with an axis intersection of 45° in any one of five positions around the output.

If **D** appears in the **14th position** of the order number, the torque arm will be delivered loose.

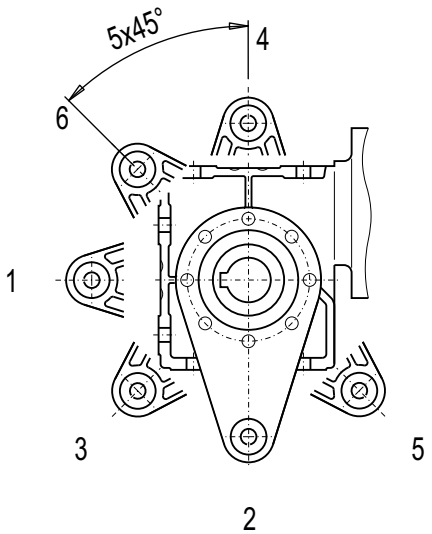

© Siemens AG 2011

Selection and ordering data

Shaft design	Order No. 8th position	Order No. suffix	Shaft dimensions		
Worm gearbox S, foot-mounted design					
Size			**S.08**	**S.18**	**S.28**
Solid shaft with feather key	**1**		V16x 40	V20 x 40	V20 x 40
Worm gearbox SAZ with housing flange					
Size			**S.08**	**S.18**	**S.28**
Hollow shaft	**5**		H16 x 84		H20 x 121
	6			H20 x 100	
Worm gearbox SAD with torque arm					
Size			**S.08**	**S.18**	**S.28**
Hollow shaft	**5**		H16 x 84		H20 x 121
	6			H20 x 100	
Worm gearbox SF/SAF, flange-mounted design (A-type)					
Size			**S.F08**	**S.F18**	**S.F28**
Solid shaft with feather key	**2**		V16x 40	V20 x 40	V20 x 40
Hollow shaft	**5**		H16 x 84		H20 x 121
	6			H20 x 100	

© Siemens AG 2011

Flange-mounted designs (A-type)

Selection and ordering data

Order code	Flange diameter		
Worm gearbox S.F			
Size	**S.F08**	**S.F18**	**S.F28**
H01	80	110	120
H02	120 / Q90	120	160 / Q136

© Siemens AG 2011

Selection and ordering data

The gearbox is lubricated for its entire service life in such a way that it can be installed and operated using all the mounting types / mounting positions listed below.

Please contact customer service to discuss the oil quantity if you wish to use a mounting position which is not shown here.

Position of the terminal box

The terminal box of the motor can be mounted in four different positions. See Chapter 8 for an accurate representation of the terminal box position and the corresponding order codes.

Worm gearbox S, flange-mounted design, and with housing flange

Oil control valves:

These types are lubricated for life.

No ventilation, oil level, or drain plugs are present.

1 ... 4 Position of the terminal box, see Chapter 8.

1) Standard mounting type

S: B3-00 (IM B3-00) [1)]
Order code: output side A **D06**, output side B **D08**

SF: B5-01 (IM B5-01) [1)]
Order code: output side A **D22**, output side B **D24**

SAD, SAF, SAZ: H-01 [1)]
Order code: output side A **D76**, output side B **D77**

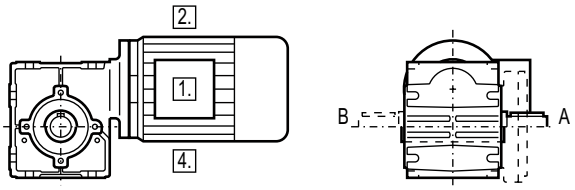

S: B8-00 (IM B8-00)
Order code: output side A **D68**, output side B **D70**

SF: B5-03 (IM B5-03)
Order code: output side A **D32**, output side B **D34**

SAD, SAF, SAZ: H-02
Order code: output side A **D78**, output side B **D79**

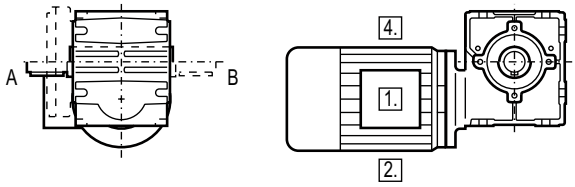

S: B6-00 (IM B6-00)
Order code: output side A **D38**, output side B **D40**

SF: B5-00 (IM B5-00)
Order code: output side A **D18**, output side B **D20**

SAD, SAF, SAZ: H-04
Order code: output side A **D82**, output side B **D83**

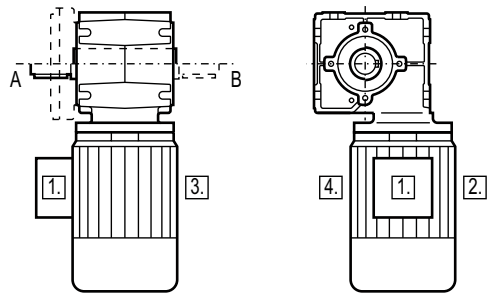

S: B7-00 (IM B7-00)
Order code: output side A **D59**, output side B **D61**

SF: B5-02 (IM B5-02)
Order code: output side A **D27**, output side B **D29**

SAD, SAF, SAZ: H-03
Order code: output side A **D80**, output side B **D81**

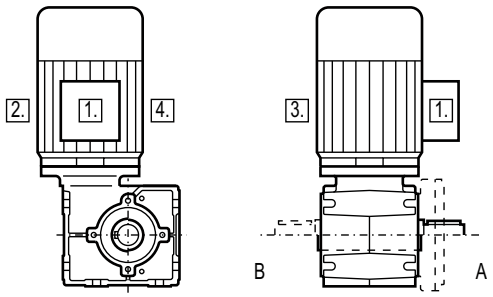

S: V5-00 (IM V5-00)
Order code: output side A **E03**, output side B **E05**

SF: V1-00 (IM V1-00)
Order code: output side A **D90**, output side B **D92**

SAD, SAF, SAZ: H-05
Order code: output side A **D84**, output side B **D85**

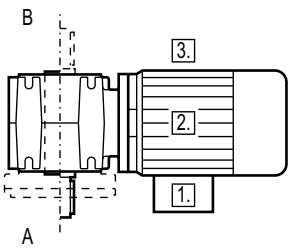

S: V6-00 (IM V6-00)
Order code: output side A **E15**, output side B **E17**

SF: V3-00 (IM V3-00)
Order code: output side A **D98**, output side B **E00**

SAD; SAF; SAZ: H-06
Order code: output side A **D86**, output side B **D87**

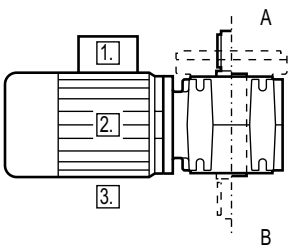

© Siemens AG 2011

Special versions

Lubricants

Worm gearbox S is always filled with synthetic lubricant prior to despatch and is supplied ready for use. The rating plate contains information about the appropriate type of oil (PGLP) and ISO viscosity class.

If the gearbox is to be used in an application with special requirements, the lubricants listed in the table below can be used.

Area of application	Ambient temperature [1]			DIN ISO designation	Order code
Standard oils					
Standard temperature	0	…	+60 °C	CLP ISO PG VG460	**K08**
Lowest temperature usage	-40	…	+40 °C	CLP ISO PAO VG 220	[2]
Physiologically safe oils (for use in the food industry) in acc. with USDA-H1					
Standard temperature	-30	…	+50 °C	CLP ISO H1 VG460	**K11**

[1] Recommendation
[2] On request

2nd output shaft extension

See the dimension drawings for the corresponding design for the relevant dimensions.

Order code:
2nd output shaft extension **G73**

Plug-in shaft

If required, hollow-shaft designs of the gearboxes are available additionally with a plug-in shaft.

© Siemens AG 2011

Dimension drawing overview

	Gearbox type	Dimension drawing on page
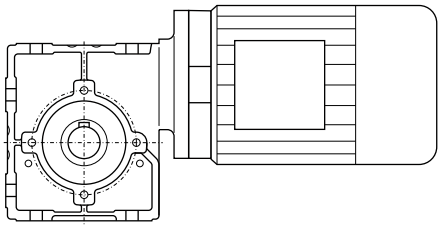	S08	6/18
	S18	6/23
	S28	6/28
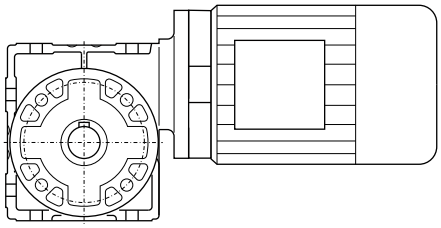	SF08	6/19
	SF18	6/24
	SF28	6/29
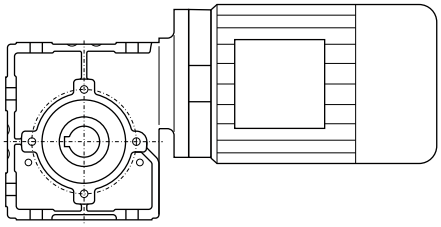	SAZ08	6/20
	SAZ18	6/25
	SAZ28	6/30
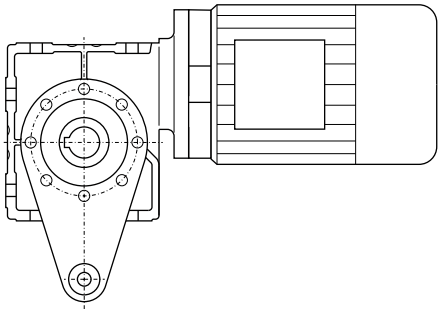	SAD08	6/21
	SAD18	6/26
	SAD28	6/31
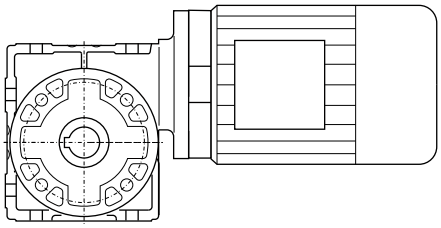	SAF08	6/22
	SAF18	6/27
	SAF28	6/32
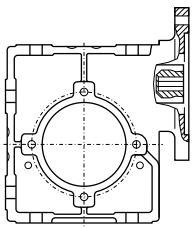	S.08-K4 ... S.28-K4	6/33

© Siemens AG 2011

Dimensions

Gearbox S08, foot-mounted design

S012

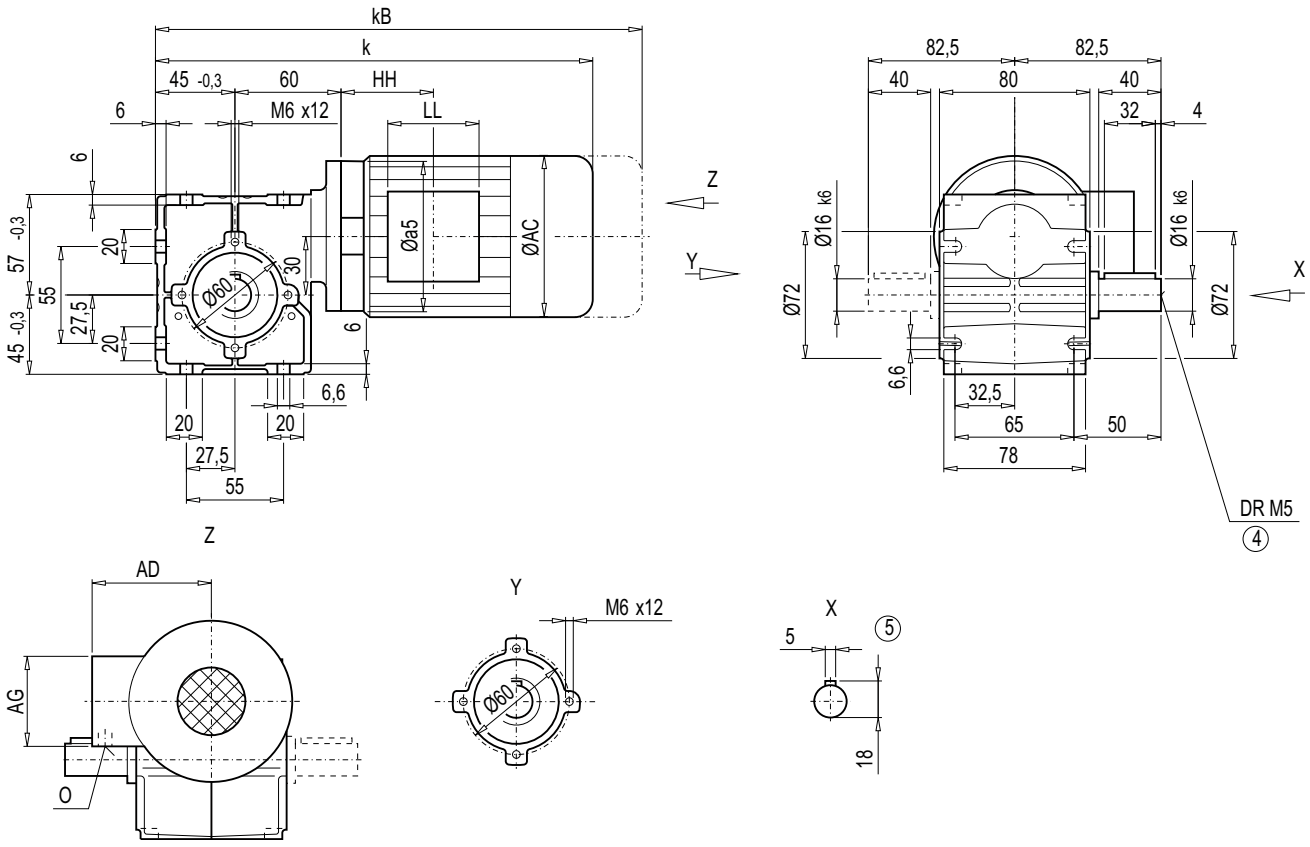

Motor	S08 k	kB	AC	AD	AG	LL	HH	a5	O	Weight S08
LAI63	284.5	335.5	118	101 (135.5)	75 (90)	75 (90)	69.5	90	M20x1.5/M25x1.5	5

④ DIN 332 ⑤ Feather key / keyway DIN 6885 ( ) Values in brackets for motor with brake and / or with encoder

© Siemens AG 2011

Gearbox SF08, flange-mounted design (A-type)

SF012

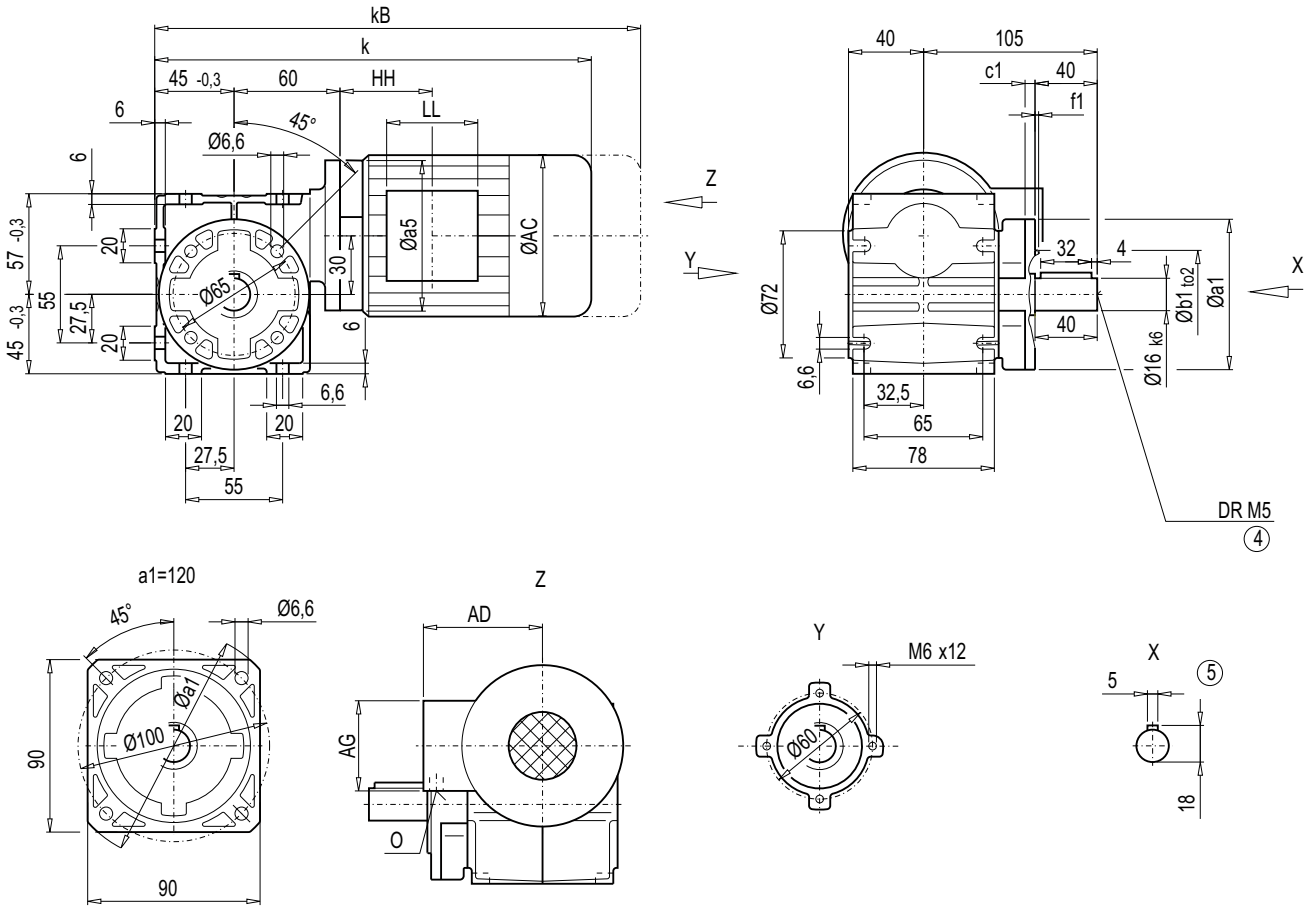

Flange	a1	b1	to2	c1	f1
A80	80	50	j6	7	2.5
A120/Q90	120	80	j6	7	3.0

	SF08									Weight
Motor	**k**	**kB**	**AC**	**AD**	**AG**	**LL**	**HH**	**a5**	**O**	**SF08**
LAI63	284.5	335.5	118	101 (135.5)	75 (90)	75 (90)	69.5	90	M20x1.5/M25x1.5	5

④ DIN 332 ⑤ Feather key / keyway DIN 6885 ( ) Values in brackets for motor with brake and / or with encoder

© Siemens AG 2011

Dimensions

Gearbox SAZ08, housing-flange-mounted design (C-type)

SAZ012

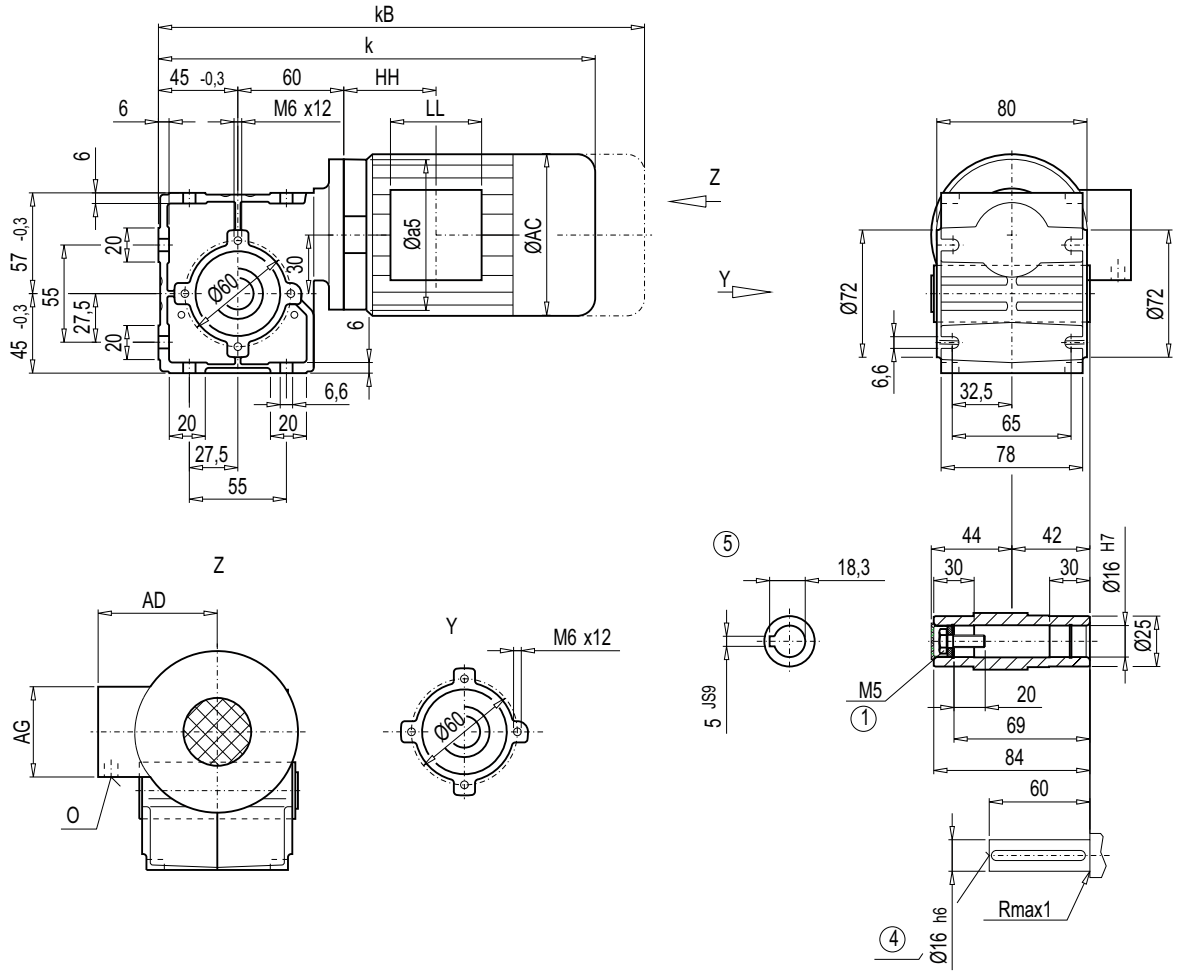

Motor	SAZ08 k	kB	AC	AD	AG	LL	HH	a5	O	Weight SAZ08
LAI63	284.5	335.5	118	101 (135.5)	75 (90)	75 (90)	69.5	90	M20x1.5/M25x1.5	5

① EN ISO 4014 ④ DIN 332 ⑤ Feather key / keyway DIN 6885 ( ) Values in brackets for motor with brake and / or with encoder

© Siemens AG 2011

Gearbox SAD08, shaft-mounted design with torque arm

SAD012

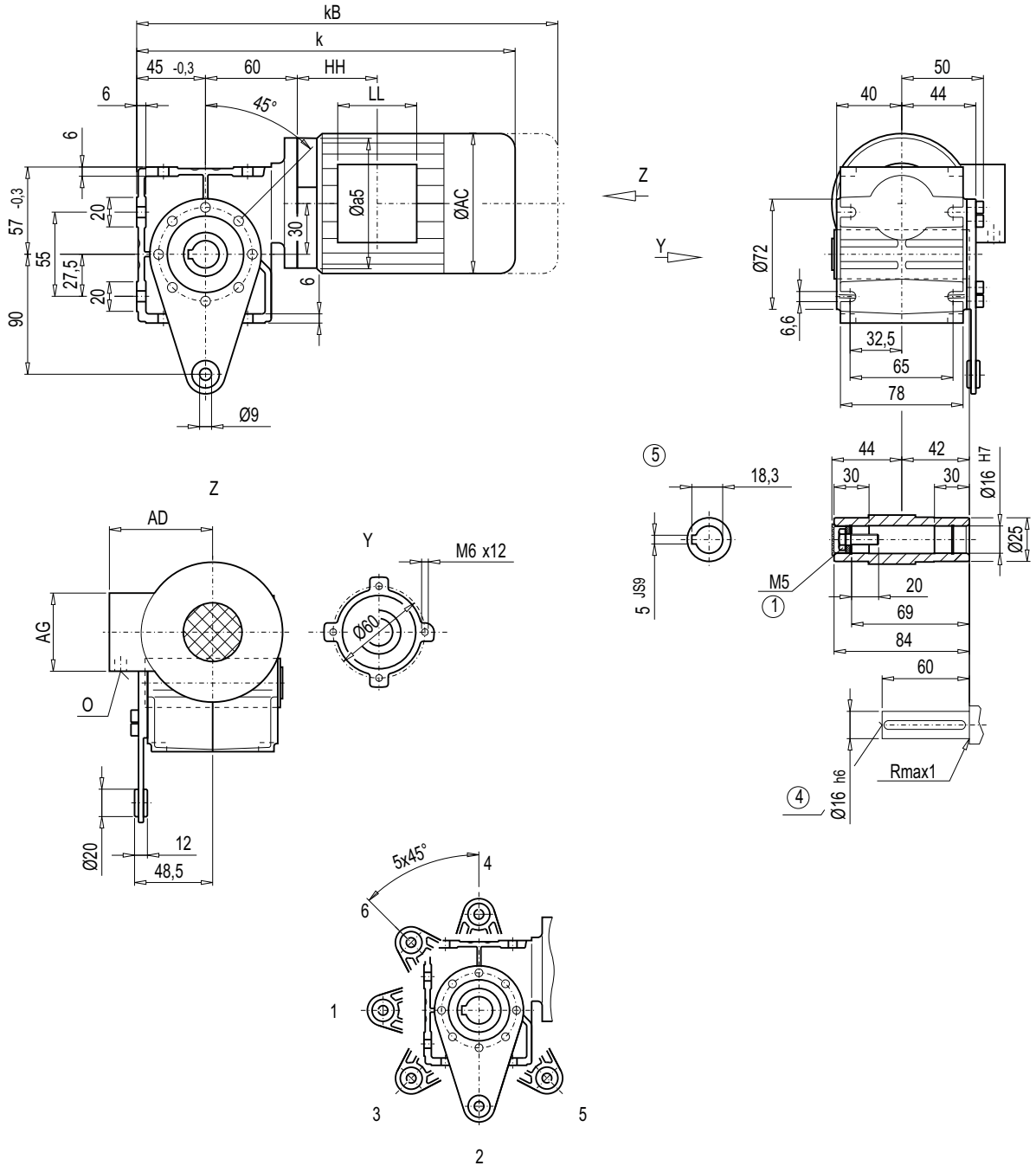

Motor	SAD08 k	kB	AC	AD	AG	LL	HH	a5	O	Weight SAD08
LAI63	284.5	335.5	118	101 (135.5)	75 (90)	75 (90)	69.5	90	M20x1.5/M25x1.5	5

① EN ISO 4014 ④ DIN 332 ⑤ Feather key / keyway DIN 6885 ( ) Values in brackets for motor with brake and / or with encoder

© Siemens AG 2011

Dimensions

Gearbox SAF08, flange-mounted design

SAF012

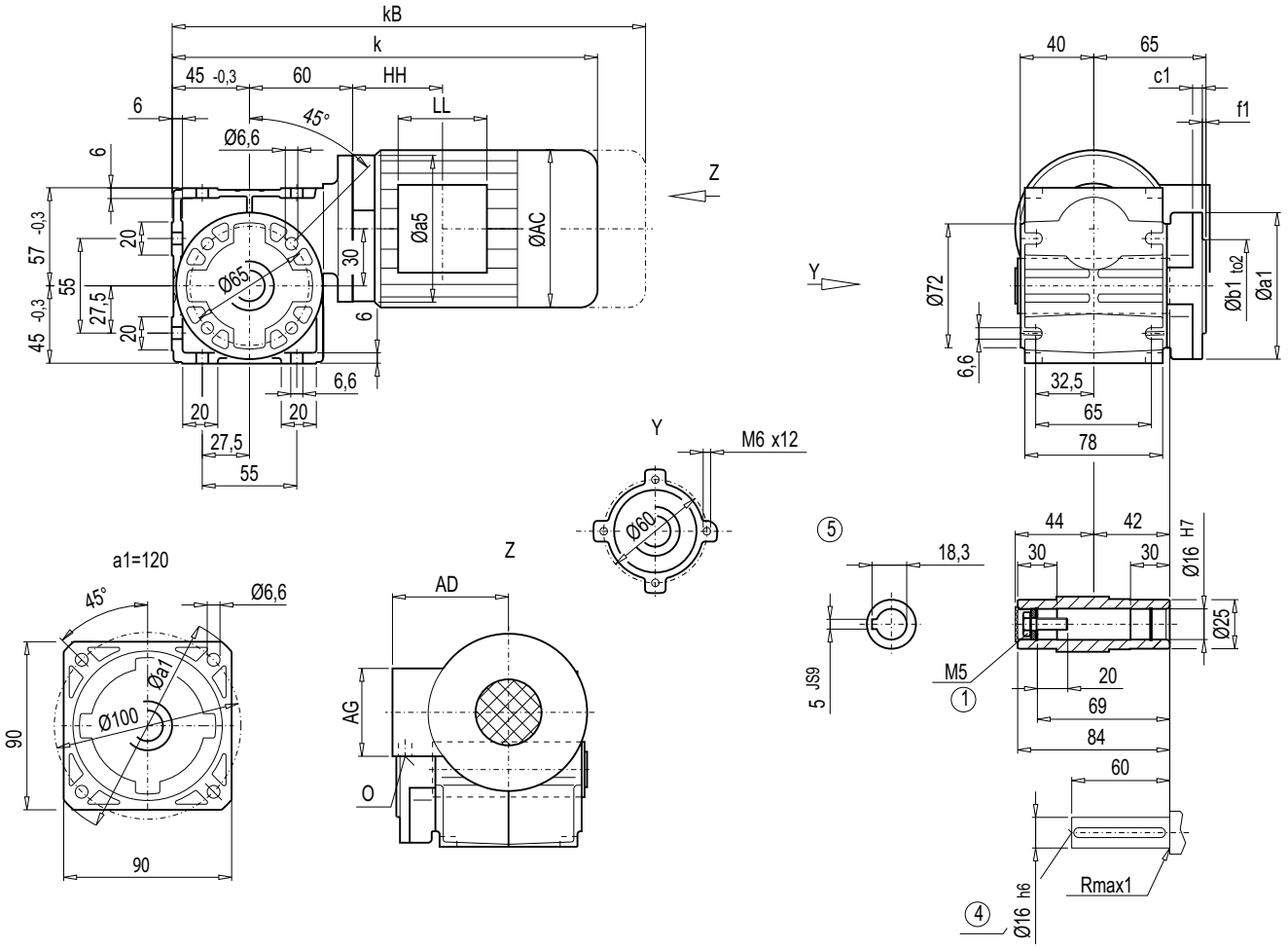

Flange	a1	b1	to2	c1	f1
A80	80	50	j6	7	2.5
A120/Q90	120	80	j6	7	3.0

	SAF08									Weight
Motor	**k**	**kB**	**AC**	**AD**	**AG**	**LL**	**HH**	**a5**	**O**	**SAF08**
LAI63	284.5	335.5	118	101 (135.5)	75 (90)	75 (90)	69.5	90	M20x1.5/M25x1.5	5

① EN ISO 4014 ④ DIN 332 ⑤ Feather key / keyway DIN 6885 ( ) Values in brackets for motor with brake and / or with encoder

© Siemens AG 2011

Gearbox S18, foot-mounted design

S012

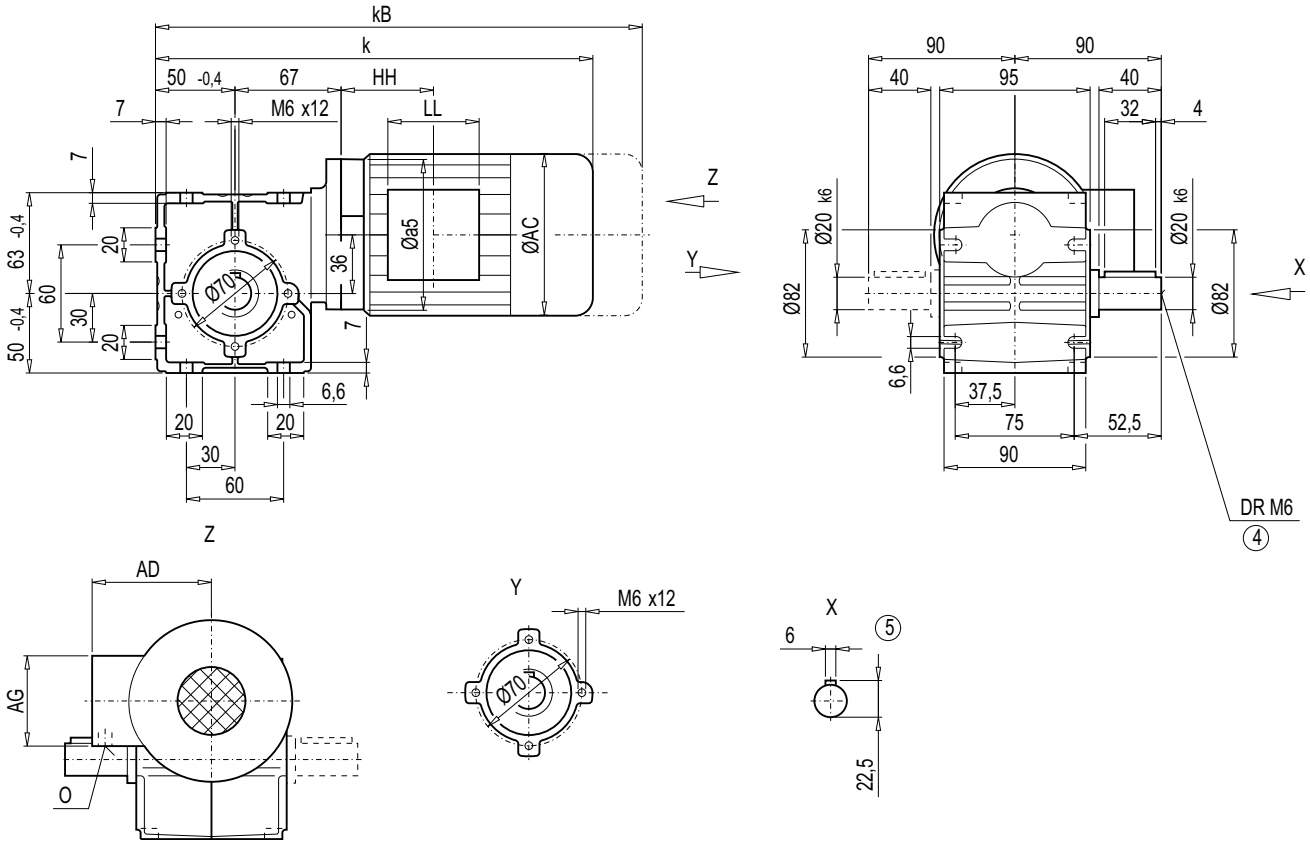

Motor	S18 k	kB	AC	AD	AG	LL	HH	a5	O	Weight S18
LAI63	296.5	347.5	118	101 (135.5)	75 (90)	75 (90)	69.5	90	M20x1.5/M25x1.5	6
LAI71	327.0	378.5	139	111.0 (146)	75 (90)	75 (90)	63.5	105	M20x1.5/M25x1.5	8

④ DIN 332 ⑤ Feather key / keyway DIN 6885 ( ) Values in brackets for motor with brake and / or with encoder

© Siemens AG 2011

Dimensions

Gearbox SF18, flange-mounted design (A-type)

SF012

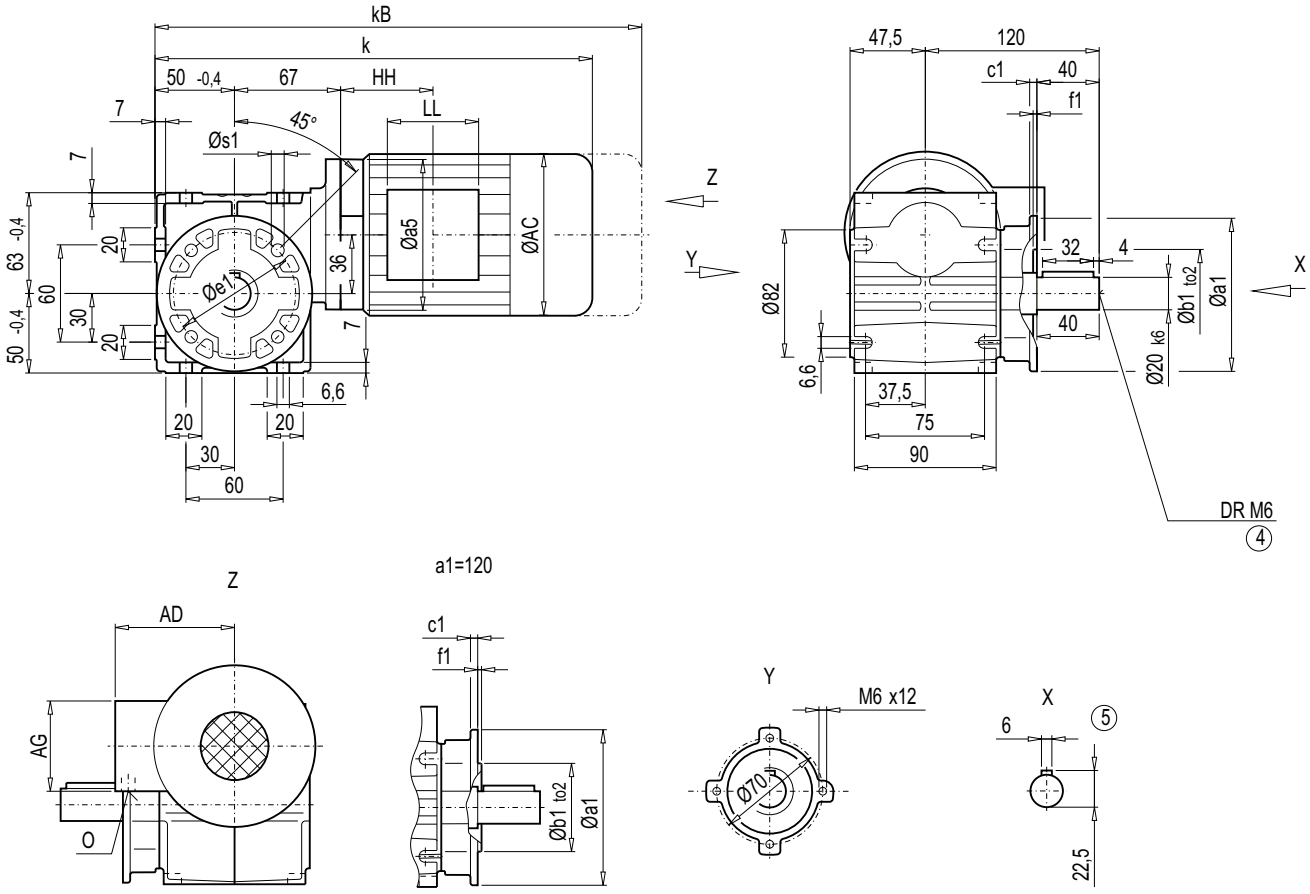

Flange	a1	b1	to2	c1	e1	f1	s1
A110	110	60	H8	8	87	4	9
A120	120	80	j6	8	100	3	6.6

	SF18									Weight
Motor	**k**	**kB**	**AC**	**AD**	**AG**	**LL**	**HH**	**a5**	**O**	**SF18**
LAI63	296.5	347.5	118	101 (135.5)	75 (90)	75 (90)	69.5	90	M20x1.5/M25x1.5	6
LAI71	327.0	378.5	139	111.0 (146)	75 (90)	75 (90)	63.5	105	M20x1.5/M25x1.5	8

④ DIN 332 ⑤ Feather key / keyway DIN 6885 ( ) Values in brackets for motor with brake and / or with encoder

© Siemens AG 2011

Gearbox SAZ18, housing-flange-mounted design (C-type)

SAZ012

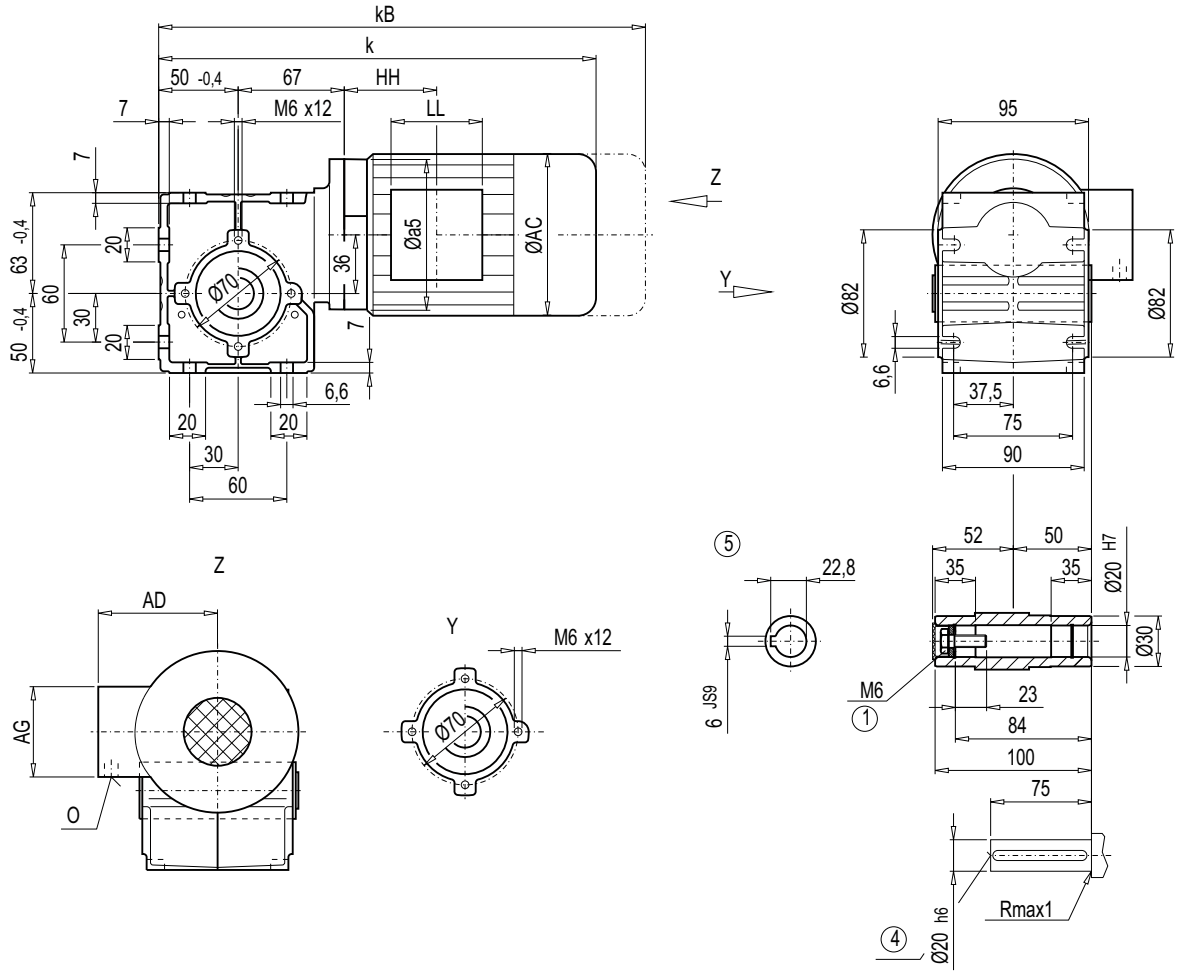

Motor	SAZ18 k	kB	AC	AD	AG	LL	HH	a5	O	Weight SAZ18
LAI63	296.5	347.5	118	101 (135.5)	75 (90)	75 (90)	69.5	90	M20x1.5/M25x1.5	6
LAI71	327.0	378.5	139	111.0 (146)	75 (90)	75 (90)	63.5	105	M20x1.5/M25x1.5	7

① EN ISO 4014 ④ DIN 332 ⑤ Feather key / keyway DIN 6885 ( ) Values in brackets for motor with brake and / or with encoder

© Siemens AG 2011

Dimensions

Gearbox SAD18, shaft-mounted design with torque arm

SAD012

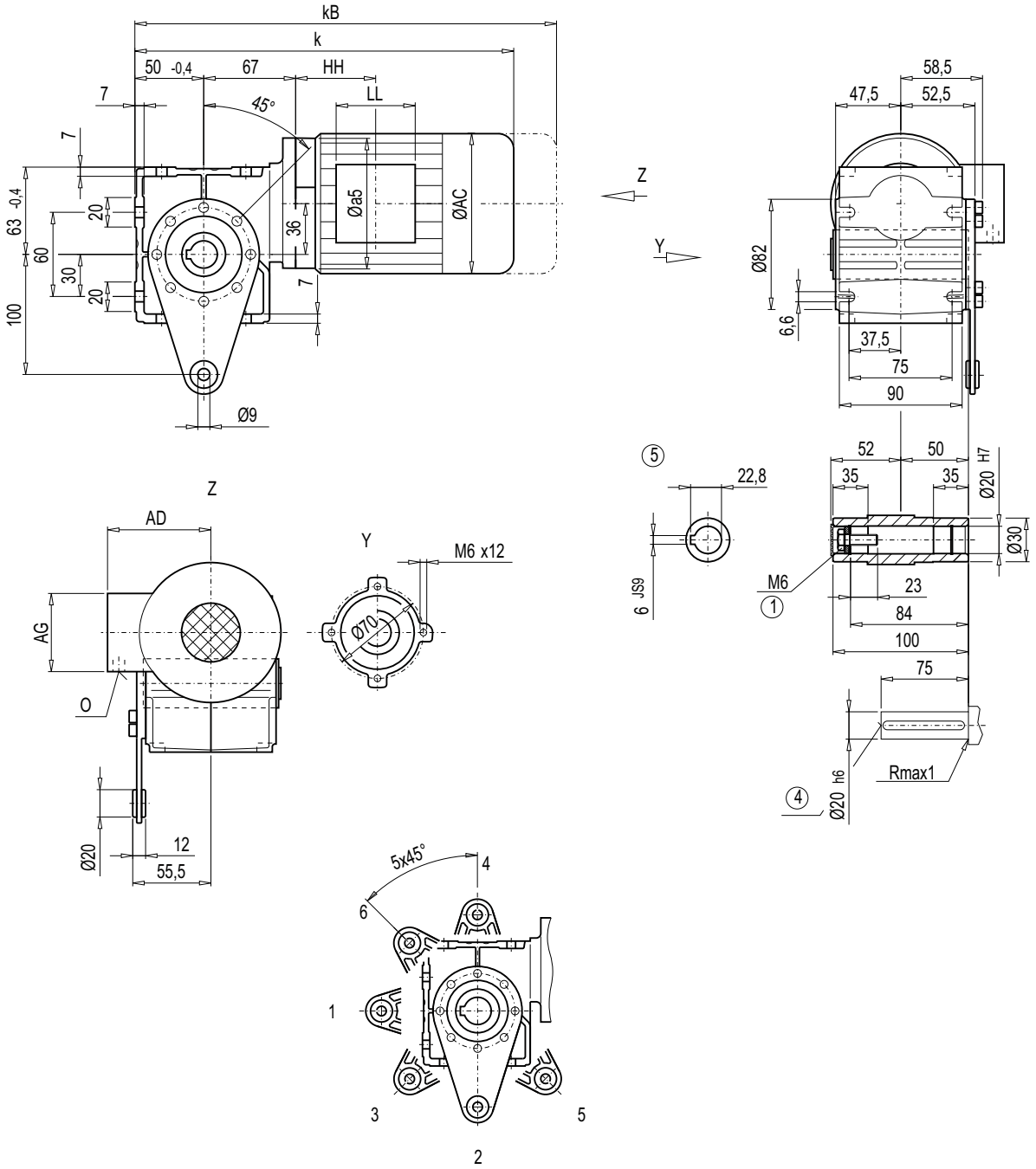

Motor	SAD18 k	kB	AC	AD	AG	LL	HH	a5	O	Weight SAD18
LAI63	296.5	347.5	118	101 (135.5)	75 (90)	75 (90)	69.5	90	M20x1.5/M25x1.5	6
LAI71	327.0	378.5	139	111.0 (146)	75 (90)	75 (90)	63.5	105	M20x1.5/M25x1.5	8

① EN ISO 4014 ④ DIN 332 ⑤ Feather key / keyway DIN 6885 ( ) Values in brackets for motor with brake and / or with encoder

© Siemens AG 2011

Gearbox SAF18, flange-mounted design

SAF012

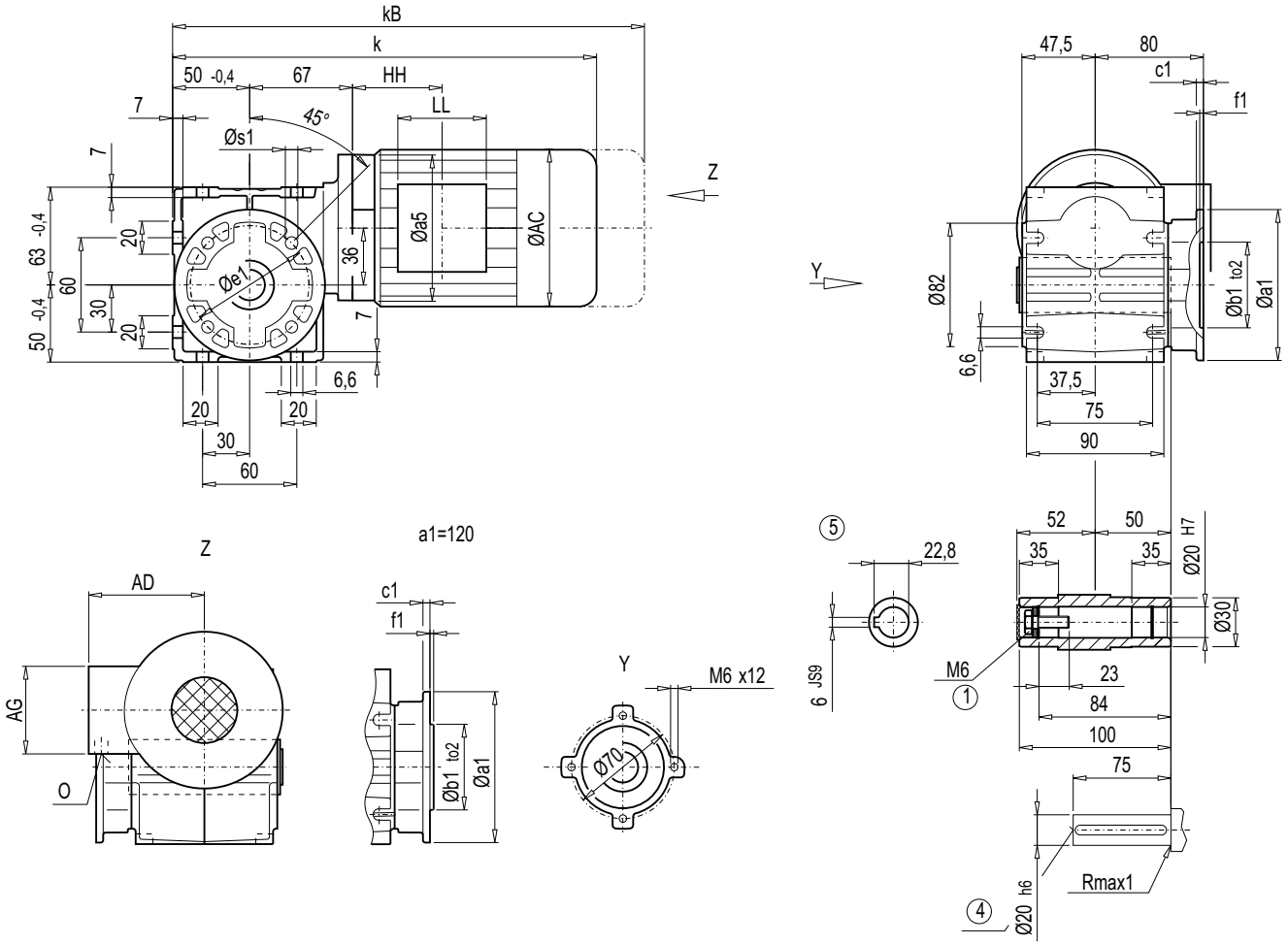

Flange	a1	b1	to2	c1	e1	f1	s1
A110	110	60	H8	8	87	4	9
A120	120	80	j6	8	100	3	6.6

	SAF18									Weight
Motor	**k**	**kB**	**AC**	**AD**	**AG**	**LL**	**HH**	**a5**	**O**	**SAF18**
LAI63	296.5	347.5	118	101 (135.5)	75 (90)	75 (90)	69.5	90	M20x1.5/M25x1.5	6
LAI71	327.0	378.5	139	111.0 (146)	75 (90)	75 (90)	63.5	105	M20x1.5/M25x1.5	8

① EN ISO 4014 ④ DIN 332 ⑤ Feather key / keyway DIN 6885 ( ) Values in brackets for motor with brake and / or with encoder

© Siemens AG 2011

Dimensions

Gearbox S28, foot-mounted design

S012

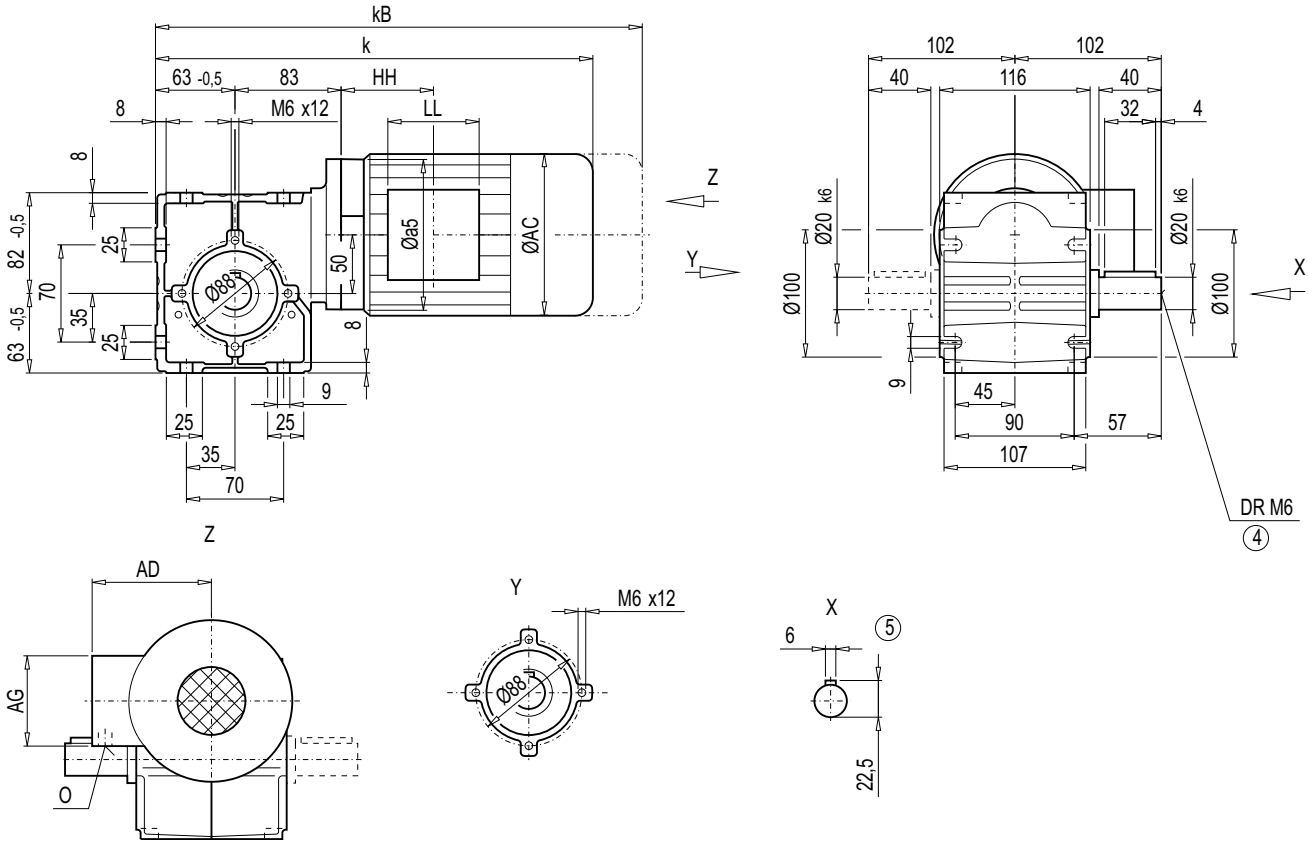

Motor	S28 k	kB	AC	AD	AG	LL	HH	a5	O	Weight S28
LAI63	325.5	376.5	118	101.0 (135.5)	75 (90)	75 (90)	69.5	90	M20x1.5/M25x1.5	8
LAI71	356.0	407.5	139	111.0 (146)	75 (90)	75 (90)	63.5	105	M20x1.5/M25x1.5	10
LAI80	379.5	433.5	156.5	120.0 (155)	75 (90)	75 (90)	63.5	120	M20x1.5/M25x1.5	14
LAI80Z	414.5	478.5	156.5	120.0 (155)	75 (90)	75 (90)	63.5	120	M20x1.5/M25x1.5	16

④ DIN 332 ⑤ Feather key / keyway DIN 6885 ( ) Values in brackets for motor with brake and / or with encoder

© Siemens AG 2011

Gearbox SF28, flange-mounted design (A-type)

SF012

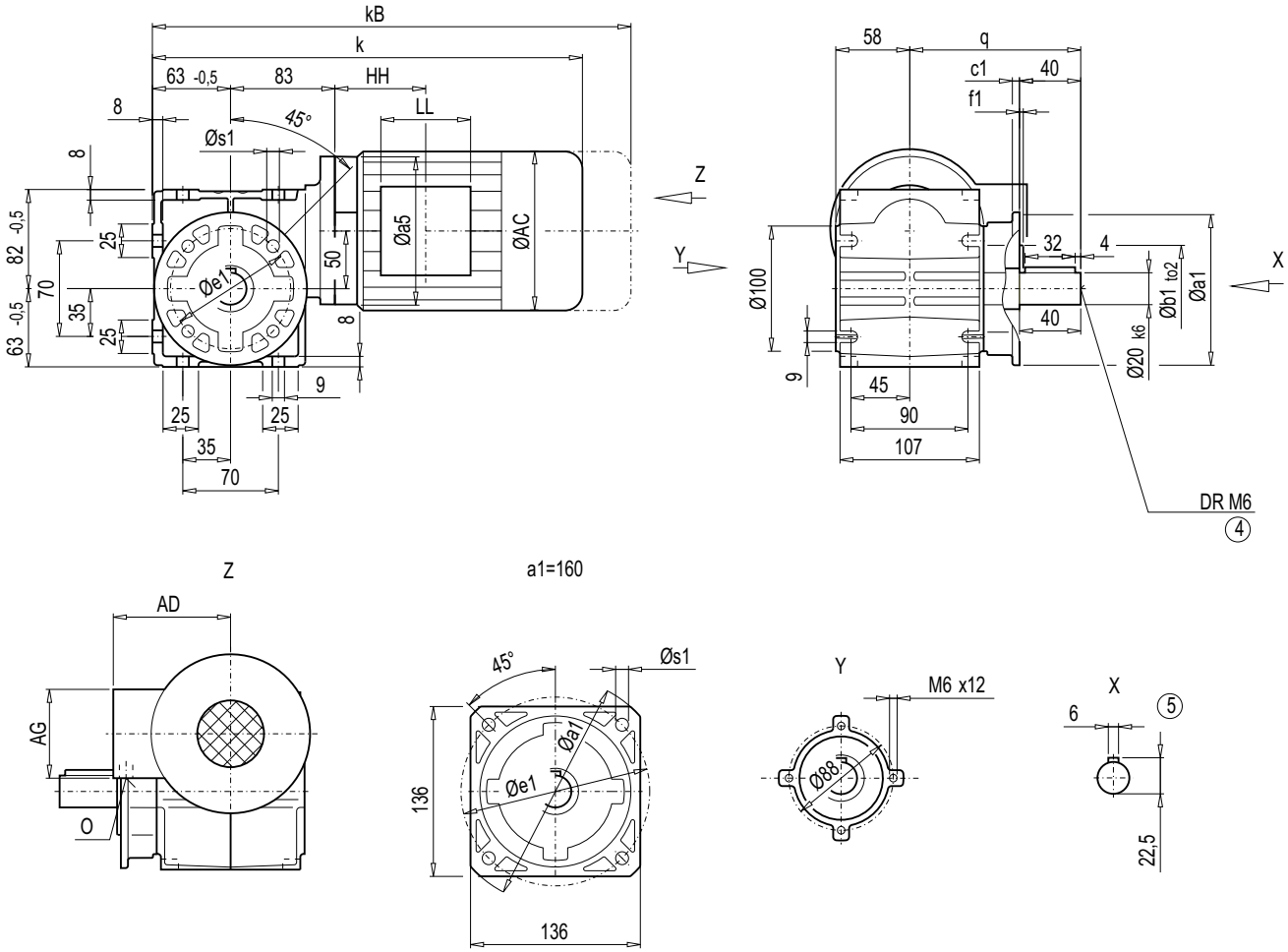

Flange	a1	b1	to2	c1	e1	f1	s1	q
A120	120	80	j6	8	100	3	6.6	120
A160/Q136	160	110	j6	8	130	3.5	9	135

	SF28									Weight
Motor	**k**	**kB**	**AC**	**AD**	**AG**	**LL**	**HH**	**a5**	**O**	**SF28**
LAI63	325.5	376.5	118	101.0 (135.5)	75 (90)	75 (90)	69.5	90	M20x1.5/M25x1.5	9
LAI71	356.0	407.5	139	111.0 (146)	75 (90)	75 (90)	63.5	105	M20x1.5/M25x1.5	10
LAI80	379.5	433.5	156.5	120.0 (155)	75 (90)	75 (90)	63.5	120	M20x1.5/M25x1.5	14
LAI80Z	414.5	478.5	156.5	120.0 (155)	75 (90)	75 (90)	63.5	120	M20x1.5/M25x1.5	16

④ DIN 332 ⑤ Feather key / keyway DIN 6885 ( ) Values in brackets for motor with brake and / or with encoder

© Siemens AG 2011

Dimensions

Gearbox SAZ28, housing-flange-mounted design (C-type)

SAZ012

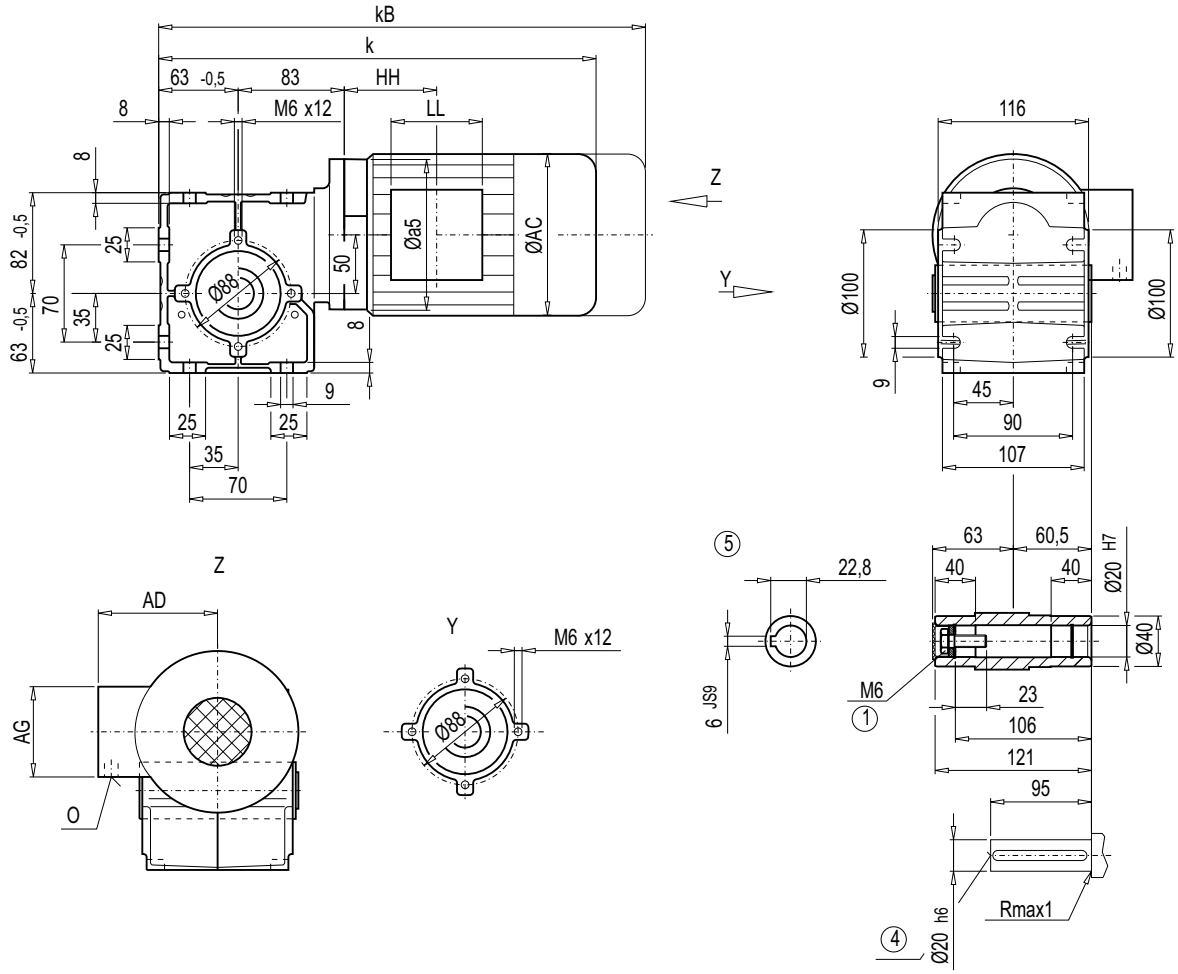

Motor	SAZ28 k	kB	AC	AD	AG	LL	HH	a5	O	Weight SAZ28
LAI63	325.5	376.5	118	101.0 (135.5)	75 (90)	75 (90)	69.5	90	M20x1.5/M25x1.5	8
LAI71	356.0	407.5	139	111.0 (146)	75 (90)	75 (90)	63.5	105	M20x1.5/M25x1.5	10
LAI80	379.5	433.5	156.5	120.0 (155)	75 (90)	75 (90)	63.5	120	M20x1.5/M25x1.5	14
LAI80Z	414.5	478.5	156.5	120.0 (155)	75 (90)	75 (90)	63.5	120	M20x1.5/M25x1.5	16

① EN ISO 4014 ④ DIN 332 ⑤ Feather key / keyway DIN 6885 ( ) Values in brackets for motor with brake and / or with encoder

© Siemens AG 2011

Gearbox SAD28, shaft-mounted design with torque arm

SAD012

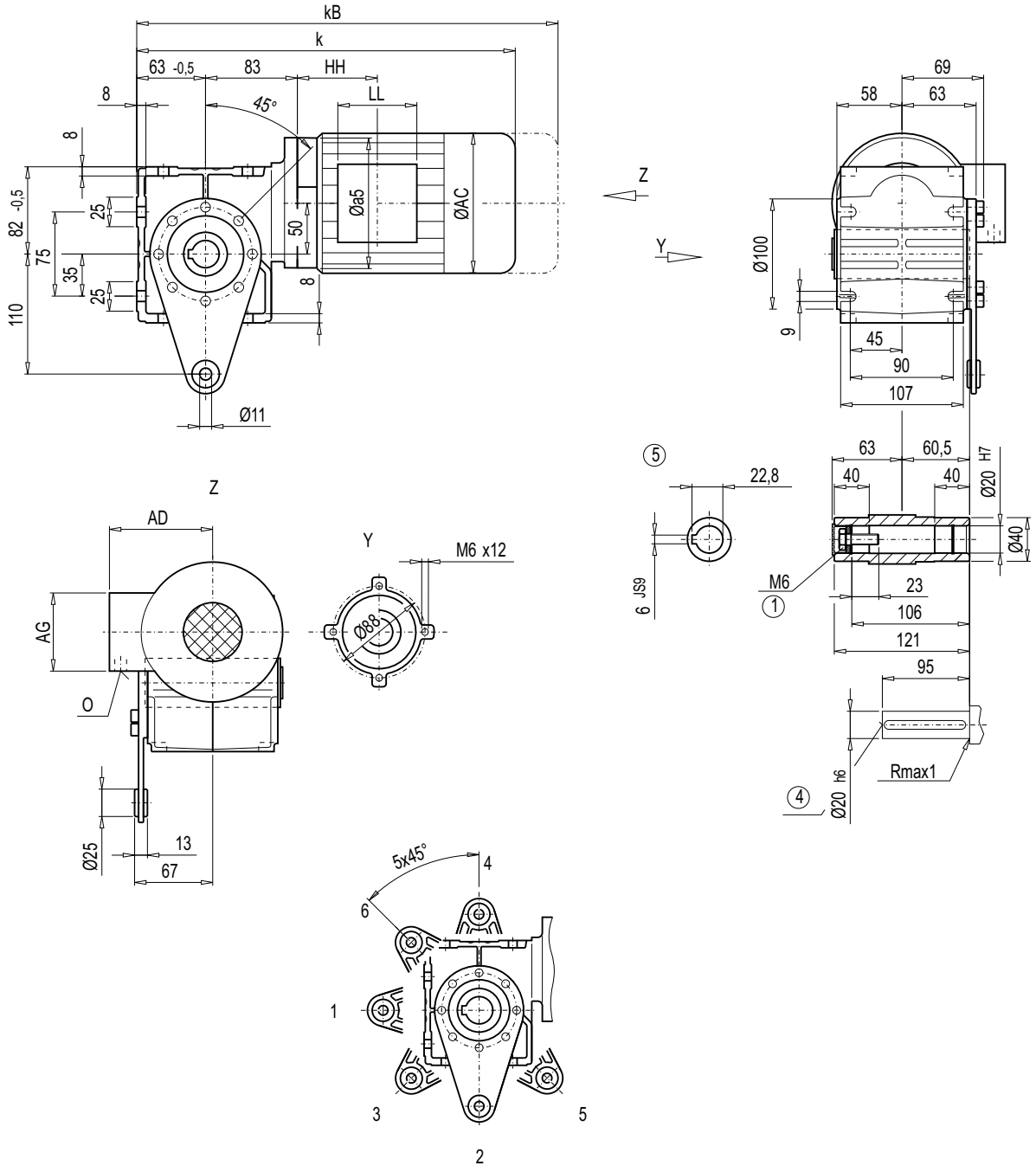

Motor	SAD28 k	kB	AC	AD	AG	LL	HH	a5	O	Weight SAD28
LAI63	325.5	376.5	118	101.0 (135.5)	75 (90)	75 (90)	69.5	90	M20x1.5/M25x1.5	8
LAI71	356.0	407.5	139	111.0 (146)	75 (90)	75 (90)	63.5	105	M20x1.5/M25x1.5	10
LAI80	379.5	433.5	156.5	120.0 (155)	75 (90)	75 (90)	63.5	120	M20x1.5/M25x1.5	14
LAI80Z	414.5	478.5	156.5	120.0 (155)	75 (90)	75 (90)	63.5	120	M20x1.5/M25x1.5	16

① EN ISO 4014 ④ DIN 332 ⑤ Feather key / keyway DIN 6885 ( ) Values in brackets for motor with brake and / or with encoder

© Siemens AG 2011

Dimensions

Gearbox SAF28, flange-mounted design

SAF012

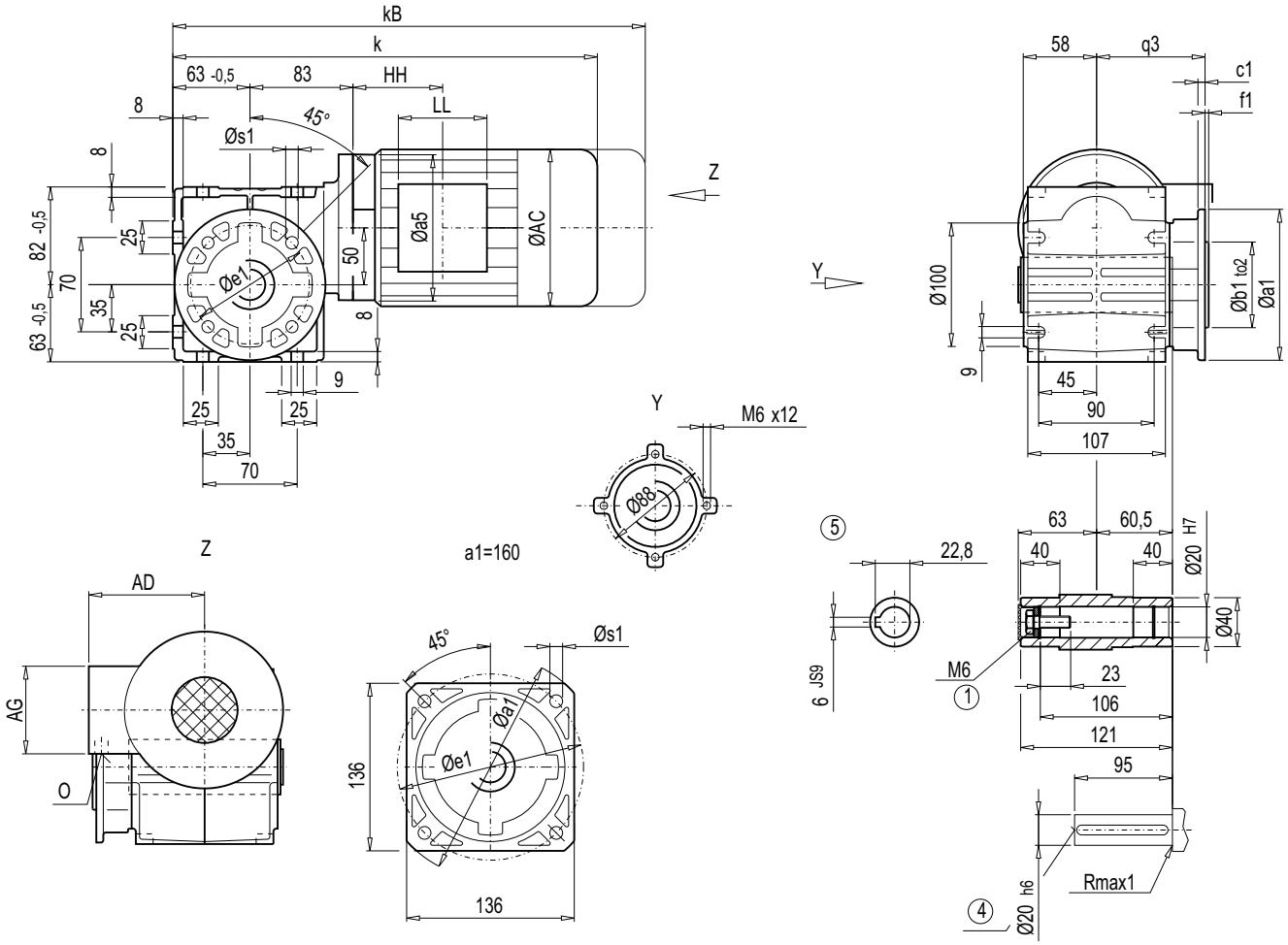

Flange	a1	b1	to2	c1	e1	f1	s1	q3
A120	120	80	j6	8	100	3	6.6	80
A160/Q136	160	110	j6	8	130	3.5	9	95

	SAF28									Weight
Motor	**k**	**kB**	**AC**	**AD**	**AG**	**LL**	**HH**	**a5**	**O**	**SAF28**
LAI63	325.5	376.5	118	101.0 (135.5)	75 (90)	75 (90)	69.5	90	M20x1.5/M25x1.5	8
LAI71	356.0	407.5	139	111.0 (146)	75 (90)	75 (90)	63.5	105	M20x1.5/M25x1.5	10
LAI80	379.5	433.5	156.5	120.0 (155)	75 (90)	75 (90)	63.5	120	M20x1.5/M25x1.5	14
LAI80Z	414.5	478.5	156.5	120.0 (155)	75 (90)	75 (90)	63.5	120	M20x1.5/M25x1.5	16

① EN ISO 4014 ④ DIN 332 ⑤ Feather key / keyway DIN 6885 ( ) Values in brackets for motor with brake and / or with encoder

© Siemens AG 2011

Gearbox S.-K4

S.-K4

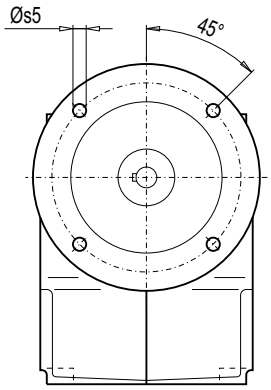

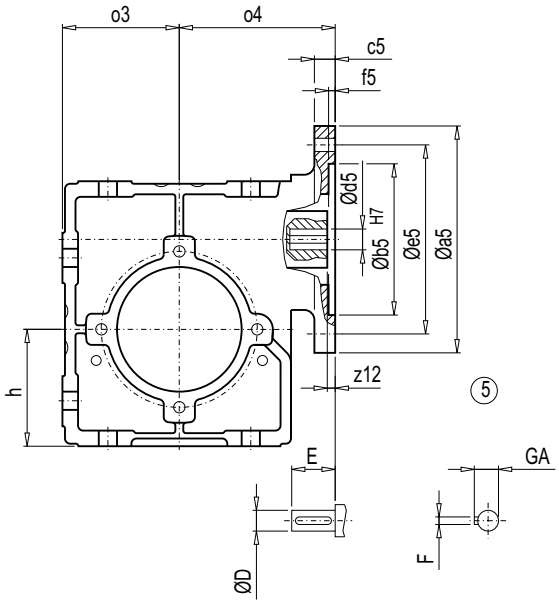

	Motor	a5	e5	b5	f5	c5	z12	s5	d5/D	E	F	GA	o3	o4	h
S08-K4	63	90	75	60	3	7	2	5.8	11	23	4	12.5	45	60	45
S18-K4	63	90	75	60	3	7	2	5.8	11	23	4	12.5	50	67	50
	71	105	85	70				7	14	30	5	16			
S28-K4	63	90	75	60	3	8	6	5.8	11	23	4	12.5	63	83	63
	71	105	85	70				7	14	30	5	16			
	80	120	100	80	3.5			7	19	40	6	21.5			

⑤ Feather key / keyway DIN 6885

© Siemens AG 2011

Notes

© Siemens AG 2011

Input units

7

Orientation
7/2 Overview

General technical data
7/4 Permissible radial forces and torques
7/6 Maximum motor weight

Input unit K2
7/7 Selection and ordering data
Input unit K4
7/9 Selection and ordering data
Input units KQ / KQS
7/11 Selection and ordering data
Input unit A
7/13 Selection and ordering data
Input unit P
7/15 Selection and ordering data

Special versions
7/17 Input units with backstop K2X, AX, PX
7/18 Friction clutch
7/18 Speed monitoring

Dimensions
7/19 Dimension drawing overview
7/20 Dimension drawings

© Siemens AG 2011

Input units

Orientation

Overview

For most applications, it is best to mount the motor so that it is integrated on the gearbox. This provides an optimum solution in terms of a short overall length and the least weight.

On request, the gearboxes can also be fitted with an input unit for mounting standard motors.

Input unit	Description	Flexible coupling	Zero-backlash flexible coupling	Clamping hub	Backstop	Friction clutch	Speed encoder	Protective belt cover, optional
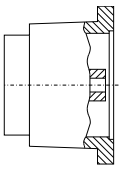 **K2**	Coupling lantern with flexible coupling for connecting an IEC motor	✔			✔	✔	✔	
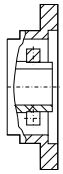 **K4**	Short coupling lantern with clamp connection for connecting an IEC motor			✔				
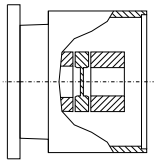 **KQ KQS**	Lantern for servomotor with zero-backlash flexible coupling for connecting a servomotor		✔	✔				
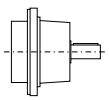 **A**	Input unit with free input shaft				✔			
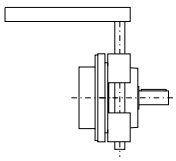 **P**	Input unit with free input shaft and piggy back for connecting an IEC motor				✔			✔

7

© Siemens AG 2011

Overview (continued)

Input unit K2 (coupling lantern)

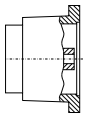

This input unit for motors in IEC sizes is suitable for general applications with all load types. The input unit contains a torsionally flexible cam coupling which can compensate for axial movement.

Input unit K2 is also available in an ATEX version.

Please refer to the Operating Instructions for information on mounting.

For additional options, see "Special versions".

Order codes:
Input unit K2 **A03**
Flexible coupling **A16**

Input unit K4 (short coupling lantern)

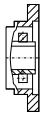

This input unit is designed for mounting situations that call for an extremely short overall length. The input units are suitable for connecting IEC standard motors within the context of general applications.

The connection between the shafts is rigid and there is no axial compensation. Therefore, we recommend using motors with a fixed bearing on the drive side for optimum service life. It is preferable to use K2 input units in situations involving a high mass inertia and a high number of starting operations in particular. With a class III load classification, you should use input unit K2 or contact us for more information.

Input unit K4 is also available in an ATEX version.

Please refer to the Operating Instructions for information on mounting.

Order code:
Input unit K4 **A04**

Input unit KQ / KQS (lantern for servomotor)

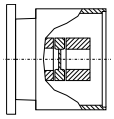

This input unit enables servomotors with a square mounting flange to be mounted on the gearbox. This provides the geared motor with a solid and attractive design. The input unit features a zero-backlash, torsionally flexible cam coupling which compensates for axial movement.

Input unit KQ is designed for motor shafts with feather key.

Input unit KQS is designed for motor shafts without feather key.

Order codes:
Input unit KQ **A07**
Input unit KQS **A08**

Size index	Order code
71.2	**N61**
80.3	**N62**
90.4	**N63**
112.3	**N62**
132.3	**N62**

Input unit A with free input shaft

Input unit A has a free solid input shaft and is designed for general solutions where the motor is mounted separately from the gearbox. It is also suitable for solutions that call for manual operation of the input shaft.

Order code:
Input unit A **A00**

Input unit P with free input shaft and piggy back

Input unit P has a free solid input shaft as well as a piggy back. A foot-mounted standard motor can be piggy backed onto the unit and connected to the gearbox input shaft by means of a V belt. A protective belt cover (PS version) is available on request.

Pulley and belt are not included in the scope of delivery.

Order codes:
Input unit P **A09**
Input unit PS **A10**

© Siemens AG 2011

General technical data

Permissible radial forces and torques

Permissible torques for input units K, A and P

Size	Permissible input torque T_1 [1]
	Nm
71	3
80	5
90	10
100	20
112	26
132	61
160	98
180	198
200	198
225	291
250	356
280	580
315 [2]	1 290

[1] 2.5x the value is permissible for a brief period (e.g. motor starting torque)
[2] only for K2

Permissible radial force for input units A and P

Size	d1	l1	Permissible radial force F_{RAperm} l1/2 at 0.5xl1 [1]
	mm	mm	N
71	16	40	240
80	19	40	240
90	24	50	620
100	28	60	840
112	28	60	1 000
132	38	80	1 700
160	42	110	1 800
180	55	110	3 000
200	55	110	3 000
225	60	140	3 450
250	65	140	3 900
280	70	140	5 150
315	–	–	–

[1] based on 1 450 rpm with input units A, P

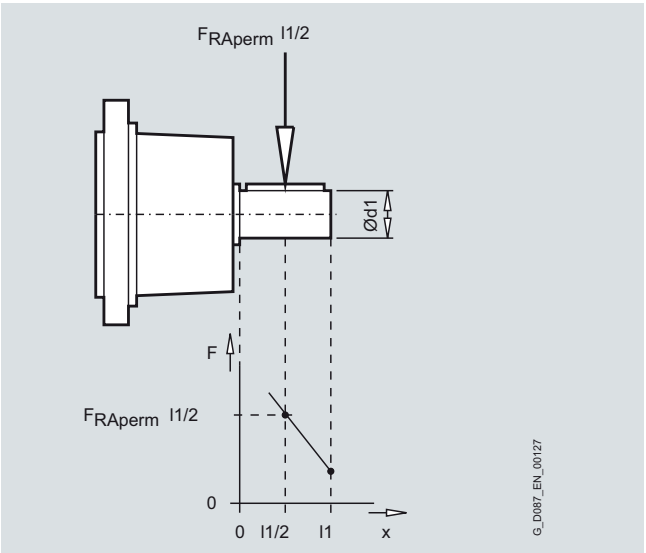

© Siemens AG 2011

Permissible radial forces and torques (continued)

Permissible torque with input unit KQ (S)

Input unit KQ / KQS	Transmitted torques		Max. speed
	T_1	T_{1max}	n_{1max}
	Nm	Nm	rpm
71.2	3.0	7.5	3 600
80.3	5.0	12.5	3 600
90.4	10.0	25.0	3 600
112.3	26.0	65.0	3 600
132.3	61.0	152.5	3 600

T_1 = max. torque transmitted with continuous duty

T_{1max} = max. permissible peak torque

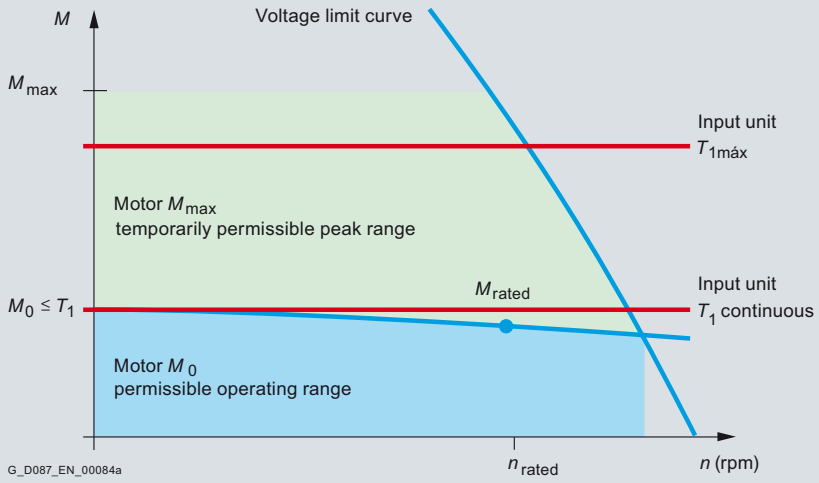

Speed-torque characteristic for servomotors and with S1 duty

Explanation of servomotor characteristic values

Abbreviation	Name	Explanation
M_0	Permanent static torque	Permanent torque acting on motor shaft at speed n = 0
M_{rated}	Rated torque	Permanent torque at rated speed
M_{max}	Maximum torque	Maximum transient torque
n_{rated}	Rated speed	Motor speed specified by manufacturer

© Siemens AG 2011

General technical data

Maximum motor weight

Geared motors with an input unit should be designed to be as short as possible.

The prevailing bending moment can be calculated on the basis of the formulae below. If the permissible bending moment is exceeded, it means that a shorter design is required or that the motor requires additional support.

This particularly applies in the case of the following drive scenarios:

- Any geared motors that are not listed in this catalog
- Any motors that are mounted on the gearbox using a K2, K4 or KQ / KQS input unit
- Any gearboxes, particularly tandem gearboxes with input units that are exposed to high levels of impact and vibration.

However, if a connection to the input unit is necessary, the motor must be supported independently of the gearbox. Within this context, it is important to ensure that no additional forces are induced in the gearbox as a result of this support.

In the case of extremely long designs, you will need to contact us.

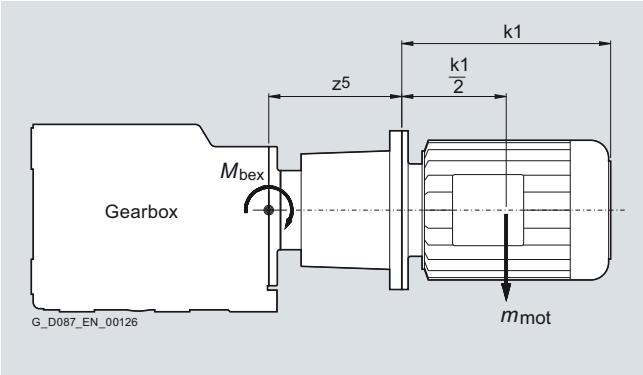

Code	Description	Unit
z5	For dimensions, see Chapter 7 "Input units"	mm
k1/2	Motor length	mm
m_{mot}	Motor weight force	N
M_{bex}	Prevailing bending moment	

IEC size	71	80	90	100	112	132	160	180	200	225	250	280	315
Permiss. bending moment M_{bperm} Nm	159	159	159	159	441	765	2 289	6 105	6 105	6 010	5 894	18 000	22 000

The prevailing bending moment M_{bex} is calculated as follows:

$$M_{bex} = m_{mot} \cdot \{z5 + (k1/2)\}$$

In the case of applications that involve powerful impacts or vibrations M_{bex} must be multiplied by 2.

The following condition applies here in respect of M_{bex}:

$$M_{bex} < M_{bperm}$$

© Siemens AG 2011

Selection and ordering data

Gearboxes with K2 input units can be supplied as solo gearboxes or with an IEC standard motor. For possible gearbox ratios, see "Gearbox ratios and maximum torques" in the gearbox sections.

When selecting a solo gearbox configuration, remember to insert an **A** in the **10th position** of the order number, and a **0** in the **11th** to **13th positions**.

Order code:
Input unit K2 **A03**

Size Gearbox	Order No. Gearbox	IEC size, input unit													
		63	71	80	90	100	112	132	160	180	200	225	250	280	315
		Order No. 9th position													
		B	C	D	E	F	G	H	J	K	L	M	N	P	Q
1-stage helical gearbox E															
E38	**2KJ1001 - ■■■■■ - ■■■■**			✓	✓	✓									
E48	**2KJ1002 - ■■■■■ - ■■■■**			✓	✓	✓	✓	✓							
E68	**2KJ1003 - ■■■■■ - ■■■■**			✓	✓	✓	✓	✓							
E88	**2KJ1004 - ■■■■■ - ■■■■**			✓	✓	✓	✓	✓	✓						
E108	**2KJ1005 - ■■■■■ - ■■■■**				✓	✓	✓	✓	✓	✓	✓				
E128	**2KJ1006 - ■■■■■ - ■■■■**					✓	✓	✓	✓	✓	✓	✓			
E148	**2KJ1007 - ■■■■■ - ■■■■**							✓	✓	✓	✓	✓	✓	✓	
2-stage helical gearbox Z															
Z38	**2KJ1102 - ■■■■■ - ■■■■**			✓	✓	✓									
Z48	**2KJ1103 - ■■■■■ - ■■■■**			✓	✓	✓	✓	✓							
Z68	**2KJ1104 - ■■■■■ - ■■■■**			✓	✓	✓	✓	✓							
Z88	**2KJ1105 - ■■■■■ - ■■■■**			✓	✓	✓	✓	✓	✓						
Z108	**2KJ1106 - ■■■■■ - ■■■■**				✓	✓	✓	✓	✓	✓	✓				
Z128	**2KJ1107 - ■■■■■ - ■■■■**					✓	✓	✓	✓	✓	✓	✓			
Z148	**2KJ1108 - ■■■■■ - ■■■■**							✓	✓	✓	✓	✓	✓	✓	
Z168	**2KJ1110 - ■■■■■ - ■■■■**							✓	✓	✓	✓	✓	✓	✓	
Z188	**2KJ1111 - ■■■■■ - ■■■■**								✓	✓	✓	✓	✓	✓	✓
3-stage helical gearbox D															
D38	**2KJ1202 - ■■■■■ - ■■■■**			✓	✓										
D48	**2KJ1203 - ■■■■■ - ■■■■**			✓	✓	✓									
D68	**2KJ1204 - ■■■■■ - ■■■■**			✓	✓	✓									
D88	**2KJ1205 - ■■■■■ - ■■■■**			✓	✓	✓	✓	✓							
D108	**2KJ1206 - ■■■■■ - ■■■■**			✓	✓	✓	✓	✓	✓						
D128	**2KJ1207 - ■■■■■ - ■■■■**				✓	✓	✓	✓	✓	✓	✓				
D148	**2KJ1208 - ■■■■■ - ■■■■**					✓	✓	✓	✓	✓	✓	✓			
D168	**2KJ1210 - ■■■■■ - ■■■■**							✓	✓	✓	✓	✓			
D188	**2KJ1211 - ■■■■■ - ■■■■**							✓	✓	✓	✓	✓	✓		

© Siemens AG 2011

Selection and ordering data (continued)

Size Gearbox	Order No. Gearbox	IEC size, input unit													
		63	71	80	90	100	112	132	160	180	200	225	250	280	315
		Order No. 9th position													
		B	C	D	E	F	G	H	J	K	L	M	N	P	Q
2-stage parallel-shaft gearbox FZ															
FZ38B	2KJ1301 - ■■■■■ - ■■■■			✓	✓	✓									
FZ48B	2KJ1302 - ■■■■■ - ■■■■			✓	✓	✓									
FZ68B	2KJ1303 - ■■■■■ - ■■■■			✓	✓	✓	✓	✓							
FZ88B	2KJ1304 - ■■■■■ - ■■■■			✓	✓	✓	✓	✓							
FZ108B	2KJ1305 - ■■■■■ - ■■■■			✓	✓	✓	✓	✓	✓						
FZ128B	2KJ1306 - ■■■■■ - ■■■■				✓	✓	✓	✓	✓	✓	✓				
FZ148B	2KJ1307 - ■■■■■ - ■■■■					✓	✓	✓	✓	✓	✓	✓			
FZ168B	2KJ1308 - ■■■■■ - ■■■■							✓	✓	✓	✓	✓	✓	✓	
FZ188B	2KJ1310 - ■■■■■ - ■■■■							✓	✓	✓	✓	✓	✓	✓	✓
FZ208	2KJ1311 - ■■■■■ - ■■■■								✓	✓	✓	✓	✓	✓	✓
3-stage parallel-shaft gearbox FD															
FD38B	2KJ1401 - ■■■■■ - ■■■■			✓	✓	✓									
FD48B	2KJ1402 - ■■■■■ - ■■■■			✓	✓	✓									
FD68B	2KJ1403 - ■■■■■ - ■■■■			✓	✓	✓	✓	✓							
FD88B	2KJ1404 - ■■■■■ - ■■■■			✓	✓	✓	✓	✓							
FD108B	2KJ1405 - ■■■■■ - ■■■■			✓	✓	✓	✓	✓	✓						
FD128B	2KJ1406 - ■■■■■ - ■■■■				✓	✓	✓	✓	✓	✓	✓				
FD148B	2KJ1407 - ■■■■■ - ■■■■					✓	✓	✓	✓	✓	✓	✓			
FD168B	2KJ1408 - ■■■■■ - ■■■■							✓	✓	✓	✓	✓	✓	✓	
FD188B	2KJ1410 - ■■■■■ - ■■■■							✓	✓	✓	✓	✓	✓	✓	
FD208	2KJ1411 - ■■■■■ - ■■■■							✓	✓	✓	✓	✓	✓	✓	✓
Bevel helical gearbox B															
B38	2KJ1501 - ■■■■■ - ■■■■			✓	✓	✓									
Bevel helical gearbox K															
K38	2KJ1502 - ■■■■■ - ■■■■			✓	✓	✓									
K48	2KJ1503 - ■■■■■ - ■■■■			✓	✓	✓									
K68	2KJ1504 - ■■■■■ - ■■■■			✓	✓	✓	✓	✓							
K88	2KJ1505 - ■■■■■ - ■■■■			✓	✓	✓	✓	✓							
K108	2KJ1506 - ■■■■■ - ■■■■			✓	✓	✓	✓	✓	✓						
K128	2KJ1507 - ■■■■■ - ■■■■				✓	✓	✓	✓	✓	✓	✓				
K148	2KJ1508 - ■■■■■ - ■■■■					✓	✓	✓	✓	✓	✓	✓			
K168	2KJ1510 - ■■■■■ - ■■■■							✓	✓	✓	✓	✓	✓	✓	
K188	2KJ1511 - ■■■■■ - ■■■■							✓	✓	✓	✓	✓	✓	✓	✓
Helical worm gearbox C															
C38	2KJ1601 - ■■■■■ - ■■■■			✓	✓	✓									
C48	2KJ1602 - ■■■■■ - ■■■■			✓	✓	✓									
C68	2KJ1603 - ■■■■■ - ■■■■			✓	✓	✓	✓	✓							
C88	2KJ1604 - ■■■■■ - ■■■■			✓	✓	✓	✓	✓							

© Siemens AG 2011

Selection and ordering data

Gearboxes with K4 input units can be supplied as solo gearboxes or with an IEC standard motor. For possible gearbox ratios, see "Gearbox ratios and maximum torques" in the gearbox sections.

When selecting a solo gearbox configuration, remember to insert an **A** in the **10th position** of the order number, and a **0** in the **11th** to **13th positions**.

Order code:
Input unit K4 **A04**

Size Gearbox	Order No. Gearbox	IEC size, input unit													
		63	71	80	90	100	112	132	160	180	200	225	250	280	315
		Order No. 9th position													
		B	C	D	E	F	G	H	J	K	L	M	N	P	Q
1-stage helical gearbox E															
E38	**2KJ1001 - ■■■■■ - ■■■■**	✓	✓	✓	✓	✓									
E48	**2KJ1002 - ■■■■■ - ■■■■**	✓	✓	✓	✓	✓	✓	✓							
E68	**2KJ1003 - ■■■■■ - ■■■■**	✓	✓	✓	✓	✓	✓	✓	✓						
E88	**2KJ1004 - ■■■■■ - ■■■■**			✓	✓	✓	✓	✓	✓	✓					
E108	**2KJ1005 - ■■■■■ - ■■■■**				✓	✓	✓	✓	✓	✓	✓	✓			
E128	**2KJ1006 - ■■■■■ - ■■■■**					✓	✓	✓	✓	✓	✓	✓	✓		
E148	**2KJ1007 - ■■■■■ - ■■■■**							✓	✓	✓	✓	✓	✓	✓	
2-stage helical gearbox Z															
Z38	**2KJ1102 - ■■■■■ - ■■■■**	✓	✓	✓	✓	✓	✓								
Z48	**2KJ1103 - ■■■■■ - ■■■■**	✓	✓	✓	✓	✓	✓	✓							
Z68	**2KJ1104 - ■■■■■ - ■■■■**	✓	✓	✓	✓	✓	✓	✓	✓						
Z88	**2KJ1105 - ■■■■■ - ■■■■**			✓	✓	✓	✓	✓	✓	✓					
Z108	**2KJ1106 - ■■■■■ - ■■■■**				✓	✓	✓	✓	✓	✓	✓	✓			
Z128	**2KJ1107 - ■■■■■ - ■■■■**					✓	✓	✓	✓	✓	✓	✓	✓		
Z148	**2KJ1108 - ■■■■■ - ■■■■**							✓	✓	✓	✓	✓	✓	✓	
Z168	**2KJ1110 - ■■■■■ - ■■■■**							✓	✓	✓	✓	✓	✓	✓	
Z188	**2KJ1111 - ■■■■■ - ■■■■**								✓	✓	✓	✓	✓	✓	
3-stage helical gearbox D															
D38	**2KJ1202 - ■■■■■ - ■■■■**	✓	✓	✓	✓										
D48	**2KJ1203 - ■■■■■ - ■■■■**	✓	✓	✓	✓	✓									
D68	**2KJ1204 - ■■■■■ - ■■■■**	✓	✓	✓	✓	✓									
D88	**2KJ1205 - ■■■■■ - ■■■■**	✓	✓	✓	✓	✓	✓	✓							
D108	**2KJ1206 - ■■■■■ - ■■■■**			✓	✓	✓	✓	✓	✓						
D128	**2KJ1207 - ■■■■■ - ■■■■**				✓	✓	✓	✓	✓	✓	✓				
D148	**2KJ1208 - ■■■■■ - ■■■■**					✓	✓	✓	✓	✓	✓	✓			
D168	**2KJ1210 - ■■■■■ - ■■■■**							✓	✓	✓	✓	✓			
D188	**2KJ1211 - ■■■■■ - ■■■■**							✓	✓	✓	✓	✓	✓	✓	

© Siemens AG 2011

Input unit K4

Selection and ordering data (continued)

Size Gearbox	Order No. Gearbox	IEC size, input unit													
		63	71	80	90	100	112	132	160	180	200	225	250	280	315
		Order No. 9th position													
		B	C	D	E	F	G	H	J	K	L	M	N	P	Q
2-stage parallel-shaft gearbox FZ															
FZ38B	**2KJ1301 - ■■■■■ - ■■■■**	✓	✓	✓	✓	✓									
FZ48B	**2KJ1302 - ■■■■■ - ■■■■**	✓	✓	✓	✓	✓	✓								
FZ68B	**2KJ1303 - ■■■■■ - ■■■■**	✓	✓	✓	✓	✓	✓	✓							
FZ88B	**2KJ1304 - ■■■■■ - ■■■■**	✓	✓	✓	✓	✓	✓	✓	✓						
FZ108B	**2KJ1305 - ■■■■■ - ■■■■**			✓	✓	✓	✓	✓	✓	✓					
FZ128B	**2KJ1306 - ■■■■■ - ■■■■**				✓	✓	✓	✓	✓	✓	✓	✓			
FZ148B	**2KJ1307 - ■■■■■ - ■■■■**					✓	✓	✓	✓	✓	✓	✓	✓		
FZ168B	**2KJ1308 - ■■■■■ - ■■■■**							✓	✓	✓	✓	✓	✓	✓	
FZ188B	**2KJ1310 - ■■■■■ - ■■■■**							✓	✓	✓	✓	✓	✓	✓	
FZ208	**2KJ1311 - ■■■■■ - ■■■■**								✓	✓	✓	✓	✓	✓	
3-stage parallel-shaft gearbox FD															
FD38B	**2KJ1401 - ■■■■■ - ■■■■**	✓	✓	✓	✓	✓									
FD48B	**2KJ1402 - ■■■■■ - ■■■■**	✓	✓	✓	✓	✓	✓								
FD68B	**2KJ1403 - ■■■■■ - ■■■■**	✓	✓	✓	✓	✓	✓	✓							
FD88B	**2KJ1404 - ■■■■■ - ■■■■**	✓	✓	✓	✓	✓	✓	✓	✓						
FD108B	**2KJ1405 - ■■■■■ - ■■■■**			✓	✓	✓	✓	✓	✓	✓					
FD128B	**2KJ1406 - ■■■■■ - ■■■■**				✓	✓	✓	✓	✓	✓	✓	✓			
FD148B	**2KJ1407 - ■■■■■ - ■■■■**					✓	✓	✓	✓	✓	✓	✓	✓		
FD168B	**2KJ1408 - ■■■■■ - ■■■■**							✓	✓	✓	✓	✓	✓	✓	
FD188B	**2KJ1410 - ■■■■■ - ■■■■**							✓	✓	✓	✓	✓	✓	✓	
FD208	**2KJ1411 - ■■■■■ - ■■■■**							✓	✓	✓	✓	✓	✓	✓	
Bevel helical gearbox B															
B38	**2KJ1501 - ■■■■■ - ■■■■**	✓	✓	✓	✓	✓									
Bevel helical gearbox K															
K38	**2KJ1502 - ■■■■■ - ■■■■**	✓	✓	✓	✓	✓	✓								
K48	**2KJ1503 - ■■■■■ - ■■■■**	✓	✓	✓	✓	✓	✓								
K68	**2KJ1504 - ■■■■■ - ■■■■**	✓	✓	✓	✓	✓	✓	✓							
K88	**2KJ1505 - ■■■■■ - ■■■■**	✓	✓	✓	✓	✓	✓	✓	✓						
K108	**2KJ1506 - ■■■■■ - ■■■■**			✓	✓	✓	✓	✓	✓	✓					
K128	**2KJ1507 - ■■■■■ - ■■■■**				✓	✓	✓	✓	✓	✓	✓	✓			
K148	**2KJ1508 - ■■■■■ - ■■■■**					✓	✓	✓	✓	✓	✓	✓	✓		
K168	**2KJ1510 - ■■■■■ - ■■■■**							✓	✓	✓	✓	✓	✓	✓	
K188	**2KJ1511 - ■■■■■ - ■■■■**							✓	✓	✓	✓	✓	✓	✓	
Helical worm gearbox C															
C38	**2KJ1601 - ■■■■■ - ■■■■**	✓	✓	✓	✓	✓	✓								
C48	**2KJ1602 - ■■■■■ - ■■■■**	✓	✓	✓	✓	✓	✓								
C68	**2KJ1603 - ■■■■■ - ■■■■**	✓	✓	✓	✓	✓	✓	✓							
C88	**2KJ1604 - ■■■■■ - ■■■■**	✓	✓	✓	✓	✓	✓	✓	✓						

© Siemens AG 2011

Selection and ordering data

For possible gearbox ratios, see "Gearbox ratios and maximum torques" in the gearbox sections.

Order code:
Input unit KQ **A07**
Input unit KQS **A08**

Size Gearbox	Order No. Gearbox	Size index				
		71.2	80.3	90.4	112.3	132.3
		Order code for size index				
		N61	N62	N63	N62	N62
		Order No. 9th position				
		C	D	E	G	H
1-stage helical gearbox E						
E38	**2KJ1001 - ■■■■■ - ■■■■**	✓	✓	✓		
E48	**2KJ1002 - ■■■■■ - ■■■■**	✓	✓	✓	✓	
E68	**2KJ1003 - ■■■■■ - ■■■■**	✓	✓	✓	✓	✓
E88	**2KJ1004 - ■■■■■ - ■■■■**		✓	✓	✓	✓
E108	**2KJ1005 - ■■■■■ - ■■■■**			✓	✓	✓
E128	**2KJ1006 - ■■■■■ - ■■■■**				✓	✓
E148	**2KJ1007 - ■■■■■ - ■■■■**					✓
2-stage helical gearbox Z						
Z28	**2KJ1101 - ■■■■■ - ■■■■**	✓	✓	✓		
Z38	**2KJ1102 - ■■■■■ - ■■■■**	✓	✓	✓		
Z48	**2KJ1103 - ■■■■■ - ■■■■**	✓	✓	✓	✓	
Z68	**2KJ1104 - ■■■■■ - ■■■■**	✓	✓	✓	✓	✓
Z88	**2KJ1105 - ■■■■■ - ■■■■**		✓	✓	✓	✓
Z108	**2KJ1106 - ■■■■■ - ■■■■**			✓	✓	✓
Z128	**2KJ1107 - ■■■■■ - ■■■■**				✓	✓
Z148	**2KJ1108 - ■■■■■ - ■■■■**					✓
Z168	**2KJ1110 - ■■■■■ - ■■■■**					✓
Z188	**2KJ1111 - ■■■■■ - ■■■■**					✓
3-stage helical gearbox D						
D28	**2KJ1202 - ■■■■■ - ■■■■**	✓	✓	✓		
D38	**2KJ1202 - ■■■■■ - ■■■■**	✓	✓	✓		
D48	**2KJ1203 - ■■■■■ - ■■■■**	✓	✓	✓		
D68	**2KJ1204 - ■■■■■ - ■■■■**	✓	✓	✓		
D88	**2KJ1205 - ■■■■■ - ■■■■**	✓	✓	✓	✓	✓
D108	**2KJ1206 - ■■■■■ - ■■■■**		✓	✓	✓	✓
D128	**2KJ1207 - ■■■■■ - ■■■■**			✓	✓	✓
D148	**2KJ1208 - ■■■■■ - ■■■■**				✓	✓
D168	**2KJ1210 - ■■■■■ - ■■■■**					✓
D188	**2KJ1211 - ■■■■■ - ■■■■**					✓

© Siemens AG 2011

Input units KQ / KQS

Selection and ordering data (continued)

Size Gearbox	Order No. Gearbox	Size index				
		71.2	80.3	90.4	112.3	132.3
		Order code for size index				
		N61	N62	N63	N62	N62
		Order No. 9th position				
		C	D	E	G	H
2-stage parallel-shaft gearbox FZ						
FZ28	2KJ1300 - ■■■■■ - ■■■■	✓	✓	✓		
FZ38B	2KJ1301 - ■■■■■ - ■■■■	✓	✓	✓		
FZ48B	2KJ1302 - ■■■■■ - ■■■■	✓	✓	✓		
FZ68B	2KJ1303 - ■■■■■ - ■■■■	✓	✓	✓	✓	
FZ88B	2KJ1304 - ■■■■■ - ■■■■	✓	✓	✓	✓	✓
FZ108B	2KJ1305 - ■■■■■ - ■■■■		✓	✓	✓	✓
FZ128B	2KJ1306 - ■■■■■ - ■■■■			✓	✓	✓
FZ148B	2KJ1307 - ■■■■■ - ■■■■				✓	✓
FZ168B	2KJ1308 - ■■■■■ - ■■■■					✓
3-stage parallel-shaft gearbox FD						
FD28	2KJ1400 - ■■■■■ - ■■■■	✓	✓	✓		
FD38B	2KJ1401 - ■■■■■ - ■■■■	✓	✓	✓		
FD48B	2KJ1402 - ■■■■■ - ■■■■	✓	✓	✓		
FD68B	2KJ1403 - ■■■■■ - ■■■■	✓	✓	✓	✓	
FD88B	2KJ1404 - ■■■■■ - ■■■■	✓	✓	✓	✓	✓
FD108B	2KJ1405 - ■■■■■ - ■■■■		✓	✓	✓	✓
FD128B	2KJ1406 - ■■■■■ - ■■■■			✓	✓	✓
FD148B	2KJ1407 - ■■■■■ - ■■■■				✓	✓
FD168B	2KJ1408 - ■■■■■ - ■■■■					✓
FD188B	2KJ1410 - ■■■■■ - ■■■■					✓
Bevel helical gearbox B						
B28	2KJ1500 - ■■■■■ - ■■■■	✓	✓	✓		
B38	2KJ1501 - ■■■■■ - ■■■■	✓	✓	✓		
Bevel helical gearbox K						
K38	2KJ1502 - ■■■■■ - ■■■■	✓	✓	✓		
K48	2KJ1503 - ■■■■■ - ■■■■	✓	✓	✓		
K68	2KJ1504 - ■■■■■ - ■■■■	✓	✓	✓	✓	
K88	2KJ1505 - ■■■■■ - ■■■■	✓	✓	✓	✓	✓
K108	2KJ1506 - ■■■■■ - ■■■■		✓	✓	✓	✓
K128	2KJ1507 - ■■■■■ - ■■■■			✓	✓	✓
K148	2KJ1508 - ■■■■■ - ■■■■				✓	✓
K168	2KJ1510 - ■■■■■ - ■■■■					✓
K188	2KJ1511 - ■■■■■ - ■■■■					✓
Helical worm gearbox C						
C38	2KJ1601 - ■■■■■ - ■■■■	✓	✓	✓		
C48	2KJ1602 - ■■■■■ - ■■■■	✓	✓	✓		
C68	2KJ1603 - ■■■■■ - ■■■■	✓	✓	✓	✓	
C88	2KJ1604 - ■■■■■ - ■■■■	✓	✓	✓	✓	✓

© Siemens AG 2011

Selection and ordering data

For possible gearbox ratios, see "Gearbox ratios and maximum torques" in the gearbox sections.

Order code:
Input unit A **A00**

Size Gearbox	Order No. Gearbox	Size, input unit													
		63	71	80	90	100	112	132	160	180	200	225	250	280	315
		Order No. 9th position													
		B	C	D	E	F	G	H	J	K	L	M	N	P	Q
1-stage helical gearbox E															
E38	**2KJ1001 - ■■■■■ - ■■■■**		✓	✓	✓	✓									
E48	**2KJ1002 - ■■■■■ - ■■■■**		✓	✓	✓	✓	✓								
E68	**2KJ1003 - ■■■■■ - ■■■■**		✓	✓	✓	✓	✓	✓							
E88	**2KJ1004 - ■■■■■ - ■■■■**			✓	✓	✓	✓	✓	✓						
E108	**2KJ1005 - ■■■■■ - ■■■■**				✓	✓	✓	✓	✓		✓				
E128	**2KJ1006 - ■■■■■ - ■■■■**					✓	✓	✓	✓		✓	✓			
E148	**2KJ1007 - ■■■■■ - ■■■■**							✓	✓		✓	✓	✓	✓	
2-stage helical gearbox Z															
Z38	**2KJ1102 - ■■■■■ - ■■■■**		✓	✓	✓	✓									
Z48	**2KJ1103 - ■■■■■ - ■■■■**		✓	✓	✓	✓	✓								
Z68	**2KJ1104 - ■■■■■ - ■■■■**		✓	✓	✓	✓	✓	✓							
Z88	**2KJ1105 - ■■■■■ - ■■■■**			✓	✓	✓	✓	✓	✓						
Z108	**2KJ1106 - ■■■■■ - ■■■■**				✓	✓	✓	✓	✓		✓				
Z128	**2KJ1107 - ■■■■■ - ■■■■**					✓	✓	✓	✓		✓	✓			
Z148	**2KJ1108 - ■■■■■ - ■■■■**							✓	✓		✓	✓	✓	✓	
Z168	**2KJ1110 - ■■■■■ - ■■■■**							✓	✓		✓	✓	✓	✓	
Z188	**2KJ1111 - ■■■■■ - ■■■■**								✓		✓	✓	✓	✓	
3-stage helical gearbox D															
D38	**2KJ1202 - ■■■■■ - ■■■■**		✓	✓	✓										
D48	**2KJ1203 - ■■■■■ - ■■■■**		✓	✓	✓	✓									
D68	**2KJ1204 - ■■■■■ - ■■■■**		✓	✓	✓	✓									
D88	**2KJ1205 - ■■■■■ - ■■■■**		✓	✓	✓	✓	✓	✓							
D108	**2KJ1206 - ■■■■■ - ■■■■**			✓	✓	✓	✓	✓	✓						
D128	**2KJ1207 - ■■■■■ - ■■■■**				✓	✓	✓	✓	✓		✓				
D148	**2KJ1208 - ■■■■■ - ■■■■**					✓	✓	✓	✓		✓	✓			
D168	**2KJ1210 - ■■■■■ - ■■■■**							✓	✓		✓	✓			
D188	**2KJ1211 - ■■■■■ - ■■■■**							✓	✓		✓	✓	✓	✓	

© Siemens AG 2011

Input unit A

Selection and ordering data (continued)

Size Gearbox	Order No. Gearbox	Size, input unit													
		63	71	80	90	100	112	132	160	180	200	225	250	280	315
		Order No. 9th position													
		B	C	D	E	F	G	H	J	K	L	M	N	P	Q
2-stage parallel-shaft gearbox FZ															
FZ38B	2KJ1301 - ■■■■■ - ■■■■		✓	✓	✓	✓									
FZ48B	2KJ1302 - ■■■■■ - ■■■■		✓	✓	✓	✓									
FZ68B	2KJ1303 - ■■■■■ - ■■■■		✓	✓	✓	✓	✓								
FZ88B	2KJ1304 - ■■■■■ - ■■■■		✓	✓	✓	✓	✓	✓							
FZ108B	2KJ1305 - ■■■■■ - ■■■■			✓	✓	✓	✓	✓	✓						
FZ128B	2KJ1306 - ■■■■■ - ■■■■				✓	✓	✓	✓	✓		✓				
FZ148B	2KJ1307 - ■■■■■ - ■■■■					✓	✓	✓	✓		✓	✓			
FZ168B	2KJ1308 - ■■■■■ - ■■■■							✓	✓		✓	✓	✓	✓	
FZ188B	2KJ1310 - ■■■■■ - ■■■■							✓	✓		✓	✓	✓	✓	
FZ208	2KJ1311 - ■■■■■ - ■■■■								✓		✓	✓	✓	✓	
3-stage parallel-shaft gearbox FD															
FD38B	2KJ1401 - ■■■■■ - ■■■■		✓	✓	✓	✓									
FD48B	2KJ1402 - ■■■■■ - ■■■■		✓	✓	✓	✓									
FD68B	2KJ1403 - ■■■■■ - ■■■■		✓	✓	✓	✓	✓								
FD88B	2KJ1404 - ■■■■■ - ■■■■		✓	✓	✓	✓	✓	✓							
FD108B	2KJ1405 - ■■■■■ - ■■■■			✓	✓	✓	✓	✓	✓						
FD128B	2KJ1406 - ■■■■■ - ■■■■				✓	✓	✓	✓	✓		✓				
FD148B	2KJ1407 - ■■■■■ - ■■■■					✓	✓	✓	✓		✓	✓			
FD168B	2KJ1408 - ■■■■■ - ■■■■							✓	✓		✓	✓	✓	✓	
FD188B	2KJ1410 - ■■■■■ - ■■■■							✓	✓		✓	✓	✓	✓	
FD208	2KJ1411 - ■■■■■ - ■■■■							✓	✓		✓	✓	✓	✓	
Bevel helical gearbox B															
B38	2KJ1501 - ■■■■■ - ■■■■		✓	✓	✓	✓									
Bevel helical gearbox K															
K38	2KJ1502 - ■■■■■ - ■■■■		✓	✓	✓	✓									
K48	2KJ1503 - ■■■■■ - ■■■■		✓	✓	✓	✓									
K68	2KJ1504 - ■■■■■ - ■■■■		✓	✓	✓	✓	✓								
K88	2KJ1505 - ■■■■■ - ■■■■		✓	✓	✓	✓	✓	✓							
K108	2KJ1506 - ■■■■■ - ■■■■			✓	✓	✓	✓	✓	✓						
K128	2KJ1507 - ■■■■■ - ■■■■				✓	✓	✓	✓	✓		✓				
K148	2KJ1508 - ■■■■■ - ■■■■					✓	✓	✓	✓		✓	✓			
K168	2KJ1510 - ■■■■■ - ■■■■							✓	✓		✓	✓	✓	✓	
K188	2KJ1511 - ■■■■■ - ■■■■							✓	✓		✓	✓	✓	✓	
Helical worm gearbox C															
C38	2KJ1601 - ■■■■■ - ■■■■		✓	✓	✓	✓									
C48	2KJ1602 - ■■■■■ - ■■■■		✓	✓	✓	✓									
C68	2KJ1603 - ■■■■■ - ■■■■		✓	✓	✓	✓	✓								
C88	2KJ1604 - ■■■■■ - ■■■■		✓	✓	✓	✓	✓	✓							

© Siemens AG 2011

Selection and ordering data

For possible gearbox ratios, see "Gearbox ratios and maximum torques" in the gearbox sections.

Order code:
Input unit P **A09**

Size Gearbox	Order No. Gearbox	Size, input unit													
		63	71	80	90	100	112	132	160	180	200	225	250	280	315
		Order No. 9th position													
		B	C	D	E	F	G	H	J	K	L	M	N	P	Q
1-stage helical gearbox E															
E38	**2KJ1001 - ■■■■■ - ■■■■**			✓	✓	✓									
E48	**2KJ1002 - ■■■■■ - ■■■■**			✓	✓	✓	✓								
E68	**2KJ1003 - ■■■■■ - ■■■■**			✓	✓	✓	✓	✓							
E88	**2KJ1004 - ■■■■■ - ■■■■**			✓	✓	✓	✓	✓	✓						
E108	**2KJ1005 - ■■■■■ - ■■■■**				✓	✓	✓	✓	✓	✓	✓				
E128	**2KJ1006 - ■■■■■ - ■■■■**					✓	✓	✓	✓	✓	✓	✓			
E148	**2KJ1007 - ■■■■■ - ■■■■**							✓	✓	✓	✓	✓	✓	✓	
2-stage helical gearbox Z															
Z38	**2KJ1102 - ■■■■■ - ■■■■**			✓	✓	✓									
Z48	**2KJ1103 - ■■■■■ - ■■■■**			✓	✓	✓	✓								
Z68	**2KJ1104 - ■■■■■ - ■■■■**			✓	✓	✓	✓	✓							
Z88	**2KJ1105 - ■■■■■ - ■■■■**			✓	✓	✓	✓	✓	✓						
Z108	**2KJ1106 - ■■■■■ - ■■■■**				✓	✓	✓	✓	✓	✓	✓				
Z128	**2KJ1107 - ■■■■■ - ■■■■**					✓	✓	✓	✓	✓	✓	✓			
Z148	**2KJ1108 - ■■■■■ - ■■■■**							✓	✓	✓	✓	✓	✓	✓	
Z168	**2KJ1110 - ■■■■■ - ■■■■**							✓	✓	✓	✓	✓	✓	✓	
Z188	**2KJ1111 - ■■■■■ - ■■■■**								✓	✓	✓	✓	✓	✓	
3-stage helical gearbox D															
D38	**2KJ1202 - ■■■■■ - ■■■■**			✓	✓										
D48	**2KJ1203 - ■■■■■ - ■■■■**			✓	✓	✓									
D68	**2KJ1204 - ■■■■■ - ■■■■**			✓	✓	✓									
D88	**2KJ1205 - ■■■■■ - ■■■■**			✓	✓	✓	✓	✓							
D108	**2KJ1206 - ■■■■■ - ■■■■**			✓	✓	✓	✓	✓	✓						
D128	**2KJ1207 - ■■■■■ - ■■■■**				✓	✓	✓	✓	✓	✓	✓				
D148	**2KJ1208 - ■■■■■ - ■■■■**					✓	✓	✓	✓	✓	✓	✓			
D168	**2KJ1210 - ■■■■■ - ■■■■**							✓	✓	✓	✓	✓			
D188	**2KJ1211 - ■■■■■ - ■■■■**							✓	✓	✓	✓	✓	✓	✓	

© Siemens AG 2011

Input unit P

Selection and ordering data (continued)

Size Gearbox	Order No. Gearbox	Size, input unit													
		63	71	80	90	100	112	132	160	180	200	225	250	280	315
		Order No. 9th position													
		B	C	D	E	F	G	H	J	K	L	M	N	P	Q
2-stage parallel-shaft gearbox FZ															
FZ38B	**2KJ1301 - ■■■■■ - ■■■■**			✓	✓	✓									
FZ48B	**2KJ1302 - ■■■■■ - ■■■■**			✓	✓	✓									
FZ68B	**2KJ1303 - ■■■■■ - ■■■■**			✓	✓	✓	✓								
FZ88B	**2KJ1304 - ■■■■■ - ■■■■**			✓	✓	✓	✓	✓							
FZ108B	**2KJ1305 - ■■■■■ - ■■■■**			✓	✓	✓	✓	✓	✓						
FZ128B	**2KJ1306 - ■■■■■ - ■■■■**				✓	✓	✓	✓	✓	✓	✓				
FZ148B	**2KJ1307 - ■■■■■ - ■■■■**					✓	✓	✓	✓	✓	✓	✓			
FZ168B	**2KJ1308 - ■■■■■ - ■■■■**							✓	✓	✓	✓	✓	✓	✓	
FZ188B	**2KJ1310 - ■■■■■ - ■■■■**							✓	✓	✓	✓	✓	✓	✓	
3-stage parallel-shaft gearbox FD															
FD38B	**2KJ1401 - ■■■■■ - ■■■■**			✓	✓	✓									
FD48B	**2KJ1402 - ■■■■■ - ■■■■**			✓	✓	✓									
FD68B	**2KJ1403 - ■■■■■ - ■■■■**			✓	✓	✓	✓								
FD88B	**2KJ1404 - ■■■■■ - ■■■■**			✓	✓	✓	✓	✓							
FD108B	**2KJ1405 - ■■■■■ - ■■■■**			✓	✓	✓	✓	✓	✓						
FD128B	**2KJ1406 - ■■■■■ - ■■■■**				✓	✓	✓	✓	✓	✓	✓				
FD148B	**2KJ1407 - ■■■■■ - ■■■■**					✓	✓	✓	✓	✓	✓	✓			
FD168B	**2KJ1408 - ■■■■■ - ■■■■**							✓	✓	✓	✓	✓	✓	✓	
FD188B	**2KJ1410 - ■■■■■ - ■■■■**							✓	✓	✓	✓	✓	✓	✓	
Bevel helical gearbox B															
B38	**2KJ1501 - ■■■■■ - ■■■■**			✓	✓	✓									
Bevel helical gearbox K															
K38	**2KJ1502 - ■■■■■ - ■■■■**			✓	✓	✓									
K48	**2KJ1503 - ■■■■■ - ■■■■**			✓	✓	✓									
K68	**2KJ1504 - ■■■■■ - ■■■■**			✓	✓	✓	✓								
K88	**2KJ1505 - ■■■■■ - ■■■■**			✓	✓	✓	✓	✓							
K108	**2KJ1506 - ■■■■■ - ■■■■**			✓	✓	✓	✓	✓	✓						
K128	**2KJ1507 - ■■■■■ - ■■■■**				✓	✓	✓	✓	✓	✓	✓				
K148	**2KJ1508 - ■■■■■ - ■■■■**					✓	✓	✓	✓	✓	✓	✓			
K168	**2KJ1510 - ■■■■■ - ■■■■**							✓	✓	✓	✓	✓	✓	✓	
K188	**2KJ1511 - ■■■■■ - ■■■■**							✓	✓	✓	✓	✓	✓	✓	
Helical worm gearbox C															
C38	**2KJ1601 - ■■■■■ - ■■■■**			✓	✓	✓									
C48	**2KJ1602 - ■■■■■ - ■■■■**			✓	✓	✓									
C68	**2KJ1603 - ■■■■■ - ■■■■**			✓	✓	✓	✓								
C88	**2KJ1604 - ■■■■■ - ■■■■**			✓	✓	✓	✓	✓							

© Siemens AG 2011

Input units with backstop K2X, AX, PX

For applications that only require one permissible direction of rotation, input units K2, A and P can be supplied with a backstop feature. In this case, an **X** needs to be added to the input unit code.

The backstops have centrifugal sprags and are suitable for use up to a maximum speed of 3600 rpm.

The backstops have been designed to offer a long service life, provided that they are used at a higher speed than the minimum specified in the table. Once this speed is reached and exceeded, the sprags lift off so that the backstop is not subject to wear and is maintenance-free.

All backstops are integrated into the input units and have no impact on the dimensions.

Note:

It is necessary to specify the desired direction of rotation of the output shaft when ordering a gearbox with backstop. The direction of rotation is determined by front view of the output shaft. See also "Direction of rotation of geared motors", Page 1/43.

With parallel shaft gearboxes, bevel helical gearboxes and helical worm gearboxes, it is again necessary to specify the side on which the output shaft is located, i.e. either "Output side A" or "Output side B". The output side is defined by specifying the mounting position. See also "Mounting types and mounting positions", Pages 3/92, 4/87 and 5/47.

K2, A, P													
IEC size		**71**	**80**	**90**	**100**	**112**	**132**	**160**	**180**	**200**	**225**	**250**	**280**
Minimum speed	[rpm]	890	820	820	750	750	670	670	610	610	610	610	400
Max. backstop starting torque	[Nm]	12.3	12.3	25	49	66	151	247	305	494	741	906	1 482

Gearbox	Size	Gear stages	View in relation to the output shaft	Output shaft direction of rotation	Input shaft direction of rotation
Z	38 ... 188	2	Facing output shaft	Clockwise	Clockwise
Z	38 ... 188	2	Facing output shaft	Counterclockwise	Counterclockwise
D	38 ... 188	3	Facing output shaft	Clockwise	Counterclockwise
D	38 ... 188	3	Facing output shaft	Counterclockwise	Clockwise
FZ	38 ... 188B	2	Facing drive end of output shaft	Clockwise	Clockwise
FZ	38 ... 188B	2	Facing drive end of output shaft	Counterclockwise	Counterclockwise
FD	38 ... 188B	3	Facing drive end of output shaft	Clockwise	Counterclockwise
FD	38 ... 188B	3	Facing drive end of output shaft	Counterclockwise	Clockwise
C	38 ... 88	2	Facing drive end of output shaft	Clockwise	Clockwise
C	38 ... 88	2	Facing drive end of output shaft	Counterclockwise	Counterclockwise
B	28 ... 38	2	Facing drive end of output shaft	Clockwise	Clockwise
B	28 ... 38	2	Facing drive end of output shaft	Counterclockwise	Counterclockwise
K	38 ... 88	3	Facing drive end of output shaft	Clockwise	Counterclockwise
K	38 ... 88	3	Facing drive end of output shaft	Counterclockwise	Clockwise
K	108 ... 188	3	Facing drive end of output shaft	Clockwise	Clockwise
K	108 ... 188	3	Facing drive end of output shaft	Counterclockwise	Counterclockwise
K	38 ... 188	3	Facing non-drive end of output shaft	Clockwise	Counterclockwise
K	38 ... 188	3	Facing non-drive end of output shaft	Counterclockwise	Clockwise

© Siemens AG 2011

Input units with backstop K2X, AX, PX (continued)

Example:

K 108 - 188

Facing drive end of output shaft

Output shaft direction of rotation = clockwise

Input shaft direction of rotation = clockwise

Additional order codes:
Backstop (X) **A15**

Output shaft direction of rotation:
Clockwise **K18**
Counterclockwise **K19**

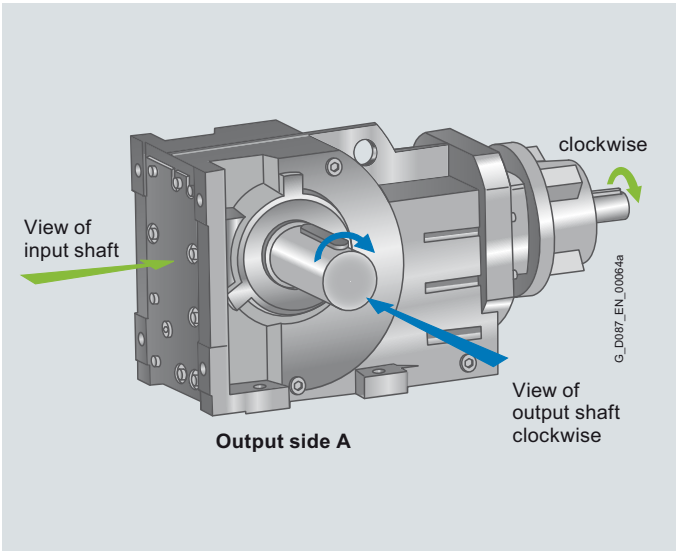

Friction clutch

Gearboxes and geared motors with a K2 input unit can be fitted with a friction clutch as an option. The friction clutch creates a friction-locked connection between the motor output shaft and the gearbox input shaft until a set torque value is achieved. Once this torque is exceeded the clutch will slip.
Friction clutches are used when there is a risk of the geared motor sustaining damage as a result of stalling.

A torque setting can be specified in plain text for the friction clutch.

Order code:
Friction clutch **A17**
Set torque **Y00**
Plain text: **Y00*RKD(a) ....***

Example: required torque 125 Nm

Plain text: Y00*RKD(a)125*

Speed monitoring

For monitoring speed deviations, a speed monitor can be used in coupling lantern K2 together with a friction clutch (order code **A17**).

The complete speed monitor system consists of proximity switch and speed monitor. The proximity switch operates contact-free according to the sampling method and emits one signal per coupling rotation which is evaluated by the speed monitor.

The signal sequence sent by the proximity switch is compared in the speed monitor with the set setpoint speed. If the speed is below or above the configured setpoint speed, a relay is actuated (depending on the function setting) via an output stage.

Both components can also be obtained separately.

Order code:

Proximity switch **A18**
Speed monitor **A19**

© Siemens AG 2011

Dimension drawing overview

Representation	Input unit	Dimension drawing on page
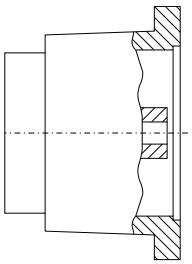	K2	7/20
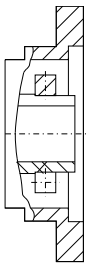	K4	7/23
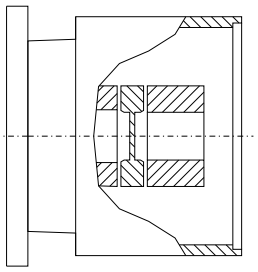	KQ and KQS	7/28
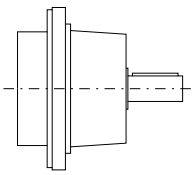	A	7/30
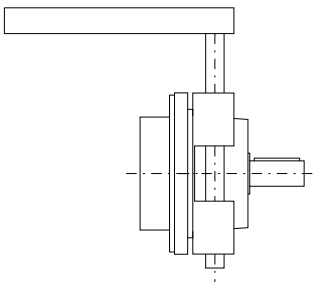	P	7/33

© Siemens AG 2011

Input units

Dimensions

Input unit K2

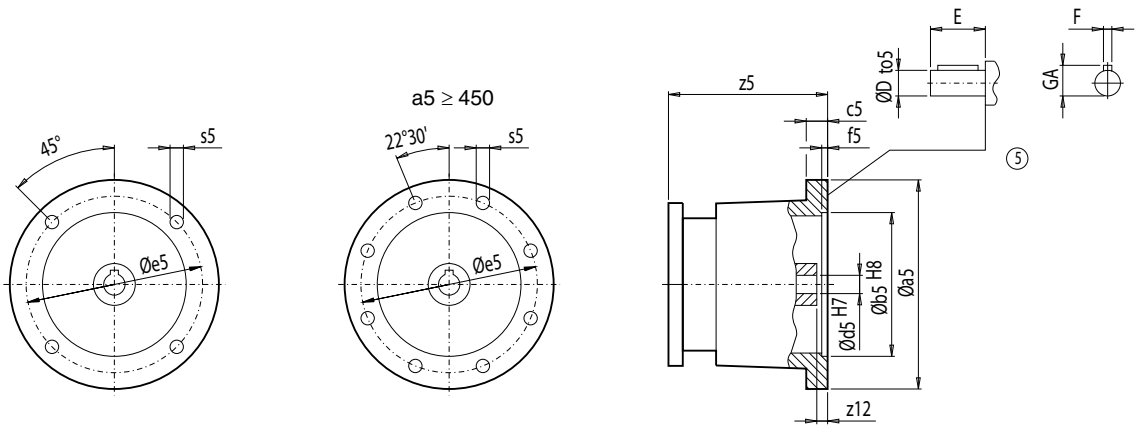

Gearbox E.Z.	D.	K./C.	FZ./ FD.			a5	b5	c5	f5	e5	s5	z12	d5 D	to5	E	GA	F	z5
–	–	B38	38B	-K2	(80)	200	130	17	4.5	165	M10	15	19	k6	40	21.5	6	176.0
					(90)	200	130	17	4.5	165	M10	26	24	k6	50	27.0	8	176.0
					(100)	250	180	19	5.0	215	M12	30	28	k6	60	31.0	8	198.5
38	–	38 48	48B	-K2	(80)	200	130	17	4.5	165	M10	15	19	k6	40	21.5	6	201.0
					(90)	200	130	17	4.5	165	M10	26	24	k6	50	27.0	8	201.0
					(100)	250	180	19	5.0	215	M12	30	28	k6	60	31.0	8	223.5
–	38	–	–	-K2	(80)	200	130	17	4.5	165	M10	15	19	k6	40	21.5	6	216.0
					(90)	200	130	17	4.5	165	M10	26	24	k6	50	27.0	8	216.0
48	–	68	68B	-K2	(80)	200	130	17	4.5	165	M10	15	19	k6	40	21.5	6	195.5
					(90)	200	130	17	4.5	165	M10	26	24	k6	50	27.0	8	195.5
					(100)	250	180	19	5.0	215	M12	30	28	k6	60	31.0	8	218.0
					(112)	250	180	19	5.0	215	M12	30	28	k6	60	31.0	8	217.0
					(132)	300	230	19	5.0	265	M12	45	38	k6	80	41.0	10	280.0
–	48	–	–	-K2	(80)	200	130	17	4.5	165	M10	15	19	k6	40	21.5	6	212.5
					(90)	200	130	17	4.5	165	M10	26	24	k6	50	27.0	8	212.5
					(100)	250	180	19	5.0	215	M12	30	28	k6	60	31.0	8	235.0
68	–	88	88B	-K2	(80)	200	130	17	4.5	165	M10	15	19	k6	40	21.5	6	189.5
					(90)	200	130	17	4.5	165	M10	26	24	k6	50	27.0	8	189.5
					(100)	250	180	19	5.0	215	M12	30	28	k6	60	31.0	8	212.0
					(112)	250	180	19	5.0	215	M12	30	28	k6	60	31.0	8	209.0
					(132)	300	230	19	5.0	265	M12	45	38	k6	80	41.0	10	270.5
–	68	–	–	-K2	(80)	200	130	17	4.5	165	M10	15	19	k6	40	21.5	6	208.0
					(90)	200	130	17	4.5	165	M10	26	24	k6	50	27.0	8	208.0
					(100)	250	180	19	5.0	215	M12	30	28	k6	60	31.0	8	230.5
88	–	108	108B	-K2	(80)	200	130	17	4.5	165	M10	15	19	k6	40	21.5	6	174.5
					(90)	200	130	17	4.5	165	M10	26	24	k6	50	27.0	8	174.5
					(100)	250	180	19	5.0	215	M12	30	28	k6	60	31.0	8	194.5
					(112)	250	180	19	5.0	215	M12	30	28	k6	60	31.0	8	190.5
					(132)	300	230	19	5.0	265	M12	45	38	k6	80	41.0	10	252.0
					(160)	350	250	30	6.0	300	M16	66	42	k6	110	45.0	12	318.5
–	88	–	–	-K2	(80)	200	130	17	4.5	165	M10	15	19	k6	40	21.5	6	199.5
					(90)	200	130	17	4.5	165	M10	26	24	k6	50	27.0	8	199.5
					(100)	250	180	19	5.0	215	M12	30	28	k6	60	31.0	8	222.0
					(112)	250	180	19	5.0	215	M12	30	28	k6	60	31.0	8	219.5
					(132)	300	230	19	5.0	265	M12	45	38	k6	80	41.0	10	280.0

⑤ Feather key / keyway DIN 6885

© Siemens AG 2011

Input unit K2 (continued)

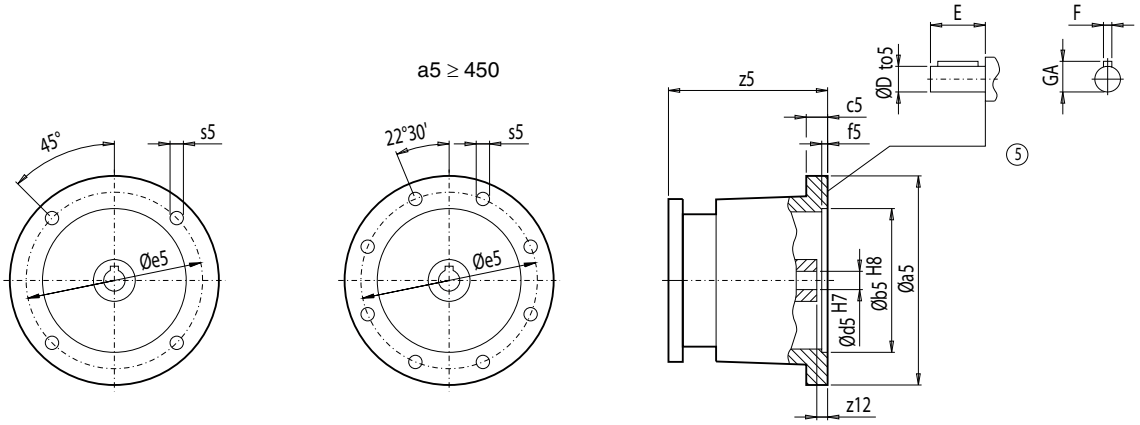

Gearbox E.Z.	D.	K./C.	FZ./ FD.			a5	b5	c5	f5	e5	s5	z12	d5 D	to5	E	GA	F	z5
108	–	128	128B	-K2	(90)	200	130	17	4.5	165	M10	26	24	k6	50	27.0	8	163.0
					(100)	250	180	19	5.0	215	M12	30	28	k6	60	31.0	8	182.5
					(112)	250	180	19	5.0	215	M12	30	28	k6	60	31.0	8	179.0
					(132)	300	230	19	5.0	265	M12	45	38	k6	80	41.0	10	239.5
					(160)	350	250	30	6.0	300	M16	66	42	k6	110	45.0	12	307.0
					(180)	350	250	25	6.0	300	M16	59	48	k6	110	51.5	14	357.5
					(200)	400	300	25	6.0	350	M16	60	55	m6	110	59.0	16	358.5
–	108	–	–	-K2	(80)	200	130	17	4.5	165	M10	15	19	k6	40	21.5	6	193.5
					(90)	200	130	17	4.5	165	M10	26	24	k6	50	27.0	8	193.5
					(100)	250	180	19	5.0	215	M12	30	28	k6	60	31.0	8	216.0
					(112)	250	180	19	5.0	215	M12	30	28	k6	60	31.0	8	210.5
					(132)	300	230	19	5.0	265	M12	45	38	k6	80	41.0	10	272.0
					(160)	350	250	30	6.0	300	M16	66	42	k6	110	45.0	12	336.5
128	–	148	148B	-K2	(100)	250	180	19	5.0	215	M12	30	28	k6	60	31.0	8	173.0
					(112)	250	180	19	5.0	215	M12	30	28	k6	60	31.0	8	168.5
					(132)	300	230	19	5.0	265	M12	45	38	k6	80	41.0	10	229.0
					(160)	350	250	30	6.0	300	M16	66	42	k6	110	45.0	12	290.5
					(180)	350	250	25	6.0	300	M16	59	48	k6	110	51.5	14	344.0
					(200)	400	300	25	6.0	350	M16	60	55	m6	110	59.0	16	345.0
					(225)	450	350	27	6.0	400	M16	90	60	m6	140	64.0	18	428.5
–	128	–	–	-K2	(90)	200	130	17	4.5	165	M10	26	24	k6	50	27.0	8	186.5
					(100)	250	180	19	5.0	215	M12	30	28	k6	60	31.0	8	209.0
					(112)	250	180	19	5.0	215	M12	30	28	k6	60	31.0	8	202.5
					(132)	300	230	19	5.0	265	M12	45	38	k6	80	41.0	10	263.0
					(160)	350	250	30	6.0	300	M16	66	42	k6	110	45.0	12	327.5
					(180)	350	250	25	6.0	300	M16	59	48	k6	110	51.5	14	381.0
					(200)	400	300	25	6.0	350	M16	60	55	m6	110	59.0	16	382.0
148	–	168	168B	-K2	(132)	300	230	19	5.0	265	M12	45	38	k6	80	41.0	10	221.0
					(160)	350	250	30	6.0	300	M16	66	42	k6	110	45.0	12	283.0
					(180)	350	250	25	6.0	300	M16	59	48	k6	110	51.5	14	336.5
					(200)	400	300	25	6.0	350	M16	60	55	m6	110	59.0	16	337.5
					(225)	450	350	27	6.0	400	M16	90	60	m6	140	64.0	18	421.0
					(250)	550	450	27	6.0	500	M16	75	65	m6	140	69.0	18	425.5
					(280)	550	450	27	7.0	500	M16	51	75	m6	140	79.5	18	469.0

⑤ Feather key / keyway DIN 6885

© Siemens AG 2011

Dimensions

Input unit K2 (continued)

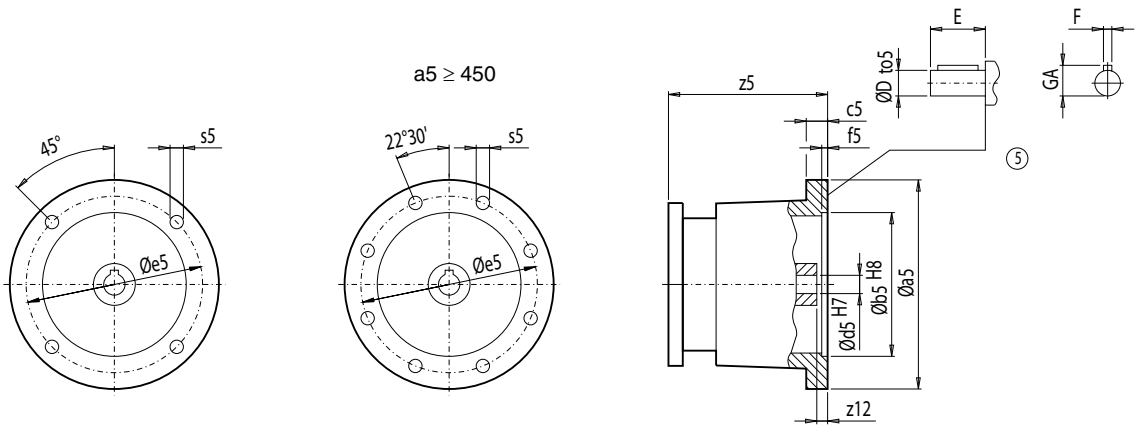

Gearbox E.Z.	D.	K./C.	FZ./ FD.			a5	b5	c5	f5	e5	s5	z12	d5 D	to5	E	GA	F	z5
–	148	–	–	-K2	(100)	250	180	19	5	215	M12	30	28	k6	60	31.0	8	204.0
					(112)	250	180	19	5	215	M12	30	28	k6	60	31.0	8	199.5
					(132)	300	230	19	5	265	M12	45	38	k6	80	41.0	10	259.0
					(160)	350	250	30	6	300	M16	66	42	k6	110	45.0	12	321.0
					(180)	350	250	25	6	300	M16	59	48	k6	110	51.5	14	374.5
					(200)	400	300	25	6	350	M16	60	55	m6	110	59.0	16	375.5
					(225)	450	350	27	6	400	M16	90	60	m6	140	64.0	18	459.0
168	–	188	188B 208	-K2	(132)	300	230	19	5	265	M12	45	38	k6	80	41.0	10	206.5
					(160)	350	250	30	6	300	M16	66	42	k6	110	45.0	12	268.5
					(180)	350	250	25	6	300	M16	59	48	k6	110	51.5	14	322.0
					(200)	400	300	25	6	350	M16	60	55	m6	110	59.0	16	323.0
					(225)	450	350	27	6	400	M16	90	60	m6	140	64.0	18	406.5
					(250)	550	450	27	6	500	M16	75	65	m6	140	69.0	18	411.0
					(280)	550	450	27	7	500	M16	51	75	m6	140	79.5	18	469.0
					(315) *)	660	550	32	8	600	M20	33	80	m6	170	85.0	22	299.0
–	168	–	–	-K2	(132)	300	230	19	5	265	M12	45	38	k6	80	41.0	10	247.5
					(160)	350	250	30	6	300	M16	66	42	k6	110	45.0	12	309.5
					(180)	350	250	25	6	300	M16	59	48	k6	110	51.5	14	363.0
					(200)	400	300	25	6	350	M16	60	55	m6	110	59.0	16	364.0
					(225)	450	350	27	6	400	M16	90	60	m6	140	64.0	18	447.5
188	–	–	–	-K2	(160)	350	250	30	6	300	M16	66	42	k6	110	45.0	12	268.5
					(180)	350	250	25	6	300	M16	59	48	k6	110	51.5	14	322.0
					(200)	400	300	25	6	350	M16	60	55	m6	110	59.0	16	323.0
					(225)	450	350	27	6	400	M16	90	60	m6	140	64.0	18	406.5
					(250)	550	450	27	6	500	M16	75	65	m6	140	69.0	18	411.0
					(280)	550	450	27	7	500	M16	51	75	m6	140	79.5	18	469.0
					(315)	660	550	32	8	600	M20	33	80	m6	170	85.0	22	299.0
–	188	–	–	-K2	(132)	300	230	19	5	265	M12	45	38	k6	80	41.0	10	206.5
					(160)	350	250	30	6	300	M16	66	42	k6	110	45.0	12	268.5
					(180)	350	250	25	6	300	M16	59	48	k6	110	51.5	14	322.0
					(200)	400	300	25	6	350	M16	60	55	m6	110	59.0	16	323.0
					(225)	450	350	27	6	400	M16	90	60	m6	140	64.0	18	406.5
					(250)	550	450	27	6	500	M16	75	65	m6	140	69.0	18	411.0
					(280)	550	450	27	7	500	M16	51	75	m6	140	79.5	18	469.0

⑤ Feather key / keyway DIN 6885 *) Not possible in conjunction with Z.168

© Siemens AG 2011

Input unit K4

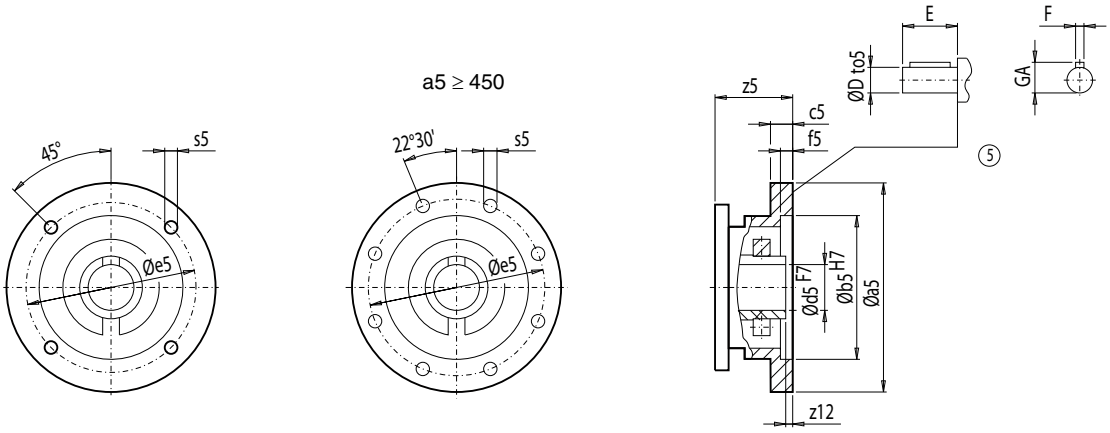

Gearbox E.Z.	D.	K./C.	FZ./ FD.			a5	b5	c5	f5	e5	s5	z12	d5 D	to5	E	GA	F	z5
–	–	B38	38B	-K4	(63)	140	95	10.0	4.5	115	M8x17	4.0	11	k6	23	12.5	4	48.5
					(71)	160	110	10.0	4.5	130	M8x17	4.0	14	k6	30	16.0	5	45.0
					(80)	200	130	15.5	4.5	165	M10	15.5	19	k6	40	21.5	6	69.0
					(90)	200	130	15.5	4.5	165	M10	15.5	24	k6	50	27.0	8	69.0
					(100)	250	180	20.5	5.0	215	M12	7.0	28	k6	60	31.0	8	76.5
38	–	38 48	48B	-K4	(63)	140	95	10.0	4.5	115	M8x17	4.0	11	k6	23	12.5	4	73.5
					(71)	160	110	10.0	4.5	130	M8x17	4.0	14	k6	30	16.0	5	70.0
					(80)	200	130	15.5	4.5	165	M10	15.5	19	k6	40	21.5	6	94.0
					(90)	200	130	15.5	4.5	165	M10	15.5	24	k6	50	27.0	8	94.0
					(100)	250	180	20.5	5.0	215	M12	7.0	28	k6	60	31.0	8	101.5
					(112)	250	180	20.0	5.0	215	M12	7.0	28	k6	60	31.0	8	110.5
–	38	–	–	-K4	(63)	140	95	10.0	4.5	115	M8x17	4.0	11	k6	23	12.5	4	88.5
					(71)	160	110	10.0	4.5	130	M8x17	4.0	14	k6	30	16.0	5	85.0
					(80)	200	130	15.5	4.5	165	M10	15.5	19	k6	40	21.5	6	109.0
					(90)	200	130	15.5	4.5	165	M10	15.5	24	k6	50	27.0	8	109.0
48	–	68	68B	-K4	(63)	140	95	10.0	4.5	115	M8x17	4.0	11	k6	23	12.5	4	68.0
					(71)	160	110	10.0	4.5	130	M8x17	4.0	14	k6	30	16.0	5	64.5
					(80)	200	130	15.5	4.5	165	M10	15.5	19	k6	40	21.5	6	88.5
					(90)	200	130	15.5	4.5	165	M10	15.5	24	k6	50	27.0	8	88.5
					(100)	250	180	20.5	5.0	215	M12	7.0	28	k6	60	31.0	8	96.0
					(112)	250	180	19.0	5.0	215	M12	7.0	28	k6	60	31.0	8	104.5
					(132)	300	230	20.0	5.0	265	M12	22.0	38	k6	80	41.0	10	147.5
–	48	–	–	-K4	(63)	140	95	10.0	4.5	115	M8x17	4.0	11	k6	23	12.5	4	85.0
					(71)	160	110	10.0	4.5	130	M8x17	4.0	14	k6	30	16.0	5	81.5
					(80)	200	130	15.5	4.5	165	M10	15.5	19	k6	40	21.5	6	105.5
					(90)	200	130	15.5	4.5	165	M10	15.5	24	k6	50	27.0	8	105.5
					(100)	250	180	20.5	5.0	215	M12	7.0	28	k6	60	31.0	8	113.0

⑤ Feather key / keyway DIN 6885

© Siemens AG 2011

Input units

Dimensions

Input unit K4 (continued)

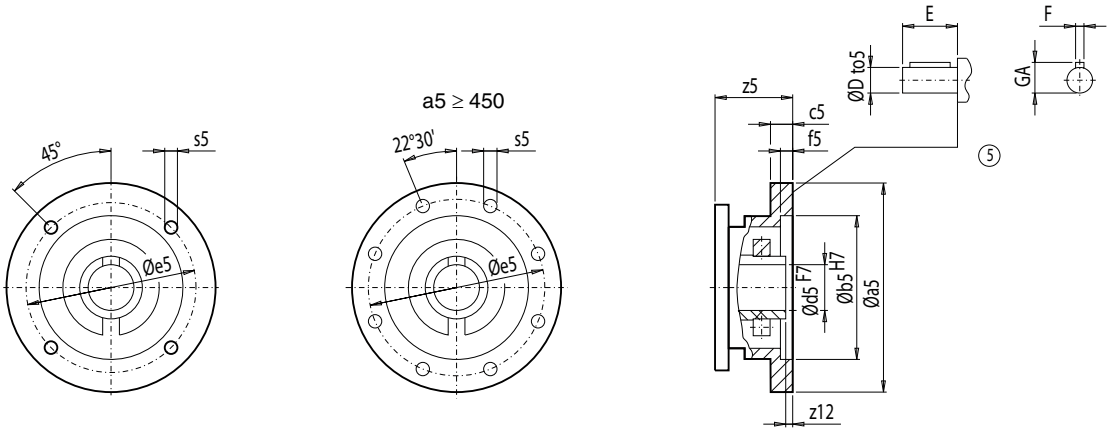

Gearbox E.Z.	D.	K./C.	FZ./ FD.			a5	b5	c5	f5	e5	s5	z12	d5 D	to5	E	GA	F	z5
68	–	88	88B	-K4	(63)	140	95	10.0	4.5	115	M8x17	4.0	11	k6	23	12.5	4	62.0
					(71)	160	110	10.0	4.5	130	M8x17	4.0	14	k6	30	16.0	5	58.5
					(80)	200	130	15.5	4.5	165	M10	15.5	19	k6	40	21.5	6	82.5
					(90)	200	130	15.5	4.5	165	M10	15.5	24	k6	50	27.0	8	82.5
					(100)	250	180	20.5	5.0	215	M12	7.0	28	k6	60	31.0	8	90.0
					(112)	250	180	19.0	5.0	215	M12	7.0	28	k6	60	31.0	8	96.5
					(132)	300	230	19.0	5.0	265	M12	22.0	38	k6	80	41.0	10	137.5
					(160)	350	250	26.0	6.0	300	M16	20.0	42	k6	110	45.0	12	178.5
–	68	–	–	-K4	(63)	140	95	10.0	4.5	115	M8x17	4.0	11	k6	23	12.5	4	80.5
					(71)	160	110	10.0	4.5	130	M8x17	4.0	14	k6	30	16.0	5	77.0
					(80)	200	130	15.5	4.5	165	M10	15.5	19	k6	40	21.5	6	101.0
					(90)	200	130	15.5	4.5	165	M10	15.5	24	k6	50	27.0	8	101.0
					(100)	250	180	20.5	5.0	215	M12	7.0	28	k6	60	31.0	8	108.5
88	–	108	108B	-K4	(90)	200	130	15.5	4.5	165	M10	15.5	24	k6	50	27.0	8	67.5
					(100)	250	180	20.5	5.0	215	M12	7.0	28	k6	60	31.0	8	72.5
					(112)	250	180	19.0	5.0	215	M12	7.0	28	k6	60	31.0	8	78.0
					(132)	300	230	19.0	5.0	265	M12	22.0	38	k6	80	41.0	10	119.0
					(160)	350	250	26.0	6.0	300	M16	20.0	42	k6	110	45.0	12	162.0
					(180)	350	250	26.0	6.0	300	M16x22	21.0	48	k6	110	51.5	14	179.0
–	88	–	–	-K4	(63)	140	95	10.0	4.5	115	M8x17	4.0	11	k6	23	12.5	4	72.0
					(71)	160	110	10.0	4.5	130	M8x17	4.0	14	k6	30	16.0	5	68.5
					(80)	200	130	15.5	4.5	165	M10	15.5	19	k6	40	21.5	6	92.5
					(90)	200	130	15.5	4.5	165	M10	15.5	24	k6	50	27.0	8	92.5
					(100)	250	180	20.5	5.0	215	M12	7.0	28	k6	60	31.0	8	100.0
					(112)	250	180	19.0	5.0	215	M12	7.0	28	k6	60	31.0	8	107.0
					(132)	300	230	19.0	5.0	265	M12	22.0	38	k6	80	41.0	10	147.0
108	–	128	128B	-K4	(90)	200	130	15.5	4.5	165	M10	15.5	24	k6	50	27.0	8	56.0
					(100)	250	180	20.5	5.0	215	M12	7.0	28	k6	60	31.0	8	60.5
					(112)	250	180	19.0	5.0	215	M12	7.0	28	k6	60	31.0	8	66.5
					(132)	300	230	19.0	5.0	265	M12	22.0	38	k6	80	41.0	10	106.5
					(160)	350	250	25.0	6.0	300	M16	20.0	42	k6	110	45.0	12	150.5
					(180)	350	250	15.5	6.0	300	M16x22	21.0	48	k6	110	51.5	14	164.0
					(200)	400	300	25.0	6.0	350	M16	30.0	55	m6	110	59.0	16	174.0
					(225)	450	350	27.0	6.0	400	M16	30.0	60	m6	140	64.0	18	247.0

⑤ Feather key / keyway DIN 6885

© Siemens AG 2011

Input unit K4 (continued)

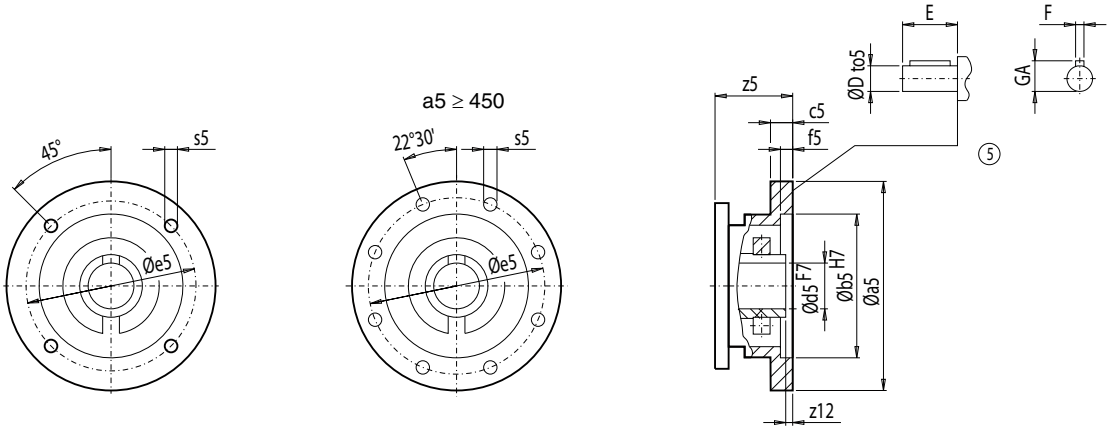

Gearbox E.Z.	D.	K./C.	FZ./ FD.			a5	b5	c5	f5	e5	s5	z12	d5 D	to5	E	GA	F	z5
–	108	–	–	-K4	(80)	200	130	15.5	4.5	165	M10	15.5	19	k6	40	21.5	6	86.5
					(90)	200	130	15.5	4.5	165	M10	15.5	24	k6	50	27.0	8	86.5
					(100)	250	180	20.5	5.0	215	M12	7.0	28	k6	60	31.0	8	94.0
					(112)	250	180	19.0	5.0	215	M12	7.0	28	k6	60	31.0	8	98.0
					(132)	300	230	19.0	5.0	265	M12	22.0	38	k6	80	41.0	10	139.0
					(160)	350	250	25.0	6.0	300	M16	20.0	42	k6	110	45.0	12	180.0
128	–	148	148B	-K4	(100)	250	180	20.5	5.0	215	M12	7.0	28	k6	60	31.0	8	51.0
					(112)	250	180	19.0	5.0	215	M12	7.0	28	k6	60	31.0	8	56.0
					(132)	300	230	19.0	5.0	265	M12	22.0	38	k6	80	41.0	10	96.0
					(160)	350	250	25.0	6.0	300	M16	20.0	42	k6	110	45.0	12	134.0
					(180)	350	250	15.5	6.0	300	M16x22	21.0	48	k6	110	51.5	14	150.5
					(200)	400	300	25.0	6.0	350	M16	30.0	55	m6	110	59.0	16	160.5
					(225)	450	350	27.0	6.0	400	M16	30.0	60	m6	140	64.0	18	233.0
					(250)	550	450	27.0	6.0	500	M16	30.0	65	m6	140	69.0	18	233.0
–	128	–	–	-K4	(90)	200	130	15.5	4.5	165	M10	15.5	24	k6	50	27.0	8	79.5
					(100)	250	180	20.5	5.0	215	M12	7.0	28	k6	60	31.0	8	87.0
					(112)	250	180	19.0	5.0	215	M12	7.0	28	k6	60	31.0	8	90.0
					(132)	300	230	19.0	5.0	265	M12	22.0	38	k6	80	41.0	10	130.0
					(160)	350	250	25.0	6.0	300	M16	20.0	42	k6	110	45.0	12	171.0
					(180)	350	250	15.5	6.0	300	M16x22	21.0	48	k6	110	51.5	14	187.5
					(200)	400	300	25.0	6.0	350	M16	30.0	55	m6	110	59.0	16	197.5
148	–	168	168B	-K4	(132)	300	230	19.0	5.0	265	M12	22.0	38	k6	80	41.0	10	88.0
					(160)	350	250	25.0	6.0	300	M16	20.0	42	k6	110	45.0	12	126.5
					(180)	350	250	15.5	6.0	300	M16x22	21.0	48	k6	110	51.5	14	143.0
					(200)	400	300	25.0	6.0	350	M16	30.0	55	m6	110	59.0	16	153.0
					(225)	450	350	27.0	6.0	400	M16	30.0	60	m6	140	64.0	18	225.5
					(250)	550	450	27.0	6.0	500	M16	30.0	65	m6	140	69.0	18	225.0
					(280)	550	450	27.0	6.0	500	M16	30.0	75	m6	140	79.5	20	238.0

⑤ Feather key / keyway DIN 6885

© Siemens AG 2011

Dimensions

Input unit K4 (continued)

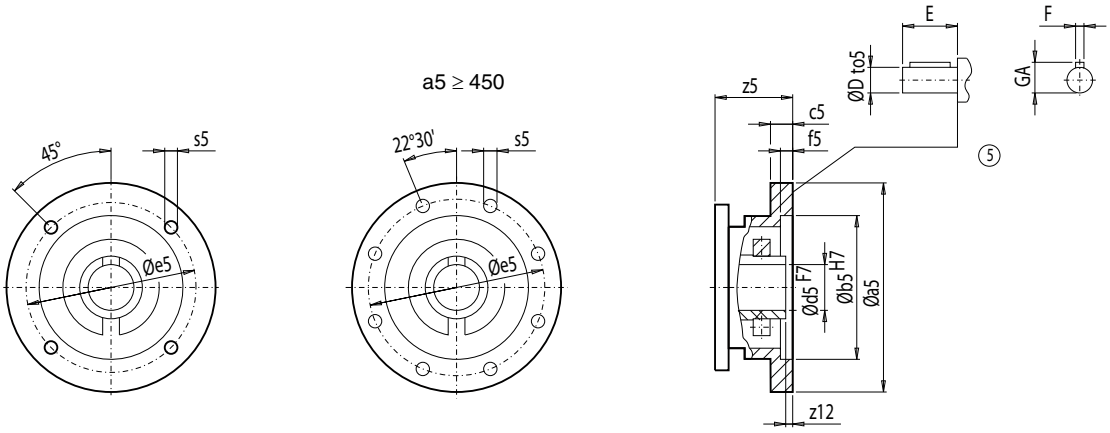

Gearbox E.Z.	D.	K./C.	FZ./ FD.			a5	b5	c5	f5	e5	s5	z12	d5 D	to5	E	GA	F	z5
–	148	–	–	-K4	(100)	250	180	20.5	5	215	M12	7	28	k6	60	31.0	8	82.0
					(112)	250	180	19.0	5	215	M12	7	28	k6	60	31.0	8	87.0
					(132)	300	230	19.0	5	265	M12	22	38	k6	80	41.0	10	126.0
					(160)	350	250	25.0	6	300	M16	20	42	k6	110	45.0	12	164.5
					(180)	350	250	15.5	6	300	M16x22	21	48	k6	110	51.5	14	181.0
					(200)	400	300	25.0	6	350	M16	30	55	m6	110	59.0	16	191.0
					(225)	450	350	27.0	6	400	M16	30	60	m6	140	64.0	18	263.5
168	–	188	188B 208	-K4	(132)	300	230	19.0	5	265	M12	22	38	k6	80	41.0	10	73.5
					(160)	350	250	25.0	6	300	M16	20	42	k6	110	45.0	12	112.0
					(180)	350	250	15.5	6	300	M16x22	21	48	k6	110	51.5	14	128.5
					(200)	400	300	25.0	6	350	M16	30	55	m6	110	59.0	16	138.5
					(225)	450	350	27.0	6	400	M16	30	60	m6	140	64.0	18	211.0
					(250)	550	450	27.0	6	500	M16	30	65	m6	140	69.0	18	210.5
					(280)	550	450	27.0	6	500	M16	30	75	m6	140	79.5	20	223.5
–	168	–	–	-K4	(132)	300	230	19.0	5	265	M12	22	38	k6	80	41.0	10	114.5
					(160)	350	250	25.0	6	300	M16	20	42	k6	110	45.0	12	153.0
					(180)	350	250	15.5	6	300	M16x22	21	48	k6	110	51.5	14	169.5
					(200)	400	300	25.0	6	350	M16	30	55	m6	110	59.0	16	179.5
					(225)	450	350	27.0	6	400	M16	30	60	m6	140	64.0	18	252.0
188	–	–	–	-K4	(160)	350	250	25.0	6	300	M16	20	42	k6	110	45.0	12	112.0
					(180)	350	250	15.5	6	300	M16x22	21	48	k6	110	51.5	14	128.5
					(200)	400	300	25.0	6	350	M16	30	55	m6	110	59.0	16	138.5
					(225)	450	350	27.0	6	400	M16	30	60	m6	140	64.0	18	211.0
					(250)	550	450	27.0	6	500	M16	30	65	m6	140	69.0	18	210.5
					(280)	550	450	27.0	6	500	M16	30	75	m6	140	79.5	20	223.5

⑤ Feather key / keyway DIN 6885

© Siemens AG 2011

Input unit K4 (continued)

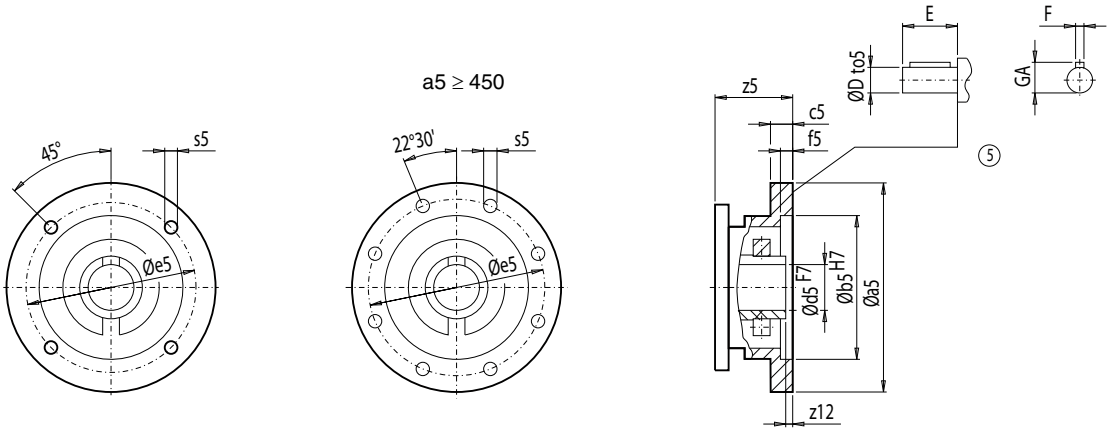

Gearbox E.Z.	D.	K./C.	FZ./ FD.			a5	b5	c5	f5	e5	s5	z12	d5 D	to5	E	GA	F	z5
–	188	–	–	-K4	(132)	300	230	19.0	5	265	M12	22	38	k6	80	41.0	10	73.5
					(160)	350	250	25.0	6	300	M16	20	42	k6	110	45.0	12	112.0
					(180)	350	250	15.5	6	300	M16x22	21	48	k6	110	51.5	14	128.5
					(200)	400	300	25.0	6	350	M16	30	55	m6	110	59.0	16	138.5
					(225)	450	350	27.0	6	400	M16	30	60	m6	140	64.0	18	211.0
					(250)	550	450	27.0	6	500	M16	30	65	m6	140	69.0	18	210.5
					(280)	550	450	27.0	6	500	M16	30	75	m6	140	79.5	20	223.5
168	–	188	188B 208	-K4	(132)	300	230	19.0	5	265	M12	22	38	k6	80	41.0	10	73.5
					(160)	350	250	25.0	6	300	M16	20	42	k6	110	45.0	12	112.0
					(180)	350	250	15.5	6	300	M16x22	21	48	k6	110	51.5	14	128.5
					(200)	400	300	25.0	6	350	M16	30	55	m6	110	59.0	16	138.5
					(225)	450	350	27.0	6	400	M16	30	60	m6	140	64.0	18	211.0
					(250)	550	450	27.0	6	500	M16	30	65	m6	140	69.0	18	210.5
					(280)	550	450	27.0	6	500	M16	30	75	m6	140	79.5	20	223.5
–	168	–	–	-K4	(132)	300	230	19.0	5	265	M12	22	38	k6	80	41.0	10	114.5
					(160)	350	250	25.0	6	300	M16	20	42	k6	110	45.0	12	153.0
					(180)	350	250	15.5	6	300	M16x22	21	48	k6	110	51.5	14	169.5
					(200)	400	300	25.0	6	350	M16	30	55	m6	110	59.0	16	179.5
					(225)	450	350	27.0	6	400	M16	30	60	m6	140	64.0	18	252.0
188	–	–	–	-K4	(160)	350	250	25.0	6	300	M16	20	42	k6	110	45.0	12	112.0
					(180)	350	250	15.5	6	300	M16x22	21	48	k6	110	51.5	14	128.5
					(200)	400	300	25.0	6	350	M16	30	55	m6	110	59.0	16	138.5
					(225)	450	350	27.0	6	400	M16	30	60	m6	140	64.0	18	211.0
					(250)	550	450	27.0	6	500	M16	30	65	m6	140	69.0	18	210.5
					(280)	550	450	27.0	6	500	M16	30	75	m6	140	79.5	20	223.5
–	188	–	–	-K4	(132)	300	230	19.0	5	265	M12	22	38	k6	80	41.0	10	73.5
					(160)	350	250	25.0	6	300	M16	20	42	k6	110	45.0	12	112.0
					(180)	350	250	15.5	6	300	M16x22	21	48	k6	110	51.5	14	128.5
					(200)	400	300	25.0	6	350	M16	30	55	m6	110	59.0	16	138.5
					(225)	450	350	27.0	6	400	M16	30	60	m6	140	64.0	18	211.0
					(250)	550	450	27.0	6	500	M16	30	65	m6	140	69.0	18	210.5
					(280)	550	450	27.0	6	500	M16	30	75	m6	140	79.5	20	223.5

⑤ Feather key / keyway DIN 6885

© Siemens AG 2011

Input units

Dimensions

Input units KQ and KQS

KQ (keyway)

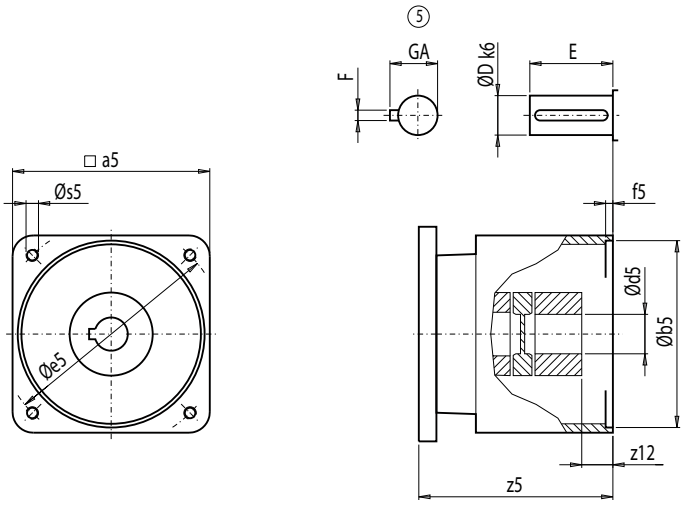

KQS (clamping ring hub / clamping collar hub)

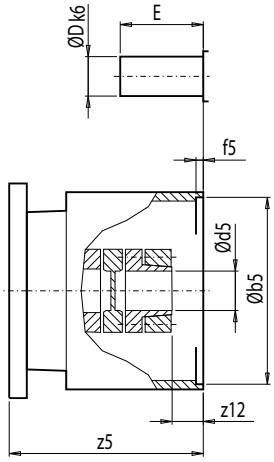

Gearbox E.Z.	D.	K./C.	FZ./ FD.			a5	b5	f5	e5	s5	z12	d5 D	E	GA	F	z5
Z28	28	B28	28	-KQ -KQS	(71.2)	82	60	5	75	M5	19	14	30	16.0	5	102.5
					(80.3)	100	80	5	100	M6	15	19	40	21.5	6	145.5
					(90.4)	115	110	7	130	M8	15	24	50	27.0	8	160.5
–	–	B38	38B	-KQ -KQS	(71.2)	82	60	5	75	M5	19	14	30	16.0	5	69.0
					(80.3)	100	80	5	100	M6	15	19	40	21.5	6	112.0
					(90.4)	115	110	7	130	M8	15	24	50	27.0	8	127.0
38	–	38 48	48B	-KQ -KQS	(71.2)	82	60	5	75	M5	19	14	30	16.0	5	94.0
					(80.3)	100	80	5	100	M6	15	19	40	21.5	6	137.0
					(90.4)	115	110	7	130	M8	15	24	50	27.0	8	152.0
–	38	–	–	-KQ -KQS	(71.2)	82	60	5	75	M5	19	14	30	16.0	5	109.0
					(80.3)	100	80	5	100	M6	15	19	40	21.5	6	152.0
					(90.4)	115	110	7	130	M8	15	24	50	27.0	8	167.0
48	–	68	68B	-KQ -KQS	(71.2)	82	60	5	75	M5	19	14	30	16.0	5	88.5
					(80.3)	100	80	5	100	M6	15	19	40	21.5	6	131.5
					(90.4)	115	110	7	130	M8	15	24	50	27.0	8	146.5
					(112.3)	140	130	5	165	M10	25	32	60	35.0	10	183.0
–	48	–	–	-KQ -KQS	(71.2)	82	60	5	75	M5	19	14	30	16.0	5	105.5
					(80.3)	100	80	5	100	M6	15	19	40	21.5	6	148.5
					(90.4)	115	110	7	130	M8	15	24	50	27.0	8	163.5
68	–	88	88B	-KQ -KQS	(71.2)	82	60	5	75	M5	19	14	30	16.0	5	82.5
					(80.3)	100	80	5	100	M6	15	19	40	21.5	6	125.5
					(90.4)	115	110	7	130	M8	15	24	50	27.0	8	140.5
					(112.3)	140	130	5	165	M10	25	32	60	35.0	10	175.0
					(132.3)	190	180	7	215	M12	30	38	80	41.0	10	224.5
–	68	–	–	-KQ -KQS	(71.2)	82	60	5	75	M5	19	14	30	16.0	5	101.0
					(80.3)	100	80	5	100	M6	15	19	40	21.5	6	144.0
					(90.4)	115	110	7	130	M8	15	24	50	27.0	8	159.0

⑤ Feather key / keyway DIN 6885

© Siemens AG 2011

Input units KQ and KQS (continued)

KQ (keyway)

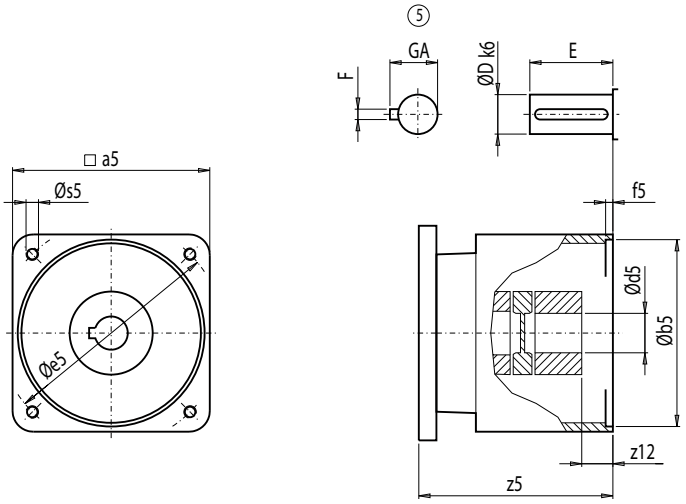

KQS (clamping ring hub / clamping collar hub)

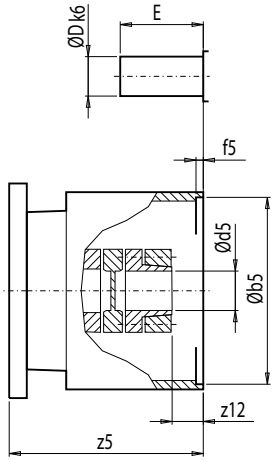

Gearbox E.Z.	D.	K./C.	FZ./ FD.			a5	b5	f5	e5	s5	z12	d5 D	E	GA	F	z5
88	–	108	108B	-KQ -KQS	(80.3)	100	80	5	100	M6	15	19	40	21.5	6	110.5
					(90.4)	115	110	7	130	M8	15	24	50	27.0	8	125.5
					(112.3)	140	130	5	165	M10	25	32	60	35.0	10	156.5
					(132.3)	190	180	7	215	M12	30	38	80	41.0	10	206.0
–	88	–	–	-KQ -KQS	(71.2)	82	60	5	75	M5	19	14	30	16.0	5	92.5
					(80.3)	100	80	5	100	M6	15	19	40	21.5	6	135.5
					(90.4)	115	110	7	130	M8	15	24	50	27.0	8	150.5
					(112.3)	140	130	5	165	M10	25	32	60	35.0	10	185.5
					(132.3)	190	180	7	215	M12	30	38	80	41.0	10	234.0
108	–	128	128B	-KQ -KQS	(90.4)	115	110	7	130	M8	15	24	50	27.0	8	114.0
					(112.3)	140	130	5	165	M10	25	32	60	35.0	10	145.0
					(132.3)	190	180	7	215	M12	30	38	80	41.0	10	193.5
–	108	–	–	-KQ -KQS	(80.3)	100	80	5	100	M6	15	19	40	21.5	6	129.5
					(90.4)	115	110	7	130	M8	15	24	50	27.0	8	144.5
					(112.3)	140	130	5	165	M10	25	32	60	35.0	10	176.5
					(132.3)	190	180	7	215	M12	30	38	80	41.0	10	226.0
128	–	148	148B	-KQ -KQS	(112.3)	140	130	5	165	M10	25	32	60	35.0	10	134.5
					(132.3)	190	180	7	215	M12	30	38	80	41.0	10	183.0
–	128	–	–	-KQ -KQS	(90.4)	115	110	7	130	M8	15	24	50	27.0	8	137.5
					(112.3)	140	130	5	165	M10	25	32	60	35.0	10	168.5
					(132.3)	190	180	7	215	M12	30	38	80	41.0	10	217.0
148	–	168	168B	-KQ -KQS	(132.3)	190	180	7	215	M12	30	38	80	41.0	10	175.0
–	148	–	–	-KQ -KQS	(112.3)	140	130	5	165	M10	25	32	60	35.0	10	165.5
					(132.3)	190	180	7	215	M12	30	38	80	41.0	10	213.0
168	–	188	188B	-KQ -KQS	(132.3)	190	180	7	215	M12	30	38	80	41.0	10	160.5
–	168	–	–	-KQ -KQS	(132.3)	190	180	7	215	M12	30	38	80	41.0	10	201.5
–	188	–	–	-KQ -KQS	(132.3)	190	180	7	215	M12	30	38	80	41.0	10	160.5

⑤ Feather key / keyway DIN 6885

© Siemens AG 2011

Input units

Dimensions

Input unit A

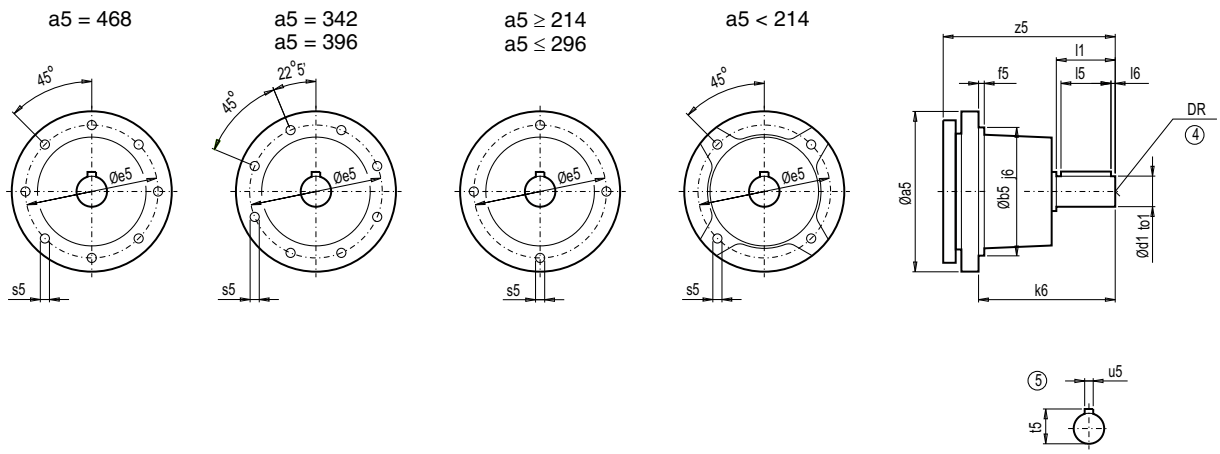

Gearbox E.Z.	D.	K./C.	FZ./ FD.			a5	b5	f5	e5	s5	d1	to1	l1	l5	l6	t5	u5	DR	k6	z5
–	–	B38	38B	-A	(71)	136	95	4.0	116	M8x14	16	k6	40	32	4	18.0	5	M5x12.5	61	125.5
					(80)	140	95	4.0	116	M8x14	19	k6	40	32	4	21.5	6	M6x16	61	160.5
					(90)	140	95	4.0	116	M8x14	24	k6	50	40	5	27.0	8	M8x19	71	170.5
					(100)	174	120	4.0	145	M10x17	28	k6	60	50	5	31.0	8	M10x22	83	186.5
38	–	38 48	48B	-A	(71)	136	95	4.0	116	M8x14	16	k6	40	32	4	18.0	5	M5x12.5	61	151.0
					(80)	140	95	4.0	116	M8x14	19	k6	40	32	4	21.5	6	M6x16	61	186.0
					(90)	140	95	4.0	116	M8x14	24	k6	50	40	5	27.0	8	M8x19	71	196.0
					(100)	174	120	4.0	145	M10x17	28	k6	60	50	5	31.0	8	M10x22	83	212.0
–	38	–	–	-A	(71)	136	95	4.0	116	M8x14	16	k6	40	32	4	18.0	5	M5x12.5	61	166.0
					(80)	140	95	4.0	116	M8x14	19	k6	40	32	4	21.5	6	M6x16	61	201.0
					(90)	140	95	4.0	116	M8x14	24	k6	50	40	5	27.0	8	M8x19	71	211.0
48	–	68	68B	-A	(71)	136	95	4.0	116	M8x14	16	k6	40	32	4	18.0	5	M5x12.5	61	145.5
					(80)	140	95	4.0	116	M8x14	19	k6	40	32	4	21.5	6	M6x16	61	180.5
					(90)	140	95	4.0	116	M8x14	24	k6	50	40	5	27.0	8	M8x19	71	190.5
					(100)	174	120	4.0	145	M10x17	28	k6	60	50	5	31.0	8	M10x22	83	206.5
					(112)	178	120	4.0	145	M10x17	28	k6	60	50	5	31.0	8	M10x22	83	207.5
–	48	–	–	-A	(71)	136	95	4.0	116	M8x14	16	k6	40	32	4	18.0	5	M5x12.5	61	162.5
					(80)	140	95	4.0	116	M8x14	19	k6	40	32	4	21.5	6	M6x16	61	197.5
					(90)	140	95	4.0	116	M8x14	24	k6	50	40	5	27.0	8	M8x19	71	207.5
					(100)	174	120	4.0	145	M10x17	28	k6	60	50	5	31.0	8	M10x22	83	223.5
68	–	88	88B	-A	(71)	136	95	4.0	116	M8x14	16	k6	40	32	4	18.0	5	M5x12.5	61	139.5
					(80)	140	95	4.0	116	M8x14	19	k6	40	32	4	21.5	6	M6x16	61	174.5
					(90)	140	95	4.0	116	M8x14	24	k6	50	40	5	27.0	8	M8x19	71	184.5
					(100)	174	120	4.0	145	M10x17	28	k6	60	50	5	31.0	8	M10x22	83	200.5
					(112)	178	120	4.0	145	M10x17	28	k6	60	50	5	31.0	8	M10x22	83	199.5
					(132)	214	160	3.5	184	M16x22	38	k6	80	70	5	41.0	10	M12x28	168	284.0
–	68	–	–	-A	(71)	136	95	4.0	116	M8x14	16	k6	40	32	4	18.0	5	M5x12.5	61	158.0
					(80)	140	95	4.0	116	M8x14	19	k6	40	32	4	21.5	6	M6x16	61	193.0
					(90)	140	95	4.0	116	M8x14	24	k6	50	40	5	27.0	8	M8x19	71	203.0
					(100)	174	120	4.0	145	M10x17	28	k6	60	50	5	31.0	8	M10x22	83	219.0

④ DIN 332

⑤ Feather key / keyway DIN 6885

© Siemens AG 2011

Input unit A (continued)

a5 = 468

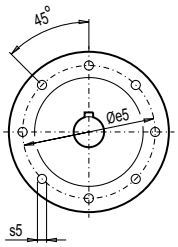

a5 = 342
a5 = 396

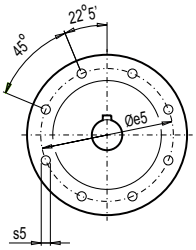

a5 ≥ 214
a5 ≤ 296

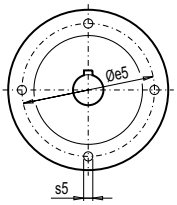

a5 < 214

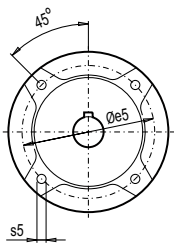

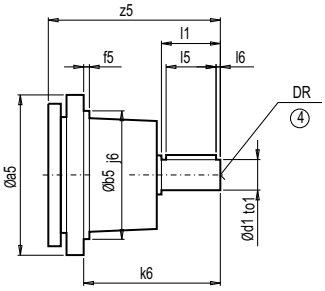

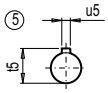

Gearbox E.Z.	D.	K./C.	FZ./ FD.			a5	b5	f5	e5	s5	d1	to1	l1	l5	l6	t5	u5	DR	k6	z5
88	-	108	108B	-A	(90)	140	95	4.0	116	M8x14	24	k6	50	40	5	27.0	8	M8x19	71	169.0
					(100)	174	120	4.0	145	M10x17	28	k6	60	50	5	31.0	8	M10x22	83	182.5
					(112)	178	120	4.0	145	M10x17	28	k6	60	50	5	31.0	8	M10x22	83	180.5
					(132)	214	160	3.5	184	M16x22	38	k6	80	70	5	41.0	10	M12x28	168	265.0
					(160)	251	160	5.0	184	M16x28	42	k6	110	90	10	45.0	12	M16x36	215	308.5
–	88	–	–	-A	(71)	136	95	4.0	116	M8x14	16	k6	40	32	4	18.0	5	M5x12.5	61	149.5
					(80)	140	95	4.0	116	M8x14	19	k6	40	32	4	21.5	6	M6x16	61	184.5
					(90)	140	95	4.0	116	M8x14	24	k6	50	40	5	27.0	8	M8x19	71	194.5
					(100)	174	120	4.0	145	M10x17	28	k6	60	50	5	31.0	8	M10x22	83	210.5
					(112)	178	120	4.0	145	M10x17	28	k6	60	50	5	31.0	8	M10x22	83	210.0
					(132)	214	160	3.5	184	M16x22	38	k6	80	70	5	41.0	10	M12x28	168	293.5
108	–	128	128B	-A	(90)	140	95	4.0	116	M8x14	24	k6	50	40	5	27.0	8	M8x19	71	157.5
					(100)	174	120	4.0	145	M10x17	28	k6	60	50	5	31.0	8	M10x22	83	170.5
					(112)	178	120	4.0	145	M10x17	28	k6	60	50	5	31.0	8	M10x22	83	169.0
					(132)	214	160	3.5	184	M16x22	38	k6	80	70	5	41.0	10	M12x28	168	252.5
					(160)	251	160	5.0	184	M16x28	42	k6	110	90	10	45.0	12	M16x36	215	297.0
					(200)	296	195	5.0	230	M16x28	55	m6	110	90	10	59.0	16	M20x42	235	317.5
–	108	–	–	-A	(80)	140	95	4.0	116	M8x14	19	k6	40	32	4	21.5	6	M6x16	61	178.5
					(90)	140	95	4.0	116	M8x14	24	k6	50	40	5	27.0	8	M8x19	71	188.5
					(100)	174	120	4.0	145	M10x17	28	k6	60	50	5	31.0	8	M10x22	83	204.5
					(112)	178	120	4.0	145	M10x17	28	k6	60	50	5	31.0	8	M10x22	83	201.0
					(132)	214	160	3.5	184	M16x22	38	k6	80	70	5	41.0	10	M12x28	168	285.5
					(160)	251	160	5.0	184	M16x28	42	k6	110	90	10	45.0	12	M16x36	215	327.0
128	–	148	148B	-A	(100)	174	120	4.0	145	M10x17	28	k6	60	50	5	31.0	8	M10x22	83	161.0
					(112)	178	120	4.0	145	M10x17	28	k6	60	50	5	31.0	8	M10x22	83	158.5
					(132)	214	160	3.5	184	M16x22	38	k6	80	70	5	41.0	10	M12x28	168	242.0
					(160)	251	160	5.0	184	M16x28	42	k6	110	90	10	45.0	12	M16x36	215	280.5
					(200)	296	195	5.0	230	M16x28	55	m6	110	90	10	59.0	16	M20x42	235	304.0
					(225)	342	250	5.0	300	M16x22	60	m6	140	110	15	64.0	18	M20x42	259	361.5
–	128	–	–	-A	(90)	140	95	4.0	116	M8x14	24	k6	50	40	5	27.0	8	M8x19	71	181.5
					(100)	174	120	4.0	145	M10x17	28	k6	60	50	5	31.0	8	M10x22	83	197.5
					(112)	178	120	4.0	145	M10x17	28	k6	60	50	5	31.0	8	M10x22	83	193.0
					(132)	214	160	3.5	184	M16x22	38	k6	80	70	5	41.0	10	M12x28	168	276.5
					(160)	251	160	5.0	184	M16x28	42	k6	110	90	10	45.0	12	M16x36	215	318.0
					(200)	296	195	5.0	230	M16x28	55	m6	110	90	10	59.0	16	M20x42	235	341.5

④ DIN 332

⑤ Feather key / keyway DIN 6885

© Siemens AG 2011

Input units

Dimensions

Input unit A (continued)

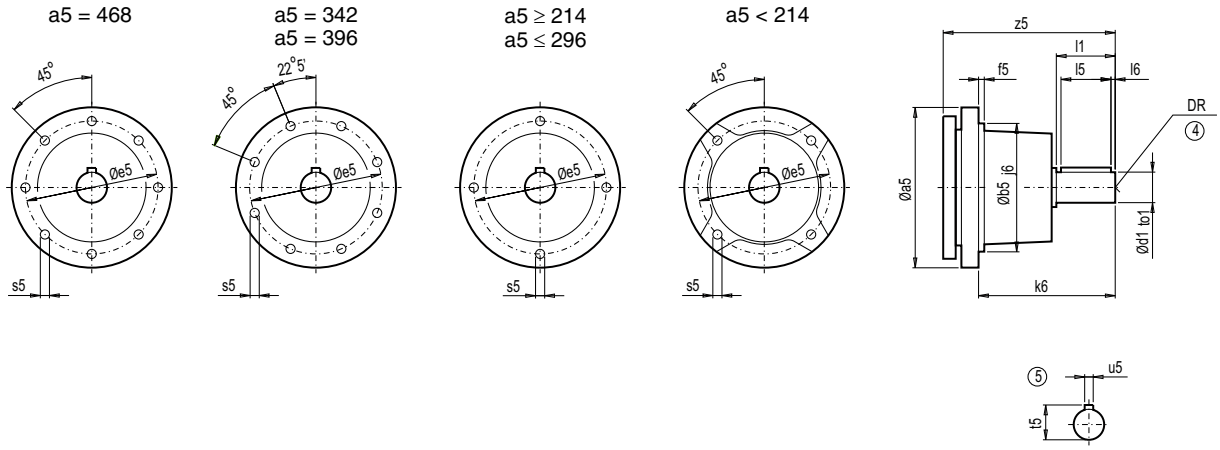

Gearbox E.Z.	D.	K./C.	FZ./ FD.			a5	b5	f5	e5	s5	d1	to1	l1	l5	l6	t5	u5	DR	k6	z5
148	–	168	168B	-A	(132)	214	160	3.5	184	M16x22	38	k6	80	70	5	41.0	10	M12x28	168.0	234.0
					(160)	251	160	5.0	184	M16x28	42	k6	110	90	10	45.0	12	M16x36	215.0	273.0
					(200)	296	195	5.0	230	M16x28	55	m6	110	90	10	59.0	16	M20x42	235.0	296.5
					(225)	342	250	5.0	300	M16x22	60	m6	140	110	15	64.0	18	M20x42	259.0	354.0
					(250)	396	250	5.0	300	M16x22	65	m6	140	110	15	69.0	18	M20x42	259.0	353.5
					(280)	485	250	5.0	300	M20x34	70	m6	140	110	15	74.5	20	M20x42	300.0	361.5
–	148	–	–	-A	(100)	174	120	4.0	145	M10x17	28	k6	60	50	5	31.0	8	M10x22	83.0	192.5
					(112)	178	120	4.0	145	M10x17	28	k6	60	50	5	31.0	8	M10x22	83.0	190.0
					(132)	214	160	3.5	184	M16x22	38	k6	80	70	5	41.0	10	M12x28	168.0	272.5
					(160)	251	160	5.0	184	M16x28	42	k6	110	90	10	45.0	12	M16x36	215.0	311.5
					(200)	296	195	5.0	230	M16x28	55	m6	110	90	10	59.0	16	M20x42	235.0	335.0
					(225)	342	250	5.0	300	M16x22	60	m6	140	110	15	64.0	18	M20x42	259.0	392.5
168	–	188	188B 208	-A	(132)	214	160	3.5	184	M16x22	38	k6	80	70	5	41.0	10	M12x28	168.0	220.0
					(160)	251	160	5.0	184	M16x28	42	k6	110	90	10	45.0	12	M16x36	215.0	259.0
					(200)	296	195	5.0	230	M16x28	55	m6	110	90	10	59.0	16	M20x42	235.0	282.5
					(225)	342	250	5.0	300	M16x22	60	m6	140	110	15	64.0	18	M20x42	259.0	340.0
					(250)	396	250	5.0	300	M16x22	65	m6	140	110	15	69.0	18	M20x42	259.0	339.5
					(280)	468	250	5.0	300	M20x34	70	m6	140	110	15	74.5	20	M20x42	288.5	347.5
–	168	–	–	-A	(132)	214	160	3.5	184	M16x22	38	k6	80	70	5	41.0	10	M12x28	168.0	261.0
					(160)	251	160	5.0	184	M16x28	42	k6	110	90	10	45.0	12	M16x36	215.0	300.0
					(200)	296	195	5.0	230	M16x28	55	m6	110	90	10	59.0	16	M20x42	235.0	323.5
					(225)	342	250	5.0	300	M16x22	60	m6	140	110	15	64.0	18	M20x42	259.0	381.0
188	–	–	–	A-	(160)	251	160	5.0	184	M16x28	42	k6	110	90	10	45.0	12	M16x36	215.0	259.0
					(200)	296	195	5.0	230	M16x28	55	m6	110	90	10	59.0	16	M20x42	235.0	282.5
					(225)	342	250	5.0	300	M16x22	60	m6	140	110	15	64.0	18	M20x42	259.0	340.0
					(250)	396	250	5.0	300	M16x22	65	m6	140	110	15	69.0	18	M20x42	259.0	339.5
					(280)	485	250	5.0	300	M20x34	70	m6	140	110	15	74.5	20	M20x42	286.0	347.5
–	188	–	–	-A	(132)	214	160	3.5	184	M16x22	38	k6	80	70	5	41.0	10	M12x28	168.0	220.0
					(160)	251	160	5.0	184	M16x28	42	k6	110	90	10	45.0	12	M16x36	215.0	259.0
					(200)	296	195	5.0	230	M16x28	55	m6	110	90	10	59.0	16	M20x42	235.0	282.5
					(225)	342	250	5.0	300	M16x22	60	m6	140	110	15	64.0	18	M20x42	259.0	340.0
					(250)	396	250	5.0	300	M16x22	65	m6	140	110	15	69.0	18	M20x42	259.0	339.5
					(280)	485	250	5.0	300	M20x34	70	m6	140	110	15	74.5	20	M20x42	286.0	347.5

④ DIN 332

⑤ Feather key / keyway DIN 6885

© Siemens AG 2011

Input unit P

Piggy back design position

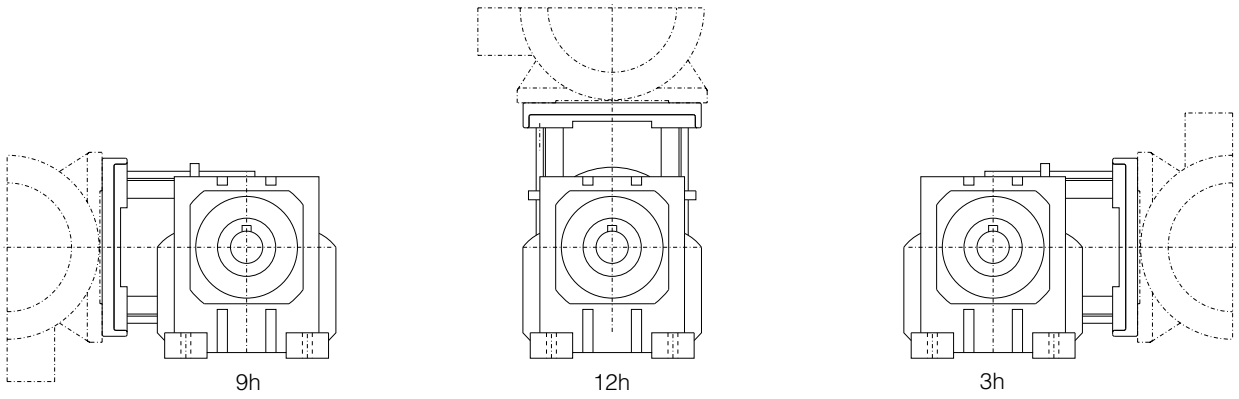

Fixing dimensions for surface-cooled AC motors, mounting position IM B3 to DIN 42673/1

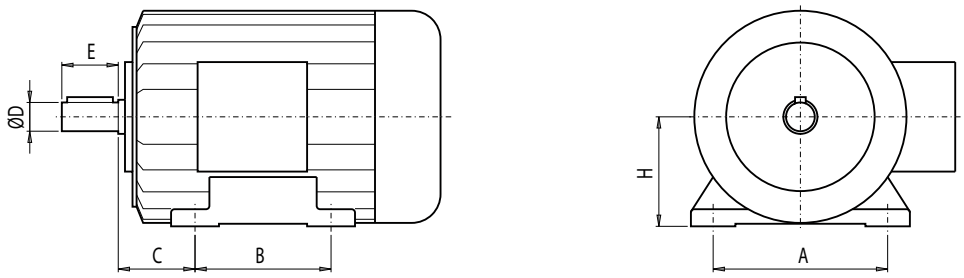

Size	D	E	C	H	B	A
80	19	40	50	80	100	125
90S	24	50	56	90	100	140
90L					125	
100L	28	60	63	100	140	160
112M	28	60	70	112	140	190
132S	38	80	89	132	140	216
132M					178	
160M	42	110	108	160	210	254
160L					254	
180M	48	110	121	180	241	279
180L					279	
200L	55	110	133	200	305	318
225S	55 60*)	110 140*)	149	225	286	356
225M					311	
250M	60 65*)	140	168	250	349	406
280S	65 75*)	140	190	280	368	457
280M					419	

*) 4-pole and multi-pole motors

© Siemens AG 2011

Dimensions

Input unit P (continued)

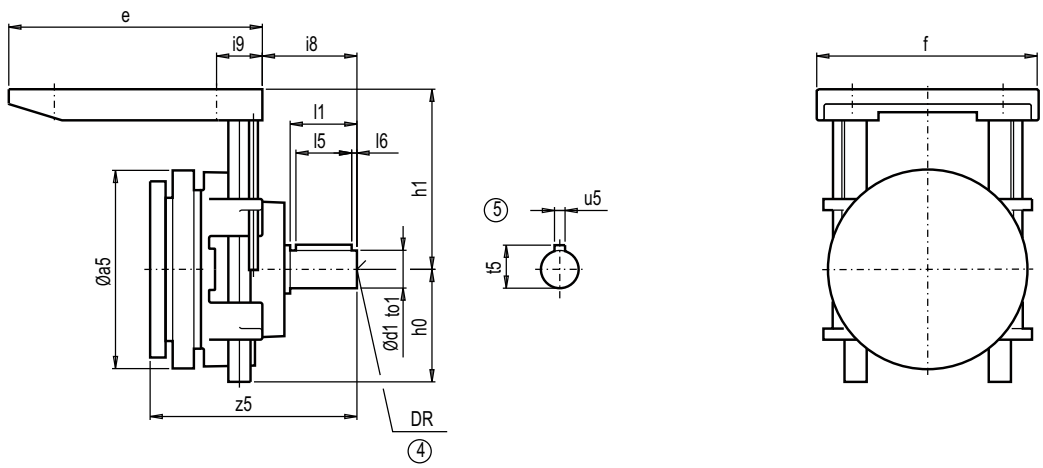

Gearbox							12h			3/9h												
			a5	e	f	i9	h0	h1	h1	h0	h1	h1	d1	to1	l1	l5	l6	t5	u5	DR	i8	z5
							Max.	Min.	Max.	Max.	Min.	Max.										
F.38B	-P	(80)	140	225	174	44	88	130	225	88	130	225	19	k6	40	32	4	21.5	6	M6x16	53	160.5
		(90)	140	225	174	53	88	130	225	88	130	225	24	k6	50	40	5	27.0	8	M8x19	63	170.5
		(100)	174	250	232	60	88	145	240	88	145	240	28	k6	60	50	5	31.0	8	M10x22	73	186.5
E./Z.38 K.38/48 C.38/48	-P	(80)	140	225	174	44	88	130	235	88	130	235	19	k6	40	32	4	21.5	6	M6x16	53	185.5
		(90)	140	225	174	53	88	130	235	88	130	235	24	k6	50	40	5	27.0	8	M8x19	63	195.5
		(100)	174	250	232	60	88	145	240	88	145	240	28	k6	60	50	5	31.0	8	M10x22	73	211.5
D.38	-P	(80)	140	225	174	44	88	130	235	88	130	235	19	k6	40	32	4	21.5	6	M6x16	53	200.5
		(90)	140	225	174	53	88	130	235	88	130	235	24	k6	50	40	5	27.0	8	M8x19	63	210.0
E./Z.48	-P	(80)	140	225	174	44	88	130	235	88	140	235	19	k6	40	32	4	21.5	6	M6x16	53	180.0
		(90)	140	225	174	53	88	130	235	88	140	235	24	k6	50	40	5	27.0	8	M8x19	63	190.0
		(100)	174	250	232	60	88	145	240	88	145	240	28	k6	60	50	5	31.0	8	M10x22	73	206.0
		(112)	178	250	232	67	88	145	240	88	145	240	28	k6	60	50	5	31.0	8	M10x22	73	207.0
D.48	-P	(80)	140	225	174	44	88	130	235	88	140	235	19	k6	40	32	4	21.5	6	M6x16	53	197.0
		(90)	140	225	174	53	88	130	235	88	140	235	24	k6	50	40	5	27.0	8	M8x19	63	207.0
		(100)	174	250	232	60	88	145	240	88	145	240	28	k6	60	50	5	31.0	8	M10x22	73	223.0
F.48B	-P	(80)	140	225	174	44	88	130	225	88	130	225	19	k6	40	32	4	21.5	6	M6x16	53	186.0
		(90)	140	225	174	53	88	130	225	88	130	225	24	k6	50	40	5	27.0	8	M8x19	63	196.0
		(100)	174	250	232	60	88	145	240	88	145	240	28	k6	60	50	5	31.0	8	M10x22	73	212.0
		(112)	178	250	232	67	88	145	240	88	145	240	28	k6	60	50	5	31.0	8	M10x22	73	181.0
E.68	-P	(80)	140	225	174	44	88	140	235	88	130	235	19	k6	40	32	4	21.5	6	M6x16	53	174.0
		(90)	140	225	174	53	88	140	235	88	130	235	24	k6	50	40	5	27.0	8	M8x19	63	184.0
		(100)	174	250	232	60	88	150	240	88	150	240	28	k6	60	50	5	31.0	8	M10x22	73	200.0
		(112)	178	250	232	67	88	150	240	88	150	240	28	k6	60	50	5	31.0	8	M10x22	73	199.0
		(132)	214	374	300	84	209	180	270	184	180	270	38	k6	80	70	5	41.0	10	M12x28	85	283.5
D.68	-P	(80)	140	225	174	44	88	140	235	88	160	235	19	k6	40	32	4	21.5	6	M6x16	53	192.5
		(90)	140	225	174	53	88	140	235	88	160	235	24	k6	50	40	5	27.0	8	M8x19	63	202.5
		(100)	174	250	232	60	88	145	240	88	160	240	28	k6	60	50	5	31.0	8	M10x22	73	218.5
Z.68	-P	(80)	140	225	174	44	88	140	235	88	160	235	19	k6	40	32	4	21.5	6	M6x16	53	174.0
		(90)	140	225	174	53	88	140	235	88	160	235	24	k6	50	40	5	27.0	8	M8x19	63	184.0
		(100)	174	250	232	60	88	145	240	88	160	240	28	k6	60	50	5	31.0	8	M10x22	73	200.0
		(112)	178	250	232	67	88	145	240	88	160	240	28	k6	60	50	5	31.0	8	M10x22	73	199.0
		(132)	214	374	300	84	139	180	230	139	180	230	38	k6	80	70	5	41.0	10	M12x28	85	283.5

④ DIN 332

⑤ Feather key / keyway DIN 6885

© Siemens AG 2011

Input unit P (continued)

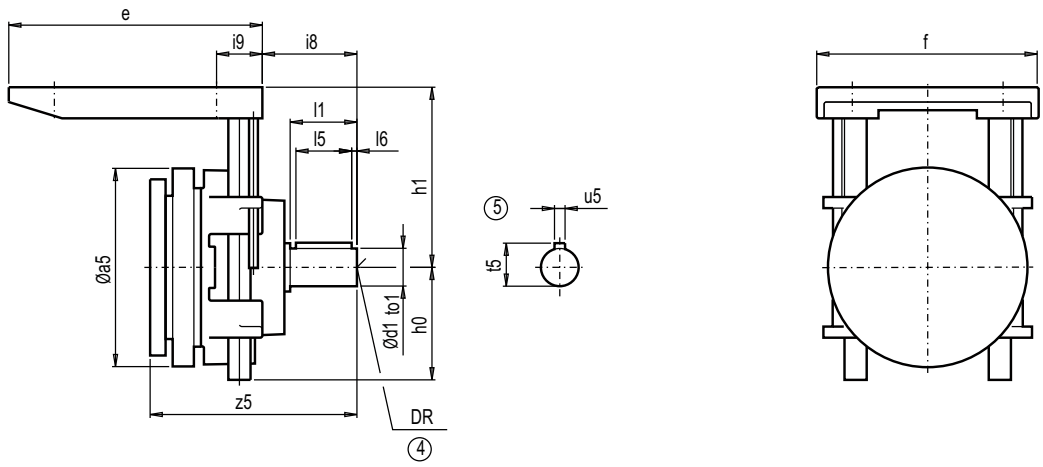

Gearbox							12h			3/9h												
			a5	e	f	i9	h0	h1	h1	h0	h1	h1	d1	to1	l1	l5	l6	t5	u5	DR	i8	z5
							Max.	Min.	Max.	Max.	Min.	Max.										
K.68	-P	(80)	140	225	174	44	88	140	235	88	160	235	19	k6	40	32	4	21.5	6	M6x16	53	180.5
		(90)	140	225	174	53	88	140	235	88	160	235	24	k6	50	40	5	27.0	8	M8x19	63	190.5
		(100)	174	250	232	60	88	145	240	88	160	240	28	k6	60	50	5	31.0	8	M10x22	73	206.5
		(112)	178	250	232	67	88	145	240	88	160	240	28	k6	60	50	5	31.0	8	M10x22	73	207.5
F.68B	-P	(80)	140	225	174	44	88	140	225	88	140	225	19	k6	40	32	4	21.5	6	M6x16	53	180.5
		(90)	140	225	174	53	88	140	225	88	140	225	24	k6	50	40	5	27.0	8	M8x19	63	190.5
		(100)	174	250	232	60	88	145	240	88	148	238	28	k6	60	50	5	31.0	8	M10x22	73	206.5
		(112)	178	250	232	67	88	145	240	88	148	238	28	k6	60	50	5	31.0	8	M10x22	73	207.5
C.68	-P	(80)	140	225	174	44	88	170	235	88	140	235	19	k6	40	32	4	21.5	6	M6x16	53	180.0
		(90)	140	225	174	53	88	170	235	88	140	235	24	k6	50	40	5	27.0	8	M8x19	63	190.0
		(100)	174	250	232	60	88	175	240	88	145	240	28	k6	60	50	5	31.0	8	M10x22	73	206.0
		(112)	178	250	232	67	88	175	240	88	145	240	28	k6	60	50	5	31.0	8	M10x22	73	207.0
E.88	-P	(90)	140	225	174	53	88	165	235	88	160	235	24	k6	50	40	5	27.0	8	M8x19	63	169.0
		(100)	174	250	232	60	88	160	240	88	160	240	28	k6	60	50	5	31.0	8	M10x22	73	182.5
		(112)	178	250	232	67	88	160	240	88	160	240	28	k6	60	50	5	31.0	8	M10x22	73	180.5
		(132)	214	374	300	84	139	200	270	139	180	270	38	k6	80	70	5	41.0	10	M12x29	85	265.0
		(160)	251	374	300	86	139	200	270	134	180	270	42	k6	110	90	10	45.0	12	M16x36	132	308.5
Z.88	-P	(90)	140	225	174	53	88	160	235	88	190	235	24	k6	50	40	5	27.0	8	M8x19	63	169.0
		(100)	174	250	232	60	88	160	240	88	190	240	28	k6	60	50	5	31.0	8	M10x22	73	182.5
		(112)	178	250	232	67	88	160	240	88	190	240	28	k6	60	50	5	31.0	8	M10x22	73	180.5
		(132)	214	374	300	84	154	180	230	124	220	270	38	k6	80	70	5	41.0	10	M12x29	85	265.0
		(160)	251	374	300	86	209	180	230	184	220	270	42	k6	110	90	10	45.0	12	M16x36	132	308.5
K.88	-P	(80)	140	225	174	44	88	160	235	88	190	235	19	k6	40	32	4	21.5	6	M6x16	53	174.5
		(90)	140	225	174	53	88	160	235	88	190	235	24	k6	50	40	5	27.0	8	M8x19	63	184.5
		(100)	174	250	232	60	88	160	240	88	190	240	28	k6	60	50	5	31.0	8	M10x22	73	200.5
		(112)	178	250	232	67	88	160	240	88	190	240	28	k6	60	50	5	31.0	8	M10x22	73	199.5
		(132)	214	374	300	84	139	180	230	139	180	230	38	k6	80	70	5	41.0	10	M12x28	85	284.0
F.88B	-P	(80)	140	225	174	44	88	163	228	88	168	228	19	k6	40	32	4	21.5	6	M6x16	53	174.5
		(90)	140	225	174	53	88	163	228	88	168	228	24	k6	50	40	5	27.0	8	M8x19	63	184.5
		(100)	174	250	232	60	88	163	238	88	160	240	28	k6	60	50	5	31.0	8	M10x22	73	200.5
		(112)	178	250	232	67	88	163	238	88	160	240	28	k6	60	50	5	31.0	8	M10x22	73	199.5
		(132)	214	374	300	84	137	178	228	127	188	228	38	k6	80	70	5	41.0	10	M12x28	85	284.0

④ DIN 332

⑤ Feather key / keyway DIN 6885

© Siemens AG 2011

Dimensions

Input unit P (continued)

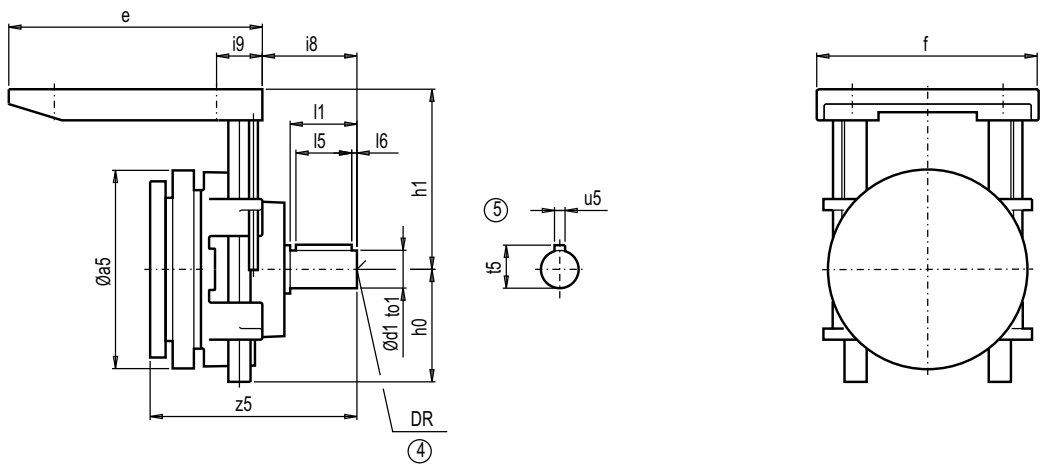

Gearbox			a5	e	f	i9	12h h0 Max.	12h h1 Min.	12h h1 Max.	3/9h h0 Max.	3/9h h1 Min.	3/9h h1 Max.	d1	to1	l1	l5	l6	t5	u5	DR	i8	z5
C.88	-P	(80)	140	225	174	44	88	200	235	88	150	235	19	k6	40	32	4	21.5	6	M6x16	53	174.0
		(90)	140	225	174	53	88	200	235	88	150	235	24	k6	50	40	5	27.0	8	M8x19	63	184.0
		(100)	174	250	232	60	88	200	240	88	145	240	28	k6	60	50	5	31.0	8	M10x22	73	200.0
		(112)	178	250	232	67	88	200	240	88	145	240	28	k6	60	50	5	31.0	8	M10x22	73	199.0
		(132)	214	374	300	84	139	220	270	134	220	270	38	k6	80	70	5	41.0	10	M12x28	85	283.5
D.88	-P	(80)	140	225	174	44	88	160	235	88	190	235	19	k6	40	32	4	21.5	6	M6x16	53	184.0
		(90)	140	225	174	53	88	160	235	88	190	235	24	k6	50	40	5	27.0	8	M8x19	63	194.0
		(100)	174	250	232	60	88	160	240	88	190	240	28	k6	60	50	5	31.0	8	M10x22	73	210.0
		(112)	178	250	232	67	88	160	240	88	190	240	28	k6	60	50	5	31.0	8	M10x22	73	209.5
		(132)	214	374	300	84	154	180	230	124	220	270	38	k6	80	70	5	41.0	10	M12x28	85	293.0
E.108	-P	(90)	140	225	174	53	88	195	300	88	195	300	24	k6	50	40	5	27.0	8	M8x19	63	157.5
		(100)	174	250	232	60	88	220	320	88	220	320	28	k6	60	50	5	31.0	8	M10x22	73	170.5
		(112)	178	250	232	67	88	220	320	88	220	320	28	k6	60	50	5	31.0	8	M10x22	73	169.0
		(132)	214	374	300	84	209	240	340	184	220	340	38	k6	80	70	5	41.0	10	M12x30	85	252.5
		(160)	251	374	300	86	184	240	340	159	220	340	42	k6	110	90	10	45.0	12	M16x36	132	297.0
		(180)	296	476	400	96	218	250	352	218	290	352	55	m6	110	90	10	59.0	16	M20x42	135	317.5
		(200)	296	476	400	108	218	250	352	218	290	352	55	m6	110	90	10	59.0	16	M20x42	135	317.5
Z.108	-P	(90)	140	225	174	53	88	190	300	88	230	300	24	k6	50	40	5	27.0	8	M8x19	63	157.5
		(100)	174	250	232	60	88	220	320	88	230	320	28	k6	60	50	5	31.0	8	M10x22	73	170.5
		(112)	178	250	232	67	88	220	320	88	230	320	28	k6	60	50	5	31.0	8	M10x22	73	169.0
		(132)	214	374	300	84	134	220	270	209	255	300	38	k6	80	70	5	41.0	10	M12x30	85	252.5
		(160)	251	374	300	86	134	220	270	209	255	305	42	k6	110	90	10	45.0	12	M16x36	132	297.0
		(180)	296	476	400	96	243	268	352	233	268	352	55	m6	110	90	10	59.0	16	M20x42	135	317.5
		(200)	296	476	400	108	243	268	352	233	268	352	55	m6	110	90	10	59.0	16	M20x42	135	317.5
K.108	-P	(80)	140	225	174	53	88	190	300	88	230	300	24	k6	50	40	5	27.0	8	M8x19	53	159.5
		(90)	140	225	174	53	88	190	300	88	230	300	24	k6	50	40	5	27.0	8	M8x19	63	169.5
		(100)	174	250	232	60	88	220	320	88	230	320	28	k6	60	50	5	31.0	8	M10x22	73	183.0
		(112)	178	250	232	67	88	220	320	88	230	320	28	k6	60	50	5	31.0	8	M10x22	73	181.0
		(132)	214	374	300	84	154	180	230	124	220	270	38	k6	80	70	5	41.0	10	M12x30	85	265.5
		(160)	251	374	300	86	209	180	230	184	220	270	42	k6	110	90	10	45.0	12	M16x36	132	309.0

④ DIN 332

⑤ Feather key / keyway DIN 6885

© Siemens AG 2011

Input unit P (continued)

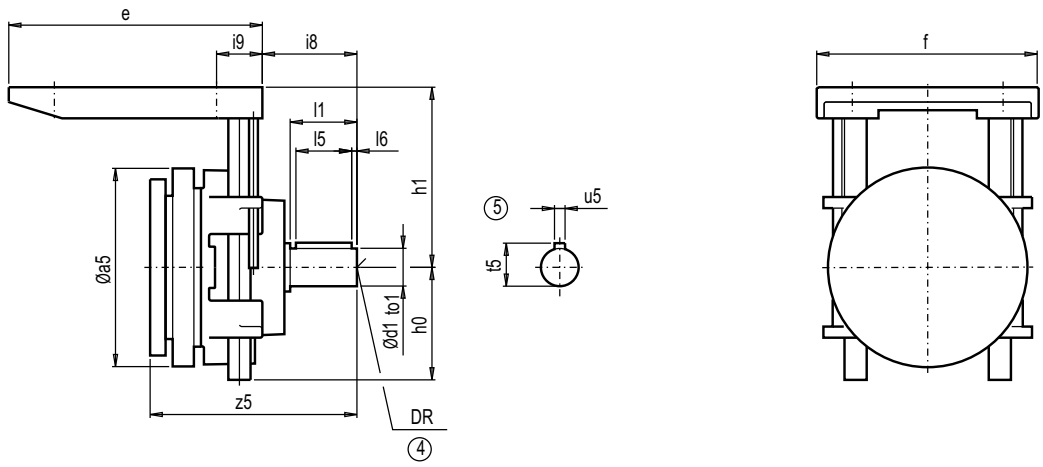

Gearbox			a5	e	f	i9	12h h0 Max.	12h h1 Min.	12h h1 Max.	3/9h h0 Max.	3/9h h1 Min.	3/9h h1 Max.	d1	to1	l1	l5	l6	t5	u5	DR	i8	z5
F.108B	-P	(80)	140	225	174	44	88	190	295	88	190	295	19	k6	40	32	4	21.5	6	M6x16	53	159.5
		(90)	140	225	174	53	88	190	295	88	190	295	24	k6	50	40	5	27.0	8	M8x19	63	169.5
		(100)	174	250	232	60	88	223	318	88	190	240	28	k6	60	50	5	31.0	8	M10x22	73	183.0
		(112)	178	250	232	67	88	223	318	88	190	240	28	k6	60	50	5	31.0	8	M10x22	73	181.0
		(132)	214	374	300	84	143	207	257	135	215	265	38	k6	80	70	5	41.0	10	M12x28	85	265.5
		(160)	251	374	300	86	143	207	257	135	215	265	42	k6	110	90	10	45.0	12	M16x36	132	309.0
D.108	-P	(80)	140	225	174	44	88	190	300	88	230	300	19	k6	40	32	4	21.5	6	M6x16	53	178.0
		(90)	140	225	174	53	88	190	300	88	230	300	24	k6	50	40	5	27.0	8	M8x19	63	188.0
		(100)	174	250	232	60	88	220	320	88	230	320	28	k6	60	50	5	31.0	8	M10x22	73	204.0
		(112)	178	250	232	67	88	220	320	88	230	320	28	k6	60	50	5	31.0	8	M10x22	73	200.5
		(132)	214	374	300	84	134	220	270	209	255	300	38	k6	80	70	5	41.0	10	M12x28	85	285.0
		(160)	251	374	300	86	134	220	270	209	255	305	42	k6	110	90	10	45.0	12	M16x36	132	326.5
E.128	-P	(100)	174	250	232	60	88	220	320	88	220	320	28	k6	60	50	5	31.0	8	M10x22	73	161.0
		(112)	178	250	232	67	88	220	320	88	220	320	28	k6	60	50	5	31.0	8	M10x22	73	158.5
		(132)	214	374	300	84	154	250	340	124	250	340	38	k6	80	70	5	41.0	10	M12x31	85	242.0
		(160)	251	374	300	86	209	250	340	184	250	340	42	k6	110	90	10	45.0	12	M16x36	132	280.5
		(180)	296	476	400	96	243	270	352	243	270	352	55	m6	110	90	10	59.0	16	M20x42	135	304.0
		(200)	296	476	400	108	243	270	352	243	270	352	55	m6	110	90	10	59.0	16	M20x42	135	304.0
		(225)	342	557	480	142	209	295	345	–	–	–	60	m6	140	110	15	64.0	18	M20x42	147	361.5
Z.128	-P	(100)	174	250	232	60	88	220	320	88	255	320	28	k6	60	50	5	31.0	8	M10x22	73	161.0
		(112)	178	250	232	67	88	220	320	88	255	320	28	k6	60	50	5	31.0	8	M10x22	73	158.5
		(132)	214	374	300	84	139	255	305	134	280	330	38	k6	80	70	5	41.0	10	M12x31	85	242.0
		(160)	251	374	300	86	139	255	305	134	280	330	42	k6	110	90	10	45.0	12	M16x36	132	280.5
		(180)	296	476	400	96	233	253	352	209	293	352	55	m6	110	90	10	59.0	16	M20x42	135	304.0
		(200)	296	476	400	108	233	253	352	209	293	352	55	m6	110	90	10	59.0	16	M20x42	135	304.0
		(225)	342	557	480	142	199	295	340	–	–	–	60	m6	140	110	15	64.0	18	M20x42	147	361.5
K.128	-P	(90)	140	225	174	53	88	230	300	88	255	300	24	k6	50	40	5	27.0	8	M8x19	63	158.0
		(100)	174	250	232	60	88	220	320	88	255	320	28	k6	60	50	5	31.0	8	M10x22	73	171.0
		(112)	178	250	232	67	88	220	320	88	255	320	28	k6	60	50	5	31.0	8	M10x22	73	169.5
		(132)	214	374	300	84	134	220	270	209	255	300	38	k6	80	70	5	41.0	10	M12x28	85	253.0
		(160)	251	374	300	86	134	220	270	209	255	305	42	k6	110	90	10	45.0	12	M16x36	132	297.5
		(180)	296	476	400	96	196	243	352	261	243	352	55	m6	110	90	10	59.0	16	M20x42	135	318.0
		(200)	296	476	400	108	196	243	352	261	243	352	55	m6	110	90	10	59.0	16	M20x42	135	318.0

④ DIN 332

⑤ Feather key / keyway DIN 6885

© Siemens AG 2011

Dimensions

Input unit P (continued)

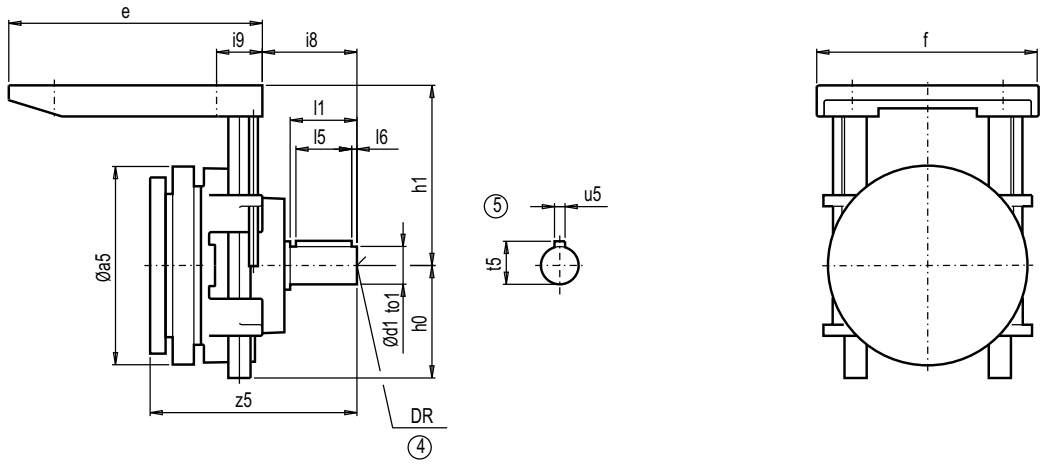

Gearbox			a5	e	f	i9	12h h0 Max.	12h h1 Min.	12h h1 Max.	3/9h h0 Max.	3/9h h1 Min.	3/9h h1 Max.	d1	to1	l1	l5	l6	t5	u5	DR	i8	z5
F.128B	-P	(90)	140	225	174	53	88	235	295	88	230	295	24	k6	50	40	5	27.0	8	M8x19	63	158.0
		(100)	174	250	232	60	88	250	320	88	235	320	28	k6	60	50	5	31.0	8	M10x22	73	171.0
		(112)	178	250	232	67	88	250	320	88	235	320	28	k6	60	50	5	31.0	8	M10x22	73	169.5
		(132)	214	374	300	84	195	265	365	175	285	365	38	k6	80	70	5	41.0	10	M12x28	85	253.0
		(160)	251	374	300	86	195	265	365	175	285	365	42	k6	110	90	10	45.0	12	M16x36	132	297.5
		(180)	296	476	400	96	217	268	358	217	268	358	55	m6	110	90	10	59.0	16	M20x42	135	318.0
		(200)	296	476	400	108	217	268	358	217	268	358	55	m6	110	90	10	59.0	16	M20x42	135	318.0
D.128	-P	(90)	140	225	174	53	88	230	300	88	255	300	24	k6	50	40	5	27.0	8	M8x19	63	181.0
		(100)	174	250	232	60	88	220	320	88	255	320	28	k6	60	50	5	31.0	8	M10x22	73	197.0
		(112)	178	250	232	67	88	220	320	88	255	320	28	k6	60	50	5	31.0	8	M10x22	73	192.5
		(132)	214	374	300	84	139	255	305	134	280	330	38	k6	80	70	5	41.0	10	M12x28	85	276.0
		(160)	251	374	300	86	139	255	305	134	280	330	42	k6	110	90	10	45.0	12	M16x36	132	317.5
		(180)	296	476	400	96	233	253	352	209	293	352	55	m6	110	90	10	59.0	16	M20x42	135	341.0
		(200)	296	476	400	108	233	253	352	209	293	352	55	m6	110	90	10	59.0	16	M20x42	135	341.0
E.148	-P	(132)	214	374	300	84	134	280	380	209	280	380	38	k6	80	70	5	41.0	10	M12x32	85	234.0
		(160)	251	374	300	86	134	280	380	209	280	380	42	k6	110	90	10	45.0	12	M16x36	132	273.0
		(180)	296	476	400	96	193	300	425	233	300	425	55	m6	110	90	10	59.0	16	M20x42	135	296.5
		(200)	296	476	400	108	193	300	425	233	300	425	55	m6	110	90	10	59.0	16	M20x42	135	296.5
		(225)	342	557	480	142	254	315	415	–	–	–	60	m6	140	110	15	64.0	18	M20x42	147	354.0
		(250)	396	557	480	161	254	305	350	–	–	–	65	m6	140	110	15	69.0	18	M20x42	147	353.5
		(280)	485	666	558	173	265	399	369	–	–	–	70	m6	140	110	15	74.5	20	M20x42	171	361.5
D.148	-P	(100)	174	250	232	60	88	245	320	88	280	320	28	k6	60	50	5	31.0	8	M10x22	73	192.0
		(112)	178	250	232	67	88	245	320	88	280	320	28	k6	60	50	5	31.0	8	M10x22	73	189.5
		(132)	214	374	300	84	184	280	330	159	305	355	38	k6	80	70	5	41.0	10	M12x28	85	272.0
		(160)	251	374	300	86	184	280	330	159	305	355	42	k6	110	90	10	45.0	12	M16x36	132	311.0
		(180)	296	476	400	96	248	318	407	248	318	407	55	m6	110	90	10	59.0	16	M20x42	135	334.5
		(200)	296	476	400	108	248	293	352	248	318	407	55	m6	110	90	10	59.0	16	M20x42	135	334.5
		(225)	342	557	480	142	199	305	350	–	–	–	60	m6	140	110	15	64.0	18	M20x42	147	392.0
Z.148	-P	(132)	214	374	300	84	184	280	330	159	305	355	38	k6	80	70	5	41.0	10	M12x28	85	234.0
		(160)	251	374	300	86	184	280	330	159	305	355	42	k6	110	90	10	45.0	12	M16x36	132	273.0
		(180)	296	476	400	96	248	318	407	248	318	407	55	m6	110	90	10	59.0	16	M20x42	135	296.5
		(200)	296	476	400	108	248	293	352	248	318	407	55	m6	110	90	10	59.0	16	M20x42	135	296.5
		(225)	342	557	480	142	199	305	350	–	–	–	60	m6	140	110	15	64.0	18	M20x42	147	354.0
		(250)	396	557	480	161	254	305	350	–	–	–	65	m6	140	110	15	69.0	18	M20x42	147	353.5
		(280)	485	666	558	173	265	399	429	–	–	–	70	m6	140	110	15	74.5	20	M20x42	171	361.5

④ DIN 332

⑤ Feather key / keyway DIN 6885

© Siemens AG 2011

Input unit P (continued)

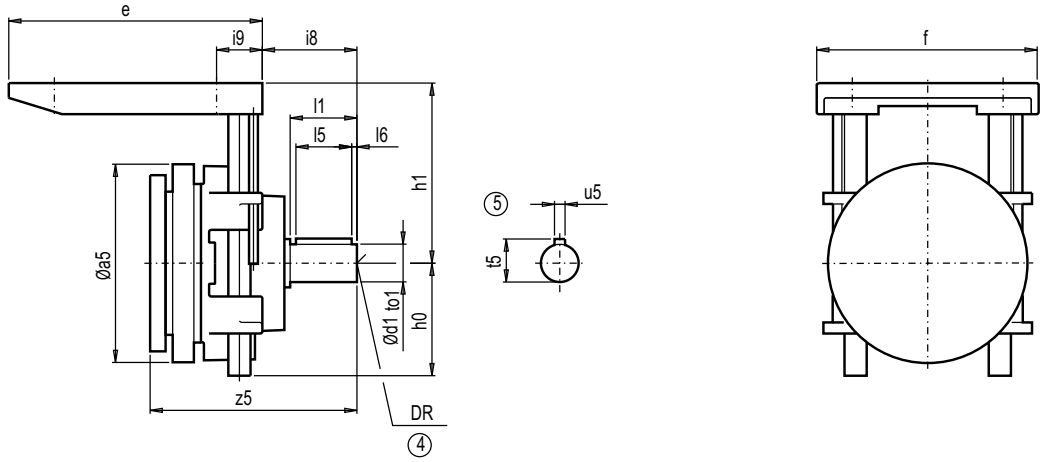

Gearbox			a5	e	f	i9	12h h0 Max.	12h h1 Min.	12h h1 Max.	3/9h h0 Max.	3/9h h1 Min.	3/9h h1 Max.	d1	to1	l1	l5	l6	t5	u5	DR	i8	z5
K.148	-P	(100)	174	250	232	60	88	245	320	88.0	280	320	28	k6	60	50	5	31.0	8	M10x22	73	161.5
		(112)	178	250	232	67	88	245	320	88.0	280	320	28	k6	60	50	5	31.0	8	M10x22	73	159.0
		(132)	214	374	300	84	139	255	305	134.0	280	330	38	k6	80	70	5	41.0	10	M12x28	85	242.5
		(160)	251	374	300	86	139	255	305	134.0	280	330	42	k6	110	90	10	45.0	12	M16x36	132	281.0
		(180)	296	476	400	96	193	293	352	233.0	253	352	55	m6	110	90	10	59.0	16	M20x42	135	304.5
		(200)	296	476	400	108	193	293	352	233.0	253	352	55	m6	110	90	10	59.0	16	M20x42	135	304.5
		(225)	342	557	480	142	199	345	390	–	–	–	60	m6	140	110	15	64.0	18	M20x42	147	362.0
F.148B	-P	(100)	174	250	232	60	88	255	320	88.0	255	320	28	k6	60	50	5	31.0	8	M10x22	73	161.5
		(112)	178	250	232	67	88	255	320	88.0	255	320	28	k6	60	50	5	31.0	8	M10x22	73	159.0
		(132)	214	374	300	84	170	290	365	175.0	285	365	38	k6	80	70	5	41.0	10	M12x28	85	242.5
		(160)	251	374	300	86	170	290	365	175.0	285	365	42	k6	110	90	10	45.0	12	M16x36	132	281.0
		(180)	296	476	400	96	192	293	358	198.0	287	357	55	m6	110	90	10	59.0	16	M20x42	135	304.5
		(200)	296	476	400	108	192	293	358	198.0	287	357	55	m6	110	90	10	59.0	16	M20x42	135	304.5
		(225)	342	557	480	142	244	323	353	187.5	393	423	60	m6	140	110	15	64.0	18	M20x42	147	362.0
D.168	-P	(132)	214	374	300	84	154	310	360	124.0	340	390	38	k6	80	70	5	41.0	10	M12x28	85	260.5
		(160)	251	374	300	86	154	310	360	124.0	340	390	42	k6	110	90	10	45.0	12	M16x36	132	299.5
		(180)	296	476	400	96	239	337	407	233.0	343	407	55	m6	110	90	10	59.0	16	M20x42	135	323.0
		(200)	296	476	400	108	239	337	407	233.0	343	407	55	m6	110	90	10	59.0	16	M20x42	135	323.0
		(225)	342	557	480	142	199	345	390	–	–	–	60	m6	140	110	15	64.0	18	M20x42	147	380.5
Z.168	-P	(132)	214	374	300	84	154	310	360	124.0	340	390	38	k6	80	70	5	41.0	10	M12x28	85	219.5
		(160)	251	374	300	86	154	310	360	124.0	340	390	42	k6	110	90	10	45.0	12	M16x36	132	258.5
		(180)	296	476	400	96	239	337	407	233.0	343	407	55	m6	110	90	10	59.0	16	M20x42	135	282.0
		(200)	296	476	400	108	239	337	407	233.0	343	407	55	m6	110	90	10	59.0	16	M20x42	135	282.0
		(225)	342	557	480	142	199	345	390	–	–	–	60	m6	140	110	15	64.0	18	M20x42	147	339.5
		(250)	396	557	480	161	194	345	390	–	–	–	65	m6	140	110	15	69.0	18	M20x42	147	339.0
		(280)	468	666	558	173	200	402	432	–	–	–	70	m6	140	110	15	74.5	20	M20x42	171	347.5
K.168	-P	(132)	214	374	300	84	184	280	330	159.0	305	355	38	k6	80	70	5	41.0	10	M12x28	85	234.5
		(160)	251	374	300	86	184	280	330	159.0	305	355	42	k6	110	90	10	45.0	12	M16x36	132	273.5
		(180)	296	476	400	96	239	337	407	209.0	277	352	55	m6	110	90	10	59.0	16	M20x42	135	297.0
		(200)	296	476	400	108	239	337	407	209.0	277	352	55	m6	110	90	10	59.0	16	M20x42	135	297.0
		(225)	342	557	480	142	199	390	435	–	–	–	60	m6	140	110	15	64.0	18	M20x42	147	354.5
		(250)	396	557	480	161	199	390	435	–	–	–	65	m6	140	110	15	69.0	18	M20x42	147	354.0
		(280)	485	666	558	173	180	472	502	–	–	–	70	m6	140	110	15	74.5	20	M20x42	171	361.5

④ DIN 332

⑤ Feather key / keyway DIN 6885

© Siemens AG 2011

Dimensions

Input unit P (continued)

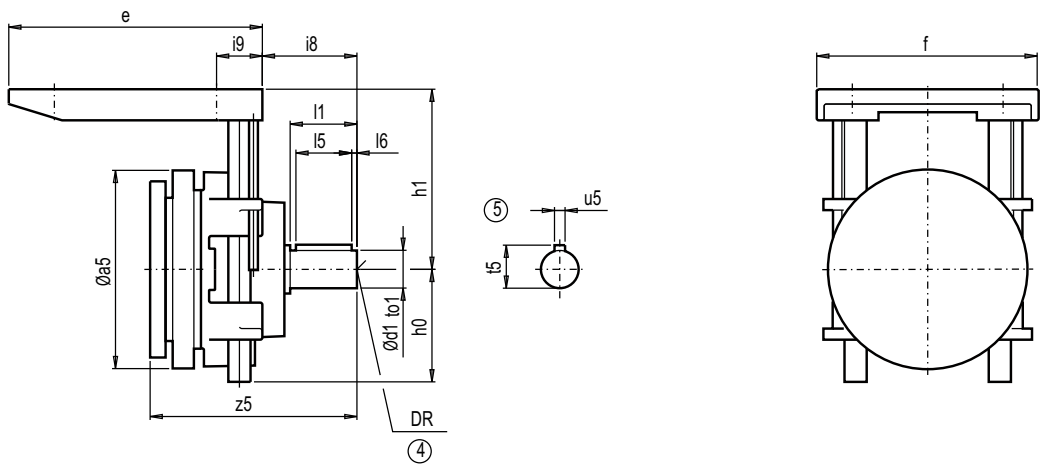

Gearbox			a5	e	f	i9	12h h0 Max.	12h h1 Min.	12h h1 Max.	3/9h h0 Max.	3/9h h1 Min.	3/9h h1 Max.	d1	to1	l1	l5	l6	t5	u5	DR	i8	z5
F.168B	-P	(132)	214	374	300	84	152.0	308	368	155.0	305	365	38	k6	80	70	5	41.0	10	M12x28	85	234.5
		(160)	251	374	300	86	152.0	308	368	155.0	305	365	42	k6	110	90	10	45.0	12	M16x36	132	273.5
		(180)	296	476	400	96	258.0	318	432	262.0	313	428	55	m6	110	90	10	59.0	16	M20x42	135	297.0
		(200)	296	476	400	108	258.0	318	432	262.0	313	428	55	m6	110	90	10	59.0	16	M20x42	135	297.0
		(225)	342	557	480	142	218.5	393	423	218.5	393	423	60	m6	140	110	15	64.0	18	M20x42	147	354.5
		(250)	396	557	480	161	255.5	356	386	187.5	424	454	65	m6	140	110	15	69.0	18	M20x42	147	354.0
		(280)	485	666	558	173	253.0	399	429	252.0	400	430	70	m6	140	110	15	74.5	20	M20x42	171	361.5
D.188	-P	(132)	214	374	300	84	120.0	340	380	125.0	372	412	38	k6	80	70	5	41.0	10	M12x28	85	219.5
		(160)	251	374	300	86	120.0	340	380	125.0	372	412	42	k6	110	90	10	45.0	12	M16x36	132	258.5
		(180)	296	476	400	96	207.0	368	433	193.0	382	432	55	m6	110	90	10	59.0	16	M20x42	135	282.0
		(200)	296	476	400	108	207.0	368	433	193.0	382	432	55	m6	110	90	10	59.0	16	M20x42	135	282.0
		(225)	342	557	480	142	193.5	393	423	–	–	–	60	m6	140	110	15	64.0	18	M20x42	147	339.5
		(250)	396	557	480	161	193.5	418	448	–	–	–	65	m6	140	110	15	69.0	18	M20x42	147	339.0
		(280)	485	666	558	173	201.0	399	424	–	–	–	70	m6	140	110	15	74.5	20	M20x42	171	347.0
Z.188	-P	(160)	251	374	300	86	120.0	340	380	125.0	372	412	42	k6	110	90	10	45.0	12	M16x36	132	259.0
		(180)	296	476	400	96	207.0	368	433	193.0	382	432	55	m6	110	90	10	59.0	16	M20x42	135	282.5
		(200)	296	476	400	108	207.0	368	433	193.0	382	432	55	m6	110	90	10	59.0	16	M20x42	135	282.5
		(225)	342	557	480	142	193.5	393	423	–	–	–	60	m6	140	110	15	64.0	18	M20x42	147	340.0
		(250)	396	557	480	161	193.5	418	448	–	–	–	65	m6	140	110	15	69.0	18	M20x42	147	339.5
		(280)	468	666	558	173	201.0	399	424	–	–	–	70	m6	140	110	15	74.5	20	M20x42	171	347.5
K.188	-P	(132)	214	374	300	84	140.0	360	410	160.0	300	370	38	k6	80	70	5	41.0	10	M12x28	85	220.0
		(160)	251	374	300	86	140.0	360	410	160.0	300	370	42	k6	110	90	10	45.0	12	M16x36	132	259.0
		(180)	296	476	400	96	197.0	378	433	183.0	302	357	55	m6	110	90	10	59.0	16	M20x42	135	282.5
		(200)	296	476	400	108	197.0	378	433	183.0	302	357	55	m6	110	90	10	59.0	16	M20x42	135	282.5
		(225)	342	557	480	142	223.5	463	493	–	–	–	60	m6	140	110	15	64.0	18	M20x42	147	340.0
		(250)	396	557	480	161	193.5	493	523	–	–	–	65	m6	140	110	15	69.0	18	M20x42	147	339.5
		(280)	485	666	558	173	180.0	472	502	–	–	–	70	m6	140	110	15	74.5	20	M20x42	171	347.0
F.188B	-P	(132)	214	374	300	84	125.0	335	375	125.0	335	375	38	k6	80	70	5	41.0	10	M12x28	85	220.0
		(160)	251	374	300	86	125.0	335	375	125.0	335	375	42	k6	110	90	10	45.0	12	M16x36	132	259.0
		(180)	296	476	400	96	228.0	347	432	232.0	343	428	55	m6	110	90	10	59.0	16	M20x42	135	282.5
		(200)	296	476	400	108	228.0	347	432	232.0	343	428	55	m6	110	90	10	59.0	16	M20x42	135	282.5
		(225)	342	557	480	142	196.5	390	420	223.5	463	493	60	m6	140	110	15	64.0	18	M20x42	147	340.0
		(250)	396	557	480	161	192.5	419	449	187.5	424	454	65	m6	140	110	15	69.0	18	M20x42	147	339.5
		(280)	468	666	558	173	186.5	463	493	181.0	471	501	70	m6	140	110	15	74.5	20	M20x42	171	347.5

④ DIN 332

⑤ Feather key / keyway DIN 6885

© Siemens AG 2011

Protective belt cover for piggy back design PS

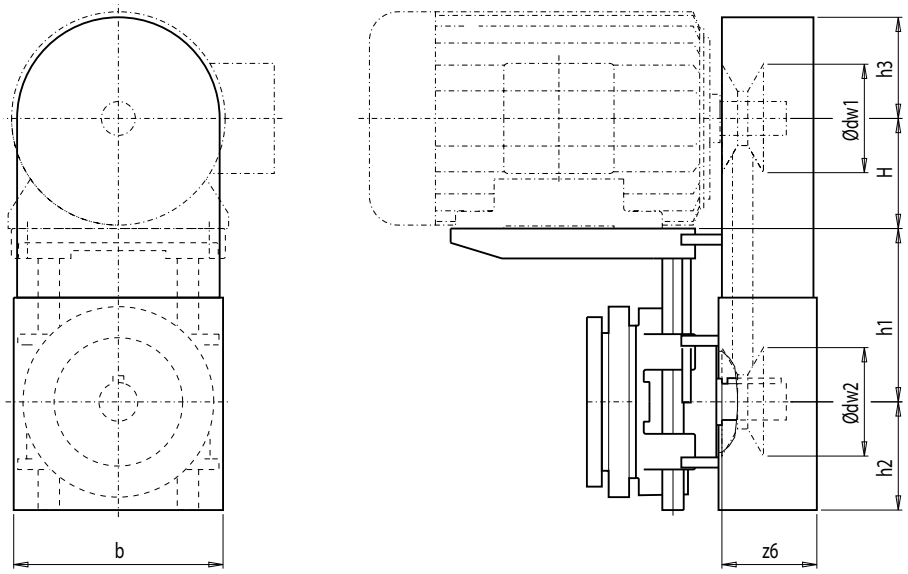

Gearbox					12h		3/9h						
			dw1	dw2	h1	h1	h1	h1	H	h2	h3	z6	b
			Max.	Max.	Min.	Max.	Min.	Max.					
B.38 F.38B/48B	-PS	(80)	150	140	130	225	130	225	80	88	97	71	190
		(90)	150	140	130	225	130	225	90	88	97	71	190
		(100)	210	140	145	240	145	240	100	88	132	83	248
E./Z.38 C.38/48 K.38/48	-PS	(80)	150	140	130	235	130	235	80	88	97	71	190
		(90)	150	140	130	235	130	235	90	88	97	71	190
		(100)	210	140	145	240	145	240	100	88	132	83	248
D.38	-PS	(80)	150	140	130	235	130	235	80	88	97	71	190
		(90)	150	140	130	235	130	235	90	88	97	71	190
E./Z.48	-PS	(80)	150	140	130	235	140	235	80	88	97	71	190
		(90)	150	140	130	235	140	235	90	88	97	71	190
		(100)	210	140	145	240	145	240	100	88	132	83	248
		(112)	210	140	145	240	145	240	112	88	120	83	248
D.48	-PS	(80)	150	140	130	235	140	235	80	88	97	71	190
		(90)	150	140	130	235	140	235	90	88	97	71	190
		100	210	140	145	240	145	240	100	88	132	83	248
E./Z.68 C.68 K.68	-PS	(80)	150	140	140	235	160	235	80	88	97	71	190
		(90)	150	140	140	235	160	235	90	88	97	71	190
		(100)	210	140	145	240	160	240	100	88	132	83	248
		(112)	210	140	145	240	160	240	112	88	120	83	248
		(132)	250	220	180	230	180	230	132	135	140	147	288
F.68B	-PS	(80)	150	140	140	225	140	225	80	88	97	71	190
		(90)	150	140	140	225	140	225	90	88	97	71	190
		(100)	210	140	145	240	148	238	100	88	132	83	248
		(112)	210	140	145	240	148	238	112	88	120	83	248
D.68	-PS	(80)	150	140	140	235	160	235	80	88	97	71	190
		(90)	150	140	140	235	160	235	90	88	97	71	190
		(100)	210	140	145	240	160	240	100	88	132	83	248
E./Z.88	-PS	(90)	150	140	160	235	190	235	90	88	97	71	190
		(100)	210	140	160	240	190	240	100	88	132	83	248
		(112)	210	140	160	240	190	240	112	88	120	83	248
		(132)	250	220	180	230	220	270	132	135	140	147	288
		(160)	250	220	180	230	220	270	160	135	140	135	288

© Siemens AG 2011

Dimensions

Protective belt cover for piggy back design PS (continued)

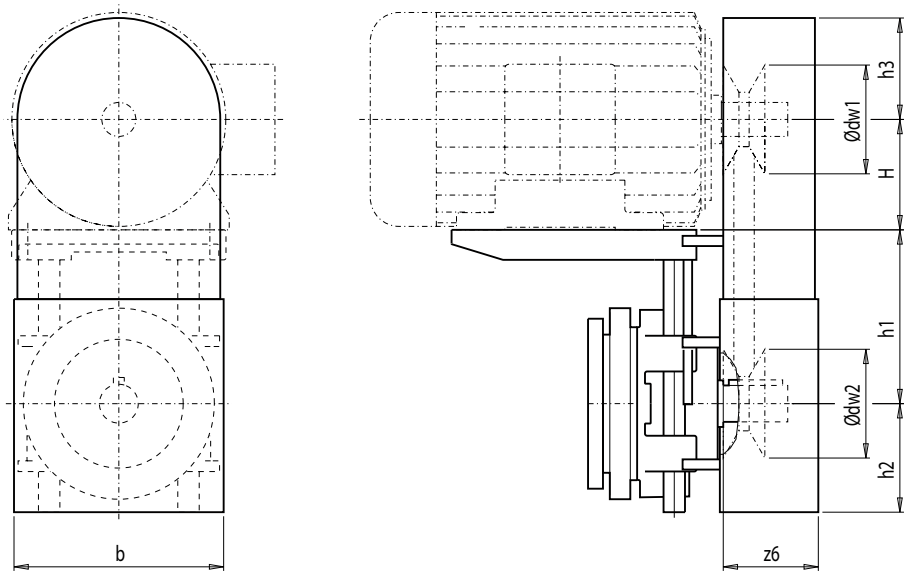

Gearbox			dw1	dw2	12h h1	h1	3/9h h1	h1	H	h2	h3	z6	b
			Max.	Max.	Min.	Max.	Min.	Max.					
F.88B	-PS	(80)	150	140	163	228	168	228	80	88	97	71	190
		(90)	150	140	163	228	168	228	90	88	97	71	190
		(100)	210	140	163	238	160	240	100	88	132	83	248
		(112)	210	140	163	238	160	240	112	88	120	83	248
		(132)	250	220	178	228	188	228	132	135	140	147	288
C.88	-PS	(80)	150	140	160	235	190	235	80	88	97	71	190
		(90)	150	140	160	235	190	235	90	88	97	71	190
		(100)	210	140	160	240	190	240	100	88	132	83	248
		(112)	210	140	160	240	190	240	112	88	120	83	248
		(132)	250	220	180	230	180	230	132	135	140	147	288
K.88	-PS	(80)	150	140	160	235	190	235	80	88	97	71	190
		(90)	150	140	160	235	190	235	90	88	97	71	190
		(100)	210	140	160	240	190	240	100	88	132	83	248
		(112)	210	140	160	240	190	240	112	88	120	83	248
		(132)	250	220	180	230	180	230	132	135	140	147	288
D.88	-PS	(80)	150	140	160	235	190	235	80	88	97	71	190
		(90)	150	140	160	235	190	235	90	88	97	71	190
		(100)	210	140	160	240	190	240	100	88	132	83	248
		(112)	210	140	160	240	190	240	112	88	120	83	248
		(132)	250	220	180	230	220	270	132	135	140	147	288
E./Z.108 K.108	-PS	(80)	150	140	190	300	230	300	80	88	97	71	190
		(90)	150	140	190	300	230	300	90	88	97	71	190
		(100)	210	140	220	320	230	320	100	88	132	83	248
		(112)	210	140	220	320	230	320	112	88	120	83	248
		(132)	250	220	220	270	255	305	132	135	140	147	288
		(160)	250	220	220	270	255	305	160	135	140	135	288
		(180)	330	310	268	352	268	352	180	205	182	134	372
		(200)	330	310	268	352	268	352	200	205	182	134	372

© Siemens AG 2011

Protective belt cover for piggy back design PS (continued)

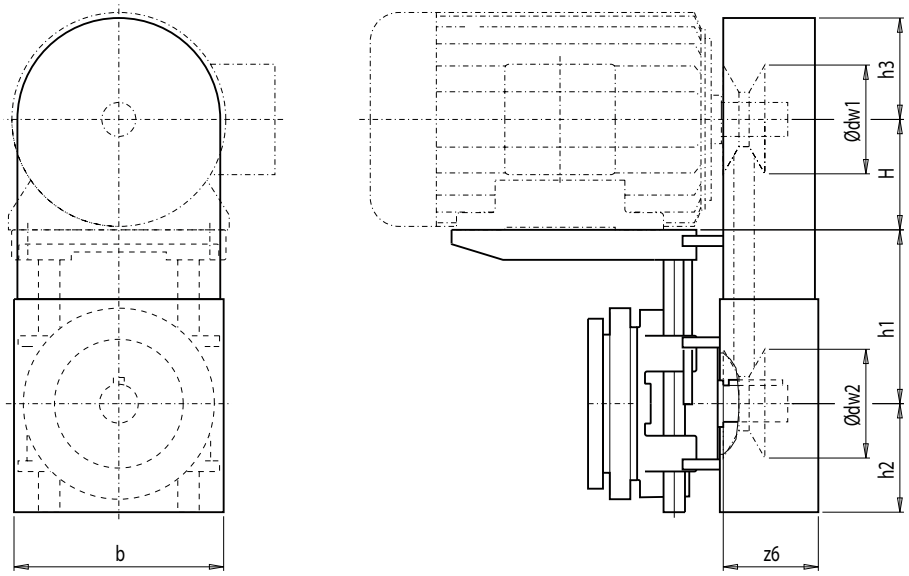

Gearbox			dw1	dw2	12h h1		3/9h h1		H	h2	h3	z6	b
			Max.	Max.	Min.	Max.	Min.	Max.					
F.108B	-PS	(80)	150	140	190	295	190	295	80	88	97.0	71	190
		(90)	150	140	190	295	190	295	90	88	97.0	71	190
		(100)	210	140	223	318	190	240	100	88	132.0	83	248
		(112)	210	140	223	318	190	240	112	88	120.0	83	248
		(132)	250	220	207	257	215	265	132	135	140.0	147	288
		(160)	250	220	207	257	215	265	160	135	140.0	135	288
D.108	-PS	(80)	150	140	190	300	23	300	80	88	97.0	71	190
		(90)	150	140	190	300	230	300	90	88	97.0	71	190
		(100)	210	140	220	320	230	320	100	88	132.0	83	248
		(112)	210	140	220	320	230	320	112	88	120.0	83	248
		(132)	250	220	220	270	255	305	132	135	140.0	147	288
		(160)	250	220	220	270	255	305	160	135	140.0	135	288
E./Z.128	-PS	(100)	210	140	220	320	255	320	100	88	132.0	83	248
		(112)	210	140	220	320	255	320	112	88	120.0	83	248
		(132)	250	220	255	305	280	330	132	135	140.0	147	288
		(160)	250	220	255	305	280	330	160	135	140.0	135	288
		(180)	330	310	253	352	293	352	180	205	182.0	134	372
		(200)	330	310	253	352	293	352	200	205	182.0	134	372
		(225)	390	390	295	340	–	–	225	215	232.5	174	428
F.128B	-PS	(90)	150	140	235	295	230	295	90	88	97.0	71	190
		(100)	210	140	250	320	235	320	100	88	132.0	83	248
		(112)	210	140	250	320	235	320	112	88	120.0	83	248
		(132)	250	220	265	365	285	365	132	135	140.0	147	288
		(160)	250	220	265	365	285	330	160	135	140.0	135	288
		(180)	330	310	268	358	268	358	180	205	182.0	134	372
		(200)	330	310	268	358	268	358	200	205	182.0	134	372
K.128	-PS	(90)	150	140	230	300	255	300	90	88	97.0	71	190
		(100)	210	140	220	320	255	320	100	88	132.0	83	248
		(112)	210	140	220	320	255	320	112	88	120.0	83	248
		(132)	250	220	220	270	255	305	132	135	140.0	147	288
		(160)	250	220	220	270	255	305	160	135	140.0	135	288
		(180)	330	310	243	352	243	352	180	205	182.0	134	372
		(200)	330	310	243	352	243	352	200	205	182.0	134	372

© Siemens AG 2011

Dimensions

Protective belt cover for piggy back design PS (continued)

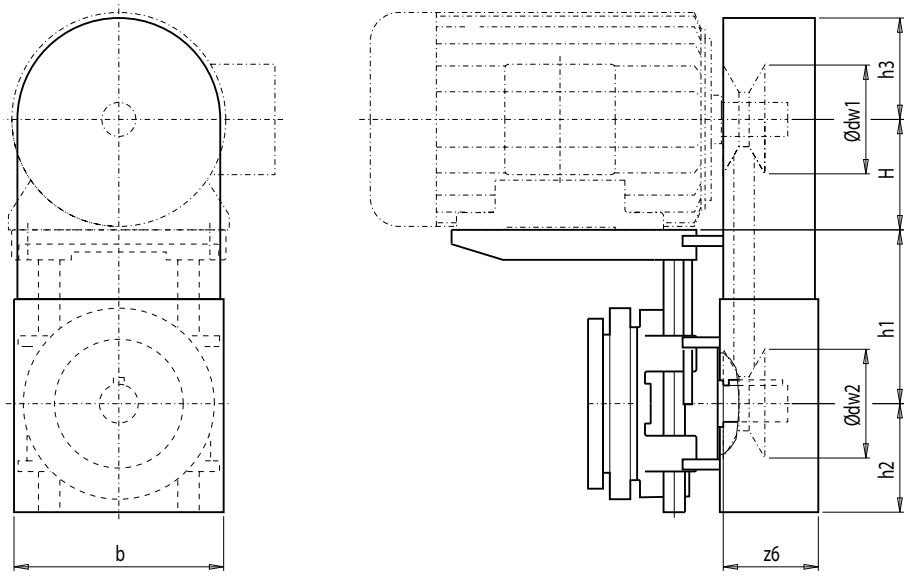

Gearbox			dw1	dw2	12h h1	h1	3/9h h1	h1	H	h2	h3	z6	b
			Max.	Max.	Min.	Max.	Min.	Max.					
D.128	-PS	(90)	150	140	230	300	255	300	90	88	97.0	71	190
		(100)	210	140	220	320	255	320	100	88	132.0	83	248
		(112)	210	140	220	320	255	320	112	88	120.0	83	248
		(132)	250	220	255	305	280	330	132	135	140.0	147	288
		(160)	250	220	255	305	280	330	160	135	140.0	135	288
		(180)	330	310	253	352	293	352	180	205	182.0	134	372
		(200)	330	310	253	352	293	352	200	205	182.0	134	372
E./Z.148	-PS	(132)	250	220	280	330	305	355	132	135	140.0	147	288
		(160)	250	220	280	330	305	355	160	135	140.0	135	288
		(180)	330	310	293	352	318	407	180	205	182.0	134	372
		(200)	330	310	293	352	318	407	200	205	182.0	134	372
		(225)	390	390	305	350	–	–	225	215	232.5	174	428
		(250)	390	350	305	350	–	–	250	215	210.0	174	428
		(280)	520	410	339	369	–	–	280	240	274.0	162	556
F.148B	-PS	(100)	210	140	255	320	255	320	100	88	132.0	83	248
		(112)	210	140	255	320	255	320	112	88	120.0	83	248
		(132)	250	220	290	365	285	365	132	135	140.0	147	288
		(160)	250	220	290	365	285	365	160	135	140.0	135	288
		(180)	330	310	293	358	287	357	180	205	182.0	134	372
		(200)	330	310	293	358	287	357	200	205	182.0	134	372
		(225)	390	390	323	353	393	423	225	215	232.5	174	428
K.148	-PS	(100)	210	140	245	320	280	320	100	88	132.0	83	248
		(112)	210	140	245	320	280	320	112	88	120.0	83	248
		(132)	250	220	255	305	280	330	132	135	140.0	147	288
		(160)	250	220	255	305	280	330	160	135	140.0	135	288
		(180)	330	310	293	352	253	352	180	205	182.0	134	372
		(200)	330	310	293	352	253	352	200	205	182.0	134	372
		(225)	390	390	345	390	–	–	225	215	232.5	174	428

© Siemens AG 2011

Protective belt cover for piggy back design PS (continued)

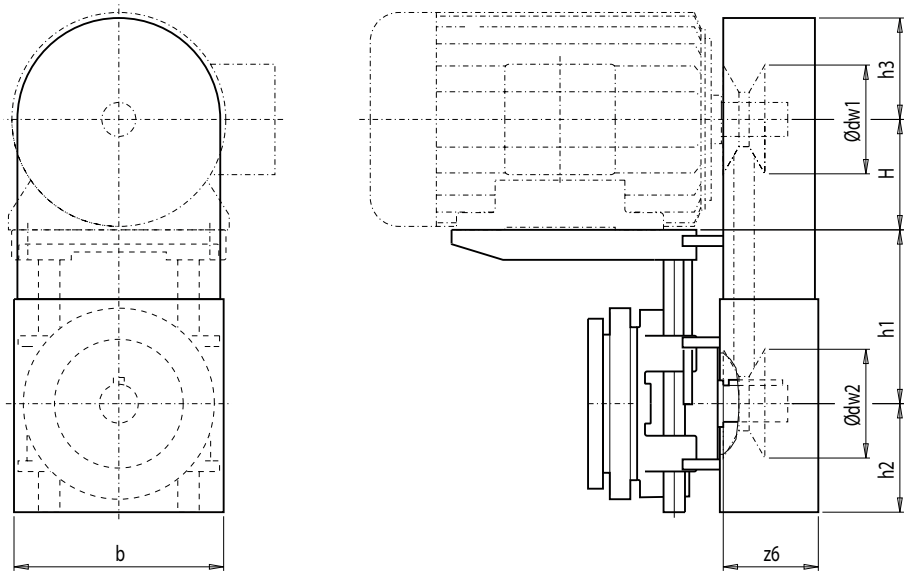

Gearbox			dw1	dw2	12h h1	h1	3/9h h1	h1	H	h2	h3	z6	b
			Max.	Max.	Min.	Max.	Min.	Max.					
D.148	-PS	(100)	210	140	245	320	280	320	100	88	132.0	83	248
		(112)	210	140	245	320	280	320	112	88	120.0	83	248
		(132)	250	220	280	330	305	355	132	135	140.0	147	288
		(160)	250	220	280	330	305	355	160	135	140.0	135	288
		(180)	330	310	293	352	318	407	180	205	182.0	134	372
		(200)	330	310	293	352	318	407	200	205	182.0	134	372
		(225)	390	390	305	350	–	–	225	215	232.5	174	428
Z.168	-PS	(132)	250	220	310	360	340	390	132	135	140.0	147	288
		(160)	250	220	310	360	340	390	160	135	140.0	135	288
		(180)	330	310	337	407	343	407	180	205	182.0	134	372
		(200)	330	310	337	407	343	407	200	205	182.0	134	372
		(225)	390	390	345	390	–	–	225	215	232.5	174	428
		(250)	390	350	345	390	–	–	250	215	210.0	174	428
		(280)	520	410	402	432	–	–	280	240	274.0	162	556
F.168B	-PS	(132)	250	220	308	368	305	365	132	135	140.0	147	288
		(160)	250	220	308	368	305	365	160	135	140.0	135	288
		(180)	330	310	318	432	313	428	180	205	182.0	134	372
		(200)	330	310	318	432	313	428	200	205	182.0	134	372
		(225)	390	390	393	423	393	423	225	215	232.5	174	428
		(250)	390	350	356	386	424	454	250	215	210.0	174	428
		(280)	520	410	399	429	400	430	280	240	274.0	162	556
K.168	-PS	(132)	250	220	280	330	305	355	132	135	140.0	147	288
		(160)	250	220	280	330	305	355	160	135	140.0	135	288
		(180)	330	310	337	407	277	352	180	205	182.0	134	372
		(200)	330	310	337	407	277	352	200	205	182.0	134	372
		(225)	390	390	390	435	–	–	225	215	232.5	174	428
		(250)	390	350	390	435	–	–	250	215	210.0	174	428
		(280)	520	410	472	502	–	–	280	240	274.0	162	556
D.168	-PS	(132)	250	220	310	360	340	390	132	135	140.0	147	288
		(160)	250	220	310	360	340	390	160	135	140.0	135	288
		(180)	330	310	337	407	343	407	180	205	182.0	134	372
		(200)	330	310	337	407	343	407	200	205	182.0	134	372
		(225)	390	390	345	390	–	–	225	215	232.5	174	428

© Siemens AG 2011

Dimensions

Protective belt cover for piggy back design PS (continued)

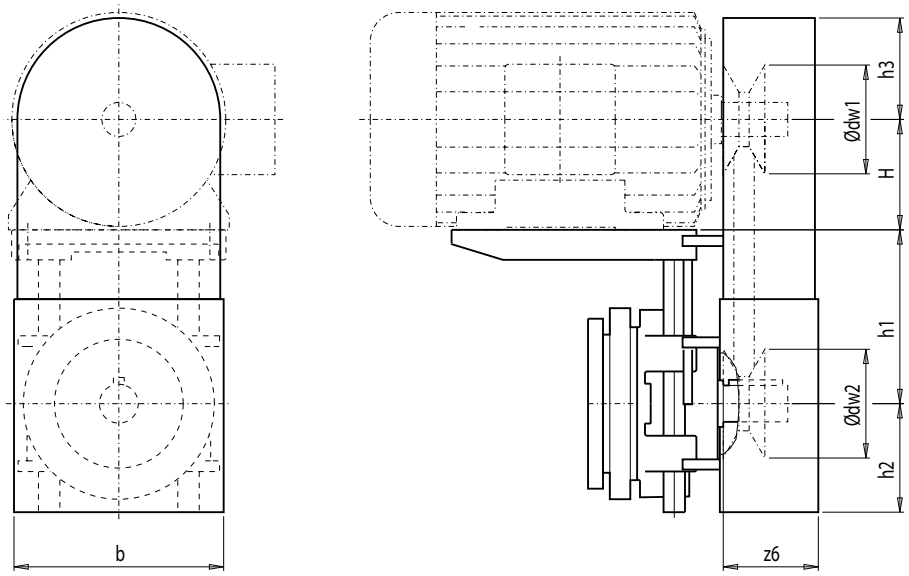

Gearbox			dw1	dw2	12h h1	h1	3/9h h1	h1	H	h2	h3	z6	b
			Max.	Max.	Min.	Max.	Min.	Max.					
Z.188	-PS	(132)	250	220	340	380	372	412	132	135	140.0	147	288
		(160)	250	220	340	380	372	412	160	135	140.0	135	288
		(180)	330	310	368	433	382	432	180	205	182.0	134	372
		(200)	330	310	368	433	382	432	200	205	182.0	134	372
		(225)	390	390	393	423	–	–	225	215	232.5	174	428
		(250)	390	350	418	448	–	–	250	215	210.0	174	428
		(280)	520	410	399	424	–	–	280	240	274.0	177	556
K.188	-PS	(132)	250	220	360	410	300	370	132	135	140.0	147	288
		(160)	250	220	360	410	300	370	160	135	140.0	135	288
		(180)	330	310	378	433	302	357	180	205	182.0	134	372
		(200)	330	310	378	433	302	357	200	205	182.0	134	372
		(225)	390	390	463	493	–	–	225	215	232.5	174	428
		(250)	390	350	493	523	–	–	250	215	210.0	174	428
		(280)	520	410	472	502	–	–	280	240	274.0	177	556
F.188B	-PS	(132)	250	220	335	375	335	375	132	135	140.0	147	288
		(160)	250	220	335	375	335	375	160	135	140.0	135	288
		(180)	330	310	347	432	343	428	180	205	182.0	134	372
		(200)	330	310	347	432	343	428	200	205	182.0	134	372
		(225)	390	390	390	420	463	493	225	215	232.5	174	428
		(250)	390	350	419	449	424	454	250	215	210.0	174	428
		(280)	520	410	463	493	471	501	280	240	274.0	177	556
D.188	-PS	(132)	250	220	340	380	372	412	132	135	140.0	147	288
		(160)	250	220	340	380	372	412	160	135	140.0	135	288
		(180)	330	310	368	433	382	432	180	205	182.0	134	372
		(200)	330	310	368	433	382	432	200	205	182.0	134	372
		(225)	390	390	393	423	–	–	225	215	232.5	174	428
		(250)	390	350	418	448	–	–	250	215	210.0	174	428
		(280)	520	410	399	424	–	–	280	240	274.0	177	556

© Siemens AG 2011

Motors



Orientation
8/2 The MODULOG modular principle
8/3 Geared motors for use worldwide
8/4 Integrated motors and module technology
8/5 IEC MODULOG motors and module technology
8/5 MODULOG motors and module technology for worm geared motors S
8/6 Technical data

Mechanical design
8/8 General mechanical design
8/8 Degrees of protection
8/8 Canopy
8/9 Cooling and ventilation
8/11 Motor connection and terminal boxes
8/17 Motor plugs
8/19 Versions for special environmental conditions
8/19 External earthing

Electrical design
8/20 Voltages, frequencies and outputs
8/22 Motor protection
8/24 Anti-condensation heating
8/25 Windings and insulation
8/26 Increased protection against humidity and acid

Additional components
8/27 Brakes
8/48 Encoders
8/63 Backstop
8/64 2nd shaft extension
8/65 Handwheel
8/65 Additional feet

Motors for line-fed operation
"Standard Efficiency" IE1 / without
Selection and ordering data at 50 Hz
8/66 *4-pole, 1 500 rpm*
8/68 *2-pole, 3 000 rpm*
8/70 *6-pole, 1 000 rpm*
8/72 *8-pole, 750 rpm*
8/74 *4/2-pole, 1 500 / 3 000 rpm*
8/76 *8/4-pole, 750 / 1 500 rpm, T = constant*
8/78 *8/4-pole, 750 / 1 500 rpm, T ~ n^2*
8/80 *8/2-pole, 750 / 3 000 rpm*
Selection and ordering data at 60 Hz
8/82 *4-pole, 1 800 rpm*
8/84 *6-pole, 1 200 rpm*
8/86 *8-pole, 900 rpm*

Motors for line-fed operation
"High Efficiency" IE2
Selection and ordering data at 50 Hz
8/88 *4-pole, 1 500 rpm*
8/90 *2-pole, 3 000 rpm*
8/92 *6-pole, 1 000 rpm*

Motors for line-fed operation
"High Efficiency" IE2
Selection and ordering data at 60 Hz
8/94 *4-pole, 1 800 rpm*
8/96 *2-pole, 3 600 rpm*
8/98 *6-pole, 1 200 rpm*

Motors for USA, Canada – Line-fed operation "Standard Efficiency"
Selection and ordering data at 60 Hz
8/100 *4-pole, 1 800 rpm, NEMA electrical*
8/102 *6-pole, 1 200 rpm, NEMA electrical*
8/104 *8-pole, 900 rpm, NEMA electrical*
8/106 *4/2-pole, 1 500 / 3 000 rpm, NEMA electrical*
"High Efficiency"
Selection and ordering data at 60 Hz
8/108 *4-pole, 1 800 rpm, NEMA electrical*
8/110 *4-pole, 1 800 rpm, NEMA electrical*
8/112 *4-pole, 1 800 rpm, UL-R*
8/114 *4-pole, 1 800 rpm, CSA*
8/116 *4-pole, 1 800 rpm, UL-R and CSA*

Motors for inverter-fed operation
"Standard Efficiency"
Selection and ordering data at 50 Hz
8/118 *4-pole, 1 500 rpm, 400 V*
8/120 *6-pole, 1 000 rpm, 400 V*
8/122 *8-pole, 750 rpm, 400 V*
Selection and ordering data at 87 Hz
8/124 *4-pole, 2 610 rpm, 400 V*
8/126 *6-pole, 1 740 rpm, 400 V*
8/128 *8-pole, 1 300 rpm, 400 V*
"High Efficiency"
Selection and ordering data at 50 Hz
8/130 *4-pole, 1 500 rpm, 400 V*
8/132 *6-pole, 1 000 rpm, 400 V*
Selection and ordering data at 87 Hz
8/134 *4-pole, 2 610 rpm, 400 V*
8/136 *6-pole, 1 740 rpm, 400 V*

Dimensions
8/138 Motors, built-in
8/144 Motors with brake, built-in
8/150 Standard motors, IEC flange
8/151 Motors with brake, IEC flange
8/152 Standard motors, B14 flange
8/152 Motors with brake, B14 flange
8/153 Additional lengths for 2nd shaft extension, handwheel and canopy
8/154 Additional lengths for encoders
8/155 Additional lengths for forced ventilation, encoder and canopy
8/156 Encoder mounting prepared
8/157 Additional feet on motor
8/159 Additional feet on motor, IEC flange

© Siemens AG 2011

Orientation

Overview

The MODULOG modular principle

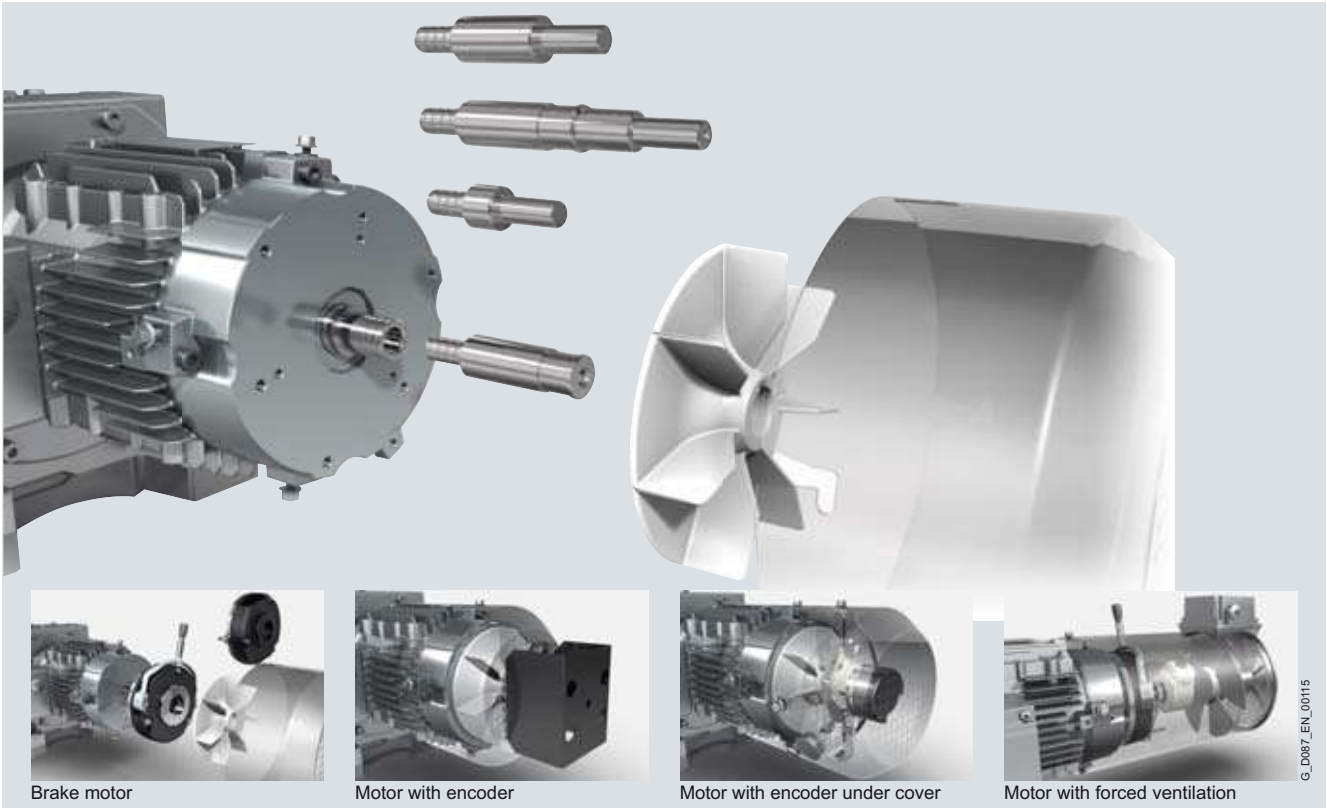

The MODULOG modular principle has a range of benefits for machine and plant designers.
The name MODULOG stands for a clear and transparent **modu**lar motor system, which offers optimum **log**istics, that enables users to assemble powerful, durable, and extremely easy-to-service motors in line with their own requirements for most applications, from just a few standard components.

At the heart of this modular system is the basic motor, which is designed to comply with international line supply conditions, and a built-on shaft system, which can be individually configured, at the non-drive end (NDE).

Functional expansions, such as brakes, backstop, rotary encoders, forced ventilation, canopy, 2nd motor shaft extension, etc. can be combined almost at will as "additional functional components".

Order code:
Motor NDE retrofit **N48**

Motor type designation

Motors are designated as follows:

Example: **LA 100L 4/2 F - L16NH**

- Motor type
- Size
- No. of poles
- Special features
- Mounted unit

Motor type

LA, LG	Three-phase AC motors, built-in
LAI, LGI	Three-phase AC motors, with IEC flange

Special features

E	High efficiency
F	Forced ventilation
I	High inertia fan
W	Canopy
IN	Incremental encoder
IR	Resolver
IA	Absolute encoder
D	Handwheel

Mounted unit

L, KFB	Spring-operated single-disk brake, DC excited
16	Size = nominal braking torque
../10	Adjusted braking torque
N	Standard version
G	Enclosed version
H	Manual brake release
HA	Manual brake release with locking mechanism
M	Microswitch

© Siemens AG 2011

Overview (continued)

Geared motors for use worldwide

Geared motors comply with the applicable IEC / EN standards.

Motors for the North American market

Motors of sizes 63 to 315 are available in designs which meet the NEMA electrical standard and up to size 250 in designs in accordance with CSA and UL-R.

Order codes:

Design in accordance with NEMA, electrical	**N65**
Design in accordance with UL-R	**N37**
Design in accordance with CSA	**N36**
Design in accordance with UL-R and CSA	**N38**

Low-voltage motors for the Chinese market

CCC-certified motors of sizes 71 to 90 are available for export to China.

Order code:

Design in accordance with CCC	**N67**

The "China Energy Efficiency Label" necessary for the import of motors to China is available for motors of sizes 71 to 315.

Order code:

China Energy Efficiency Label	**K69**

Geared motors for the Russian market

MOTOX geared motors with motors of sizes 63 to 315 are available in a design which conforms to GOST-R.

Order code:

Design in accordance with GOST-R	**N30**

For more information on the specifications named above, see Chapter 1, "Designs in accordance with standards and specifications".

© Siemens AG 2011

Overview (continued)

Integrated motors and module technology

Standards and specifications	No. of poles	Motor size														
		71	80	90	100	112	132	160	180	200	225	250	280	315		
CE	4	- Brake / Backstop - Encoder system - Metal fan - Forced ventilation - High inertia fan [1] - 2nd shaft extension [2] - Motor plug						- Brake / Backstop - Encoder system - Metal fan - Forced ventilation - 2nd shaft extension [2]			- Brake / Backstop - Metal fan - Forced ventilation - 2nd shaft extension [2]					
	2															
	6; 8										- Brake / Backstop - Metal fan - Forced ventilation - 2nd shaft extension [2]					
	8/4			- Brake / Backstop - Encoder system - Metal fan - Forced ventilation - Motor plug												
	4/2															
	8/2															
NEMA	4	- Brake / Backstop - Encoder system - Metal fan - Forced ventilation - High inertia fan [1] - 2nd shaft extension [2]						- Brake / Backstop - Encoder system - Metal fan - Forced ventilation - 2nd shaft extension [2]			- Brake / Backstop - Metal fan - Forced ventilation - 2nd shaft extension [2]					
	6; 8															
	8/4															
	4/2															
UL-R/CSA	4	- Brake / Backstop - Encoder system - Metal fan - Forced ventilation - High inertia fan [1] - 2nd shaft extension [2] - Motor plug						- Brake / Backstop - Encoder system - Metal fan - Forced ventilation - 2nd shaft extension [2]			- Brake / Backstop - Metal fan - Forced ventilation - 2nd shaft extension [2]					
CCC	4	- Brake / Backstop - Encoder system - Metal fan - Forced ventilation - High inertia fan [1] - 2nd shaft extension [2] - Motor plug														
	2															
	6; 8															
CEEL	4	- Brake / Backstop - Encoder system - Metal fan - Forced ventilation - High inertia fan [1] - 2nd shaft extension [2] - Motor plug						- Brake / Backstop - Encoder system - Metal fan - Forced ventilation - 2nd shaft extension [2]			- Brake / Backstop - Metal fan - Forced ventilation - 2nd shaft extension [2]					
	2															
	6; 8										- Brake / Backstop - Metal fan - Forced ventilation - 2nd shaft extension [2]					
GOST-R	4	- Brake / Backstop - Encoder system - Metal fan - Forced ventilation - High inertia fan [1] - 2nd shaft extension [2] - Motor plug						- Brake / Backstop - Encoder system - Metal fan - Forced ventilation - 2nd shaft extension [2]			- Brake / Backstop - Metal fan - Forced ventilation - 2nd shaft extension [2]					
	2															
	6; 8										- Brake / Backstop - Metal fan - Forced ventilation - 2nd shaft extension [2]					
	8/4					- Brake / Backstop - Encoder system - Metal fan - Forced ventilation - Motor plug										
	4/2															
	8/2															

[1] 2-pole, 6-pole, 8-pole and pole-changing motors with brake and backstop on request

[2] 2-pole, 6-pole, 8-pole and pole-changing motors with 2nd shaft extension on request

© Siemens AG 2011

Overview (continued)

IEC MODULOG motors and module technology

Standards and specifications	No. of poles	Motor size 71	80	90 [3]	100 [3]	112 [3]	132 [3]	160 [3]	180	200	225	250	280	315
CE	4	- Brake / Backstop - Encoder system - Metal fan - Forced ventilation - High inertia fan [1] - 2nd shaft extension [2] - Motor plug						- Brake / Backstop - Encoder system - Metal fan - Forced ventilation			- Brake / Backstop - Metal fan - Forced ventilation - 2nd shaft extension			
	2													
	6; 8										- Brake / Backstop - Metal fan - Forced ventilation - 2nd shaft extension			
	8/4 8/2 4/2													
NEMA	4	- Brake / Backstop - Encoder system - Metal fan - Forced ventilation - High inertia fan [1] - 2nd shaft extension [2] - Motor plug						- Brake / Backstop - Encoder system - Metal fan - Forced ventilation			- Brake / Backstop - Metal fan - Forced ventilation - 2nd shaft extension			
	6; 8													
UL-R/CSA	4	- Brake / Backstop - Encoder system - Metal fan - Forced ventilation - High inertia fan [1] - 2nd shaft extension [2] - Motor plug						- Brake / Backstop - Encoder system - Metal fan - Forced ventilation			- Brake / Backstop - Metal fan - Forced ventilation - 2nd shaft extension			
CCC	4	- Brake / Backstop - Encoder system - Metal fan - Forced ventilation - High inertia fan [1] - 2nd shaft extension [2] - Motor plug												
	2													
	6; 8													
CEEL	4	- Brake / Backstop - Encoder system - Metal fan - Forced ventilation - High inertia fan [1] - 2nd shaft extension [2] - Motor plug						- Brake / Backstop - Encoder system - Metal fan - Forced ventilation			- Brake / Backstop - Metal fan - Forced ventilation - 2nd shaft extension			
	2													
	6; 8										- Brake / Backstop - Metal fan - Forced ventilation - 2nd shaft extension			
GOST-R	4	- Brake / Backstop - Encoder system - Metal fan - Forced ventilation - High inertia fan [1] - 2nd shaft extension [2] - Motor plug						- Brake / Backstop - Encoder system - Metal fan - Forced ventilation			- Brake / Backstop - Metal fan - Forced ventilation - 2nd shaft extension			
	2													
	6; 8										- Brake / Backstop - Metal fan - Forced ventilation - 2nd shaft extension			
	8/4 8/2 4/2													

[1] 2-pole, 6-pole, 8-pole and pole-changing motors with brake and backstop on request

[2] 2-pole, 6-pole, 8-pole and pole-changing motors with 2nd shaft extension on request

[3] Not possible in conjunction with high efficiency, code **E**

MODULOG motors and module technology for worm geared motors S

Standards and specifications	No. of poles	Motor size 63	71	80
CE	4; 2; 6	- Brake - Encoder system - Motor plug		
NEMA	4; 2; 6	- Brake - Encoder system - Motor plug		
UL-R/CSA	4; 2; 6	- Brake - Encoder system - Motor plug		
GOST-R	4; 2; 6	- Brake - Encoder system - Motor plug		

© Siemens AG 2011

Orientation

Technical data

Technical data at a glance

Motor type	Squirrel-cage motor
Connection types	You can establish the connection type that can be used from the product number suffixes in the selection and ordering data for the required motor.
Number of poles	2, 4, 6, 8, 8/4 (T ~ n^2), 4/2, 8/4 (T = constant), 8/2
Rated speed (synchronous speed)	750 ... 3 600 rpm
Rated power	0.09 ... 200 kW
Rated torque	0.25 ... 1 700 Nm
Insulation of the stator winding according to IEC 60034-1 (EN 60034-1)	Temperature class 155 (F), utilization in accordance with temperature class 130 (B) DURIGNIT IR 2 000 insulating system
Degree of protection according to IEC 60034-5 (EN 60034-5)	IP55 as standard IP65 optional
Cooling according to IEC 60034-6 (EN 60034-6)	Self-cooled (IC 411) Separately-cooled (IC 416)
Permissible coolant temperature and site altitude	–15 °C ... +40 °C as standard, site altitude up to 1 000 m above sea level
Standard voltages according to IEC 60038	50 Hz: 230 V, 400 V, 690 V You can establish the voltage that can be used from the selection and ordering data for the required motor.
Vibration severity grade according to IEC 60034-14 (EN 60034-14)	Vibration severity grade A (normal)
Shaft extension according to DIN 748 (IEC 60072)	Balance type: half-key balancing
Sound pressure level according to DIN EN ISO 1680 (tolerance +3 dB)	You can establish the corresponding sound pressure level from the selection and ordering data for the required motor.
Weights	You can establish the corresponding weight from the selection and ordering data for the required motor.
Rating plates	Fixed to the motor See "Rating plate" in the "Introduction" section
Connection and terminal boxes	See "Connection, circuit and terminal boxes"

Rated torque

The rated torque in Nm delivered at the motor shaft is:

$$T = \frac{P \cdot 9550}{n}$$

P = Rated power in kW
n = Rated speed in rpm

Note:

If the voltage deviates from its rated value within the allowed limits, the starting torque, the average acceleration torque, and the breakdown torque vary with the approximate square of the value, but the starting current varies approximately linearly.

In the case of squirrel-cage motors, the starting torques, average acceleration torques, and breakdown torques are listed in the selection tables as multiples of the rated torque.

Rated speed

The rated speeds are applicable for the rated data. The synchronous speed changes proportionally with the line frequency.

© Siemens AG 2011

Technical data (continued)

Tolerances

The following tolerances apply to the electrical values in the power tables according to EN 60034-1:

Efficiency:

≤ 150 kW: – 0.15 (1 - η)

> 150 kW: – 0.1 (1 - η)

Power factor:

$$-\frac{1-\cos\varphi}{6}$$

(minimum 0.02 / maximum 0.07)

Efficiency and power factor

The efficiency η and power factor cos φ for each rated power are listed in the selection tables in the individual sections of this catalog.

For motors in Standard Efficiency (IE1) and High Efficiency (IE2), the 3/4 load efficiency is also indicated in the selection tables. The part-load values stated in the tables below are averages, precise values can be provided on request.

Part-load power factor

4/4 of full load	1/4	1/2	3/4	5/4
0.92	0.70	0.86	0.90	0.92
0.91	0.65	0.85	0.89	0.91
0.90	0.63	0.83	0.88	0.90
0.89	0.61	0.80	0.86	0.89
0.88	0.57	0.78	0.85	0.88
0.87	0.53	0.76	0.84	0.87
0.86	0.51	0.75	0.83	0.86
0.85	0.49	0.73	0.81	0.86
0.84	0.47	0.71	0.80	0.85
0.83	0.45	0.69	0.79	0.84
0.82	0.43	0.67	0.77	0.83
0.81	0.41	0.66	0.76	0.82
0.80	0.40	0.65	0.75	0.81
0.79	0.38	0.63	0.74	0.80
0.78	0.36	0.61	0.72	0.80
0.77	0.34	0.59	0.71	0.79
0.76	0.32	0.58	0.70	0.78
0.75	0.30	0.56	0.69	0.78
0.74	0.29	0.55	0.68	0.77
0.73	0.28	0.54	0.67	0.77
0.72	0.27	0.52	0.63	0.76
0.71	0.26	0.50	0.62	0.76

Slip at full load and operating temperature

± 20 % of the setpoint slip at $P_{rated} \geq 1$ kW

± 30 % of the setpoint slip at $P_{rated} < 1$ kW

Starting torque: –15 % and +25 %

Breakdown torque: –10 % with no upper limit

Starting current: +20 % with no lower limit

Moment of inertia (of the motor): ±10 %

Part-load efficiency in %

4/4 of full load	1/4	1/2	3/4	5/4
97	93	96.0	97.0	96.5
96	92	95.0	96.0	95.5
95	90	93.5	95.0	94.5
94	89	92.5	94.0	93.5
93	88	91.5	93.0	92.5
92	87	91.0	92.0	91.5
91	86	90.0	91.0	90.0
90	85	89.0	90.0	89.0
89	84	88.0	89.0	88.0
88	80	87.0	88.0	87.0
87	79	86.0	87.0	86.0
86	78	85.0	86.0	85.0
85	76	84.0	85.0	83.5
84	74	83.0	84.0	82.5
83	72	82.0	83.0	81.5
82	70	81.0	82.0	80.5
81	68	80.0	81.0	79.5
80	66	79.0	80.0	78.5
79	64	77.0	79.5	77.5
78	62	75.5	78.5	76.5
77	60	74.0	77.5	75.0
76	58	73.0	76.0	74.0
75	56	72.0	75.0	73.0
74	55	71.0	74.0	72.0
73	54	70.0	73.0	71.0
72	53	68.0	72.0	70.0
71	52	67.0	71.0	69.0
70	51	66.0	70.0	68.0
69	50	65.0	69.0	67.0
68	49	64.0	67.5	66.0
67	48	62.0	66.5	65.0
66	47	61.0	65.0	64.0
65	46	60.0	64.0	63.0
64	45	59.0	63.0	62.0
63	44	57.0	62.0	61.0
62	43	56.0	60.5	60.5
61	42	55.0	59.5	59.5
60	41	54.0	58.5	58.5

© Siemens AG 2011

General mechanical design

Eyebolts and transport

Motors of size 100L and above have an eyebolt which can be used on their housings, if required.

All the available eyebolts specifically provided for the type of construction must be used during transport.

Housing material

Motor size	Housing material
63	Aluminum alloy
71	Aluminum alloy
80	Aluminum alloy
90	Aluminum alloy
100	Aluminum alloy
112	Aluminum alloy
132	Aluminum alloy
160	Aluminum alloy
180	Gray cast iron
200	Gray cast iron
225	Gray cast iron
250	Gray cast iron
280	Gray cast iron
315	Gray cast iron

Degrees of protection

The motors are supplied with IP55 to standard IEC 60034-5. They can be installed in dusty or humid environments.
The motors are suitable for operation in tropical climates. Guide value < 60 % relative air humidity at CT 40 °C. Other requirements are available on request.

Explanation of the degrees of protection

The first digit of the IP code indicates the degree to which persons and equipment are protected against contact, and foreign bodies from intruding into the enclosure.
The second digit indicates the degree to which the equipment inside the housing is protected against water.

1st digit	Brief description	2nd digit	Brief description
4	Motor is protected against solid objects larger than 1 mm	4	Motor is protected against splashwater
5	Motor is protected against dust	5	Motor is protected against low-pressure jets of water
6	Machine is dust-tight	6	Motor is protected against 'choppy seas' or powerful jets of water
		7	Motor is protected against the effects of immersion
		8	Motor is protected against long periods of immersion under pressure

Overview of available degrees of protection

Degree of protection	IP55	IP56	IP65
Order code	**K01**	**K02** [1]	**K03** [1]
Supported options	No restrictions	This degree of protection is also possible in conjunction with forced ventilation, an incremental encoder, and absolute encoder.	This degree of protection is also possible in conjunction with a brake, backstop, forced ventilation unit, incremental encoder, absolute encoder, resolver, and motor plug.
Additional geared motor requirements	Standard gearboxes can be used	It is recommended that a pressure ventilation valve and PTC thermistor are used for disconnection and sealing of the terminal box.	It is recommended that a pressure ventilation valve and a combination shaft sealing are used

[1] Not possible for worm geared motors S

A canopy is strongly recommended for geared motors with a vertical mounting position and with the non-drive end at the top.

If the motor is to be used or stored in the open air, we recommend that it is kept under additional cover to protect it from prolonged exposure to direct, intense sunlight, rain, snow, ice, or dust.

Canopy

Geared motors with a vertical mounting position (air inlet at the top) can also be fitted with a canopy.
This is particularly relevant where IP65 is concerned or where the drives are to be installed in the open air, in which case you should also ensure that the motors are protected against exposure to strong, prolonged solar radiation. The canopy prevents small items from falling into the geared motor, in the case of open-air installation, its primary function is to serve as a rain canopy.

Order code:
Canopy **N22**

© Siemens AG 2011

Cooling and ventilation

The motors have radial-flow fans, which cool regardless of the direction of rotation of the motor (cooling method IC 411 acc. to IEC 60034-6). The air flows from the non-drive end to the drive end.

When the motor is mounted and the air intake is restricted, you must ensure that a minimum clearance is maintained between the fan cover and the wall and that the cooling air is not immediately drawn in again.

Overview of possible module technology in conjunction with self ventilation and forced ventilation

	Motor plug	Encoder system					Brake				Back-stop [5]	2nd shaft extension [5]
		Incremental encoder	Absolute encoder	Resolver	Encoder under cover [5]	Encoder accessories	Without manual release	With manual release [3]	Microswitch [5]			
									Release monitoring [1]	Wear monitoring [2]		
Self ventilation												
Standard fan	✓	✓	✓	✓	✓	✓	✓	✓	✓		✓	✓
Metal fan [5]	✓	✓	✓	✓	✓	✓	✓	✓	✓		✓	✓
High inertia fan [5]	✓	✓	✓	✓	✓	✓	✓	✓	✓		✓	✓
Canopy	✓	✓ [4]	✓ [4]	✓ [4]	✓	✓	✓	✓	✓		✓	
Forced ventilation [5]												
Canopy	✓	✓	✓	✓		✓	✓	✓	✓		✓	

[1] Not in conjunction with L4, L8, L16
[2] On request
[3] Standard from SH225
[4] Only in conjunction with encoder under cover
[5] Not in conjunction with worm geared motors S

Self ventilation

Standard fan

The fan can either be a standard fan, metal fan, or high inertia fan. For design of the fan and the fan cover, see the table below.

Motor size	Fan	Fan material	No. of poles	Order code	Fan cover material [1]
63 ... 90	Standard fan	Plastic	2 ... 8		Sheet metal
	Metal fan [2]	Aluminum	2 ... 8	**M21**	Sheet metal
	High inertia fan [2]	Steel core with plastic fan blades	4 ... 8	**M22**	Sheet metal
100 ... 132	Standard fan	Plastic	2 ... 8		Sheet metal
	Metal fan	Aluminum	2 ... 8	**M21**	Sheet metal
	High inertia fan	Gray cast iron	4 ... 8	**M22**	Sheet metal
160 ... 200	Standard fan	Plastic	2 ... 8		Sheet metal
	Metal fan	Aluminum	2 ... 8	**M21**	Sheet metal
225 ... 315	Standard fan	Plastic	4 ... 8		Sheet metal

[1] In the case of motors with a cooling-tower design without a backstop or brake, the fan cover is made from strong, corrosion-resistant, glass-fiber-reinforced plastic.
[2] Metal fan or high inertia fan are only in combination with brake or backstop possible for motors of size 71 in design with IEC standard flange (IM) B5.

High inertia fan

High inertia fans as additional centrifugal mass are precision balanced (DIN ISO 1940) so that smooth running of the motors is not impaired. Typical applications are drives for traveling gear, conveying equipment, or in general for supporting soft starting and / or soft braking.

Order code:
High inertia fan **M22**

A high inertia fan increases the moment of inertia of the motor according to the table below.

Motor size	J_Z	m_{Fan}
	kgm^2	kg
71 [1]	0.00171	1.38
80 [1]	0.00279	1.75
90S / 90L	0.00540	2.55
100L	0.01160	3.30
112M	0.02300	5.30
132S / 132M / 132ZM	0.05620	9.10

[1] Not in conjunction with worm geared motors S

Metal fan

As an alternative to the standard plastic fans, metal fans constructed of aluminum are available for motors up to size 200.

Metal fans are used for special ambient conditions, for example, with possible debris or dirt particles such as wood shavings, textile fibers in the cooling air, or for motors specially designed for higher ambient temperatures (> 60 °C).

Order code:
Metal fan **M21**

© Siemens AG 2011

Cooling and ventilation (continued)

Forced ventilation

The use of an external fan is recommended to increase motor utilization at low speeds and to limit noise generation at speeds significantly higher than the synchronous speed. Both are mainly used in conjunction with inverter-fed operation.

A rating plate listing all the important data is fitted to the external fan. Please note the direction of rotation of the external fan (axial-flow fan) when connecting it.

The forced ventilation system can be operated either with 3-phase AC or single-phase AC on motors up to 200.

The forced ventilation system up to size 200 is certified to cUL-Rus.

The forced ventilation system from size 225 is certified according to the motor design.

Order code:
External fan **M23**

Technical data of the forced ventilation

Motor size	Frequency	Rated voltage range			Rated speed	Rated current	Input power	Volumetric flow	Weight
	Hz		V		rpm	A	W	m^3/h	kg
71	50	1 AC	230 ... 277	⊥(Δ)	2 770	0.10	28	78	1.8
		3 AC	220 ... 290 / 380 ... 500	Δ/Y	2 770	0.1 / 0.05	30		
	60	1 AC	230 ... 277	⊥(Δ)	3 190	0.12	41	98	
		3 AC	220 ... 332 / 380 ... 575	Δ/Y	3 300	0.1 / 0.06	33		
80	50	1 AC	230 ... 277	⊥(Δ)	2 630	0.11	29	127	1.9
		3 AC	220 ... 290 / 380 ... 500	Δ/Y	2 700	0.1 / 0.05	31		
	60	1 AC	230 ... 277	⊥(Δ)	2 680	0.13	44	148	
		3 AC	220 ... 332 / 380 ... 575	Δ/Y	3 180	0.1 / 0.06	34		
90	50	1 AC	220 ... 277	⊥(Δ)	2 880	0.30	82	170	2.80
		3 AC	220 ... 290 / 380 ... 500	Δ/Y	2 890	0.34 / 0.19	97		
	60	1 AC	220 ... 277	⊥(Δ)	3 470	0.25	70	210	
		3 AC	220 ... 332 / 380... 575	Δ/Y	3 510	0.30 / 0.18	101		
100	50	1 AC	220... 277	⊥(Δ)	2 840	0.31	86	220	2.90
		3 AC	220... 290 / 380... 500	Δ/Y	2 850	0.35 / 0.19	100		
	60	1 AC	220... 277	⊥(Δ)	3 350	0.29	79	260	
		3 AC	220... 332 / 380... 575	Δ/Y	3 450	0.32 / 0.18	105		
112	50	1 AC	220... 277	⊥(Δ)	2 740	0.31	85	310	3.30
		3 AC	220... 290 / 380... 500	Δ/Y	2 790	0.33 / 0.18	95		
	60	1 AC	220... 277	⊥(Δ)	2 910	0.39	95	350	
		3 AC	220... 332 / 380... 575	Δ/Y	3 330	0.31 / 0.18	102		
132	50	1 AC	230... 277	⊥(Δ)	2 800	0.40	115	450	4.70
		3 AC	220... 290 / 380... 500	Δ/Y	2 820	0.45 / 0.24	138		
	60	1 AC	230... 277	⊥(Δ)	3 160	0.59	185	530	
		3 AC	220... 332 / 380... 575	Δ/Y	3 330	0.24 / 0.16	148		
160	50	1 AC	230... 277	⊥(Δ)	2 670	0.93	225	780	6.25
		3 AC	220... 290 / 380... 500	Δ/Y	2 760	0.71 / 0.40	220		
	60	1 AC	230... 277	⊥(Δ)	-	-	-	880	
		3 AC	220... 332 / 380... 575	Δ/Y	3 130	0.85 / 0.51	280		
180	50	1 AC	230... 277	⊥(Δ)	2 670	0.93	225	860	8.15
		3 AC	220... 290 / 380... 500	Δ/Y	2 760	0.71 / 0.40	220		
	60	1 AC	230... 277	⊥(Δ)	-	-	-		
		3 AC	220... 332 / 380... 575	Δ/Y	3 130	0.85 / 0.51	280		
200	50	1 AC	230... 277	⊥(Δ)	2 670	0.93	225	950	9.75
		3 AC	220... 290 / 380... 500	Δ/Y	2 760	0.85 / 0.51	220		
	60	1 AC	230... 277	⊥(Δ)	-	-	-		
		3 AC	220... 332 / 380... 575	Δ/Y	3 130	0.71 / 0.40	280		
225	50	3 AC	220... 240 / 380... 420	Δ/Y	2 720	2.00 / 1.15	450		22
	60	3 AC	440... 480	Y	3 320	1.05	520		
250	50	3 AC	220... 240 / 380... 420	Δ/Y	2 720	2.00 / 1.15	450		25
	60	3 AC	440... 480	Y	3 320	1.05	520		
280	50	3 AC	220... 240 / 380... 420	Δ/Y	2 720	2.00 / 1.15	450		28
	60	3 AC	440... 480	Y	3 320	1.05	520		
315	50	3 AC	220... 240 / 380... 420	Δ/Y	2 720	2.00 / 1.15	450		36
	60	3 AC	440... 480	Y	3 320	1.05	520		

© Siemens AG 2011

Motor connection and terminal boxes

Overview of possible module technology in conjunction with motor connection and terminal boxes

	Encoder system	Brake					Self ventilation Forced ventilation	Backstop	2nd shaft extension
		Without manual release	With manual release [3]		Microswitch				
			Without locking mechanism	With locking mechanism [4]	Release monitoring [1]	Wear monitoring [2]			
Terminal box	✓	✓	✓	✓	✓		✓	✓	✓
Harting connector	✓	✓	✓	✓			✓	✓	✓

[1] Not in conjunction with L4, L8, L16
[2] On request
[3] Standard from SH225
[4] Standard for KFB brake

Connection, circuit and terminal boxes

Location and position of the terminal box

The terminal box of the motor can be mounted in four different locations or positions. The position of the terminal box must always be viewed from the drive end of the motor (DE).

Selection data for cable entry

Terminal box position	Motors LA71 ... LG315		Motors LA80Z, LA90Z, LA100Z, LA112Z, LA132Z, LA160Z	
	Cable entry position DE	Order code	Cable entry position NDE	Order code
1	A [1]	**M55**	AK [1]	**M71**
	B	**M56**	BK	**M72**
	C	**M57**	CK	**M73**
	D	**M58**	DK	**M74**
2	A	**M59**	AK	**M75**
	B	**M60**	BK	**M76**
	C	**M61**	CK	**M77**
	D	**M62**	DK	**M78**
3	A	**M63**	AK	**M79**
	B	**M64**	BK	**M80**
	C	**M65**	CK	**M81**
	D	**M66**	DK	**M82**
4	A	**M67**	AK	**M83**
	B	**M68**	BK	**M84**
	C	**M69**	CK	**M85**
	D	**M70**	DK	**M86**

[1] Standard position

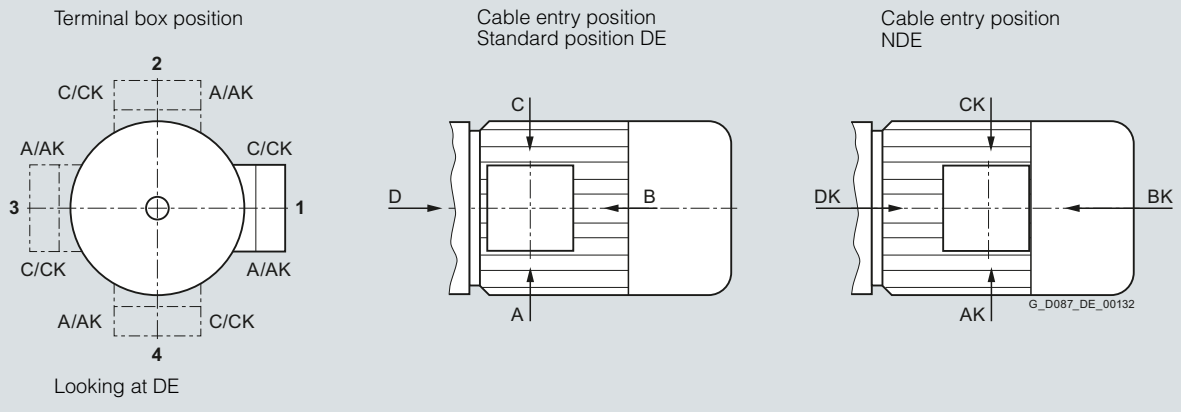

Only terminal box positions on the left, only cable entry positions in the middle and on the right

© Siemens AG 2011

Motor connection and terminal boxes (continued)

Terminal box on non-drive end of motor

Cable entry at position D is not always possible for some combinations of geared motors. In these cases, position DK (order code **M86**) can be selected as an alternative except for motor sizes 180 and 200. The terminal box is then mounted on the non-drive end of the motor.

Motor	Gearbox Size		Helical gearbox E. and Z.				Helical gearbox D.				Parallel shaft gearbox FZ./FD. and bevel helical gearbox K.				Helical-worm gearbox C.			
	E., D./Z.,		Terminal box position															
	B., K., C.	FZ./FD.	1	2	3	4	1	2	3	4	1	2	3	4	1	2	3	4
LA71	38		●		●	●	●		●	●	●		●	●				
	48	48B	●	●	●	●	●	●	●	●	●		●	●				
	68	68B	●	●	●	●	●	●	●	●	●	●	●	●	●	●	●	
	88	88B					●	●	●	●	●	●	●	●	●	●	●	●
LA80 [2]	48		●	●	●	●	●	●	●	●								
	68	68B	●	●	●	●	●	●	●	●	●	●	●	●				
	88	88B	●	●	●	●	●	●	●	●	●	●	●	●	●	●	●	●
	108	108B					●	●	●	●	●	●	●	●				
LA90 [2]	48		●		●	●	●		●	●								
	68	68B	●	●	●	●	●	●	●	●	●		●	●				
	88	88B	●	●	●	●	●	●	●	●	●	●	●	●	●	●	●	
	108	108B	●	●	●	●	●	●	●	●	●	●	●	●				
	128	128B					●	●	●	●	●	●	●	●				
LA100 [2]	48																	
	68	68B	●	●	●	●												
	88	88B	●	●	●	●	●	●	●	●	●	●	●	●	●	●	●	●
	108	108B	●	●	●	●	●	●	●	●	●	●	●	●				
	128	128B	●	●	●	●	●	●	●	●	●	●	●	●				
	148	148B					●	●	●	●	●	●	●	●				
LA112 [2]	48		●		●	●												
	68	68B	●	●	●	●					●		●	●				
	88	88B	●	●	●	●					●	●	●	●				
	108	108B	●	●	●	●	●	●	●	●	●	●	●	●				
	128	128B	●	●	●	●	●	●	●	●	●	●	●	●				
	148	148B					●	●	●	●	●	●	●	●				
LA132 [2]	88	88B	●	●	●	●												
	108	108B	●	●	●	●	●	●	●	●	●	●	●	●				
	128	128B	●	●	●	●	●	●	●	●	●	●	●	●				
	148	148B	●	●	●	●	●	●	●	●	●	●	●	●				
	168	168B	●	●	●	●	●	●	●	●	●	●	●	●				
	188	188B					●	●	●	●	●[1]	●[1]	●[1]	●[1]				
		208									●	●	●	●				
LA160 [2]	108		●		●	●	●		●	●								
	128	128B	●	●	●	●	●	●	●	●	●		●	●				
	148	148B	●	●	●	●	●	●	●	●	●	●	●	●				
	168	168B	●	●	●	●	●	●	●	●	●	●	●	●				
	188	188B	●	●	●	●	●	●	●	●	●	●	●	●				
		208									●	●	●	●				
LG180	148	148B	⊗	⊗	⊗	⊗												
	168	168B	⊗	⊗	⊗	⊗	⊗	⊗	⊗	⊗	⊗	⊗	⊗	⊗				
	188	188B	⊗	⊗	⊗	⊗	⊗	⊗	⊗	⊗	⊗	⊗	⊗	⊗				
		208									⊗	⊗	⊗	⊗				
LG200	128	128B	⊗		⊗	⊗												
	148	148B	⊗	⊗	⊗	⊗	⊗		⊗	⊗	⊗		⊗	⊗				
	168	168B	⊗	⊗	⊗	⊗	⊗	⊗	⊗	⊗	⊗	⊗	⊗	⊗				
	188	188B	⊗	⊗	⊗	⊗	⊗	⊗	⊗	⊗	⊗	⊗	⊗	⊗				
		208									⊗	⊗	⊗	⊗				

● Position DK instead of D
⊗ Neither D nor DK possible
[1] Only for FZ./FD.188B
[2] No restrictions for LA80Z, LA902Z, LA10Z, LA112Z, LA132Z and LA160Z

© Siemens AG 2011

Motor connection and terminal boxes (continued)

Motor	Gearbox Size		Helical gearbox E. and Z.				Helical gearbox D.				Parallel shaft gearbox FZ./FD. and bevel helical gearbox K.				Helical-worm gearbox C.			
	E., D./Z.,		Terminal box position															
	B., K., C.	FZ./FD.	1	2	3	4	1	2	3	4	1	2	3	4	1	2	3	4
LG225	128	128B				●												
	148	148B				●				●				●				
	168	168B	●		●	●	●		●	●				●				
	188	188B	●		●	●	●		●	●				●				
		208									●		●	●				
LG250	148	148B				●												
	168	168B				●								●				
	188	188B	●		●	●	●		●	●				●				
		208									●		●	●				
LGI280	148	148B	No restrictions															
	168	168B																
	188	188B																
		208																
LGI315	168	168B	No restrictions															
	188	188B																
		208																

● Position DK instead of D
⊗ Neither D nor DK possible
1) Only for FZ./FD.188B

Additional lengths for dimension HH in position DK

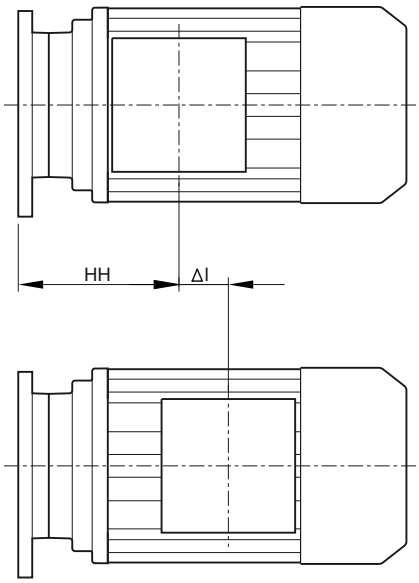

Standard position (DE)

Position K (Terminal box on NDE of the motor)

Motor	Additional lengths ΔI
LA71	53
LA71Z	53
LA80	73
LA90	79
LA100	62
LA112	76
LA132	62
LA160	105
LG180	-
LG180Z	-
LG200	-
LG200Z	-
LG225	142
LG225Z	202
LG250	154
LG250Z	224

Terminal box position	Order code
1DK	**M74**
2DK	**M78**
3DK	**M82**
4DK	**M86**

© Siemens AG 2011

Motor connection and terminal boxes (continued)

Motor connection

The number of winding ends depends on the winding design. Three-phase AC motors are connected to the three phase conductors L1, L2, and L3 of a three-phase system. The rated voltage of the motor in the running connection must match the phase conductor voltages of the network.
When the three phases are operating in a time sequence and are connected to the terminals of the motor in alphabetical order U1, V1, and W1, the motor shaft rotates in a clockwise direction as viewed from the drive end.

The direction of rotation of the motor can be reversed if two connecting leads are interchanged. Connecting terminals are provided to connect the protective conductor.

When the motor is fitted with a brake or thermal motor protection, the connections are also made in the terminal box.

Diagram of connections for D/Y motor connection

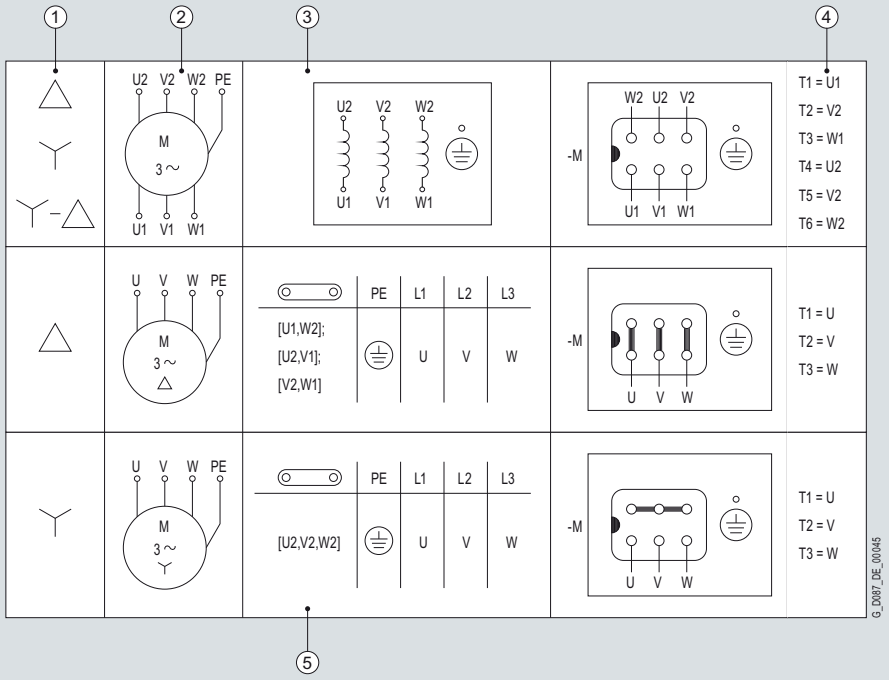

① Motor connection
② Circuit diagram symbol
③ Winding arrangement in the motor
④ Comparison:
Terminal designation acc. to NEMA MG1/
terminal designation acc. to IEC 60034-8
⑤ Location of the bridges on the terminal board and comparison of the line with the motor connection

Diagram of connections for Y motor connection

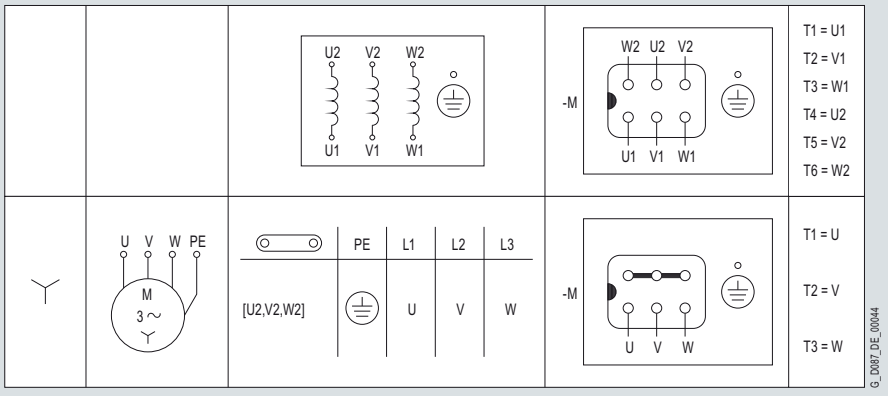

© Siemens AG 2011

Motor connection and terminal boxes (continued)

Diagram of connections for YY/Y motor connection

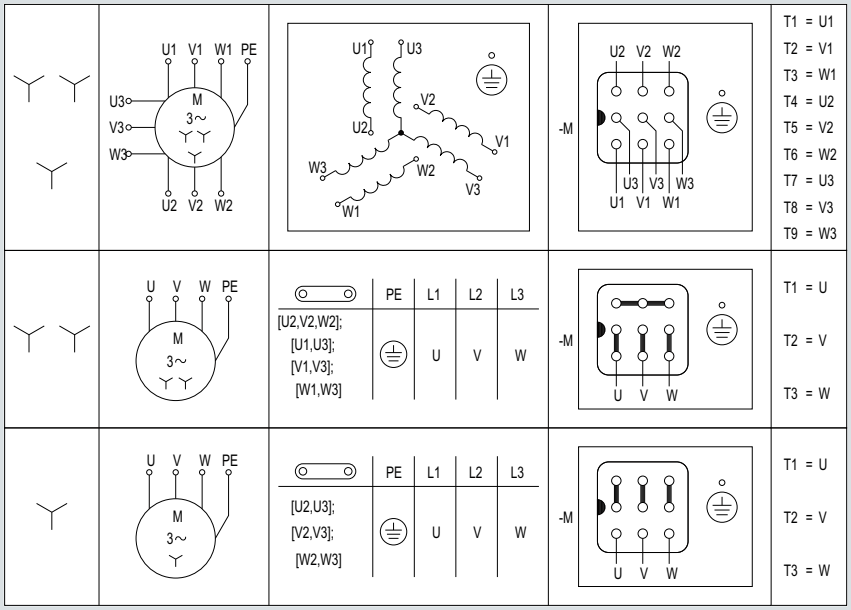

Diagram of connections for Y/YY motor connection (for 8/4-pole motors, T ~ n^2)

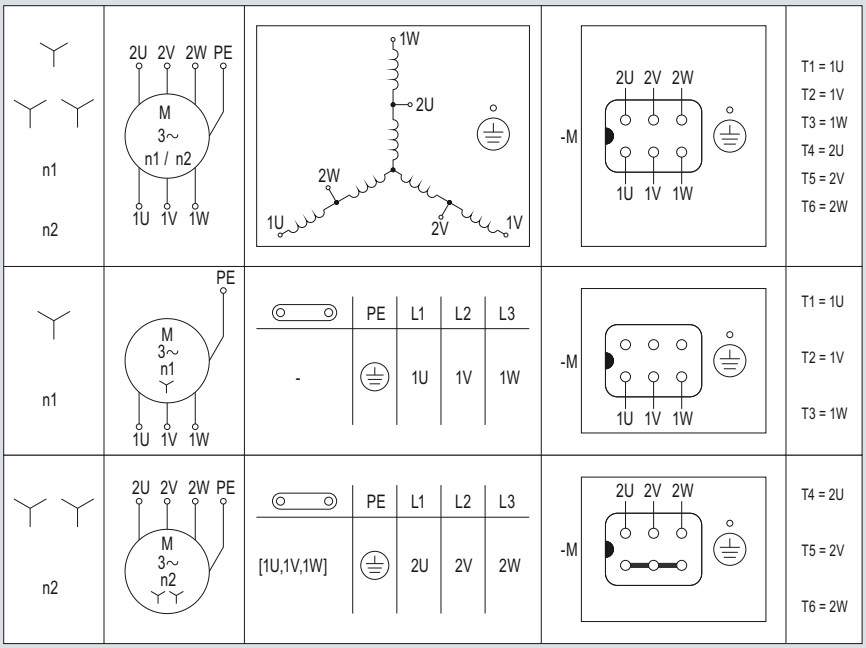

8

© Siemens AG 2011

Motor connection and terminal boxes (continued)

Line feeder cables

The line feeder cables must be dimensioned acc. to DIN VDE 0298. The number of required parallel (if applicable) feeder cables is determined by the max. connectable conductor cross-section, the type of cable, the cable installation, the ambient temperature, and the relevant permissible current acc. to DIN VDE 0298.

Terminal connection

The terminal board accommodates the connecting terminals that are connected to the leads to the motor windings.

The connecting terminals are designed so that up to size 160, the external (line) connections can be made without the need for cable lugs. From size 180 up, standard connection uses cable lugs.

Motor size	Number of cable entries	Terminal box material	Line feeder cable connection
63 ... 160L	2 holes with sealing plugs	Aluminum alloy	With or without cable lug
180M ... 225S			With cable lug
250M ... 315L		Gray cast iron	

Terminal boxes

Motor size	Terminals				Auxiliary terminals	
	Number	Contact screw thread	Max. connectable conductor	Cable entry	Number	Max. connectable conductor
			mm^2	Size		mm^2
63	6 / 9	M4	1.5 (2.5 with cable lug)	1xM25x1.5 + 1xM20x1.5	8	2.5
71						
80						
90S/L						
100L			4	2xM32x1.5	10	
112M						
132S/M			6			
160M/L		M5	16	2xM40x1.5		
180M/L	6	M6	25		8	
200L				2xM50x1.5		
225S/M		M8	35		2	
250M		M10	120	2xM63x1.5		
280S/M						
315S/M/L		M12	240			

© Siemens AG 2011

Motor plugs

ECOFAST motor plug system

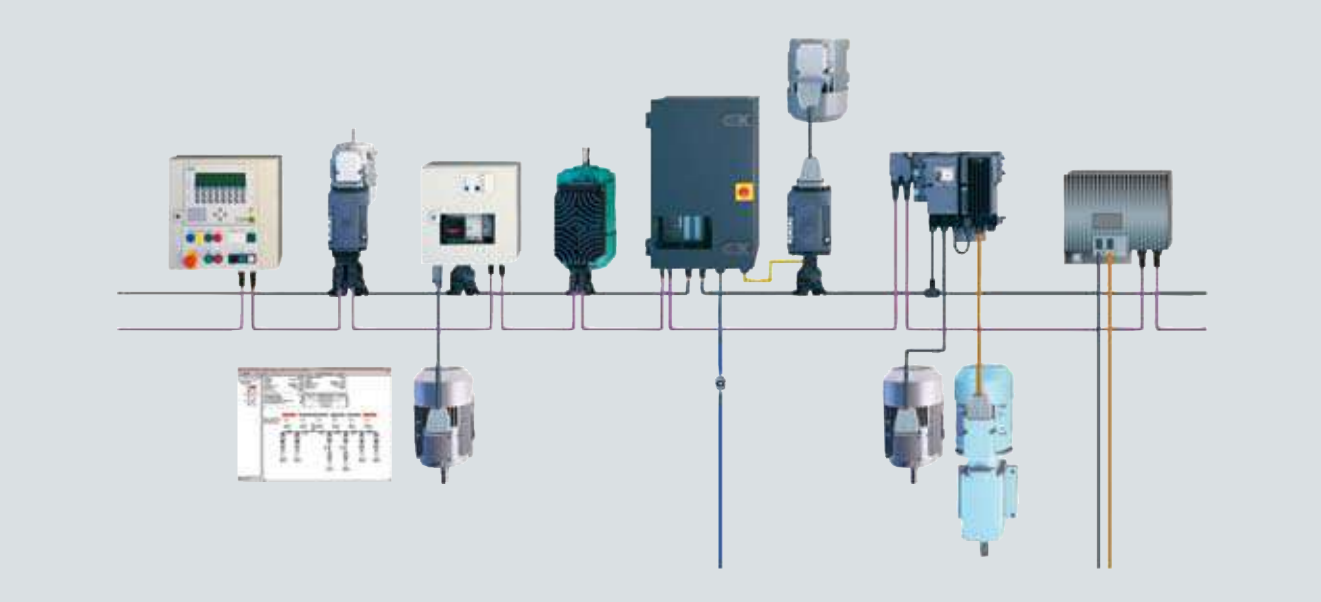

ECOFAST is a system which permits extensive decentralization and a modular structure for installation elements on the component level.

Motors can be supplied with an ECOFAST HAN 10E motor plug in the standard or EMV designs.*
An ECOFAST HAN 10B counterplug can also be supplied.

With the basic design, the ECOFAST motor plug is connected in position B (see also page 8/11). The dimensions depend on the motor size. Particularly if a brake with a manual brake release lever is used, a check must be performed to ensure that the motor plug does not collide with the manual brake release lever in either direction (toward the non-drive end or the drive end).

The main advantages of the ECOFAST motor plug over a terminal box with terminals are as follows:

- Fast mounting of peripherals belonging to the ECOFAST system
- Reduction of mounting and repair times for the end user
- No wiring errors due to plug technology
- Replacement of a geared motor without intervention in the electronics.

Main features of the ECOFAST motor plug

The motor plug is supplied ready for use and replaces the terminal box with terminal board. It comprises an angled plug housing, which can be rotated by 4 x 90°. A 10-pole (+ ground) male insert is used in the housing.

The winding connections and, optionally, the power supply for the brake and the signal lines for the thermistors are connected in the plug housing. The ECOFAST motor plug is compatible with the products of the ECOFAST field device system.

The motor connection (star or delta connection) is selected by the customer in the form of the counterplug used. All standard socket shells with a longitudinal interlock, size 10B, can be used as ECOFAST counterplugs.

The ECOFAST motor plug is available for motor sizes 63 to 132 and can be used for line voltages at the motor plug ≤ 500 V and nominal currents ≤ 16 A.

Technical data of the ECOFAST HAN 10E motor plug

Contacts	Number	Max. voltage	Max. current
		$U^{\sim}_{max.}$	$I_{max.}$
	10 + ⏚	**500 V**	**16 A**
Degree of protection	**IP65**		
Plug housing type	**"HAN 10B"** with 1 bracket		

* The HAN 10E motor plug complies with DESINA.

© Siemens AG 2011

Motor plugs (continued)

Connection assignment

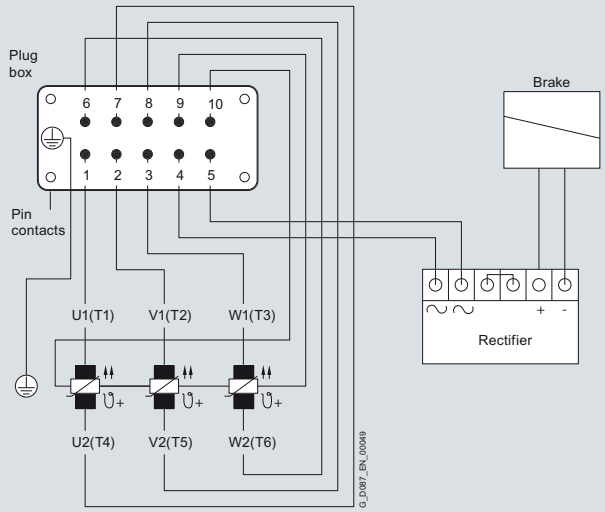

Dimensions of the motor plug

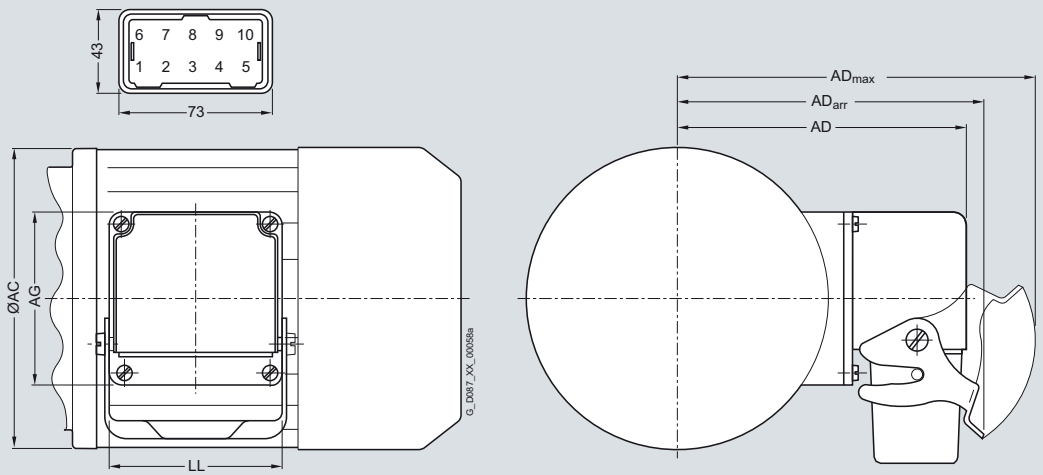

Order codes:

ECOFAST motor plug HAN 10E	**N04**
ECOFAST motor plug HAN 10E with ECOFAST counterplug HAN 10B	**N05**
ECOFAST motor plug HAN 10E, EMC design	**N06**
ECOFAST motor plug HAN 10E with ECOFAST counterplug HAN 10B, EMC design	**N07**

Motor size	LL	AG	AC	AD	AD_{arr}	AD_{max}
63	91	104.6	118.0	121	140	144
71	91	104.6	139.0	131	150	154
80	91	104.6	156.5	140	159	163
90	91	104.6	174.0	148	167	171
100	91	104.6	195.0	159	178	182
112	91	104.6	219.0	172	191	195
132	91	104.6	259.0	190	209	213

Further information on the ECOFAST system is available on the Internet at: http://www.siemens.com/ecofast

Motor plugs with customized connection assignment

Motor plugs are available with a different plug insert and customized connection assignment for motor sizes 63 to 132 on request.

© Siemens AG 2011

Versions for special environmental conditions

Motor-internal anti-corrosion protection

The exterior surfaces of the gearboxes and geared motors are coated with a high-quality paint. For certain applications, it may be necessary to apply a protective coating to the inner surfaces of the motor as well.

This version is not possible for worm geared motors S.

Order code:
Motor-internal anti-corrosion protection **N41**

External earthing

The standard IEC 60034 prescribes additional external earthing for motors of 100 kW and above. Motors of size 180 and above have this additional external earthing as a standard feature; for sizes 71 to 160 it is available as an option.

Order code:
External earthing **N53**

Maximum conductor connection of external earthing

Motor size	Thread size	Conductor cross-section with grounding strap F_eZ_n mm^2
63 ... 90	M4	Not possible
100 ... 112	M5	
132 ... 160	M6	
180	M6	
200	M8 or 2xM6	
225	2xM8	120 (30 mm x 4 mm)
250		
280		
315		

© Siemens AG 2011

Voltages, frequencies and outputs

Standard voltages

IEC 60034-1 differentiates between category A (combination of voltage deviation ±5 % and frequency deviation ±2 %) and category B (combination of voltage deviation ±10 % and frequency deviation +3/–5 %) for voltage and frequency fluctuations. The motors can supply their rated torque in both category A and category B.

In category A, the temperature rise is approx. 10 K higher than during normal operation. According to the standard, longer operation is not recommended for category B. The selection and ordering data state the rated current at 400 V and, where applicable, at 460 V.

Non-standard voltages

For some non-standard voltages at 50 or 60 Hz, order codes are specified. They are ordered by specifying the code digit **9** for voltage in the 13th position of the order number and the appropriate order number suffix.

For voltages and rated powers outside the range, please contact us.

Possible voltages for motors

Voltages	Connection Operation	Frequency	Power rating[1]	Order No. 13th position	Order No. suffix	63	71	80	90	100	112	132	160	180	200	225	250	280	315
Motors for line-fed operation																			
Voltages for 50 Hz																			
230 / 400 V	Δ / Y	50 Hz	P_{50}	**1**	**–**	✓	✓	✓	✓	✓	✓								
400 / 690 V	Δ / Y	50 Hz	P_{50}	**1**	**–**							✓	✓	✓	✓				
220 / 380 V ±10 %	Δ / Y	50 Hz	P_{50}	**9**	**N7F**	✓	✓	✓	✓	✓	✓								
380 / 660 V ±10 %	Δ / Y	50 Hz	P_{50}	**9**	**N1H**							✓	✓	✓	✓				
240 / 415 V ±10 %	Δ / Y	50 Hz +3 / -5 %	P_{50}	**9**	**N1J**	✓	✓	✓	✓	✓	✓								
415 V ±10 %	Δ	50 Hz +3 / -5 %	P_{50}	**9**	**N9X**							✓	✓	✓	✓				
500 V	Y	50 Hz	P_{50}	**9**	**N1C**	✓	✓	✓	✓	✓									
500 V	Δ	50 Hz	P_{50}	**9**	**N1D**						✓	✓	✓	✓	✓	✓	✓	✓	✓
Voltages for 50 // 60 Hz																			
230 / 400 V	Δ / Y	50 Hz	P_{50}	**6**	**–**	✓	✓	✓	✓	✓	✓								
460 V	Y	60 Hz	P_{50}																
400 / 690 V	Δ / Y	50 Hz	P_{50}	**6**	**–**							✓	✓	✓	✓	✓	✓	✓	✓
460 V	Δ	60 Hz	P_{50}																
Voltages for 50 // 60 Hz; increased power rating at 60 Hz																			
230 / 400 V	Δ / Y	50 Hz	P_{50}	**2**	**–**	✓	✓	✓	✓	✓	✓								
460 V	Y	60 Hz	1.2 x P_{50}																
400 / 690 V	Δ / Y	50 Hz	P_{50}	**2**	**–**							✓	✓	✓	✓	✓	✓	✓	✓
460 V	Δ	60 Hz	1.2 x P_{50}																
Voltages for 60 Hz																			
230 / 400 V	Δ / Y	60 Hz	P_{50}	**9**	**N4A**		✓	✓	✓	✓	✓								
400 / 690 V	Δ / Y	60 Hz	P_{50}	**9**	**N4B**							✓	✓	✓	✓	✓	✓	✓	✓
Voltages for brake motors with DC side disconnection by current registration																			
400 V	Y	50 Hz	P_{50}	**9**	**N6B**		✓	✓	✓	✓	✓								
400 V	Δ	50 Hz	P_{50}	**9**	**N6C**						✓	✓	✓	✓	✓				
Voltages for motors with 2 pole numbers																			
380 ... 420 V	Y / YY	50 Hz	P_{50}	**4**	**–**						✓	✓	✓	✓	✓	✓	✓	✓	
380 ... 420 V	Δ / YY	50 Hz	P_{50}				✓	✓	✓	✓	✓	✓	✓	✓	✓				
380 ... 420 V	Δ / YY	50 Hz	P_{50}	**5**	**–**		✓	✓	✓	✓	✓	✓	✓	✓	✓	•	•	•	
440 ... 480 V	Δ / YY	60 Hz	1.2 x P_{50}																
Motors for USA, Canada																			
Voltages for motors to NEMA standards																			
460 V	Y	60 Hz	P_{50}	**9**	**N4N**		✓	✓	✓	✓	✓								
460 V	Δ	60 Hz	P_{50}	**9**	**N4J**							✓	✓	✓	✓	✓	✓	✓	✓
Voltages for motors to NEMA standards; increased power rating at 60 Hz																			
460 V	Y	60 Hz	1.2 x P_{50}	**9**	**N5C**	✓	✓	✓	✓	✓	✓								
460 V	Δ	60 Hz	1.2 x P_{50}	**9**	**N5D**							✓	✓	✓	✓	✓	✓	✓	✓
440 ... 480 V	Δ / YY	60 Hz	1.2 x P_{50}	**9**	**N5K**		✓	✓	✓	✓	✓	✓	✓	✓	✓				

1) P_{50} / P_{87} = Rated power at 50 Hz or 87 Hz
2) Frequency limit
• Available on request

For motors which can be operated in both a delta and a star connection, Y-Δ connection is possible at start.

© Siemens AG 2011

Voltages, frequencies and outputs (continued)

Possible voltages for motors

Voltages	Connection Operation	Frequency	Power rating[1]	Order No. 13th position	Order No. suffix	63	71	80	90	100	112	132	160	180	200	225	250	280	315
Motors for USA, Canada (continued)																			
Voltages for motors to UL-R standards																			
230 / 460 V	YY / Y	60 Hz	P_{50}	**9**	**N4F**	✓	✓	✓	✓	✓	✓	✓	✓						
460 V	Δ	60 Hz	P_{50}	**9**	**N4J**									✓	✓	✓	✓		
Voltages for motors to CSA standards																			
575 V	Y	60 Hz	P_{50}	**9**	**N4G**	✓	✓	✓	✓	✓	✓	✓							
575 V	Δ	60 Hz	P_{50}	**9**	**N4H**								✓	✓	✓	✓	✓		
Voltages for motors to UL-R and CSA standards																			
230 V / 460 V	YY / Y	60 Hz	P_{50}	**9**	**N4F**	✓	✓	✓	✓	✓	✓	✓	✓						
460 V	Δ	60 Hz	P_{50}	**9**	**N4J**									✓	✓	✓	✓		
575 V	Y	60 Hz	P_{50}	**9**	**N4G**	✓	✓	✓	✓	✓	✓	✓							
575 V	Δ	60 Hz	P_{50}	**9**	**N4H**								✓	✓	✓	✓	✓		
Voltages for inverter-fed operation																			
400 V	Y	50 Hz [2]	P_{50}	**9**	**N6B**	✓	✓	✓	✓	✓	✓								
400 V	Δ	50 Hz [2]	P_{50}	**9**	**N6C**							✓	✓	✓	✓	✓	✓	✓	✓
230 / 400 V	Δ	50 Hz [2] 87 Hz	P_{50} / P_{87}	**9**	**N6A**	✓	✓	✓	✓	✓	✓	✓	✓	✓	✓	✓	✓		
500 V	Y	50 Hz	P_{50}	**9**	**N1C**		✓	✓	✓	✓									
500 V	Δ	50 Hz	P_{50}	**9**	**N1D**						✓	✓	✓	✓	✓	✓	✓	✓	
690 V	Y	50 Hz	P_{50}	**9**	**N6G**		✓	✓	✓	✓	✓	✓	✓	✓	✓	✓	✓	✓	
Special voltages for motors to CE / IEC standards																			
Voltages for 50 Hz																			
230 / 400 V	Δ / Y	50 Hz	P_{50}	**9**	**N1A**							✓	•	•	•	•	•	•	•
400 / 690 V	Δ / Y	50 Hz	P_{50}	**9**	**N1B**		•	•	•	•	✓								
Voltages for 50 // 60 Hz																			
230 / 400 V	Δ / Y	50 Hz	P_{50}	**9**	**N3T**							✓	•	•	•	•	•	•	•
460 V	Y	60 Hz	P_{50}																
400 / 690 V	Δ / Y	50 Hz	P_{50}	**9**	**N3U**		•	•	•	•	✓								
460 V	Δ	60 Hz	P_{50}																
Voltages for 50 // 60 Hz; increased power rating at 60 Hz																			
230 / 400 V	Δ / Y	50 Hz	P_{50}	**9**	**N2A**							✓	•	•	•	•	•	•	•
460 V	Y	60 Hz	1.2 x P_{50}																
400 / 690 V	Δ / Y	50 Hz	P_{50}	**9**	**N2B**		•	•	•	•	✓								
460 V	Δ	60 Hz	1.2 x P_{50}																

1) P_{50} / P_{87} = Rated power at 50 Hz or 87 Hz

2) Frequency limit

• Available on request

8

© Siemens AG 2011

Motor protection

A distinction is made between current-dependent and temperature-dependent protection devices for motors.

Overview of motor protection

Motor protection	Order code	Motor size													
		63	71	80	90	100	112	132	160	180	200	225	250	280	315
PTC thermistor for disconnection	**M10**	✓	✓	✓	✓	✓	✓	✓	✓	✓	✓	✓	✓	✓	✓
PTC thermistor for warning and disconnection [1]	**M11**		✓	✓	✓	✓	✓	✓	✓	✓	✓	✓	✓	✓	✓
Winding thermostat for disconnection [2]	**M12**	✓	✓	✓	✓	✓	✓	✓	✓	✓	✓	✓	✓	✓	✓
Winding thermostat for warning and disconnection [1] [2] [3]	**M13**		✓	✓	✓	✓	✓	✓	✓	✓	✓				
KTY 84-130 temperature sensor [1] [3]	**M16**		✓	✓	✓	✓	✓	✓	✓	✓	✓	✓	✓	✓	✓

[1] Not possible for worm geared motors S
[2] Not possible for inverter-fed operation
[3] Not possible for pole-changing motors

Current-dependent protection devices

Fuses are only used to protect line cables in the event of a short-circuit. They are not suitable for providing the motor with overload protection. The motors are usually protected by thermally delayed overload protection devices (circuit breakers for motor protection or overload relays).

This protection is current-dependent and is particularly effective in the case of a locked rotor. For standard duty with short startup times and starting currents that are not excessive and for low numbers of startings, motor protection switches provide adequate protection. Motor protection switches are not suitable for heavy starting duty or high numbers of startings. Differences in the thermal time constants for the protection devices and the motor result in unnecessary early tripping when the protection switch is set to rated current.

Temperature-dependent protection devices

Temperature-dependent protection devices are integrated in the motor winding and can be implemented as **thermistors** and **temperature switches**.

The number of temperature-dependent protection devices depends on the number of windings and their function.

The warning is normally set to 10 K below the tripping temperature. The rated response temperatures (NAT) of the protection devices depend on the temperature class of the motors.

Number of windings	Example	Function	Number of temperature-dependent protection devices	Number of terminals
1	Motors with one pole number	Disconnection	3	2 (63 ... 315L)
		Warning and disconnection	6	3 (63 ... 200L) 4 (225S ... 315L)
	Pole-changing motors with two pole numbers in a 1:2 ratio	Disconnection	3	2 (63 ... 315L)
		Warning and disconnection	6	3 (63 ... 200L) 4 (225S ... 315L)
2	All other pole-changing motors	Disconnection	6	2
		Warning and disconnection	12	3 (63 ... 200L) 4 (225S ... 315L)

© Siemens AG 2011

Motor protection (continued)

Thermistor

The thermistor is a **positive temperature coefficient** (PTC) thermistor which offers comprehensive protection against thermal overloading of the motor. The temperature of the winding can be accurately monitored thanks to its low heating capacity and the excellent heat contact with the winding. The PTC thermistor exhibits a sudden change in resistance when a rated response temperature (NAT) is reached.
A tripping unit is used to evaluate the change in resistance and open auxiliary circuits via auxiliary contacts.

The switching hysteresis of the PTC thermistor is low, which facilitates fast restarting of the drive.

Motors with this type of protection are recommended for heavy duty starting, switching duty, extreme changes in load, high ambient temperatures, or fluctuating supply systems.

Order codes:

PTC thermistor for disconnection	**M10**
PTC thermistor for warning and disconnection	**M11**

In order to achieve full thermal protection it is necessary to combine a thermally delayed overcurrent release and a PTC thermistor.

With PTC thermistors for warning and disconnection, a tripping unit is required for 3 terminals for both functions.

Diagram of connections

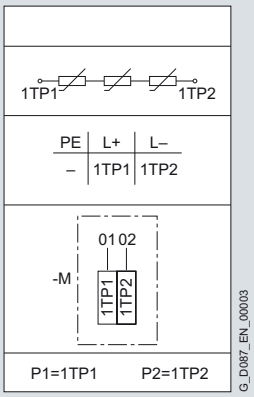

1TP1 (P1) – 1TP2 (P2):
$U_{max.}$ = 2.5 V

Characteristic

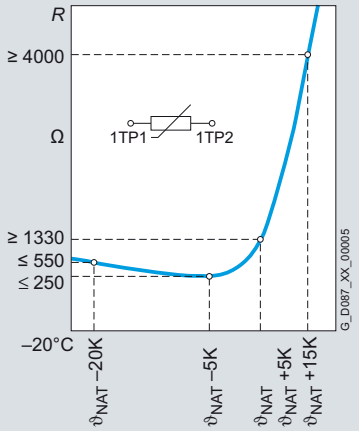

Diagram of connections and characteristic for thermistor

Temperature switch

The temperature switch is a **winding thermostat** (break contact) and is suitable as a protection device for slowly increasing motor temperatures. When the rated response temperature (NAT) is reached, it can open an auxiliary circuit. When the motor temperature decreases, the winding thermostat closes again as soon as the temperature falls significantly below the rated response temperature.

When the motor current rises quickly (e.g. with a locked rotor), these switches are not suitable due to their large thermal time constants.

Order codes:

Winding thermostat for disconnection	**M12**
Winding thermostat for warning and disconnection for sizes 71 to 200	**M13**

Diagram of connections

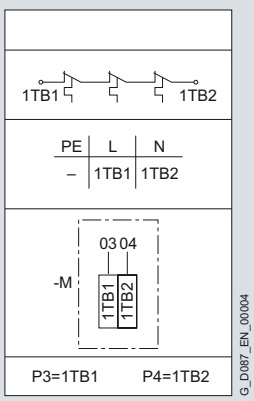

1TB1 (P3) – 1TB2 (P4):
$U_{max.}$ = 250 V
$I_{max.}$ = 1.6 A

Characteristic

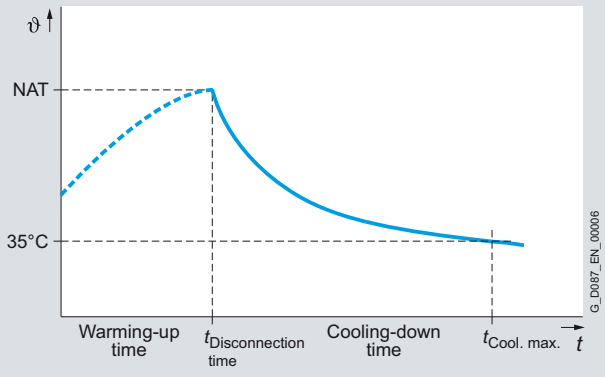

Diagram of connections and characteristic for temperature switch

8

© Siemens AG 2011

Motor protection (continued)

KTY 84-130 temperature sensor

This sensor is a PTC thermistor that changes its resistance depending on temperature in accordance with a defined curve. The KTY 84-130 temperature sensor can be used for detecting the motor temperature with inverter-fed operation.

Some inverters determine the motor temperature using the resistance of the temperature sensor. They can be set to a required temperature for outputting warnings and shutting down.

Motor temperature detection with embedded KTY 84-130 temperature sensor.

Order code:

KTY 84-130 temperature sensor	**M16**

Diagram of connections

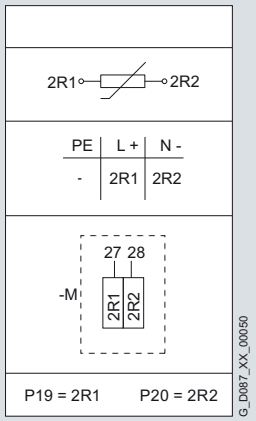

Characteristic

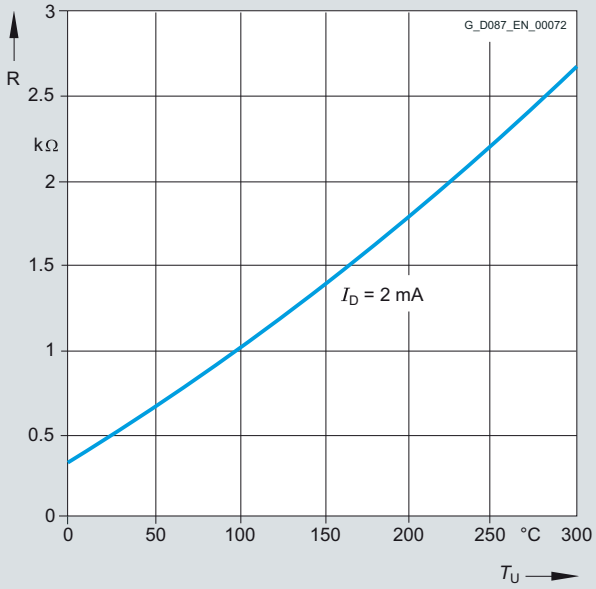

Diagram of connections and characteristic for temperature sensor

Anti-condensation heating

Anti-condensation heaters can be fitted to motors whose windings are exposed to the ambient climate, e.g. stationary motors in a damp environment or motors subjected to considerable temperature fluctuations. Anti-condensation heating must not be switched on during operation.

Order codes:

Supply voltage 230 V (1~)	**M41**
Supply voltage 115 V (1~)	**M40**

Anti-condensation heating is not possible for worm geared motors S.

Instead of an anti-condensation heater, another possibility (at no extra cost) is the connection of a voltage that is approximately 4 to 10 % of the rated motor voltage to stator terminals U1 and V1; 20 to 30 % of rated motor current is sufficient to heat the motor.

Technical data

Motor size	Heating capacity in watts (W)
71 [1]	12.5
80 [1]	25
90 … 112	50
132 … 160	100
180 … 200	55
225 … 250	92
280 … 315	109

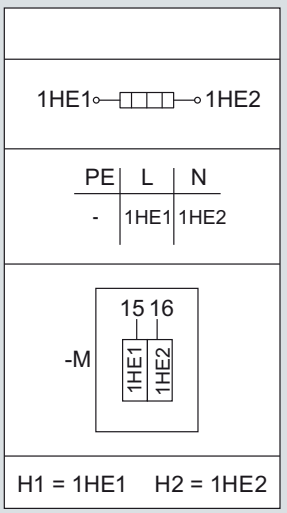

Diagram of connections for anti-condensation heating

[1] Not possible for worm geared motors S

© Siemens AG 2011

Windings and insulation

DURIGNIT IR 2000 insulation

The DURIGNIT IR 2000 insulating system consists of high-quality enamel wires and insulating sheeting in conjunction with solvent-free resin impregnation.

This ensures that these motors will have a high mechanical and electrical strength, high service value, and a long service life. The insulating system protects the winding to a large degree against aggressive gases, vapors, dust, oil, and increased air humidity. It can withstand the usual vibration stressing.

The insulation is suitable up to an absolute air humidity of 30 g of water per m^3 of air. Moisture condensation should be prevented from forming on the winding. Please enquire if higher values are required.

Winding and insulation design with regard to temperature class and air humidity

All motors have temperature class 155 (F) insulation. Utilization is to temperature class 130 (B). Temperature class 155 (F) is available for the motors LA71ZMD4, LA90ZLB4, and LA132ZMP4.

The 4-pole, 2-pole and 6-pole motors of sizes 71 to 200 can optionally have temperature class 180 (H) insulation. This design is not possible for worm geared motors S.

Order code:

Temperature class 180 (H) **M08**

The following applies to all motors:
The motors can withstand 1.5 times the rated current at rated voltage and frequency for two minutes (IEC 60034).

Insulation of the motor winding

Permissible voltage stress

More stress is placed on the insulation of the motor winding with inverter-fed operation than with operation on the mains.
The voltage stress also depends on the type of inverter used. The inverter subjects the motor winding to wear and tear mainly by quickly applying voltage pulses. The maximum voltage is influenced by the rise time of the pulses, the cable length, and the type of cable used between the motor and the inverter.

Output filters on the inverter can reduce the maximum motor voltage to uncritical values. When using output filters, the control type, pulse frequency, output frequency, and implementable limit torque need to be observed, among other factors.

With inverters without output filters, impermissible voltage peaks can occur even with a relatively short motor cable. Regenerative operation, in particular, can stress the motor insulation.
This stress occurs predominantly during vertical motion and is dependent on the line voltage, inverter type, cable length, and cable type.

The curves show the permissible voltage stress for the motors available for selection.

Limit curves of the pulse voltage U_{pk}, measured between the motor terminals of two phases as a function of the rise time

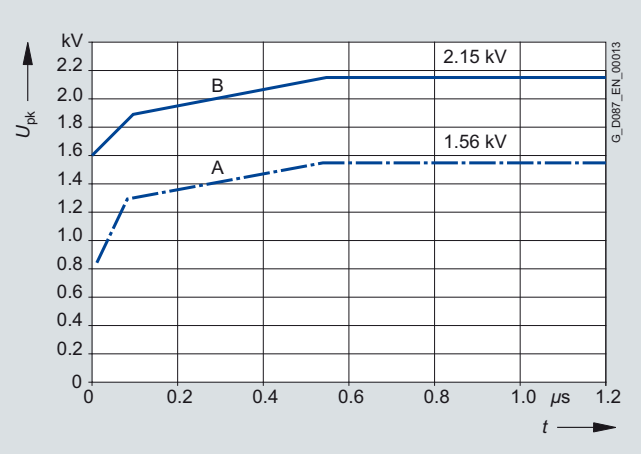

A Standard insulation
B Reinforced insulation

Inverter-fed operation up to 480 V +5 % line voltage

The standard insulation of the LA and LG motors is designed such that operation on the inverter is possible at line voltages up to 480 V + 5 %. This also applies for operation with a pulse-controlled AC inverter with voltage rise times of $t_S > 0.1\,\mu s$ at the motor terminals (IGBT transistors).

Inverter-fed operation up to 690 V +5 % line voltage

The LA and LG motors are available for operation on the inverter with supply voltages of up to 690 V + 5 % with higher insulation resistance.

Order code:

Special insulation for inverter-fed operation up to 690 V +5 % **M09**

8

© Siemens AG 2011

Increased protection of the winding against humidity and acid

Increased air humidity / temperature with 30 to 60 g water per m^3 of air

The motors in the standard range are designed for up to 30 g water per m^3. A version can be ordered for increased air humidity of between 30 and 60 g water per m^3 of air depending on the temperature as listed in the table below.

Please contact us if order code **N54** is to be combined with additional components (e.g. rotary pulse encoders, brakes).

Increased protection against humidity and acid is not possible in conjunction with worm geared motors S.

Order code:

Increased protection of the winding against humidity and acid **N54**

Environment - air humidity

Relative humidity	**Temperature**						
	20 °C	30 °C	40 °C	50 °C	60 °C	70 °C	80 °C
10 %	2	3	5	8	13	20	29
15 %	3	5	8	12	19	30	44
20 %	3	6	10	17	26	39	58
25 %	4	8	13	21	32	49	
30 %	5	9	15	25	39	59	
35 %	6	11	18	29	45		
40 %	7	12	20	33	52		
45 %	8	14	23	38	58		
50 %	9	15	26	41			
55 %	10	17	28	46			
60 %	10	19	31	50			
65 %	11	20	33	54			
70 %	12	21	36	58			
75 %	13	23	38				
80 %	14	24	41				
85 %	15	26	43				
90 %	16	27	46				
95 %	16	29	49				
100 %	17	30	51				

© Siemens AG 2011

Brakes

The brakes are designed as spring-operated brakes.
When the brake is mounted, it increases the length of the motor.
Please enquire if motors with brakes are to be operated below freezing point or in very humid environments (e.g. close to the sea) with long standstill times.

Overview of possible module technology in conjunction with brake

	Motor plug	Encoder system					Backstop	Self ventilation Forced ventilation	2nd shaft extension
		Incremental encoder	Absolute encoder	Resolver	Encoder under cover Without canopy	Encoder accessories			
Brake	✓	✓	✓		✓	✓		✓	✓
Manual release [3]	✓	✓	✓		✓	✓		✓	✓
• Without locking mechanism	✓	✓	✓		✓	✓		✓	✓
• With locking mechanism [4] [5]	✓	✓	✓		✓	✓		✓	✓
Microswitch	✓	✓	✓		✓	✓		✓	✓
• Release monitoring [1]	✓	✓	✓		✓	✓		✓	✓
• Wear monitoring [2]									

[1] Not in conjunction with L4, L8, L16
[2] On request
[3] Standard from SH225
[4] Standard for KFB brake
[5] Not in conjunction with worm geared motors S

Design and mode of operation

The brake takes the form of a spring-operated single-disk brake with two friction surfaces. When the brake is at zero current, a braking torque is generated using several springs.
The brake is released electromagnetically. When the motor brakes, the rotor which can be axially shifted on the hub or the shaft is pressed via the armature disk against the friction surface by means of the springs. In the braked state, there is an air gap S_{Gap} between the armature disk and the solenoid component.
To release the brake, the solenoid is energized with DC voltage. The resulting magnetic force pulls the armature disk against the spring force on to the solenoid component.
The spring force is then no longer applied to the rotor, which can rotate freely.

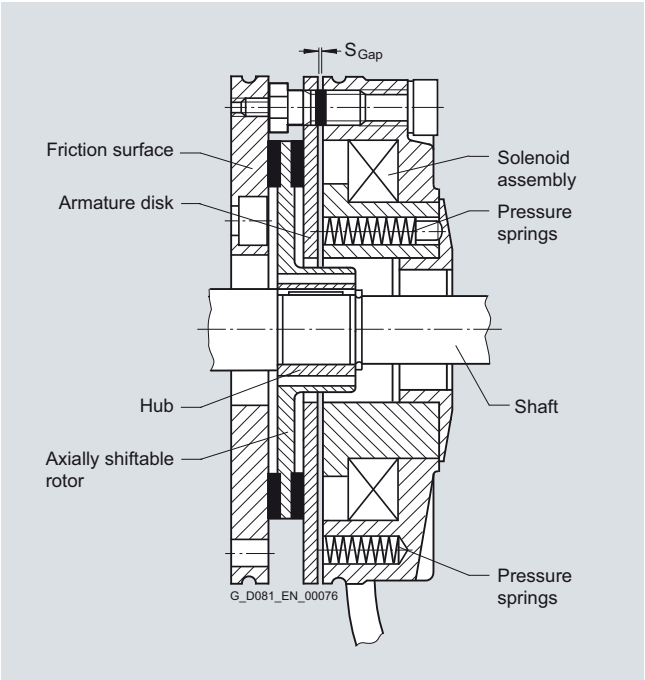

L brake

© Siemens AG 2011

Additional components

Brakes (continued)

Special features of KFB brake

- High degree of protection IP65
- Corrosion-resistant in sea water and in the tropics
- The brake is a dynamic brake, not simply a holding brake. For this reason there is less wear, especially in the case of emergency stops (commissioning).
- High wear reserves – repeated stepless air gap readjustment is possible. This results in an extremely long service life and low service and operating costs.
- The function and wear can be monitored with microswitches and proximity switches.
  An on / off microswitch is used as standard.
- Fully functional brake for housing acceptance test.
  Visual inspection of brake is possible during operation.
- The brake (air gap) can be adjusted in the factory, for example, and mounted on the drive motor without further adjustments. The wear parts can be replaced without great outlay. After the housing has been opened (three screws), it is easy to replace the friction plate. It is not necessary to disassemble the entire brake.

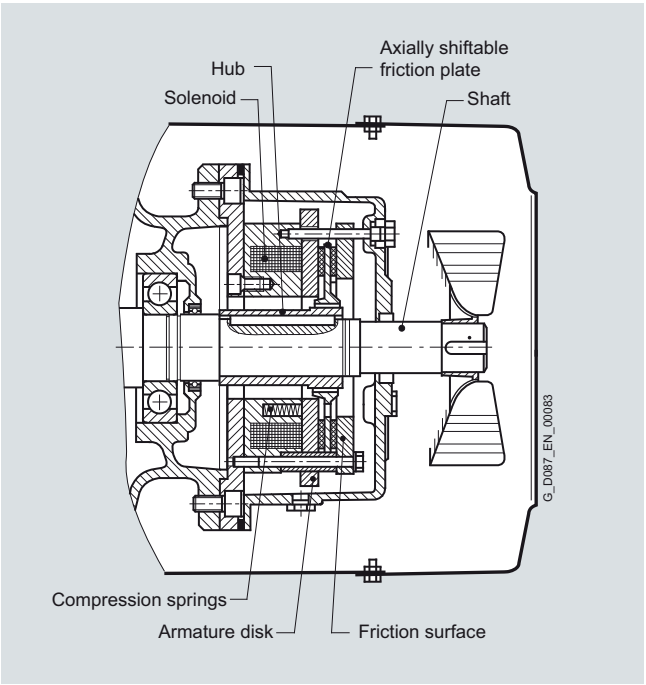

KFB brake

Using the brakes

The brakes can be used as working brakes or holding brakes. A holding brake is suitable for holding masses and loads in a fixed position. A working brake is also capable of decelerating masses and loads.

© Siemens AG 2011

Brakes (continued)

Brake assignment

The following tables provide an overview of which brakes are available for the individual motor sizes.

L brakes for motors up to size 200

Brake type	Braking torque	Order code	Motor size									
	Nm		63	71	80	90	100	112	132	160	180	200
L4/1.4	1.4	**B01**	✓	✓	✓ 1)							
L4/2	2.0	**B02**	✓	✓	✓ 1)							
L4/3	3.0	**B03**	✓	✓	✓ 1)							
L4	4.0	**B00**	✓	❍	✓ 1)							
L4/5	5.0	**B57**	✓	✓	✓ 1)							
L8/3	3.0	**B05**		✓ 1)	✓	✓						
L8/4	4.0	**B06**		✓ 1)	✓	✓						
L8/5	5.0	**B07**		✓ 1)	✓	✓						
L8/6.3	6.3	**B08**		✓ 1)	✓	✓						
L8	8.0	**B04**		✓ 1)	❍	✓						
L8/10	10.0	**B09**		✓ 1)	✓	✓						
L16/8	8.0	**B14**			✓ 1)	✓	✓					
L16/10	10.0	**B11**			✓ 1)	✓	✓					
L16/13	13.0	**B12**			✓ 1)	✓	✓					
L16	16.0	**B10**			• 1)	❍	✓					
L16/20	20.0	**B13**				✓	✓					
L32/14	14.0	**B66**				✓	✓	✓				
L32/18	18.0	**B16**				✓	✓	✓				
L32/23	23.0	**B17**				✓	✓	✓				
L32	32.0	**B15**				✓	❍	❍				
L32/40	40.0	**B18**					✓	✓				
L60/25	25.0	**B67**					✓	✓				
L60/38	38.0	**B20**					✓	✓				
L60/50	50.0	**B21**					✓	✓				
L60	60.0	**B19**						✓				
L80/25	25.0	**B24**							✓			
L80/35	35.0	**B25**							✓			
L80/50	50.0	**B26**							✓			
L80/63	63.0	**B27**							✓			
L80	80.0	**B22**							❍			
L80/100	100.0	**B23**							✓			
L150/60	60.0	**B31**							✓	✓		
L150/80	80.0	**B32**							✓	✓		
L150/100	100.0	**B29**							✓	✓		
L150/125	125.0	**B30**							✓	✓		
L150	150.0	**B28**							✓	❍		
L260/100	100.0	**B34**								✓	✓	✓
L260/145	145.0	**B35**								✓	✓	✓
L260/180	180.0	**B36**								✓	✓	✓
L260/200	200.0	**B37**								✓	✓	✓
L260/240	240.0	**B38**								✓	✓	✓
L260	260.0	**B33**								✓	❍	❍
L260/315	315.0	**B58**									✓	✓
L400/265	265.0	**B40**										✓
L400/300	300.0	**B41**										✓
L400/360	360.0	**B42**										✓
L400	400.0	**B39**										✓
L400/600	600.0	**B59**										•

❍ Standard assignment
✓ Working brake and holding brake
• Can only be used as a holding brake
1) Not in conjunction with worm geared motors S

© Siemens AG 2011

Brakes (continued)

L and KFB brakes for motors of size 225 and above

Brake type	Braking torque	Order code	Motor size				
	Nm		225	250	280	315S	315M
L400/265	265	**B40**	✓				
L400/300	300	**B41**	✓				
L400/360	360	**B42**	✓				
L400	400	**B39**	❍				
L400/600	600	**B59**	✓				
KFB63/510	510	**B49**	✓	✓			
KFB63	630	**B48**	✓	❍			
KFB63/710	710	**B50**	✓	✓			
KFB100/630	630	**B60**		✓	✓	✓	✓
KFB100/725	725	**B61**		✓	✓	✓	✓
KFB100/820	820	**B62**		✓	✓	✓	✓
KFB100	1 000	**B52**			❍	❍	❍
KFB160/1000	1 000	**B55**					✓
KFB160/1300	1 300	**B56**					✓
KFB160	1 600	**B54**					✓

❍ Standard assignment
✓ Working brake and holding brake

Brake options

Options	Brake size											
	L4	**L8**	**L16**	**L32**	**L60**	**L80**	**L150**	**L260**	**L400**	**KFB63**	**KFB100**	**KFB160**
Without rectifier	✓	✓	✓	✓	✓	✓	✓	✓	✓	✓	✓	✓
Rectifier for disconnection at the AC and DC sides	✓	✓	✓	✓	✓	✓	✓	✓	✓	✓	✓	✓
Function rectifier for fast brake release and application	✓ [1]	✓ [1]	✓	✓	✓	✓	✓	✓	✓	-	-	-
Standard friction lining	✓	✓	✓	✓	✓	✓	✓	✓	✓	✓	✓	✓
Wear-resistant friction lining	✓	✓	✓	✓	✓	✓	✓	✓	✓	-	-	-
Microswitch for release monitoring	-	-	-	✓	✓	✓	✓	✓	✓	❍	❍	❍
Microswitch for wear monitoring	-	-	-	✓	✓	✓	✓	✓	✓	✓	✓	✓

❍ Standard version
[1] Not possible for worm geared motors S

© Siemens AG 2011

Brakes (continued)

Brake options

Options	Motor size												
	63 … 200									225 ... 315			
	Brake size												
	L4	L8	L16	L32	L60	L80	L150	L260	L400	L400	KFB63	KFB100	KFB160
Manual brake release	✓	✓	✓	✓	✓ 1)	✓	✓	✓	✓	❍	❍	❍	❍
Manual brake release with locking mechanism	✓ 3)	✓ 3)	✓	✓	✓ 1)	✓	✓	✓	✓	✓	❍	❍	❍
Standard anti-corrosion protection	❍	❍	❍	❍	❍	❍	❍	❍	❍	❍	❍	❍	❍
Basic anti-corrosion protection	✓	✓	✓	✓	✓	✓	✓	✓	✓	✓	✓	✓	✓
Increased anti-corrosion protection	✓	✓	✓	✓	✓	✓	✓	✓	✓	-	-	-	-
Enclosed brake	✓	✓	✓	✓	✓	✓	✓	✓ 2)	✓	✓	✓	✓	✓
Enclosed brake with condensation drain hole	✓	✓	✓	✓	✓	✓	✓	✓ 2)	✓	-	-	-	-

1) Not possible for LA100
2) Not possible for LG200 with standard anti-corrosion protection
3) Not possible for worm geared motors S

❍ Standard version

Connecting the brake

In the case of sizes 63 to 200, the motor's main terminal box contains connecting terminals for connecting the brake. Motors of sizes 225 to 315 are equipped with an additional terminal box on the side of the main terminal box that is used specifically for connection of the brake.

With AC brake voltages, the AC voltage is connected to the two free rectifier terminals.

The brake can be released when the motor is at a standstill by separately exciting the solenoid. In this case, an AC voltage must be connected to the rectifier terminals. The brake remains released as long as this voltage is present.

The rectifier is protected against overvoltages by varistors in the input and output circuits.

With DC brake voltages, the DC voltage for the brake's excitation winding is connected to two terminals. See the circuit diagrams below.

Function diagram for brake switched on the AC side

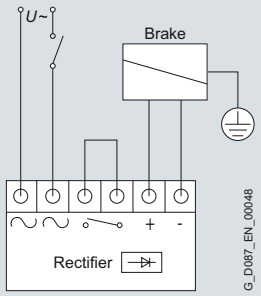

Diagram of connections with AC control voltage

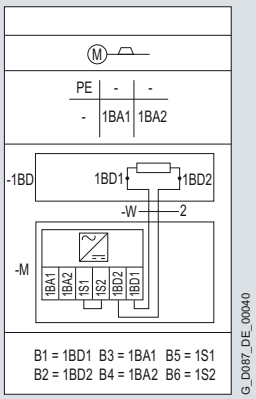

Function diagram for brake switched on the DC ***and*** AC sides

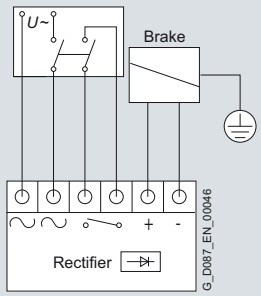

8

© Siemens AG 2011

Brakes (continued)

Diagram of connections with DC control voltage

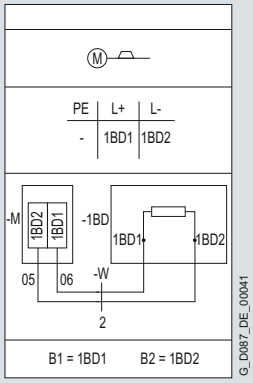

Supply voltages

The following supply voltages are available for brakes:

Supply voltage	Order code	Motor size												
		63 … 200									225 … 315			
		L4	L8	L16	L32	L60	L80	L150	L260	L400	L400	KFB63	KFB100	KFB160
DC voltages														
24 V DC ±10 %	**C66**	✓	✓	✓	✓	✓	✓	✓	✓	✓	✓	✓	✓	✓
92 … 110 V DC	**C52**	✓	✓	✓	✓	✓	✓	✓	✓	✓				
170 … 200 V DC	**C53**	✓	✓	✓	✓	✓	✓	✓	✓	✓				
184 … 218 V DC	**C64**	✓	✓	✓	✓	✓	✓	✓	✓	✓				
AC voltages with half-wave rectifier														
48 … 58 V AC	**C70 + C32** [1]	✓	✓	✓	✓	✓	✓							
48 … 58 V AC	**C70 + C30** [1]							✓						
190 … 240 V AC	**C46 + C30** [1]	✓	✓	✓	✓	✓	✓	✓	✓	✓				
400 V AC	**C67 + C30** [1]										✓	✓	✓	✓
380 … 440 V AC	**C47 + C30** [1]	✓	✓	✓	✓	✓	✓	✓	✓	✓				
460 V AC	**C68 + C31** [1]										✓	✓	✓	✓
410 … 480 V AC	**C63 + C31** [1]	✓	✓	✓	✓	✓	✓	✓	✓	✓				
AC voltages with bridge rectifier														
24 … 29 V AC	**C69 + C33** [1]	✓	✓	✓	✓									
95 … 120 V AC	**C48 + C33** [1]	✓	✓	✓	✓	✓	✓	✓	✓	✓				
190 … 220 V AC	**C61 + C33** [1]	✓	✓	✓	✓	✓	✓	✓	✓	✓				
230 V AC	**C65 + C33** [1]										✓	✓	✓	✓
205 … 240 V AC	**C62 + C33** [1]	✓	✓	✓	✓	✓	✓	✓	✓	✓				
AC voltages with function rectifier with disconnection at DC side by means of voltage registration														
220 ... 240 V AC	**C72**	✓	✓	✓	✓	✓	✓	✓	✓					
380 ... 440 V AC	**C47**	✓	✓	✓	✓	✓	✓	✓	✓	✓				
410 ... 480 V AC	**C63**	✓	✓	✓	✓	✓	✓	✓	✓	✓				

[1] Order code for rectifier

If a half-wave and a bridge rectifier are available for the required voltage, preference should be given to the half-wave rectifier.

© Siemens AG 2011

Brakes (continued)

Definition of operating times (VDI 2241)

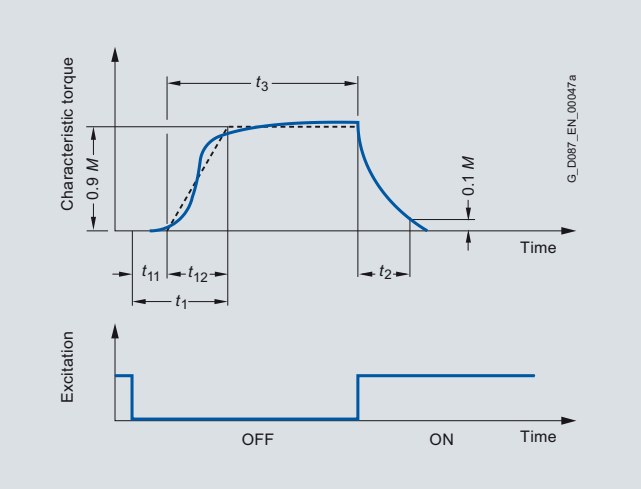

Operating times:
t_{11} Response time
t_{12} Rise time
t_1 Application time
t_2 Disconnection time
t_3 Slipping time

Fast brake application

If the brake is disconnected from the line supply, the brake is applied. With AC brake voltages, the brake disk application time is extended as a result of the inductance of the solenoid (disconnection at the AC side). This results in a considerable delay before the brake is mechanically applied. In order to achieve short brake application times, the circuit must also be interrupted on the DC side.

Rectifier for disconnection at the DC side

Electromagnetically released spring-operated disk brakes can be disconnected at the DC **and** AC sides.

With this type of disconnection, the inductance and thus the magnetic field in the brake coil are reduced very quickly.

A wire jumper on the rectifier can be removed and replaced by the contacts of an external switch for motors of sizes 63 to 200.

This enables significantly shorter application times to be achieved than those experienced during AC side disconnection.

Function rectifier for fast brake application

By using the function rectifier to achieve high-speed application of brakes, there is no need to incorporate an external switch which helps to reduce wiring.

Disconnection at DC side by means of current registration

One way of achieving disconnection at the DC side is via registration of the motor current. If the motor current falls below the rectifier's sensor current when disconnected from the three-phase system, the brake coil is disconnected from the DC voltage electronically and in a non-contacting manner.

Used in conjunction with DC side disconnection by means of current registration, rectifiers are generally suitable for parallel configuration with the motor connection, even in applications involving moving loads or large moments of inertia.
Brakes controlled in this way are fully cabled on the motor's terminal board.
Operation on the frequency inverter is not permissible.

Disconnection at DC side by means of voltage registration

Another way of achieving disconnection at the DC side is via registration of the rectifier's supply voltage.

An integrated switching transistor disables the load if the input voltage falls below a specified switching threshold. Used in conjunction with disconnection at DC side by means of voltage registration, rectifiers are generally suitable for operation with separate AC side brake control via an additional switching contact.

Interconnection in parallel with the motor connection is also possible, but it is not recommended, as the rectifier's disconnection procedure will be impaired by the influence of the motor winding. In addition, almost all applications involve moving loads or large moments of inertia. This can cause the no-load voltage generated when the motor coasts down to considerably delay brake application if the switching threshold for voltage registration is not undershot.

If interconnection in parallel with the motor connection is desired or required nevertheless, disconnection at the DC side by means of current registration is recommended.

Fast brake release

Function rectifer for fast brake release

Rectifier for overexcitation (high-speed excitation)

Rectifiers with overexcitation work for approximately 300 to 400 ms with bridge rectification, i.e. the brakes are supplied with twice the nominal coil voltage for the purposes of release. After this period the rectifiers switch from bridge to half-wave rectification automatically and the brakes are operated at nominal coil voltage. This results in shorter release times and higher numbers of startings for the brakes. The wear to the friction lining is also reduced, the permissible friction energy until the air gap is readjusted increases, and startup losses are reduced. Rectifiers with overexcitation are generally suitable for parallel configuration with the motor connection or for a separate circuit in the case of frequency inverter operation (note interconnection information for disconnection at DC side).

Long-term operation at a supply voltage below 198 V AC is not permissible. With switching duty, the nominal brake power must not be exceeded.

© Siemens AG 2011

Brakes (continued)

Brake control with function rectifiers

The following tables provide an overview of brake control with function rectifiers

Function rectifier		High-speed rectifier + DC side disconnection by means of		High-speed rectifier
		Current registration	Voltage registration	
Order code		**C59**	**C60**	on request
Supply voltage	V_{AC} ±10 %	220 … 460	220 … 500	220 … 500
Supply frequency	Hz	40 … 60	40 … 60	40 … 60
Max. output current, ambient temperature up to 40 °C [1]	A_{DC}	1.2	1.2	1.2
Output voltage	V_{DC}	0.445 x supply voltage (0.89 – max. 8 %) x supply voltage	0.445 x supply voltage (0.89 – max. 8 %) x supply voltage	0.445 x supply voltage (0.89 – max. 8 %) x supply voltage
Permissible continuous current of the current sensor	A_{DC}	0.27 … 34	–	–
Max. number of startings [2]	1/min	76 [2)3)]	76 [2)3)]	60 [2)3)]
Supported motors		Max. motor current 34 A	No restrictions	No restrictions
Supported brakes		L4 … L400	L4 … L400	L4 … L400
Suitable for		Braking operation for fast brake release + application	Braking operation for fast brake release + application	Braking operation for fast brake release
Frequency inverter operation		Not suitable	Separate power supply required	Separate power supply required
Operation with moving loads and / or high moment of inertia		No restrictions	Separate power supply required	Separate power supply required
Suppressor circuit		Spark suppressor	Spark suppressor	Spark suppressor

Function rectifier		DC side disconnection by means of		
		Current registration (SEGE)	Current registration	Voltage registration
Order code		on request	on request	on request
Supply voltage	V_{AC} ±10 %	440	460	220 … 500
Supply frequency	Hz	40 … 60	40 … 60	40 … 60
Max. output current, ambient temperature up to 40 °C [1]	A_{DC}	1.15	1.2	1.2
Output voltage	V_{DC}	0.45 x supply voltage	0.89 x supply voltage 0.445 x supply voltage	0.89 x supply voltage 0.445 x supply voltage
Permissible continuous current of the current sensor	A_{DC}	SEGE1: 0.1 … 20 SEGE2: 1 … 70 A	0.27 … 34	-
Max. number of startings [2]	1/min	76 [2)]	76 [2)]	76 [2)3)]
Supported motors		SEGE1: max. motor current 20 A SEGE2: max. motor current 70 A	max. motor current 34 A	No restrictions
Supported brakes		L4 … L400	L4 … L400	L4 … L400
Suitable for		Braking operation for fast brake application	Braking operation for fast brake application	Braking operation for fast brake application
Frequency inverter operation		Not suitable	Not suitable	Separate power supply required
Operation with moving loads and / or high moment of inertia		No restrictions	No restrictions	Separate power supply required

1) At higher ambient temperatures the output current drops.
2) The maximum numbers of startings specified in the table are upper limits. The numbers of startings are basically dependent on the braking power and the permissible operating energy of the brakes.
3) The maximum numbers of startings result from the overexcitation times and recovery times as well as switch-off during stopping mode.

© Siemens AG 2011

Brakes (continued)

Duty cycle n_{coil} high-speed rectifier

The high-speed rectifier releases the brake with overexcitation and thus reduces the maximum duty cycle of the brake. The brake coil's maximum duty cycle is as shown in the table below, depending on the supply voltage and switching frequency. The maximum duty cycle is specified as a percentage.

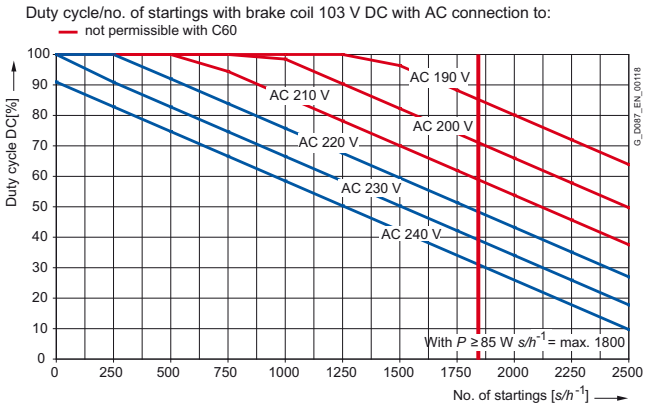

Supply voltage	Number of startings										
	c/h										
V_{AC}	1	250	500	750	1 000	1 250	1 500	1 750	2 000 [1]	2 250 [1]	2 500 [1]
220 ... 240 V AC (C72) with separate power supply											
220	100	100	91	83	75	67	59	51	43	35	26
230	100	90	82	74	66	58	50	42	34	25	17
240	100	82	74	66	58	50	42	34	25	17	9

[1] Number of startings up to brake size L80

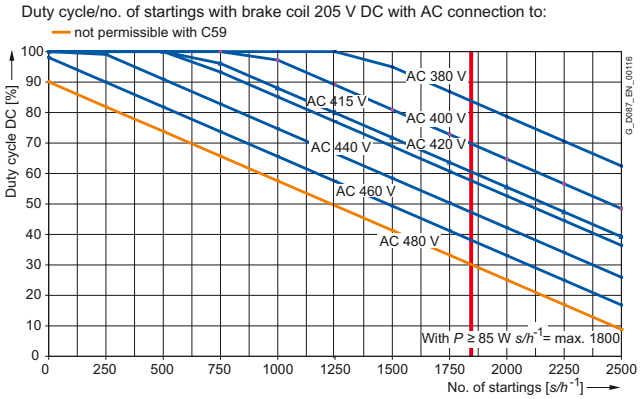

Supply voltage	Number of startings										
	c/h										
V_{AC}	1	250	500	750	1 000	1 250	1 500	1 750	2 000 [1]	2 250 [1]	2 500 [1]
400 V AC for connection at the motor terminal board											
380	100	100	100	100	100	100	94	86	78	70	62
400	100	100	100	100	97	89	80	72	64	56	48
420	100	100	100	93	85	77	68	60	52	44	36
380 ... 440 V AC (C47) with separate power supply											
380	100	100	100	100	100	100	94	86	78	70	62
400	100	100	100	100	97	89	80	72	64	56	48
440	100	99	90	82	74	66	58	50	42	34	25

[1] Number of startings up to brake size L80

© Siemens AG 2011

Brakes (continued)

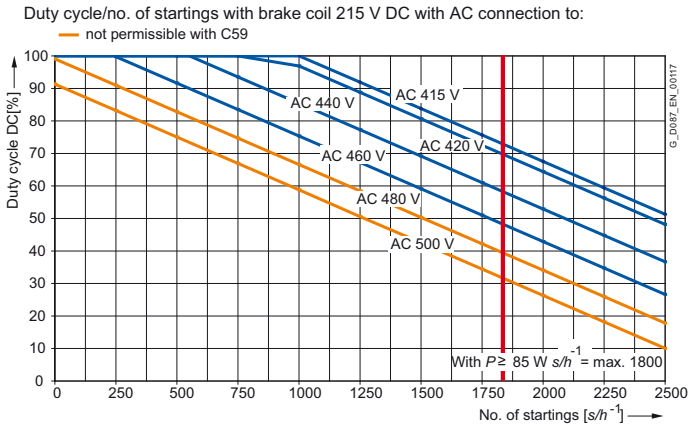

Supply voltage	Number of startings c/h										
V_{AC}	1	250	500	750	1 000	1 250	1 500	1 750	2 000 [1]	2 250 [1]	2 500 [1]
410 ... 480 V AC (C63) with separate power supply [2]											
410	100	100	100	100	100	95	87	78	70	62	54
460	100	99	91	83	75	67	59	51	42	34	26
480	100	90	82	74	66	58	50	42	34	25	17

[1] Number of startings up to brake size L80

[2] The brake's supply voltage can be limited by the rectifier.

Service life of the braking lining

The braking energy L_{rated} until brake readjustment depends on various factors. The main influencing factors include the masses to be braked, the motor speed, the number of startings, and, therefore, the temperature at the friction surfaces. This means it is not possible to specify a value for the friction energy until re-adjustment that is valid for all operating conditions.

Reduced-noise rotor-hub connection and wear-resistant friction lining

The brake can be supplied with a wear-resistant friction lining. The reduced-noise rotor-hub connection also reduces clatter noise made by the rotor, particularly at low speeds.

Order code:

Reduced-noise rotor-hub connection and wear-resistant friction lining **C06**

© Siemens AG 2011

Brakes (continued)

Braking torques as a function of the speed and permissible limit speeds

The braking torque available reduces as the motor speed increases. The maximum permissible speeds from which emergency stops can be made are listed in the next table. These speeds should be considered as guide values and must be checked under actual operating conditions.

The maximum permissible friction energy depends on the number of startings and is shown for the various brakes in the figure "Permissible operating energy as a function of the number of startings". Increased wear can be expected when the brakes are used for emergency stops.

Braking torques and permissible limit speeds:

Brake type	Max. permissible operating speed	Max. permissible no-load speed with emergency-stop function	Braking torque in % of the rated braking torque at 100 rpm		
	rpm	rpm	1 500 rpm	3 000 rpm	max.
L4	3 600	6 000	87	80	65
L8	3 600	6 000	85	78	66
L16	4 000	4 000	83	76	
L32	3 600	3 600	81	74	
L60	6 000	6 000	80	73	67
L80	5 300	5 300	79	72	66
L150	4 400	4 400	77	70	
L260	3 700	3 700	75	68	
L400	3 000	3 000	73	66	
KFB63		4 700			
KFB100		4 000			
KFB160		3 600			

Permissible operating energy as a function of the number of startings

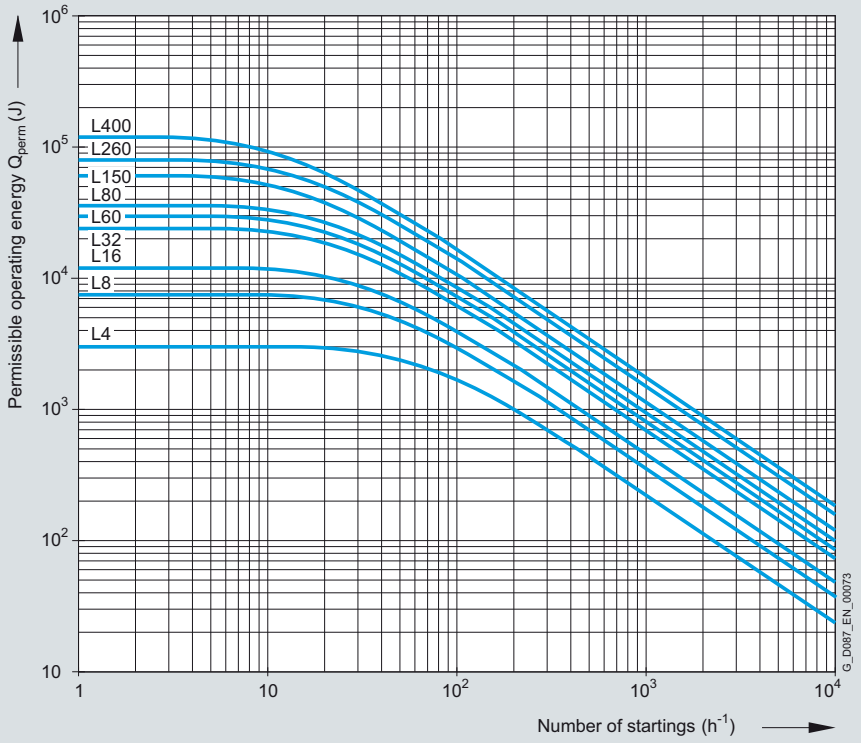

© Siemens AG 2011

Brakes (continued)

Monitoring

Brake with microswitch for release monitoring

The brake's air gap s_{Gap} is monitored by a microswitch which can be mounted on the base plate of the solenoid component. The motor does not start up until the brake has been fully released (s_{Gap} = 0) and the armature disk is lying against the solenoid component. The microswitch is actuated and triggers the motor contactor.
When the brake is switched off, the armature disk reaches the maximum air gap (s_{Gapmax}) and the microswitch opens.
This means that the motor contactor is not triggered and the motor does not start up. This method is used for machines and units which require a precisely defined startup and braking procedure, as well as for error monitoring of faulty rectifiers, broken connecting cables, faulty coils, and excessively large air gaps (brake coil does not attract the armature disk any further).
Microswitches for release monitoring can be supplied for all brakes of sizes L32 to L400. Motors of size 225 and above with KFB brakes are equipped with release monitoring as standard.

Order code:
Microswitch for release monitoring **C04**

A combination with the anti-corrosion protection option is not possible.

Brake with microswitch for wear monitoring

While the brake is being used, the friction lining of the rotor is subjected to wear and becomes thinner. This means that the maximum air gap s_{Gapmax} becomes larger and the brake requires a longer time to be fully released and applied. To prevent the friction lining becoming too thin (thickness falling below wear reserves) or the air gap from exceeding a predefined value, the air gap s_{Gap} is monitored by a microswitch mounted on the base plate of the solenoid component. If the air gap fluctuates within a predefined range, the motor contactor is triggered. If an adjustable critical air gap is reached, the microswitch opens; the motor contactor is not triggered; motor and brake remain at zero current. This method is used for machines and units which employ braking operation very frequently and for which a high degree of wear is to be expected at a high number of startings, as well as for error monitoring of excessively large air gaps.
Microswitches for wear monitoring can be supplied for all brakes of sizes L32 to L400 on request.

A combination with the anti-corrosion protection option is not possible.

Circuit concept with microswitch

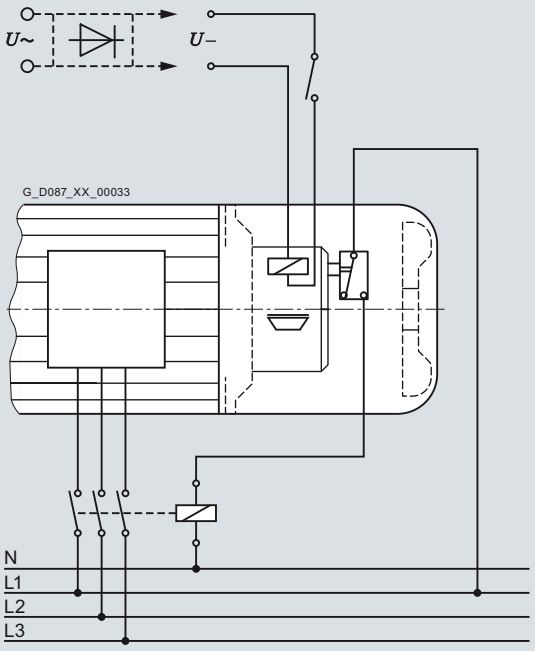

© Siemens AG 2011

Brakes (continued)

Manual brake release

Brakes can be supplied with a manual brake release lever. The manual brake release lever can be used to release the brake at zero current. When the brake has been released, the motor shaft can rotate freely in order to bring the output shaft to a certain position or for use as an emergency release in the event of a power failure, for example.

The manual brake release lever can be fixed in the released position using an additional locking mechanism mounted on the brake. The manual brake release lever with locking mechanism is mounted on KFB brakes as standard.

Order code:

Manual brake release lever	**C02**
Manual brake release lever with locking mechanism *)	**C03**

The manual brake release lever can be mounted in various different positions. The position of the manual brake release lever relates to the standard version of the motor. The standard position is "2".

In the case of the worm geared motors S, the manual brake release lever position always corresponds to the terminal box position.

*) Not possible for worm geared motors S

Manual brake release lever position	1	2	3	4
Order code	C26	C27	C28	C29
Motor size	Angle α			
63 1)	0°	90°	180°	270°
71 1)	0°	90°	180°	270°
80 1)	0°	90°	180°	270°
71	10°	100°	190°	280°
80	10°	100°	190°	280°
90	15°	105°	195°	285°
100	15°	105°	195°	285°
112	15°	105°	195°	285°
132	15°	105°	195°	285°
160	15°	105°	195°	285°
180	0°	90°	180°	270°
200	0°	90°	180°	270°
225	0°	90°	180°	270°
250	0°	90°	180°	270°
280	0°	90°	180°	270°
315	0°	90°	180°	270°

1) Applies only for worm geared motors S

Manual brake release lever position

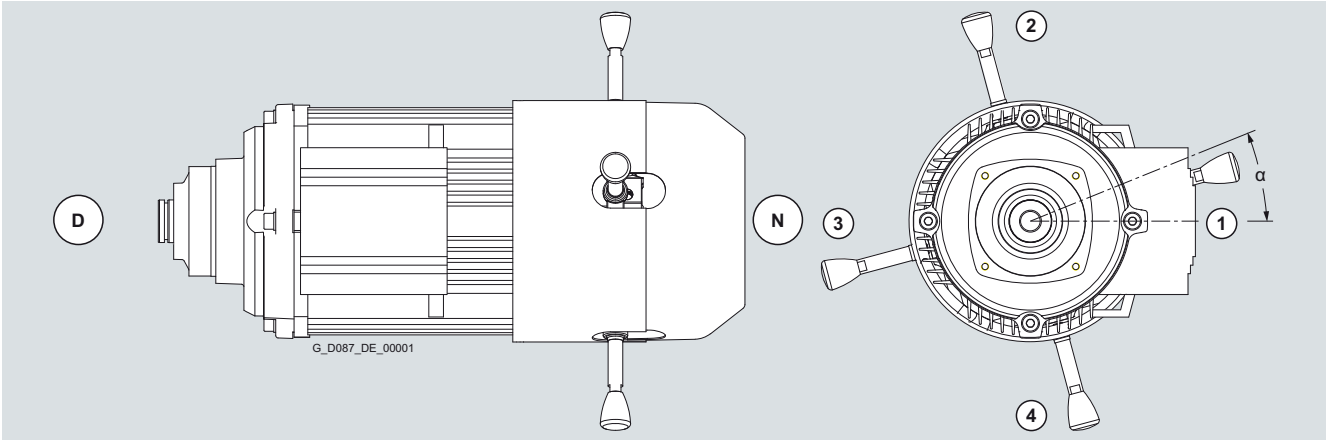

Manual brake release lever with locking mechanism

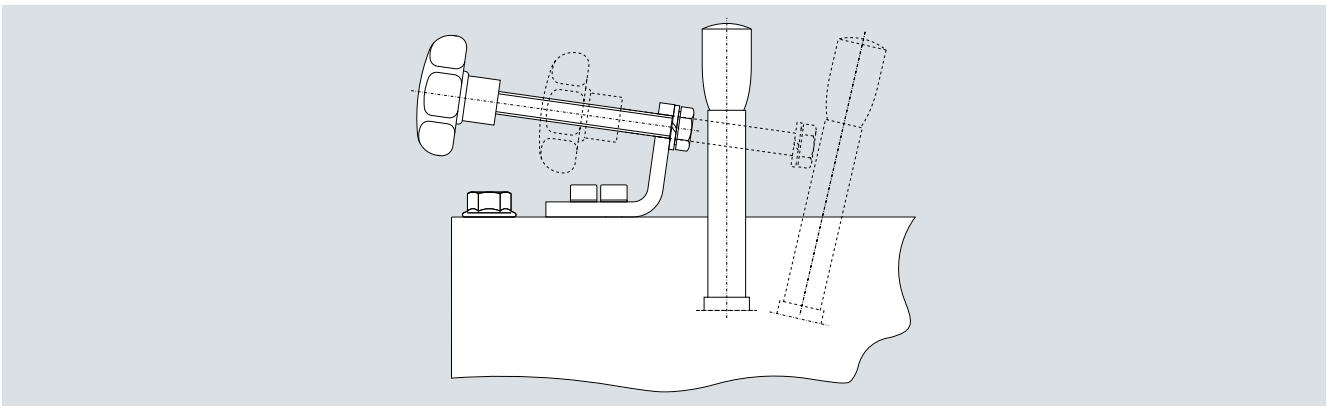

© Siemens AG 2011

Brakes (continued)

Dimensions of the manual brake release lever

The dimensions of the manual brake release lever depend on the size (see table).

There is a possibility that the lever could collide with the connecting cable on motors where the cable entry is at the non-drive end.

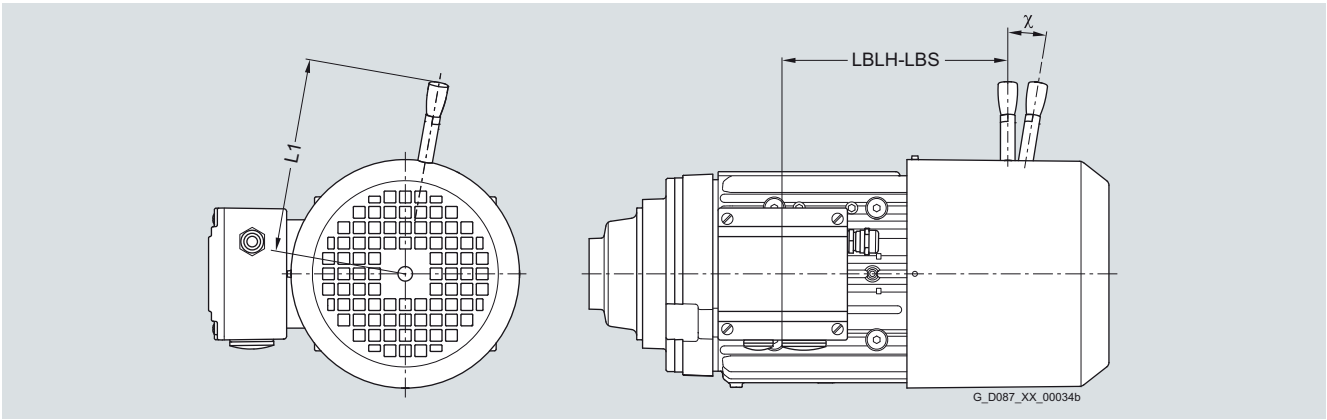

Dimensions of the manual brake release lever:

Motor size	Brake size	Terminal box position	Distance from the center line of the motor to the outermost position of the manual brake release lever	Dist. from center line of motor to outermost position of manual brake release lever, on design with locking mechanism	Distance from the center of the terminal box to the center of the manual brake release lever	Angle of the manual brake release lever when brake released Tolerance of +3°
			L1	**L1**	**LBLH-LBS**	**χ**
63 [1]	L4	1A, 2A, 3A, 4A	107	–	97.4	12°
71 [1]	L4	1A, 2A, 3A, 4A	107	–	130.8	12°
80 [1]	L8	1A, 2A, 3A, 4A	116	–	151.3	10°
71	L4	1A, 2A, 3A, 4A	107	127	124.8	12°
	L8	1A, 2A, 3A, 4A	116	136	125.3	10°
71Z	L4	1A, 2A, 3A, 4A	107	127	143.8	12°
	L8	1A, 2A, 3A, 4A	116	136	144.3	10°
80	L4	1A, 2A, 3A, 4A	107	127	161.3	12°
	L8	1A, 2A, 3A, 4A	116	136	161.8	10°
	L16	1A, 2A, 3A, 4A	132	151	172.9	9°
80Z	L4	1AK, 2AK, 3AK, 4AK	107	127	65.8	12°
	L8	1AK, 2AK, 3AK, 4AK	116	136	66.3	10°
	L16	1AK, 2AK, 3AK, 4AK	132	151	77.4	9°
90	L8	1A, 2A, 3A, 4A	116	136	181.8	10°
	L16	1A, 2A, 3A, 4A	132	151	192.9	9°
	L32	1A, 2A, 3A, 4A	161	161	194.9	10°
90Z	L8	1A, 2A, 3A, 4A	116	136	155.8	10°
	L16	1A, 2A, 3A, 4A	132	151	166.9	9°
	L32	1A, 2A, 3A, 4A	161	161	168.9	10°
100	L16	1A, 2A, 3A, 4A	132	151	197.4	9°
	L32	1A, 2A, 3A, 4A	161	161	199.4	10°
	L60	1A, 2A, 3A, 4A	195	195	203	9°
100Z	L16	1AK, 2AK, 3AK, 4AK	132	151	73.4	9°
	L32	1AK, 2AK, 3AK, 4AK	161	161	67.4	10°
	L60	1AK, 2AK, 3AK, 4AK	195	195	71.0	9°

[1] Applies only for worm geared motors S

© Siemens AG 2011

Brakes (continued)

Dimensions of the manual brake release lever:

Motor size	Brake size	Terminal box position	Distance from the center line of the motor to the outermost position of the manual brake release lever	Dist. from center line of motor to outermost position of manual brake release lever, on design with locking mechanism	Distance from the center of the terminal box to the center of the manual brake release lever	Angle of the manual brake release lever when brake released Tolerance of +3°
			L1	**L1**	**LBLH-LBS**	χ
112	L32	1A, 2A, 3A, 4A	161	161	213.9	10°
	L60	1A, 2A, 3A, 4A	195	195	217.5	9°
112Z	L32	1AK, 2AK, 3AK, 4AK	161	161	105.9	10°
	L60	1AK, 2AK, 3AK, 4AK	195	195	113.5	9°
132	L80	1A, 2A, 3A, 4A	240	240	232.0	10°
	L150	1A, 2A, 3A, 4A	279	279	245.1	9°
132Z	L80	1A, 2A, 3A, 4A	240	240	176.0	10°
	L150	1A, 2A, 3A, 4A	279	279	189.1	9°
160	L150	1A, 2A, 3A, 4A	279	279	312.6	9°
	L260	1A, 2A, 3A, 4A	319	319	319.1	10°
160Z	L150	1AK, 2AK, 3AK, 4AK	279	279	159.6	9°
	L260	1AK, 2AK, 3AK, 4AK	319	319	166.1	10°
180	L260	1A, 2A, 3A, 4A	319	319	399.6 (410.6)	10°
180Z	L260	1A, 2A, 3A, 4A	319	319	277.6 (288.6)	10°
200	L260	1A, 2A, 3A, 4A	319	319	361.9	10°
	L400	1A, 2A, 3A, 4A	445	445	371.7	10°

© Siemens AG 2011

Brakes (continued)

Anti-corrosion protection

Brakes can be supplied with standard, basic and increased anti-corrosion protection (e.g. to prevent them from seizing up). A friction plate or adapter flange is always mounted between the friction surface (end shield on the ventilation side) and the rotor. The rotor is made of a rustproof material.

Overview of anti-corrosion protection

Brake type		L4	L8	L16	L32	L60	L80	L150	L260	L400
Standard anti-corrosion protection										
Friction surface for motor	Friction plate of stainless steel	✓	✓	✓	✓	✓	✓			
	Adapter flange plated with thin zinc film							✓	✓	
	End shield								✓ [1]	✓
Armature disk	Gas-nitrided	✓	✓	✓	✓					
	Plated with thin zinc film					✓	✓	✓	✓	✓
Basic anti-corrosion protection										
Friction surface for motor	Friction plate of stainless steel	✓	✓	✓	✓	✓	✓			
	Adapter flange plated with thin zinc film							✓	✓	✓
Armature disk	Gas-nitrided	✓	✓	✓	✓					
	Plated with thin zinc film					✓	✓	✓	✓	✓
Increased anti-corrosion protection										
Friction surface for motor	Friction plate of stainless steel	✓	✓	✓	✓	✓	✓			
	Chromium-plated adapter flange							✓	✓	✓
Armature disk	Chromium-plated	✓	✓	✓	✓	✓	✓	✓	✓	✓

[1] For motor sizes 180 and 200

Brake with basic anti-corrosion protection

Basic anti-corrosion protection is employed when a motor is used in corrosive ambient conditions (high air humidity, for example) and / or with long standstill times.

Order code:
Basic anti-corrosion protection **C09**

Brake with increased anti-corrosion protection

The adapter flanges and armature disks of the brakes are chromium-plated for increased anti-corrosion protection. Increased anti-corrosion protection is employed when a motor is used in corrosive ambient conditions (high air humidity, dripping water, crane systems, for example) and / or with long standstill times.

Order code:
Increased anti-corrosion protection **C10**

Enclosed brake

The brakes can be supplied as enclosed brakes. Enclosed brakes include a built-in dust protection ring on the perimeter and a built-in shaft sealing ring on the shaft passage. This prevents the ingress and egress of dust, moisture, and other debris. Other advantages are reduced noise when applying the brake as well as, in combination with a motor anti-condensation heater, a reduced risk of the rotor freezing on the friction surfaces.

In addition, a condensation drain hole can be incorporated in the dust protection ring.

The enclosed brake is also available in combination with a manual brake release lever and a manual brake release lever with locking mechanism.

Order codes:
Enclosed brake **C01**
Enclosed brake with condensation drain hole **C11**

© Siemens AG 2011

Brakes (continued)

Technical data

Disconnection times, application times, and moments of inertia for L brakes

Brake type	Rated braking torque at 100 rpm	Disconnection time t_2		Application time $t_1 = t_{11} + t_{12}$	Response time t_{11}	Rise time t_{12}	Application time $t_1 = t_{11} + t_{12}$	Response time t_{11}	Rise time t_{12}	Weight	Moment of inertia	Moment of inertia with wear-resistant lining
		Standard excitation	Over-excitation	AC and DC switched or DC switched			AC switched				J_B	
		ms	ms	ms	ms	ms	ms	ms	ms	kg	kgm^2	kgm^2
L4/1.4	1.4	20	13	31	13.0	18.0	250	110	140	0.85	0.000011	0.000015
L4/2	2.0	27	17	22	9.0	13.0	175	77	98			
L4/3	3.0	29	18	30	12.0	18.0	230	101	129			
L4	4.0	45	28	28	15.0	13.0	190	120	70			
L4/5	5.0	56	35	25	13.0	12.0	158	100	58			
L8/3	3.0	21	12	65	39.0	26.0	510	326	184	1.5	0.000034	0.000061
L8/4	4.0	30	17	50	30.0	20.0	390	250	140			
L8/5	5.0	35	20	40	24.0	16.0	310	200	110			
L8/6.3	6.3	45	30	38	18.0	20.0	315	174	141			
L8	8.0	57	38	31	15.0	16.0	245	135	110			
L8/10	10.0	71	47	26	12.5	13.5	205	113	92			
L16/8	8.0	55	41	36	22.0	14.0	350	183	167	2.6	0.0002	0.0002
L16/10	10.0	48	36	58	35.0	23.0	680	355	325			
L16/13	13.0	60	34	50	30.0	20.0	560	293	267			
L16	16.0	76	48	47	28.0	19.0	460	240	220			
L16/20	20.0	93	59	38	23.0	15.0	390	204	186			
L32/14	14.0	65	50	46	27.0	19.0	400	210	290	3.9	0.00045	0.00045
L32/18	18.0	65	44	70	45.0	25.0	600	325	275			
L32/23	23.0	82	56	75	40.0	35.0	680	300	380			
L32	32.0	115	78	53	28.0	25.0	490	215	275			
L32/40	40.0	140	95	45	24.0	21.0	440	194	246			
L60/25	25.0	130	66	47	25.0	22.0	540	220	320	5.8	0.00063	0.00063
L60/38	38.0	140	60	60	24.0	36.0	800	290	510			
L60/50	50.0	175	75	50	20.0	30.0	665	240	425			
L60	60.0	210	90	42	17.0	25.0	580	210	370			
L80/25	25.0	95	56	103	48.0	55.0	1 600	690	710	8.4	0.0015	0.0015
L80/35	35.0	128	75	73	34.0	39.0	1 200	520	680			
L80/50	50.0	160	94	90	42.0	48.0	1 920	830	1 090			
L80/63	63.0	170	100	72	34.0	38.0	1 550	670	880			
L80	80.0	220	130	57	27.0	30.0	1 200	520	680			
L80/100	100.0	280	165	49	24.0	25.0	990	430	560			
L150/60	60.0	135	81	55	27.5	27.5	920	470	450	12.5	0.0029	0.0029
L150/80	80.0	180	108	40	20.0	20.0	690	350	340			
L150/100	100.0	180	108	93	48.0	45.0	1 300	700	600			
L150/125	125.0	225	135	85	44.0	41.0	1 200	650	550			
L150	150.0	270	160	78	33.0	45.0	1 080	480	600			
L260/100	100.0	210	95	205	82.0	123.0	1 775	605	1 170	21.0	0.0073	0.0073
L260/145	145.0	230	170	180	72.0	108.0	1 200	440	790			
L260/180	180.0	230	100	185	73.0	112.0	2 500	850	1 650			
L260/200	200.0	260	120	178	70.0	108.0	2 720	920	1 800			
L260/240	240.0	312	140	170	67.0	103.0	2 300	570	1 530			
L260	260.0	340	150	165	65.0	100.0	2 100	700	1 400			
L260/315	315.0	410	180	150	60.0	90.0	1 750	590	1 160			
L400/265	265.0	260	140	275	155.0	120.0	3 100	2 000	1 100	32.0	0.02	0.02
L400/300	300.0	290	150	260	125.0	135.0	2 800	1 540	1 260			
L400/360	360.0	350	165	255	125.0	130.0	2 660	1 440	1 220			
L400	400.0	390	185	230	110.0	120.0	2 400	1 300	1 100			
L400/600	600.0	585	265	175	55.0	120.0	1 400	300	1 100			

© Siemens AG 2011

Brakes (continued)

Working capacity for L brakes

Brake type	Rated braking torque at 100 rpm	Power consumption at 20 °C	Working capacity			Working capacity with wear-resistant friction lining		
			Friction energy until the braking lining is replaced W_{Tot}	Friction energy until the air gap is readjusted W_V	With overexcitation	Friction energy until the braking lining is replaced W_{Tot}	Friction energy until the air gap is readjusted W_V	With overexcitation
		W	MJ	MJ	MJ	MJ	MJ	MJ
L4/1.4	1.4	20	156	46.8	52	312	94	104
L4/2	2.0		176		59	351		117
L4/3	3.0		170	39.6	57	339	80	113
L4	4.0		180	36.0	60	360	72	120
L4/5	5.0		176	23.4	59	351	46	117
L8/3	3.0	25	324	86.4	108	648	173	216
L8/4	4.0							
L8/5	5.0			75.6			151	
L8/6.3	6.3					756		
L8	8.0			64.8		648	130	
L8/10	10.0			54.0			108	
L16/8	8.0	30	405	108.0	162	810	216	324
L16/10	10.0							
L16/13	13.0							
L16	16.0							
L16/20	20.0		396	80.0	158	792	160	317
L32/14	14.0	40	948	285.0	284	1 896	570	568
L32/18	18.0				283			
L32/23	23.0			260.0		1 885	518	
L32	32.0			212.0	284	1 888	425	
L32/40	40.0			165.0		1 893	331	
L60/25	25.0	50	1 276	306.0	306	2 560	612	612
L60/38	38.0			280.0		2 553	560	
L60/50	50.0		1 320	238.0	317	2 640	476	635
L60	60.0		1 322					
L80/25	25.0	55	2 310	396.0	396	4 536	792	792
L80/35	35.0							
L80/50	50.0							
L80/63	63.0							
L80	80.0							
L80/100	100.0			260.0	389		519	778
L150/60	60.0	85	2 295	612.0	612	4 590	1 224	1 224
L150/80	80.0							
L150/100	100.0							
L150/125	125.0							
L150	150.0							
L260/100	100.0	100	4 680	936.0	1 287	7 020	1 872	2 574
L260/145	145.0							
L260/180	180.0		3 510					
L260/200	200.0							
L260/240	240.0							
L260	260.0							
L260/315	315.0	130	3 489	756.0	1 279	6 978	1 512	2 559
L400/265	265.0	110	6 480	1 440.0	1 872	12 960	2 880	3 744
L400/300	300.0							
L400/360	360.0							
L400	400.0							
L400/600	600.0			576.0			1 152	

© Siemens AG 2011

Brakes (continued)

Disconnection times, application times, and moments of inertia for KFB brakes

Brake type	Rated braking torque at 100 rpm	Disconnection time t_2	Application time $t_1 = t_{11} + t_{12}$	Response time t_{11}	Rise time t_{12}	Application time $t_1 = t_{11} + t_{12}$	Response time t_{11}	Rise time t_{12}	Weight	Moment of inertia
		Standard excitation	AC and DC switched or DC switched			AC switched				J_B
		ms	ms	ms	ms	ms	ms	ms	kg	kgm^2
KFB63/510	510								72	0.0175
KFB63	630	342		112						
KFB63/710	710									
KFB100/630	630								104	0.0360
KFB100/725	725									
KFB100/820	820									
KFB100	1 000	375		126						
KFB160/1000	1 000								150	0.05
KFB160/1300	1 300									
KFB160	1 600	498		183						

Working capacity for KFB brakes

Brake type	Rated braking torque at 100 rpm	Power consumption [1]	Working capacity	
		at 20 °C	Friction energy until the braking lining is replaced W_{Tot}	Friction energy until the air gap is readjusted W_V
		W	MJ	MJ
KFB63/510	510	220	2 074	592
KFB63	630			
KFB63/710	710			
KFB100/630	630	307	3 441	1 066
KFB100/725	725			
KFB100/820	820			
KFB100	1 000			
KFB160/1000	1 000	344	5 222	1 616
KFB160/1300	1 300			
KFB160	1 600			

[1] With 110 V coil

8

© Siemens AG 2011

Additional components

Brakes (continued)

No-load operating

Motors			4-pole		2-pole		6-pole		8-pole	
	4-pole power rating at	Brake type	Overexcitation							
Type	50 Hz		Without	With	Without	With	Without	With	Without	With
			No-load operating (Z_A)							
	kW		1/h	1/h	1/h	1/h	1/h	1/h	1/h	1/h
LA71B LA71C	0.12 0.18	L4/5, L4	7 800	9 800	2 500	3 300	11 500	14 500	–	–
		L4/3, L4/2, L4/1.4	12 500	13 000	4 000	4 400	18 000	19 000		
		L8/10, L8, L8/6.3	6 400	8 000	200	2 500	9 500	11 500	–	–
		L8/5, L8/4, L8/3	9 100	11 000	3 000	3 500	13 500	16 000	–	–
LA71S LA71M	0.25 0.37	L4/5, L4	7 300	9 500	2 500	3 200	10 500	14 000	14 500	19 000
		L4/3, L4/2, L4/1.4	12 500	13 500	4 300	4 500	18 500	20 000	25 000	27 000
		L8/10, L8, L8/6.3	6 000	7 600	1 800	2 500	9 000	11 000	12 000	15 000
		L8/5, L8/4	8 900	11 000	2 900	3 500	13 000	16 000	17 500	22 000
		L8/3	11 000	12 000	3 500	4 000	16 500	18 000	22 000	24 000
LA71ZMP LA71ZMD	0.55 0.75	L4/5, L4	9 000	10 000	–	–	–	–	–	–
		L4/3, L4/2, L4/1.4	10 500	11 500	–	–	–	—	–	–
		L8/10, L8, L8/6.3	6 000	7 600	–	–	–	–	–	–
		L8/5, L8/4, L8/3	9 500	10 500	–	–	–	–	–	–
LA80S LA80M	0.55 0.75	L4/5, L4	9 000	9 500	2 900	3 100	13 500	14 000	18 000	19 000
		L4/3, L4/2, L4/1.4	10 500	11 500	3 500	3 800	15 500	16 500	21 000	22 000
		L8/10, L8, L8/6.3	6 300	7 500	2 100	2 500	9 400	11 000	12 500	15 000
		L8/5, L8/4, L8/3	9 500	10 000	3 100	3 300	14 000	15 000	19 000	20 000
		L16/20	6 500	7 500	2 100	2 500	9 700	11 000	13 000	15 000
		L16/13, L16/10, L16/8	7 500	8 000	2 500	2 600	11 000	12 000	15 000	16 000
LA90S LA90L LA90ZLB	1.1 1.5 2.2	L8/10, L8, L8/6.3	6 500	7 000	2 100	2 300	9 700	10 500	13 000	14 000
		L8/5, L8/4, L8/3	8 000	8 500	2 600	2 800	12 000	12 500	16 000	17 000
		L16/20, L16	3 200	4 300	1 000	1 400	4 800	6 400	6 400	8 500
		L16/13, L16/10, L16/8	6 500	7 000	2 100	2 300	9 700	10 500	13 000	14 000
		L32	2 200	3 000	700	1 000	3 300	4 500	4 400	6 000
		L32/23, L32/18	3 300	4 200	1 100	1 400	4 900	6 300	4 400	6 000
		L32/14	5 500	6 000	1 800	2 000	8 200	12 000	11 000	12 000
LA100L LA100LB	2.2 3.0	L16/20, L16	6 000	6 500	2 000	2 100	9 000	9 700	12 000	13 000
		L16/13, L16/10, L16/8	6 500	7 000	2 100	2 300	9 700	10 500	14 000	14 000
		L32/40, L32	3 200	4 600	1 000	1 500	4 800	6 900	6 400	9 200
		L32/23, L32/18, L32/14	6 000	6 500	2 000	2 100	9 000	9 700	12 000	13 000
		L60/50	1 100	2 100	350	700	1 600	3 100	2 200	4 200
		L60/38, L60/25	3 200	4 600	1 000	1 500	4 800	6 900	9 200	9 200
LA112M	4.0	L32/40, L32	3 300	3 500	1 100	1 100	4 900	5 200	6 600	7 000
		L32/23, L32/18, L32/14	3 600	3 800	1 200	1 200	5 400	5 700	7 600	7 600
		L60, L60/50	2 600	3 200	850	1 050	3 900	4 800	5 200	6 400
		L60/38, L60/25	3 200	3 600	1 050	1 200	4 800	5 400	7 200	7 200

At 60 Hz operation (1.2 x *P*) the no-load operating is reduced by 25 %.

© Siemens AG 2011

Brakes (continued)

No-load operating

Motors			4-pole		2-pole		6-pole		8-pole	
	4-pole power rating at	Brake type	Overexcitation							
Type	50 Hz		Without	With	Without	With	Without	With	Without	With
			No-load operating (Z_A)							
	kW		1/h	1/h	1/h	1/h	1/h	1/h	1/h	1/h
LA132S LA132M	5.5 7.5	L80/100, L80	1 850	2 050	600	6 500	2 700	3 000	3 700	4 100
		L80/63, L80/50	2 050	2 200	650	700	3 000	3 300	4 100	4 400
		L80/35, L80/25	2 200	2 350	700	750	3 300	3 500	4 400	4 700
		L150, L150/125	1 200	1 500	400	500	1 800	2 200	2 400	3 000
		L150/100, L150/80, L150/60	1 900	2 050	600	650	2 800	3 000	3 800	4 100
LA132ZMB	9.2	L80/100, L80	1 500	1 650	–	–	–	–	–	–
		L80/35, L80/25	1 700	1 800	–	–	–	–	–	–
		L150, L150/125	1 200	1 400	–	–	–	–	–	–
		L150/100, L150/80, L150/60	1 500	1 600	–	–	–	–	–	–
LA160MB LA160L	11.0 15.0	L150, L150/125	1 400	1 550	450	500	2 100	2 300	2 800	3 100
		L150/100, L150/80, L150/60	1 650	1 750	550	550	2 400	2 600	3 300	3 500
		L260, L260/240	850	1 200	250	400	1 200	1 800	1 700	2 400
		L260/200, L260/180	1 050	1 300	350	400	1 500	1 900	2 100	2 600
		L260/145, L260/100	1 450	1 550	450	500	2 100	2 300	2 900	3 100
LG180ZMB LG180ZLB	18.5 22.0	L260/315, L260, L260/240	500	550	320	330	750	800	1 000	1 100
		L260/200, L260/180, L260/145, L260/100	550	600	174	200	800	900	1 100	1 200
LG200LB	30.0	L260/315, L260, L260/240	450	500	150	150	650	750	900	1 000
		L260/200, L260/180, L260/145, L260/100	500	525	150	175	750	750	1 000	1 050
		L400, L400/360, L400/300, L400/265	400	425	125	125	600	600	800	850

At 60 Hz operation (1.2 x *P*) the no-load operating is reduced by 25 %.

© Siemens AG 2011

Encoders

Overview

The geared motors are available with an optional encoder.

Overview of possible module technology in conjunction with encoder systems

	Motor plug	Brake	Self ventilation					Forced ventilation	Backstop	2nd shaft extension
			Standard fan	Metal fan	High inertia fan	Encoder under cover	Canopy [1]			
Incremental encoder										
1XP8012	✓	✓	✓	✓	✓			✓	✓	
1XP8022	✓	✓	✓	✓	✓	✓	✓	✓	✓	
1XP8032	✓	✓	✓	✓	✓	✓	✓	✓	✓	
Absolute encoder										
1XP8014	✓	✓	✓	✓	✓			✓	✓	
1XP8024	✓	✓	✓	✓	✓	✓	✓	✓	✓	
Resolver										
1XP8013	✓		✓	✓	✓			✓	✓	
1XP8023	✓		✓	✓	✓	✓	✓	✓	✓	
Encoder under cover [2]										
Without canopy	✓	✓	✓	✓	✓	✓		✓	✓	
With canopy	✓	✓	✓	✓	✓	✓		✓	✓	
Encoder accessories	✓	✓	✓	✓	✓	✓	✓	✓	✓	

[1] Only in conjunction with encoder under cover

[2] Not possible for worm geared motors S

© Siemens AG 2011

Encoders (continued)

Incremental encoders 1XP8012, 1XP8022 and 1XP8032

Incremental encoders are used to determine the position of rotor shafts and are used to approach a precisely defined angular position. This is achieved by photoelectric scanning of the graduation on a graduated disk. With incremental measuring methods, the graduation consists of a regular grating structure.
The position information is obtained by counting the individual increments (measuring steps) from a set point of origin. Since an absolute reference is required to ascertain positions, the graduated disks are provided with an additional track that bears a reference mark. The absolute position determined by the reference mark is assigned exactly one measuring step. The reference mark must, therefore, be scanned before an absolute reference can be established or the last selected reference point found.

The incremental signals are transmitted as the square-wave pulse train sequences U_{a1} (A) and U_{a2} (B), phase-shifted by 90° elec. The reference mark signal consists of a reference pulse U_{a0} (N), which is gated with the incremental signals. The integrated electronics also generate inverse signals $\overline{U_{a1}}$ ($\overline{A}$), $\overline{U_{a2}}$ ($\overline{B}$) and $\overline{U_{a0}}$ ($\overline{N}$) for reliable transmission. The illustrated sequence of output signals – with U_{a2} lagging behind U_{a1} – applies for clockwise rotation of the motor.

The fault-detection signal $\overline{U_{aS}}$ indicates fault conditions such as breakage of the power lines or failure of the light source, etc. It can be used for such purposes as machine shut-off during automated production.

The distance between two successive edges of the incremental signals U_{a1} and U_{a2} through 1-fold, 2-fold, or 4-fold evaluation is one measuring step.

The max. permissible speed or traversing velocity must never be exceeded, not even for a short time.

Incremental encoders are used for applications which require an exactly defined position to be approached or relocated. With incremental encoders, reference point approach is required each time the mains power supply is switched off, since the position is not usually stored in the control and movements of the machine are not detected when the power is off.

Principle of operation: Photoelectric scanning

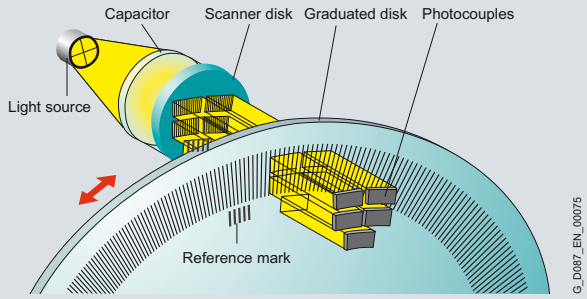

Output signals

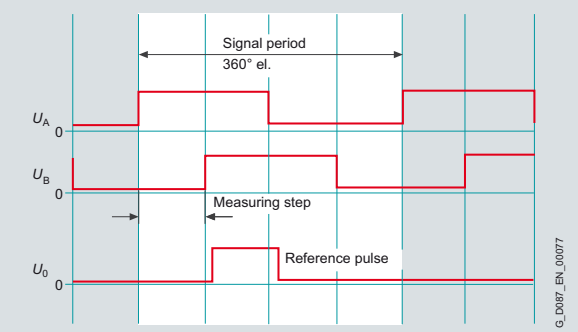

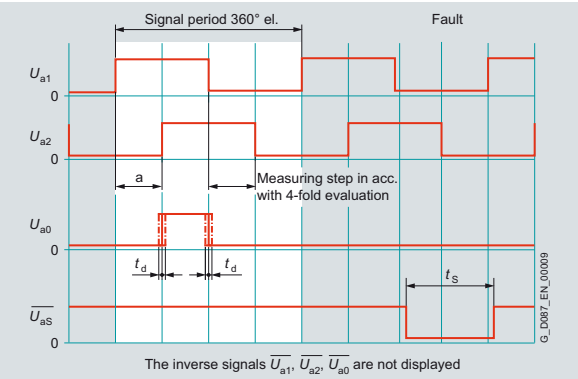

	Incremental encoder			Resolver		Absolute encoder	
	1XP8012	1XP8022	1XP8032	1XP8013	1XP8023	1XP8014	1XP8024
Connection method	Flange socket	Cable terminal box	0.8 m cable with coupling socket	Flange socket	1 m cable with coupling socket	Flange socket	1 m cable with coupling socket
Supply voltage	8 … 30 V; 5 V	8 … 30 V; 5 V	8 … 30 V; 5 V	7 V_{RMS}	7 V_{RMS}	10 … 30 V; 5 V	10 … 30 V; 5 V
Pulses per revolution	512; 1 024; 2 048	512; 1 024; 2 048	512; 1 024; 2 048	–	–	512; 2 048	–
Optional connection method							
• Connector, straight	✓	–	✓	✓	✓	✓	✓
• Cable with ferrules (2, 8, or 15 m)	✓	✓	✓	✓	✓	✓	✓
• Cable with coupling socket (2, 8, or 15 m)	✓	✓	✓	✓	✓	✓	✓
Optional mechanical protection in the case of self ventilation							
• Encoder under cover	–	✓	✓	–	✓	–	✓

8

© Siemens AG 2011

Encoders (continued)

Incremental encoder 1XP8012



Technical data for incremental encoder 1XP8012

Incremental encoder 1XP8012	-11	-10	-12	-21	-20	-22
Order code	**Q54**	**Q53**	**Q55**	**Q51**	**Q50**	**Q52**
Pulses per revolution	2 048	1 024	512	2 048	1 024	512
Incremental signals	HTL			TTL		
Supply voltage U_B	10 … 30 V_{DC}			5 V_{DC} ±10 %		
Maximum current input without load	150 mA			120 mA		
Permissible load per output	I_{Load} ≤ 100 mA (except for $\overline{U_{aS}}$)			I_{Load} ≤ 20 mA		
Outputs	2 short-circuit-proof square-wave pulses U_{a1}, U_{a2} (maximum 1 min) 2 short-circuit-proof square-wave pulses $\overline{U_{a1}}$, $\overline{U_{a2}}$ (maximum 1 min) Zero pulse U_{a0} Zero pulse $\overline{U_{a0}}$ Fault-detection signal $\overline{U_{aS}}$			Square-wave pulses U_{a1}, U_{a2} Square-wave pulses $\overline{U_{a1}}$, $\overline{U_{a2}}$ Zero pulse U_{a0} Zero pulse $\overline{U_{a0}}$ Fault-detection signal $\overline{U_{aS}}$		
Signal level	U_{High} ≥ 21 V At $-I_{High}$ = 20 mA U_{Low} ≤ 2.8 V I_{Low} = 20 mA (U_p = 24 V)			U_{High} ≥ 2.5 V At $-I_{High}$ = 20 mA U_{Low} ≤ 0.5 V I_{Low} = 20 mA		
Minimum edge interval	0.8 µs at 160 kHz			0.45 µs at 300 kHz		
Operating times (10 % … 90 %)	t_+ t_- ≤ 200 ns (with 1 m cable), except for $\overline{U_{aS}}$			t_+ t_- ≤ 30 ns (with 1 m cable)		
Maximum frequency	160 kHz			300 kHz		
Moment of inertia of rotor	4.3 x 10^{-6} kgm^2					
Maximum mechanical speed	6 000 rpm					
Vibration (55 … 2 000 Hz)	≤ 150 m/s^2 (EN 60068-2-6)					
Shock (6 ms/2 ms)	≤ 1 000 m/s^2 (EN 60068-2-27) /≤ 2 000 m/s^2 (EN 60068-2-27)					
Degree of protection	IP66					
Connection method	12-pole flange socket, 0° coding					
Weight	0.30 kg					
Certification	CE, cUL-Rus					

Connection assignment of the flange socket

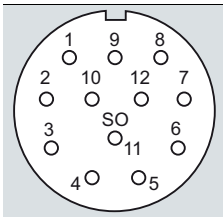

G_D087_XX_00056

Voltage supply				Incremental signals						Other signals	
12	2	10	11	5	6	8	1	3	4	7	9
U_P	Sensor U_P	0 V	Sensor 0 V	U_{a1}	$\overline{U_{a1}}$	U_{a2}	$\overline{U_{a2}}$	U_{a0}	$\overline{U_{a0}}$	$\overline{U_{aS}}$	Free

© Siemens AG 2011

Encoders (continued)

Incremental encoder 1XP8032

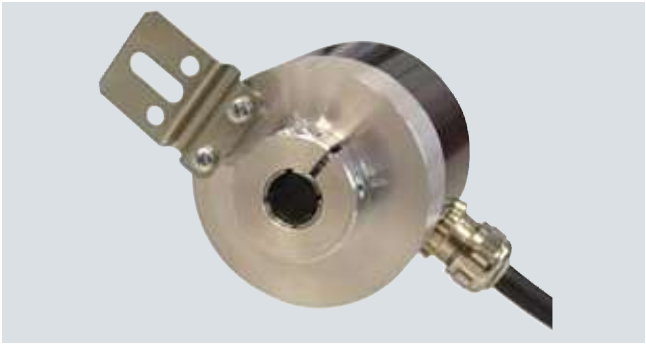

Technical data for incremental encoder 1XP8032

Incremental encoder 1XP8032	-11	-10	-12	-21	-20	-22
Order code	**Q48**	**Q47**	**Q49**	**Q45**	**Q44**	**Q46**
Pulses per revolution	2 048	1 024	512	2 048	1 024	512
Incremental signals	HTL			TTL		
Supply voltage U_B	10 … 30 V_{DC}			5 V_{DC} ±10 %		
Maximum current input without load	150 mA			120 mA		
Permissible load per output	I_{Load} ≤ 100 mA (except for $\overline{U_{aS}}$)			I_{Load} ≤ 20 mA		
Outputs	2 short-circuit-proof square-wave pulses U_{a1}, U_{a2} (maximum 1 min) 2 short-circuit-proof square-wave pulses $\overline{U_{a1}}$, $\overline{U_{a2}}$ (maximum 1 min) Zero pulse U_{a0} Zero pulse $\overline{U_{a0}}$ Fault-detection signal $\overline{U_{aS}}$			Square-wave pulses U_{a1}, U_{a2} Square-wave pulses $\overline{U_{a1}}$, $\overline{U_{a2}}$ Zero pulse U_{a0} Zero pulse $\overline{U_{a0}}$ Fault-detection signal $\overline{U_{aS}}$		
Signal level	U_{High} ≥ 21 V At $-I_{High}$ = 20 mA U_{Low} ≤ 2.8 V I_{Low} = 20 mA (U_p = 24 V)			U_{High} ≥ 2.5 V At $-I_{High}$ = 20 mA U_{Low} ≤ 0.5 V I_{Low} = 20 mA		
Minimum edge interval	0.8 μs at 160 kHz			0.45 μs at 300 kHz		
Operating times (10 % … 90 %)	t_+ t_- ≤ 200 ns (with 1 m cable), except for $\overline{U_{aS}}$			t_+ t_- ≤ 30 ns (with 1 m cable)		
Maximum frequency	160 kHz			300 kHz		
Moment of inertia of rotor	4.3 x 10^{-6} kgm^2					
Maximum mechanical speed	6 000 rpm					
Vibration (55 … 2 000 Hz)	≤ 150 m/s^2 (EN 60068-2-6)					
Shock (6 ms/2 ms)	≤ 1 000 m/s^2 (EN 60068-2-27) /≤ 2 000 m/s^2 (EN 60068-2-27)					
Degree of protection	IP66					
Connection method	0.8 m cable with 12-pole coupling socket, 0° coding					
Weight	0.30 kg					
Certification	CE, cUL-Rus					

8

© Siemens AG 2011

Additional components

Encoders (continued)

Incremental encoder 1XP8022



Connection assignment in the cable terminal box

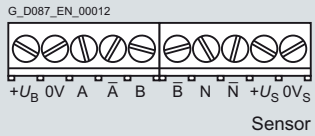

Technical data for incremental encoder 1XP8022

Incremental encoder 1XP8022	-11	-10	-12	-21	-20	-22
Order code	Q60	Q59	Q61	Q57	Q56	Q58
Pulses per revolution	2 048	1 024	512	2 048	1 024	512
Incremental signals	HTL			TTL		
Supply voltage U_B	8 … 30 V_{DC} (protected against polarity reversal)			5 V_{DC} ±5 % (protected against polarity reversal)		
Maximum current input without load	≤ 100 mA					
Permissible load per output	I_L ≤ 70 mA					
Outputs	2 square-wave pulses A, B 2 square-wave pulses $\overline{A}$, $\overline{B}$ Zero pulse N Zero pulse $\overline{N}$					
Signal level	$U_{High} \geq U_B - 3$ V $U_{Low} \leq 1.5$ V			$U_{High} \geq 2.5$ V $U_{Low} \leq 0.5$ V		
Minimum edge interval	500 ns					
Operating times (10 % … 90 %)	≤ 1 μs			≤ 200 ns		
Maximum frequency	120 kHz					
Moment of inertia of rotor	6 x 10^{-6} kgm^2					
Maximum mechanical speed	8 000 rpm					
Vibration (55 … 2 000 Hz)	≤ 100 m/s^2 (EN 60068-2-6)					
Shock (11 ms)	≤ 1 000 m/s^2 (EN 60068-2-27)					
Degree of protection	IP66					
Connection method	Cable terminal box					
Weight	0.35 kg					
Certification	CE, cUL-Rus					

© Siemens AG 2011

Encoders (continued)

Resolvers 1XP8013 and 1XP8023



Resolver 1XP8013



Resolver 1XP8023

Resolvers are rotary measuring systems where the angle of rotation is inductively detected, without contact. They operate with analog measured value acquisition, i.e. a measuring signal value can be continuously assigned to each value of the measured variable.

The method of operation mainly corresponds to that of a rotary transformer consisting of rotor and stator. If AC voltage is applied to the stator winding, the magnetic flux created in the rotor winding induces an amplitude-modulated voltage of the same frequency. The amplitude change with time is modulated by the angle-dependent change of the rotor. The envelope curve shows the respective angle. With the zero passes of these envelope curves, the modulated voltage is phase-shifted by 180° elec. In practice, resolvers with multiple stator windings are commonly used. The voltage at the secondary winding continuously changes with the spatial angle in the phase position with regard to the voltage at one of the primary windings.
A phase discriminator delivers a signal that is proportional to the angle of rotation. Resolvers are used with applications which do not require such accurate position acquisition as that possible with incremental encoders due to their higher resolution capability. They are used under rugged conditions regarding vibrations, shock loads, and / or temperature.

The resolver is available for sizes 71 to 250.

Principle of operation: Inductive scanning, sin/cos evaluation for rotor position

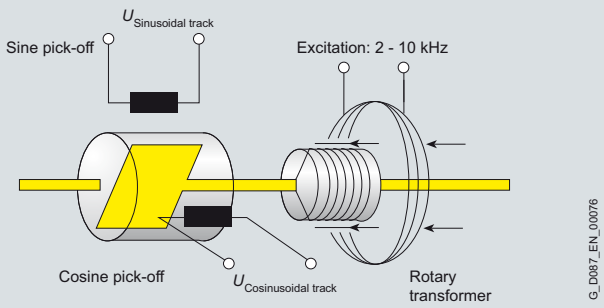

Output signals

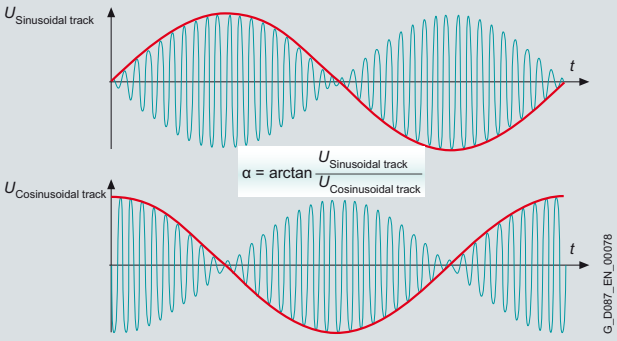

8

© Siemens AG 2011

Encoders (continued)

Technical data for the resolver

Resolver	1XP8013-10	1XP8023-10	1XP8013-11	1XP8023-11
Order code	**Q85**	**Q88**	**Q87**	**Q86**
Input voltage	7 V_{RMS}		7 V_{RMS}	
Current input (maximum)	120 mA		65 mA	
Input frequency	5 kHz		10 kHz	
Phase shift	0° (+25°)		0° (±10°)	
Zero voltage (maximum)	50 mV		50 mV	
Pole pairs	1		1	
Primary side	R1 – R2		R1 – R2	
Impedance				
Z_{ro}	55 + j50 (±20 %) Ω		70 + j100 (±20 %) Ω	
Z_{so}	115 + j175 (±20 %) Ω		180 + j300 (±20 %) Ω	
Z_{ss}	115 + j160 (±20 %) Ω		175 + j275 (±20 %) Ω	
DC resistance				
Rotor	36 (±10 %) Ω		36 (±10 %) Ω	
Stator	60 (±10 %) Ω		60 (±10 %) Ω	
Maximum permissible mechanical speed	≤ 8 000 rpm		≤ 8 000 rpm	
Permissible electrical speed	≤ 8 000 rpm		≤ 8 000 rpm	
Vibration (55 … 2 000 Hz)	≤ 100 m/s²		≤ 100 m/s²	
Shock (6 ms)	≤ 1 000 m/s²		≤ 1 000 m/s²	
Connection method	Flange socket, 0° coding	1 m cable with coupling socket	Flange socket, 0° coding	1 m cable with coupling socket
Temperature range				
Flange socket or fixed cable	–30 … +80 °C		–30 … +80 °C	
Moveable cable	–		–5 … +80 °C	
Degree of protection	IP65		IP65	
Weight	Approx. 320 g	Approx. 500 g	Approx. 320 g	Approx. 500 g
Certification	CE, cUL-Rus			

8

Connection assignment of the flange socket

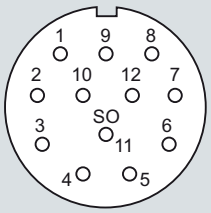

G_D087_XX_00056

Input voltage		Sine pick-off		Cosine pick-off	
10	7	11	12	1	2
R1	R2	S1	S3	S2	S4

© Siemens AG 2011

Encoders (continued)

Absolute encoders 1XP8014 and 1XP8024

Absolute encoders are used to determine the position of rotor shafts and to approach a precisely defined angular position. With the absolute measuring method, the position value is available from the encoder immediately after switch-on and can be called at any time by the subsequent electronics. There is no need to move the axes to find the reference position. The absolute position information is read from the graduation on the graduated disk, which consists of several parallel graduation tracks. The track with the finest scale division is interpolated for the position value and is used to generate an optional incremental signal at the same time. The graduated disks are photoelectrically scanned.

With singleturn rotary encoders the absolute position information is repeated at each revolution. Multiturn rotary encoders can also differentiate between revolutions.

Absolute encoders are used with applications which require a precisely defined position to be approached / relocated.

Encoders can be fitted on all motors with sizes 71 to 250.

The multiturn absolute encoder is available with ENDAT protocol or SSI protocol and built on the shaft.

Principle of operation: Photoelectric scanning

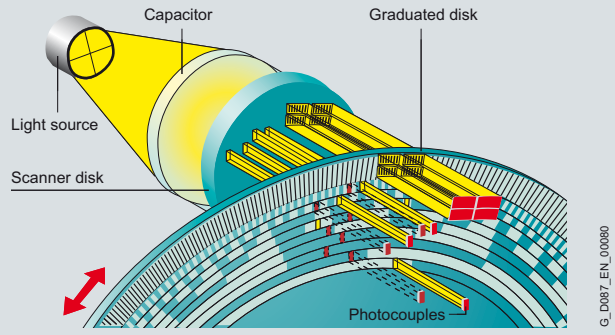

Output signals (serial interface)

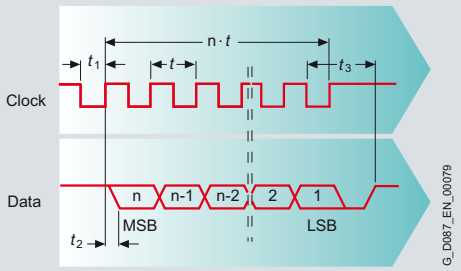

Clock: 90 kHz ... 1.1 MHz

Technical data

Absolute encoder	1XP8014-20	1XP8024-20	1XP8014-10	1XP8024-10
Order code	**Q80**	**Q81**	**Q82**	**Q83**
Supply voltage U_P	10 … 30 V		5 V ± 5 %	
Maximum current input without load	≤ 200 mA			
Absolute position values	SSI		EnDAT 2.1	
• Code	Gray		Dual	
• Positions per revolution	8 192 (13 bit)			
• Differentiable revolutions	4 096			
Incremental signals	~1 V_{ss}			
• Pulses per revolution	512		2 048	
• Outputs	Sine / cosine pulses A, B			
• Limit frequency -3 dB	≥ 200 kHz			
• Signal size	0.8 … 1.2 V_{ss}			
Moment of inertia of rotor	4.3 x 10^{-6} kgm^2			
Maximum permissible mechanical speed	≤ 6 000 rpm			
Permissible electrical speed with system accuracy	≤ 1 500 rpm / ±1 LSB ≤ 10 000 rpm / ±50 LSB			
Vibration (55 … 2 000 Hz)	15 g	30 g	15 g	30 g
Shock (6 ms)	100 g			
Temperature range	–20 °C … 80 °C		–20 °C … 80 °C	
Degree of protection	IP66			
Connection method	Flange socket, 17-pole with 0° coding	1 m cable with coupling socket	Flange socket, 17-pole with 0° coding	1 m cable with coupling socket
Weight	0.3 kg			
Certification	CE, cUL-Rus			

© Siemens AG 2011

Encoders (continued)

Connection assignment of the flange socket (SSI)

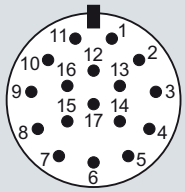

G_D087_XX_00011

Voltage supply					Incremental signals				Absolute position values				Other signals	
7	1	10	4	11	15	16	12	13	14	17	8	9	2	5
U_P	Sensor U_P	0 V	Sensor 0 V	Interior shield	A+	A–	B+	B–	DATA	$\overline{\text{DATA}}$	CLOCK	$\overline{\text{CLOCK}}$	Direc-tion of rota-tion	Zeros

Connection assignment of the flange socket (EnDAT 2.1)

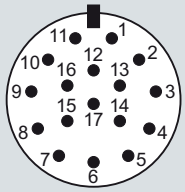

G_D087_XX_00011

Voltage supply					Incremental signals				Absolute position values			
7	1	10	4	11	15	16	12	13	14	17	8	9
U_P	Sensor U_P	0 V	Sensor 0 V	Interior shield	A+	A–	B+	B–	DATA	$\overline{\text{DATA}}$	CLOCK	$\overline{\text{CLOCK}}$

8

© Siemens AG 2011

Encoders (continued)

Rugged encoders

Rotary pulse encoder LL 861 900 220



Leine & Linde LL 861 900 220

With its rugged design, it is also suitable for difficult operating conditions. It is resistant to shock and vibration and has insulated bearings.

The rotary pulse encoder LL 861 900 220 is available only from motor size 112.

Order code:
Rotary pulse encoder LL 861 900 220 **Q92**

The version of the rotary pulse encoder with a diagnostics system (ADS) can be supplied by Leine & Linde.

Manufacturer:
Leine & Linde (Germany) GmbH
Bahnhofstraße 36
73430 Aalen, Germany
Phone: +49 73 61-78093-0
Fax: +49 73 61-78093-11
http://www.leinelinde.com
E-mail: info@leinelinde.se

Technical data for LL 861 900 220 (HTL version)

Supply voltage U_B	**+9 V to +30 V**
Current input without load	Max. 80 mA
Permissible load current per output	40 mA
Pulses per revolution	1 024
Outputs	6 short-circuit-proof square-wave pulses A, A', B, B', 0, 0', High Current HTL
Pulse offset between the two outputs	90° ±25° el.
Output amplitude	$U_{High} \geq U_B - 4$ V $U_{Low} \leq 2.5$ V
Pulse duty factor	1:1 ±10 %
Rate of change	50 V/µs (without load)
Maximum frequency	100 kHz with 350 m cable
Maximum speed	4 000 rpm
Temperature range	–20 to +40 °C, on request up to +80 °C
Degree of protection	IP65
Max. permissible radial transverse force	300 N
Max. permissible axial force	100 N
Connection method	Terminal strips in the encoder Cable connection M20 x 1.5 radial
Weight	Approx. 1.3 kg

© Siemens AG 2011

Encoders (continued)

Rotary pulse encoder HOG9 D 1024



Hübner HOG9 D 1024 I

The encoder features insulated bearings.

The rotary pulse encoder HOG9 D 1024 I is available only from motor size 112.

Order code:
Rotary pulse encoder HOG9 D 1024 **Q93**

Manufacturer:
Baumer Hübner GmbH
Planufer 92b
10967 Berlin, Germany
Phone: +49 30-6 90 03-0
Fax: +49 30-6 90 03-1 04
http://www.baumerhuebner.com
E-mail: info@baumerhuebner.com

Technical data for HOG9 D 1024 I (HTL version)

Supply voltage U_B	**+9 V to +30 V**
Current input without load	50 to 100 mA
Permissible load current per output	60 mA, 300 mA peak
Pulses per revolution	1 024
Outputs	4 short-circuit-proof square-wave pulses A, B and A', B'
Pulse offset between the two outputs	90° ±20°
Output amplitude	$U_{High} \geq U_B - 3.5$ V $U_{Low} \leq 1.5$ V
Pulse duty factor	1:1 ± 20 %
Rate of change	10 V/µs (without load)
Maximum frequency	120 kHz
Maximum speed	7 000 rpm
Temperature range	–20 to +40 °C, on request from –30 to +100 °C
Degree of protection	IP56
Max. permissible radial transverse force	300 N
Max. permissible axial force	200 N
Connection method	Radial connector (mating connector is supplied)
Mechanical design acc. to Hübner identity number	73 522 E
Weight	Approx. 0.7 kg

© Siemens AG 2011

Encoders (continued)

Rotary pulse encoder HOG10 D

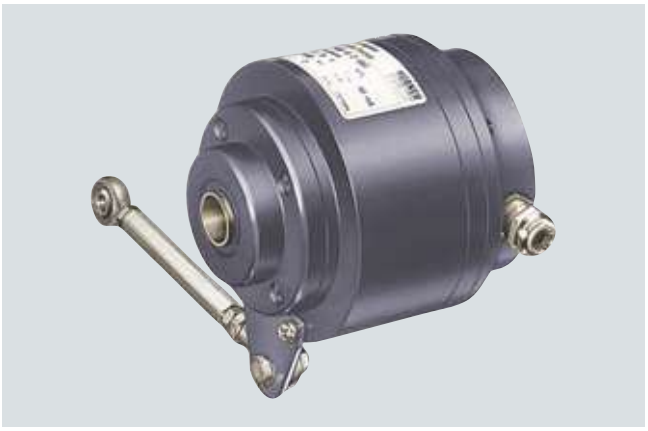

Hübner HOG10 D

This encoder features a very rugged design and is therefore suitable for difficult operating conditions. It has insulated bearings.

The rotary pulse encoder HOG10 D is available only from motor size 112.

Order code:

Rotary pulse encoder HOG10 D **Q94**

Manufacturer:
Baumer Hübner GmbH
Planufer 92b
10967 Berlin, Germany
Phone: +49 30-6 90 03-0
Fax: +49 30-6 90 03-1 04
http://www.baumerhuebner.com
E-mail: info@baumerhuebner.com

Technical data for HOG10 D 1024 I (HTL version)

Supply voltage U_B	**+9 V to +30 V**
Current input without load	Approx. 100 mA
Permissible load current per output	60 mA, 300 mA peak
Pulses per revolution	1 024
Outputs	4 short-circuit-proof square-wave pulses A, B and A', B'
Pulse offset between the two outputs	90° ±20 %
Output amplitude	$U_{High} \geq U_B - 3.5$ V $U_{Low} \leq 1.5$ V
Pulse duty factor	1:1 ± 20 %
Rate of change	10 V/µs (without load)
Maximum frequency	120 kHz
Maximum speed	7 000 rpm
Temperature range	–20 to +40 °C, on request from –40 to +100 °C
Degree of protection	IP66
Max. permissible radial transverse force	400 N
Max. permissible axial force	250 N
Connection method	Connecting terminals, cable connection M20x1.5
Mechanical design acc. to Hübner identity number	74 055 E
Weight	Approx. 1.6 kg

© Siemens AG 2011

Additional components

Encoders (continued)

Mechanical protection

In force-ventilated motors the encoder is mounted inside the protection cover. In self-ventilated motors the encoder is mounted outside the protection cover. The encoder is covered by a protection cover / plate. This provides additional mechanical protection for the encoder.

In the standard version the encoder is covered by a protection plate. As an option, a protection cover can be ordered instead of the protection plate.

Order code:
Encoder under cover **Q95**



Motors prepared for encoder mounting

Motors up to size 200 can be supplied with the optional interface Encoder mounting prepared. Encoders with dimensions as shown in the diagram on page 8/156 can be mounted up to a maximum total weight of 500 g. This option is suitable for applications with medium shock and vibration requirements. At a medium clock frequency of the application, speeds up to 3600/min are possible.

Order code:
Encoder mounting prepared **N50**

© Siemens AG 2011

Encoders (continued)

Encoder accessories

Connector

A straight connector for shielded cables up to 8 mm in diameter can be supplied for the encoders with flange socket – incremental encoder 1XP8012, resolvers 1XP8013, 1XP8023, absolute encoders 1XP8014 and 1XP8024.

Order code:
Connector **Q62**
FDU:55190000565003

Cable with ferrules

A preassembled cable with ferrules and three different cable lengths can be supplied for the encoders.

Selection table for the connector

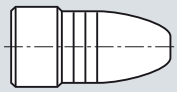

	Connector		
Order codes **Part number**			
• Incremental encoders 1XP8012, 1XP8032	**Q62** FDU:55190000565002		
• Resolvers 1XP8013 and 1XP8023	**Q62** FDU:55190000565002		
• Absolute encoders 1XP8014 and 1XP8024	**Q62** FDU:55190000565003		

Selection table for the cable with ferrules

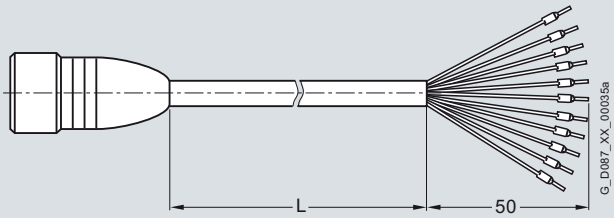

Free cable length L	2 m	8 m	15 m
Order codes **Part number**			
• Incremental encoders 1XP8012, 1XP8032	**Q69** FDU:70000004013446	**Q70** FDU:70000004013447	**Q71** FDU:70000004013448
• Resolvers 1XP8013 and 1XP8023	**Q69** FDU:70000004013576	**Q70** FDU:70000004013577	**Q71** FDU:70000004013578
• Absolute encoders 1XP8014 and 1XP8024	**Q69** FDU:70000004013454	**Q70** FDU:70000004013455	**Q71** FDU:70000004013456

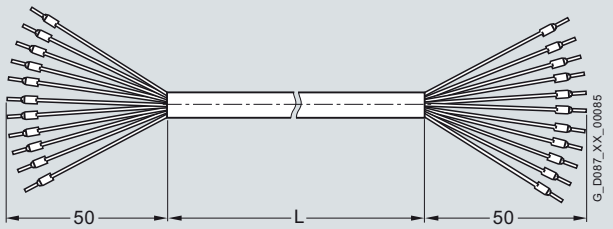

Free cable length L	2 m	8 m	15 m
Order codes **Part number**			
• Incremental encoder 1XP8022	**Q63** FDU:70000004013418	**Q64** FDU:70000004013419	**Q65** FDU:70000004013420

© Siemens AG 2011

Additional components

Encoders (continued)

Cable with coupling socket

A cable with a straight coupling socket can be supplied for the encoders.

Selection table for the cable with coupling socket

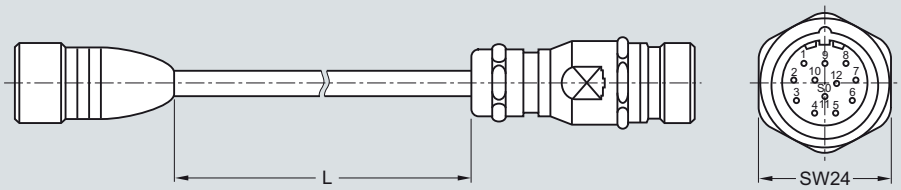

Free cable length L	2 m	8 m	15 m
Order codes **Part number**			
• Incremental encoders 1XP8012, 1XP8032	**Q72** FDU:70000004013449	**Q73** FDU:70000004013450	**Q74** FDU:70000004013451
• Resolvers 1XP8013 and 1XP8023	**Q72** FDU:70000004013579	**Q73** FDU:70000004013580	**Q74** FDU:70000004013581

For the connection assignment of the coupling socket, see the encoder flange socket.

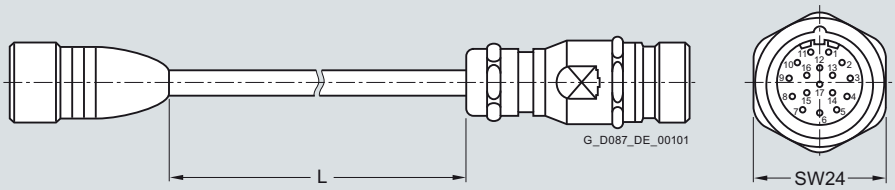

Free cable length L	2 m	8 m	15 m
Order codes **Part number**			
• Absolute encoders 1XP8014 and 1XP8024	**Q72** FDU:70000004013457	**Q73** FDU:70000004013458	**Q74** FDU:70000004013459

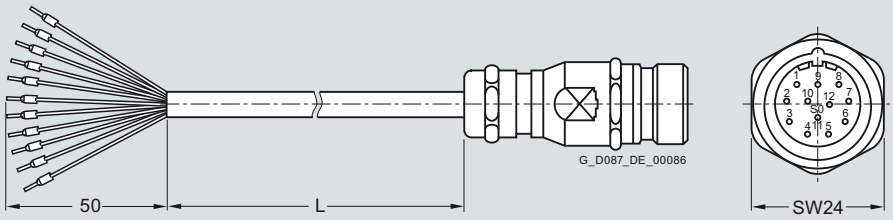

Free cable length L	2 m	8 m	15 m
Order codes **Part number**			
• Incremental encoder 1XP8022	**Q66** FDU:70000004013421	**Q67** FDU:70000004013422	**Q68** FDU:70000004013443

SW = Wrench width

© Siemens AG 2011

Encoders (continued)

Gateways EnDAT for absolute encoders

With the interface converters (gateways) EnDAT absolute encoders can be integrated in networks with a serial bus system (Profibus DP, CANopen and DeviceNET).

The connection between absolute encoder and gateway is possible with the cables for absolute encoder **Q72**, **Q73** or **Q74**.

Order code:

Gateway EnDAT Profibus DP	**Q02**
Gateway EnDAT CANopen	**Q03**
Gateway EnDAT DeviceNET	**Q04**

Backstop

Overview of possible module technology in conjunction with backstop

	Motor plug	Brake	Encoder system	Self ventilation Forced ventilation	2nd shaft extension
Backstop	✓		✓	✓	✓

The motors can be supplied with a backstop, which prevents them from turning against the direction of rotation used for operation.

The backstop will idle when the motor is turning in the direction of rotation used for operation. As soon as the motor speed exceeds the disengage speed, the interior and exterior backstop rings will no longer be connected. In the opposite direction of rotation to that used for operation, the backstop is blocked. This creates a fixed connection between the interior and exterior rings. The backstop's nominal torque can now be transferred.

Order code:

Backstop **N23**

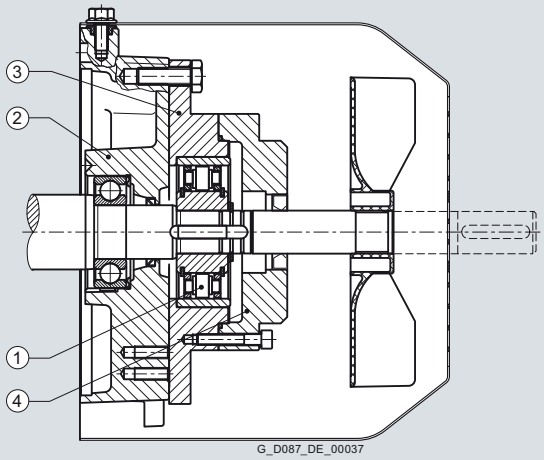

① Cage
② Motor end shield
③ Backstop flange
④ Backstop cover

Technical data for the backstop

Motor size	Nominal torque	Disengage speed	Max. speed	Weight	Moment of inertia of cage and interior ring
	T_{SP}	n_{Dis}	n_{max}	m_{Bstp}	J_{Bstp}
	Nm	rpm	rpm	kg	kgm^2
71 [1]	100	890	5 000	0.26	0.0001
80 [1]	100	890	5 000	0.26	0.0001
90	150	860	5 000	0.42	0.0002
100	150	860	5 000	0.42	0.0002
112	150	860	5 000	0.42	0.0002
132	420	750	5 000	1.16	0.0008
160	580	730	5 000	0.92	0.0008
180	1 050	670	5 000	1.60	0.0020
200	1 050	670	5 000	1.60	0.0020
225	1 350	630	5 000	4.20	0.0027
250	1 350	630	5 000	4.20	0.0027
280	2 700	400	4 500	8.80	0.0115
315S	2 700	400	4 000	8.80	0.0115
315M/L	6 500	320	4 000	12.70	0.0241

[1] Not possible for worm geared motors S

© Siemens AG 2011

2nd shaft extension

Overview of possible module technology in conjunction with 2nd shaft extension

	Motor plug	Brake	Backstop	Encoder system	Self ventilation	Forced ventilation
2nd shaft extension						
Without handwheel	✓	✓	✓		✓	
With handwheel	✓	✓	✓		✓	

For 4-pole motors a free, 2nd shaft extension can be supplied at the non-drive end. The 2nd shaft extension has a 60° center hole to DIN 332, Part 2 with M3 to M24 tapped hole depending on the shaft diameter.

For a coupling output, the 2nd shaft extension can transmit the full rated power. Please also enquire about the transmittable power and permissible transverse force if belt pulleys, chains, or gear pinions are used on the 2nd shaft extension.

A 2nd shaft extension cannot be provided if a rotary pulse encoder and / or an external fan has been mounted to the motor.

Order code:
2nd shaft extension **N39**

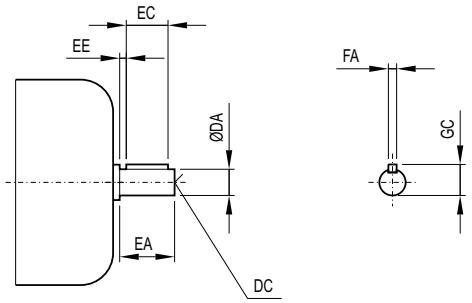

Motor size	DA	EA	Distance between fan cover and shaft shoulder	DC	EC	EE	FA	GC
71 [1)]	14	30	4	DS M5	22	4	5	16.0
80 [1)]	14	30	4	DS M5	22	4	5	16.0
90	19	40	5	DS M6	32	4	6	21.5
100	19	40	5	DS M6	32	4	6	21.5
112	24	50	6	DS M8	40	5	8	27.0
132	28	60	8	DS M10	50	5	8	31.0
160	38	80	8	DS M12	70	5	10	41.0
180	42	110	15	DS M16	90	10	12	45.0
200	48	110	20	DS M16	100	5	14	51.5
225	55	110	4	DS M20	100	5	16	59
250	60	140	5	DS M20	125	10	18	64
280	65	140	5	DS M20	125	10	18	69
315	70	140	5	DS M20	125	10	20	74.5

[1)] Not possible for worm geared motors S

© Siemens AG 2011

2nd shaft extension (continued)

Hexagonal recess

All self-ventilated motors of sizes 71 to 160 with built-on brake or backstop have a hexagonal recess in the motor shaft extension at the non-drive end. Thus there is frequently no need for a handwheel.

Use of a hexagonal recess is not possible for a rotary pulse encoder or 2nd shaft extension.

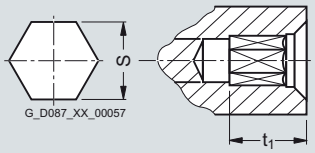

Motor size	Wrench width SW	
	S	t_1
	mm	mm
LA71 [1]	6	9
LA80 [1]		
LA90		
LA100		
LA112	10	12
LA132		
LA160		

[1] Not possible for worm geared motors S

Handwheel

Motors of sizes 71 to 160 can be supplied with a 2nd shaft extension and additionally with a handwheel. The handwheel is a disk handwheel in accordance with DIN 3670. By mounting it on the 2nd shaft extension of the motor, the geared motor can rotate when the motor winding is de-energized.

The handwheel can only be used in combination with the 2nd shaft extension.

Additional lengths for the handwheel with 2nd shaft extension can be found in the table on page 8/153. In addition, the order code **N39** must always be quoted for the 2nd shaft extension.

Order code:
Handwheel **N40**

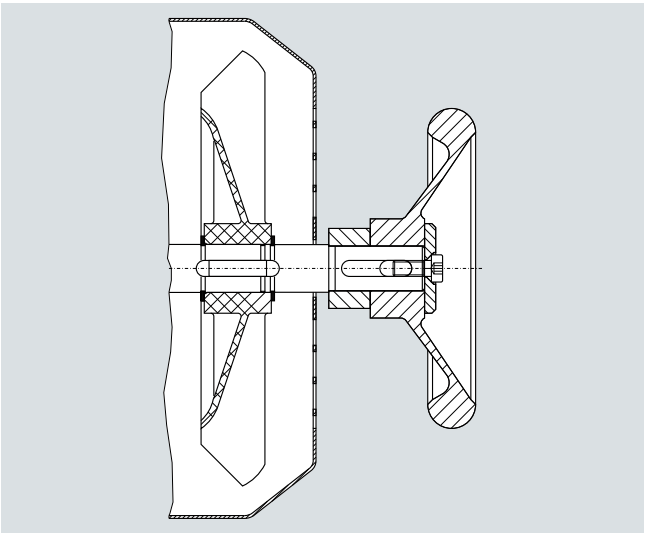

Additional feet

Additional feet can also be mounted on motors of sizes 100 to 160. This enables additional components, such as distributor boxes etc., to be mounted. The mounting dimensions comply with EN 50347.

You can establish the dimensions from the table on page 8/157.

Order code:
Additional feet **N49**

© Siemens AG 2011

Motors for line-fed operation "Standard Efficiency" IE1 / without

Selection and ordering data

4-pole, 1 500 rpm at 50 Hz

IEC Motor size	Motor LA/LG LAI/LGI	Order No.		Order code		Rated power	Rated speed	Rated torque	Rated current	Power factor	Efficiency		Effi-ciency class
		9th posi-tion	10th posi-tion	No. of poles	Effi-ciency	P_{rated}	n_{rated}	T_{rated}	I_{rated} 400 V	cos φ	η at 4/4 load	η at 3/4 load	acc. to standard IEC 60034-30
				4-pole		kW	rpm	Nm	A	–	%	%	
63	LAI63S4 [3]	**B**	**C**	–	–	0.12	1 350	0.85	0.42	0.75	55.0	54.0	–
	LAI63M4 [3]	**B**	**E**	–	–	0.18	1 350	1.27	0.58	0.76	59.0	60.0	–
71	LA71B4	**C**	**B**	–	–	0.12	1 400	0.82	0.40	0.66	65.0	65.0	–
	LA71C4	**C**	**C**	–	–	0.18	1 370	1.25	0.60	0.69	63.0	63.0	–
	LA71S4	**C**	**D**	–	–	0.25	1 350	1.77	0.77	0.78	60.0	60.0	–
	LA71M4	**C**	**E**	–	–	0.37	1 370	2.58	1.06	0.78	65.0	65.0	–
	LA71ZMP4 [1]	**C**	**G**	–	–	0.55	1 370	3.83	1.54	0.73	70.0	70.0	–
	LA71ZMD4 [1]	**C**	**H**	–	–	0.75	1 330	5.38	2.12	0.74	69.0	69.0	–
80	LAI80S4 [2]	**D**	**B**	–	–	0.55	1 395	3.76	1.46	0.81	67.0	67.0	–
	LA80M4	**D**	**C**	–	–	0.75	1 395	5.13	1.88	0.80	72.1	72.1	**IE1**
90	LA90S4	**E**	**L**	–	–	1.10	1 415	7.42	2.6	0.81	75.0	75.0	**IE1**
	LA90L4	**E**	**P**	–	–	1.50	1 420	10.1	3.45	0.81	77.2	77.2	**IE1**
	LA90ZLB4 [1]	**E**	**Q**	–	–	2.20	1 375	15.3	5.10	0.82	76.0	76.0	–
100	LA100L4	**F**	**L**	–	–	2.20	1 420	14.8	4.85	0.82	79.7	80.2	**IE1**
	LA100LB4	**F**	**M**	–	–	3.00	1 420	20.2	6.5	0.82	81.5	82.0	**IE1**
112	LA112MB4	**G**	**H**	–	–	4.00	1 440	26.5	8.4	0.83	83.1	83.6	**IE1**
132	LA132SB4	**H**	**F**	–	–	5.50	1 455	36.1	11.6	0.81	84.7	84.7	**IE1**
	LA132M4	**H**	**H**	–	–	7.50	1 455	49.2	15.4	0.82	86.0	86.5	**IE1**
	LA132ZMP4	**H**	**T**	–	–	9.20	1 445	60.8	17.75	0.86	86.9	87.4	**IE1**
160	LA160MB4	**J**	**P**	–	–	11.00	1 460	71.9	21.5	0.84	87.6	88.1	**IE1**
	LA160L4	**J**	**R**	–	–	15.00	1 460	98.1	29.0	0.84	88.7	88.9	**IE1**
180 ... 280	Motor sizes 180 to 280 in High Efficiency (IE2) see page 8/88												
315	LGI315S4 [2]	**Q**	**Q**	–	–	110.00	1 486	707.0	200.0	0.85	93.3	93.3	**IE1**
	LGI315M4 [2]	**Q**	**S**	–	–	132.00	1 488	847.0	240.0	0.85	93.5	93.5	**IE1**
	LGI315L4 [2]	**Q**	**U**	–	–	160.00	1 486	1 028.0	285.0	0.86	93.8	93.9	**IE1**
	LGI315LB4 [2]	**Q**	**V**	–	–	200.00	1 486	1 285.0	350.0	0.88	94.0	94.3	**IE1**

[1] Only as integrated motor
[2] Only as IEC MODULOG
[3] Only for worm geared motors S

© Siemens AG 2011

Selection and ordering data (continued)

4-pole, 1 500 rpm at 50 Hz

IEC Motor size	Motor LA/LG LAI/LGI	Order No.		Order code		Starting current	Relative starting torque	Relative breakdown torque	Relative average acceleration torque	Measuring surface sound pressure level	Sound pressure level	No-load operating	Moment of inertia	Weight
		9th position	10th position	No. of poles	Efficiency	I_{St}/I_{rated}	T_{St}/T_{rated}	T_{Bk}/T_{rated}	T_{Ru}/T_{rated}	L_{pfA}	L_{WA}	Z_0	J_{mot}	m_{mot}
				4-pole		–	–	–	–	dB(A)	dB(A)	/h	kgm^2	kg
63	LAI63S4 [3]	**B**	**C**	–	–	2.8	1.9	2.0		42	53		0.00029	4.0
	LAI63M4 [3]	**B**	**E**	–	–	3.0	1.9	1.9	1.8	42	53		0.00037	4.7
71	LA71B4	**C**	**B**	–	–	3.5	2.1	2.3	2.0	44	55	20 000	0.00052	5.5
	LA71C4	**C**	**C**	–	–	3.0	1.9	1.9	1.8	44	55	20 000	0.00052	5.5
	LA71S4	**C**	**D**	–	–	3.0	1.9	1.9	1.9	44	55	15 000	0.00052	5.5
	LA71M4	**C**	**E**	–	–	3.3	1.9	2.1	1.8	44	55	15 000	0.00077	6.9
	LA71ZMP4 [1]	**C**	**G**	–	–	3.7	2.3	2.3	2.1	46	57	10 000	0.00110	8.1
	LA71ZMD4 [1]	**C**	**H**	–	–	3.4	2.3	2.1	2.0	46	57	10 000	0.00120	8.6
80	LAI80S4 [2]	**D**	**B**	–	–	3.9	2.2	2.2	1.9	47	58	10 000	0.00140	10.4
	LA80M4	**D**	**C**	–	–	4.2	2.3	2.3	2.1	47	58	10 000	0.00170	11.5
90	LA90S4	**E**	**L**	–	–	4.6	2.3	2.4	2.3	48	60	8 000	0.00240	15.0
	LA90L4	**E**	**P**	–	–	5.3	2.4	2.6	2.4	48	60	8 000	0.00330	17.9
	LA90ZLB4 [1]	**E**	**Q**	–	–	5.1	2.8	2.8	2.3	50	62	5 000	0.00400	20.7
100	LA100L4	**F**	**L**	–	–	5.6	2.5	2.8	2.6	53	65	7 000	0.00470	24.1
	LA100LB4	**F**	**M**	–	–	5.6	2.7	3.0	2.7	53	65	7 000	0.00550	27.6
112	LA112MB4	**G**	**H**	–	–	6.0	2.7	3.0	2.5	53	65	5 000	0.01200	35.7
132	LA132SB4	**H**	**F**	–	–	6.3	2.5	3.1	2.5	62	74	3 000	0.01800	47.2
	LA132M4	**H**	**H**	–	–	6.7	2.7	3.2	2.6	62	74	3 000	0.02300	56.4
	LA132ZMP4	**H**	**T**	–	–	7.8	2.6	3.2	2.5	64	76	1 600	0.02900	69.0
160	LA160MB4	**J**	**P**	–	–	6.2	2.2	2.7	2.3	66	78	2 000	0.04300	84.0
	LA160L4	**J**	**R**	–	–	6.5	2.6	3.0	2.5	66	78	2 000	0.05500	98.0
180 ... 280	Motor sizes 180 to 280 in High Efficiency (IE2) see page 8/88													
315	LGI315S4 [2]	**Q**	**Q**	–	–	6.4	2.5	2.8	1.9	70	83	200	1.90000	730.0
	LGI315M4 [2]	**Q**	**S**	–	–	6.8	2.7	2.9	2.1	70	83	180	2.30000	810.0
	LGI315L4 [2]	**Q**	**U**	–	–	6.8	2.7	2.8	2.1	71	83	160	2.90000	955.0
	LGI315LB4 [2]	**Q**	**V**	–	–	6.5	2.6	2.8	2.0	71	86	140	3.50000	955.0

[1] Only as integrated motor
[2] Only as IEC MODULOG
[3] Only for worm geared motors S

© Siemens AG 2011

Selection and ordering data (continued)

2-pole, 3 000 rpm at 50 Hz

IEC Motor size	Motor LA/LG LAI/LGI	Order No.		Order code		Rated power	Rated speed	Rated torque	Rated current	Power factor	Efficiency		Efficiency class
		9th position	10th position	No. of poles	Efficiency	P_{rated}	n_{rated}	T_{rated}	I_{rated} 400 V	cos φ	η at 4/4 load	η at 3/4 load	acc. to standard IEC 60034-30
				2-pole		kW	rpm	Nm	A	–	%	%	
63	LAI63S2 [3]	**B**	**C**	**P00**	**–**	0.18	2 820	0.61	0.51	0.79	64.0	63.0	**–**
	LAI63M2 [3]	**B**	**E**	**P00**	**–**	0.25	2 830	0.84	0.69	0.80	65.0	65.0	**–**
71	LA71B2	**C**	**B**	**P00**	**–**	0.18	2 800	0.61	0.49	0.80	66.5	65.5	**–**
	LA71C2	**C**	**C**	**P00**	**–**	0.25	2 790	0.86	0.68	0.78	68.0	67.0	**–**
	LA71S2	**C**	**D**	**P00**	**–**	0.37	2 740	1.29	1.00	0.82	66.0	65.0	**–**
	LA71M2	**C**	**E**	**P00**	**–**	0.55	2 800	1.88	1.36	0.82	71.0	70.0	**–**
80	LA80S2	**D**	**B**	**P00**	**–**	0.75	2 855	2.51	1.75	0.86	72.1	71.1	**IE1**
	LA80M2	**D**	**L**	**P00**	**–**	1.10	2 845	3.69	2.45	0.87	75.0	75.0	**IE1**
90	LA90S2	**E**	**L**	**P00**	**–**	1.50	2 860	5.01	3.3	0.85	77.2	78.2	**IE1**
	LA90L2	**E**	**P**	**P00**	**–**	2.20	2 880	7.29	4.7	0.85	79.7	79.7	**IE1**
100	LA100L2	**F**	**K**	**P00**	**–**	3.00	2 890	9.91	6.3	0.85	81.5	81.5	**IE1**
112	LA112MB2	**G**	**H**	**P00**	**–**	4.00	2 905	13.1	8.1	0.86	83.1	83.1	**IE1**
132	LA132S2	**H**	**E**	**P00**	**–**	5.50	2 925	18.0	10.5	0.89	84.7	84.7	**IE1**
	LA132SB2	**H**	**F**	**P00**	**–**	7.50	2 930	24.4	14.1	0.89	86.0	86.0	**IE1**
160	LA160M2	**J**	**N**	**P00**	**–**	11.00	2 940	35.7	20.5	0.88	87.6	87.6	**IE1**
	LA160MB2	**J**	**P**	**P00**	**–**	15.00	2 930	48.9	27.0	0.90	88.7	88.9	**IE1**
	LA160L2	**J**	**R**	**P00**	**–**	18.50	2 940	60.1	33.0	0.91	89.3	89.5	**IE1**
180	LG180M2	**K**	**K**	**P00**	**–**	22.00	2 945	71.3	41.0	0.86	89.9	89.9	**IE1**
200	LG200LA2	**L**	**K**	**P00**	**–**	30.00	2 950	97.1	54.0	0.88	90.7	90.8	**IE1**
	LG200L2	**L**	**L**	**P00**	**–**	37.00	2 955	119.6	66.0	0.89	91.2	91.5	**IE1**

[3] Only for worm geared motors S

© Siemens AG 2011

Selection and ordering data (continued)

2-pole, 3 000 rpm at 50 Hz

IEC Motor size	Motor LA/LG LAI/LGI	Order No.		Order code		Starting current	Relative starting torque	Relative breakdown torque	Relative average acceleration torque	Measuring surface sound pressure level	Sound pressure level	No-load operating	Moment of inertia	Weight
		9th position	10th position	No. of poles	Efficiency	I_{St}/I_{rated}	T_{St}/T_{rated}	T_{Bk}/T_{rated}	T_{Ru}/T_{rated}	L_{pfA}	L_{WA}	Z_0	J_{mot}	m_{mot}
				2-pole		–	–	–	–	dB(A)	dB(A)	/h	kgm^2	kg
63	LAI63S2 [3]	**B**	**C**	**P00**	**–**	3.7	2.0	2.2		49	60		0.00018	4.0
	LAI63M2 [3]	**B**	**E**	**P00**	**–**	4.0	2.0	2.2		49	60		0.00022	4.7
71	LA71B2	**C**	**B**	**P00**	**–**	4.4	2.5	2.6	1.8	52	63	7 000	0.00029	5.8
	LA71C2	**C**	**C**	**P00**	**–**	4.4	2.4	2.5	1.7	52	63	7 000	0.00029	5.8
	LA71S2	**C**	**D**	**P00**	**–**	3.5	2.3	2.3	1.7	52	63	7 000	0.00029	5.8
	LA71M2	**C**	**E**	**P00**	**–**	4.3	2.5	2.6	1.7	52	63	7 000	0.00041	6.9
80	LA80S2	**D**	**B**	**P00**	**–**	5.6	2.3	2.4	1.6	56	67	6 000	0.00079	10.4
	LA80M2	**D**	**L**	**P00**	**–**	6.1	2.6	2.7	2.1	56	67	6 000	0.00100	12.7
90	LA90S2	**E**	**L**	**P00**	**–**	5.5	2.4	2.7	2.0	60	72	5 000	0.00140	14.8
	LA90L2	**E**	**P**	**P00**	**–**	6.3	2.8	3.1	2.6	60	72	5 000	0.00180	18.0
100	LA100L2	**F**	**K**	**P00**	**–**	6.8	2.8	3.0	2.6	62	74	3 000	0.00350	25.3
112	LA112MB2	**G**	**H**	**P00**	**–**	7.2	2.6	2.9	2.3	63	75	2 000	0.00590	33.3
132	LA132S2	**H**	**E**	**P00**	**–**	5.9	2.0	2.8	2.1	68	80	1 000	0.01500	45.0
	LA132SB2	**H**	**F**	**P00**	**–**	6.9	2.3	3.0	2.1	68	80	1 000	0.01900	55.0
160	LA160M2	**J**	**N**	**P00**	**–**	6.5	2.1	2.9	1.7	70	82	600	0.03400	78.0
	LA160MB2	**J**	**P**	**P00**	**–**	6.6	2.2	3.0	1.8	70	82	600	0.04300	88.0
	LA160L2	**J**	**R**	**P00**	**–**	7.0	2.4	3.1	2.6	70	82	600	0.05100	99.0
180	LG180M2	**K**	**K**	**P00**	**–**	6.6	2.5	3.4	2.2	67	80	500	0.06800	167.0
200	LG200LA2	**L**	**K**	**P00**	**–**	6.5	2.3	3.0	1.7	73	86	300	0.13000	236.0
	LG200L2	**L**	**L**	**P00**	**–**	7.2	2.5	3.3	2.1	73	86	300	0.15000	259.0

[3] Only for worm geared motors S

© Siemens AG 2011

Selection and ordering data (continued)

6-pole, 1 000 rpm at 50 Hz

IEC Motor size	Motor LA/LG LAI/LGI	Order No.		Order code		Rated power	Rated speed	Rated torque	Rated current	Power factor	Efficiency	Efficiency class acc. to standard IEC 60034-30
		9th position	10th position	No. of poles	Efficiency	P_{rated}	n_{rated}	T_{rated}	I_{rated} 400 V	cos φ	η at 4/4 load	
				6-pole		kW	rpm	Nm	A	–	%	
63	LAI63M6 3)	B	E	P01	–	0.09	850	1.01	0.44	0.66	45.0	–
71	LA71B6	C	B	P01	–	0.09	895	0.96	0.34	0.65	59.0	–
	LA71C6	C	C	P01	–	0.12	860	1.33	0.45	0.70	54.5	–
	LA71S6	C	D	P01	–	0.18	850	2.02	0.72	0.68	53.0	–
	LA71M6	C	E	P01	–	0.25	860	2.78	0.79	0.76	60.0	–
80	LA80S6	D	B	P01	–	0.37	920	3.84	1.20	0.72	62.0	–
	LA80M6	D	C	P01	–	0.55	910	5.77	1.60	0.74	67.0	–
90	LA90S6	E	C	P01	–	0.75	915	7.83	2.05	0.76	69.0	–
	LA90L6	E	P	P01	–	1.10	915	11.5	2.85	0.77	72.0	–
100	LA100L6	F	L	P01	–	1.50	925	15.5	3.90	0.75	74.0	–
112	LA112M6	G	G	P01	–	2.20	940	22.3	5.25	0.78	77.5	–
132	LA132S6	H	E	P01	–	3.00	950	30.2	7.20	0.75	79.0	–
	LA132MA6	H	G	P01	–	4.00	950	40.2	9.40	0.76	80.5	–
	LA132MB6	H	J	P01	–	5.50	950	55.3	12.60	0.76	83.0	–
160	LA160MB6	J	F	P01	–	7.50	960	74.6	17.25	0.74	84.5	–
	LA160LB6	J	S	P01	–	11.00	960	109.4	25.0	0.74	86.0	–
180	LG180LA6	K	M	P01	–	15.00	965	148.4	29.5	0.83	87.7	IE1
200	LG200LA6	L	K	P01	–	18.50	975	181.2	37.0	0.81	88.6	IE1
	LG200L6	L	L	P01	–	22.00	975	215.5	44.0	0.81	89.2	IE1
225	LG225M6	M	J	P01	–	30.00	978	293.0	58.0	0.83	90.2	IE1
250	LG250M6	N	C	P01	–	37.00	980	361.0	71.0	0.83	90.8	IE1
280	LGI280S6 2)	P	G	P01	–	45.00	985	436.0	84.0	0.85	91.4	IE1
	LGI280M6 2)	P	L	P01	–	55.00	985	533.0	100.0	0.86	91.9	IE1
315	LGI315S6 2)	Q	G	P01	–	75.00	988	725.0	139.0	0.84	92.6	IE1
	LGI315M6 2)	Q	R	P01	–	90.00	988	870.0	167.0	0.84	92.9	IE1
	LGI315L6 2)	Q	U	P01	–	110.00	988	1 063.0	198.0	0.86	93.3	IE1
	LGI315LB6 2)	Q	V	P01	–	132.00	988	1 276.0	235.0	0.86	93.5	IE1
	LGI315ZLP6 2)	Q	X	P01	–	160.00	988	1 546.0	285.0	0.86	93.8	IE1

2) Only as IEC MODULOG
3) Only for worm geared motors S

© Siemens AG 2011

Selection and ordering data (continued)

6-pole, 1 000 rpm at 50 Hz

IEC Motor size	Motor LA/LG LAI/LGI	Order No.		Order code		Starting current	Relative starting torque	Relative breakdown torque	Relative average acceleration torque	Measuring surface sound pressure level	Sound pressure level	No-load operating	Moment of inertia	Weight
		9th position	10th position	No. of poles	Efficiency	I_{St}/I_{rated}	T_{St}/T_{rated}	T_{Bk}/T_{rated}	T_{Ru}/T_{rated}	L_{pfA}	L_{WA}	Z_0	J_{mot}	m_{mot}
				6-pole		–	–	–	–	dB(A)	dB(A)	/h	kgm^2	kg
63	LAI63M6 3)	**B**	**E**	**P01**	**–**	2.0	1.8	1.9		39	50		0.00037	4.7
71	LA71B6	**C**	**B**	**P01**	**–**	2.9	2.5	2.5	2.4	39	50	15 000	0.00052	5.8
	LA71C6	**C**	**C**	**P01**	**–**	2.5	2.0	2.0	1.9	39	50	15 000	0.00052	5.8
	LA71S6	**C**	**D**	**P01**	**–**	2.3	2.1	1.9	1.9	39	50	15 000	0.00052	5.8
	LA71M6	**C**	**E**	**P01**	**–**	2.7	2.2	2.0	1.9	39	50	15 000	0.00077	7.2
80	LA80S6	**D**	**B**	**P01**	**–**	3.1	1.9	2.1	1.8	40	51	12 000	0.00140	10.4
	LA80M6	**D**	**C**	**P01**	**–**	3.4	2.1	2.2	1.9	40	51	12 000	0.00170	11.5
90	LA90S6	**E**	**C**	**P01**	**–**	3.7	2.2	2.2	2.0	43	55	10 000	0.00240	14.4
	LA90L6	**E**	**P**	**P01**	**–**	3.8	2.3	2.3	2.2	43	55	10 000	0.00330	18.0
100	LA100L6	**F**	**L**	**P01**	**–**	4.0	2.3	2.3	2.0	47	59	9 000	0.00470	24.0
112	LA112M6	**G**	**G**	**P01**	**–**	4.6	2.2	2.5	2.2	52	64	8 000	0.00550	30.0
132	LA132S6	**H**	**E**	**P01**	**–**	4.2	1.9	2.2	1.9	63	75	6 000	0.01200	44.0
	LA132MA6	**H**	**G**	**P01**	**–**	4.5	2.1	2.4	2.0	63	75	6 000	0.01800	51.0
	LA132MB6	**H**	**J**	**P01**	**–**	5.0	2.3	2.6	2.0	63	75	5 000	0.02300	60.0
160	LA160MB6	**J**	**F**	**P01**	**–**	4.6	2.1	2.5	1.9	66	78	4 000	0.04400	85.0
	LA160LB6	**J**	**S**	**P01**	**–**	4.8	2.3	2.6	2.0	66	78	4 000	0.06300	109.0
180	LG180LA6	**K**	**M**	**P01**	**–**	5.3	2.3	2.5	2.1	56	69	1 260	0.18000	145.0
200	LG200LA6	**L**	**K**	**P01**	**–**	5.6	2.5	2.5	2.3	56	70	1 140	0.24000	185.0
	LG200L6	**L**	**L**	**P01**	**–**	5.7	2.6	2.5	2.4	57	71	1 140	0.29000	210.0
225	LG225M6	**M**	**J**	**P01**	**–**	5.6	2.7	2.5	2.1	60	73	1 000	0.49000	280.0
250	LG250M6	**N**	**C**	**P01**	**–**	6.0	2.7	2.3	2.2	59	73	640	0.76000	370.0
280	LGI280S6 2)	**P**	**G**	**P01**	**–**	6.1	2.4	2.4	2.1	61	74	520	1.10000	546.0
	LGI280M6 2)	**P**	**L**	**P01**	**–**	6.3	2.5	2.5	2.2	61	74	480	1.40000	510.0
315	LGI315S6 2)	**Q**	**G**	**P01**	**–**	6.5	2.5	2.8	2.0	65	78	380	2.10000	685.0
	LGI315M6 2)	**Q**	**R**	**P01**	**–**	6.8	2.6	2.9	2.1	65	78	360	2.50000	750.0
	LGI315L6 2)	**Q**	**U**	**P01**	**–**	6.8	2.5	2.9	2.2	62	77	340	3.20000	890.0
	LGI315LB6 2)	**Q**	**V**	**P01**	**–**	7.3	3.1	3.0	2.7	62	76	320	4.00000	890.0
	LGI315ZLP6 2)	**Q**	**X**	**P01**	**–**	7.5	3.0	3.0	2.4	65	78	300	4.70000	1 180.0

2) Only as IEC MODULOG
3) Only for worm geared motors S

© Siemens AG 2011

Selection and ordering data (continued)

8-pole, 750 rpm at 50 Hz

IEC Motor size	Motor LA/LG LAI/LGI	Order No.		Order code		Rated power	Rated speed	Rated torque	Rated current	Power factor	Efficiency	Efficiency class acc. to standard IEC 60034-30
		9th position	10th position	No. of poles	Efficiency	P_{rated}	n_{rated}	T_{rated}	I_{rated} 400 V	cos φ	η at 4/4 load	
				8-pole		kW	rpm	Nm	A	–	%	
71	LA71M8	**C**	**E**	**P02**	**–**	0.09	630	1.36	0.36	0.68	53.0	**–**
	LA71MB8	**C**	**F**	**P02**	**–**	0.12	645	1.78	0.51	0.64	53.0	**–**
80	LA80S8	**D**	**B**	**P02**	**–**	0.18	675	2.55	0.75	0.68	51.0	**–**
	LA80M8	**D**	**C**	**P02**	**–**	0.25	685	3.49	1.02	0.64	55.0	**–**
90	LA90SA8	**E**	**B**	**P02**	**–**	0.37	675	5.23	1.14	0.75	63.0	**–**
	LA90LA8	**E**	**E**	**P02**	**–**	0.55	675	7.78	1.58	0.76	66.0	**–**
100	LA100LA8	**F**	**B**	**P02**	**–**	0.75	680	10.50	2.15	0.76	66.0	**–**
	LA100L8	**F**	**L**	**P02**	**–**	1.10	680	15.50	2.90	0.76	72.0	**–**
112	LA112M8	**G**	**G**	**P02**	**–**	1.50	705	20.30	3.85	0.76	74.0	**–**
132	LA132S8	**H**	**E**	**P02**	**–**	2.20	700	30.00	5.70	0.74	75.0	**–**
	LA132MA8	**H**	**G**	**P02**	**–**	3.00	700	40.90	7.60	0.74	77.0	**–**
160	LA160M8	**J**	**E**	**P02**	**–**	4.00	715	53.40	10.00	0.72	80.0	**–**
	LA160MB8	**J**	**F**	**P02**	**–**	5.50	710	74.10	13.00	0.73	83.5	**–**
	LA160LB8	**J**	**J**	**P02**	**–**	7.50	715	100.20	17.60	0.72	85.5	**–**
180	LG180LA8	**K**	**M**	**P02**	**–**	11.00	725	144.90	25.00	0.73	87.5	**–**
200	LG200L8	**L**	**L**	**P02**	**–**	15.00	725	197.60	32.50	0.76	87.7	**–**
225	LG225S8	**M**	**E**	**P02**	**–**	18.50	730	242.00	38.50	0.78	89.4	**–**
	LG225M8	**M**	**J**	**P02**	**–**	22.00	730	288.00	45.00	0.79	89.7	**–**
250	LG250M8	**N**	**C**	**P02**	**–**	30.00	730	392.00	58.00	0.81	91.4	**–**
280	LGI280S8 [2]	**P**	**B**	**P02**	**–**	37.00	735	481.00	72.00	0.81	92.0	**–**
	LGI280M8 [2]	**P**	**L**	**P02**	**–**	45.00	735	585.00	87.00	0.81	92.4	**–**
315	LGI315S8 [2]	**Q**	**G**	**P02**	**–**	55.00	740	710.00	106.00	0.81	93.0	**–**
	LGI315M8 [2]	**Q**	**J**	**P02**	**–**	75.00	738	970.00	140.00	0.83	93.3	**–**
	LGI315L8 [2]	**Q**	**U**	**P02**	**–**	90.00	738	1 165.00	168.00	0.83	93.4	**–**
	LGI315LB8 [2]	**Q**	**V**	**P02**	**–**	110.00	738	1 423.00	205.00	0.83	94.0	**–**
	LGI315LP8 [2]	**Q**	**W**	**P02**	**–**	132.00	738	1 708.00	245.00	0.83	94.2	**–**

[2] Only as IEC MODULOG

© Siemens AG 2011

Selection and ordering data (continued)

8-pole, 750 rpm at 50 Hz

IEC Motor size	Motor LA/LG LAI/LGI	Order No.		Order code		Starting current	Relative starting torque	Relative breakdown torque	Relative average acceleration torque	Measuring surface sound pressure level	Sound pressure level	No-load operating	Moment of inertia	Weight
		9th position	10th position	No. of poles	Efficiency	I_{St}/I_{rated}	T_{St}/T_{rated}	T_{Bk}/T_{rated}	T_{Ru}/T_{rated}	L_{pfA}	L_{WA}	Z_0	J_{mot}	m_{mot}
				8-pole		–	–	–	–	dB(A)	dB(A)	/h	kgm^2	kg
71	LA71M8	**C**	**E**	**P02**	**–**	2.2	1.9	1.7	1.7	36	47	25 000	0.0008	7.2
	LA71MB8	**C**	**F**	**P02**	**–**	2.2	2.2	2.0	1.8	36	47	25 000	0.0008	7.2
80	LA80S8	**D**	**B**	**P02**	**–**	2.3	1.7	1.9	1.7	41	52	20 000	0.0014	10.4
	LA80M8	**D**	**C**	**P02**	**–**	2.6	2.0	2.2	1.8	41	52	20 000	0.0017	11.5
90	LA90SA8	**E**	**B**	**P02**	**–**	2.9	1.6	1.8	1.7	41	53	20 000	0.0023	12.1
	LA90LA8	**E**	**E**	**P02**	**–**	3.0	1.7	1.9	1.8	41	53	20 000	0.0031	15.2
100	LA100LA8	**F**	**B**	**P02**	**–**	3.0	1.6	1.9	1.7	45	57	15 000	0.0051	21.9
	LA100L8	**F**	**L**	**P02**	**–**	3.3	1.8	2.1	1.8	45	57	15 000	0.0063	25.3
112	LA112M8	**G**	**G**	**P02**	**–**	3.7	1.8	2.1	1.9	49	61	10 000	0.0130	27.6
132	LA132S8	**H**	**E**	**P02**	**–**	3.9	1.9	2.3	2.0	53	65	7 000	0.0140	43.7
	LA132MA8	**H**	**G**	**P02**	**–**	4.1	2.1	2.4	2.1	53	65	7 000	0.0190	51.0
160	LA160M8	**J**	**E**	**P02**	**–**	4.5	2.2	2.6	2.2	63	75	6 000	0.0360	74.0
	LA160MB8	**J**	**F**	**P02**	**–**	4.7	2.3	2.7	2.2	63	75	6 000	0.0460	85.0
	LA160LB8	**J**	**J**	**P02**	**–**	5.3	2.7	3.0	2.6	63	75	6 000	0.0640	108.0
180	LG180LA8	**K**	**M**	**P02**	**–**	4.2	1.7	2.1	1.8	65	78	2 000	0.1700	173.0
200	LG200L8	**L**	**L**	**P02**	**–**	4.9	2.2	2.6	1.9	67	80	1 600	0.2900	236.0
225	LG225S8	**M**	**E**	**P02**	**–**	5.5	2.3	2.7	1.9	57	71	1 200	0.4800	270.0
	LG225M8	**M**	**J**	**P02**	**–**	5.6	2.3	2.8	2.2	50	64	1 100	0.5500	290.0
250	LG250M8	**N**	**C**	**P02**	**–**	5.5	2.3	2.6	2.1	55	68	1 000	0.8400	385.0
280	LGI280S8 [2]	**P**	**B**	**P02**	**–**	5.0	2.2	2.1	1.9	55	69	800	1.1000	475.0
	LGI280M8 [2]	**P**	**L**	**P02**	**–**	5.1	2.2	2.1	1.9	58	71	800	1.4000	515.0
315	LGI315S8 [2]	**Q**	**G**	**P02**	**–**	5.8	2.2	2.6	1.9	59	73	600	2.1000	680.0
	LGI315M8 [2]	**Q**	**J**	**P02**	**–**	5.7	2.2	2.6	2.0	57	71	520	2.5000	745.0
	LGI315L8 [2]	**Q**	**U**	**P02**	**–**	5.8	2.2	2.7	2.0	59	73	480	3.1000	865.0
	LGI315LB8 [2]	**Q**	**V**	**P02**	**–**	6.1	2.4	2.8	2.2	59	73	440	3.9000	865.0
	LGI315LP8 [2]	**Q**	**W**	**P02**	**–**	6.5	2.5	2.9	2.5	60	74	400	4.5000	1 100.0

[2] Only as IEC MODULOG

© Siemens AG 2011

Selection and ordering data (continued)

4/2-pole, 1 500 / 3 000 rpm at 50 Hz

IEC Motor size	Motor LA/LG LAI/LGI	Order No.		Order code		Rated power	Rated speed	Rated torque	Rated current	Power factor	Efficiency	Efficiency class acc. to standard IEC 60034-30
		9th position	10th position	No. of poles	Efficiency	P_{rated}	n_{rated}	T_{rated}	I_{rated} 380 ... 420 V	cos φ	η at 4/4 load	
				4/2-pole		kW	rpm	Nm	A	–	%	
71	LA71S4/2 [1]	C	D	P04	–	0.21	1 375	1.46	0.70	0.73	59.00	–
						0.28	2 770	0.97	1.10	0.76	48.0	
	LA71M4/2 [1]	C	E	P04	–	0.30	1 390	2.06	0.89	0.76	64.00	–
						0.43	2 780	1.48	1.30	0.82	58.0	
80	LA80S4/2 [1]	D	B	P04	–	0.48	1 390	3.3	1.25	0.82	66.0	–
						0.60	2 810	2.04	1.60	0.84	64.0	
	LA80M4/2 [1]	D	L	P04	–	0.70	1 390	4.81	1.75	0.84	69.0	–
						0.85	2 810	2.89	2.10	0.83	70.0	
90	LA90S4/2 [1]	E	L	P04	–	1.10	1 390	7.56	2.70	0.85	69.0	–
						1.40	2 810	4.76	3.60	0.85	66.0	
	LA90L4/2 [1]	E	P	P04	–	1.50	1 390	10.3	3.40	0.86	74.0	–
						1.90	2 860	6.34	4.50	0.85	72.0	
100	LA100L4/2 [1]	F	L	P04	–	2.00	1 410	13.5	4.25	0.84	81.0	–
						2.40	2 870	7.99	5.50	0.84	75.0	
	LA100LB4/2 [1]	F	M	P04	–	2.60	1 400	17.7	5.50	0.86	79.0	–
						3.10	2 850	10.4	7.60	0.80	74.0	
112	LA112MB4/2 [1]	G	H	P04	–	3.70	1 420	24.9	8.00	0.85	79.0	–
						4.40	2 885	14.6	10.50	0.80	76.0	
132	LA132SB4/2 [1]	H	F	P04	–	4.70	1 450	31.0	9.70	0.84	83.0	–
						5.90	2 920	19.3	12.50	0.85	80.0	
	LA132M4/2 [1]	H	R	P04	–	6.50	1 450	42.8	13.60	0.84	82.0	–
						8.00	2 930	26.1	16.70	0.84	82.5	
160	LA160MB4/2 [1]	J	P	P04	–	9.30	1 455	61.0	18.30	0.85	86.5	–
						11.50	2 930	37.5	23.40	0.89	80.0	
	LA160LB4/2 [1]	J	S	P04	–	13.00	1 455	85.3	25.60	0.84	87.5	–
						17.00	2 930	55.4	32.00	0.88	87.0	
180	LG180ZMB4/2 [1]	K	L	P04	–	15.00	1 400	102.3	28.00	0.85	91.0	–
						18.00	2 900	59.3	33.50	0.88	87.5	
	LG180ZLB4/2 [1]	K	P	P04	–	18.00	1 470	116.9	33.50	0.84	92.0	–
						21.50	2 945	69.7	40.00	0.88	88.0	
200	LG200LB4/2 [1]	L	M	P04	–	26.00	1 465	169.5	48.00	0.86	91.0	–
						31.00	2 950	100.3	56.00	0.91	88.5	

[1] Only as integrated motor

© Siemens AG 2011

Selection and ordering data (continued)

4/2-pole, 1 500 / 3 000 rpm at 50 Hz

IEC Motor size	Motor LA/LG LAI/LGI	Order No.		Order code		Starting current	Relative starting torque	Relative breakdown torque	Relative average acceleration torque	Measuring surface sound pressure level	Sound pressure level	No-load operating	Moment of inertia	Weight
		9th position	10th position	No. of poles	Efficiency	I_{St}/I_{rated}	T_{St}/T_{rated}	T_{Bk}/T_{rated}	T_{Ru}/T_{rated}	L_{pfA}	L_{WA}	Z_0	J_{mot}	m_{mot}
				4/2-pole		–	–	–	–	dB(A)	dB(A)	/h	kgm^2	kg
71	LA71S4/2 [1]	**C**	**D**	**P04**	**–**	3.0	1.6	1.8	1.6				0.00052	5.5
						3.1	1.6	1.8	1.4					
	LA71M4/2 [1]	**C**	**E**	**P04**	**–**	3.7	1.8	2.0	1.8				0.00076	8.0
						3.8	1.8	2.0	1.6					
80	LA80S4/2 [1]	**D**	**B**	**P04**	**–**	3.9	1.7	2.0	1.7				0.00140	10.3
						4.0	1.7	2.0	1.5					
	LA80M4/2 [1]	**D**	**L**	**P04**	**–**	4.3	1.8	2.1	1.8				0.00170	11.5
						4.3	1.8	2.1	1.6					
90	LA90S4/2 [1]	**E**	**L**	**P04**	**–**	4.2	1.6	1.9	1.4				0.00240	14.9
						4.3	1.8	2.0	1.5					
	LA90L4/2 [1]	**E**	**P**	**P04**	**–**	4.9	1.9	2.0	1.7				0.00330	17.9
						5.3	1.9	2.1	1.7					
100	LA100L4/2 [1]	**F**	**L**	**P04**	**–**	5.0	1.8	2.0	1.8				0.00480	24.0
						5.5	1.8	2.1	1.8					
	LA100LB4/2 [1]	**F**	**M**	**P04**	**–**	5.6	2.3	2.4	2.0				0.00550	27.0
						5.6	2.4	2.4	2.1					
112	LA112MB4/2 [1]	**G**	**H**	**P04**	**–**	5.6	2.0	2.2	2.0				0.01100	35.0
						5.8	2.2	2.3	2.2					
132	LA132SB4/2 [1]	**H**	**F**	**P04**	**–**	6.3	1.7	2.2	1.7				0.01800	47.0
						6.5	1.6	2.2	1.6					
	LA132M4/2 [1]	**H**	**R**	**P04**	**–**	6.9	2.0	2.5	2.0				0.02300	57.0
						7.5	2.1	2.6	2.3					
160	LA160MB4/2 [1]	**J**	**P**	**P04**	**–**	6.7	2.0	2.6	1.8				0.04300	85.0
						7.4	1.8	2.4	1.4					
	LA160LB4/2 [1]	**J**	**S**	**P04**	**–**	7.6	2.5	3.0	2.2				0.06000	105.0
						8.5	2.8	3.0	2.5					
180	LG180ZMB4/2 [1]	**K**	**L**	**P04**	**–**	6.8	2.2	2.9	2.1					178.0
						7.7	2.4	3.4	2.4					
	LG180ZLB4/2 [1]	**K**	**P**	**P04**	**–**	6.8	2.2	2.9	2.1					213.0
						7.7	2.4	3.4	2.4					
200	LG200LB4/2 [1]	**L**	**M**	**P04**	**–**	6.3	2.0	2.6	2.0					
						7.3	2.1	3.1	2.2					

[1] Only as integrated motor

© Siemens AG 2011

Selection and ordering data (continued)

8/4-pole, 750 / 1 500 rpm at 50 Hz, T = constant

IEC Motor size	Motor LA/LG LAI/LGI	Order No.		Order code		Rated power	Rated speed	Rated torque	Rated current	Power factor	Efficiency	Efficiency class acc. to standard IEC 60034-30
		9th position	10th position	No. of poles	Efficiency	P_{rated}	n_{rated}	T_{rated}	I_{rated} 380 ... 420 V	cos φ	η at 4/4 load	
				8/4-pole		kW	rpm	Nm	A	–	%	
90	LA90SA8/4 [1]	**E**	**B**	**P08**	–	0.35	675	4.95	1.19	0.71	60.0	–
						0.50	1 365	3.5	1.41	0.79	65.0	
	LA90LA8/4 [1]	**E**	**E**	**P08**	–	0.50	675	7.07	1.60	0.72	63.0	–
						0.70	1 380	4.84	2.10	0.78	62.0	
100	LA100LA8/4 [1]	**F**	**K**	**P08**	–	0.70	690	9.69	2.10	0.74	65.0	–
						1.10	1 380	7.61	3.25	0.80	61.0	
	LA100L8/4 [1]	**F**	**L**	**P08**	–	0.90	690	12.5	2.70	0.70	69.0	–
						1.50	1 380	10.4	4.00	0.80	67.0	
112	LA112M8/4 [1]	**G**	**G**	**P08**	–	1.40	690	19.4	4.00	0.73	69.0	–
						1.90	1 410	12.9	5.20	0.75	70.0	
132	LA132SB8/4 [1]	**H**	**F**	**P08**	–	1.80	720	23.9	6.30	0.57	72.0	–
						3.60	1 430	24.0	7.20	0.90	80.0	
	LA132M8/4 [1]	**H**	**H**	**P08**	–	2.50	720	33.2	8.20	0.60	73.0	–
						5.00	1 430	33.4	10.00	0.90	80.0	
160	LA160MB8/4 [1]	**J**	**F**	**P08**	–	3.50	725	46.1	11.70	0.56	77.0	–
						7.00	1 450	46.1	13.90	0.89	81.5	
	LA160LB8/4 [1]	**J**	**S**	**P08**	–	5.60	725	73.8	18.50	0.56	78.0	–
						11.00	1 450	72.4	21.50	0.89	83.0	
180	LG180ZLB8/4 [1]	**K**	**P**	**P08**	–	11.00	730	143.9	27.50	0.67	86.0	–
						18.00	1 465	117.3	33.00	0.89	88.0	
200	LG200LB8/4 [1]	**L**	**M**	**P08**	–	17.00	730	222.4	39.50	0.72	86.5	–
						27.00	1 465	176.0	46.50	0.93	90.0	

[1] Only as integrated motor

© Siemens AG 2011

Selection and ordering data (continued)

8/4-pole, 750 / 1 500 rpm at 50 Hz, T = constant

IEC Motor size	Motor LA/LG LAI/LGI	Order No.		Order code		Starting current	Relative starting torque	Relative breakdown torque	Relative average acceleration torque	Measuring surface sound pressure level	Sound pressure level	No-load operating	Moment of inertia	Weight
		9th position	10th position	No. of poles	Efficiency	I_{St}/I_{rated}	T_{St}/T_{rated}	T_{Bk}/T_{rated}	T_{Ru}/T_{rated}	L_{pfA}	L_{WA}	Z_0	J_{mot}	m_{mot}
				8/4-pole		–	–	–	–	dB(A)	dB(A)	/h	kgm^2	kg
90	LA90SA8/4 [1]	**E**	**B**	**P08**	**–**	2.5	1.3	1.6	1.3				0.00230	12.6
						3.2	1.3	1.6	1.3					
	LA90LA8/4 [1]	**E**	**E**	**P08**	**–**	3.0	1.4	1.7	1.4				0.00310	15.2
						3.5	1.5	1.8	1.4					
100	LA100LA8/4 [1]	**F**	**K**	**P08**	**–**	3.3	1.7	2.0	1.5				0.00510	23.0
						3.5	1.6	1.9	1.3					
	LA100L8/4 [1]	**F**	**L**	**P08**	**–**	3.5	1.8	2.0	1.5				0.00630	25.0
						3.6	1.6	1.9	1.3					
112	LA112M8/4 [1]	**G**	**G**	**P08**	**–**	3.6	1.4	1.7	1.4				0.01300	29.0
						4.4	1.5	1.8	1.3					
132	LA132SB8/4 [1]	**H**	**F**	**P08**	**–**	4.3	2.0	2.3	1.9				0.01800	47.0
						5.4	1.3	1.8	1.2					
	LA132M8/4 [1]	**H**	**H**	**P08**	**–**	4.3	2.0	2.3	1.9				0.02300	56.0
						5.4	1.3	1.8	1.2					
160	LA160MB8/4 [1]	**J**	**F**	**P08**	**–**	4.0	2.0	2.3	1.9				0.04300	84.0
						5.4	1.4	1.8	1.3					
	LA160LB8/4 [1]	**J**	**S**	**P08**	**–**	4.2	2.2	2.4	1.9				0.06000	104.0
						5.9	1.7	2.0	1.4					
180	LG180ZLB8/4 [1]	**K**	**P**	**P08**	**–**	5.2	1.9	2.3	2.0					213.0
						6.6	2.0	2.4	2.0					
200	LG200LB8/4 [1]	**L**	**M**	**P08**	**–**	6.3	2.7	3.0	2.5					259.0
						7.4	2.3	2.9	2.1					

[1] Only as integrated motor

© Siemens AG 2011

Selection and ordering data (continued)

8/4-pole, 750 / 1 500 rpm at 50 Hz, T ~ n²

IEC Motor size	Motor LA/LG LAI/LGI	Order No. 9th position	Order No. 10th position	Order code No. of poles 8/4-pole	Order code Power rating T ~ n²	Order code Efficiency	Rated power P_{rated} kW	Rated speed n_{rated} rpm	Rated torque T_{rated} Nm	Rated current I_{rated} 380 ... 420 V A	Power factor cos φ –	Efficiency η at 4/4 load %	Efficiency class acc. to standard IEC 60034-30
112	LA112MB8/4 [1]	G	H	P08	P51	–	0.9	720	11.9	4.7	0.50	55.0	–
							3.6	1 440	23.9	8.0	0.83	78.0	
132	LA132SB8/4 [1]	H	F	P08	P51	–	1.1	720	14.6	3.5	0.60	76.0	–
							4.7	1 455	30.8	11.0	0.78	79.0	
	LA132MP8/4 [1]	H	H	P08	P50	–	1.4	720	18.6	4.4	0.60	77.0	–
							5.5	1 465	35.9	12.5	0.75	84.5	
	LA132MP8/4 [1]	H	H	P08	P51	–	1.4	720	18.6	4.4	0.60	77.0	–
							6.4	1 455	42.0	13.3	0.83	83.5	
160	LA160MB8/4 [1]	J	F	P08	P51	–	1.9	730	24.9	6.3	0.55	78.0	–
							7.5	1 470	48.7	17.1	0.74	85.0	
	LA160MB8/4 [1]	J	P	P08	P51	–	2.2	725	29.0	6.5	0.62	79.0	–
							9.5	1 465	61.9	19.7	0.83	84.0	
	LA160LB8/4 [1]	J	S	P08	P50	–	3.0	730	39.2	9.2	0.58	81.6	–
							11.0	1 470	71.5	24.0	0.76	87.2	
	LA160LB8/4 [1]	J	S	P08	P51	–	3.3	730	43.2	9.3	0.60	85.5	–
							14.0	1 470	90.9	28.6	0.80	88.5	
180	LG180LA8/4 [1]	K	M	P08	P51	–	4.5	725	59.3	12.6	0.63	81.6	–
							16.0	1 465	104.3	31.0	0.84	88.6	
	LG180ZLB8/4 [1]	K	P	P08	P51	–	5.0	725	65.9	14.2	0.62	82.5	–
							18.5	1 470	120.2	35.0	0.85	91.0	
	LG180ZLB8/4 [1]	K	P	P08	P50	–	5.5	730	71.9	16.5	0.59	81.7	–
							22.0	1 465	143.4	42.5	0.84	88.8	
200	LG200LB8/4 [1]	L	M	P08	P51	–	7.5	730	98.1	21.5	0.60	84.7	–
							28.0	1 465	182.5	52.0	0.86	91.0	
225	LG225S8/4	M	E	P08	P51	–	9.5	738	122.9	26.0	0.61	86.0	–
							35.0	1 478	226.1	64.0	0.86	92.0	
	LG225ZM8/4	M	S	P08	P51	–	11.5	738	148.8	30.5	0.62	87.8	–
							42.0	1 475	271.9	75.0	0.87	92.7	
250	LG250M8/4	N	L	P08	P51	–	14.5	740	187.1	38.0	0.62	88.3	–
							52.0	1 482	335.1	94.0	0.86	93.2	
280	LGI280S8/4 [2]	P	G	P08	P51	–	19.0	742	244.5	49.0	0.62	90.7	–
							70.0	1 482	451.0	124.0	0.86	94.0	
	LGI280M8/4 [2]	P	U	P08	P51	–	23.0	742	296.0	58.0	0.63	91.0	–
							83.0	1 485	533.7	146.0	0.87	94.2	

[1] Only as integrated motor
[2] Only as IEC MODULOG

© Siemens AG 2011

Selection and ordering data (continued)

8/4-pole, 750 / 1 500 rpm at 50 Hz, T ~ n²

IEC Motor size	Motor LA/LG LAI/LGI	Order No.		Order code			Starting current	Relative starting torque	Relative breakdown torque	Relative average acceleration torque	Measuring surface sound pressure level	Sound pressure level	No-load operating	Moment of inertia	Weight
		9th position	10th position	No. of poles	Power rating	Efficiency	I_{St}/I_{rated}	T_{St}/T_{rated}	T_{Bk}/T_{rated}	T_{Ru}/T_{rated}	L_{pfA}	L_{WA}	Z_0	J_{mot}	m_{mot}
				8/4-pole	T ~ n²		–	–	–	–	dB(A)	dB(A)	/h	kgm²	kg
112	LA112MB8/4 [1]	G	H	P08	P51	–	3.2	1.6	2.4	1.5				0.01200	36.0
							6.5	2.6	2.6	2.2					
132	LA132SB8/4 [1]	H	F	P08	P51	–	4.3	2.0	2.5	1.9				0.01800	47.0
							6.4	2.3	2.9	1.8					
	LA132MP8/4 [1]	H	H	P08	P50	–	4.6	2.2	2.7	2.0				0.02300	56.0
							7.0	2.5	3.4	2.3					
	LA132MP8/4 [1]	H	H	P08	P51	–	4.6	2.2	2.7	2.0				0.02300	56.0
							6.8	1.9	2.5	1.7					
160	LA160MB8/4 [1]	J	P	P08	P51	–	4.1	1.7	2.0	1.7				0.04300	84.0
							7.0	2.0	2.6	2.1					
	LA160MB8/4 [1]	J	F	P08	P51	–	4.1	1.7	2.6	1.8				0.04300	84.0
							8.1	2.5	3.4	2.6					
	LA160LB8/4 [1]	J	S	P08	P50	–	4.2	2.1	2.4	1.9				0.06000	105.0
							8.9	3.0	3.9	2.9					
	LA160LB8/4 [1]	J	S	P08	P51	–	4.7	2.0	2.2	1.8				0.06000	105.0
							8.1	2.6	3.1	2.4					
180	LG180LA8/4 [1]	K	M	P08	P51	–	3.6	1.4	2.0	1.4				0.11000	178.0
							6.8	2.2	3.1	2.1					
	LG180ZLB8/4 [1]	K	P	P08	P51	–	3.7	1.6	2.1	1.4				0.14000	207.0
							7.2	2.4	3.3	2.2					
	LG180ZLB8/4 [1]	K	P	P08	P50	–	4.0	1.5	2.3	1.4				0.14000	207.0
							7.2	2.0	3.2	1.9					
200	LG200LB8/4 [1]	L	M	P08	P51	–	4.3	2.1	2.5	2.0				0.19000	253.0
							7.3	2.7	2.9	2.6					
225	LG225S8/4	M	E	P08	P51	–	4.4	2.0	2.3	1.7				0.44000	339.0
							6.9	1.7	2.9	2.3					
	LG225ZM8/4	M	S	P08	P51	–	4.5	1.9	2.2	1.7				0.48000	380.0
							6.9	2.4	3.0	2.2					
250	LG250M8/4	N	L	P08	P51	–	4.0	2.0	1.8	1.6				0.85000	495.0
							6.8	2.5	2.6	2.1					
280	LGI280S8/4 [2]	P	G	P08	P51	–	4.0	1.8	1.8	1.4				1.19000	530.0
							6.3	2.0	2.5	1.9					
	LGI280M8/4 [2]	P	U	P08	P51	–	4.2	1.9	1.8	1.3				1.71000	665.0
							7.2	2.2	2.7	2.0					

[1] Only as integrated motor
[2] Only as IEC MODULOG

8

© Siemens AG 2011

Motors for line-fed operation "Standard Efficiency" IE1 / without

Selection and ordering data

8/2-pole, 750 / 3 000 rpm at 50 Hz, operating mode S3 - 40/60 %

IEC Motor size	Motor LA/LG LAI/LGI	Order No.		Order code			Rated power	Rated speed	Rated torque	Rated current	Power factor	Efficiency	Efficiency class
		9th position	10th position	No. of poles	Power rating	Efficiency	P_{rated}	n_{rated}	T_{rated}	I_{rated} 380 ... 420 V	cos φ	η at 4/4 load	acc. to standard IEC 60034-30
				8/2-pole			kW	rpm	Nm	A	–	%	
71	LA71M8/2R [1]	**C**	**E**	**P07**	**–**	**–**	0.045	625	0.69	0.50	0.64	20.5	**–**
							0.18	2 775	0.62	0.58	0.79	56.5	
	LA71ZMP8/2R [1]	**C**	**G**	**P07**	**–**	**–**	0.06	645	0.89	0.56	0.54	28.5	**–**
							0.25	2 795	0.85	0.68	0.83	63.5	
	LA71ZMP8/2R [1]	**C**	**G**	**P07**	**P40**	**–**	0.10	615	1.55	0.81	0.55	32.5	**–**
							0.40	2 750	1.39	1.33	0.76	57.0	
80	LA80ZMB8/2R [1]	**D**	**E**	**P07**	**–**	**–**	0.15	610	2.35	0.85	0.62	41.0	**–**
							0.60	2 755	2.08	1.48	0.86	68.0	
90	LA90L8/2R [1]	**E**	**M**	**P07**	**–**	**–**	0.22	660	3.18	1.20	0.61	43.5	**–**
							0.90	2 785	3.09	2.05	0.91	69.5	
	LA90ZLB8/2R [1]	**E**	**Q**	**P07**	**–**	**–**	0.30	660	4.34	1.80	0.63	38.0	**–**
							1.20	2 780	4.12	2.70	0.93	69.0	
100	LA100LB8/2R [1]	**F**	**M**	**P07**	**–**	**–**	0.45	670	6.41	2.00	0.61	53.5	**–**
							1.80	2 825	6.08	4.05	0.87	73.5	
	LA100ZLP8/2R [1]	**F**	**N**	**P07**	**–**	**–**	0.60	675	8.49	2.60	0.62	54.0	**–**
							2.40	2 805	8.17	5.60	0.85	73.0	
112	LA112ZMP8/2R [1]	**G**	**J**	**P07**	**–**	**–**	0.75	695	10.3	3.25	0.57	58.0	**–**
							3.00	2 855	10.0	6.45	0.89	75.5	
132	LA132SB8/2R [1]	**H**	**F**	**P07**	**–**	**–**	1.00	710	13.4	4.15	0.58	60.0	**–**
							4.00	2 900	13.2	8.90	0.84	77.0	
	LA132SP8/2R [1]	**H**	**H**	**P07**	**–**	**–**	1.50	700	20.5	5.70	0.59	64.5	**–**
							6.00	2 885	19.9	12.40	0.87	80.0	

[1] Only as integrated motor

© Siemens AG 2011

Selection and ordering data (continued)

8/2-pole, 750 / 3 000 rpm at 50 Hz, operating mode S3 - 40/60 %

IEC Motor size	Motor LA/LG LAI/LGI	Order No.		Order code			Starting current	Relative starting torque	Relative breakdown torque	Relative average acceleration torque	Measuring surface sound pressure level	Sound pressure level	No-load operating	Moment of inertia	Weight
		9th position	10th position	No. of poles	Power rating	Efficiency	I_{St}/I_{rated}	T_{St}/T_{rated}	T_{Bk}/T_{rated}	T_{Ru}/T_{rated}	L_{pfA}	L_{WA}	Z_0	J_{mot}	m_{mot}
				8/2-pole			–	–	–	–	dB(A)	dB(A)	/h	kgm²	kg
71	LA71M8/2R [1]	**C**	**E**	**P07**	**–**	**–**	1.3	2.3	-	1.8					6.90
							3.6	2.5	2.4	2.1					
	LA71ZMP8/2R [1]	**C**	**G**	**P07**	**–**	**–**	1.5	2.7	-	2.2				0.00110	8.10
							4.3	2.2	2.5	2.2					
	LA71ZMP8/2R [1]	**C**	**G**	**P07**	**P40**	**–**	1.7	2.8	-	2.1				0.00110	8.10
							3.5	2.5	2.3	2.0					
80	LA80ZMB8/2R [1]	**D**	**E**	**P07**	**–**	**–**	1.8	2.2	-	1.8				0.00240	14.10
							4.4	2.5	2.5	2.1					
90	LA90L8/2R [1]	**E**	**M**	**P07**	**–**	**–**	2.1	2.3	-	2.0				0.00330	17.90
							4.7	2.3	2.3	2.0					
	LA90ZLB8/2R [1]	**E**	**Q**	**P07**	**–**	**–**	2.0	2.3	-	2.0				0.00400	20.70
							5.0	2.3	2.3	2.0					
100	LA100LB8/2R [1]	**F**	**M**	**P07**	**–**	**–**	2.5	2.1	-	1.9				0.00550	27.60
							5.3	2.5	2.4	1.9					
	LA100ZLP8/2R [1]	**F**	**N**	**P07**	**–**	**–**	2.6	2.1	2.1	1.8				0.00620	28.80
							5.0	2.6	2.4	2.0					
112	LA112ZMP8/2R [1]	**G**	**J**	**P07**	**–**	**–**	2.9	2.3	2.5	2.2				0.01400	42.50
							5.9	2.5	2.9	2.2					
132	LA132SB8/2R [1]	**H**	**F**	**P07**	**–**	**–**	3.4	2.2	2.8	2.3				0.01800	47.20
							6.2	1.8	2.8	2.0					
	LA132SP8/2R [1]	**H**	**H**	**P07**	**–**	**–**	3.4	2.6	2.6	2.3				0.02300	56.40
							6.3	2.6	2.5	2.0					

[1] Only as integrated motor
[2] Only as IEC MODULOG

© Siemens AG 2011

Motors for line-fed operation "Standard Efficiency" IE1 / without

Selection and ordering data

4-pole, 1 800 rpm at 60 Hz, 1.2 x P_{50}

IEC Motor size	Motor LA/LG LAI/LGI	Order No.		Order code		Rated power	Rated speed	Rated torque	Rated current	Power factor	Efficiency	Efficiency class acc. to standard IEC 60034-30
		9th position	10th position	No. of poles	Efficiency	P_{rated}	n_{rated}	T_{rated}	I_{rated} 460 V	cos φ	η at 4/4 load	
				4-pole		kW	rpm	Nm	A	–	%	
63	LAI63S4 [3]	**B**	**C**	**–**	**–**	0.15	1 645	0.87	0.46	0.75	55.0	**–**
	LAI63M4 [3]	**B**	**E**	**–**	**–**	0.22	1 620	1.30	0.59	0.78	60.0	**–**
71	LA71B4	**C**	**B**	**–**	**–**	0.15	1 680	0.85	0.41	0.69	67.1	**–**
	LA71C4	**C**	**C**	**–**	**–**	0.22	1 660	1.27	0.60	0.70	65.4	**–**
	LA71S4	**C**	**D**	**–**	**–**	0.30	1 650	1.74	0.77	0.77	63.2	**–**
	LA71M4	**C**	**E**	**–**	**–**	0.45	1 665	2.58	1.06	0.78	67.6	**–**
	LA71ZMP4 [1]	**C**	**G**	**–**	**–**	0.66	1 665	3.79	1.54	0.74	72.8	**–**
	LA71ZMD4 [1]	**C**	**H**	**–**	**–**	0.90	1 615	5.32	2.12	0.74	71.8	**–**
80	LAI80S4 [2]	**D**	**B**	**–**	**–**	0.66	1 690	3.73	1.45	0.82	69.8	**–**
	LA80M4	**D**	**C**	**–**	**–**	0.90	1 690	5.09	1.90	0.80	74.6	**–**
90	LA90S4	**E**	**L**	**–**	**–**	1.30	1 710	7.26	2.51	0.82	79.2	**IE1**
	LA90L4	**E**	**P**	**–**	**–**	1.80	1 715	10.0	3.39	0.82	81.0	**IE1**
	LA90ZLB4 [1]	**E**	**Q**	**–**	**–**	2.60	1 680	14.8	4.95	0.83	79.2	**–**
100	LA100L4	**F**	**L**	**–**	**–**	2.60	1 715	14.5	4.64	0.84	83.5	**IE1**
	LA100LB4	**F**	**M**	**–**	**–**	3.60	1 715	20.0	6.37	0.84	84.5	**IE1**
112	LA112MB4	**G**	**H**	**–**	**–**	4.80	1 735	26.4	8.30	0.84	86.1	**IE1**
132	LA132SB4	**H**	**F**	**–**	**–**	6.60	1 750	36.0	11.5	0.84	85.5	**IE1**
	LA132M4	**H**	**H**	**–**	**–**	9.00	1 750	49.1	15.3	0.85	87.0	**IE1**
	LA132ZMP4	**H**	**T**	**–**	**–**	11.00	1 740	60.4	17.8	0.88	88.0	**IE1**
160	LA160MB4	**J**	**P**	**–**	**–**	13.00	1 755	70.7	21.6	0.86	88.0	**IE1**
	LA160L4	**J**	**R**	**–**	**–**	18.00	1 755	97.9	29.0	0.87	89.5	**IE1**
180 ... 280	Motor sizes 180 to 280 in High Efficiency (IE2) see page 8/94											
315	LGI315S4 [2]	**Q**	**Q**	**–**	**–**	132.00	1 787	705.0	204.0	0.86	94.5	**IE1**
	LGI315M4 [2]	**Q**	**S**	**–**	**–**	158.00	1 786	845.0	242.0	0.86	95.0	**IE2**
	LGI315L4 [2]	**Q**	**U**	**–**	**–**	192.00	1 784	1 028.0	291.0	0.87	95.4	**IE2**
	LGI315LB4 [2]	**Q**	**V**	**–**	**–**	240.00	1 784	1 285.0	353.0	0.89	95.8	**IE2**

[1] Only as integrated motor
[2] Only as IEC MODULOG
[3] Only for worm geared motors S

© Siemens AG 2011

Selection and ordering data (continued)

4-pole, 1 800 rpm at 60 Hz, 1.2 x P_{50}

IEC Motor size	Motor LA/LG LAI/LGI	Order No.		Order code		Starting current	Relative starting torque	Relative breakdown torque	Relative average acceleration torque	Measuring surface sound pressure level	Sound pressure level	No-load operating	Moment of inertia	Weight
		9th position	10th position	No. of poles	Efficiency	I_{St}/I_{rated}	T_{St}/T_{rated}	T_{Bk}/T_{rated}	T_{Ru}/T_{rated}	L_{pfA}	L_{WA}	Z_0	J_{mot}	m_{mot}
				4-pole		–	–	–	–	dB(A)	dB(A)	/h	kgm^2	kg
63	LAI63S4 3)	**B**	**C**	**–**	**–**	2.8	1.9	1.0		46	57		0.00029	4.0
	LAI63M4 3)	**B**	**E**	**–**	**–**	2.9	1.7	1.7	1.8	46	57		0.00037	4.7
71	LA71B4	**C**	**B**	**–**	**–**	3.9	2.1	2.3	2.0	48	59	20 000	0.00052	5.5
	LA71C4	**C**	**C**	**–**	**–**	3.5	2.0	2.0	1.9	48	59	20 000	0.00052	5.5
	LA71S4	**C**	**D**	**–**	**–**	3.5	2.1	2.0	2.0	48	59	15 000	0.00052	5.5
	LA71M4	**C**	**E**	**–**	**–**	3.8	2.0	2.2	2.0	48	59	15 000	0.00077	6.9
	LA71ZMP4 1)	**C**	**G**	**–**	**–**	4.2	2.4	2.4	2.2	50	61	7 000	0.00110	8.1
	LA71ZMD4 1)	**C**	**H**	**–**	**–**	3.9	2.4	2.3	2.2	50	61	7 000	0.00120	8.6
80	LAI80S4 2)	**D**	**B**	**–**	**–**	4.5	2.4	2.4	2.1	51	62	10 000	0.00140	10.4
	LA80M4	**D**	**C**	**–**	**–**	4.9	2.5	2.5	2.3	51	62	10 000	0.00170	11.5
90	LA90S4	**E**	**L**	**–**	**–**	5.2	2.3	2.5	2.4	52	64	8 000	0.00240	15.0
	LA90L4	**E**	**P**	**–**	**–**	6.0	2.4	2.7	2.5	52	64	8 000	0.00330	17.9
	LA90ZLB4 1)	**E**	**Q**	**–**	**–**	5.8	2.8	2.8	2.3	54	66	5 000	0.00400	20.7
100	LA100L4	**F**	**L**	**–**	**–**	6.1	2.4	2.8	2.6	57	69	7 000	0.00470	24.1
	LA100LB4	**F**	**M**	**–**	**–**	6.0	2.6	2.9	2.5	57	69	7 000	0.00550	27.6
112	LA112MB4	**G**	**H**	**–**	**–**	6.2	2.4	2.9	2.3	57	69	5 000	0.01200	35.7
132	LA132SB4	**H**	**F**	**–**	**–**	6.7	2.3	3.0	2.4	66	78	3 000	0.01800	47.2
	LA132M4	**H**	**H**	**–**	**–**	7.1	2.5	3.1	2.5	66	78	3 000	0.02300	56.4
	LA132ZMP4	**H**	**T**	**–**	**–**	8.3	2.5	3.1	2.5	68	80	1 600	0.02900	69.0
160	LA160MB4	**J**	**P**	**–**	**–**	6.4	2.0	2.6	2.2	70	82	2 000	0.04300	84.0
	LA160L4	**J**	**R**	**–**	**–**	6.6	2.4	2.8	2.4	70	82	2 000	0.05500	98.0
180 ... 280	Motor sizes 180 to 280 in High Efficiency (IE2) see page 8/94													
315	LGI315S4 2)	**Q**	**Q**	**–**	**–**	6.3	2.2	2.5	1.8	74	87	160	1.90000	730.0
	LGI315M4 2)	**Q**	**S**	**–**	**–**	6.7	2.4	2.6	1.9	74	87	150	2.30000	810.0
	LGI315L4 2)	**Q**	**U**	**–**	**–**	6.7	2.5	2.5	1.9	74	87	130	2.90000	955.0
	LGI315LB4 2)	**Q**	**V**	**–**	**–**	6.3	2.4	2.5	1.8	75	90	110	3.50000	955.0

1) Only as integrated motor
2) Only as IEC MODULOG

© Siemens AG 2011

Motors for line-fed operation "Standard Efficiency" IE1 / without

Selection and ordering data (continued)

6-pole, 1 200 rpm at 60 Hz, 1.2 x P_{50}

IEC Motor size	Motor LA/LG LAI/LGI	Order No.		Order code		Rated power	Rated speed	Rated torque	Rated current	Power factor	Efficiency	Efficiency class acc. to standard IEC 60034-30
		9th position	10th position	No. of poles	Efficiency	P_{rated}	n_{rated}	T_{rated}	I_{rated} 460 V	cos φ	η at 4/4 load	
				6-pole		kW	rpm	Nm	A	–	%	
63	LAI63M6 [3]	B	E	P01	–	0.11	1 035	1.01	0.45	0.68	45.0	–
71	LA71B6	C	B	P01	–	0.11	1 095	0.96	0.34	0.66	61.5	–
	LA71C6	C	C	P01	–	0.15	1 045	1.37	0.45	0.71	58.5	–
	LA71S6	C	D	P01	–	0.22	1 040	2.02	0.70	0.68	57.6	–
	LA71M6	C	E	P01	–	0.30	1 060	2.7	0.78	0.75	63.8	–
80	LA80S6	D	B	P01	–	0.45	1 115	3.85	1.18	0.72	66.6	–
	LA80M6	D	C	P01	–	0.66	1 105	5.7	1.57	0.74	70.8	–
90	LA90S6	E	C	P01	–	0.90	1 110	7.74	2.01	0.77	72.6	–
	LA90L6	E	P	P01	–	1.30	1 115	11.1	2.80	0.77	75.1	–
100	LA100L6	F	L	P01	–	1.80	1 120	15.3	3.81	0.77	76.9	–
112	LA112M6	G	G	P01	–	2.60	1 135	21.9	5.28	0.79	78.3	–
132	LA132S6	H	E	P01	–	3.60	1 145	30.0	6.95	0.79	81.9	–
	LA132MA6	H	G	P01	–	4.80	1 145	40.0	9.1	0.79	83.4	–
	LA132MB6	H	J	P01	–	6.60	1 145	55.0	12.4	0.79	84.9	–
160	LA160MB6	J	F	P01	–	9.00	1 155	74.4	17.1	0.77	85.9	–
	LA160LB6	J	S	P01	–	13.00	1 155	107.5	23.9	0.77	89.0	–
180	LG180LA6	K	M	P01	–	18.00	1 160	148.2	30.0	0.83	90.2	IE1
200	LG200LA6	L	K	P01	–	22.00	1 170	179.6	37.5	0.82	91.0	IE1
	LG200L6	L	L	P01	–	26.00	1 170	212.2	43.5	0.82	91.7	IE1
225	LG225M6	M	J	P01	–	36.00	1 175	293.0	59.0	0.84	91.7	IE1
250	LG250M6	N	C	P01	–	45.00	1 177	365.0	73.0	0.84	91.7	IE1
280	LGI280S6 [2]	P	G	P01	–	54.00	1 183	436.0	86.0	0.86	92.1	IE1
	LGI280M6 [2]	P	L	P01	–	66.00	1 183	533.0	104.0	0.86	93.0	IE1
315	LGI315S6 [2]	Q	G	P01	–	90.00	1 186	725.0	143.0	0.85	93.0	IE1
	LGI315M6 [2]	Q	R	P01	–	108.00	1 186	870.0	170.0	0.85	94.1	IE1
	LGI315L6 [2]	Q	U	P01	–	132.00	1 186	1 063.0	202.0	0.87	94.1	IE1
	LGI315LB6 [2]	Q	V	P01	–	158.00	1 186	1 272.0	242.0	0.87	94.1	IE1
	LGI315ZLP6 [2]	Q	X	P01	–	192.00	1 186	1 546.0	293.0	0.87	94.5	IE1

[2] Only as IEC MODULOG
[3] Only for worm geared motors S

© Siemens AG 2011

Selection and ordering data (continued)

6-pole, 1 200 rpm at 60 Hz, 1.2 x P_{50}

IEC Motor size	Motor LA/LG LAI/LGI	Order No.		Order code		Starting current	Relative starting torque	Relative breakdown torque	Relative average acceleration torque	Measuring surface sound pressure level	Sound pressure level	No-load operating	Moment of inertia	Weight
		9th position	10th position	No. of poles	Efficiency	I_{St}/I_{rated}	T_{St}/T_{rated}	T_{Bk}/T_{rated}	T_{Ru}/T_{rated}	L_{pfA}	L_{WA}	Z_0	J_{mot}	m_{mot}
				6-pole		–	–	–	–	dB(A)	dB(A)	/h	kgm^2	kg
63	LAI63M6 3)	**B**	**E**	**P01**	**–**	2.0	1.8	1.9		43	54		0.00037	4.7
71	LA71B6	**C**	**B**	**P01**	**–**	3.0	2.3	2.3	2.1	43	54	10 500	0.00052	5.8
	LA71C6	**C**	**C**	**P01**	**–**	2.7	2.0	2.0	1.9	43	54	10 500	0.00052	5.8
	LA71S6	**C**	**D**	**P01**	**–**	2.7	2.2	2.1	2.0	43	54	10 500	0.00052	5.8
	LA71M6	**C**	**E**	**P01**	**–**	3.2	2.4	2.2	2.1	43	54	10 500	0.00077	7.2
80	LA80S6	**D**	**B**	**P01**	**–**	3.6	2.0	2.2	1.9	44	55	8 400	0.00140	10.4
	LA80M6	**D**	**C**	**P01**	**–**	4.0	2.2	2.4	2.0	44	55	8 400	0.00170	11.5
90	LA90S6	**E**	**C**	**P01**	**–**	4.3	2.3	2.4	2.1	47	59	7 000	0.00240	14.4
	LA90L6	**E**	**P**	**P01**	**–**	4.4	2.4	2.5	2.3	47	59	7 000	0.00330	18.0
100	LA100L6	**F**	**L**	**P01**	**–**	4.5	2.3	2.4	2.0	51	63	6 300	0.00470	24.0
112	LA112M6	**G**	**G**	**P01**	**–**	5.1	2.2	2.6	2.2	56	68	5 600	0.00550	30.0
132	LA132S6	**H**	**E**	**P01**	**–**	4.6	1.8	2.2	1.8	67	79	4 200	0.01200	44.0
	LA132MA6	**H**	**G**	**P01**	**–**	4.9	2.0	2.3	1.9	67	79	4 200	0.01800	51.0
	LA132MB6	**H**	**J**	**P01**	**–**	5.3	2.1	2.6	1.9	67	79	3 500	0.02300	60.0
160	LA160MB6	**J**	**F**	**P01**	**–**	4.8	1.9	2.4	1.8	70	82	2 800	0.04400	85.0
	LA160LB6	**J**	**S**	**P01**	**–**	5.0	2.1	2.5	1.9	70	82	2 800	0.06300	109.0
180	LG180LA6	**K**	**M**	**P01**	**–**	5.4	2.1	2.4	1.9	60	73	1 020	0.18000	145.0
200	LG200LA6	**L**	**K**	**P01**	**–**	5.8	2.3	2.4	2.1	60	74	920	0.24000	185.0
	LG200L6	**L**	**L**	**P01**	**–**	5.9	2.4	2.4	2.3	61	74	920	0.29000	210.0
225	LG225M6	**M**	**J**	**P01**	**–**	5.6	2.4	2.3	1.9	64	77	800	0.49000	280.0
250	LG250M6	**N**	**C**	**P01**	**–**	5.9	2.3	2.0	1.9	63	77	520	0.76000	370.0
280	LGI280S6 2)	**P**	**G**	**P01**	**–**	6.1	2.1	2.2	1.9	65	78	420	1.10000	546.0
	LGI280M6 2)	**P**	**L**	**P01**	**–**	6.2	2.2	2.3	2.0	65	78	390	1.40000	510.0
315	LGI315S6 2)	**Q**	**G**	**P01**	**–**	6.4	2.2	2.6	1.8	69	82	310	2.10000	685.0
	LGI315M6 2)	**Q**	**R**	**P01**	**–**	6.7	2.3	2.6	1.9	69	82	290	2.50000	750.0
	LGI315L6 2)	**Q**	**U**	**P01**	**–**	6.7	2.2	2.6	2.0	66	81	280	3.20000	890.0
	LGI315LB6 2)	**Q**	**V**	**P01**	**–**	7.2	2.8	2.7	2.4	66	80	260	4.00000	890.0
	LGI315ZLP6 2)	**Q**	**X**	**P01**	**–**	7.4	2.7	2.7	2.1	69	82	240	4.70000	1 180.0

2) Only as IEC MODULOG
3) Only for worm geared motors S

© Siemens AG 2011

Selection and ordering data (continued)

8-pole, 900 rpm at 60 Hz, 1.2 x P_{50}

IEC Motor size	Motor LA/LG LAI/LGI	Order No.		Order code		Rated power	Rated speed	Rated torque	Rated current	Power factor	Efficiency	Efficiency class acc. to standard IEC 60034-30
		9th position	10th position	No. of poles	Efficiency	P_{rated}	n_{rated}	T_{rated}	I_{rated} 460 V	cos φ	η at 4/4 load	
				8-pole		kW	rpm	Nm	A	–	%	
71	LA71M8	C	E	P02	–	0.11	775	1.36	0.35	0.67	57.3	–
	LA71MB8	C	F	P02	–	0.15	795	1.80	0.48	0.62	61.1	–
80	LA80S8	D	B	P02	–	0.22	825	2.55	1.03	0.66	43.8	–
	LA80M8	D	C	P02	–	0.30	830	3.45	1.00	0.63	59.3	–
90	LA90SA8	E	B	P02	–	0.45	820	5.24	1.13	0.75	66.7	–
	LA90LA8	E	E	P02	–	0.66	820	7.69	1.56	0.76	69.4	–
100	LA100LA8	F	B	P02	–	0.90	825	10.40	2.13	0.77	69.1	–
	LA100L8	F	L	P02	–	1.30	825	15.00	2.86	0.76	75.0	–
112	LA112M8	G	G	P02	–	1.80	850	20.20	3.84	0.77	76.6	–
132	LA132S8	H	E	P02	–	2.60	845	29.40	5.59	0.75	77.9	–
	LA132MA8	H	G	P02	–	3.60	845	40.70	7.45	0.76	79.6	–
160	LA160M8	J	E	P02	–	4.80	860	53.30	9.77	0.75	82.1	–
	LA160MB8	J	F	P02	–	6.60	855	73.70	12.85	0.75	85.3	–
	LA160LB8	J	J	P02	–	9.00	860	99.90	17.27	0.75	87.1	–
180	LG180LA8	K	M	P02	–	13.00	875	141.90	25.21	0.73	89.3	–
200	LG200L8	L	L	P02	–	18.00	870	197.60	32.90	0.77	88.7	–
225	LG225S8	M	E	P02	–	22.00	878	239.30	39.20	0.78	90.3	–
	LG225M8	M	J	P02	–	26.00	879	282.0	44.91	0.80	90.8	–
250	LG250M8	N	C	P02	–	36.00	877	392.0	59.40	0.82	92.0	–
280	LGI280S8 [2]	P	B	P02	–	45.00	883	487.0	74.60	0.82	92.8	–
	LGI280M8 [2]	P	L	P02	–	54.00	883	584.0	89.70	0.81	92.8	–
315	LGI315S8 [2]	Q	G	P02	–	66.00	889	709.0	107.80	0.82	93.5	–
	LGI315M8 [2]	Q	J	P02	–	90.00	887	969.0	143.10	0.84	93.8	–
	LGI315L8 [2]	Q	U	P02	–	108.00	886	1 164.0	171.90	0.84	93.9	–
	LGI315LB8 [2]	Q	V	P02	–	132.00	886	1 423.0	209.80	0.84	94.4	–
	LGI315LP8 [2]	Q	W	P02	–	158.00	886	1 703.0	250.20	0.84	94.6	–

[2] Only as IEC MODULOG

© Siemens AG 2011

Selection and ordering data (continued)

8-pole, 900 rpm at 60 Hz, 1.2 x P_{50}

IEC Motor size	Motor LA/LG LAI/LGI	Order No.		Order code		Starting current	Relative starting torque	Relative breakdown torque	Relative average acceleration torque	Measuring surface sound pressure level	Sound pressure level	No-load operating	Moment of inertia	Weight
		9th position	10th position	No. of poles	Efficiency	I_{St}/I_{rated}	T_{St}/T_{rated}	T_{Bk}/T_{rated}	T_{Ru}/T_{rated}	L_{pfA}	L_{WA}	Z_0	J_{mot}	m_{mot}
				8-pole		–	–	–	–	dB(A)	dB(A)	/h	kgm^2	kg
71	LA71M8	**C**	**E**	**P02**	**–**	2.6	2.0	1.8	1.9	40	51	17 500	0.0008	7.2
	LA71MB8	**C**	**F**	**P02**	**–**	2.7	2.4	2.1	2.0	40	51	17 500	0.0008	7.2
80	LA80S8	**D**	**B**	**P02**	**–**	1.9	1.8	2.0	1.8	45	56	14 000	0.0014	10.4
	LA80M8	**D**	**C**	**P02**	**–**	3.0	2.1	2.7	1.9	45	56	14 000	0.0017	11.5
90	LA90SA8	**E**	**B**	**P02**	**–**	3.3	1.6	1.9	1.7	45	57	14 000	0.0023	12.1
	LA90LA8	**E**	**E**	**P02**	**–**	3.4	1.7	1.9	1.8	45	57	14 000	0.0031	15.2
100	LA100LA8	**F**	**B**	**P02**	**–**	3.4	1.6	1.9	1.8	50	61	10 500	0.0051	21.9
	LA100L8	**F**	**L**	**P02**	**–**	3.7	1.8	2.1	1.8	50	61	10 500	0.0063	25.3
112	LA112M8	**G**	**G**	**P02**	**–**	4.0	1.7	2.1	1.9	53	65	7 000	0.0130	27.6
132	LA132S8	**H**	**E**	**P02**	**–**	4.3	1.8	2.3	1.9	57	69	4 900	0.0140	43.7
	LA132MA8	**H**	**G**	**P02**	**–**	4.5	2.0	2.4	2.0	57	69	4 900	0.0190	51.0
160	LA160M8	**J**	**E**	**P02**	**–**	4.8	2.0	2.5	2.0	67	79	4 200	0.0360	74.0
	LA160MB8	**J**	**F**	**P02**	**–**	4.9	2.1	2.6	2.0	67	79	4 200	0.0460	85.0
	LA160LB8	**J**	**J**	**P02**	**–**	5.6	2.4	2.9	2.4	67	79	4 200	0.0640	108.0
180	LG180LA8	**K**	**M**	**P02**	**–**	4.4	1.6	2.0	1.7	69	82	1 600	0.1700	173.0
200	LG200L8	**L**	**L**	**P02**	**–**	5.0	2.1	2.4	1.9	71	84	1 280	0.2900	236.0
225	LG225S8	**M**	**E**	**P02**	**–**	5.5	2.2	2.5	1.8	61	74	960	0.4800	270.0
	LG225M8	**M**	**J**	**P02**	**–**	5.8	2.2	2.7	2.1	54	68	880	0.5500	290.0
250	LG250M8	**N**	**C**	**P02**	**–**	5.5	2.0	2.4	1.9	59	72	800	0.8400	385.0
280	LGI280S8 [2]	**P**	**B**	**P02**	**–**	4.9	1.9	1.9	1.7	59	73	640	1.1000	475.0
	LGI280M8 [2]	**P**	**L**	**P02**	**–**	5.1	1.9	1.9	1.7	62	75	640	1.4000	515.0
315	LGI315S8 [2]	**Q**	**G**	**P02**	**–**	5.7	1.9	2.4	1.8	63	77	480	2.1000	680.0
	LGI315M8 [2]	**Q**	**J**	**P02**	**–**	5.6	1.9	2.3	1.8	63	75	420	2.5000	745.0
	LGI315L8 [2]	**Q**	**U**	**P02**	**–**	5.7	2.0	2.5	1.8	63	77	390	3.1000	865.0
	LGI315LB8 [2]	**Q**	**V**	**P02**	**–**	6.0	2.1	2.5	2.0	63	77	350	3.9000	865.0
	LGI315LP8 [2]	**Q**	**W**	**P02**	**–**	6.4	2.3	2.6	2.3	64	78	320	4.5000	1 100.0

[2] Only as IEC MODULOG

8

© Siemens AG 2011

Motors for line-fed operation "High Efficiency" IE2

IE2

Selection and ordering data

4-pole, 1 500 rpm at 50 Hz

IEC Motor size	Motor LA/LG LAI/LGI	Order No.		Order code		Rated power	Rated speed	Rated torque	Rated current	Power factor	Efficiency		Effi-ciency class
		9th position	10th position	No. of poles	Effi-ciency	P_{rated}	n_{rated}	T_{rated}	I_{rated} 400 V	cos φ	η at 4/4 load	η at 3/4 load	acc. to standard IEC 60034-30
				4-pole		kW	rpm	Nm	A	–	%	%	
80	LA80ZMB4E	**D**	**E**	**–**	**M00**	0.75	1 400	5.11	1.81	0.75	79.6	79.6	**IE2**
90	LA90SB4E [1]	**E**	**M**	**–**	**M00**	1.1	1 440	7.29	2.55	0.77	81.4	81.4	**IE2**
	LA90ZLB4E [1]	**E**	**Q**	**–**	**M00**	1.5	1 440	9.95	3.4	0.77	82.8	82.8	**IE2**
100	LA100ZLP4E [1]	**F**	**M**	**–**	**M00**	2.2	1 435	14.6	4.6	0.82	84.3	84.3	**IE2**
	LA100ZLD4E [1]	**F**	**P**	**–**	**M00**	3.0	1 435	20.0	6.3	0.81	85.5	85.7	**IE2**
112	LA112ZMP4E [1]	**G**	**J**	**–**	**M00**	4.0	1 440	26.5	8.2	0.81	86.6	86.6	**IE2**
132	LA132SP4E [1]	**H**	**G**	**–**	**M00**	5.5	1 455	36.1	10.8	0.84	87.7	87.7	**IE2**
	LA132ZMP4E [1]	**H**	**K**	**–**	**M00**	7.5	1 455	49.2	14.5	0.84	88.7	88.9	**IE2**
160	LA160MB4E [1]	**J**	**P**	**–**	**M00**	9.2	1 445	60.8	18.2	0.82	89.3	89.3	**IE2**
	LA160MP4E [1]	**J**	**Q**	**–**	**M00**	11.0	1 460	71.9	21.0	0.85	89.8	89.8	**IE2**
	LA160ZLP4E [1]	**J**	**T**	**–**	**M00**	15.0	1 460	98.1	28.0	0.86	90.6	90.6	**IE2**
180	LG180ZMB4E [1]	**K**	**L**	**–**	**M00**	18.5	1 470	120	35.5	0.83	91.2	91.5	**IE2**
	LG180ZLB4E [1]	**K**	**P**	**–**	**M00**	22	1 465	143	41.5	0.84	91.6	92.0	**IE2**
200	LG200LB4E [1]	**L**	**M**	**–**	**M00**	30	1 475	194	55	0.85	92.3	92.8	**IE2**
225	LG225S4E	**M**	**E**	**–**	**M00**	37	1 470	240	66	0.87	92.7	93.6	**IE2**
	LG225ZM4E	**M**	**U**	**–**	**M00**	45	1 475	291	80	0.87	93.1	93.6	**IE2**
250	LG250ZM4E	**N**	**N**	**–**	**M00**	55	1 480	355	100	0.85	93.5	93.7	**IE2**
280	LGI280S4E [2]	**P**	**G**	**–**	**M00**	75	1 485	482	132	0.87	94.0	94.3	**IE2**
	LGI280ZM4E [2]	**P**	**W**	**–**	**M00**	90	1 485	579	159	0.87	94.2	94.6	**IE2**
315	LGI315S4E [2]	**Q**	**Q**	**–**	**M00**	110	1 490	705	196	0.86	94.5	94.6	**IE2**
	LGI315ZM4E [2]	**Q**	**S**	**–**	**M00**	132	1 485	849	230	0.87	94.7	94.9	**IE2**
	LGI315L4E [2]	**Q**	**U**	**–**	**M00**	160	1 485	1 029	280	0.87	94.9	95.2	**IE2**
	LGI315ZLB4E [2]	**Q**	**V**	**–**	**M00**	200	1 490	1 282	350	0.87	95.1	95.3	**IE2**

[1] Only as integrated motor
[2] Only as IEC MODULOG

© Siemens AG 2011

Selection and ordering data (continued)

4-pole, 1 500 rpm at 50 Hz

IEC Motor size	Motor LA/LG LAI/LGI	Order No.		Order code		Starting current	Relative starting torque	Relative breakdown torque	Relative average acceleration torque	Measuring surface sound pressure level	Sound pressure level	No-load operating	Moment of inertia	Weight
		9th position	10th position	No. of poles	Efficiency	I_{St}/I_{rated}	T_{St}/T_{rated}	T_{Bk}/T_{rated}	T_{Ru}/T_{rated}	L_{pfA}	L_{WA}	Z_0	J_{mot}	m_{mot}
				4-pole		–	–	–	–	dB(A)	dB(A)	/h	kgm^2	kg
80	LA80ZMB4E	**D**	**E**	**–**	**M00**	5.8	4.0	3.5	3.0	47	58	10 000	0.0024	14.1
90	LA90SB4E [1]	**E**	**M**	**–**	**M00**	6.4	2.7	3.2	2.6	48	60	8 000	0.0033	17.3
	LA90ZLB4E [1]	**E**	**Q**	**–**	**M00**	6.7	3.4	2.9	2.9	48	60	8 000	0.004	20.7
100	LA100ZLP4E [1]	**F**	**M**	**–**	**M00**	7.0	3.5	3.9	3.2	53	65	7 000	0.0062	28.8
	LA100ZLD4E [1]	**F**	**P**	**–**	**M00**	7.0	3.8	3.9	3.2	53	65	7 000	0.0077	34.5
112	LA112ZMP4E [1]	**G**	**J**	**–**	**M00**	6.9	2.8	3.2	2.5	53	65	5 000	0.014	42.5
132	LA132SP4E [1]	**H**	**G**	**–**	**M00**	7.0	2.9	3.6	2.6	62	74	3 000	0.023	51.8
	LA132ZMP4E [1]	**H**	**K**	**–**	**M00**	7.0	3.0	3.6	2.6	62	74	3 000	0.029	69.0
160	LA160MB4E [1]	**J**	**P**	**–**	**M00**	6.2	2.8	2.9	2.4	66	78		0.055	93.2
	LA160MP4E [1]	**J**	**Q**	**–**	**M00**	6.9	2.7	3.2	2.5	66	78	2 000	0.055	93.2
	LA160ZLP4E [1]	**J**	**T**	**–**	**M00**	7.0	2.9	3.3	2.5	66	78	2 000	0.072	123
180	LG180ZMB4E [1]	**K**	**L**	**–**	**M00**	6.8	2.5	3.0	2.3	60	73	1 000	0.12	178
	LG180ZLB4E [1]	**K**	**P**	**–**	**M00**	7.5	2.5	3.3	2.5	60	73	1 000	0.14	207
200	LG200LB4E [1]	**L**	**M**	**–**	**M00**	6.7	2.4	3.1	2.2	62	75	800	0.23	259
225	LG225S4E	**M**	**E**	**–**	**M00**	6.5	2.6	3.0	2.6	60	73	460	0.40	334
	LG225ZM4E	**M**	**U**	**–**	**M00**	7.0	2.6	3.1	2.6	60	73	480	0.49	380
250	LG250ZM4E	**N**	**N**	**–**	**M00**	7.1	2.8	3.0	2.5	65	78	280	0.86	529
280	LGI280S4E [2]	**P**	**G**	**–**	**M00**	7.0	2.5	2.9	2.2	67	80	260	1.4	661
	LGI280ZM4E [2]	**P**	**W**	**–**	**M00**	7.3	2.6	3.1	2.3	68	82	190	1.7	776
315	LGI315S4E [2]	**Q**	**Q**	**–**	**M00**	7.4	2.7	2.9	2.4	68	82	200	2.3	932
	LGI315ZM4E [2]	**Q**	**S**	**–**	**M00**	7.1	2.7	2.9	2.4	69	83	180	2.9	1 110
	LGI315L4E [2]	**Q**	**U**	**–**	**M00**	7.5	2.9	3.0	2.7	69	83	160	3.5	1 271
	LGI315ZLB4E [2]	**Q**	**V**	**–**	**M00**	7.9	3.2	3.1	2.7	69	83	140	4.2	1 501

[1] Only as integrated motor
[2] Only as IEC MODULOG

8

© Siemens AG 2011

Motors for line-fed operation "High Efficiency" IE2

IE2

Selection and ordering data

2-pole, 3 000 rpm at 50 Hz

IEC Motor size	Motor LA/LG LAI/LGI	Order No.		Order code		Rated power	Rated speed	Rated torque	Rated current	Power factor	Efficiency		Effi-ciency class
		9th position	10th position	No. of poles	Effi-ciency	P_{rated}	n_{rated}	T_{rated}	I_{rated} 400 V	cos φ	η at 4/4 load	η at 3/4 load	acc. to standard IEC 60034-30
				2-pole		kW	rpm	Nm	A	–	%	%	
80	LA80M2E	**D**	**C**	**P00**	**M00**	0.75	2 870	2.5	1.71	0.82	77.4	77.4	**IE2**
	LA80ZMB2E	**D**	**N**	**P00**	**M00**	1.1	2 860	3.67	2.25	0.89	79.6	79.6	**IE2**
90	LA90SB2E [1]	**E**	**M**	**P00**	**M00**	1.5	2 890	4.96	3.05	0.87	81.3	81.3	**IE2**
	LA90ZLB2E [1]	**E**	**Q**	**P00**	**M00**	2.2	2 890	7.27	4.4	0.87	83.2	83.2	**IE2**
100	LA100ZLB2E [1]	**F**	**M**	**P00**	**M00**	3.0	2 890	9.91	5.8	0.88	84.6	84.6	**IE2**
112	LA112ZMP2E [1]	**G**	**J**	**P00**	**M00**	4.0	2 905	13.1	7.6	0.89	85.8	85.8	**IE2**
132	LA132SB2E [1]	**H**	**F**	**P00**	**M00**	5.5	2 930	17.9	10.1	0.90	87.0	87.0	**IE2**
	LA132ZSD2E [1]	**H**	**J**	**P00**	**M00**	7.5	2 930	24.4	13.4	0.92	88.1	88.1	**IE2**
160	LA160MB2E [1]	**J**	**P**	**P00**	**M00**	11.0	2 945	35.7	19.7	0.90	89.4	89.4	**IE2**
	LA160MP2E [1]	**J**	**Q**	**P00**	**M00**	15.0	2 945	48.6	26.5	0.90	90.3	90.3	**IE2**
	LA160ZLB2E [1]	**J**	**S**	**P00**	**M00**	18.5	2 940	60.1	32.0	0.92	90.9	91.0	**IE2**
180	LG180ZMB2E [1]	**K**	**L**	**P00**	**M00**	22	2 955	71.1	39.5	0.88	91.3	92.0	**IE2**
200	LG200L2E [1]	**L**	**L**	**P00**	**M00**	30	2 960	96.8	53.5	0.88	92.0	92.1	**IE2**
	LG200ZLB2E [1]	**L**	**M**	**P00**	**M00**	37	2 960	119.0	65.0	0.89	92.5	92.7	**IE2**

[1] Only as integrated motor

© Siemens AG 2011

Selection and ordering data (continued)

2-pole, 3 000 rpm at 50 Hz

IEC Motor size	Motor LA/LG LAI/LGI	Order No.		Order code		Starting current	Relative starting torque	Relative breakdown torque	Relative average acceleration torque	Measuring surface sound pressure level	Sound pressure level	No-load operating	Moment of inertia	Weight
		9th position	10th position	No. of poles	Efficiency	I_{St}/I_{rated}	T_{St}/T_{rated}	T_{Bk}/T_{rated}	T_{Ru}/T_{rated}	L_{pfA}	L_{WA}	Z_0	J_{mot}	m_{mot}
				2-pole		–	–	–	–	dB(A)	dB(A)	/h	kgm^2	kg
80	LA80M2E	**D**	**C**	**P00**	**M00**	8.3	4.4	3.8	3.2	56	67	6 000	0.0010	11.3
	LA80ZMB2E	**D**	**N**	**P00**	**M00**	7.0	3.5	3.1	2.4	56	67	6 000	0.0013	14.1
90	LA90SB2E [1]	**E**	**M**	**P00**	**M00**	7.0	3.4	3.5	2.9	60	72	5 000	0.0018	17.3
	LA90ZLB2E [1]	**E**	**Q**	**P00**	**M00**	7.0	5.6	4.9	4.8	60	72	5 000	0.0022	21.4
100	LA100ZLB2E [1]	**F**	**M**	**P00**	**M00**	7.0	3.2	3.2	2.9	62	74	3 000	0.0044	27.6
112	LA112ZMP2E [1]	**G**	**J**	**P00**	**M00**	7.0	2.6	3.2	2.6	63	75	2 000	0.0077	40.3
132	LA132SB2E [1]	**H**	**F**	**P00**	**M00**	7.0	2.5	3.2	2.5	68	80	1 000	0.019	49.5
	LA132ZSD2E [1]	**H**	**J**	**P00**	**M00**	7.0	2.5	3.1	2.1	68	80	1 000	0.024	64.4
160	LA160MB2E [1]	**J**	**P**	**P00**	**M00**	7.0	2.4	3.3	2.0	70	82	600	0.044	84
	LA160MP2E [1]	**J**	**Q**	**P00**	**M00**	7.0	2.4	3.2	2.1	70	82	600	0.051	94
	LA160ZLB2E [1]	**J**	**S**	**P00**	**M00**	7.0	2.2	3.0	2.0	70	82	600	0.065	117
180	LG180ZMB2E [1]	**K**	**L**	**P00**	**M00**	7.4	2.4	3.3	2.4	67	80	500	0.086	207
200	LG200L2E [1]	**L**	**L**	**P00**	**M00**	7.0	2.4	3.3	2.4	71	84	300	0.15	259
	LG200ZLB2E [1]	**L**	**M**	**P00**	**M00**	7.2	2.5	3.3	2.4	71	84	300	0.18	293

[1] Only as integrated motor

© Siemens AG 2011

Motors for line-fed operation "High Efficiency" IE2

IE2

Selection and ordering data

6-pole, 1 000 rpm at 50 Hz

IEC Motor size	Motor LA/LG LAI/LGI	Order No.		Order code		Rated power	Rated speed	Rated torque	Rated current	Power factor	Efficiency		Effi-ciency class
		9th position	10th position	No. of poles	Effi-ciency	P_{rated}	n_{rated}	T_{rated}	I_{rated} 400 V	cos φ	η at 4/4 load	η at 3/4 load	acc. to standard IEC 60034-30
				6-pole		kW	rpm	Nm	A	–	%	%	
90	LA90SB6E [1]	**E**	**D**	**P01**	**M00**	0.75	925	7.74	1.98	0.72	75.9	75.9	**IE2**
	LA90ZLD6E [1]	**E**	**Q**	**P01**	**M00**	1.1	940	11.2	2.9	0.70	78.1	78.5	**IE2**
100	LA100ZLP6E [1]	**F**	**M**	**P01**	**M00**	1.5	935	15.3	3.7	0.70	79.8	79.8	**IE2**
112	LA112ZMP6E [1]	**G**	**J**	**P01**	**M00**	2.2	955	22.0	5.6	0.70	81.8	81.8	**IE2**
132	LA132SB6E [1]	**H**	**F**	**P01**	**M00**	3.0	955						**IE2**
	LA132ZMB6E [1]	**H**	**J**	**P01**	**M00**	4.0	950	40.2	8.4	0.81	84.6	84.6	**IE2**
	LA132ZMD6E [1]	**H**	**K**	**P01**	**M00**	5.5	960	54.7	12.0	0.77	86.0	86.0	**IE2**
160	LA160MD6E [1]	**J**	**J**	**P01**	**M00**	7.5	965	74.2	17.2	0.72	87.2	87.2	**IE2**
	LA160ZLP6E [1]	**J**	**T**	**P01**	**M00**	11.0	960	109	23.0	0.78	88.7	88.7	**IE2**
180	LG180ZLB6E [1]	**K**	**P**	**P01**	**M00**	15.0	975	147	30.0	0.81	90.5	90.5	**IE2**
200	LG200L6E [1]	**L**	**L**	**P01**	**M00**	18.5	975	181	36.5	0.81	91.0	91.0	**IE2**
	LG200ZLB6E [1]	**L**	**M**	**P01**	**M00**	22	975	215	42.5	0.82	91.5	91.5	**IE2**
225	LG225ZM6E	**M**	**L**	**P01**	**M00**	30	980	292	57	0.83	92.2	92.2	**IE2**
250	LG250M6E	**N**	**E**	**P01**	**M00**	37	985	359	70	0.83	92.6	92.6	**IE2**
280	LGI280S6E [2]	**P**	**G**	**P01**	**M00**	45	985	436	82	0.85	92.9	92.9	**IE2**
	LGI280M6E [2]	**P**	**N**	**P01**	**M00**	55	985	533	100	0.85	93.3	93.3	**IE2**
315	LGI315S6E [2]	**Q**	**G**	**P01**	**M00**	75	990	723	139	0.83	93.7	93.7	**IE2**
	LGI315ZM6E [2]	**Q**	**S**	**P01**	**M00**	90	990	868	163	0.85	94.1	94.1	**IE2**
	LGI315L6E [2]	**Q**	**U**	**P01**	**M00**	110	990	1 061	198	0.85	94.4	94.4	**IE2**
	LGI315ZLB6E [2]	**Q**	**V**	**P01**	**M00**	132	990	1 273	235	0.85	94.6	94.6	**IE2**
	LGI315ZLP6E [2]	**Q**	**X**	**P01**	**M00**	160	990	1 543	285	0.86	94.9	94.9	**IE2**

[1] Only as integrated motor
[2] Only as IEC MODULOG

© Siemens AG 2011

Selection and ordering data (continued)

6-pole, 1 000 rpm at 50 Hz

IEC Motor size	Motor LA/LG LAI/LGI	Order No.		Order code		Starting current	Relative starting torque	Relative breakdown torque	Relative average acceleration torque	Measuring surface sound pressure level	Sound pressure level	No-load operating	Moment of inertia	Weight
		9th position	10th position	No. of poles	Efficiency	I_{St}/I_{rated}	T_{St}/T_{rated}	T_{Bk}/T_{rated}	T_{Ru}/T_{rated}	L_{pfA}	L_{WA}	Z_0	J_{mot}	m_{mot}
				6-pole		–	–	–	–	dB(A)	dB(A)	/h	kgm^2	kg
90	LA90SB6E [1]	**E**	**D**	**P01**	**M00**	4.4	3	2.5	2.2	43	55	10 000	0.0033	18.0
	LA90ZLD6E [1]	**E**	**Q**	**P01**	**M00**	5.7	3.7	3.2	2.9	43	55	10 000	0.005	21.9
100	LA100ZLP6E [1]	**F**	**M**	**P01**	**M00**	6.2	3.5	3.4	2.8	47	59	9 000	0.0065	28.8
112	LA112ZMP6E [1]	**G**	**J**	**P01**	**M00**	6.2	2.9	3	2.6	52	64	8 000	0.014	42.6
132	LA132SB6E [1]	**H**	**F**	**P01**	**M00**					63	75	6 000		
	LA132ZMB6E [1]	**H**	**J**	**P01**	**M00**	6.3	3	2.7	2.5	63	75	6 000	0.025	56.4
	LA132ZMD6E [1]	**H**	**K**	**P01**	**M00**	7.3	3.7	3.6	3.1	63	75	5 000	0.03	73.6
160	LA160MD6E [1]	**J**	**J**	**P01**	**M00**	5.5	2.4	2.5	2.2	66	78	4 000	0.063	113
	LA160ZLP6E [1]	**J**	**T**	**P01**	**M00**	6.9	3.1	3.2	2.6	66	78	4 000	0.072	132
180	LG180ZLB6E [1]	**K**	**P**	**P01**	**M00**	5.5	2.4	2.5	2.1	56	69	1 260	0.20	201
200	LG200L6E [1]	**L**	**L**	**P01**	**M00**	5.6	2.4	2.4	2.1	59	72	1 140	0.29	242
	LG200ZLB6E [1]	**L**	**M**	**P01**	**M00**	5.6	2.4	2.4	2.1	59	72	1 140	0.36	276
225	LG225ZM6E	**M**	**L**	**P01**	**M00**	6.5	2.8	2.9	2.5	59	72	1 000	0.63	374
250	LG250M6E	**N**	**E**	**P01**	**M00**	6.8	2.9	2.5	2.3	59	72	640	0.93	466
280	LGI280S6E [2]	**P**	**G**	**P01**	**M00**	6.8	3	2.7	2.5	58	71	520	1.4	520
	LGI280M6E [2]	**P**	**N**	**P01**	**M00**	7.3	3.3	2.9	2.8	58	71	480	1.6	570
315	LGI315S6E [2]	**Q**	**G**	**P01**	**M00**	7.3	2.8	3	2.5	61	74	380	2.5	760
	LGI315ZM6E [2]	**Q**	**S**	**P01**	**M00**	7.3	2.7	2.9	2.4	61	74	360	3.2	935
	LGI315L6E [2]	**Q**	**U**	**P01**	**M00**	7.4	2.9	2.9	2.6	61	74	340	4.0	1 010
	LGI315ZLB6E [2]	**Q**	**V**	**P01**	**M00**	7.8	3.1	3.1	2.8	61	74	320	4.7	1 180
	LGI315ZLP6E [2]	**Q**	**X**	**P01**	**M00**	7.8	3.2	3.1	2.8	64	77	300	5.4	1 245

[1] Only as integrated motor
[2] Only as IEC MODULOG

© Siemens AG 2011

Motors for line-fed operation "High Efficiency" IE2

IE2

Selection and ordering data

4-pole, 1 800 rpm at 60 Hz

IEC Motor size	Motor LA/LG LAI/LGI	Order No.		Order code		Rated power	Rated speed	Rated torque	Rated current	Power factor	Efficiency		Effi-ciency class
		9th position	10th position	No. of poles	Effi-ciency	P_{rated}	n_{rated}	T_{rated}	I_{rated} 460 V	cos φ	η at 4/4 load	η at 3/4 load	acc. to standard IEC 60034-30
				4-pole		kW	rpm	Nm	A	–	%	%	
80	LA80ZMB4E	**D**	**E**	**–**	**M00**	0.75	1 720	4.16	1.55	0.72	82.5	82.5	**IE2**
90	LA90SB4E [1]	**E**	**M**	**–**	**M00**	1.1	1 755	5.99	2.2	0.76	85.5	85.5	**IE2**
	LA90ZLB4E [1]	**E**	**Q**	**–**	**M00**	1.5	1 755	8.16	2.95	0.76	86.5	86.5	**IE2**
100	LA100ZLP4E [1]	**F**	**M**	**–**	**M00**	2.2	1 750	12.0	4.1	0.79	87.5	87.5	**IE2**
	LA100ZLD4E [1]	**F**	**P**	**–**	**M00**	3.0	1 750	16.4	5.4	0.79	88.5	88.5	**IE2**
112	LA112ZMP4E [1]	**G**	**J**	**–**	**M00**	4.0	1 755	21.8	7.0	0.79	90.0	90.0	**IE2**
132	LA132SP4E [1]	**H**	**G**	**–**	**M00**	5.5	1 760	29.8	9.7	0.81	90.5	90.5	**IE2**
	LA132ZMP4E [1]	**H**	**K**	**–**	**M00**	7.5	1 760	40.7	12.8	0.82	90.5	90.5	**IE2**
160	LA160MB4E [1]	**J**	**P**	**–**	**M00**	9.2	1 755	50.1	15.9	0.81	89.5	89.5	**IE2**
	LA160MP4E [1]	**J**	**Q**	**–**	**M00**	11.0	1 765	59.5	18.2	0.85	91.0	91.0	**IE2**
	LA160ZLP4E [1]	**J**	**T**	**–**	**M00**	15.0	1 765	81.1	24.5	0.85	91.5	91.5	**IE2**
180	LG180ZMB4E [1]	**K**	**L**	**–**	**M00**	18.5	1 770	99.8	31.0	0.82	92.4	92.4	**IE2**
	LG180ZLB4E [1]	**K**	**P**	**–**	**M00**	22	1 770	119	36.5	0.83	92.4	92.4	**IE2**
200	LG200LB4E [1]	**L**	**M**	**–**	**M00**	30	1 775	161	48	0.84	93.0	93.0	**IE2**
225	LG225S4E	**M**	**E**	**–**	**M00**	37	1 775	199	59	0.86	93.0	93.0	**IE2**
	LG225ZM4E	**M**	**U**	**–**	**M00**	45	1 775	242	70	0.86	93.6	93.6	**IE2**
250	LG250ZM4E	**N**	**N**	**–**	**M00**	55	1 785	294	89	0.84	94.1	94.1	**IE2**
280	LGI280S4E [2]	**P**	**G**	**–**	**M00**	75	1 785	401	114	0.87	94.5	94.5	**IE2**
	LGI280ZM4E [2]	**P**	**W**	**–**	**M00**	90	1 785	481	144	0.86	94.5	94.5	**IE2**
315	LGI315S4E [2]	**Q**	**Q**	**–**	**M00**	110	1 790	587	172	0.86	95.0	95.0	**IE2**
	LGI315ZM4E [2]	**Q**	**S**	**–**	**M00**	132	1 790	704	200	0.86	95.0	95.0	**IE2**
	LGI315L4E [2]	**Q**	**U**	**–**	**M00**	160	1 790	854	240	0.88	95.4	95.4	**IE2**
	LGI315ZLB4E [2]	**Q**	**V**	**–**	**M00**	200	1 790	1 067	305	0.87	95.4	95.4	**IE2**

[1] Only as integrated motor
[2] Only as IEC MODULOG

© Siemens AG 2011

Selection and ordering data (continued)

4-pole, 1 800 rpm at 60 Hz

IEC Motor size	Motor LA/LG LAI/LGI	Order No.		Order code		Starting current	Relative starting torque	Relative breakdown torque	Relative average acceleration torque	Measuring surface sound pressure level	Sound pressure level	No-load operating	Moment of inertia	Weight
		9th position	10th position	No. of poles	Efficiency	I_{St}/I_{rated}	T_{St}/T_{rated}	T_{Bk}/T_{rated}	T_{Ru}/T_{rated}	L_{pfA}	L_{WA}	Z_0	J_{mot}	m_{mot}
				4-pole		–	–	–	–	dB(A)	dB(A)	/h	kgm^2	kg
80	LA80ZMB4E	**D**	**E**	**–**	**M00**	7.3	4.0	3.9	3.1	51	62	10 000	0.0024	14.1
90	LA90SB4E [1]	**E**	**M**	**–**	**M00**	7.7	3.1	3.9	3.0	52	64	8 000	0.0033	17.3
	LA90ZLB4E [1]	**E**	**Q**	**–**	**M00**	8.1	3.6	4.2	3.1	52	64	8 000	0.004	20.7
100	LA100ZLP4E [1]	**F**	**M**	**–**	**M00**	8.4	3.4	4.3	3.1	57	69	7 000	0.0062	28.8
	LA100ZLD4E [1]	**F**	**P**	**–**	**M00**	8.7	3.8	4.6	3.3	57	69	7 000	0.0077	34.5
112	LA112ZMP4E [1]	**G**	**J**	**–**	**M00**	8.6	3.2	3.9	2.9	57	69	5 000	0.014	42.5
132	LA132SP4E [1]	**H**	**G**	**–**	**M00**	8.7	3.2	4.1	2.9	66	78	3 000	0.023	51.8
	LA132ZMP4E [1]	**H**	**K**	**–**	**M00**	8.7	3.4	4.1	3.0	66	78	3 000	0.029	69.0
160	LA160MB4E [1]	**J**	**P**	**–**	**M00**	7.1	3.2	3.3	2.5	70	82		0.055	93.2
	LA160MP4E [1]	**J**	**Q**	**–**	**M00**	8.1	2.6	3.2	2.4	70	82	2 000	0.055	93.2
	LA160ZLP4E [1]	**J**	**T**	**–**	**M00**	8.5	2.8	3.5	2.4	70	82	2 000	0.072	123
180	LG180ZMB4E [1]	**K**	**L**	**–**	**M00**	8.0	3.0	3.8	2.7	64	77	800	0.12	178
	LG180ZLB4E [1]	**K**	**P**	**–**	**M00**	7.9	2.8	3.8	2.8	64	77	800	0.14	207
200	LG200LB4E [1]	**L**	**M**	**–**	**M00**	7.7	2.7	3.5	2.5	66	79	640	0.23	259
225	LG225S4E	**M**	**E**	**–**	**M00**	7.4	3.0	3.4	2.9	64	77	370	0.40	334
	LG225ZM4E	**M**	**U**	**–**	**M00**	8.1	3.0	3.6	2.9	64	77	390	0.49	380
250	LG250ZM4E	**N**	**N**	**–**	**M00**	8.1	3.2	3.4	2.7	69	82	230	0.86	529
280	LGI280S4E [2]	**P**	**G**	**–**	**M00**	7.9	2.8	3.2	2.5	71	84	210	1.4	661
	LGI280ZM4E [2]	**P**	**W**	**–**	**M00**	8.1	2.9	3.5	2.6	72	86	150	1.7	776
315	LGI315S4E [2]	**Q**	**Q**	**–**	**M00**	7.6	3.1	3.2	2.6	72	86	160	2.3	932
	LGI315ZM4E [2]	**Q**	**S**	**–**	**M00**	7.8	3.1	3.4	2.7	73	87	150	2.9	1 110
	LGI315L4E [2]	**Q**	**U**	**–**	**M00**	7.8	3.3	2.9	3.0	73	87	130	3.5	1 271
	LGI315ZLB4E [2]	**Q**	**V**	**–**	**M00**	7.9	3.3	3.1	2.7	73	87	110	4.2	1 501

[1] Only as integrated motor
[2] Only as IEC MODULOG

© Siemens AG 2011

Motors for line-fed operation "High Efficiency" IE2

IE2

Selection and ordering data

2-pole, 3 600 rpm at 60 Hz

IEC Motor size	Motor LA/LG LAI/LGI	Order No.		Order code		Rated power	Rated speed	Rated torque	Rated current	Power factor	Efficiency		Effi-ciency class
		9th posi-tion	10th posi-tion	No. of poles	Effi-ciency	P_{rated}	n_{rated}	T_{rated}	I_{rated} 460 V	cos φ	η at 4/4 load	η at 3/4 load	acc. to standard IEC 60034-30
				2-pole		kW	rpm	Nm	A	–	%	%	
80	LA80M2E	**D**	**C**	**P00**	**M00**	0.75	3 485	2.05	1.49	0.84	75.5		**IE2**
	LA80ZMB2E	**D**	**N**	**P00**	**M00**	1.1	3 480	3.02	1.91	0.88	82.5		**IE2**
90	LA90SB2E [1]	**E**	**M**	**P00**	**M00**	1.5	3 510	4.08	2.60	0.86	84.0		**IE2**
	LA90ZLB2E [1]	**E**	**Q**	**P00**	**M00**	2.2	3 510	5.98	3.85	0.85	85.5		**IE2**
100	LA100ZLB2E [1]	**F**	**M**	**P00**	**M00**	3.0	3 510	8.16	4.9	0.87	86.5		**IE2**
112	LA112ZMP2E [1]	**G**	**J**	**P00**	**M00**	4.0	3 540	10.8	6.1	0.88	87.5		**IE2**
132	LA132SB2E [1]	**H**	**F**	**P00**	**M00**	5.5	3 540	14.8	8.7	0.90	88.5		**IE2**
	LA132ZSD2E [1]	**H**	**J**	**P00**	**M00**	7.5	3 540	20.2	11.4	0.92	89.5		**IE2**
160	LA160MB2E [1]	**J**	**P**	**P00**	**M00**	11.0	3 555	29.5	17.1	0.90	90.2		**IE2**
	LA160MP2E [1]	**J**	**Q**	**P00**	**M00**	15.0	3 555	40.3	23.0	0.90	90.2		**IE2**
	LA160ZLB2E [1]	**J**	**S**	**P00**	**M00**	18.5	3 550	49.8	27.8	0.92	91.0		**IE2**
180	LG180ZMB2E [1]	**K**	**L**	**P00**	**M00**	22	3 560	59.0	34	0.88	93.6		**IE2**
200	LG200L2E [1]	**L**	**L**	**P00**	**M00**	30	3 565	80.4	46	0.88	92.4		**IE2**
	LG200ZLB2E [1]	**L**	**M**	**P00**	**M00**	37	3 565	99.1	58	0.88	92.4		**IE2**

[1] Only as integrated motor

© Siemens AG 2011

Selection and ordering data (continued)

2-pole, 3 600 rpm at 60 Hz

IEC Motor size	Motor LA/LG LAI/LGI	Order No.		Order code		Starting current	Relative starting torque	Relative breakdown torque	Relative average acceleration torque	Measuring surface sound pressure level	Sound pressure level	No-load operating	Moment of inertia	Weight
		9th position	10th position	No. of poles	Efficiency	I_{St}/I_{rated}	T_{St}/T_{rated}	T_{Bk}/T_{rated}	T_{Ru}/T_{rated}	L_{pfA}	L_{WA}	Z_0	J_{mot}	m_{mot}
				2-pole		–	–	–	–	dB(A)	dB(A)	/h	kgm^2	kg
80	LA80M2E	**D**	**C**	**P00**	**M00**	9.6	4.8	4.1	3.5	60	71	4 500	0.0010	11.3
	LA80ZMB2E	**D**	**N**	**P00**	**M00**	8.6	3.8	3.4	2.6	60	71	4 500	0.0013	14.1
90	LA90SB2E [1]	**E**	**M**	**P00**	**M00**	8.6	3.7	3.8	3.2	64	76	3 700	0.0018	17.3
	LA90ZLB2E [1]	**E**	**Q**	**P00**	**M00**	8.5	6.1	5.4	5.2	64	76	3 700	0.0022	21.4
100	LA100ZLB2E [1]	**F**	**M**	**P00**	**M00**	8.6	3.5	3.5	3.2	66	78	2 200	0.0044	27.6
112	LA112ZMP2E [1]	**G**	**J**	**P00**	**M00**	9.2	2.8	3.5	2.8	67	79	1 500	0.0077	40.3
132	LA132SB2E [1]	**H**	**F**	**P00**	**M00**	8.5	2.7	3.5	2.8	72	84	700	0.019	49.5
	LA132ZSD2E [1]	**H**	**J**	**P00**	**M00**	8.3	2.7	3.4	2.3	72	84	700	0.024	64.4
160	LA160MB2E [1]	**J**	**P**	**P00**	**M00**	8.5	2.6	3.6	2.2	74	86	400	0.044	84
	LA160MP2E [1]	**J**	**Q**	**P00**	**M00**	8.5	2.6	3.5	2.3	74	86	400	0.051	94
	LA160ZLB2E [1]	**J**	**S**	**P00**	**M00**	8.5	2.4	3.3	2.2	74	86	400	0.065	117
180	LG180ZMB2E [1]	**K**	**L**	**P00**	**M00**	8	2.7	3.7	2.6	71	84	300	0.086	207
200	LG200L2E [1]	**L**	**L**	**P00**	**M00**	7.8	2.7	3.7	2.6	75	88	200	0.15	259
	LG200ZLB2E [1]	**L**	**M**	**P00**	**M00**	8	3.4	3.7	2.6	75	88	200	0.18	293

[1] Only as integrated motor

© Siemens AG 2011

Motors for line-fed operation "High Efficiency" IE2

IE2

Selection and ordering data

6-pole, 1 200 rpm at 60 Hz

IEC Motor size	Motor LA/LG LAI/LGI	Order No.		Order code		Rated power	Rated speed	Rated torque	Rated current	Power factor	Efficiency		Effi-ciency class
		9th posi-tion	10th posi-tion	No. of poles	Effi-ciency	P_{rated}	n_{rated}	T_{rated}	I_{rated} 460 V	cos φ	η at 4/4 load	η at 3/4 load	acc. to standard IEC 60034-30
				6-pole		kW	rpm	Nm	A	–	%	%	
90	LA90SB6E [1]	**E**	**D**	**P01**	**M00**	0.75	1 140	6.28	1.78	0.66	80.0	80.0	**IE2**
	LA90ZLD6E [1]	**E**	**Q**	**P01**	**M00**	1.1	1 150	9.13	2.5	0.64	85.5	85.5	**IE2**
100	LA100ZLP6E [1]	**F**	**M**	**P01**	**M00**	1.5	1 150	12.46	3.1	0.62	86.5	86.5	**IE2**
112	LA112ZMP6E [1]	**G**	**J**	**P01**	**M00**	2.2	1 160	18.1	4.8	0.66	87.5	87.5	**IE2**
132	LA132SB6E [1]	**H**	**F**	**P01**	**M00**	3.0	1 160						**IE2**
	LA132ZMB6E [1]	**H**	**J**	**P01**	**M00**	4.0	1 160	32.9	7.5	0.77	87.5	87.5	**IE2**
	LA132ZMD6E [1]	**H**	**K**	**P01**	**M00**	5.5	1 160	45.3	10.6	0.73	89.5	89.5	**IE2**
160	LA160MD6E [1]	**J**	**J**	**P01**	**M00**	7.5	1 165	61.5	15.0	0.70	89.5	89.5	**IE2**
	LA160ZLP6E [1]	**J**	**T**	**P01**	**M00**	11.0	1 165	90.2	19.9	0.77	90.2	90.2	**IE2**
180	LG180ZLB6E [1]	**K**	**P**	**P01**	**M00**	15.0	1 175	122	26.0	0.80	90.2	90.2	**IE2**
200	LG200L6E [1]	**L**	**L**	**P01**	**M00**	18.5	1 180	150	32.0	0.79	91.7	91.7	**IE2**
	LG200ZLB6E [1]	**L**	**M**	**P01**	**M00**	22	1 180	178	37.5	0.8	91.7	91.7	**IE2**
225	LG225ZM6E	**M**	**L**	**P01**	**M00**	30	1 180	243	49.5	0.82	93.0	93.0	**IE2**
250	LG250M6E	**N**	**E**	**P01**	**M00**	37	1 185	298	61	0.82	93.0	93.0	**IE2**
280	LGI280S6E [2]	**P**	**G**	**P01**	**M00**	45	1 190	361	73	0.83	93.6	93.6	**IE2**
	LGI280M6E [2]	**P**	**N**	**P01**	**M00**	55	1 190	441	89	0.83	93.6	93.6	**IE2**
315	LGI315S6E [2]	**Q**	**G**	**P01**	**M00**	75	1 190	602	122	0.82	94.1	94.1	**IE2**
	LGI315ZM6E [2]	**Q**	**S**	**P01**	**M00**	90	1 190	722	143	0.84	94.1	94.1	**IE2**
	LGI315L6E [2]	**Q**	**U**	**P01**	**M00**	110	1 190	883	173	0.84	95.0	95.0	**IE2**
	LGI315ZLB6E [2]	**Q**	**V**	**P01**	**M00**	132	1 190	1 059	210	0.84	95.0	95.0	**IE2**
	LGI315ZLP6E [2]	**Q**	**X**	**P01**	**M00**	160	1 190	1 284	250	0.84	96.4	96.4	**IE2**

[1] Only as integrated motor
[2] Only as IEC MODULOG

© Siemens AG 2011

Selection and ordering data (continued)

6-pole, 1 000 rpm at 60 Hz

IEC Motor size	Motor LA/LG LAI/LGI	Order No.		Order code		Starting current	Relative starting torque	Relative breakdown torque	Relative average acceleration torque	Measuring surface sound pressure level	Sound pressure level	No-load operating	Moment of inertia	Weight
		9th position	10th position	No. of poles	Efficiency	I_{St}/I_{rated}	T_{St}/T_{rated}	T_{Bk}/T_{rated}	T_{Ru}/T_{rated}	L_{pfA}	L_{WA}	Z_0	J_{mot}	m_{mot}
				6-pole		–	–	–	–	dB(A)	dB(A)	/h	kgm^2	kg
90	LA90SB6E [1]	**E**	**D**	**P01**	**M00**	5.6	3.0	3.0	2.3	47	59	7 000	0.0033	18.0
	LA90ZLD6E [1]	**E**	**Q**	**P01**	**M00**	6.4	3.7	3.7	3.1	47	59	7 000	0.0050	21.9
100	LA100ZLP6E [1]	**F**	**M**	**P01**	**M00**	7.2	3.5	3.8	3.0	51	63	6 300	0.0065	28.8
112	LA112ZMP6E [1]	**G**	**J**	**P01**	**M00**	7.5	2.9	3.7	2.8	56	68	5 600	0.014	42.6
132	LA132SB6E [1]	**H**	**F**	**P01**	**M00**					67	79	4 200		
	LA132ZMB6E [1]	**H**	**J**	**P01**	**M00**	7.9	3.0	3.6	2.7	67	79	4 200	0.025	56.4
	LA132ZMD6E [1]	**H**	**K**	**P01**	**M00**	8.4	3.7	4.3	3.2	67	79	3 500	0.03	73.6
160	LA160MD6E [1]	**J**	**J**	**P01**	**M00**	6.4	2.4	2.8	2.3	70	82	2 800	0.063	113
	LA160ZLP6E [1]	**J**	**T**	**P01**	**M00**	8.3	3.1	3.8	2.8	70	82	2 800	0.072	132
180	LG180ZLB6E [1]	**K**	**P**	**P01**	**M00**	6.5	2.9	3.0	2.5	60	73	1 020	0.20	201
200	LG200L6E [1]	**L**	**L**	**P01**	**M00**	6.5	2.9	2.7	2.4	63	76	920	0.29	242
	LG200ZLB6E [1]	**L**	**M**	**P01**	**M00**	6.4	2.9	2.7	2.4	63	76	920	0.36	276
225	LG225ZM6E	**M**	**L**	**P01**	**M00**	7.2	3.4	3.4	3.0	63	76	800	0.63	374
250	LG250M6E	**N**	**E**	**P01**	**M00**	7.4	3.4	2.9	2.8	63	76	520	0.93	466
280	LGI280S6E [2]	**P**	**G**	**P01**	**M00**	7.7	3.6	3.1	2.9	62	75	420	1.4	520
	LGI280M6E [2]	**P**	**N**	**P01**	**M00**	8.3	3.9	3.3	3.2	62	75	390	1.6	570
315	LGI315S6E [2]	**Q**	**G**	**P01**	**M00**	8.4	3.3	3.4	2.9	65	78	310	2.5	760
	LGI315ZM6E [2]	**Q**	**S**	**P01**	**M00**	7.9	3.0	3.1	2.6	65	78	290	3.2	935
	LGI315L6E [2]	**Q**	**U**	**P01**	**M00**	8.5	3.3	3.3	3.0	65	78	280	4.0	1 010
	LGI315ZLB6E [2]	**Q**	**V**	**P01**	**M00**	8.9	3.6	3.6	3.2	65	78	260	4.7	1 180
	LGI315ZLP6E [2]	**Q**	**X**	**P01**	**M00**	9.4	4.0	4.0	3.5	68	81	240	5.4	1 245

[1] Only as integrated motor
[2] Only as IEC MODULOG

© Siemens AG 2011

Motors for USA, Canada - Line-fed operation "Standard Efficiency"

Selection and ordering data

4-pole, 1 800 rpm at 60 Hz, NEMA electrical, 1.2 x P_{50}

IEC Motor size	Motor LA/LG LAI/LGI	Order No.		Order code			Rated power		Rated speed	Rated torque	Rated current	Power factor	Efficiency	Efficiency class
		9th position	10th position	Specification	No. of poles	Efficiency	P_{rated}	P_{rated}	n_{rated}	T_{rated}	I_{rated} 460 V	cos φ	η at 4/4 load	acc. to standard IEC 60034-30
				NEMA	4-pole		kW	hp	rpm	Nm	A	–	%	
63	LAI63S4 [3]	**B**	**C**	**N65**	**–**	**–**	0.15	0.20	1 645	0.87	0.46	0.75	55.0	**–**
	LAI63M4 [3]	**B**	**E**	**N65**	**–**	**–**	0.22	0.30	1 620	1.3	0.59	0.78	60.0	**–**
71	LA71B4	**C**	**B**	**N65**	**–**	**–**	0.15	0.2	1 680	0.85	0.41	0.69	67.1	**–**
	LA71C4	**C**	**C**	**N65**	**–**	**–**	0.22	0.3	1 660	1.27	0.60	0.70	65.4	**–**
	LA71S4	**C**	**D**	**N65**	**–**	**–**	0.30	0.4	1 650	1.74	0.77	0.77	63.2	**–**
	LA71M4	**C**	**E**	**N65**	**–**	**–**	0.45	0.6	1 665	2.58	1.06	0.78	67.6	**–**
	LA71ZMP4 [1]	**C**	**G**	**N65**	**–**	**–**	0.66	0.9	1 665	3.79	1.54	0.74	72.8	**–**
	LA71ZMD4 [1]	**C**	**H**	**N65**	**–**	**–**	0.90	1.2	1 615	5.32	2.12	0.74	71.8	**–**
80	LAI80S4 [2]	**D**	**B**	**N65**	**–**	**–**	0.66	0.9	1 690	3.73	1.45	0.82	69.8	**–**
	LA80M4	**D**	**C**	**N65**	**–**	**–**	0.90	1.2	1 690	5.09	1.90	0.80	74.6	**–**
90	LA90S4	**E**	**L**	**N65**	**–**	**–**	1.30	1.7	1 710	7.26	2.51	0.82	79.2	**–**
	LA90L4	**E**	**P**	**N65**	**–**	**–**	1.80	2.4	1 715	10.00	3.39	0.82	81.0	**–**
	LA90ZLB4 [2]	**E**	**Q**	**N65**	**–**	**–**	2.60	3.5	1 680	14.80	4.95	0.83	79.2	**–**
100	LA100L4	**F**	**L**	**N65**	**–**	**–**	2.60	3.5	1 715	14.50	4.64	0.84	83.5	**–**
	LA100LB4	**F**	**M**	**N65**	**–**	**–**	3.60	4.8	1 715	20.00	6.37	0.84	84.5	**–**
112	LA112MB4	**G**	**H**	**N65**	**–**	**–**	4.80	6.5	1 735	26.40	8.30	0.84	86.1	**–**
132	LA132SB4	**H**	**F**	**N65**	**–**	**–**	6.60	9.0	1 750	36.00	11.5	0.84	85.5	**–**
	LA132M4	**H**	**H**	**N65**	**–**	**–**	9.0	12.0	1 750	49.10	15.3	0.85	87.0	**–**
	LA132ZMP4	**H**	**T**	**N65**	**–**	**–**	11.0	15.0	1 740	60.40	17.8	0.88	88.0	**–**
160	LA160MB4	**J**	**P**	**N65**	**–**	**–**	13.0	17.5	1 755	70.70	21.6	0.86	88.0	**–**
	LA160L4	**J**	**R**	**N65**	**–**	**–**	18.0	24.0	1 755	97.90	29.0	0.87	89.5	**–**
180 ... 280	Motor sizes 180 to 280 in High Efficiency (IE2) see page 8/108													
315	LGI315S4 [2]	**Q**	**Q**	**N65**	**–**	**–**	132.0	177.0	1 787	705.00	204.0	0.86	94.5	**IE1**
	LGI315M4 [2]	**Q**	**S**	**N65**	**–**	**–**	158.0	212.0	1 786	845.00	242.0	0.86	95.0	**IE2**
	LGI315L4 [2]	**Q**	**U**	**N65**	**–**	**–**	192.0	257.0	1 784	1 028.00	291.0	0.87	95.4	**IE2**
	LGI315LB4 [2]	**Q**	**V**	**N65**	**–**	**–**	240.0	322.0	1 784	1 285.00	353.0	0.89	95.8	**IE2**

[1] Only as integrated motor
[2] Only as IEC MODULOG motor
[3] Only for worm geared motors S

© Siemens AG 2011

Selection and ordering data (continued)

4-pole, 1 800 rpm at 60 Hz, NEMA electrical, 1.2 x P_{50}

IEC Motor size	Motor LA/LG LAI/LGI	Order No.		Order code			Starting current	Relative starting torque	Relative breakdown torque	Relative average acceleration torque	Measuring surface sound pressure level	Sound pressure level	No-load operating	Moment of inertia	Weight
		9th position	10th position	Specification	No. of poles	Efficiency	I_{St}/I_{rated}	T_{St}/T_{rated}	T_{Bk}/T_{rated}	T_{Ru}/T_{rated}	L_{pfA}	L_{WA}	Z_0	J_{mot}	m_{mot}
				NEMA	4-pole		–	–	–	–	dB(A)	dB(A)	/h	kgm^2	kg
63	LAI63S4 3)	B	C	N65	–	–	2.8	1.9	2.0		46	57		0.00029	4.0
	LAI63M4 3)	B	E	N65	–	–	2.9	1.7	1.7	1.8	46	57		0.00037	4.7
71	LA71B4	C	B	N65	–	–	3.9	2.1	2.3	2.0	48	59	20 000	0.00052	5.5
	LA71C4	C	C	N65	–	–	3.5	2.0	2.0	1.9	48	59	20 000	0.00052	5.5
	LA71S4	C	D	N65	–	–	3.5	2.1	2.0	2.0	48	59	15 000	0.00052	5.5
	LA71M4	C	E	N65	–	–	3.8	2.0	2.2	2.0	48	59	15 000	0.00077	6.9
	LA71ZMP4 1)	C	G	N65	–	–	4.2	2.4	2.4	2.2	50	61	7 000	0.00110	8.1
	LA71ZMD4 1)	C	H	N65	–	–	3.9	2.4	2.3	2.2	50	61	7 000	0.00120	8.6
80	LAI80S4 2)	D	B	N65	–	–	4.5	2.4	2.4	2.1	51	62	10 000	0.00140	10.4
	LA80M4	D	C	N65	–	–	4.9	2.5	2.5	2.3	51	62	10 000	0.00170	11.5
90	LA90S4	E	L	N65	–	–	5.2	2.3	2.5	2.4	52	64	8 000	0.00240	15.0
	LA90L4	E	P	N65	–	–	6.0	2.4	2.7	2.5	52	64	8 000	0.00330	17.9
	LA90ZLB4 2)	E	Q	N65	–	–	5.8	2.8	2.8	2.3	54	66	5 000	0.00400	20.7
100	LA100L4	F	L	N65	–	–	6.1	2.4	2.8	2.6	57	69	7 000	0.00470	24.1
	LA100LB4	F	M	N65	–	–	6.0	2.6	2.9	2.5	57	69	7 000	0.00550	27.6
112	LA112MB4	G	H	N65	–	–	6.2	2.4	2.9	2.3	57	69	5 000	0.01200	35.7
132	LA132SB4	H	F	N65	–	–	6.7	2.3	3.0	2.4	66	78	3 000	0.01800	47.2
	LA132M4	H	H	N65	–	–	7.1	2.5	3.1	2.5	66	78	3 000	0.02300	56.4
	LA132ZMP4	H	T	N65	–	–	8.3	2.5	3.1	2.5	68	80	1 600	0.02900	69.0
160	LA160MB4	J	P	N65	–	–	6.4	2.0	2.6	2.2	70	82	2 000	0.04300	84.0
	LA160L4	J	R	N65	–	–	6.6	2.4	2.8	2.4	70	82	2 000	0.05500	98.0
180 ... 280	Motor sizes 180 to 280 in High Efficiency (IE2) see page 8/108														
315	LGI315S4 2)	Q	Q	N65	–	–	6.3	2.2	2.5	1.8	74	87	160	1.90000	730.0
	LGI315M4 2)	Q	S	N65	–	–	6.7	2.4	2.6	1.9	74	87	150	2.30000	810.0
	LGI315L4 2)	Q	U	N65	–	–	6.7	2.5	2.5	1.9	74	87	130	2.90000	955.0
	LGI315LB4 2)	Q	V	N65	–	–	6.3	2.4	2.5	1.8	75	90	110	3.50000	955.0

1) Only as integrated motor
2) Only as IEC MODULOG motor
3) Only for worm geared motors S

© Siemens AG 2011

Motors for USA, Canada - Line-fed operation "Standard Efficiency"

Selection and ordering data

6-pole, 1 200 rpm at 60 Hz, NEMA electrical, 1.2 x P_{50}

IEC Motor size	Motor LA/LG LAI/LGI	Order No.		Order code			Rated power		Rated speed	Rated torque	Rated current	Power factor	Efficiency	Efficiency class
		9th position	10th position	Specification	No. of poles	Efficiency	P_{rated}	P_{rated}	n_{rated}	T_{rated}	I_{rated} 460 V	cos φ	η at 4/4 load	acc. to standard IEC 60034-30
				NEMA	6-pole		kW	hp	rpm	Nm	A	–	%	
63	LAI63M6 3)	**B**	**E**	**N65**	**P01**	**–**	0.11	0.15	1 035	1.01	0.45	0.68	45.0	**–**
71	LA71B6	**C**	**B**	**N65**	**P01**	**–**	0.11	0.15	1 095	0.96	0.34	0.66	61.5	**–**
	LA71C6	**C**	**C**	**N65**	**P01**	**–**	0.15	0.2	1 045	1.37	0.45	0.71	58.5	**–**
	LA71S6	**C**	**D**	**N65**	**P01**	**–**	0.22	0.3	1 040	2.02	0.70	0.68	57.6	**–**
	LA71M6	**C**	**E**	**N65**	**P01**	**–**	0.30	0.4	1 060	2.70	0.78	0.75	63.8	**–**
80	LA80S6	**D**	**B**	**N65**	**P01**	**–**	0.45	0.6	1 115	3.85	1.18	0.72	66.6	**–**
	LA80M6	**D**	**C**	**N65**	**P01**	**–**	0.66	0.9	1 105	5.70	1.57	0.74	70.8	**–**
90	LA90S6	**E**	**C**	**N65**	**P01**	**–**	0.90	1.2	1 110	7.74	2.01	0.77	72.6	**–**
	LA90L6	**E**	**P**	**N65**	**P01**	**–**	1.30	1.7	1 115	11.10	2.80	0.77	75.1	**–**
100	LA100L6	**F**	**L**	**N65**	**P01**	**–**	1.80	2.4	1 120	15.30	3.81	0.77	76.9	**–**
112	LA112M6	**G**	**G**	**N65**	**P01**	**–**	2.60	3.5	1 135	21.90	5.28	0.79	78.3	**–**
132	LA132S6	**H**	**E**	**N65**	**P01**	**–**	3.60	4.8	1 145	30.00	6.95	0.79	81.9	**–**
	LA132MA6	**H**	**G**	**N65**	**P01**	**–**	4.80	6.5	1 145	40.00	9.1	0.79	83.4	**–**
	LA132MB6	**H**	**J**	**N65**	**P01**	**–**	6.60	9.0	1 145	55.00	12.4	0.79	84.9	**–**
160	LA160MB6	**J**	**F**	**N65**	**P01**	**–**	9.0	12.0	1 155	74.40	17.1	0.77	85.9	**–**
	LA160LB6	**J**	**S**	**N65**	**P01**	**–**	13.0	17.5	1 155	107.5	23.9	0.77	89.0	**–**
180	LG180LA6	**K**	**M**	**N65**	**P01**	**–**	18.0	24.0	1 160	148.2	30.0	0.83	90.2	**IE1**
200	LG200LA6	**L**	**K**	**N65**	**P01**	**–**	22.0	30.0	1 170	179.6	37.5	0.82	91.0	**IE1**
	LG200L6	**L**	**L**	**N65**	**P01**	**–**	26.0	35.0	1 170	212.2	43.5	0.82	91.7	**IE1**
225	LG225M6	**M**	**J**	**N65**	**P01**	**–**	36.0	48.5	1 175	293.0	59.0	0.84	91.7	**IE1**
250	LG250M6	**N**	**C**	**N65**	**P01**	**–**	45.0	60.0	1 177	365.0	73.0	0.84	91.7	**IE1**
280	LGI280S6 2)	**P**	**G**	**N65**	**P01**	**–**	54.0	72.5	1 183	436.0	86.0	0.86	92.1	**IE1**
	LGI280M6 2)	**P**	**L**	**N65**	**P01**	**–**	66.0	90.0	1 183	533.0	104.0	0.86	93.0	**IE1**
315	LGI315S6 2)	**Q**	**G**	**N65**	**P01**	**–**	90.0	120.0	1 186	725.0	143.0	0.85	93.0	**IE1**
	LGI315M6 2)	**Q**	**R**	**N65**	**P01**	**–**	108.0	145.0	1 186	870.0	170.0	0.85	94.1	**IE1**
	LGI315L6 2)	**Q**	**U**	**N65**	**P01**	**–**	132.0	177.0	1 186	1 063.0	202.0	0.87	94.1	**IE1**
	LGI315LB6 2)	**Q**	**V**	**N65**	**P01**	**–**	158.0	212.0	1 186	1 272.0	242.0	0.87	94.1	**IE1**
	LGI315ZLP6 2)	**Q**	**X**	**N65**	**P01**	**–**	192.0	257.0	1 186	1 546.0	293.0	0.87	94.5	**IE1**

2) Only as IEC MODULOG
3) Only for worm geared motors S

© Siemens AG 2011

Selection and ordering data (continued)

6-pole, 1 200 rpm at 60 Hz, NEMA electrical, 1.2 x P_{50}

IEC Motor size	Motor LA/LG LAI/LGI	Order No.		Order code			Starting current	Relative starting torque	Relative breakdown torque	Relative average acceleration torque	Measuring surface sound pressure level	Sound pressure level	No-load operating	Moment of inertia	Weight
		9th position	10th position	Specification	No. of poles	Efficiency	I_{St}/I_{rated}	T_{St}/T_{rated}	T_{Bk}/T_{rated}	T_{Ru}/T_{rated}	L_{pfA}	L_{WA}	Z_0	J_{mot}	m_{mot}
				NEMA	6-pole		–	–	–	–	dB(A)	dB(A)	/h	kgm^2	kg
63	LAI63M6 3)	**B**	**E**	**N65**	**P01**	**–**	2.0	1.8	1.9		43	54		0.00037	4.7
71	LA71B6	**C**	**B**	**N65**	**P01**	**–**	3.0	2.3	2.3	2.1	43	54	10 500	0.00052	5.8
	LA71C6	**C**	**C**	**N65**	**P01**	**–**	2.7	2.0	2.0	1.9	43	54	10 500	0.00052	5.8
	LA71S6	**C**	**D**	**N65**	**P01**	**–**	2.7	2.2	2.0	2.0	43	54	10 500	0.00052	5.8
	LA71M6	**C**	**E**	**N65**	**P01**	**–**	3.2	2.4	2.1	2.2	43	54	10 500	0.00077	7.2
80	LA80S6	**D**	**B**	**N65**	**P01**	**–**	3.6	2.0	2.2	1.9	44	55	8 400	0.00140	10.4
	LA80M6	**D**	**C**	**N65**	**P01**	**–**	4.0	2.2	2.3	2.0	44	55	8 400	0.00170	11.5
90	LA90S6	**E**	**C**	**N65**	**P01**	**–**	4.3	2.3	2.3	2.1	47	59	7 000	0.00240	14.4
	LA90L6	**E**	**P**	**N65**	**P01**	**–**	4.4	2.4	2.4	2.3	47	59	7 000	0.00330	18.0
100	LA100L6	**F**	**L**	**N65**	**P01**	**–**	4.5	2.3	2.3	2.0	51	63	6 300	0.00470	24.0
112	LA112M6	**G**	**G**	**N65**	**P01**	**–**	5.1	2.2	2.6	2.2	56	68	5 600	0.00550	30.0
132	LA132S6	**H**	**E**	**N65**	**P01**	**–**	4.6	1.8	2.1	1.8	67	79	4 200	0.01200	44.0
	LA132MA6	**H**	**G**	**N65**	**P01**	**–**	4.9	2.0	2.3	1.9	67	79	4 200	0.01800	51.0
	LA132MB6	**H**	**J**	**N65**	**P01**	**–**	5.3	2.1	2.5	1.9	67	79	3 500	0.02300	60.0
160	LA160MB6	**J**	**F**	**N65**	**P01**	**–**	4.8	1.9	2.4	1.8	70	82	2 800	0.04400	85.0
	LA160LB6	**J**	**S**	**N65**	**P01**	**–**	5.0	2.1	2.5	1.9	70	82	2 800	0.06300	109.0
180	LG180LA6	**K**	**M**	**N65**	**P01**	**–**	5.4	2.1	2.3	1.9	60	73	1 020	0.18000	145.0
200	LG200LA6	**L**	**K**	**N65**	**P01**	**–**	5.8	2.3	2.3	2.1	60	74	920	0.24000	185.0
	LG200L6	**L**	**L**	**N65**	**P01**	**–**	5.9	2.4	2.3	2.3	61	74	920	0.29000	210.0
225	LG225M6	**M**	**J**	**N65**	**P01**	**–**	5.6	2.4	2.3	1.9	64	77	800	0.49000	280.0
250	LG250M6	**N**	**C**	**N65**	**P01**	**–**	5.9	2.3	2.0	1.9	63	77	520	0.76000	370.0
280	LGI280S6 2)	**P**	**G**	**N65**	**P01**	**–**	6.1	2.1	2.2	1.9	65	78	420	1.10000	546.0
	LGI280M6 2)	**P**	**L**	**N65**	**P01**	**–**	6.2	2.2	2.3	2.2	65	78	390	1.40000	510.0
315	LGI315S6 2)	**Q**	**G**	**N65**	**P01**	**–**	6.4	2.2	2.6	1.8	69	82	310	2.10000	685.0
	LGI315M6 2)	**Q**	**R**	**N65**	**P01**	**–**	6.7	2.3	2.6	1.9	69	82	290	2.50000	750.0
	LGI315L6 2)	**Q**	**U**	**N65**	**P01**	**–**	6.7	2.2	2.6	2.0	66	81	280	3.20000	890.0
	LGI315LB6 2)	**Q**	**V**	**N65**	**P01**	**–**	7.2	2.8	2.7	2.4	66	80	260	4.00000	890.0
	LGI315ZLP6 2)	**Q**	**X**	**N65**	**P01**	**–**	7.4	2.7	2.7	2.1	69	82	240	4.70000	1 180.0

2) Only as IEC MODULOG
3) Only for worm geared motors S

© Siemens AG 2011

Selection and ordering data (continued)

8-pole, 900 rpm at 60 Hz, NEMA electrical, 1.2 x P_{50}

IEC Motor size	Motor LA/LG LAI/LGI	Order No.		Order code			Rated power		Rated speed	Rated torque	Rated current	Power factor	Efficiency	Efficiency class
		9th position	10th position	Specification	No. of poles	Efficiency	P_{rated}	P_{rated}	n_{rated}	T_{rated}	I_{rated} 460 V	cos φ	η at 4/4 load	acc. to standard IEC 60034-30
				NEMA	8-pole		kW	hp	rpm	Nm	A	–	%	
71	LA71M8	**C**	**E**	**N65**	**P02**	**–**	0.11	0.15	770	1.36	0.36	0.67	57.3	**–**
	LA71MB8	**C**	**F**	**N65**	**P02**	**–**	0.15	0.2	785	1.82	0.51	0.65	61.1	**–**
80	LA80S8	**D**	**B**	**N65**	**P02**	**–**	0.22	0.3	815	2.58	0.75	0.67	43.8	**–**
	LA80M8	**D**	**C**	**N65**	**P02**	**–**	0.30	0.4	830	3.45	1.00	0.63	59.3	**–**
90	LA90SA8	**E**	**B**	**N65**	**P02**	**–**	0.45	0.6	820	5.24	1.13	0.75	66.7	**–**
	LA90LA8	**E**	**E**	**N65**	**P02**	**–**	0.66	0.9	820	7.69	1.58	0.76	69.4	**–**
100	LA100LA8	**F**	**B**	**N65**	**P02**	**–**	0.90	1.2	825	10.40	2.13	0.77	69.1	**–**
	LA100L8	**F**	**L**	**N65**	**P02**	**–**	1.30	1.75	825	15.00	2.86	0.76	75.0	**–**
112	LA112M8	**G**	**G**	**N65**	**P02**	**–**	1.80	2.4	850	20.20	3.84	0.77	76.6	**–**
132	LA132S8	**H**	**E**	**N65**	**P02**	**–**	2.60	3.5	845	29.40	5.59	0.75	77.9	**–**
	LA132MA8	**H**	**G**	**N65**	**P02**	**–**	3.60	4.8	845	40.70	7.45	0.76	79.6	**–**
160	LA160M8	**J**	**E**	**N65**	**P02**	**–**	4.80	6.5	860	53.30	9.77	0.75	82.1	**–**
	LA160MB8	**J**	**F**	**N65**	**P02**	**–**	6.60	9.0	855	73.70	12.85	0.75	85.3	**–**
	LA160LB8	**J**	**J**	**N65**	**P02**	**–**	9.0	12.0	860	99.90	17.27	0.75	87.1	**–**
180	LG180LA8	**K**	**M**	**N65**	**P02**	**–**	13.0	17.5	875	141.90	25.21	0.73	89.3	**–**
200	LG200L8	**L**	**L**	**N65**	**P02**	**–**	18.0	24.0	870	197.60	32.90	0.77	88.7	**–**
225	LG225S8	**M**	**E**	**N65**	**P02**	**–**	22.0	30.0	878	239.30	39.20	0.78	90.3	**–**
	LG225M8	**M**	**J**	**N65**	**P02**	**–**	26.0	35.0	879	282.00	44.91	0.80	90.8	**–**
250	LG250M8	**N**	**C**	**N65**	**P02**	**–**	36.0	48.5	877	392.00	59.40	0.82	92.0	**–**
280	LGI280S8 [2]	**P**	**B**	**N65**	**P02**	**–**	45.0	60.0	883	487.00	74.60	0.82	92.8	**–**
	LGI280M8 [2]	**P**	**L**	**N65**	**P02**	**–**	54.0	72.5	883	584.00	89.70	0.81	92.8	**–**
315	LGI315S8 [2]	**Q**	**G**	**N65**	**P02**	**–**	66.0	90.0	889	709.00	107.80	0.82	93.5	**–**
	LGI315M8 [2]	**Q**	**J**	**N65**	**P02**	**–**	90.0	120.0	887	969.00	143.10	0.84	93.8	**–**
	LGI315L8 [2]	**Q**	**U**	**N65**	**P02**	**–**	108.0	145.0	886	1 164.00	171.90	0.84	93.9	**–**
	LGI315LB8 [2]	**Q**	**V**	**N65**	**P02**	**–**	132.0	177.0	886	1 423.00	209.80	0.84	94.4	**–**
	LGI315LP8 [2]	**Q**	**W**	**N65**	**P02**	**–**	158.0	212.0	886	1 703.00	250.20	0.84	94.6	**–**

[2] Only as IEC MODULOG

© Siemens AG 2011

Selection and ordering data (continued)

8-pole, 900 rpm at 60 Hz, NEMA electrical, 1.2 x P_{50}

IEC Motor size	Motor LA/LG LAI/LGI	Order No.		Order code			Starting current	Relative starting torque	Relative breakdown torque	Relative average acceleration torque	Measuring surface sound pressure level	Sound pressure level	No-load operating	Moment of inertia	Weight
		9th position	10th position	Specification	No. of poles	Efficiency	I_{St}/I_{rated}	T_{St}/T_{rated}	T_{Bk}/T_{rated}	T_{Ru}/T_{rated}	L_{pfA}	L_{WA}	Z_0	J_{mot}	m_{mot}
				NEMA	8-pole		–	–	–	–	dB(A)	dB(A)	/h	kgm^2	kg
71	LA71M8	**C**	**E**	**N65**	**P02**	**–**	2.5	2.0	1.8	1.8	40	51	17 500	0.0008	7.2
	LA71MB8	**C**	**F**	**N65**	**P02**	**–**	2.5	2.3	2.1	1.9	40	51	17 500	0.0008	7.2
80	LA80S8	**D**	**B**	**N65**	**P02**	**–**	2.6	1.8	2.0	1.8	45	56	14 000	0.0014	10.4
	LA80M8	**D**	**C**	**N65**	**P02**	**–**	3.0	2.1	2.3	1.9	45	56	14 000	0.0017	11.5
90	LA90SA8	**E**	**B**	**N65**	**P02**	**–**	3.3	1.6	1.9	1.7	45	57	14 000	0.0023	12.1
	LA90LA8	**E**	**E**	**N65**	**P02**	**–**	3.4	1.7	1.9	1.8	45	57	14 000	0.0031	15.2
100	LA100LA8	**F**	**B**	**N65**	**P02**	**–**	3.4	1.6	1.9	1.8	50	61	10 500	0.0051	21.9
	LA100L8	**F**	**L**	**N65**	**P02**	**–**	3.7	1.8	2.1	1.8	50	61	10 500	0.0063	25.3
112	LA112M8	**G**	**G**	**N65**	**P02**	**–**	4.0	1.7	2.1	1.9	53	65	7 000	0.0130	27.6
132	LA132S8	**H**	**E**	**N65**	**P02**	**–**	4.3	1.8	2.3	1.9	57	69	4 900	0.0140	43.7
	LA132MA8	**H**	**G**	**N65**	**P02**	**–**	4.5	2.0	2.4	2.0	57	69	4 900	0.0190	51.0
160	LA160M8	**J**	**E**	**N65**	**P02**	**–**	4.8	2.0	2.5	2.0	67	79	4 200	0.0360	74.0
	LA160MB8	**J**	**F**	**N65**	**P02**	**–**	4.9	2.1	2.6	2.0	67	79	4 200	0.0460	85.0
	LA160LB8	**J**	**J**	**N65**	**P02**	**–**	5.6	2.4	2.9	2.4	67	79	4 200	0.0640	108.0
180	LG180LA8	**K**	**M**	**N65**	**P02**	**–**	4.4	1.6	2.0	1.7	69	82	1 600	0.1700	173.0
200	LG200L8	**L**	**L**	**N65**	**P02**	**–**	5.0	2.1	2.4	1.9	71	84	1 280	0.2900	236.0
225	LG225S8	**M**	**E**	**N65**	**P02**	**–**	5.5	2.2	2.5	1.8	61	74	960	0.4800	270.0
	LG225M8	**M**	**J**	**N65**	**P02**	**–**	5.8	2.2	2.7	2.1	54	68	880	0.5500	290.0
250	LG250M8	**N**	**C**	**N65**	**P02**	**–**	5.5	2.0	2.4	1.9	59	72	800	0.8400	385.0
280	LGI280S8 [2]	**P**	**B**	**N65**	**P02**	**–**	4.9	1.9	1.9	1.7	59	73	640	1.1000	475.0
	LGI280M8 [2]	**P**	**L**	**N65**	**P02**	**–**	5.1	1.9	1.9	1.7	62	75	640	1.4000	515.0
315	LGI315S8 [2]	**Q**	**G**	**N65**	**P02**	**–**	5.7	1.9	2.4	1.8	63	77	480	2.1000	680.0
	LGI315M8 [2]	**Q**	**J**	**N65**	**P02**	**–**	5.6	1.9	2.3	1.8	63	75	420	2.5000	745.0
	LGI315L8 [2]	**Q**	**U**	**N65**	**P02**	**–**	5.7	2.0	2.5	1.8	63	77	390	3.1000	865.0
	LGI315LB8 [2]	**Q**	**V**	**N65**	**P02**	**–**	6.0	2.1	2.5	2.0	63	77	350	3.9000	1 173.0
	LGI315LP8 [2]	**Q**	**W**	**N65**	**P02**	**–**	6.4	2.3	2.6	2.3	64	78	320	4.5000	1 100.0

[2] Only as IEC MODULOG

© Siemens AG 2011

Selection and ordering data (continued)

4/2-pole, 1 500 / 3 000 rpm at 60 Hz, NEMA electrical

IEC Motor size	Motor LA/LG LAI/LGI	Order No.		Order code			Rated power		Rated speed	Rated torque	Rated current	Power factor	Efficiency	Efficiency class
		9th position	10th position	Specification	No. of poles	Efficiency	P_{rated}	P_{rated}	n_{rated}	T_{rated}	I_{rated} 460 V	cos φ	η at 4/4 load	acc. to standard IEC 60034-30
				NEMA	4/2-pole		kW	hp	rpm	Nm	A	–	%	
71	LA71S4/2	**C**	**D**	**N65**	**P04**	**–**	0.25	0.33	1 645	1.45	0.82	0.75	51.0	**–**
							0.34	0.46	3 285	0.99	1.11	0.81	47.5	
	LA71M4/2	**C**	**E**	**N65**	**P04**	**–**	0.36	0.48	1 680	2.05	0.94	0.74	65.0	**–**
							0.52	0.70	3 380	1.47	1.28	0.80	63.5	
80	LA80S4/2	**D**	**B**	**N65**	**P04**	**–**	0.58	0.78	1 660	3.34	1.35	0.80	68.0	**–**
							0.72	0.97	3 375	2.04	1.70	0.82	64.5	
	LA80M4/2	**D**	**L**	**N65**	**P04**	**–**	0.84	1.13	1 660	4.83	1.80	0.82	71.0	**–**
							1.00	1.34	3 375	2.83	2.20	0.81	70.5	
90	LA90S4/2	**E**	**L**	**N65**	**P04**	**–**	1.30	1.75	1 680	7.39	2.70	0.86	70.0	**–**
							1.70	2.30	3 385	4.8	3.65	0.87	67.0	
	LA90L4/2	**E**	**P**	**N65**	**P04**	**–**	1.80	2.40	1 680	10.2	3.40	0.87	76.5	**–**
							2.30	3.10	3 430	6.4	4.50	0.87	73.5	
100	LA100L4/2	**F**	**L**	**N65**	**P04**	**–**	2.40	3.40	1 690	13.6	4.25	0.86	82.6	**–**
							2.90	3.90	3 440	8.05	5.40	0.88	77.1	
	LA100LB4/2	**F**	**M**	**N65**	**P04**	**–**	3.10	4.20	1 680	17.6	5.50	0.88	81.0	**–**
							3.70	5.00	3 420	10.3	7.30	0.85	74.7	
112	LA112MB4/2	**G**	**H**	**N65**	**P04**	**–**	4.40	5.90	1 705	24.6	8.10	0.86	79.3	**–**
							5.30	7.10	3 465	14.6	10.20	0.83	78.6	
132	LA132SB4/2	**H**	**F**	**N65**	**P04**	**–**	5.60	7.50	1 740	30.7	9.90	0.85	83.6	**–**
							7.10	9.50	3 500	19.4	12.20	0.88	83.0	
	LA132M4/2	**H**	**R**	**N65**	**P04**	**–**	7.80	10.50	1 740	42.8	13.90	0.85	83.4	**–**
							9.60	12.90	3 515	26.1	16.40	0.87	84.5	
160	LA160MB4/2	**J**	**P**	**N65**	**P04**	**–**	11.20	15.00	1 745	61.3	18.70	0.86	87.4	**–**
							13.80	18.50	3 515	37.5	24.60	0.88	80.4	
	LA160LB4/2	**J**	**S**	**N65**	**P04**	**–**	15.60	20.90	1 745	85.4	26.50	0.84	88.0	**–**
							20.40	27.40	3 515	55.4	33.00	0.88	87.9	
180	LG180ZMB4/2	**K**	**L**	**N65**	**P04**	**–**	18.00	24.00	1 700	101.1	29.25	0.86	89.8	**–**
							22.00	30.00	3 500	60.0	34.25	0.90	88.0	
	LG180ZLB4/2	**K**	**P**	**N65**	**P04**	**–**	21.60	30.00	1 765	116.9	35.00	0.85	91.1	**–**
							25.80	30.00	3 540	69.6	41.00	0.90	87.7	
200	LG200LB4/2	**L**	**M**	**N65**	**P04**	**–**	31.00	41.60	1 760	168.2	49.00	0.87	91.0	**–**
							37.00	50.00	3 540	99.8	56.50	0.92	89.5	

© Siemens AG 2011

Selection and ordering data (continued)

4/2-pole, 1 500 / 3 000 rpm at 60 Hz, NEMA electrical

IEC Motor size	Motor LA/LG LAI/LGI	Order No.		Order code			Starting current	Relative starting torque	Relative breakdown torque	Relative average acceleration torque	Measuring surface sound pressure level	Sound pressure level	No-load operating	Moment of inertia	Weight
		9th position	10th position	Specification	No. of poles	Efficiency	I_{St}/I_{rated}	T_{St}/T_{rated}	T_{Bk}/T_{rated}	T_{Ru}/T_{rated}	L_{pfA}	L_{WA}	Z_0	J_{mot}	m_{mot}
				NEMA	4/2-pole		–	–	–	–	dB(A)	dB(A)	/h	kgm^2	kg
71	LA71S4/2	**C**	**D**	**N65**	**P04**	**–**	2.9	1.4	1.6	1.4				0.00052	5.5
							3.0	1.4	1.6	1.2					
	LA71M4/2	**C**	**E**	**N65**	**P04**	**–**	3.6	1.6	1.8	1.6				0.00076	8.0
							3.7	1.6	1.8	1.4					
80	LA80S4/2	**D**	**B**	**N65**	**P04**	**–**	3.7	1.5	1.8	1.5				0.00140	10.3
							3.8	1.5	1.8	1.3					
	LA80M4/2	**D**	**L**	**N65**	**P04**	**–**	4.2	1.6	1.9	1.6				0.00170	11.5
							4.2	1.6	1.9	1.4					
90	LA90S4/2	**E**	**L**	**N65**	**P04**	**–**	4.1	1.5	1.8	1.3				0.00240	14.9
							4.2	1.6	1.8	1.4					
	LA90L4/2	**E**	**P**	**N65**	**P04**	**–**	4.7	1.7	1.8	1.5				0.00330	17.9
							5.1	1.7	1.9	1.5					
100	LA100L4/2	**F**	**L**	**N65**	**P04**	**–**	4.8	1.6	1.8	1.6				0.00480	24.0
							5.3	1.6	1.9	1.6					
	LA100LB4/2	**F**	**M**	**N65**	**P04**	**–**	5.4	2.1	2.2	1.8				0.00550	27.0
							5.4	2.2	2.2	1.9					
112	LA112MB4/2	**G**	**H**	**N65**	**P04**	**–**	5.4	1.9	2.1	1.9				0.01100	35.0
							5.6	2.1	2.2	2.1					
132	LA132SB4/2	**H**	**F**	**N65**	**P04**	**–**	6.1	1.5	2.0	1.5				0.01800	47.0
							6.3	1.4	2.0	1.4					
	LA132M4/2	**H**	**R**	**N65**	**P04**	**–**	6.7	1.8	2.3	1.8				0.02300	57.0
							7.2	1.9	2.4	2.1					
160	LA160MB4/2	**J**	**P**	**N65**	**P04**	**–**	6.5	1.8	2.3	1.6				0.04300	85.0
							7.1	1.6	2.2	1.2					
	LA160LB4/2	**J**	**S**	**N65**	**P04**	**–**	7.3	2.2	2.7	1.9				0.06000	105.0
							8.2	2.5	2.7	2.2					
180	LG180ZMB4/2	**K**	**L**	**N65**	**P04**	**–**	6.6	2.0	2.6	1.9					178.0
							7.4	2.2	3.1	2.2					
	LG180ZLB4/2	**K**	**P**	**N65**	**P04**	**–**	6.6	2.0	2.6	1.9					213.0
							7.4	2.2	3.1	2.2					
200	LG200LB4/2	**L**	**M**	**N65**	**P04**	**–**	6.1	1.9	2.5	1.9					
							7.1	2.0	2.9	2.1					

© Siemens AG 2011

Motors for USA, Canada - Line-fed operation "High Efficiency"

Selection and ordering data

4-pole, 1 800 rpm at 60 Hz, NEMA electrical

IEC Motor size	Motor LA/LG LAI/LGI	Order No.		Order code			Rated power		Rated speed	Rated torque	Rated current	Power factor	Efficiency		Effi-ciency class
		9th position	10th position	Specification	No. of poles	Efficiency	P_{rated}	P_{rated}	n_{rated}	T_{rated}	I_{rated} 460 V	cos φ	η at 3/4 load	η at 4/4 load	acc. to standard IEC 60034-30
				NEMA	4-pole		kW	hp	rpm	Nm	A	–	%	%	
80	LA80ZMB4E	**D**	**E**	**N65**	**–**	**M00**	0.75	1.0	1 720	4.16	1.55	0.72	82.5	82.5	**IE2**
90	LA90SB4E [1]	**E**	**M**	**N65**	**–**	**M00**	1.1	1.5	1 755	5.99	2.15	0.76	85.5	85.5	**IE2**
	LA90ZLB4E [1]	**E**	**Q**	**N65**	**–**	**M00**	1.5	2.0	1 775	8.16	2.95	0.76	86.5	86.5	**IE2**
100	LA100ZLP4E [1]	**F**	**M**	**N65**	**–**	**M00**	2.2	3.0	1 750	12.0	4.0	0.79	87.5	87.5	**IE2**
	LA100ZLD4E [1]	**F**	**P**	**N65**	**–**	**M00**	3.0	4.0	1 750	16.4	5.5	0.79	88.5	88.5	**IE2**
112	LA112ZMP4E [1]	**G**	**J**	**N65**	**–**	**M00**	4.0	5.5	1 755	21.8	7.3	0.79	88.5	90.0	**IE2**
132	LA132SP4E [1]	**H**	**G**	**N65**	**–**	**M00**	5.5	7.5	1 760	29.8	9.5	0.80	90.5	90.5	**IE2**
	LA132ZMP4E [1]	**H**	**K**	**N65**	**–**	**M00**	7.5	10.0	1 760	40.7	12.8	0.81	90.5	90.5	**IE2**
160	LA160MB4E [1]	**J**	**P**	**N65**	**–**	**M00**	9.2	12.3	1 755	50.1	15.9	0.81	89.5	89.5	**IE2**
	LA160MP4E [1]	**J**	**Q**	**N65**	**–**	**M00**	11.0	15	1 765	59.5	17.9	0.85	91.0	91.0	**IE2**
	LA160ZLP4E [1]	**J**	**T**	**N65**	**–**	**M00**	15.0	20	1 765	81.1	24.5	0.85	91.5	91.5	**IE2**
180	LG180ZMB4E [1]	**K**	**L**	**N65**	**–**	**M00**	18.5	25	1 770	99.8	30.5	0.83	92.4	92.4	**IE2**
	LG180ZLB4E [1]	**K**	**P**	**N65**	**–**	**M00**	22	30	1 770	119	36	0.83	92.4	92.4	**IE2**
200	LG200LB4E [1]	**L**	**M**	**N65**	**–**	**M00**	30	40	1 770	161	48	0.84	93.0	93.0	**IE2**
225	LG225S4E	**M**	**E**	**N65**	**–**	**M00**	37	50	1 785	199	60	0.84	93.6	93.0	**IE2**
	LG225ZM4E	**M**	**U**	**N65**	**–**	**M00**	45	60	1 785	242	71	0.85	94.1	93.6	**IE2**
250	LG250ZM4E	**N**	**N**	**N65**	**–**	**M00**	55	75	1 785	294	89	0.84	94.1	94.1	**IE2**
280	LGI280S4E [2]	**P**	**G**	**N65**	**–**	**M00**	75	100	1 785	401	114	0.87	94.5	94.5	**IE2**
	LGI280ZM4E [2]	**P**	**W**	**N65**	**–**	**M00**	90	120	1 785	481	144	0.86	94.5	94.5	**IE2**
315	LGI315S4E [2]	**Q**	**Q**	**N65**	**–**	**M00**	110	150	1 790	587	172	0.86	95.0	95.0	**IE2**
	LGI315ZM4E [2]	**Q**	**S**	**N65**	**–**	**M00**	132	177	1 790	704	200	0.86	95.0	95.0	**IE2**
	LGI315L4E [2]	**Q**	**U**	**N65**	**–**	**M00**	160	215	1 790	854	240	0.88	95.4	95.4	**IE2**
	LGI315ZLB4E [2]	**Q**	**V**	**N65**	**–**	**M00**	200	270	1 790	1 067	305	0.87	95.4	95.4	**IE2**

[1] Only as integrated motor
[2] Only as IEC MODULOG

© Siemens AG 2011

Selection and ordering data (continued)

4-pole, 1 800 rpm at 60 Hz, NEMA electrical

IEC Motor size	Motor LA/LG LAI/LGI	Order No.		Order code			Starting current	Relative starting torque	Relative breakdown torque	Relative average acceleration torque	Measuring surface sound pressure level	Sound pressure level	No-load operating	Moment of inertia	Weight
		9th position	10th position	Specification	No. of poles	Efficiency	I_{St}/I_{rated}	T_{St}/T_{rated}	T_{Bk}/T_{rated}	T_{Ru}/T_{rated}	L_{pfA}	L_{WA}	Z_0	J_{mot}	m_{mot}
				NEMA	4-pole		–	–	–	–	dB(A)	dB(A)	/h	kgm^2	kg
80	LA80ZMB4E	**D**	**E**	**N65**	**–**	**M00**	7.3	4.0	3.9	3.1	51	62	10 000	0.0024	14.1
90	LA90SB4E [1]	**E**	**M**	**N65**	**–**	**M00**	7.7	3.1	3.9	2.7	52	64	8 000	0.0033	17.3
	LA90ZLB4E [1]	**E**	**Q**	**N65**	**–**	**M00**	8.1	3.6	4.2	2.9	52	64	8 000	0.0040	20.7
100	LA100ZLP4E [1]	**F**	**M**	**N65**	**–**	**M00**	8.4	3.4	4.3	3.1	57	69	7 000	0.0062	28.8
	LA100ZLD4E [1]	**F**	**P**	**N65**	**–**	**M00**	8.7	3.8	4.6	3.4	57	69	7 000	0.0077	34.5
112	LA112ZMP4E [1]	**G**	**J**	**N65**	**–**	**M00**	8.6	3.2	3.9	2.9	57	69	5 000	0.014	42.5
132	LA132SP4E [1]	**H**	**G**	**N65**	**–**	**M00**	8.7	3.2	4.1	2.7	66	78	3 000	0.023	51.8
	LA132ZMP4E [1]	**H**	**K**	**N65**	**–**	**M00**	8.7	3.4	4.1	2.7	66	78	3 000	0.029	69.0
160	LA160MB4E [1]	**J**	**P**	**N65**	**–**	**M00**	7.1	3.2	3.3	2.5	70	82		0.055	93.2
	LA160MP4E [1]	**J**	**Q**	**N65**	**–**	**M00**	8.1	2.6	3.2	2.2	70	82	2 000	0.055	93.2
	LA160ZLP4E [1]	**J**	**T**	**N65**	**–**	**M00**	8.5	2.8	3.5	2.2	70	82	2 000	0.072	123
180	LG180ZMB4E [1]	**K**	**L**	**N65**	**–**	**M00**	8.4	2.8	3.6	2.7	64	77	800	0.12	178
	LG180ZLB4E [1]	**K**	**P**	**N65**	**–**	**M00**	8.8	3.1	3.9	2.8	64	77	800	0.14	207
200	LG200LB4E [1]	**L**	**M**	**N65**	**–**	**M00**	8.3	3.0	3.6	2.5	66	79	640	0.23	259
225	LG225S4E	**M**	**E**	**N65**	**–**	**M00**	7.5	3.1	3.4	2.9	64	77	370	0.40	334
	LG225ZM4E	**M**	**U**	**N65**	**–**	**M00**	7.9	3.3	3.5	2.9	64	77	390	0.49	380
250	LG250ZM4E	**N**	**N**	**N65**	**–**	**M00**	8.1	3.2	3.4	2.7	69	82	230	0.86	529
280	LGI280S4E [2]	**P**	**G**	**N65**	**–**	**M00**	7.9	2.8	3.2	2.5	71	84	210	1.4	661
	LGI280ZM4E [2]	**P**	**W**	**N65**	**–**	**M00**	8.1	2.9	3.5	2.6	72	86	150	1.7	776
315	LGI315S4E [2]	**Q**	**Q**	**N65**	**–**	**M00**	7.6	3.1	3.2	2.6	72	86	160	2.3	932
	LGI315ZM4E [2]	**Q**	**S**	**N65**	**–**	**M00**	7.8	3.1	3.4	2.7	73	87	150	2.9	1 110
	LGI315L4E [2]	**Q**	**U**	**N65**	**–**	**M00**	7.8	3.3	2.9	3.0	73	87	130	3.5	1 271
	LGI315ZLB4E [2]	**Q**	**V**	**N65**	**–**	**M00**	7.9	3.3	3.1	2.7	73	87	110	4.2	1 501

[1] Only as integrated motor
[2] Only as IEC MODULOG

© Siemens AG 2011

Motors for USA, Canada - Line-fed operation "High Efficiency"

IE2

Selection and ordering data

4-pole, 1 800 rpm at 60 Hz, NEMA electrical, 1.2 x P_{50}

IEC Motor size	Motor LA/LG LAI/LGI	Order No.		Order code			Rated power		Rated speed	Rated torque	Rated current	Power factor	Efficiency	Efficiency class
		9th position	10th position	Specification	No. of poles	Efficiency	P_{rated}	P_{rated}	n_{rated}	T_{rated}	I_{rated} 460 V	cos φ	η at 4/4 load	acc. to standard IEC 60034-30
				NEMA	4-pole		kW	hp	rpm	Nm	A	–	%	
90	LA90SB4E [1]	**E**	**M**	**N65**	**–**	**M00**	1.30	1.75	1 735	7.16	2.52	0.78	83.0	**IE1**
	LA90ZLB4E [1]	**E**	**Q**	**N65**	**–**	**M00**	1.80	2.40	1 735	9.91	3.31	0.80	85.0	**IE2**
100	LA100ZLP4E [1]	**F**	**M**	**N65**	**–**	**M00**	2.60	3.50	1 730	14.4	4.54	0.83	87.0	**IE1**
	LA100ZLD4E [1]	**F**	**P**	**N65**	**–**	**M00**	3.60	4.80	1 730	19.9	6.19	0.83	87.5	**IE2**
112	LA112ZMP4E [1]	**G**	**J**	**N65**	**–**	**M00**	4.80	6.50	1 730	26.5	8.33	0.82	88.5	**IE1**
132	LA132SP4E [1]	**H**	**G**	**N65**	**–**	**M00**	6.60	9.00	1 750	36.0	11.01	0.85	88.5	**IE1**
	LA132ZMP4E [1]	**H**	**K**	**N65**	**–**	**M00**	9.00	12.00	1 750	49.1	14.82	0.85	89.5	**IE2**
160	LA160MP4E [1]	**J**	**Q**	**N65**	**–**	**M00**	13.00	17.50	1 755	70.7	21.19	0.85	90.5	**IE1**
	LA160ZLP4E [1]	**J**	**T**	**N65**	**–**	**M00**	18.00	24.00	1 760	97.7	28.97	0.86	90.5	**IE1**
180	LG180ZMB4E [1]	**K**	**L**	**N65**	**–**	**M00**	22.00	30.00	1 765	119.0	35.4	0.84	92.4	**IE2**
	LG180ZLB4E [1]	**K**	**P**	**N65**	**–**	**M00**	26.00	35.00	1 765	140.7	41.6	0.84	93.0	**IE2**
200	LG200LB4E [1]	**L**	**M**	**N65**	**–**	**M00**	36.00	48.50	1 766	194.7	56.7	0.86	93.0	**IE2**
225	LG225S4E	**M**	**E**	**N65**	**–**	**M00**	45.00	60.00	1 778	241.7	70.1	0.86	93.6	**IE2**
	LG225ZM4E	**M**	**U**	**N65**	**–**	**M00**	54.00	72.50	1 778	290.0	83.9	0.86	94.1	**IE2**
250	LG250ZM4E	**N**	**N**	**N65**	**–**	**M00**	66.00	90.00	1 783	353.0	99.7	0.88	94.5	**IE2**
280	LGI280S4E [2]	**P**	**G**	**N65**	**–**	**M00**	90.00	120.00	1 783	482.0	136.0	0.88	94.5	**IE2**
	LGI280ZM4E [2]	**P**	**W**	**N65**	**–**	**M00**	108.00	145.00	1 784	578.0	164.0	0.87	95.0	**IE2**

[1] Only as integrated motor
[2] Only as IEC MODULOG

© Siemens AG 2011

Selection and ordering data (continued)

4-pole, 1 800 rpm at 60 Hz, NEMA electrical, 1.2 x P_{50}

IEC Motor size	Motor LA/LG LAI/LGI	Order No.		Order code			Starting current	Relative starting torque	Relative breakdown torque	Relative average acceleration torque	Measuring surface sound pressure level	Sound pressure level	No-load operating	Moment of inertia	Weight
		9th position	10th position	Specification	No. of poles	Efficiency	I_{St}/I_{rated}	T_{St}/T_{rated}	T_{Bk}/T_{rated}	T_{Ru}/T_{rated}	L_{pfA}	L_{WA}	Z_0	J_{mot}	m_{mot}
				NEMA	4-pole		–	–	–	–	dB(A)	dB(A)	/h	kgm^2	kg
90	LA90SB4E [1]	**E**	**M**	**N65**	**–**	**M00**	6.8	2.5	3.2	2.4	52	64		0.00330	17.3
	LA90ZLB4E [1]	**E**	**Q**	**N65**	**–**	**M00**	7.2	2.8	3.3	2.7	54	66		0.00400	20.7
100	LA100ZLP4E [1]	**F**	**M**	**N65**	**–**	**M00**	7.3	2.9	3.5	2.7	57	69		0.00620	28.8
	LA100ZLD4E [1]	**F**	**P**	**N65**	**–**	**M00**	7.3	3.2	3.7	2.9	57	69		0.00770	34.5
112	LA112ZMP4E [1]	**G**	**J**	**N65**	**–**	**M00**	7.0	2.5	3.0	2.2	57	69		0.01400	42.5
132	LA132SP4E [1]	**H**	**G**	**N65**	**–**	**M00**	7.0	2.6	3.4	2.3	66	78		0.02300	51.8
	LA132ZMP4E [1]	**H**	**K**	**N65**	**–**	**M00**	7.0	2.7	3.4	2.3	66	78		0.02900	69.0
160	LA160MP4E [1]	**J**	**Q**	**N65**	**–**	**M00**	6.9	2.5	3.0	2.2	70	82		0.05500	93.2
	LA160ZLP4E [1]	**J**	**T**	**N65**	**–**	**M00**	6.9	2.6	3.1	2.2	70	82		0.07200	123.0
180	LG180ZMB4E [1]	**K**	**L**	**N65**	**–**	**M00**	6.4	2.3	2.8	2.0	64	77	800	0.12000	180.0
	LG180ZLB4E [1]	**K**	**P**	**N65**	**–**	**M00**	6.6	2.2	2.9	2.1	64	77	800	0.14000	210.0
200	LG200LB4E [1]	**L**	**M**	**N65**	**–**	**M00**	6.6	2.4	3.0	2.4	66	79	640	0.23000	260.0
225	LG225S4E	**M**	**E**	**N65**	**–**	**M00**	6.6	2.4	2.7	2.0	64	77	370	0.40000	334.0
	LG225ZM4E	**M**	**U**	**N65**	**–**	**M00**	6.8	2.5	2.7	2.0	64	77	390	0.49000	380.0
250	LG250ZM4E	**N**	**N**	**N65**	**–**	**M00**	7.4	2.4	2.7	1.9	65	79	230	0.86000	460.0
280	LGI280S4E [2]	**P**	**G**	**N65**	**–**	**M00**	6.6	2.3	2.6	1.7	71	84	210	1.40000	575.0
	LGI280ZM4E [2]	**P**	**W**	**N65**	**–**	**M00**	7.3	2.6	2.8	2.0	71	84	150	1.70000	675.0

[1] Only as integrated motor
[2] Only as IEC MODULOG

8

© Siemens AG 2011

Motors for USA, Canada - Line-fed operation "High Efficiency"

Selection and ordering data

4-pole, 1 800 rpm at 60 Hz, UL-R

IEC Motor size	Motor LA/LG LAI/LGI	Order No.		Order code			Rated power		Rated speed	Rated torque	Rated current	Power factor	Efficiency	Efficiency class
		9th position	10th position	Specification	No. of poles	Efficiency	P_{rated}	P_{rated}	n_{rated}	T_{rated}	I_{rated} 460 V	cos φ	η at 4/4 load	
				UL-R	4-pole		kW	hp	rpm	Nm	A	–	%	EPACT
63	LAI63S4 3)	**B**	**C**	**N37**	**–**	**–**	0.12	0.16						**–**
	LAI63M4 3)	**B**	**E**	**N37**	**–**	**–**	0.18	0.25						**–**
71	LA71B4	**C**	**B**	**N37**	**–**	**–**	0.12	0.16	1 690	0.68	0.40	0.61	62.2	**–**
	LA71C4	**C**	**C**	**N37**	**–**	**–**	0.18	0.25	1 675	1.03	0.57	0.63	62.8	**–**
	LA71S4	**C**	**D**	**N37**	**–**	**–**	0.25	0.33	1 665	1.43	0.71	0.71	62.0	**–**
	LA71M4	**C**	**E**	**N37**	**–**	**–**	0.37	0.50	1 680	2.1	0.98	0.71	66.4	**–**
	LA71ZMP4 1)	**C**	**G**	**N37**	**–**	**–**	0.55	0.75	1 680	3.13	1.41	0.68	72.2	**–**
	LA71ZMD4 1)	**C**	**H**	**N37**	**–**	**–**	0.75	1.00	1 635	4.38	1.92	0.68	71.7	**–**
80	LAI80S4 2)	**D**	**B**	**N37**	**–**	**–**	0.55	0.75	1 710	3.07	1.32	0.76	69.2	**–**
	LA80M4	**D**	**C**	**N37**	**–**	**–**	0.75	1.00	1 710	4.19	1.71	0.74	74.3	**–**
90	LA90SB4E 1)	**E**	**M**	**N37**	**–**	**M00**	1.10	1.50	1 755	5.99	2.15	0.76	85.5	EPACT
	LA90ZLB4E 1)	**E**	**Q**	**N37**	**–**	**M00**	1.50	2.00	1 775	8.07	2.95	0.76	86.5	EPACT
	LA90ZLB4 1)	**E**	**Q**	**N37**	**–**	**–**	2.20	3.00	1 680	12.5	4.35	0.80	79.0	**–**
100	LA100ZLP4E 1)	**F**	**M**	**N37**	**–**	**M00**	2.20	3.00	1 750	12.0	4.00	0.79	87.5	**–**
	LA100ZLD4E 1)	**F**	**P**	**N37**	**–**	**M00**	3.00	4.00	1 750	16.4	5.50	0.79	88.5	**–**
112	LA112ZMP4E 1)	**G**	**J**	**N37**	**–**	**M00**	4.00	5.50	1 755	21.8	7.30	0.79	88.5	EPACT
132	LA132SP4E 1)	**H**	**G**	**N37**	**–**	**M00**	5.50	7.50	1 760	29.8	9.50	0.80	90.5	EPACT
	LA132ZMP4E 1)	**H**	**K**	**N37**	**–**	**M00**	7.50	10.00	1 760	40.7	12.80	0.81	90.5	EPACT
	LA132ZMP4 1)	**H**	**T**	**N37**	**–**	**–**	9.20	12.30	1 745	50.3	15.20	0.86	88.5	**–**
160	LA160MP4E 1)	**J**	**Q**	**N37**	**–**	**M00**	11.00	15.00	1 765	59.5	17.90	0.85	91.0	EPACT
	LA160ZLP4E 1)	**J**	**T**	**N37**	**–**	**M00**	15.00	20.00	1 765	81.2	24.50	0.85	91.5	EPACT
180	LG180ZMB4E	**K**	**L**	**N37**	**–**	**M00**	18.50	25.00	1 770	99.8	30.50	0.83	92.4	EPACT
	LG180ZLB4E	**K**	**P**	**N37**	**–**	**M00**	22.00	30.00	1 770	118.7	36.00	0.83	92.4	EPACT
200	LG200LB4E 1)	**L**	**M**	**N37**	**–**	**M00**	30.00	40.00	1 770	161.9	48.00	0.84	93.0	EPACT
225	LG225S4E 1)	**M**	**E**	**N37**	**–**	**M00**	37.00	50.00	1 785	197.9	60.00	0.84	93.6	**–**
	LG225ZM4E 1)	**M**	**U**	**N37**	**–**	**M00**	45.00	60.00	1 785	240.7	71.00	0.85	94.1	EPACT

1) Only as integrated motor
2) Only as IEC MODULOG
3) Only for worm geared motors S

© Siemens AG 2011

Selection and ordering data (continued)

4-pole, 1 800 rpm at 60 Hz, UL-R

IEC Motor size	Motor LA/LG LAI/LGI	Order No.		Order code			Starting current	Relative starting torque	Relative breakdown torque	Relative average acceleration torque	Measuring surface sound pressure level	Sound pressure level	No-load operating	Moment of inertia	Weight
		9th position	10th position	Specification	No. of poles	Efficiency	I_{St}/I_{rated}	T_{St}/T_{rated}	T_{Bk}/T_{rated}	T_{Ru}/T_{rated}	L_{pfA}	L_{WA}	Z_0	J_{mot}	m_{mot}
				UL-R	4-pole		–	–	–	–	dB(A)	dB(A)	/h	kgm^2	kg
63	LAI63S4 3)	**B**	**C**	**N37**	**–**	**–**					46	57		0.00029	4.0
	LAI63M4 3)	**B**	**E**	**N37**	**–**	**–**					46	57		0.00037	4.7
71	LA71B4	**C**	**B**	**N37**	**–**	**–**	4.1	2.6	2.8	2.5	48	59		0.00052	5.5
	LA71C4	**C**	**C**	**N37**	**–**	**–**	3.8	2.4	2.4	2.3	48	59		0.00052	5.5
	LA71S4	**C**	**D**	**N37**	**–**	**–**	3.8	2.5	2.4	2.4	48	59		0.00052	5.5
	LA71M4	**C**	**E**	**N37**	**–**	**–**	4.2	2.4	2.7	2.4	48	59		0.00077	6.9
	LA71ZMP4 1)	**C**	**G**	**N37**	**–**	**–**	4.6	2.9	2.9	2.6	50	61		0.00110	8.1
	LA71ZMD4 1)	**C**	**H**	**N37**	**–**	**–**	4.4	4.4	2.8	2.6	50	61		0.00120	8.6
80	LAI80S4 2)	**D**	**B**	**N37**	**–**	**–**	5.0	2.9	2.9	2.5	51	62		0.00140	10.4
	LA80M4	**D**	**C**	**N37**	**–**	**–**	5.5	3.0	3.0	2.8	51	62		0.00170	11.5
90	LA90SB4E 1)	**E**	**M**	**N37**	**–**	**M00**	7.7	3.1	3.9	2.7	52	64		0.00240	15.0
	LA90ZLB4E 1)	**E**	**Q**	**N37**	**–**	**M00**	8.1	3.6	4.2	2.9	54	66		0.00400	20.7
	LA90ZLB4 1)	**E**	**Q**	**N37**	**–**	**–**	6.3	3.1	3.3	2.6	54	66		0.00400	20.7
100	LA100ZLP4E 1)	**F**	**M**	**N37**	**–**	**M00**	8.4	3.4	4.3	3.1	57	69		0.00620	28.8
	LA100ZLD4E 1)	**F**	**P**	**N37**	**–**	**M00**	8.7	3.8	4.6	3.4	57	69		0.00770	34.5
112	LA112ZMP4E 1)	**G**	**J**	**N37**	**–**	**M00**	8.6	3.2	3.9	2.5	57	69		0.01400	42.5
132	LA132SP4E 1)	**H**	**G**	**N37**	**–**	**M00**	8.7	3.2	4.1	2.7	66	78		0.02300	51.8
	LA132ZMP4E 1)	**H**	**K**	**N37**	**–**	**M00**	8.7	3.4	4.1	2.7	66	78		0.02900	69.0
	LA132ZMP4 1)	**H**	**T**	**N37**	**–**	**–**	8.5	2.6	3.3	2.6	68	80		0.02900	69.0
160	LA160MP4E 1)	**J**	**Q**	**N37**	**–**	**M00**	8.1	2.6	3.2	2.2	70	82		0.05500	93.2
	LA160ZLP4E 1)	**J**	**T**	**N37**	**–**	**M00**	8.5	2.8	3.5	2.2	70	82		0.07200	123.0
180	LG180ZMB4E 1)	**K**	**L**	**N37**	**–**	**M00**	8.4	2.8	3.6		64	77		0.12000	180.0
	LG180ZLB4E 1)	**K**	**P**	**N37**	**–**	**M00**	8.8	3.1	3.9		64	77		0.14000	210.0
200	LG200LB4E 1)	**L**	**M**	**N37**	**–**	**M00**	8.3	3.0	3.6		66	79		0.23000	260.0
225	LG225S4E 1)	**M**	**E**	**N37**	**–**	**M00**	7.5	3.1	3.4		64	77		0.40000	334.0
	LG225ZM4E 1)	**M**	**U**	**N37**	**–**	**M00**	7.9	3.3	3.5		64	77		0.49000	380.0

1) Only as integrated motor
2) Only as IEC MODULOG
3) Only for worm geared motors S

© Siemens AG 2011

Motors for USA, Canada - Line-fed operation "High Efficiency"

Selection and ordering data

4-pole, 1 800 rpm at 60 Hz, CSA

IEC Motor size	Motor LA/LG LAI/LGI	Order No.		Order code			Rated power		Rated speed	Rated torque	Rated current	Power factor	Efficiency	Efficiency class
		9th position	10th position	Specification	No. of poles	Efficiency	P_{rated}	P_{rated}	n_{rated}	T_{rated}	I_{rated} 575 V	cos φ	η at 4/4 load	
				CSA	4-pole		kW	hp	rpm	Nm	A	–	%	EEV
63	LAI63S4 3)	B	C	N36	–	–								–
	LAI63M4 3)	B	E	N36	–	–								–
71	LA71B4	C	B	N36	–	–	0.12	0.16	1 690	0.68	0.32	0.61	62.2	–
	LA71C4	C	C	N36	–	–	0.18	0.25	1 675	1.03	0.46	0.63	62.8	–
	LA71S4	C	D	N36	–	–	0.25	0.33	1 665	1.43	0.57	0.71	62.0	–
	LA71M4	C	E	N36	–	–	0.37	0.50	1 680	2.1	0.78	0.71	66.4	–
	LA71ZMP4 1)	C	G	N36	–	–	0.55	0.75	1 680	3.13	1.23	0.68	72.2	–
	LA71ZMD4 1)	C	H	N36	–	–	0.75	1.00	1 635	4.38	1.54	0.68	71.7	–
80	LAI80S4 2)	D	B	N36	–	–	0.55	0.75	1 710	3.07	1.06	0.76	69.2	–
	LA80M4	D	C	N36	–	–	0.75	1.00	1 710	4.19	1.37	0.74	74.3	–
90	LA90SB4E 1)	E	M	N36	–	M00	1.10	1.50	1 755	5.99	1.72	0.76	85.5	EEV
	LA90ZLB4E 1)	E	Q	N36	–	M00	1.50	2.00	1 775	8.07	2.36	0.76	86.5	EEV
	LA90ZLB4 1)	E	Q	N36	–	–	2.20	3.00	1 680	12.5	3.48	0.80	79.0	–
100	LA100ZLP4E 1)	F	M	N36	–	M00	2.20	3.00	1 750	12.0	3.2	0.79	87.5	EEV
	LA100ZLD4E 1)	F	P	N36	–	M00	3.00	4.00	1 750	16.4	4.4	0.79	88.5	EEV
112	LA112ZMP4E 1)	G	J	N36	–	M00	4.00	5.50	1 755	21.8	5.8	0.79	88.5	EEV
132	LA132SP4E 1)	H	G	N36	–	M00	5.50	7.50	1 760	29.8	7.6	0.80	90.5	EEV
	LA132ZMP4E 1)	H	K	N36	–	M00	7.50	10.00	1 760	40.7	10.2	0.81	90.5	EEV
	LA132ZMP4 1)	H	T	N36	–	–	9.20	12.30	1 745	50.3	12.2	0.86	88.5	–
160	LA160MP4E 1)	J	Q	N36	–	M00	11.00	15.00	1 765	59.5	14.3	0.85	91.0	EEV
	LA160ZLP4E 1)	J	T	N36	–	M00	15.00	20.00	1 765	81.2	19.6	0.85	91.5	EEV
180	LG180ZMB4E 1)	K	L	N36	–	M00	18.50	25.00	1 770	99.8	24.4	0.83	92.4	EEV
	LG180ZLB4E 1)	K	P	N36	–	M00	22.00	30.00	1 770	118.7	28.8	0.83	92.4	EEV
200	LG200LB4E 1)	L	M	N36	–	M00	30.00	40.00	1 770	161.9	38.4	0.84	93.0	EEV
225	LG225S4E 1)	M	E	N36	–	M00	37.00	50.00	1 785	197.9	48.0	0.84	93.6	EEV
	LG225ZM4E 1)	M	U	N36	–	M00	45.00	60.00	1 785	240.7	56.8	0.85	94.1	EEV

1) Only as integrated motor
2) Only as IEC MODULOG
3) Only for worm geared motors S

© Siemens AG 2011

Selection and ordering data (continued)

4-pole, 1 800 rpm at 60 Hz, CSA

IEC Motor size	Motor LA/LG LAI/LGI	Order No.		Order code			Starting current	Relative starting torque	Relative breakdown torque	Relative average acceleration torque	Measuring surface sound pressure level	Sound pressure level	No-load operating	Moment of inertia	Weight
		9th position	10th position	Specification	No. of poles	Efficiency	I_{St}/I_{rated}	T_{St}/T_{rated}	T_{Bk}/T_{rated}	T_{Ru}/T_{rated}	L_{pfA}	L_{WA}	Z_0	J_{mot}	m_{mot}
				CSA	4-pole		–	–	–	–	dB(A)	dB(A)	/h	kgm^2	kg
63	LAI63S4 3)	**B**	**C**	**N36**	**–**	**–**					46	57		0.00029	4.0
	LAI63M4 3)	**B**	**E**	**N36**	**–**	**–**					46			0.00037	4.7
71	LA71B4	**C**	**B**	**N36**	**–**	**–**	4.1	2.6	2.8	2.5	48	59		0.00052	5.5
	LA71C4	**C**	**C**	**N36**	**–**	**–**	3.8	2.4	2.4	2.3	48	59		0.00052	5.5
	LA71S4	**C**	**D**	**N36**	**–**	**–**	3.8	2.5	2.4	2.4	48	59		0.00052	5.5
	LA71M4	**C**	**E**	**N36**	**–**	**–**	4.2	2.4	2.7	2.4	48	59		0.00077	6.9
	LA71ZMP4 1)	**C**	**G**	**N36**	**–**	**–**	4.6	2.9	2.9	2.6	50	61		0.00110	8.1
	LA71ZMD4 1)	**C**	**H**	**N36**	**–**	**–**	4.4	4.4	2.8	2.6	50	61		0.00120	8.6
80	LAI80S4 2)	**D**	**B**	**N36**	**–**	**–**	5.0	2.9	2.9	2.5	51	62		0.00140	10.4
	LA80M4	**D**	**C**	**N36**	**–**	**–**	5.5	3.0	3.0	2.8	51	62		0.00170	11.5
90	LA90SB4E 1)	**E**	**M**	**N36**	**–**	**M00**	7.7	3.1	3.9	2.7	52	64		0.00240	15.0
	LA90ZLB4E 1)	**E**	**Q**	**N36**	**–**	**M00**	8.1	3.6	4.2	2.9	54	66		0.00400	20.7
	LA90ZLB4 1)	**E**	**Q**	**N36**	**–**	**–**	6.3	3.1	3.3	2.6	54	66		0.00400	20.7
100	LA100ZLP4E 1)	**F**	**M**	**N36**	**–**	**M00**	8.4	3.4	4.3	3.1	57	69		0.00620	28.8
	LA100ZLD4E 1)	**F**	**P**	**N36**	**–**	**M00**	8.7	3.8	4.6	3.4	57	69		0.00770	34.5
112	LA112ZMP4E 1)	**G**	**J**	**N36**	**–**	**M00**	8.6	3.2	3.9	2.5	57	69		0.01400	42.5
132	LA132SP4E 1)	**H**	**G**	**N36**	**–**	**M00**	8.7	3.2	4.1	2.7	66	78		0.02300	51.8
	LA132ZMP4E 1)	**H**	**K**	**N36**	**–**	**M00**	8.7	3.4	4.1	2.7	66	78		0.02900	69.0
	LA132ZMP4 1)	**H**	**T**	**N36**	**–**	**–**	8.5	2.6	3.3	2.6	68	80		0.02900	69.0
160	LA160MP4E 1)	**J**	**Q**	**N36**	**–**	**M00**	8.1	2.6	3.2	2.2	70	82		0.05500	93.2
	LA160ZLP4E 1)	**J**	**T**	**N36**	**–**	**M00**	8.5	2.8	3.5	2.2	70	82		0.07200	123.0
180	LG180ZMB4E 1)	**K**	**L**	**N36**	**–**	**M00**	8.4	2.8	3.6		64	77		0.12000	180.0
	LG180ZLB4E 1)	**K**	**P**	**N36**	**–**	**M00**	8.8	3.1	3.9		64	77		0.14000	210.0
200	LG200LB4E 1)	**L**	**M**	**N36**	**–**	**M00**	8.3	3.0	3.6		66	79		0.23000	260.0
225	LG225S4E 1)	**M**	**E**	**N36**	**–**	**M00**	7.5	3.1	3.4		64	77		0.40000	334.0
	LG225ZM4E 1)	**M**	**U**	**N36**	**–**	**M00**	7.9	3.3	3.5		64	77		0.49000	380.0

1) Only as integrated motor
2) Only as IEC MODULOG
3) Only for worm geared motors S

8

© Siemens AG 2011

Motors for USA, Canada - Line-fed operation "High Efficiency"

Selection and ordering data

4-pole, 1 800 rpm at 60 Hz, UL-R and CSA

IEC Motor size	Motor LA/LG LAI/LGI	Order No.		Order code			Rated power		Rated speed	Rated torque	Rated current	Power factor	Efficiency	Efficiency class
		9th position	10th position	Specification	No. of poles	Efficiency	P_{rated}	P_{rated}	n_{rated}	T_{rated}	I_{rated} 460 V	cos φ	η at 4/4 load	
				UL-R + CSA	4-pole		kW	hp	rpm	Nm	A	–	%	EPACT / EEV
63	LAI63S4 3)	**B**	**C**	**N38**	**–**	**–**								
	LAI63M4 3)	**B**	**E**	**N38**	**–**	**–**								
71	LA71B4	**C**	**B**	**N38**	**–**	**–**	0.12	0.16	1 690	0.68	0.40	0.61	62.2	**–**
	LA71C4	**C**	**C**	**N38**	**–**	**–**	0.18	0.25	1 675	1.03	0.57	0.63	62.8	**–**
	LA71S4	**C**	**D**	**N38**	**–**	**–**	0.25	0.33	1 665	1.43	0.71	0.71	62.0	**–**
	LA71M4	**C**	**E**	**N38**	**–**	**–**	0.37	0.50	1 680	2.1	0.98	0.71	66.4	**–**
	LA71ZMP4 1)	**C**	**G**	**N38**	**–**	**–**	0.55	0.75	1 680	3.13	1.41	0.68	72.2	**–**
	LA71ZMD4 1)	**C**	**H**	**N38**	**–**	**–**	0.75	1.00	1 635	4.38	1.92	0.68	71.7	**–**
80	LAI80S4 2)	**D**	**B**	**N38**	**–**	**–**	0.55	0.75	1 710	3.07	1.32	0.76	69.2	**–**
	LA80M4	**D**	**C**	**N38**	**–**	**–**	0.75	1.00	1 710	4.19	1.71	0.74	74.3	**–**
90	LA90SB4E	**E**	**M**	**N38**	**–**	**M00**	1.10	1.50	1 755	5.99	2.15	0.76	85.5	EPACT / EEV
	LA90ZLB4E	**E**	**Q**	**N38**	**–**	**M00**	1.50	2.00	1 775	8.07	2.95	0.76	86.5	EPACT / EEV
	LA90ZLB4 1)	**E**	**Q**	**N38**	**–**	**–**	2.20	3.00	1 680	12.5	4.35	0.80	79.0	**–**
100	LA100ZLP4E 1)	**F**	**M**	**N38**	**–**	**M00**	2.20	3.00	1 750	12.0	4.00	0.79	87.5	EEV
	LA100ZLD4E 1)	**F**	**P**	**N38**	**–**	**M00**	3.00	4.00	1 750	16.4	5.50	0.79	88.5	EEV
112	LA112ZMP4E 1)	**G**	**J**	**N38**	**–**	**M00**	4.00	5.50	1 755	21.8	7.30	0.79	88.5	EPACT / EEV
132	LA132SP4E 1)	**H**	**G**	**N38**	**–**	**M00**	5.50	7.50	1 760	29.8	9.50	0.80	90.5	EPACT / EEV
	LA132ZMP4E 1)	**H**	**K**	**N38**	**–**	**M00**	7.50	10.00	1 760	40.7	12.80	0.81	90.5	EPACT / EEV
	LA132ZMP4 1)	**H**	**T**	**N38**	**–**	**–**	9.20	12.30	1 745	50.3	15.20	0.86	88.5	**–**
160	LA160MP4E 1)	**J**	**Q**	**N38**	**–**	**M00**	11.00	15.00	1 765	59.5	17.90	0.85	91.0	EPACT / EEV
	LA160ZLP4E 1)	**J**	**T**	**N38**	**–**	**M00**	15.00	20.00	1 765	81.2	24.50	0.85	91.5	EPACT / EEV
180	LG180ZMB4E 1)	**K**	**L**	**N38**	**–**	**M00**	18.50	25.00	1 770	99.8	30.50	0.83	92.4	EPACT / EEV
	LG180ZLB4E 1)	**K**	**P**	**N38**	**–**	**M00**	22.00	30.00	1 770	118.7	36.00	0.83	92.4	EPACT / EEV
200	LG200LB4E 1)	**L**	**M**	**N38**	**–**	**M00**	30.00	40.00	1 770	161.9	48.00	0.84	93.0	EPACT / EEV
225	LG225S4E 1)	**M**	**E**	**N38**	**–**	**M00**	37.00	50.00	1 785	197.9	60.00	0.84	93.6	EEV
	LG225ZM4E 1)	**M**	**U**	**N38**	**–**	**M00**	45.00	60.00	1 785	240.7	71.00	0.85	94.1	EPACT / EEV

1) Only as integrated motor
2) Only as IEC MODULOG
3) Only for worm geared motors S

© Siemens AG 2011

Selection and ordering data (continued)

4-pole, 1 800 rpm at 60 Hz, UL-R and CSA

IEC Motor size	Motor LA/LG LAI/LGI	Order No.		Order code			Starting current	Relative starting torque	Relative breakdown torque	Relative average acceleration torque	Measuring surface sound pressure level	Sound pressure level	No-load operating	Moment of inertia	Weight
		9th position	10th position	Specification	No. of poles	Efficiency	I_{St}/I_{rated}	T_{St}/T_{rated}	T_{Bk}/T_{rated}	T_{Ru}/T_{rated}	L_{pfA}	L_{WA}	Z_0	J_{mot}	m_{mot}
				UL-R + CSA	4-pole		–	–	–	–	dB(A)	dB(A)	/h	kgm^2	kg
63	LAI63S4 3)	**B**	**C**	**N38**	**–**	**–**									
	LAI63M4 3)	**B**	**E**	**N38**	**–**	**–**									
71	LA71B4	**C**	**B**	**N38**	**–**	**–**	4.1	2.6	2.8	2.5	48	59		0.00052	5.5
	LA71C4	**C**	**C**	**N38**	**–**	**–**	3.8	2.4	2.4	2.3	48	59		0.00052	5.5
	LA71S4	**C**	**D**	**N38**	**–**	**–**	3.8	2.5	2.4	2.4	48	59		0.00052	5.5
	LA71M4	**C**	**E**	**N38**	**–**	**–**	4.2	2.4	2.7	2.4	48	59		0.00077	6.9
	LA71ZMP4 1)	**C**	**G**	**N38**	**–**	**–**	4.6	2.9	2.9	2.6	50	61		0.00110	8.1
	LA71ZMD4 1)	**C**	**H**	**N38**	**–**	**–**	4.4	4.4	2.8	2.6	50	61		0.00120	8.6
80	LAI80S4 2)	**D**	**B**	**N38**	**–**	**–**	5.0	2.9	2.9	2.5	51	62		0.00140	10.4
	LA80M4	**D**	**C**	**N38**	**–**	**–**	5.5	3.0	3.0	2.8	51	62		0.00170	11.5
90	LA90SB4E	**E**	**M**	**N38**	**–**	**M00**	7.7	3.1	3.9	2.7	52	64		0.00240	15.0
	LA90ZLB4E	**E**	**Q**	**N38**	**–**	**M00**	8.1	3.6	4.2	2.9	54	66		0.00400	20.7
	LA90ZLB4 1)	**E**	**Q**	**N38**	**–**	**–**	6.3	3.1	3.3	2.6	54	66		0.00400	20.7
100	LA100ZLP4E 1)	**F**	**M**	**N38**	**–**	**M00**	8.4	3.4	4.3	3.1	57	69		0.00620	28.8
	LA100ZLD4E 1)	**F**	**P**	**N38**	**–**	**M00**	8.7	3.8	4.6	3.4	57	69		0.00770	34.5
112	LA112ZMP4E 1)	**G**	**J**	**N38**	**–**	**M00**	8.6	3.2	3.9	2.5	57	69		0.01400	42.5
132	LA132SP4E 1)	**H**	**G**	**N38**	**–**	**M00**	8.7	3.2	4.1	2.7	66	78		0.02300	51.8
	LA132ZMP4E 1)	**H**	**K**	**N38**	**–**	**M00**	8.7	3.4	4.1	2.7	66	78		0.02900	69.0
	LA132ZMP4 1)	**H**	**T**	**N38**	**–**	**–**	8.5	2.6	3.3	2.6	68	80		0.02900	69.0
160	LA160MP4E 1)	**J**	**Q**	**N38**	**–**	**M00**	8.1	2.6	3.2	2.2	70	82		0.05500	93.2
	LA160ZLP4E 1)	**J**	**T**	**N38**	**–**	**M00**	8.5	2.8	3.5	2.2	70	82		0.07200	123.0
180	LG180ZMB4E 1)	**K**	**L**	**N38**	**–**	**M00**	8.4	2.8	3.6		64	77		0.12000	180.0
	LG180ZLB4E 1)	**K**	**P**	**N38**	**–**	**M00**	8.8	3.1	3.9		64	77		0.14000	210.0
200	LG200LB4E 1)	**L**	**M**	**N38**	**–**	**M00**	8.3	3.0	3.6		66	79		0.23000	260.0
225	LG225S4E 1)	**M**	**E**	**N38**	**–**	**M00**	7.5	3.1	3.4		64	77		0.40000	334.0
	LG225ZM4E 1)	**M**	**U**	**N38**	**–**	**M00**	7.9	3.3	3.5		64	77		0.49000	380.0

1) Only as integrated motor
2) Only as IEC MODULOG
3) Only for worm geared motors S

© Siemens AG 2011

Selection and ordering data

4-pole, 1 500 rpm at 50 Hz, 400 V, operating mode S9

IEC Motor size	Motor LA/LG LAI/LGI	Order No.		Order code			Rated power	Rated speed	Rated torque	Rated current	Power factor	Efficiency	Efficiency class
		9th position	10th position	No. of poles	Power rating	Efficiency	P_{rated}	n_{rated}	T_{rated}	I_{rated} 400 V	cos φ	η at 4/4 load	
				4-pole	Inverter		kW	rpm	Nm	A	–	%	
63	LAI63S4 [3]	**B**	**C**	**–**	**P71**	**–**							
	LAI63M4 [3]	**B**	**E**	**–**	**P71**	**–**							
71	LA71B4	**C**	**B**	**–**	**P71**	**–**	0.12	1 400	0.82	0.40	0.66	65.0	
	LA71C4	**C**	**C**	**–**	**P71**	**–**	0.18	1 370	1.25	0.60	0.69	63.0	
	LA71S4	**C**	**D**	**–**	**P71**	**–**	0.25	1 350	1.77	0.77	0.78	60.0	
	LA71M4	**C**	**E**	**–**	**P71**	**–**	0.37	1 370	2.58	1.06	0.78	65.0	
	LA71ZMP4 [1]	**C**	**G**	**–**	**P71**	**–**	0.55	1 370	3.83	1.54	0.73	70.0	
	LA71ZMD4 [1]	**C**	**H**	**–**	**P71**	**–**	0.75	1 330	5.38	2.12	0.74	69.0	
80	LAI80S4 [2]	**D**	**B**	**–**	**P71**	**–**	0.55	1 395	3.76	1.46	0.81	67.0	
	LA80M4	**D**	**C**	**–**	**P71**	**–**	0.75	1 395	5.13	1.91	0.80	72.0	
90	LA90S4	**E**	**L**	**–**	**P71**	**–**	1.10	1 415	7.42	2.55	0.81	77.0	
	LA90L4	**E**	**P**	**–**	**P71**	**–**	1.50	1 420	10.1	3.40	0.81	79.0	
	LA90ZLB4 [1]	**E**	**Q**	**–**	**P71**	**–**	2.20	1 375	15.3	5.10	0.82	76.0	
100	LA100L4 [1]	**F**	**L**	**–**	**P71**	**–**	2.20	1 420	14.8	4.70	0.82	82.0	
	LA100LB4 [1]	**F**	**M**	**–**	**P71**	**–**	3.00	1 420	20.2	6.40	0.82	83.0	
112	LA112MB4 [1]	**G**	**H**	**–**	**P71**	**–**	4.00	1 440	26.5	8.20	0.83	85.0	
132	LA132SB4 [1]	**H**	**F**	**–**	**P71**	**–**	5.50	1 455	36.1	11.40	0.81	86.0	
	LA132M4 [1]	**H**	**H**	**–**	**P71**	**–**	7.50	1 455	49.2	15.20	0.82	87.0	
	LA132ZMP4 [1]	**H**	**T**	**–**	**P71**	**–**	9.20	1 445	60.8	17.70	0.86	87.0	
160	LA160MB4 [1]	**J**	**P**	**–**	**P71**	**–**	11.00	1 460	71.9	21.50	0.84	88.5	
	LA160L4 [1]	**J**	**R**	**–**	**P71**	**–**	15.00	1 460	98.1	28.50	0.84	90.0	
180 ... 280	Motor sizes 180 to 280 in High Efficiency (IE2) see page 8/130												
315	LGI315S4 [2]	**Q**	**Q**	**–**	**P71**	**–**	110.00	1 486	707.0	198.0	0.85	94.6	**–**
	LGI315M4 [2]	**Q**	**S**	**–**	**P71**	**–**	132.00	1 488	847.0	235.0	0.85	95.2	**–**
	LGI315L4 [2]	**Q**	**U**	**–**	**P71**	**–**	160.00	1 486	1 028.0	280.0	0.86	95.7	**–**
	LGI315LB4 [2]	**Q**	**V**	**–**	**P71**	**–**	200.00	1 486	1 285.0	340.0	0.88	95.9	**–**

[1] Only as integrated motor
[2] Only as IEC MODULOG
[3] Only for worm geared motors S

© Siemens AG 2011

Selection and ordering data (continued)

4-pole, 1 500 rpm at 50 Hz, 400 V, operating mode S9

IEC Motor size	Motor LA/LG LAI/LGI	Order No.		Order code			Relative breakdown torque	Measuring surface sound pressure level	Sound pressure level	Moment of inertia	Weight
		9th position	10th position	No. of poles	Power rating	Efficiency	T_{Bk}/T_{rated}	L_{pfA}	L_{WA}	J_{mot}	m_{mot}
				4-pole	Inverter		–	dB(A)	dB(A)	kgm^2	kg
63	LAI63S4 [3]	**B**	**C**	**–**	**P71**	**–**					
	LAI63M4 [3]	**B**	**E**	**–**	**P71**	**–**					
71	LA71B4	**C**	**B**	**–**	**P71**	**–**	2.3	44	55	0.00052	5.5
	LA71C4	**C**	**C**	**–**	**P71**	**–**	1.9	44	55	0.00052	5.5
	LA71S4	**C**	**D**	**–**	**P71**	**–**	1.9	44	55	0.00052	5.5
	LA71M4	**C**	**E**	**–**	**P71**	**–**	2.1	44	55	0.00077	6.9
	LA71ZMP4 [1]	**C**	**G**	**–**	**P71**	**–**	2.3	46	57	0.00110	8.1
	LA71ZMD4 [1]	**C**	**H**	**–**	**P71**	**–**	2.1	46	57	0.00120	8.6
80	LAI80S4 [2]	**D**	**B**	**–**	**P71**	**–**	2.2	47	58	0.00140	10.4
	LA80M4	**D**	**C**	**–**	**P71**	**–**	2.3	47	58	0.00170	11.5
90	LA90S4	**E**	**L**	**–**	**P71**	**–**	2.4	48	60	0.00240	15.0
	LA90L4	**E**	**P**	**–**	**P71**	**–**	2.6	48	60	0.00330	17.9
	LA90ZLB4 [1]	**E**	**Q**	**–**	**P71**	**–**	2.8	50	62	0.00400	20.7
100	LA100L4 [1]	**F**	**L**	**–**	**P71**	**–**	2.8	53	65	0.00470	24.1
	LA100LB4 [1]	**F**	**M**	**–**	**P71**	**–**	3.0	53	65	0.00550	27.6
112	LA112MB4 [1]	**G**	**H**	**–**	**P71**	**–**	3.0	53	65	0.01200	35.7
132	LA132SB4 [1]	**H**	**F**	**–**	**P71**	**–**	3.1	62	74	0.01800	47.2
	LA132M4 [1]	**H**	**H**	**–**	**P71**	**–**	3.2	62	74	0.02300	56.4
	LA132ZMP4 [1]	**H**	**T**	**–**	**P71**	**–**	3.2	64	76	0.02900	69.0
160	LA160MB4 [1]	**J**	**P**	**–**	**P71**	**–**	2.7	66	78	0.04300	84.0
	LA160L4 [1]	**J**	**R**	**–**	**P71**	**–**	3.0	66	78	0.05500	98.0
180 ... 280	Motor sizes 180 to 280 in High Efficiency (IE2) see page 8/130										
315	LGI315S4 [2]	**Q**	**Q**	**–**	**P71**	**–**	2.8	70	83	1.90000	730.0
	LGI315M4 [2]	**Q**	**S**	**–**	**P71**	**–**	2.9	70	83	2.30000	810.0
	LGI315L4 [2]	**Q**	**U**	**–**	**P71**	**–**	2.8	70	83	2.90000	955.0
	LGI315LB4 [2]	**Q**	**V**	**–**	**P71**	**–**	2.8	71	86	3.50000	955.0

[1] Only as integrated motor
[2] Only as IEC MODULOG
[3] Only for worm geared motors S

© Siemens AG 2011

Selection and ordering data (continued)

6-pole, 1 000 rpm at 50 Hz, 400 V, operating mode S9

IEC Motor size	Motor LA/LG LAI/LGI	Order No.		Order code			Rated power	Rated speed	Rated torque	Rated current	Power factor	Efficiency	Efficiency class
		9th position	10th position	No. of poles	Power rating	Efficiency	P_{rated}	n_{rated}	T_{rated}	I_{rated} 400 V	cos φ	η at 4/4 load	
				6-pole	Inverter		kW	rpm	Nm	A	–	%	
63	LAI63M6 [3]	**B**	**E**	**P01**	**P71**	**–**							
71	LA71B6	**C**	**B**	**P01**	**P71**	**–**	0.09	895	0.96	0.34	0.65	59.0	
	LA71C6	**C**	**C**	**P01**	**P71**	**–**	0.12	860	1.33	0.45	0.70	54.5	
	LA71S6	**C**	**D**	**P01**	**P71**	**–**	0.18	850	2.02	0.72	0.68	53.0	
	LA71M6	**C**	**E**	**P01**	**P71**	**–**	0.25	860	2.78	0.79	0.76	60.0	
80	LA80S6	**D**	**B**	**P01**	**P71**	**–**	0.37	920	3.84	1.20	0.72	62.0	
	LA80M6	**D**	**C**	**P01**	**P71**	**–**	0.55	910	5.77	1.60	0.74	67.0	
90	LA90S6	**E**	**C**	**P01**	**P71**	**–**	0.75	915	7.83	2.05	0.76	69.0	
	LA90L6	**E**	**P**	**P01**	**P71**	**–**	1.10	915	11.5	2.85	0.77	72.0	
100	LA100L6	**F**	**L**	**P01**	**P71**	**–**	1.50	925	15.5	3.9	0.75	74.0	
112	LA112M6	**G**	**G**	**P01**	**P71**	**–**	2.20	940	22.3	5.2	0.78	78.0	
132	LA132S6	**H**	**E**	**P01**	**P71**	**–**	3.00	950	30.2	7.2	0.76	79.0	
	LA132MA6	**H**	**G**	**P01**	**P71**	**–**	4.00	950	40.2	9.4	0.76	80.5	
	LA132MB6	**H**	**J**	**P01**	**P71**	**–**	5.50	950	55.3	12.6	0.76	83.0	
160	LA160MB6	**J**	**F**	**P01**	**P71**	**–**	7.50	960	74.6	17.0	0.74	86.0	
	LA160LB6	**J**	**S**	**P01**	**P71**	**–**	11.00	960	109.4	24.5	0.74	87.5	
180	LG180LA6	**K**	**M**	**P01**	**P71**	**–**	15.00	965	148.4	29.5	0.83	88.9	
200	LG200LA6	**L**	**K**	**P01**	**P71**	**–**	18.50	975	181.2	36.5	0.81	89.8	
	LG200L6	**L**	**L**	**P01**	**P71**	**–**	22.00	975	215.5	43.5	0.81	90.3	
225	LG225M6	**M**	**J**	**P01**	**P71**	**–**	30.00	978	293.0	57.0	0.83	91.8	
250	LG250M6	**N**	**C**	**P01**	**P71**	**–**	37.00	980	361.0	70.0	0.83	92.3	
280	LGI280S6 [2]	**P**	**G**	**P01**	**P71**	**–**	45.00	985	436.0	83.0	0.85	92.4	
	LGI280M6 [2]	**P**	**L**	**P01**	**P71**	**–**	55.00	985	533.0	100.0	0.86	92.7	
315	LGI315S6 [2]	**Q**	**G**	**P01**	**P71**	**–**	75.00	988	725.0	138.0	0.84	93.5	
	LGI315M6 [2]	**Q**	**R**	**P01**	**P71**	**–**	90.00	988	870.0	164.0	0.84	93.9	
	LGI315L6 [2]	**Q**	**U**	**P01**	**P71**	**–**	110.00	988	1 063.0	196.0	0.86	94.3	
	LGI315LB6 [2]	**Q**	**V**	**P01**	**P71**	**–**	132.00	988	1 276.0	235.0	0.86	94.8	
	LGI315ZLP6 [2]	**Q**	**X**	**P01**	**P71**	**–**	160.00	988	1 546.0	285.0	0.86	95.0	

[2] Only as IEC MODULOG
[3] Only for worm geared motors S

© Siemens AG 2011

Selection and ordering data (continued)

6-pole, 1 000 rpm at 50 Hz, 400 V, operating mode S9

IEC Motor size	Motor LA/LG LAI/LGI	Order No.		Order code			Relative breakdown torque	Measuring surface sound pressure level	Sound pressure level	Moment of inertia	Weight
		9th position	10th position	No. of poles	Power rating	Efficiency	T_{Bk}/T_{rated}	L_{pfA}	L_{WA}	J_{mot}	m_{mot}
				6-pole	Inverter		–	dB(A)	dB(A)	kgm^2	kg
63	LAI63M6 [3]	**B**	**E**	**P01**	**P71**	**–**					
71	LA71B6	**C**	**B**	**P01**	**P71**	**–**	2.5	39	50	0.00052	5.8
	LA71C6	**C**	**C**	**P01**	**P71**	**–**	2.0	39	50	0.00052	5.8
	LA71S6	**C**	**D**	**P01**	**P71**	**–**	1.9	39	50	0.00052	5.8
	LA71M6	**C**	**E**	**P01**	**P71**	**–**	2.0	39	50	0.00077	7.2
80	LA80S6	**D**	**B**	**P01**	**P71**	**–**	2.1	40	51	0.00140	10.4
	LA80M6	**D**	**C**	**P01**	**P71**	**–**	2.2	40	51	0.00170	11.5
90	LA90S6	**E**	**C**	**P01**	**P71**	**–**	2.2	43	55	0.00240	14.4
	LA90L6	**E**	**P**	**P01**	**P71**	**–**	2.3	43	55	0.00330	18.0
100	LA100L6	**F**	**L**	**P01**	**P71**	**–**	2.3	47	59	0.00470	24.0
112	LA112M6	**G**	**G**	**P01**	**P71**	**–**	2.5	52	64	0.00550	30.0
132	LA132S6	**H**	**E**	**P01**	**P71**	**–**	2.2	63	75	0.01200	44.0
	LA132MA6	**H**	**G**	**P01**	**P71**	**–**	2.4	63	75	0.01800	51.0
	LA132MB6	**H**	**J**	**P01**	**P71**	**–**	2.6	63	75	0.02300	60.0
160	LA160MB6	**J**	**F**	**P01**	**P71**	**–**	2.5	66	78	0.04400	85.0
	LA160LB6	**J**	**S**	**P01**	**P71**	**–**	2.6	66	78	0.06300	109.0
180	LG180LA6	**K**	**M**	**P01**	**P71**	**–**	2.5	56	69	0.18000	145.0
200	LG200LA6	**L**	**K**	**P01**	**P71**	**–**	2.5	56	69	0.24000	185.0
	LG200L6	**L**	**L**	**P01**	**P71**	**–**	2.5	57	71	0.29000	210.0
225	LG225M6	**M**	**J**	**P01**	**P71**	**–**	2.5	60	73	0.49000	280.0
250	LG250M6	**N**	**C**	**P01**	**P71**	**–**	2.3	59	73	0.76000	370.0
280	LGI280S6 [2]	**P**	**G**	**P01**	**P71**	**–**	2.4	61	74	1.10000	546.0
	LGI280M6 [2]	**P**	**L**	**P01**	**P71**	**–**	2.5	61	74	1.40000	510.0
315	LGI315S6 [2]	**Q**	**G**	**P01**	**P71**	**–**	2.8	65	78	2.10000	685.0
	LGI315M6 [2]	**Q**	**R**	**P01**	**P71**	**–**	2.9	65	78	2.50000	750.0
	LGI315L6 [2]	**Q**	**U**	**P01**	**P71**	**–**	2.9	62	77	3.20000	890.0
	LGI315LB6 [2]	**Q**	**V**	**P01**	**P71**	**–**	3.0	62	76	4.00000	890.0
	LGI315ZLP6 [2]	**Q**	**X**	**P01**	**P71**	**–**	3.0	65	78	4.70000	1 180.0

[2] Only as IEC MODULOG
[3] Only for worm geared motors S

© Siemens AG 2011

Selection and ordering data (continued)

8-pole, 750 rpm at 50 Hz, 400 V, operating mode S9

IEC Motor size	Motor LA/LG LAI/LGI	Order No.		Order code			Rated power	Rated speed	Rated torque	Rated current	Power factor	Efficiency	Efficiency class
		9th position	10th position	No. of poles	Power rating	Efficiency	P_{rated}	n_{rated}	T_{rated}	I_{rated} 400 V	cos φ	η at 4/4 load	
				8-pole	Inverter		kW	rpm	Nm	A	–	%	
71	LA71M8	**C**	**E**	**P02**	**P71**	**–**	0.09	630	1.36	0.36	0.68	53.0	
	LA71MB8	**C**	**F**	**P02**	**P71**	**–**	0.12	645	1.78	0.51	0.64	53.0	
80	LA80S8	**D**	**B**	**P02**	**P71**	**–**	0.18	675	2.55	0.75	0.68	51.0	
	LA80M8	**D**	**C**	**P02**	**P71**	**–**	0.25	685	3.49	1.02	0.64	55.0	
90	LA90SA8	**E**	**B**	**P02**	**P71**	**–**	0.37	675	5.23	1.14	0.75	63.0	
	LA90LA8	**E**	**E**	**P02**	**P71**	**–**	0.55	675	7.78	1.58	0.76	66.0	
100	LA100LA8	**F**	**B**	**P02**	**P71**	**–**	0.75	680	10.50	2.15	0.76	66.0	
	LA100L8	**F**	**L**	**P02**	**P71**	**–**	1.10	680	15.40	2.90	0.76	72.0	
112	LA112M8	**G**	**G**	**P02**	**P71**	**–**	1.50	705	20.30	3.85	0.76	74.0	
132	LA132S8	**H**	**E**	**P02**	**P71**	**–**	2.20	700	30.00	5.70	0.74	75.0	
	LA132MA8	**H**	**G**	**P02**	**P71**	**–**	3.00	700	40.90	7.60	0.74	77.0	
160	LA160M8	**J**	**E**	**P02**	**P71**	**–**	4.00	715	53.40	10.00	0.72	80.0	
	LA160MB8	**J**	**F**	**P02**	**P71**	**–**	5.50	710	74.10	13.00	0.73	83.5	
	LA160LB8	**J**	**J**	**P02**	**P71**	**–**	7.50	715	100.20	17.60	0.72	85.5	
180	LG180LA8	**K**	**M**	**P02**	**P71**	**–**	11.00	725	144.90	25.00	0.73	87.5	
200	LG200L8	**L**	**L**	**P02**	**P71**	**–**	15.00	725	197.60	32.50	0.76	87.7	
225	LG225S8	**M**	**E**	**P02**	**P71**	**–**	18.50	730	242.00	38.50	0.78	89.4	
	LG225M8	**M**	**J**	**P02**	**P71**	**–**	22.00	730	288.00	45.00	0.79	89.7	
250	LG250M8	**N**	**C**	**P02**	**P71**	**–**	30.00	730	392.00	58.00	0.81	91.4	

© Siemens AG 2011

Selection and ordering data (continued)

8-pole, 750 rpm at 50 Hz, 400 V, operating mode S9

IEC Motor size	Motor LA/LG LAI/LGI	Order No.		Order code			Relative breakdown torque	Measuring surface sound pressure level	Sound pressure level	Moment of inertia	Weight
		9th position	10th position	No. of poles	Power rating	Efficiency	T_{Bk}/T_{rated}	L_{pfA}	L_{WA}	J_{mot}	m_{mot}
				8-pole	Inverter		–	dB(A)	dB(A)	kgm^2	kg
71	LA71M8	**C**	**E**	**P02**	**P71**	**–**	1.7	36	47	0.0008	7.2
	LA71MB8	**C**	**F**	**P02**	**P71**	**–**	2.0	36	47	0.0008	7.2
80	LA80S8	**D**	**B**	**P02**	**P71**	**–**	1.9	41	52	0.0014	10.4
	LA80M8	**D**	**C**	**P02**	**P71**	**–**	2.2	41	52	0.0017	11.5
90	LA90SA8	**E**	**B**	**P02**	**P71**	**–**	1.8	41	53	0.0023	12.1
	LA90LA8	**E**	**E**	**P02**	**P71**	**–**	1.9	41	53	0.0031	15.2
100	LA100LA8	**F**	**B**	**P02**	**P71**	**–**	1.9	45	57	0.0051	21.9
	LA100L8	**F**	**L**	**P02**	**P71**	**–**	2.1	45	57	0.0063	25.3
112	LA112M8	**G**	**G**	**P02**	**P71**	**–**	2.1	49	61	0.0130	27.6
132	LA132S8	**H**	**E**	**P02**	**P71**	**–**	2.3	53	65	0.0140	43.7
	LA132MA8	**H**	**G**	**P02**	**P71**	**–**	2.4	53	65	0.0190	51.0
160	LA160M8	**J**	**E**	**P02**	**P71**	**–**	2.6	63	75	0.0360	74.0
	LA160MB8	**J**	**F**	**P02**	**P71**	**–**	2.7	63	75	0.0460	85.0
	LA160LB8	**J**	**J**	**P02**	**P71**	**–**	3.0	63	75	0.0640	108.0
180	LG180LA8	**K**	**M**	**P02**	**P71**	**–**	2.1	65	78	0.1700	173.0
200	LG200L8	**L**	**L**	**P02**	**P71**	**–**	2.6	67	80	0.2900	236.0
225	LG225S8	**M**	**E**	**P02**	**P71**	**–**	2.7	57	71	0.4800	270.0
	LG225M8	**M**	**J**	**P02**	**P71**	**–**	2.8	50	64	0.5500	290.0
250	LG250M8	**N**	**C**	**P02**	**P71**	**–**	2.6	55	68	0.8400	385.0

© Siemens AG 2011

Selection and ordering data

4-pole, 2 610 rpm at 87 Hz, 400 V, operating mode S9

IEC Motor size	Motor LA/LG LAI/LGI	Order No.		Order code			Rated power	Rated speed	Rated torque	Rated current	Power factor	Efficiency	Efficiency class
		9th position	10th position	No. of poles	Power rating	Efficiency	P_{rated}	n_{rated}	T_{rated}	I_{rated} 400 V	cos φ	η at 4/4 load	
				4-pole	Inverter		kW	rpm	Nm	A	–	%	
63	LAI63S4 [3]	**B**	**C**	**–**	**P71**	**–**							
	LAI63M4 [3]	**B**	**E**	**–**	**P71**	**–**							
71	LA71B4	**C**	**B**	**–**	**P71**	**–**	0.20	2 495	0.77	0.70	0.66	62.5	
	LA71C4	**C**	**C**	**–**	**P71**	**–**	0.30	2 465	1.16	1.02	0.69	61.5	
	LA71S4	**C**	**D**	**–**	**P71**	**–**	0.45	2 460	1.75	1.40	0.78	59.5	
	LA71M4	**C**	**E**	**–**	**P71**	**–**	0.65	2 480	2.50	1.80	0.79	66.0	
	LA71ZMP4 [1]	**C**	**G**	**–**	**P71**	**–**	0.95	2 480	3.66	2.68	0.73	70.0	
	LA71ZMD4 [1]	**C**	**H**	**–**	**P71**	**–**	1.30	2 425	5.12	3.68	0.74	69.0	
80	LAI80S4 [2]	**D**	**B**	**–**	**P71**	**–**	0.95	2 510	3.61	2.50	0.81	67.7	
	LA80M4	**D**	**C**	**–**	**P71**	**–**	1.30	2 510	4.95	3.35	0.80	70.0	
90	LA90S4	**E**	**L**	**–**	**P71**	**–**	1.90	2 530	7.17	4.40	0.80	77.9	
	LA90L4	**E**	**P**	**–**	**P71**	**–**	2.60	2 540	9.77	6.30	0.74	80.5	
	LA90ZLB4 [1]	**E**	**Q**	**–**	**P71**	**–**	3.80	2 500	14.50	8.20	0.77	86.9	
100	LA100L4 [1]	**F**	**L**	**–**	**P91**	**–**	3.60	2 540	13.50	8.00	0.79	82.2	
	LA100LB4 [1]	**F**	**M**	**–**	**P91**	**–**	5.00	2 540	18.80	11.00	0.79	83.0	
112	LA112MB4 [1]	**G**	**H**	**–**	**P91**	**–**	6.50	2 560	24.20	14.00	0.80	83.8	
132	LA132SB4 [1]	**H**	**F**	**–**	**P91**	**–**	9.00	2 570	33.40	19.50	0.78	85.4	
	LA132M4 [1]	**H**	**H**	**–**	**P91**	**–**	12.50	2 570	46.40	26.00	0.79	87.8	
	LA132ZMP4 [1]	**H**	**T**	**–**	**P91**	**–**	16.00	2 550	59.90	30.00	0.84	91.6	
160	LA160MB4 [1]	**J**	**P**	**–**	**P91**	**–**	17.00	2 575	63.00	34.50	0.81	87.8	
	LA160L4 [1]	**J**	**R**	**–**	**P91**	**–**	23.50	2 575	87.10	47.00	0.81	89.1	
180 ... 250	Motor sizes 180 to 250 in High Efficiency (IE2) see page 8/134												

[1] Only as integrated motor
[2] Only as IEC MODULOG
[3] Only for worm geared motors S

© Siemens AG 2011

Selection and ordering data (continued)

4-pole, 2 610 rpm at 87 Hz, 400 V, operating mode S9

IEC Motor size	Motor LA/LG LAI/LGI	Order No.		Order code			Relative breakdown torque	Measuring surface sound pressure level	Sound pressure level	Moment of inertia	Weight
		9th position	10th position	No. of poles	Power rating	Efficiency	T_{Bk}/T_{rated}	L_{pfA}	L_{WA}	J_{mot}	m_{mot}
				4-pole	Inverter		–	dB(A)	dB(A)	kgm^2	kg
63	LAI63S4 [3]	**B**	**C**	**–**	**P71**	**–**					
	LAI63M4 [3]	**B**	**E**	**–**	**P71**	**–**					
71	LA71B4	**C**	**B**	**–**	**P71**	**–**	2.3			0.00052	5.5
	LA71C4	**C**	**C**	**–**	**P71**	**–**	1.9			0.00052	5.5
	LA71S4	**C**	**D**	**–**	**P71**	**–**	1.8			0.00052	5.5
	LA71M4	**C**	**E**	**–**	**P71**	**–**	2.0			0.00077	6.9
	LA71ZMP4 [1]	**C**	**G**	**–**	**P71**	**–**	2.3			0.00110	8.1
	LA71ZMD4 [1]	**C**	**H**	**–**	**P71**	**–**	2.1			0.00120	8.6
80	LAI80S4 [2]	**D**	**B**	**–**	**P71**	**–**	2.2			0.00140	10.4
	LA80M4	**D**	**C**	**–**	**P71**	**–**	2.2			0.00170	11.5
90	LA90S4	**E**	**L**	**–**	**P71**	**–**	2.4			0.00240	15.0
	LA90L4	**E**	**P**	**–**	**P71**	**–**	2.5			0.00330	17.9
	LA90ZLB4 [1]	**E**	**Q**	**–**	**P71**	**–**	2.8			0.00400	20.7
100	LA100L4 [1]	**F**	**L**	**–**	**P91**	**–**	2.9			0.00470	24.1
	LA100LB4 [1]	**F**	**M**	**–**	**P91**	**–**	3.1			0.00550	27.6
112	LA112MB4 [1]	**G**	**H**	**–**	**P91**	**–**	3.1			0.01200	35.7
132	LA132SB4 [1]	**H**	**F**	**–**	**P91**	**–**	3.2			0.01800	47.2
	LA132M4 [1]	**H**	**H**	**–**	**P91**	**–**	3.3			0.02300	56.4
	LA132ZMP4 [1]	**H**	**T**	**–**	**P91**	**–**	3.1			0.02900	69.0
160	LA160MB4 [1]	**J**	**P**	**–**	**P91**	**–**	3.0			0.04300	84.0
	LA160L4 [1]	**J**	**R**	**–**	**P91**	**–**	3.3			0.05500	98.0
180 ... 250	Motor sizes 180 to 250 in High Efficiency (IE2) see page 8/134										

[1] Only as integrated motor
[2] Only as IEC MODULOG
[3] Only for worm geared motors S

© Siemens AG 2011

Selection and ordering data (continued)

6-pole, 1 740 rpm at 87 Hz, 400 V, operating mode S9

IEC Motor size	Motor LA/LG LAI/LGI	Order No.		Order code			Rated power	Rated speed	Rated torque	Rated current	Power factor	Efficiency	Efficiency class
		9th position	10th position	No. of poles	Power rating	Efficiency	P_{rated}	n_{rated}	T_{rated}	I_{rated} 400 V	cos φ	η at 4/4 load	
				6-pole	Inverter		kW	rpm	Nm	A	–	%	
63	LAI63M6 [3]	**B**	**E**	**P01**	**P71**	**–**							
71	LA71B6	**C**	**B**	**P01**	**P71**	**–**	0.15	1 640	0.87	0.59	0.55	67.1	
	LA71C6	**C**	**C**	**P01**	**P71**	**–**	0.20	1 600	1.19	0.78	0.59	62.5	
	LA71S6	**C**	**D**	**P01**	**P71**	**–**	0.30	1 580	1.81	1.05	0.74	55.7	
	LA71M6	**C**	**E**	**P01**	**P71**	**–**	0.45	1 570	2.74	1.40	0.75	61.9	
80	LA80S6	**D**	**B**	**P01**	**P71**	**–**	0.65	1 660	3.74	2.10	0.71	62.9	
	LA80M6	**D**	**C**	**P01**	**P71**	**–**	0.95	1 650	5.50	2.80	0.73	67.1	
90	LA90S6	**E**	**C**	**P01**	**P71**	**–**	1.30	1 660	7.48	3.60	0.75	69.5	
	LA90L6	**E**	**P**	**P01**	**P71**	**–**	1.90	1 660	10.90	5.00	0.76	72.2	
100	LA100L6	**F**	**L**	**P01**	**P71**	**–**	2.60	1 670	14.90	6.80	0.74	74.6	
112	LA112M6	**G**	**G**	**P01**	**P71**	**–**	3.80	1 680	21.60	9.00	0.77	79.1	
132	LA132S6	**H**	**E**	**P01**	**P71**	**–**	5.00	1 700	28.10	12.20	0.73	81.0	
	LA132MA6	**H**	**G**	**P01**	**P71**	**–**	6.50	1 700	36.50	16.00	0.73	80.3	
	LA132MB6	**H**	**J**	**P01**	**P71**	**–**	9.00	1 700	50.60	22.00	0.73	80.9	
160	LA160MB6	**J**	**F**	**P01**	**P71**	**–**	12.00	1 705	67.20	28.00	0.70	88.4	
	LA160LB6	**J**	**S**	**P01**	**P71**	**–**	17.00	1 705	95.20	40.00	0.70	87.6	
180	LG180LA6	**K**	**M**	**P01**	**P71**	**–**	22.50	1 708	125.80	44.00	0.81	91.1	
200	LG200LA6	**L**	**K**	**P01**	**P71**	**–**	27.80	1 718	154.50	55.00	0.79	92.3	
	LG200L6	**L**	**L**	**P01**	**P71**	**–**	33.00	1 716	183.60	65.00	0.79	92.8	
225	LG225M6	**M**	**J**	**P01**	**P91**	**–**	45.00	1 720	249.80	85.00	0.82	93.2	
250	LG250M6	**N**	**C**	**P01**	**P91**	**–**	55.50	1 722	308.00	104.00	0.82	93.9	

[3] Only for worm geared motors S

© Siemens AG 2011

Selection and ordering data (continued)

6-pole, 1 740 rpm at 87 Hz, 400 V, operating mode S9

IEC Motor size	Motor LA/LG LAI/LGI	Order No.		Order code			Relative breakdown torque	Measuring surface sound pressure level	Sound pressure level	Moment of inertia	Weight
		9th position	10th position	No. of poles	Power rating	Efficiency	T_{Bk}/T_{rated}	L_{pfA}	L_{WA}	J_{mot}	m_{mot}
				6-pole	Inverter		–	dB(A)	dB(A)	kgm^2	kg
63	LAI63M6 [3]	**B**	**E**	**P01**	**P71**	**–**					
71	LA71B6	**C**	**B**	**P01**	**P71**	**–**	2.5			0.00052	5.8
	LA71C6	**C**	**C**	**P01**	**P71**	**–**	2.0			0.00052	5.8
	LA71S6	**C**	**D**	**P01**	**P71**	**–**	1.8			0.00052	5.8
	LA71M6	**C**	**E**	**P01**	**P71**	**–**	2.0			0.00077	7.2
80	LA80S6	**D**	**B**	**P01**	**P71**	**–**	2.3			0.00140	10.4
	LA80M6	**D**	**C**	**P01**	**P71**	**–**	2.4			0.00170	11.5
90	LA90S6	**E**	**C**	**P01**	**P71**	**–**	2.2			0.00240	14.4
	LA90L6	**E**	**P**	**P01**	**P71**	**–**	2.2			0.00330	18.0
100	LA100L6	**F**	**L**	**P01**	**P71**	**–**	2.4			0.00470	24.0
112	LA112M6	**G**	**G**	**P01**	**P71**	**–**	2.5			0.00550	30.0
132	LA132S6	**H**	**E**	**P01**	**P71**	**–**	2.8			0.01200	44.0
	LA132MA6	**H**	**G**	**P01**	**P71**	**–**	2.9			0.01800	51.0
	LA132MB6	**H**	**J**	**P01**	**P71**	**–**	3.1			0.02300	60.0
160	LA160MB6	**J**	**F**	**P01**	**P71**	**–**	3.1			0.04400	85.0
	LA160LB6	**J**	**S**	**P01**	**P71**	**–**	3.2			0.06300	109.0
180	LG180LA6	**K**	**M**	**P01**	**P71**	**–**	3.3			0.18000	145.0
200	LG200LA6	**L**	**K**	**P01**	**P71**	**–**	3.1			0.24000	185.0
	LG200L6	**L**	**L**	**P01**	**P71**	**–**	3.0			0.29000	210.0
225	LG225M6	**M**	**J**	**P01**	**P91**	**–**	2.7			0.49000	280.0
250	LG250M6	**N**	**C**	**P01**	**P91**	**–**	2.6			0.76000	370.0

[3] Only for worm geared motors S

© Siemens AG 2011

Selection and ordering data (continued)

8-pole, 1 300 rpm at 87 Hz, 400 V, operating mode S9

IEC Motor size	Motor LA/LG LAI/LGI	Order No.		Order code			Rated power	Rated speed	Rated torque	Rated current	Power factor	Efficiency	Efficiency class
		9th position	10th position	No. of poles	Power rating	Efficiency	P_{rated}	n_{rated}	T_{rated}	I_{rated} 400 V	cos φ	η at 4/4 load	
				8-pole	Inverter		kW	rpm	Nm	A	–	%	
71	LA71M8	**C**	**E**	**P02**	**P71**	**–**	0.15	1 185	1.21	0.60	0.67	53.9	
	LA71MB8	**C**	**F**	**P02**	**P71**	**–**	0.20	1 200	1.59	0.85	0.63	53.9	
80	LA80S8	**D**	**B**	**P02**	**P71**	**–**	0.30	1 230	2.33	1.30	0.67	49.7	
	LA80M8	**D**	**C**	**P02**	**P71**	**–**	0.45	1 240	3.47	1.80	0.63	57.3	
90	LA90SA8	**E**	**B**	**P02**	**P71**	**–**	0.65	1 230	5.05	2.00	0.74	63.4	
	LA90LA8	**E**	**E**	**P02**	**P71**	**–**	0.95	1 230	7.38	2.70	0.75	67.7	
100	LA100LA8	**F**	**B**	**P02**	**P71**	**–**	1.30	1 235	10.10	3.70	0.75	67.6	
	LA100L8	**F**	**L**	**P02**	**P71**	**–**	1.90	1 235	14.70	5.00	0.75	73.1	
112	LA112M8	**G**	**G**	**P02**	**P71**	**–**	2.60	1 260	19.70	6.80	0.75	73.6	
132	LA132S8	**H**	**E**	**P02**	**P71**	**–**	3.80	1 255	28.90	9.90	0.73	75.9	
	LA132MA8	**H**	**G**	**P02**	**P91**	**–**	5.00	1 255	38.00	13.20	0.73	74.9	
160	LA160M8	**J**	**E**	**P02**	**P91**	**–**	7.00	1 270	52.60	17.30	0.71	82.3	
	LA160MB8	**J**	**F**	**P02**	**P91**	**–**	9.50	1 265	71.70	22.50	0.72	84.6	
	LA160LB8	**J**	**J**	**P02**	**P91**	**–**	13.00	1 270	97.70	30.50	0.71	86.6	
180	LG180LA8	**K**	**M**	**P02**	**P91**	**–**	16.50	1 280	123.10	37.50	0.70	90.7	
200	LG200L8	**L**	**L**	**P02**	**P91**	**–**	22.50	1 280	167.90	49.00	0.73	90.8	
225	LG225S8	**M**	**E**	**P02**	**P91**	**–**	27.80	1 288	206.10	59.00	0.74	91.9	
	LG225M8	**M**	**J**	**P02**	**P91**	**–**	33.00	1 286	245.00	68.00	0.76	92.2	
250	LG250M8	**N**	**C**	**P02**	**P91**	**–**	45.00	1 286	334.00	86.00	0.81	93.2	

© Siemens AG 2011

Selection and ordering data (continued)

8-pole, 1 300 rpm at 87 Hz, 400 V, operating mode S9

IEC Motor size	Motor LA/LG LAI/LGI	Order No.		Order code			Relative breakdown torque	Measuring surface sound pressure level	Sound pressure level	Moment of inertia	Weight
		9th position	10th position	No. of poles	Power rating	Efficiency	T_{Bk}/T_{rated}	L_{pfA}	L_{WA}	J_{mot}	m_{mot}
				8-pole	Inverter		–	dB(A)	dB(A)	kgm^2	kg
71	LA71M8	**C**	**E**	**P02**	**P71**	**–**	2.3			0.0008	7.2
	LA71MB8	**C**	**F**	**P02**	**P71**	**–**	1.9			0.0008	7.2
80	LA80S8	**D**	**B**	**P02**	**P71**	**–**	1.8			0.0014	10.4
	LA80M8	**D**	**C**	**P02**	**P71**	**–**	2.0			0.0017	11.5
90	LA90SA8	**E**	**B**	**P02**	**P71**	**–**	2.3			0.0023	12.1
	LA90LA8	**E**	**E**	**P02**	**P71**	**–**	2.4			0.0031	15.2
100	LA100LA8	**F**	**B**	**P02**	**P71**	**–**	2.2			0.0051	21.9
	LA100L8	**F**	**L**	**P02**	**P71**	**–**	2.2			0.0063	25.3
112	LA112M8	**G**	**G**	**P02**	**P71**	**–**	2.4			0.0130	27.6
132	LA132S8	**H**	**E**	**P02**	**P71**	**–**	2.5			0.0140	43.7
	LA132MA8	**H**	**G**	**P02**	**P91**	**–**	2.8			0.0190	51.0
160	LA160M8	**J**	**E**	**P02**	**P91**	**–**	2.9			0.0360	74.0
	LA160MB8	**J**	**F**	**P02**	**P91**	**–**	3.1			0.0460	85.0
	LA160LB8	**J**	**J**	**P02**	**P91**	**–**	3.1			0.0640	108.0
180	LG180LA8	**K**	**M**	**P02**	**P91**	**–**	3.2			0.1700	173.0
200	LG200L8	**L**	**L**	**P02**	**P91**	**–**	3.3			0.2900	236.0
225	LG225S8	**M**	**E**	**P02**	**P91**	**–**	3.1			0.4800	270.0
	LG225M8	**M**	**J**	**P02**	**P91**	**–**	3.0			0.5500	290.0
250	LG250M8	**N**	**C**	**P02**	**P91**	**–**	4.0			0.8400	385.0

© Siemens AG 2011

Selection and ordering data

4-pole, 1 500 rpm at 50 Hz, 400 V, operating mode S9

IEC Motor size	Motor LA/LG LAI/LGI	Order No.		Order code			Rated power	Rated speed	Rated torque	Rated current	Power factor	Efficiency	Efficiency class
		9th position	10th position	No. of poles	Power rating	Efficiency	P_{rated}	n_{rated}	T_{rated}	I_{rated} 400 V	cos φ	η at 4/4 load	
				4-pole	Inverter		kW	rpm	Nm	A	–	%	
80	LA80ZMB4E	**D**	**E**	**–**	**P71**	**M00**	0.75	1 400	5.11	1.81	0.75	79.6	**–**
90	LA90SB4E	**E**	**M**	**–**	**P71**	**M00**	1.1	1 440	7.29	2.55	0.77	81.4	**–**
	LA90ZLB4E	**E**	**Q**	**–**	**P71**	**M00**	1.5	1 440	9.95	3.4	0.77	82.8	**–**
100	LA100ZLP4E	**F**	**M**	**–**	**P71**	**M00**	2.2	1 435	14.6	4.6	0.82	84.3	**–**
	LA100ZLD4E	**F**	**P**	**–**	**P71**	**M00**	3.0	1 435	20.0	6.3	0.81	85.5	**–**
112	LA112ZMP4E	**G**	**J**	**–**	**P71**	**M00**	4.0	1 440	26.5	8.2	0.81	86.6	**–**
132	LA132SP4E	**H**	**G**	**–**	**P71**	**M00**	5.5	1 455	36.1	10.8	0.84	87.7	**–**
	LA132ZMP4E	**H**	**K**	**–**	**P71**	**M00**	7.5	1 455	49.2	14.5	0.84	88.7	**–**
160	LA160MB4E	**J**	**P**	**–**	**P71**	**M00**	9.2	1 445	60.8	18.2	0.82	89.3	**–**
	LA160MP4E	**J**	**Q**	**–**	**P71**	**M00**	11.0	1 460	71.9	21.0	0.85	89.8	**–**
	LA160ZLP4E	**J**	**T**	**–**	**P71**	**M00**	15.0	1 460	98.1	28.0	0.86	90.6	**–**
180	LG180ZMB4E	**K**	**L**	**–**	**P71**	**M00**	18.5	1 470	120	35.5	0.83	91.2	**–**
	LG180ZLB4E	**K**	**P**	**–**	**P71**	**M00**	22	1 465	143	41.5	0.84	91.6	**–**
200	LG200LB4E	**L**	**M**	**–**	**P71**	**M00**	30	1 475	194	55	0.85	92.3	**–**
225	LG225S4E	**M**	**E**	**–**	**P71**	**M00**	37	1 470	240	66	0.87	92.7	**–**
	LG225ZM4E	**M**	**U**	**–**	**P71**	**M00**	45	1 475	291	80	0.87	93.1	**–**
250	LG250ZM4E	**N**	**N**	**–**	**P71**	**M00**	55	1 480	355	100	0.85	93.5	**–**
280	LGI280S4E [2]	**P**	**G**	**–**	**P71**	**M00**	75	1 485	482	132	0.87	94.0	**–**
	LGI280ZM4E [2]	**P**	**W**	**–**	**P71**	**M00**	90	1 485	579	159	0.87	94.2	**–**
315	LGI315S4E [2]	**Q**	**Q**	**–**	**P71**	**M00**	110	1 490	705	196	0.86	94.5	**–**
	LGI315ZM4E [2]	**Q**	**S**	**–**	**P71**	**M00**	132	1 485	849	230	0.87	94.7	**–**
	LGI315L4E [2]	**Q**	**U**	**–**	**P71**	**M00**	160	1 485	1 029	280	0.87	94.9	**–**
	LGI315ZLB4E [2]	**Q**	**V**	**–**	**P71**	**M00**	200	1 490	1 282	350	0.87	95.1	**–**

[1] Only as integrated motor
[2] Only as IEC MODULOG

© Siemens AG 2011

Selection and ordering data (continued)

4-pole, 1 500 rpm at 50 Hz, 400 V, operating mode S9

IEC Motor size	Motor LA/LG LAI/LGI	Order No.		Order code			Relative breakdown torque	Measuring surface sound pressure level	Sound pressure level	Moment of inertia	Weight
		9th position	10th position	No. of poles	Power rating	Efficiency	T_{Bk}/T_{rated}	L_{pfA}	L_{WA}	J_{mot}	m_{mot}
				4-pole	Inverter		–	dB(A)	dB(A)	kgm^2	kg
80	LA80ZMB4E	**D**	**E**	**–**	**P71**	**M00**	3.5	47	58	0.0024	14.1
90	LA90SB4E	**E**	**M**	**–**	**P71**	**M00**	3.2	48	60	0.0033	17.3
	LA90ZLB4E	**E**	**Q**	**–**	**P71**	**M00**	2.9	48	60	0.0040	20.7
100	LA100ZLP4E	**F**	**M**	**–**	**P71**	**M00**	3.9	53	65	0.0062	28.8
	LA100ZLD4E	**F**	**P**	**–**	**P71**	**M00**	3.9	53	65	0.0077	34.5
112	LA112ZMP4E	**G**	**J**	**–**	**P71**	**M00**	3.2	53	65	0.014	42.5
132	LA132SP4E	**H**	**G**	**–**	**P71**	**M00**	3.6	62	74	0.023	51.8
	LA132ZMP4E	**H**	**K**	**–**	**P71**	**M00**	3.6	62	74	0.029	69.0
160	LA160MB4E	**J**	**P**	**–**	**P71**	**M00**	2.9	66	78	0.055	93.2
	LA160MP4E	**J**	**Q**	**–**	**P71**	**M00**	3.2	66	78	0.055	93.2
	LA160ZLP4E	**J**	**T**	**–**	**P71**	**M00**	3.3	66	78	0.072	123
180	LG180ZMB4E	**K**	**L**	**–**	**P71**	**M00**	3.0	60	73	0.12	178
	LG180ZLB4E	**K**	**P**	**–**	**P71**	**M00**	3.3	60	73	0.14	207
200	LG200LB4E	**L**	**M**	**–**	**P71**	**M00**	3.1	62	75	0.23	259
225	LG225S4E	**M**	**E**	**–**	**P71**	**M00**	3.0	60	73	0.40	334
	LG225ZM4E	**M**	**U**	**–**	**P71**	**M00**	3.1	60	73	0.49	380
250	LG250ZM4E	**N**	**N**	**–**	**P71**	**M00**	3.0	65	78	0.86	529
280	LGI280S4E [2]	**P**	**G**	**–**	**P71**	**M00**	2.9	67	80	1.4	661
	LGI280ZM4E [2]	**P**	**W**	**–**	**P71**	**M00**	3.1	68	82	1.7	776
315	LGI315S4E [2]	**Q**	**Q**	**–**	**P71**	**M00**	2.9	68	82	2.3	932
	LGI315ZM4E [2]	**Q**	**S**	**–**	**P71**	**M00**	2.9	69	83	2.9	1 110
	LGI315L4E [2]	**Q**	**U**	**–**	**P71**	**M00**	3.0	69	83	3.5	1 271
	LGI315ZLB4E [2]	**Q**	**V**	**–**	**P71**	**M00**	3.1	69	83	4.2	1 501

[1] Only as integrated motor
[2] Only as IEC MODULOG

© Siemens AG 2011

Selection and ordering data

6-pole, 1 000 rpm at 50 Hz, 400 V, operating mode S9

IEC Motor size	Motor LA/LG LAI/LGI	Order No.		Order code			Rated power	Rated speed	Rated torque	Rated current	Power factor	Efficiency	Efficiency class
		9th position	10th position	No. of poles	Power rating	Efficiency	P_{rated}	n_{rated}	T_{rated}	I_{rated} 400 V	cos φ	η at 4/4 load	
				6-pole	Inverter		kW	rpm	Nm	A	–	%	
90	LA90SB6E	**E**	**D**	**P01**	**P71**	**M00**	0.75	925	7.74	1.98	0.72	75.9	–
	LA90ZLD6E	**E**	**Q**	**P01**	**P71**	**M00**	1.1	940	11.2	2.9	0.7	78.1	–
100	LA100ZLP6E	**F**	**M**	**P01**	**P71**	**M00**	1.5	935	15.3	3.7	0.7	79.8	–
112	LA112ZMP6E	**G**	**J**	**P01**	**P71**	**M00**	2.2	955	22.0	5.6	0.7	81.8	–
132	LA132SB6E	**H**	**F**	**P01**	**P71**	**M00**	3.0	955					–
	LA132ZMB6E	**H**	**J**	**P01**	**P71**	**M00**	4.0	950	40.2	8.4	0.81	84.6	–
	LA132ZMD6E	**H**	**K**	**P01**	**P71**	**M00**	5.5	960	54.7	12.0	0.77	86.0	–
160	LA160MD6E	**J**	**J**	**P01**	**P71**	**M00**	7.5	965	74.2	17.2	0.72	87.2	–
	LA160ZLP6E	**J**	**T**	**P01**	**P71**	**M00**	11.0	960	109	23.0	0.78	88.7	–
180	LG180ZLB6E	**K**	**P**	**P01**	**P71**	**M00**	15.0	975	147	30.0	0.81	90.5	–
200	LG200L6E	**L**	**L**	**P01**	**P71**	**M00**	18.5	975	181	36.5	0.81	91.0	–
	LG200ZLB6E	**L**	**M**	**P01**	**P71**	**M00**	22	975	215	42.5	0.82	91.5	–
225	LG225ZM6E	**M**	**L**	**P01**	**P71**	**M00**	30	980	292	57	0.83	92.2	–
250	LG250M6E	**N**	**E**	**P01**	**P71**	**M00**	37	985	359	70	0.83	92.6	–
280	LGI280S6E [2]	**P**	**G**	**P01**	**P71**	**M00**	45	985	436	82	0.85	92.9	–
	LGI280M6E [2]	**P**	**N**	**P01**	**P71**	**M00**	55	985	533	100	0.85	93.3	–
315	LGI315S6E [2]	**Q**	**G**	**P01**	**P71**	**M00**	75	990	723	139	0.83	93.7	–
	LGI315ZM6E [2]	**Q**	**S**	**P01**	**P71**	**M00**	90	990	868	163	0.85	94.1	–
	LGI315L6E [2]	**Q**	**U**	**P01**	**P71**	**M00**	110	990	1 061	198	0.85	94.4	–
	LGI315ZLB6E [2]	**Q**	**V**	**P01**	**P71**	**M00**	132	990	1 273	235	0.85	94.6	–
	LGI315ZLP6E [2]	**Q**	**X**	**P01**	**P71**	**M00**	160	990	1 543	285	0.86	94.9	–

[1] Only as integrated motor
[2] Only as IEC MODULOG

© Siemens AG 2011

Selection and ordering data (continued)

6-pole, 1 000 rpm at 50 Hz, 400 V, operating mode S9

IEC Motor size	Motor LA/LG LAI/LGI	Order No.		Order code			Relative breakdown torque	Measuring surface sound pressure level	Sound pressure level	Moment of inertia	Weight
		9th position	10th position	No. of poles	Power rating	Efficiency	T_{Bk}/T_{rated}	L_{pfA}	L_{WA}	J_{mot}	m_{mot}
				6-pole	Inverter		–	dB(A)	dB(A)	kgm^2	kg
90	LA90SB6E	**E**	**D**	**P01**	**P71**	**M00**	2.5	43	55	0.0033	18.0
	LA90ZLD6E	**E**	**Q**	**P01**	**P71**	**M00**	3.2	43	55	0.0050	21.9
100	LA100ZLP6E	**F**	**M**	**P01**	**P71**	**M00**	3.4	47	59	0.0065	28.8
112	LA112ZMP6E	**G**	**J**	**P01**	**P71**	**M00**	3.0	52	64	0.014	42.6
132	LA132SB6E	**H**	**F**	**P01**	**P71**	**M00**		63	75		
	LA132ZMB6E	**H**	**J**	**P01**	**P71**	**M00**	2.7	63	75	0.025	56.4
	LA132ZMD6E	**H**	**K**	**P01**	**P71**	**M00**	3.6	63	75	0.030	73.6
160	LA160MD6E	**J**	**J**	**P01**	**P71**	**M00**	2.5	66	78	0.063	113
	LA160ZLP6E	**J**	**T**	**P01**	**P71**	**M00**	3.2	66	78	0.072	132
180	LG180ZLB6E	**K**	**P**	**P01**	**P71**	**M00**	2.5	56	69	0.20	201
200	LG200L6E	**L**	**L**	**P01**	**P71**	**M00**	2.4	59	72	0.29	242
	LG200ZLB6E	**L**	**M**	**P01**	**P71**	**M00**	2.4	59	72	0.36	276
225	LG225ZM6E	**M**	**L**	**P01**	**P71**	**M00**	2.9	59	72	0.63	374
250	LG250M6E	**N**	**E**	**P01**	**P71**	**M00**	2.5	59	72	0.93	466
280	LGI280S6E [2]	**P**	**G**	**P01**	**P71**	**M00**	2.7	58	71	1.4	520
	LGI280M6E [2]	**P**	**N**	**P01**	**P71**	**M00**	2.9	58	71	1.6	570
315	LGI315S6E [2]	**Q**	**G**	**P01**	**P71**	**M00**	3.0	61	74	2.5	760
	LGI315ZM6E [2]	**Q**	**S**	**P01**	**P71**	**M00**	2.9	61	74	3.2	935
	LGI315L6E [2]	**Q**	**U**	**P01**	**P71**	**M00**	2.9	61	74	4.0	1 010
	LGI315ZLB6E [2]	**Q**	**V**	**P01**	**P71**	**M00**	3.1	61	74	4.7	1 180
	LGI315ZLP6E [2]	**Q**	**X**	**P01**	**P71**	**M00**	3.1	64	77	5.4	1 245

[1] Only as integrated motor
[2] Only as IEC MODULOG

© Siemens AG 2011

Selection and ordering data

4-pole, 2 610 rpm at 87 Hz, 400 V, operating mode S9

IEC Motor size	Motor LA/LG LAI/LGI	Order No.		Order code			Rated power	Rated speed	Rated torque	Rated current	Power factor	Efficiency	Efficiency class
		9th position	10th position	No. of poles	Power rating	Efficiency	P_{rated}	n_{rated}	T_{rated}	I_{rated} 400 V	cos φ	η at 4/4 load	
				4-pole	Inverter		kW	rpm	Nm	A	–	%	
80	LA80ZMB4E	**D**	**E**	**–**	**P71**	**M00**	1.3	2 515	4.94	3.2	0.74	79.0	**–**
90	LA90SB4E	**E**	**M**	**–**	**P71**	**M00**	1.9	2 560	7.09	4.3	0.76	83.9	**–**
	LA90ZLB4E	**E**	**Q**	**–**	**P71**	**M00**	2.6	2 560	9.7	5.8	0.76	85.1	**–**
100	LA100ZLP4E	**F**	**M**	**–**	**P71**	**M00**	3.8	2 555	14.2	8.0	0.80	85.7	**–**
	LA100ZLD4E	**F**	**P**	**–**	**P71**	**M00**	5.2	2 555	19.4	10.7	0.80	87.7	**–**
112	LA112ZMP4E	**G**	**J**	**–**	**P71**	**M00**	6.9	2 560	25.7	14.2	0.80	88.0	**–**
132	LA132SP4E	**H**	**G**	**–**	**P71**	**M00**	9.5	2 570	35.3	18.5	0.83	89.6	**–**
	LA132ZMP4E	**H**	**K**	**–**	**P71**	**M00**	13.0	2 570	48.3	25.0	0.83	90.4	**–**
160	LA160MB4E	**J**	**P**	**–**	**P71**	**M00**	16.0	2 560	59.7	31.0	0.81	90.5	**–**
	LA160MP4E	**J**	**Q**	**–**	**P71**	**M00**	19.0	2 575	70.5	36.5	0.84	89.7	**–**
	LA160ZLP4E	**J**	**T**	**–**	**P71**	**M00**	26.0	2 575	96.4	48.5	0.85	91.0	**–**
180	LG180ZMB4E	**K**	**L**	**–**	**P91**	**M00**	27.8	2 585	103	54.8	0.80	91.6	**–**
	LG180ZLB4E	**K**	**P**	**–**	**P91**	**M00**	33.0	2 585	122	63.0	0.81	93.4	**–**
200	LG200LB4E	**L**	**M**	**–**	**P91**	**M00**	45.0	2 590	166	86.1	0.82	92.0	**–**
225	LG225S4E	**M**	**E**	**–**	**P91**	**M00**	55.5	2 590					**–**
	LG225ZM4E	**M**	**U**	**–**	**P91**	**M00**	67.5	2 595					**–**
250	LG250ZM4E	**N**	**N**	**–**	**P91**	**M00**	82.5	2 600					**–**

[1] Only as integrated motor
[2] Only as IEC MODULOG

© Siemens AG 2011

Selection and ordering data (continued)

4-pole, 2 610 rpm at 87 Hz, 400 V, operating mode S9

IEC Motor size	Motor LA/LG LAI/LGI	Order No.		Order code			Relative breakdown torque	Measuring surface sound pressure level	Sound pressure level	Moment of inertia	Weight
		9th position	10th position	No. of poles	Power rating	Efficiency	T_{Bk}/T_{rated}	L_{pfA}	L_{WA}	J_{mot}	m_{mot}
				4-pole	Inverter		–	dB(A)	dB(A)	kgm^2	kg
80	LA80ZMB4E	**D**	**E**	**–**	**P71**	**M00**	4.8			0.0024	14.1
90	LA90SB4E	**E**	**M**	**–**	**P71**	**M00**	3.1			0.0033	17.3
	LA90ZLB4E	**E**	**Q**	**–**	**P71**	**M00**	3.3			0.0040	20.7
100	LA100ZLP4E	**F**	**M**	**–**	**P71**	**M00**	3.5			0.0062	28.8
	LA100ZLD4E	**F**	**P**	**–**	**P71**	**M00**	3.8			0.0077	34.5
112	LA112ZMP4E	**G**	**J**	**–**	**P71**	**M00**	3.1			0.014	42.5
132	LA132SP4E	**H**	**G**	**–**	**P71**	**M00**	3.5			0.023	51.8
	LA132ZMP4E	**H**	**K**	**–**	**P71**	**M00**	3.5			0.029	69.0
160	LA160MB4E	**J**	**P**	**–**	**P71**	**M00**	3.1			0.055	93.2
	LA160MP4E	**J**	**Q**	**–**	**P71**	**M00**	3.2			0.055	93.2
	LA160ZLP4E	**J**	**T**	**–**	**P71**	**M00**	3.1			0.072	123
180	LG180ZMB4E	**K**	**L**	**–**	**P91**	**M00**	3.3			0.12	178
	LG180ZLB4E	**K**	**P**	**–**	**P91**	**M00**	3.0			0.14	207
200	LG200LB4E	**L**	**M**	**–**	**P91**	**M00**	3.1			0.23	259
225	LG225S4E	**M**	**E**	**–**	**P91**	**M00**				0.40	334
	LG225ZM4E	**M**	**U**	**–**	**P91**	**M00**				0.49	380
250	LG250ZM4E	**N**	**N**	**–**	**P91**	**M00**				0.86	529

[1] Only as integrated motor
[2] Only as IEC MODULOG

8

© Siemens AG 2011

Selection and ordering data

6-pole, 1 740 rpm at 87 Hz, 400 V, operating mode S9

IEC Motor size	Motor LA/LG LAI/LGI	Order No.		Order code			Rated power	Rated speed	Rated torque	Rated current	Power factor	Efficiency	Efficiency class
		9th position	10th position	No. of poles	Power rating	Efficiency	P_{rated}	n_{rated}	T_{rated}	I_{rated} 400 V	cos φ	η at 4/4 load	
				6-pole	Inverter		kW	rpm	Nm	A	–	%	
90	LA90SB6E	**E**	**D**	**P01**	**P71**	**M00**	1.3	1 670	7.4	3.48	0.71	75.8	–
	LA90ZLD6E	**E**	**Q**	**P01**	**P71**	**M00**	1.9	1 680	10.8	5.1	0.69	77.8	–
100	LA100ZLP6E	**F**	**M**	**P01**	**P71**	**M00**	2.6	1 685	14.7	6.7	0.69	81.0	–
112	LA112ZMP6E	**G**	**J**	**P01**	**P71**	**M00**	3.8	1 690	21.5	9.9	0.69	81.9	–
132	LA132SB6E	**H**	**F**	**P01**	**P71**	**M00**	5.2	1 690					–
	LA132ZMB6E	**H**	**J**	**P01**	**P71**	**M00**	6.9	1 690	39.0	14.8	0.80	84.0	–
	LA132ZMD6E	**H**	**K**	**P01**	**P71**	**M00**	9.5	1 695	53.5	21.1	0.76	85.4	–
160	LA160MD6E	**J**	**J**	**P01**	**P71**	**M00**	13.0	1 700	73.0	30.3	0.71	87.0	–
	LA160ZLP6E	**J**	**T**	**P01**	**P71**	**M00**	19.0	1 700	107	40.5	0.77	87.8	–
180	LG180ZLB6E	**K**	**P**	**P01**	**P71**	**M00**	26.0	1 710	145	51.0	0.80	91.9	–
200	LG200L6E	**L**	**L**	**P01**	**P71**	**M00**	32.0	1 715	178	61.4	0.81	92.8	–
	LG200ZLB6E	**L**	**M**	**P01**	**P71**	**M00**	38.0	1 715	212	71.8	0.82	93.0	–
225	LG225ZM6E	**M**	**L**	**P01**	**P91**	**M00**	45.0	1 720	250	85.0			–
250	LG250M6E	**N**	**E**	**P01**	**P91**	**M00**	55.5	1 720	308	104.0			–

[1] Only as integrated motor
[2] Only as IEC MODULOG

© Siemens AG 2011

Selection and ordering data (continued)

6-pole, 1 740 rpm at 87 Hz, 400 V, operating mode S9

IEC Motor size	Motor LA/LG LAI/LGI	Order No.		Order code			Relative breakdown torque	Measuring surface sound pressure level	Sound pressure level	Moment of inertia	Weight
		9th position	10th position	No. of poles	Power rating	Efficiency	T_{Bk}/T_{rated}	L_{pfA}	L_{WA}	J_{mot}	m_{mot}
				6-pole	Inverter		–	dB(A)	dB(A)	kgm^2	kg
90	LA90SB6E	**E**	**D**	**P01**	**P71**	**M00**	3.4			0.0033	18.0
	LA90ZLD6E	**E**	**Q**	**P01**	**P71**	**M00**	3.8			0.0050	21.9
100	LA100ZLP6E	**F**	**M**	**P01**	**P71**	**M00**	3.5			0.0065	28.8
112	LA112ZMP6E	**G**	**J**	**P01**	**P71**	**M00**	4.0			0.014	42.6
132	LA132SB6E	**H**	**F**	**P01**	**P71**	**M00**					
	LA132ZMB6E	**H**	**J**	**P01**	**P71**	**M00**	3.3			0.025	56.4
	LA132ZMD6E	**H**	**K**	**P01**	**P71**	**M00**	4.1			0.030	73.6
160	LA160MD6E	**J**	**J**	**P01**	**P71**	**M00**	2.8			0.063	113
	LA160ZLP6E	**J**	**T**	**P01**	**P71**	**M00**	3.6			0.072	132
180	LG180ZLB6E	**K**	**P**	**P01**	**P71**	**M00**	2.3			0.20	201
200	LG200L6E	**L**	**L**	**P01**	**P71**	**M00**	2.4			0.29	242
	LG200ZLB6E	**L**	**M**	**P01**	**P71**	**M00**	2.4			0.36	276
225	LG225ZM6E	**M**	**L**	**P01**	**P91**	**M00**				0.63	374
250	LG250M6E	**N**	**E**	**P01**	**P91**	**M00**				0.93	466

[1] Only as integrated motor
[2] Only as IEC MODULOG

8

© Siemens AG 2011

Dimensions

Motors, built-in

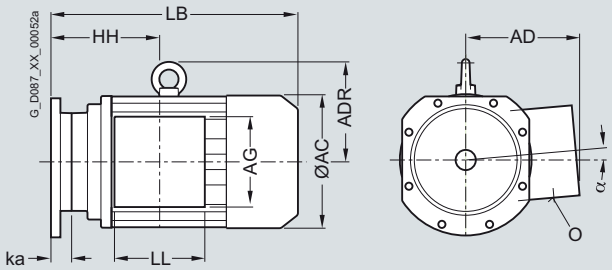

Motor	Gearbox type					ka	HH	LB	Gearbox type	ka	HH	LB	AC	AD	α	O	LL	AG	ADR
	E.	Z.	K.	C.	FZ./FD.				D.										
LA71		18		28		0	40.5	184.5	18	0	40.5	184.5	139.0	146	0	1xM20x1.5/ 1xM25x1.5 (1/2"+3/4") [1]	90	90	–
		28	B28		28	0	58.5	202.5	28	0	58.5	202.5							
			B38		38B	0	89.0	233.0											
	38	38	38/48	38/48	48B	25.5	114.5	258.5	38	40.5	129.5	273.5							
	48	48	68	68	68B	20.0	109.0	253.0	48	37.0	126.0	270.0							
	68	68	88	88	88B	14.0	103.0	247.0	68	32.5	121.5	265.5							
									88	24.0	113.0	257.0							
LA71Z		18		28		0	40.5	203.5	18	0	40.5	203.5	139.0	146	0	1xM20x1.5/ 1xM25x1.5 (1/2"+3/4") [1]	90	90	–
		28	B28		28	0	58.5	221.5	28	0	58.5	221.5							
			B38		38B	0	89.0	252.0											
	38	38	38/48	38/48	48B	25.5	114.5	277.5	38	40.5	129.5	292.5							
	48	48	68	68	68B	20.0	109.0	272.0	48	37.0	126.0	289.0							
	68	68	88	88	88B	14.0	103.0	266.0	68	32.5	121.5	284.5							
									88	24.0	113.0	276.0							
LA80		28			28	34.0	123.0	304.0	28	34.0	123.0	304.0	156.5	155	0	1xM20x1.5/ 1xM25x1.5 (1/2"+3/4") [1]	90	90	–
			B38		38B	0	88.5	270.0											
	38	38	38/48	38/48	48B	25.5	114.0	295.5	38	40.5	129.0	310.5							
	48	48	68	68	68B	20.0	108.5	290.0	48	37.0	125.5	307.0							
	68	68	88	88	88B	14.0	102.5	284.0	68	32.5	121.0	302.5							
			108		108B	–1.0	87.5	269.0	88	24.0	112.5	294.0							
									108	18.0	106.5	288.0							
LA80Z		28			28	34.0	196.0	326.5	28	34.0	196.0	326.5	156.5	155	0	1xM20x1.5/ 1xM25x1.5 (1/2"+3/4") [1]	90	90	–
			B38		38B	0	161.0	292.5											
	38	38	38/48	38/48	48B	25.5	187.0	318.0	38	40.5	202.0	333.0							
	48	48	68	68	68B	20.0	181.5	312.5	48	37.0	198.5	329.5							
	68	68	88	88	88B	14.0	175.5	306.5	68	32.5	194.0	325.0							
			108		108B	–1.0	160.5	291.5	88	24.0	185.5	316.5							
									108	18.0	179.5	310.5							
LA90S		28	B28		28	0	87.0	299.5	28	0	87.0	299.5	174.0	163	0	1xM20x1.5/ 1xM25x1.5 (1/2"+3/4") [1]	90	90	–
			B38		38B	0	88.5	301.0											
	38	38	38/48	38/48	48B	25.5	114.0	326.5	38	40.5	129.0	341.5							
	48	48	68	68	68B	20.0	108.5	321.0	48	37.0	125.5	338.0							
	68	68	88	88	88B	14.0	102.5	315.0	68	32.5	121.0	333.5							
	88	88	108		108B	–1.0	87.5	300.0	88	24.0	112.5	325.0							
	108	108	128		128B	–12.5	76.0	288.5	108	18.0	106.5	319.0							
									128	11.0	99.5	312.0							

[1] Values in brackets NPT gland

© Siemens AG 2011

Motors, built-in (continued)

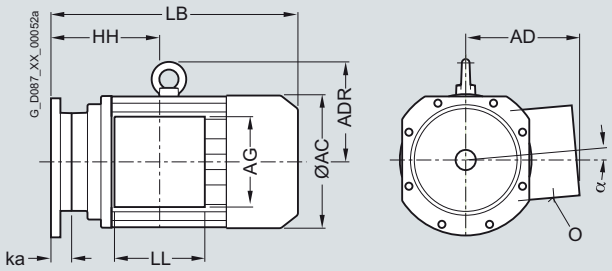

Motor	Gearbox type					ka	HH	LB	Gearbox type	ka	HH	LB	AC	AD	α	O	LL	AG	ADR
	E.	Z.	K.	C.	FZ./FD.				D.										
LA90L		28	B28		28	0	87.0	299.5	28	0	87.0	299.5	174	163	0	1xM20x1.5/ 1xM25x1.5 (1/2"+3/4") [1]	90	90	–
			B38		38B	0	88.5	301.0											
	38	38	38/48	38/48	48B	25.5	114.0	326.5	38	40.5	129.0	341.5							
	48	48	68	68	68B	20.0	108.5	321.0	48	37.0	125.5	338.0							
	68	68	88	88	88B	14.0	102.5	315.0	68	32.5	121.0	333.5							
	88	88	108		108B	–1.0	87.5	300.0	88	24.0	112.5	325.0							
	108	108	128		128B	–12.5	76.0	288.5	108	18.0	106.5	319.0							
									128	11.0	99.5	312.0							
LA90ZL		28	B28		28	0	211.0	344.5	28	0	211.0	344.5	174	163	0	1xM20x1.5/ 1xM25x1.5 (1/2"+3/4") [1]	90	90	–
			B38		38B	0	212.5	346.0											
	38	38	38/48	38/48	48B	25.5	238.0	371.5	38	40.5	253.0	386.5							
	48	48	68	68	68B	20.0	232.5	366	48	37.0	249.5	383.0							
	68	68	88	88	88B	14.0	226.5	360	68	32.5	245.0	378.5							
	88	88	108		108B	–1.0	211.5	345	88	24.0	236.5	370.0							
	108	108	128		128B	–12.5	200.0	333.5	108	18.0	230.5	364.0							
									128	11.0	223.5	357.0							
LA100L		28	B28		28	34.0	163.5	381.0					195	168	0	2xM32x1.5 (2x3/4") [1]	120	120	116
			B38		38B	0	129.0	347.0											
	38	38	38/48	38/48	48B	25.5	154.5	372.5	48	37.0	166.0	384.0							
	48	48	68	68	68B	20.0	149.0	367.0	68	32.5	161.5	379.5							
	68	68	88	88	88B	14.0	143.0	361.0	88	24.0	153.0	371.0							
	88	88	108		108B	–3.5	125.5	343.5	108	18.0	147.0	365.0							
	108	108	128		128B	–15.5	113.5	331.5	128	11.0	140.0	358.0							
	128	128	148		148B	–25.0	104.0	322.0	148	6.0	135.0	353.0							
LA100ZL		28	B28		28	34.0	295.5	451.0					195	168	0	2xM32x1.5 (2x3/4") [1]	120	120	116
			B38		38B	0	261.0	417.0											
	38	38	38/48	38/48	48B	25.5	286.5	442.5	48	37.0	298.0	454							
	48	48	68	68	68B	20.0	281.0	437.0	68	32.5	293.5	449.5							
	68	68	88	88	88B	14.0	275.0	431.0	88	24.0	285.0	441.0							
	88	88	108		108B	–3.5	257.5	413.5	108	18.0	279.0	435.0							
	108	108	128		128B	–15.5	245.5	401.5	128	11.0	272.0	428.0							
	128	128	148		148B	–25.0	236.0	392.0	148	6.0	267.0	423.0							
LA112M	38	38	38/48	38/48	48B	0.5	160.0	402.0					219	181	0	2xM32x1.5 (2x3/4") [1]	120	120	126
	48	48	68	68	68B	27.0	154.0	396.0											
	68	68	88	88	88B	19.0	146.0	388.0	88	29.5	156.5	398.5							
	88	88	108		108B	0.5	127.5	369.5	108	20.5	147.5	389.5							
	108	108	128		128B	–11.0	116.0	358.0	128	12.5	139.5	381.5							
	128	128	148		148B	–21.5	105.5	347.5	148	9.5	136.5	378.5							

[1] Values in brackets NPT gland

© Siemens AG 2011

Dimensions

Motors, built-in (continued)

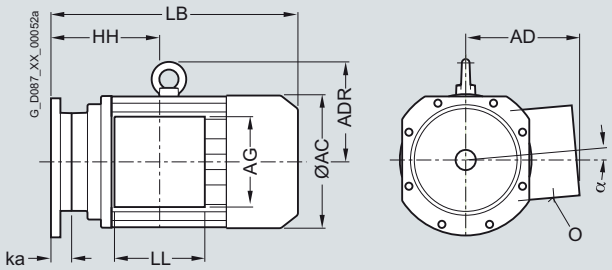

Motor	Gearbox type					ka	HH	LB	Gearbox type	ka	HH	LB	AC	AD	α	O	LL	AG	ADR
	E.	Z.	K.	C.	FZ./FD.				D.										
LA112ZM	38	38	38/48	38/48	48B	0.5	264.0	430.0					219	181	0	2xM32x1.5 (2x3/4") [1]	120	120	126
	48	48	68	68	68B	27.0	258.0	424.0											
	68	68	88	88	88B	19.0	250.0	416.0	88	29.5	260.5	426.5							
	88	88	108		108B	0.5	231.5	397.5	108	20.5	251.5	417.5							
	108	108	128		128B	–11.0	220.0	386.0	128	12.5	243.5	409.5							
	128	128	148		148B	–21.5	209.5	375.5	148	9.5	240.5	406.5							
LA132S	48	48	68	68	68B	0.5	196.5	458.0					259	195	0	2xM32x1.5 (1"+3/4") [1]	140	140	144
	68	68	88	88	88B	54.5	186.5	448.0	88	64.0	196.0	457.5							
	88	88	108		108B	36.0	168.0	429.5	108	56.0	188.0	449.5							
	108	108	128		128B	23.5	155.5	417.0	128	47.0	179.0	440.5							
	128	128	148		148B	13.0	145.0	406.5	148	43.0	175.0	436.5							
	148	148	168		168B	5.0	137.0	398.5	168	31.5	163.5	425.0							
		168	188		188B	–9.5	122.5	384.0	188	–9.5	122.5	384.0							
					208	–9.5	122.5	384.0											
LA132M	48	48	68	68	68B	0.5	196.5	458.0					259	195	0	2xM32x1.5 (1"+3/4") [1]	140	140	144
	68	68	88	88	88B	54.5	186.5	448.0	88	64.0	196.0	457.5							
	88	88	108		108B	36.0	168.0	429.5	108	56.0	188.0	449.5							
	108	108	128		128B	23.5	155.5	417.0	128	47.0	179.0	440.5							
	128	128	148		148B	13.0	145.0	406.5	148	43.0	175.0	436.5							
	148	148	168		168B	5.0	137.0	398.5	168	31.5	163.5	425.0							
		168	188		188B	–9.5	122.5	384.0	188	–9.5	122.5	384.0							
					208	–9.5	122.5	384.0											
LA132ZM	48	48	68	68	68B	0.5	304.5	504.0					259	195	0	2xM32x1.5 (1"+3/4") [1]	140	140	144
	68	68	88	88	88B	54.5	294.5	494.0	88	64.0	260.5	503.5							
	88	88	108		108B	36.0	276.0	475.5	108	56.0	296.0	495.5							
	108	108	128		128B	23.5	263.5	463.0	128	47.0	287.0	486.5							
	128	128	148		148B	13.0	253.0	452.5	148	43.0	283.0	482.5							
	148	148	168		168B	5.0	245.0	444.5	168	31.5	271.5	471.0							
		168	188		188B	–9.5	230.5	430.0	188	–9.5	230.5	430.0							
					208	–9.5	230.5	430.0											

[1] Values in brackets NPT gland

© Siemens AG 2011

Motors, built-in (continued)

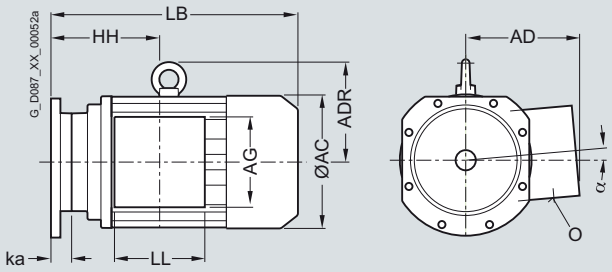

Motor	Gearbox type					ka	HH	LB	Gearbox type	ka	HH	LB	AC	AD	α	O	LL	AG	ADR
	E.	Z.	K.	C.	FZ./FD.				D.										
LA160M	68	68	88	88	88B	0.5	212.0	550.5					313.5	227	0	2xM40x1.5 (1"+3/4") [1]	165	165	195
	88	88	108		108B	25.5	195.5	534.0											
	108	108	128		128B	14.0	184.0	522.5	108	43.5	213.5	552.0							
	128	128	148		148B	–2.5	167.5	506.0	128	34.5	204.5	543.0							
	148	148	168		168B	–10.0	160.0	498.5	148	28.0	198.0	536.5							
		168	188		188B	–24.5	145.5	484.0	168	16.5	186.5	525.0							
		188			208	–24.5	145.5	484.0	188	-24.5	145.5	484.0							
LA160L	68	68	88	88	88B	0.5	212.0	550.5					313.5	227	0	2xM40x1.5 (1"+3/4") [1]	165	165	195
	88	88	108		108B	25.5	195.5	534.0											
	108	108	128		128B	14.0	184.0	522.5	108	43.5	213.5	552.0							
	128	128	148		148B	–2.5	167.5	506.0	128	34.5	204.5	543.0							
	148	148	168		168B	–10.0	160.0	498.5	148	28.0	198.0	536.5							
		168	188		188B	–24.5	145.5	484.0	168	16.5	186.5	525.0							
		188			208	–24.5	145.5	484.0	188	–24.5	145.5	484.0							
LA160ZL	68	68	88	88	88B	0.5	365.0	598.5					313.5	227	0	2xM40x1.5 (1"+3/4") [1]	165	165	195
	88	88	108		108B	25.5	348.5	582.0											
	108	108	128		128B	14.0	337.0	570.5	108	43.5	366.5	600.0							
	128	128	148		148B	–2.5	320.5	554.0	128	34.5	357.5	591.0							
	148	148	168		168B	–10.0	313.0	546.5	148	28.0	351.0	584.5							
		168	188		188B	–24.5	298.5	532.0	168	16.5	339.5	573.0							
		188			208	–24.5	298.5	532.0	188	–24.5	298.5	532.0							
LG180M	88	88	108		108B	0.5	212.5	593.5					348.0	322.5	0	2xM40x1.5 (1 1/4"+3/4") [1]	192	260	226
	108	108	128		128B	31.0	198.0	579.0											
	128	128	148		148B	17.5	184.5	565.5	128	54.5	221.5	602.5							
	148	148	168		168B	10.0	177.0	558.0	148	48.0	215.0	596.0							
		168	188		188B	–4.5	162.5	543.5	168	36.5	203.5	584.5							
		188			208	–4.5	162.5	543.5	188	–4.5	162.5	543.5							
LG180ZM	88	88	108		108B	0.5	212.5	644.5					348.0	322.5	0	2xM40x1.5 (1 1/4"+3/4") [1]	192	260	226
	108	108	128		128B	31.0	198.0	630.0											
	128	128	148		148B	17.5	184.5	616.5	128	54.5	221.5	653.5							
	148	148	168		168B	10.0	177.0	609.0	148	48.0	215.0	647.0							
		168	188		188B	–4.5	162.5	594.5	168	36.5	203.5	635.5							
		188			208	–4.5	162.5	594.5	188	–4.5	162.5	594.5							

[1] Values in brackets NPT gland

© Siemens AG 2011

Motors, built-in (continued)

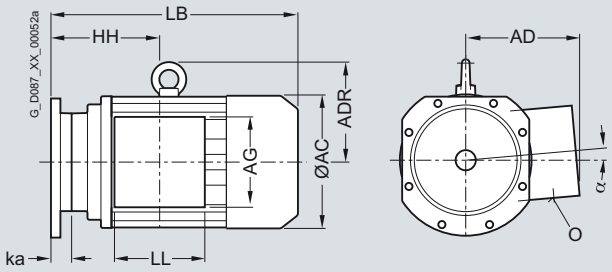

Motor	Gearbox type					ka	HH	LB	Gearbox type	ka	HH	LB	AC	AD	α	O	LL	AG	ADR
	E.	Z.	K.	C.	FZ./FD.				D.										
LG180L	88	88	108		108B	0.5	212.5	593.5					348.0	322.5	0	2xM40x1.5 (1 1/4"+3/4") [1]	192	260	226
	108	108	128		128B	31.0	198.0	579.0											
	128	128	148		148B	17.5	184.5	565.5	128	54.5	221.5	602.5							
	148	148	168		168B	10.0	177.0	558.0	148	48.0	215.0	596.0							
		168	188		188B	–4.5	162.5	543.5	168	36.5	203.5	584.5							
		188			208	–4.5	162.5	543.5	188	–4.5	162.5	543.5							
LG180ZL	88	88	108		108B	0.5	212.5	644.5					348.0	322.5	0	2xM40x1.5 (1 1/4"+3/4") [1]	192	260	226
	108	108	128		128B	31.0	198.0	630.0											
	128	128	148		148B	17.5	184.5	616.5	128	54.5	221.5	653.5							
	148	148	168		168B	10.0	177.0	609.0	148	48.0	215.0	647.0							
		168	188		188B	–4.5	162.5	594.5	168	36.5	203.5	635.5							
		188			208	–4.5	162.5	594.5	188	–4.5	162.5	594.5							
LG200L	108	108	128		128B	31.0	228.0	635.0					385	301.0	0	2xM50x1.5 (1 1/4"+3/4") [1]	192	260	256
	128	128	148		148B	17.5	214.5	621.5	128	54.5	251.5	658.5							
	148	148	168		168B	10.0	207.0	614.0	148	48.0	245	652.0							
		168	188		188B	–4.5	192.5	599.5	168	36.5	233.5	640.5							
		188			208	–4.5	192.5	599.5	188	–4.5	192.5	599.5							
K4-LGI225S	108	108	128		128B	247.0	443.0	896.0					442	325.0	0	2xM50x1.5 (2x1 1/2") [1]	192	260	278
LG225S	128	128	148		148B	45.0	250.0	692.5											
	148	148	168		168B	37.5	242.5	685.0	148	75.5	280.5	723.0							
		168	188		188B	23.0	228.5	670.5	168	64.0	269.0	711.5							
		188			208	23.0	228.5	670.5	188	23.0	228.0	670.5							
K4-LGI225M	108	108	128		128B	247.0	443.0	896.0					442	325.0	0	2xM50x1.5 (2x1 1/2") [1]	192	260	278
LG225M	128	128	148		148B	45.0	250.0	692.5											
	148	148	168		168B	37.5	242.5	685.0	148	75.5	280.5	723.0							
		168	188		188B	23.0	228.5	670.5	168	64.0	269.0	711.5							
		188			208	23.0	228.5	670.5	188	23.0	228.0	670.5							
K4-LGI225ZM	108	108	128		128B	247.0	443.0	956.0					442	325	0	2xM50x1.5 (2x1 1/2") [1]	192	260	278
LG225ZM	128	128	148		148B	45.0	250.0	752.5											
	148	148	168		168B	37.5	242.5	745.0	148	75.5	280.5	783.0							
		168	188		188B	23.0	228.5	728.5	168	64.0	269.0	771.5							
		188			208	23.0	228.5	728.5	188	23.0	228.0	730.5							
K4-LGI250M	128	128	148		148B	233.0	470.0	980.0					495	392	0	2xM63x1.5 (2x2 1/2") [1]	236	300	310
LG250M	148	148				38.0	278.0	778.5											
		168	168		168B	23.5	263.5	764.0											
		188	188		188B	23.5	263.5	764.0	188	23.5	263.5	764.0							
					208	23.5	264	764.0											

[1] Values in brackets NPT gland

© Siemens AG 2011

Motors, built-in (continued)

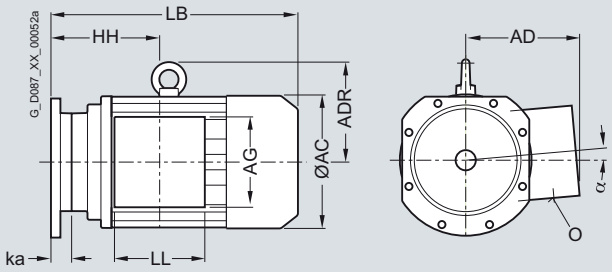

Motor	Gearbox type					ka	HH	LB	Gearbox type	ka	HH	LB	AC	AD	α	O	LL	AG	ADR
	E.	Z.	K.	C.	FZ./FD.				D.										
K4-LGI250ZM	128	128	148		148B	233.0	470.0	1 050.0					495	392	0	2xM63x1.5 (2x2 1/2") [1]	236	300	310
LG250ZM	148	148				38.0	278.0	848.5											
		168	168		168B	23.5	263.5	834.0											
		188	188		188B	23.5	263.5	834.0	188	23.5	263.5	834.0							
					208	23.5	264.0	834.0											
K4-LGI280S	148	148	168		168B	238.0	490.0	1 058.0					555	432	0	2xM63x1.5 (2x2 1/2")[1]	236	300	336
		168	188		188B	224.0	476.0	1 044.0											
		188			208	224.0	476.0	1 044.0	188	224.0	476.0	1 044.0							
K4-LGI280M	148	148	168		168B	238.0	490.0	1 058.0					555	432	0	2xM63x1.5 (2x2 1/2")[1]	236	300	336
		168	188		188B	224.0	476.0	1 044.0											
		188			208	224.0	476.0	1 044.0	188	224.0	476.0	1 044.0							
K4-LGI280ZM	148	148	168		168B	238.0	490.0	1 168.0					555	432	0	2xM63x1.5 (2x2 1/2")[1]	236	300	336
		168	188		188B	224.0	476.0	1 154.0											
		188			208	224.0	476.0	1 154.0	188	224.0	476.0	1 154.0							
K2-LGI315S			188		188B	300.0	585.0	1 232.0					610	500	0	2xM63x1.5	307	380	390
		188			208	300.0	585.0	1 232.0											
K2-LGI315M			188		188B	300.0	585.0	1 232.0					610	500	0	2xM63x1.5	307	380	390
		188			208	300.0	585.0	1 232.0											
K2-LGI315L			188		188B	300.0	585.0	1 392.0					610	500	0	2xM63x1.5	307	380	390
		188			208	300.0	585.0	1 392.0											
K2-LGI315ZL			188		188B	300.0	585.0	1 532.0					610	500	0	2xM63x1.5	307	380	390
		188			208	300.0	585.0	1 532.0											

[1] Values in brackets NPT gland

8

© Siemens AG 2011

Dimensions

Motors with brake, built-in

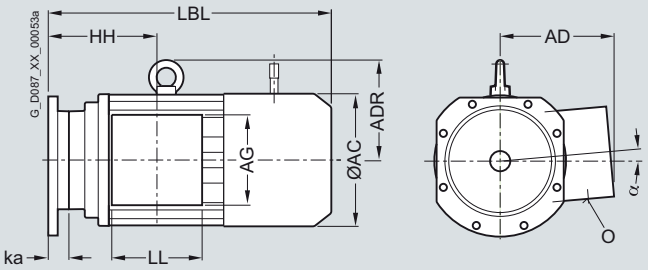

Motor	Gearbox type					ka	HH	LBL	Gearbox type	ka	HH	LBL	AC	AD	α	O	LL	AG	ADR
	E.	Z.	K.	C.	FZ./FD.				D.										
LA71		18		28		0	40.5	239.5	18	0	40.5	239.5	139.0	146	0	1xM20x1.5/ 1xM25x1.5 (1/2"+3/4") [1]	90	90	–
		28	B28		28	0	58.5	257.5	28	0	58.5	257.5							
			B38		38B	0	89.0	288.0											
	38	38	38/48	38/48	48B	25.5	114.5	313.5	38	40.5	129.5	328.5							
	48	48	68	68	68B	20.0	109.0	308.0	48	37.0	126.0	325.0							
	68	68	88	88	88B	14.0	103.0	302.0	68	32.5	121.5	320.5							
									88	24.0	113.0	312.0							
LA71Z		18		28		0	40.5	258.5	18	0	40.5	258.5	139.0	146	0	1xM20x1.5/ 1xM25x1.5 (1/2"+3/4") [1]	90	90	–
		28	B28		28	0	58.5	276.5	28	0	58.5	276.5							
			B38		38B	0	89.0	307.0											
	38	38	38/48	38/48	48B	25.5	114.5	332.5	38	40.5	129.5	347.5							
	48	48	68	68	68B	20.0	109.0	327.0	48	37.0	126.0	344.0							
	68	68	88	88	88B	14.0	103.0	321.0	68	32.5	121.5	339.5							
									88	24.0	113.0	331.0							
LA80		28			28	34.0	123.0	368.0	28	34.0	123.0	368.0	156.5	155	0	1xM20x1.5/ 1xM25x1.5 (1/2"+3/4") [1]	90	90	–
			B38		38B	0	88.5	333.5											
	38	38	38/48	38/48	48B	25.5	114.0	359.0	38	40.5	129.0	374.0							
	48	48	68	68	68B	20.0	108.5	353.5	48	37.0	125.5	370.5							
	68	68	88	88	88B	14.0	102.5	347.5	68	32.5	121.0	366.0							
			108		108B	–1.0	87.5	332.5	88	24.0	112.5	357.5							
									108	18.0	106.5	351.5							
LA80Z		28			28	34.0	196.0	390.5	28	34.0	196.0	390.5	156.5	155	0	1xM20x1.5/ 1xM25x1.5 (1/2"+3/4") [1]	90	90	–
			B38		38B	0	161.0	356.0											
	38	38	38/48	38/48	48B	25.5	187.0	381.5	38	40.5	202.0	396.5							
	48	48	68	68	68B	20.0	181.5	376.0	48	37.0	198.5	393.0							
	68	68	88	88	88B	14.0	175.5	370.0	68	32.5	194.0	388.5							
			108		108B	–1.0	160.5	355.0	88	24.0	185.5	380.0							
									108	18.0	179.5	374.0							
LA90S		28	B28		28	0	87.0	370.5	28	0	87.0	370.5	174.0	163	0	1xM20x1.5/ 1xM25x1.5 (1/2"+3/4") [1]	90	90	–
			B38		38B	0	88.5	372.0											
	38	38	38/48	38/48	48B	25.5	114.0	397.5	38	40.5	129.0	412.5							
	48	48	68	68	68B	20.0	108.5	392.0	48	37.0	125.5	409.0							
	68	68	88	88	88B	14.0	102.5	386.0	68	32.5	121.0	404.5							
	88	88	108		108B	–1.0	87.5	371.0	88	24.0	112.5	396.0							
	108	108	128		128B	–12.5	76.0	359.5	108	18.0	106.5	390.0							
									128	11.0	99.5	383.0							

[1] Values in brackets NPT gland

© Siemens AG 2011

Motors with brake, built-in (continued)

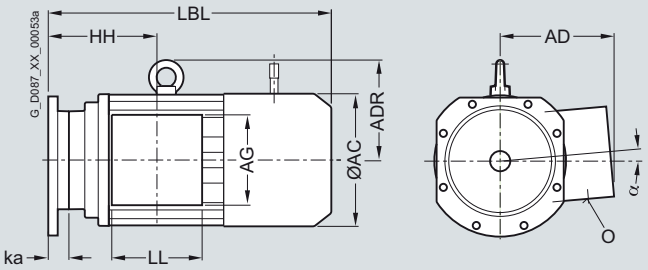

Motor	Gearbox type					ka	HH	LBL	Gearbox type	ka	HH	LBL	AC	AD	α	O	LL	AG	ADR
	E.	Z.	K.	C.	FZ./FD.				D.										
LA90L		28	B28		28	0	87.0	370.5	28	0	87.0	370.5	174.0	163	0	1xM20x1.5/ 1xM25x1.5 (1/2"+3/4") [1]	90	90	–
			B38		38B	0	88.5	372.0											
	38	38	38/48	38/48	48B	25.5	114.0	397.5	38	40.5	129.0	412.5							
	48	48	68	68	68B	20.0	108.5	392.0	48	37.0	125.5	409.0							
	68	68	88	88	88B	14.0	102.5	386.0	68	32.5	121.0	404.5							
	88	88	108		108B	–1.0	87.5	371.0	88	24.0	112.5	396.0							
	108	108	128		128B	–12.5	76.0	359.5	108	18.0	106.5	390.0							
									128	11.0	99.5	383.0							
LA90ZL		28	B28		28	0	211.0	415.5	28	0	211.0	415.5	174	163	0	1xM20x1.5/ 1xM25x1.5 (1/2"+3/4") [1]	90	90	–
			B38		38B	0	212.5	417.0											
	38	38	38/48	38/48	48B	25.5	238.0	442.5	38	40.5	253.0	457.5							
	48	48	68	68	68B	20.0	232.5	437.0	48	37.0	249.5	454.0							
	68	68	88	88	88B	14.0	226.5	431.0	68	32.5	245.0	449.5							
	88	88	108		108B	–1.0	211.5	416.0	88	24.0	236.5	441.0							
	108	108	128		128B	–12.5	200.0	404.5	108	18.0	230.5	435.0							
									128	11.0	223.5	428.0							
LA100L		28	B28		28	34.0	163.5	462.5					195	168	0	2xM32x1.5 (2x3/4") [1]	120	120	116
			B38		38B	0	129.0	428.0											
	38	38	38/48	38/48	48B	25.5	154.5	453.5	48	37.0	166.0	465.0							
	48	48	68	68	68B	20.0	149.0	448.0	68	32.5	161.5	460.5							
	68	68	88	88	88B	14.0	143.0	442.0	88	24.0	153.0	452.0							
	88	88	108		108B	–3.5	125.5	424.5	108	18.0	147.0	446.0							
	108	108	128		128B	–15.5	113.5	412.5	128	11.0	140.0	439.0							
	128	128	148		148B	–25.0	104.0	403.0	148	6.0	135.0	434.0							
LA100ZL		28	B28		28	34.0	295.5	532.5					195	168	0	2xM32x1.5 (2x3/4") [1]	120	120	116
			B38		38B	0	261.0	498.0											
	38	38	38/48	38/48	48B	25.5	286.5	523.5	48	37.0	298.0	535.0							
	48	48	68	68	68B	20.0	281.0	518.0	68	32.5	293.5	530.5							
	68	68	88	88	88B	14.0	275.0	513.0	88	24.0	285.0	522.0							
	88	88	108		108B	–3.5	257.5	501.5	108	18.0	279.0	516.0							
	108	108	128		128B	–15.5	245.5	482.5	128	11.0	272.0	509.0							
	128	128	148		148B	–25.0	236.0	463.0	148	6.0	267.0	504.0							
LA112M	38	38	38/48	38/48	48B	0.5	160.0	483.0					219	181	0	2xM32x1.5 (2x3/4") [1]	120	120	126
	48	48	68	68	68B	27.0	154.0	477.0											
	68	68	88	88	88B	19.0	146.0	469.0	88	29.5	156.5	479.5							
	88	88	108		108B	0.5	127.5	450.5	108	20.5	147.5	470.5							
	108	108	128		128B	–11.0	116.0	439.0	128	12.5	139.5	462.5							
	128	128	148		148B	–21.5	105.5	428.5	148	9.5	136.5	459.5							

[1] Values in brackets NPT gland

© Siemens AG 2011

Dimensions

Motors with brake, built-in (continued)

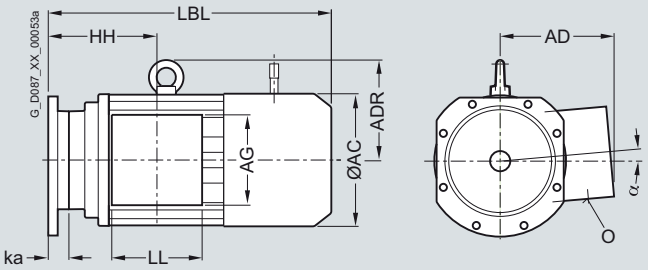

Motor	Gearbox type					ka	HH	LBL	Gearbox type	ka	HH	LBL	AC	AD	α	O	LL	AG	ADR
	E.	Z.	K.	C.	FZ./FD.				D.										
LA112ZM	38	38	38/48	38/48	48B	0.5	264.0	511.0					219	181	0	2xM32x1.5 (2x3/4") [1]	120	120	126
	48	48	68	68	68B	27.0	258.0	505.0											
	68	68	88	88	88B	19.0	250.0	497.0	88	29.5	260.5	507.5							
	88	88	108		108B	0.5	231.5	478.5	108	20.5	251.5	498.5							
	108	108	128		128B	–11.0	220.0	467.0	128	12.5	243.5	490.5							
	128	128	148		148B	–21.5	209.5	456.5	148	9.5	240.5	487.5							
LA132S	48	48	68	68	68B	0.5	196.5	560.0					259	195	0	2xM32x1.5 (1"+3/4") [1]	140	140	144
	68	68	88	88	88B	54.5	186.5	550.0	88	64.0	196.0	559.5							
	88	88	108		108B	36.0	168.0	531.5	108	56.0	188.0	551.5							
	108	108	128		128B	23.5	155.5	519.0	128	47.0	179.0	542.5							
	128	128	148		148B	13.0	145.0	508.5	148	43.0	175.0	538.5							
	148	148	168		168B	5.0	137.0	500.5	168	31.5	163.5	527.0							
		168	188		188B	–9.5	122.5	486.0	188	–9.5	122.5	486.0							
					208	–9.5	122.5	486.0											
LA132M	48	48	68	68	68B	0.5	196.5	560.0					259	195	0	2xM32x1.5 (1"+3/4") [1]	140	140	144
	68	68	88	88	88B	54.5	186.5	550.0	88	64.0	196.0	559.5							
	88	88	108		108B	36.0	168.0	531.5	108	56.0	188.0	551.5							
	108	108	128		128B	23.5	155.5	519.0	128	47.0	179.0	542.5							
	128	128	148		148B	13.0	145.0	508.5	148	43.0	175.0	538.5							
	148	148	168		168B	5.0	137.0	500.5	168	31.5	163.5	527.0							
		168	188		188B	–9.5	122.5	486.0	188	–9.5	122.5	486.0							
					208	–9.5	122.5	486.0											
LA132ZM	48	48	68	68	68B	0.5	304.5	606.0					259	195	0	2xM32x1.5 (1"+3/4") [1]	140	140	144
	68	68	88	88	88B	54.5	294.5	596.0	88	64.0	260.5	605.5							
	88	88	108		108B	36.0	276.0	577.5	108	56.0	296.0	597.5							
	108	108	128		128B	23.5	263.5	565.0	128	47.0	287.0	588.5							
	128	128	148		148B	13.0	253.0	554.5	148	43.0	283.0	584.5							
	148	148	168		168B	5.0	245.0	546.5	168	31.5	271.5	573.0							
		168	188		188B	–9.5	230.5	532.0	188	–9.5	230.5	532.0							
					208	–9.5	230.5	532.0											
LA160M	68	68	88	88	88B	0.5	212.0	669.0					313.5	227.0	0	2xM40x1.5 (1"+3/4") [1]	165	165	195
	88	88	108		108B	25.5	195.5	652.5											
	108	108	128		128B	14.0	184.0	641.0	108	43.5	213.5	670.5							
	128	128	148		148B	–2.5	167.5	624.5	128	34.5	204.5	661.5							
	148	148	168		168B	–10.0	160.0	617.0	148	28.0	198.0	655.0							
		168	188		188B	–24.5	145.5	602.5	168	16.5	186.5	643.5							
		188			208	–24.5	145.5	602.5	188	–24.5	145.5	602.5							

[1] Values in brackets NPT gland

© Siemens AG 2011

Motors with brake, built-in (continued)

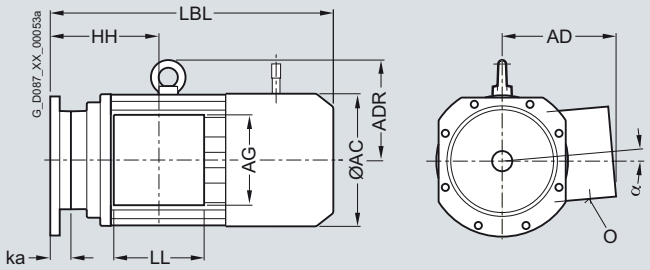

Motor	Gearbox type					ka	HH	LBL	Gearbox type	ka	HH	LBL	AC	AD	α	O	LL	AG	ADR
	E.	Z.	K.	C.	FZ./FD.				D.										
LA160L	68	68	88	88	88B	0.5	212.0	669.0					313.5	227.0	0	2xM40x1.5 (1"+3/4") [1]	165	165	195
	88	88	108		108B	25.5	195.5	652.5											
	108	108	128		128B	14.0	184.0	641.0	108	43.5	213.5	670.5							
	128	128	148		148B	–2.5	167.5	624.5	128	34.5	204.5	661.5							
	148	148	168		168B	–10.0	160.0	617.0	148	28.0	198.0	655.0							
		168	188		188B	–24.5	145.5	602.5	168	16.5	186.5	643.5							
		188			208	–24.5	145.5	602.5	188	–24.5	145.5	602.5							
LA160ZL	68	68	88	88	88B	0.5	365.0	717.0					313.5	227.0	0	2xM40x1.5 (1"+3/4") [1]	165	165	195
	88	88	108		108B	25.5	348.5	700.5											
	108	108	128		128B	14.0	337.0	689.0	108	43.5	366.5	718.5							
	128	128	148		148B	–2.5	320.5	672.5	128	34.5	357.5	709.5							
	148	148	168		168B	–10.0	313.0	665.0	148	28.0	351.0	703.0							
		168	188		188B	–24.5	298.5	650.5	168	16.5	339.5	691.5							
		188			208	–24.5	298.5	650.5	188	–24.5	298.5	650.5							
LG180M	88	88	108		108B	0.5	212.5	715.5					348.0	322.5	0	2xM40x1.5 (1 1/4"+3/4") [1]	192	260	226
	108	108	128		128B	31.0	198.0	701.0											
	128	128	148		148B	17.5	184.5	687.5	128	54.5	221.5	724.5							
	148	148	168		168B	10.0	177.0	680.0	148	48.0	215.0	718.0							
		168	188		188B	–4.5	162.5	665.5	168	36.5	203.5	706.5							
		188			208	–4.5	162.5	665.5	188	–4.5	162.5	665.5							
LG180ZM	88	88	108		108B	0.5	212.5	766.5					348.0	322.5	0	2xM40x1.5 (1 1/4"+3/4") [1]	192	260	226
	108	108	128		128B	31.0	198.0	752.0											
	128	128	148		148B	17.5	184.5	738.5	128	54.5	221.5	775.5							
	148	148	168		168B	10.0	177.0	731.0	148	48.0	215.0	769.0							
		168	188		188B	–4.5	162.5	716.5	168	36.5	203.5	757.5							
		188			208	–4.5	162.5	716.5	188	–4.5	162.5	716.5							
LG180L	88	88	108		108B	0.5	212.5	715.5					348	322.5	0	2xM40x1.5 (1 1/4"+3/4") [1]	192	260	226
	108	108	128		128B	31.0	198.0	701.0											
	128	128	148		148B	17.5	184.5	687.5	128	54.5	221.5	724.5							
	148	148	168		168B	10.0	177.0	680.0	148	48.0	215.0	718.0							
		168	188		188B	–4.5	162.5	665.5	168	36.5	203.5	706.5							
		188			208	–4.5	162.5	665.5	188	–4.5	162.5	665.5							
LG180ZL	88	88	108		108B	0.5	212.5	766.5					348	322.5	0	2xM40x1.5 (1 1/4"+3/4") [1]	192	260	226
	108	108	128		128B	31.0	198.0	752.0											
	128	128	148		148B	17.5	184.5	738.5	128	54.5	221.5	775.5							
	148	148	168		168B	10.0	177.0	731.0	148	48.0	215.0	769.0							
		168	188		188B	–4.5	162.5	716.5	168	36.5	203.5	757.5							
		188			208	–4.5	162.5	716.5	188	–4.5	162.5	716.5							

[1] Values in brackets NPT gland

© Siemens AG 2011

Dimensions

Motors with brake, built-in (continued)

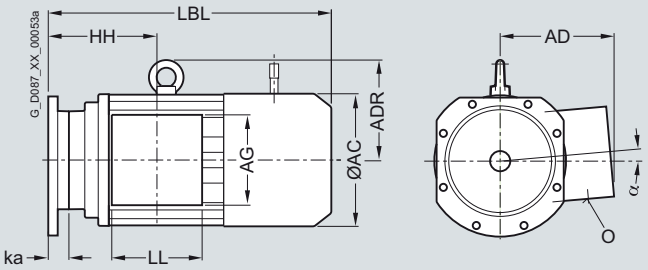

Motor	Gearbox type					ka	HH	LBL	Gearbox type	ka	HH	LBL	AC	AD	α	O	LL	AG	ADR
	E.	Z.	K.	C.	FZ./FD.				D.										
LG200L	108	108	128		128B	31.0	228.0	761.0					385	301.0	0	2xM50x1.5 (1 1/4"+3/4") [1]	192	260	256
	128	128	148		148B	17.5	214.5	747.5	128	54.5	251.5	784.5							
	148	148	168		168B	10.0	207.0	740.0	148	48.0	245.0	778.0							
		168	188		188B	–4.5	192.5	725.5	168	36.5	233.5	766.5							
		188			208	–4.5	192.5	725.5	188	–4.5	192.5	725.5							
K4-LGI225S	108	108	128		128B	247.0	443.0	1 135.0					442	325.0	0	2xM50x1.5 (2x1 1/2") [1]	192	260	278
LG225S	128	128	148		148B	45.0	250.0	931.5											
	148	148	168		168B	37.5	242.5	924.0	148	75.5	280.5	962.0							
		168	188		188B	23.0	228.0	909.5	168	64.0	269.0	950.5							
		188			208	23.0	228.0	909.5	188	23.0	228.0	909.5							
K4-LGI225M	108	108	128		128B	247.0	443.0	1 135.0					442	325.0	0	2xM50x1.5 (2x1 1/2") [1]	192	260	278
LG225M	128	128	148		148B	45.0	250.0	931.5											
	148	148	168		168B	37.5	242.5	924.0	148	75.5	280.5	962.0							
		168	188		188B	23.0	228.0	909.5	168	64.0	269.0	950.5							
		188			208	23.0	228.0	909.5	188	23.0	228.0	909.5							
K4-LGI225ZM	108	108	128		128B	247.0	443.0	1 195.0					442	325	0	2xM50x1.5 (2x1 1/2") [1]	192	260	278
LG225ZM	128	128	148		148B	45.0	250.0	991.5											
	148	148	168		168B	37.5	242.5	984.0	148	75.5	280.5	1 040.0							
		168	188		188B	23.0	228.0	969.5	168	64.0	269.0	1 028.5							
		188			208	23.0	228.0	969.5	188	23.0	228.0	987.5							
K4-LGI250M	128	128	148		148B	233.0	470.0	1 205.0					495	392	0	2xM63x1.5 (2x2 1/2") [1]	236	300	310
LG250M	148	148				38.0	278.0	1 003.5											
		168	168		168B	23.5	263.5	989.0											
		188	188		188B	23.5	263.5	989.0	188	23.5	263.5	989.0							
					208	23.5	264.0	989.0											
K4-LGI250ZM	128	128	148		148B	233.0	471.0	1 276.0					495	392	0	2xM63x1.5 (2x2 1/2") [1]	236	300	310
LG250ZM	148	148				38.0	279.0	1 074.5											
		168	168		168B	23.5	264.5	1 061.5											
		188	188		188B	23.5	264.5	1 061.5	188	23.5	263.5	1 059.5							
					208	23.5	264.5	1 059.0											
K4-LGI280S	148	148	168		168B	238.0	490.0	1 285.0					555	432	0	2xM63x1.5 (2x2 1/2") [1]	236	300	336
		168	188		188B	224.0	476.0	1 271.0											
		188			208	224.0	476.0	1 271.0	188	224.0	476.0	1 271.0							
K4-LGI280M	148	148	168		168B	238.0	490.0	1 285.0					555	432	0	2xM63x1.5 (2x2 1/2") [1]	236	300	336
		168	188		188B	224.0	476.0	1 271.0											
		188			208	224.0	476.0	1 271.0	188	224.0	476.0	1 271.0							
K4-LGI280ZM	148	148	168		168B	238.0	490.0	1 395.0					555	432	0	2xM63x1.5 (2x2 1/2") [1]	236	300	336
		168	188		188B	224.0	476.0	1 381.0											
		188			208	224.0	476.0	1 381.0	188	224.0	476.0	1 381.0							

[1] Values in brackets NPT gland

© Siemens AG 2011

Motors with brake, built-in (continued)

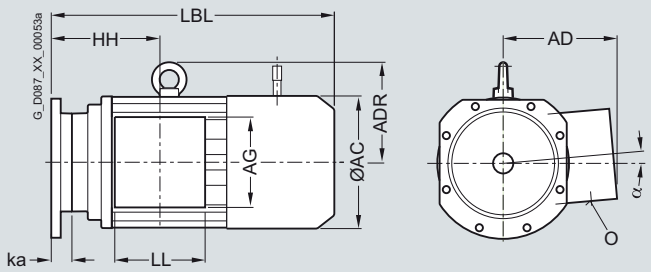

Motor	Gearbox type					ka	HH	LBL	Gearbox type	ka	HH	LBL	AC	AD	α	O	LL	AG	ADR
	E.	Z.	K.	C.	FZ./FD.				D.										
K2-LGI315S			188		188B	300.0	585.0	1 497.0					610	500	0	2xM63x1.5	307	380	390
		188			208	300.0	585.0	1 497.0											
K2-LGI315M			188		188B	300.0	585.0	1 497.0					610	500	0	2xM63x1.5	307	380	390
		188			208	300.0	585.0	1 497.0											
K2-LGI315L			188		188B	300.0	585.0	-					610	500	0	2xM63x1.5	307	380	390
		188				300.0	585.0	-											
K2-LGI315ZL			188		188B	300.0	585.0	-					610	500	0	2xM63x1.5	307	380	390
		188				300.0	585.0	-											

8

© Siemens AG 2011

Dimensions

Standard motors, IEC flange

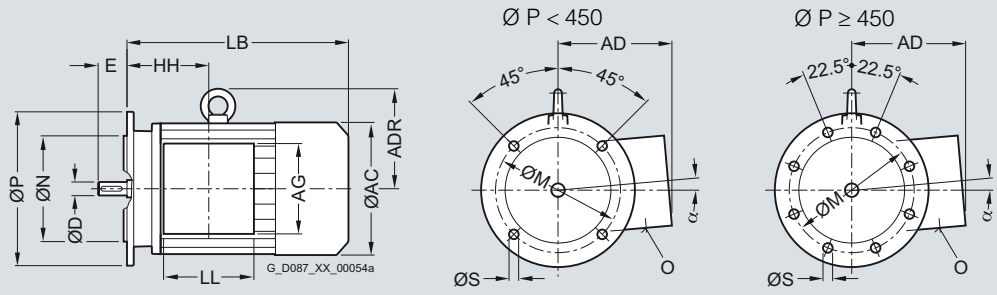

Motor	HH	LB	P	N	M	S	D	E	AC	AD	α	O	LL	AG	ADR
LAI71	63.5	207.5	160	110	130	10.0	14	30	139.0	146.0	0	M20x1.5 / M25x1.5	90	90	–
LAI80	63.5	245.0	200	130	165	12.0	19	40	156.5	155.0	0	M20x1.5 / M25x1.5	90	90	–
LAI90S	79.0	291.5	200	130	165	12.0	24	50	174.0	163.0	0	M20x1.5 / M25x1.5	90	90	–
LAI90L	79.0	291.5	200	130	165	12.0	24	50	174.0	163.0	0	M20x1.5 / M25x1.5	90	90	–
LAI90ZL	79.0	336.5	200	130	165	12.0	24	50	174.0	163.0	0	M20x1.5 / M25x1.5	90	90	–
LAI100L	102.0	320.0	250	180	215	14.5	28	60	195.0	168.0	0	2xM32x1.5	120	120	116
LAI112M	102.0	344.0	250	180	215	14.5	28	60	219.0	181.0	0	2xM32x1.5	120	120	126
LAI132S	128.0	389.5	300	230	265	14.5	38	80	259.0	195.0	0	2xM32x1.5	140	140	144
LAI132M	128.0	389.5	300	230	265	14.5	38	80	259.0	195.0	0	2xM32x1.5	140	140	144
LAI132ZM	128.0	435.5	300	230	265	14.5	38	80	259.0	195.0	0	2xM32x1.5	140	140	144
LAI160M	160.5	499.0	350	250	300	18.5	42	110	313.5	227.0	0	2xM40x1.5	165	165	195
LAI160L	160.5	499.0	350	250	300	18.5	42	110	313.5	227.0	0	2xM40x1.5	165	165	195
LGI180M	157.0	538.0	350	250	300	18.5	48	110	348.0	322.5	0	2xM40x1.5	192	260	226
LGI180ZM	157.0	589.0	350	250	300	18.5	48	110	348.0	322.5	0	2xM40x1.5	192	260	226
LGI180L	157.0	538.0	350	250	300	18.5	48	110	348.0	322.5	0	2xM40x1.5	192	260	226
LG180ZL	157.0	589.0	350	250	300	18.5	48	110	348.0	322.5	0	2xM40x1.5	192	260	226
LGI200L	196.0	603.0	400	300	350	18.5	55	110	385.0	301.0	0	2xM50x1.5	192	260	256
LGI225S	196.0	649.0	450	350	400	18.5	60	140	442.0	325.0	0	2xM50x1.5	192	260	
LGI225M	196.0	649.0	450	350	400	18.5	60	140	442.0	325.0	0	2xM50x1.5	192	260	
LGI225ZM	196.0	709.0	450	350	400	18.5	60	140	442.0	325.0	0	2xM50x1.5	192	260	
LGI250M	237.0	747.0	550	450	500	18.5	65	140	495.0	392.0	0	2xM63x1.5	236	300	
LGI250ZM	237.0	817.0	550	450	500	18.5	65	140	495.0	392.0	0	2xM63x1.5	236	300	
LGI280S	252.0	820.0	550	450	500	18.5	75	140	555.0	432.0	0	2xM63x1.5	236	300	
LGI280M	252.0	820.0	550	450	500	18.5	75	140	555.0	432.0	0	2xM63x1.5	236	300	
LGI280ZM	285.0	930.0	550	450	500	18.5	75	140	555.0	432.0	0	2xM63x1.5	236	300	
LGI315S	285.0	932.0	660	550	600	24.0	80	170	610.0	500.0	0	2xM63x1.5	307	380	
LGI315M	285.0	932.0	660	550	600	24.0	80	170	610.0	500.0	0	2xM63x1.5	307	380	
LGI315L	285.0	1 092.0	660	550	600	24.0	80	170	610.0	500.0	0	2xM63x1.5	307	380	
LGI315ZL	285.0	1 232.0	660	550	600	24.0	80	170	610.0	500.0	0	2xM63x1.5	307	380	

© Siemens AG 2011

Motors with brake, IEC flange

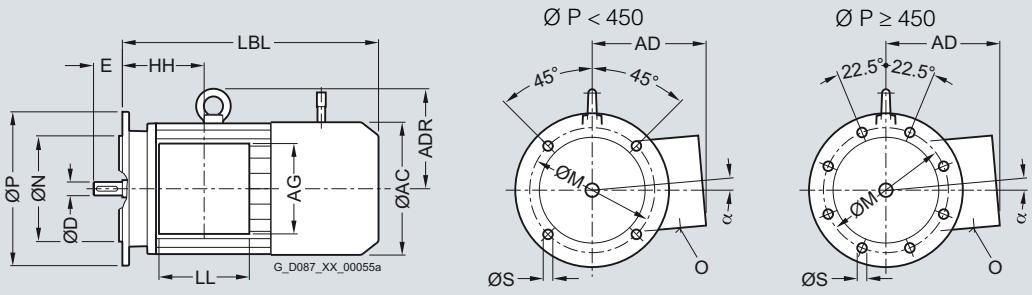

Motor	HH	LBL	P	N	M	S	D	E	AC	AD	α	O	LL	AG	ADR
LAI71	63.5	262.5	160	110	130	10.0	14	30	139.0	146.0	0	M20x1.5 / M25x1.5	90	90	–
LAI80	63.5	308.5	200	130	165	12.0	19	40	156.5	155.0	0	M20x1.5 / M25x1.5	90	90	–
LAI90S	79.0	362.5	200	130	165	12.0	24	50	174.0	163.0	0	M20x1.5 / M25x1.5	90	90	–
LAI90L	79.0	362.5	200	130	165	12.0	24	50	174.0	163.0	0	M20x1.5 / M25x1.5	90	90	–
LAI90ZL	79.0	407.5	200	130	165	12.0	24	50	174.0	163.0	0	M20x1.5 / M25x1.5	90	90	–
LAI100L	102.0	401.0	250	180	215	14.5	28	60	195.0	168.0	0	2xM32x1.5	120	120	116
LAI112M	102.0	425.0	250	180	215	14.5	28	60	219.0	181.0	0	2xM32x1.5	120	120	126
LAI132S	128.0	491.5	300	230	265	14.5	38	80	259.0	195.0	0	2xM32x1.5	140	140	144
LAI132M	128.0	491.5	300	230	265	14.5	38	80	259.0	195.0	0	2xM32x1.5	140	140	144
LAI132ZM	128.0	537.5	300	230	265	14.5	38	80	259.0	195.0	0	2xM32x1.5	140	140	144
LAI160M	160.5	617.5	350	250	300	18.5	42	110	313.5	227.0	0	2xM40x1.5	165	165	195
LAI160L	160.5	617.5	350	250	300	18.5	42	110	313.5	227.0	0	2xM40x1.5	165	165	195
LGI180M	157.0	660.0	350	250	300	18.5	48	110	348.0	322.5	0	2xM40x1.5	192	260	226
LGI180ZM	157.0	711.0	350	250	300	18.5	48	110	348.0	322.5	0	2xM40x1.5	192	260	226
LGI180L	157.0	660.0	350	250	300	18.5	48	110	348.0	322.5	0	2xM40x1.5	192	260	226
LGI180ZL	157.0	711.0	350	250	300	18.5	48	110	348.0	322.5	0	2xM40x1.5	192	260	226
LGI200L	196.0	729.0	400	300	350	18.5	55	110	385.0	301.0	0	2xM50x1.5	192	260	256
LGI225S	196.0	888.0	450	350	400	18.5	60	140	442.0	325.0	0	2xM50x1.5	192	260	
LGI225M	196.0	888.0	450	350	400	18.5	60	140	442.0	325.0	0	2xM50x1.5	192	260	
LGI225ZM	196.0	948.0	450	350	400	18.5	60	140	442.0	325.0	0	2xM50x1.5	192	260	
LGI250M	237.0	972.0	550	450	500	18.5	65	140	495.0	392.0	0	2xM63x1.5	236	300	
LGI250ZM	237.0	1 042.0	550	450	500	18.5	65	140	495.0	392.0	0	2xM63x1.5	236	300	
LGI280S	252.0	1 047.0	550	450	500	18.5	75	140	555.0	432.0	0	2xM63x1.5	236	300	
LGI280M	252.0	1 047.0	550	450	500	18.5	75	140	555.0	432.0	0	2xM63x1.5	236	300	
LGI280ZM	252.0	1 157.0	550	450	500	18.5	75	140	555.0	432.0	0	2xM63x1.5	236	300	
LGI315S	285.0	1 197.0	660	550	600	24.0	80	170	610.0	500.0	0	2xM63x1.5	307	380	
LGI315M	285.0	1 197.0	660	550	600	24.0	80	170	610.0	500.0	0	2xM63x1.5	307	380	
LGI315L	285.0	-	660	550	600	24.0	80	170	610.0	500.0	0	2xM63x1.5	307	380	
LGI315ZL	285.0	-	660	550	600	24.0	80	170	610.0	500.0	0	2xM63x1.5	307	380	

© Siemens AG 2011

Dimensions

Standard motors, B14 flange for worm geared motors S

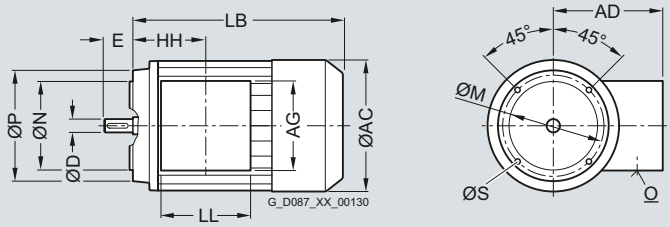

Motor	HH	LB	P	N	M	S	D	E	AC	AD	O	LL	AG
LAI63	69.5	179.5	90	60	75	M5	11	23	118.0	101.0	M20x1.5/M25x1.5	75	75
										115.0 [1]		90 [1]	90 [1]
										135.5 [2]		90 [2]	90 [2]
LAI71	63.5	210.0	105	70	85	M6	14	30	139.0	111.0	M20x1.5/M25x1.5	75	75
										125.0 [1]		90 [1]	90 [1]
										146.0 [2]		90 [2]	90 [2]
LAI80	63.5	233.5	120	80	100	M6	19	40	156.5	120.0	M20x1.5/M25x1.5	75	75
										120.0 [1]		90 [1]	90 [1]
										155.0 [2]		90 [2]	90 [2]
LAI80Z	63.5	268.5	120	80	100	M6	19	40	156.5	120.0	M20x1.5/M25x1.5	75	75
										120.0 [1]		90 [1]	90 [1]
										155.0 [2]		90 [2]	90 [2]

[1] For motors with more than 6 terminals and 2 auxiliary terminals
[2] For motors with encoder or brake

8

Motors with brake, B14 flange for worm geared motors S

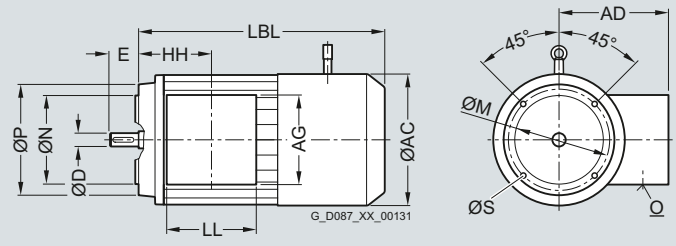

Motor	HH	LBL	P	N	M	S	D	E	AC	AD	O	LL	AG
LAI63	69.5	230.5	90	60	75	M5	11	23	118.0	135.5	M20x1.5/M25x1.5	90	90
LAI71	63.5	261.5	105	70	85	M6	14	30	139.0	146.0	M20x1.5/M25x1.5	90	90
LAI80	63.5	287.5	1230	80	100	M6	19	40	156.5	155.0	M20x1.5/M25x1.5	90	90
LAI80Z	63.5	332.5	120	80	100	M6	19	40	156.5	155.0	M20x1.5/M25x1.5	90	90

© Siemens AG 2011

Additional lengths for 2nd shaft extension, handwheel and canopy

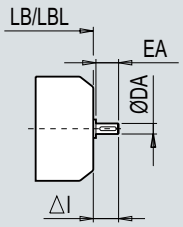

Figure 1

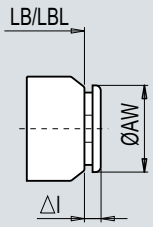

Figure 2

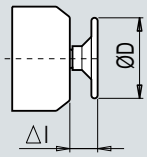

Figure 6

Relevant figure	**1**			**6**		**2**	
Motor	**2nd shaft extension**			**Handwheel at 2nd shaft extension**		**Canopy**	
	DA	EA	ΔI	D	ΔI	AW	ΔI
LAI63 [2]	–	–	–	–	–	124	27
LAI71 [2]	–	–	–	–	–	124	27
LAI80 [2]	–	–	–	–	–	124	27
LAI80Z [2]	–	–	–	–	–	124	27
LA71	14	30	34	100	50	138	26.0
LA71Z	14	30	34	100	50	138	26.0
LA80	14	30	34	100	50	138	26.0
LA80Z	14	30	34	100	50	138	26.0
LA90S	19	40	45	160	65	176	16.0
LA90L	19	40	45	160	65	176	16.0
LA90ZL	19	40	45	160	65	176	16.0
LA100L	19	40	45	160	65	194	16.0
LA100ZL	19	40	45	160	65	194	16.0
LA112M	24	50	56	200	77	218	16.0
LA112ZM	24	50	56	200	77	218	16.0
LA132S	28	60	68	200	89	257	18.0
LA132M	28	60	68	200	89	257	18.0
LA132ZM	28	60	68	200	89	257	18.0
LA160M	38	80	88	315	111	310	18.5
LA160L	38	80	88	315	111	310	18.5
LA160Z	38	80	88	315	111	310	18.5
LG180M	42	110	125	–	–	345	36.5
LG180ZM	42	110	125	–	–	345	36.5
LG180L	42	110	125	–	–	345	36.5
LG180ZL	42	110	125	–	–	345	36.5
LG200L	48	110	130	–	–	382	41.5
LG200ZL	48	110	130	–	–	382	41.5
LG225S	55	110	114	–	–	425	100.0
LG225M	48 [1] / 55	110	114	–	–	425	100.0
LG225ZM	55	110	114	–	–	425	100.0
LG250M	55 [1] / 60	110 [1] / 140	115 [1] / 145	–	–	470	100.0
LG250ZM	60	140	145	–	–	470	100.0
LG280S	60 [1]/ 65	140	145	–	–	525	110.0
LG280M	60 [1]/ 65	140	145	–	–	525	110.0
LG280ZM	65	140	145	–	–	525	110.0
LG315S	60 [1]/ 70	140	145	–	–	590	110.0
LG315M	60 [1]/ 70	140	145	–	–	590	110.0
LG315L	60 [1]/ 70	140	145	–	–	590	110.0
LG315ZL	70	140	145	–	–	590	110.0

[1] For 2-pole motors
[2] Only for worm geared motors S

© Siemens AG 2011

Dimensions

Additional lengths for encoder

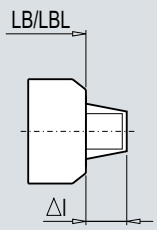

Figure 3

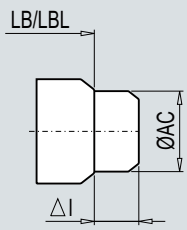

Figure 4

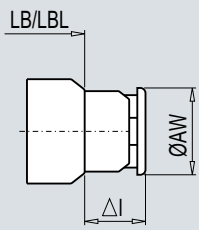

Figure 5

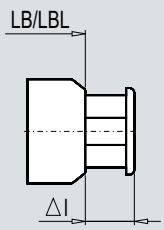

Figure 7

Relevant figure	3			4			5			7		
Motor	Encoder			Encoder under cover			Encoder under cover with canopy			Encoder with canopy		
	ΔI			AC	ΔI		AW	ΔI		AW	ΔI	
	1XP	LL, HOG9	HOG10		1XP	LL, HOG9, HOG10		1XP	LL, HOG9, HOG10		1XP	LL, HOG9, HOG10
LA71	70.0	–	–	139.0	75	–	138	101.0	–	–	–	–
LA71Z	70.0	–	–	139.0	75	–	138	101.0	–	–	–	–
LA80	70.0	–	–	156.5	75	–	138	101.0	–	–	–	–
LA80Z	70.0	–	–	156.5	75	–	138	101.0	–	–	–	–
LA90S	70.0	–	–	174.0	75	–	176	91.0	–	–	–	–
LA90L	70.0	–	–	174.0	75	–	176	91.0	–	–	–	–
LA90ZL	70.0	–	–	174.0	75	–	176	91.0	–	–	–	–
LA100L	70.0	–	–	174.0	75	–	176	91.0	–	–	–	–
LA100ZL	70.0	–	–	174.0	75	–	176	91.0	–	–	–	–
LA112M	70.0	93.5	–	195.0	75	–	194	91.0	–	–	–	–
LA112ZM	70.0	93.5	–	195.0	75	–	194	91.0	–	–	–	–
LA132S	70.0	93.5	–	195.0	75	140	194	91.0	156.0	–	–	–
LA132M	70.0	93.5	–	195.0	75	140	194	91.0	156.0	–	–	–
LA132ZM	70.0	93.5	–	195.0	75	140	194	91.0	156.0	–	–	–
LA160M	70.0	93.5	–	195.0	75	140	310	93.5	158.5	–	–	–
LA160L	70.0	93.5	–	195.0	75	140	310	93.5	158.5	–	–	–
LA160Z	70.0	93.5	–	195.0	75	140	310	93.5	158.5	–	–	–
LG180M	70.0	91.5	–	195.0	73	138	310	91.5	156.5	–	–	–
LG180ZM	70.0	91.5	–	195.0	73	138	310	91.5	156.5	–	–	–
LG180L	70.0	91.5	–	195.0	73	138	310	91.5	156.5	–	–	–
LG180ZL	70.0	91.5	–	195.0	73	138	310	91.5	156.5	–	–	–
LG200L	70.0	91.5	–	195.0	73	138	310	91.5	156.5	–	–	–
LG200ZL	70.0	91.5	–	195.0	73	138	310	91.5	156.5	–	–	–
LG225S	86.5	150.0	150.0	–	–	–	–	–	–	425	100	160
LG225M	86.5	150.0	150.0	–	–	–	–	–	–	425	100	160
LG225ZM	86.5	150.0	150.0	–	–	–	–	–	–	425	100	160
LG250M	86.5	150.0	150.0	–	–	–	–	–	–	470	100	160
LG250ZM	86.5	150.0	150.0	–	–	–	–	–	–	470	100	160
LG280S	86.5			–	–	–	–	–	–			
LG280M	86.5			–	–	–	–	–	–			
LG280ZM	86.5			–	–	–	–	–	–			
LG315S	86.5			–	–	–	–	–	–			
LG315M	86.5			–	–	–	–	–	–			
LG315L	86.5			–	–	–	–	–	–			
LG315ZL	86.5			–	–	–	–	–	–			

© Siemens AG 2011

Additional lengths for forced ventilation, encoder and canopy

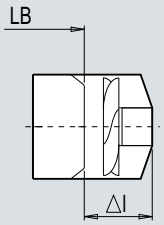

Figure 8

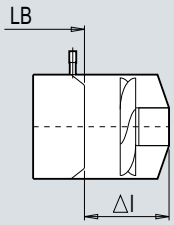

Figure 9

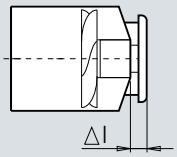

Figure 10

Relevant figure	**8**	**9**	**9**		**9**			**10**
Motor	**External fan**	**Brake + external fan**	**Encoder + external fan**		**Brake + encoder + external fan**			**Canopy for external fan**
			ΔI		ΔI			
	ΔI	ΔI	1XP	LL, HOG9, HOG10	1XP	LL, HOG9	HOG10	ΔI
LA71	110.5	134.5	229.5	–	229.5	–	–	37
LA71Z	91.5	115.5	210.5	–	210.5	–	–	37
LA80	91.0	120.0	215.0	–	215.0	–	–	40
LA80Z	91.0	120.0	215.0	–	215.0	–	–	40
LA90S	95.0	130.0	225.0	–	225.0	–	–	30
LA90L	95.0	130.0	225.0	–	225.0	–	–	30
LA90ZL	95.0	130.0	225.0	–	225.0	–	–	30
LA100L	99.0	138.0	233.0	–	233.0	–	–	28
LA100ZL	99.0	138.0	233.0	–	233.0	–	–	28
LA112M	91.0	129.0	224.0	–	224.0	–	–	33
LA112ZM	91.0	129.0	224.0	–	224.0	–	–	33
LA132S	122.5	172.5	265.5	265.5	265.5	265.5	308.5	25
LA132M	122.5	172.5	265.5	265.5	265.5	265.5	308.5	25
LA132ZM	122.5	172.5	265.5	265.5	265.5	265.5	308.5	25
LA160M	143.0	205.0	299.0	299.0	299.0	299.0	342.0	32
LA160L	143.0	205.0	299.0	299.0	299.0	299.0	342.0	32
LA160Z	143.0	205.0	299.0	299.0	299.0	299.0	342.0	32
LG180M	158.0	220.0	310.0	310.0	298.0	298.0	340.0	32
LG180ZM	158.0	220.0	310.0	310.0	298.0	298.0	340.0	32
LG180L	158.0	220.0	310.0	310.0	298.0	298.0	340.0	32
LG180ZL	158.0	220.0	310.0	310.0	298.0	298.0	340.0	32
LG200L	154.0	229.0	309.0	309.0	301.0	301.0	341.0	32
LG200ZL	154.0	229.0	309.0	309.0	301.0	301.0	341.0	32
LG225S	235.0	576.0	425.0	425.0	576.0	576.0	576.0	255
LG225M	235.0	576.0	425.0	425.0	576.0	576.0	576.0	255
LG225ZM	235.0	576.0	425.0	425.0	576.0	576.0	576.0	255
LG250M	235.0	578.0	425.0	425.0	578.0	578.0	578.0	255
LG250ZM	235.0	578.0	425.0	425.0	578.0	578.0	578.0	255
LG280S	235.0	550.0	425.0	425.0	550.0	550.0	550.0	255
LG280M	235.0	550.0	425.0	425.0	550.0	550.0	550.0	255
LG280ZM	235.0	550.0	425.0	425.0	550.0	550.0	550.0	255
LG315S	247.0	577.0	437.0	437.0	577.0	577.0	577.0	255
LG315M	247.0	577.0	437.0	437.0	577.0	577.0	577.0	255
LG315L	247.0	577.0	437.0	437.0	577.0	577.0	577.0	255
LG315ZL	247.0	577.0	437.0	437.0	577.0	577.0	577.0	255

© Siemens AG 2011

Dimensions

Encoder mounting prepared

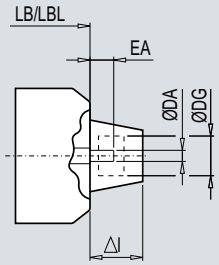

Figure 1

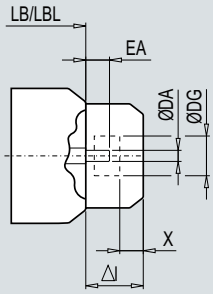

Figure 2

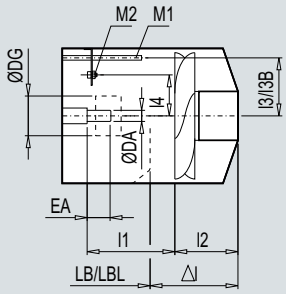

Figure 3

Relevant figure				1	2		3								
Motor				Encoder prepared	Encoder prepared under cover		Encoder prepared + external fan + with / without brake								
	DA	EA	DG	ΔI	ΔI	X	ΔI	l1	l2	l3	Brake	l3B	l4	M1	M2
LA71	12	30	max. 60	70	75	min. 10	229.5	134.5	95.0	59.0	L4, L8	59.0	37.0	M5x120	2xM4
LA71Z							210.5	115.5	95.0	59.0	L4, L8	59.0		M5x120	
LA80							215.0	121.2	95.0	56.0	L4, L8	66.0		M6x130	
											L16	56.0			
LA80Z							215.0	121.2	95.0	56.0	L4, L8	66.0		M6x130	
											L16	56.0			
LA90S							225.0	120.0	105.0	77.0	L8, L16	77.0			
											L32	66.0			
LA90L							225.0	120.0	105.0	77.0	L8, L16	77.0			
											L32	66.0			
LA90ZL							225.0	120.0	105.0	77.0	L8, L16	77.0			
											L32	66.0			
LA100L							233.0	128.0	105.0	86.0	L16, L32	86.0			
											L60	72.5			
LA100ZL							233.0	128.0	105.0	86.0	L16, L32	86.0			
											L60	72.5			
LA112M							224.0	115.5	105.0	97.5	L32, L60	97.5		M8x160	
LA112ZM							224.0	115.5	105.0	97.5	L32, L60	97.5			
LA132S							265.5	138.5	127.0	85.0	L80	117.0			
											L150	98.0			
LA132M							265.5	138.5	127.0	85.0	L80	117.0			
											L150	98.0			
LA132ZM							265.5	138.5	127.0	85.0	L80	117.0			
											L150	98.0			
LA160M							299.0	147.0	152.0	115.0	L150, L260	140.0		M10x210	
LA160L							299.0	147.0	152.0	115.0	L150, L260	140.0			
LA160Z							299.0	147.0	152.0	115.0	L150, L260	140.0			
LG180M					73		310.0	148.0	152.0	115.0	L260	157.0			
LG180ZM							310.0	148.0	152.0	115.0	L260	157.0			
LG180L							310.0	148.0	152.0	115.0	L260	157.0			
LG180ZL							310.0	148.0	152.0	115.0	L260	157.0			
LG200L		29.4					309.0	151.0	152.0	115.0	L260, L400	175.0			
LG200ZL							309.0	151.0	152.0	115.0	L260, L400	175.0			

© Siemens AG 2011

Additional feet on standard motor

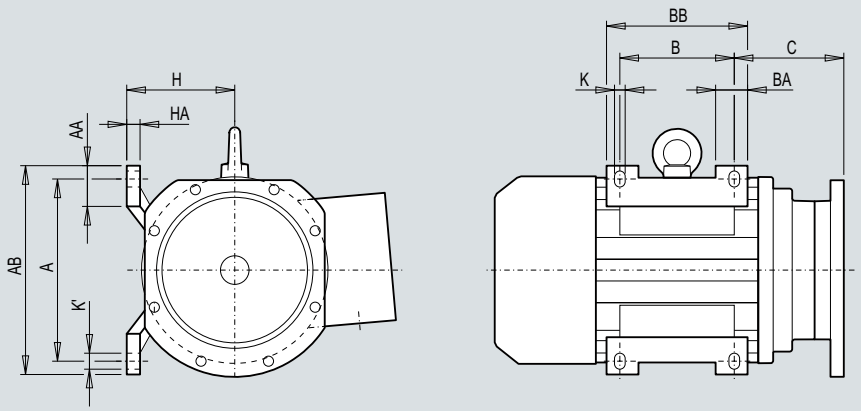

Motor	Gearbox type					C	Gearbox type	C	A	AB	AA	B	BB	BA	H	HA	K	K´
	E.	Z.	K.	C.	FZ./FD.		D.											
LA100			B38		38B	90.0			160	196	42	140	176	47	100 +0.7	12	12	12
	38	38	38/48	38/48	48B	115.5	48	127.0										
	48	48	68	68	68B	110.0	68	122.5										
	68	68	88	88	88B	104.0	88	114.0										
	88	88	108		108B	86.5	108	108.0										
	108	108	128		128B	74.5	128	101.0										
	128	128	148		148B	65.0	148	96.0										
LA112	38	38	38/48	38/48	48B	95.5			190	226	46	140	176	47	112 +0.7	12	12	16
	48	48	68	68	68B	122.0												
	68	68	88	88	88B	114.0	88	124.5										
	88	88	108		108B	95.5	108	115.5										
	108	108	128		128B	84.0	128	107.5										
	128	128	148		148B	73.5	148	104.5										
LA132ZS	48	48	68	68	68B	93.5			216	256	53	140	180	49	132 +0.7	15	12	16
	68	68	88	88	88B	147.5	88	157.0										
	88	88	108		108B	129.0	108	149.0										
	108	108	128		128B	116.5	128	140.0										
	128	128	148		148B	106.0	148	136.0										
	148	148	168		168B	98.0	168	124.5										
		168	188		188B	83.5	188	83.5										
LA132M	48	48	68	68	68B	93.5			216	256	53	178	218	49	132 +0.7	15	12	16
LA132ZM	68	68	88	88	88B	147.5	88	157.0										
	88	88	108		108B	129.0	108	149.0										
	108	108	128		128B	116.5	128	140.0										
	128	128	148		148B	106.0	148	136.0										
	148	148	168		168B	98.0	168	124.5										
		168	188		188B	83.5	188	83.5										

© Siemens AG 2011

Dimensions

Additional feet on standard motor (continued)

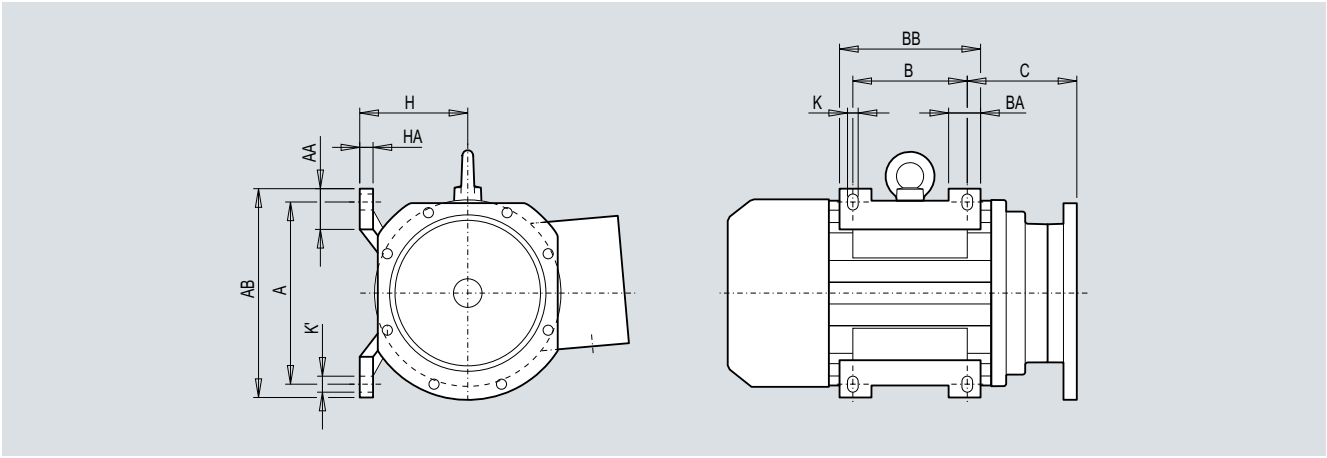

Motor	Gearbox type					C	Gearbox type	C	A	AB	AA	B	BB	BA	H	HA	K	K´
	E.	Z.	K.	C.	FZ./FD.		D.											
LA160M	68	68	88	88	88B	96.0			254	300	60	210	256	57	160 +0.7	18	14.5	19
LA160ZM	88	88	108		108B	121.0												
	108	108	128		128B	109.5	108	139.0										
	128	128	148		148B	93.0	128	130.0										
	148	148	168		168B	85.5	148	123.5										
		168	188		188B	71.0	168	112.0										
		188				71.0	188	71.0										
LA160L	68	68	88	88	88B	96.0			254	300	60	254	300	57	160 +0.7	18	14.5	19
LA160ZL	88	88	108		108B	121.0												
	108	108	128		128B	109.5	108	139.0										
	128	128	148		148B	93.0	128	130.0										
	148	148	168		168B	85.5	148	123.5										
		168	188		188B	71.0	168	112.0										
		188				71.0	188	71.0										

© Siemens AG 2011

Additional feet on standard motor, IEC flange

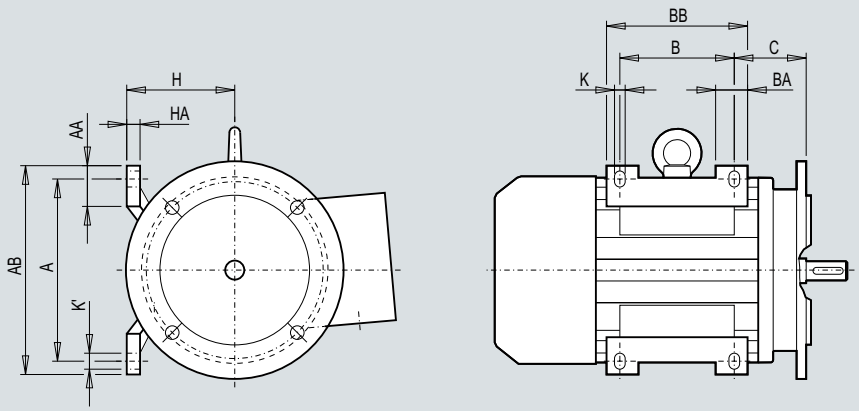

Motor	C	A	AB	AA	B	BB	BA	H	HA	K	K´
LA100	63.0	160	196	42	140	176	47	100 +0.7	12	12	16
LA112	70.0	190	226	46	140	176	47	112 +0.7	12	12	16
LA132ZS	89.0	216	256	53	140	180	49	132 +0.7	15	12	16
LA132M LA132ZM	89.0	216	256	53	178	218	49	132 +0.7	15	12	16
LA160M LA160ZM	108.0	254	300	60	210	256	57	160 +0.7	18	14.5	19
LA160L LA160ZL	108.0	254	300	60	254	300	57	160 +0.7	18	14.5	19

© Siemens AG 2011

Notes

© Siemens AG 2011

Appendix

9



9/2 Partner at Industry Automation and Drive Technologies

9/3 Information and Ordering in the Internet and on DVD

9/4 Service & Support

9/12 Conditions of sale and delivery
Export regulations

© Siemens AG 2011

Partner at Industry Automation and Drive Technologies







At Siemens Industry Automation and Drive Technologies, more than 85 000 people are resolutely pursuing the same goal: long-term improvement of your competitive ability.
We are committed to this goal. Thanks to our commitment, we continue to set new standards in automation and drive technology. In all industries – worldwide.

At your service locally, around the globe for consulting, sales, training, service, support, spare parts ... on the entire Industry Automation and Drive Technologies range.

Your personal contact can be found in our Contacts Database at:
www.siemens.com/automation/partner

You start by selecting a

- Product group,
- Country,
- City,
- Service.

© Siemens AG 2011

Siemens Industry Automation and Drive Technologies in the WWW



A detailed knowledge of the range of products and services available is essential when planning and configuring automation systems. It goes without saying that this information must always be fully up-to-date.

Siemens Industry Automation and Drive Technologies has therefore built up a comprehensive range of information in the World Wide Web, which offers quick and easy access to all data required.

Under the address

www.siemens.com/industry

you will find everything you need to know about products, systems and services.

Product Selection Using the Offline Mall of Industry



Detailed information together with convenient interactive functions:
The Offline Mall CA 01 covers more than 80 000 products and thus provides a full summary of the Siemens Industry Automation and Drive Technologies product base.

Here you will find everything that you need to solve tasks in the fields of automation, switchgear, installation and drives.
All information is linked into a user interface which is easy to work with and intuitive.

After selecting the product of your choice you can order at the press of a button, by fax or by online link.

Information on the Offline Mall CA 01 can be found in the Internet under

www.siemens.com/automation/ca01

or on DVD.

Easy Shopping with the Industry Mall



The Industry Mall is the virtual department store of Siemens AG in the Internet. Here you have access to a huge range of products presented in electronic catalogs in an informative and attractive way.

Data transfer via EDIFACT allows the whole procedure from selection through ordering to tracking of the order to be carried out online via the Internet.

Numerous functions are available to support you.

For example, powerful search functions make it easy to find the required products, which can be immediately checked for availability. Customer-specific discounts and preparation of quotes can be carried out online as well as order tracking and tracing.

Please visit the Industry Mall on the Internet under:

www.siemens.com/industrymall

© Siemens AG 2011

Service & Support

The unmatched complete service for the entire life cycle

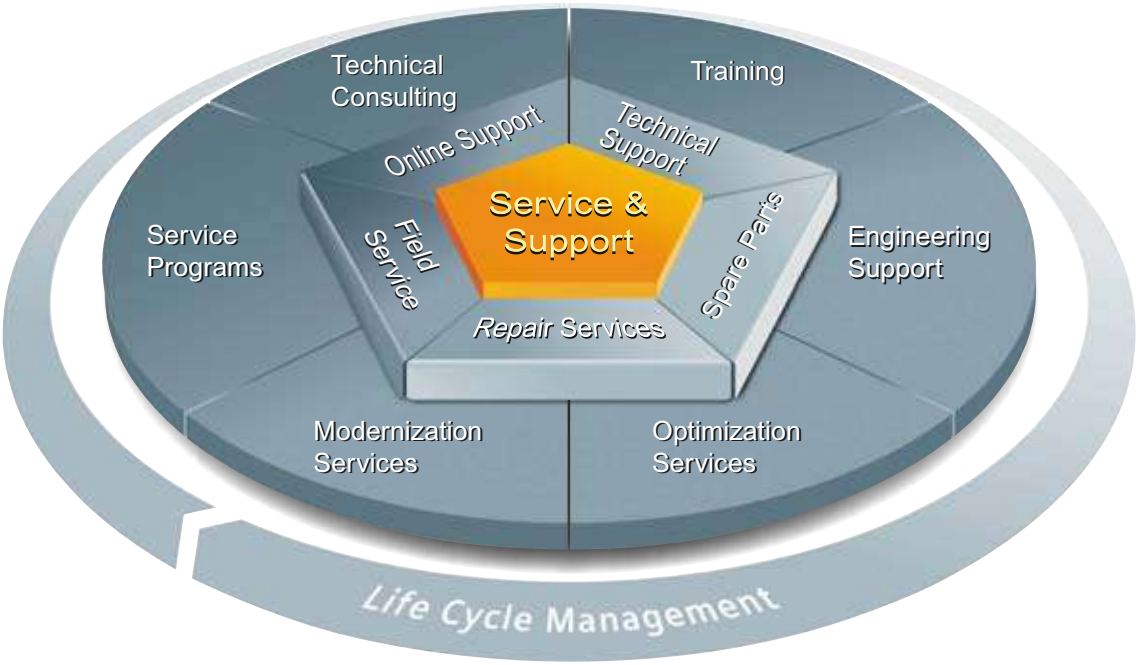

For machine constructors, solution providers and plant operators: The service offering from Siemens Industry, Automation and Drive Technologies includes comprehensive services for a wide range of different users in all sectors of the manufacturing and process industry

To accompany our products and systems, we offer integrated and structured services that provide valuable support in every phase of the life cycle of your machine or plant – from planning and implementation through commissioning as far as maintenance and modernization.

Our Service & Support accompanies you worldwide in all matters concerning automation and drives from Siemens. We provide direct on-site support in more than 100 countries through all phases of the life cycle of your machines and plants.

You have an experienced team of specialists at your side to provide active support and bundled know-how. Regular training courses and intensive contact among our employees – even across continents – ensure reliable service in the most diverse areas.

Contact information is available in the Internet at:
www.siemens.com/automation/partner

© Siemens AG 2011

The unmatched complete service for the entire life cycle

Online Support



The comprehensive online information platform supports you in all aspects of our Service & Support at any time and from any location in the world.

www.siemens.com/automation/service&support

Technical Consulting



Support in planning and designing your project: From detailed actual-state analysis, definition of the goal and consulting on product and system questions right through to the creation of the automation solution.

Technical Support



Expert advice on technical questions with a wide range of demand-optimized services for all our products and systems.

www.siemens.com/automation/support-request

Training



Extend your competitive edge – through practical know-how directly from the manufacturer.

www.siemens.com/sitrain

Contact information is available in the Internet at:
www.siemens.com/automation/partner

© Siemens AG 2011

Service & Support

The unmatched complete service for the entire life cycle

Engineering Support



Support during project engineering and development with services fine-tuned to your requirements, from configuration through to implementation of an automation project.

Spare parts



In every sector worldwide, plants and systems are required to operate with constantly increasing reliability. We will provide you with the support you need to prevent a standstill from occurring in the first place: with a worldwide network and optimum logistics chains.

Field Service



Our Field Service offers you services for commissioning and maintenance – to ensure that your machines and plants are always available.

Repairs



Downtimes cause problems in the plant as well as unnecessary costs. We can help you to reduce both to a minimum – with our worldwide repair facilities.

Contact information is available in the Internet at:
www.siemens.com/automation/partner

© Siemens AG 2011

The unmatched complete service for the entire life cycle

Optimization



During the service life of machines and plants, there is often a great potential for increasing productivity or reducing costs. To help you achieve this potential, we are offering a complete range of optimization services.

Modernization



You can also rely on our support when it comes to modernization – with comprehensive services from the planning phase all the way to commissioning.

Service programs



Our service programs are selected service packages for an automation and drives system or product group. The individual services are coordinated with each over to ensure smooth coverage of the entire life cycle and support optimum use of your products and systems.

The services of a Service Program can be flexibly adapted at any time and used separately.

Examples of service programs:

- Service contracts
- Plant IT Security Services
- Life Cycle Services for Drive Engineering
- SIMATIC PCS 7 Life Cycle Services
- SINUMERIK Manufacturing Excellence
- SIMATIC Remote Support Servicess

Advantages at a glance:

- Reduced downtimes for increased productivity
- Optimized maintenance costs due to a tailored scope of services
- Costs that can be calculated and therefore planned
- Service reliability due to guaranteed response times and spare part delivery times
- Customer service personnel will be supported and relieved of additional tasks
- Comprehensive service from a single source, fewer interfaces and greater expertise

Contact information is available in the Internet at:
www.siemens.com/automation/partner

© Siemens AG 2011

Knowledge Base on DVD



For locations without online connections to the Internet there are excerpts of the free part of the information sources available on DVD (Service & Support Knowledge Base). This DVD contains all the latest product information at the time of production (FAQs, Downloads, Tips and Tricks, Updates) as well as general information on Service & Support.

The DVD also includes a full-text search and our Knowledge Manager for targeted searches for solutions. The DVD will be updated every 4 months.

Just the same as our online offer in the Internet, the Service & Support Knowledge Base on DVD comes complete in 5 languages (German, English, French, Italian, Spanish).

You can order the **Service & Support Knowledge Base** DVD from your Siemens contact.

Order no. **6ZB5310-0EP30-0BA2**

© Siemens AG 2011

Automation Value Card



Small card – great support

The Automation Value Card is an integral component of the comprehensive service concept with which Siemens Automation and Drives will accompany you in each phase of your automation project.

It doesn't matter whether you want just specific services from our Technical Support or want to purchase something on our Online portal, you can always pay with your Automation Value Card. No invoicing, transparent and safe. With your personal card number and associated PIN you can view the state of your account and all transactions at any time.

Services on card. This is how it's done.

Card number and PIN are on the back of the Automation Value Card. When delivered, the PIN is covered by a scratch field, guaranteeing that the full credit is on the card.

By entering the card number and PIN you have full access to the Service & Support services being offered. The charge for the services procured is debited from the credits on your Automation Value Card.

All the services offered are marked in currency-neutral credits, so you can use the Automation Value Card worldwide.

Order your Automation and Value Card easily and comfortably like a product with your sales contact.

Automation Value Card order numbers	
Credits	Order no.
200	**6ES7 997-0BA00-0XA0**
500	**6ES7 997-0BB00-0XA0**
1 000	**6ES7 997-0BC00-0XA0**
10 000	**6ES7 997-0BG00-0XA0**

Detailed information on the services offered is available on our Internet site at:

www.siemens.com/automation/service&support

Service & Support à la Card: Examples

Technical Support	
"Priority"	Priority processing for urgent cases
"24 h"	Availability round the clock
"Extended"	Technical consulting for complex questions
"Mature Products"	Consulting service for products that are not available any more
Support Tools in the Support Shop	
	Tools that can be used directly for configuration, analysis and testing

I IA/DT/BT Standard-Anhang En 09.02.2011

© Siemens AG 2011

Notes

© Siemens AG 2011

Notes

© Siemens AG 2011

Terms and Conditions of Sale and Delivery

By using this catalog you can acquire hardware and software products described therein from Siemens AG subject to the following terms. Please note! The scope, the quality and the conditions for supplies and services, including software products, by any Siemens entity having a registered office outside of Germany, shall be subject exclusively to the General Terms and Conditions of the respective Siemens entity. The following terms apply exclusively for orders placed with Siemens AG.

For customers with a seat or registered office in Germany

The "General Terms of Payment" as well as the "General Conditions for the Supply of Products and Services of the Electrical and Electronics Industry" shall apply.

For software products, the "General License Conditions for Software Products for Automation and Drives for Customers with a Seat or registered Office in Germany" shall apply.

For customers with a seat or registered office outside of Germany

The "General Terms of Payment" as well as the "General Conditions for Supplies of Siemens, Automation and Drives for Customers with a Seat or registered Office outside of Germany" shall apply.

For software products, the "General License Conditions for Software Products for Automation and Drives for Customers with a Seat or registered Office outside of Germany" shall apply.

General

The dimensions are in mm. In Germany, according to the German law on units in measuring technology, data in inches only apply to devices for export.

Illustrations are not binding.

Insofar as there are no remarks on the corresponding pages, - especially with regard to data, dimensions and weights given – these are subject to change without prior notice.

The prices are in € (Euro) ex works, exclusive packaging.

The sales tax (value added tax) is not included in the prices. It shall be debited separately at the respective rate according to the applicable legal regulations.

Prices are subject to change without prior notice. We will debit the prices valid at the time of delivery.

Surcharges will be added to the prices of products that contain silver, copper, aluminum, lead and/or gold if the respective basic official prices for these metals are exceeded. These surcharges will be determined based on the official price and the metal factor of the respective product.

The surcharge will be calculated on the basis of the official price on the day prior to receipt of the order or prior to the release order.
The metal factor determines the official price as of which the metal surcharges are charged and the calculation method used. The metal factor, provided it is relevant, is included with the price information of the respective products.

An exact explanation of the metal factor and the text of the Comprehensive Terms and Conditions of Sale and Delivery are available free of charge from your local Siemens business office under the following Order Nos.:

- 6ZB5310-0KR30-0BA1
  (for customers based in Germany)
- 6ZB5310-0KS53-0BA1
  (for customers based outside Germany)

or download them from the Internet
www.siemens.com/industrymall
(Germany: Industry Mall Online-Help System)

Export regulations

Our obligation to fulfill this agreement is subject to the proviso that the fulfillment is not prevented by any impediments arising out of national and international foreign trade and customs requirements or any embargos and/or other sanctions.

If you transfer goods (hardware and/ or software and/ or technology as well as corresponding documentation, regardless of the mode of provision) delivered by us or works and services (including all kinds of technical support) performed by us to a third party worldwide, you shall comply with all applicable national and international (re-) export control regulations.

If required to conduct export control checks, you, upon request by us, shall promptly provide us with all information pertaining to particular end customer, destination and intended use of goods, works and services provided by us, as well as any export control restrictions existing.

The products listed in this catalog may be subject to European / German and/or US export regulations.

Therefore, any export requiring a license is subject to approval by the competent authorities.

According to current provisions, the following export regulations must be observed with respect to the products featured in this catalog:

AL	Number of the German Export List Products marked other than "N" require an export license. In the case of software products, the export designations of the relevant data medium must also be generally adhered to. Goods labeled with an "AL" not equal to "N" are subject to a European or German export authorization when being exported out of the EU.
ECCN	Export Control Classification Number Products marked other than "N" are subject to a reexport license to specific countries. In the case of software products, the export designations of the relevant data medium must also be generally adhered to. Goods labeled with an "ECCN" not equal to "N" are subject to a US re-export authorization.

Even without a label or with an "AL: N" or "ECCN: N", authorization may be required due to the final destination and purpose for which the goods are to be used.

The deciding factors are the AL or ECCN export authorization indicated on order confirmations, delivery notes and invoices.

Errors excepted and subject to change without prior notice.

IA/DT/BT VuL_ohne MZ En 07.07.10

© Siemens AG 2011

Catalogs

Industry Automation, Drive Technologies and Low Voltage Distribution

Further information can be obtained from our branch offices listed in the appendix or at www.siemens.com/automation/partner

Interactive Catalog on DVD	*Catalog*
for Industry Automation, Drive Technologies and Low Voltage Distribution	**CA 01**

Drive Systems

Variable-Speed Drives	
SINAMICS G110, SINAMICS G120 Standard Inverters SINAMICS G110D, SINAMICS G120D Distributed Inverters	D 11.1
SINAMICS G130 Drive Converter Chassis Units SINAMICS G150 Drive Converter Cabinet Units	D 11
SINAMICS GM150, SINAMICS SM150 Medium-Voltage Converters	D 12
SINAMICS S120 Chassis Format Units and Cabinet Modules SINAMICS S150 Converter Cabinet Units	D 21.3
SINAMICS DCM Converter Units	D 23.1
Three-phase Induction Motors • H-compact • H-compact PLUS	D 84.1
Asynchronous Motors Standardline	D 86.1
Synchronous Motors with Permanent-Magnet Technology, HT-direct	D 86.2
DC Motors	DA 12
SIMOREG DC MASTER 6RA70 Digital Chassis Converters	DA 21.1
SIMOREG K 6RA22 Analog Chassis Converters	DA 21.2
PDF: SIMOREG DC MASTER 6RM70 Digital Converter Cabinet Units	*DA 22*
SIMOVERT PM Modular Converter Systems	DA 45
SIEMOSYN Motors	DA 48
MICROMASTER 420/430/440 Inverters	DA 51.2
MICROMASTER 411/COMBIMASTER 411	DA 51.3
SIMOVERT MASTERDRIVES Vector Control	DA 65.10
SIMOVERT MASTERDRIVES Motion Control	DA 65.11
Synchronous and asynchronous servomotors for SIMOVERT MASTERDRIVES	DA 65.3
SIMODRIVE 611 universal and POSMO	DA 65.4
SIMOTION, SINAMICS S120 and Motors for Production Machines	PM 21
SINAMICS S110 The Basic Positioning Drive	PM 22
Low-Voltage Three-Phase-Motors	
IEC Squirrel-Cage Motors	D 81.1
MOTOX Geared Motors	D 87.1
Automation Systems for Machine Tools SIMODRIVE • Motors • Converter Systems SIMODRIVE 611/POSMO	NC 60
Automation Systems for Machine Tools SINAMICS • Motors • Drive System SINAMICS S120	NC 61
Drive and Control Components for Hoisting Equipment	HE 1
Mechanical Driving Machines	
Flender Standard Couplings	MD 10.1

Low-Voltage Power Distribution and Electrical Installation Technology

Protection, Switching, Measuring & Monitoring Devices	LV 10.1
Switchboards and Distribution Systems	LV 10.2
GAMMA Building Management Systems	ET G1
PDF: DELTA Switches and Socket Outlets	*ET D1*
SICUBE System Cubicles and Cubicle Air-Conditioning	LV 50
SIVACON 8PS Busbar Trunking Systems	LV 70

Motion Control

	Catalog
SINUMERIK & SIMODRIVE Automation Systems for Machine Tools	NC 60
SINUMERIK & SINAMICS Equipment for Machine Tools	NC 61
SINUMERIK 828D BASIC T/BASIC M, SINAMICS S120 Combi and 1FK7/1PH8 motors	NC 82
SIMOTION, SINAMICS S120 and Motors for Production Machines	PM 21
SINAMICS S110 The Basic Positioning Drive	PM 22

Power Supply and System Cabling

Power supply SITOP	KT 10.1
System cabling SIMATIC TOP connect	KT 10.2

Process Instrumentation and Analytics

Field Instruments for Process Automation	FI 01
SIREC Recorders and Accessories	MP 20
SIPART, Controllers and Software	MP 31
Products for Weighing Technology	WT 10
Process Analytical Instruments	PA 01
PDF: Process Analytics, Components for the System Integration	*PA 11*

Safety Integrated

Safety Technology for Factory Automation	SI 10

SIMATIC HMI/PC-based Automation

Human Machine Interface Systems/ PC-based Automation	ST 80/ ST PC

SIMATIC Industrial Automation Systems

Products for Totally Integrated Automation and Micro Automation	ST 70
SIMATIC PCS 7 Process Control System	ST PCS 7
Add-ons for the SIMATIC PCS 7 Process Control System	ST PCS 7.1
PDF: Migration solutions with the SIMATIC PCS 7 Process Control System	*ST PCS 7.2*

SIMATIC NET

Industrial Communication	IK PI

SIMATIC Sensors

Sensor Technology for Factory Automation	FS 10
Industrial Identification Systems	ID 10

SINVERT Photovoltaics

Inverters and Components for Photovoltaic Installations	RE 10

SIRIUS Industrial Controls

SIRIUS Industrial Controls	IC 10
SIRIUS Industrial Controls (selected content from catalog IC 10)	IC 90

System Solutions

Applications and Products for Industry are part of the interactive catalog CA 01

PDF: These catalogs are only available as pdf files.

Download-Center

PDF versions of the catalogs are available on the Internet at:
www.siemens.com/drives/infocenter

© Siemens AG 2011

Siemens AG
Industry Sector
Drive Technologies Division
Mechanical Drives
Postfach 1709
72007 TÜBINGEN
GERMANY

www.siemens.com/motors

Subject to change without prior notice
Order No.: E86060-K5287-A111-A4-7600
Dispo 18409 / 3P.8322.80.18
KG 0311 10.0 K 1008 En
Printed in Germany
© Siemens AG 2011

The information provided in this catalog contains descriptions or characteristics of performance which in case of actual use do not always apply as described or which may change as a result of further development of the products. An obligation to provide the respective characteristics shall only exist if expressly agreed in the terms of contract. Availability and technical specifications are subject to change without notice.
All product designations may be trademarks or product names of Siemens AG or supplier companies whose use by third parties for their own purposes could violate the rights of the owners.

Token fee: 5.00 €

© Siemens AG 2011