SIEMENS

Function Manual

SINAMICS

S120

Drive functions

Edition 06/2019

www.siemens.com/drives

SIEMENS

SINAMICS

S120
Drive functions

Function Manual

Introduction 1

Fundamental safety instructions 2

Infeed 3

Extended setpoint channel 4

Servo control 5

Vector control 6

U/f control (vector control) 7

Basic functions 8

Function modules 9

Monitoring functions and protective functions 10

Safety Integrated Basic Functions 11

Applications 12

Web server 13

Basic information about the drive system 14

Appendix A

Valid as of:
Firmware version 5.2

06/2019
6SL3097-5AB00-0BP2

Legal information

Warning notice system

This manual contains notices you have to observe in order to ensure your personal safety, as well as to prevent damage to property. The notices referring to your personal safety are highlighted in the manual by a safety alert symbol, notices referring only to property damage have no safety alert symbol. These notices shown below are graded according to the degree of danger.

⚠ DANGER
indicates that death or severe personal injury **will** result if proper precautions are not taken.

⚠ WARNING
indicates that death or severe personal injury **may** result if proper precautions are not taken.

⚠ CAUTION
indicates that minor personal injury can result if proper precautions are not taken.

NOTICE
indicates that property damage can result if proper precautions are not taken.

If more than one degree of danger is present, the warning notice representing the highest degree of danger will be used. A notice warning of injury to persons with a safety alert symbol may also include a warning relating to property damage.

Qualified Personnel

The product/system described in this documentation may be operated only by **personnel qualified** for the specific task in accordance with the relevant documentation, in particular its warning notices and safety instructions. Qualified personnel are those who, based on their training and experience, are capable of identifying risks and avoiding potential hazards when working with these products/systems.

Proper use of Siemens products

Note the following:

⚠ WARNING
Siemens products may only be used for the applications described in the catalog and in the relevant technical documentation. If products and components from other manufacturers are used, these must be recommended or approved by Siemens. Proper transport, storage, installation, assembly, commissioning, operation and maintenance are required to ensure that the products operate safely and without any problems. The permissible ambient conditions must be complied with. The information in the relevant documentation must be observed.

Trademarks

All names identified by ® are registered trademarks of Siemens AG. The remaining trademarks in this publication may be trademarks whose use by third parties for their own purposes could violate the rights of the owner.

Disclaimer of Liability

We have reviewed the contents of this publication to ensure consistency with the hardware and software described. Since variance cannot be precluded entirely, we cannot guarantee full consistency. However, the information in this publication is reviewed regularly and any necessary corrections are included in subsequent editions.

Siemens AG
Digital Industries
Postfach 48 48
90026 NÜRNBERG
GERMANY

Document order number: 6SL3097-5AB00-0BP2
℗ 07/2019 Subject to change

Copyright © Siemens AG 2004 - 2019.
All rights reserved

Table of contents

1 Introduction 17

1.1 The SINAMICS converter family 17

1.2 General information about SINAMICS documentation 18

1.3 Usage phases and their documents/tools (as an example) 20

1.4 Where can the various topics be found? 21

1.5 Training and support 22

1.6 Using OpenSSL 23

1.7 General Data Protection Regulation 24

2 Fundamental safety instructions 25

2.1 General safety instructions 25

2.2 Warranty and liability for application examples 26

2.3 Industrial security 27

3 Infeed 29

3.1 Active Infeed 30
3.1.1 Active Infeed closed-loop control booksize 31
3.1.2 Active Infeed closed-loop control chassis 33
3.1.3 Line supply and DC link identification 35
3.1.4 Active Infeed open-loop control 36
3.1.5 Reactive current control 39
3.1.6 Harmonics controller 39
3.1.7 Parameterizable bandstop filters for Active Infeed Controls in chassis format 40
3.1.8 Function diagrams and parameters 41

3.2 Basic Infeed 43
3.2.1 Basic Infeed open-loop control 45
3.2.2 Function diagrams and parameters 47

3.3 Smart Infeed 49
3.3.1 Line supply and DC link identification routine for Smart Infeed Booksize 51
3.3.2 Extended Smart Mode 52
3.3.3 Smart Infeed open-loop control 52
3.3.4 Function diagrams and parameters 55

3.4 Line contactor control 56

3.5 Pre-charging and bypass contactor Chassis and Chassis-2 58

4 Extended setpoint channel 59

4.1 Motorized potentiometer 62

4.2 Fixed setpoints 64

4.3 Speed setpoint 65

4.3.1 Main/supplementary setpoint and setpoint scaling 65
4.3.2 Jogging....66
4.3.3 Direction of rotation limiting and direction reversal 70
4.4 Speed limiting....71
4.5 Ramp-function generator 73
4.5.1 Ramp-function generator tracking....76
4.5.2 Signal overview, function diagrams and important parameters 78
5 Servo control 81
5.1 Comparison between servo control and vector control 82
5.2 Influencing calculation of the open-loop control and closed-loop control parameters....86
5.3 Setpoint addition 87
5.4 Speed setpoint filter 89
5.5 Speed controller 91
5.5.1 Speed controller adaptation 91
5.5.2 Torque-controlled operation 93
5.6 Torque setpoint limitation 96
5.7 Current setpoint filter....100
5.8 Current controller 107
5.9 Autotuning 109
5.9.1 One Button Tuning 109
5.9.2 Online tuning 114
5.9.2.1 "Drive-based" online tuning....114
5.9.2.2 Adaptation of the control parameters 118
5.9.2.3 Problem handling 119
5.9.3 Current setpoint filter adaptation 120
5.9.3.1 Stability of the speed control loop 124
5.9.3.2 Lower and upper limit frequencies 124
5.9.3.3 Remedy for insufficient adaptation....125
5.9.4 Function diagrams and parameters 125
5.10 Notes about the electronic motor model 127
5.11 Increased stall power at the voltage limit 128
5.12 U/f control....131
5.13 Optimizing the current and speed controller 135
5.14 Encoderless operation 137
5.15 Motor data identification 142
5.15.1 Motor data identification for induction motors 145
5.15.2 Motor data identification for synchronous motors 147
5.16 Pole position identification....150
5.16.1 Supplementary conditions....151
5.16.2 Important parameters (process-dependent)....155
5.16.3 Setting of the elasticity-based pole position identification 156
5.16.4 Commutation angle offset commissioning support (p1990) 165
5.16.5 Overview of important parameters (see SINAMICS S120/S150 List Manual) 165

5.17 Vdc control 167
5.18 Dynamic Servo Control (DSC) 171
5.19 Travel to fixed stop 176
5.20 Vertical axes 181
5.21 Variable signaling function 182
5.22 Central probe evaluation 184
5.22.1 Examples 190
5.22.2 Function diagrams and parameters 191
5.23 Voltage precontrol 193
5.23.1 Function diagrams and parameters 201
6 Vector control 203
6.1 Technology application (application) (p0500) 208
6.2 Vector control without encoder (SLVC) 209
6.2.1 Three-phase induction motor 209
6.2.2 Permanent-magnet synchronous motors 213
6.2.3 Synchronous reluctance motors 215
6.3 Vector control with encoder 218
6.4 Speed controller 219
6.4.1 Speed controller adaptation 221
6.4.2 Speed controller precontrol and reference model 224
6.5 Droop 228
6.6 Open actual speed value 230
6.7 Closed-loop torque control 232
6.8 Torque limiting 235
6.9 Vdc control 237
6.9.1 Function diagrams and parameters 240
6.10 Current setpoint filter 241
6.11 Speed actual value filter 242
6.12 Current controller adaptation 243
6.13 Motor data identification and rotating measurement 244
6.13.1 Overview 244
6.13.2 Motor data identification 245
6.13.3 Rotating measurement 248
6.13.4 Shortened rotating measurement 250
6.13.5 Overview of important parameters 251
6.14 Pole position identification 253
6.14.1 Operation without an encoder 253
6.14.2 Operation with encoder 254
6.14.3 Messages and parameters 256
6.15 Efficiency optimization 258
6.15.1 Efficiency optimization for induction motors 258

6.15.2 Efficiency optimization for reluctance motors 260
6.15.3 Function diagrams and parameters 261
6.16 Fast magnetization for induction motors 262
6.17 Flying restart 266
6.17.1 Fast flying restart 268
6.17.2 Flying restart for a synchronous reluctance motor 270
6.17.3 Messages and parameters 271
6.18 Synchronization 272
6.19 Voltage Sensing Module 274
6.20 Simulation mode 276
6.21 Redundancy mode power units 277
6.22 Bypass 278
6.22.1 Bypass with synchronization with overlap 280
6.22.2 Bypass with synchronization without overlap 283
6.22.3 Bypass without synchronization 284
6.22.4 Function diagrams and parameters 286
6.23 Asynchronous pulse frequency 288
7 U/f control (vector control) 291
7.1 Technology application (application) (p0500) 295
7.2 Voltage boost 296
7.3 Slip compensation 300
7.4 Resonance damping 301
7.5 Vdc control 302
8 Basic functions 307
8.1 Switching over units 307
8.2 Reference parameters/scaling 309
8.3 Checking for a short-circuit/ground fault at a motor 313
8.4 Modular machine concept 314
8.5 Sine-wave filter 317
8.6 Motor reactors 319
8.7 dv/dt filter plus Voltage Peak Limiter 321
8.8 dv/dt filter compact plus Voltage Peak Limiter 323
8.9 Pulse frequency wobbling 325
8.10 Direction reversal without changing the setpoint 326
8.11 Automatic restart 328
8.12 Armature short-circuit 331
8.12.1 Internal armature short-circuit braking 332
8.12.2 External armature short-circuit braking 333
8.12.3 Internal voltage protection 336

8.12.4 Configuring a fault reaction 337
8.12.5 Function diagrams and parameters 337

8.13 DC braking 339
8.13.1 Configuring the function via parameters 339
8.13.2 Activating a function via fault reaction 341
8.13.3 Activating a function via OFF fault responses 341
8.13.4 Configuring a function as a response to a speed threshold 341
8.13.5 Internal voltage protection 342
8.13.6 Configuring a fault reaction 343
8.13.7 Function diagrams and parameters 344

8.14 Motor Module as a Braking Module 345
8.14.1 Configuring resistors 346
8.14.2 Activating the "Braking Module" function 349
8.14.3 Protective equipment 352
8.14.4 Overview of the important parameters 352

8.15 OFF3 torque limits 354

8.16 Technology function friction characteristic 355

8.17 Simple brake control 357

8.18 System runtime / operating hours counter 360

8.19 Energy-saving display 362

8.20 Encoder diagnostics 365
8.20.1 Datalogger 365
8.20.2 Encoder dirty signal 366
8.20.3 Early encoder failure detection 366
8.20.4 Function diagrams and parameters 367

8.21 Tolerant encoder monitoring 368
8.21.1 Encoder track monitoring 369
8.21.2 Zero mark tolerance 370
8.21.3 Freezing the speed raw value 371
8.21.4 Adjustable hardware filter 371
8.21.5 Edge evaluation of the zero mark 372
8.21.6 Pole position adaptation 373
8.21.7 Pulse number correction for faults 374
8.21.8 "Tolerance band pulse number" monitoring 375
8.21.9 Signal edge evaluation (1x, 4x) 376
8.21.10 Setting the measuring time to evaluate speed "0" 377
8.21.11 Sliding averaging of the speed actual value 377
8.21.12 Troubleshooting 378
8.21.13 Tolerance window and correction 381
8.21.14 Dependencies 382
8.21.15 Overview of important parameters 384

8.22 Parking axis / parking encoder 385

8.23 Position tracking 388
8.23.1 Position tracking with a measuring gearbox 389

8.24 Encoder as drive object 393

8.25 Terminal Module 41 396

8.25.1 SIMOTION mode 396
8.25.2 SINAMICS mode 397
8.25.3 Zero mark emulation (SINAMICS mode) 399
8.25.4 Synchronization of the zero marks (SINAMICS mode) 402
8.25.5 Limit frequencies for TM41 403
8.25.6 Example in the SINAMICS mode 404
8.25.7 Function diagrams and parameters 405
8.26 Upgrade the firmware and project 407
8.26.1 Updating the firmware and STARTER project data using the web server 408
8.26.2 Downgrade lock 409
8.26.3 Protection against power failure while updating via the Web server 409
8.27 Essential service mode (ESM) for CU310-2 on Blocksize power units 411
8.27.1 Configuring the essential service mode 414
8.27.2 Function diagrams and parameters 415
8.28 Pulse/direction interface 416
8.29 Derating function for chassis units 418
8.30 Parallel connection of motors 419
9 Function modules 423
9.1 Technology controller 425
9.2 Extended monitoring functions 430
9.3 Extended Brake Control 432
9.4 Braking Module external 438
9.5 Cooling unit 440
9.6 Extended torque control (kT estimator, servo) 442
9.7 Position control 445
9.7.1 Position actual value conditioning 445
9.7.1.1 Indexed actual value acquisition 449
9.7.1.2 Load gear position tracking 450
9.7.1.3 Function diagrams and parameters 456
9.7.2 Position controller 457
9.7.3 Monitoring functions 458
9.7.4 Measuring probe evaluation and reference mark search 460
9.7.5 Commissioning the function 461
9.8 Basic positioner 463
9.8.1 Mechanical system 465
9.8.2 Limits 468
9.8.2.1 Maximum velocity 468
9.8.2.2 Maximum acceleration/deceleration 468
9.8.2.3 Limit traversing range 469
9.8.2.4 Jerk limitation 472
9.8.2.5 Starting against a closed brake 473
9.8.2.6 Function diagrams and parameters 473
9.8.3 EPOS and safe setpoint velocity limitation 474
9.8.4 Referencing 474
9.8.4.1 Reference point approach (incremental measuring system) 478

9.8.4.2 Flying referencing ... 482
9.8.4.3 Data set switchover ... 483
9.8.4.4 Function diagrams and parameters ... 485
9.8.5 Referencing with several zero marks per revolution ... 485
9.8.5.1 Evaluating BERO signals ... 487
9.8.6 Safely referencing under EPOS ... 488
9.8.7 Traversing blocks ... 491
9.8.8 Travel to fixed stop ... 496
9.8.9 Direct setpoint input (MDI) ... 499
9.8.10 Jog ... 502
9.8.11 Status signals ... 503

9.9 Master/slave function for Active Infeed ... 506
9.9.1 Basic structure ... 508
9.9.2 Commissioning the function ... 510
9.9.3 Types of communication ... 512
9.9.4 Explanations for the function diagrams ... 513
9.9.5 Function diagrams and parameters ... 514

9.10 Parallel connection of power units ... 515
9.10.1 Applications of parallel connections ... 518
9.10.1.1 Parallel connection of Basic Line Modules ... 520
9.10.1.2 Parallel connection of Smart Line Modules ... 522
9.10.1.3 Parallel connection of Active Line Modules ... 523
9.10.1.4 Parallel connection of Motor Modules ... 526
9.10.2 Commissioning the parallel connection ... 528
9.10.3 Additional drive in addition to the parallel connection ... 529

9.11 Extended stop and retract ... 532
9.11.1 Commissioning the function ... 533
9.11.2 Valid trigger sources ... 533
9.11.3 Invalid trigger sources ... 534
9.11.4 Configuring ESR responses ... 534
9.11.4.1 Extended stopping ... 534
9.11.4.2 Extended retract ... 535
9.11.4.3 Regenerative operation ... 536
9.11.5 Restrictions for ESR ... 537
9.11.6 PROFIdrive telegram for ESR ... 538
9.11.7 Function diagrams and parameters ... 538

9.12 Moment of inertia estimator ... 540
9.12.1 Commissioning the function ... 544
9.12.2 Supplementary functions for vector control ... 545
9.12.2.1 Moment of inertia precontrol ... 545
9.12.2.2 Additional functions ... 547
9.12.3 Function diagrams and parameters ... 547

9.13 Additional controls for Active Infeed ... 549

9.14 Advanced Position Control (including Active Vibration Suppression) ... 550
9.14.1 Commissioning the function module ... 554
9.14.2 Active Vibration Suppression (APC without sensor on the load side) ... 556
9.14.2.1 Activating the function ... 560
9.14.2.2 Measuring the function ... 561
9.14.3 APC to reduce machining-related oscillation ... 562

9.14.3.1 Activating the function 564
9.14.3.2 Measuring the function 565
9.14.4 APC with encoder combination and differential position feedback: 565
9.14.4.1 Important notes for parameterization 569
9.14.4.2 Measuring the function 570
9.14.5 APC with acceleration feedback 570
9.14.5.1 Important notes for parameterization 575
9.14.5.2 Measuring the function 576
9.14.6 APC with load velocity control 576
9.14.6.1 Important notes for parameterization 578
9.14.6.2 Measuring the function 578
9.14.7 Additional Information 579
9.14.8 Measuring frequency responses 582
9.14.8.1 Use case SINUMERIK 582
9.14.8.2 Application with STARTER 582
9.14.8.3 Configuring measuring functions 584
9.14.9 Function diagrams and parameters 585

9.15 Cogging torque compensation 587
9.15.1 Activating the function module 590
9.15.2 Activate cogging torque compensation 590
9.15.3 Filling compensation tables 590
9.15.4 Compensating periodic position errors 593
9.15.5 Messages and parameters 594

10 Monitoring functions and protective functions 595

10.1 Power unit protection 595
10.1.1 Thermal monitoring and overload responses 595

10.2 Thermal motor protection 599
10.2.1 Thermal motor models 599
10.2.1.1 Thermal motor model 1 600
10.2.1.2 Thermal motor model 2 602
10.2.1.3 Thermal motor model 3 602
10.2.1.4 Motor overload protection according to IEC/UL 61800-5-1 603
10.2.1.5 Function diagrams and parameters 605
10.2.2 Motor temperature sensing 606
10.2.3 Sensor Modules 608
10.2.3.1 Sensor Module Cabinet-Mounted 608
10.2.3.2 Sensor Module External 609
10.2.3.3 Sensor Module SME 20/25 609
10.2.3.4 Sensor Module External 120/125 609
10.2.4 Terminal Modules 611
10.2.5 Terminal Module 31 612
10.2.6 Terminal Module 120 613
10.2.7 Terminal Module 150 615
10.2.7.1 Measurement with up to 6 channels 616
10.2.7.2 Measurement with up to 12 channels 617
10.2.7.3 Forming groups of temperature sensors 618
10.2.7.4 Evaluating temperature channels 618
10.2.7.5 Setting the smoothing time for temperature channels 619
10.2.8 Motor Module / Power Module Chassis 620
10.2.9 Connection of the CU310-2 and the CUA31/CUA32 adapters 621

10.2.10 Motor with DRIVE-CLiQ 622
10.2.11 Temperature sensor evaluation 623
10.2.12 Function diagrams and parameters 623
10.3 Blocking protection 626
10.4 Stall protection (vector control only) 627
11 Safety Integrated Basic Functions 629
11.1 Latest information 629
11.2 General information 631
11.2.1 Explanations, standards and terminology 631
11.2.2 Supported functions 633
11.2.3 Control possibilities 635
11.2.4 Parameters, checksum, version 636
11.2.5 Handling the Safety password 637
11.2.6 Forced checking procedure (test stop) 640
11.2.6.1 Forced checking procedure or test of the switch-off signal paths (test stop) for Safety Integrated Basic 640
11.2.6.2 Forced checking procedure (test stop) with POWER ON 641
11.3 Safety instructions 642
11.4 Safe Torque Off (STO) 644
11.5 Safe Stop 1 (SS1, time controlled) 648
11.5.1 SS1 with OFF3 648
11.5.2 SS1 with external stop 650
11.5.3 Function diagrams and parameters 650
11.6 Safe Brake Control (SBC) 651
11.6.1 SBC for Motor Modules in the chassis format 653
11.7 Response times 655
11.7.1 Controlling via terminals on the Control Unit and Motor Module 656
11.7.2 Control via PROFIsafe 657
11.7.3 Control via TM54F 658
11.8 Controlling via terminals on the Control Unit and Motor/Power Module 659
11.8.1 Simultaneity and tolerance time of the two monitoring channels_Basic_Functions 662
11.8.2 Bit pattern test 664
11.9 Control via TM54F 666
11.9.1 Design 666
11.9.2 Fault acknowledgment 667
11.9.3 F-DI function 667
11.9.4 Function of the F-DO 669
11.10 Commissioning the functions "STO", "SBC" and "SS1" 672
11.10.1 General information on commissioning Safety Integrated Functions 672
11.10.2 Commissioning with Startdrive 673
11.10.2.1 STO/SS1/SBC (Basic Functions) 673
11.10.3 Commissioning via direct parameter access 675
11.10.4 Safety faults 677
11.11 Acceptance test and acceptance report 680
11.11.1 Acceptance test structure 682

11.11.2 Safety Logbook 684
11.11.3 Acceptance test 684
11.11.3.1 Preparing the acceptance test 685
11.11.3.2 Carrying out an acceptance test (example) 686
11.12 Overview of parameters and function diagrams (WV) 689
12 Applications 691
12.1 Application examples 691
12.2 Switch on infeed unit via a drive axis 694
12.3 Control Units without infeed control 697
12.4 Quick stop in the event of a power failure or emergency stop (servo) 699
12.5 Motor changeover 701
12.6 Application examples with DMC20 706
12.7 DCC and DCB extension applications 710
13 Web server 713
13.1 Overview 713
13.2 Fundamentals 716
13.2.1 Supported browsers 716
13.2.2 Accessing the web server 716
13.2.2.1 Access via service interface X127 717
13.2.2.2 Access via PROFINET interface X150 717
13.2.2.3 Preparations 718
13.2.2.4 Interfaces and connection type 718
13.2.3 Access protection 719
13.2.4 Users and access rights 720
13.2.5 Dialog screen forms in the web server 721
13.2.6 Changing parameter values 722
13.2.7 Assigning the administrator password 722
13.2.8 Login/logout 725
13.2.9 Layout of the start page 728
13.2.9.1 Navigation 728
13.2.9.2 Calling Support information 730
13.2.9.3 Saving data in a non-volatile fashion 730
13.2.10 Certificates for the secure data transfer 731
13.2.10.1 Overview 731
13.2.10.2 Using the certificate default configuration 731
13.2.10.3 Generating your own certificates 736
13.3 Diagnostic functions 738
13.3.1 “Drive objects and components” display area 738
13.3.2 “Alarms” display area 740
13.3.2.1 Filtering messages 742
13.3.2.2 Acknowledging faults 743
13.3.3 “Diagnostics buffer” display area 743
13.3.4 “Communication” display area 745
13.3.5 “Trace files” display area 745
13.4 Creating and adjusting the parameter list 747

13.4.1 Overview 747
13.4.2 Creating a parameter list 747
13.4.3 Adding parameters 749
13.4.4 Selecting/entering parameters 750
13.4.5 Changing the parameter sequence 750
13.4.6 Deleting parameters 750
13.4.7 Changing the list properties 750
13.4.8 Deleting a parameter list 751

13.5 Backup and restore 752
13.5.1 Overview 752
13.5.2 Backing up parameters 753
13.5.3 Restore file parameters 754
13.5.4 Restoring the factory setting 754

13.6 System settings 756
13.6.1 Setting or changing user accounts 756
13.6.2 Password forgotten 758
13.6.3 Configuring the IP connection 759
13.6.4 Using functions that require a license 760
13.6.5 Displaying/entering the license key 764
13.6.6 Updating the firmware via the web server 764
13.6.6.1 Overview 764
13.6.6.2 Updating the firmware and STARTER project files 765
13.6.6.3 Loading STARTER project data into the drive 767
13.6.7 Transferring the configuration using the web server 768
13.6.8 System restoration 769

14 Basic information about the drive system 771

14.1 Parameter 771

14.2 Drive objects 774

14.3 Licensing 776
14.3.1 Overview 776
14.3.2 Overview of licenses 778
14.3.3 Activating Trial License Mode 781
14.3.4 Creating a license key 783
14.3.5 Displaying/entering the License Key 784
14.3.6 Messages and parameters 785

14.4 BICO technology: Interconnecting signals 786
14.4.1 Binectors, connectors 786
14.4.2 Interconnecting signals using BICO technology 787
14.4.3 Internal coding of the binector/connector output parameters 788
14.4.4 Sample interconnections 788
14.4.5 Notes on BICO technology 789
14.4.6 Scaling 790
14.4.7 Propagation of faults 791

14.5 Data sets 792
14.5.1 CDS: Command data set 792
14.5.2 DDS: Drive Data Set 793
14.5.3 EDS: Encoder Data Set 794
14.5.4 MDS: Motor Data Set 795

14.5.5 Function diagrams and parameters 796
14.6 Inputs/outputs 798
14.6.1 Digital inputs/outputs 798
14.6.2 Use of bidirectional inputs/outputs on the CU 801
14.6.3 Analog inputs 802
14.6.4 Analog outputs 804
14.7 Write protection 805
14.8 Know-how protection 808
14.8.1 Overview 808
14.8.2 Know-how protection features 809
14.8.3 Configuring know-how protection 811
14.8.3.1 Maintaining the list of exceptions 811
14.8.3.2 Activate know-how protection 812
14.8.3.3 Deactivating know-how protection 814
14.8.3.4 Changing the password 815
14.8.4 Loading know-how protected data to the file system 816
14.8.5 Overview of important parameters 820
14.9 Component replacement 822
14.9.1 Replacing components 822
14.9.2 Examples of replacing components 823
14.10 Data backup 825
14.10.1 Backing up the non-volatile memory 825
14.10.2 Redundant data backup on memory card 827
14.11 DRIVE-CLiQ 829
14.11.1 DRIVE-CLiQ topology 829
14.11.2 DRIVE-CLiQ diagnostics 830
14.11.3 Emergency operating mode for DRIVE-CLiQ components 831
14.12 System rules, sampling times and DRIVE-CLiQ wiring 834
14.12.1 Overview of system limits and system utilization 834
14.12.2 System rules 835
14.12.3 Special configurations and topologies 837
14.12.4 Rules on the sampling times 838
14.12.4.1 Rules when setting the sampling times 838
14.12.4.2 Rules for isochronous mode 841
14.12.4.3 Default settings for the sampling times 842
14.12.4.4 Setting the pulse frequency 843
14.12.4.5 Setting sampling times 844
14.12.4.6 Overview of important parameters 845
14.12.5 Rules for wiring with DRIVE-CLiQ 845
14.12.5.1 Binding DRIVE-CLiQ interconnection rules 846
14.12.5.2 Recommended interconnection rules 848
14.12.5.3 Rules for automatic configuration 850
14.12.5.4 Changing the offline topology in the STARTER commissioning tool 852
14.12.5.5 Modular machine concept: Offline correction of the reference topology 852
14.12.6 Notes on the number of controllable drives 854
14.12.6.1 Number of drives depending on the control mode and cycle times 854
14.12.6.2 Cycle mix for servo control and vector control 861

A Appendix 865

A.1 List of abbreviations 865

A.2 Documentation overview 877

A.3 Supported sample topologies 878

A.4 Parameterization using the BOP20 885
A.4.1 Introduction 885
A.4.2 General information about the BOP20 885
A.4.3 Displays and using the BOP20 888
A.4.4 Fault and alarm displays 893
A.4.5 Controlling the drive using the BOP20 894
A.4.6 Important functions via BOP20 894

A.5 Replacing an encoder for SIMOTICS motors 896

A.6 Availability of hardware components 898

A.7 Availability of SW functions 905

A.8 Functions of SINAMICS S120 Combi 916

Index 919

Introduction

1

1.1 The SINAMICS converter family

With the SINAMICS converter family, you can solve any individual drive task in the low-voltage, medium-voltage and DC voltage range. From converters to motors and controllers, all Siemens drive components are perfectly matched to each other and can be easily integrated into your existing automation system. With SINAMICS you are prepared for digitization. You benefit from highly efficient engineering with a variety of tools for the entire product development and production process. And you also save space in the control cabinet – thanks to the integrated safety technology.

You can find additional information about SINAMICS at the following address (http://www.siemens.com/sinamics).

1.2 General information about SINAMICS documentation

SINAMICS documentation

The SINAMICS documentation is organized in the following categories:

- General documentation/catalogs
- User documentation
- Manufacturer/service documentation

Standard scope

The scope of the functionality described in this document can differ from that of the drive system that is actually supplied.

- Other functions not described in this documentation might be able to be executed in the drive system. However, no claim can be made regarding the availability of these functions when the equipment is first supplied or in the event of service.
- The documentation can also contain descriptions of functions that are not available in a particular product version of the drive system. Please refer to the ordering documentation only for the functionality of the supplied drive system.
- Extensions or changes made by the machine manufacturer must be documented by the machine manufacturer.

For reasons of clarity, this documentation does not contain all of the detailed information on all of the product types, and cannot take into consideration every conceivable type of installation, operation and service/maintenance.

Target group

This documentation is intended for machine manufacturers, commissioning engineers, and service personnel who use the SINAMICS drive system.

Benefits

This manual provides all of the information, procedures and operator actions required for the particular usage phase.

Siemens MySupport/Documentation

You can find information on how to create your own individual documentation based on Siemens content and adapt it for your own machine documentation at the following address (https://support.industry.siemens.com/My/ww/en/documentation).

Additional information

You can find information on the topics below at the following address (https://support.industry.siemens.com/cs/de/en/view/108993276):

- Ordering documentation/overview of documentation
- Additional links to download documents
- Using documentation online (find and search in manuals/information)

Questions relating to the technical documentation

Please send any questions about the technical documentation (e.g. suggestions for improvement, corrections) to the following email address (mailto:docu.motioncontrol@siemens.com).

FAQs

You can find Frequently Asked Questions under Product Support (https://support.industry.siemens.com/cs/de/en/ps/faq).

1.3 Usage phases and their documents/tools (as an example)

Usage phase	Document/tool
Orientation	SINAMICS S Sales Documentation
Planning/configuration	• SIZER Engineering Tool • Configuration Manuals, Motors
Deciding/ordering	SINAMICS S120 catalogs • SINAMICS S120 and SIMOTICS (Catalog D 21.4) • SINAMICS Converters for Single-Axis Drives and SIMOTICS Motors (Catalog D 31) • SINAMICS Converters for Single-Axis Drives – Built-In Units (D 31.1) • SINAMICS Converters for Single-Axis Drives – Distributed Converters (D 31.2) • SINAMICS S210 Servo Drive System (D 32) • SINUMERIK 840 Equipment for Machine Tools (Catalog NC 62)
Installation/assembly	• SINAMICS S120 Equipment Manual for Control Units and Supplementary System Components • SINAMICS S120 Equipment Manual for Booksize Power Units • SINAMICS S120 Equipment Manual for Booksize Power Units C/D Type • SINAMICS S120 Equipment Manual for Chassis Power Units • SINAMICS S120 Equipment Manual for Chassis Power Units, Liquid-cooled • SINAMICS S120 Equipment Manual water-cooled chassis power units for common cooling circuits • SINAMICS S120 Equipment Manual for Chassis Power Units, Air-cooled • SINAMICS S120 Equipment Manual for AC Drives • SINAMICS S120 Equipment Manual Combi • SINAMICS S120M Equipment Manual Distributed Drive Technology • SINAMICS HLA System Manual Hydraulic Drives
Commissioning	• Startdrive Commissioning Tool • SINAMICS S120 Getting Started • SINAMICS S120 Commissioning Manual • SINAMICS S120 Function Manual Drive Functions • SINAMICS S120 Safety Integrated Function Manual • SINAMICS S120 Function Manual Communication • SINAMICS S120/S150 List Manual • SINAMICS HLA System Manual Hydraulic Drives
Usage/operation	• SINAMICS S120 Commissioning Manual • SINAMICS S120/S150 List Manual • SINAMICS HLA System Manual Hydraulic Drives
Maintenance/servicing	• SINAMICS S120 Commissioning Manual • SINAMICS S120/S150 List Manual
References	• SINAMICS S120/S150 List Manual

1.4 Where can the various topics be found?

Software		Manual
Alarms	Described in order of ascending numbers	SINAMICS S120/S150 List Manual
Parameters	Described in order of ascending numbers	SINAMICS S120/S150 List Manual
Function block diagrams	Sorted according to topic	SINAMICS S120/S150 List Manual
	Described in order of ascending numbers	
Drive functions		SINAMICS S120 Function Manual Drive Functions
Communication topics		SINAMICS S120 Function Manual Communication[2]
Safety Integrated	Basic and Extended Functions	SINAMICS S120 Safety Integrated Function Manual
	Basic Functions	SINAMICS S120 Function Manual Drive Functions
Commissioning	Of a simple SINAMICS S120 drive with STARTER	Getting Started[1]
Commissioning	With STARTER	SINAMICS S120 Commissioning Manual[1]
Commissioning	Of a simple SINAMICS S120 drive with Startdrive	Getting Started[2]
Commissioning	With Startdrive	SINAMICS S120 Commissioning Manual[2]
Web server		SINAMICS S120 Function Manual Drive Functions

Hardware			Manual
Control Units and expansion components	• Control Units • Option Boards • Terminal Modules	• HUB Modules • VSM10 • Encoder system connection	SINAMICS S120 Equipment Manual for Control Units and Supplementary System Components
Booksize power units	• Line connection • Line Modules • Motor Modules	• DC link components • Braking resistors • Control cabinet design	SINAMICS S120 Equipment Manual for Booksize Power Units
Power units, booksize C/D type format			SINAMICS S120 Equipment Manual for Booksize Power Units C/D Type
Chassis power units			SINAMICS S120 Equipment Manual for Chassis Power Units, air, liquid or water cooled
AC drive components			SINAMICS S120 Equipment Manual for AC Drives
S120 Combi components			SINAMICS S120 Equipment Manual Combi
Diagnostics via LEDs	STARTER		SINAMICS S120 Commissioning Manual[1]
	Startdrive		SINAMICS S120 Commissioning Manual[2]
Meaning of the LEDs			Equipment Manuals
High Frequency Drive components			SINAMICS S120 System Manual High Frequency Drives

[1] Up to firmware version 5.1 SP1

[2] From firmware version 5.2

1.5 Training and support

Training

At the following address (http://www.siemens.com/sitrain), you can find information about SITRAIN (Siemens training on products, systems and solutions for automation and drives).

Technical Support

Country-specific telephone numbers for technical support are provided in the Internet at the following address (https://support.industry.siemens.com/cs/ww/en/sc) in the "Contact" area.

1.6 Using OpenSSL

Many SINAMICS products include OpenSSL. The following applies to these products:

- This product contains software (https://www.openssl.org/) that has been developed by the OpenSSL project for use in the OpenSSL toolkit.
- This product contains cryptographic software (mailto:eay@cryptsoft.com) created by Eric Young.
- This product contains software (mailto:eay@cryptsoft.com) developed by Eric Young.

1.7 General Data Protection Regulation

Compliance with the General Data Protection Regulation

Siemens respects the principles of data protection, in particular the data minimization rules (privacy by design).

For this product, this means:
The product does not process neither store any person-related data, only technical function data (e.g. time stamps). If the user links these data with other data (e.g. shift plans) or if he stores person-related data on the same data medium (e.g. hard disk), thus personalizing these data, he has to ensure compliance with the applicable data protection stipulations.

Fundamental safety instructions 2

2.1 General safety instructions

⚠ WARNING

Danger to life if the safety instructions and residual risks are not observed

If the safety instructions and residual risks in the associated hardware documentation are not observed, accidents involving severe injuries or death can occur.

- Observe the safety instructions given in the hardware documentation.
- Consider the residual risks for the risk evaluation.

⚠ WARNING

Malfunctions of the machine as a result of incorrect or changed parameter settings

As a result of incorrect or changed parameterization, machines can malfunction, which in turn can lead to injuries or death.

- Protect the parameterization against unauthorized access.
- Handle possible malfunctions by taking suitable measures, e.g. emergency stop or emergency off.

2.2 Warranty and liability for application examples

Application examples are not binding and do not claim to be complete regarding configuration, equipment or any eventuality which may arise. Application examples do not represent specific customer solutions, but are only intended to provide support for typical tasks.

As the user you yourself are responsible for ensuring that the products described are operated correctly. Application examples do not relieve you of your responsibility for safe handling when using, installing, operating and maintaining the equipment.

2.3 Industrial security

Note

Industrial security

Siemens provides products and solutions with industrial security functions that support the secure operation of plants, systems, machines and networks.

In order to protect plants, systems, machines and networks against cyber threats, it is necessary to implement – and continuously maintain – a holistic, state-of-the-art industrial security concept. Products and solutions from Siemens constitute one element of such a concept.

Customers are responsible for preventing unauthorized access to their plants, systems, machines and networks. Such systems, machines and components should only be connected to an enterprise network or the Internet if and to the extent such a connection is necessary and only when appropriate security measures (e.g. using firewalls and/or network segmentation) are in place.

For additional information on industrial security measures that can be implemented, please visit:

Industrial security (https://www.siemens.com/industrialsecurity)

Siemens' products and solutions undergo continuous development to make them more secure. Siemens strongly recommends that product updates are applied as soon as they become available, and that only the latest product versions are used. Use of product versions that are no longer supported, and failure to apply the latest updates may increase customer's exposure to cyber threats.

To stay informed about product updates, subscribe to the Siemens Industrial Security RSS Feed at:

Industrial security (https://www.siemens.com/industrialsecurity)

Further information is provided on the Internet:

Industrial Security Configuration Manual (https://support.industry.siemens.com/cs/ww/en/view/108862708)

⚠ WARNING

Unsafe operating states resulting from software manipulation

Software manipulations, e.g. viruses, Trojans, or worms, can cause unsafe operating states in your system that may lead to death, serious injury, and property damage.

- Keep the software up to date.
- Incorporate the automation and drive components into a holistic, state-of-the-art industrial security concept for the installation or machine.
- Make sure that you include all installed products into the holistic industrial security concept.
- Protect files stored on exchangeable storage media from malicious software by with suitable protection measures, e.g. virus scanners.
- On completion of commissioning, check all security-related settings.
- Protect the drive against unauthorized changes by activating the "Know-how protection" converter function.

Infeed

3

Overview

Infeed units or Line Modules contain the central line infeed unit for the intermediate DC circuit. Various Line Modules are available to address the various application profiles:

- Active Line Modules (ALM)
  Active Line Modules can supply energy and return regenerative energy to the line supply. A Braking Module and braking resistor are required only if the drives need to be decelerated in a controlled manner after a power failure (i.e. when energy cannot be fed back to the supply). For an infeed unit with an ALM, a line reactor or an Active Interface Module is required.
- Basic Line Modules (BLM)
  Basic Line Modules are only suitable for infeed operation, i.e. they cannot feed regenerative energy back into the grid. If regenerative energy accrues, e.g. when braking the drives, it must be converted to heat via a Braking Module and a braking resistor.
- Smart Line Modules (SLM)
  Smart Line Modules can supply energy and return regenerative energy to the line supply. A Braking Module and braking resistor are required only if the drives need to be decelerated in a controlled manner after a power failure (i.e. when energy cannot be fed back to the supply). For an infeed unit with an SLM, the matching line reactor is required.

Parameter assignment

Line Modules are parameterized in the Startdrive engineering tool via the "Infeed" drive object.

Note

Smart Line Modules 5 kW and 10 kW

Smart Line Modules of performance class 5 kW and 10 kW do not have DRIVE-CLiQ interfaces and cannot be configured in the Startdrive engineering tool and in the STARTER commissioning tool. The following information must be taken into consideration for the commissioning of SLMs of performance class 5 kW and 10 kW:

- For communicating with the Control Unit, SLMs must be wired with a digital input of the Control Unit via terminals.
- The recommended ON and OFF sequence for activating the SLMs must be adhered to.

You can find further information on the wiring of Smart Line Modules with the Control Unit and for the recommended ON/OFF sequence in the Equipment Manual SINAMICS S120 Booksize power units.

3.1 Active Infeed

Function description

The Active Infeed control works in conjunction with the line reactor or an Active Interface Module and the Active Line Module as step-up controller. The level of the DC link voltage can be defined through parameters, and, by means of the control, it is independent of line voltage fluctuations.

The open and closed-loop control firmware of the Active Line Module runs on the Control Unit assigned to it. The Active Line Module and Control Unit communicate via DRIVE-CLiQ.

The operating modes "Parallel connection" and "Master/Slave connection" of power units are described in this manual in Section "Function modules (Page 423)".

Features

- Controlled DC link voltage whose level can be adjusted (independent of line voltage fluctuations)
- Regenerative feedback capability
- Specific reactive current setting
- Low line harmonics, sinusoidal line current (cos φ = 1)
- Several Active Line Modules connected in parallel
- Master/Slave operation for several Active Line Modules
- Parameterizable band-stop filters for Active Line Modules in Chassis format

3.1.1 Active Infeed closed-loop control booksize

Overview

The following figure gives an overview of the structure of an Active Infeed control.

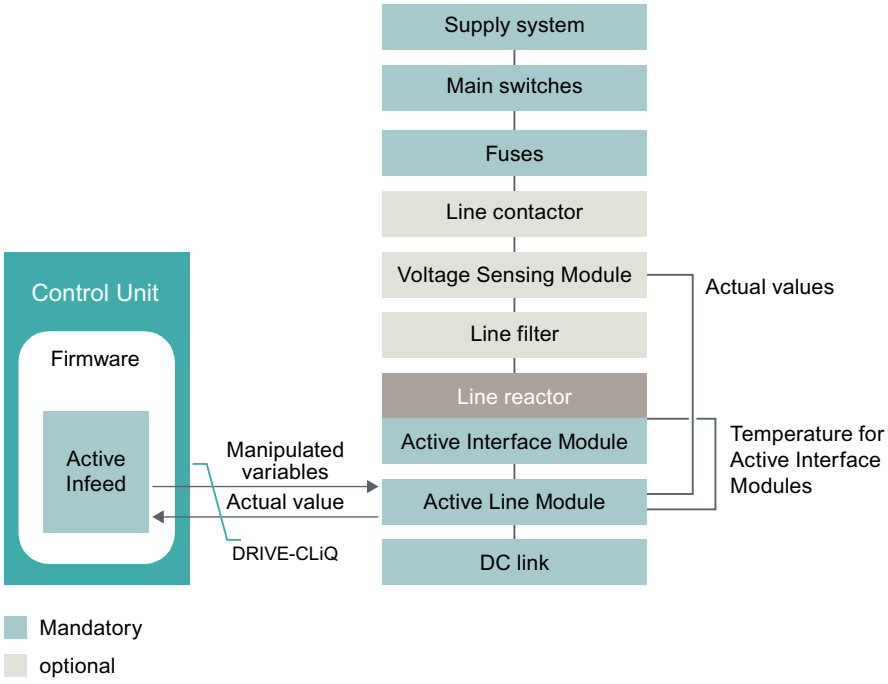

Figure 3-1 Schematic structure of Active Infeed Booksize

Active Infeed control for Active Line Modules in Booksize design

Active Line Modules of the Booksize format can be operated in the following modes depending on the parameterized line voltage (p0210):

- **Active Mode**
  In the Active Mode, the DC link voltage is regulated to a variable setpoint (p3510) which results in a sinusoidal line current (cos φ = 1). The level of the reactive current is also controlled and can be specifically defined.
- **Smart Mode**
  Energy recovery capability is maintained in Smart Mode, although there is a lower DC link voltage in comparison to the Active Mode. The DC link voltage is dependent on the current line voltage. The Extended Smart Mode can be activated as an option (see Chapter "Extended Smart Mode (Page 52)").

The DC link voltage setpoint (p3510) and the control type are preset as follows during commissioning in line with the connection voltage (p0210):

Table 3-1 Presetting the control type and DC link voltage Booksize

Supply voltage p0210 [V]	380...400	401...415	416...440	460	480
Control type p3400.0	"0" = Active Mode		"1" = Smart Mode		
Vdc_set p3510 [V]	600	625	562-594[1)]	621[1)]	648[1)]

1) Voltages specified for the Smart Mode are derived from the rectified line supply voltage. The DC link voltage setpoint (p3510) has no effect in this control mode.

The closed-loop controlled mode of Booksize power units for p0210 > 415 V can be enabled if the maximum stationary DC link voltage (p0280) is increased as follows: p0280 ≥ 1.5 · p0210 and p0280 > 660 V.

In this case, the setpoint of the DC link voltage p3510 is not adapted automatically. p3510 = 1.5 · p0210 is recommended. The voltage-controlled operation is activated with p3400.0 = 0 and p3400.3 = 1.

Voltage Sensing Module 10 (VSM10)

Using a Voltage Sensing Module 10 (VSM10) to detect the line voltage, drives can also be operated in systems with significant frequency fluctuations beyond the range defined in IEC 61000-2-4 if certain supplementary conditions are met. Significant frequency fluctuations may occur, e.g. in (isolated) diesel-electric systems but not in large interconnected systems such as the European power grid.

In non-European countries, especially in countries with power distribution over a wide geographical region (large countries such as Australia, USA, China), line voltage dips occur more frequently, the dips are somewhat lower and, above all, they can occur for longer periods of time up to several seconds. In such grids, the use of the Voltage Sensing Module is urgently recommended.

Commissioning an ALM Booksize

During commissioning, the device supply voltage (p0210) and the selection of an optional line filter (p0220) must be parameterized.

Following automatic commissioning, the appropriate filter for the matching Active Interface Module is preset as the line filter. If the drive line-up is set up differently, then the line filter type must be adjusted using p0220.

When it is first switched on with a new/modified network, an automatic controller setting must be implemented using the line and DC link identification routine (p3410).

While the identification routine is running, it is not permissible that other loads are switched-in/ switched-out.

Note

In a supply system without regenerative feedback capability (e.g. generators), regenerative operation must be inhibited via the binector input p3533.

Note

When a Wideband Line Filter is connected, it must be parameterized with p0220 = 1...5. The temperature sensor must be connected to terminal X21 of the Active Line Module.

The DC link voltage (p3510) can be set within the following limits:

- Upper limit:
  - Maximum DC link voltage (p0280)
  - Product of line voltage (p0210) and max. step-up factor (r3508)
- Lower limit: Supply voltage (p0210) multiplied by 1.42

3.1.2 Active Infeed closed-loop control chassis

Overview

The following figure gives an overview of the structure of an Active Line Module. In addition, the figure shows the differences between the Chassis and Chassis-2 designs.

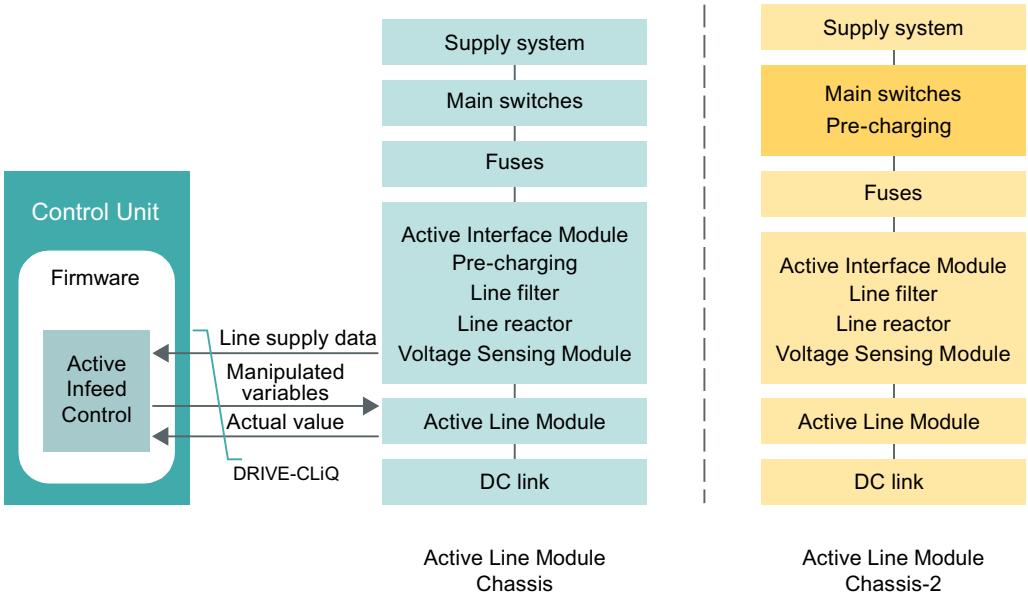

Figure 3-2 Schematic structure of the Active Infeed Control Chassis and Chassis-2

Operating mode of the Active Infeed Control for Active Line Modules of the Chassis format

Active Line Modules of the Chassis format (ALM Chassis) work exclusively in Active Mode.

In the Active Mode, the DC link voltage is regulated to a variable setpoint (p3510) which results in a sinusoidal line current (cos φ = 1).

The DC link voltage setpoint (p3510) is preset depending on the supply voltage (p0210) using the equation p3510 = 1.5 · p0210.

Commission an ALM Chassis

The device supply voltage (p0210) must be parameterized during commissioning. The necessary line filter (p0220) is preset.

When it is first switched on with a new or modified network, an automatic controller setting should be implemented using the supply/DC-link identification routine (p3410).

Note

While the identification routine is running, it is not permissible that other loads are switched-in/ switched-out.

Note

In a supply system without regenerative feedback capability (e.g. generators), regenerative operation must be inhibited via the binector input p3533.

Special features of Active Interface Modules the format Chassis-2

Active Line Modules of the Chassis-2 format (ALM Chassis-2) works in a way comparable to the ALMs of the Chassis format with a higher and adjustable pulse frequency. To further minimize phase effects on the system, the upstream Active Interface Module of the Chassis-2 format (AIM Chassis-2) has been redesigned.

The pre-charging and main contactor must be provided externally for Chassis-2 AIMs. The control and feedback of the switches required for operation are implemented and monitored using the software of the Chassis-2 ALM. The necessary signal interconnections are described in the following manual:

- SINAMICS S120 Device manual for air-cooled Chassis power unit

Opening and closing times of the contacts being used can be adjusted in parameter p0255 (power unit contactor monitoring time). In the case of parallel connection of Chassis-2 ALMs, the following constraints apply:

- The signals must be connected to each Chassis-2 ALM. This is the only way to achieve a valid operating mode for the parallel connection.

Setting the DC link voltage

NOTICE
Overheating of the components An excessively high step-up factor for Active Line Modules can overheat and destroy components. • In parameter p3508 (step-up factor), enter the value "2.00" at a maximum.

The DC link voltage (p3510) can be set for both the ALMs for the Chassis format and the ALMs for the Chassis-2 format within the following limits:

- Upper limit:
  - Maximum DC link voltage (p0280)
  - Product of the supply voltage (p0210) and step-up factor (max. p3508 = 2.00)
- Lower limit: Supply voltage (p0210) multiplied by 1.42

For ALMs in the Chassis and Chassis-2 formats, the following DC link voltage values apply (p0280):

Device voltage	Default setting	Minimum	Maximum
380 ... 480 V	750 V	50 V	785 V
500 ... 690 V	0.875 · p0210 + 502 V	50 V	1130 V

The values are entered in the parameter p0280 (DC link voltage maximum).

3.1.3 Line supply and DC link identification

Function description

The characteristic line supply and DC link quantities are determined using the automatic parameter identification routine. They provide the basis to optimally set the controllers in the Line Module.

An optimal setting of the current and voltage control is achieved with the line supply and DC link identification routine. The dynamic response of the current control can be adjusted with p3560.

Note

Repetition of the supply / DC link identification

If the line supply environment or the components connected to the DC link change (e.g. after installation of the equipment at the customer's site or after expanding the drive line-up), the supply/DC-link identification routine should be repeated with p3410 = 5. Only then can it be guaranteed that the infeed unit operates with the optimum controller settings.

When the identification function is activated, alarm A06400 is output.

Note

While the identification routine is running, it is not permissible that other loads are switched-in/ switched-out.

Identification methods

The following identification types are available:

- p3410 = 4: Identify and save controller setting with L adaptation
  An identification run for the total inductance and DC link capacitance is initiated when the pulses are next enabled (2 measuring routines with different current magnitudes). The data acquired (r3411 and r3412) is entered into p3421 and p3422. At the same time, the parameters for current controller adaptation are recalculated (p3620, p3622). The parameters for the infeed unit are then automatically stored in a non-volatile memory. The infeed unit continues to operate without any interruption with the new controller parameters.
- p3410 = 5: Reset, save ID and controller setting with L adaptation
  Unlike p3410 = 4, the parameter values for line inductance and DC link capacitance are reset before the first identification run (p3421 = p0223 and p3422 = p0227).

  Note

  Identification using p3410 = 5 should preferably be used. The identification can be carried out for both Active Line Modules of the Chassis format and for ALMs of the Chassis-2 format.

- p3410 = 6: Robust controller setting for Active Line Modules the Chassis-2 format (ALM Chassis-2)
  For ALM Chassis-2, you can use p0220 ≥ 110 to select the corresponding Active Interface Modules of the Chassis-2 format (AIM Chassis-2) automatically and carry out an automated controller setting with p3410 = 6. During the automated controller setting, the value of the DC link is determined in a substantially shortened measurement. All of the other controller parameters are already preset by setting p3410 = 6.
  The following **advantages and disadvantages** must be observed:
  - Adjustments relating to the controller parameters and grid identification are not required for modified grid parameters (e.g. switchover to another grid).
  - Unlike identification over p3410 = 5, the automated controller setting leads to losses in the dynamic response.

P3410 = 0 is automatically set when an identification routine is successfully completed.

Additional identification methods are listed in the SINAMICS S120/S150 List Manual.

3.1.4 Active Infeed open-loop control

Description

The Active Line Module can be controlled via the BICO interconnection using terminals or the fieldbus. The operating status is indicated on the operating display r0002. The missing enable signals for operation (r0002 = 00) are mapped in parameter r0046. The EP terminals (enable pulses) must be connected in accordance with the manual of the corresponding power units. The drive unit must have been commissioned for the first time.

Acknowledging faults

Faults that are still present but the causes of which have been rectified can be acknowledged using a 0/1 edge at the "1st acknowledge faults" signal (p2103).

Switching on the ALM

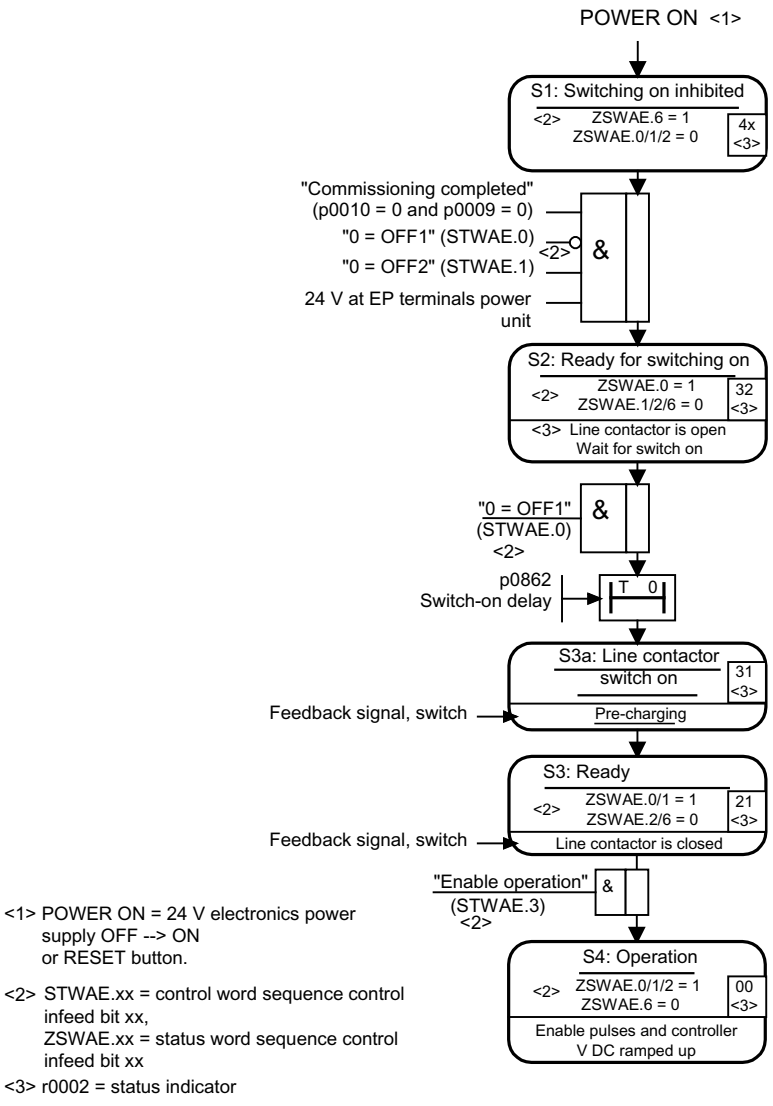

<1> POWER ON = 24 V electronics power supply OFF --> ON or RESET button.

<2> STWAE.xx = control word sequence control infeed bit xx, ZSWAE.xx = status word sequence control infeed bit xx

<3> r0002 = status indicator

Figure 3-3 Active Infeed power-up procedure

Note

The infeed unit can be switched on by issuing an enable signal at the EP terminals and a positive signal edge at OFF1 (p0840).

Requirement

- Commissioning takes place via the STARTER commissioning tool.
- No PROFIdrive telegrams activated.

Switching off the ALM

The Active Line Module is switched off by the same procedure used to switch it on, but in the reverse order. However, there is no pre-charging at switch off.

Switching off the controller with the OFF1 signal is delayed by the time entered in p3490. This allows the attached drives to be braked in a controlled manner. Before the infeed unit is switched off, the drives connected to the DC link should be in pulse inhibit mode.

Control and status messages

Table 3-2 Active Infeed open-loop control

Signal name	Internal control word	Binector input	Display of internal control word	PROFIdrive telegram 370
ON/OFF1	STWAE.0	p0840 ON/OFF1	r0898.0	E_STW1.0
OFF2	STWAE.1	p0844 1 OFF2 and p0845 2 OFF2	r0898.1	E_STW1.1
Enable operation	STWAE.3	p0852 Enable operation	r0898.3	E_STW1.3
Disable motor operation	STWAE.5	p3532 Disable motor operation	r0898.5	E_STW1.5
Inhibit regenerating	STWAE.6	p3533 Inhibit regenerating	r0898.6	E_STW1.6
Acknowledge fault	STWAE.7	p2103 1 Acknowledge or p2104 2 Acknowledge or p2105 3 Acknowledge	r2138.7	E_STW1.7
Master control by PLC	STWAE.10	p0854 Master control by PLC	r0898.10	E_STW1.10

Table 3-3 Active Infeed status message

Signal name	Internal status word	Parameter	PROFIdrive telegram 370
Ready to start	ZSWAE.0	r0899.0	E_ZSW1.0
Ready	ZSWAE.1	r0899.1	E_ZSW1.1
Operation enabled	ZSWAE.2	r0899.2	E_ZSW1.2
Fault active	ZSWAE.3	r2139.3	E_ZSW1.3
No OFF2 active	ZSWAE.4	r0899.4	E_ZSW1.4
Switching on inhibited	ZSWAE.6	r0899.6	E_ZSW1.6
Alarm active	ZSWAE.7	r2139.7	E_ZSW1.7
Switch-on operation active	ZSWAE.8	r0899.8	E_ZSW1.8
Control requested	ZSWAE.9	r0899.9	E_ZSW1.9
Precharging complete	ZSWAE.11	r0899.11	E_ZSW1.11
Line contactor closed	ZSWAE.12	r0899.12	E_ZSW1.12

3.1.5 Reactive current control

Function description

A reactive current setpoint can be set to compensate the reactive current or to stabilize the line voltage in infeed operation. The total setpoint is the sum of the fixed setpoint p3610 and the dynamic setpoint via the connector input p3611.

- The direction of rotation of the line supply is compensated automatically with reactive current control.
  - A negative reactive current setpoint (r0076 < 0) causes an inductive reactive current (overexcited operation, lower output voltage and or lagging current).
  - A positive reactive current setpoint (r0076 > 0) generates a capacitive reactive current (overexcited operation, high output voltage and/or leading current).
- The closed-loop control limits the reactive current setpoint dynamically in such a way that the sum of the active current setpoint and the reactive current setpoint does not exceed the maximum device current.
- The reactive current demand of a line filter selected in the configuration wizard is automatically supplied by the Active Infeed Module. This means that the display value of the current reactive current setpoint in r0075 no longer corresponds with the parameterized total reactive current setpoint.
- The reactive power setpoint of the Active Infeed Module with respect to the line supply can be obtained by multiplying the parameterized total reactive current setpoint by 1.73 rated line voltage.

3.1.6 Harmonics controller

Function description

Harmonics in the line voltage cause harmonics in the line currents. With the activation of the harmonics controller, the ALM generates a pulse pattern that contains harmonic components in addition to the fundamental component. Ideally, the Active Infeed now sets an equally large harmonic voltage to the harmonic voltage on the line side, and does not consume any power for this harmonic. Despite the harmonic component of the line voltage, the line current remains almost sinusoidal and does not load the line supply with additional harmonic currents. However, the specific compensation of voltage harmonics to improve the line supply quality is not possible.

Example: Setting the harmonics controller

The 5th and 7th harmonics harmonics are to be compensated.

Table 3-4 Example parameters for the harmonics controller

Index	p3624	p3625
[0]	5	100 %
[1]	7	100 %
The phase currents in parameter p0069[0 ... 2] (U, V, W) can be checked using the trace function of the commissioning tool.		

3.1.7 Parameterizable bandstop filters for Active Infeed Controls in chassis format

Overview

Parameterizable band-stop filters that can be used to dampen system resonance are available for the current control loop. The main application for these band-stop filters is in weak line supplies in which the resonance point of the line filter can drop to one quarter of the controller frequency. Resonance effects in oscillating line supplies can be suppressed with the aid of these band-stop filters.

Function description

The band-stop filters are managed in the "Supplementary closed-loop control" function module.

Activating the function module

1. Select the infeed unit in the project navigator and open the "Properties" shortcut menu. The "Object properties" dialog then opens.
2. Click the "Function modules" tab.
3. Activate the "Additional closed-loop controls" function module in the function modules selection with a mouse click.

Parameter r0108.03 indicates whether the function module has been activated.

Parameterizing the function

Because the same filter algorithms are involved, the settings of the band-stop filters are always comparable with the settings of the current setpoint filters (see Section "Current setpoint filter (Page 100)").

To prevent resonance effects for nets with low short-circuit power (small RSC), a band-stop filter (with defined notch depth) for approx. 0.25-fold controller frequency (see p0115) is chosen typically. Appropriate values for the attenuation are preset for the numerator and the denominator. Only the natural frequencies for the numerator and the denominator may need to be adapted.

You can configure the band-stop filters for the Active Infeed using the following parameters:

- Negative phase-sequence system control (p3639 ff)
- Fixed setpoints (p2900 ff)
- Output voltage setpoint filter; activation with p5200.0 = 1
- Actual current value filter; activation with p5200.2 = 1
- Vdc actual value filter; activation with p1656.4 = 1

3.1.8 Function diagrams and parameters

Function diagrams (see SINAMICS S120/S150 List Manual)

- 8910 Active Infeed overview
- 8920 Active Infeed - Control word, sequence control, infeed

...

- 8940 Active Infeed - controller modulation depth reserve / controller DC link voltage (p3400.0 = 0)
- 8946 Active Infeed - current precontrol / current controller / gating unit (p3400.0 = 0)

...

- 8964 Active Infeed - signals and monitoring function, line frequency/Vdc monit. (p3400.0 = 0)

Overview of important parameters (see SINAMICS S120/S150 List Manual)

- r0002 Infeed operating display
- r0046.0...29 CO/BO: Missing enable signals
- r0069[0...8] CO: Phase current actual value
- p0210[0...1] Device supply voltage
- p0220[0...1] Infeed line filter type
- p0255[0...7] Power unit contactor monitoring time
- p0280 DC link voltage maximum steady-state
- p0840 BI: ON/OFF (OFF1)
- p0844 BI: No coast down / coast down (OFF2)
- p0852 BI: "Enable operation/Inhibit operation"
- r0898.0...10 CO/BO: Control word sequence control infeed
- r0899.0...12 CO/BO: Status word sequence control infeed
- r2138.7...15 CO/BO: Control word, faults/alarms
- r2139.0...15 CO/BO: Status word, faults/alarms 1
- p3400 Infeed configuration word
- r3405.0...7 CO/BO: Infeed status word
- p3410 Infeed identification method

- r3411[0...1] Infeed inductance identified
- r3412[0...1] Infeed DC link capacitance identified
- p3508 Infeed step-up factor maximum
- p3510 Infeed DC link voltage setpoint
- p3533 BI: Infeed, inhibit regenerative operation
- p3560 Infeed Vdc controller proportional gain
- p3610 Infeed reactive current fixed setpoint
- p3611 CI: Infeed reactive current supplementary setpoint
- p3624[0...1] Infeed harmonics controller order
- p3625[0...1] Infeed harmonics controller scaling
- r3626[0...1] Infeed harmonics controller output

Parameterizable bandstop filters

- p1656 Signal filter activation
- p1677 Vdc actual value filter 5 type
- p1678 Vdc actual value filter 5 denominator natural frequency
- p1679 Vdc actual value filter 5 denominator natural frequency
- p1680 Vdc actual value filter 5 numerator natural frequency
- p1681 Vdc actual value filter 5 numerator damping
- p2900 CO: Fixed value 1 [%] / fixed value 1 [%]
- p2901 CO: Fixed value 2 [%] / fixed value 2 [%]
- p5200 Signal filter activation
- p5201 Output voltage setpoint filter 5 type
- p5202 Output voltage setpoint filter 5 denominator natural frequency
- p5203 Output voltage setpoint filter 5 denominator damping
- p5204 Output voltage setpoint filter 5 numerator natural frequency
- p5205 Output voltage setpoint filter 5 numerator damping
- p5211 Current actual value filter 7 type
- p5212 Current actual value filter 7 denominator natural frequency
- p5213 Current actual value filter 7 denominator damping
- p5214 Current actual value filter 7 numerator natural frequency
- p5215 Current actual value filter 7 numerator damping

3.2 Basic Infeed

Overview

The following figure gives an overview of the structure of a Basic Infeed in **Booksize format**.

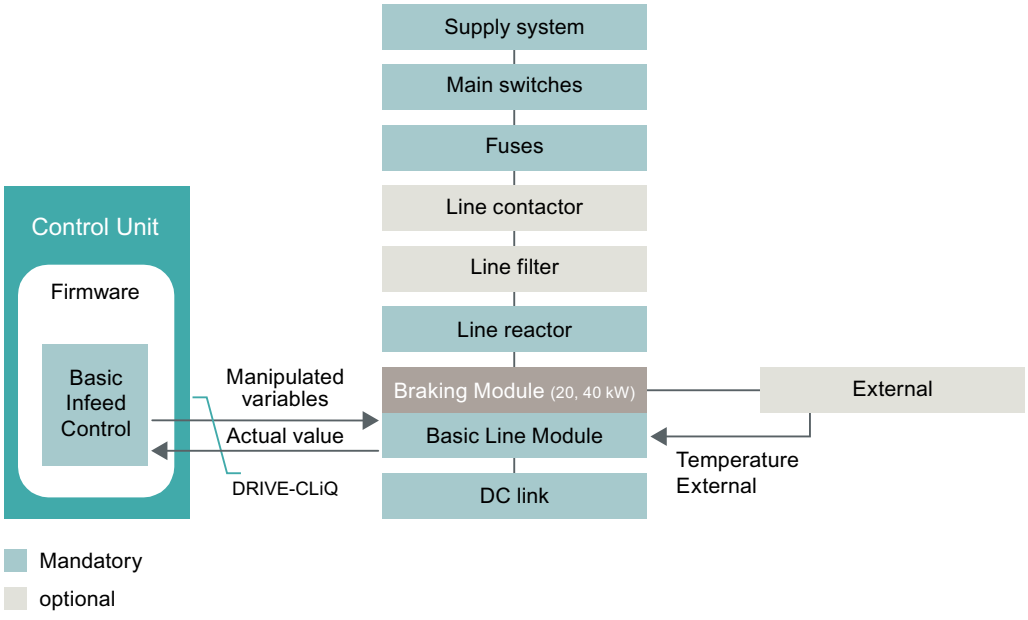

Figure 3-4 Schematic structure of Basic Infeed Booksize

The following figure gives an overview of the structure of a Basic Infeed in **Chassis format**.

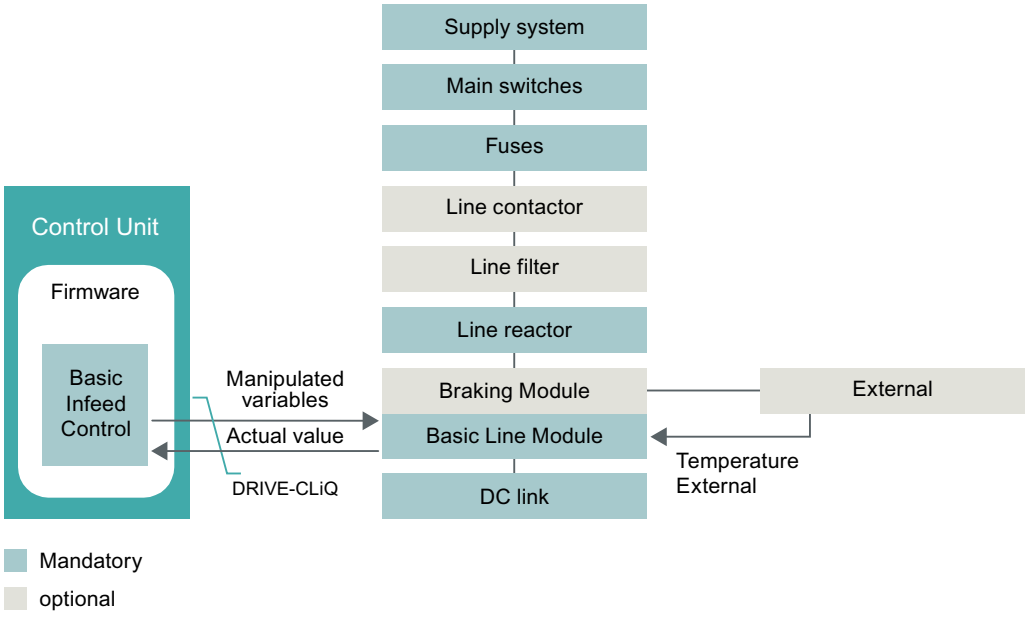

Figure 3-5 Schematic structure of Basic Infeed Chassis

Description

The Basic Infeed open-loop control can be used to switch on/off the Basic Line Module. The Basic Line Module is an unregulated infeed unit without regenerative feedback capability.

The open-loop control firmware for the Basic Line Module is on the assigned Control Unit. The Basic Line Module and Control Unit communicate via DRIVE-CLiQ.

Features

- For Basic Line Modules in Chassis and Booksize formats
- Unregulated DC link voltage
- Control of external braking resistors with 20 kW and 40 kW Basic Line Modules (with temperature monitoring)

Commissioning the BLM

The rated line voltage (p0210) must be parameterized during commissioning.

For the 20 kW and 40 kW Basic Line Modules Booksize, the temperature switch of the external braking resistor must be connected to X21 on the Basic Line Module. If a braking resistor has not been connected for 20 kW and 40 kW Basic Line Modules Booksize, the Braking Module must be deactivated via p3680 = 1.

An optional Braking Module can be externally mounted on the Basic Line Module Chassis. A braking resistor must then be connected to the Braking Module.

Restrictions for Basic Line Modules

⚠ WARNING

Unexpected motion of individual drives

If several Motor Modules are supplied from one infeed unit, then if the V_{dc_max}control is incorrectly parameterized, individual drives can accelerate in an uncontrolled fashion, which can lead to death or severe injury.

- Only activate the V_{dc_max} control for the Motor Module whose drive has the highest moment of inertia.
- Inhibit this function for all other Motor Modules, or set this function to monitoring only.

If several Motor Modules are supplied from a non-regenerative infeed unit (e.g. a Basic Line Module), or for power failure or overload (for SLM / ALM), the V_{dc_max} control may only be activated for a Motor Module whose drive should have a high moment of inertia. For the other Motor Modules, this function must be disabled or monitoring must be set.

If the V_{dc_max} control is active for multiple Motor Modules, then the controllers may have negative effects on each other in the case of unfavorable parameter assignment. The drives may become unstable and individual drives may unintentionally accelerate.

Remedy

- activate the V_{dc_max} control:
  - Vector control: p1240 = 1 (factory setting)
  - Servo control: p1240 = 1
  - U/f control: p1280 = 1 (factory setting)
- Inhibit V_{dc_max} control:
  - Vector control: p1240 = 0
  - Servo control: p1240 = 0 (factory setting)
  - U/f control: p1280 = 0
- Activate the V_{dc_max} monitoring
  - Vector control: p1240 = 4 or 6
  - Servo control: p1240 = 4 or 6
  - U/f control: p1280 = 4 or 6

3.2.1 Basic Infeed open-loop control

Overview

The Basic Line Module can be controlled via a BICO interconnection, e.g. using terminals or fieldbus. The operating status is indicated on the operating display r0002. The missing enable signals for operation (r0002 = 00) are mapped in parameter r0046. The EP terminals (enable pulses) must be connected in accordance with the manual of the corresponding power units.

Description

The Basic Line Module can be controlled via a BICO interconnection, e.g. using terminals or fieldbus. The operating status is indicated on the operating display r0002. The missing enable signals for operation (r0002 = 00) are mapped in parameter r0046. The EP terminals (enable pulses) must be connected in accordance with the manual of the corresponding power units.

Acknowledging faults

Faults that are still present but the causes of which have been rectified can be acknowledged using a 0/1 edge at the "1st acknowledge faults" signal (p2103).

Switching on the BLM

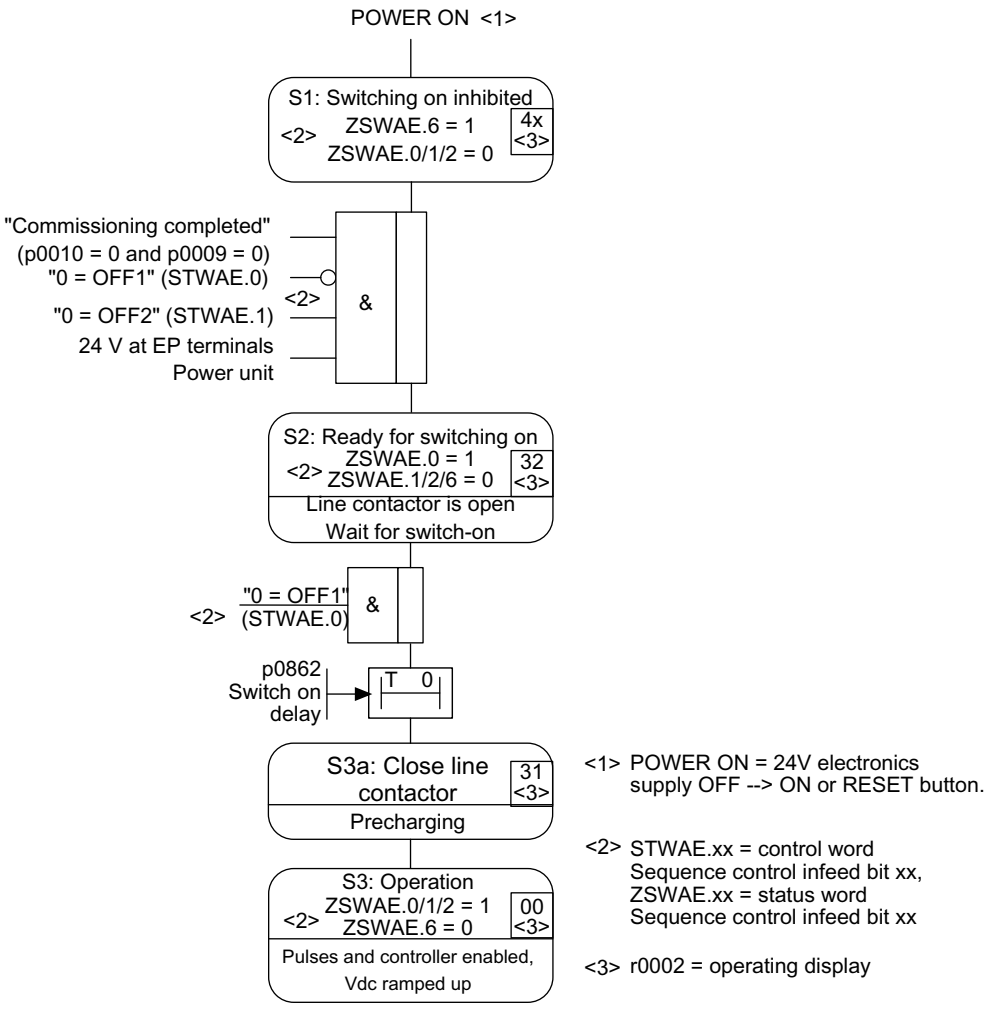

Figure 3-6 Basic Infeed power-up procedure

Note

The infeed unit can be switched on by issuing an enable signal at the EP terminals and a positive signal edge at OFF1 (p0840).

Requirement

- Commissioning takes place via the STARTER commissioning tool.
- No PROFIdrive telegrams activated.

Switching off the BLM

For switching off, carry out the steps for switching on in the reverse order. However, there is no pre-charging at switch off.

Control and status messages

Table 3-5 Basic Infeed open-loop control

Signal name	Internal control word	Binector input	Display of internal control word	PROFIdrive telegram 370
ON/OFF1	STWAE.0	p0840 BI: ON/OFF1	r0898.0	E_STW1.0
OC/OFF2	STWAE.1	p0844 BI: 1. OFF2 and p0845 BI: 2. OFF2	r0898.1	E_STW1.1
Acknowledge fault	STWAE.7	p2103 BI: 1. Acknowledge faults or p2104 BI: 2. Acknowledge faults or p2105 BI: 3. Acknowledge faults	r2138.7	E_STW1.7
Master control by PLC	STWAE.10	p0854 BI: Master control by PLC	r0898.10	E_STW1.10

Table 3-6 Basic Infeed status message

Signal name	Internal status word	Parameter	PROFIdrive telegram 370
Ready to start	ZSWAE.0	r0899.0	E_ZSW1.0
Ready	ZSWAE.1	r0899.1	E_ZSW1.1
Operation enabled	ZSWAE.2	r0899.2	E_ZSW1.2
Fault active	ZSWAE.3	r2139.3	E_ZSW1.3
No OFF2 active	ZSWAE.4	r0899.4	E_ZSW1.4
Switching on inhibited	ZSWAE.6	r0899.6	E_ZSW1.6
Alarm active	ZSWAE.7	r2139.7	E_ZSW1.7
Control requested	ZSWAE.9	r0899.9	E_ZSW1.9
Precharging complete	ZSWAE.11	r0899.11	E_ZSW1.11
Line contactor closed	ZSWAE.12	r0899.12	E_ZSW1.12

3.2.2 Function diagrams and parameters

Function diagrams (see SINAMICS S120/S150 List Manual)

- 8710 Basic Infeed overview
- 8720 Basic Infeed - Control word, sequence control, infeed
- 8726 Basic Infeed - Status word, sequence control, infeed
- 8732 Basic Infeed - Sequencer
- 8738 Basic Infeed - Missing enables, line contactor control
- 8750 Basic Infeed - Interface to the Basic Infeed power unit (control signals, actual values)
- 8760 Basic Infeed - Signals and monitoring functions (p3400.0 = 0)

Overview of important parameters (see SINAMICS S120/S150 List Manual)

- r0002 Infeed operating display
- r0046.0...29 CO/BO: Missing enable signals
- p0210 Device supply voltage
- p0840 BI: ON/OFF (OFF1)
- p0844 BI: No coast down / coast down (OFF2)
- r0898.0...10 CO/BO: Control word sequence control infeed
- r0899.0...12 CO/BO: Status word sequence control infeed
- p1240[0...n] Vdc controller or Vdc monitoring configuration
- p1280[0...n] Vdc controller or Vdc monitoring configuration (V/f)
- r2138.7...15 CO/BO: Control word, faults/alarms
- r2139.0...15 CO/BO: Status word, faults/alarms 1
- p3680 BI: Inhibit Braking Module internally

3.3 Smart Infeed

Overview

The following figure gives an overview of the structure of a Smart Infeed in **Booksize format**.

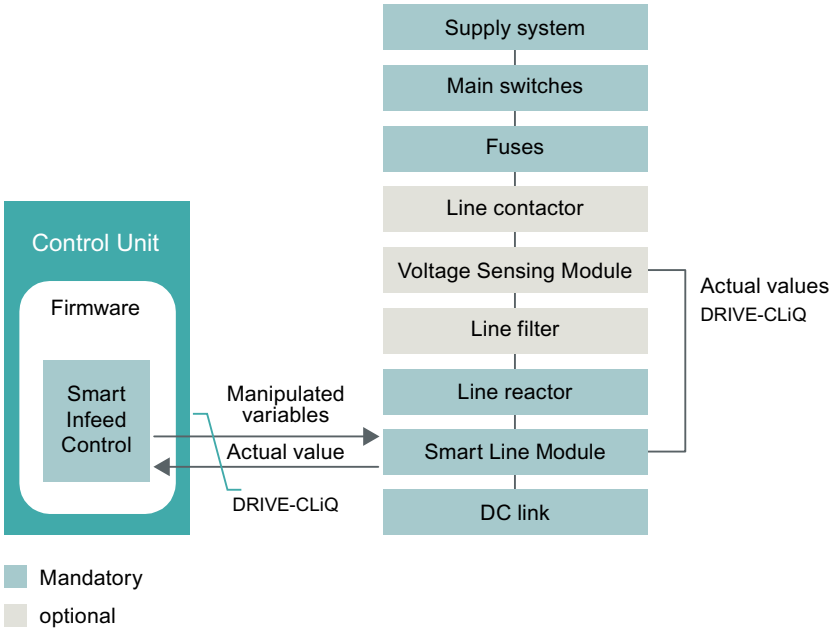

Figure 3-7 Schematic structure of Smart Infeed Booksize

The following figure gives an overview of the structure of a Smart Infeed in **Chassis format**.

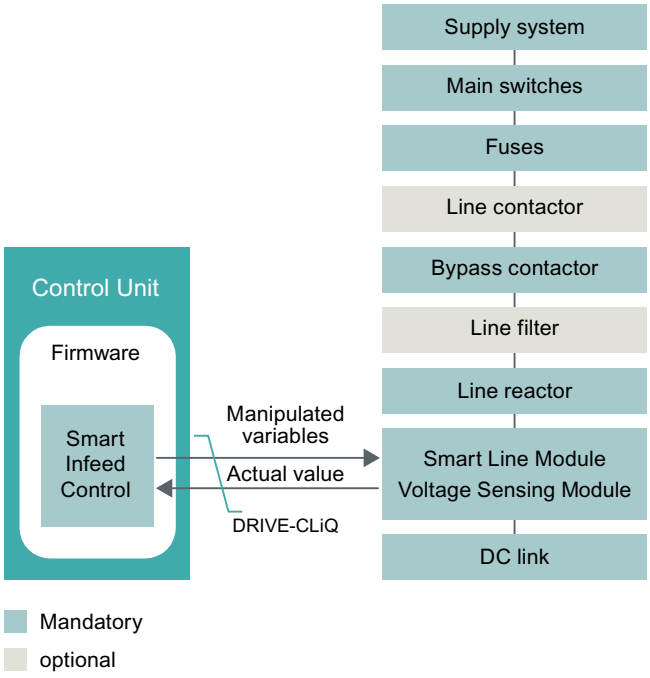

Figure 3-8 Schematic structure of Smart Infeed Chassis

Description

The firmware of the Smart Line Module is located on the assigned Control Unit. The Smart Line Module and Control Unit communicate via DRIVE-CLiQ.

Features

- For Smart Line Modules with a power ≥ 16 kW
- Unregulated DC link voltage
- Regenerative feedback capability

Commissioning SLM

The device connection voltage (p0210) must be parameterized during commissioning. The Extended Smart Mode can be activated as an option (see Chapter "Extended Smart Mode (Page 52)").

Note

In a supply system without regenerative feedback capability (e.g. generators), the regenerative operation of the infeed unit must be deactivated via the binector input p3533.

Smart Line Modules do not support kinetic buffering in generator mode.

3.3.1 Line supply and DC link identification routine for Smart Infeed Booksize

Function description

The characteristic line supply and DC link quantities are determined using the automatic parameter identification routine. They provide the basis to optimally set the controllers in the Line Module.

Note

If the line supply environment or the components connected to the DC link change (e.g. after installation of the equipment at the customer's site or after expanding the drive line-up), the supply/DC-link identification routine should be repeated with p3410 = 5. Only then can it be guaranteed that the infeed unit operates with an optimum controller setting.

When the identification function is activated, alarm A06400 is output.

Note

While the identification routine is running, it is not permissible that other loads are switched-in/ switched-out.

Note

The line supply and DC link identification routine is not permissible for Smart Line Modules of the Chassis type.

Identification methods

The following identification types are available:

- p3410 = 4: Identify and save controller setting with L adaptation
  An identification run for the total inductance and DC link capacitance is initiated when the pulses are next enabled (2 measuring routines with different current magnitudes). Data determined during the identification routine (r3411 and r3412) is entered into p3421 and p3422 and the controller is recalculated. At the same time, the parameters for current controller adaptation are determined (p6320, p6322). All of the parameters for the infeed unit are then automatically stored in a non-volatile memory. The infeed unit continues to operate without any interruption with the new controller parameters.
- p3410 = 5 (preferred): Reset, save ID and controller setting with L adaptation
  Unlike p3410 = 4, the parameter values for line inductance and DC link capacitance are reset before the first identification run (p3421 = p0223 and p3422 = p0227).

  Note

  Identification using p3410 = 5 should preferably be used.

P3410 = 0 is automatically set when an identification routine is successfully completed.

For additional identification methods, see the SINAMICS S120/S150 List Manual.

It may be necessary to reset the closed-loop controller to the factory settings if an identification run was unsuccessful, for example.

3.3.2 Extended Smart Mode

Requirement

- The Smart Mode is active (p3400.0 = 1).

Function description

The operating mode "Extended Smart Mode" represents and extension of the Smart Mode, and facilitates a higher efficiency no-load operation and partial load operation as well as a more rugged operating behavior.

Features

The function is characterized by the following features:

- Significantly reduced reactive power drawn in no-load operation and partial load operation. At rated load or overload, the operating behavior is equivalent to the normal Smart Mode.
- More stable DC link voltage in no-load operation and partial load operation. At rated load or overload, the operating behavior is equivalent to the normal Smart Mode.
- Increased degree of ruggedness with respect to brief line disturbances.
- After each POWER ON, automatic adaptation to the actual line parameters.

Restrictions

The function is not available for Smart Line Modules with **5 and 10 kW**.

Activating the function

Activate the Extended Smart Mode with p3440.1 = 1.

All other adjustable parameters (p3441 and following) are appropriately preset for standard applications, or are automatically optimized with the first operating enable (p3440.2 = 0).

3.3.3 Smart Infeed open-loop control

Description

The Smart Line Module can be controlled via the BICO interconnection, e.g. using terminals or the fieldbus. The operating status is indicated on the operating display r0002. The missing enable signals for operation (r0002 = 00) are mapped in parameter r0046. The EP terminals (enable pulses) must be connected in accordance with the manual of the corresponding power units. The drive unit must have been commissioned for the first time.

Acknowledging faults

Faults that are still present but the causes of which have been rectified can be acknowledged using a 0/1 edge at the "1st acknowledge faults" signal (p2103).

Switching on the SLM

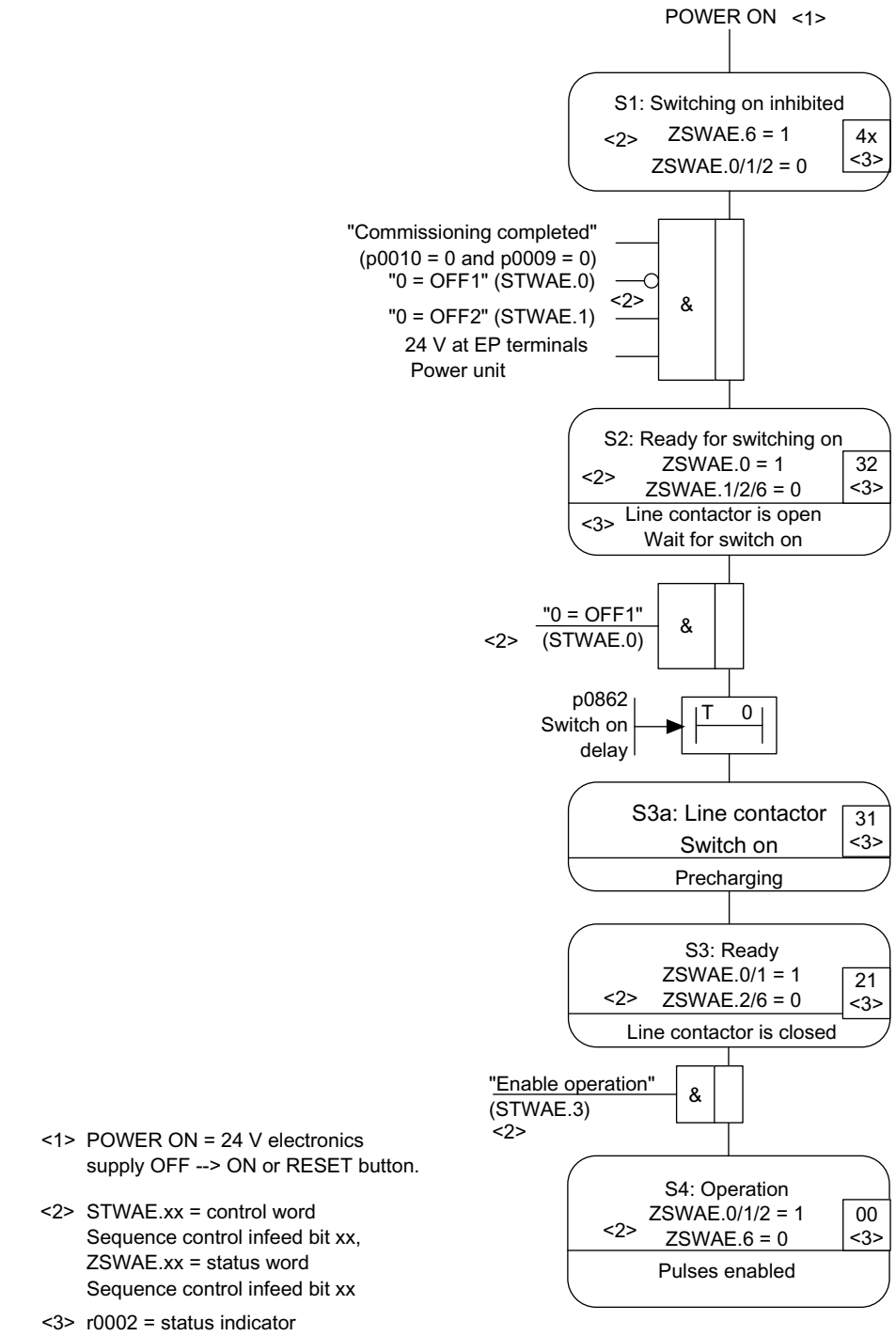

<1> POWER ON = 24 V electronics supply OFF --> ON or RESET button.

<2> STWAE.xx = control word Sequence control infeed bit xx, ZSWAE.xx = status word Sequence control infeed bit xx

<3> r0002 = status indicator

Figure 3-9 Smart Infeed power-up procedure

Note

The infeed unit can be switched on by issuing an enable signal at the EP terminals and a positive signal edge at OFF1 (p0840).

Requirement

- Commissioning takes place via the STARTER commissioning tool.
- No PROFIdrive telegrams activated.

Switching off the SLM

The Active Line Module is switched off by the same procedure used to switch it on, but in the reverse order. However, there is no pre-charging at switch off.

Switching off the controller with the OFF1 signal is delayed by the time entered in p3490. This allows the attached drives to be braked in a controlled manner.

Control and status messages

Table 3-7 Smart Infeed open-loop control

Signal name	Internal control word	Binector input	Display of internal control word	PROFIdrive telegram 370
ON/OFF1	STWAE.0	p0840 BI: ON/OFF1	r0898.0	E_STW1.0
OFF2	STWAE.1	p0844 BI: 1. OFF2 and p0845 BI: 2. OFF2	r0898.1	E_STW1.1
Enable operation	STWAE.3	p0852 BI: Enable operation	r0898.3	E_STW1.3
Inhibit regenerating	STWAE.6	p3533 BI: Infeed, inhibit regenerative operation	r0898.6	E_STW1.6
Acknowledge fault	STWAE.7	p2103 BI: 1. Acknowledge faults or p2104 BI: 2. Acknowledge faults or p2105 BI: 3. Acknowledge faults	r2138.7	E_STW1.7
Master control by PLC	STWAE.10	p0854 BI: Master control by PLC	r0898.10	E_STW1.10

Table 3-8 Smart Infeed status message

Signal name	Internal status word	Parameter	PROFIdrive telegram 370
Ready to start	ZSWAE.0	r0899.0	E_ZSW1.0
Ready	ZSWAE.1	r0899.1	E_ZSW1.1
Operation enabled	ZSWAE.2	r0899.2	E_ZSW1.2
Fault active	ZSWAE.3	r2139.3	E_ZSW1.3
No OFF2 active	ZSWAE.4	r0899.4	E_ZSW1.4
Switching on inhibited	ZSWAE.6	r0899.6	E_ZSW1.6
Alarm active	ZSWAE.7	r2139.7	E_ZSW1.7
Control requested	ZSWAE.9	r0899.9	E_ZSW1.9
Precharging complete	ZSWAE.11	r0899.11	E_ZSW1.11
Line contactor closed	ZSWAE.12	r0899.12	E_ZSW1.12

3.3.4 Function diagrams and parameters

Function diagrams (see SINAMICS S120/S150 List Manual)

- 8810 Smart Infeed overview
- 8820 Smart Infeed - Control word, sequence control, infeed
- 8826 Smart Infeed - Status word, sequence control, infeed
- 8828 Smart Infeed - Status word, infeed
- 8832 Smart Infeed - Sequencer
- 8838 Smart Infeed - Missing enables, line contactor control
- 8850 Smart Infeed - Interface to the Smart Infeed (control signals, actual values)
- 8860 Smart Infeed - Signals and monitoring functions, line voltage monitoring
- 8864 Smart Infeed - Signals and monitoring functions, line frequency and Vdc monitoring

Overview of important parameters (see SINAMICS S120/S150 List Manual)

- r0002 Infeed operating display
- r0046.0...29 CO/BO: Missing enable signals
- p0210 Device supply voltage
- p0840 BI: ON/OFF (OFF1)
- p0844 BI: No coast down / coast down
- p0852 BI: Enable operation / disable operation
- r0898.0...10 CO/BO: Control word sequence control infeed
- r0899.0...12 CO/BO: Status word sequence control infeed
- r2138.7...15 CO/BO: Control word, faults/alarms
- r2139.0...15 CO/BO: Status word, faults/alarms 1
- p3400 Infeed configuration word
- r3405.0...7 CO/BO: Infeed status word
- p3410 Infeed identification method
- p3421 Infeed inductance
- p3422 Infeed DC link capacitance
- p3440 Smart Mode configuration
- p3533 BI: Infeed, inhibit regenerative operation

3.4 Line contactor control

Function description

This function can be used to control an external line contactor. Opening and closing the line contactor can be monitored by evaluating the feedback contact in the line contactor. For the "Infeed", "Servo" and "Vector" drive objects, the line contactor can be controlled over r0863.1.

Note

Further information on the line connection can be found in the manuals:

Commissioning the function

The following describes the commissioning of a line contactor control based on an example.

Assumptions

The following assumptions are taken as a basis in the case study.

- The line contactor is controlled over a digital output of the Control Unit (DI/DO 8).
- Line contactor feedback uses a digital input of the Control Unit (DI/DO 9).
- Line contactor switching time is less than 100 ms.

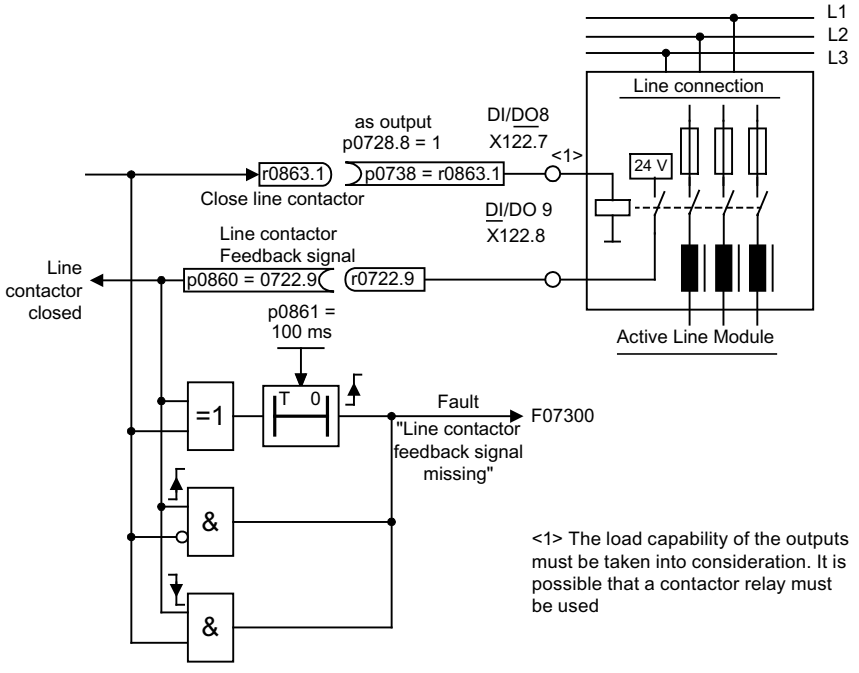

Figure 3-10 Line contactor control

Procedure

1. Connect the line contactor control contact to DI/DO 8

   Note

   Pay attention to the continuous current-carrying capacity of the digital output (see SINAMICS S120 Equipment Manual for Control Units and Additional System Components). If necessary, use an auxiliary contactor!

2. Parameterize DI/DO 8 as an output (p0728.8 = 1).
3. Assign parameter p0738 the control signal for the line contactor r0863.1
4. Connect the line contactor feedback contact to DI/DO 9.
5. Assign p0860 with input signal r0722.9.
6. Enter the monitoring time for the line contactor (100 ms) in p0861.

Function diagrams (see SINAMICS S120/S150 List Manual)

- 8938 Active Infeed - Missing enables, line contactor control

Overview of important parameters (see SINAMICS S120/S150 List Manual)

- p0860 BI: Line contactor, feedback signal
- r0863.0...2 CO/BO: Drive coupling status word / control word
- p0867 Power section main contactor hold time after OFF1
- p0869 Configuration sequence control

3.5 Pre-charging and bypass contactor Chassis and Chassis-2

Function description

Pre-charging is the term for the procedure used to charge the DC link capacitors via resistors. Pre-charging is carried out from the feeding supply network. The precharging input circuit limits the charging current of the DC link capacitors.

- Chassis format
  The pre-charging input circuit for Active Infeed and Smart Infeed Modules consists of a pre-charge contactor with pre-charging resistors and a bypass contactor. The
  Active Line Module controls the pre-charging input circuit in the Active Interface Module through terminals.
- Chassis-2 format
  The pre-charging and main contactor must be provided externally for
  Active Interface Modules. The control and feedback of the switches required for operation are implemented and monitored using the software of the Active Line Modules. The necessary signal interconnections are described in the manual referred to below: Opening and closing times of the contacts being used can be adjusted using parameter p0255 (power unit contactor monitoring time).
- Sizes FI, GI, HI and JI
  The precharging input circuit in the Active Interface Module of module types FI and GI contains the bypass contactor. The bypass contactor must be provided separately for frame sizes HI and JI.
- Smart Line Module
  With the Smart Line Module, precharging is integrated in the Smart Line Module itself. The bypass contactor must be implemented in this case.
- Basic Line Modules (Thyristor)
  For Basic Line Modules with thyristors, the built-in thyristors are connected instead of a bypass contactor. For Basic Line Modules with diodes, the bypass contactor is implemented as a circuit breaker.

Further information

You will find more detailed information in the following manual:

- SINAMICS S120 Manual for Chassis Power Units, Air-cooled

Procedure during switch-on

- The precharging contactor is closed and the DC link is charged via the precharging resistors.
- Once precharging is complete, the bypass contactor is closed and the precharging contactor opened. The DC link is precharged and ready for operation. If precharging could not be completed, fault F06000 is output.

Procedure during switch-off

- The pulses are inhibited and the bypass contactor is then opened.

Extended setpoint channel

4

Overview

- Servo control
  In servo control, the extended setpoint channel is **deactivated** through the factory setting. If an extended setpoint channel is required, it has to be activated.
- Vector control
  The extended setpoint channel is **always activated** in vector control.

Function description

In the extended setpoint channel, setpoints from the setpoint source are conditioned for motor control.

The setpoint for the motor control can also come from the technology controller (see Chapter "Technology controller (Page 425)").

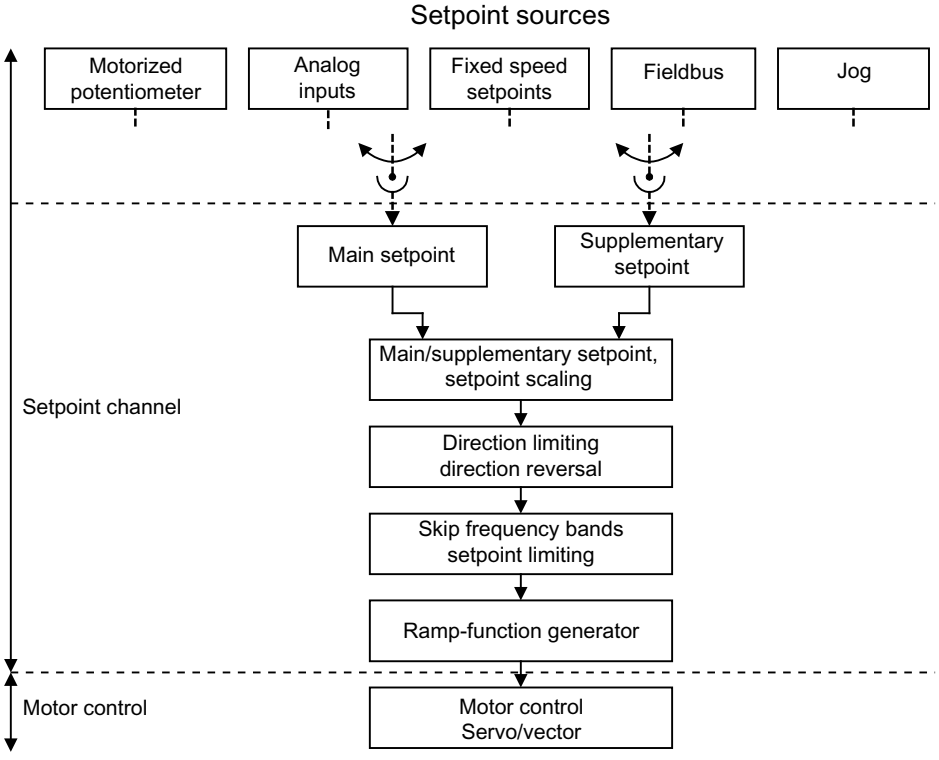

Figure 4-1 Extended setpoint channel

Features

The function is characterized by the following features:

- Main/supplementary setpoint, setpoint scaling
- Direction limitation and direction reversal
- Suppression bandwidths and setpoint limitation
- Ramp-function generator

Setpoint sources

The closed-loop control setpoint can be interconnected from various sources using BICO technology, e.g. at p1070 CI: Main setpoint (see function diagram 3030)).

There are various options for setpoint input:

- Fixed speed setpoints
- Motorized potentiometer
- Jog
- Fieldbus
  - Setpoint via PROFIBUS, for example
- Analog inputs of the following exemplary components:
  - e.g. Terminal Board 30 (TB30)
  - e.g. Terminal Module 31 (TM31)
  - e.g. Terminal Module 41 (TM41)

Activating a function module (servo control)

The function module "Expanded setpoint channel" in the servo control is activated in Startdrive using "Drive axis > Parameters > Basic parameter assignment > Function modules".

In the r0108.8 parameter, you then check the current configuration.

Note

When the "extended setpoint channel" function module for servo control is activated, under certain circumstances, the number of drives in the multi-axis group that can be controlled from a Control Unit is reduced.

Properties of servo control without the "Extended setpoint channel" function module

- The setpoint is directly interconnected to p1155[D] (e.g. from a higher-level controller or technology controller)
- Dynamic Servo Control (DSC) only
  When using DSC, the "extended setpoint channel" is not used. This unnecessarily uses the computation time of the Control Unit and, for servo control, can be deactivated.

- Deceleration ramp OFF1 via p1121[D]
  The deceleration ramp in p1121 is also effective when the "Extended setpoint channel" is deactivated.
- Deceleration ramp OFF3 via p1135[D]
- For PROFIdrive telegrams 2 to 103 and 999 only (free assignment)
- STW 1 bit 5 (freeze ramp-function generator), no function

4.1 Motorized potentiometer

Function description

The "Motorized potentiometer" function is used to simulate an electromechanical potentiometer for setpoint input.

You can switch between manual and automatic mode for setpoint input. The specified setpoint is routed to an internal ramp-function generator. Setting values, start values and braking with OFF1 do not require the ramp-function generator of the motorized potentiometer.

The output of the ramp-function generator for the motorized potentiometer is available for further interconnection via a connector output (e.g. interconnection to connector input p1070 - CI: Main setpoint, an additional ramp-function generator is then active).

Features of manual operation (p1041 = 0)

For manual operation, the function is characterized by the following features:

- Separate binector inputs for Raise and Lower are used to adjust the input setpoint:
  - p1035 BI: Motorized potentiometer, setpoint, raise
  - p1036 BI: Motorized potentiometer, setpoint, lower
- Invert setpoint (p1039)
- Configurable ramp-function generator, e.g.:
  - Ramp-up/ramp-down time (p1047/p1048) referred to p1082
  - Setting value (p1043/p1044)
  - Activate/deactivate initial rounding (p1030.2 = 1/0)
- Non-volatile storage of the setpoints via p1030.3 = 1
- Configurable setpoint for Power ON (p1030.0)
  - Starting value is the value in p1040 (p1030.0 = 0)
  - Starting value is the stored value (p1030.0 = 1)

Features of automatic mode (p1041 = 1)

For automatic mode, the function is characterized by the following features:

- The input setpoint is specified via a connector input (p1042).
- The motorized potentiometer acts like a "normal" ramp-function generator.
- Configurable ramp-function generator, e.g.:
  - Activate/deactivate (p1030.1 = 1/0)
  - Ramp-up/ramp-down time (p1047/p1048)
  - Setting value (p1043/p1044)
  - Activate/deactivate initial rounding (p1030.2 = 1/0)

- Non-volatile storage of the setpoints via p1030.3 = 1
- Configurable setpoint for Power ON (p1030.0)
  - Starting value is the value in p1040 (p1030.0 = 0)
  - Starting value is the stored value (p1030.0 = 1)

Function diagrams (see SINAMICS S120/S150 List Manual)

- 3001 Setpoint channel overview
- 2501 Internal control/status words - Control word, sequence control
- 3020 Setpoint channel - Motorized potentiometer

Overview of important parameters (see SINAMICS S120/S150 List Manual)

- p1030[0...n] Motorized potentiometer configuration
- p1035[0...n] BI: Motorized potentiometer, setpoint, raise
- p1036[0...n] BI: Motorized potentiometer, setpoint, lower
- p1037[0...n] Motorized potentiometer, maximum speed
- p1038[0...n] Motorized potentiometer, minimum speed
- p1039[0...n] BI: Motorized potentiometer, inversion
- p1040[0...n] Motorized potentiometer start value
- p1041[0...n] BI: Motorized potentiometer, manual/automatic
- p1042[0...n] CI: Motorized potentiometer, automatic setpoint
- p1043[0...n] BI: Motorized potentiometer, accept setting value
- p1044[0...n] CI: Motorized potentiometer, setting value
- r1045 CO: Motorized potentiometer, speed setpoint in front of the ramp-function generator
- p1047[0...n] Motorized potentiometer, ramp-up time
- p1048[0...n] Motorized potentiometer, ramp-down time
- r1050 CO: Motorized potentiometer, setpoint after the ramp-function generator
- p1082[0...n] Maximum speed

4.2 Fixed setpoints

Function description

The "Fixed setpoints" function can be used to specify preset speed setpoints. These fixed setpoints are defined using parameters and selected via binector inputs. Both the individual fixed setpoints and the effective fixed setpoint are available for further interconnection via a connector output (e.g. to connector input p1070 - CI: Main setpoint).

Features

The function is characterized by the following features:

- Number of fixed setpoints: Fixed setpoint 1 to 15
- Selection of fixed setpoints: Binector input bits 0 to 3
  - Binector input bits 0, 1, 2 and 3 = 0 → setpoint = 0 active
  - Unused binector inputs have the same effect as a "0" signal

Parameterizing the function (STARTER)

In the STARTER commissioning tool, the "Fixed setpoints" parameterizing screen form in the project navigator under the relevant drive is called by double-clicking "Setpoint channel" > "Fixed setpoints".

Function diagrams (see SINAMICS S120/S150 List Manual)

- 3001 Setpoint channel overview
- 3010 Setpoint channel - Fixed speed setpoints

Overview of important parameters (see SINAMICS S120/S150 List Manual)

- p1001[0...n] CO: Fixed speed setpoint 1

...

- p1015[0...n] CO: Fixed speed setpoint 15
- p1020[0...n] BI: Fixed speed setpoint selection Bit 0
- p1021[0...n] BI: Fixed speed setpoint selection Bit 1
- p1022[0...n] BI: Fixed speed setpoint selection Bit 2
- p1023[0...n] BI: Fixed speed setpoint selection Bit 3
- r1024 CO: Fixed speed setpoint effective
- r1197 Current fixed speed setpoint number

4.3 Speed setpoint

4.3.1 Main/supplementary setpoint and setpoint scaling

Function description

The supplementary setpoint can be used to incorporate correction values from lower-level controllers. This can be easily carried out using the addition point for the main/supplementary setpoint in the setpoint channel. Both variables are imported via two separate sources and added in the setpoint channel.

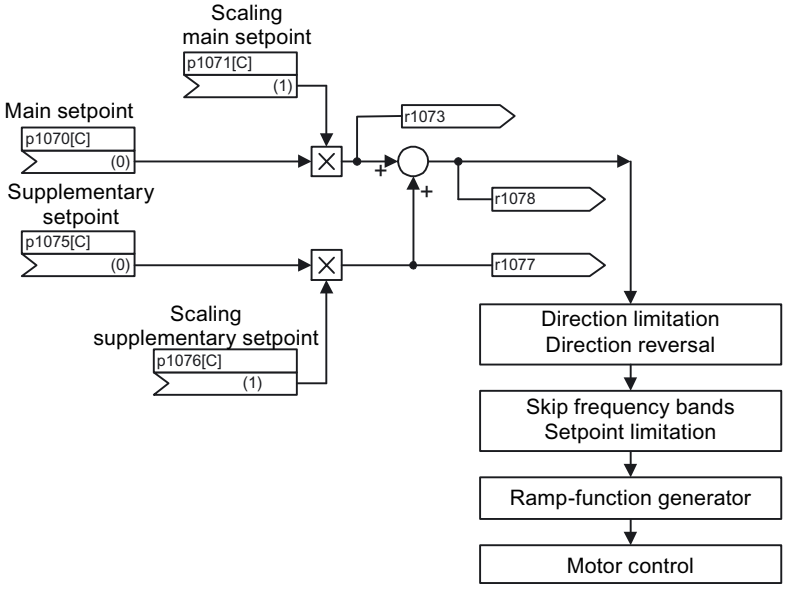

Figure 4-2 Setpoint addition, setpoint scaling

Function diagrams (see SINAMICS S120/S150 List Manual)

- 3001 Setpoint channel overview
- 3030 Setpoint channel - Main setpoint / supplementary setpoint, setpoint scaling, jogging

Overview of important parameters (see SINAMICS S120/S150 List Manual)

- p1070[0...n] CI: Main setpoint
- p1071[0...n] CI: Main setpoint scaling
- r1073 CO: Main setpoint effective
- p1075[0...n] CI: Supplementary setpoint
- p1076[0...n] CI: Supplementary setpoint scaling

- r1077 CO: Supplementary setpoint effective
- r1078 CO: Total setpoint effective

4.3.2 Jogging

Function description

The "Jog" function is typically used to slowly move a machine part, e.g. a conveyor belt. The "Jog mode" can also be used to move a drive into the required position independent of the sequence.

The jog mode can be selected via digital inputs or fieldbus (e.g. PROFIBUS). This means that the setpoint is specified via p1058[0...n] and p1059[0...n].

When a jog signal is present, the motor is accelerated to the jog setpoint with the acceleration ramp of the ramp-function generator (referred to the maximum speed p1082; see figure "Flow diagram: Jog 1 and jog 2"). After the jog signal has been deselected, the motor is decelerated via the set ramp of the ramp-function generator.

Note

The "Jog" function is **not** PROFIdrive-compliant!

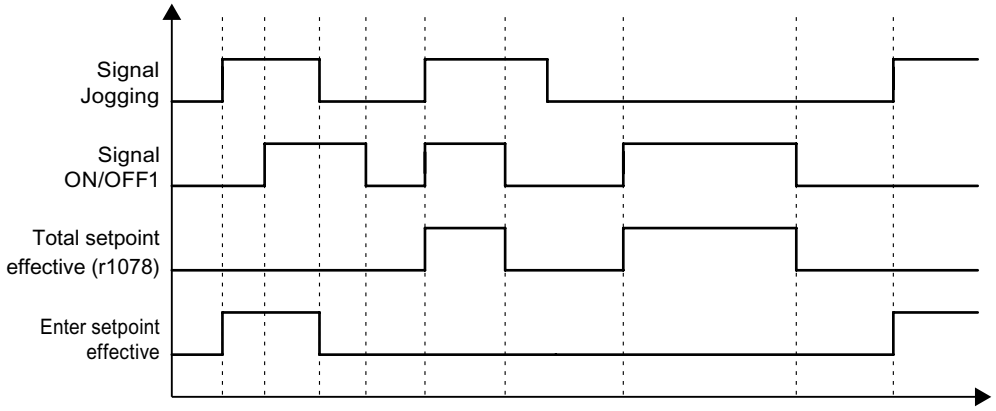

Figure 4-3 Flow diagram: jogging and OFF1

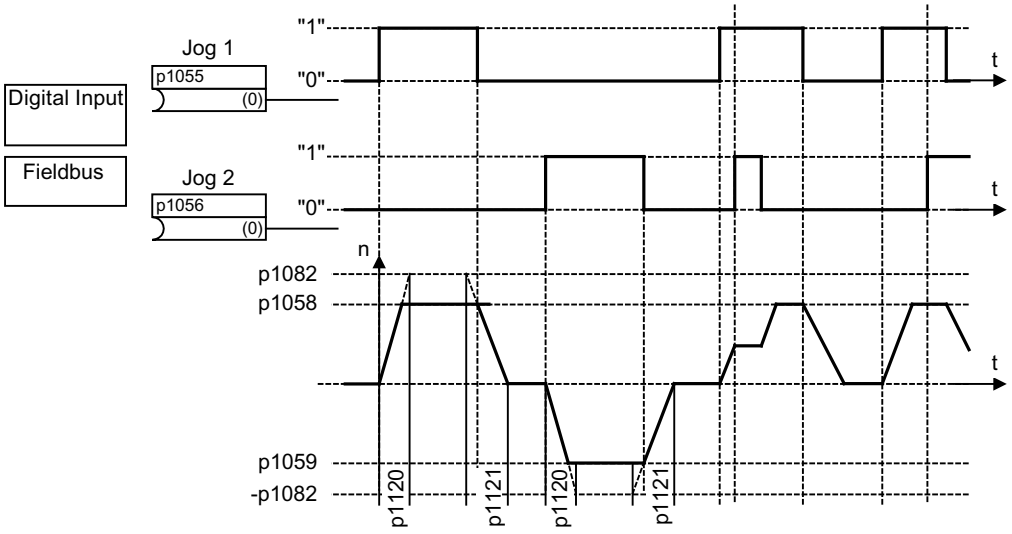

Figure 4-4 Flow diagram: Jog 1 and jog 2

Features

- If both jog signals are issued at the same time, the current speed is maintained (constant speed phase).
- Jog setpoints are approached and exited via the ramp-function generator.
- Jog is possible from the "Ready to start" state.
- If ON/OFF1 = "1" and jog are selected simultaneously, ON/OFF1 has priority. Therefore ON/OFF1 = "1" must not be active for jog to be activated.
- OFF2 and OFF3 have priority over jog.
- The switch-on command is issued via p1055 and p1056.
- The jog speed is defined via p1058 and p1059.
- The following applies in "Jog mode":
  - The main speed setpoints (r1078) are disabled.
  - The supplementary setpoint 1 (p1155) is disabled.
  - The supplementary setpoint 2 (p1160) is forwarded and added to the current speed.
- The suppression bandwidths (p1091 to p1094) and the minimum limit (p1080) in the setpoint channel are also active in jog mode.
- The ramp-function generator cannot be frozen (via p1141) in jog mode (r0046.31 = 1).

Flow diagram

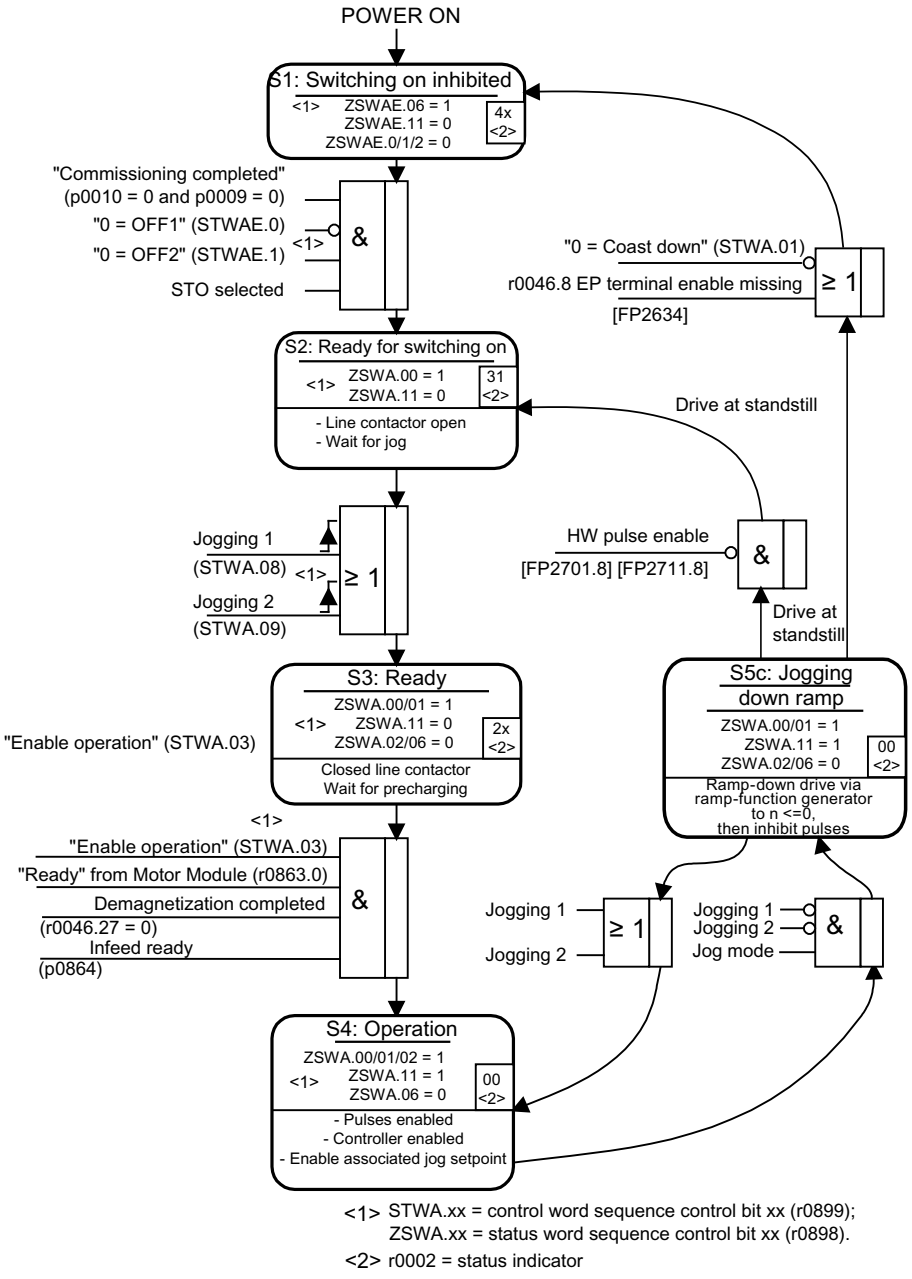

Figure 4-5 Jog sequence

Control and status messages

Table 4-1 Jog control

Signal name	Internal control word	Binector input	PROFIdrive/Siemens telegram 1 ... 352
0 = OFF1	STWA.0	p0840 BI: ON/OFF1	STW1.0
0 = OFF2	STWA.1	p0844 BI: 1. OFF2 p0845 BI: 2. OFF2	STW1.1
0 = OFF3	STWA.2	p0848 BI: 1. OFF3 p0849 BI: 2. OFF3	STW1.2
Operation enabled	STWA.3	p0852 BI: Operation enabled	STW1.3
Jog 1	STWA.8	p1055 BI: Jog bit 0	STW1.8[1)]
Jog 2	STWA.9	p1056 BI: Jog bit 1	STW1.9[1)]

[1)] Interconnected automatically in telegrams 7, 9, 110, and 111 only.

Table 4-2 Jog status message

Signal name	Internal status word	Parameter	PROFIdrive/Siemens telegram 1 to 352
Ready to start	ZSWA.0	r0899.0	ZSW1.0
Ready	ZSWA.1	r0899.1	ZSW1.1
Operation enabled	ZSWA.2	r0899.2	ZSW1.2
Switching on inhibited	ZSWA.6	r0899.6	ZSW1.6
"Pulses enabled"	ZSWA.11	r0899.11	ZSW2.10[2)]

[2)] Only available in Interface Mode p2038 = 0.

Function diagrams (see SINAMICS S120/S150 List Manual)

- 3001 Setpoint channel overview
- 2610 Sequence control - Sequencer
- 3030 Setpoint channel - Main/supplementary setpoint, setpoint scaling, jogging

Overview of important parameters (see SINAMICS S120/S150 List Manual)

- p1055[0...n] BI: Jog bit 0
- p1056[0...n] BI: Jog bit 1
- p1058[0...n] Jog 1 speed setpoint
- p1059[0...n] Jog 2 speed setpoint
- p1082[0...n] Maximum speed
- p1120[0...n] Ramp-function generator ramp-up time
- p1121[0...n] Ramp-function generator ramp-down time

4.3.3 Direction of rotation limiting and direction reversal

Function description

A reversing operation involves a direction of rotation reversal. Selecting setpoint inversion p1113[C] can reverse the direction of rotation in the setpoint channel.

Parameter p1110[C] or p1111[C] can be set respectively to prevent input of a negative or positive setpoint via the setpoint channel. However, the following settings for minimum speed (p1080) in the setpoint channel are still operative. With the minimum speed, the motor can turn in a negative direction, although p1110 = 1 is set.

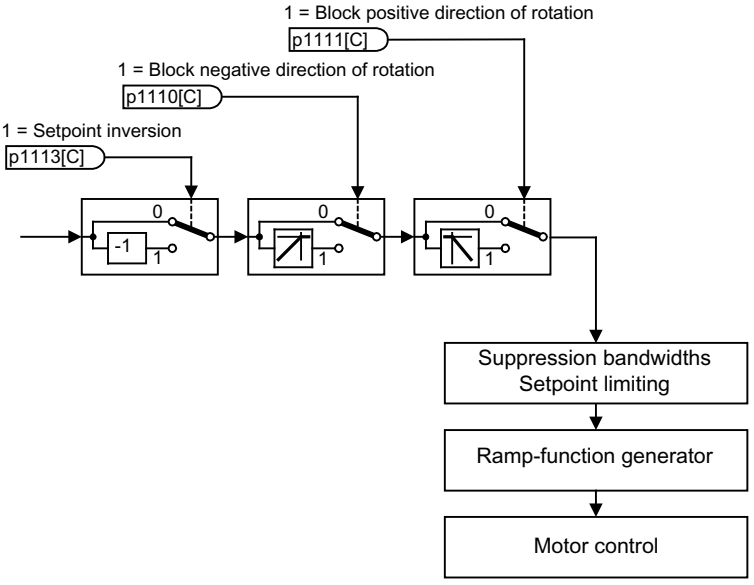

Figure 4-6 Direction of rotation limiting and direction of rotation reversal

Function diagrams (see SINAMICS S120/S150 List Manual)

- 3001 Setpoint channel overview
- 3040 Setpoint channel - Direction limitation and direction reversal

Overview of important parameters (see SINAMICS S120/S150 List Manual)

- p1110[0...n] BI: Block negative direction
- p1111[0...n] BI: Block positive direction
- p1113[0...n] BI: Setpoint inversion

4.4 Speed limiting

Function description

In the range from 0 rpm to the speed setpoint, a drive train (e.g. motor, clutch, shaft, machine) can have one or more points of resonance. These resonances lead to oscillations. The suppression bandwidths can be used to prevent operation in the resonant frequency range.

The limit frequencies can be set via p1080[D] and p1082[D]. Further, using connectors p1085[C] and p1088[C] it is possible to influence these limits in operation.

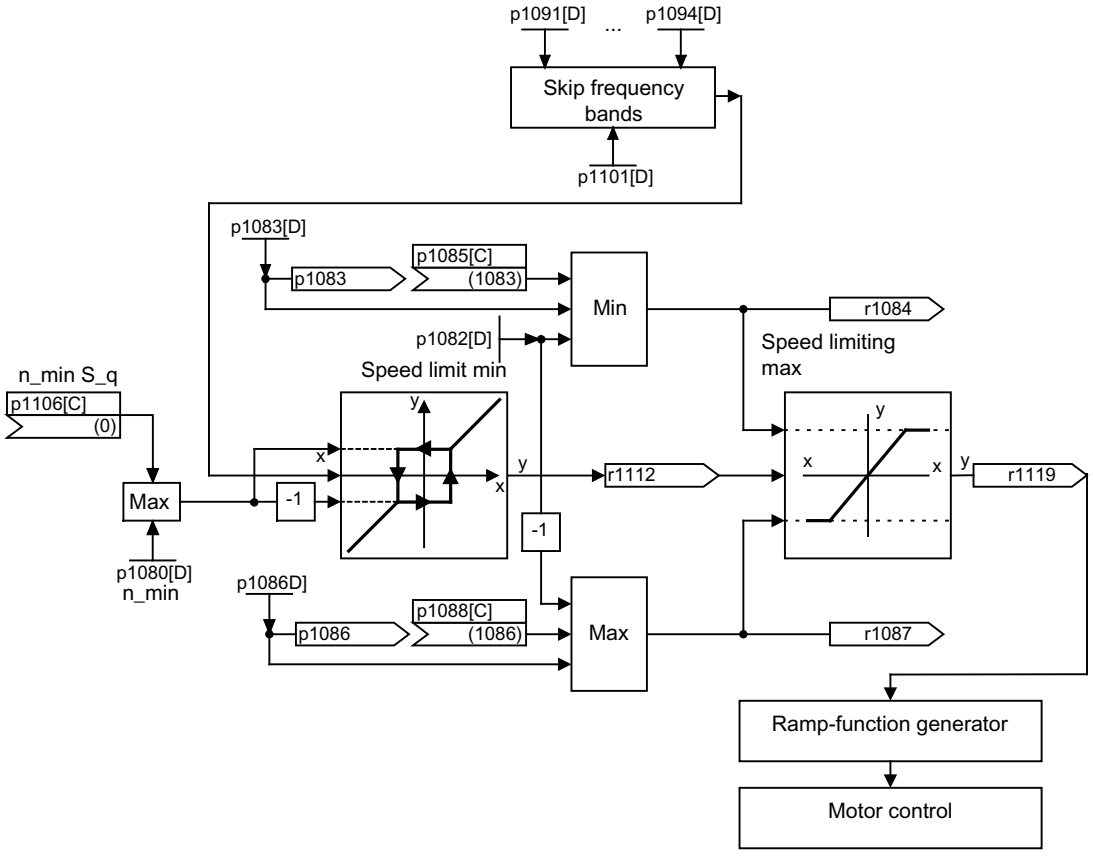

Figure 4-7 Skip frequency bands, setpoint limitation, minimum speed

Minimum speed

Using parameter p1106[0...n], a minimum speed n_min s_src or minimum velocity can be set, which is wired via BICO.

Function diagrams (see SINAMICS S120/S150 List Manual)

- 3001 Setpoint channel overview
- 3050 Setpoint channel - Skip frequency bands and speed limiting

Overview of important parameters (see SINAMICS S120/S150 List Manual)

Setpoint limitation

- p1080[0...n] Minimum speed
- p1082[0...n] Maximum speed
- p1083[0...n] CO: Speed limit in positive direction of rotation
- r1084 CO: Speed limit positive effective
- p1085[0...n] CI: Speed limit in positive direction of rotation
- p1086[0...n] CO: Speed limit in negative direction of rotation
- r1087 CO: Speed limit negative effective
- p1088[0...n] CI: Speed limit in negative direction of rotation
- p1106[0...n] CI: Minimum speed signal source
- r1119 CO: Ramp-function generator setpoint at the input

Skip frequency bands

- p1091[0...n] Skip speed 1

...

- p1094[0...n] Skip speed 4
- p1101[0...n] Skip speed bandwidth

4.5 Ramp-function generator

Function description

The "Ramp-function generator" function is used to limit the acceleration in the event of abrupt setpoint changes and thus helps to prevent load surges throughout the complete drive train. The ramp-up time p1120[0...n] and ramp-down time p1121[0...n] can be used to set mutually independent acceleration and deceleration ramps. This allows a controlled transition to be made in the event of setpoint changes.

The maximum speed p1082[0...n] is used as a reference value for calculating the ramps from the ramp-up and ramp-down time. For a quick stop (OFF3), a special adjustable ramp is available via the ramp-down time p1135[0...n] (e.g. for quick, controlled stopping after an EMERGENCY OFF button has been pressed).

The following versions are available:

- **Basic ramp-function generator**
  The basic ramp-function generator has the following general features:
  - Ramp up and ramp down
  - Ramp down for quick stop (OFF3)
  - Tracking configurable via parameter p1145
  - Setting values for the ramp-function generator
- **Extended ramp-function generator**
  In addition to the basic ramp-function generator, the extended ramp-function generator also has initial and final rounding.

Note

The ramp-function generator cannot be frozen (via p1141) in jog mode (r0046.31 = 1).

Specific features of the basic ramp-function generator

The basic ramp-function generator is characterized by the following features:

- Ramp-up time T_{up} p1120[0...n]
- Ramp-down time T_{dn} p1121[0...n]
- OFF3 ramp-down:
  - OFF3 ramp-down time p1135[0...n]
- Set ramp-function generator:
  - Setting value ramp-function generator p1144[0...n]
  - Signal, set ramp-function generator p1143[0...n]
- Freezing of the ramp-function generator using p1141 (not in jog mode r0046.31 = 1)

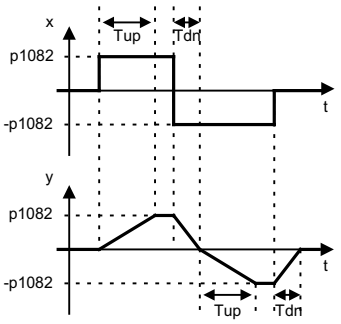

Figure 4-8 Ramp-up and ramp-down with the basic ramp-function generator

Specific features of the extended ramp-function generator

The extended ramp-function generator is characterized by the following features:

- Ramp-up time T_{up} p1120[0...n]
- Ramp-down time T_{dn} p1121[0...n]
- Initial rounding IR p1130[0...n]
- Final rounding FR p1131[0...n]
- Effective ramp-up time
  $T_{up_eff} = T_{up} + (IR/2 + FR/2)$
- Effective ramp-down time
  $T_{dn_eff} = T_{dn} + (IR/2 + FR/2)$
  - OFF3 ramp-down
  - OFF3 ramp-down time p1135[0...n]
  - OFF3 initial rounding p1136[0...n]
  - OFF3 final rounding p1137[0...n]
- Set ramp-function generator
  - Setting value ramp-function generator p1144[0...n]
  - Signal, set ramp-function generator p1143[0...n]
- Select ramp-function generator rounding type p1134[0...n]
  - p1134 = "0": continuous smoothing; rounding is always active. Overshoots can occur. If the setpoint changes, final rounding is carried out and then the direction of the new setpoint is adopted.
  - p1134 = "1": discontinuous smoothing; for a setpoint change, the change is immediately made to the direction of the new setpoint.
- Ramp-function generator configuration, deactivate rounding at zero point p1151[0...n]
- Freezing of the ramp-function generator using p1141 (not in jog mode r0046.31 = 1)

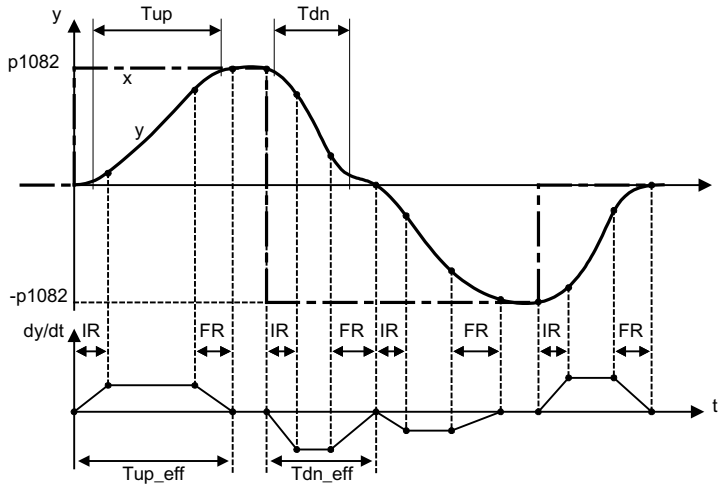

Figure 4-9 Extended ramp-function generator

Scaling of the up ramp and the down ramp

In order to be able to influence the ramp times set in parameters p1120 and p1121 cyclically via PROFIdrive telegrams, scaling is available for the ramp times.

- Using p1138[0...n], the signal source for scaling the ramp-up time p1120[0...n] of the ramp-function generator is set.
- Using p1139[0...n], the signal source for scaling the ramp-down time p1121[0...n] of the ramp-function generator is set.

The ramp times can be changed independently of one another in a cyclic PROFIdrive telegram. If the ramp-up time and the ramp-down time are to be changed together, then the scaling factor transferred in the PROFIdrive telegram is connected to both connectors.

The scaling also affects the initial and final rounding. However, it does not have the same effect as in the acceleration ramp. This is the reason why an incorrect effective ramp-up time is displayed. With scaling of approx. 50% to 200%, you get the most accurate effective ramp-up times.

Override of the ramp-function generator

- Down ramp for Safety Integrated functions:
  If Safety Integrated functions are activated and the down ramp is monitored, only the OFF3 ramp according to p1135 is effective. The speed setpoint limit is selected using p1051/ p1052.
- Down ramp for the "Extended stop and retract" function module (ESR):
  If ESR is activated, p0893 is used to enter the setpoint for the end speed of the ramp-function generator. Instead of the ramp time of the ramp-function generator, ramp-down is controlled using the OFF3 ramp.

4.5.1 Ramp-function generator tracking

Overview

A ramp-function generator (RFG) can be operated with or without tracking.

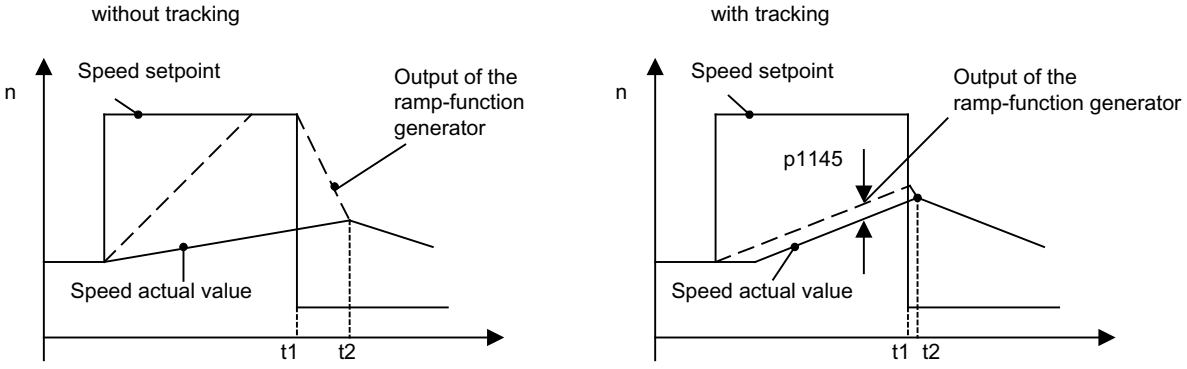

Figure 4-10 Ramp-function generator tracking

Without ramp-function generator tracking

- p1145 = 0
- Drive accelerates until t2 although setpoint < actual value

With standard ramp-function generator tracking

- At p1145 > 1 (values between 0 and 1 are not applicable), ramp-function generator tracking is activated when the torque limit is approached. The ramp-function generator output thereby only exceeds the actual speed value by a deviation value that can be defined in p1145.
- t1 and t2 almost identical

Note

Smaller motors

For smaller motors and depending on the controller settings required for the application there may still be a greater deviation between the setpoint and the actual value. In this case any sudden cancellation of the torque could result in a greater uncontrolled speed jump. By setting the parameter p1400.16 = 1 the setpoint value becomes even more closely connected with the actual value and the speed jump is reduced. With this parameter setting the integral component of the speed controller is only stopped if it reaches the torque limit.

Function description

The following functions are available for RFG tracking:

Standard RFG tracking

If the load torque exceeds the torque limit of the drive and so causes the actual speed to diminish, the ramp-function generator output is not tracked to the actual speed value. If the torque limit is overshot during the ramp-up because the ramp-up time was selected too small, the effective ramp-up time of the ramp-function generator lengthens.

Result: Once the load torque decreases, the drive accelerates again at the current limit to the setpoint. The ramp-up is stopped when the torque, power or current limit is reached. p1145 can be used to set the permitted following error. The speed setpoint is so tracked to the set permitted following error. The acceleration ramp is flattened. If the torque decreases, the ramp-up continues on the speed setpoint with a flattened ramp to the torque/current limit.

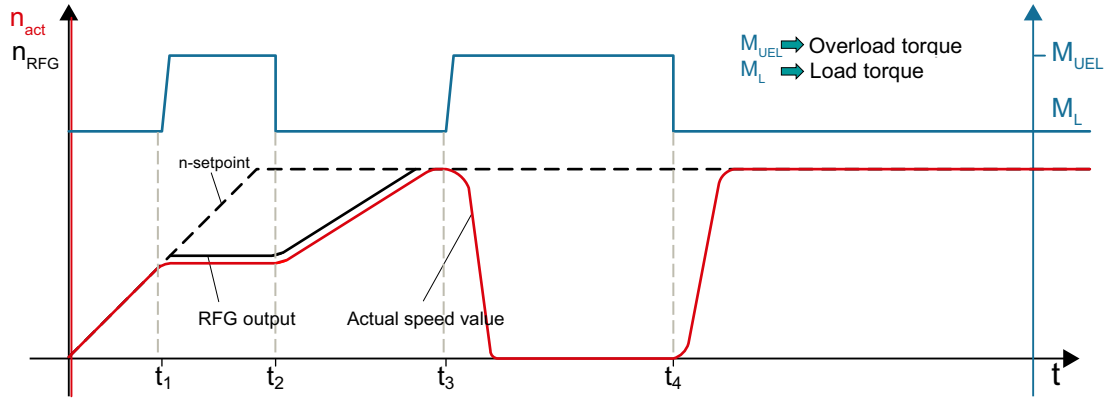

Figure 4-11 Standard RFG tracking

At the times t_1 and t_3, an overload torque M_{Ovl} starts to act on the drive in addition to the load torque M_L. The torque limit of the drive is exceeded.

For t_1 the drive is being ramped up along specified ramp-function generator ramp. The additional torque prevents the further acceleration of the motor to the rated speed on the ramp-function generator ramp.

The ramp-function generator output is tracked to the actual speed value when p1145 > 1 which causes a flattening of the rise ramp for the decrease of M_{Ovl}. The drive accelerates with flattened ramp at the current/torque limit to the speed setpoint (t_2).

For t_3, the drive runs with the specified speed setpoint and is already in field weakening. The additional torque causes the drive to be braked to standstill.

For t_4, the torque reduces again to M_L. Because the ramp-function generator output is not tracked to the actual speed value, the drive now accelerates at the torque/current limit to the speed setpoint.

Extended RFG tracking

The extended ramp-function generator tracking returns the ramp-function generator output to the actual speed value when the drive reaches the torque limit. Consequently, the drive does not return to the current limit but rather back on the set acceleration ramp to the original setpoint.

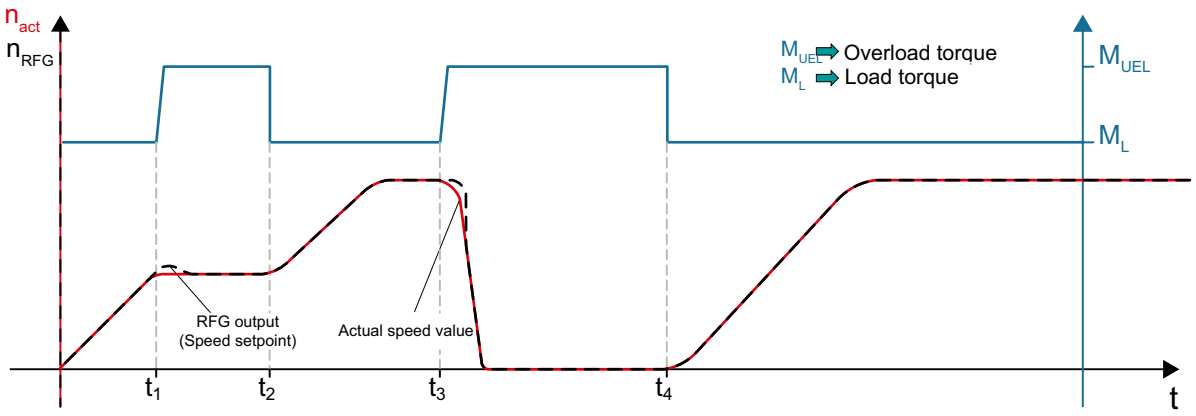

Figure 4-12 Extended RFG tracking

The additional torque starts to act at the times t_1 and t_3 and the RFG output is tracked to the actual speed value. This causes the drive to be accelerated to the speed setpoint on the specified ramp-function generator ramp when the torque falls again to M_L (t_2 and t_4).

2 versions can be used for the extended ramp-function generator tracking:

- The RFG tracking is always active (p1151.1 = 1). For load surges, the output of the ramp-function generator is tracked to the actual value. The tracking ends for setpoint zero.
- The RFG tracking is always active (p1151.2 = 1). For load surges, the output of the ramp-function generator is tracked to the actual value. The tracking continues for a polarity change.

4.5.2 Signal overview, function diagrams and important parameters

Signal overview (see SINAMICS S120/S150 List Manual)

- Control signal STW1.2 OFF3
- Control signal STW1.4 Enable ramp-function generator
- Control signal STW1.5 Start/stop ramp-function generator
- Control signal STW1.6 Enable setpoint
- Control signal STW2.1 Bypass ramp-function generator

Function diagrams (see SINAMICS S120/S150 List Manual)

- 3001 Setpoint channel overview
- 3060 Setpoint channel - Basic ramp-function generator
- 3070 Setpoint channel - Extended ramp-function generator
- 3080 Setpoint channel - Ramp-function generator selection, status word, tracking

Overview of important parameters (see SINAMICS S120/S150 List Manual)

- p1051[0...n] CI: Speed limit in RFG, positive direction of rotation
- p1052[0...n] CI: Speed limit RFG, negative direction of rotation
- p1083[0...n] CO: Speed limit in positive direction of rotation
- p1115 Ramp-function generator selection
- r1119 CO: Ramp-function generator setpoint at the input
- p1120[0...n] Ramp-function generator ramp-up time
- p1121[0...n] Ramp-function generator ramp-down time
- p1122[0...n] BI: Bypass ramp-function generator
- p1130[0...n] Ramp-function generator initial rounding time
- p1131[0...n] Ramp-function generator final rounding time
- p1134[0...n] Ramp-function generator rounding type
- p1135[0...n] OFF3 ramp-down time
- p1136[0...n] OFF3 initial rounding time
- p1137[0...n] OFF3 final rounding time
- p1138[0...n] CI: Ramp-function generator ramp-up time scaling
- p1139[0...n] CI: Ramp-function generator, ramp-down time
- p1140[0...n] BI: Enable ramp-function generator/disable ramp-function generator
- p1141[0...n] BI: Continue ramp-function generator/Freeze ramp-function generator
- p1143[0...n] BI: Accept ramp-function generator setting value
- p1144[0...n] CI: Ramp-function generator setting value
- p1145[0...n] Ramp-function generator tracking intensity
- p1148 [0...n] Ramp-function generator tolerance for ramp-up and ramp-down active
- r1149 CO: Ramp-function generator acceleration
- r1150 CO: Ramp-function generator speed setpoint at the output
- p1151 [0...n] Ramp-function generator configuration
- p1400[0...n] Speed control configuration

Servo control

5

Function description

The servo control mode enables operation with a high dynamic response and precision for a motor with motor encoder.

The motor connected to servo control is simulated in a vector model based on data from the equivalent circuit diagram. Consequently, the servo control constitutes a field-oriented control. However, for servo control, the vector model is optimized according to other criteria. In favor of achieving a high dynamic performance, a small deterioration in the control accuracy and control quality is taken into consideration.

Features

Special features of the servo control include:

- Maximum computing speed
- Shortest sampling times
- Maximum dynamic performance
- High output frequencies (> 800 Hz)
- Preferably used with permanent magnet synchronous motors with the appropriate dynamic performance

5.1 Comparison between servo control and vector control

The basic features and properties of the SERVO and VECTOR control modes are compared in the following table.

Table 5-1 Comparison: Servo control/vector control

Subject	Servo control	Vector control
Typical applications	• Drives with highly dynamic motion control • Drives with high speed and torque accuracy (servo synchronous motors) • Angular-locked synchronism with isochronous PROFIdrive • For use in machine tools and clocked production machines • High output frequency	• Speed and torque-controlled drives with high speed and torque accuracy, particularly in operation without an encoder (sensorless operation)
Maximum number of drives that can be controlled by one Control Unit **To be observed:** Chapter "Rules for wiring with DRIVE-CLiQ (Page 845)" further down in this document	• 1 infeed unit + 6 drives (with current controller sampling times 125 µs or speed controller sampling times 125 µs) • 1 infeed unit + 3 drives (with current controller sampling times 62.5 µs or speed controller sampling times 62.5 µs) • 1 infeed unit + 1 drive (with controller sampling times 31.25 µs or speed controller sampling times 62.5 µs) • Mixed operation, servo control with 125 µs with U/f, max.11 drives	• 1 infeed unit + 3 drives (with current controller sampling times 250 µs or speed controller sampling times of 1 ms) • 1 infeed unit + 6 drives (with current controller sampling times 400 µs/500 µs or speed controller sampling times 1.6 ms/2 ms) • U/f control: 1 infeed unit + 12 drives (with current controller sampling times 500 µs or speed controller sampling times 2000 µs) • Mixed operation, vector control with 500 µs with U/f, max.11 drives
Dynamic response	High	Medium
Note: Additional information on the sampling conditions is provided in subchapter "Rules regarding sampling times (Page 838)" in this manual.		

Subject	Servo control	Vector control
Connectable motors	• Synchronous servomotors • Permanent-magnet synchronous motors • Induction motors • Torque motors • Linear motors	• Synchronous motors (including torque motors) • Permanent-magnet synchronous motors • Induction motors • Reluctance motors - textile (only for U/f control) • Synchronous reluctance motors • Separately excited synchronous motors **Note:** Synchronous motors of the 1FT6, 1FK6 and 1FK7 series cannot be connected.
Position interface via PROFIdrive for higher-level motion control	Yes	Yes
Encoderless speed control	Yes, as of 10% rated motor speed, open-loop controlled operation below this	Yes (for ASM and PMSM from standstill)
Motor data identification	Yes	Yes
Speed controller sampling time optimization	Yes	Yes
U/f control	Yes	Yes (various characteristics)
Encoderless Torque control	No	Yes, as of 10% rated motor speed, open-loop controlled operation below this
Field-weakening range for induction motors	≤ 16% field weakening operation speed (with encoder) ≤ 5% field weakening operation speed (without encoder)	≤ 5% rated motor speed

Subject	Servo control	Vector control
Maximum output frequency with closed-loop control	• 2600 Hz with 31.25 µs / 16 kHz • 1300 Hz with 62.5 µs / 8 kHz • 650 Hz with 125 µs / 4 kHz • 300 Hz with 250 µs / 2 kHz **Note:** SINAMICS S can achieve the specified values without tuning. Higher frequencies can be set under the following secondary conditions and additional tuning runs: • Up to 3000 Hz – Operation without an encoder – In conjunction with controlled infeed units • Up to 3200 Hz – Operation with encoder – In conjunction with controlled infeed units • Absolute upper limit 3200 Hz A license is required tor frequencies >600 Hz because of export regulations.	• 300 Hz with 250 µs/4 kHz or with 400 µs/5 kHz • 240 Hz with 500 µs / 4 kHz **Note**: If a higher output frequency is required, consult the specialist support from SIEMENS.
Note: Note the derating characteristics in the Equipment Manuals. Max. output frequency when using dv/dt and sine-wave filters: 150 Hz		
Speed setpoint channel (ramp-function generator)	Optional (reduces the number of drives from 6 to 5 Motor Modules with current controller sampling times of 125 µs or speed controller sampling times of 125 µs)	Standard
Parallel connection of power units	No	• Blocksize: No • Booksize: No (Exceptions: Active Line Modules, power class 55 kW, 80 kW or 120 kW) • Cabinet: Yes • Chassis: Yes • Chassis-2: Yes (Applies to: Active Line Modules and Motor Modules)

Subject	Servo control	Vector control
Note: Additional information on connecting power units in parallel is provided in Chapter "Parallel connection of power units (Page 515)".		
Permissible range of the ratio between the rated motor current (p0305) and rated Motor Module current (r0207)	The permissible range of the ratio between the rated motor current (p0305) and rated Motor Module current (r0207) is, for servo control, 1:1 to 1:4. With restrictions regarding the torque accuracy and smooth running operation, a ratio of up to 1:8 is possible.	The permissible range of the ratio between the rated motor current (p0305) and rated Motor Module current (r0207) is, for vector control, 1.3:1 to 1:4. With restrictions regarding the torque accuracy and smooth running operation, a ratio of up to 1:8 is possible.

5.2 Influencing calculation of the open-loop control and closed-loop control parameters

Using parameter p0500 (technological application), you can influence the calculation of open-loop control and closed-loop control parameters. The default setting helps you find suitable values for standard applications.

You can make preassignments for the following technological applications:

Value p0500	Application
100	Standard drive (SERVO)
101	Feed drive (limit current limitation)
102	Spindle drive (rated current limitation)
103[1)]	Feed drive (maximum power limitation)

[1)] The value is only used for 1FK2 motors.

An overview of the influenced parameters and the set values is provided in the "SINAMICS S120/S150 List Manual".

Calling the calculation

You call the calculation of the parameters, which influence the technological application, as follows:

- When exiting quick commissioning using p3900 > 0
- When automatically calculating the motor/closed-loop control parameters with p0340 = 1, 3, 5
- When calculating the technology-dependent parameters with p0578 = 1

5.3 Setpoint addition

Function description

Setpoint addition allows up to 2 speed setpoints to be combined. While main and supplementary setpoints used in the setpoint channel are influenced by speed limits and the ramp-function generator, the speed setpoint is directly active here. As a consequence, up ramps and down ramps of a ramp-function generator are eliminated.

Speed actual values of a higher-level position control are suitable as source, which can be entered using a PROFIdrive telegram. Interconnect the telegram control word as BICO source. The speed setpoint is then refreshed in the bus cycle, e.g. in the PROFINET cycle.

A supplementary speed setpoint can, through setpoint addition, minimize disturbing influences on the speed setpoint from the position control.

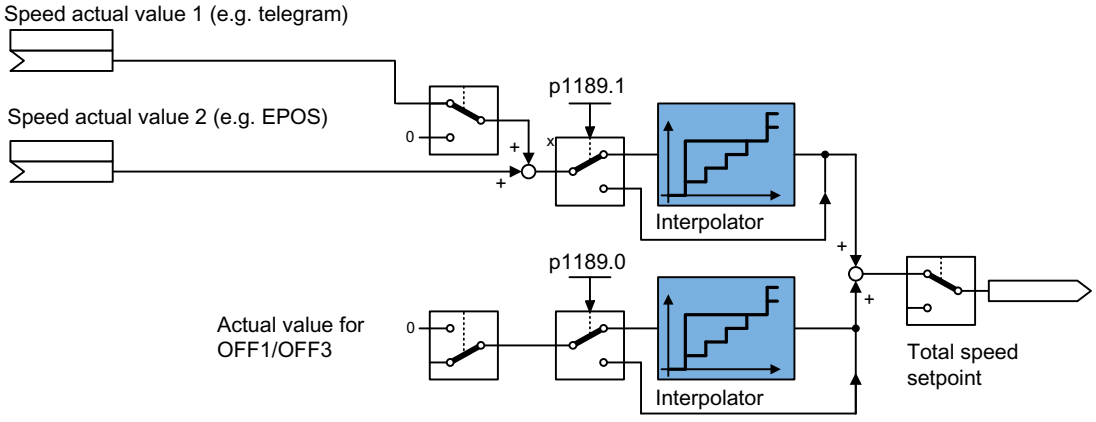

Figure 5-1 Setpoint addition

Parameterizing the function

Proceed as follows to parameterize the function:

1. Interconnect the signal source for p1155.
2. Interconnect the signal source for p1160.
3. To activate the interpolator for the speed setpoint, in the drop-down list for 1189[1] select "yes".

Interpolator

When using a speed setpoint from a higher-level control system, the speed setpoints are only refreshed (updated) in the bus cycle. The bus cycle is normally significantly slower than the current controller cycle of the SINAMICS drive, which can result in steps. When using an interpolator, the speed setpoint is linearly interpolated between the bus cycles, so that steps that possibly occur can be eliminated.

Speed actual value at the instant of OFF1 / OFF3

If an event initiates OFF1 or OFF3 - and the "Extended setpoint channel" function module is not active - then the drive ramps down via the OFF1 and OFF3 times parameterized in the "Ramp down" dialog.

1. Enter a value in p1121[0] for the OFF1 ramp-down time.
2. Enter a value in p1135 for the OFF3 ramp-down time.
3. To activate the interpolator for the down ramp, in the drop-down list for p1189[0], select "Yes".

Function diagrams (see SINAMICS S120/S150 List Manual)

- 3080 Setpoint channel - ramp-function generator selection, status word, tracking

Overview of important parameters (see SINAMICS S120/S150 List Manual)

- p1121[0...n] Ramp-function generator ramp-down time
- p1135[0...n] OFF3 ramp-down time
- p1155[0...n] CI: Speed controller, speed setpoint 1
- p1160[0...n] CI: Speed controller, speed setpoint 2
- p1189[0...n] Speed setpoint configuration

5.4 Speed setpoint filter

Function description

The "Speed setpoint filter" function allows you to hide or to attenuate certain frequency ranges. Speed setpoint filters do not have any effect on the stability of the speed controller, because they lie in the setpoint channel. The dynamic response in the control behavior is reduced by the smoothing.

The various filter types are identical in structure and can be set via parameters p1415[0...n] (Filter 1) and p1421[0...n] (Filter 2) as follows:

- Band-stop filter
- Low-pass 1st order (PT1)
- Low-pass 2nd order (PT2)

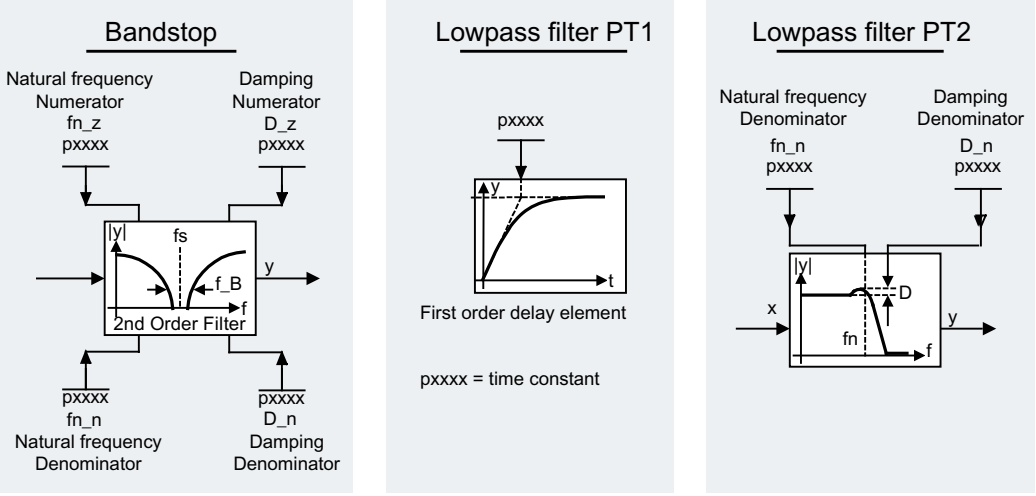

Figure 5-2 Overview: Speed setpoint filter

Activating and parameterizing a function

You can activate 2 speed setpoint filters in the Startdrive engineering tool via parameter p1414[0...n].

To activate and to parameterize the speed setpoint filters, proceed as follows:

1. Select group parameter p1414[0] and open the sub categorization.
2. Select the required speed setpoint filter - and in the drop-down list of the parameter line, select setting "[1] Yes".
   Repeat this procedure for every speed setpoint filter that you wish to additionally activate.

3. Parameterize the following values for each activated speed setpoint filter (parameter range p1415 to p1426):
   - Type
   - Time constant
   - Denominator natural frequency
   - Denominator damping
   - Numerator natural frequency
   - Numerator damping
4. Then save the modified project settings.

Function diagrams (see SINAMICS S120/S150 List Manual)

- 5020 Servo control - Speed setpoint filter and speed precontrol

Overview of important parameters (see SINAMICS S120/S150 List Manual)

- p1414[0...n] Speed setpoint filter activation
- p1415[0...n] Speed setpoint filter 1 type
- p1416[0...n] Speed setpoint filter 1 time constant
- p1417[0...n] Speed setpoint filter 1 denominator natural frequency
- p1418[0...n] Speed setpoint filter 1 denominator damping
- p1419[0...n] Speed setpoint filter 1 numerator natural frequency
- p1420[0...n] Speed setpoint filter 1 numerator damping
- p1421[0...n] Speed setpoint filter 2 type
- p1422[0...n] Speed setpoint filter 2 time constant
- p1423[0...n] Speed setpoint filter 2 denominator natural frequency
- p1424[0...n] Speed setpoint filter 2 denominator damping
- p1425[0...n] Speed setpoint filter 2 numerator natural frequency
- p1426[0...n] Speed setpoint filter 2 numerator damping

5.5 Speed controller

Function description

For **operation with a controller**, the speed controller regulates the speed of the motor based on the actual values of the encoder. For **operation without a controller**, the speed controller regulates the speed of the motor based on calculated speed actual values.

Special characteristics of the speed controller include:

- Speed setpoint filter
- Speed controller adaptation

Note

Speed and torque **cannot** be controlled simultaneously. If speed control is activated, this has priority over torque control.

Limits

The maximum speed r1082[D] is preset with the default value of the selected motor and becomes effective upon commissioning. The ramp-up and ramp-down times for the encoder relate to this value.

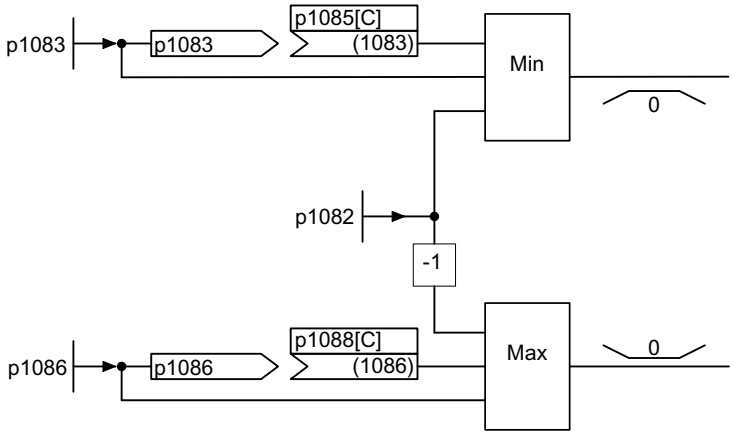

Figure 5-3 Speed controller limitations

5.5.1 Speed controller adaptation

Function description

The following types of adaptation are available with the "Speed controller" function:

- Free K_{p_n} adaptation
- Speed-dependent K_{p_n}/T_{n_n} adaptation

Free K_{p_n} adaptation

The free K_{p_n} adaptation is active during operation with encoder, as well as during operation without encoder. The free K_{p_n} adaptation provides an added factor for the speed-dependent K_{p_n} adaptation during operation with encoder.

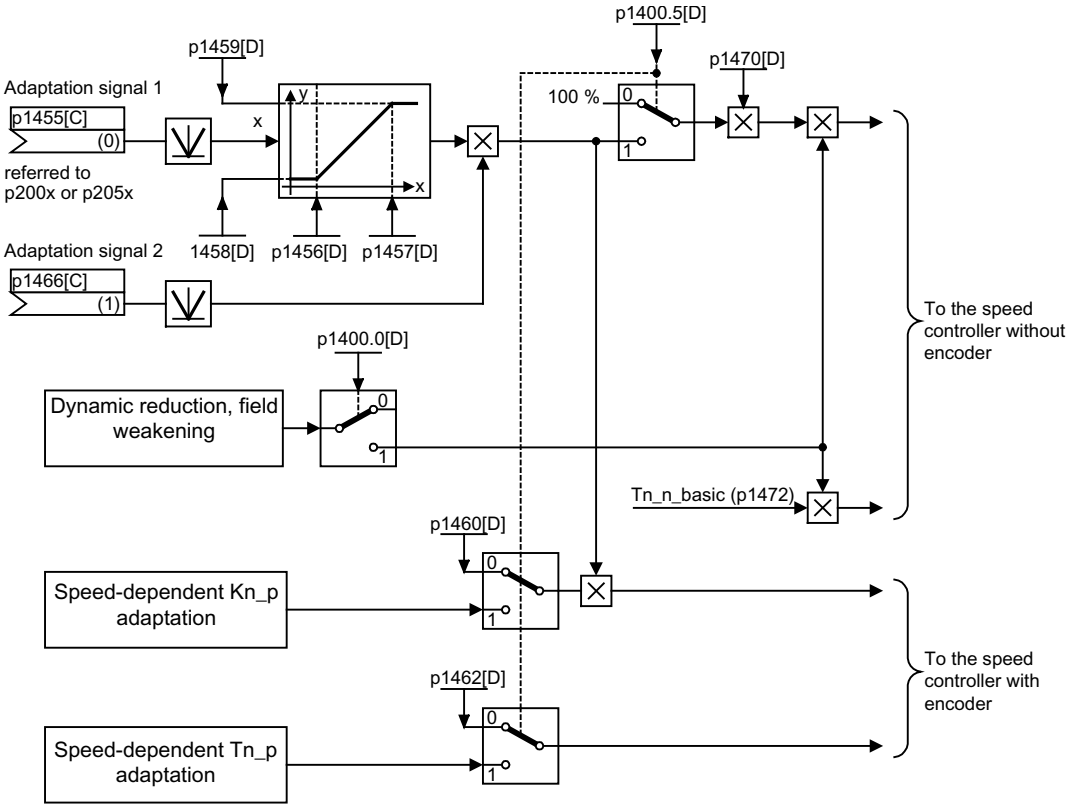

Figure 5-4 Overview: free adaptation

Speed-dependent K_{p_n}/T_{n_n} adaptation

Speed-dependent K_{p_n}/T_{n_n} adaptation is only active in "operation with encoder" mode and also affects the T_{n_n} value.

Kp_n Proportional gain
Tn_n Integral time

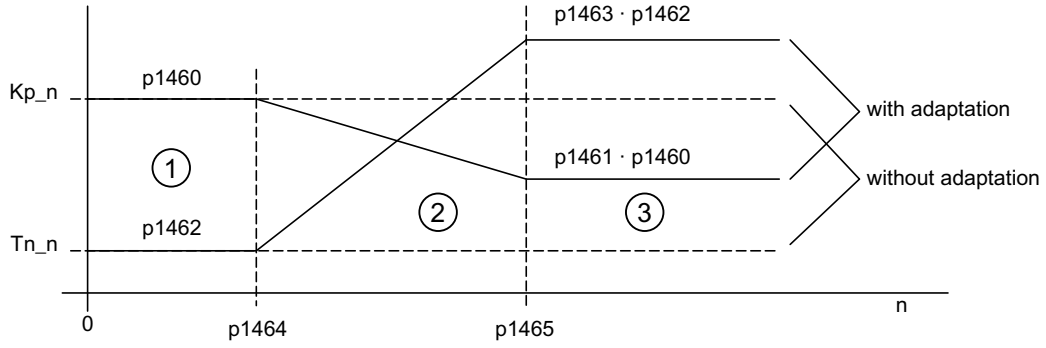

Figure 5-5 Example: Speed-dependent adaptation

Function diagrams (see SINAMICS S120/S150 List Manual)

- 5050 Servo control - Speed controller adaptation (K_{p_n}-/T_{n_n} adaptation)

Overview of important parameters (see SINAMICS S120/S150 List Manual)

Free Kp_n adaptation

- p1455[0...n] CI: Speed controller P gain adaptation signal
- p1456[0...n] Speed controller P gain adaptation lower starting point
- p1457[0...n] Speed controller P gain adaptation upper starting point
- p1458[0...n] Lower adaptation factor
- p1459[0...n] Upper adaptation factor

Speed-dependent Kp_n/Tn_n adaptation

- p1460[0...n] Speed controller P gain adaptation speed, lower
- p1461[0...n] Speed controller Kp adaptation speed, upper scaling
- p1462[0...n] Speed controller integral time adaptation speed, lower
- p1463[0...n] Speed controller Tn adaptation speed, upper scaling
- p1464[0...n] Speed controller adaptation speed, lower
- p1465[0...n] Speed controller adaptation speed, upper
- p1466[0...n] CI: Speed controller P gain scaling

5.5.2 Torque-controlled operation

Function description

The changeover from speed-controlled to torque-controlled operation is implemented with selection of the operating modes (p1300) or via a binector input (p1501). This changeover renders all torque setpoints from the speed control ineffective. The setpoints for torque control mode are selected by parameterization.

Features

Moreover, special features of the torque control also include:

- Torque setpoint can be specified:
  - The torque setpoint source can be selected.
  - The torque setpoint can be scaled.
  - An additional torque setpoint can be entered.
- Display of the overall torque

Activating torque-controlled operation

To initiate torque-controlled operation, proceed as follows:

1. Set torque-controlled operation as follows:
   – p1300 = 2 or p1501 = "1" signal
2. Enter the torque setpoint using the following parameter:
   – p1511: Signal source for supplementary torque 1
   – p1512: Signal source for scaling supplementary torque 1.
   – p1513: Signal source for supplementary torque 2

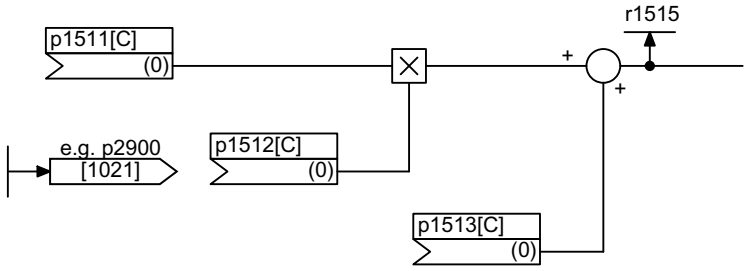

Figure 5-6 Torque setpoint

3. Issue the enable signals.

Torque-controlled operation is activated and is set correctly.

OFF responses

Once you have activated torque-controlled operation, you can parameterize the OFF responses 1, 2 and 3 as follows:

- OFF1 and p1300 = 23
  – Response as for OFF2
- OFF1, p1501 = "1" signal and p1300 ≠ 23
  – No separate braking response; the braking response is provided by a drive that specifies the torque.
  – The pulses are suppressed when the brake application time (p1217) expires. Standstill is detected when the actual speed value is less than the speed threshold (p1226) or when the monitoring time (p1227) that started when speed setpoint ≤ speed threshold (p1226) has expired.
  – Switching-on inhibited is activated.

- OFF2
  - Immediate pulse suppression, the drive coasts to standstill.
  - The motor brake (if parameterized) is closed immediately.
  - Switching-on inhibited is activated.
- OFF3
  - Switch to speed-controlled operation
  - n_set = 0 is input immediately to brake the drive along the OFF3 deceleration ramp (p1135).
  - When standstill is detected, the motor brake (if parameterized) is closed.
  - The pulses are suppressed when the motor brake application time (p1217) has elapsed. Standstill is detected when the actual speed value is less than the speed threshold (p1226) or when the monitoring time (p1227) that started when speed setpoint ≤ speed threshold (p1226) has expired.
  - Switching-on inhibited is activated.

Function diagrams (see SINAMICS S120/S150 List Manual)

- 5060 Servo control - Torque setpoint, switchover control mode
- 5610 Servo control – torque limiting/reduction, interpolator

Overview of important parameters (see SINAMICS S120/S150 List Manual)

- p1300[0...n] Open-loop/closed-loop control operating mode
- r1406.8...12 CO/BO: Control word, speed controller
- p1501[0...n] BI: Change over between closed-loop speed/torque control
- p1511[0...n] CI: Supplementary torque 1
- p1512[0...n] CI: Supplementary torque 1 scaling
- p1513[0...n] CI: Supplementary torque 2
- r1515 Supplementary torque total

5.6 Torque setpoint limitation

Function description

The torque setpoint can be limited to a maximum permissible value in all four quadrants. Different limits can be parameterized for motor and regenerative modes.

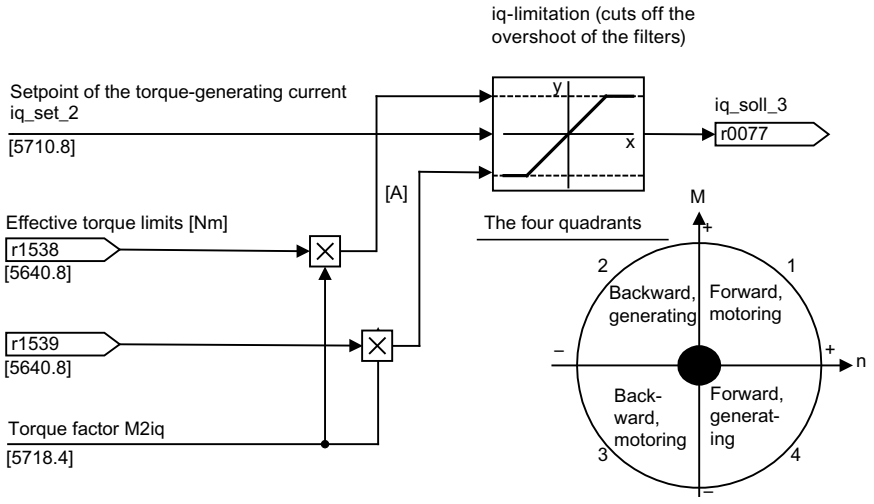

Figure 5-7 Current / torque setpoint limitation

The torque setpoint is limited with the following steps:

- Specification of a torque setpoint
- Specification of an additional torque setpoint
- Generate torque limits

Applications

The main applications for torque setpoint limitation are:

- Travel to fixed stop
- Tension control for continuous goods conveyors and winders

Default value

The "Torque setpoint limitation" function is always pre-allocated the factory settings.

Features

The connector inputs of the function are initialized with fixed torque limits. If required, the torque limits can also be defined dynamically during operation.

- A control bit can be used to select the torque limitation mode. The following alternatives are available:
  - Upper and lower torque limit
  - Motor and regenerative torque limit
- Additional power limitation configurable
  - Motor mode power limit
  - Regenerative mode power limit
- The following factors are monitored by the current controller and therefore always apply in addition to torque limitation:
  - Stall power
  - Maximum torque-generating current
- Offset of the setting values also possible (see "Example: Torque limits with or without offset").
- The following torque limits are displayed via parameters:
  - Lowest of all upper torque limits with and without offset
  - Highest of all lower torque limits with and without offset

Specification of torque limitations

⚠ WARNING

Uncontrolled movement of the drive as a result of incorrect parameter assignment

If there is no counter torque, incorrect parameterization of the torque limits could result in uncontrolled drive motions and thus cause serious injury or even fatalities.

- Ensure that the limits are correctly parameterized.

The following variants of torque limitations can be specified:

- No settings are possible:
  The application does not require any additional restrictions to the torque limits.
- Fixed limits are required for the torque:
  The fixed upper and lower limits or alternatively the fixed motor and regenerative limits can be specified separately from different sources.
- Dynamic limits are required for the torque:
  - The dynamic upper and lower limits or alternatively the dynamic motor and regenerative limit can be specified separately from different sources.
  - Parameters are used to select the source of the actual limit.

- A torque offset can be parameterized.
- In addition, the power limits can be parameterized independently of one another for motor and regenerative mode.

Negative values at r1534 or positive values at r1535 represent a minimum torque for the other torque directions and can cause the drives to rotate if no counteractive load torque is generated (see function diagram 5630 in the SINAMICS S120/S150 List Manual).

Example: torque limits with / without offset

The following figure demonstrates an instance in which the signals selected via parameters p1522 and p1523 additionally restrict the torque limits which were parameterized via 1520 and p1521. The hatched area in the figure shows the permissible torque range.

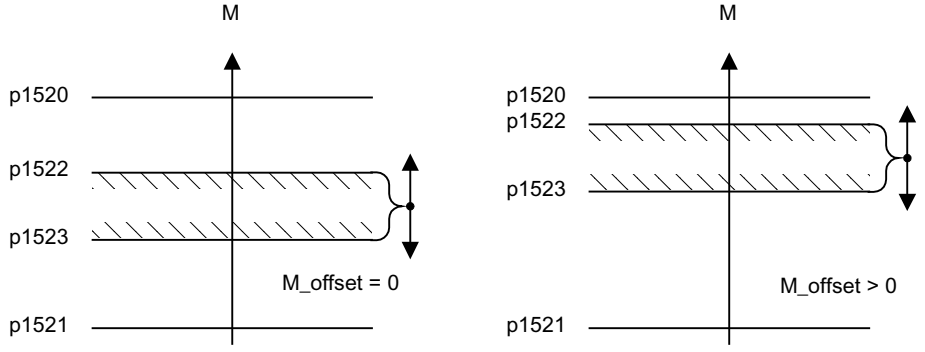

Figure 5-8 Example: torque limits with / without offset

Fixed and variable torque limit settings

The following table provides an overview of the setting of fixed and variable torque limits.

Selection	Torque limitation mode			
Mode	Maximum upper or lower torque limits p1400.4 = 0		Maximum motor or regenerative mode torque limits p1400.4 = 1	
Fixed torque limit	Upper torque limit (as positive value)	p1520	Motor mode torque limit (as positive value)	p1520
	Lower torque limit (as negative value)	p1521	Regenerative mode torque limit (as negative value)	p1521
Source for variable torque limit	Upper torque limit	p1522	Motor mode torque limit	p1522
	Lower torque limit	p1523	Regenerative mode torque limit	p1523
Source for variable scaling factor of torque limit	Upper torque limit	p1528	Motor mode torque limit	p1528
	Lower torque limit	p1529	Regenerative mode torque limit	p1529
Torque offset for torque limit	Shifts the upper and lower torque limits together	p1532	Shifts the motor and regenerative mode torque limits together	p1532

Activating torque limitation

To activate a torque limitation, proceed as follows:

1. Select the source for the torque limitation using the parameters (refer to the table "Setting fixed and variable torque limits").
2. Specify the torque limiting mode via the control word.
3. If required, make the following settings:
   - Select additional limitations and activate the additionally selected limitations.
   - Set the torque offset.

Function diagrams (see SINAMICS S120/S150 List Manual)

- 5609 Servo control, generation of the torque limits, overview
- 5610 Servo control – torque limiting/reduction, interpolator
- 5620 Servo control - Motoring/generating torque limit
- 5630 Servo control - Upper/lower torque limit
- 5640 Servo control - Mode changeover, power/current limiting

Overview of important parameters (see SINAMICS S120/S150 List Manual)

- p0640[0...n] Current limit
- p1400[0...n] Speed control configuration
- r1508 CO: Torque setpoint before supplementary torque
- r1509 CO: Torque setpoint before torque limiting
- r1515 Supplementary torque total
- p1520[0...n] CO: Torque limit upper/motoring
- p1521[0...n] CO: Torque limit lower/regenerative
- p1522[0...n] CI: Torque limit upper/motoring
- p1523[0...n] CI: Torque limit lower/regenerative
- r1526 CO: Torque limit upper/motoring without offset
- r1527 CO: Torque limit, lower/regenerative without offset
- p1528[0...n] CI: Torque limit upper/motoring scaling
- p1529[0...n] CI: Torque limit, lower/regenerative scaling
- p1530[0...n] Power limit motoring
- p1531[0...n] Power limit regenerative
- p1532[0...n] CO: Torque limit, offset
- r1533 Current limit torque-generating, total
- r1534 CO: Total upper torque limit
- r1535 CO: Torque limit, lower total
- r1538 CO: Upper effective torque limit
- r1539 CO: Lower effective torque limit

5.7 Current setpoint filter

The current setpoint filters 1 to 4 are activated by default. If more than 4 current setpoint filters are required, you can activate current setpoint filters 5 to 10 in offline mode in the object properties of the drive.

Activating and setting current setpoint filters 5 to 10

To activate and to set current setpoint filters 5 to 10, proceed as follows:

1. Mark the desired servo drive in the project navigator and open the "Properties" context menu.
   The "Object Properties" dialog opens.
2. Click the "Function modules" tab.
3. Activate the "Extended current setpoint filters" function module in the function modules selection with a mouse click.
4. Download the data to the target system.
5. Select group parameter p1656[0] online and open the sub categorization.
6. Select the required current setpoint filter (e.g. P1656[0].0) - and in the drop-down list of the parameter line, select setting "[1] Active".
   Repeat this procedure for every speed setpoint filter that you wish to additionally activate.
7. Select group parameter p5200[0] and open the sub-categorization.
8. Select the required additional current setpoint filter, in the parameter line, open the value selection and select setting "[1] Active".
   Repeat this procedure for every additional speed setpoint filter that you wish to activate.
9. The activated current setpoint filters must then be subsequently parameterized.

Current setpoint filter	Setting in the parameter area
1 to 4	p1657 to p1676
5 to 10	p5201 to p5230

For each activated current setpoint filter, parameterize the following values:

- Type
- Denominator natural frequency
- Denominator damping
- Numerator damping
- Numerator natural frequency

As long as the parameter setting p1699 = 1 is active, the background calculation of the filter data is not performed, even when filter parameters are changed.

Note

The set parameter values of the current setpoint filters 5 to 10 are lost if you deactivate the extended current setpoint filters again in the Properties dialog.

10. Make the setting p1699 = 0 to start calculating the filter data.
11. Then save the modified project settings.

Parameterization example

Four current setpoint filters connected in series can be parameterized as follows, for example:

- Lowpass 2nd order (PT2: -40 dB/decade) (type 1)
- General filter 2nd order (type 2)
- Band-stop filter
- Low-pass with reduction by a constant value

In addition to the amplitude response, the phase response is also shown in the following. A phase shift results in a control system delay and should be kept to a minimum.

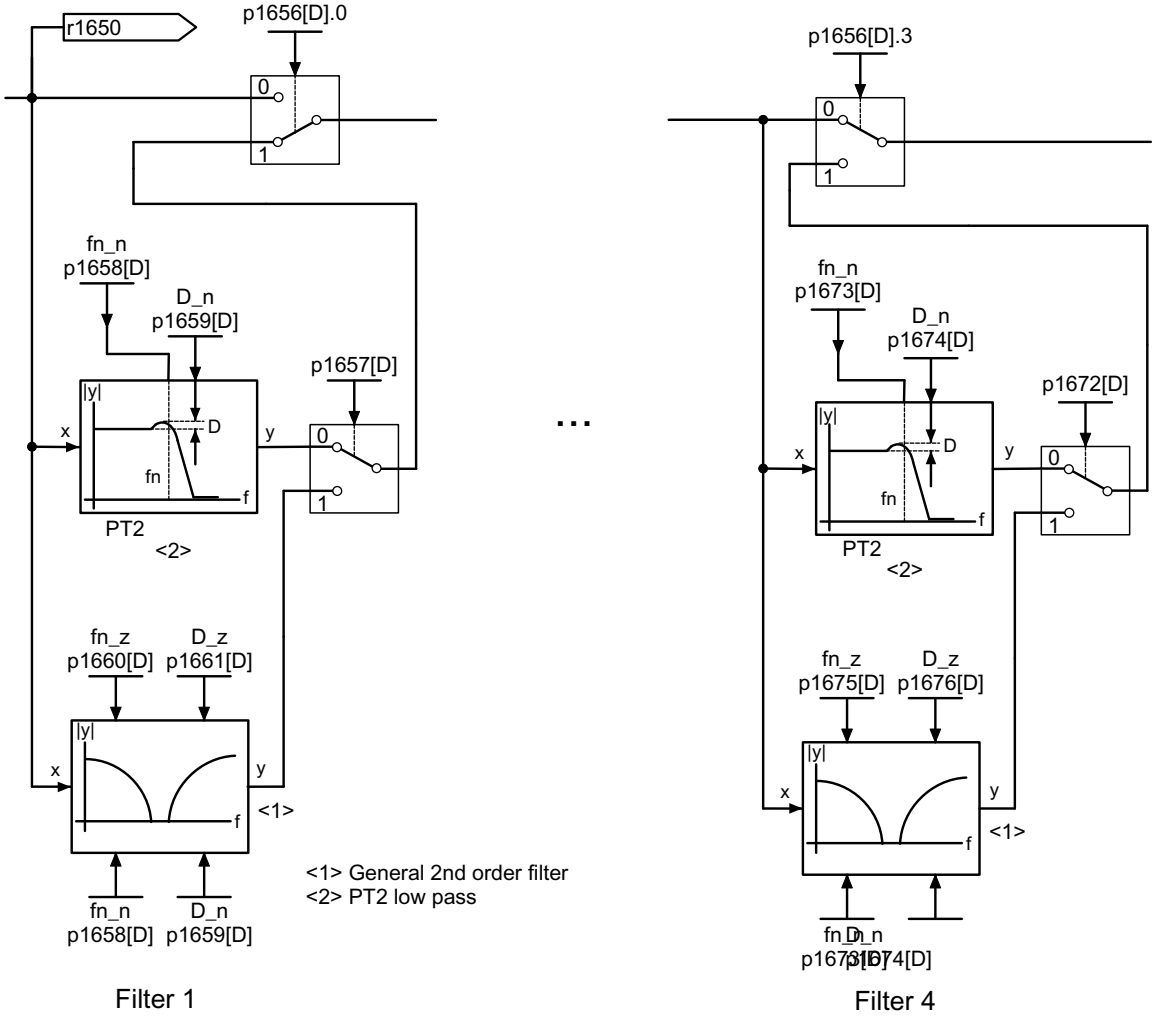

Figure 5-9 Current setpoint filter

Additional examples

The following examples demonstrate the features of the parameterizable current setpoint filters.

Low-pass 2nd order (PT2 filter)

The following figure shows the transfer function for low-pass 2nd order.

$$H_{(s)} = \frac{1}{\left(\frac{s}{2\pi f_N}\right)^2 + \frac{2D_N}{2\pi f_N} \cdot s + 1}$$

f_N = Denominator natural frequency

D_N = Denominator damping

Table 5-2 Example: PT2 filter

Filter parameters	Amplitude log frequency curve	Phase frequency curve
Characteristic frequency f_N = 500 Hz Damping D_N = 0.7 dB	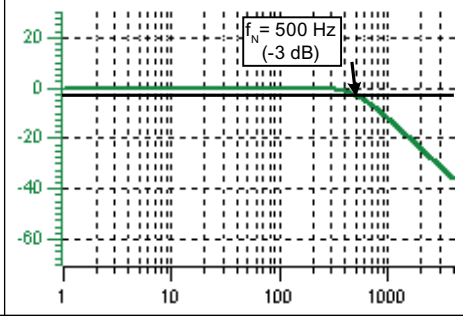	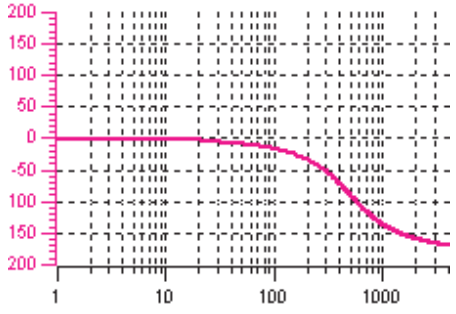

Band-stop filter with infinite notch depth

Table 5-3 Example: Band-stop filter with infinite notch depth

Filter parameters	Amplitude log frequency curve	Phase frequency curve
Blocking frequency f_{Sp} = 500 Hz Bandwidth (-3 dB) f_{BB} = 500 Hz Notch depth K = -∞ dB Reduction Abs = 0 dB	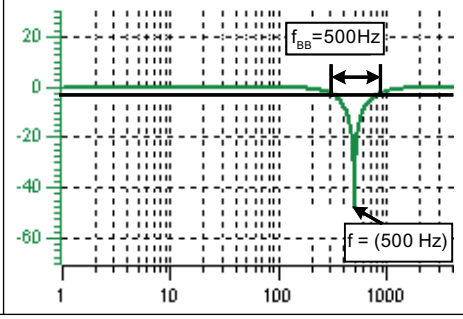	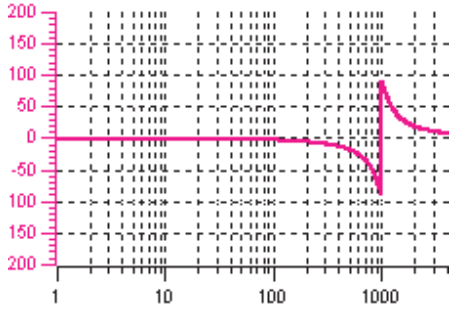

Simplified conversion to parameters for general order filters:

- Infinite notch depth at the blocking frequency
- Numerator natural frequency $f_Z = f_{Sp}$
- Numerator damping $D_Z = 0$

- Denominator natural frequency $f_N = f_{Sp}$
- Denominator damping

$$D_N = \frac{f_{BB}}{2\, f_{Sp}}$$

Band-stop filter with defined notch depth

Table 5-4 Example: Band-stop filter with defined notch depth

Filter parameters	Amplitude log frequency curve	Phase frequency curve
Blocking frequency f_{Sp} = 500 Hz Bandwidth f_{BB} = 500 Hz Notch depth K = -20 dB Reduction Abs = 0 dB	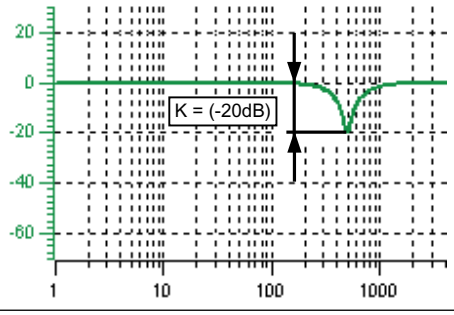	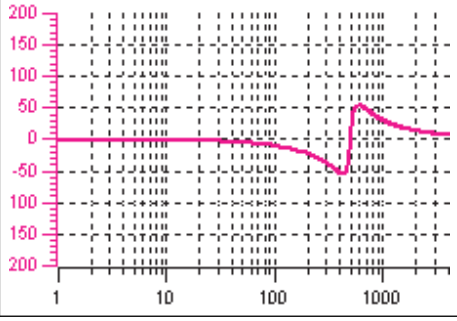

Simplified conversion to parameters for general order filters:

- No reduction or increase after the blocking frequency
- Defined notch at the blocking frequency K[dB] (e.g. -20 dB)
- Numerator natural frequency $f_Z = f_{Sp}$
- Numerator damping

$$D_Z = \frac{f_{BB} \cdot 10^{\frac{K}{20}}}{2\, f_{Sp}}$$

- Denominator natural frequency $f_N = f_{Sp}$
- Denominator damping

$$D_N = \frac{f_{BB}}{2\, f_{Sp}}$$

Band-stop filter with defined reduction

Table 5-5 Example: Band-stop filter with defined reduction

Filter parameters	Amplitude log frequency curve	Phase frequency curve
Blocking frequency f_{SP} = 500 Hz Bandwidth f_{BB} = 500 Hz Notch depth K = -∞ dB Reduction ABS = -20 dB	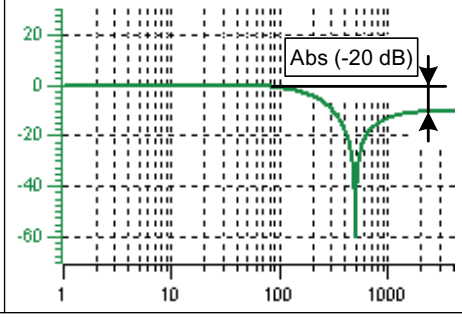	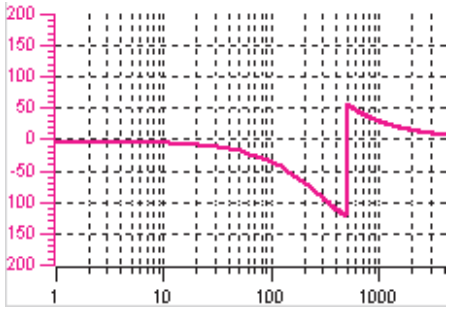

General conversion to parameters for general order filters:

- Numerator natural frequency

$$f_Z = \frac{\omega_Z}{2\pi} = f_{Sp}$$

- Numerator damping

$$D_Z = 10^{\frac{K}{20}} \cdot \frac{1}{2} \cdot \sqrt{\left(1 - \frac{1}{10^{\frac{Abs}{20}}}\right)^2 + \frac{f_{BB}^{\ 2}}{f_{Sp}^{\ 2} \cdot 10^{\frac{Abs}{10}}}}$$

- Denominator natural frequency

$$f_N = \frac{\omega_N}{2\pi} = f_{Sp} \cdot 10^{\frac{Abs}{40}}$$

- Denominator damping

$$D_N = \frac{f_{BB}}{2\, f_{Sp} \cdot 10^{\frac{Abs}{40}}}$$

General low-pass with reduction

Table 5-6 Example: Low-pass with reduction

Filter parameters	Amplitude log frequency curve	Phase frequency curve
Characteristic frequency f_{Abs} = 500 Hz Damping D = 0.7 Reduction Abs = -10 dB	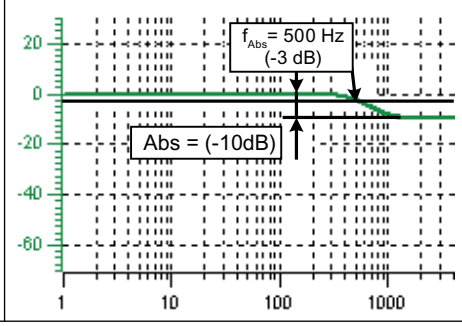	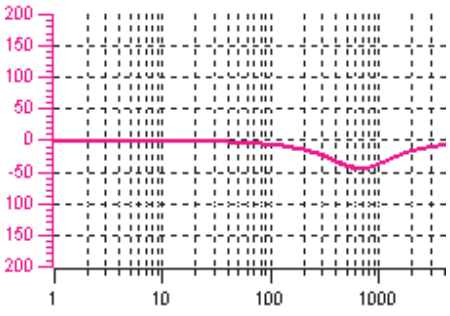

Conversion to parameters for general order filters:

- Denominator natural frequency $f_N = f_{Abs}$ (start of reduction)
- Numerator natural frequency f_Z

$$f_Z = \frac{f_{Abs}}{10^{\frac{Abs}{40}}}$$

- Denominator damping $D_N = 0.7$
- Numerator damping: $D_Z = 0.7$

General 2nd order filter

The following image shows the transfer function for a general filter 2nd order.

$$H_{(s)} = \frac{\left(\frac{s}{2\pi f_Z}\right)^2 + \frac{2D_Z}{2\pi f_Z} \cdot s + 1}{\left(\frac{s}{2\pi f_N}\right)^2 + \frac{2D_N}{2\pi f_N} \cdot s + 1}$$

f_Z = Numerator natural frequency

D_Z =numerator damping

f_N = Denominator natural frequency

D_N = Denominator damping

Table 5-7 Example: General 2nd order filter

Filter parameters	Amplitude log frequency curve	Phase frequency curve
Numerator frequency f_Z = 500 Hz Numerator damping D_Z = 0.02 dB Denominator frequency f_N = 900 Hz Denominator damping D_N = 0.15 dB	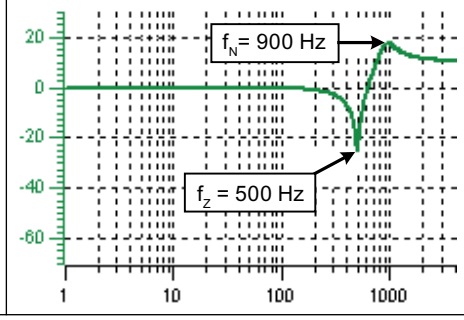	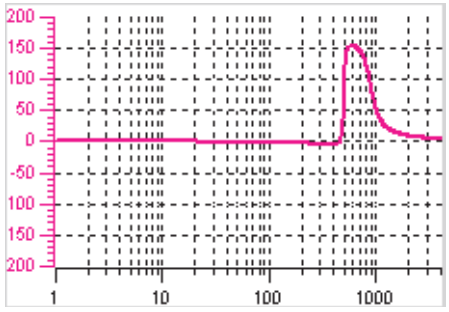

Function diagrams (see SINAMICS S120/S150 List Manual)

- 5700 Servo control - Current control, overview
- 5710 Servo control - Current setpoint filters 1 ... 4
- 5711 Servo control - Current setpoint filters 5 … 10 (r0108.21 = 1)

Overview of important parameters (see SINAMICS S120/S150 List Manual)

- p0108[0...n] Drive object function module
- p1400[0...n] Speed control configuration
- p1656[0...n] Current setpoint filter activation
- p1657[0...n] Current setpoint filter 1 type
- p1658[0...n] Current setpoint filter 1 denominator natural frequency
- p1659[0...n] Current setpoint filter 1 denominator damping
- p1660[0...n] Current setpoint filter 1 numerator natural frequency
- p1661[0...n] Current setpoint filter 1 numerator damping
- p1662[0...n] … p1666[0...n] Current setpoint filter 2 (for distribution see current setpoint filter 1)
- p1667[0...n] … p1671[0...n] Current setpoint filter 3 (for distribution see current setpoint filter 1)
- p1672[0...n] … p1676[0...n] Current setpoint filter 4 (for distribution see current setpoint filter 1)
- p1699 Filter data acceptance
- p5200[0...n] Current setpoint filter 5 ... 10 activation
- p5201[0...n] … p5205[0...n] Current setpoint filter 5 (for distribution see current setpoint filter 1)
- p5206[0...n] … p5210[0...n] Current setpoint filter 6 (for distribution see current setpoint filter 1)
- p5211[0...n] … p5215[0...n] Current setpoint filter 7 (for distribution see current setpoint filter 1)
- p5216[0...n] … p5220[0...n] Current setpoint filter 8 (for distribution see current setpoint filter 1)
- p5221[0...n] … p5225[0...n] Current setpoint filter 9 (for distribution see current setpoint filter 1)
- p5226[0...n] … p5230[0...n] Current setpoint filter 10 (for distribution see current setpoint filter 1)

5.8 Current controller

Function description

The current controller is pre-assigned based on the electrical motor data, and generally, does not have to be adapted in operation. When required, you can measure and optimize the current controller frequency response using the appropriate measuring functions.

Features

Features of the current controller include:

- Current and torque limitation
- Current controller acts as PI controller
- Current controller adaptation is possible
- Closed-loop flux control is possible for an induction motor

Current and torque limitation

The current and torque limitations are preset when the system is commissioned for the first time and must be adjusted according to the respective application.

Current controller adaptation

The P gain of the current controller can be reduced (depending on the current) by means of current controller adaptation. Current controller adaptation can be deactivated with the setting p1402.2 = 0.

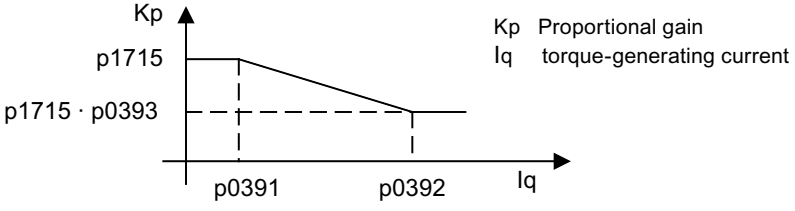

Function diagrams (see SINAMICS S120/S150 List Manual)

- 5700 Servo control - Current control, overview
- 5710 Servo control - Current setpoint filter 1 ... 4
- 5714 Servo control - Iq and Id controller
- 5722 Servo control - Field current / flux specification, flux reduction, flux controller

Overview of important parameters (see SINAMICS S120/S150 List Manual)

Current control

- p1701[0...n] Current controller reference model dead time
- p1715[0...n] Current controller P gain
- p1717[0...n] Current controller integral time

Current and torque limitation

- p0323[0...n] Maximum motor current
- p0326[0...n] Motor stall torque correction factor
- p0640[0...n] Current limit
- p1520[0...n] CO: Torque limit upper/motoring
- p1521[0...n] CO: Torque limit lower/regenerative
- p1522[0...n] CI: Torque limit upper/motoring
- p1523[0...n] CI: Torque limit lower/regenerative
- p1524[0...n] CO: Torque limit upper/motoring scaling
- p1525[0...n] CO: Torque limit, lower/regenerative scaling
- r1526 CO: Torque limit upper/motoring without offset
- r1527 CO: Torque limit, lower/regenerative without offset
- p1528[0...n] CI: Torque limit upper/motoring scaling
- p1529[0...n] CI: Lower or regenerative torque limit scaling
- p1530[0...n] Power limit motoring
- p1531[0...n] Power limit regenerative
- p1532[0...n] CO: Torque limit, offset
- r1533 Current limit torque-generating, total
- r1534 CO: Total upper torque limit
- r1535 CO: Torque limit, lower total
- r1538 CO: Upper effective torque limit
- r1539 CO: Lower effective torque limit

Current controller adaptation

- p0391[0...n] Current controller adaptation, starting point KP
- p0392[0...n] Current controller adaptation, starting point KP adapted
- p0393[0...n] Current controller adaptation, P gain adaptation
- p1590[0...n] Flux controller P gain
- p1592[0...n] Flux controller integral time

5.9 Autotuning

Function description

The term "Autotuning" comprises all drive-internal functions that adapt controller parameters during operation based on internal measured variables. The set parameters are written in the parameters, but are not saved permanently.

Applications

The main applications of the autotuning functions are:

- Support of the commissioning
- Adaptation of the controller during major changes in the mechanical system

Autotuning process

The following table provides an overview of the most important autotuning processes and their basic functions.

Processes	Explanation
One Button Tuning (OBT)	This process allows the speed controller and EPOS controller to be optimized automatically with servo control. In this regard, a controlled system is measured once and the controller is then set.
Online tuning	With this optimization process the controller parameters are determined from the constant estimated or parameterized moments of inertia (motor torque and moment of inertia). Recommendations: • Always apply this process in conjunction with the EPOS function. • Apply this process wherever the engineering tool (e.g. Startdrive) cannot be used for optimization of the EPOS position controller during commissioning. • Measurements are not permanently required Deactivate online tuning as soon as the controller data has been calculated and the established values for controller optimization, as well as the filter settings have been saved in a non-volatile (RAM to ROM) memory.
Current setpoint filter adaptation	Current setpoint filter adaptation is provided for plants and systems which exhibit a variable mechanical resonant frequency during operation. To dampen mechanical resonant frequencies, this process allows a selected current setpoint filter to be shifted automatically to a mechanical resonant frequency.

5.9.1 One Button Tuning

Overview

The One Button Tuning function enables automatic optimization of the speed and position controller for a drive.

Function description

With One Button Tuning (OBT), the mechanical drive train is measured using short test signals and the controller parameters are optimally adapted to the existing mechanics. As this concerns a drive-internal function, no external engineering tool is required.

Restrictions

Only the motor measuring system is taken into account when optimizing the position controller. If an external measuring system is used for the position control, this can result in an unstable controller setting. Additionally, the OBT does not support different sampling times for current controller and speed/velocity controller in this configuration. We therefore recommend that OBT is not used in this configuration.

Note

When using OBT in conjunction with the function "Advanced Position Control (incl. Active Vibration Suppression)" (APC), you must first deactivate the APC function.

Activating/deactivating autotuning

NOTICE

Unstable controller when manually changing the controller parameters during autotuning

If you wish to manually change a controller parameter that the One Button Tuning automatically sets, then this can result in an unstable controller and therefore material damage.

- Therefore, do not change the following parameters during the One Button Tuning: p0430, p1160, p1413 to p1426, p1428, p1429, p1433 to p1435, p1441, p1460 to 1465, p1498, p1513, p1656 to p1676, p1703, p2533 to p2539, p2567, p2572, p2573

Autotuning is activated / deactivated with parameter p5300. The following settings are possible:

Setting	Explanation
-1	The "Autotuning" function is set inactive. The setting is automatically corrected to p5300 = 0. The default settings for the speed controller and position controller are also restored.
0	The "Autotuning" function is set inactive. The current setting of all controller parameters are retained as volatile values. The parameters must be saved in the non-volatile memory for permanent storage of the values determined for the speed controller and position controller (p0977 = 1 or RAM after ROM).
1	The "One button tuning" function is active. A new calculation of the controller parameters is performed once following completion of the OBT. p5300 = 0 is then set.
2	The "Online tuning" function is active. A new calculation of the controller parameters is performed cyclically if the estimated moment of inertia changes.

Note

Changing parameter p5300 changes parameters p5280 and p1400. Therefore after deactivating the autotuning function check the accuracy of the configuration of parameters p5280 and p1400 and amend these if required.

Configuring the function

The following settings are possible via parameter p5301:

Bit	Effect
00	The speed controller gain is determined and set with the aid of a noise signal.
01	Any required current setpoint filters are determined and set with the aid of a noise signal. In this way, a higher dynamic response can be achieved in the speed control loop.
02	With this bit, the moment of inertia is determined with the aid of a test signal. If this bit is not set, the load moment of inertia must be parameterized manually in parameter p1498. The test signal must first be set with parameters p5308 and p5309.
04	Possibly existing load oscillations (low-frequency resonance) are determined using a test signal. The function detects frequencies in the range of approx. 2Hz to 95Hz. No external measuring system is required for the load. The frequencies detected (zero positions and pole positions) are displayed in p5294[0...2] and p5295[0...2]. A sufficiently large traversing distance must be preset using parameter p5308 for this function.
05	In addition to the loan oscillation detection (see bit 04) an active attenuation is configured for the load oscillation detected. In doing so, the frequency of the smallest zero position is automatically entered in p3752. A requirement for this is the function module "Advanced Positioning Control" (r0108.7 = 1) and p3700.2 = 1. The load moment of inertia must also be determined using p5301.2 - or first manually entered in p1498. After the function is performed, Advanced Positioning Control must be activated by setting p3700.0 to 1.
07	With this function, these axes are adapted to the dynamic response set in p5275. This is required for interpolating axes. The time in p5275 should be set with the lowest dynamic response in accordance with the axis.
08	Using this bit, the moment of inertia is determined from the frequency response without traversing path, and indicated in r5325. The frequency range to determine the moment of inertia can be specified using p5323 and p5324. If bit 02 is not set, then the determined moment of inertia is also transferred to p1498.

Automatic pre-assignment

With activation of the OBT, settings which should guarantee safe and dynamic operation of the drive are performed automatically. The mechanical drive train is measured with the aid of test signals. In this way, the controller parameters can be calculated so that the drive train is set as dynamically as possible.

Measuring via noise excitation

The test signals comprise, on the one hand, a noise excitation during which the drive executes a motion with a superimposed noise signal for a few seconds. The following settings are required for this:

- The speed controller gain is set with p5301.0 = 1.
  Parameter p5292 is a multiplier for this gain. An amplitude reserve of 7 dB and 45° phase margin is taken into account with p5292 = 100%.
- Current setpoint filters 2 to 4 are parameterized with p5301.1 = 1.
  These filters are set in order to achieve greater gains in the speed control loop. Typically, band-stop filters are applied to mechanical resonances. Filters are only set when a greater speed controller gain p1460 can be achieved.
- Active oscillation damping is parameterized by setting p5301.5 to 1.
  The frequency of the load oscillation detected is set in p3752 "Advanced positioning control closed-loop controller pre-assignment for natural frequency of vibration". A requirement for this is the function module "Advanced Positioning Control" (r0108.7 = 1) and p3700.2 = 1. The load moment of inertia must also be determined using p5301.2 - or first manually entered in p1498. Following this, Advanced Positioning Control must be activated by setting p3700.0 to 1. An existing load oscillation can be dampened during the positioning action using the oscillation damping control. The response to interference and synchronous operation properties can be negatively impacted as a result of oscillation damping without sensor on the load side.

Measuring via low-frequency speed setpoint signal

On the other hand, a very low frequency speed setpoint signal (triangular) is applied to the drive. The motor makes a clearly visible movement. Distance amplitude and duration must be set with parameters p5308 and p5309.

In this way, the moment of inertia of the drive train is estimated. All the remaining controller parameters are set. The setting is performed in the same way as for "Online tuning".

Additional settings and displays

The following table provides an overview of further settings and displays in the parameters.

Parameter	Adjustment range	Factory setting	Setting / display (with explanations)
p5271[0...n]	-	0000 1100 bin	Configuration of the OBT. The following settings are possible: • Bit 03: Activates speed precontrol – Only relevant for EPOS. • Bit 04: Activates torque precontrol – If EPOS is active, then the torque precontrol from EPOS is used (p2567). – If EPOS is not active, then the speed/torque precontrol of the speed controller is used (p1493, p1428, p1429). • Bit 07: Activates voltage precontrol
r5276	-	-	Display of the estimated position controller gain for OBT: • If position control is implemented using a higher-level open-loop control system, the open-loop control system can assume the values displayed here.
r5277	-	-	Display of the estimated precontrol symmetrizing time of the position controller for OBT: • If position control is implemented using a higher-level open-loop control system, the open-loop control system can assume the values displayed here.
p5292	25% to 125%	80%	Dynamic response factor for the P gain of the speed controller: • The speed control may become instable if the values are too high.
r5293	-	-	Display of the proportional gain established for the speed controller, calculated from the FFT measurement by OBT
r5294	-	-	Display of the identified mechanical zero positions
r5295	-	-	Display of the identified mechanical pole positions
p5296[0]	1% to 300%	10%	Setting the amplitude of the noise signal for the functions p5301.0 and p5301.1. • The value refers to the rated torque of the motor r0333.
p5296[1]	1% to 300%	30%	Setting the amplitude of the noise signal for the functions p5301.4 and p5301.5: • The value refers to the rated torque of the motor r0333.
p5297[0]	-210000 to 210000 rpm -210000 to 210000 m/min	0 rpm 0 m/min	Setting the rotational feed offset for the functions p5301.0 and p5301.1: • The setting should prevent non-linear effects, such as backlash or stiction, influencing the measured values.
p5297[1]	-210000 to 210000 rpm -210000 to 210000 m/min	0 rpm 0 m/min	Setting the rotational feed offset for the functions p5301.4 and p5301.5: • The setting should prevent non-linear effects, such as backlash or stiction, influencing the measured values.
r5306[0...n]	-	-	Status display of the auto tuning functions that have been executed: • The display relates to the action of the p5300 last executed, and is therefore not only applicable for the OBT.

Parameter	Adjustment range	Factory setting	Setting / display (with explanations)
p5308	0 to 30000 degrees 0 to 30000 mm	0 degree 0 mm	Distance limiting for the OBT: • Following activation of the OBT (p5300), the traversing range in positive and negative direction is restricted to the set distance limiting specified in degrees. The value 360 ° corresponds with one full rotation of the motor.
p5309	0 ms to 5000 ms	2000 ms	Complete test signal (triangular)

5.9.2 Online tuning

5.9.2.1 "Drive-based" online tuning

Overview

The "Online tuning" function is enabled via the "Moment of inertia estimator (Page 540)" function module and can be used with EPOS for simple positioning tasks.

Function description

This function allows robust setting of the controller parameters for a drive during operation. Through the online tuning, the relevant controller parameters for the speed controller and position controller including precontrol are set automatically. The automatic calculation of the controller parameters also depends on the moment of inertia of the motor and the load. The load moment of inertia (p1498) can either be parameterized manually or determined once or cyclically by activating the moment of inertia estimator.

NOTICE

Unstable controller for excessively low stiffness between the motor and load

Only the motor measuring system is taken into account for the calculation of the controller parameters.

If a load-side measuring system is used for the position control, this can result in an unstable controller setting if the motor shaft is not adequately stiff and there is a relatively high load moment of inertia – which in turn can lead to material damage.

- If the stiffness is too low, reduce the load dynamic factor using p5273.
- For all DDS where the same EDS is assigned with TTL/HTL encoder, ensure that the identical parameterization is used (e.g. p5300[0] = -1 and p5300[1] = -1, etc.).

NOTICE

Unstable controller when manually changing the controller parameters during autotuning

If you wish to manually change a controller parameter that the online tuning automatically sets, then this can result in an unstable controller and therefore material damage.

- Therefore, do not change the following parameters during the online tuning:
  p1413, p1414 to p1426, p1428, p1429, p1433 to p1435, p1441, p1460 to p1465, p1656 to p1676, p1703, p2533 to p2539, p2567

Activating autotuning

Autotuning is activated / deactivated with parameter p5300. The following settings are possible:

Setting	Explanation
-1	The "Autotuning" function is set inactive. The setting is automatically corrected to p5300 = 0. The default settings for the speed controller and position controller are also restored.
0	The "Autotuning" function is set inactive. The current setting of all controller parameters are retained as volatile values. The parameters must be saved in the non-volatile memory for permanent storage of the determined values for the speed controller and position controller (p0977 = 1 or RAM after ROM).
1	The "One button tuning" function is active. A new calculation of the controller parameters is performed once. p5300 = 0 is then set.
2	The "Online tuning" function is active. A new calculation of the controller parameters is performed cyclically if the estimated moment of inertia changes.

Note

Changing parameter p5300 changes parameters p5280 and p1400. Therefore after deactivating the autotuning function check the accuracy of the configuration of parameters p5280 and p1400 and amend these if required.

Configuring the function

To configure the online tuning, proceed as follows:

1. Activate the online tuning via p5300 = 2.
2. Configure the sequence control via parameter p5302.
3. Configure the controllers via parameter p5271.

Note

Saving the established values in a non-volatile memory

To save the established values for speed and position controllers, the parameters must be saved in a non-volatile memory (RAM to ROM or p0977 = 1). In this way, the start values for the online tuning are retained, e.g. after POWER ON.

Note

Function and supplementary conditions for the inertia estimator

Please observe the notes in chapter Moment of inertia estimator (Page 540).

Note

Resetting the inertia estimator

Through deactivation and renewed activation of the online tuning, the estimated load moment of inertia and the load torques are reset.

Setting the sequential control system

The following sequence control settings can be made via p5302:

Bit	Effect
00	The speed controller gain is determined and set with the aid of a noise signal. "Function is being prepared"
01	Any required current setpoint filters are determined and set with the aid of a noise signal. In this way, a higher dynamic response can be achieved in the speed control loop. "Function is being prepared"
02	With this bit, the moment of inertia is determined with the aid of the inertia estimator. If this bit is not set, the load moment of inertia must be parameterized manually in parameter p1498. The test signal must first be set with parameters p5308 and p5309.
03	• If "Once" is parameterized, the inertia estimator is deactivated after successful determination of the moment of inertia p1498. The parameters must then be saved in a non-volatile memory (p0977 = 1). • If "Cyclically" is parameterized, the moment of inertia is determined continuously and the controller parameters adapted. As soon as the moment of inertia has been successfully established (r1407.26 = 1), we recommend saving the parameters. The necessity for resettling of the controllers following a POWER ON will thus be avoided.
06	The function Current setpoint filter adaptation (Page 120) is enabled once this bit is activated. This function can be useful for damping a variable resonance in the mechanical system.
07	With this function, these axes are adapted to the dynamic response set in p5275. This is required for interpolating axes. The time in p5275 should be set with the lowest dynamic response in accordance with the axis.

Parameterizing the controller

You can parameterize the controller as follows via parameter p5271:

- Evaluate the estimated load for the speed controller gain with p5273.
- Activate the speed precontrol for the basic positioner (EPOS).
- Activate torque precontrol.
- Only with activated speed precontrol (bit 3) or torque precontrol (bit 4):
  Use the controller as PD controller in the position control loop to increase the dynamic response of the position controller.
- Determine the maximum acceleration limits for the basic positioner (EPOS).

- Do not change the Kp (speed controller gain).
- Activate the torque precontrol.

Automatic pre-assignment

When the "Online tuning" function is activated, settings are made that ensure the safe operation of the online tuning.

Current setpoint filter

The natural frequency of the first PT2 filter behaves proportional to the current controller and speed controller cycles. The faster the sampling, the higher the positive feedback frequency and therefore the higher the frequency must be set for the current setpoint filter.

A **lower dynamic response** via p5272 makes the control loop less sensitive to resonance from the drive train.

A **higher dynamic response** via p5272 makes the control loop more sensitive to resonance from the drive train.

The instability of the control loop through resonance can also be avoided through the parameterization of additional band-stop filters in the current setpoint.

Speed actual value filter

An actual speed value filter is required, for example, when the resolution of the encoder is relatively poor. Depending on the encoder resolution and the motor moment of inertia, an actual speed value filter (p1441) is calculated. The time constant of the actual speed value filter is taken into account in the calculation of the controller parameters.

Adaptive resonance filter

The limit frequencies for the adaptive resonance filter are pre-assigned according to the set sampling time. These can be changed manually.

Additional settings and displays

- Set the dynamic response factor (p5272) for the entire P gain of the speed controller.
- Set the estimated load moment of inertia component for the P gain of the speed controller with the load dynamic response factor (p5273).
- Display the estimated dynamic response (r5274) of the speed control loop as PT1 time constant.
- Set the same time constants for the dynamic response time constant (p5275) so that the interpolating drives receive a defined dynamic response via the precontrol. However, this does not always ensure positioning without overshoot.
- The estimated Kv factor is displayed (r5276). This value can be used for a higher-level control system, to set the position controller gain. Precondition: DSC is active in the drive.
- The estimated precontrol symmetrizing time is displayed (r5277). This value can be used for a higher-level control system, to symmetrize the position controller precontrol. Precondition: DSC is active in the drive.

Application examples

Online tuning is applied in the following cases:

- **Positioning axes**
  A positioning axis application can always be used when an axis performs a point-to-point motion independently of other axes. p5302.7 = 0 must be set. The axis is thus optimized for positioning without overshoot.
- **Interpolating axes** (EPOS position controller with higher-level control)
  Interpolating axis applications are required when several axes jointly perform a path motion, for example, in which the deviation to the contour should be as small as possible. Parameter p5302.7 = 1 must be set. The precontrol must not be switched off subsequently.
  The controlled dynamic response is set with parameter p5275. All interpolating axes must have the same value.
  With values that are too small, the axis can overshoot during positioning. If this has a negative effect on the application, the value in p5275 must be increased in all axes. The axis with the largest estimated time constant (r5274) in the settled state is the determining axis.

5.9.2.2 Adaptation of the control parameters

As soon as the "Online tuning" is active, the controller parameters are adapted to the estimated moment of inertia. However, the controller parameters are only recalculated when the moment of inertia has changed more than 5% compared to the last calculation. Otherwise the controller settings are not changed.

All adaptive controller settings also depend on the moment of inertia, e.g. determined by the estimator. If p5271.2 = 1 is set, the Kp factor depends directly on this moment of inertia. All other variables are only indirectly dependent on the moment of inertia.

Kp (speed controller gain)

The speed controller gain is set proportional to the motor moment of inertia. The gains are proportional to the dynamic response factor p5272. An adaptation of the Kp factor depending on the estimated moment of inertia is only performed when p5271.2 is set.

Parameter p5273 is used to set how many percent of the estimated load moment of inertia is to be taken into account as effective moment of inertia for the calculation of the Kp factor. With 0%, only the motor moment of inertia is effective, with 100%, the total moment of inertia is used for the calculation of the Kp factor.

When calculating the speed controller gain, the time constants of the parameterized current setpoint or actual speed value filter are also taken into account.

Tn (integral time, speed controller)

The integral time results from the estimated dynamic response of the speed control loop (r5274).

Reference model

The reference model adapts the speed setpoint for the integrator input of the speed controller to the dynamic response of the speed controller. This reduces speed overshoots during setpoint changes.

Position controller

Two cases can be selected for the position control via bit p5271.0:

- p5271.0 = 0 (not active)
  In this case, the position controller acts like a normal closed-loop P controller. The position controller gain (servo gain factor) is adapted depending on the estimated dynamic response of the speed control loop and the sample times.
- p5271.0 = 1 (active)
  If this bit is set and the estimated dynamic response (r5274) is greater than 16 ms, then the first speed setpoint filter is parameterized as D filter. With the parameterization, the gain for higher frequencies is greater and the filter has a more differentiated effect in the bandwidth of the speed controller (larger phase reserve). This corresponds to a PD controller. The servo gain factor may then be increased significantly.

The precontrol balancing is also adapted. The balancing of the speed controller precontrol depends on parameters p5271 and p5275.

Determining the maximum acceleration limits

Prerequisite is that the pulses have been disabled in the drive and the maximum moment of inertia has been determined.

The maximum target acceleration for the basic positioner (EPOS) is determined with the aid of the inertia estimator. This is performed only once after the activation of bit p5271.5. The load torques and a control reserve of 20% are taken into account.

The user must decide to what extent this maximum acceleration is permissible for the mechanical system of the machine (elastomechanical system) or for the thermal load capability of the motor (depending on the load cycle). The calculated acceleration (p2572) or deceleration (p2573) may have to be reduced by the commissioning engineer.

5.9.2.3 Problem handling

Possible problems and remedies are described in the following.

Drive vibrates

If the drive vibrates audibly, then the speed controller may have become instable at a mechanical resonance.

Remedy

- The instability in the control loop through resonance can be avoided by parameterizing band-stop filters in the current setpoint.
- Activate the adaptive resonance filter (see Section "Current setpoint filter adaptation (Page 120)") and, if required, traverse forward and backward and wait a few seconds to see whether the oscillation stops. If the whistling stops and also can no longer be heard during operation, then the axis is ready.
- If required, the dynamic response of the axis can be decreased. To do this, the value of parameter p5272 can be decreased.

Motor hums at very low speeds

If the drive has an encoder with poor resolution, the motor may hum at very low speeds or at standstill.

Remedy

- Increase the actual speed value smoothing (p1441) or reduce the dynamic response (p5272).
- Set parameter p5271.1 to reduce the controller gains for low speeds.

Poor positioning behavior

Poor positioning behavior is possible when the dynamic response of the drive is relatively low. The achievable dynamic response depends on the quality and the dimensioning of the elastomechanical drive train.

Remedy

Increase the value of parameter p5272 in order to increase the dynamic response of the drive. The drive may become instable if the values are too high (see, for example, the section "Drive vibrates" further above).

5.9.3 Current setpoint filter adaptation

Overview

The "Current setpoint filter adaptation" function is recommended for systems that display a variable mechanical resonant frequency during operation. If the system only contains non-variable mechanical resonant frequencies, they must be suppressed exclusively with fixed current setpoint filters. (e.g. "One Button Tuning (Page 109)").

Requirements

Make the following settings before you activate the current setpoint filter adaptation:

1. Parameterize the desired current setpoint filter as band-stop filter.
2. Assign the desired current setpoint filter to the adaptation via parameter p5281 (e.g. for filter 4: p5821 = 4).

Note

If the requirements are not met, the fault F07419 "Drive: Current setpoint filter adaptation error" is output. The fault value indicates which requirement has not been satisfied.

Function description

The function is used to automatically shift a selected current setpoint filter to a mechanical resonant frequency. Detailed descriptions on the principle of operation of the current setpoint filter adaptation as well all of the parameters that are linked with the adaptation can be found later in this chapter.

Enabling the function

The function is activated for S120 drives together with the "Moment of inertia estimator (Page 540)" function module.

Activating/deactivating current setpoint filter adaption

Active/deactivate the current setpoint filter adaptation via parameter p5280. The following settings are possible:

Setting	Explanation
-1	The "Current setpoint filter adaptation" function is deactivated together with the assigned filter (see p5281). With this setting, not only the adaptation, but also an assigned filter is deactivated. The associated bit is automatically deleted in parameters p1656 and p5200. However, the filter is not reset in its characteristic, it retains the values saved last. In contrast, the adaptation parameter is automatically reset to 0.
0	The "Current setpoint filter adaptation" function is inactive. The adaptation is deactivate with this setting. However, a filter assigned to the adaptation can still be active. The filter function is not affected by this setting.
1	The "Current setpoint filter adaptation" function is permanently active. A mechanical resonant frequency is determined with this activation and the appropriate blocking frequency is set automatically. If the band-stop filter has not been activated yet (see parameter p1656 or p5200), it is activated automatically. While the function generator generates a signal with the "noise" signal shape (p4820 = 4), the adaptation is temporarily inactive.

Note

The current setpoint filters 1 to 4 are activated by default. The extended current setpoint filters 5 to 10 can be activated additionally (see chapter "Current setpoint filter (Page 100)").

Further parameters of the current setpoint filter adaptation and their purpose:

p5281 Specifies which of the current setpoint filters is to be used for the adaptation.
p5282 Defines the lower limit frequency.
p5283 Defines the upper limit frequency.
p5284 Defines the activation threshold of the adaptation.
p5285 Shows the current blocking frequency.

Note

Deviation with activated online tuning (p5300 = 2)

The denominator damping of the adapted filter is set automatically. You can also overwrite this setting.

Further explanations for the principle of operation

If, after the pulse enable, a resonant frequency has been excited to such a degree that the internal activation threshold is exceeded, the adaptation moves the band-stop filter to this resonant frequency. If, however, the resonant frequency has not been excited enough or there is no interfering resonant frequency, the band-stop filter stops and the current blocking frequency does not change.

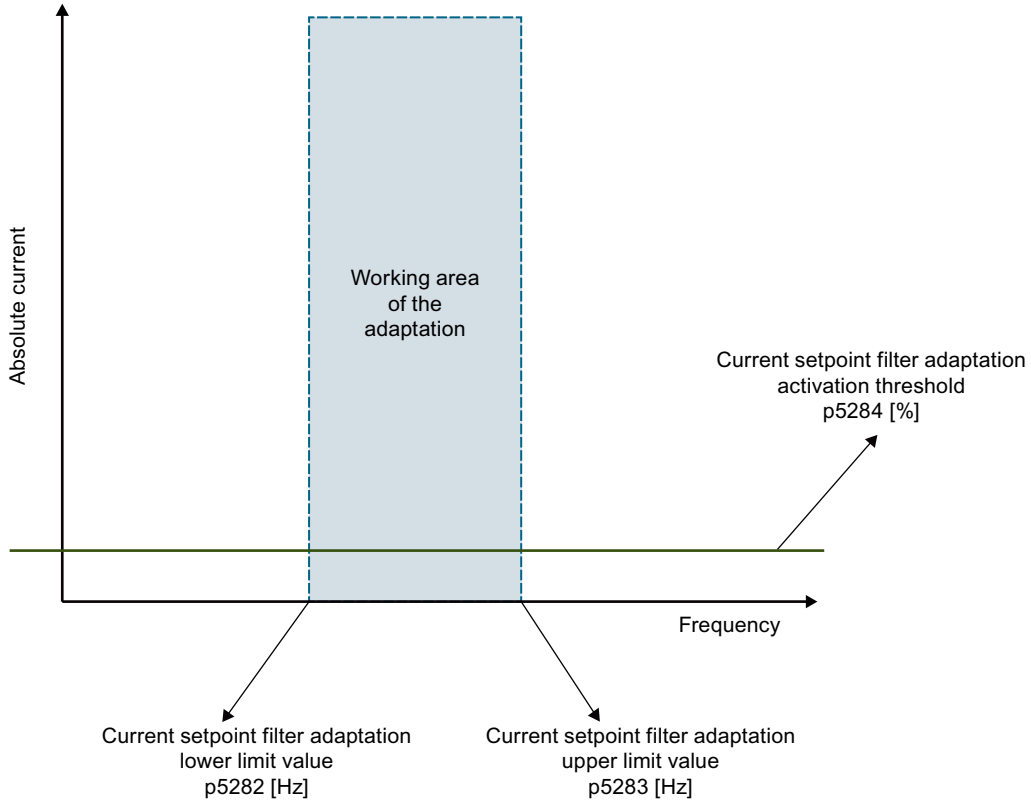

Figure 5-10 Principle of operation of the adaptation

The calculated values for the numerator and denominator damping of the band-stop filter are tracked during the movement so that the bandwidth of the band-stop filter increases with increasing blocking frequency.

The current frequency of the band-stop filter can be read and recorded via r5285. This frequency is also written to the appropriate frequency parameters of the adapted current setpoint filter.

Supplementary conditions

- Due to the operating principle of the adaptation, the base adaptation algorithm can only work reliably with systems that have one single mechanical resonant frequency. Undesirable movements of the adapted filter between the resonances can occur for systems with several mechanical resonant frequencies.
- Because of the operating principle of the adaptation, inaccuracies can occur during the adaptation of the blocking frequency. This generally happens if encoders with poor resolution (e.g. resolvers) are used. In such cases, the resonant frequency is only partly suppressed.
  Remedy: To reduce the inaccuracies, the actual speed value smoothing time constant in parameter p1441 can be increased.
- Stepped setpoint changes of the speed or velocity can cause unwanted movements of the adaptive current setpoint filter.
- If in addition to a variable mechanical resonant frequency, the system also contains non-variable mechanical resonant frequencies, the non-variable frequencies must be suppressed with fixed current setpoint filters. The adapted band-stop filter should be the last filter in the filter cascade of the band-stop filters. Otherwise the adaptation may be subject to interference from non-variable resonant frequencies, which may cause unwanted movements of the blocking frequency.

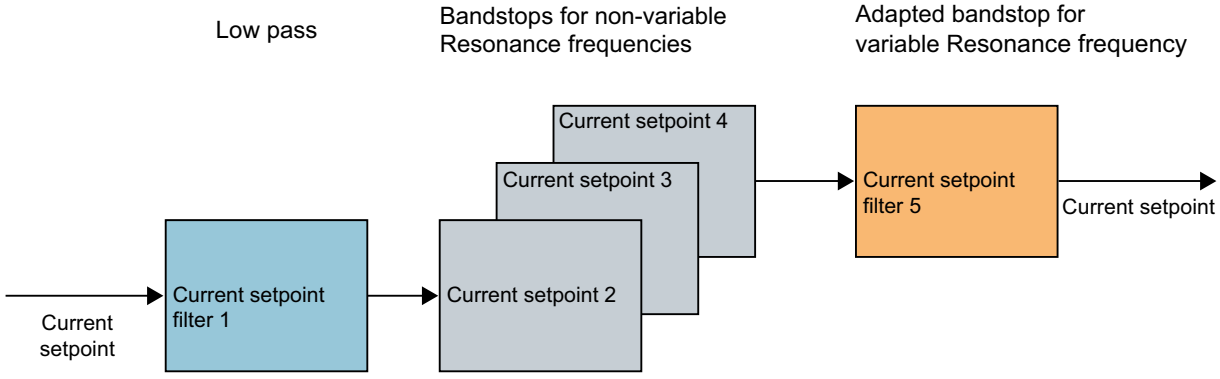

Figure 5-11 Example: Current setpoint filter 5 as the last filter used in the cascade

Internal activation threshold

The internal activation threshold can be weighted via parameter p5284:

- If the adaptation reacts too sensitively to other disturbances such as jumps in the speed or load torque, the activation threshold should be set high.
- If the adaptation is too insensitive and resonant frequencies do not occur despite strong excitation, the activation threshold can be reduced.

Range of movement of the adapted filter

The range of movement of the adapted filter can be limited with parameter p5282 or p5283.

Start value of the adaptation

The frequency with which the adaptation starts at the pulse enable is always the current blocking frequency of the filter. It can be read in parameter r5285 and in the frequency parameters of the filter. After a pulse inhibit and renewed pulse enable, this start value is always the blocking frequency last determined before the pulses were inhibited. After switching the drive off and on, the adaptation starts with the frequency stored in the frequency parameters of the adapted filter.

You have the following options in order to find a suitable start value for the frequency of the adaptation:

- Use the current position of the resonant frequency as start value:
  - To do this, read the current resonant frequency from the frequency response measurement.
    OR
  - Determine the current resonant frequency from one cycle of the "One Button Tuning".

  OR
- Use 500 Hz as start value.

The start value may be above or below the sought resonant frequency. This value should be set as blocking frequency of the respective band-stop filter before the adaptation is activated and the pulse enable set.

5.9.3.1 Stability of the speed control loop

Moving the band-stop filter changes the phase and amplitude frequency response of the speed control loop. The stability of the speed control loop is not checked by the current setpoint filter adaptation. If the current setpoint filter adaptation is operated with activated online tuning (p5300 = 2), the parameter settings that guarantee the stability are made automatically.

If autotuning is not activated, the settings that prevent instability must be made by the user. You must also ensure a sufficiently large phase reserve. The phase or amplitude frequency response of the adapted filter and the lower limit frequency of the adaptation (p5282) must be taken into consideration during this.

A resonant frequency can be moved by the active control. An instability of the controller can be caused by too high a controller gain that has a higher amplitude than the mechanical resonant frequency and therefore influences the adaptation.

5.9.3.2 Lower and upper limit frequencies

Parameter p5283 for the upper limit frequency has an internal upper limit that is only effective with active adaptation and depends on the settings for the adapted current setpoint filter. The following applies:

- If the adaptation is **active**, p5283 is limited immediately to this internal value when written.
- If the adaptation is **not active**, p5283 is automatically limited to the internal value when the adaptation is activated.

For the case that one of the limit frequency parameters (p5282 or p5283) is written and the current blocking frequency of the band-stop filter is beyond the relevant new limit frequency, the following applies:

- If the adaptation is **active**, the band-stop filter is automatically set to the relevant limit frequency when p5282 or p5283 is written.
- If the adaptation is **not active**, the band-stop filter is automatically set to the relevant limit frequency when the adaptation is activated.

5.9.3.3 Remedy for insufficient adaptation

If the adaptation does not change the blocking frequency of the adapted current setpoint filter during operation, then the mechanical resonant frequency is not sufficiently excited and therefore has no negative effect on the operation. If you nevertheless want to change the behavior of the adaptation, the following options are available:

- Change the activation threshold (p5284).
- Change the blocking frequency in the relevant filter parameters in order to obtain a different start value for the adaptation.
- Increase the speed controller gain via p1460 or p5272 to further excite the mechanical resonant frequency. However, observe the stability of the control loop with this setting.

5.9.4 Function diagrams and parameters

Overview of important faults (see SINAMICS S120/S150 List Manual)

- F07419 Drive: Incorrect current setpoint filter adaptation

Overview of important parameters (see SINAMICS S120/S150 List Manual)

- p0108[0...n] Drive object function module
- p1400[0...n] Speed control configuration
- p5271[0...n] Online / One Button Tuning configuration
- p5272[0...n] Online tuning dynamic response factor
- p5273[0...n] Online tuning load dynamic response factor
- r5274 CO: Online / One Button Tuning dynamic response estimated
- p5275[0...n] Online / One Button Tuning dynamic response time constant
- r5276 Online / One Button Tuning Kv factor estimated
- r5277 Online / One Button Tuning precontrol symmetrizing time estimated
- p5280[0...n] Current setpoint filter adaptation configuration
- p5281[0...n] Current setpoint filter adaptation assignment
- p5282[0...n] Current setpoint filter adaptation lower limit frequency
- p5283[0...n] Current setpoint filter adaptation upper limit frequency

- p5284[0...n] Current setpoint filter adaptation activation threshold
- r5285[0...n] Current setpoint filter adaptation current frequency
- p5292 FFT tuning dynamic response factor
- r5293 FFT tuning speed controller P gain identified
- r5294[0...5] FFT tuning zero position identified
- r5295[0...5] FFT tuning pole position identified
- p5296[0...2] FFT tuning PRBS amplitude
- p5297[0...2] FFT tuning PRBS offset
- p5300[0...n] Autotuning selection
- p5301[0...n] "One button tuning" configuration
- p5302[0...n] "Online tuning" configuration
- r5306[0...n] Autotuning status
- p5308[0...n] One Button Tuning test signal distance limiting
- p5309[0...n] One Button Tuning test signal duration

5.10 Notes about the electronic motor model

A model change takes place within the speed range p1752 · (100 % - p1756) and p1752. With induction motors with encoder, the torque image is more accurate in higher speed ranges; the effect of the rotor resistance and the saturation of the main field inductance are corrected. With synchronous motors with encoder, the commutation angle is monitored. If the kT estimator has been activated, the torque image for synchronous motors is more accurate too.

5.11 Increased stall power at the voltage limit

Function description

As a result of a new voltage management, in operation, the spindle power can be briefly increased to the stall power limit. The stall power limit is the range in which the motor power is limited as a result of the maximum converter output voltage. This stall power range is normally marked in the motor data sheets (voltage limit characteristic) and depends on the motor type (induction/synchronous motor) and the DC-link voltage magnitude (see figures shown further below).

Constraint

An increased stall power is not possible for motors that have sufficient clearance to the voltage limiting characteristic over the complete speed range.

Note

As a result of the field-orientated control, for operation at the voltage limit there is no danger of the motor stalling. This applies regardless of whether the operation takes place at the voltage limit with or without activated increased stall power.

Activation/deactivation effects

Activating and deactivating the increased stall power as the following effect:

- Increased stall power; p1402.6 = 1
  - The motor stall torque correction factor can be set via p0388.
  - The stall power can be set higher since it will be reduced by a controller as required.
- Normal stall power; p1402.6 = 0
  - The motor stall torque correction factor can be set via p0326.
  - Stall power must be very precisely set.

An increased stall power (p1402.6 = 1) provides an improvement for both synchronous and induction motors in the following ranges:

- For induction motors, the stall power decreases with the speed (see "voltage limiting Characteristics" in the figure below).

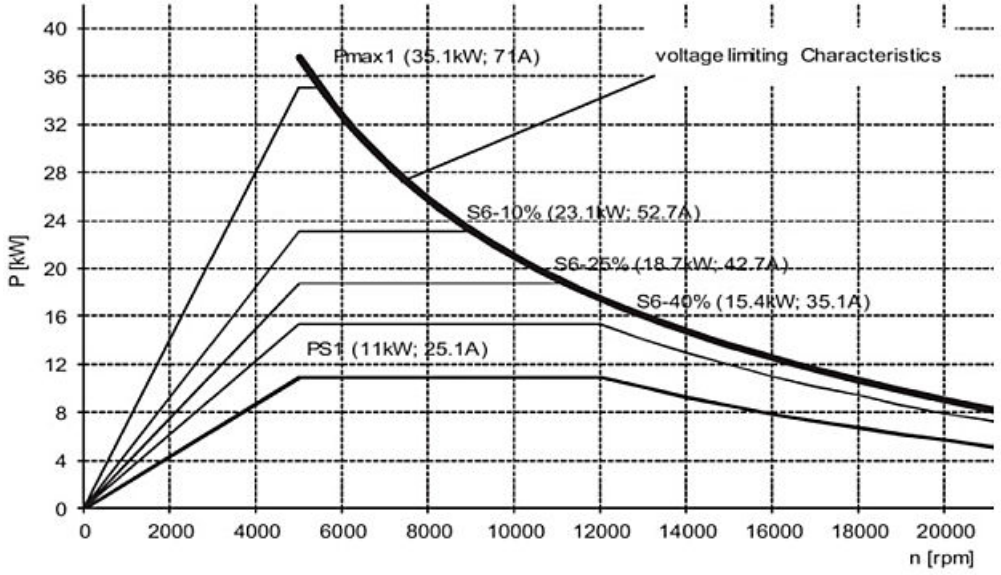

Figure 5-12 Induction motor: Power-torque characteristic

- For synchronous motors, the stall power represents a constant power limit (see "voltage limiting power" in the figure below).

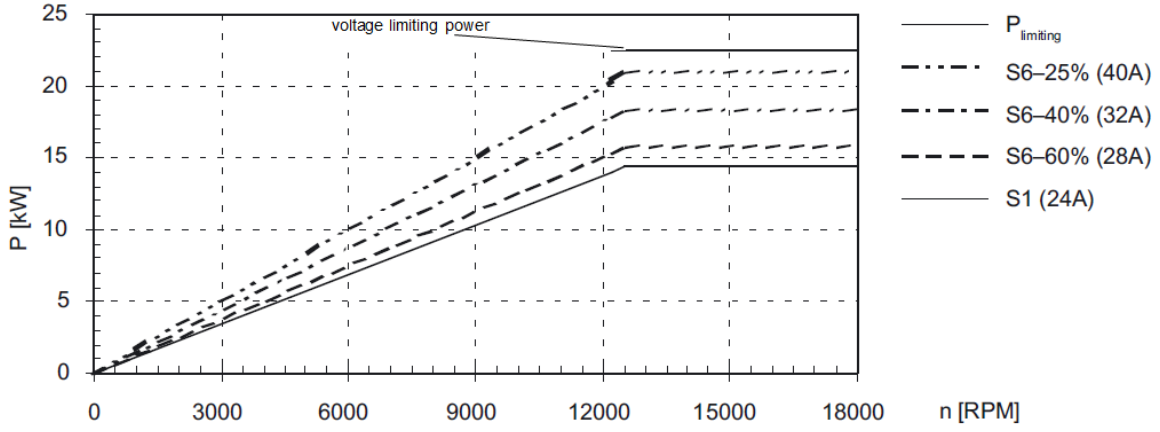

Figure 5-13 Synchronous motor: Power-torque characteristic

Using r1549[1], when braking from a high speed, the stall power setting can be recorded using a trace. The following must be observed:

- If a ramp-function generator is active, this should be deactivated so that the power limit can be reached.
- If the motor in the stall power range is braked along the set limits (p640, p1520, p1521, p1531), and r1549[1] remains set at zero, then p0388 should be increased. If p0388 remains set too low, then the maximum possible motor power at the stall power limit is not reached.

Specifics for induction motors

For induction motors, the higher stall power (p1402.6 = 1) is **automatically** preassigned when recommissioning. At the same time, the motor stall power limiting remains deactivated (p1402.3 = 0), so that the new control is only active in the generator mode.

Note

When motoring (accelerating, machining), the new closed-loop control can result in increased motor losses for some motors; this means that even in spite of a higher active power drawn, the torque at the motor shaft is not increased.

A combination of the higher stall power (p1402.6 = 1) with the activated stall power limiting motoring (p1402.3 = 1) is only recommended if shorter acceleration times can be achieved than with p1402.3 = 0.

As a result of the new voltage management, when an overload condition is demanded in the stall power range, if required, additional field weakening can be implemented in order to set the operating point with the maximum power.

In encoderless operation, in the high field weakening range, this additional field weakening can destabilize the motor model. Increasing the speed actual value smoothing time without encoder (p1451, e.g. to 15 ms) or reducing the speed controller P gain in encoderless operation (p1470) can counteract this effect.

Special situation, synchronous motors

For synchronous motors, the higher stall power (p1402.6 = 1) is **not automatically** preassigned. An increased motor power with p1402.6 = 1 can only be expected in the stall power range if the motor can handle the short-circuit current (p0640 > r0331). The power increase is especially high if the motor has a reluctance torque (p0327 > 90°, p0328 > 0). The increased power applies both for motors as well as when generating. p1402.3 is not relevant for synchronous motors.

Overview of important parameters (see SINAMICS S120/S150 List Manual)

- p0326[0...n] Motor stall torque correction factor
- r0331[0...n] Actual motor magnetizing current / short-circuit current
- p0388[0...n] Motor stall torque correction factor for p1402.6 = 1
- p0640[0...n] Current limit
- p1402[0...n] Current control and motor model configuration
- p1520[0...n] CO: Torque limit upper/motoring
- p1521[0...n] CO: Torque limit lower/regenerative
- p1531[0...n] Power limit regenerative
- r1549[0...1] CO: Actual stall power value

5.12 U/f control

Overview

With U/f control, the following **components and data** can be checked:

- Motor Module
- Power cable between the Motor Module and motor
- Motor
- DRIVE-CLiQ cable between the Motor Module and motor
- Encoder and actual encoder value

The following **motors** can be operated with U/f control:

- Induction motors
- Synchronous motors

Note

Operating synchronous motors with activated or deactivated resonance damping

- Speed limitation
  When resonance damping is deactivated, synchronous motors may only be operated with U/f control up to 25 % of the rated motor speed. If resonance damping is activated, synchronous motors may be operated with U/f control without any speed limiting.
- Stability
  When resonance damping is deactivated, for synchronous motors, U/f control is only stable at low speeds. Higher speeds can result in oscillation problems.
  When resonance damping is activated, for synchronous motors, U/f control is stable over the complete speed range. In the default setting, resonance damping is activated with suitable parameter values; these parameter values can be kept for most applications. If you become aware of interference caused by a transient response, you have the option of gradually increasing the value of p1338 in small steps and evaluating how this affects your system.

Function description

For U/f control, the drive is operated with an open control loop. In this open-loop control system, the drive does not require speed feedback and no actual current sensing. The current actual values only have to be sensed if resonance damping is activated. Operation with U/f control possible with just a small amount of motor data.

Note

In the U/f mode, the calculated actual speed value is always displayed in r0063. The speed of the encoder (if installed) is displayed in r0061. If an encoder is not installed, r0061 displays "0".

Note

Restricted applications for U/f control

U/f control must **only be used as a diagnostic function** (e.g. check of the motor encoder function). In order to obtain a pure diagnostic mode without any influence on actual values, the resonance damping must be deactivated (p1338 = 0).

The activated U/f control blocks all other settings, for example current controller or speed controller.

Structure of U/f control

The following figure shows a schematic of the structure of a U/f control:

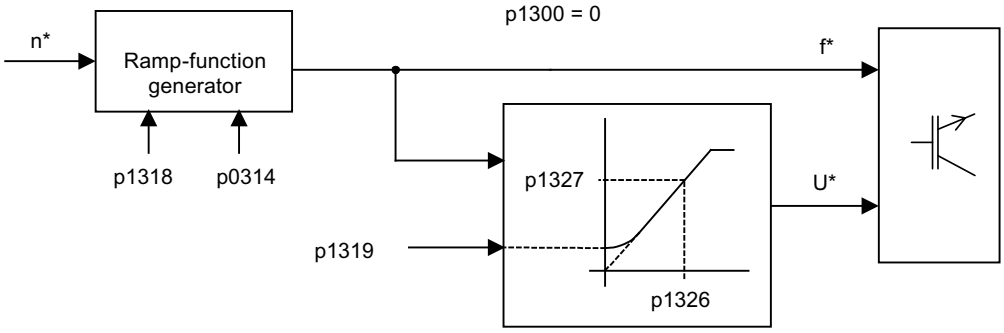

Figure 5-14 Structure of U/f control

U/f characteristic

The speed setpoint is converted to the frequency specification taking into account the number of pole pairs. The synchronous frequency associated with the speed setpoint is output (no slip compensation).

The following figure shows the U/f characteristic in schematic form:

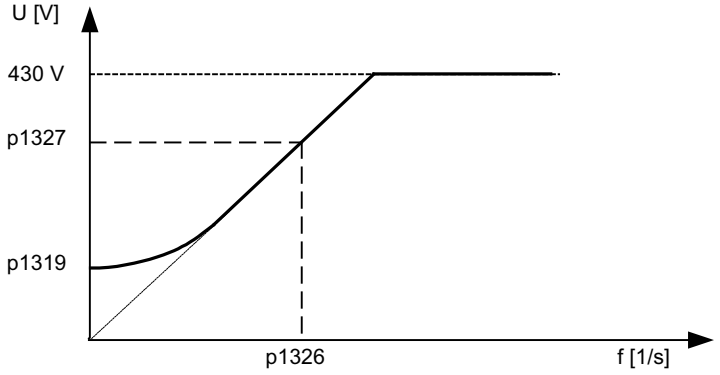

Figure 5-15 U/f characteristic

Commissioning U/f control

Before commissioning the U/f control, observe the following information:

Note

The run-up at the current limit (p0640) permits a quick run-up of the drive, e.g. when operating the drive with variable moments of inertia. Only the ramp-function generator stops when the current limit (p0640) is reached. This does not prevent the current from increasing even further. In view of this, the parameters you assign must include a safety margin relative to the current limits for the monitoring functions to prevent the drive from switching off with an overcurrent fault.

To commission the U/f control, proceed as follows:

1. Check the requirements for U/f control.
   - **Initial commissioning has been performed:**
     The parameters for U/f control have been preset with appropriate values.
   - **Initial commissioning has not been performed:**
     The following relevant motor data must be checked and corrected:
     r0313 Motor pole pair number, actual (or calculated)
     p0314 motor pole pair number
     p1318 U/f control ramp-up/ramp-down time
     p1319 U/f control voltage at zero frequency
     p1326 U/f control programmable characteristic frequency 4
     p1327 U/f control programmable characteristic voltage 4
     p1338[0...n] U/f mode resonance damping gain
     p1339[0...n] U/f mode resonance damping filter time constant
     p1349[0...n] U/f mode resonance damping maximum frequency
2. Set the rated motor speed via parameter p0311.
3. Activate U/f control with the parameter setting of p1317 = 1.

   Note

   Automatic activation of additional functions

   With p1317 = 1, the following functions are also activated automatically:
   - Resonance damping (p1338)
     In order to obtain a pure diagnostic mode without any influence on actual values, the resonance damping must be deactivated (p1338 = 0).
   - Vdc controller (p1240, p1244, p1248, p1250)
   - Limitation of the up ramp as a result of M, P and I limits
   - The ramp-function generator is stopped as soon as the current limit p0640 is exceeded.
4. Issue the enable signals for operation.
5. Enter the speed setpoint.

Function diagrams (see SINAMICS S120/S150 List Manual)

- 5300 Servo control - U/f control for diagnostics
- 5650 Servo control - Vdc_max controller and Vdc_min controller

Overview of important parameters (see SINAMICS S120/S150 List Manual)

- p0304[0...n] Rated motor voltage
- p0310[0...n] Rated motor frequency
- p0311[0...n] Rated motor speed
- r0313[0...n] Motor pole pair number, current (or calculated)
- p0314[0...n] Motor pole pair number
- p0317[0...n] Motor voltage constant
- p0322[0...n] Maximum motor speed
- p0323[0...n] Maximum motor current
- p0640[0...n] Current limit
- p1082[0...n] Maximum speed
- p1317[0...n] U/f control activation
- p1318[0...n] U/f control ramp-up/ramp-down time
- p1319[0...n] U/f control voltage at zero frequency
- p1326[0...n] U/f control programmable characteristic frequency 4
- p1327[0...n] U/f control programmable characteristic voltage 4

5.13 Optimizing the current and speed controller

Overview

The following tools are available for tuning the controllers:

- Function generator in the commissioning tool
- Trace in the commissioning tool
- Measuring function in the commissioning tool
- Measuring sockets on the Control Unit

Perform optimizations

Note

The optimization of the controller may only **be performed by specialists with knowledge of control technology**.

Current controller

The current controller is initialized when the system is commissioned for the first time and is adequately tuned for most applications.

Speed controller

The speed controller is set in accordance with the motor moment of inertia when the motor is configured for the first time. The calculated proportional gain is set to approximately 30% of the maximum possible gain in order to minimize vibrations when the controller is mounted on the mechanical system of the machine for the first time. The integral time of the speed controller is always preset to 10 ms. To achieve the full dynamic response, the following parameters must be optimized:

- Increase the proportional gain K_{p_n} (p1460)
- Change the integral time T_{n_n} (p1462)

Automatic controller setting for the speed controller (frequency response analysis)

The automatic speed controller setting has the following features:

- Section identification using FFT analysis
- Automatic setting of filters in the current setpoint arm (e.g. for damping resonance)
- Automatic setting of the controller (gain factor K_p, integral time T_n)

The automatic controller settings can be verified with the measuring functions.

Example 1: Measuring the speed controller frequency response

By measuring the speed controller frequency response and the control system, critical resonant frequencies can, if necessary, be determined at the stability limit of the speed control loop and dampened using one or more current setpoint filters. This normally enables the proportional gain to be increased (e.g. K_{p_n} = 3 default value).

After the K_{p_n} value has been set, the ideal integral time T_{n_n} (e.g. reduced from 10 ms to 5 ms) can be determined.

Example 2: Speed setpoint step change

A rectangular step change can be applied to the speed setpoint via the speed setpoint step change measuring function. The measuring function has preselected the measurement for the speed setpoint and the torque-generating current.

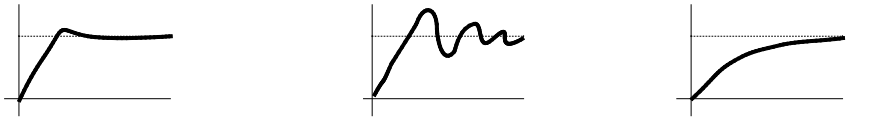

Kp_n is optimum	Kp_n is too high, overshoots.	Kp_n is too low, dampened transient response.
→ OK	→ Not OK	→ OK, not optimum

Figure 5-16 Setting the proportional gain K_p

5.14 Encoderless operation

Overview

Both encoderless and mixed operation (without/with encoder) is possible in the servo control. Encoderless operation with the motor model allows a higher dynamic response and greater stability in the servo control than a standard drive with U/f control. Compared with drives with an encoder, however, speed accuracy is lower and the dynamic response and smooth running features deteriorate.

Function description

Since the dynamic response in operation without an encoder is lower than in operation with an encoder, acceleration torque precontrol is implemented to improve the control dynamic performance. It controls, knowing the drive torque, and taking into account the existing torque and current limits as well as the load moment of inertia (motor moment of inertia: p0341 · p0342 + load torque: p1498), the required torque for a demanded speed dynamic performance optimized from a time perspective.

Note

If the motor is operated with and without an encoder (e.g. p0491 ≠ 0 or p1404 < p1082), the maximum current during operation without an encoder can be reduced via p0642 (reference value is p0640) in order to minimize interfering, saturation-related motor data changes during operation without an encoder.

A torque smoothing time can be parameterized via p1517 for the torque precontrol. The speed controller needs to be optimized for operation without an encoder due to the lower dynamic response. This can be achieved via p1470 (P gain) and p1472 (integral time).

In the low-speed range, the actual speed value, the orientation, and the actual flux can no longer be calculated during operation without an encoder due to the accuracy of the measured values and the parameter sensitivity of the procedure. This is the reason that the system switches over to current/frequency control (I/f-controlled operation), where only the current and frequency are impressed. The switchover threshold is parameterized via p1755 and the hysteresis via p1756.

To accept a high load torque even in the open-loop controlled range, the motor current (current setpoint) can be set using p1612. To do so, the drive torque (e.g. friction torque) must be known or estimated. An additional reserve of approx. 20% should also be added. In synchronous motors, the torque is converted to the current via the motor torque constant (p0316). For induction motors, the magnetizing current (r0331) must be additionally taken into account in p1612. In the lower speed range, the required current cannot be measured directly on the Motor Module. The default setting is 50% (synchronous motor) or 80% (induction motor) of the motor rated current (p0305). When parameterizing the motor current (p1612), you must take into

account the thermal motor load, as the current entered in p1612 is impressed in I/f-controlled operation also without load.

Note

Encoderless operation is not permitted for vertical axes or similar. Encoderless operation is not suitable for a higher-level closed-loop position control either.

The starting behavior of synchronous motors from standstill can be improved further by parameterizing the pole position identification (p1982 = 1).

Behavior once pulses have been canceled

⚠ CAUTION

Evaluating incorrect information about the motor speed

Once the pulses have been canceled, no information about the motor speed is available. The drive sets its speed actual value = "0" Messages and signals derived from the actual value no longer provide any information. Evaluating these messages and signals can result in the risk of injury and material damage.

- Take this behavior into consideration when engineering your plant or system.

Once the pulses have been canceled in operation without an encoder, the current actual speed value of the motor can no longer be calculated. Once the pulses are enabled again, the system must search for the actual speed value.

p1400.11 can be used to parameterize whether the search is to begin with the speed setpoint (p1400.11 = 1) or with speed = 0.0 (p1400.11 = 0). Under normal circumstances, p1400.11 = 0 because the motor is usually started from standstill. If the motor is rotating faster than the changeover speed p1755 when the pulses are enabled, p1400.11 = 1 must be set.

If the motor is rotating and the start value for the search is as of the setpoint (p1400.11 = 1), the speed setpoint must be in the same direction as the actual speed before the pulses can be enabled. A large discrepancy between the actual and setpoint speed can cause a malfunction.

Switchover, open-loop controlled/closed-loop controlled operation, operation with/without encoder

Operation without an encoder is activated using parameter setting p1300 = 20. If p1300 = 20 or p1404 = 0, operation without an encoder is active across the entire speed range. If the speed value is less than the changeover speed p1755, the motor is operated in accordance with the current/frequency.

During operation with an encoder, a switchover can be made to operation without an encoder when the speed threshold p1404 is exceeded. If p1404 > 0 and p1404 < p1755, a switchover is not made to operation without an encoder until the speed exceeds p1755.

To prevent encoder evaluation alarms in encoderless operation, set p1402.1 = 1 to park the encoder evaluation. Reading-in the motor temperature via the encoder evaluation remains active.

Operation without an encoder is displayed in parameter r1407.1.

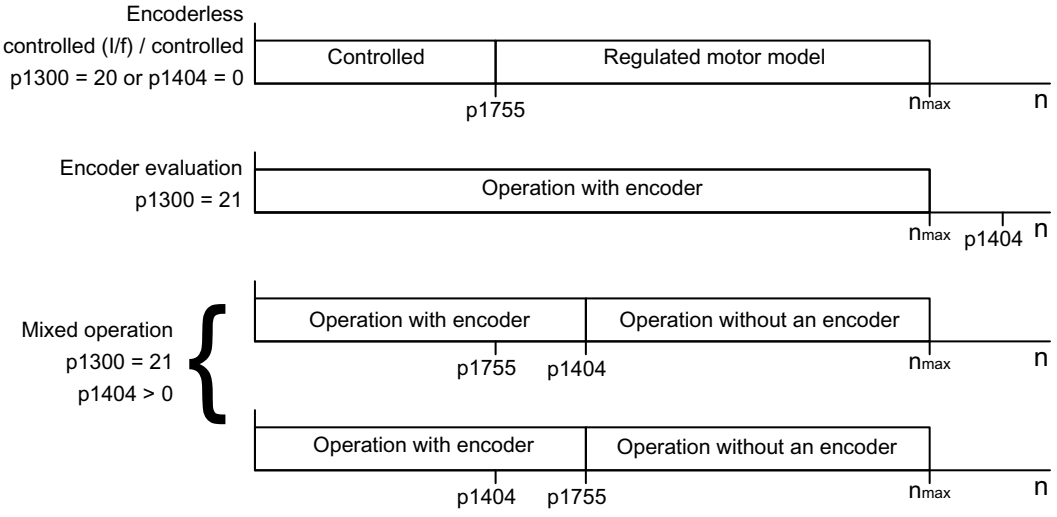

Figure 5-17 Area switchover

Note

In closed-loop control operating mode "Speed controller without encoder", a rotor position encoder is not required. Temperature evaluation remains active, even when the encoder is parked. This state can be identified at parameter r0458.26 = 1. When parameter r0458.26 = 0, temperature sensing is also deactivated.

Series reactor

When high-speed special motors are used, or other low leakage induction motors, a series reactor may be required to ensure stable operation of the current controller.

The series reactor can be integrated via p0353.

Commission and optimizing the function

Proceed as follows to start and optimize the function:

1. Estimate the motor current p1612 on the basis of the mechanical conditions (I = M/kt).
2. For synchronous motors with high overload setting (p0640 significantly higher than p0305), it may be necessary to reduce the current limiting in encoderless operation (p0642).
3. For a third-party motor, carry out the stationary measurement - and if possible - also the rotating measurement and accept the determined data (see Chapter "Motor data identification (Page 142)"). Check the current controller setting.

4. If the total moment of inertia has not already been determined using the rotating measurement, you have the possibility of determining the total moment of inertia as follows:
   - If an encoder is being used, and the motor has a restricted traversing path (e.g. encoderless operation is only used when an encoder develops a fault or only for the upper speed range):
     Determine the moment of inertia using the rotating measurement of the motor data identification (p1959 = 420 hex (i.e. only commutation angle and Lq characteristic), p1960 = 1).
   - If the motor can endlessly rotate (with and without encoder)
     Determine the moment of inertia using the rotating measurement of the motor data identification (p1959 = 404 hex (i.e. only commutation angle and moment of inertia), p1960 = 1).
   - You can also determine the moment of inertia using the "Moment of inertia estimator" function module (see Chapter "Moment of inertia estimator (Page 540)"). As the moment of inertia is also determined in operation using this function module, we recommend that the "Moment of inertia estimator" function module is used if the total moment of inertia changes during operation.
5. Set the speed controller:
   - When the "Moment of inertia estimator" function module is active, accept the moment of inertia that has been determined.
   - Deactivate the "Moment of inertia estimator" function module (p1400.18 = 0).
   - Start a trace recording of parameter r0063 (speed actual value) and r0079 (torque).
   - Adjust the moment of inertia (p1498; if possible, increase), and in the controlled range, enter a speed setpoint (speed higher than p1755).
   - Optimize the settling behavior using the P gain (p1470) and the integral time (p1472).

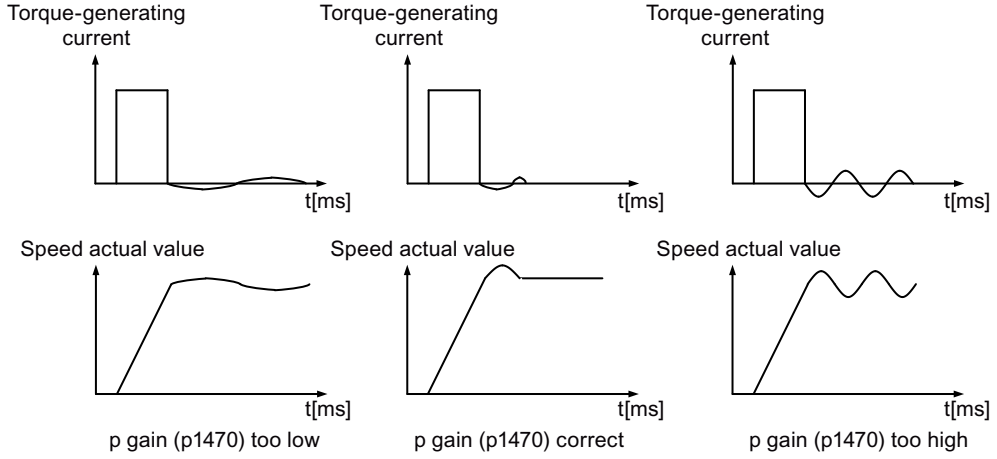

   - Exit the trace recording.
   - Finally, again set the appropriate total moment of inertia - or activate the "Moment of inertia estimator" function module

Function diagrams (see SINAMICS S120/S150 List Manual)

- 5019 Servo control - Speed control and U/f control, overview
- 5050 Servo control - Speed controller adaptation (Kp_n-/Tn_n adaptation)
- 5060 Servo control - Torque setpoint, switchover control mode
- 5210 Servo control - Speed controller without encoder

Overview of important parameters (see SINAMICS S120/S150 List Manual)

- p0341[0...n] Motor moment of inertia
- p0342[0...n] Ratio between the total and motor moment of inertia
- p0353[0...n] Motor series inductance
- p0600[0...n] Motor temperature sensor for monitoring
- p0640[0...n] Current limit
- p0642[0...n] Encoderless operation current reduction
- p1300[0...n] Open-loop/closed-loop control operating mode
- p1400[0...n] Speed control configuration
- p1404[0...n] Encoderless operation changeover speed
- r1407.0...26 CO/BO: Status word, speed controller
- p1470[0...n] Speed controller encoderless operation P gain
- p1472[0...n] Speed controller sensorless operation integral time
- p1498[0...n] Load moment of inertia
- p1517[0...n] Acceleration torque smoothing time constant
- p1612[0...n] Current setpoint, open-loop control, encoderless
- p1755[0...n] Motor model changeover speed encoderless operation
- p1756 Motor model changeover speed hysteresis

"Moment of inertia estimator" function module

- p0108[0...n] Drive object function module
- p1400[0...n] Speed control configuration

5.15 Motor data identification

Requirement

- The first commissioning has been completed. The following must be fulfilled:
  - The electrical motor data (motor datasheet) or rating plate data have been entered.
  - The calculation of the motor and control parameters (p0340) has been completed.

Function description

The motor data identification (MotID) is used as a tool to determine the motor data, e.g. of third-party motors and can help to improve the torque accuracy (k_T estimator).

Commissioning the function

To commission the MotID, proceed as follows:

1. Enter the motor data, rating plate data and, if applicable, the encoder data.
2. The converter determines the motor and control data as starting value for the MotID (p0340 = 3, if motor data has been entered, p0340 = 1, if rating plate data was entered).
3. Make a stationary measurement (p1910).
4. For synchronous motors:
   Perform a commutation angle calibration (p1990) and, if necessary (e.g. because of overtraveling the zero mark), perform a fine synchronization (see r1992).

   Note

   Absolute encoders do not have to be finely synchronized.

   Further information

   - Detailed information about calibrating the commutation angle is provided in Chapter "Commutation angle offset commissioning support (p1990) (Page 165)".
   - Detailed information about performing fine synchronization is provided in Chapter "Pole position identification (Page 150)" under "Pole position correction with zero marks".
5. Make a rotating measurement (p1960).
   Before starting the rotating measurement, check and, if necessary, optimize the setting of the speed controller (p1460, p1462 and p1470, p1472).
   It is preferable if the rotating MotID is carried out with the motor de-coupled from the mechanical system. This therefore means that only the motor moment of inertia is determined. The total moment of inertia with mechanical system can be subsequently identified with p1959 = 4 and p1960 = 1. The stress on the mechanical system can be reduced by parameterizing the ramp-up time (p1958), using direction limiting (p1959.14/ p1959.15) or using the current and speed limit. The higher the selected ramp-up time, the less accurately the moment of inertia can be determined.
6. To store the results of the MotID retentively, execute the "Copy RAM to ROM" command.

Note

Completion of the individual identification runs can be read via parameters r3925 to r3928.

The enable signals OFF1, OFF2, OFF3 and "enable operation" remain effective and can interrupt the MotID routine.

If there is an extended setpoint channel (r0108.08 = 1), p1959.14 = 0 and p1959.15 = 0 and direction limiting (p1110 or p1111) is active there, then this is observed at the instant of the start via p1960. For p1958 = -1, the ramp-up and ramp-down time of the setpoint channel (p1120 and p1121) are also used for the MotID.

Note

If a ramp-up/ramp-down time or direction limiting is active, parts of the MotID routine cannot be executed. For other parts of the MotID routine, the accuracy of the results is diminished because a ramp-up/ramp-down time is selected. If possible, p1958 should be 0 and no direction limiting selected (p1959.14 = 1 and p1959.15 = 1).

Motor movement through MotID

⚠ WARNING

Unexpected motor motion during motor data identification (MotID)

Motor movement caused by the motor data identification routine can result in death, severe injury or material damage.

- Ensure that nobody is in the danger zone and that the mechanical parts can move freely.
- Do not carry out the rotating measurement if the traversing distance is mechanically limited.

The stationary MotID can result in slight movement of up to 210 degrees electrical.

For the rotating MotID routine, motor motion is initiated, which can reach the maximum speed (p1082) and the motor torque corresponding to the maximum current (p0640).

The rotating measurement should be carried out with a motor running at no load (de-coupled from the mechanical system) in order to prevent damage/destruction to the load or be influenced by the load. If the motor cannot be de-coupled from the mechanical system, then the stress on the mechanical system can be reduced by parameterizing the ramp-up time (p1958) and/or using direction limiting (p1959.14/p1959.15) or using the current and speed limit.

Motor data

Motor data input requires the following parameters:

Table 5-8 Motor data

Induction motor	Permanent-magnet synchronous motor
• p0304 rated motor voltage • p0305 rated motor current • p0307 rated motor power • p0308 rated motor power factor • p0310 rated motor frequency • p0311 rated motor speed • p0320 rated motor magnetizing current • p0322 maximum motor speed • p0350 motor stator resistance, cold • p0353 motor series inductance • p0354 motor rotor resistance, cold • p0356 motor stator leakage inductance • p0358 motor rotor leakage inductance • p0360 motor magnetizing inductance • p0400ff encoder data	• p0305 rated motor current • p0311 rated motor speed • p0314 motor pole pair number • p0316 motor torque constant • p0322 maximum motor speed • p0323 maximum motor current • p0341 motor moment of inertia • p0350 motor stator resistance, cold • p0353 motor series inductance • p0356 motor stator leakage inductance • p0400ff encoder data

Rating plate data

Input of the rating plate data requires the following parameters:

Table 5-9 Rating plate data

Induction motor	Permanent-magnet synchronous motor
• p0304 rated motor voltage • p0305 rated motor current • p0307 rated motor power • p0308 rated motor power factor • p0310 rated motor frequency • p0311 rated motor speed • p0322 maximum motor speed • p0353 motor series inductance • p0400ff encoder data	• p0304 rated motor voltage • p0305 rated motor current • p0307 rated motor power (alternative p0316) • p0311 rated motor speed • p0314 motor pole pair number or p0315 motor pole pair width • p0322 maximum motor speed • p0323 maximum motor current • p0353 motor series inductance • p0400ff encoder data

Since the rating plate data contains the initialization values for identification, you must ensure that it is entered correctly and consistently to enable the above data to be determined.

Parameters to control the MotID

The following parameters influence the MotID:

Table 5-10 Parameters for control

Stationary measurement (MotID)	Rotating measurement
• p0640 current limit • p1215 motor holding brake configuration • p1909 motor data identification control word • p1910 motor data identification, stationary • p1959.14/.15 positive/negative direction permitted[1)]	• p0640 current limit • p1082 maximum speed • p1958 motor data identification ramp-up/ramp-down time • p1959 rotating measurement configuration • p1960 rotating measurement selection

1) The setting of p1959 has the following effects for the direction of rotation p1821:
- Positive direction permitted, for setting p1821 = 0, this means: Clockwise direction of rotation
- Negative direction permitted, for setting p1821 = 1, this means: Counter-clockwise direction of rotation

Note

If a brake is being used and is operational (p1215 = 1, 3), the stationary measurement is made with closed brake. If possible (e.g. no hanging/suspended axis), we recommend that the brake is opened before the MotID (p1215 = 2). This also means that the encoder size can be adjusted and the commutation angle calibrated.

5.15.1 Motor data identification for induction motors

The data are identified in the inverse gamma equivalent circuit diagram and displayed in r19xx. The motor parameters p0350, p0354, p0356, p0358 and p0360 taken from the motor data identification refer to the T equivalent circuit diagram of the induction machine and cannot be directly compared. This is the reason that an r parameter is listed in the table, which displays the parameterized motor parameters in the inverse gamma equivalent circuit diagram.

Table 5-11 Data determined using p1910 for induction motors (stationary measurement)

Determined data (gamma)	Data that is accepted (p1910 = 1)
r1912 identified stator resistance	p0350 motor stator resistance, cold+ p0352 cable resistance
r1913 rotor time constant identified	r0384 motor rotor time constant / damping time constant, d axis
r1915 stator inductance identified	-
r1925 threshold voltage identified	-
r1927 rotor resistance identified	r0374 motor resistance cold (gamma) p0354

Determined data (gamma)	Data that is accepted (p1910 = 1)
r1932 d inductance	r0377 motor leakage inductance total (gamma) p0353 motor series inductance p0356 motor leakage inductance p0358 motor rotor leakage inductance p1715 current controller P gain p1717 current controller integral time
r1934 q inductance identified	-
r1936 magnetizing inductance identified	r0382 motor magnetizing inductance transformed (gamma) p0360 motor magnetizing inductance p1590 flux controller P gain p1592 flux controller integral time
r1973 encoder pulse number identified	-
Note: The encoder pulse number is only determined with a very high degree of inaccuracy (p0407/p0408) and is only suitable for making rough checks. The sign is negative if inversion is required (p0410.0).	
-	p0410 encoder inversion actual value
Note: If the encoder inversion is changed using motor data identification, fault F07993 is output, which refers to a possible change in the direction of rotation - and can only be acknowledged using p1910 = -2.	

Table 5-12 Data determined using p1960 for induction motors (rotating measurement)

Determined data (gamma)	Data that is accepted (p1960 = 1)
r1934 q inductance identified	p0356 motor stator leakage inductance
r1935 q inductance identification current	p0358 motor rotor leakage inductance/damping inductance d axis p0391 current controller adaptation starting point Kp p0392 current controller adaptation starting point Kp adapted p0393 current controller adaptation P gain adaptation
r1936 magnetizing inductance identified	r0382 motor magnetizing inductance transformed (gamma) p0360 motor magnetizing inductance p1590 flux controller P gain p1592 flux controller integral time
r1948 magnetizing current identified	p0320 rated motor magnetizing current
r1962 saturation characteristic magnetizing current identified	p2952 flux characteristic coefficient K0x (x = 1) p2953 flux characteristic coefficient K0x (x = 2)
r1963 saturation characteristic stator inductance identified	p2954 flux characteristic coefficient K0x (x = 3)
Note: The magnetic design of the motor can be identified from the saturation characteristic.	

Determined data (gamma)	Data that is accepted (p1960 = 1)
r1969 moment of inertia identified	p0341 motor moment of inertia · p0342 ratio between the total moment of inertia and that of the motor + p1498 load moment of inertia
r1973 encoder pulse number identified	-
Note: The encoder pulse number is only determined with a very high degree of inaccuracy (p0407/p0408) and is only suitable for making rough checks. The sign is negative if inversion is required (p0410.0).	

5.15.2 Motor data identification for synchronous motors

Table 5-13 Data determined using p1910 for synchronous motors (standstill measurement)

Determined data	Data that are accepted (p1910 = 1)
r1912 stator resistance identified	p0350 motor stator resistance cold + p0352 cable resistance
r1925 threshold voltage identified	-
r1932 d inductance	p0356 motor stator leakage inductance + p0353 motor series inductance p1715 current controller P gain p1717 current controller integral time
r1934 q inductance identified	-
r1950 voltage emulation error voltage values	p1952 voltage emulation error final value + p1953 voltage emulation error current offset + p1954 voltage emulation error semiconductor voltage
r1951 voltage emulation error, current values	
Note regarding r1950 to p1953: Active when the function module "extended torque control" is activated and activated compensation of the voltage emulation error (p1780.8 = 1).	
r1973 encoder pulse number identified	-
Note: The encoder pulse number is only determined with a very high degree of inaccuracy (p0407/p0408) and is only suitable for making rough checks. The sign is negative if inversion is required (p0410.0).	
r1984 pole position identification angular difference	p0431 commutation angle offset
Note: r1984 indicates the difference of the angular commutation offset before being transferred into p0431.	
-	p0410 encoder inversion actual value
Note: If the encoder inversion is changed using motor data identification, fault F07993 is output, which refers to a possible change in the direction of rotation - and can only be acknowledged using p1910 = -2.	

Table 5-14 Data determined using p1960 for synchronous motors (rotating measurement)

Determined data	Data that are accepted (p1960 = 1)
r1934 q inductance identified	p0356 motor stator leakage inductance
r1935 q inductance identification current	p0391 current controller adaptation starting point Kp p0392 current controller adaptation starting point Kp adapted p0393 current controller adaptation P gain adaptation
r1937 torque constant identified	p0316 motor torque constant
r1938 voltage constant identified	p0317 motor voltage constant
r1939 reluctance torque constant identified	p0328 motor reluctance torque constant
r1947 optimum load angle identified	p0327 optimum motor load angle
r1969 moment of inertia identified	p0341 motor moment of inertia · p0342 ratio between the total moment of inertia and that of the motor + p1498 load moment of inertia
r1973 encoder pulse number identified	-
Note: The encoder pulse number is only determined with a very high degree of inaccuracy (p0407/p0408) and is only suitable for making rough checks. The sign is negative if inversion is required (p0410.0).	
r1984 pole position identification angular difference	p0431 commutation angle offset
Note: r1984 indicates the difference of the angular commutation offset before being transferred into p0431.	

For linear motors (p0300 = 4xx), p1959 is pre-set so that only the q inductance, the commutation angle offset and the high inertia mass are measured (p1959.05 = 1 and p1959.10 = 1), as generally the travel limits do not permit longer travel distances in one direction.

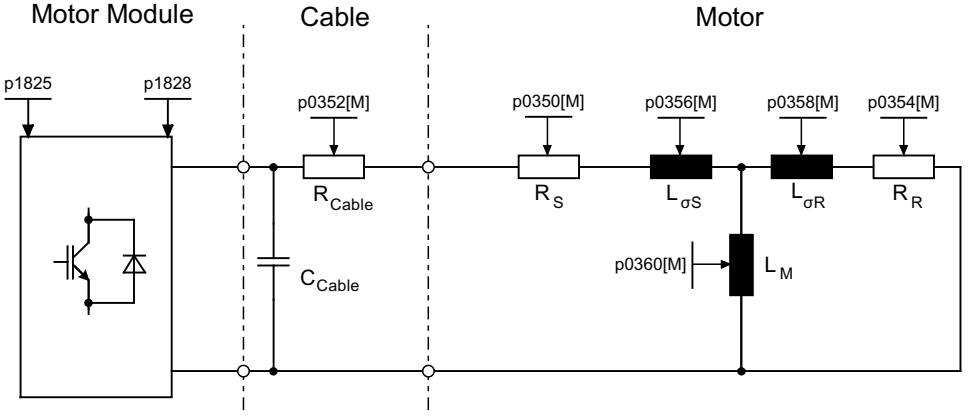

Figure 5-18 Equivalent circuit diagram for induction motor and cable

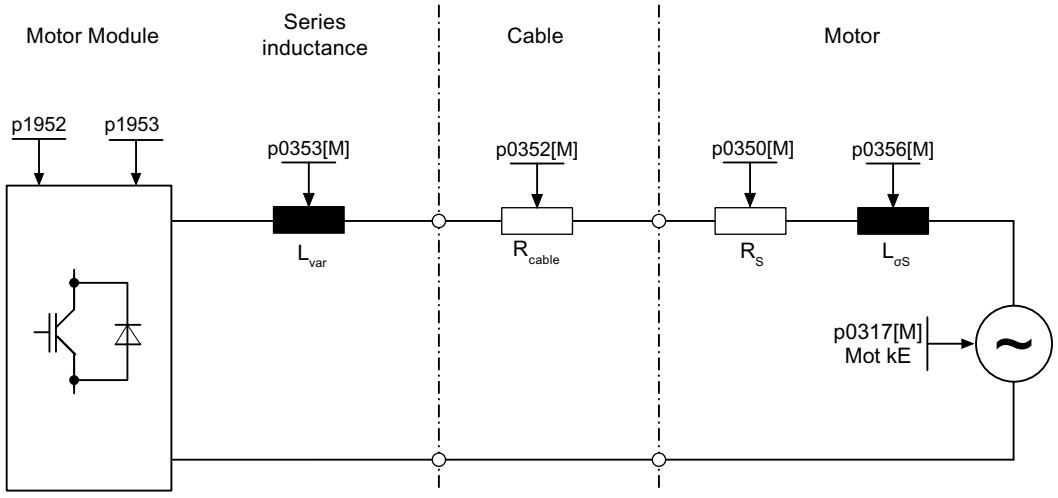

Figure 5-19 Equivalent circuit diagram for synchronous motor and cable

Overview of important parameters (see SINAMICS S120/S150 List Manual)

- r0047 Identification status

Standstill measurement

- p1909[0...n] Motor data identification, control word
- p1910 Motor data identification, stationary

Rotating measurement

- p1958[0...n] Rotating measurement ramp-up/ramp-down time
- p1959[0...n] Rotating measurement configuration
- p1960 Rotating measurement selection

5.16 Pole position identification

Function description

⚠ WARNING

Unplanned motor motion when carrying out measurements at motors that are not braked

The measurement for unbraked motors can cause a motor movement with the specified current that can lead to death or severe injuries.

- Ensure that nobody is in the danger zone and that the mechanical parts can move freely.

For synchronous motors, the pole position identification (PolID) determines the electrical pole position required for the field-oriented closed-loop control. Generally, the electrical pole position is provided from a mechanically adjusted encoder with absolute information.

Motors with encoders that are either not calibrated or have not been adjusted require a one-off PolID:

1. Select a technique with p1980
2. Set the value "1" in parameter p1990 to start the selected technique.
   The value in p1982 is not taken into account.

Absolute encoders are automatically identified when commissioning or after an encoder has been replaced based on the saved serial number. As a consequence, for Siemens linear motors 1FN1, 1FN3 and 1FN6, p1990 = 1 is automatically set after commissioning or after an encoder has been replaced.

Incremental encoders are not automatically identified as they have no serial number. As a consequence, after commissioning, or after an encoder has been replaced, a value of "1" is not automatically set in p1990, and must be additionally entered.

A PolID is not required for the following encoder properties:

- Absolute encoder (e.g. EnDat, DRIVE-CLiQ encoder)
- Encoder with C/D track and pole pair number ≤ 8
- Hall sensor
- Resolver with a multiple integer ratio between the motor pole pair number and the encoder pole pair number
- Incremental encoder with a multiple integer ratio between the motor pole pair number and the encoder pulse number

The PolID is used for:

- Determining the pole position (p1982 = 1)
- Determining the commutation angle offset during commissioning (p1990 = 1)
- Plausibility check for encoders with absolute information (p1982 = 2)

Note

Use default setting

When using standard Siemens motors, the automatically pre-selected setting should be kept.

Determining the suitable method

On the basis of the following table, you can determine the PolID methods that are suitable for your drive:

	Saturation-based	Motion-based	Elasticity-based
Brake available	Possible	Not possible	Required
Motor can move freely	Possible	Required	Not possible
Motor has no iron	Not possible	Possible	Possible

Selecting a method

⚠ WARNING

Uncontrolled motor motion as a result of an incorrect control sense of the speed control loop

If a PolID is used to determine the commutation angle, then the commutation angle must be redetermined each time the control sense is changed. An incorrect commutation angle can lead to uncontrollable motor movement - and therefore result in death or severe injury.

- Check the commutation angle offset (F7966) after an actual value inversion, and when necessary redetermine the offset (p1990 = 1).

The relevant technique can be selected via parameter p1980. The following techniques are available for pole position identification (PolID):

- Saturation-based 1st + 2nd harmonics (p1980 = 0)
- Saturation-based 1st harmonic (p1980 = 1)
- Saturation-based, two-stage (p1980 = 4)
- Motion-based (p1980 = 10)
- Elasticity-based (p1980 = 20)

Please also observe the list of relevant parameters in Chapter "Important parameters (process-dependent) (Page 155)".

5.16.1 Supplementary conditions

Supplementary conditions

When selecting a suitable method for PolID, you must observe the following information and supplementary conditions.

Saturation-based PolID

The following notes and supplementary conditions apply to the saturation-based PolID:

- The technique can be performed for both braked and non-braked motors.
- The technique can only be performed for a speed setpoint = 0 or from standstill.
- In order to obtain meaningful measurement results, the specified currents (p0325, p0329) must be sufficiently high.
- For motors without iron, the pole position cannot be identified with the saturation-based PolID.
- For 1FN3 motors, it is not permissible to traverse with the 2nd harmonic (p1980 = 0, 4).
- With 1FK7 motors, a two-stage technique must not be used (p1980 = 4). The value in p0329, which is set automatically, must not be reduced.

Note

Inaccuracy when determining the commutation angle

If several 1FN3 linear motors are coupled together, and at the same time a saturation-based PolID is performed for the commutation (p1980 ≤ 4 and p1982 = 1), this can influence the DC-link voltage. Fast current changes in the DC link cannot be completely compensated. In this case, the commutation angle is not determined precisely.

- If high precision is required, perform the PolIDs in succession. This can be achieved, for example, by enabling the individual drives one after the other (with a time offset).

Motion-based PolID

For the motion-based technique, the following notes and supplementary conditions apply:

- The motor must be free to move and must not be subject to external forces. The technique therefore **cannot** be performed for vertical axes.
- The technique can only be performed for a speed setpoint = 0 or from standstill.
- If there is a motor brake, it must be open (p1215 = 2).
- The specified current magnitude (p1993) must move the motor by a sufficient amount.
- A position sensor must be available and also activated.

Elasticity-based PolID

For the elasticity-based technique, the following notes and supplementary conditions apply:

- A brake must be available and must also be activated during the PolID. Either the drive controls the brake (p1215 = 1 or 3) or the brake is externally activated in advance of the PolID start and deactivated again after the operation.
- A position sensor must be available and also activated.

- Drive axis motion corresponds to the deflection (motion in the µm to mm range). Uncontrollable axis motion is completely ruled out **during** the measurement.

  ⚠ WARNING

  Uncontrollable axis motion as a result of incorrect settings

  With incorrect settings during the elasticity-based PolID, uncontrollable axis motion can occur when enabling the axis after the measuring procedure, which can cause death or severe injury.

  - Ensure that the settings in the context of this technique are correct.
  - Ensure that after completing the technique, the axis cannot move.

- Parameters p3090 to p3096 must be correctly set for a successful elasticity-based PolID. For a detailed description of the technique, see "Setting of the elasticity-based pole position identification (Page 156)".
  The following table contains basic information on the relevant parameters:

Parameter	Designation	Information about parameterization
p3090	PolID elasticity-based configuration	The value "0" is preset in the parameter. For motors, where the brake is installed between the motor and encoder, an inversion may be required in order to take into account the relationship between the sign of the deflection and the torque or force. The inversion is set in bit 0 (p3090[0]).
p3091	PolID elasticity-based ramp time	The ramp time is preset with 250 ms. This value should only be changed if mechanical oscillations are present. Generally, mechanical oscillations occur if the ramp time is too short (< 250 ms).
p3092	PolID elasticity-based wait time	The wait time serves as buffer between the measurement operations. Set a wait time longer than 5 ms in order to make a clear distinction between the individual measuring operations.
p3093	PolID elasticity-based measurement count	We recommend you set 12 measurement steps to achieve a rugged and precise PolID. The precision and duration of the measurement increases proportionally with the number of measurement steps.
p3094	PolID elasticity-based deflection expected	The parameter setting depends heavily on the mechanical design and the drive braking force, and must therefore be set by the customer.
p3095	PolID elasticity-based deflection permitted	The maximum permissible deflection preset in the parameter is 1 degree or 1 mm.
p3096	PolID elasticity-based current	The parameter setting depends heavily on the mechanical design and the drive braking force, and must therefore be set by the customer.

Pole position correction with zero marks

The pole position identification routine provides coarse synchronization. If zero marks exist, the pole position can be automatically compared with the zero mark position once the zero mark(s) have been passed (fine synchronization). The zero mark position must be either mechanically or electrically (p0431) calibrated. If the encoder system permits this, then we recommend fine synchronization (p0404.15 = 1). This is because it avoids measurement spread and allows the determined pole position to be additionally checked.

Suitable zero marks

- One zero mark in the complete traversing range
- Equidistant zero marks
- Distance-coded zero marks

Selecting the reference mark for fine synchronization for determining the pole position using zero marks

A precondition for determining the pole position using zero marks is that the zero mark distance of the encoder is a multiple integer of the pole pitch / pole pair width of the motor.

For example, for linear motors with measuring systems where this is not available, the drive permits the zero mark which is used for the reference point approach, to be used for fine synchronization. With this zero mark, due to the mechanical arrangement, the commutation angle = 0 or is available as offset in p0431.

This technique is available for absolute encoders (with the exception of DRIVE-CLiQ encoders), incremental encoders with equidistant zero mark and resolvers.

The sequence is then as follows:

1. Set the "Commutation with selected zero mark" mode in p0430.24.
2. Via the PROFIdrive encoder interface, the drive receives the request for a reference mark search.
3. Together with the Sensor Module, the drive determines the reference mark as a result of the parameterization.
4. The drive provides the reference mark position via the PROFIdrive encoder interface.
5. The drive transfers the same position to the Sensor Module.
6. The Sensor Module corrects the commutation angle (fine synchronization).

5.16.2 Important parameters (process-dependent)

Important parameters (process-dependent)

The table below gives you an overview of the important parameters depending on the PolID method selected:

	Saturation-based	Motion-based	Elasticity-based
p0325	+	-	-
p0329	+	-	-
p1980	Value 0, 1 or 4	Value 10	Value 20
p1981	+	+	-
p1982	+	+	+
p1983	+	+	+
r1984	+	+	+
r1985	+	+	+
r1986	+	+	+
r1987	+	+	+
p1990	+	+	+
r1992	+	+	+
p1993	-	+	-
p1994	-	+	-
p1995	-	+	-
p1996	-	+	-
p1997	-	+	-
p3090	-	-	+
p3091	-	-	+
p3092	-	-	+
p3093	-	-	+
p3094	-	-	+
p3095	-	-	+
p3096	-	-	+
r3097	-	-	+
Marking + = relevant, - = not relevant			

5.16.3 Setting of the elasticity-based pole position identification

Overview

The technique described in the following is an example of the setting of the elasticity-based pole position identification (PolID) for linear motors and rotary motors.

- You can parameterize this technique in the commissioning tool.
- The following example shows the parameterization in STARTER.

Also observe the notes and information on this technique in Section "Supplementary conditions (Page 151)".

Requirement

The following requirements must be satisfied in order to be able to perform the elasticity-based PolID.

- Motor, encoder and brake control have been correctly parameterized.

Procedure

⚠ WARNING

Uncontrollable axis motion as a result of incorrect settings

With incorrect settings during the elasticity-based PolID, uncontrollable axis motion can occur when enabling the axis after the measuring procedure, which can cause death or severe injury.

- Ensure that the settings in the context of this technique are correct.
- Ensure that after completing the technique, the axis cannot move.

Proceed as follows to set the elasticity-based PolID.

1. Open the STARTER commissioning tool.
2. Create a new project and select the components in accordance with your drive configuration.
   OR
   Call the already saved project in which you want to perform the elasticity-based PolID.
3. Click the  button ("Connect to selected target devices") to connect to the target device.
4. Call the expert list for the configured drive.
5. Click the  button ("Device trace/function generator") to open the device trace in STARTER.
   The device trace opens.

6. Select the following signals of the configured drive in the device trace.
   - r76: Current actual value field-generating
   - r479[0]: Diagnostics encoder position actual value

No.	Active	Signal	Comment	Color
1	☑	LIN.r76	LIN.r76: Current actual value field-generating	
2	☑	LIN.r479[0]	LIN.r479[0]: Diagnostics encoder position actual value Gn_XIST1, Encoder 1	
3	☐			
4	☐			
5	☐			
6	☐			
7	☐			
8	☐			

Figure 5-20 Device trace: Select signals

The following figure shows further settings in the device trace. In order to obtain good, useful measurement results, we recommend that you set the displayed values.

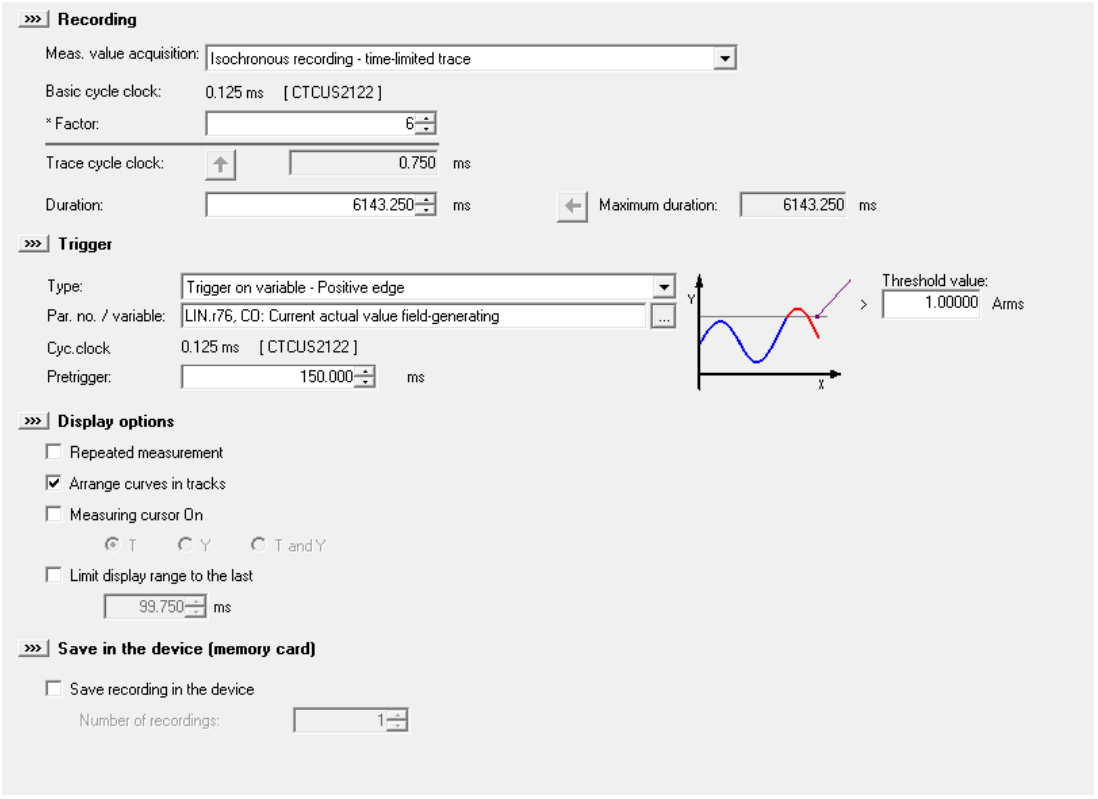

Figure 5-21 Device trace: Recommended settings

7. Set the rated motor current in parameter p3096[0] (PolID elasticity-based current).

Note

The rated motor current is displayed in parameter p305[0].

8. Set the value "20" in parameter p1980[0] (PolID technique)

9. Set the value "1" in parameter p1982[0] (PolID selection).
   You have now activated the elasticity-based PolID.

   Note
   Setting of further parameters

   Further parameters do not have to be set. Leave the other parameters in the factory setting.

10. Click the ▶ button ("Start trace") to start the trace.
11. Enable the drive to start the measurement.
    The measurement result is displayed.

    Note
    Enabling the drive via the control panel

    An alarm/message may appear when enabling the drive via the control panel.

12. Compare the deflection at the starting point of the measurement (2) with the deflection at the end point of the measurement (3).
    The following figure shows the measurement result. A guide line (1) is shown for the optical alignment and aligned as reference line at the starting point (2) of the measurement.

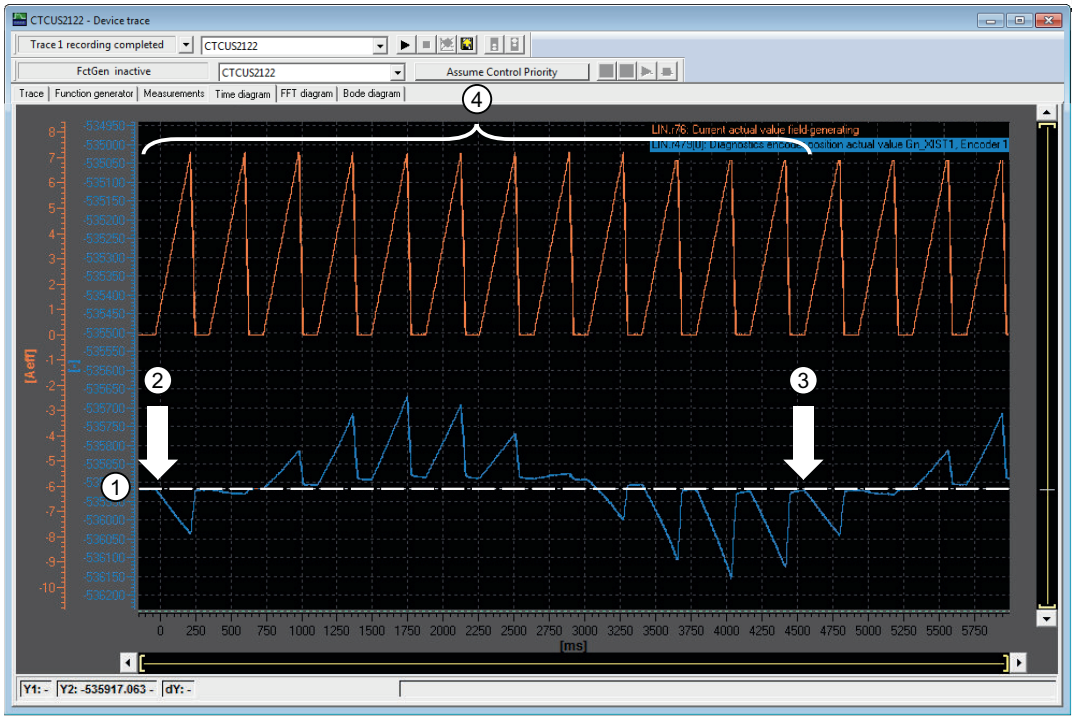

Signal (red/top): Measuring current

Signal (blue/bottom): Deflection

① Guide line

② Starting point of the measurement

③ End point of the measurement

④ Amplitudes of measuring currents 1 to 12 (p3093)

Figure 5-22 Measurement result: Determined deflection

- Result 1: You have set parameter p3096[0] correctly when the deflection at the starting point of the measurement (2) corresponds to the deflection at the end point of the measurement (3).
- Result 2: The holding brake is not strong enough when the deflection at the starting point of the measurement (2) differs significantly from the deflection at the end point of the measurement (3). In this case, we recommend that you reduce the measuring current step-by-step until the deflection at the starting point of the measurement corresponds to the deflection at the end point of the measurement, or approximately. Only continue with the next step when this has been ensured.

The following figure shows an example of the signal curve of the deflection when the brake is too weak.

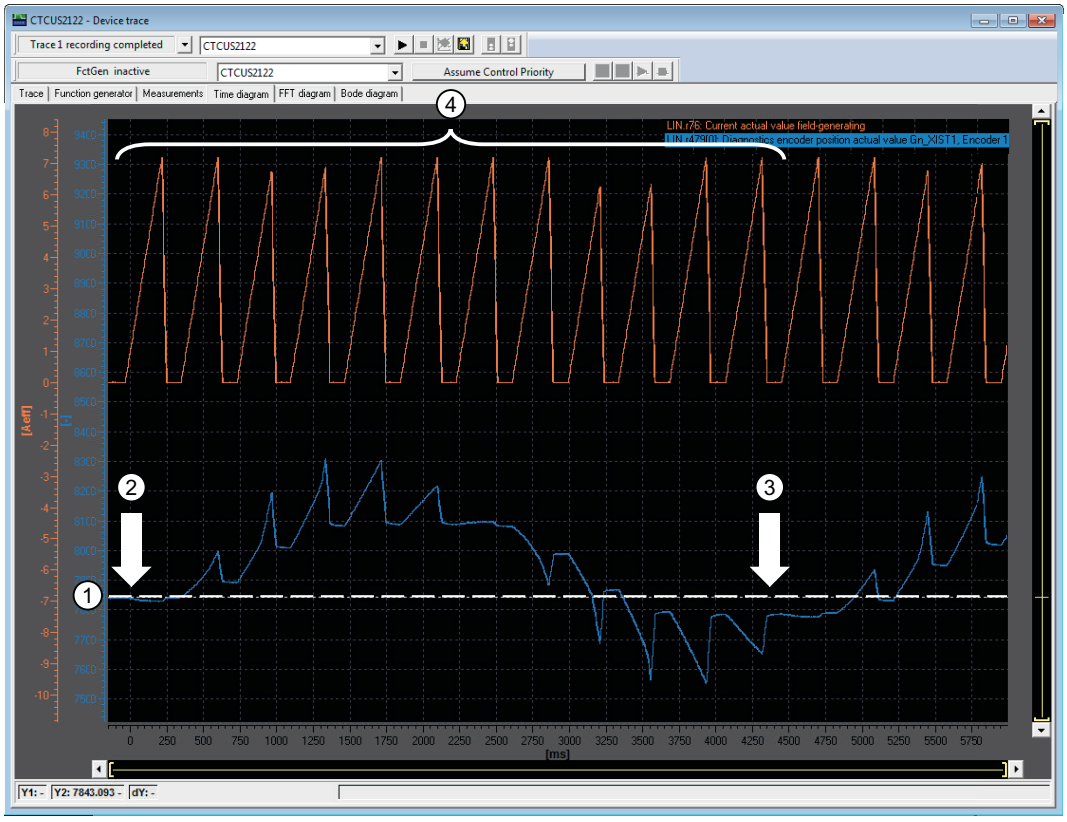

Signal (red/top): Measuring current

Signal (blue/bottom): Deflection

① Guide line

② Starting point of the measurement

③ End point of the measurement

④ Amplitudes of measuring currents 1 to 12 (p3093)

Figure 5-23 Measurement result: Brake too weak

13. Compare the height of the deflection amplitudes in both directions and determine optically the highest amplitude in the measurement result.

14. Determine the stroke of the maximum deflection. The maximum deflection corresponds to the highest deflection (peak) in the measurement result. The stroke corresponds to the calculated difference between the lowest (3) and the highest point (4) of the deflection amplitude.

   – Tip: Insert a guide line (1) and move it to the top of the highest deflection. Insert a second guide line (2) and move it to the zero point of the highest deflection.

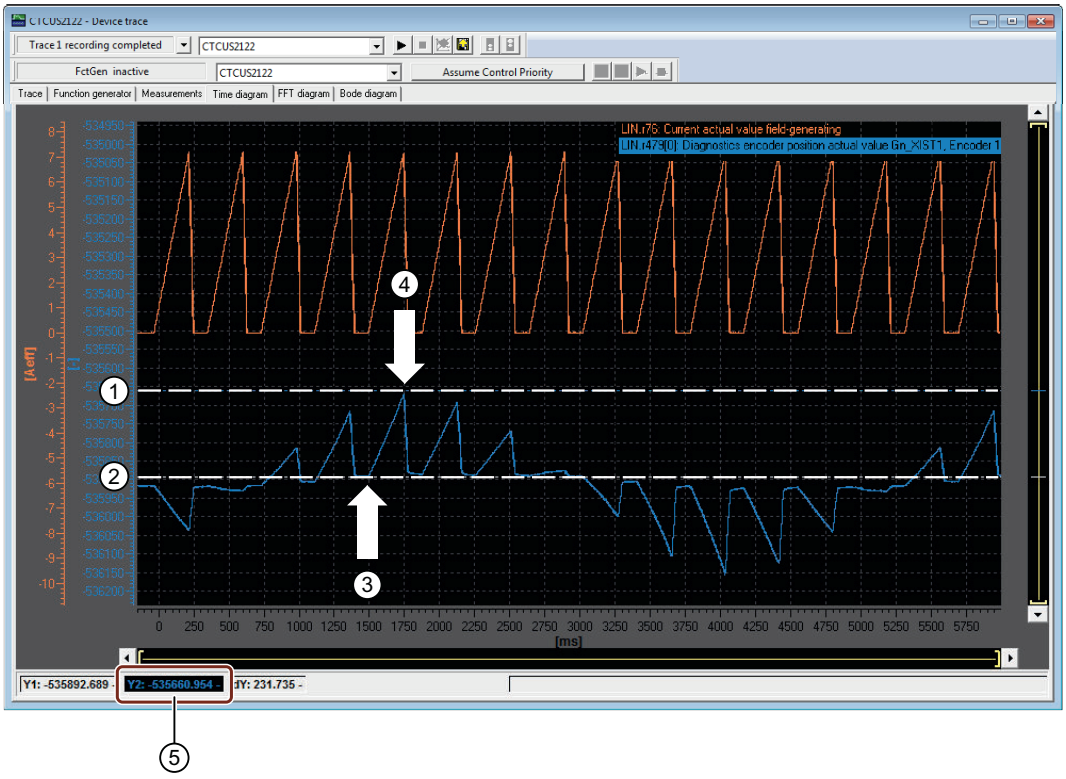

① Guide line 1
② Guide line 2
③ Lowest point of the deflection amplitude
④ Highest point of the deflection amplitude
⑤ Display of the difference

Figure 5-24 Determining the highest deflection amplitude

The value calculated as the difference between the lowest (3) and the highest point (4) of the deflection amplitude is shown in the display bar (5) of the trace. The displayed value corresponds to the stroke of the deflection amplitude.

15. To calculate the value for parameter p3094[0] (PolID elasticity-based deflection expected), set the determined value (difference) in the appropriate formula.
   – For linear motors:

$$p3094 = \frac{\text{Difference}}{3} \cdot \frac{p407}{(10^9)} \text{ [mm]}$$

   – For rotary motors:

$$p3094 = \frac{\text{Difference}}{3} \cdot \frac{360}{p408} \text{ [°]}$$

16. Enter the calculated value in the expert list in parameter p3094[0] (PolID elasticity-based deflection expected) of the configured drive.
17. Acknowledge the fault.
    This completes the configuration.

18. To check the result, restart the trace and enable the configured drive.
    The measurement result is displayed.

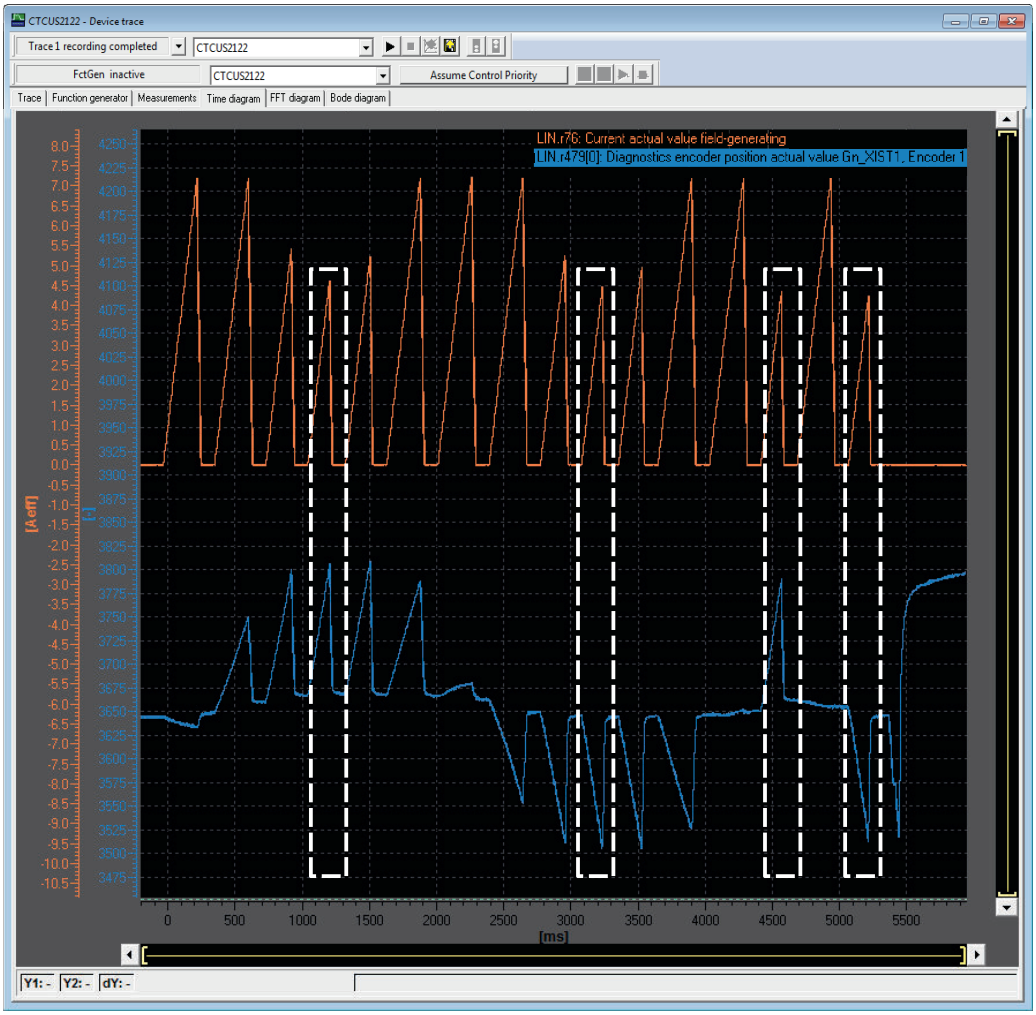

Figure 5-25 Measurement result after the configuration

19. Check the measurement results.
    Based on the following questions, you can check the validity of the measurement in relation to the determination of the PolID.
    - Is a fault present for the configured/selected drive after the last measurement?

      Note

      Possible causes and remedies can be found in the help of the relevant alarm.

    - Were different measuring currents taken into account during the measurement?

      Note

      Different measuring currents are indicated by the varying heights of the current amplitudes (wave form of the curve) in the measurement result.

    - Does the lowest current amplitude of the first 12 measuring points in the measurement result correspond approximately to the maximum deflection?

      Note

      The measurement is made up of 12 measuring points (p3093) to determine the deflection and 4 control measuring points for the plausibility check.

    - Do the last 4 measuring points comprise 2 maximum currents, 2 minimum currents, 2 minimum deflections and 2 maximum deflections in different directions?
20. If you can answer all questions with **YES**, then the technique for the elasticity-based PolID has been set correctly.
    The pole position of the drive has been determined.
21. Click the  button ("Copy RAM to ROM") to save the parameter setting in the drive and, if required, in your project.
22. If you had to answer one of the questions with **NO**, then the technique for the elasticity-based PolID is faulty or has failed.
    To ensure that all values have been determined correctly and entered in the parameters, repeat the technique.

    Note

    Setting of further parameters

    If required, change the values in parameters p3090 to p3096 when repeating the technique. Check the measurement results.

    Also observe all steps of the procedure for the elasticity-based PolID.
    If repeated attempts to perform the technique fail, please contact the Siemens Support (https://support.industry.siemens.com/cs/ww/en/).

5.16.4 Commutation angle offset commissioning support (p1990)

The function for determining the commutation angle offset is activated via p1990=1. The commutation angle offset is entered in p0431. This function can be used in the following cases:

- Single calibration of the pole position for encoders with absolute information
  Exception: The Hall sensor must always be mechanically adjusted.
- Calibrating the zero mark position for fine synchronization

Table 5-15 Mode of operation of p0431

	Incremental without zero mark	Incremental with one zero mark	Incremental with distance-coded zero marks	Absolute encoder
C/D track	Shifts the commutation with respect to the C/D track.	Shifts the commutation with respect to the C/D track and zero mark.	Currently not available.	Not permitted.
Hall sensor	Does not influence the Hall sensor. The Hall sensor must be mechanically adjusted.	Does not influence the Hall sensor. Shifts the commutation with respect to the zero mark.	Does not influence the Hall sensor. Shifts the commutation with respect to the absolute position (after two zero marks have been passed).	Not permitted.
Pole position identification	No effect	Shifts the commutation with respect to the zero mark.	Shifts the commutation with respect to the absolute position (after two zero marks have been passed).	Shifts the commutation with respect to the absolute position

Note

When fault F07414 occurs, p1990 is automatically started; if p1980 ≠ 99 and p0301 does not refer to a catalog motor with an encoder that is adjusted in the factory.

5.16.5 Overview of important parameters (see SINAMICS S120/S150 List Manual)

Overview of important parameters (see SINAMICS S120/S150 List Manual)

- p0325[0...n] Motor pole position identification current 1st phase
- p0329[0...n] Motor pole position identification current
- p0404[0...n] Encoder configuration active
- p0430[0...n] Sensor Module configuration
- p0431[0...n] Commutation angle offset
- p0437[0...n] Sensor Module extended configuration
- r0458 Sensor Module properties
- r0459 Sensor Module extended properties
- p0640[0...n] Current limit
- p1082[0...n] Maximum speed
- p1215 Motor holding brake configuration

- p1980[0...n] PolID procedure
- p1981[0...n] PolID maximum distance
- p1982[0...n] PolID selection
- p1983 PolID test
- r1984 PolID angular difference
- r1985 PolID saturation curve
- r1986 PolID saturation curve 2
- r1987 PolID trigger curve
- p1990 Encoder adjustment, determine commutation angle offset
- p1991[0...n] Motor changeover, commutation angle offset
- r1992.0...15 CO/BO: PolID diagnostics
- p1993[0...n] PolID motion-based current
- p1994[0...n] PolID motion-based rise time
- p1995[0...n] PolID motion-based gain
- p1996[0...n] PolID motion-based integral time
- p1997[0...n] PolID motion-based smoothing time
- p3090[0...n] PolID elasticity-based configuration
- p3091[0...n] PolID elasticity-based ramp time
- p3092[0...n] PolID elasticity-based wait time
- p3093[0...n] PolID elasticity-based measurement count
- p3094[0...n] PolID elasticity-based deflection expected
- p3095[0...n] PolID elasticity-based deflection permitted
- p3096[0...n] PolID elasticity-based current
- r3097.0...31 BO: Pole ID elasticity-based status

5.17 Vdc control

Function description

The Vdc control monitors the DC voltage in the DC link for overvoltage and undervoltage. If an overvoltage or undervoltage is identified in the DC link line-up, a subsequent response can be set with the Vdc control via p1240.

The torque limits of the motors for which the Vdc controller is active can be affected if discrepancies in the DC link voltage are significant enough. The motors may no longer be able to maintain their setpoint speed or the acceleration/braking phases are prolonged.

In a drive line-up, one or more drives can be used to relieve or support the DC link. This allows a fault due to an unfavorable DC link voltage to be avoided. The drives remain ready for operation.

Generally, a maximum motoring power p_{mot} of the Motor Module from the DC link is given by:

- $P_{mot} = V_{DC,\ actual\ value} \cdot (V_{DC,\ actual\ value} - p1248) \cdot p1250$

Correspondingly, a maximum regenerative feedback power P_{gen} of the Motor Module into the DC link of:

- $P_{gen} = V_{DC,\ actual\ value} \cdot (p1244 - V_{DC,\ actual\ value}) \cdot p1250$

The V_{dc} controller is a P controller that influences the torque limits. It only intervenes when the DC link voltage approaches the "upper threshold" (p1244) or "lower threshold" (p1248) and the corresponding controller is activated with p1240. The recommended setting for the P gain is p1250 = 0.5 · DC link capacitance [mF].

Once the DC link has been identified (p3410), the DC link capacitance can be read in parameter p3422 in the Infeed Module.

Note

To ensure that the drives remain active if the Line Module has failed, the response to fault F07841 must be changed to "none" or the operation message from the Infeed Module must be permanently set to "1" with p0864.

The V_{dc} controller can be used, for example, when a Line Module without energy feedback capability (V_{dc_max} controller) is used and as a safety measure in the event of a power failure (V_{dc_min} and V_{dc_max} controller). To ensure that critical drives can be operated for as long as possible, parameterizable faults exist that switch off individual drives if there is a problem with the DC link.

The voltage limit values for V_{dc} control also have an impact on U/f control, merely the dynamic response of V_{dc} control is slower in this case.

V_{dc_min} control

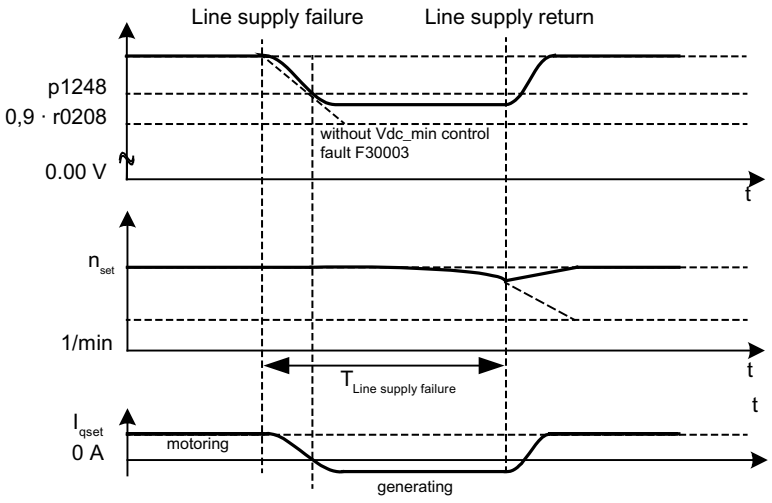

Figure 5-26 Switching V_{dc_min} control on/off (kinetic buffering)

In the event of a power failure, the Line Module can no longer supply the DC link voltage, particularly if the Motor Modules in the DC link line-up are drawing active power. To maintain the DC link voltage in the event of a power failure (e.g. for a controlled emergency retraction), the V_{dc_min} controller can be activated for one or more drives (p1240 = 2, 3). When the set voltage threshold of p1248 is fallen below, these drives are switched into the generator mode so that they can buffer the DC link voltage with their kinetic energy. The threshold should be set considerably higher than the shutdown threshold of the Motor Modules (recommendation: 50 V below the DC link voltage). When the line supply returns, the V_{dc} controller is automatically inactive. The drives approach the speed setpoint again. If the line supply does not return, then the DC link voltage collapses as soon as the kinetic energy of the drives is exhausted with an active V_{dc_min} controller.

Note

If it is expected that the line supply will return, you must make sure that the drive lineup is not disconnected from the line supply. It could become disconnected, for example, if the line contactor drops out. The line contactor must be supplied, e.g. from an uninterruptible power supply (UPS).

V_{dc_min} control without braking

As for V_{dc_min} control with braking, however, active motor braking can be prevented by reducing the DC link voltage (p1240 = 8, 9). The effective upper torque limit must not be less than the torque limit offset (p1532). The motor does not go into the generator mode and does not draw any active power from the DC link.

V_{dc_max} control

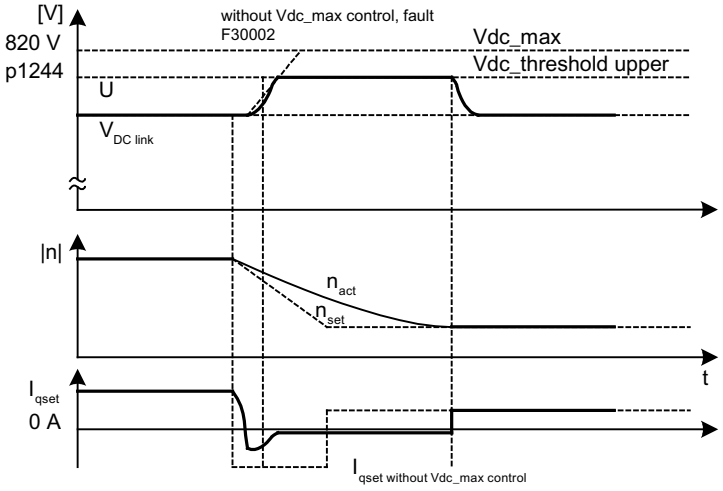

Figure 5-27 Switching the V_{dc_max} control on/off

With Infeed Modules without feedback or in the event of a power failure, the DC link voltage can increase until it reaches the shutdown threshold when drives in the DC link line-up are decelerated. To prevent the system from shutting down due to a DC link overvoltage, the V_{dc_max} controller can be activated for one or more drives (p1240 = 1, 3). The V_{dc_max} controller is normally activated for drives that have to decelerate/accelerate high levels of kinetic energy themselves. When the overvoltage threshold in p1244 is reached (recommended setting: 50 V higher than the DC link voltage), the braking torque of the drives with an active V_{dc_max} controller is reduced by shifting the torque limit. These drives feed back exactly the same amount of energy, that is drawn as a result of losses or loads in the DC link. This function minimizes the braking time.

Note

If other drives in the drive line-up, where the V_{dc_max} controller is not active, feed energy back, the drives with an active V_{dc_max} controller can even be accelerated to absorb the braking energy and, in turn, relieve the DC link.

V_{dc_max} control without acceleration

As for the normal V_{dc_max} control (p1240 = 1, 3), if the drive must not be accelerated by means of feedback from other drives in the DC link, acceleration can be prevented by the setting p1240 = 7, 9. The effective lower torque limit must not be greater than the torque limit offset (p1532).

$V_{dc\ controller}$ monitoring

In the event of a power failure, the Line Module can no longer supply the DC link voltage, particularly if the Motor Modules in the DC link line-up are drawing active power. To ensure that the DC link voltage is not loaded with uncritical drives in the event of a power failure, these drives can be switched off with fault F7403 (Drive: lower DC link voltage threshold reached) with a parameterizable threshold in p1248. This is carried out by activating the V_{dc_min} monitoring function (p1240 = 5, 6).

In the event of a power failure, the DC link voltage can increase until it reaches the shutdown threshold when drives are decelerated. To ensure that the DC link voltage is not loaded with uncritical drives in the event of a power failure, these drives can be switched off with fault F7404 (Drive: upper DC link voltage threshold reached) with a parameterizable threshold in p1244. This is done by activating the V_{dc_max} monitoring (p1240 = 4, 6).

Function diagrams (see SINAMICS S120/S150 List Manual)

- 5300 Servo control - U/f control for diagnostics
- 5650 Servo control - Vdc_max controller and Vdc_min controller

Overview of important parameters (see SINAMICS S120/S150 List Manual)

- r0056.14 CO/BO: Status word, closed-loop control: Vdc_max controller active
- r0056.15 CO/BO: Status word, closed-loop control: Vdc_min controller active
- p1240[0...n] Vdc controller or Vdc monitoring configuration
- p1244[0...n] Upper DC link voltage threshold
- p1248[0...n] Lower DC link voltage threshold
- p1250[0...n] Vdc controller proportional gain

5.18 Dynamic Servo Control (DSC)

Overview

Function "Dynamic Servo Control" (DSC) is a closed-loop control structure that computes the position controller in a fast speed controller clock cycle and is supplied with setpoints by the control system in the position controller cycle. This allows higher position controller gain factors to be achieved.

Requirements

The following prerequisites are necessary to use the "Dynamic Servo Control" function:

- n-set mode
- Isochronous PROFIBUS DP or PROFINET IO with IRT
- The position controller gain factor (KPC) and the position deviation (XERR) must be included in the setpoint telegram of PROFIBUS DP or PROFINET IO with IRT (refer to p0922).
- The actual position value must be transferred to the master in the actual value telegram of PROFIBUS DP or PROFINET IO with IRT via the encoder interface Gx_XIST1.
- When DSC is activated, the speed setpoint N_SOLL_B from the PROFIdrive telegram from PROFIBUS DP or PROFINET IO with IRT is used as a speed precontrol value.
- The internal quasi position controller, DSC position controller (FP3090), uses the actual position value G1_XIST1 from the motor measuring system or the actual position value from an additional encoder system (telegrams 6, 106, 116, 118, 126, 136 and 138 or free telegrams).

Function description

A detailed description of the mode of operation is provided in function diagram 3090 (see SINAMICS S120/S150 List Manual).

Note

Synchronization is required on the control side and on the drive side for the operation of DSC.

PROFIdrive telegrams

The following PROFIdrive telegrams support DSC:

- Standard telegrams 5 and 6
- SIEMENS telegrams: 5, 6, 105, 106, 116, 118, 125, 126, 136, 138, 139, 146, 148, 149 and 166

Further PZD data telegram types can be used with the telegram extension. It must be observed that SERVO control mode supports a maximum of 20 PZD setpoints and 28 PZD actual values.

Operating states

The following operating states are possible for DSC (for details, see function diagram 3090 in the SINAMICS S120/S150 List Manual):

Operating state for DSC	Meaning
Speed/torque precontrol with linear interpolation	As a result of the step-like torque precontrol in the position controller cycle, a pulsed torque characteristic is obtained with the excitation cycle.
Speed precontrol with splines[1)]	• The position setpoint is made symmetrical. • The speed precontrol value is not made symmetrical.
Speed/torque precontrol with splines[1)]	• The position setpoint is made symmetrical. • The speed precontrol value is made symmetrical.[2)] • The torque precontrol value is not made symmetrical.

1) The following improvements are achieved as a result of spline interpolation:
- A finer interpolation of the torque in the speed controller cycle and therefore softer motion; torque surges are also avoided
- An extremely high path accuracy (i.e. lower following error in the control behavior) for torque-speed feedforward control
- High-frequency path motions

2) For active balancing (T_SYMM > 0), using p1427 you can set an additive symmetrizing time constant T_SYMM_ADD to symmetrize the speed precontrol value when torque precontrol is active. In this case, the speed precontrol value is symmetrized with the sum of the following time constants: T_SYMM (p1195) + T_SYMM_ADD (p1427) + 0.5 · T_speed controller cycle (p0115[1]). In this case, speed generation is automatically taken into account using position differences with half a speed controller cycle.

Activate DSC

If the preconditions for DSC are fulfilled, then the DSC structure is activated using a logical interconnection of the following parameters via a selected PROFIdrive telegram:

- p1190 "DSC position deviation XERR"
- p1191 "DSC position controller gain KPC"
- p1194 "CI: DSC control word DSC_STW"
- p1195 "CI: DSC symmetrizing time constant T_SYMM"
- p1430 "CI: Speed precontrol"

If KPC = 0 is transferred, only speed control with the speed precontrol values can be used (p1430, PROFIdrive N_SOLL_B and p1160 n_set_2). Position-controlled operation requires a transfer of KPC > 0.

Note

Position controller gain KPC when DSC is activated

After activating dynamic servo control, check the position controller gain KPC in the master. It may be necessary to correct the setting.

Channel p1155 for speed setpoint 1 and channel r1119 for the extended setpoint are disconnected when DSC is active. p1160 for speed setpoint 2 and p1430 for the speed precontrol are added to the speed setpoint from the DSC (see function diagram 3090).

Deactivating the DSC

If the interconnection is removed at the connector input for KPC or XERR (p1191 = 0 or p1190 = 0), the DSC structure is dissolved and the "DSC" function deactivated. The sum from r1119 and p1155 is then added to the values from p1160 and p1430 from the speed precontrol.

Since it is possible to set higher gain factors using DSC, the control loop can become unstable when DSC is disabled. For this reason, before deselecting DSC, the value for KPC in the master must be reduced.

Speed setpoint filter

A speed setpoint filter for smoothing the speed setpoint steps is not required when DSC is active.

When using the "DSC" function, it only makes sense to use speed setpoint filter 1 to support the position controller, e.g. to suppress resonance effects.

External encoder systems (except motor encoder)

If, with DSC active, an external encoder is to be used, this requires the selection of a telegram with additional actual encoder values: Telegrams 6,106,116,118, 126, 136, 138, 146, 148, 166 or free telegrams.

For optimum control in the DSC mode, the same encoder(s) (encoder 2 and/or encoder 3) must be selected for the control (master) and the drive via parameter p1192 "DSC encoder selection".

If the encoder for the position actual value generation in the control and the encoder selected for DSC differ regarding their pulse numbers and/or fine resolution, then this must be taken into account in p1193. The factor represents the ratio of the pulse difference between the encoders used for the same distance reference. Further, it should be noted that for different encoders there are no dead times regarding their position actual value sensing (for example as is the case for EnDat encoders and SSI encoders), as this will otherwise lead to undesirable behavior.

The effect of the parameters p1192 and p1193 is illustrated in function diagram 3090.

Wind-up effect

If the drive reaches its torque limits when in the DSC mode, e.g. because of excessively fast setpoint inputs, then positioning motion can be overshot. With this so-called wind-up effect, the drive overshoots the specified target, the controller enters a specific correction, the drive reverses, overshoots the target again, etc. In order to avoid this behavior, the drive limits the position controller to values that the drive can always reliably maintain depending on the acceleration capability. Set p1400.17 = 1 to activate dynamic setpoint limiting in the DSC mode. In this case, the total weight (m_{tot}) must be precisely parameterized (determine the weight p0341, p0342 and p1498 possibly using the mot ID). If the limiting responds, then this is indicated in r1407.19. On this topic, also observe the description of parameter p1400.17 and function diagram 3090.

Diagnostics

Parameter r1407 indicates which DSC closed-loop control structure is active, e.g. r1407.20 = 1 means "DSC with Spline on".

Requirements for the display:

- p1190 and p1191 must be connected to a signal source with a value of > 0 (DSC structure activated).
- OFF1, OFF3 and STOP2 must not be active.
- The motor data identification must not be active.
- Master control must not be active.

The following conditions can mean that although the bit is set, the DSC function is not active:

- Isochronous mode has not been selected (r2054 ≠ 4).
- PROFIBUS is not isochronous (r2064[0] ≠ 1).
- On the control side, DSC is not active, which causes the value of KPC = 0 to be transferred to p1191.

Function diagrams (see SINAMICS S120/S150 List Manual)

- 2401 PROFIdrive overview
- 2415 PROFIdrive - Standard telegrams and process data 1
- 2416 PROFIdrive - Standard telegrams and process data 2
- 2419 PROFIdrive - Manufacturer-specific telegrams and process data 1
- 2420 PROFIdrive - Manufacturer-specific telegrams and process data 2
- 2421 PROFIdrive - Manufacturer-specific telegrams and process data 3
- 2422 PROFIdrive - Manufacturer-specific telegrams and process data 4
- 2423 PROFIdrive - Manufacturer-specific/free telegrams and process data
- 3090 Setpoint channel - Dynamic Servo Control (DSC) linear and DSC Spline (r0108.6 = 1)
- 5020 Servo control - Speed setpoint filter and speed precontrol
- 5030 Servo control - Reference model/pre-control balancing/speed limiting

Overview of important parameters (see SINAMICS S120/S150 List Manual)

- p1160[0...n] CI: Speed controller, speed setpoint 2
- p1190 CI: DSC position deviation XERR
- p1191 CI: DSC position controller gain KPC
- p1192[0...n] DSC encoder selection
- p1193[0...n] DSC encoder adaptation factor
- p1194 CI: DSC control word DSC_STW
- p1195 CI: DSC symmetrizing time constant T_SYMM
- p1400[0...n] Speed control configuration
  17 DSC position controller limiting active

- r1407.0...26 CO/BO: Status word, speed controller
  - 04 Speed setpoint from DSC
  - 19 DSC position controller limited
  - 20 DSC with spline on
  - 21 Speed precontrol for DSC with spline on
  - 22 Torque precontrol for DSC with spline on
- p1430[0...n] CI: Speed precontrol

5.19 Travel to fixed stop

Function description

This function can be used to move a motor to a fixed stop at a specified torque without a fault being signaled. When the stop is reached, the specified torque is established and is then continuously available.

The desired torque derating is brought about by scaling the upper/motor-mode torque limit and the lower/regenerative-mode torque limit.

Applications

The main applications of the function are:

- Screwing parts together with a defined torque
- Moving to a mechanical reference point

Signals

For PROFIdrive telegrams 2 to 6, the following signals are automatically interconnected:

- Control word 2, bit 8 (STW2.8)
- Status word 2, bit 8 (ZSW2.8)

For PROFIdrive telegrams 102 to 106, the following signals are also interconnected:

- Message word, bit 1 (MELDW1)
- Process data M_red to the scaling of the torque limit

When the "basic positioner" function module is activated, the signals listed above are automatically interconnected to the basic positioner.

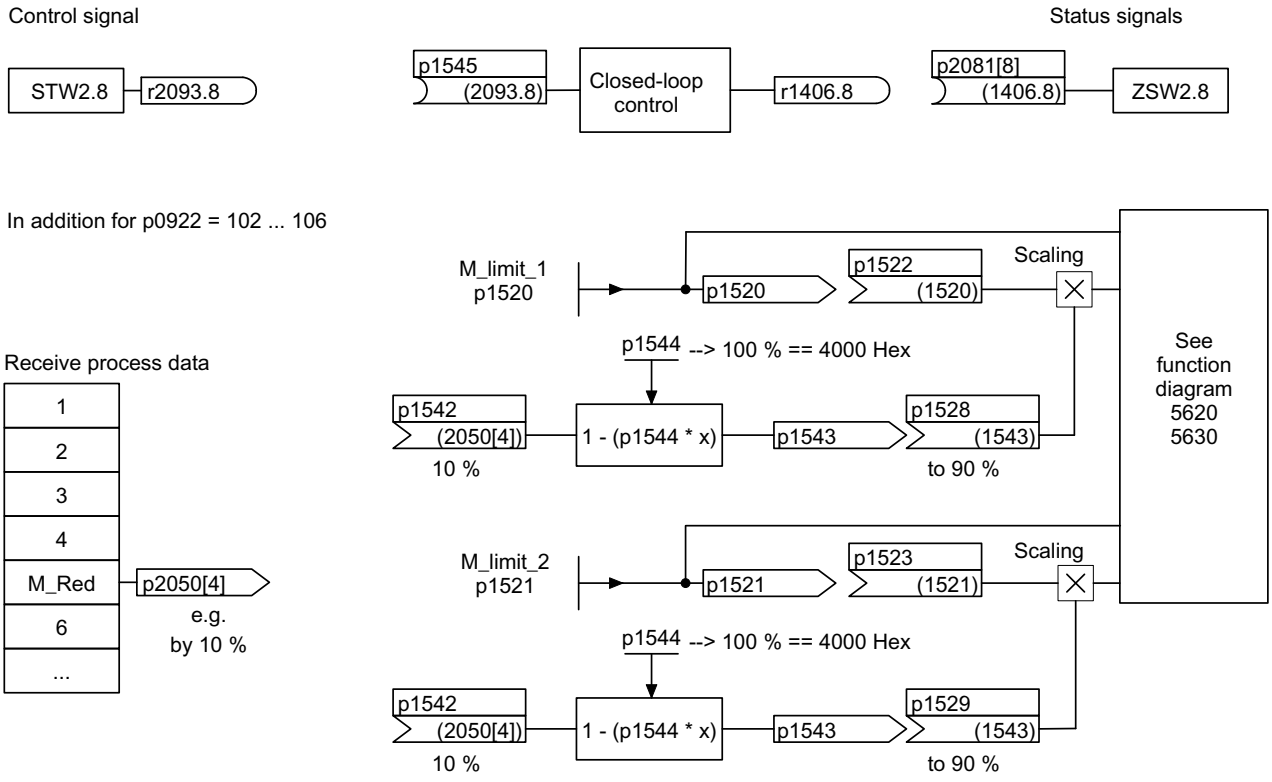

Figure 5-28 Signals for "Travel to fixed stop"

When PROFIdrive telegrams 2 to 6 are used, no torque reduction is transferred. When the "Travel to fixed stop" function is activated, the motor ramps up to the torque limits specified in p1520 and p1521. If the torque has to be reduced, protocols 102 to 106, for example, can be used to transfer it. Another option would be to enter a fixed value in p2900 and interconnect it to the torque limits p1528 and p1529.

Signal chart

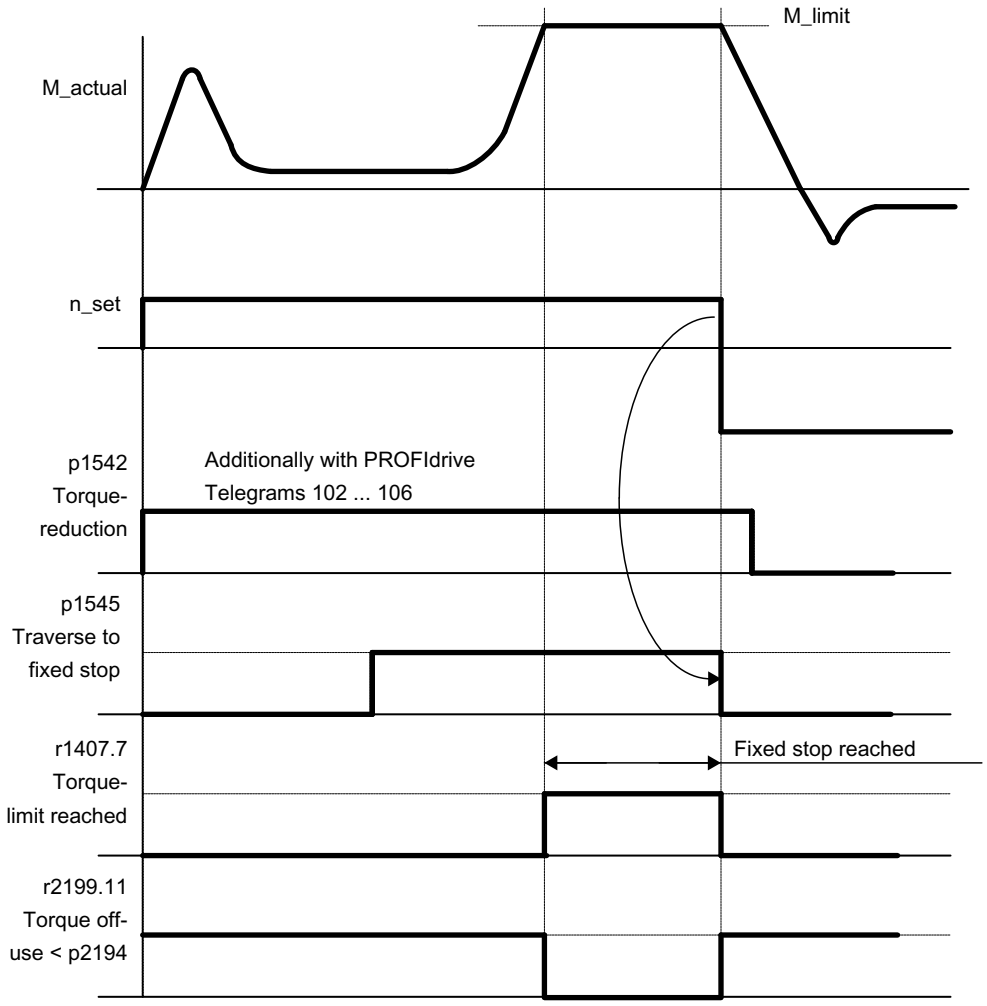

Figure 5-29 Signal chart for "Travel to fixed stop"

Commission PROFIdrive telegrams 2 to 6

To commission the PROFIdrive telegrams 2 to 6, proceed as follows:

1. Activate the "Travel to fixed stop" function via the parameter setting p1545 = "1".
2. Set the required torque limit.
   Example:
   - p1400.4 = 0 (upper or lower torque limit)
   - p1520 = 100 Nm (effective in the upper positive torque direction)
   - p1521 = -1500 Nm (effective in the lower negative torque direction)
3. Traverse the motor to stop.
   The motor runs at the set torque until it reaches the stop and continues to work against the stop until the torque limit has been reached, this status being indicated in status bit r1407.7 "Torque limit reached".

Control and status messages

Table 5-16 Control: Travel to fixed stop

Signal name	Internal control word STW n_ctrl	Binector input	PROFIdrive p0922 and/or p2079
Activate travel to fixed stop	8	p1545 Activate travel to fixed stop	STW2.8

Table 5-17 Status message: Travel to fixed stop

Signal name	Internal status word	Parameter	PROFIdrive p0922 and/or p2079
Travel to fixed stop active	-	r1406.8	ZSW2.8
Torque limits reached	ZSW n_ctrl.7	r1407.7	ZSW1.11 (inverted)
Torque utilization < torque threshold value 2	ZSW monitoring functions 3.11	r2199.11	MELDEW.1

Function diagrams (see SINAMICS S120/S150 List Manual)

- 5609 Servo control, generation of the torque limits, overview
- 5610 Servo control – torque limiting/reduction, interpolator
- 5620 Servo control - Motoring/generating torque limit
- 5630 Servo control - Upper/lower torque limit
- 8012 Signals and monitoring functions – Torque messages, motor locked/stalled

Overview of important parameters (see SINAMICS S120/S150 List Manual)

- p1400[0...n] Speed control configuration
- r1407.7 CO/BO: Status word speed controller; torque limit reached
- p1520[0...n] CO: Torque limit upper/motoring
- p1521[0...n] CO: Torque limit lower/regenerative
- p1522[0...n] CI: Torque limit upper/motoring
- p1523[0...n] CI: Torque limit lower/regenerative
- r1526 CO: Torque limit upper/motoring without offset
- r1527 CO: Torque limit, lower/regenerative without offset
- p1532[0...n] Torque limit, offset
- p1542[0...n] CI: Travel to fixed stop, torque reduction
- r1543 CO: Travel to fixed stop, torque scaling
- p1544 Travel to fixed stop, evaluation torque reduction
- p1545[0...n] BI: Activate travel to fixed stop

- p2194[0...n] Torque threshold value 2
- p2199.11 CO/BO: Status word monitoring;
  Torque utilization < torque threshold value 2

5.20 Vertical axes

Function description

With a vertical axis without mechanical weight compensation, electronic weight compensation can be set by offsetting the torque limits (p1532). The torque limits specified in p1520 and p1521 are shifted by this offset value. The offset value can be read in r0031 and transferred in p1532.

To reduce compensation once the brake has been released, the torque offset can be interconnected as a supplementary torque setpoint (p1511 or p1513). In this way, the holding torque is specified as soon as the brake has been released.

Function diagrams (see SINAMICS S120/S150 List Manual)

- 5060 Servo control - Torque setpoint, switchover control mode
- 5620 Servo control - Motoring/generating torque limit
- 5630 Servo control - Upper/lower torque limit

Overview of important parameters (see SINAMICS S120/S150 List Manual)

- r0031 Actual torque smoothed
- p1511[0...n] CI: Supplementary torque 1
- p1512[0...n] CI: Supplementary torque 1 scaling
- p1513[0...n] CI: Supplementary torque 2
- p1520[0...n] CO: Torque limit, upper/motoring
- p1521[0...n] CO: Torque limit lower/regenerative
- p1532[0...n] CO: Torque limit, offset

5.21 Variable signaling function

Function description

Using the "Variable signaling" function, BICO interconnections and parameters that have the attribute "traceable" can be monitored; otherwise they can also be recorded using the "Device trace" commissioning function.

Note

The variable signaling function works with an accuracy of 8 ms. This value must also to be taken into account for pickup and dropout delay.

Enter the desired data source into parameter p3291 of the drive object expert list. In parameter p3295 define a threshold value for the data source. The hysteresis of the threshold value can be set with p3296. If the threshold value is violated, then an output signal is generated from r3294. A pickup delay can be set with p3297 and a dropout delay with p3298 for the output signal r3294.

The setting of a hysteresis results in a tolerance band around the threshold value. If the upper band limit is exceeded, the output signal r3294 is set to "1", if it drops below the lower band limit the output signal is set to "0"

You set the sampling time of the variable signaling function in p3299.

After completing the configuration, activate the variable signaling function with p3290.0 = 1.

Example 1: switching on temperature-dependent heating

Heating should be switched on depending on the temperature. For this the analog signal of an external sensor is connected with the variable signaling function. A temperature threshold and a hysteresis is defined to prevent the heating from switching on and off constantly.

Example 2: monitoring the pressure

The pressure as process variable is to be monitored, whereby a temporary overpressure is tolerated. For this, the output signal of an external sensor is connected with the variable signaling function. The pressure thresholds and a pull-in delay are set as tolerance time. When the output signal of the variable signaling function is set, bit 5 in message word MELDW is set during cyclic communication. The message word MELDW is a component of the telegrams 102, 103, 105, 106, 110, 111, 116, 118, 126.

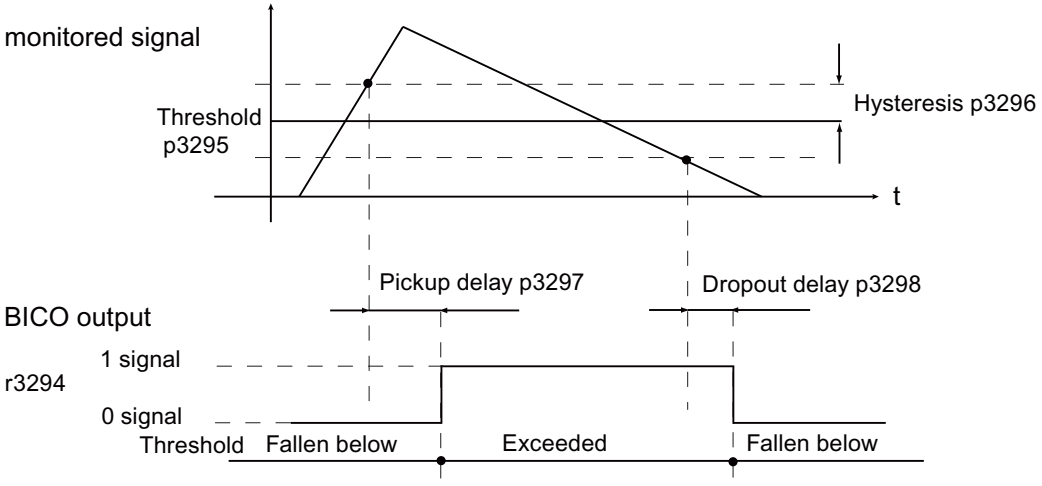

Figure 5-30 Diagram: Variable signaling function

Function diagrams (see SINAMICS S120/S150 List Manual)

- 5301 Servo control - variable signaling function

Overview of important parameters (see SINAMICS S120/S150 List Manual)

- p3290 Variable signaling function, start
- p3291 CI: Variable signaling function signal source
- r3294 BO: Variable signaling function, output signal
- p3295 Variable signaling function, threshold value
- p3296 Variable signaling function, hysteresis
- p3297 Variable signaling function, pickup delay
- p3298 Variable signaling function, dropout delay
- p3299 Variable signaling function, sampling time

5.22 Central probe evaluation

Overview

Frequently, Motion Control systems have to detect and save the positions of drive axes at an instant in time defined by an external event. For example, this external event may be the signal edge of a probe. The following can be necessary:

- Several probes have to be evaluated.
- The actual position values of several axes must be saved with a probe event.

Function description

For the central probe evaluation, the instant in time of the probe signal is detected and saved by a central function. From the sampling values of the position signals of the various axes, the control interpolates the times of the actual position values at the probe instant. Three evaluation procedures are implemented in SINAMICS S120 for this purpose.

The evaluation procedures can be set using parameter p0684:

- With handshake (p0684 = 0)
  Factory setting
- Without handshake, 2 edges (p0684 = 1)
  A change to p0684 = 0 or 1 is possible in the RUN state.
- Without handshake, more than 2 edges (p0684 = 16)
  Measuring several signal edges per probe, without handshake:
  A change to p0684 = 16 only becomes active after "Save parameters" and "POWER ON".
  A change of p0684 = 16 to p0684 = 0 or 1 only becomes active "After save parameters" and "POWER ON".

The fail safety of the standard PROFIdrive connection without handshake cannot be guaranteed. The "Without handshake" function has been released for "integrated" platforms (e.g. SINAMICS integrated in SIMOTION D425). You must use the "With handshake" function to ensure absolute reliability when detecting the probe.

PROFIdrive telegrams for the central measuring function

- Telegram 390: No probe
- Telegram 391: 2 probes (when p0684=0/1)
- Telegram 392: 6 probes (when p0684=0/1)
- Telegram 393: 8 probes (when p0684=0/1)
- Telegram 394: No probe
- Telegram 395: 16 probes, time stamp (p0684 = 16)

Central measuring with/without handshake

Both measuring procedures have the following points in common:

- Setting the input terminal in p0680.
- Signal source, synchronization signal in p0681.
- Signal source, control word probe p0682.
- Transfer with the communication interface PROFIdrive.
- Synchronizing and monitoring isochronous PROFIdrive
- Prerequisite for measurements is the synchronization between the control and drive.
- Setpoint transfer at start time To and actual value transfer at instant in time Ti in the PROFIBUS cycle (max. 8 ms).
- Time stamp: Format (drive increments, NC decrements)
- Each valid time stamp in the drive is incremented by 1 in order to make a differentiation between a valid measuring time zero and an invalid time format. This increment is removed again by the higher-level control.
- The value "0" in the interface is an invalid time format and indicates that a measured value is not available.
- Sequencer for the control/status word processing
- Monitoring functions (sign of life)
- Faults

Note

Time-critical data transfer

The status information E_DIGITAL and A_DIGITAL in telegrams 39x are not subject to any precise time restraints according to the specifications. The transfer of E_DIGITAL and the output of A_DIGITAL are realized independently of the PROFIBUS cycle with the PROFIdrive PZD sampling time according to p2048. Depending on the module, this can be set to between 1 ms and 16 ms. As a consequence, dead times must be expected for the transfer of output values and the feedback signal of input values.

Although the probe status word MT_ZSW is identical with the content of E_DIGITAL, it is however directly transferred in PZDs. As a consequence, for time-critical applications measuring probes or cams should be used.

Central measuring with handshake

With p0684 = 0, you activate the evaluation procedure with handshake for the central probe evaluation. You can evaluate a maximum of one positive and/or negative edge per probe within four DP cycles.

T_{DP} = PROFIBUS cycle (also DP cycle)

T_{MAPC} = master application cycle time (time frame in which the master application generates new setpoints)

- Transfer, control word probe (BICO p0682 to PZD3) at the start instant To in the MAPC cycle.
- The measurement is activated with a 0/1 transition of the control bit for a falling or rising edge in the probe control word.
- If the measurement is activated, in data bus cycle (e.g. PROFIBUS cycle: DP cycle) a check is made as to whether a measured value is available.
- If a measured value is available, then the time stamp is entered into either p0686 or p0687.
- The time stamp is transferred until the control bit for falling or rising edge is set to "0" in the control word. Then, the associated time stamp is set to "0".
- The measurement is deactivated by a 1/0 transition of the control bit in the probe control word.
- Transfer with PROFIdrive telegrams 391, 392 or 393.

Central measurement without handshake

With p0684 = 1, you activate the evaluation procedure without handshake for the central probe evaluation. You can evaluate a **maximum of two signal edges** per probe simultaneously within two DP cycles.

Requirement

- $T_{DP} = T_{MAPC}$ (cycle ratio = 1:1, cycle reduction not possible).

Procedure

If the measurement is activated, a check is made in the DP cycle as to whether a measured value was acquired:

- If a measured value is available, then the time stamp is entered in either p0686 or p0687 and a new measurement is automatically activated.
- If a measured value is not available, then the time stamp zero is entered into either p0686 or p0687.
- This means that a time stamp is only transferred once before it is overwritten with zero or a new time stamp.
- The measurement is immediately reactivated after the measured values have been read out.
- Parallel to acquiring new probe events, the measuring results are transferred to the higher-level control for one DP cycle without evaluating the success.
- For each probe, a maximum of one rising and one falling edge can be detected for each 2 DP cycles.
- Transfer with PROFIdrive telegrams 391, 392 or 393.

Central measurement without handshake (max. 16 signal edges)

With p0684 = 16, you activate the evaluation procedure without handshake for the central probe evaluation. You can evaluate up to 16 signal edges from a maximum of 2 probes simultaneously within a DP cycle.

DP cycle = PROFIBUS cycle = T_{DP}

T_{MAPC} = master application cycle time (time frame in which the master application generates new setpoints)

- For each probe, up to 8 rising and/or 8 falling edges can be detected in each DP cycle and saved in a measurement buffer.
- For each probe it can be selected whether the rising or falling signal edges are to be taken into account.
- The cyclic measurement is activated with a 0/1 transition of the control bit for the signal edges in the probe control word.
- After activating the measurement, the measured value buffer is emptied once for initialization.
- When the buffer is full, the oldest measured value is overwritten first (first in/first out). The bit "measured value buffer full" in the probe-diagnostic word signals the risk of losing measured values.
- The measured value buffer is then cyclically emptied and the measured values are converted in the sense of a measuring task into a time stamp. The time stamps are saved according to their chronological order, starting with the oldest, in the indexes of parameter r0565[0...15] for the transfer.
- If several probes of being used, then the time stamps of the measurements are entered into the telegram block, corresponding to their chronological sequence, from the lowest up to the highest probe.
- Up to 16 time stamps (MT_ZS), can be entered into telegram 395.
- As soon as there is no longer any space for the time stamps of a probe in telegram 395, then the "Telegram full" is set in MT_DIAG.
  Examples:
  - 4 values are transferred from the 1st probe.
  - 6 values are transferred from the 2nd probe.
  - Only the first 6 measured values are transferred from the 3rd probe - the rest is cut off and "Full telegram" is signaled in MT_DIAG.
- From a selected probe, all signal edges are always taken into account. Individual signal edges cannot be selected or deselected.
- The time stamps are transferred in parallel (to acquire new probe events associated with a time stamp without handshake). A time stamp is only transferred for one DP cycle. Then the time stamp overwritten with zero or a new time stamp.
- The cyclic measurement is deactivated with a 1/0 transition of the control bit for a falling or rising signal edge in the probe control word.
- Transfer with PROFIdrive telegram 395.

The PZDs of the probe time stamp are BICO parameters, which are automatically connected with the indices of the new parameter r0565[16] when the telegram block is selected.

After the measuring function has been activated, for several measured values per DP cycle, the acquired time stamps are saved in the indices of r0565[0...15] for transfer, corresponding to their sequence in time starting with the oldest measured value.

Probe time stamp references

For telegram 395, the probe time stamps MT_ZS_1...16 are assigned to the telegram locations using the probe time stamp references MT_ZSB1...4.

Four probe time stamps each (MT_ZS) are assigned a probe time stamp reference (MT_ZSB):

Table 5-18 Assignment, probe time stamp reference to time stamp

Probe time stamp reference	Probe time stamp	Bits
MT_ZSB1	Reference ZS1	Bits 0...3
	Reference ZS2	Bits 4...7
	Reference ZS3	Bits 8...11
	Reference ZS4	Bits 12...15
MT_ZSB2	Reference ZS5	Bits 0...3
	Reference ZS6	Bits 4...7
	Reference ZS7	Bits 8...11
	Reference ZS8	Bits 12...15
MT_ZSB3	Reference ZS9	Bits 0...3
	Reference ZS10	Bits 4...7
	Reference ZS11	Bits 8...11
	Reference ZS12	Bits 12...15
MT_ZSB4	Reference ZS13	Bits 0...3
	Reference ZS14	Bits 4...7
	Reference ZS15	Bits 8...11
	Reference ZS16	Bits 12...15

Table 5-19 Bit assignment of MT_ZSB1 (r0566[0])

Reference time stamp	Probe bit, binary values	Edge selection bit
Reference MT_ZS1	Bits 0...2:	Bit 3:
	000: MT_ZS1 from MT1	0: MT_ZS1 falling edge
	001: MT_ZS1 from MT2	1: MT_ZS1 rising edge
	010: MT_ZS1 from MT3	
	011: MT_ZS1 from MT4	
	100: MT_ZS1 from MT5	
	101: MT_ZS1 from MT6	
	110: MT_ZS1 from MT7	
	111: MT_ZS1 from MT8	

Reference time stamp	Probe bit, binary values	Edge selection bit
Reference MT_ZS2	Bits 4...6:	Bit 7:
	000: MT_ZS2 from MT1 001: MT_ZS2 from MT2 - 110: MT_ZS2 from MT7 111: MT_ZS2 from MT8	0: MT_ZS2 falling edge 1: MT_ZS2 rising edge
Reference MT_ZS3	Bits 8...10	Bit 11:
	000: MT_ZS3 from MT1 001: MT_ZS3 from MT2 - 110: MT_ZS3 from MT7 111: MT_ZS3 from MT8	0: MT_ZS3 falling edge 1: MT_ZS3 rising edge
Reference MT_ZS4	Bits 12...14	Bit 15
	000: MT_ZS4 from MT1 001: MT_ZS4 from MT2 - 110: MT_ZS4 from MT7 111: MT_ZS4 from MT8	0: MT_ZS4 falling edge 1: MT_ZS4 rising edge

Examples for determining the reference values of the probe evaluation in hex:

- 0000 = 0 hex = time stamp from probe 1 falling edge
- 1000 = 8 hex = time stamp from probe 1 rising edge
- 0001 = 1 hex = time stamp from probe 2 falling edge
- 1001 = 9 hex = time stamp from probe 2 rising edge

Measurement buffer

Each measuring pulse input of a Control Unit 320-2 or 310-2 has one memory for maximum 16 measured value entries (8 rising and 8 falling edges).

The measured values for rising and falling signal edges are sequentially written to the memory. If the memory is full and a new measured value is entered, all entries move down by one location and the oldest value drops out. This means that in the case of an overflow the latest 16 values are contained in the memory. When reading out an entry, the oldest value is taken from the memory. The remaining entries move down and make space for a new entry (FIFO principle).

Remarks

Other applications can also read the probe status and evaluate the probe measured values.

Example

EPOS controls its probes axis-specifically. A control system can connect to the probe to read its data and integrate the information into the drive telegram.

5.22.1 Examples

Examples of probe evaluation

Hex values in MT_ZSB from the above example:

- 0 hex = time stamp from probe 1, falling edge
- 8 hex = time stamp from probe 1 rising edge
- 1 hex = time stamp from probe 2, falling edge
- 9 hex = time stamp from probe 2, rising edge

Example 1

MT_STW = 100H: a search is only made for rising edges for probe 1

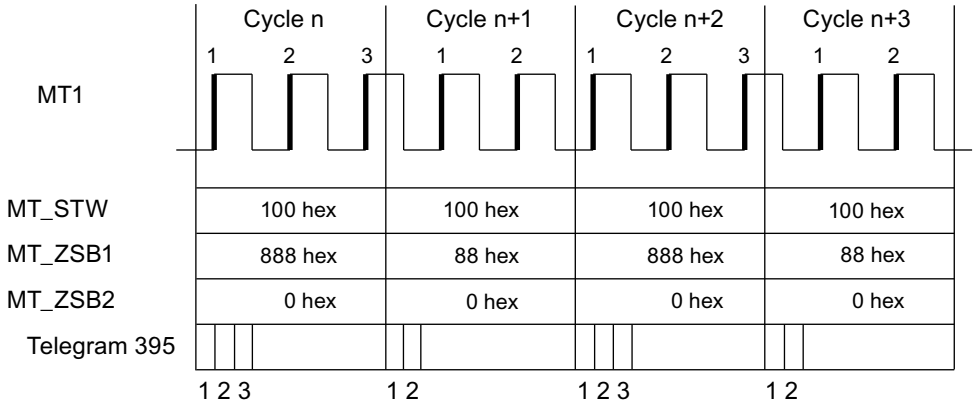

Figure 5-31 A search is made for rising edges for probe 1

In the DP cycle, all time stamps for rising edges are transferred corresponding to their sequence in time for probe 1.

Example 2

MT_STW = 101H: a search is made for rising and falling edges for probe 1.

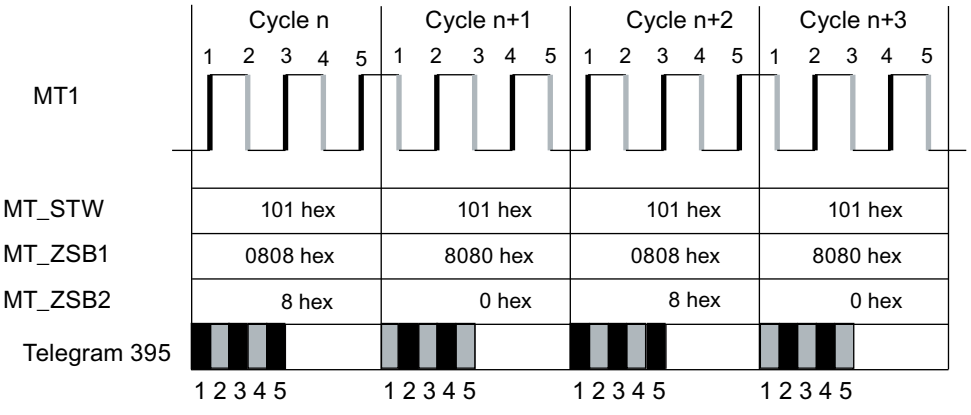

Figure 5-32 A search is made for rising and falling edges for probe 1

In the DP cycle, all time stamps for rising and falling edges are transferred corresponding to their sequence in time for probe 1.

Example 3

MT_STW = 303H: a search is made for rising and falling edges for probes 1 and 2.

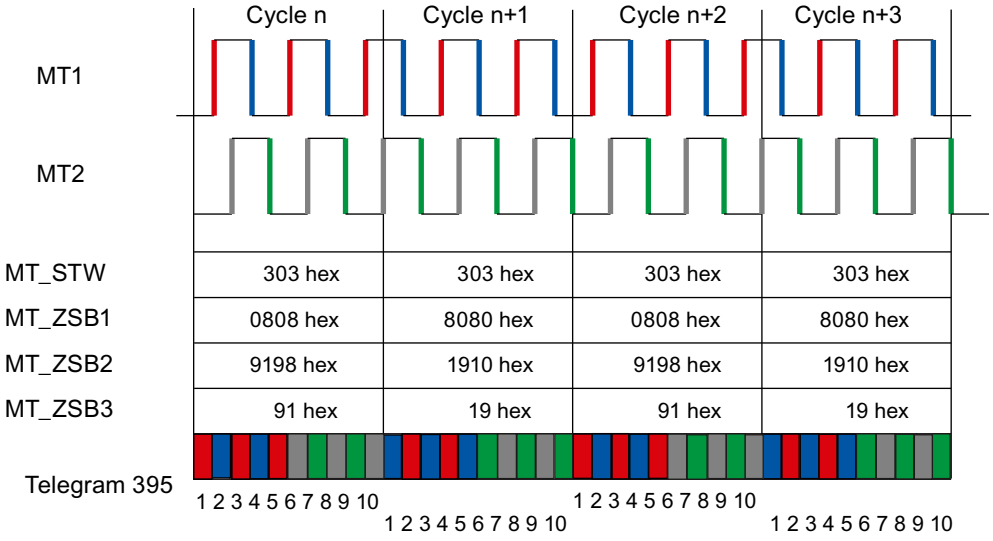

Figure 5-33 A search is made for rising and falling edges for probes 1 and 2

In the DP cycle, initially all time stamps for rising and falling edges of probe 1 are entered. Afterwards, all time stamps for rising and falling edges of probe 2.

5.22.2 Function diagrams and parameters

Function diagrams (see SINAMICS S120/S150 List Manual)

- 2423 PROFIdrive - Manufacturer-specific/free telegrams and process data
- 4740 Encoder evaluation - Probe evaluation, measured value memory, encoders 1 ... 3

Overview of important parameters (see SINAMICS S120/S150 List Manual)

- r0565[0...15] CO: Probe time stamp
- r0566[0...3] CO: Probe time stamp reference
- r0567 CO: Probe diagnostic word
- p0680[0...7] Central probe, input terminal
- p0681 BI: Central probe synchronization signal, signal source
- p0682 CI: Central probe control word signal source
- p0684 Central probe evaluation procedure
- r0685 Central probe control word display

- r0686[0...7] CO: Central probe measuring time, rising edge
- r0687[0...7] CO: Central probe measuring time, falling edge
- r0688 CO: Central probe status word display
- r0898.0...14 CO/BO: Control word, sequence control
- r0899.0...15 CO/BO: Drive object status word
- p0922 IF1 PROFIdrive PZD telegram selection
- p0925 PROFIdrive isochronous sign-of-life tolerance

5.23 Voltage precontrol

Function description

Using voltage precontrol (p1703), the dynamic response of the q current controller can be increased independent of the current controller setting - all the way up to the limit that is physically possible. This means that the current setpoint is established as quickly as possible. Together with the speed-torque precontrol (p1402.4 = 1, p1517 = 0 ms, p1428, p1429), the bandwidth of the speed controller dynamic response can be increased.

Especially for synchronous motors, the motor q-inductance (p0356) changes significantly with the torque-generating current. This response must be taken into account for the precontrol model.

The individual steps for configuring the voltage feedforward control are described in the following.

Recommendation

As a result of the higher bandwidth of the current controller, higher frequencies can be excited - and the phase position changes. As a consequence, after activating the voltage precontrol, check the speed or position controller and if required - adjusted these as necessary.

Configuring the function

This "Voltage feedforward control" function is configured in the following steps:

Setting the adaptation characteristic

Proceed as follows to determine and set the adaptation characteristic:

1. Determine the q-inductance characteristic using a rotating measurement (p1959.5, p1960 and r1934, r1935).
2. When the identified data are accepted, the parameters of the adaptation characteristic (p0356, p0391, p0392 and p0393) are appropriately set.

Additionally note the following parameter assignment examples:

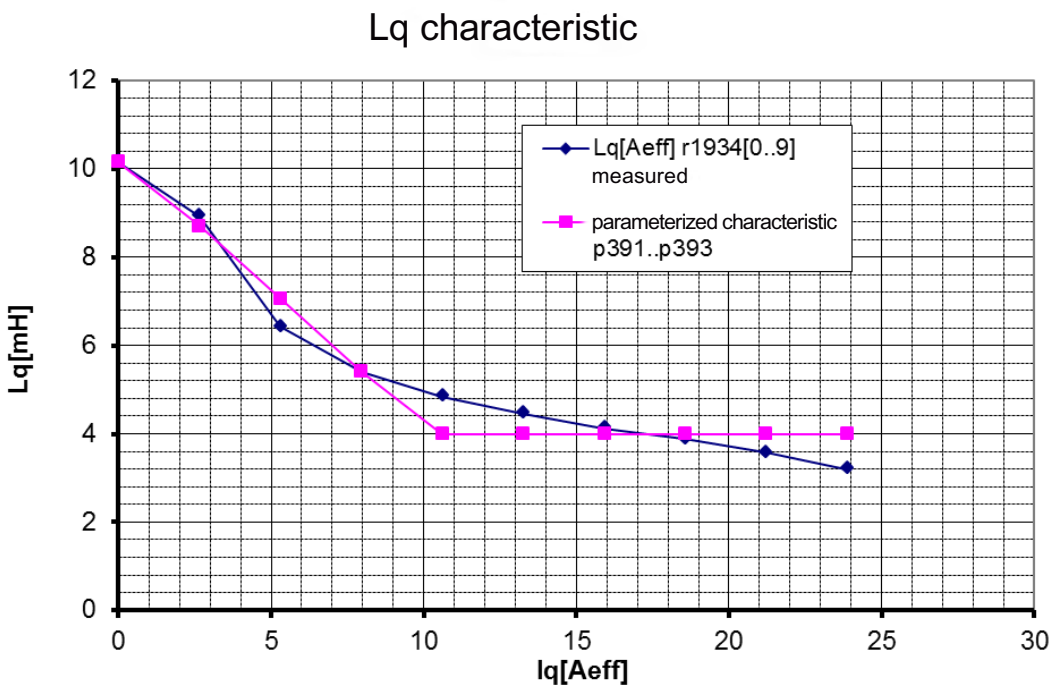

p0391 0.33 A
p0392 10.23 A
p0393 39.31%
p0356 10.16 mH

Figure 5-34 Example 1: Adaptation characteristic

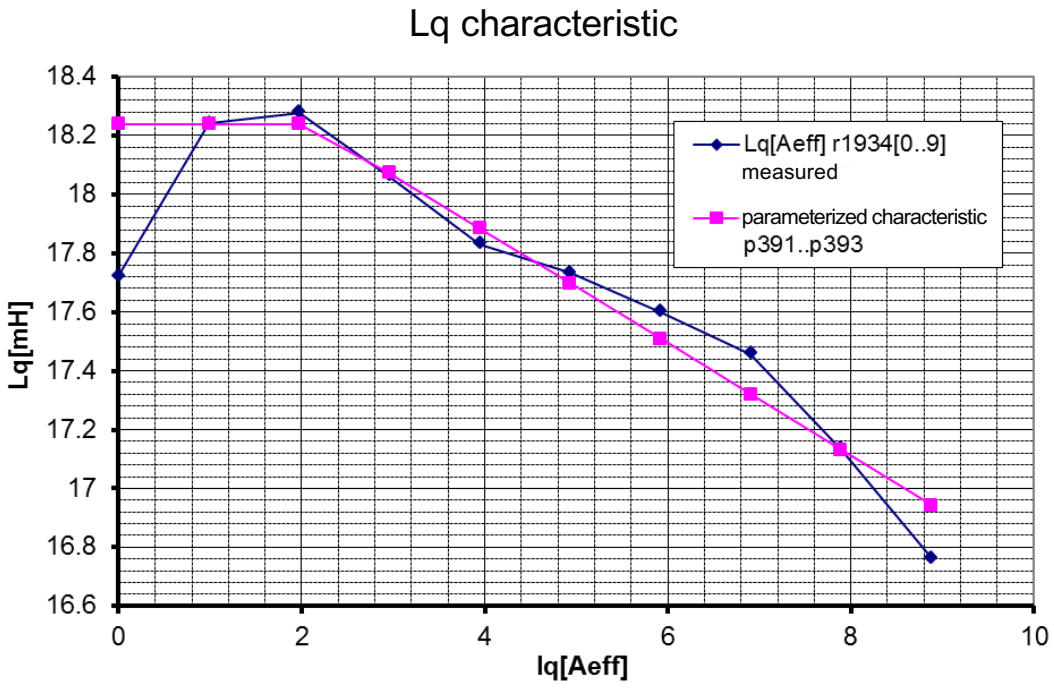

p0391 2.09 A
p0392 11 A
p0393 90.67%
p0356 18.24 mH

Figure 5-35 Example 2: Adaptation characteristic

Determining the voltage feedforward control

You determine the voltage feedforward control in several optimization steps. Proceed as follows:

1. To activate voltage precontrol, enter a value of "100" into p1703.
2. Proceed as follows to determine the dead time of the current controller reference model:
   - Activate p0340 = 4, and automatically calculate the closed-loop control parameters.
     OR
   - Perform a One-Button-Tuning with p5271.4 = 1 and p5271.7 = 1 (p5300 = 1).

3. Measure a current controller setpoint step and correct the value p1703.
   – Repeat the current controller setpoint step until the current actual value reaches the setpoint without any overshoot or undershoot (see the following sample displays).

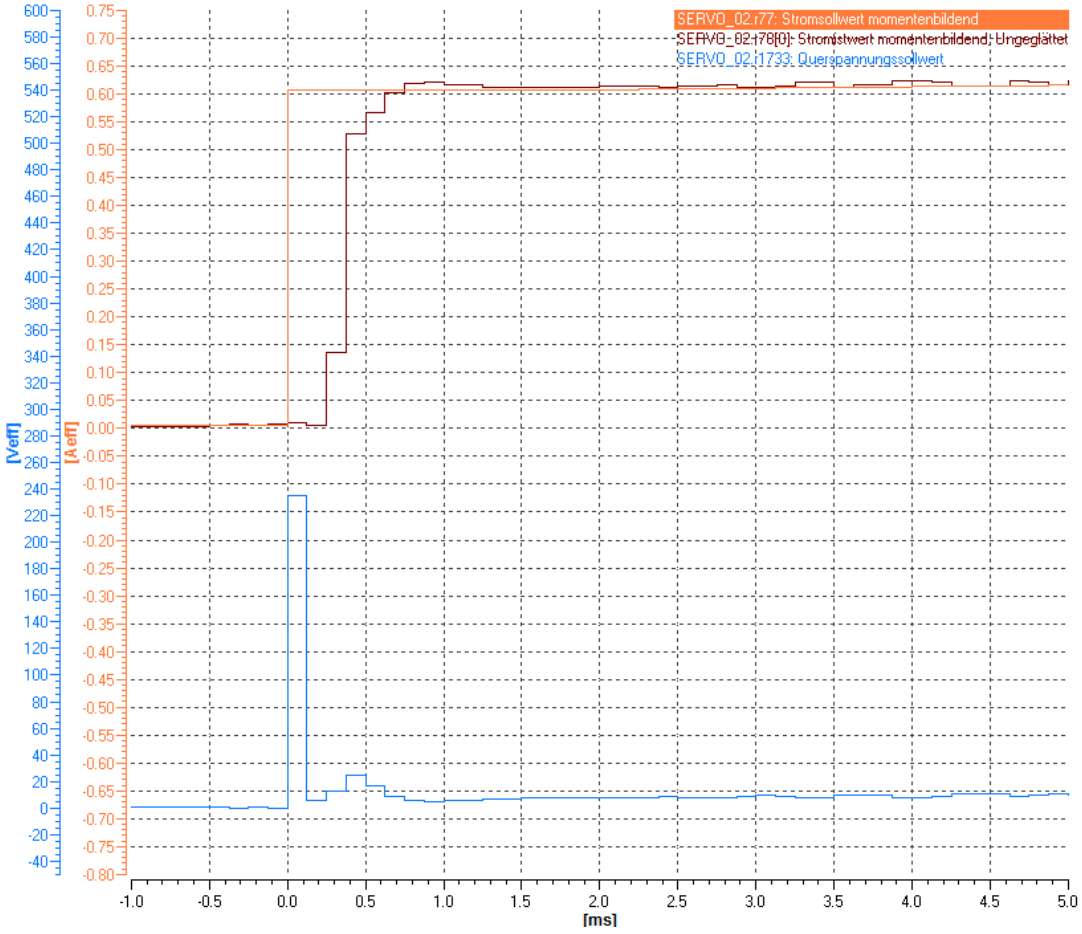

Figure 5-36 Example: Voltage precontrol p1703 too low

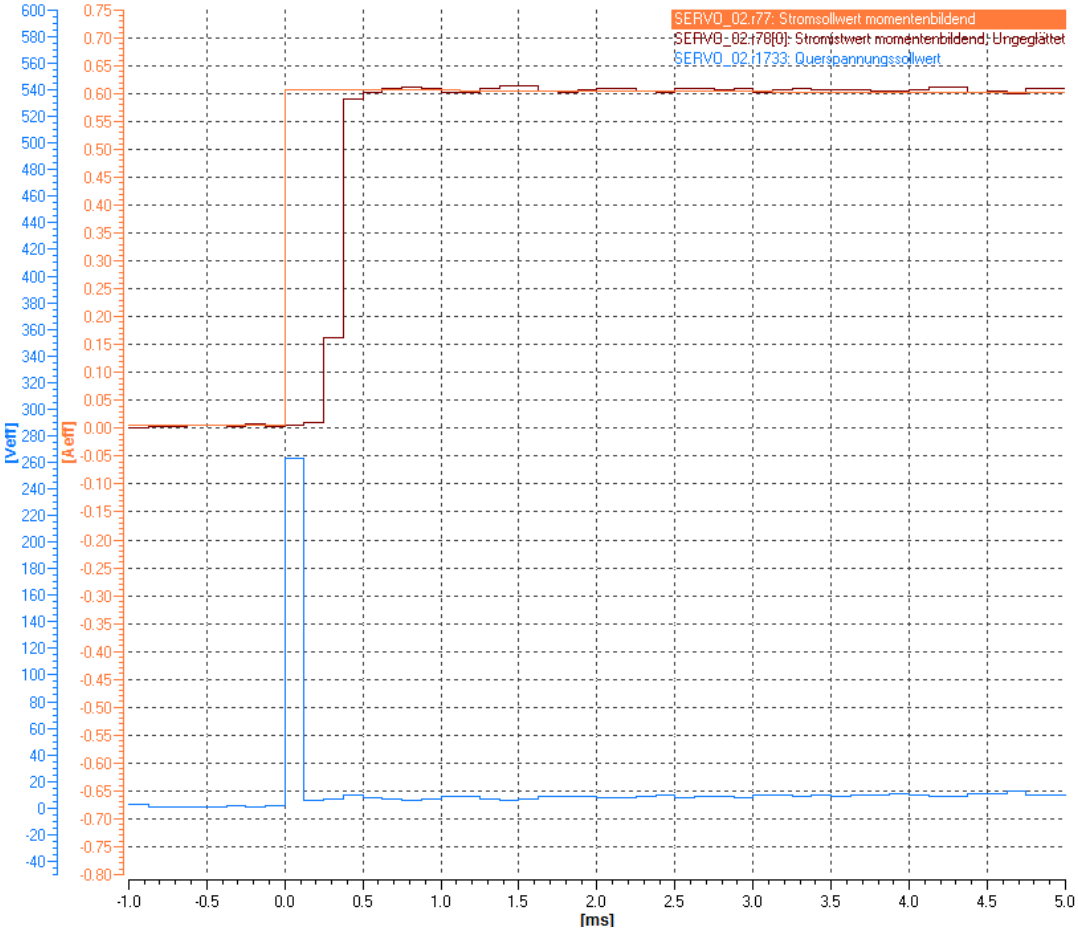

Figure 5-37 Example: Voltage feedforward control p1703 is okay

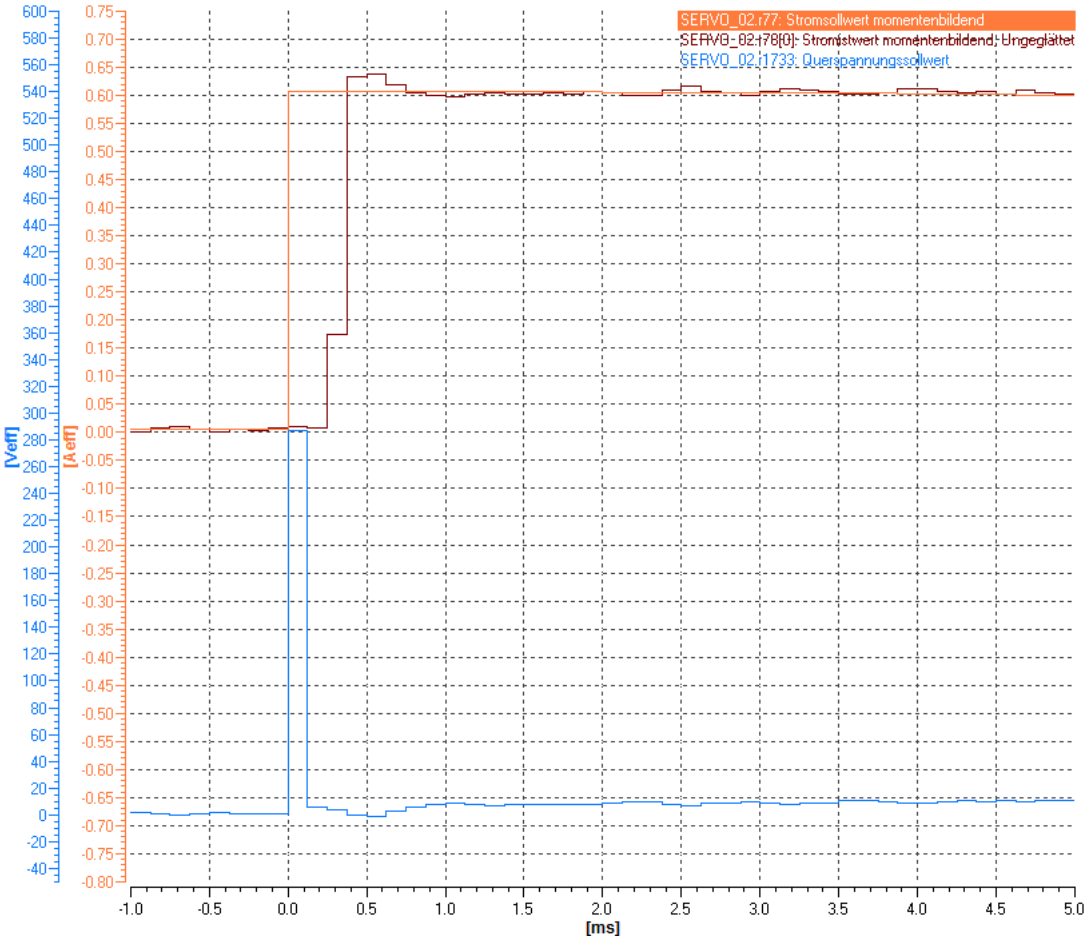

Figure 5-38 Example: Voltage precontrol p1703 too high

4. The result can be improved by compensating the voltage emulation error (only for synchronous motors).
   - To do this, activate function module "Extended torque control (Page 442)" (r0108.1).
   - Determine the voltage emulation error with the stationary motor data identification (p1909.14 = 1 and p1910).
   - Activate the compensation of the voltage emulation error (p1780.8 = 1).
5. If, after reaching the current setpoint, the current actual value dips, correct the current actual value via p1734 or p1735 (see the subsequent diagram).

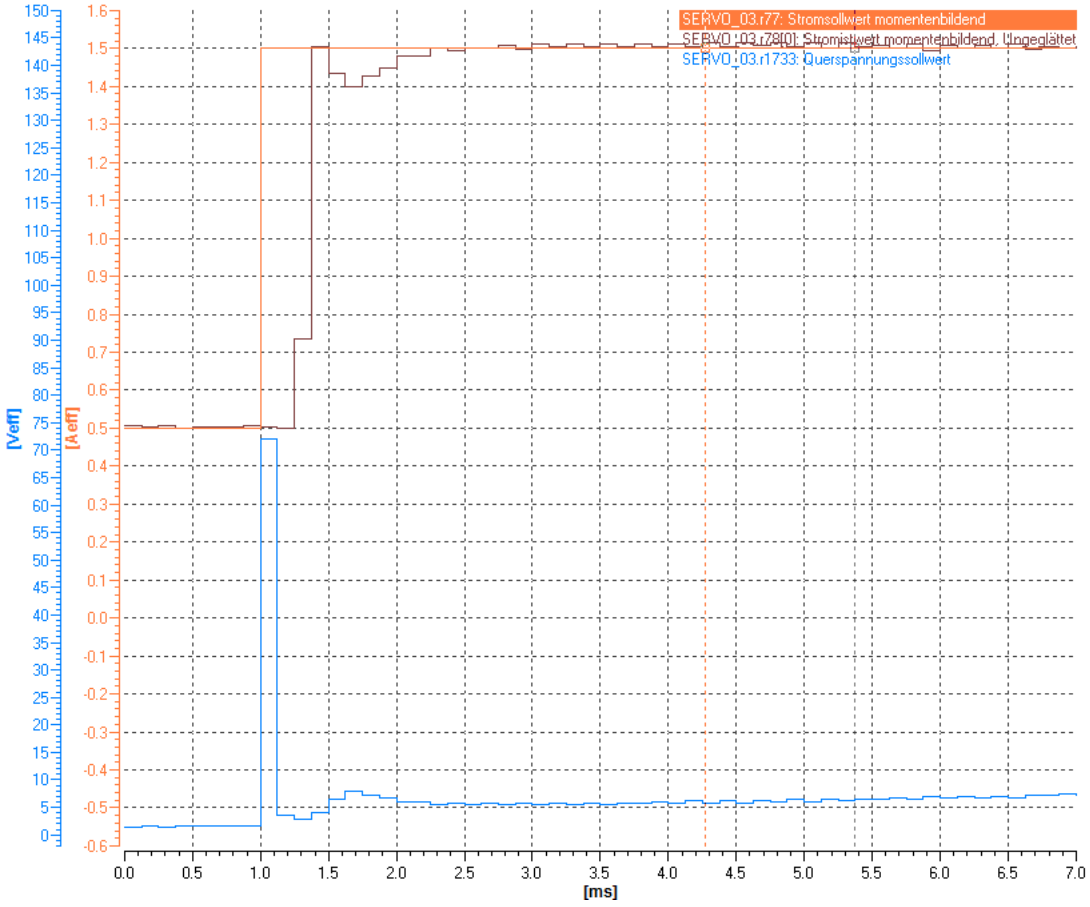

Figure 5-39 Example: Voltage precontrol before optimization (with dip)

Optimizing parameters p1734 and p1735

Proceed as follows to optimize parameters p1734 and p1735:

1. Set the current controller P gain (p1715) lower by a factor of 10.
2. Set the current controller integral time (p1717) higher by a factor of 10.
3. Set the decrease of the eddy current compensation p1734 = 0.

4. Measure a current controller setpoint step change again (see figure below)

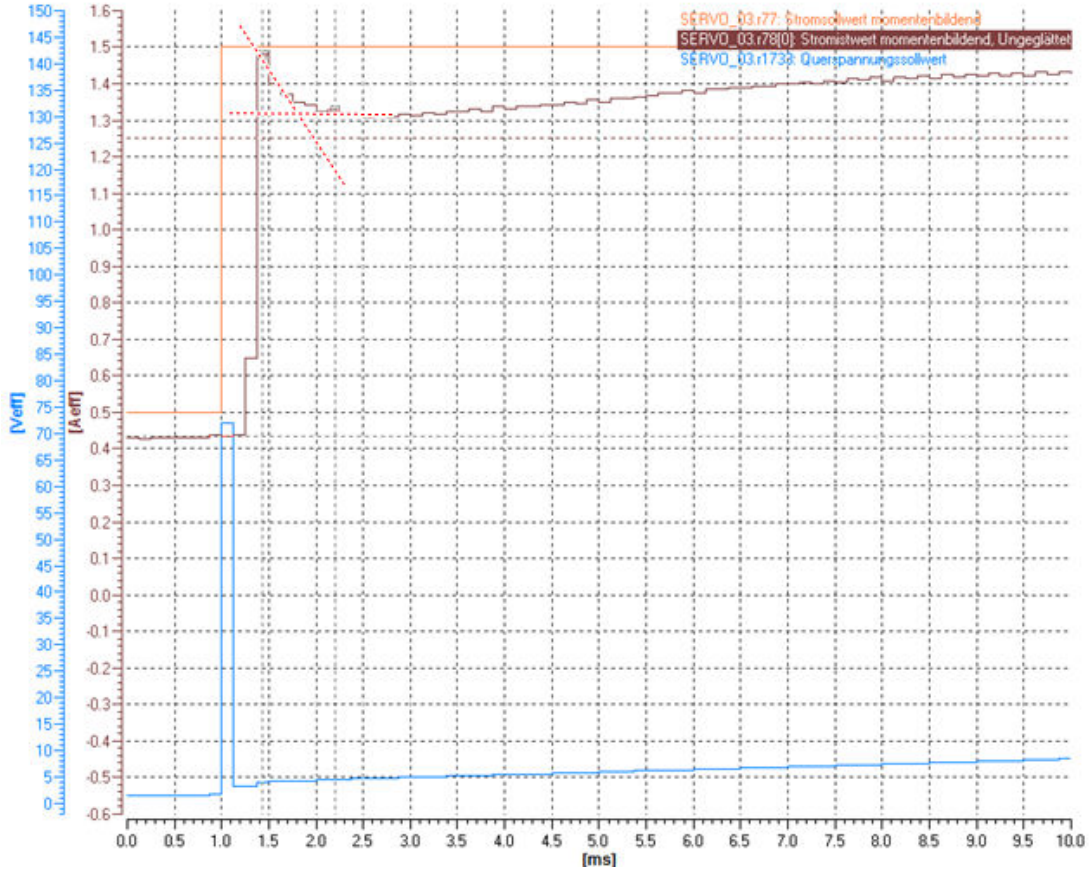

Figure 5-40 Example: Prior to optimizing

The measurement result in the example indicates that after reaching the setpoint, the current decays according to an exponential function (1-exp(-t/Tsm)). You estimate the smoothing time based on the time from the point of contact of the initial tangent with the final value straight line.

5. Enter the time constant in p1735.
6. In p1734, enter by what percentage the setpoint point of contact should extend beyond the final value straight line (e.g. (1.5A/1.32A -1)·100 % = 13.6 %).

7. Restore the P gain (p1715) and integral time (p1717) of the current controller back to the original values.
8. Again measure a current controller setpoint step.

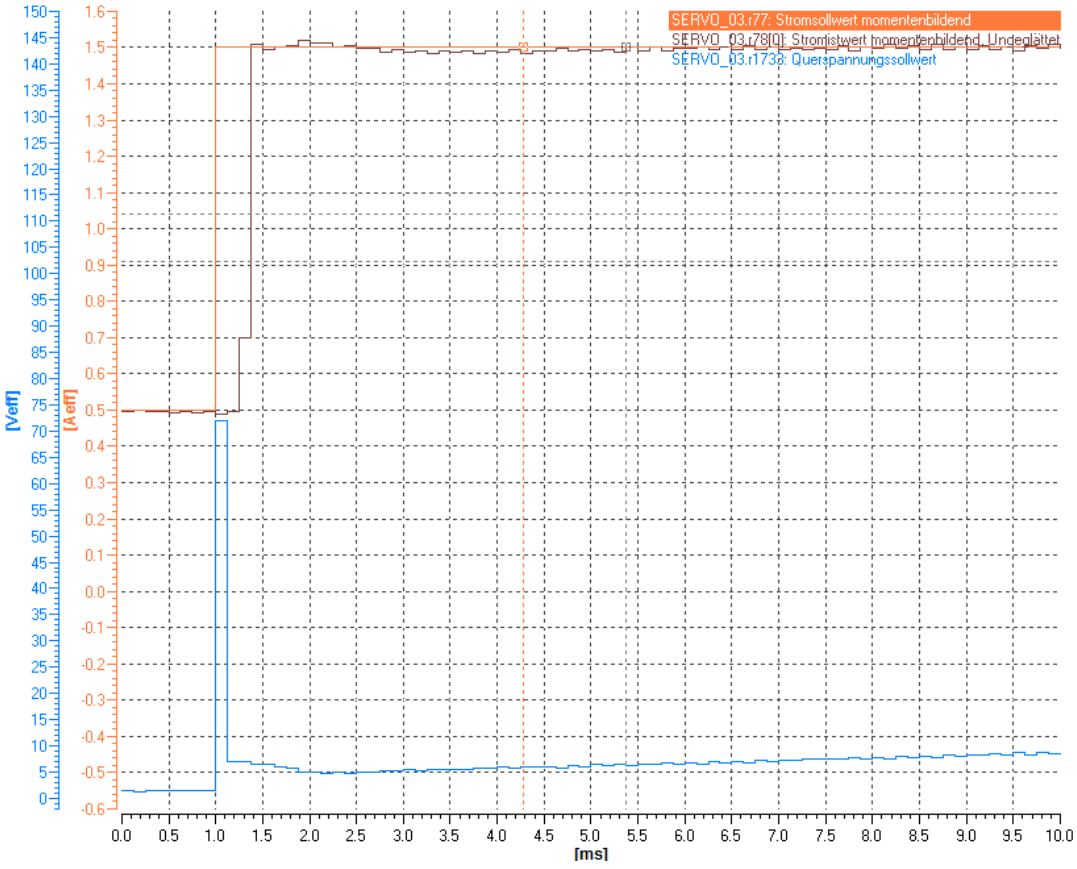

Figure 5-41 Example: After optimization

In most cases, the voltage precontrol is correctly set after the eddy current compensation (see example). If required, you can correct again using p1734.

Legend for the measurement diagrams

SERVO_02.r77: Stromsollwert momentenbildend	Torque-generating current setpoint
SERVO_02.r78[0]: Stromistwert momentenbildend, Ungeglättet	Torque-generating current setpoint unsmoothed
SERVO_02.r1733: Querspannungssollwert	Quadrature-axis voltage setpoint

5.23.1 Function diagrams and parameters

Overview of important parameters (see SINAMICS S120/S150 List Manual)

- p0340[0...n] Automatic calculation of motor/control parameters
- p0356[0...n] Motor stator leakage inductance

- p0391[0...n] Current controller adaptation, starting point Kp
- p0392[0...n] Current controller adaptation, starting point Kp adapted
- p0393[0...n] Current controller adaptation, P gain adaptation
- p1402[0...n] Current control and motor model configuration
- p1428[0...n] Speed precontrol symmetrizing dead time
- p1429[0...n] Velocity precontrol balancing time constant
- p1517[0...n] Acceleration torque smoothing time constant
- p1701[0...n] Current controller reference model dead time
- p1703[0...n] Isq current controller precontrol scaling
- p1715[0...n] Current controller P gain
- p1717[0...n] Current controller integral time
- p1734[0...n] Isq current controller precontrol eddy current compensation drop
- p1735[0...n] Isq current controller precontrol eddy current compensation time constant
- p5271[0...n] Online / One Button Tuning configuration
- p5300[0...n] Autotuning selection

Vector control

6

Operating principle

The motor connected to a vector control is simulated in a vector model based on data from the equivalent circuit diagram. The motor module is emulated as precisely as possible to obtain the best results regarding control precision and control quality.

Versions

The vector control is available in the following versions:

- Vector control without encoder (Page 209) (SLVC) as frequency control
- Vector control with encoder (Page 218) as speed-torque control with speed feedback

Features

The vector control is characterized by the following features:

- Normal computing speed
- Best speed accuracy
- Best speed ripple
- Best torque accuracy
- Best torque ripple

The vector control can be used with or without an encoder for speed feedback.

Using a speed encoder

A speed encoder is required if the following criteria apply:

- High speed accuracy is required
- High dynamic response requirements
  - Better control behavior
  - Better response to disturbances
- Torque control is required in a control range greater than 1:10
- A defined and/or variable torque should be maintained for speeds below approx. 10% of the rated motor frequency (p0310).

With regard to setpoint input, vector control is subdivided into:

- Speed control
- Torque/current control (in short: torque control)

Differences with respect to vector U/f control

Compared with vector U/f control, vector control offers the following benefits:

- Stability for load and setpoint changes
- Short rise times for setpoint changes (→ better control behavior)
- Short settling times for load changes (→ better response to disturbances)
- Acceleration and braking are possible with maximum settable torque
- Motor protection due to variable torque limitation in motor and regenerative mode
- Drive and braking torque controlled independently of the speed
- Maximum breakaway torque possible at speed 0

The basic features and properties of the SERVO and VECTOR control modes are compared in the following table.

Table 6-1 Comparison: Servo control/vector control

Subject	Servo control	Vector control
Typical applications	• Drives with highly dynamic motion control • Drives with high speed and torque accuracy (servo synchronous motors) • Angular-locked synchronism with isochronous PROFIdrive • For use in machine tools and clocked production machines • High output frequency	• Speed and torque-controlled drives with high speed and torque accuracy, particularly in operation without an encoder (sensorless operation)
Maximum number of drives that can be controlled by one Control Unit **To be observed:** Chapter "Rules for wiring with DRIVE-CLiQ (Page 845)" further down in this document	• 1 infeed unit + 6 drives (with current controller sampling times 125 µs or speed controller sampling times 125 µs) • 1 infeed unit + 3 drives (with current controller sampling times 62.5 µs or speed controller sampling times 62.5 µs) • 1 infeed unit + 1 drive (with controller sampling times 31.25 µs or speed controller sampling times 62.5 µs) • Mixed operation, servo control with 125 µs with U/f, max.11 drives	• 1 infeed unit + 3 drives (with current controller sampling times 250 µs or speed controller sampling times of 1 ms) • 1 infeed unit + 6 drives (with current controller sampling times 400 µs/500 µs or speed controller sampling times 1.6 ms/2 ms) • U/f control: 1 infeed unit + 12 drives (with current controller sampling times 500 µs or speed controller sampling times 2000 µs) • Mixed operation, vector control with 500 µs with U/f, max.11 drives
Dynamic response	High	Medium

Subject	Servo control	Vector control
Note: Additional information on the sampling conditions is provided in subchapter "Rules regarding sampling times (Page 838)" in this manual.		
Connectable motors	• Synchronous servomotors • Permanent-magnet synchronous motors • Induction motors • Torque motors • Linear motors	• Synchronous motors (including torque motors) • Permanent-magnet synchronous motors • Induction motors • Reluctance motors - textile (only for U/f control) • Synchronous reluctance motors • Separately excited synchronous motors **Note:** Synchronous motors of the 1FT6, 1FK6 and 1FK7 series cannot be connected.
Position interface via PROFIdrive for higher-level motion control	Yes	Yes
Encoderless speed control	Yes, as of 10% rated motor speed, open-loop controlled operation below this	Yes (for ASM and PMSM from standstill)
Motor data identification	Yes	Yes
Speed controller sampling time optimization	Yes	Yes
U/f control	Yes	Yes (various characteristics)
Encoderless Torque control	No	Yes, as of 10% rated motor speed, open-loop controlled operation below this
Field-weakening range for induction motors	≤ 16% field weakening operation speed (with encoder) ≤ 5% field weakening operation speed (without encoder)	≤ 5% rated motor speed

Subject	Servo control	Vector control
Maximum output frequency with closed-loop control	• 2600 Hz with 31.25 µs / 16 kHz • 1300 Hz with 62.5 µs / 8 kHz • 650 Hz with 125 µs / 4 kHz • 300 Hz with 250 µs / 2 kHz **Note:** SINAMICS S can achieve the specified values without tuning. Higher frequencies can be set under the following secondary conditions and additional tuning runs: • Up to 3000 Hz – Operation without an encoder – In conjunction with controlled infeed units • Up to 3200 Hz – Operation with encoder – In conjunction with controlled infeed units • Absolute upper limit 3200 Hz A license is required tor frequencies >600 Hz because of export regulations.	• 300 Hz with 250 µs/4 kHz or with 400 µs/5 kHz • 240 Hz with 500 µs / 4 kHz **Note**: If a higher output frequency is required, consult the specialist support from SIEMENS.
Note: Note the derating characteristics in the Equipment Manuals. Max. output frequency when using dv/dt and sine-wave filters: 150 Hz		
Speed setpoint channel (ramp-function generator)	Optional (reduces the number of drives from 6 to 5 Motor Modules with current controller sampling times of 125 µs or speed controller sampling times of 125 µs)	Standard
Parallel connection of power units	No	• Blocksize: No • Booksize: No (Exceptions: Active Line Modules, power class 55 kW, 80 kW or 120 kW) • Cabinet: Yes • Chassis: Yes • Chassis-2: Yes (Applies to: Active Line Modules and Motor Modules)

Subject	Servo control	Vector control
Note: Additional information on connecting power units in parallel is provided in Chapter "Parallel connection of power units (Page 515)".		
Permissible range of the ratio between the rated motor current (p0305) and rated Motor Module current (r0207)	The permissible range of the ratio between the rated motor current (p0305) and rated Motor Module current (r0207) is, for servo control, 1:1 to 1:4. With restrictions regarding the torque accuracy and smooth running operation, a ratio of up to 1:8 is possible.	The permissible range of the ratio between the rated motor current (p0305) and rated Motor Module current (r0207) is, for vector control, 1.3:1 to 1:4. With restrictions regarding the torque accuracy and smooth running operation, a ratio of up to 1:8 is possible.

6.1 Technology application (application) (p0500)

Function description

Using parameter p0500, you can influence the calculation of open-loop control and closed-loop control parameters. The default setting helps you find suitable values for standard applications.

You can make preassignments for the following technological applications:

Value p0500	Application
0	Standard drive (vector)
1	Pumps and fans
2	Encoderless control down to f = 0 (passive loads)
4	Dynamic response in the field weakening range
5	Starting with high breakaway torque
6	High load moment of inertia (e.g. centrifuges)

An overview of the influenced parameters and the set values is provided in the "SINAMICS S120/S150 List Manual".

Instantiating the calculation of the parameters

You call the calculation of the parameters, which influence the technological application, as follows:

- When exiting quick commissioning with p3900 > 0
- When automatically calculating the motor/closed-loop control parameters with p0340 = 1, 3, 5 (for p0500 = 6: p0340 = 1, 3, 4)
- When calculating the technology-dependent parameters with p0578 = 1

6.2 Vector control without encoder (SLVC)

Function description

During operation via the "Sensorless vector control" function (SLVC), the position of the flux and actual speed must be determined using the electric motor model. The motor model is buffered by the incoming currents and voltages. At low frequencies (approx. 0 Hz), the motor model cannot determine the speed with sufficient accuracy. For this reason, in this range, the vector control can be changed over from closed-loop to open-loop control. When using passive loads, additional limitations and constraints must be taken into consideration (see Supplementary conditions for the operation of third-party motors).

Motor types

The function can be used for the following motor types:

- Three-phase induction motors
- Permanent-magnet synchronous motors (PMSM)
- Synchronous reluctance motors (RESM)

6.2.1 Three-phase induction motor

Description

The changeover between closed-loop/open-loop control is controlled by means of the time and frequency conditions (p1755, p1756, p1758). If the setpoint frequency at the ramp-function generator input and the actual frequency are below p1755 · (1 - (p1756/100 %)) simultaneously, then the system does not wait for the time condition.

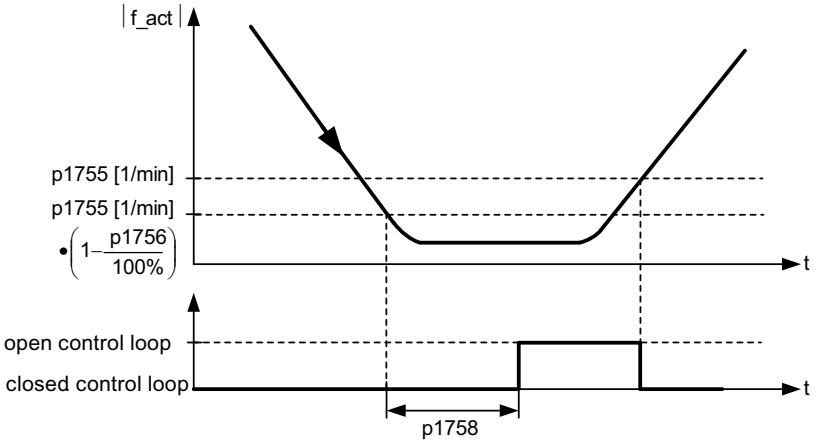

Figure 6-1 Changeover conditions for SLVC

Setting the torque setpoint

In open-loop operation, the calculated actual speed value is the same as the setpoint value. For static loads (e.g. for cranes) or during acceleration, you adapt the parameters p1610 (torque

setpoint static) and p1611 (additional acceleration torque) to the required maximum torque. The drive can then generate the static or dynamic load torque that occurs.

- If, for induction motors (ASM), p1610 is set to 0%, then only the magnetizing current r0331 is impressed.
  If 100% is set, the rated motor current p0305 is impressed.
- If, for reluctance motors (RESM) p1610 is set to 0 %, then only the no-load magnetizing current is impressed.
  If 100% is set, the rated motor current p0305 is impressed.
- For permanent-magnet synchronous motors (PMSM), for p1610 = 0%, a precontrol absolute value, derived from the additional torque r1515, remains instead of the magnetizing current of the induction motor.

To prevent stalling of the drive during acceleration, the supplementary acceleration torque p1611 can be increased or acceleration precontrol for the speed controller can be used. This avoids thermal overloading of the motor at low speeds.

If the moment of inertia of the drive is almost constant, acceleration precontrol with p1496 offers more advantages than the supplementary acceleration torque with p1611. You can determine the drive moment of inertia using the rotating measurement: p1900 = 3 and p1960 = 1.

Features of the vector control without encoder for speed feedback

The vector control without encoder for speed feedback has the following characteristics at low frequencies:

- Closed-loop controlled operation for passive loads up to approx. 0 Hz output frequency (p0500 = 2), for p1750.2 = 1 and p1750.3 = 1.
- Start an induction motor in the closed-loop controlled mode (after the motor has been completely excited), if the speed setpoint before the ramp-function generator is greater than p1755.
- Reversing without the need to change into the open-loop controlled mode is possible, if the range of the changeover speed p1755 is passed through in a shorter time than the changeover delay time set in p1758, and the speed setpoint in front of the ramp-function generator lies outside the open-loop controlled speed range of p1755.
- In the "Torque control" mode, at low speeds, the system always changes over into the open-loop controlled mode.

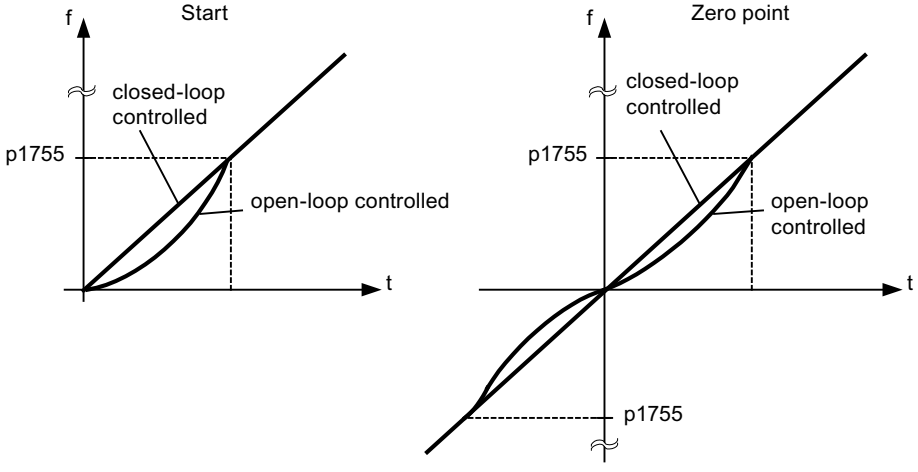

Figure 6-2 Zero crossover and when induction motors start in closed-loop or open-loop controlled operation

Advantages of the controlled operation down to f = 0 Hz

Closed-loop operation to approx. 0 Hz (can be set using parameter p1755) and the possibility to start or reverse at 0 Hz directly in closed-loop operation (can be set using parameter p1750) result in the following benefits:

- No changeover operation required within closed-loop control (bumpless behavior, no frequency dips, no discontinuities in the torque).
- Closed-loop speed control without encoder down to and including 0 Hz
- Passive loads down to a frequency of 0 Hz
- Steady-state closed-loop speed control down to approx. 0 Hz possible
- Higher dynamic performance when compared to open-loop controlled operation

Note

If, in the closed-loop controlled mode, start from 0 Hz or reversing takes longer than 2 s, or the time set in p1758 - then the system automatically changes over from closed-loop controlled into open-loop controlled operation.

Note

Operation in encoderless torque control only makes sense if, in the speed range below the changeover speed of the motor model (p1755), the setpoint torque is greater than the load torque. The drive must be able to follow the setpoint and the associated setpoint speed (p1499, FBD 6030).

Passive loads

In the closed-loop controlled mode, for passive loads, induction motors can be operated under steady-state conditions down to 0 Hz (standstill) without changing over into the open-loop controlled mode.

Make the following settings for this:

1. Set p0500 = 2 (technological application = passive loads for encoderless control to f = 0).
2. Set p0578 = 1 (calculate technology-dependent parameters).
   The following parameters are then set automatically:
   - p1574 = 2 V for induction motors
   - p1574 = 4 V for separately excited synchronous motors
   - p1750.2 = 1, closed-loop operation down to 0 Hz for passive loads
   - p1802 = 4 SVM/FLB without overcontrol
   - p1803 = 106% (factory setting)

As a consequence, the "Passive load" function is automatically activated.

Note

If p0500 is parameterized when commissioning the motor, the calculation is carried out automatically via p0340 and p3900. p0578is is then set automatically.

Closed-loop control without changeover between closed-loop and open-loop speed control is restricted to applications with passive load:
A passive load only has a reactive effect on the drive torque of the driving motor at the starting point, e.g. high inertia masses, pumps, fans, centrifuges, extruders, travel drives, or horizontal conveyors.
Standstill without a holding current is possible for as long as required. Then, at standstill, only the magnetizing current is impressed in the motor.

Note

Generator operation

Steady-state generator operation at frequencies close to 0 Hz is not permissible in this operating mode.

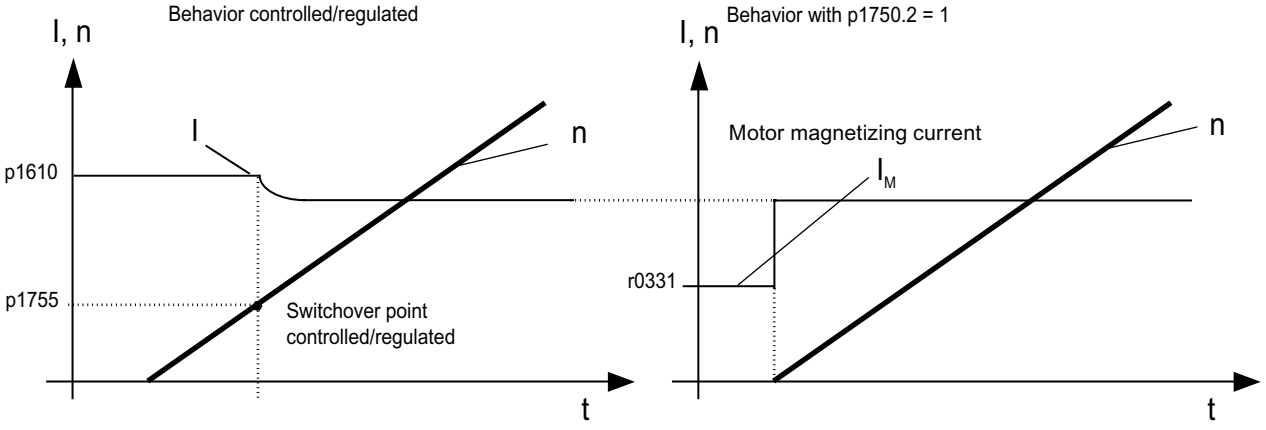

Figure 6-3 Vector control without an encoder

Blocking drives

If the load torque is higher than the torque limiting of the encoderless closed-loop vector control, the drive is braked to zero speed (standstill). In order that the open-loop controlled mode is not selected after the time p1758, p1750.6 can be set to 1. Under certain circumstances the "Motor blocked delay time" (p2177) must be increased.

Note

Exception for reversing drives

It is not permissible to use this setting if the load can force the drive to reverse.

Active loads

Active loads that can be used to reverse the drive, e.g., hoisting gear, must be started in the open-loop speed control mode. In this case, bit p1750.6 must be set to 0 (open-loop controlled operation when the motor is blocked). The static (steady state) torque setpoint p1610 must be greater than the maximum occurring load torque.

Note

Loads that can drive the motor

For applications with high regenerative load torques at low speeds, p1750.7 can also be set to 1. As a result, the speed changeover limits of the motor model are increased and a faster changeover can be made into open-loop controlled operation.

6.2.2 Permanent-magnet synchronous motors

Description

Permanent-magnet synchronous motors (PMSM) are always started and reversed in the open-loop controlled mode. The changeover speeds are set to 10% as well as 5% of the rated motor speed. Changeover is not subject to any time condition (p1758 is not evaluated). Prevailing load torques (motor or regenerative) are adapted in open-loop operation, facilitating constant-torque crossover to closed-loop operation even under high static loads. Whenever the pulses are enabled, the rotor position is identified.

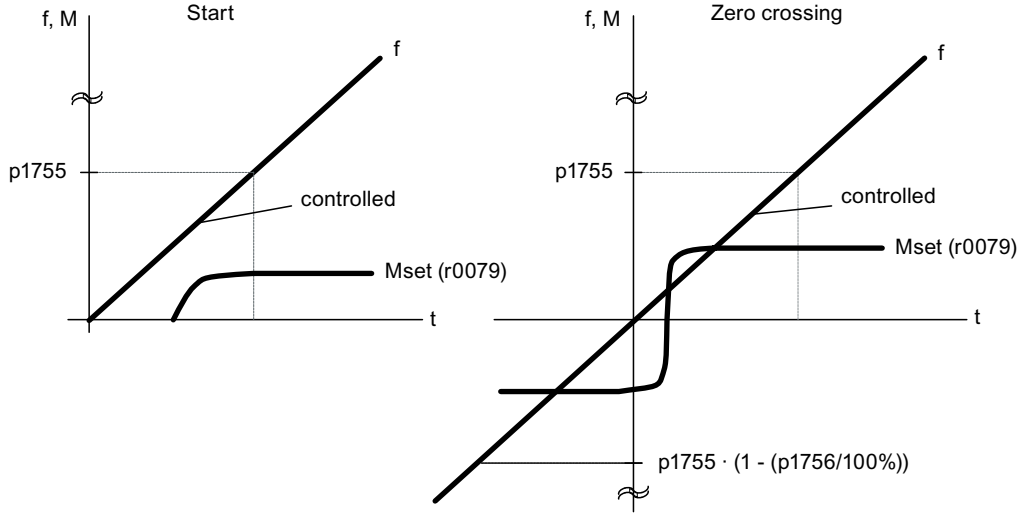

Figure 6-4 Zero point and starting in the open-loop controlled mode at low speeds

Closed-loop controlled operation down to f = 0 Hz

The actual rotor position can be continuously determined down to 0 Hz (standstill). With Siemens 1FW4 and 1PH8 torque motors, the load can be maintained at standstill or, from standstill, the motor can accelerate any load up to rated torque.

When the function is activated, at low speeds, additional noise can be heard, depending on the motor design.

The procedure is suitable for motors with internal magnets.

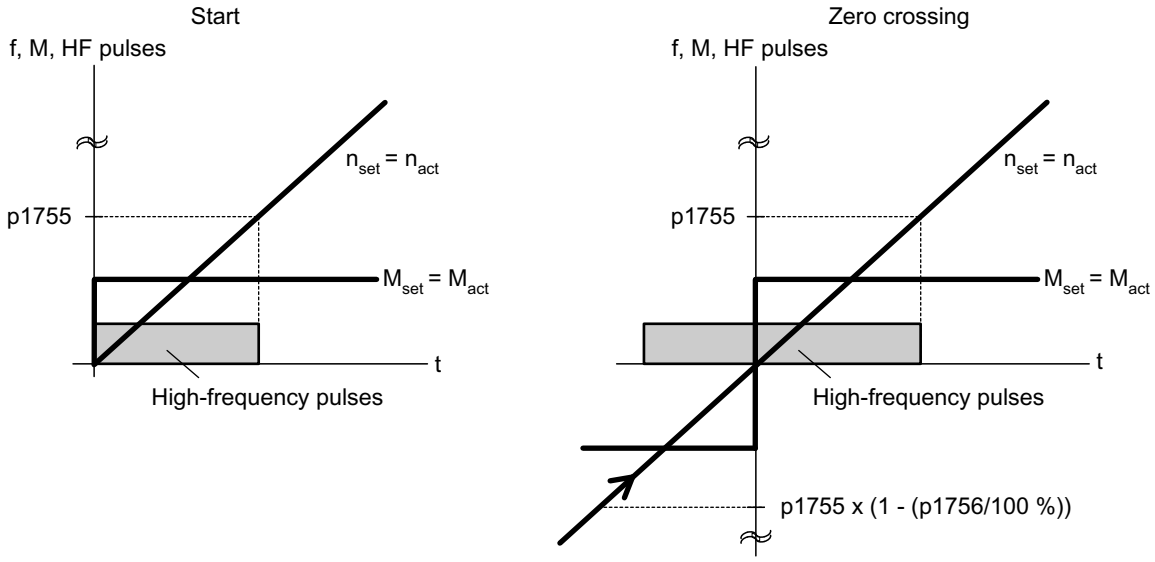

Figure 6-5 Zero point in closed-loop operation down to zero speed

Note

Only open-loop controlled operation is permitted when using a sine-wave filter.

Note

1FW4 torque motors

Siemens "1FW4" torque motors can be started from standstill and operated in the closed-loop torque controlled mode. The function is activated with parameter p1750.5 = 1.

Third-party motors must be checked on a case-for-case basis.

Supplementary conditions for the use of third-party motors

- The procedure is very suitable for motors with magnets within the rotor core (IPMSM - Interior Permanent Magnet Synchronous Motors).
- The ratio of stator quadrature reactance (Lsq): Stator direct-axis reactance (Lsd) must be > 1.5.
- The asymmetrical reactance ratio (Lsq:Lsd) is maintained in the motor up to a certain current; this determines the possible operating limits of the method. If the procedure should be operable up to the rated motor torque, then the reactance ratio must be retained up to the rated motor current.

The following parameter input is prerequisite for optimal response:

- Saturation characteristic: p0362 to p0369
- Load characteristic: p0398, p0399

Commissioning sequence for closed-loop controlled operation to zero speed:

- Perform the commissioning with motor data identification at standstill.
- Enter the parameters for the saturation characteristic and the load characteristic.
- Activate closed-loop controlled operation down to zero speed via parameter p1750.5 = 1.

The following advantages are obtained by maintaining closed-loop controlled operation:

- No torque irregularities as a result of changeover operations in the closed-loop control structure
- Closed-loop speed and torque control without encoder (sensorless) up to and including 0 Hz.
- Higher dynamic performance when compared to open-loop controlled operation
- Encoderless operation of drive line-ups (e.g. in the paper industry, master-slave operation) is possible.
- Active (including hanging/suspended) loads down to zero frequency.

Note

Motor reactor, sine-wave filter, dv/dt filter

The process cannot be used with the present motor reactors, sine-wave filters and dv/dt filters.

6.2.3 Synchronous reluctance motors

Description

Synchronous reluctance motors (RESM) are operated in vector control with/without encoder. Synchronous reluctance motors are motors that do not have a damping cage. The advantages of this motor type include:

- No rotor losses
- Energy efficient operation in the partial load range with reduced flux
- Fast magnetization at high load torques

Note

No U/f control

Synchronous reluctance motors must not be operated with U/f control, as this is only intended for diagnostic purposes.

Note

Synchronous reluctance motors are considered to be synchronous motors

Generally, the data for "Synchronous motors" provided in the SINAMICS S120 Manuals also applies to "Synchronous reluctance motors". Any deviating behavior/response of synchronous reluctance motors is always explicitly specified.

Features

For the motor type RESM in the default configuration (without test signal), at low speeds the system changes over into speed-controlled operation is also started in this way. The load torque requirement expected must be known for open-loop speed controlled operation, and can be parameterized using p1610 and p1611.

When reaching the voltage limit (depending on the load and speed), the motor flux is appropriately reduced (field weakening). Depending on the torque demanded, the required motor current increases up to the available current limit. If the speed is increased further, the current must be reduced to below the available current limit in order to maintain the voltage limit. In this range, the motor power available is therefore solely limited by the available voltage; for synchronous reluctance motors, as a result of the saturation attributes, it is slightly below that for induction motors.

Closed-loop controlled operation down to f = 0 Hz

Due to the magnetically anisotropic rotor, sensorless field-oriented operation can be continued until standstill (f = 0 Hz) in the synchronous reluctance motor. A replacement of the field orientation at low speed in an open-loop mode, as physically required with other machines, can thus be omitted in the synchronous reluctance motor.

To determine the rotor position and speed from voltage and current, not only their large signal levels are used. Additive small excitation pulses are superimposed on the driving fundamental voltage and the resulting current changes, which are dependent on the rotor position, are evaluated.

Functionally, the process permits a behavior that is completely equivalent to control operation with speed-position sensor. For example, sensorless torque control can be used without limiting the speed range. The achieved dynamics are only insignificantly reduced compared to operation with sensor for the vast majority of vector applications.

Requirements

- Vector control
- Only Motor Modules in the "Booksize" format
- Valid license ("Advanced synchronous reluctance control")

- Limited number of axes (see Chapter "Overview of system limits and system utilization (Page 834)")
- Max. cable lengths (depending on the sampling times and shielding):

Sampling times	Length	Features
250 µs	100 m	Unshielded cable[1)]
	50 m	Shielded cable
500 µs	300 m	Unshielded cable[1)]
	150 m	Shielded cable

[1)] Unshielded cables should be connected to the converter output **without** reactors.

Enabling controlled operation with test signal

Proceed as follows to activate controlled operation with a test signal:

1. Set the required operating mode (p1300[0...n]).
2. Activate controlled operation using a test signal (superimposed technique) with p1750.5 = 1. If required by the system, message F01040 appears when the power unit is configured (backup parameters and power on required). This alarm indicates that a parameter was changed. This means that the parameters must be backed up, and the system must be powered up again.

Function diagrams (see SINAMICS S120/S150 List Manual)

- 6030 Vector control - Speed setpoint, droop
- 6730 Vector control - Interface to Motor Module (ASM, p0300 = 1)
- 6731 Vector control - interface to the Motor Module (PMSM, p0300 = 2)
- 6792 Vector control - Interface to the Motor Module (RESM, p0300 = 6)

Overview of important parameters (see SINAMICS S120/S150 List Manual)

- p0305[0...n] Rated motor current
- r0331[0...n] Actual motor magnetizing current / short-circuit current
- p0500 Technology application
- p1300[0...n] Open-loop/closed-loop control operating mode
- p1574[0...n] Dynamic voltage reserve
- p1610[0...n] Torque setpoint static (without encoder)
- p1611[0...n] Supplementary acceleration torque (without encoder)
- p1750[0...n] Motor model configuration
- p1755[0...n] Motor model changeover speed encoderless operation
- p1756 Motor model changeover speed encoderless operation
- p1758[0...n] Motor model changeover delay time, closed/open-loop control
- p1802[0...n] Modulator mode
- p1803[0...n] Maximum modulation depth

6.3 Vector control with encoder

Benefits of vector control with an encoder

- The speed can be controlled right down to 0 Hz (standstill)
- Constant torque in the rated speed range
- Compared with speed control without an encoder, the dynamic response of drives with an encoder is significantly better because the speed is measured directly and integrated in the model created for the current components.
- Higher speed accuracy

Motor model change

A model change takes place between the current model and the observer model within the speed range p1752 · (100 % - p1753) and p1752. In the current model range (i.e at lower speeds), torque accuracy depends on whether thermal tracking of the rotor resistance is carried out correctly. In the observer-model range and at speeds of less than approx. 20% of the rated speed, torque accuracy depends primarily on whether thermal tracking of the stator resistance is carried out correctly. If the resistance of the supply cable is greater than 20 ... 30% of the total resistance, this should be entered in p0352 before motor data identification is carried out (p1900 / p1910).

To deactivate thermal adaptation, set p0620 = 0. This may be necessary if adaptation cannot function accurately enough.

Causes for inaccuracies:

- A sensor is not used for the temperature measurement and the ambient temperatures vary greatly.
- The overtemperatures of the motor (p0626 to p0628) deviate greatly from the default settings due to the motor design.

6.4 Speed controller

Overview

The control modes with/without encoder have the same speed controller structure. The speed controller structure comprises the following components:

- PI controller
- Speed controller precontrol
- Droop

The total of the output variables result in the torque setpoint which is reduced to the permissible magnitude by means of the torque setpoint limitation.

Function description

The speed controller receives its setpoint (r0062) from the setpoint channel and its actual value (r0063) either directly from the speed sensor (control with sensor (VC)) or indirectly via the motor model (control without sensor (SLVC)). The system deviation is increased by the PI controller and, in conjunction with the precontrol, results in the torque setpoint.

When the load torque increases, the speed setpoint is reduced proportionately when droop is active, which means that the single drive within a group (two or more mechanically connected motors) is relieved when the torque becomes too large.

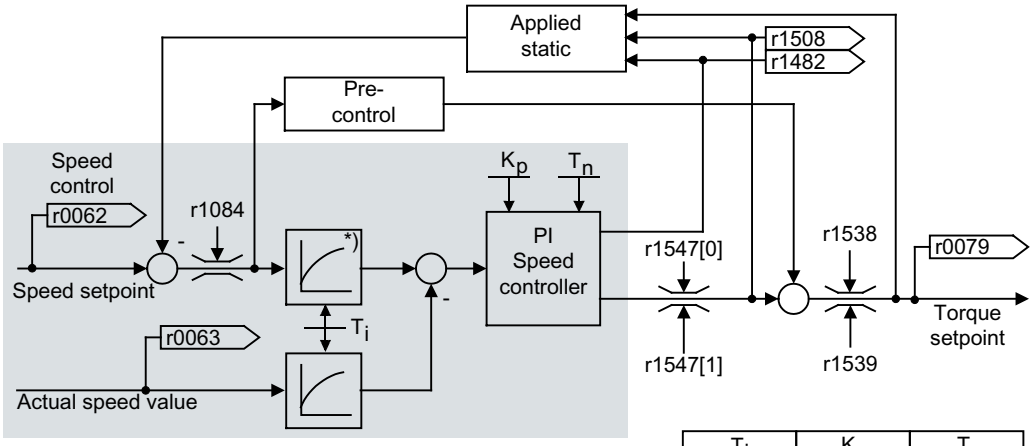

*) Active only when the precontrol has been activated (p1496 > 0)

	T_i	K_p	T_n
SLVC:	p1452	p1470	p1472
VC:	p1442	p1460	p1462

Figure 6-6 Overview: Speed controller

The optimum speed controller setting can be determined via the automatic speed controller tuning function (p1900 = 1, rotating measurement).

If the moment of inertia has been specified, the speed controller (K_p, T_n) can be calculated by means of automatic parameterization (p0340 = 4). The controller parameters are defined in accordance with the symmetrical optimum as follows:

$T_n = 4 \cdot T_s$

$K_p = 0.5 \cdot r0345 / T_s = 2 \cdot r0345 / T_n$

T_s = total of the short delay times (contains p1442 and p1452)

If vibration develops with these settings, reduce speed controller gain K_p manually. Actual speed smoothing can also be increased (standard procedure for gearless or high-frequency torsional vibration) and the controller calculation performed again because this value is also used to calculate K_p and T_n.

The following relationships apply for tuning:

- If K_p is increased, the controller becomes faster and overshoot is decreased. However, signal ripples and oscillations in the speed control loop will increase.
- If T_n is reduced, the controller also becomes faster. However, this increases the overshoot.

When setting the speed control manually, you are advised to define the possible dynamic response via K_p (and actual speed value smoothing) first, so that the integral time can subsequently be reduced as much as possible. Please note that the closed-loop control must also remain stable in the field-weakening range.

To suppress any vibrations that occur in the speed controller, it is usually only necessary to increase the smoothing time in p1452 for operation with an encoder or p1442 for operation without an encoder or reduce the controller gain.

The integral output of the speed controller can be monitored via r1482 and the limited controller output via r1508 (torque setpoint).

Note

In comparison with speed control with an encoder, the dynamic response of drives without an encoder is significantly reduced. The actual speed is derived by means of a model calculation from the converter output variables for current and voltage that have a corresponding interference level. To this end, the actual speed must be adjusted by means of filter algorithms in the software.

Speed controller response when a brake is opened

After a motor has been a magnetized, "Open brake" is controlled. The value that the BICO input delivers defines the speed controller response:

- BICO input p1475 (torque setting value for the motor holding brake) supplies a value of 0:
  - The speed controller I component is immediately enabled; this means that the system can respond to a slipping load and establish a holding torque.
  - Depending on the parameter assignment, the speed setpoint remains inhibited until the brake opening time has elapsed (p1275.6 = 0) - or until the brake feedback signal is received (p1275.6 = 1).
- BICO input p1475 (torque setting value for the motor holding brake) supplies a value ≠ 0:
  - The speed controller I component is held at the specified setting value until the "Brake open" feedback signal is received.
  - Only then are the speed controller I component and the speed setpoint enabled.

Function diagrams (see SINAMICS S120/S150 List Manual)

- 6040 Vector control - Speed controller with/without encoder

Overview of important parameters (see SINAMICS S120/S150 List Manual)

- r0062 CO: Speed setpoint after filter
- r0063[0...2] CO: Speed actual value
- p0340[0...n] Automatic calculation of motor/control parameters
- r0345[0...n] Nominal motor starting time
- p1442[0...n] Speed controller actual speed value smoothing time
- p1452[0...n] Speed controller actual speed value smoothing time (without encoder)
- p1460[0...n] Speed controller P gain adaptation speed, lower
- p1462[0...n] Speed controller integral time adaptation speed, lower
- p1470[0...n] Speed controller encoderless operation P gain
- p1472[0...n] Speed controller sensorless operation integral time
- p1475[0...n] CI: Speed controller torque setting value for motor holding brake
- p1478[0...n] CI: Speed controller integrator setting value
- r1482 CO: Speed controller I torque output
- r1508 CO: Torque setpoint before supplementary torque
- p1960 Rotating measurement selection

6.4.1 Speed controller adaptation

Function description

With the speed controller adaptation, vibrations that can occur in the speed controller are suppressed.

Speed-dependent K_{p_n}/T_{n_n} adaptation is activated by default. The required values are automatically calculated when commissioning and for the rotating measurement. If, in spite of the automatic calculation, speed oscillations do occur, then in addition the K_{p_n} component can be tuned using the free K_{p_n} adaptation. The free K_{p_n} adaptation is activated by connecting a signal source at p1455. The factor calculated from this is multiplied by the K_{p_n} value of the speed-dependent adaptation. The range of action of the free K_{p_n} adaptation is set using parameters p1456 to p1459.

In addition using p1400.6 = 1, the T_{n_n} component of the speed-dependent adaptation can be tuned. The T_{n_n} value of the speed-dependent adaptation is divided by the factor of the free adaptation.

The K_{p_n}/T_{n_n} adaptation can be deactivated with p1400.5 = 0. As a consequence, the dynamic reduction of the speed controller is deactivated.

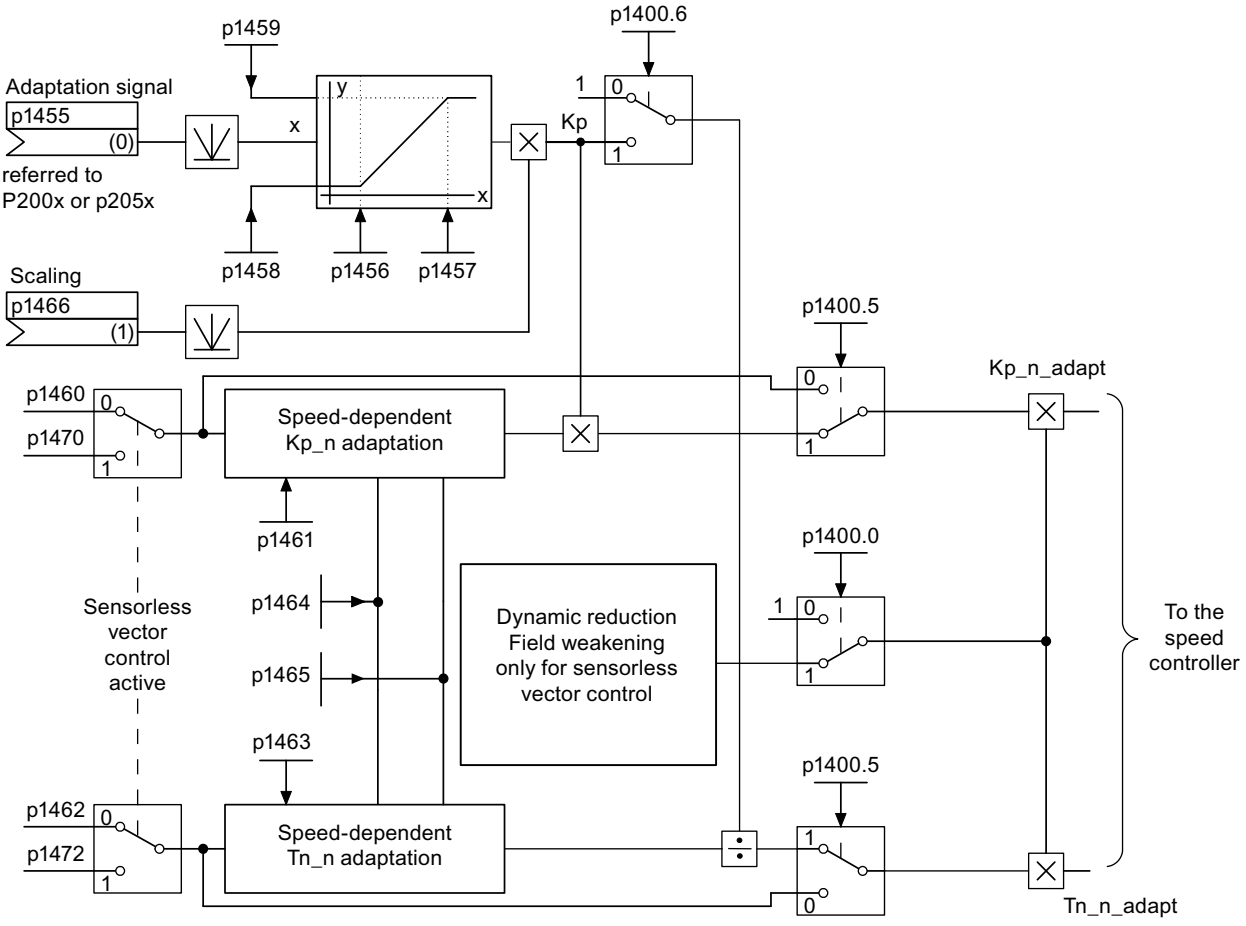

Figure 6-7 Signal flow: Kp_n-/Tn_n adaptation

Example: Speed-dependent adaptation

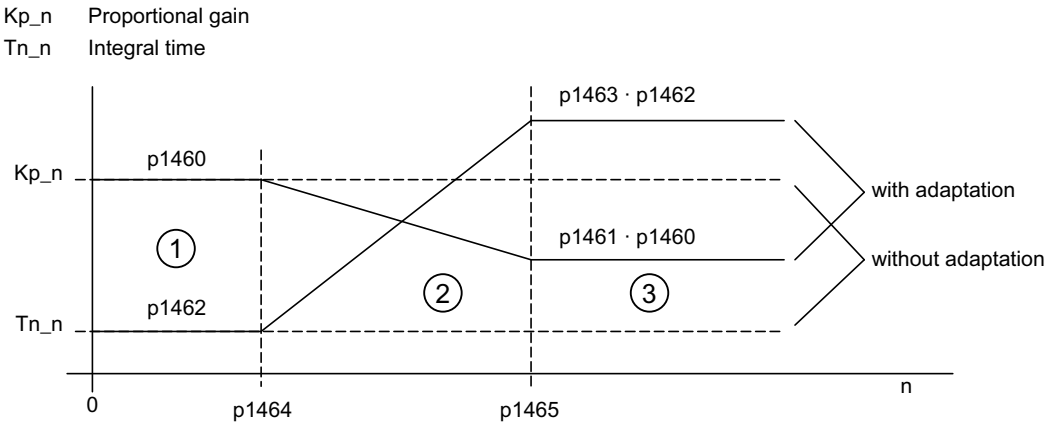

① Constant lower speed range (n < p1464)

② Adaptation range (p1464 < n < p1465)

③ Constant upper speed range (n > p1465)

Figure 6-8 Speed controller-K_{p_n}/T_{n_n} adaptation

For operation without encoder, a higher value is in p1464 than in p1465. As a consequence, the behavior is inverted: K_p increases with increasing speed and T_n decreases.

Special case: Encoderless operation in field-weakening range

In encoderless operation, dynamic reduction for the field-weakening range can be activated with p1400.0 = 1.

K_p/T_n ~ flux setpoint

K_p/T_n decreases proportionally with the flux setpoint (minimum: Factor 0.25).

This dynamic reduction is activated to reduce the controller dynamic response in the field-weakening range. Up to the field-weakening range, the higher controller dynamic of the speed controller is kept.

Function diagrams (see SINAMICS S120/S150 List Manual)

- 6050 Vector control - Speed controller adaptation (K_{p_n}-/T_{n_n} adaptation)

Overview of important parameters (see SINAMICS S120/S150 List Manual)

- p1400.0 Speed control configuration: Automatic Kp/Tn adaptation active
- p1400.5 Speed control configuration: Kp/Tn adaptation active
- p1400.6 Speed control configuration: Free Tn adaptation active
- p1470 Speed controller encoderless operation P gain
- p1472 Speed controller sensorless operation integral time

Free Tn_n adaptation

- p1455[0...n] CI: Speed controller P gain adaptation signal
- p1456[0...n] Speed controller P gain adaptation lower starting point
- p1457[0...n] Speed controller P gain adaptation upper starting point
- p1458[0...n] Lower adaptation factor
- p1459[0...n] Upper adaptation factor
- p1466[0...n] CI: Speed controller P gain scaling

Speed-dependent Kp_n/Tn_n adaptation

- p1460[0...n] Speed controller P gain adaptation speed, lower
- p1461[0...n] Speed controller Kp adaptation speed, upper scaling
- p1462[0...n] Speed controller integral time adaptation speed, lower
- p1463[0...n] Speed controller Tn adaptation speed, upper scaling
- p1464[0...n] Speed controller adaptation speed, lower
- p1465[0...n] Speed controller adaptation speed, upper

Dynamic response reduction field weakening (SLVC only)

- p1400.0 Speed control configuration: Automatic Kp/Tn adaptation active

6.4.2 Speed controller precontrol and reference model

Speed controller precontrol

The command behavior of the speed control loop can be improved by calculating the acceleration torque from the speed setpoint and connecting it on the line side of the speed controller. The torque setpoint "mv" is calculated as follows:

$$mv = p1496 \cdot J \cdot \frac{dn}{dt} = p1496 \cdot p0341 \cdot p0342 \cdot \frac{dn}{dt}$$

This torque setpoint "mv" is applied to the current controller or the current controller is precontrolled using adaptation elements directly as additive reference variable (enabled via p1496).

The motor moment of inertia p0341 is calculated directly during commissioning or when the entire set of parameters is calculated (p0340 = 1). The factor p0342 between the total moment of inertia J and the motor moment of inertia must be determined manually or by means of speed controller tuning. The acceleration is calculated from the speed difference over the time "dn/dt".

Note

When speed controller tuning is carried out, the ratio between the total moment of inertia and that of the motor (p0342) is determined and acceleration precontrol scaling (p1496) is set to 100%.

When p1400.2 = p1400.3 = 0, precontrol balancing is set automatically.

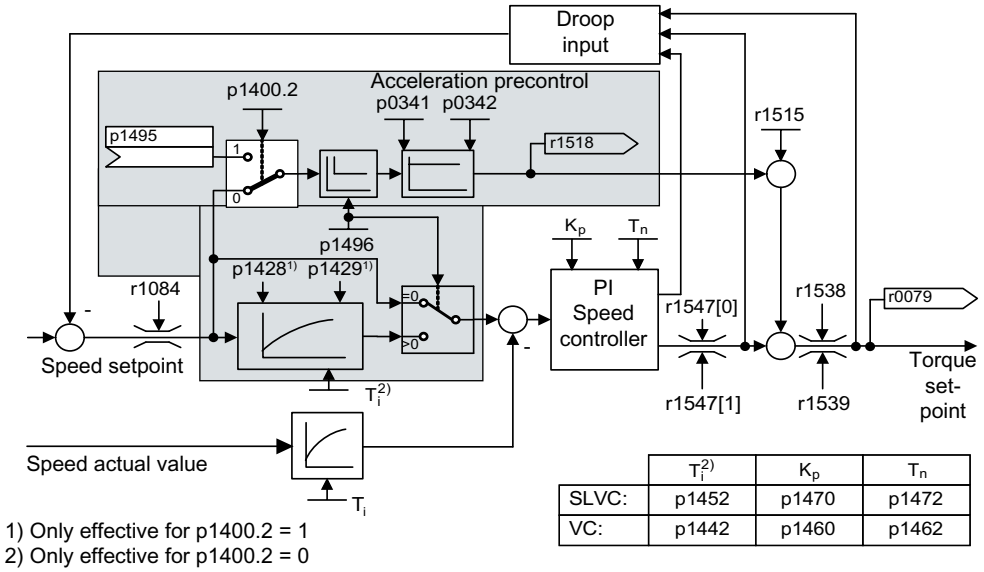

	$T_i^{2)}$	K_p	T_n
SLVC:	p1452	p1470	p1472
VC:	p1442	p1460	p1462

Figure 6-9 Speed controller with precontrol

If the speed controller has been correctly adjusted, it only has to compensate for disturbance variables in its own control loop, which can be achieved by means of a relatively small change to the correcting variables. Speed setpoint changes, on the other hand, are carried out without involving the speed controller and are, therefore, performed more quickly.

The effect of the precontrol variable can be adapted according to the application via the evaluation factor p1496. If p1496 = 100%, precontrol is calculated in accordance with the motor and load moment of inertia (p0341, p0342). A balancing filter is used automatically to prevent the speed controller from acting against the injected torque setpoint. The time constant of the balancing filter corresponds to the equivalent delay time of the speed control loop. Speed controller precontrol is correctly set (p1496 = 100%, calibration via p0342) when the I component of the speed controller (r1482) does not change during a ramp-up or ramp-down in the range n > 20 % · p0310. Thus, precontrol allows a new speed setpoint to be approached without overshoot. (Requirement: Torque limiting does not switch in and the moment of inertia remains constant.)

If the speed controller is precontrolled through injection, the speed setpoint (r0062) is delayed with the same smoothing time (p1442 or p1452) as the actual value (r1445). This ensures that no target/actual difference (r0064) occurs at the controller input during acceleration, which would be attributable solely to the signal propagation time.

When speed precontrol is activated, the speed setpoint must be specified continuously or without a higher interference level (avoids sudden torque changes). An appropriate signal can be generated by smoothing the speed setpoint or activating the ramp-function generator rounding p1130 – p1131.

The starting time r0345 (T_{start}) is a measure for the total moment of inertia J of the machine and describes the time during which the unloaded drive can be accelerated with the rated motor torque r0333 ($M_{mot,rated}$) from standstill to the rated motor speed p0311 ($n_{mot,rated}$).

$$r0345 = T_{Starting} = J \cdot \frac{(2\pi \cdot n_{Mot,\,rated})}{(60 \cdot M_{Mot,\,rated})} = p0341 \cdot p0342 \cdot \frac{(2\pi \cdot p0311)}{(60 \cdot r0333)}$$

If these supplementary conditions are in line with the application, the starting time can be used as the lowest value for the ramp-up or ramp-down time.

Note

The ramp-up and ramp-down times (p1120; p1121) of the ramp-function generator in the setpoint channel should be set accordingly so that the motor speed can track the setpoint during acceleration and braking. This ensures that speed controller precontrol is functioning optimally.

The acceleration precontrol using a connector input (p1495) is activated by the parameter settings p1400.2 = 1 and p1400.3 = 0. p1428 (dead time) and p1429 (time constant) can be set for balancing purposes.

Reference model

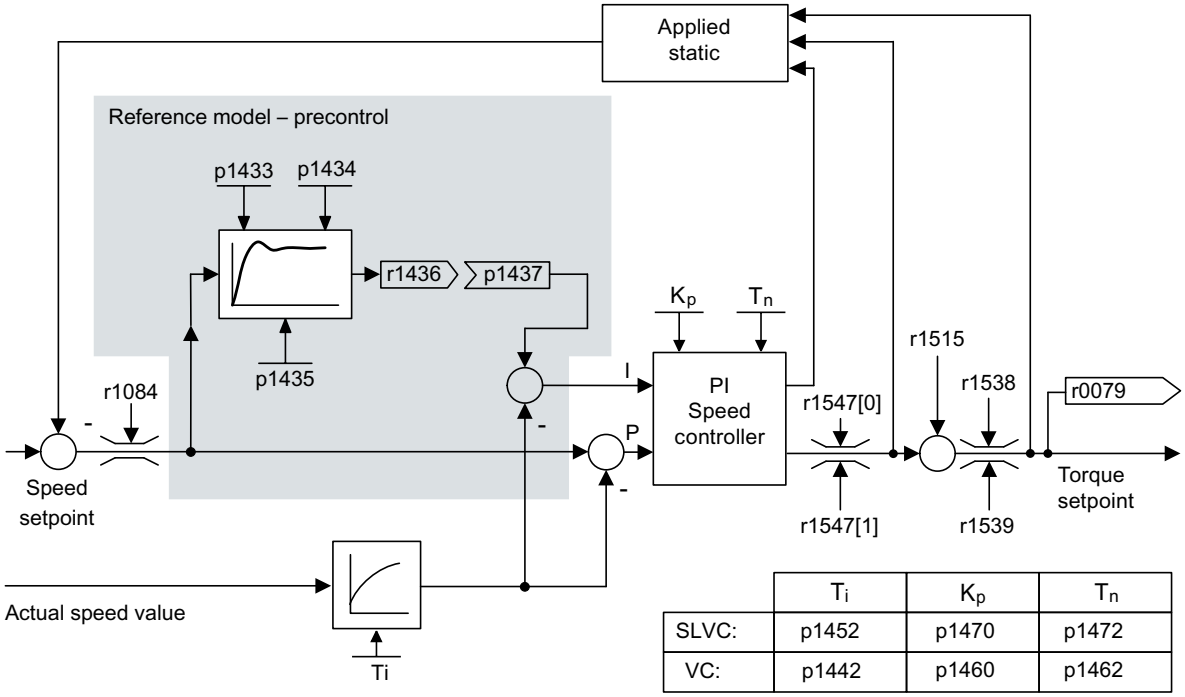

	T_i	K_p	T_n
SLVC:	p1452	p1470	p1472
VC:	p1442	p1460	p1462

The reference model is activated with p1400.3 = 1.

The reference model is used to emulate the speed control loop with a P speed controller.

The loop emulation can be set in p1433 to p1435. It is activated when p1437 is connected to the output of model r1436.

The reference model delays the setpoint-actual deviation for the integral component of the speed controller so that transient conditions can be suppressed.

The reference model can also be emulated externally and its output signal injected via p1437.

Function diagrams (see SINAMICS S120/S150 List Manual)

- 6031 Vector control - Precontrol balancing reference/acceleration model
- 6040 Vector control - Speed controller with/without encoder

Overview of important parameters (see SINAMICS S120/S150 List Manual)

- p0311[0...n] Rated motor speed
- r0333[0...n] Rated motor torque
- p0341[0...n] Motor moment of inertia
- p0342[0...n] Ratio between the total and motor moment of inertia
- r0345[0...n] Nominal motor starting time
- p1400[0...n] Speed control configuration
- p1428[0...n] Speed precontrol balancing dead time
- p1429[0...n] Speed precontrol balancing time constant
- p1496[0...n] Acceleration precontrol scaling
- r1518[0...1] CO: Acceleration torque

Reference model

- p1400[0...n] Speed control configuration
- p1433[0...n] Speed controller reference model natural frequency
- p1434[0...n] Speed controller reference model damping
- p1435[0...n] Speed controller reference model dead time
- r1436 CO: Speed controller reference model speed setpoint output
- p1437[0...n] CI: Speed controller reference model I component input

6.5 Droop

Requirement

- All coupled drives must be operated in vector control and closed-loop speed control, with or without an encoder.
- Only a single common ramp-function generator may be used for mechanically coupled drives.

Function description

The "Droop" function ensures that the speed setpoint is reduced proportionately as the load torque increases. The function is enabled via parameter p1492.

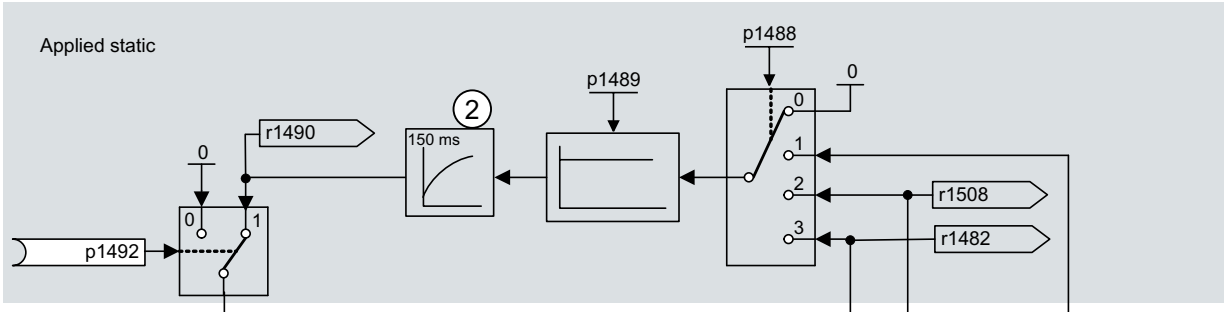

	Ti	Kp	Tn
SLVC:	p1452	p1470	p1472
VC:	p1442	p1460	p1462

① Active only when the precontrol has been activated (p1496 > 0).

② Only active for sensorless vector control (SLVC).

Figure 6-10 Speed controller with static injection

The droop has a torque limiting effect on a drive that is mechanically coupled to a different speed (e.g. guide roller on a goods train). In connection with the torque setpoint of a leading speed-controlled drive, a very effective load distribution can also be implemented. With the appropriate setting (in contrast to torque control or load distribution with overload and limitation), this load distribution controls even a smooth mechanical coupling or the case of slipping.

This method is only suitable to a limited extent for drives that are accelerated and braked with significant changes in speed.

The droop feedback is used, for example, in applications in which two or more motors are connected mechanically or operate with a common shaft and fulfill the above requirements. It limits the torque differences that can occur as a result of the mechanical coupling by appropriately modifying the speeds of the individual motors. The drive is relieved when the torque is too large.

Function diagrams (see SINAMICS S120/S150 List Manual)

- 6030 Vector control - Speed setpoint, droop

Overview of important parameters (see SINAMICS S120/S150 List Manual)

- r0079 CO: Torque setpoint
- r1482 CO: Speed controller I torque output
- p1488[0...n] Droop input source
- p1489[0...n] Droop feedback scaling
- r1490 CO: Droop feedback speed reduction
- p1492[0...n] BI: Droop feedback enable
- r1508 CO: Torque setpoint before supplementary torque

6.6 Open actual speed value

Function description

Via the parameter p1440 (CI: Speed controller actual speed value) is the signal source for the actual speed value of the speed controller. In the factory setting, the unsmoothed actual speed value r0063[0] is the default signal source.

Via parameter p1440, a filter can be switched into the actual value channel or an external actual speed value can be fed in, according to the specific system requirements.

Parameter r1443 displays the actual speed value present at p1440.

Note

When feeding in an external actual speed value, ensure the monitoring functions continue to be derived from the motor model.

Behavior for speed control with an encoder (p1300 = 21)

A motor encoder must always be available for the speed or position signal of the motor model (e.g. evaluation via SMC, see p0400). The actual speed of the motor (r0061) and the position information for synchronous motors still come from this motor encoder and are not influenced by the setting in p1440.

Interconnection of p1440:
When interconnecting connector input p1440 with an external actual speed value, ensure the speed scaling is the same (p2000).

The external speed signal should correspond to the average speed of the motor encoder (r0061).

Behavior for speed control without an encoder (p1300 = 20)

Depending on the transmission path of the external speed signal, dead times will occur; these dead times must be taken into account in the speed controller's parameter assignment (p1470, p1472) and can lead to corresponding losses in the dynamic performance.
Signal transmission times must therefore be minimized.

p1750.2 = 1 should be set so that the speed controller is also able to work at standstill (closed-loop controlled operation to zero frequency for passive loads). Otherwise, at low speeds it switches over to speed-controlled operation, so that the speed controller is switched off and the measured actual speed no longer has an influence.

Monitoring of the speed deviation between motor model and external speed

The external actual speed (r1443) is compared with the actual speed of the motor model (r2169). If the deviation is greater than the tolerance threshold set in p3236, after the switch-off delay time set in p3238 expires, fault F07937 (Drive: Speed deviation motor model to external speed) is generated and the drive switched-off corresponding to the set response (factory setting: OFF2).

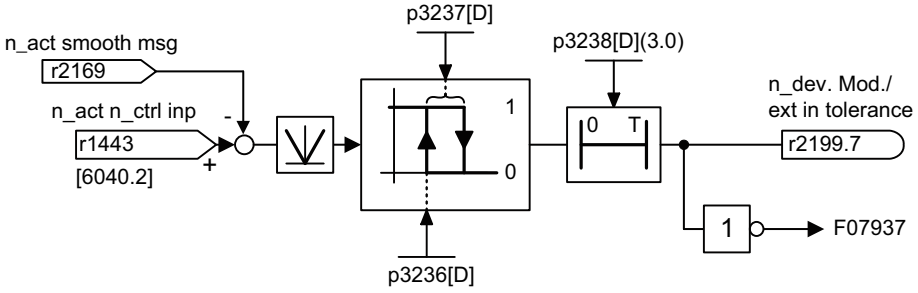

Figure 6-11 Monitoring "Speed deviation model / external in tolerance"

Function diagrams (see SINAMICS S120/S150 List Manual)

- 6040 Vector control - Speed controller with/without encoder
- 8012 Signals and monitoring function - Torque messages, motor locked/stalled

Overview of important parameters (see SINAMICS S120/S150 List Manual)

- r0063[0...2] CO: Speed actual value
- p1440[0...n] CI: Speed controller actual speed value input
- r1443 CO: Actual speed value actual speed value on actual value input
- r2169 CO: Actual speed value smoothed messages
- r2199.7 CO/BO: Status word, monitoring 3
  Speed deviation model / external in tolerance
- p3236[0...n] Speed threshold 7
- p3237[0...n] Hysteresis speed 7
- p3238[0...n] OFF delay n_act_motor_model = n_act_external

6.7 Closed-loop torque control

Function description

For speed control without encoder (p1300 = 20) or with encoder (p1300 = 21), a changeover can be made to torque control (following drive) using BICO parameter p1501. A changeover cannot be made between speed and torque control if torque control is selected directly with p1300 = 22 or 23. The torque setpoint and/or supplementary setpoint can be entered using BICO parameter p1503 (CI: torque setpoint) or p1511 (CI: supplementary torque setpoint). The supplementary torque is active both with torque and speed control. This particular feature with the supplementary torque setpoint allows a precontrol torque to be applied for speed control.

Note

For safety reasons, connecting to fixed torque setpoints is currently not possible.

Regenerative energy may accumulate, and this must be either fed back into the supply system or converted into heat using a braking resistor.

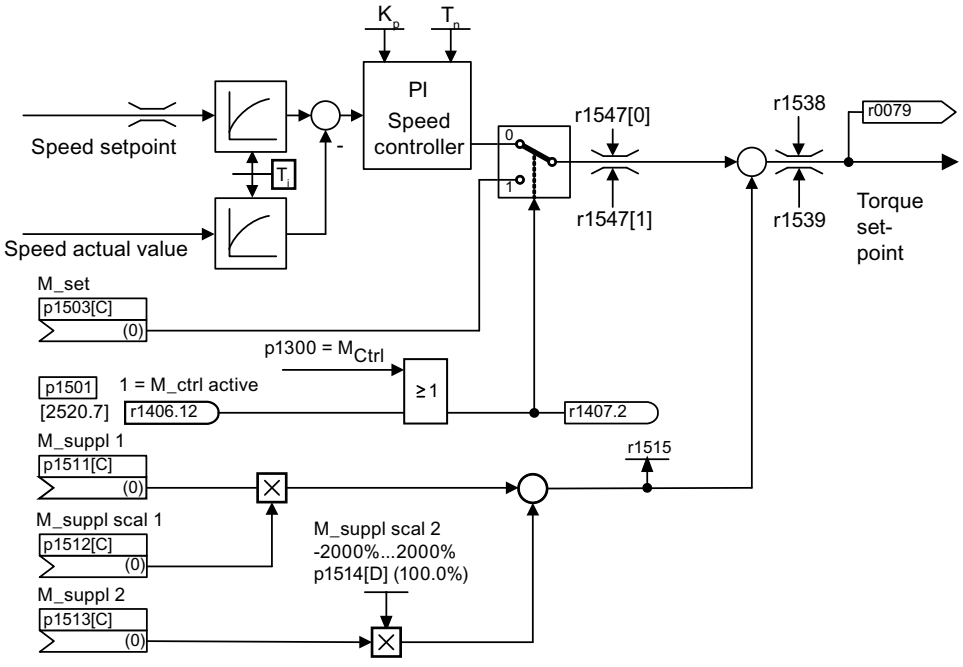

Figure 6-12 Signal flow: Closed-loop speed/torque control

The total of the two torque setpoints is limited in the same way as the speed control torque setpoint. Above the maximum speed (p1082), a speed limiting controller reduces the torque limits in order to prevent the drive from accelerating any further.

A "real" torque control (with self-adjusting speed) is only possible in closed-loop but not open-loop control for sensorless vector control (SLVC).

In open-loop control, the torque setpoint adjusts the setpoint speed via a ramp-function generator (integration time ~ p1499 · p0341 · p0342). For this reason, encoderless torque control at standstill is only suitable for applications that require an acceleration torque but no load torque (e.g. traction drives). This restriction does not apply to torque control with sensor.

OFF responses

- OFF1 and p1300 = 22, 23
  - Response as for OFF2
- OFF1, p1501 = "1" signal and p1300 ≠ 22, 23
  - No separate braking response; the braking response is provided by a drive that specifies the torque.
  - The pulses are suppressed when the brake application time (p1217) expires. Standstill is detected when the actual speed value is less than the speed threshold (p1226) or when the monitoring time (p1227) that started when speed setpoint ≤ speed threshold (p1226) has expired.
  - Switching-on inhibited is activated.
- OFF2
  - Immediate pulse suppression, the drive coasts to standstill.
  - The motor brake (if parameterized) is closed immediately.
  - Switching-on inhibited is activated.
- OFF3
  - Switch to speed-controlled operation
  - n_set = 0 is input immediately to brake the drive along the OFF3 deceleration ramp (p1135).
  - When standstill is detected, the motor brake (if parameterized) is closed.
  - The pulses are suppressed when the motor brake application time (p1217) has elapsed. Standstill is detected when the actual speed value is less than the speed threshold (p1226) or when the monitoring time (p1227) that started when speed setpoint ≤ speed threshold (p1226) has expired.
  - Switching-on inhibited is activated.

Function diagrams (see SINAMICS S120/S150 List Manual)

- 6060 Vector control - Torque setpoint

Overview of important parameters (see SINAMICS S120/S150 List Manual)

- p0341[0...n] Motor moment of inertia
- p0342[0...n] Ratio between the total and motor moment of inertia
- p1300[0...n] Open-loop/closed-loop control operating mode
- p1499[0...n] Accelerating for torque control, scaling
- p1501[0...n] BI: Change over between closed-loop speed/torque control
- p1503[0...n] CI: Torque setpoint
- p1511[0...n] CI: Supplementary torque 1
- p1512[0...n] CI: Supplementary torque 1 scaling

- p1513[0...n] CI: Supplementary torque 2
- p1514[0...n] Supplementary torque 2 scaling
- r1515 Supplementary torque total

6.8 Torque limiting

Function description

The torque limiting value specifies the maximum permissible torque. Different limits can be parameterized for motoring and generating operation.

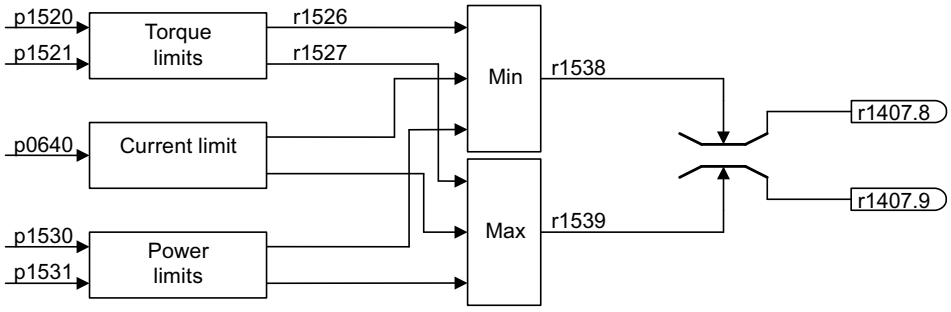

Figure 6-13 Signal flow: Torque limitation

- p0640[0...n] Current limit
- p1520[0...n] CO: Torque limit upper/motoring
- p1521[0...n] CO: Torque limit lower/regenerative
- p1522[0...n] CI: Torque limit upper/motoring
- p1523[0...n] CI: Torque limit lower/regenerative
- p1524[0...n] CO: Torque limit upper/motoring scaling
- p1525[0...n] CO: Torque limit, lower/regenerative scaling
- p1530[0...n] Motor mode power limit
- p1531[0...n] Regenerative mode power limit

The currently active torque limit values are displayed in the following parameters:

- r0067 CO: Output current maximum
- r1526 Torque limit, upper/motoring without offset
- r1527 Torque limit, lower/regenerative without offset

All of the following limits apply to the torque setpoint, which is present either at the speed controller output in the case of speed control, or at the torque input in the case of torque control. The minimum/maximum value of the different limits is used in each case. This minimum/maximum is cyclically calculated and displayed in the following parameters:

- r1538 CO: Upper effective torque limit
- r1539 CO: Lower effective torque limit

These cyclic values therefore limit the torque setpoint at the speed controller output / torque input or indicate the instantaneous maximum possible torque. If the torque setpoint is limited in the Motor Module, this is indicated via the following diagnostic parameters:

- r1407.8 CO:/BO: Status word speed controller: Upper torque limit active
- r1407.9 CO:/BO: Status word speed controller: Lower torque limit active

Function diagrams (see SINAMICS S120/S150 List Manual)

- 6060 Vector control - Torque setpoint
- 6630 Vector control - Upper/lower torque limit
- 6640 Vector control - Current/power/torque limits

6.9 Vdc control

Function description

The "Vdc control" function can be activated using the appropriate measures if an overvoltage or undervoltage is present in the DC link.

- **Overvoltage in the DC link**
  - Typical cause
    The drive is operating in regenerative mode and is supplying too much energy to the DC link.
  - Remedy
    Reduce the regenerative torque to maintain the DC link voltage within permissible limits. With the Vdc controller activated, the converter automatically partly extends the ramp-down time of a drive if the shutdown supplies too much energy to the DC link.
- **Undervoltage in the DC link**
  - Typical cause
    Failure of the supply voltage or supply for the DC link.
  - Remedy
    Specify a regenerative torque for the rotating drive to compensate the existing losses, thereby stabilizing the voltage in the DC link (kinetic buffering).

Note

During operation of the Braking Module, the following must be observed:

- You must set the threshold of the Braking Module below the V_{dc_max} threshold.
- You must switch off the V_{dc_max} controller.

Properties

- V_{dc} control
  - This comprises V_{dc_max} control and V_{dc_min} control (kinetic buffering), which are independent of each other.
  - Joint PI controller. The dynamic factor is used to set V_{dc_min} and V_{dc_max} control independently of each other.
- V_{dc_max} control
  - This function can be used to control momentary regenerative load without shutdown using "overvoltage in the DC link".
  - V_{dc_max} control is only recommended with a supply without active closed-loop control for the DC link and without feedback.
- V_{dc_min} control (kinetic buffering)
  - With this function, the kinetic energy of the motor is used for buffering the DC link voltage in the event of a momentary power failure, thereby delaying the drive.

Vdc_min control

In the event of a power failure, V_{dc_min} is activated when the V_{dc_min} switch-on level is undershot. This controls the DC link voltage and maintains it at a constant level. The motor speed is reduced.

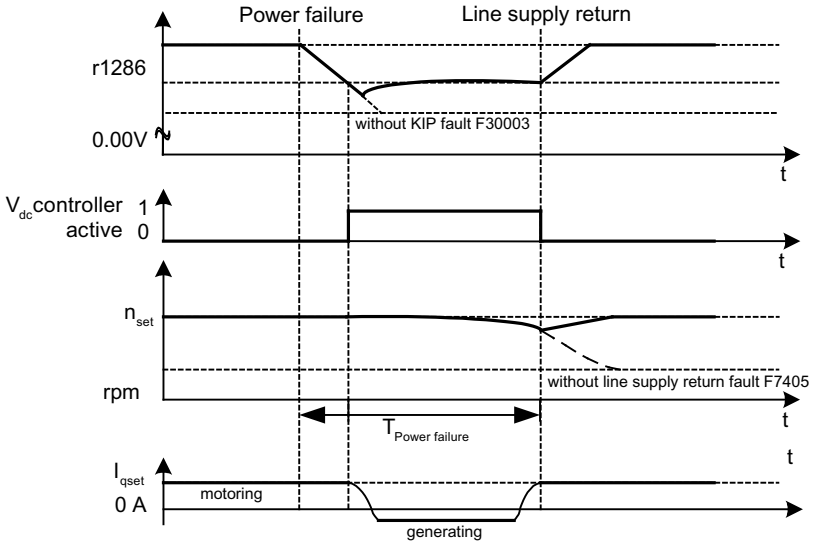

Figure 6-14 Switching V_{dc_min} control on/off (kinetic buffering)

When the power supply is restored, the DC link voltage increases again and V_{dc_min} control is deactivated again at 5% above the V_{dc_min} switch-on level. The motor continues operating normally.

If the power supply is not re-established, the motor speed continues to drop. When the threshold in p1257 is reached, this results in a response in accordance with p1256.

Once the time threshold (p1255) has elapsed without the line voltage being re-established, a fault is triggered (F07406), which can be parameterized as required (factory setting: OFF3).

The V_{dc_min} controller can be activated for a drive. Other drives can participate in supporting the DC link, by transferring to them a scaling of their speed setpoint from the controlling drive via BICO interconnection.

Note

If it is expected that the line supply will return, you must make sure that the drive lineup is not disconnected from the line supply. It could become disconnected, for example, if the line contactor drops out. The line contactor must be supplied, e.g. from an uninterruptible power supply (UPS).

Vdc_max control

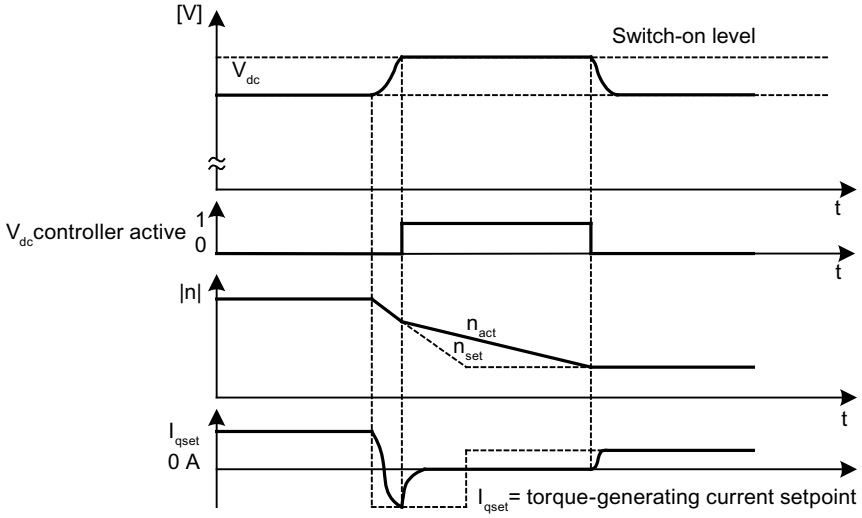

Figure 6-15 Switching the V_{dc_max} control on/off

The switch-on level for V_{dc_max}-control (r1242) is calculated as follows:

- When automatic switch-in level sensing is disabled (p1254 = 0)
  r1242 = 1.15 · p0210 (Drive unit line supply voltage, DC link)
- When automatic switch-in level sensing is enabled (p1254 = 1)
  r1242 = V_{dc_max} - 50 V (V_{dc_max}: Overvoltage threshold of the Motor Module)

Restrictions for Basic Line Modules

⚠ WARNING

Unexpected motion of individual drives

If several Motor Modules are supplied from one infeed unit, then if the V_{dc_max}control is incorrectly parameterized, individual drives can accelerate in an uncontrolled fashion, which can lead to death or severe injury.

- Only activate the V_{dc_max} control for the Motor Module whose drive has the highest moment of inertia.
- Inhibit this function for all other Motor Modules, or set this function to monitoring only.

If several Motor Modules are supplied from a non-regenerative infeed unit (e.g. a Basic Line Module), or for power failure or overload (for SLM / ALM), the V_{dc_max} control may only be activated for a Motor Module whose drive should have a high moment of inertia. For the other Motor Modules, this function must be disabled or monitoring must be set.

If the V_{dc_max} control is active for multiple Motor Modules, then the controllers may have negative effects on each other in the case of unfavorable parameter assignment. The drives may become unstable and individual drives may unintentionally accelerate.

Remedy

- activate the V_{dc_max} control:
  - Vector control: p1240 = 1 (factory setting)
  - Servo control: p1240 = 1
  - U/f control: p1280 = 1 (factory setting)
- Inhibit V_{dc_max} control:
  - Vector control: p1240 = 0
  - Servo control: p1240 = 0 (factory setting)
  - U/f control: p1280 = 0
- Activate the V_{dc_max} monitoring
  - Vector control: p1240 = 4 or 6
  - Servo control: p1240 = 4 or 6
  - U/f control: p1280 = 4 or 6

6.9.1 Function diagrams and parameters

Function diagrams (see SINAMICS S120/S150 List Manual)

- 6220 Vector control - Vdc_max controller and Vdc_min controller

Overview of important parameters (see SINAMICS S120/S150 List Manual)

- p1240[0...n] Vdc controller or Vdc monitoring configuration
- r1242 Vdc_min controller switch-on level
- p1243[0...n] Vdc_max controller dynamic factor
- p1245[0...n] Vdc_min controller switch-on level (kinetic buffering)
- r1246 Vdc_min controller switch-on level (kinetic buffering)
- p1247[0...n] Vdc_min controller dynamic factor (kinetic buffering)
- p1250[0...n] Vdc controller proportional gain
- p1251[0...n] Vdc controller integral time
- p1252[0...n] Vdc controller rate time
- p1254 Vdc_max controller automatic ON level detection
- p1256[0...n] Vdc_min controller response (kinetic buffering)
- p1257[0...n] Vdc_min controller speed threshold
- r1258 CO: Vdc controller output

6.10 Current setpoint filter

Function description

You can parameterize the two current setpoint filters 1 and 2 connected in series as follows:

- 2nd order lowpass (PT2: -40 dB/decade)
- Band-stop filter
- Low-pass with reduction
- General 2nd order filter

Band-stop filter and low-pass filter with reduction are converted into the parameters of the general 2nd order filter. The phase frequency curve is shown alongside the amplitude log frequency curve. A phase shift results in a control system delay and should be kept to a minimum.

You activate the current setpoint filters with p1656[0...n].0 = 1 and p1656[0...n].1 = 1. You set the current setpoint parameters with p1657 to p1666.

As long as the parameter setting p1699 = 1 is active, the background calculation of the filter data is not performed, even when filter parameters are changed. Only with parameter setting p1699 = 0, is the calculation performed.

Examples for the current setpoint filter can be found in the description of the servo control in Chapter "Current setpoint filter (Page 100)".

Function diagrams (see SINAMICS S120/S150 List Manual)

- 6710 Vector control - Current setpoint filter

Overview of important parameters (see SINAMICS S120/S150 List Manual)

- p1655[0...4] CI: Current setpoint filter / actual speed value filter natural frequency tuning
- p1656[0...n] Current setpoint filter activation
- p1657[0...n] Current setpoint filter 1 type
- p1658[0...n] Current setpoint filter 1 denominator natural frequency
- p1659[0...n] Current setpoint filter 1 denominator damping
- p1660[0...n] Current setpoint filter 1 numerator natural frequency
- p1661[0...n] Current setpoint filter 1 numerator damping
- p1662[0...n] Current setpoint filter 2 type
- p1663[0...n] Current setpoint filter 2 denominator natural frequency
- p1664[0...n] Current setpoint filter 2 denominator damping
- p1665[0...n] Current setpoint filter 2 numerator natural frequency
- p1666[0...n] Current setpoint filter 2 numerator damping
- p1699 Filter data acceptance

6.11 Speed actual value filter

Function description

For vector control, an actual speed value filter can be set. You can parameterize the actual speed value filter as follows:

- 2nd order lowpass (PT2: -40 dB/decade)
- General 2nd order filter

You activate the actual speed value filter with p1656.4 = 1. You set the speed actual value filter parameters with p1677 to p1681.

As long as the parameter setting p1699 = 1 is active, the background calculation of the filter data is not performed, even when filter parameters are changed. Only with parameter setting p1699 = 0, is the calculation performed.

Note

For the vector control, there are two current setpoint filters and one actual speed value filter. The actual speed value filter has been allocated the number "5".

Function diagrams (see SINAMICS S120/S150 List Manual)

- 4702 Encoder evaluation - vector control, overview
- 4715 Encoder evaluation - speed actual value and pole position sensing, encoder1, n_act_filter5

Overview of important parameters (see SINAMICS S120/S150 List Manual)

- p1655[0...4] CI: Current setpoint filter / actual speed value filter natural frequency tuning
- p1656[0...n] Current setpoint filter / actual speed value filter activation
- p1677[0...n] Actual speed value filter 5 type
- p1678[0...n] Actual speed value filter 5 denominator natural frequency
- p1679[0...n] Actual speed value filter 5 denominator damping
- p1680[0...n] Actual speed value filter 5 numerator natural frequency
- p1681[0...n] Actual speed value filter 5 numerator damping
- p1699 Filter data acceptance

6.12 Current controller adaptation

Function description

Current controller adaptation can be used to adapt the P gain of the current controller and the dynamic precontrol of the I_q current controller depending on the current. The current controller adaptation is directly activated with setting p1402.2 = 1 or deactivated with p1402.2 = 0. It is automatically activated with p1959.5 (p1959.5 = 1) or deactivated (p1959.5 = 0).

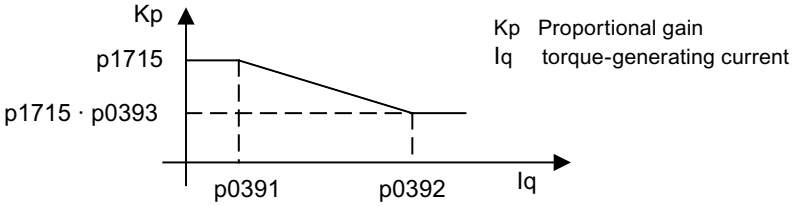

Figure 6-16 Current controller adaptation for p0393 < 1, with p0391 < p0392

When swapping the I_q interpolation points (e.g. for ASM), the current controller adaptation appears as follows:

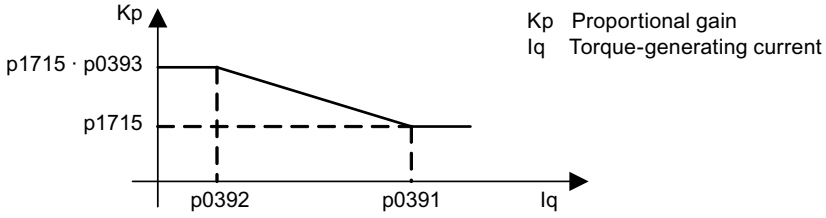

Figure 6-17 Current controller adaptation with swapped I_q interpolation points for p0393 > 1, with p0392 < p0391

Function diagrams (see SINAMICS S120/S150 List Manual)

- 6714 Vector control - Iq and Id controller

Overview of important parameters (see SINAMICS S120/S150 List Manual)

- p0391[0...n] Current controller adaptation, starting point KP
- p0392[0...n] Current controller adaptation, starting point KP adapted
- p0393[0...n] Current controller adaptation P gain scaling
- p1402[0...n] Current control and motor model configuration
- p1703 Isq current controller precontrol scaling
- p1715[0...n] Current controller P gain
- p1717[0...n] Current controller integral time
- p1959[0...n] Rotating measurement configuration

6.13 Motor data identification and rotating measurement

6.13.1 Overview

⚠ WARNING

Unexpected motor motion during motor data identification

Motor movement caused by the motor data identification routine can result in death, severe injury or material damage.

- Ensure that nobody is in the danger zone and that the mechanical parts can move freely.

There are two motor data identification options which are based on each other:

- Motor data identification (Page 245) with p1910 (standstill measurement)
  For measuring the motor equivalent circuit diagram parameters. Obligatory for operation with vector control.
- Rotating measurement (Page 248) with p1960
  To improve the torque accuracy and to optimize the speed control. This should be performed only after a motor data identification.

Note

Motor brake opened

If there is a motor brake, it must be open for the rotating measurement (p1215 = 2).

For synchronous motors, the motor brake must also be open for the standstill measurement so that the motor can orient itself.

The two motor data identifications can be selected more easily via p1900.

- p1900 = 2
  Activates the standstill measurement (motor not rotating).
- p1900 = 1
  Additionally activates the rotating measurement. p1910 is set to = 1, and p1960 is set depending on the actual control mode (p1300).
  The rotating measurement can also be activated subsequently using p1900 = 3.

If a synchronous motor is being used (p0300 = 2), then with p1900 > 0, the encoder adjustment (p1990 = 1) is automatically activated. The procedure used can be set in p1980.

For the selection p1900 = 1, 3, the parameter p1960 is set depending on p1300:

- p1960 = 1, when p1300 = 20 or 22 (without encoder)
- p1960 = 2, when p1300 = 21 or 23 (with encoder)

The measurements, parameterized using p1900 are started in the following sequence after the drive has been enabled:

Measurements and conclusion	After successful measurement:
Standstill measurement	Pulse inhibit activated and parameter is set to "0": p1910 = 0
Encoder adjustment	Pulse inhibit activated and parameter is set to "0": p1990 = 0
Rotating measurement	Pulse inhibit activated and parameter is set to "0": p1960 = 0
Successful completion	Pulse inhibit activated and parameter is set to "0": p1900 = 0

Note

To set the new controller setting permanently, the data must be saved in a non-volatile memory.

The measurement progress can be tracked using r0047.

Completion of the individual motor data identification runs can be read via parameters r3925 to r3928.

The motor data identification runs influence only the currently valid motor data set (MDS).

6.13.2 Motor data identification

Function description

The motor data identification can be activated via p1900 = 2 or p1910 = 1. It is used to determine the motor parameters (equivalent circuit diagram) at standstill.

For control engineering reasons, you are strongly advised to carry out motor data identification because the equivalent circuit diagram data and motor cable resistance can only be estimated if the data on the rating plate is used. For this reason, the stator resistance is very important for the stability of encoderless vector control or for the voltage boost in the U/f characteristic. Motor data identification is essential if long supply cables or third-party motors are used. When motor data identification is started, the following data is determined with p1910 on the basis of the data on the rating plate:

Table 6-2 Determined data

Determined data for p1910 = 1	Induction motor	Permanent magnet synchronous motor	Synchronous reluctance motor
Rated magnetization current (p0320)	x	-	-
Stator resistance (p0350)	x	x	x
Rotor resistance (p0354)	x	-	-
Stator leakage inductance (p0356)	x	x	-
Stator inductance d axis (p0357)	-	x	-
Rotor leakage inductance (p0358)	x	-	-

Determined data for p1910 = 1	Induction motor	Permanent magnet synchronous motor	Synchronous reluctance motor
Magnetizing inductance (p0360)	x	-	-
Drive converter valve threshold voltage (p1825)	x	x	x
Converter valve interlocking times (p1828 ... p1830)	x	x	x

Since the rating plate data contains the initialization values for identification, you must ensure that it is entered correctly and consistently (taking into account the connection type (star/delta)) so that the above data can be determined.

It is advisable to enter the motor supply cable resistance (p0352) before the standstill measurement (p1910) is performed, so that it can be subtracted from the total measured resistance when the stator resistance is calculated (p0350).

Entering the cable resistance improves the accuracy of thermal resistance adaptation, particularly when long supply cables are used. This governs behavior at low speeds, particularly during encoderless vector control.

For p1909.20 = 1 (and p0352 = 0), the supply cable resistance is set from the difference of the measured value and the default value of the automatic parameterization or the value of the data set for list motors. The supply cable resistance then normally no needs to be entered.

Specifics for induction motors

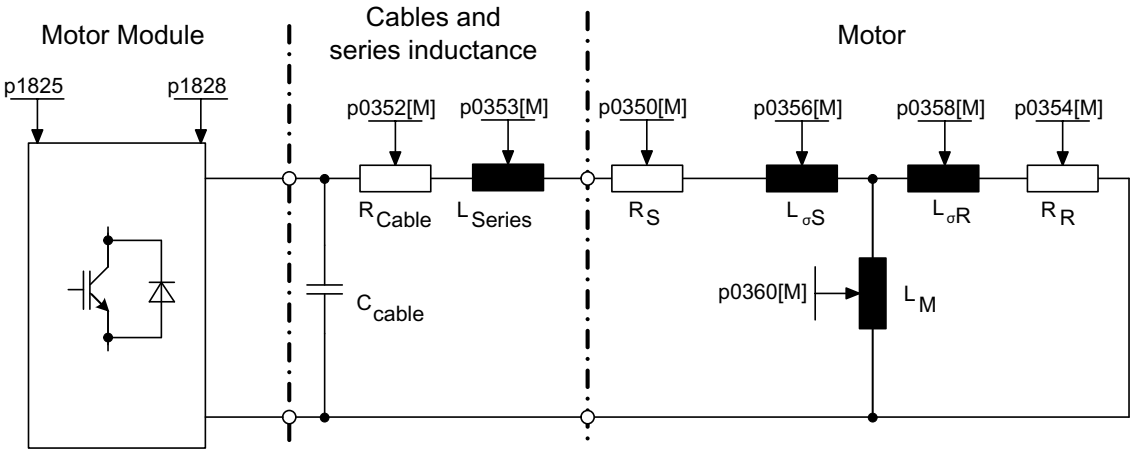

Figure 6-18 Equivalent circuit diagram for induction motor and cable

If an output filter (see p0230) or series inductance (p0353) is used, the data for this must also be entered before the standstill measurement is carried out.

The inductance value is then subtracted from the total measured value of the leakage. With sine-wave filters, only the stator resistance, valve threshold voltage, and valve interlocking time are measured.

Note

With diffusion of more than 35% to 40% of the motor nominal impedance, the dynamic response of the speed and current control is restricted to the area of the voltage limit and to field weakening mode.

Note

The standstill measurement must be carried out when the motor is cold. In p0625, enter the estimated motor ambient temperature during the measurement (for PT1000 or KTY sensor: Set p0600, p0601 and read r0035). This is the reference point for the thermal motor model and thermal R_S/R_R adaptation.

The rated magnetization current and the magnetization characteristic should, if possible, be determined during the rotating measurement (p1900 = 3) (without encoder: p1960 = 1; with encoder: p1960 = 2). The magnetization characteristic can be used to calculate the field-generating current in the field-weakening range more accurately, thereby increasing torque accuracy.

Note

In comparison with standstill measurement (p1910) for induction motors, rotating measurement (p1960) allows the rated magnetizing current and saturation characteristic to be determined much more accurately.

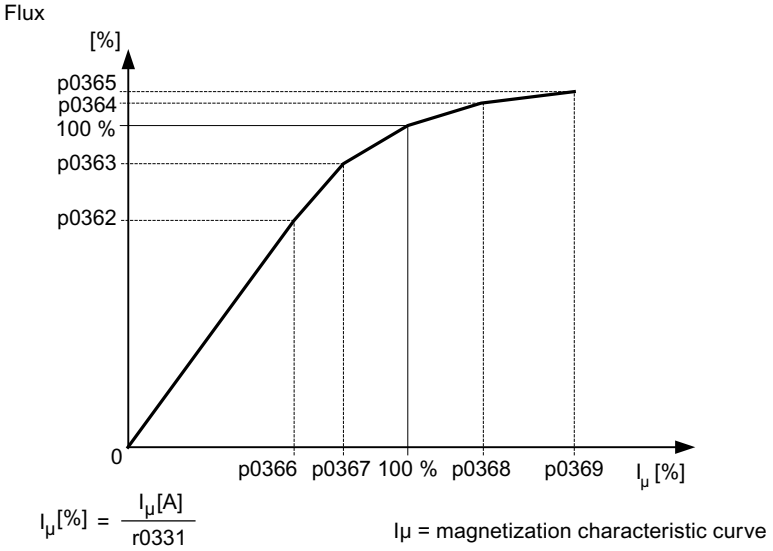

Figure 6-19 Magnetization characteristic

Note

To set the new controller setting permanently, the data must be saved in a non-volatile memory.

Note

At the end of the motor data identification, all dependent control parameters are calculated automatically (p0340 = 3)

Procedure

To perform the motor data identification, proceed as follows:

1. Activate motor data identification with p1900 = 2 (or p1910 = 1).
   Alarm A07991 is displayed.
2. Motor data identification starts the next time that the motor is switched on.
3. After a successful motor data identification, parameter p1900 (or p1910) is reset to "0".
   If the identification was not successful, then instead, fault F07990 is output.
4. Parameter r0047 indicates the actual status of the measurement or identification.

Measurement without automatic adaptation of the control parameters (p1909.17)

p1909.17 = 1 can be used, for example, to measure the motor parameters after a motor replacement, without automatically adapting the control parameters via p0340.

6.13.3 Rotating measurement

Requirement

- The "Rotating measurement" function is only performed after the motor data identification (p1910).

Function description

The "Rotating measurement" function can be activated via p1960 or p1900 = 3.

The function contains a speed control tuning with which the drive's moment of inertia is ascertained and the speed controller is set. In addition, the saturation characteristic and rated magnetizing current of induction motors are measured and so make a significant contribution to improving the torque accuracy.

If the rotating measurement is not to be carried out using the speed set in p1965, this parameter can be changed before the measurement is started. Higher speeds are recommended.

For induction motors, a similar approach applies for the speed in p1961, at which the saturation characteristic is determined and the encoder test is carried out.

The speed controller is set to the symmetrical optimum in accordance with dynamic factor p1967. Parameter p1967 must be set before the optimization run and only affects the calculation of the controller parameters. If, during the measurement, it becomes clear that, with the specified dynamic factor, the drive cannot operate in a stable manner or the torque ripples are too large, the dynamic response is reduced automatically and the result displayed in r1968. In this case, a check must be performed to see whether the drive is running stable across the entire setting range. The dynamic response might need to be reduced or the Kp_n/Tn_n adaptation for the speed controller parameterized accordingly.

Note

Dynamic response reduced too much

If the dynamic response of the speed controller is reduced excessively because of load oscillations, the oscillation test can also be deactivated (p1959.4 = 0).

Recommendations

- Induction motors
  When commissioning induction machines, you are advised to proceed as follows:
  - Before connecting the load, a complete "rotating measurement" (p1900 = 3 or **without encoder**: p1960 = 1; **with encoder**: p1960 = 2) should be carried out. Since the induction machine is idling, you can expect highly accurate results for the saturation characteristic and the rated magnetizing current.
  - When the load is connected, speed controller tuning should be repeated because the total moment of inertia has changed. This is realized by selecting parameter p1960 (without encoder: p1960 = 3; with encoder: p1960 = 4). During the speed optimization, the saturation characteristic recording is automatically deactivated in parameter p1959.
- Permanent-magnet synchronous motors
  When permanent-magnet synchronous motors are commissioned, the speed controller should be tuned (p1900 = 3 or p1960 > 0) when the load is connected.

Procedure

⚠ WARNING

Unexpected motor motion during motor data identification

Motor movement caused when optimizing the speed controller can result in death, severe injury or material damage.

- Ensure that nobody is in the danger zone and that the mechanical parts can move freely.

The following measurements are carried out when the enable signals are set and a switch-on command is issued in accordance with the settings in p1959 and p1960.

- Encoder test
  If a speed encoder is used, the direction of rotation and the pulse number are checked.
- Induction motors only:
  - Measurement of the saturation characteristic (p0362 to p0369)
  - Measurement of the magnetizing current (p0320) and determination of the offset voltage of the converter for offset compensation
  - Measurement of the saturation of the leakage inductance, for induction motors, and setting of the current controller adaptation (p0391 to p0393)
    This measurement is automatically activated for 1LA1 and 1LA8 motors (p0300 = 11, 18) (see p1959.5).
- Speed controller tuning
  - p1470 and p1472, when p1960 = 1 (operation without encoder)
  - p1460 and p1462, when p1960 = 2 (operation with encoder)
  - Setting the Kp adaptation
- Acceleration precontrol setting (p1496, p1517)
- Setting for ratio between the total moment of inertia and that of the motor (p0342)

Note

Saving the controller setting in a non-volatile memory

To set the new controller setting permanently, the data must be saved in a non-volatile memory.

Note

Operation with encoder

If speed controller tuning is used for operation with encoder, then the closed-loop control operating mode is automatically changed over to closed-loop speed control without encoder, so that the encoder test can be carried out.

6.13.4 Shortened rotating measurement

Function description

A normal rotating measurement cannot always be performed when a load is connected. When switching the motor on for the first time, a short measurement of the moment of inertia and the measurement of the magnetizing current and the saturation characteristic can be performed with a simplified measuring procedure. The following settings are possible:

- Measurement shortened (p1959.12 = 1)
- After measurement: Direct transition to operation (p1959.13 = 1)

During the rotating measurement, the drive is not run up to the rated speed, but up to the value in p1965 related to the rated speed (p0310). In the factory setting, this is 40 %. Parameter p1965 can be adapted to the operational requirements, but must be large enough so that the machine can safely leave the open-loop controlled mode. The machine should still be operated as far as possible in no-load operation (torque < 30 % M_{rated}).

During the rotating measurement, the saving of parameters is blocked because automatic parameter adjustments made for the measurement are withdrawn again after the measurement.

Measurement shortened (p1959.12 = 1)

If you have set bit 12 in parameter p1959, a shortened rotating measurement is performed with reduced accuracy for the measurement of the moment of inertia. In this case, the magnetizing current is measured only once instead of twice. The measurement of the acceleration processes and the vibration test are not used at all.

After the end of the measurement, the drive is shut down and all the parameters modified for performing the measurement are reset to their original values.

p1959.12 does not have any effect on p1960 = 3, 4.

After measurement: Direct transition to operation (p1959.13 = 1)

In this case, the drive is not stopped at the end, but run up directly with the acceleration ramp up to the desired speed setpoint.

Do not change controller parameters during the measurement (p1959.11 = 1)

During rotating measurement, the drive automatically changes its speed controller parameters during ramp-up. This is also performed when bits 3 (recalculate speed controller parameters) and 4 (speed controller tuning) are not set. On many plants, the decoupling of the drives requires a lot of work. The loads have high moments of inertia. The controller parameters set by the drive do not always correspond to the drive application and may therefore potentially cause damage to the mechanical system.

If you have set bit 11 in parameter p1959, the recalculation of the speed controller parameters is prevented.

6.13.5 Overview of important parameters

Overview of important parameters (see SINAMICS S120/S150 List Manual)

- r0047 Motor data identification routine and speed controller optimization
- p0340[0...n] Automatic calculation of motor/control parameters
- p1300[0...n] Open-loop/closed-loop control operating mode
- p1900 Motor data identification and rotating measurement
- p1901 Test pulse evaluation configuration
- r1902 Test pulse evaluation status
- r3925[0...n] Identification complete indicator
- r3927[0...n] Motor data identification induction motor data determined

- r3928[0...n] Rotating measurement configuration

Motor data identification at standstill

- p1909[0...n] Motor data identification, control word
- p1910 Motor data identification selection

Rotating measurement

- p0391[0...n] Current controller adaptation, starting point Kp
- p0392[0...n] Current controller adaptation, starting point Kp adapted
- p0393[0...n] Current controller adaptation P gain scaling
- p1959[0...n] Rotating measurement configuration
- p1960 Rotating measurement selection
- p1961 Saturation characteristic speed to determine
- p1965 Speed_ctrl_opt speed
- p1967 Speed_ctrl_opt dynamic response factor
- r1968 Speed_ctrl_opt current dynamic response factor
- r1973 Rotating measurement encoder test pulse number determined
- p1980[0...n] PolID procedure
- p1990 Encoder adjustment, determine commutation angle offset

6.14 Pole position identification

Overview

For synchronous motors and synchronous reluctance motors, the pole position identification (PolID) determines the electrical pole position that is required for the field-oriented control. When operated with one encoder, which is not adjusted to the pole position, then the identification is used to calibrate and align the encoder.

6.14.1 Operation without an encoder

Function description

In encoderless operation, select the pole position identification using parameter p1780.6. You must identify the pole position each time that you switch on the motor to operate it without an encoder. You set the technique that is suitable for the motor using parameter p1980 - and the current using p0325 and p0329.

Note

Pole position identification is only possible at standstill

The shaft can move during pole position identification.

The pole position identification is used during the motor data identification to determine the motor data. Faults F07968 or F07969 can occur during the motor data identification.

Important notes

A suitable technique for the motor is selected using parameter p1980. The following techniques are available:

- Voltage pulsing 1st harmonic (p1980 = 1)
- Voltage pulsing 2-stage (p1980 = 4)
- Voltage pulsing 2-stage inverse (p1980 = 6)
- Voltage pulsing 2nd harmonic inverse (p1980 = 8)
- Impressing DC current

All of these techniques are only possible at standstill. The fast pole position identification can be selected if a faster switch-on is required (p1780.13 = 1).

Supplementary conditions

The following supplementary conditions apply for the pulsed techniques (p1980 = 1, 4, 6, 8):

- This procedure can be used for both braked and non-braked motors.
- The specified current magnitudes (p0325, p0329) must be sufficient to provide a significant measuring result (p0325 is only used for p1980 = 4).

- Technique p1980 = 4 is recommended if the air gap manifests significant asymmetry (e.g. magnets are embedded in the rotor). Technique p1980 = 1 should be applied if the air gap is constant.
- Technique p1980 = 8 is recommended for synchronous reluctance motors.
- Technique p1980 = 6 is used for synchronous motors with a high reluctance torque component.

The following constraints apply when impressing DC current (p1980 = 10):

- The motor must be free to move and it may not be subject to external forces (no hanging/ suspended axes).
- If a motor holding brake is being used, then this must be opened.
- The technique is recommended if there is no magnetic asymmetry (e.g. symmetrical air gap).

6.14.2 Operation with encoder

Function description

For operation with one encoder, which does not provide an absolute pole position (e.g. an incremental encoder with zero mark), the encoder must be adjusted and the pole position identified. The pole position identification is used for this purpose.

For operation with encoders without position information (e.g. incremental encoders without zero mark), pole position identification must be carried out each time that the motor is switched on. If the position information is available, then PolID is only carried out once when switching-on for the first time after the power returns.

Determining the angular commutation offset

The encoder is calibrated one time when determining the angular commutation offset.

Requirement

- The motor can be rotated freely.

Procedure

To determine the angular commutation offset, proceed as follows:

1. After exiting commissioning, for encoders where the adjustment is possible, the commutation angle offset is automatically activated (p1990 = 1).
   Alarm A07971 is output.
2. The commutation angle is determined when the drive is switched-on for the first time. The shaft is slowly turned to do this.
   Alarm A07975 is output.
3. After the commutation angle has been determined, the drive automatically switches-off and writes the commutation angle (p0431).
   Alarm A07971 disappears.

Note

For encoders, which provide an absolute position (r0404.1 = 1), determining the commutation angle offset can be deactivated (p1990 = 0).

Pole position identification is only possible at standstill.

If the control mode is only changed over to operation with encoder (p1300 = 21) after the automatic calculation (p3900 = 3 or p0340 = 3), then pole position identification must be manually set (p1982 = 1); this assumes that an encoder that requires pole position identification has been selected (e.g. an incremental encoder with zero mark). This is indicated by fault F07551.

Pole position correction when rotating (fine calibration of the encoder)

The accuracy of the determined commutation angle offset (p0431) can be increased using the encoder fine calibration.

Requirement

- The motor can be rotated without load.

Procedure

To perform the pole position correction when rotating, proceed as follows:

1. Activate the encoder fine calibration (p1905 = 90).
   Alarm A07976 with alarm value 1 is displayed.
2. Set the pulse enable and accelerate the motor (n > 40% rated speed)
3. Wait for the end of the measurement (alarm A07976 with alarm value 4, takes approximately 1 minute) and then switch off the drive.
   The measurement is restarted if, during the measurement, an excessively low current flows (alarm A07976 with alarm value 12) - or if the speed is too low (alarm A07976 with alarm value 10), then the measurement is restarted.
4. After the pulse inhibit, the value is calculated and saved to parameter p0431 - assuming that it had been successfully completed (alarm A07976 with alarm value 5).
   0 is automatically written to p1905, and alarm A07976 disappears.

Pole position correction with zero mark

When switching on for the first time, the pole position identification roughly synchronizes the encoder angle to the pole position. After passing the zero mark, this coarse synchronization is aligned assuming that the encoder supports commutation with zero mark (r0404.15 = 1). The commutation angle must be available to do this (p0431). In order to utilize fine synchronization for synchronous reluctance motors, the encoder must support commutation with 180° (r0459.23 = 1).

Note

If an encoder with zero mark is used, then the converter can switch to a rotating motor as soon as a valid zero mark position is available.

For synchronous reluctance motors, also when switching on the first time after the power returns, the converter can be switched to a rotating motor - assuming that the "Flying restart" function has been activated (p1200 = 1).

Replacing an encoder

If the encoder is replaced or retrofitted, the commutation angle offset must be determined again (p1990 = 1), assuming that the encoder has position information (e.g. zero mark).

Checking the plausibility of the commutation angle

When using an absolute encoder, with the pole position identification, the plausibility of the encoder commutation position can be checked (p1980 = 2). With this setting, each time that the pulses are enabled, the encoder angle is checked. The determined angular difference can be read out from parameter r1984. Fault F07413 is output if the deviation exceeds 45°.

If mechanical changes are carried out at the encoder, then using the encoder adjustment, the commutation angle offset can be checked (p1990 = 2). The commutation angle offset is determined, and the determined value is not accepted (p0431). Fault F07413 is output if the deviation exceeds 6°.

6.14.3 Messages and parameters

Faults and alarms (see SINAMICS S120/S150 List Manual)

- F07413 Drive: Commutation angle incorrect (pole position identification)
- A07967 Drive: Automatic encoder adjustment/pole position identification incorrect
- F07968 Drive: Lq-Ld measurement incorrect
- F07969 Drive: Pole position identification incorrect
- F07970 Drive: Automatic encoder adjustment incorrect
- A07971 (N) Drive: Communication angle offset determination activated
- A07975 (N) Drive: Traverse to the zero mark - setpoint input expected
- A07976 Drive: Encoder fine calibration activated

Overview of important parameters (see SINAMICS S120/S150 List Manual)

- p0325[0...n] Motor pole position identification current 1st phase
- p0329[0...n] Motor pole position identification current
- p0404[0...n] Encoder configuration active
- p0430[0...n] Sensor Module configuration
- p0431[0...n] Commutation angle offset
- p0437[0...n] Sensor Module extended configuration
- r0458 Sensor Module properties
- r0459 Sensor Module extended properties
- p0640[0...n] Current limit
- p1082[0...n] Maximum speed
- p1215 Motor holding brake configuration
- p1780[0...n] Motor model adaptation configuration
- p1980[0...n] PolID procedure
- p1982[0...n] PolID selection
- r1984 PolID angular difference
- p1990 Encoder adjustment, determine commutation angle offset
- p1991[0...n] Motor changeover, commutation angle offset
- p1993[0...n] PolID motion-based current
- p1994[0...n] PolID motion-based rise time
- p1995[0...n] PolID motion-based gain
- p1996[0...n] PolID motion-based integral time
- p1997[0...n] PolID motion-based smoothing time

6.15 Efficiency optimization

6.15.1 Efficiency optimization for induction motors

Overview

Speed and torque are specified by the driven machine. As a consequence, the flux is the remaining variable for optimizing the efficiency.

Function description

The efficiency of induction motors can be optimized using 2 different techniques. Both techniques optimize the efficiency using the flux. It only makes sense to activate efficiency optimization if the dynamic response requirements are low (e.g. pump and fan applications).

Benefits

For induction motors, efficiency optimization has the following advantages:

- Lower energy costs
- Lower motor temperature rise
- Reduced motor noise levels

Disadvantages

Disadvantages of efficiency optimization

- Longer acceleration times
- More significant speed dips for torque surges
- Lower dynamic response

The disadvantages are only relevant if the motor must respond with a high dynamic performance. Also when that the efficiency optimization is active, the converter motor control prevents the motor from stalling.

Basic efficiency optimization

For p1580 = 100%, the flux in the motor under no-load operating conditions is reduced to half of the setpoint (reference flux) (p1570/2). As soon as load is connected to the drive, the setpoint (reference) flux increases linearly with the load and, reaching the setpoint set in p1570 at approx. r0077 = r0331 · p1570.

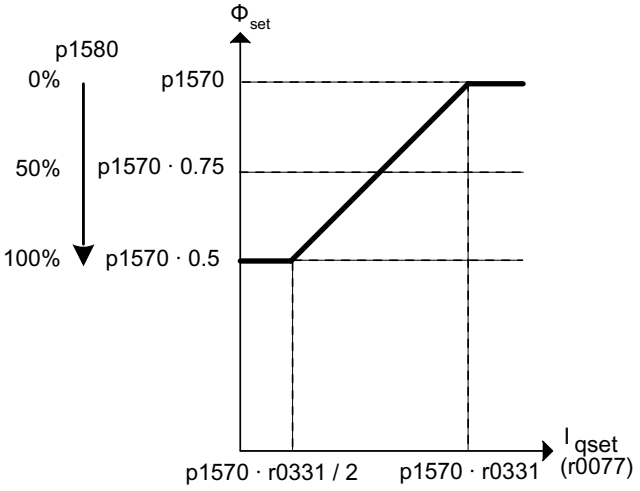

Figure 6-20 Basic efficiency optimization

In the field-weakening range, the final value is reduced by the actual degree of field weakening. The smoothing time (p1582) should be set to approx. 100 to 200 ms. Flux differentiation (see also p1401.1) is automatically deactivated internally following magnetization.

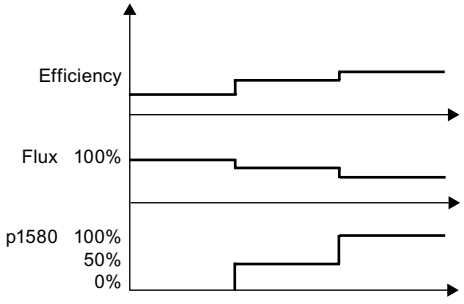

Figure 6-21 Basic efficiency optimization

Extended efficiency optimization

The advanced efficiency optimization generally achieves a better efficiency than the basic efficiency optimization. With this technique, the actual motor operating point is determined as a function of the efficiency and flux - and the flux is set to achieve the optimum efficiency. Depending on the motor operating point, the converter either reduces or increases the flux when the motor is operating in the partial load range.

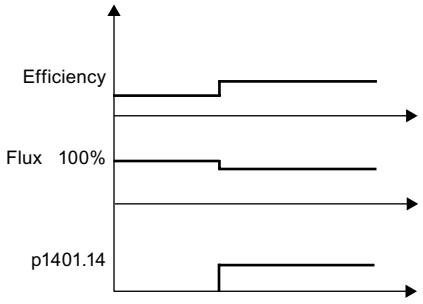

Advanced efficiency optimization with flux reduction

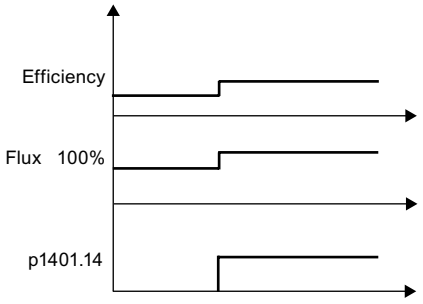

Advanced efficiency optimization with flux reduction

Advanced efficiency optimization is activated in the default setting. To activate advanced efficiency optimization, set p1401.14 = 1.

6.15.2 Efficiency optimization for reluctance motors

Function description

The typically high efficiency for 1FP1 reluctance motors can also be achieved in the partial load range.

To achieve this, depending on the demanded torque, the motor is operated with a loss-optimized current setpoint (MTPC: **M**ax-**T**orque-**P**er-**C**urrent). This operation corresponds to a load-dependent input of the flux setpoint - and can be appropriately preconfigured when commissioning by setting p1401.3 = 1. Further, drives with reluctance motors can be optimized in the following way:

- p1401.9 = 1
  Dynamically increases the flux setpoint when quickly establishing the torque.
- p1401.10 = 1
  Increases the flux setpoint at low speeds and for load-dependent optimum flux characteristic (p1401.3 = 1).

6.15.3 Function diagrams and parameters

Function diagrams (see SINAMICS S120/S150 List Manual)

- 6722 Vector control - Field weakening characteristic, Id setpoint (ASM, p0300 = 1)
- 6723 Vector control - Field weakening controller, flux controller (p0300 = 1)
- 6790 Vector control - flux setpoint (RESM, p0300 = 6)

Overview of important parameters (see SINAMICS S120/S150 List Manual)

- r0077 CO: Torque-generating current setpoint
- r0331[0...n] Actual motor magnetizing current / short-circuit current
- p1401[0...n] Flux control configuration
- p1570[0...n] CO: Flux setpoint
- p1580[0...n] Efficiency tuning

6.16 Fast magnetization for induction motors

Function description

For crane applications, frequently a frequency converter is switched alternately to different motors. After being switched to a different motor, a new data set must be loaded in the frequency converter and the motor magnetized. This can result in excessive waiting times which can be significantly reduced by means of quick magnetization.

Features

- Application for induction motors in closed-loop vector control
- Rapid flux build-up by injecting a field-generating current at the current limit, which considerably reduces the magnetization time
- The "flying restart" function continues working with parameter p0346 (magnetization time)
- Magnetizing is not dependent on a brake configuration (p1215) as it is with servo drives

Characteristics

The following figure shows the characteristics for quick magnetizing.

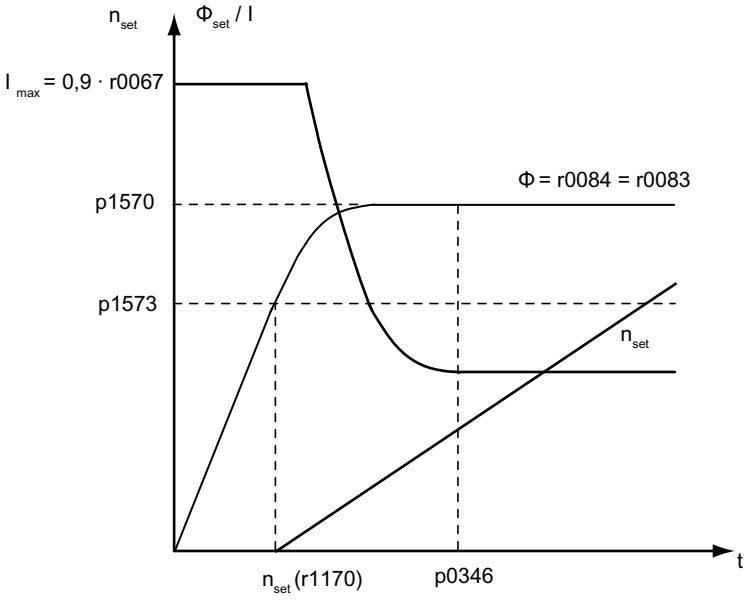

Figure 6-22 Quick magnetization characteristics

Commissioning the function

Parameter p1401.6 = 1 (flux control configuration) must be set to activate quick magnetization. This setting initiates the following sequence during motor starting:

- The maximum excitation build-up current of the induction motor (in reference to the permitted rated power module current (r0207[0])) is set with parameter p0644 ("Current limit excitation build-up induction motor").
- The field-generating current setpoint jumps to the value parameterized in p0644 or the maximum of I_{max} = 0.9 · r0067 (upper limit field-generating current setpoint).
- The flux increases as fast as physically possible with the specified current.
- The flux setpoint r0083 is made to follow accordingly.
- As soon as the flux threshold value programmed in p1573 is reached (min. 10% and max. 200%, factory setting 100%), excitation is ended and the speed setpoint is enabled. The flux threshold value must not be set too low for a large load because the torque-producing current is limited during magnetization.

  Note

  The flux threshold value set in parameter p1573 is effective only if the actual flux during magnetization reaches the value programmed in p1573 before the time set in p0346.

- The flux is increased further until the flux setpoint in p1570 has been reached.
- The field-producing current setpoint is reduced by means of a flux controller with P gain (p1590) and the parameterized smoothing factor (p1616).

Important notes

When quick magnetization is selected (p1401.6 = 1), smooth starting is deactivated internally and alarm A07416 displayed.

When the stator resistance identification function is active (see p0621 "Identification of stator resistance after restart") is active, quick magnetization is deactivated internally and alarm A07416 displayed.

The parameter (p1401.6 = 1) does not work when combined with the "flying restart" function (see p1200), i.e. flying restart is performed without quick magnetization.

Alarms and faults

Flux controller configuration

When a function controlled using parameters p1401 and p0621 is activated, it is checked whether another function that is in conflict with the function to be activated is selected. If this is the case, alarm A07416 is displayed together with the parameter number that is incompatible with the configuration (i.e. p0621 or p1401). The number of the dataset in the alarm value is also be displayed. The following applies:

- p1401 is DDS-dependent
- p0621 is MDS-dependent

The configuration of the flow control (p1401) has inconsistencies.

Error causes and remedies

Cause	Remedy
Quick magnetizing (p1401.6) for soft starting (p1401.0)	• Deactivate smooth starting: p1401.0 = 0 • Deactivate quick magnetization: p1401.6 = 0
Quick magnetizing (p1401.6) for flux build-up control (p1401.2)	• Deactivate flux build-up control: p1401.2 = 0 • Deactivate quick magnetization: p1401.6 = 0
Quick magnetization (p1401.6) for Rs identification (stator resistance identification) after restart (p0621 = 2)	• Change Rs identification parameter settings: p0621 = 0, 1 • Deactivate quick magnetization: p1401.6 = 0

Flux controller output limited

If the current limit p0640[D] is set very low (below the rated magnetizing current value in p0320[M]), the parameterized flux setpoint p1570 [D] might not be reached at all.

As soon as the time in p0346 (magnetization time) is exceeded, fault F07411 is output. Generally, the magnetization time is significantly longer than the flux build-up time associated with quick magnetization.

Error causes and remedies

With quick magnetization configured (p1401.6 = 1), the specified flux setpoint is not reached even though the current setpoint = 90% of maximum current.

Cause	Remedy
Motor data is incorrect.	Correct the motor data.
Motor data and motor connection type (star/delta) do not match.	Check the motor connection type.
Current limit in p0640 is set too low for the motor concerned.	Correct the current limits (p0640, p0323).
Induction motor (encoderless, open-loop control) at I2t limit.	Reduce the load on the induction motor.
Motor Module rating is too low.	• Use a larger Motor Module if necessary. • Check the motor supply cable.

Function diagrams (see SINAMICS S120/S150 List Manual)

- 6491 Vector control - Flux control configuration
- 6722 Vector control - Field weakening characteristic, Id setpoint (ASM, p0300 = 1)
- 6723 Vector control - Field weakening controller, flux controller (ASM, p0300 = 1)

Overview of important parameters (see SINAMICS S120/S150 List Manual)

- r0207[0...4] Rated power unit current
- p0320[0...n] Motor rated magnetizing current / short-circuit current
- p0346[0...n] Motor excitation build-up time
- p0621[0...n] Stator resistance identification after restart
- p0640[0...n] Current limit
- p0644[0...n] Current limit excitation build-up induction motor

- p1401[0...n] Flux control configuration
- p1570[0...n] CO: Flux setpoint
- p1573[0...n] Flux threshold value magnetization
- p1590[0...n] Flux controller P gain
- p1616[0...n] Current setpoint smoothing time

6.17 Flying restart

Function description

⚠ WARNING

Unplanned movement of the motor when flying restart is activated

When the "flying restart" (p1200) is activated, the drive can still be accelerated by the search current despite the fact that it is at standstill and the setpoint is "0"; this can result in death, severe injury or material damage.

- Ensure that nobody is in the danger zone and that the mechanical parts can move freely.

After power ON, the "flying restart" function automatically connects a Motor Module to a motor which may already be turning. This function can be activated during operation **with/without encoder**.

Procedure

To start the "Flying restart" function, proceed as follows:

1. The function should be activated via p1200 especially for loads which may coast after power interruption.
   This prevents sudden loads in the entire mechanics.
2. With an induction motor, the system waits for a demagnetization time to elapse before the search is carried out.

Note

De-magnetizing time

- The demagnetization time can reduce the voltage at the motor terminals. At the pulse enable, this avoids high equalizing currents due to a phase short-circuit.
- An internal demagnetization time is calculated. In addition, you can define a de-excitation time via parameter p0347. The system waits for the longer of the two times to elapse.

Note

Search

- In operation without an encoder, a search is carried out initially for the current speed. The search starts at the maximum speed plus 25%. A Voltage Sensing Module (VSM) is required for permanent-magnet synchronous motors (for additional information, see SINAMICS S120 Control Units Manual and SINAMICS S120/S150 List Manual in parameter p1200).
- When operated with an encoder (actual speed value is sensed), the search phase is eliminated.

3. For an induction or reluctance motor, immediately after the speed has been determined, magnetization starts (p0346).
4. The current speed setpoint in the ramp-function generator is then set to the current actual speed value.
   The ramp-up to the final speed setpoint starts with this value.

Example

After a power failure, a fan drive can be quickly reconnected to the running fan motor by means of the "flying restart" function.

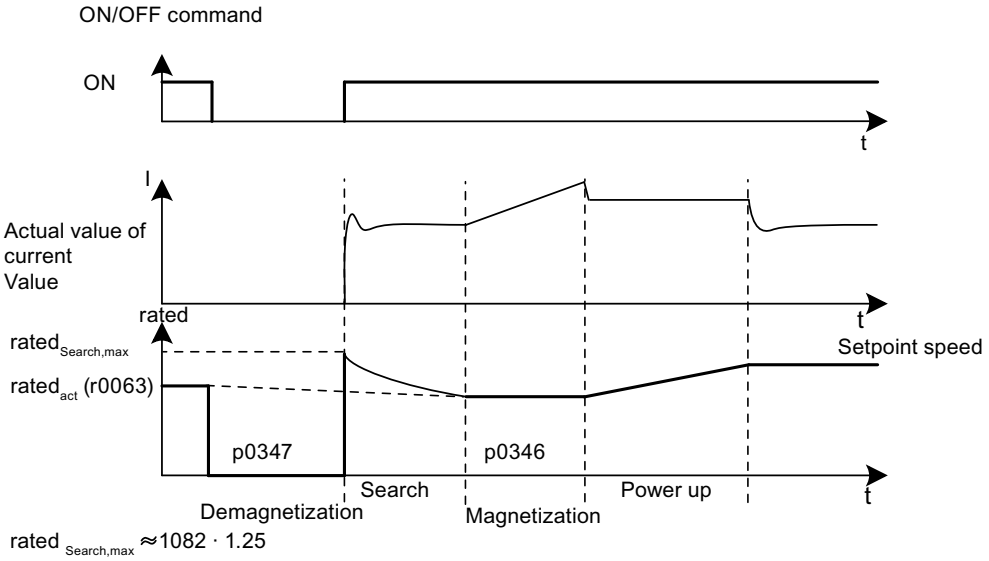

Figure 6-23 Application example: Induction motor without encoder

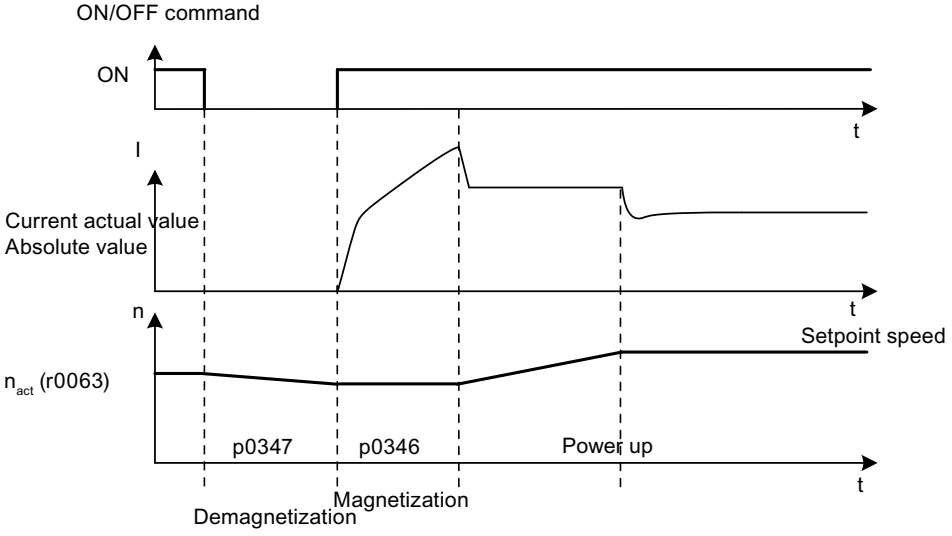

Figure 6-24 Application example: Induction motor with encoder

Flying restart in encoderless operation for long cables

As a rule, it is important to consider the cable resistance. The cable resistance is required for calculation of the thermal motor model.

1. Enter the cable resistance in parameter p0352 before you perform motor data identification.
2. For an induction motor, set parameter p1203[0...n] to at least 300%.
   This operation can take a little longer than for the factory setting (100%).
   The setting is not required for a reluctance motor.

Note

Use a trace recording to check and optimize the flying restart function. If necessary, optimize the settings of parameters p1202 and p1203.

6.17.1 Fast flying restart

Function description

You can only use the "Fast flying restart" function for induction motors for encoderless operation (vector, U/f linear and parabolic). The application of the function with/without voltage measurement is described in the following.

Fast flying restart without voltage measurement

To use the function without voltage measurement, the starting frequency is set to zero. The model settles within approximately 200 ms on its own when the parameterization is correct. The following conditions must be fulfilled:

- At a current controller cycle time of 250 µs or 400 µs (without filter and long cables)
- Up to 4x rated speed for vector control
- Up to the rated speed for U/f control

You can find the settings for the fast flying restart in the expert list.

Procedure

Proceed as follows to configure the function in the expert list:

1. To switch flying restart to "fast flying restart", make the following setting: "p1780.11 = 1". The normal flying restart had the parameter setting "p1780.11 = 0". For operation with encoder, settings of this bit are ignored because fast flying restart is not possible in this case.
2. Activate the fast flying restart as with the normal flying restart via parameter p1200.
3. Perform a standstill measurement (p1900 = 2) for the correct parameterization of the voltage model for both vector and U/f control to determine the power resistance.
   The critical parameters are the stator resistance (p0350) and the stator leakage inductance (p0356).
   The following status bits indicate the characteristic of the flying restart:
   - For U/f control: r1204.14
   - For vector control: r1205.16 or r1205.17

Note

Optimizing the function

You can optimize the function with the aid of parameter p1202 (Flying restart search current). Parameter p1203, however, has no effect on the fast flying restart.

Note

Detection current must not become too small

If the drive is operated well into the field weakening or with filters or long cables, the detection current may become too small with the fast flying restart (F07330).

In this case, set the detection current (p1202) to values > 30%.

Fast flying restart with voltage acquisition

The time for the connection to a rotating induction motor can be shortened when the terminal voltage of the motor is measured. This requires that a VSM module is connected (see Chapter "Voltage Sensing Module (Page 274)").

Procedure

Proceed as follows to configure the function:

1. Select the voltage measurement for the fast flying restart: p0247.5 = 1.
2. Activate the flying restart: p1200 > 0.
   The following status bits indicate the characteristic of the flying restart:
   - For U/f control: r1204.15
   - For vector control: r1205.18, r1205.19, r1205.20

Note

If the measured voltage amplitude undershoots the 1% limit of the converter rated voltage, the flying restart with voltage measurement is deactivated and the rotating frequency sought.

6.17.2 Flying restart for a synchronous reluctance motor

Function description

⚠ WARNING

Unplanned movement of the motor when flying restart is activated

When the "flying restart" (p1200) is activated, the drive can still be accelerated by the search current despite the fact that it is at standstill and the setpoint is "0"; this can result in death, severe injury or material damage.

- Ensure that nobody is in the danger zone and that the mechanical parts can move freely.

With encoderless operation of a synchronous reluctance motor, using the "Flying restart" function, the position and speed of the rotor can be determined with almost no delay. To increase the quality of the function, a motor data identification routine (p1900, stationary measurement) must be carried out. The motor properties are measured so that the flying restart function can optimally determine the speed and the position.

Procedure

Proceed as follows to configure the function:

1. Activate the "Flying restart" function using p1200 = 1 especially for loads which may coast down after the power is interrupted.
   This prevents sudden loads in the entire mechanics.
2. Contrary to an induction motor, for a synchronous reluctance motor, the system does not wait a specific demagnetization time (see. "Flying restart for an induction motor (Page 266)"). Flying restart can be activated for the rotating machine immediately after switching off.
3. For a synchronous reluctance motor, immediately after the speed has been determined, magnetization starts (p0346).

4. The current speed setpoint in the ramp-function generator is then set to the current actual speed value.
   The ramp-up to the final speed setpoint starts with this value.
   Bit r1205.21 indicates whether flying restart is active.
5. The search current and the search speed can be set using parameters p1202 and p1203 to optimize the flying restart.

Note

If the search current is changed (p1202), then a stationary measurement must be carried out to accept the change. After changing the parameter, the measurement is configured (p1909.22 = 1) so that it is as short as possible. The bit is only reset if a motor data identification routine has been carried out.

6.17.3 Messages and parameters

Overview of important faults (see SINAMICS S120/S150 List Manual)

- F07330 Flying restart: Detection current measured too low
- F07331 Flying restart: Function not supported

Overview of important parameters (see SINAMICS S120/S150 List Manual)

- p0247 Voltage measurement configuration
- p0352[0...n] Cable resistance
- p1082[0...n] Maximum speed
- p1200[0...n] Flying restart operating mode
- p1202[0...n] Flying restart detection current
- p1203[0...n] Flying restart search rate factor
- r1204.0...15 CO/BO: Flying restart, V/f control status
- r1205.0...21 CO/BO: Flying restart, vector control status
- p1780.11 Motor model adaptation configuration
  Fast flying restart with voltage model for induction machines
- p1900 Motor data identification and rotating measurement
- p1909[0...n] Motor data identification control word

6.18 Synchronization

Requirement

- Drive in the vector control mode with Voltage Sensing Module (VSM10)
- Induction motor without encoder
- Vector control

Function description

You can synchronize a motor with the line supply using the "Synchronization" function and an existing Voltage Sensing Module VSM10 to measure the line voltage. The connection to the line supply or the required contactor control can be realized using the existing bypass function or a higher-level control system. Use of the bypass function allows temporary operation (e.g. for maintenance work without plant standstill) or permanent operation of the motor on the mains.

Synchronization is activated with parameter p3800. A VSM10 which is assigned to a drive (via DRIVE-CLiQ), measures the line supply voltage.

Features

The function is characterized by the following features:

- Connector inputs for the actual voltage sensing of the motor via VSM10 (r3661, r3662)
- Setting a phase difference (p3809)
- Can be activated by parameter (p3802)

Function diagrams (see SINAMICS S120/S150 List Manual)

- 7020 Technology functions - Synchronizing

Overview of important parameters (see SINAMICS S120/S150 List Manual)

- p3800[0...n] Sync-line-drive activation
- p3801[0...n] Sync-line-drive drive object number
- p3802[0...n] BI: Sync-line-drive enable
- r3803.0 CO/BO: Sync-line-drive control word
- r3804 CO: Sync-line-drive target frequency
- r3805 CO: Sync-line-drive frequency difference
- p3806[0...n] Sync-line-drive frequency difference threshold value
- r3808 CO: Sync-line-drive phase difference
- p3809[0...n] Sync-line-drive phase setpoint value
- p3811[0...n] Sync-line-drive frequency limitation
- r3812 CO: Sync-line-drive correction frequency
- p3813[0...n] Sync-line-drive phase synchronism threshold value
- r3814 CO: Sync-line-drive voltage difference

- p3815[0...n] Sync-line-drive voltage difference threshold value
- r3819.0...7 CO/BO: Sync-line-drive status word

6.19 Voltage Sensing Module

Function description

The Voltage Sensing Module (VSM) is required in the vector control and in U/f control for following functions:

- **Synchronization**
  Using the "synchronizing" function, the system is synchronized to a line supply. The function is used in the following use cases:
  - After synchronization, a motor is directly switched over to the supply system. The connection to the line supply or the required contactor control can be realized using the existing bypass function or a higher-level control system.
  - To prevent a plant standstill during maintenance work on the converter, the motor can be temporarily operated on the mains.

  For p3800 = 1, the voltage detection takes place via a VSM, which is connected to the line phases and assigned to a Motor Module via DRIVE-CLiQ.
- **Flying restart**
  After power ON, the "flying restart" function automatically connects a Motor Module to a motor which may already be turning. In operation without an encoder, a search is carried out initially for the motor speed.
  For this function, a Voltage Sensing Module (VSM) is required for operation with permanent-magnet synchronous motors. Further information on using the function with permanent-magnet synchronous motors can be found in the SINAMICS S120 Equipment Manual Control Units and SINAMICS S120/S150 List Manual in parameter p1200.
  A VSM can be used for operation with induction motors to reduce the duration of the search (see Chapter "Fast flying restart (Page 268)"). If only one VSM exists, it is used to acquire the motor voltages when the "Synchronize" function is deactivated (p3800 = 0).

Topology view

The VSM is used on the encoder side for the SINAMICS S120 drives. The VSM is only used at the Vector drive object in sensorless operating modes. The VSM is integrated into the topology at the position of the motor encoder.

Commissioning with STARTER

Further information on commissioning the VSM can be found in the "SINAMICS S120 Commissioning Manual for Startdrive", Chapter "Adding Voltage Sensing Module VSM10".

The component number of the VSM from the current topology must be entered in parameter p0151[0...1]. This parameter assigns the VSM data set to a VSM evaluation routine. With parameter p0155[0...n] "Activate/deactivate Voltage Sensing Module", it is possible to activate or deactivate the VSM explicitly as a topology component.

VSM parameters are independent of the data set model of the SINAMICS S120 drive. A maximum of two VSMs are permitted for each Vector drive object.

Note

Use of 2 Voltage Sensing Modules

If two Voltage Sensing Modules are connected to one Motor Module, the 1st Voltage Sensing Module (p0151[0]) is used to measure the line voltage (p3801). The motor voltage is measured (p1200) with the 2nd Voltage Sensing Module.

Identification via LED and firmware version

The identification of the Voltage Sensing Module via LED is activated via parameter p0154. When p0154 = 1, the LED RDY on the relevant VSM flashes green/orange or red/orange at a frequency of 2 Hz. The firmware version of the VSM can be displayed using parameter p0158[0,1] on the Vector drive object.

Function diagrams (see SINAMICS S120/S150 List Manual)

- 7020 Technology functions - Synchronizing
- 9880 Voltage Sensing Module (VSM) - Analog inputs (AI 0 ... AI 3)
- 9886 Voltage Sensing Module (VSM) - Temperature evaluation

Overview of important parameters (see SINAMICS S120/S150 List Manual)

- p0151[0...n] Voltage Sensing Module component number
- p0155[0...n] Activate/deactivate Voltage Sensing Module
- p0158[0...n] Voltage Sensing Module firmware version
- p3800[0...n] Sync-line-drive activation
- p3801[0...n] Sync-line-drive drive object number

6.20 Simulation mode

Requirement

- Initial commissioning must be complete (default: standard induction motors).
- The DC-link voltage must be less than 40 V (observe the tolerance of the DC-link voltage sensing).

Function description

Simulation mode allows you to simulate the drive without a connected motor and without the DC-link voltage. In this case, it should be noted that the simulation mode can only be activated under an actual DC-link voltage of 40 V. If the voltage is higher, simulation mode is reset and fault message F07826 is output.

With the simulation mode, you can test the communication with a higher-level controller. If the drive is also to return actual values, note that it must be switched over to encoderless operation during simulation mode. This means that large parts of the SINAMICS software (e.g. software channel, sequence control, communications, technology function, etc.) can be tested in advance without requiring a motor.

For units with outputs greater than 75 kW, it is recommended to test the activation of the power semiconductors after repairs. To do so, a DC voltage of less than 40 V is applied to the DC link and the possible pulse patterns must then be tested by the control software.

Note

Simulation mode cannot be activated without a power unit. A power unit must be connected via DRIVE-CLiQ.

Features

- Automatic deactivation with a DC-link voltage greater than 40 V (measurement tolerance ± 4 V) with fault F07826 and immediate pulse inhibit (OFF2)
- Can be activated via parameter p1272
- Deactivation of line contactor activation during simulation mode
- Activation of power semiconductor with low DC-link voltage and with motor (for test purposes).
- Power unit and closed-loop control can be simulated without a connected motor.

Activating the function

The simulation mode can be activated via p1272 = 1.

6.21 Redundancy mode power units

Requirement

- Parallel connection is only possible for the same power units of the Chassis or Chassis-2 format
- Maximum of 4 power units in parallel for the Chassis format
- Maximum of 6 power units in parallel for the Chassis-2 format

Note

For the following power units, when commissioning, a firmware version ≥ V5.2 must be available.

- Active Line Modules in the Chassis-2 format
- Motor Modules in the Chassis-2 format

- Parallel connection of power units with suitable power reserves
- Motor with one single-winding system (p7003 = 0)
- No Safe Torque Off (STO)

Function description

Note

System standstill

Due to feedback effects caused by a lack of galvanic separation, the entire system may come to a standstill despite a redundancy circuit.

Redundancy mode is suitable for replacing a defective or failed power unit in parallel operation and continue operation. Before the damaged or failed power unit is removed, it must be deactivated via p0125 or via the binector input p0895. If a power unit is replaced, it must be reactivated after it is installed.

Features

- Redundancy for up to 4 power units for the Chassis format
- Redundancy for up to 6 Motor Modules for the Chassis-2 format
- Power unit can be deactivated via parameter (p0125)
- Power unit can be deactivated via binector input (p0895)

Overview of important parameters (see SINAMICS S120/S150 List Manual)

- p0125[0...n] Activate/deactivate power unit component
- r0126[0...n] Power unit components active/inactive
- p0895[0...n] BI: Activate/deactivate power unit component
- p7003 Par_circuit winding system

6.22 Bypass

Function description

NOTICE
Incorrect synchronization as a result of an incorrect phase sequence The target frequency r3804 is specified as an absolute value. It does not contain information about the direction of the rotating field (phase sequence)! If the phase sequence of the line voltage, which must be synchronized with, does not match the motor voltage phase sequence, then this results in incorrect synchronization. In the worst-case scenario, this can mechanically damage the plant or system. • Ensure that the line voltage phase sequence matches that of the motor voltage. You can correct the phase sequence as follows: – Interchange the two feeder cables at the converter output or at the line contactor. – Correct the phase sequence of the motor or converter output voltage using p1820 or p1821.

The bypass function controls two contactors via digital outputs of the drive converter and evaluates the feedback signals of the contactors via digital inputs (e.g. via TM31). The bypass circuit allows the motor to be operated using the converter or directly on the supply line. The contactors are activated by the converter. The feedback signals for the contactor positions have to be returned to the converter.

Features

The "Bypass" function is characterized by the following features:

- Available for vector control
- Available for induction motors without encoder

Restrictions

The following limitations apply to the "Bypass" function:

- Use only when induction motors are used
- Use only for encoderless speed control (p1300 = 20) or U/f control (p1300 = 0 ... 19)

Versions

The bypass circuit can be implemented in two ways:

- Without synchronizing the motor to the line supply
- With synchronizing the motor to the supply

Supplementary conditions

The following supplementary conditions apply to the use of the bypass function:

- The bypass switch is also always shut down if one of the control word signals OFF2 or OFF3 is canceled and the motor coasts down. If the control word signal OFF1 is withdrawn, the motor remains connected to the supply system.
  Exception:
  If necessary, the bypass switch can be interlocked by a higher-level controller such that the converter can be shut down completely (i.e. including the controller electronics) while the motor is operated on the supply. The contactor interlocking should be implemented on the plant/system side.
- When the drive is started up again after POWER ON, the status of the bypass contactors is evaluated. After powering up, the converter can thereby change straight into "Ready to start and bypass" status. This is only possible if the bypass is activated via a control signal, the control signal (p1266) is still present once the system has been ramped up, and the "Automatic restart" function (p1210 = 4) is active.
  The bypass is automatically started again when restarting. To accelerate the motor to the setpoint speed or to synchronize it to the network, the pulse enable may takes place with the motor rotating. In this case, it is recommended that you activate the "Flying restart" function (p1200 = 1). This prevents high current peaks.
- Changing the converter into "Ready to start and bypass" status after powering up, is of a higher priority than switching back on automatically.
- Monitoring of the motor temperatures using temperature sensors is active while the converter is in one of two states "Ready to start and bypass" or "Ready for operation and bypass".
- The two motor contactors must be designed for switching under load.

Note

The application examples contained in the following descriptions are only basic circuits designed to explain the basic principle of operation. The dimensions of specific circuit configurations (contactors, protective equipment) must be calculated for specific systems.

Commissioning the function

The bypass function is part of the function module "technology controller" that can be activated when using the commissioning wizard. Parameter r0108.16 indicates whether it has been activated.

6.22.1 Bypass with synchronization with overlap

Function description

The "Bypass synchronized with overlap" function is used for drives with low inertia. These are drives in which the speed would decrease very quickly when contactor K1 is opened. If the function "Bypass with synchronization with overlap (p1260 = 1)" is activated, the motor is transferred, synchronized to the line supply and is also retrieved again. During the changeover, the two contactors K1 and K2 are simultaneously closed for a time (phase lock synchronization).

A voltage sensing module VSM10 is required for this bypass function, which measures the mains voltage required for the drive to be synchronized. A reactor is used to de-couple the drive converter from the line supply - the uk value for the reactor is 10% +/- 2%.

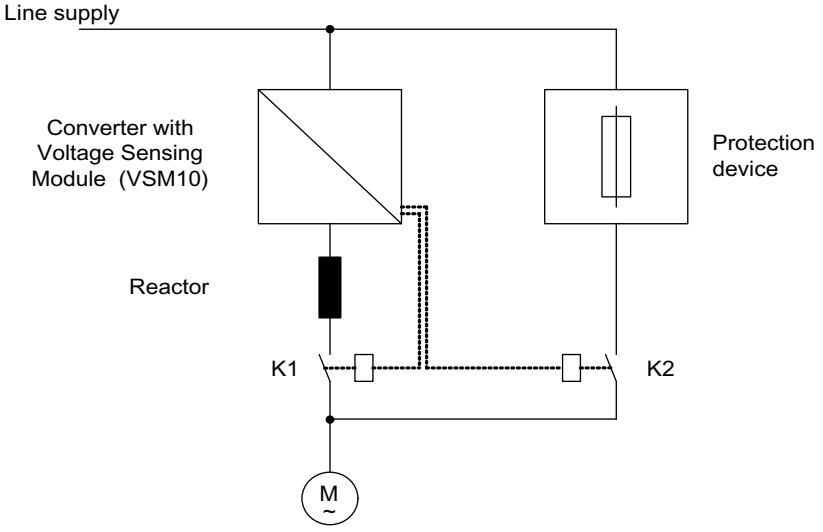

Figure 6-25 Circuit example: Bypass with synchronization with overlap

Note

As a result of the overlap, when synchronizing back to the converter, the DC link voltage can increase; in the worst case scenario this can result in a fault trip. It is possible to activate an overvoltage protection function, which, when a Vdc max threshold r1242 is reached, the pulses are inhibited; as a consequence, the DC link voltage stops increasing. When the pulses are inhibited, the motor coasts down, which is why it must be restarted on-the-fly. As a consequence, overvoltage protection is only active if the "Flying restart" function was activated (p1200 = 1).

Activating the function

The bypass function with synchronization with overlap (p1260 = 1) can only be activated using a control signal. Activation using a speed threshold is not possible.

Parameterizing the function

The following parameters must be set after the bypass function with synchronization with overlap (p1260 = 1) has been activated.

Parameter	Description
r1261.0 =	Control signal for contactor K1
r1261.1 =	Control signal for contactor K2
p1266 =	Setting the control signal
P1269[0] =	Signal source to provide the feedback signal of contactor K1
P1269[1] =	Signal source for contactor K2 feedback
p3800 = 1	Synchronization is activated.
p3802 = r1261.2	Synchronizer activation is triggered by the bypass function.

Transfer of the motor to the power system

The following diagram shows the signal characteristic for the transfer of the motor to the supply system.

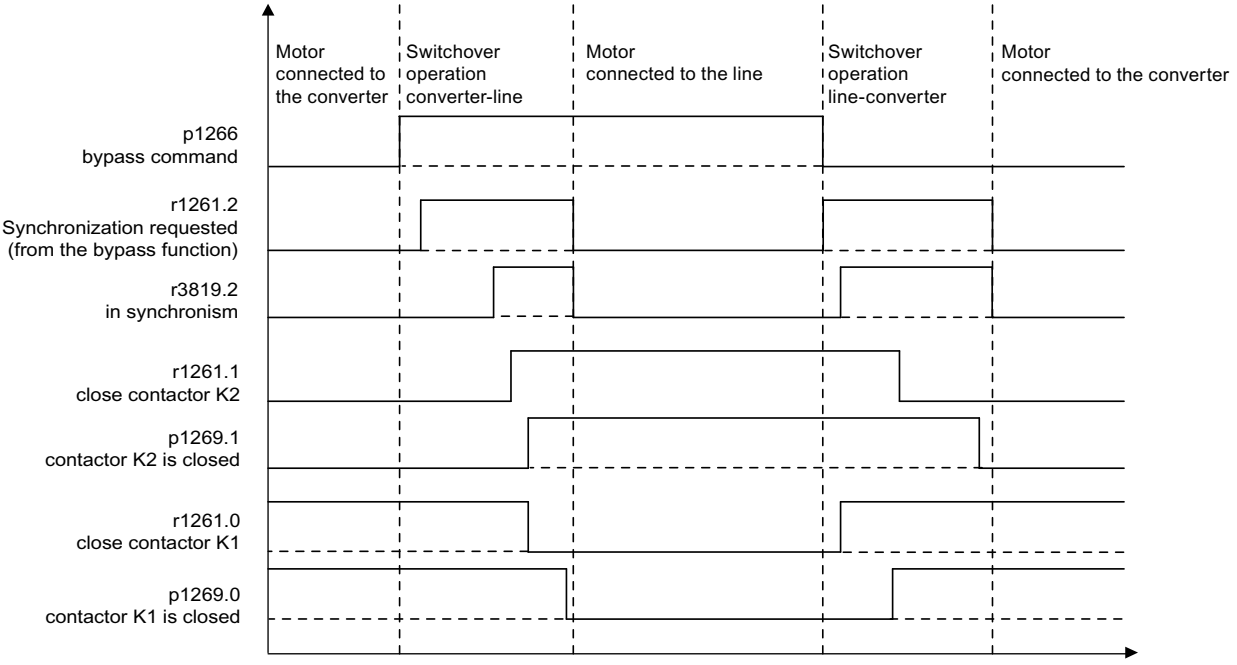

Figure 6-26 Signal flow: Bypass with synchronization with overlap

For the transfer of the motor to the supply system, contactors K1 and K2 are controlled via the converter. The transfer of the motor is done in the following order:

- Initial state:
  - Contactor K1 is closed.
  - Contactor K2 is open and the motor is operated via the converter.
- The control bit "bypass command" (p1266) is set (e.g. from the higher-level automation).
- The bypass function sets the control word bit "synchronizing" (r1261.2).

- Since the bit is set while the converter is running, the "Transfer motor to supply" synchronization process is started.
- After the motor has been synchronized to the line frequency, line voltage and line phase, the synchronizing algorithm reports this status (r3819.2).
- The bypass mechanism evaluates this signal and closes contactor K2 (r1261.1 = 1). The signal is internally evaluated - BICO wiring is not required.
- After contactor K2 has signaled back the "closed" state (r1269[1] = 1), contactor K1 is opened and the drive converter inhibits the pulses. The drive converter is in the "hot standby" state.
- If the on command is withdrawn in this phase, the drive converter changes into the basic standby state. If the appropriate contactors are being used, the drive converter is isolated from the line supply and the DC link is discharged.

Retrieving the motor from power system operation

Retrieving the motor from mains operation is done in the following order:

- Initial state:
  - Contactor K2 is closed.
  - Contactor K1 is opened.
- The "Command bypass" control bit is canceled (e.g. by the higher-level automation).
- The bypass function sets the control word bit "synchronizing".
- Pulses are enabled. Since "Synchronize" is set before "Pulse enable", the converter interprets this as a command to retrieve a motor from the supply and to take it over.
- After the motor has been synchronized to the line frequency, line voltage and line phase, the synchronizing algorithm reports this status.
- The bypass mechanism evaluates this signal and closes contactor K1. The signal is internally evaluated - BICO wiring is not required.
- Once contactor K1 has reported "closed" status, contactor K2 is opened and the motor returns to operation on the drive.

6.22.2 Bypass with synchronization without overlap

Function description

If the function "Bypass with synchronization without overlap (p1260 = 2)" is activated, contactor K2 is only closed when contactor K1 has opened (anticipatory type synchronization). During this time, the motor is not connected to the line supply so that its speed is determined by the load and the friction. For the function to run correctly, the moment of inertia of the drive and the load must be sufficiently high.

Note

A sufficiently high moment of inertia is characterized by a change in the motor speed when contactors K1 and K2 are opened, which is approximately equal to the rated slip.

Further, it must be ensured that at the switchover instant, the motor is not significantly braked as a result of external effects (e.g. friction).

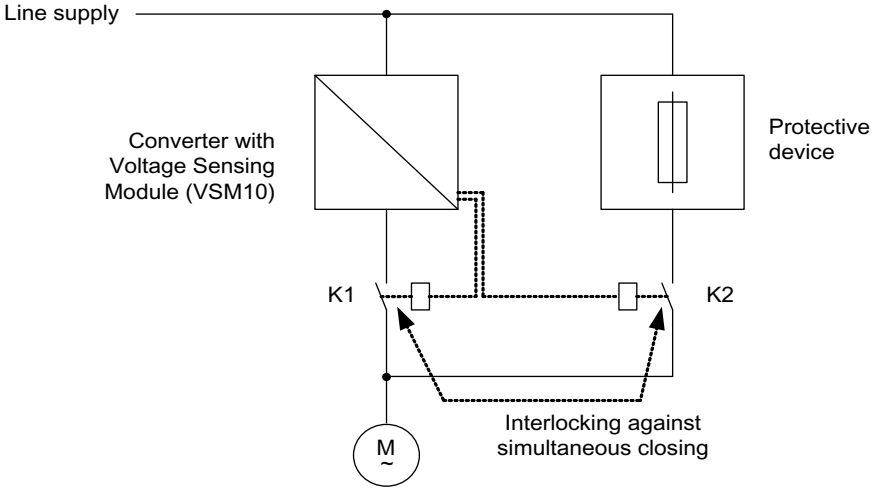

Figure 6-27 Circuit example: Bypass with synchronization without overlap

Synchronization setpoint p3809 is used to correct a phase rotation in the signal sensing of the voltage actual values (p3809 = -180° to 179.90°). Further, using this parameter, the setpoint angle of the motor voltage can be advanced in a range up to a maximum of 20°el (= maximum value p3813), in order to compensate for a friction/load-dependent speed decrease during the bypass switchover.

The phase position of the motor voltage before synchronization can be set using p3809 to enable an "advance start" before the line supply to which synchronization should be carried out. As a result of the motor braking in the short time in which both contactors are open, when closing contactor K2, now a phase and frequency difference of approximately zero must be obtained. If, when switching over, the angular difference would be > 20°el, then current surges be expected that cannot be neglected. This is the reason that synchronism is only reached if the angular difference is ≤ p3813 (maximum of 20°el).

Compensating a speed decrease using p3809 only makes sense if the motor is evenly loaded during the switchover period. For instance, for conveyor belts, depending on the process environment, the load can change during the bypass sequence. If, during the switchover

process, the angular difference is more than 20°el - or if the load for each bypass operation differs, then the "Bypass with synchronization with overlap (Page 280)" mode must be used.

Features

- Operation only **with** Voltage Sensing Module (VSM10)
  The VSM10 measures the line voltage for the drive to be synchronized.

Activating the function

The bypass function with synchronization without overlap (p1260 = 2) can only be activated using a control signal. Activation using a speed threshold is not possible.

Parameterizing the function

The following parameters must be set after the bypass function with synchronization without overlap (p1260 = 2) has been activated.

Parameter	Description
r1261.0 =	Control signal for contactor K1
r1261.1 =	Control signal for contactor K2
p1266 =	Setting the control signal
P1269[0] =	Signal source to provide the feedback signal of contactor K1
P1269[1] =	Signal source for contactor K2 feedback
p3800 = 1	Synchronization is activated.
p3802 = r1261.2	Synchronizer activation is triggered by the bypass function.
p3809 =	Setting of the phase setpoint for synchronizing the drive to the line supply

6.22.3 Bypass without synchronization

Function description

When the motor is transferred to the line supply, contactor K1 is opened (after the drive converter pulses have been inhibited); the system then waits for the motor de-excitation time and then contactor K2 is closed so that the motor is directly connected to the line supply.

If the motor is switched on in a non-synchronized manner, when activated an equalizing current flows and this must be taken into account when designing the protective equipment (see following figure). This is why this type of bypass function is only suitable for drives with a low power rating.

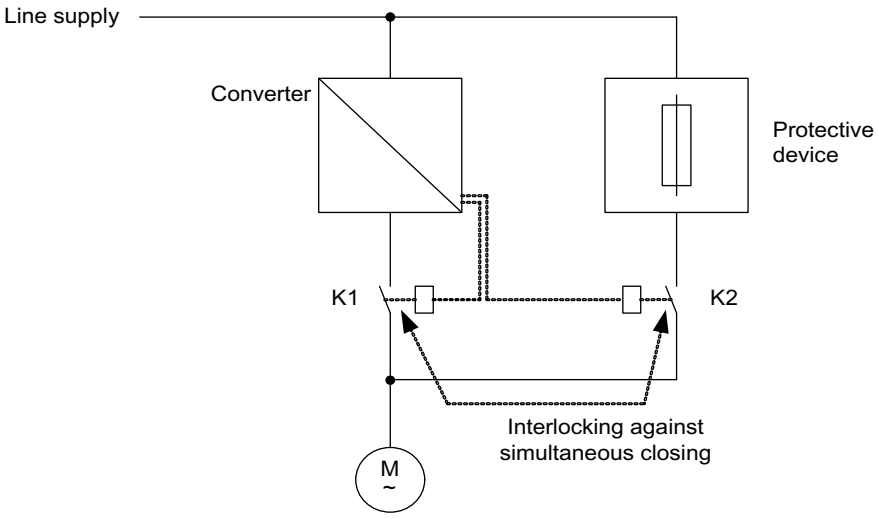

Figure 6-28 Circuit example, bypass without synchronization

When the converter retrieves the motor from the line supply, initially contactor K2 is opened, and after the excitation time has expired, contactor K1 is closed. The drive converter then connects to the rotating motor and the motor is fed from the drive converter.

Features

The function is characterized by the following features:

- Operation **without** Voltage Sensing Module (VSM10)

Activating the function

To be able to activate the function, the following requirements must be satisfied:

- Contactor K2 must be designed for switching an inductive load.
- Contactors K1 and K2 must be interlocked against closing at the same time.
- The "flying restart" function must be activated (p1200).

Activation of the bypass function without synchronization (p1260 = 3) can be triggered via the following signals (p1267):

- Bypass using control signal (p1267.0 = 1):
  Activation of the bypass is triggered by a digital signal (p1266) e.g. from a higher-level control system. If the digital signal is withdrawn, a changeover to converter operation is initiated once the bypass delay time (p1263) has expired.
- Bypass at speed threshold (p1267.1 = 1)
  Once a certain speed is reached, the system changes over to bypass, i.e. the converter is used as a start-up converter. The precondition for activating the bypass is that the speed setpoint is greater than the bypass speed threshold (p1265).
  Switching back to converter operations is initiated by the setpoint (at input of ramp generator, r1119) falling below the bypass speed threshold (p1265). The setpoint > comparison value condition prevents the bypass from being reactivated straight away if the actual speed is still above the bypass speed threshold (p1265) after switching back to converter operations.

The following variables are also set via parameters:

- Bypass time
- De-bypass time
- Bypass speed
- Command source for the switchover

Parameterizing the function

After activating the bypass function without synchronization (p1260 = 3) the following parameters have to be set:

Table 6-3 Parameter settings for non-synchronized bypass function with overlap

Parameter	Description
r1261.0 =	Control signal for contactor K1
r1261.1 =	Control signal for contactor K2
p1262 =	Setting of the dead time for non-synchronized bypass
p1263 =	Setting of the delay time to switch back to converter operation for non-synchronized bypass
p1264 =	Setting of the delay time to switch to line operation for non-synchronized bypass
p1265 =	Setting of the speed threshold for activating the bypass (for p1267.1 = 1)
p1266 =	Setting of the signal source for the control command to the bypass (for p1267.0 = 1)
p1267.0 = p1267.1 =	Trigger signal setting for bypass function
p1268	Setting of the signal source for the feedback signal "synchronization completed"
P1269[0] =	Setting of the signal source for the feedback signal of contactor K1
P1269[1] =	Setting of the signal source for the feedback signal of contactor K2
p3800 = 0	Synchronization is deactivated.
p3802 = r1261.2	Synchronizer activation is triggered by the bypass function.

6.22.4 Function diagrams and parameters

Function diagrams (see SINAMICS S120/S150 List Manual)

- 7020 Technology functions - Synchronizing

Overview of important parameters (see SINAMICS S120/S150 List Manual)

Bypass function

- p1260 Bypass configuration

- r1261.0...12 CO/BO: Bypass control/status word
- p1262[0...n] Bypass dead time
- p1263 Debypass (revert to drive) delay time
- p1264 Bypass delay time
- p1265 Bypass speed threshold
- p1266 BI: Bypass control command
- p1267 Bypass changeover source configuration
- p1268 BI: Bypass feedback signal synchronization completed
- p1269[0...1] BI: Bypass switch feedback signal

Synchronization

- p3800[0...n] Sync-line-drive activation
- p3801[0...n] Sync-line-drive drive object number
- p3802[0...n] BI: Sync-line-drive enable
- r3803.0 CO/BO: Sync-line-drive control word
- r3804 CO: Sync-line-drive target frequency
- r3805 CO: Sync-line-drive frequency difference
- p3806[0...n] Sync-line-drive frequency difference threshold value
- r3808 CO: Sync-line-drive phase difference
- p3809[0...n] Sync network drive phase setpoint value
- p3811[0...n] Sync-line-drive frequency limitation
- r3812 CO: Sync-line-drive correction frequency
- p3813[0...n] Sync-line-drive phase synchronism threshold value
- r3814 CO: Sync-line-drive voltage difference
- p3815[0...n] Sync-line-drive voltage difference threshold value
- r3819.0...7 CO/BO: Sync-line-drive status word

6.23 Asynchronous pulse frequency

Function description

The pulse frequency is coupled to the current controller cycle, and can only be adjusted in multiple integer steps. For most standard applications, this setting makes sense and should not be modified. For certain applications, decoupling of the pulse frequency from the current controller cycle can result in the following advantages:

- Motor Modules or Power Modules are optimized.
- Certain motor types are operated with a more favorable pulse frequency.
- Motor Modules of different sizes can be operated with different pulse frequencies.
- Faster sampling times can be set for DCC and free function blocks.
- Faster setpoint transfers from a higher-level control system are possible.
- Automatic commissioning routines with different current controller cycles are simplified.

This function is enabled for Motor Modules and Power Modules in the Chassis format in vector control.

Activating the function

To be able to activate the asynchronous pulse frequency, the following requirements must be satisfied:

- r0192.16 = 1
- p1800 < 2 · 1000/p0115[0]
- p1810.3 = 0

When the requirements are satisfied, the asynchronous pulse frequency (for vector control) can be activated with the parameter setting p1810.12 = 1. The activation has the following effects:

- Switchover of the gating unit (p1810 bit 2)
- Switch on of the actual current value correction (p1840 bit 0)
- Minimum pulse frequency 1000 · 0.5 / p0115[0]
- Maximum pulse frequency 1000 · 2 / p0115[0]
- Fluctuating dead times and dynamic response in the current control circuit
- Increased current ripple in the current display

Example

Application

A large Motor Module (> 250 kW) in Chassis format and a small Motor Module (< 250 kW) in Booksize format are to be connected to a DRIVE-CLiQ line. The factory setting of the current controller cycle of the large Motor Module is 400 µs, corresponding to a pulse frequency of 1.25

kHz. The factory setting of the current controller cycle of the small Motor Module is 250 µs, corresponding to a pulse frequency of 2 kHz.

Problem

For standard applications, the current controller cycle of the large Motor Module is increased up to 500 µs, an integer multiple of the current controller cycle of 250 µs. As a consequence, the pulse frequency of the large Motor Module is 1 kHz. As a consequence, the Motor Module in Chassis format is no longer optimally utilized.

Remedy

Set the pulse frequency for the Motor Module Chassis to asynchronous operation with p1800.10 = 12. Then increase the pulse frequency to 1.25 kHz with p1800. The current controller cycle remains unchanged at 500 µs. The Chassis Motor Module is better utilized as a result of the increased pulse frequency.

When setting the pulse frequency for the Motor Module Chassis, the Motor Module Booksize is still operated in sync with the current control cycle of 250 µs at a pulse frequency of 2 kHz.

Boundary conditions for asynchronous pulse frequency

- A higher system utilization as a result of the activated gating unit for the asynchronous pulse frequency (p1810.12 = 1) and the required current actual value correction (p1840 = 1) causes:
  - Halving the maximum number of axes that can be used
  - A reduction in the current controller dynamic performance
- The maximum pulse frequency that can be set is limited to double the frequency of the current controller cycle.
- The pulse procedure, where the pulse frequency can be freely adjusted, is not suitable for a permanent-magnet synchronous motor without an encoder.
- If output reactors or filters are connected to a Motor Module in the Chassis format, when dimensioning the reactors, the maximum pulse frequency must be taken into account and for sine-wave filters, the minimum pulse frequency.
- The motor data identification must be performed with a current controller cycle of 250 µs or 500 µs with 2 kHz.

Overview of important parameters (see SINAMICS S120/S150 List Manual)

- p0115[0...6] Sampling times for internal control loops
- p1800[0...n] Pulse frequency setpoint
- p1810 Modulator configuration
- p1840[0...n] Actual value correction configuration

U/f control (vector control) 7

Function description

The U/f control characteristic is the simplest way to control an induction motor. When configuring the drive using the Startdrive commissioning tool, U/f control is activated under “Drive axis > Parameters > Basic parameter assignment > Control mode" screen (also see p1300).

Note

Ratio between the rated motor current and the rated Motor Module current

For U/f control, the permissible range of the ratio between the rated motor current (p0305) and rated Motor Module current (r0207) is 1:1 to 1:12.

The stator voltage of the induction motor is set proportional to the stator frequency. This procedure is used for the following standard applications where the dynamic performance requirements are low:

- Pumps
- Fans
- Belt drives

U/f control aims to maintain a constant flux Φ in the motor whereby the flux is proportional to the magnetizing current (Iμ) or the ratio of voltage (V) to frequency (f).

- Φ ~ Iμ ~ U/f

The torque M generated by an induction motor is proportional to the product of the flux and current (the vector product Φ · I).

- M ~ Φ · I

To generate as much torque as possible with a given current, the motor must function using the greatest possible constant flux. To maintain a constant flux (Φ), therefore, the voltage (V) must be changed in proportion to the frequency (f) to ensure a constant magnetizing current (Iμ). U/f characteristic control is derived from these basic premises.

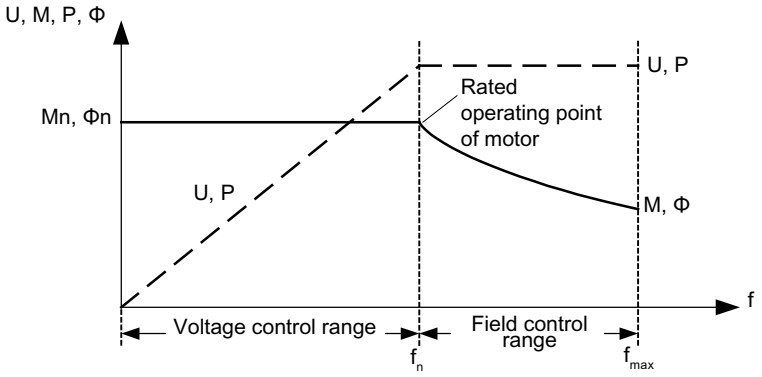

Figure 7-1 Operating areas and characteristic curves for the induction motor with converter supply

The following table gives an overview of the various versions of the U/f characteristic:

Table 7-1 U/f characteristic (p1300)

Parameter values	Meaning	Application / property	
0	Linear characteristic	Standard (without voltage boost)	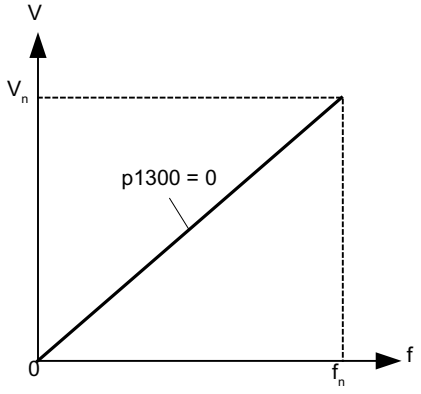
1	Linear characteristic with flux current control (FCC)	Characteristic that compensates for voltage losses in the stator resistance for static/dynamic loads (Flux Current Control FCC). This is particularly useful for small motors, since they have a relatively high stator resistance.	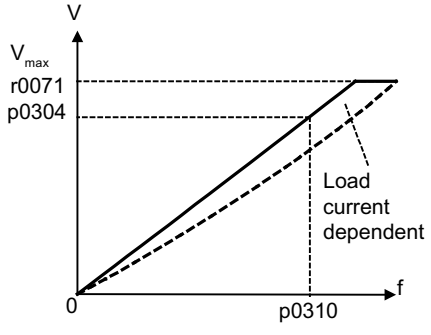

Parameter values	Meaning	Application / property	
2	Parabolic characteristic	Characteristic that takes into account the motor torque curve (e.g. fan, pump). • Quadratic characteristic (f^2 characteristic) • Energy saving because the low voltage also results in small currents and losses	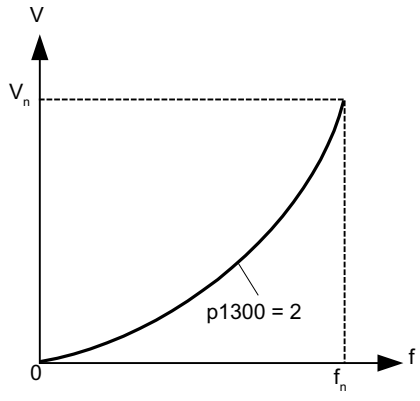
3	Programmable characteristic	Characteristic that takes into account motor/machine torque curve (e.g. synchronous motor).	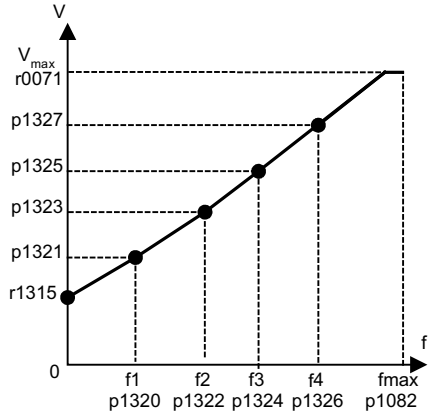
4	Linear characteristic and ECO	Characteristic, see parameter 0 and Eco mode at a constant operating point. • In the ECO mode, the efficiency at a constant operating point is optimized. This optimization is only effective in steady-state operation and when the ramp-function generator is not bypassed. • You must activate slip compensation and set the scaling of the slip compensation (p1335) so that the slip is completely compensated (generally, 100%).	
5	Precise frequency drives	Characteristic that takes into account the technological particularity of an application (e.g. textile applications): • Whereby the current limitation (Imax controller) only affects the output voltage and not the output frequency • By disabling slip compensation	
6	Precise frequency drives with flux current control (FCC)	Characteristic that takes into account the technological particularity of an application (e.g. textile applications): • Whereby the current limitation (Imax controller) only affects the output voltage and not the output frequency • By disabling slip compensation Voltage losses in the stator resistance for static/dynamic loads are also compensated (Flux Current Control FCC). This function is required for small motors, as, in comparison to large motors, they have a relatively high stator resistance.	

Parameter values	Meaning	Application / property
7	Parabolic characteristic and ECO	Characteristic, see parameter 1 and ECO mode at a constant operating point. • In the Eco mode, the efficiency at a constant operating point is optimized. This optimization is only effective in steady-state operation and when the ramp-function generator is not bypassed. • You must activate slip compensation and set the scaling of the slip compensation (p1335) so that the slip is completely compensated (generally, 100%).
19	Independent voltage setpoint	The user can define the output voltage of the Motor Module independently of the frequency using BICO parameter p1330 via the interfaces (e.g. analog input AI0 of Terminal Board 30 –> p1330 = r4055[0]).

Function diagram

- 6300 Vector control - U/f control, overview
- 6301 Vector control - U/f characteristic and voltage boost

Parameter

- p1300[0...n] Open-loop/closed-loop control operating mode
- p1320[0...n] U/f control programmable characteristic frequency 1

...

- p1327[0...n] U/f control programmable characteristic voltage 4
- p1330[0...n] CI: U/f control independent of voltage setpoint
- p1331[0...n] Voltage limitation
- p1333[0...n] U/f control FCC starting frequency
- r1348 CO: U/f control Eco factor actual value
- p1350[0...n] U/f control soft starting

7.1 Technology application (application) (p0500)

Function description

Using parameter p0500, you can influence the calculation of open-loop control and closed-loop control parameters. The default setting helps you find suitable values for standard applications.

You can make preassignments for the following technological applications:

Value p0500	Application
0	Standard drive (vector)
1	Pumps and fans
2	Encoderless control down to f = 0 (passive loads)
4	Dynamic response in the field weakening range
5	Starting with high breakaway torque
6	High load moment of inertia (e.g. centrifuges)

An overview of the influenced parameters and the set values is provided in the "SINAMICS S120/S150 List Manual".

Instantiating the calculation of the parameters

You call the calculation of the parameters, which influence the technological application, as follows:

- When exiting quick commissioning with p3900 > 0
- When automatically calculating the motor/closed-loop control parameters with p0340 = 1, 3, 5 (for p0500 = 6: p0340 = 1, 3, 4)
- When calculating the technology-dependent parameters with p0578 = 1

7.2 Voltage boost

Function description

According to the U/f characteristic, at an output frequency of 0 Hz, the control supplies an output voltage of 0 V. This means that at 0 V the motor cannot generate any torque. For this reason, the use of the "Voltage boost" function makes sense in the following cases:

- Magnetization build-up of an induction motor at n = 0 rpm
- Build-up of a torque at n = 0 rpm (e.g. in order to hold a load)
- Generation of a breakaway, acceleration or braking torque
- Compensation of ohmic losses in the windings and feeder cables

The voltage boost affects all U/f characteristics (p1300).

Note

Excessive motor temperature rise

If the voltage boost value is too high, this can result in an excessively high motor winding temperature increase - and therefore result in a shutdown (trip).

Versions

Three different options are available for the voltage boost:

- Permanent voltage boost with p1310
- Voltage boost only while accelerating with p1311
- Voltage boost only while starting for the first time with p1312

The following figure shows the signal characteristic in the 3 variants of the function.

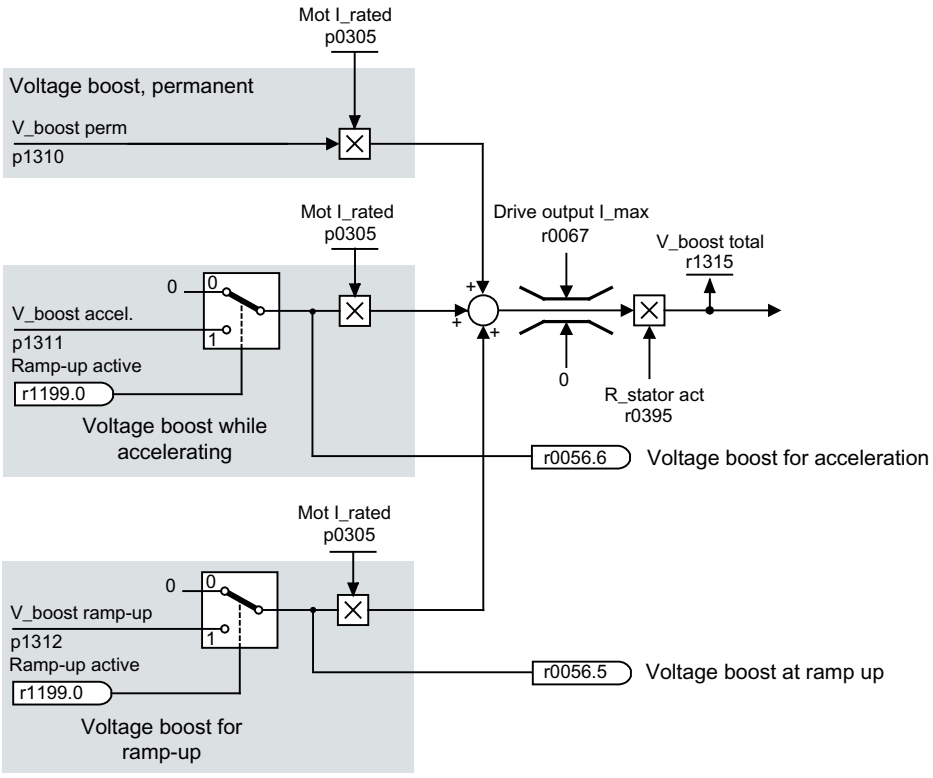

Figure 7-2 Voltage boost variants

Example: Voltage boost, permanent

The following applies in this example:

- p1300 = 0
- p1310 > 0
- $V_{permanent}$ = P0305 (rated motor current · p0395 (actual stator resistance) · p1310 (permanent voltage boost)

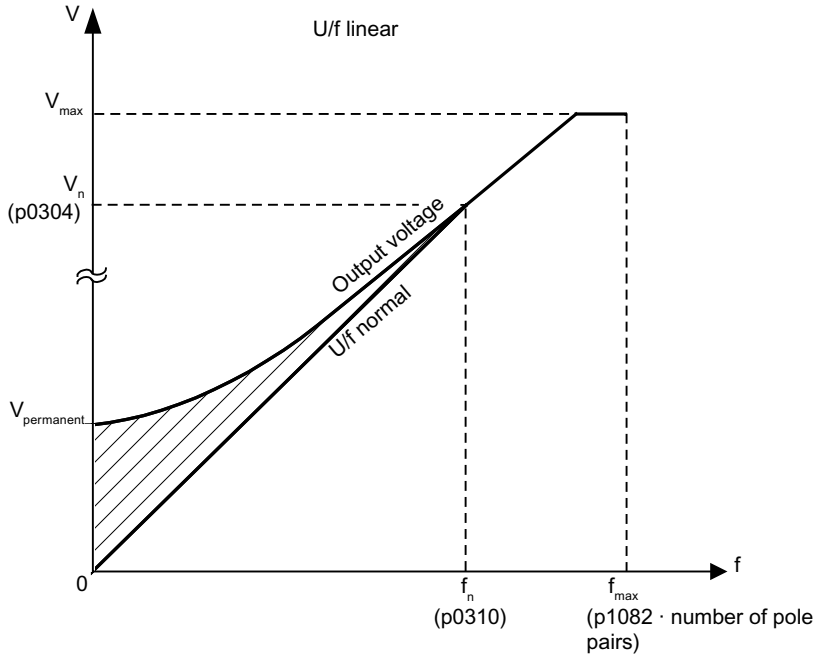

Example: Voltage boost while accelerating

Voltage boost while accelerating is effective if the ramp-function generators provide the feedback signal "ramp-up active" (r1199.0 = 1). The following applies in this example:

- p1300 = 0
- p1311 > 0
- $V_{acceleration}$ = P0305 (rated motor current · p0395 (actual stator resistance) · p1311 (voltage when accelerating)

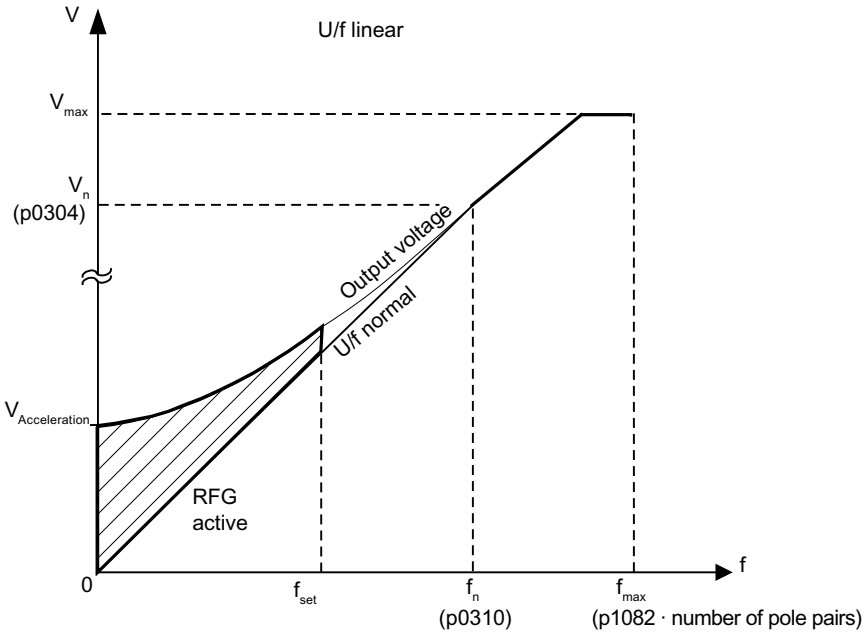

Function diagrams (see SINAMICS S120/S150 List Manual)

- 6301 Vector control - U/f characteristic and voltage boost

Overview of important parameters (see SINAMICS S120/S150 List Manual)

- p0304[0...n] Rated motor voltage
- p0305[0...n] Rated motor current
- r0395[0...n] Current stator resistance
- p1300[0...n] Open-loop/closed-loop control operating mode
- p1310[0...n] Starting current (voltage boost) permanent
- p1311[0...n] Starting current (voltage boost) acceleration
- p1312[0...n] Starting current (voltage boost) when starting
- r1315 Voltage boost total

7.3 Slip compensation

Function description

The slip compensation ensures that the motor setpoint speed n_{set} of induction motors is essentially kept constant independent of the load. For a load step from M1 to M2, the setpoint frequency should be automatically increased, so that the resulting frequency and therefore the motor speed is kept constant. When the load decreases from M2 to M1, then the setpoint frequency is automatically reduced.

If a motor holding brake is used, a setting value can be specified at the slip compensation output via p1351. A parameter setting of p1351 > 0 automatically activates the slip compensation (p1335 = 100 %).

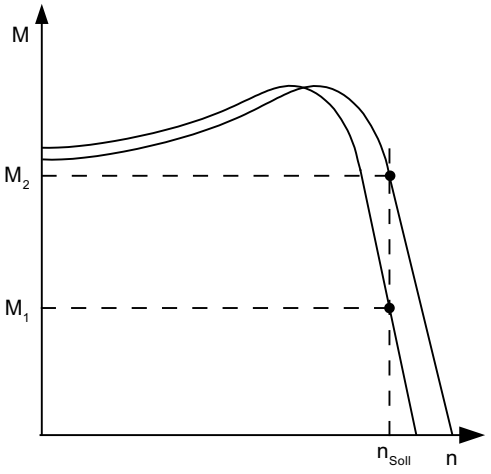

Overview of important parameters (see SINAMICS S120/S150 List Manual)

- r0330[0...n] Rated motor slip
- p1334[0...n] U/f control slip compensation starting frequency
- p1335[0...n] Slip compensation scaling
  p1335 = 0.0 % The slip compensation is deactivated.
  p1335 = 100.0 % The slip is fully compensated.
- p1336[0...n] Slip compensation limit value
- r1337 CO: Actual slip compensation
- p1351[0...n] CO: Motor holding brake start frequency

7.4 Resonance damping

Function description

The resonance damping function dampens active current oscillations that can occur under no-load conditions. Resonance damping is active in a range between 5% and 90% of the rated motor frequency (p0310), but only up to 45 Hz.

Note

Maximum frequency resonance damping

When p1349 = 0, the changeover limit is automatically set to 95% of the rated motor frequency, but only up to a maximum of 45 Hz.

The following figure shows the signal curve of the function.

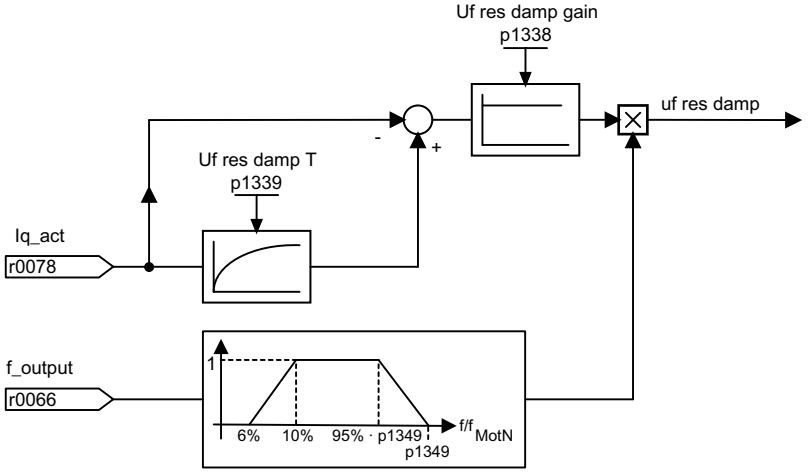

Function diagrams (see SINAMICS S120/S150 List Manual)

- 6310 Vector control - Resonance damping and slip compensation

Overview of important parameters (see SINAMICS S120/S150 List Manual)

- r0066 CO: Output frequency
- r0078 CO: Torque-generating actual current value
- p0310[0...n] Rated motor frequency
- p1338[0...n] U/f mode resonance damping gain
- p1339[0...n] U/f mode resonance damping filter time constant
- p1349[0...n] Maximum frequency

7.5 Vdc control

Function description

The "Vdc control" function can be activated using the appropriate measures if an overvoltage or undervoltage is present in the DC link.

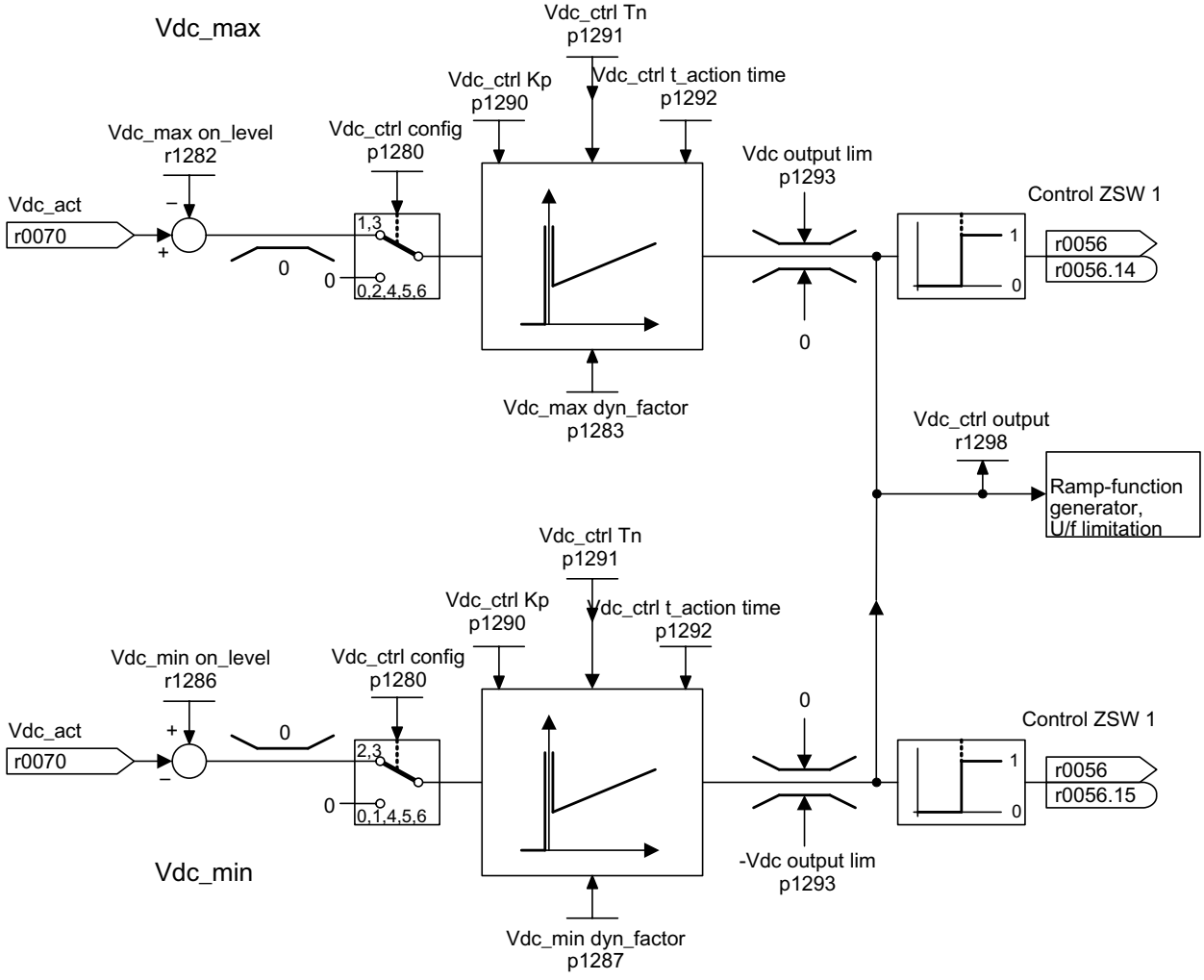

Figure 7-3 $V_{dc\ control}$ U/f

Undervoltage in the DC link

- Typical cause:
  Failure of the supply voltage or supply for the DC link.
- Remedy:
  Specify a regenerative torque for the rotating drive to compensate the existing losses, thereby stabilizing the voltage in the DC link (kinetic buffering).

Overvoltage in the DC link

- Typical cause:
  The drive is operating in regenerative mode and is supplying too much energy to the DC link.
- Remedy:
  Reduce the regenerative torque to maintain the DC link voltage within permissible limits.

Features

- V_{dc} control
  - This comprises V_{dc_max} control and V_{dc_min} control (kinetic buffering). These two functions can be parameterized independently of one another and activated.
  - There is a common PID controller. The dynamic factor is used to set V_{dc_min} and V_{dc_max} control to a smoother or harder setting independently of each other.
- V_{dc_min} control (kinetic buffering)
  - With this function, the kinetic energy of the motor is used for buffering the DC link voltage in the event of a momentary power failure, thereby delaying the drive.
- V_{dc_max} control
  - This function can be used to control momentary regenerative load without shutdown using "overvoltage in the DC link".
  - V_{dc_max} control is only recommended with a supply without active closed-loop control for the DC link and without feedback.

Vdc_min control

In the event of a power failure, V_{dc_min} is activated when the V_{dc_min} switch-on level is undershot. This controls the DC link voltage and maintains it at a constant level. The motor speed also decreases.

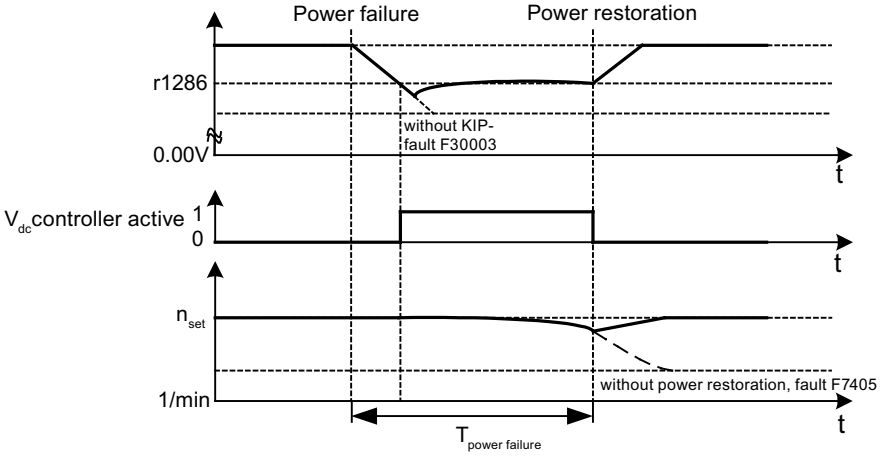

Figure 7-4 Switching V_{dc_min} control on/off (kinetic buffering)

When the line supply returns, the DC link voltage increases again. 5% above the V_{dc_min} switch-on level, the V_{dc_min} control is switched off again. The motor continues operating normally.

If the power supply is not re-established, the motor speed continues to drop. When the threshold in p1297 is reached, this results in a response in accordance with p1296.

Once the time threshold (p1295) has elapsed without the line voltage being re-established, a fault is triggered (F07406), which can be parameterized as required (factory setting: OFF3).

The V_{dc_min} controller can be activated for a drive. Other drives can participate in supporting the DC link, by transferring to them a scaling of their speed setpoint from the controlling drive via BICO interconnection.

Note

If it is expected that the line supply will return, you must make sure that the converter is not disconnected from the line supply. It could become disconnected, for example, if the line contactor drops out. The line contactor must be supplied, e.g. from an uninterruptible power supply (UPS).

Vdc_max control

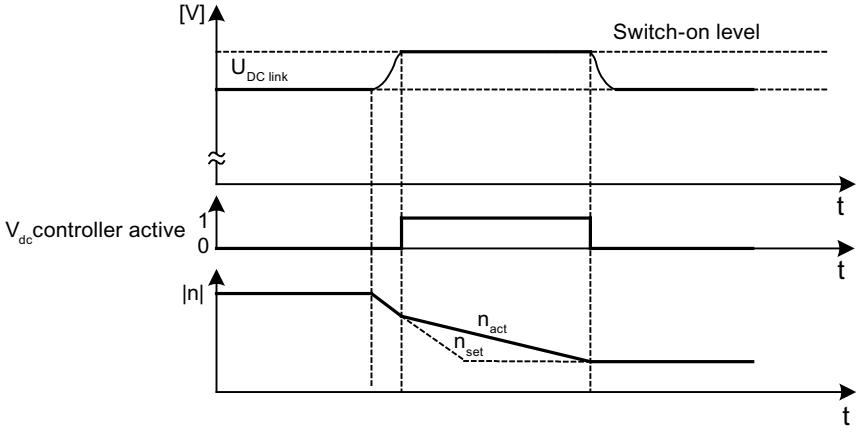

Figure 7-5 Switching the V_{dc_max} control on/off

The switch-on level for V_{dc_max}-control (r1282) is calculated as follows:

p1294 (automatic sensing of the ON level (U/f))		Switch-on level of the V_{dc_max} control (r1282)	Comment
Value	Meaning		
= 0	Switched out	r1282 = 1.15 · p0210	p0210 ≙ device supply voltage
= 1	Switched in	r1282 = V_{dc_max} - 50 V	V_{dc_max} ≙ overvoltage threshold of the Motor Module

Restrictions for Basic Line Modules

⚠ WARNING

Unexpected motion of individual drives

If several Motor Modules are supplied from one infeed unit, then if the V_{dc_max}control is incorrectly parameterized, individual drives can accelerate in an uncontrolled fashion, which can lead to death or severe injury.

- Only activate the V_{dc_max} control for the Motor Module whose drive has the highest moment of inertia.
- Inhibit this function for all other Motor Modules, or set this function to monitoring only.

If several Motor Modules are supplied from a non-regenerative infeed unit (e.g. a Basic Line Module), or for power failure or overload (for SLM / ALM), the V_{dc_max} control may only be activated for a Motor Module whose drive should have a high moment of inertia. For the other Motor Modules, this function must be disabled or monitoring must be set.

If the V_{dc_max} control is active for multiple Motor Modules, then the controllers may have negative effects on each other in the case of unfavorable parameter assignment. The drives may become unstable and individual drives may unintentionally accelerate.

Remedy

- activate the V_{dc_max} control:
  - Vector control: p1240 = 1 (factory setting)
  - Servo control: p1240 = 1
  - U/f control: p1280 = 1 (factory setting)
- Inhibit V_{dc_max} control:
  - Vector control: p1240 = 0
  - Servo control: p1240 = 0 (factory setting)
  - U/f control: p1280 = 0
- Activate the V_{dc_max} monitoring
  - Vector control: p1240 = 4 or 6
  - Servo control: p1240 = 4 or 6
  - U/f control: p1280 = 4 or 6

Function diagrams (see SINAMICS S120/S150 List Manual)

- 6320 Vector control - Vdc_max controller and Vdc_min controller (V/f)

Overview of important parameters (see SINAMICS S120/S150 List Manual)

- p1280[0...n] Vdc controller or Vdc monitoring configuration (V/f)
- r1282 Vdc_max controller switch-on level (V/f)
- p1283[0...n] Vdc_max controller dynamic factor (V/f)
- p1285[0...n] Vdc_min controller switch-on level (kinetic buffering) (V/f)
- r1286 Vdc_min controller switch-on level (kinetic buffering) (V/f)
- p1287[0...n] Vdc_min controller dynamic factor (kinetic buffering) (V/f)
- p1290[0...n] Vdc controller proportional gain (V/f)
- p1291[0...n] Vdc controller integral time (V/f)
- p1292[0...n] Vdc controller derivative time (V/f)
- p1293[0...n] Vdc_min controller output limit (V/f)
- p1294 Vdc_max controller automatic detection ON signal level (V/f)
- p1295[0...n] Vdc_min controller time threshold (V/f)
- p1296[0...n] Vdc_min controller response (kinetic buffering) (V/f)
- p1297[0...n] Vdc_min controller speed threshold (V/f)
- r1298 CO: Vdc controller output (V/f)

Basic functions 8

8.1 Switching over units

Function description

By changing over the units, parameters and process quantities for input and output can be changed over to an appropriate system of units (US units or as per unit quantities (%)).

The following supplementary conditions apply when changing over units:

- Parameters of the drive converter rating plate or the motor rating plate can be changed over between SI/US units; however, a per unit representation is not possible.
- After changing over the units parameter, all parameters that are assigned to one of the units group dependent on it, are all changed over to the new system of units.
- A parameter is available to select technological units (p0595) to represent technological quantities in the technology controller.
- If a changeover is made to referenced variables and the reference variable is subsequently changed, the % value entered in a parameter will not change.
  Examples:
  - A fixed speed of 80% corresponds, for a reference speed of 1500 RPM, to a value of 1200 RPM.
  - If the reference speed is changed to 3000 RPM, then the value of 80% is kept and now means 2400 RPM.

Restrictions

- When a unit changeover occurs, rounding to the decimal places is carried out. This can mean that the original value might change by up to one decimal place.
- If a referenced form is selected and the reference parameters (e.g. p2000) are changed retrospectively, the referenced values of some of the control parameters are also adjusted to ensure that the control behavior is unaffected.
- If you change the reference variables (p2000 to p2007) offline, there is a risk that the parameter value ranges will be violated. In this case, appropriate fault messages will be displayed when the parameters are loaded to the drive unit.

Groups of units

Every parameter that can be changed over is assigned to a units group, that, depending on the group, can be changed over within certain limits.

This assignment and the unit groups can be read for each parameter in the parameter list in the SINAMICS S120/S150 List Manual.

The unit groups can be individually switched using 4 parameters (p0100, p0349, p0505 and p0595).

Overview of important parameters (see SINAMICS S120/S150 List Manual)

- p0010 Infeed, commissioning parameter filter
- p0100 IEC/NEMA motor standard
- p0349 Unit system, motor equivalent circuit diagram data
- p0505 Unit system selection
- p0595 Technological unit selection
- p0596 Technological unit reference variable
- p2000 Reference speed reference frequency
- p2001 Reference voltage
- p2002 Reference current
- p2003 Reference torque
- r2004 Reference power
- p2005 Reference angle
- p2006 Reference temperature
- p2007 Reference acceleration

8.2 Reference parameters/scaling

Function description

Reference values, corresponding to 100%, are required to display units as percentages. These reference values are entered in parameters p2000 to p2007. They are computed during the calculation using p0340 = 1. After calculation in the drive, these parameters are automatically protected via p0573 = 1 from being overwritten in a new calculation (p0340). This eliminates the need to adjust the references values in a PROFIdrive controller whenever a new calculation of the reference parameters via p0340 takes place.

Parameters p0514 to p0519 are provided for scaling purposes when interconnecting BICO parameters (also see SINAMICS S120/S150 List Manual).

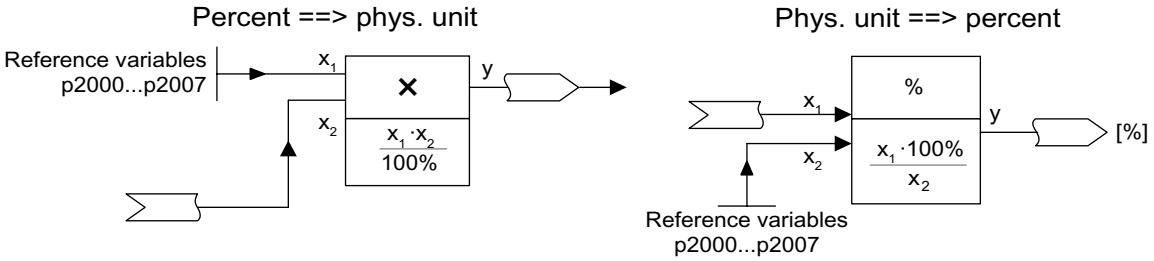

Figure 8-1 Conversion with reference variables

Note

If a referenced form is selected and the reference parameters (e.g. p2000) are changed retrospectively, the referenced values of some of the control parameters are also adjusted to ensure that the control behavior is unaffected.

Behavior in the case of offline parameter assignment.

After the offline drive configuration, the reference parameters are preset.

Note

If the reference values (p2000 to p2007) are changed offline, it can lead to limit violations of the parameter values, which cause alarms or faults when loading to the drive unit.

Scaling for the vector drive object

Table 8-1 Scaling for the vector drive object

Size	Scaling parameter	Default when commissioning for the first time
Reference speed	100% = p2000	p2000 = Maximum speed (p1082)
Reference voltage	100% = p2001	p2001 = 1000 V
Reference current	100% = p2002	p2002 = Current limit (p0640)
Reference torque	100% = p2003	p2003 = 2 · rated motor torque (r0333)
Reference power	100% = r2004	r2004 = p2003 · p2000 · 2π / 60

Size	Scaling parameter	Default when commissioning for the first time
Reference angle	100% = p2005	90°
Reference acceleration	100% = p2007	0.01 1/s²
Reference frequency	100% = p2000/60	-
Reference modulation depth	100% = Maximum output voltage without overload	-
Reference flux	100% = Rated motor flux	-
Reference temperature	100 % = p2006	100°C
Reference electrical angle	100 % = p2005	90°

Note

Operation of motors in the field-weakening range

If the motors are to be operated in the field-weakening range > 2:1, the value of parameter p2000 must be set ≤ 1/2 x maximum speed of the drive object.

Scaling for the servo drive object

Table 8-2 Scaling for the servo drive object

Size	Scaling parameter	Default when commissioning for the first time
Reference speed	100% = p2000	Induction motor p2000 = Maximum motor speed (p0322) Synchronous motor p2000 = Rated motor speed (p0311)
Reference voltage	100% = p2001	p2001 = 1000 V
Reference current	100% = p2002	p2002 = Motor limit current (p0338); when p0338 = "0", 2 · rated motor current (p0305)
Reference torque	100% = p2003	p2003 = p0338 · r0334; if "0", then 2 · rated motor torque (r0333)
Reference power	100% = r2004	r2004 = p2003 · p2000 · π / 30
Reference angle	100% = p2005	90°
Reference acceleration	100% = p2007	0.01 1/s²
Reference frequency	100% = p2000/60	-
Reference modulation depth	100% = Maximum output voltage without overload	-
Reference flux	100% = Rated motor flux	-
Reference temperature	100 % = p2006	100°C
Reference electrical angle	100 % = p2005	90°

Note

Operation of motors in the field-weakening range

If the motors are to be operated in the field-weakening range > 2:1, the value of parameter p2000 must be set ≤ 1/2 x maximum speed of the drive object.

Scaling for the A_INF drive object

Table 8-3 Scaling for the A_INF drive object

Size	Scaling parameter	Default when commissioning for the first time
Reference frequency	100% = p2000	p2000 = p0211
Reference voltage	100% = p2001	p2001 = p0210
Reference current	100% = p2002	p2002 = r0206/p0210/√3
Reference power	100% = r2004	r2004 = r0206
Reference modulation depth	100% = Maximum output voltage without overload	-
Reference temperature	100 % = p2006	100°C
Reference electrical angle	100 % = p2005	90°

Scaling for the S_INF drive object

Table 8-4 Scaling for the S_INF drive object

Size	Scaling parameter	Default when commissioning for the first time
Reference frequency	100% = p2000	p2000 = 50 Hz
Reference voltage	100% = p2001	p2001 = p0210
Reference current	100% = p2002	p2002 = r0206/p0210/√3
Reference power	100% = r2004	r2004 = r0206
Reference modulation depth	100% = Maximum output voltage without overload	-
Reference temperature	100 % = p2006	100°C
Reference electrical angle	100 % = p2005	90°

Scaling for the B_INF drive object

Table 8-5 Scaling for the B_INF drive object

Size	Scaling parameter	Default when commissioning for the first time
Reference frequency	100% = p2000	p2000 = 50 Hz
Reference voltage	100% = p2001	p2001 = p0210
Reference current	100% = p2002	p2002 = r0206/p0210/√3

Size	Scaling parameter	Default when commissioning for the first time
Reference power	100% = r2004	r2004 = r0206
Reference temperature	100 % = p2006	100°C
Reference electrical angle	100 % = p2005	90°

Overview of important parameters (see SINAMICS S120/S150 List Manual)

- r0206[0...4] Rated power module power
- p0210 Device supply voltage
- p0340[0...n] Automatic calculation of motor/control parameters
- p0573 Inhibit automatic reference value calculation
- p2000 Reference speed reference frequency
- p2001 Reference voltage
- p2002 Reference current
- p2003 Reference torque
- r2004 Reference power
- p2005 Reference angle
- p2006 Reference temperature
- p2007 Reference acceleration
- p0514[0...9] Specific scaling, reference values
- p0515[0...19] Specific scaling, parameter referred to p0514[0]
- p0516[0...19] Specific scaling, parameter referred to p0514[1]
- p0517[0...19] Specific scaling, parameter referred to p0514[2]
- p0518[0...19] Specific scaling, parameter referred to p0514[3]
- p0519[0...19] Specific scaling, parameter referred to p0514[4]
- p0520[0...19] Specific scaling, parameter referred to p0514[5]
- p0521[0...19] Specific scaling, parameter referred to p0514[6]
- p0522[0...19] Specific scaling, parameter referred to p0514[7]
- p0523[0...19] Specific scaling, parameter referred to p0514[8]
- p0524[0...19] Specific scaling, parameter referred to p0514[9]

8.3 Checking for a short-circuit/ground fault at a motor

Overview

The function is only available for **vector control**.

Function description

When switching on the power unit, test pulses can be generated that check the connection between the power unit and motor - or the motor winding itself - for a short-circuit or ground fault.

This function is only available for vector control.

In parameter p1901, you can define as to whether only the short circuit test is executed or additionally also a ground fault test (with higher current pulses). The parameter can be configured as follows:

- p1901.0: Checks for a conductor-conductor short-circuit once when the pulses are enabled.
- p1901.1: Checks for a ground fault once when the pulses are enabled.
- p1901.2 = 0: The checks selected with bit 00 or bit 01 are performed once when the pulses are enabled.
- p1901.2 = 1: The checks selected with bit 00 or bit 01 are performed each time the pulses are enabled.

The test can be executed once after the Control Unit is switched on (POWER ON) or each time that the pulses are enabled.

The ground fault test is only possible when the motor is stationary, and is therefore only realized when flying restart is deactivated (p1200 = 0).

The tests slightly delay motor starting, depending on the selection in p1901. The result of the short-circuit or ground fault test is indicated in r1902.

Note

The ground fault and short-circuit test is automatically deactivated as soon as a sine-wave filter is connected. The test pulses can excite the filter.

8.4 Modular machine concept

Function description

The modular machine concept is based on a maximum target topology created in the offline mode in the engineering tool. The maximum design of a particular machine type is referred to as the maximum configuration in which all the machine components that may be used are pre-configured in the target topology. Sections of the maximum configuration can be removed by deactivating or removing drive objects (p0105 = 2).

If a component fails, the sub-topology can also be used to allow a machine to continue running until the spare part is available. In this case, however, no BICO source must be interconnected from this drive object to other drive objects.

Example of a sub-topology

The starting point is a machine created in the engineering tool in offline mode for which "Drive 1" has not been implemented.

- Object "Drive 1" must be removed from the target topology via p0105 = 2 in the offline mode.
- The DRIVE-CLiQ cable is reconnected from the Control Unit directly to "Drive 2".
- Download the project by choosing "Load to drive object".
- Copy from RAM to ROM.

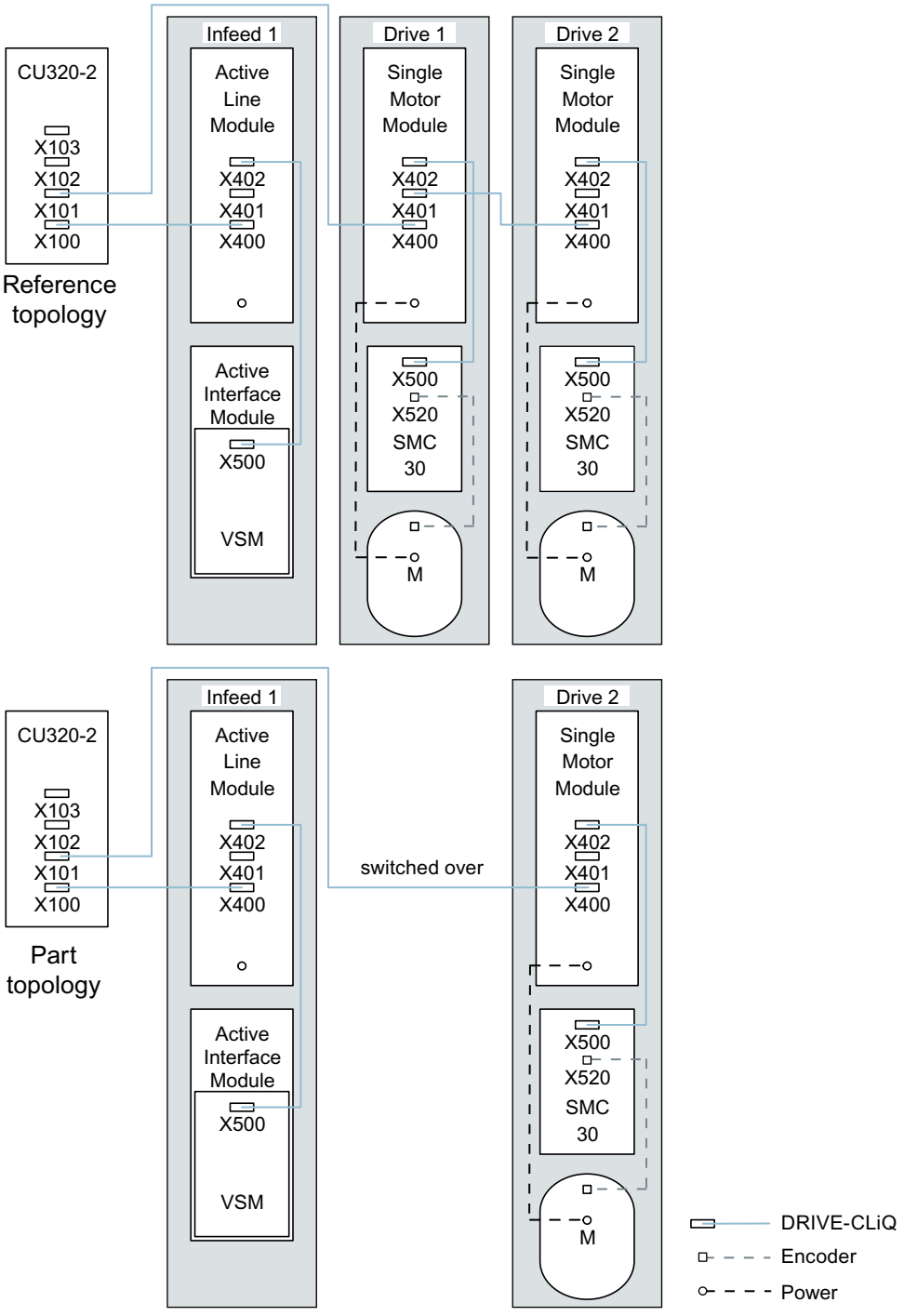

Figure 8-2 Example of a sub-topology

Note

Defective Safety Integrated status indicator

If a drive in a Safety Integrated drive line-up is deactivated using p0105, then r9774 is not correctly output. The signals of a deactivated drive are no longer updated.

Overview of important parameters (see SINAMICS S120/S150 List Manual)

- p0105 Activate/deactivate drive object
- r0106 Drive object active/inactive
- p0125[0...n] Activate/deactivate power unit component
- r0126[0...n] Power unit components active/inactive
- p0145[0...n] Enable/disable sensor interface
- r0146[0...n] Sensor interface active/inactive
- p9495 BICO behavior for deactivated drive objects
- p9496 BICO behavior when activating drive objects
- r9498[0 ... 29] BICO BI/CI parameters for deactivated drive objects
- r9499[0 ... 29] BICO BO/CO parameters for deactivated drive objects

8.5 Sine-wave filter

Overview

The "Sine-wave filter" function is only available for **vector control**.

Function description

NOTICE
Damage to a sine-wave filter through incorrect parameter assignment
The sine-wave filter can be damaged as a result of an incorrect parameter assignment. • Activate the sine-wave filter during commissioning via parameter p0230 = 3.

NOTICE
Damage to the sine-wave filter if a motor is not connected
Sine-wave filters, which are operated without a motor being connected, can be damaged or destroyed. • Never operate a sine-wave filter on the Power Module or Motor Module without a connected motor.

The sine-wave filter limits the voltage rate-of-rise and the capacitive charge/discharge currents that usually occur with converter operation. It also prevents additional noise caused by the pulse frequency. The service life of the motor is the same as that with direct line operation.

The sine-wave filter is only available for vector control.

Usage restrictions for sine-wave filters

The following restrictions must be taken into account when a sine-wave filter is used:

- The output frequency is limited to a maximum of 150 Hz.
- The modulation type is permanently set to space vector modulation without overload. This reduces the maximum output voltage to approx. 85% of the rated output voltage.
- Maximum permissible motor cable lengths:
  - Unshielded cables: Max. 450 m
  - Shielded cables: Max. 300 m
- Further restrictions are contained in the following device manuals:
  - SINAMICS S120 AC Drive
  - SINAMICS S120 air-cooled Chassis power units
  - SINAMICS S120 Chassis power units, liquid-cooled

Note

If a filter cannot be parameterized (p0230 < 3), this means that a filter has not been provided for the component. In this case, the drive converter must not be operated with a sine-wave filter.

Table 8-6 Parameter settings for sine-wave filters

Parameter number	Name	Setting
p0233	Power unit motor reactor	Filter inductance
p0234	Power unit sine-wave filter capacitance	Filter capacitance
p0290	Power unit overload response	Disable pulse frequency reduction
p1082	Maximum speed	Fmax filter / pole pair number
p1800	Pulse frequency	Nominal pulse frequency of the filter
p1802	Modulator modes	Space vector modulation without overload

8.6 Motor reactors

Overview

The "Motor reactors" function is only available for **vector control**.

Function description

Motor reactors reduce the voltage load on the motor windings by reducing the voltage gradients at the motor terminals that occur during converter operation. At the same time, the capacitive charge/discharge currents that occur at the converter output when long motor cables are used are reduced.

This function is only available for vector control.

Restrictions

The following restrictions must be taken into account when a motor reactor is used:

- The output frequency is limited:
  - Booksize power units: To maximum 120 Hz.
  - Blocksize and Chassis power units: To maximum 150 Hz.
- Maximum permissible motor cable lengths are limited and depend on the number of motor reactors connected in series.

For details, see the following device manuals:

- SINAMICS S120 AC Drive
- SINAMICS S120 Booksize power units
- SINAMICS S120 air-cooled Chassis power units
- SINAMICS S120 Chassis power units, liquid-cooled

The maximum permissible pulse frequency for the motor reactor is defined as follows for the SINAMICS power units:

- for Booksize and Blocksize power units, the single rated pulse frequency (4 kHz).
- for Chassis power units, twice the rated pulse frequency (2.5 kHz from 315 kW to 800 kW at 400 V or 75 kW to 1200 kW at 690 V or 4 kHz to 250 kW at 400 V).
- for Chassis-2 Motor Modules, the single rated pulse frequency (2.5 kHz).

NOTICE
Damage to the motor reactor if the maximum pulse frequency is exceeded
Inadmissibly high pulse frequencies can damage the motor reactor. • Do not exceed maximum permissible pulse frequency.

Configuring the function

1. Activate the motor reactors during commissioning (p0230 = 1).
2. Enter the number of motor reactors connected in series via p0235.

Overview of important parameters (see SINAMICS S120/S150 List Manual)

- p0230 Drive filter type, motor side
- p0233 Power unit motor reactor
- p0235 Number of motor reactors in series

8.7 dv/dt filter plus Voltage Peak Limiter

Overview

The "du/dt filter plus Voltage Peak Limiter" function is only available for **vector control**.

Function description

The dv/dt filter plus Voltage Peak Limiter consists of the following components:

- dv/dt reactor
- Voltage Peak Limiter (VPL)
  The VPL cuts the voltage peaks off and feeds the energy back into the DC link.

The function should preferably be used for operation with motors for which the dielectric strength of the insulation system is unknown or insufficient. Standard motors of the 1LA5, 1LA6 and 1LA8 series require the use of the function for supply voltages > 500 V +10%.

With motor cable lengths of < 150 m, the function limits the rate of voltage rise to values < 500 V/µs and the typical voltage peaks to the following values:

- Voltage peaks ÛLL (typically) < 1000 V for V_{line} < 575 V
- Voltage peaks ÛLL (typically) < 1250 V for 660 V < V_{line} < 690 V

Restrictions

NOTICE
Damage to the dv/dt filter from exceeding the maximum pulse frequency
Inadmissibly high pulse frequencies can damage the du/dt filter. • Do not exceed maximum permissible pulse frequency.

The following restrictions must be taken into account when a dv/dt filter is used:

- The output frequency is limited to a maximum of 150 Hz.
- Maximum permissible motor cable lengths:
  - Shielded cables: Max. 300 m
  - Unshielded cables: Max. 450 m
- Further restrictions are contained in the following device manuals:
  - SINAMICS S120 AC Drive
  - SINAMICS S120 air-cooled Chassis power units
  - SINAMICS S120 Chassis power units, liquid-cooled

The maximum permissible pulse frequency when using a du/dt filter:

- For 2.5 kHz
  - Chassis power units from 315 kW to 800 kW at 400 V
  - Chassis power units from 75 kW to 1200 kW at 690 V
  - Chassis-2 power units at 400 V
- For 4 kHz
  - Chassis power units up to 250 kW at 400 V

Configuring the function

The dv/dt filter must be activated when commissioning the system (p0230 = 2).

8.8 dv/dt filter compact plus Voltage Peak Limiter

Overview

The "du/dt filter compact plus Voltage Peak Limiter" function is only available for **vector control**.

Descriptions of functions

The dv/dt filter compact plus Voltage Peak Limiter consists of the following components:

- dv/dt reactor
- Voltage Peak Limiter (VPL)
  The VPL cuts the voltage peaks off and feeds the energy back into the DC link.

The function should preferably be used for operation with motors for which the dielectric strength of the insulation system is unknown or insufficient.

The function limits the voltage loads on the motor cables to the values in accordance with limit value curve A according to IEC/TS 60034-25:2007. The rate of voltage rise is limited to < 1600 V/µs, the peak voltages are limited to < 1400 V.

Continuous operation

NOTICE
Damage to the dv/dt filter during continuous operation with low output frequencies Continuous operation with output frequencies of less than 10 Hz - or not complying with the permissible time ratings - can thermally destroy the du/dt filter. • Comply with the specifications.

Continuous operation is only permissible for output frequencies higher than 10 Hz. For short-time operation, output frequencies less than 10 Hz are permissible for a maximum of 5 minutes. However, this must be followed by a minimum period of 5 minutes, where the output frequency is higher than 10 Hz.

Pulse frequency

NOTICE
Damage to the du/dt filter compact with voltage peak limiter by exceeding the maximum pulse frequency Inadmissibly high pulse frequencies can damage the du/dt filter compact with voltage peak limiter. • Do not exceed maximum permissible pulse frequency.

The maximum permissible pulse frequency when using a du/dt filter:

- For 2.5 kHz
  - Chassis power units from 315 kW to 800 kW at 400 V
  - Chassis power units from 75 kW to 1200 kW at 690 V
- For 4 kHz
  - Chassis power units up to 250 kW at 400 V

Restrictions

The following restrictions must be taken into account when a dv/dt filter is used:

- The output frequency is limited to a maximum of 150 Hz.
- Maximum permissible motor cable lengths:
  - Shielded cables: Max. 100 m
  - Unshielded cables: Max. 150 m
- Further restrictions are contained in the following device manuals:
  - SINAMICS S120 AC Drive
  - SINAMICS S120 air-cooled Chassis power units
  - SINAMICS S120 Chassis power units, liquid-cooled

Configuring the function

During commissioning, you must activate the dv/dt filter with p0230 = 2.

8.9 Pulse frequency wobbling

Overview

The "Pulse frequency wobbling" function is only available for **vector control** and for Motor Modules in Chassis format with DRIVE-CLiQ (article numbers: 6SL3...-.....-...3).

Function description

The function damps the spectral components, which can generate unwanted noise in the motor. Wobbling can be activated only for pulse frequencies that are ≤ the current controller frequency (see also p0115[0]).

Wobbling causes the pulse frequency in a modulation interval to deviate from the setpoint frequency. This means that the actual pulse frequency might be higher than the average pulse frequency required. A noise generator can be used to vary the pulse frequency around an average value. In this case, the average pulse frequency is equal to the setpoint pulse frequency. The pulse frequency can be varied in every current controller cycle if the cycle is constant. Current measurement errors resulting from asynchronous pulse and control intervals are compensated by a correction in the actual current value.

Pulse frequency wobbling can be parameterized with parameter p1810 "Modulator configuration".

Parameter p1811[0...n] "Pulse frequency wobbling amplitude" can be set to adjust the magnitude of variation in the pulse frequency wobble to between 0 and 20%. The factory setting is 0%. For a wobble amplitude of p1811 = 0 %, the maximum possible pulse frequency is p1800 = 2 · 1/current controller cycle (1000/p0115[0]). With a wobble amplitude setting of p1811 > 0, the maximum possible pulse frequency is p1800 = 1/current controller cycle (1000/p0115[0]). These conditions apply to all indices.

Note

If pulse frequency wobbling is deactivated, parameter p1811 is set to "0" in all of the indices.

Overview of important parameters (see SINAMICS S120/S150 List Manual)

- p1810 Modulator configuration
- p1811[0...n] Pulse frequency wobbling amplitude

8.10 Direction reversal without changing the setpoint

Function description

⚠ WARNING

Excessively high torque due to an inappropriate phase sequence of the motor after direction reversal

If a drive is synchronized to the line supply, when the direction is reversed, high torques can be generated when connecting to the line supply if the phase sequence of the line voltage does not match the phase sequence of the rotating motor. This high torque can destroy the coupling between the motor and load and therefore result in death or severe injury.

- As a consequence, for this constellation, check the phase sequence of the VSM wiring and correct if necessary.

NOTICE

Uncontrollable acceleration of the drive with an external speed actual value

When using an external speed actual value for the speed controller via p1440, positive feedback can occur in the speed control loop. As a consequence, the drive accelerates up to its speed limit and can be damaged.

- When using external speed actual values for the speed controller, additionally change its polarity when reversing the direction of rotation (p1821 = 1).

Note

Position reference is lost at direction reversal

If direction reversal is configured in the data set configurations (e.g. p1821[0] = 0 and p1821[1] = 1), when the function module "Basic positioner" or "Position control" is activated, the absolute adjustment is reset after each data set changeover (p2507), as the position reference is lost when the direction of rotation is switched over.

The direction of rotation of the motor can be reversed using the direction reversal via p1821 without having to change the motor rotating field by interchanging two phases at the motor and having to invert the encoder signals using p0410. The direction reversal via p1821 can be detected as a result of the motor direction of rotation. The speed setpoint and actual value, torque setpoint and actual value and also the relative position change remain unchanged. The direction change can be identified as a result of the phase voltage (r0089). When the direction reverses, then the absolute position reference is also lost.

For vector control, in addition, the output direction of rotation of the converter can be reversed using p1820. This means that the rotating field can be changed without having to interchange

the power connections. If an encoder is being used, the direction of rotation must, when required, be adapted using p0410.

Note

Rotating/moving measurement for motor data identification for servos drives

Use parameter p1959[0...n].14/15 = 0 to activate a direction inhibit for the rotating measurement for motor data identification where necessary. The direction inhibit should be deactivated with p1959[0...n].14/15 = 1 for complete and accurate identification of the motor.

Features

- No change to the speed setpoint and actual value, the torque setpoint and actual value and the relative position change.
- Only possible when the pulses are inhibited.

Overview of important parameters (see SINAMICS S120/S150 List Manual)

- r0069[0...8] CO: Phase current actual value
- r0089[0...2] Phase voltage, actual value
- p1820[0...n] Reverse output phase sequence
- p1821[0...n] Direction of rotation
- p1959[0...n] Rotating measurement configuration
- p2507[0...n] Position control absolute encoder adjustment status

8.11 Automatic restart

Function description

The automatic restart function is used to automatically restart the drive/drive system, e.g. when the power is restored after a power failure. In this case, all of the faults present are automatically acknowledged and the drive is powered-up again. This function is not only restricted to line supply faults; it can also be used to automatically acknowledge faults and to restart the motor after any fault trips.

To allow the drive to be connected to a motor shaft that is still rotating, for a "Vector" drive object the "Flying restart" function has to be activated using p1200. Before the automatic restart commences, it must be ensured that the returning supply voltage is available and is present at the infeed.

You can find more information in Chapter Switch on infeed unit via a drive axis (Page 694).

Note

Automatic restart functions in servo control and vector control and for infeed units with infeed control.

After the line supply voltage is connected, Smart Line Modules 5kW/10kW automatically switch on.

When the automatic restart function is activated, then the system also restarts after the Control Unit powers up if there is still an ON signal.

Power restoration with p1210 > 1

⚠ WARNING

Unplanned motion when the automatic restart function is active

When the automatic restart is activated, when the line supply returns, unexpected motion can occur that may result in death or serious injury.

- Take the appropriate measures on the plant/system side so that there is no safety risk as a result of an unexpected restart.

If p1210 is set to the value > 1, the Line Module / motors can start automatically once the line supply has been re-established. This is especially critical if, after longer line supply failures, motors come to a standstill (zero speed) and it is incorrectly assumed that they have been powered-down.

Configuring the function

Proceed as follows to configure the function:

1. Activate the function for drive objects "Servo", "Vector" or X_INF (all drive objects "Infeed"; i.e. A_INF, B_INF, S_INF).
   - Automatic restart: Set mode (p1210).
   - Flying restart (only for "Vector"): Activate function (p1200).
2. Set the startup attempts (p1211).
3. Set the wait times (p1212, p1213).
4. Check the function.

Automatic restart mode

Table 8-7 Automatic restart mode

p1210	Mode	Meaning
0	Disables automatic restart	Automatic restart inactive
1	Acknowledges all faults without re-starting	Any faults that are present, are acknowledged automatically once the cause has been rectified. If further faults occur after faults have been acknowledged, then these are also again automatically acknowledged. A minimum time of p1212 + 1s must expire between successful fault acknowledgment and a fault re-occurring if the signal ON/OFF1 (control word 1, bit 0) is at a HIGH signal level. If the ON/OFF1 signal is at a LOW signal level, the time between a successful fault acknowledgment and a new fault must be at least 1s. For p1210 = 1, fault F07320 is not generated if the acknowledge attempt failed (e.g. because the faults occurred too frequently).
4	Restart after line supply failure, without additional startup attempts	An automatic restart is only carried out if fault F30003 has also occurred at the Motor Module, or there is a high signal at binector input p1208[1], or in the case of an infeed drive object (X_INF1), fault F06200 has occurred. If additional faults are pending, then these faults will also be acknowledged; if this is successful, the startup attempt will be resumed. For the case that only the phase voltage fails, time monitoring can be set using p1213.
6	Restart after a fault with additional startup attempts	An automatic restart is carried out after any fault or for p1208[0] = 1. If the faults occur one after the other, then the number of startup attempts is defined in p1211. Monitoring over time can be set using p1213.
14	Restart after line supply failure following manual acknowledgment	As for 4: However, existing faults must be acknowledged manually. This is then followed by an automatic restart.
16	Restart after a fault after manual acknowledgment	As for 6: However, existing faults must be acknowledged manually. This is then followed by an automatic restart.

Startup attempts (p1211) and wait time (p1212)

p1211 is used to specify the number of startup attempts. The number is internally decremented after each successful fault acknowledgment (line supply voltage must be re-applied or the infeed unit signals that it is ready). Fault F07320 is signaled if the number of parameterized startup attempts is exceeded.

When p1211 = x, x + 1 startup attempts are made.

Note

A startup attempt immediately starts when the fault occurs.

The faults are automatically acknowledged in intervals of half the waiting time p1212.

After successfully acknowledgment and the voltage returns, then the system is automatically powered-up again.

The startup attempt has been successfully completed if the flying restart and the motor magnetization (induction motor) have been completed (r0056.4 = 1) and one additional second has expired. The starting counter is only reset to the initial value p1211 after this time.

If additional faults occur between successful acknowledgment and the end of the startup attempt, then the startup counter, when it is acknowledged, is also decremented.

Monitoring time line supply return (p1213)

The monitoring time starts when the faults are detected. If the automatic acknowledgments are not successful, the monitoring time runs again. If the drive has not successfully started again after the monitoring time has expired (flying restart and motor magnetization must have been completed: r0056.4 = 1), fault F07320 is output. The monitoring is deactivated with p1213 = 0.

If p1213 is set lower than the sum of p1212, the magnetization time r0346 and the additional delay time due to flying restart, then fault F07320 is generated at each restart. p1210 = 1 prevents a restart. The monitoring time must be extended if the faults that occur cannot be immediately and successfully acknowledged (e.g. when faults are permanently present).

Exceptions

There are faults, where after they have occurred, an automatic restart would be dangerous or is undesirable. Enter the numbers of these faults into p1206[0...9]. The automatic restart is suppressed if one of these faults occurs. After the cause of the fault has been removed, the drives must be switched-on in another way.

Overview of important parameters (see SINAMICS S120/S150 List Manual)

- r0863.0...2 CO/BO: Drive coupling status word / control word
- p1206[0...9] Automatic restart fault active
- p1207 BI: Automatic restart (AR) - connection to the following drive object
- p1208[0...1] BI: Automatic restart modification, infeed
- p1210 Automatic restart mode
- p1211 Automatic restart, startup attempts
- p1212 Automatic restart, delay time startup attempts
- p1213[0...1] Automatic restart monitoring time
- r1214.0...15 CO/BO: Automatic restart status

8.12 Armature short-circuit

Overview

You set the "Armature short-circuit" function in the parameter p1231[0...n]. You can determine the current status of the function in r1239.

Requirement

- Operation with permanent-magnet synchronous motors

Function description

⚠ WARNING

Motor accelerates uncontrollably for pulling loads

For pulling loads, for an armature short circuit, the motor can uncontrollably accelerate if a mechanical brake is not additionally used. If the motor accelerates uncontrollably this can result in severe injury or death.

- For pulling loads, only use armature short circuit braking to support a mechanical brake (a mechanical brake is mandatory).

Using the "Armature short-circuit" function, you can brake **permanent-magnet synchronous motors**. The stator windings of synchronous motors are then short-circuited. For a rotating synchronous motor, a current flows that brakes the motor.

The function is preferably used in the following cases:

- Braking without regenerative feedback
- Braking when the power fails
- Operation with a line module that is not capable of energy recovery
- Braking the motor despite loss of orientation (e.g. when there are encoder errors)

You can switch the armature short-circuit internally via the Motor Module or externally using a contactor circuit with braking resistors.

The advantage of armature short-circuit braking over a mechanical brake is the response time of the internal armature short-circuit braking with just a few milliseconds. The response time of a mechanical brake is about 40 ms. For external armature short-circuit braking, the slowness of the switching contactor results in a response time of over 60 ms.

8.12.1 Internal armature short-circuit braking

Overview

With the "Internal armature short-circuit braking" function, the motor windings are short-circuited via a Motor Module.

Supported Motor Modules

The function has been released for Motor Modules in the Booksize and Chassis formats.

Requirement

- Short-circuit-proof motors (p0320 < p0323)
- One of the following motor types is used:
  - rotating permanent-magnet synchronous motor (p0300 = 2xx)
  - linear permanent-magnet synchronous motor (p0300 = 4xx)
- The maximum current of the Motor Module (r0209.0) must be at least 1.8x the motor short-circuit current (r0331).

Note

Internal short-circuit braking despite power failure

If armature short-circuit braking should still be maintained despite a power failure, you must buffer the 24 V power supply for the Motor Module. For this purpose, you can use for example a dedicated SITOP unit for the Motor Module or a Control Supply Module (CSM).

Configuring the function

Carry out the following steps to configure the function:

Setting the function

The internal armature short-circuit braking is set with p1231 = 4.

Activating the function

The function is activated and initiated if the signal source of p1230 is set to a "1" signal.

Deactivating the function

The function is deactivated if the signal source of p1230 is set to a "0" signal. When triggered by a fault, the fault must have been removed and acknowledged.

8.12.2 External armature short-circuit braking

Overview

Via output terminals, the "External armature short-circuit braking" function controls an external contactor, which then short-circuits the motor windings through resistors.

Requirement

- Short-circuit-proof motors (p0320 < p0323):
  Use only short-circuit proof motors, or use suitable resistors to short-circuit the motor.
- One of the following motor types is used:
  - rotating permanent-magnet synchronous motor (p0300 = 2xx)
  - linear permanent-magnet synchronous motor (p0300 = 4xx)

Configuring the function

Carry out the following steps to configure the function:

Setting the function

The external armature short-circuit braking is activated via p1231 = 1 **with contactor feedback signal** or via p1231 = 2 **without contactor feedback signal**.

Activating the function

The function is activated as follows:

- The signal source is set to a "1" signal by p1230.
- The pulse inhibit is set.

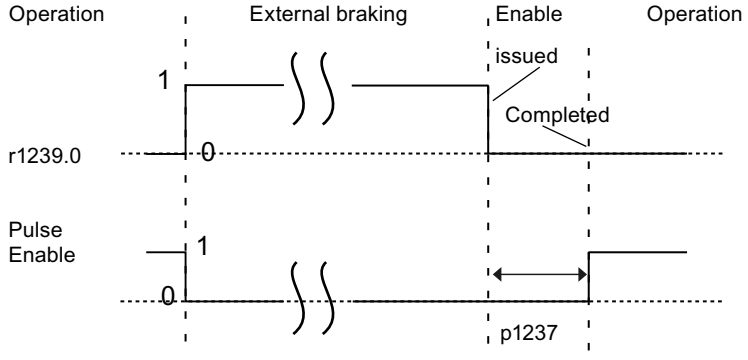

Figure 8-3 Signal flow without contactor feedback signal during pulse enable

If the function is activated, then the following responses are executed:

1. Pulse cancellation is first activated,
2. then the external armature short-circuit braking is initiated. If the function has been triggered, r0046.4 indicates a "1".

Example

The function is activated if the signal source of p1230 is set to "1". Then the following responses are carried out:

1. The display parameters of drive object Motor Module r1239.0 and r0046.4 also indicate "1".
2. Pulse enable is deleted, and the contactor for the external braking is switched.
3. Braking starts as a result of the short-circuited armature.
4. Braking is terminated by setting the signal source of p1230 to "0" signal. As a consequence r1239.0 also displays a "0" signal.
5. When the wait time p1237 expires, the pulse enables are output.

Calculating external braking resistors

To achieve the highest braking effect, calculate the values of the resistors using the following formula:

- $R_{ext} = 5.2882 \cdot 10^{-5} \cdot p0314 \cdot p0356 \cdot n_{max} - p0350$
  n_{max} = maximum speed used

Parameterizing the function

You can parameterize Motor Modules and Control Units with the aid of an engineering tool (e.g. Startdrive). The parameter lists of the drive objects and of the digital inputs/outputs are available for this.

- Terminals 11 and 14 are connected to ground.
- The digital inputs/outputs DI/DO 8 to 15 are connected with terminals 9, 10, 12 and 13 at terminal blocks X122 and X132. You can use parameters p0728[8...15] to define the terminals as an input or output.
- Digital inputs DI 8 to 15 are interconnected with the parameters p0722[8...15] and can be inverted with p0723[8...15].
- The outputs are interconnected with parameters p0738 to p0745.
- The outputs can be inverted with p0748[8...15] = 1.
- Parameters p0722 to p0748 are Control Unit parameters.
- Parameters p123x, r1239 and r0046 are drive parameters.

Example of external armature short-circuit braking

The following diagram shows the interconnections connected between the converter and Control Unit (see function diagram 7014 in the List Manual). In this diagram, the main contacts for the contactor are shown as NO contacts.

Note

No protection against power failure

When using NO contacts as main contacts for the contactor, then the drive is no longer protected against power failure. Protection against power failure is only guaranteed when using the NC contacts as the main contacts for the contactor, with simultaneous inversion of DI14 via p0723.14.

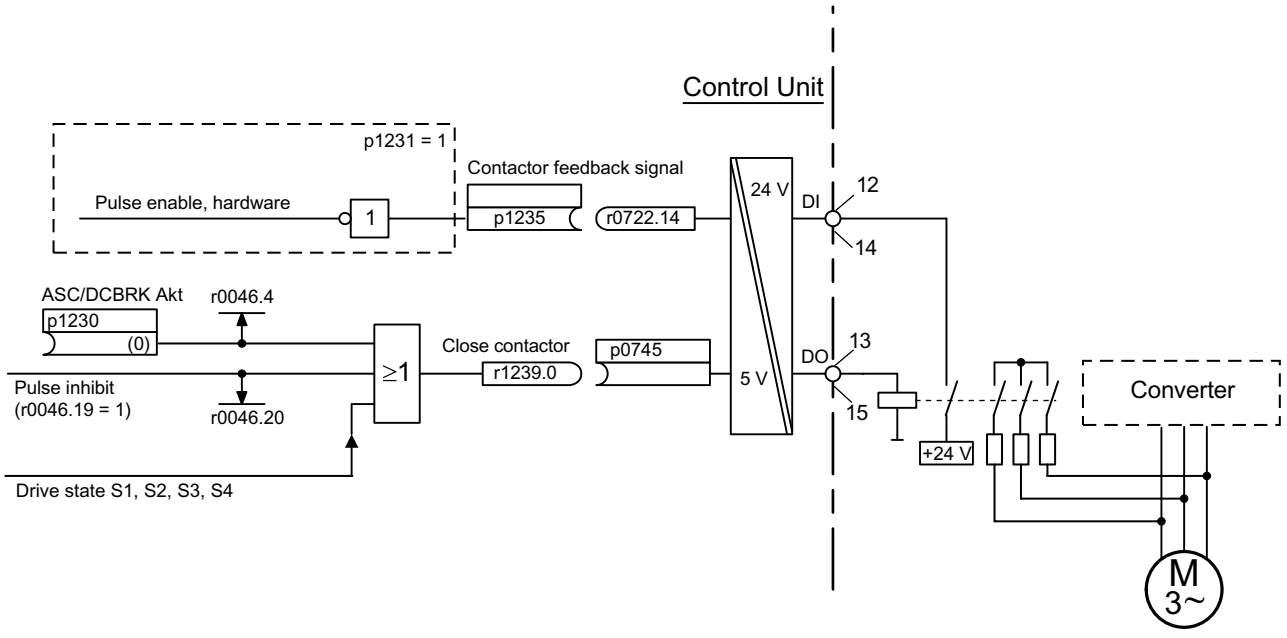

Figure 8-4 Example: External armature short-circuit braking

Requirement

- Before parameterizing external armature short-circuit braking, you have to create a new project with a Motor Module and a motor.
- A short-circuit contactor with an additional feedback signal contact is used (p1231 = 1).
- DI 14 is defined as the input for the feedback signal of the short-circuit contactor. Digital input DI 14 is connected to terminal 12 of terminal strip X132.
- DO 15 is used as switching output for the short-circuit contactor. Digital output DO 15 is connected to terminal 13 of terminal strip X132. Parameter r1239.0 indicates the status of the braking and issues the signal for the contactor.

Parameter assignment

1. Set p1231 = 1.
2. Define DI 14 as input with p0728.14 = 0.
3. Connect the feedback signal of the external armature short-circuit contactor with terminal 12 of terminal strip X132 (DI 14).
4. Interconnect p1235 with r0722.14.
5. Define DO 15 as output with p0728.15 = 1.
6. Connect the control signal for the external armature short-circuit contactor with terminal 13 of terminal strip X132 (DO 15).
7. Interconnect p0745 with r1239.0.

The parameterization of external armature short-circuit braking has now been completed.

8.12.3 Internal voltage protection

Function description

With the integrated voltage protection is active, after the pulses have been canceled, all the motor terminals are at half of the DC link potential (without integrated voltage protection the motor terminals have a no voltage condition)!

- Only short-circuit proof motors must be used (p0320 < p0323).
- The Motor Module must be able to withstand the 1.8-fold short-circuit current (r0320) of the motor (r0209).
- The internal voltage protection function cannot be interrupted due to a fault response. If an overcurrent occurs while internal voltage protection is active, the Motor Module and/or the motor might sustain irreparable damage.
- If the Motor Module does not support the autonomous, integrated voltage protection mechanism (r0192.10 = 0), an external 24 V supply (UPS) must be provided for the components to ensure reliable operation in the event of mains power failure.
- If the Motor Module supports the autonomous, integrated voltage protection mechanism (r0192.10 = 1), the 24 V supply for the components must be implemented via a Control Supply Module to ensure reliable operation in the event of mains power failure.
- When the internal voltage protection function is active, the motor must not be powered by an external source for an extended period of time (e.g. by loads that move the motor or another coupled motor).

The internal voltage protection is set with p1231 = 3.

Configuring the function

Carry out the following steps to configure the function:

Setting the function

The internal voltage protection is set with p1231 = 3.

Activating the function

The function is activated and initiated if the signal source of p1230 is set to a "1" signal.

Deactivating the function

The function is deactivated if the signal source of p1230 is set to a "0" signal. When triggered by a fault, the fault must have been removed and acknowledged.

8.12.4 Configuring a fault reaction

Changing the fault response

The responses can be set to selected faults using parameters p2100 and p2101. Only responses can be set that are intended for the corresponding faults.

Using parameter p0491, responses to encoder errors of a motor encoder can be set (F07412 and many F3yxxx, y = 1, 2, 3).

Note

Motor type change

If the preconditions for armature short-circuit braking or DC braking are no longer satisfied after a motor type has been changed (see p0300), then those modified parameters that have armature short-circuit braking or DC braking as a response (e.g. p2100, p2101 or p0491) are set to the factory setting.

Note

Deselecting armature short-circuit or DC braking

Armature short-circuit or DC braking cannot be deactivated using parameter p1231, as long as a response parameterized with p2100, p2101 or p0491 has a fault condition.

8.12.5 Function diagrams and parameters

Function diagrams (see SINAMICS S120/S150 List Manual)

- 7014 Technology functions - External armature short circuit (EASC, p0300 = 2xx or 4xx)
- 7016 Technology functions - Internal armature short-circuit (IVP, p0300 = 2xx or 4xx)
- 7017 Technology functions - DC braking (p0300 = 1xx)

Overview of important parameters (see SINAMICS S120/S150 List Manual)

- r0046.0...31 CO/BO: Missing enable signals
- p0300[0...n] Motor type selection
- p0347[0...n] Motor de-excitation time
- p0491 Motor encoder fault response: ENCODER
- r0722.0...21 CO/BO: CU digital inputs, status
- r0723.0...21 CO/BO: CU digital inputs, status inverted
- p0728 CU set input or output
- p0738 BI: CU signal source for terminal DI/DO 8

  To
- p0745 BI: CU signal source for terminal DI/DO 15
- p0748 CU, invert digital outputs
- p1226[0...n] Standstill recognition speed threshold
- p1230[0...n] BI: Armature short-circuit/DC braking activation
- p1231[0...n] Armature short-circuit/DC braking configuration
- p1232[0...n] DC braking, braking current
- p1233[0...n] DC braking duration
- p1234[0...n] Speed at the start of DC braking
- p1235[0...n] BI: External armature short-circuit, contactor feedback signal
- p1237[0...n] External armature short-circuit, delay time when opening
- r1239.0...13 CO/BO: Armature short-circuit/DC braking status word

8.13 DC braking

Overview

You set the "DC braking" function in the parameters p1231[0...n]. You can determine the current status of the function in r1239.

Supported Motor Modules

The function has been released for Motor Modules in the Booksize and Chassis formats.

Requirement

- Operation with induction motors

Function description

⚠ WARNING

Motor accelerates uncontrollably for pulling loads

For pulling loads, when DC braking is used, during the demagnetization time, the motor can accelerate uncontrollably. This can result in severe injury or death. An additional supporting mechanical brake is only closed after the demagnetization time - when the motor is already rotating - and therefore does not prevent the motor from accelerating uncontrollably.

- Do not use DC braking for pulling loads.

Using the "DC braking" function, you can brake **induction motors** down to standstill. With this function, after a demagnetization time, a direct current is injected in the stator windings of the induction motor. The motor is braked by the direct current.

The function is preferably used in the following cases:

- It is not possible to ramp down the drive in a controlled fashion
- Operation with a line module that is not capable of energy recovery
- Operation without a braking resistor

8.13.1 Configuring the function via parameters

Procedure

Carry out the following steps to configure the function via parameters:

Setting the function

DC braking is set with parameter p1231 = 4.

- Setting the braking current for DC braking with p1232[0..n]
- Setting the braking current duration for DC braking with p1233[0..n]
- Setting the start speed for DC braking with p1234[0..n]

Activating the function

The function is activated if the signal source of p1230 is set to "1". Then the following responses are carried out:

1. First, the pulse inhibit is set for the motor de-excitation time p0347[0 ... n] until the motor is demagnetized. The DC braking start speed parameter p1234 is not taken into account with this activation.
2. The DC braking current p1232[0 ... n] is injected into the motor as long as a "1" signal is available at the input of p1230. The motor can be braked down to standstill.
3. If the drive is switched off - and DC braking is activated - the drive switches itself on. DC current is then injected into the stator windings.

Deactivating the function

If DC braking is deactivated by setting the signal source of p1230 to "0" and the ON command is still active, then the drive returns to its selected operating mode.

Depending on the selected control mode, the following reactions are executed:

- Servo control (with encoder)
  The drive returns to close-loop control after the demagnetization time has elapsed (p0347 can also be set to 0).
- Vector control (with/without encoder)
  When the "flying restart" function is activated, the Motor Module is synchronized with the motor frequency. The drive is then switched back into closed-loop controlled operation. If the "flying restart" function is not activated, the drive can only be restarted from standstill. In this case, for a new start you must wait until the drive has come to a standstill.
- U/f control
  When the "flying restart" function is activated, the Motor Module is synchronized with the motor frequency. The drive is then switched back to U/f control. If the "flying restart" function is not available, the drive can only be restarted from standstill. In this case, for a new start you must wait until the drive has come to a standstill.

8.13.2 Activating a function via fault reaction

Procedure

If DC braking is activated as fault response, then the following responses are executed:

1. The motor is braked along the braking ramp up to the threshold in p1234. The gradient of the braking ramp corresponds to the gradient of the down ramp (can be set using p1121).
2. The pulses are inhibited for the duration of the motor demagnetization time (p0347) until the magnetic field in the motor has decayed.
3. After p0347 has expired, DC braking starts for the period of time according to p1233.
   If an encoder is being used, the braking operation lasts until the speed falls below the zero speed threshold set in p1226. If an encoder is not being used, braking lasts until the time set in p1233 has expired.

Note

For encoderless servo control, it is possible that operation cannot be continued after DC braking has been completed. An OFF2 fault response is then output.

8.13.3 Activating a function via OFF fault responses

Procedure

With p1231 = 5, DC braking is set as a response to OFF1 or OFF3. Parameter p1230 has no influence on the response for OFF1 or OFF3. The speed threshold is set with p1234, under which DC braking is activated.

If DC braking is activated with OFF1 or OFF3, then the following responses are executed:

1. If the motor speed is ≥ p1234 for OFF1/OFF3, the motor is braked down to p1234. As soon as the motor speed is < p1234, the pulses are disabled and the motor is demagnetized.
   OR
2. If the motor speed at OFF1/OFF3 is < p1234, the pulses are immediately inhibited and the motor is demagnetized.
3. The DC braking is activated for the duration p1233 and is then switched off.
4. When OFF1/OFF3 is prematurely canceled, then normal operation is resumed.
5. DC braking as emergency braking of a fault response remains active.

8.13.4 Configuring a function as a response to a speed threshold

Procedure

To configure a function as a response to a speed threshold, perform the following steps:

Setting the function

If p1231 is set to 14, DC braking as a response is activated as soon as the actual speed falls below p1234.

Activating the function

Before activation, the actual speed must be > p1234. The DC braking can then be activated when both of the following conditions are met:

- The actual speed has fallen below p1234.
- The signal source of p1230 is set to "1".

If the function is activated as a response to a speed threshold, then the following responses are executed:

1. The pulses are first disabled. As a consequence, the motor is demagnetized. DC braking is then initiated for the duration p1233. The motor is braked with the braking current p1232.
2. If the signal source of p1230 is set to "0", the braking command is canceled and the drive goes back into the previous operating mode.
3. DC braking for OFF1 or OFF3 is only executed if the signal source of p1230 is set to "1".
4. DC braking as emergency braking of a fault response remains active.

8.13.5 Internal voltage protection

Function description

With the integrated voltage protection is active, after the pulses have been canceled, all the motor terminals are at half of the DC link potential (without integrated voltage protection the motor terminals have a no voltage condition)!

- Only short-circuit proof motors must be used (p0320 < p0323).
- The Motor Module must be able to withstand the 1.8-fold short-circuit current (r0320) of the motor (r0209).
- The internal voltage protection function cannot be interrupted due to a fault response. If an overcurrent occurs while internal voltage protection is active, the Motor Module and/or the motor might sustain irreparable damage.
- If the Motor Module does not support the autonomous, integrated voltage protection mechanism (r0192.10 = 0), an external 24 V supply (UPS) must be provided for the components to ensure reliable operation in the event of mains power failure.
- If the Motor Module supports the autonomous, integrated voltage protection mechanism (r0192.10 = 1), the 24 V supply for the components must be implemented via a Control Supply Module to ensure reliable operation in the event of mains power failure.
- When the internal voltage protection function is active, the motor must not be powered by an external source for an extended period of time (e.g. by loads that move the motor or another coupled motor).

The internal voltage protection is set with p1231 = 3.

Configuring the function

Carry out the following steps to configure the function:

Setting the function

The internal voltage protection is set with p1231 = 3.

Activating the function

The function is activated and initiated if the signal source of p1230 is set to a "1" signal.

Deactivating the function

The function is deactivated if the signal source of p1230 is set to a "0" signal. When triggered by a fault, the fault must have been removed and acknowledged.

8.13.6 Configuring a fault reaction

Changing the fault response

The responses can be set to selected faults using parameters p2100 and p2101. Only responses can be set that are intended for the corresponding faults.

Using parameter p0491, responses to encoder errors of a motor encoder can be set (F07412 and many F3yxxx, y = 1, 2, 3).

Note

Motor type change

If the preconditions for armature short-circuit braking or DC braking are no longer satisfied after a motor type has been changed (see p0300), then those modified parameters that have armature short-circuit braking or DC braking as a response (e.g. p2100, p2101 or p0491) are set to the factory setting.

Note

Deselecting armature short-circuit or DC braking

Armature short-circuit or DC braking cannot be deactivated using parameter p1231, as long as a response parameterized with p2100, p2101 or p0491 has a fault condition.

8.13.7 Function diagrams and parameters

Function diagrams (see SINAMICS S120/S150 List Manual)

- 7014 Technology functions - External armature short circuit (EASC, p0300 = 2xx or 4xx)
- 7016 Technology functions - Internal armature short-circuit (IVP, p0300 = 2xx or 4xx)
- 7017 Technology functions - DC braking (p0300 = 1xx)

Overview of important parameters (see SINAMICS S120/S150 List Manual)

- r0046.0...31 CO/BO: Missing enable signals
- p0300[0...n] Motor type selection
- p0347[0...n] Motor de-excitation time
- p0491 Motor encoder fault response: ENCODER
- r0722.0...21 CO/BO: CU digital inputs, status
- r0723.0...21 CO/BO: CU digital inputs, status inverted
- p0728 CU set input or output
- p0738 BI: CU signal source for terminal DI/DO 8

  To
- p0745 BI: CU signal source for terminal DI/DO 15
- p0748 CU, invert digital outputs
- p1226[0...n] Standstill recognition speed threshold
- p1230[0...n] BI: Armature short-circuit/DC braking activation
- p1231[0...n] Armature short-circuit/DC braking configuration
- p1232[0...n] DC braking, braking current
- p1233[0...n] DC braking duration
- p1234[0...n] Speed at the start of DC braking
- p1235[0...n] BI: External armature short-circuit, contactor feedback signal
- p1237[0...n] External armature short-circuit, delay time when opening
- r1239.0...13 CO/BO: Armature short-circuit/DC braking status word

8.14 Motor Module as a Braking Module

Overview

You can parameterize this function in the STARTER commissioning tool.

Requirement

- Three identical braking resistors in a star (see table below) or delta connection
- At least 10 m cable length to the resistors
- Configuration in the STARTER commissioning tool
  - Drive object vector
  - U/f control

Function description

This function uses a Motor Module as a Braking Module. To do this, three resistors are connected to the Motor Module instead of a motor.

Supported Motor Modules

The function is released for the following Motor Modules:

- SINAMICS S120 Motor Modules Cabinet
- SINAMICS S120 Motor Modules Chassis (500 V - 690 V)
- SINAMICS S120 Motor Modules Chassis (380 V - 480 V) > 250 kW
- SINAMICS S120 Motor Modules Chassis Liquid Cooled (380 V - 480 V) > 250 kW
- SINAMICS S120 Motor Modules Chassis Liquid Cooled (500 V - 690 V)

Features

- Three identical resistors required.
- Parallel connection of Motor Modules possible.
- Integrated protective devices are available for monitoring the resistors.
- The Chassis Motor Module must be switched on in order that it can operate as Braking Module.

8.14.1 Configuring resistors

Rules and values

Note

Undershooting of the resistance values is not permitted

Under no circumstances may the resistance values for the peak braking power, which are listed in the following table, be undershot!

Observe the following rules and follow the instructions specified therein:

- The resistance values apply for each of the three resistors in a star connection in the cold state.
- Each braking resistor absorbs $^1/_3$ of the total braking power. It is imperative that you take into account the power rating of the resistors.
- For a delta connection, multiply the braking resistance value by a factor of 3.
- The tables apply for all Motor Modules of the "Chassis" format (liquid or air cooling).
- The cable lengths to the resistors must be at least 10 m.
- At rated voltages of 380 V to 480 V, Motor Modules with a type rating ≥ 250 kW are permitted.
- At rated voltages of 500 V to 690 V, all Motor Modules in the "Chassis" format have been released for use of this function.

You can enter the resistance value in a star connection into parameter p1360. The default setting of the resistance values is calculated from:

- p1360 = p1362[0] / (√(6) · r0207[0])
- p1362[0] = Braking Module activation threshold according to the following table.
- r0207[0...4] = rated current of the Motor Module

Connecting the braking resistor

Preferably connect the braking resistors in a star configuration

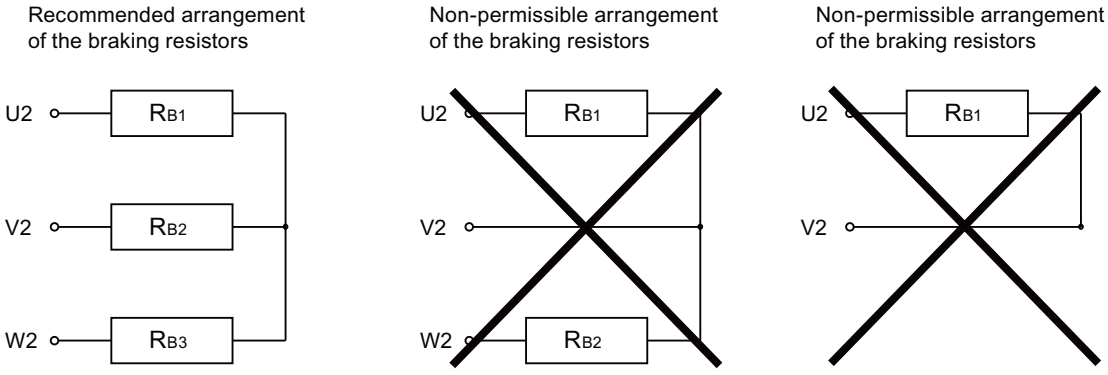

Resistance table 380 - 480 V supply voltage

Motor Module frame size	Rated voltage	Rated current	Braking current	$U_{DC\ link}$ chopper threshold	Continuous braking power	Peak braking power	Resistance for continuous braking power	Resistance at peak braking power
	[V]	[A]	[A]	[V]	[kW]	[kW]	[Ω]	[Ω]
G	400	490	450	667	368	551	0.605	0.403
	480	490	450	774	427	640	0.702	0.466
H	400	605	545	667	445	668	0.500	0.333
	480	605	545	774	517	775	0.580	0.387
H	400	745	680	667	555	833	0.400	0.267
	480	745	680	774	645	967	0.465	0.310
H	400	840	800	667	654	980	0.340	0.277
	480	840	800	774	758	1138	0.395	0.263
J	400	985	900	667	735	1103	0.303	0.202
	480	985	900	774	853	1280	0.351	0.234
J	400	1260	1215	667	93	1489	0.224	0.149
	480	1260	1215	774	1152	1728	0260	0.173
J	400	1405	1365	667	1115	1673	0.199	0.133
	480	1405	1365	774	1294	1941	0.231	0.154

Resistance table 500 - 690 V supply voltage

Motor Module frame size	Rated voltage	Rated current	Braking current	$U_{DC\ link}$ chopper threshold	Continuous braking power	Peak braking power	Resistance for continuous braking power	Resistance at peak braking power
	[V]	[A]	[A]	[V]	[kW]	[kW]	[Ω]	[Ω]
F	500	85	85	841	87.6	131.3	4.039	2.693
	600	85	85	967	100.7	151.0	4.644	3.096
	660	85	85	1070	111.4	167.1	5.139	3.426
	690	85	85	1158	120.6	180.8	5.562	3.708
F	500	100	100	841	103.0	154.5	3.433	2.289
	600	100	100	967	118.4	177.6	3.948	2.632
	660	100	100	1070	131.0	196.6	4.368	2.912
	690	100	100	1158	141.8	212.7	4.728	3.152
F	500	120	115	841	118.5	177.7	2.986	1.990
	600	120	115	967	136.2	204.3	3.433	2.289
	660	120	115	1070	150.7	226.1	3.798	2.532
	690	120	115	1158	163.1	244.6	4.111	2.741
F	500	150	144	841	148.3	222.5	2.384	1.590
	600	150	144	967	170.5	255.8	2.742	1.828
	660	150	144	1070	188.7	283.1	3.034	2.022
	690	150	144	1158	204.2	306.3	3.283	2.189

Motor Module frame size	Rated voltage	Rated current	Braking current	$U_{DC\ link}$ chopper threshold	Continuous braking power	Peak braking power	Resistance for continuous braking power	Resistance at peak braking power
	[V]	[A]	[A]	[V]	[kW]	[kW]	[Ω]	[Ω]
G	500	175	175	841	180.3	270.4	1.962	1.308
	600	175	175	967	207.3	310.9	2.256	1.504
	660	175	175	1070	229.3	344.0	2.496	1.664
	690	175	175	1158	248.2	372.3	2.701	1.801
G	500	215	215	841	221.5	332.2	1.597	1.065
	600	215	215	967	254.6	381.9	1.836	1.224
	660	215	215	1070	281.8	422.6	2.032	1.354
	690	215	215	1158	304.9	457.4	2.199	1.466
G	500	260	255	841	262.7	394.0	1.346	0.898
	600	260	255	967	302.0	453.0	1.548	1.032
	660	260	255	1070	334.2	501.3	1.713	1.142
	690	260	255	1158	361.7	542.5	1.854	1.236
G	500	330	290	841	298.7	448.1	1.184	0.789
	600	330	290	967	343.5	515.2	1.361	0.908
	660	330	290	1070	380.0	570.1	1.506	1.004
	690	330	290	1158	441.3	616.9	1.630	1.087
H	500	410	400	841	412.0	618.0	0.858	0.572
	600	410	400	967	473.7	710.6	0.987	0.658
	660	410	400	1070	524.2	786.3	1.092	0.728
	690	410	400	1158	567.3	851.0	1.182	0.788
H	500	465	450	841	463.5	695.3	0.763	0.509
	600	465	450	967	532.9	799.4	0.877	0.585
	660	465	450	1070	589.7	884.6	0.971	0.647
	690	465	450	1158	638.2	957.3	1.051	0.700
H	500	575	515	841	530.5	795.7	0.667	0.444
	600	575	515	967	609.9	914.9	0.767	0.511
	660	575	515	1070	674.9	1012.3	0.848	0.565
	690	575	515	1158	730.4	1095.6	0.918	0.612
J	500	735	680	841	700.4	1050.6	0.505	0.337
	600	735	680	967	805.3	1208.0	0.581	0.387
	660	735	680	1070	891.1	1336.7	0.642	0.428
	690	735	680	1158	964.4	1446.6	0.695	0.463
J	500	810	805	841	829.2	1243.7	0.427	0.284
	600	810	805	967	953.4	1430.1	0.490	0.327
	660	810	805	1070	1054.9	1582.4	0.543	0.362
	690	810	805	1158	1141.7	1712.5	0.587	0.392
J	500	910	905	841	932.2	1398.2	0.379	0.253
	600	910	905	967	1071.8	1607.7	0.436	0.291
	660	910	905	1070	1186.0	1779.0	0.483	0.322
	690	910	905	1158	1283.5	1925.3	0.522	0.348

Motor Module frame size	Rated voltage	Rated current	Braking current	$U_{DC\ link}$ chopper threshold	Continuous braking power	Peak braking power	Resistance for continuous braking power	Resistance at peak braking power
	[V]	[A]	[A]	[V]	[kW]	[kW]	[Ω]	[Ω]
J	500	1025	1020	841	1050.6	1575.9	0.337	0.224
	600	1025	1020	967	1280.0	1812.0	0.387	0.258
	660	1025	1020	1070	1336.7	2005.0	0.428	0.286
	690	1025	1020	1158	1446.6	2169.9	0.463	0.309
J	500	1270	1230	841	1266.9	1900.4	0.279	0.186
	600	1270	1230	967	1456.7	2185.1	0.321	0.214
	660	1270	1230	1070	1611.9	2417.8	0.355	0.237
	690	1270	1230	1158	1744.5	2616.7	0.384	0.256

8.14.2 Activating the "Braking Module" function

Requirement

- The STARTER commissioning tool has been opened.
- A new project has been created, or an existing project is opened.

Activating the Braking Module

To activate the braking module and set the operation threshold as well as hysteresis for the braking module, proceed as follows:

1. Configure the Control Unit and the infeed unit as usual (see SINAMICS S120 Commissioning Manual with STARTER).
2. Select “VECTOR" as drive object type.
3. "U/f control" should be selected as controller structure.
4. In the parameter p1300 (open loop/closed loop control mode of operation), output the value “15” (operation with braking resistor).
5. Select the supply voltage in the configuration dialog box.
6. Pre-allocate the supply voltage p0210 according to the infeed unit being used (e.g. for a Basic Line Module with approx. 600 V at 400 V of supply voltage).
7. In the configuration dialog box, select "Chassis" as format.
8. Enter the value "1" in parameter p0864 (infeed unit operation) if the drive line-up is **not** equipped with a Basic Line Module.
9. Select the required power unit in the configuration dialog box.
10. Terminate the configuration for the Motor Module and the resistors. Parameter input for p1360 (Braking Module braking resistance, cold) using the expert list.

11. Follow the wizard from "Continue >" up to "Complete".
    Deselect the provided motor data identification (MotID) by entering the value “0” into the parameter p1900 (motor data identification and rotating measurement).
12. Allocating a freely selectable BICO signal of p0840[0...n] (BI: ON/OFF (OFF1)), the chopper is activated if there is DC link voltage present.
13. Using p1362[0] (Braking chopper threshold value) and p1362[1] (Braking chopper hysteresis), the switch-on and switch-off threshold of the chopper is defined (see the table at the end of this action sequence).
14. For the temperature monitoring of the braking resistors, a temperature monitoring (p0600 and p0601) has been pre-configured. Apply the temperature switch of the braking resistors at terminals X41/3 and 4 of the Motor Module.

Table 8-8 Activation threshold

Line voltage	V	380 - 480	500 - 600	660 - 690
Tolerance	%	+/- 10%, -15% (60 s)	+/- 10%, -15% (60 s)	+/- 10%, -15% (60 s)
Ud_{max}	V	820	1022	1220
$U_{DC\ link}$ Braking Module activation threshold p1362[0]	V_{min}	759	948	1137
	V_{rated}	774	967	1159
	V_{max}	789	986	1179
HW shutdown threshold	V_{min}	803	1003	1198
	V_{rated}	819	1022	1220
	V_{max}	835	1041	1244

Activating a parallel connection

Motor Modules can be operated Braking Modules a in parallel connection. The setting is made in STARTER as follows during the configuration:

1. Activate the "Parallel connection" checkbox in the "Power Unit Additional Data" configuration dialog box (see step 7 of the above list).
   The pull-down menu for the "Number of parallel modules" appears.
2. Select the desired number of Motor Modules.
3. Click "Continue" until you reach "Complete".
   You have now completed the wizard for the configuration of the Motor Modules.

4. Check the number of Motor Modules that you have set in the topology.
   The braking resistors must be dimensioned for each Motor Module according to the table of resistances above.

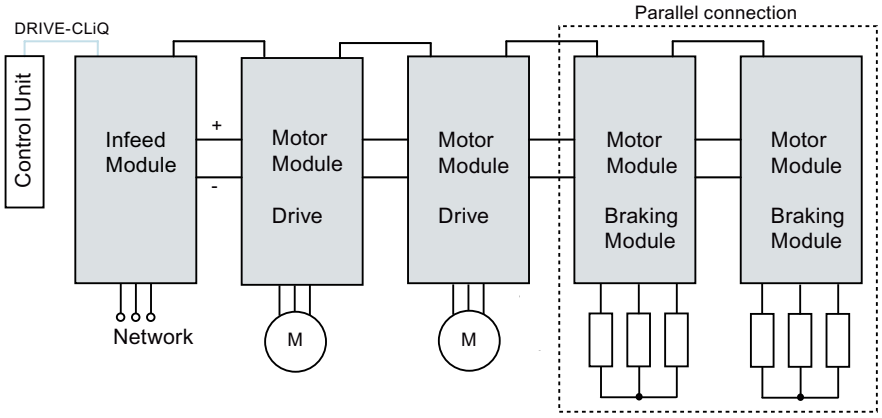

Figure 8-5 Parallel connection of Motor Modules as Braking Modules

5. To carry out further checks, double-click ".../Drives/Drive_1 > Configuration" in the project navigator.
   A dialog opens allowing you to check the current configuration. The "Current power unit operating values" button lists the Motor Modules according to component number. During operation, they show the current electrical values.

Operating a parallel connection in Master/Slave mode

Motor Modules connected in parallel can also be operated in Master/Slave mode.

1. To do this, use parameter p1330 to transfer the input of the U/f characteristic to the next power unit.
   The slaves only receive the voltage setpoint for the U/f characteristic.

8.14.3 Protective equipment

Function description

The protection functions are explained in detail in Section Thermal monitoring and overload responses (Page 595). Additional protective devices include:

- **Ground fault**
  Monitoring of sum of all phase currents.
- **Cable break**
  An unbalanced load of 20 % and more produces a non-symmetrical current, which is detected by the I^2T monitoring.
  - Alarm A06921 is output if phase non-symmetry is detected.
  - The errors are located in parameter r0949:
    Parameter r0949 = 11 Wire break phase U
    Parameter r0949 = 12 Wire break phase V
    Parameter r0949 = 13 Wire break phase W
  - Fault F06922 is output if phase failure is detected.
- **Overcurrent**
  The Imax controller is active. The setpoint is stored in parameter p0067.
- **Overtemperature of the resistors**
  The temperature is monitored using bimetal temperature switches mounted on the resistors.

Configuring temperature evaluation contacts

To configure the temperature evaluation contacts, perform the following steps:

1. Switch the temperature evaluation contacts of all 3 resistors in series.
2. Connect the temperature evaluation contacts to the temperature sensor evaluation of the Motor Module (terminals X41.3 and X41.4).
3. For the temperature monitoring, set the temperature sensor via Motor Module (p0600 = 11).
4. Set sensor type "Bimetallic NC contact warning & timer" as motor temperature sensor (p0601 = 4).
5. Parameterize the temperature sensor evaluation of the Motor Module as "external fault".

8.14.4 Overview of the important parameters

Overview of important parameters (see SINAMICS S120/S150 List Manual)

- r0207[0…4] Rated power unit current
- r0949[0...63] Fault value
- p1300[0…n] Open-loop/closed-loop control operating mode
- p1330[0...n] CI: V/f control independent of voltage setpoint
- p1360 Braking Module braking resistor, cold

- p1362[0…1] Braking Module activation threshold
- r1363 CO: Braking Module output voltage
- p1364 Braking Module non-symmetrical resistance

8.15 OFF3 torque limits

Function description

If the torque limits are externally specified (e.g. tension controller), then the drive can only be stopped with a reduced torque. If stopping in the selected time p3490 of the infeed unit has not been completed, the infeed unit shuts down and the drive coasts down. In order to avoid this behavior, there is a binector input (p1551), that for a LOW signal, activates the torque limits p1520 and p1521. This means that the drive can brake with the maximum torque by interconnecting the signal OFF 3 (r0899.5) to this binector.

Function diagrams (see SINAMICS S120/S150 List Manual)

- 5620 Servo control - Motoring/generating torque limit
- 5630 Servo control - Upper/lower torque limit
- 6630 Vector control - Upper/lower torque limit

Overview of important parameters (see SINAMICS S120/S150 List Manual)

- p1520[0...n] Torque limit upper/motoring
- p1521[0...n] CO: Torque limit lower/regenerative

8.16 Technology function friction characteristic

Function description

The friction characteristic curve is used to compensate the friction torque for the motor and the driven machine. A friction characteristic enables the speed controller to be precontrolled and improves the response.

Ten interpolation points are used for each friction characteristic curve. The coordinates of every interpolation point are defined by a speed parameter (p382x) and a torque parameter (p383x) (point 1 = p3820 and p3830).

Features

- Ten interpolation points are available for mapping the friction characteristic curve.
- An automatic function allows you to record the friction characteristic curve (record friction characteristic curve).
- A connector output (r3841) can be applied as friction torque (p1569).
- The friction characteristic can be activated and deactivated (p3842).

Configuring the function via parameters

In p382x, speeds for the measurement are predefined as a function of the maximum speed p1082 during first commissioning. They can be changed appropriately.

The automatic friction characteristic plot can be activated using p3845. The characteristic is then plotted the next time that it is enabled. The following settings are possible:

Setting	Reaction
p3845 = 0	Friction characteristic plot deactivated
p3845 = 1	Friction characteristic record activates direction of rotation all **Note:** The friction characteristic curve is recorded in both directions of rotation. The results of the positive and negative measurement are averaged and entered in p383x.
p3845 = 2	Friction characteristic plot activated, positive direction of rotation
p3845 = 3	Friction characteristic plot activated, negative direction of rotation

When the friction characteristic is plotted, the drive can cause the motor to move. As a result, the motor may reach maximum speed.

⚠ WARNING

Unplanned motor motion while recording the friction characteristic

Motor movement caused when plotting the friction characteristic can result in death, severe injury or material damage.

- Ensure that nobody is in the danger zone and that the mechanical parts can move freely.

Function diagrams (see SINAMICS S120/S150 List Manual)

- 5610 Servo control – torque limiting/reduction, interpolator
- 6710 Vector control - Current setpoint filter
- 7010 Technology functions - Friction characteristic

Overview of important parameters (see SINAMICS S120/S150 List Manual)

- p3820[0...n] Friction characteristic, value n0

...

- p3839[0...n] Friction characteristic, value M9
- r3840.0...8 CO/BO: Friction characteristic status word
- r3841 CO: Friction characteristic curve output
- p3842 Activate friction characteristic
- p3843[0...n] Friction characteristic smoothing time friction moment difference
- p3844[0...n] Friction characteristic number changeover point at the top
- p3845 Activate friction characteristic plot
- p3846[0...n] Friction characteristic plot ramp-up/ramp-down time
- p3847[0...n] Friction characteristic plot warm-up period

8.17 Simple brake control

Function description

The "Simple brake control" function is used exclusively for the control of **holding brakes**. The holding brake is used to secure drives against unwanted motion when deactivated.

The trigger command for releasing and applying the holding brake is transmitted via DRIVE-CLiQ from the Control Unit, which monitors and logically connects the signals to the system-internal processes, directly to the Motor Module. The Motor Module then performs the action and activates the output for the holding brake accordingly. The exact sequence control is shown in function diagrams 2701 and 2704 (see SINAMICS S120/S150 List Manual).

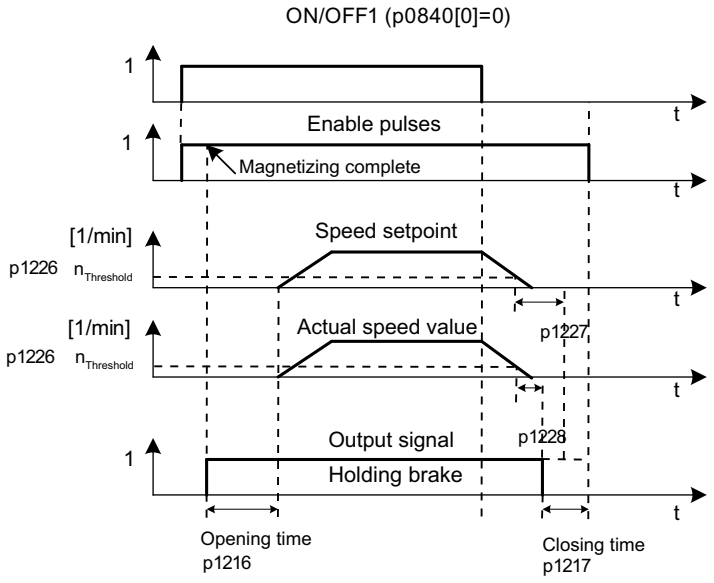

Figure 8-6 Flow diagram: Simple brake control

The start of the closing time for the brake depends on the expiration of the shorter of the two times p1227 (standstill detection monitoring time) and p1228 (pulse cancellation delay time).

Features

- Automatic activation by means of sequence control
- Standstill monitoring
- Forced brake release (p0855, p1215)
- Closing of brake for a 1 signal "unconditionally close holding brake" (p0858)
- Closing of brake after "Enable speed controller" signal has been canceled (p0856)

Configuring the function

⚠ WARNING

Destruction of the holding brake as a result of incorrect parameterization

If the drive moves against the closed holding brake, this can destroy the holding brake and as a consequence result in death or severe injury.

- If a holding brake is being used, do **not** set p1215 = 0.
- Set all the relevant parameters correctly.

The function or principle of operation of the holding brake is configured via parameter p1215.

Activating the function

The function is activated automatically (p1215 = 1) when the Motor Module has an internal brake control and a connected brake has been found. If no internal brake control is available, the control can be activated via parameter (p1215 = 3).

Note

It is only permissible to activate brake control monitoring for **Booksize** power units and **Blocksize** power units with Safe Brake Relay (p1278 = 0).

Function diagrams (see SINAMICS S120/S150 List Manual)

- 2701 Brake control - Simple brake control (r0108.14 = 0)
- 2704 Brake control - Extended brake control, standstill detection (r0108.14 = 1)

Overview of important parameters (see SINAMICS S120/S150 List Manual)

- r0056.4 CO/BO: Status word, closed-loop control; magnetizing complete
- r0060 CO: Speed setpoint before the setpoint filter
- r0063 CO: Actual velocity value smoothed
- r0063[0...2] CO: Speed actual value
- r0108.14 Drive object function module; extended brake control
- p0855[0...n] BI: Unconditionally open holding brake
- p0856[0...n] BI: Speed controller enabled
- p0858[0...n] BI: Unconditionally close holding brake
- r0899.12 CO/BO: Status word, sequence control; holding brake open
- r0899.13 CO/BO: Status word, sequence control; close holding brake command
- p1215 Motor holding brake configuration

- p1216 Motor holding brake opening time
- p1217 Motor holding brake closing time
- p1226[0...n] Threshold for standstill detection
- p1227 Standstill detection monitoring time
- p1228 Pulse suppression delay time
- p1278 Brake control diagnostics evaluation

8.18 System runtime / operating hours counter

Total system runtime

The total system runtime is displayed in p2114 (Control Unit). Index 0 indicates the system runtime in milliseconds. After reaching 86,400,000 ms (24 hours), the value is reset. Index 1 indicates the system runtime in days. The counter value is saved when the power is switched off.

After the drive unit has been switched on, the counter continues to run with the value stored when the power was last switched off.

Relative system runtime

The relative system runtime after the last POWER ON is displayed in p0969 (Control Unit). The value is specified in milliseconds. The counter runs over after 49 days.

Actual motor operating hours

The motor operating hours counter p0650 (drive) is started when the pulses are enabled. When the pulse enable is withdrawn, the counter is stopped and the value saved.

If p0651 is at 0, the counter is deactivated. If the maintenance interval set in p0651 is reached, alarm A01590 is triggered. Once the motor has been maintained, the maintenance interval must be reset.

Note

If the motor data set is switched during the star/delta changeover without the motor being changed, the two values in p0650 must be added to determine the correct number of motor operating hours.

Operating hours counter/wear meter of the fan

The wear on fans can be shown in 2 ways:

- All fans
  The operating hours of the fan in the power unit are displayed in p0251 (drive). The number of hours operated can only be reset to 0 in this parameter (e.g. after a fan has been replaced). The maximum operating period of the fan is entered in p0252 (drive). Alarm A30042 is output 500 hours before this figure is reached.
- For fans as of firmware V5.1
  The wear on the heat sink of the fan in the power module is displayed by a wear counter r0277. The wear counter can be reset (e.g. after a fan replacement) via p0251 = 0.

Monitoring (wear counter and operating hours counter) is deactivated when p0252 = 0.

Time stamp mode

The mode for the time stamp can be set via parameter p3100. The following modes are available:

Setting	Explanation
p3100 = 0	Time stamp based on operating hours
p3100 = 1	Time stamp UTC format
p3100 = 2	Time stamp operating hours + 01.01.2000 **Note:** With this setting, the value in p3102 is used as the time stamp for the error messages for a firmware version > V4.7. For firmware versions < V4.7, the time basis of p2114 was used with the setting p3100 = 0.

Also note the following information when setting a time stamp:

Note

Time stamp settings depending on the firmware version

If a project is upgraded from firmware V4.6 to V4.7 then the time stamp settings for the old project are retained. The times displayed for the error messages do not therefore differ from those in the old firmware version.

If a new project is created with a firmware version > V4.7, the factory setting for the p3100 = 2 and therefore a different time basis for error messages. If the response required is the one for versions older than V4.7 then p3100 = 0 should be set.

Note

Synchronizing time stamps

If a control system and several drive devices are connected through a bus, then the different time stamps can be synchronized to the time stamp of the control system (= time-of-day master). Detailed information on this is provided in the manual “SINAMICS S120 Function Manual Communication” in the chapter “Time synchronization between the control and converter.”

8.19 Energy-saving display

Overview

Through the tailored, speed-controlled operation, a drive can consume significantly less energy than with a conventional closed-loop process control. This is especially true for continuous-flow machines with parabolic load characteristics, such as centrifugal pumps and fans. Using the SINAMICS S120 system enables control of the flow rate or the pressure by changing the speed of the continuous-flow machine. As a consequence, the plant or system is controlled close to its maximum efficiency over the complete operating range.

Requirement

- Operation in vector control

Function description

The function determines the amount of energy used and compares it with the interpolated energy required for a plant or system equipped with a conventional throttle control. The amount of energy saved is calculated over the last 100 operating hours and is displayed in kilowatt (kW). The calculation can be individually configured for each individual axis.

For an operating time of less than 100 hours, the potential energy-saving is interpolated up to 100 operating hours. To do this, you must manually enter the plant/system characteristic with the conventional throttle control.

Note

Plant/system characteristic

The factory setting is used as basis for the calculation if you do not enter the interpolation points for your plant/system characteristic. The values of the factory setting can deviate from your plant/system characteristic and result in an inaccurate calculation.

Configuring the function

Carry out the following steps to configure the function:

1. The function is automatically activated after the pulses have been enabled.
2. Enter five interpolation points for the load characteristic in parameters p3320 to p3329:

Interpolation point	Parameter	Factory setting: P - power in % n - speed in %
1	p3320	P1 = 25.00
	p3321	n1 = 0.00
2	p3322	P2 = 50.00
	p3323	n2 = 25.00
3	p3324	P3 = 77.00
	p3325	n3 = 50.00
4	p3326	P4 = 92.00
	p3327	n4 = 75.00
5	p3328	P5 = 100.00
	p3329	n5 = 100.00

Reset the energy display

Set p0040 = 1 to reset the value of parameter r0041 to "0".

Parameter p0040 is then automatically set back to "0".

Energy savings display

The energy saving is displayed in r0041.

Example: Fans and pumps

The function is optimized for fluid-flow machines. When compared to continuous-flow machines with parabolic load characteristic, machines with a linear or constant load characteristic, such as conveyor drives or reciprocating pumps, have a lower energy-saving potential.

Initial situation

In a conventionally controlled plant or system, the flow rate of the medium is controlled using valves or throttles. In this case, the drive motor operates at a constant rated speed defined by the particular operation. The system efficiency decreases significantly if the flow rate is reduced by means of valves or throttles. The pressure in the system increases. The motor also consumes energy when the valves/throttles are completely closed, i.e. with a flow rate of Q = 0. In addition, undesirable process-related situations can occur; for example, cavitation in the fluid flow machine or increased temperature rise of the fluid flow machine and the medium.

Solution

When using a speed controller, the process-specific flow rate of the continuous-flow machine is controlled by varying the speed. The flow rate changes proportionally with the speed of the continuous-flow machine. Any throttles or valves remain completely open. The entire plant/

system characteristic is shifted by the speed controller to achieve the required flow rate. As a consequence, the complete system operates close to the optimum efficiency - and especially in the partial load range, uses significantly less energy than when using a throttle or valve to control the flow rate.

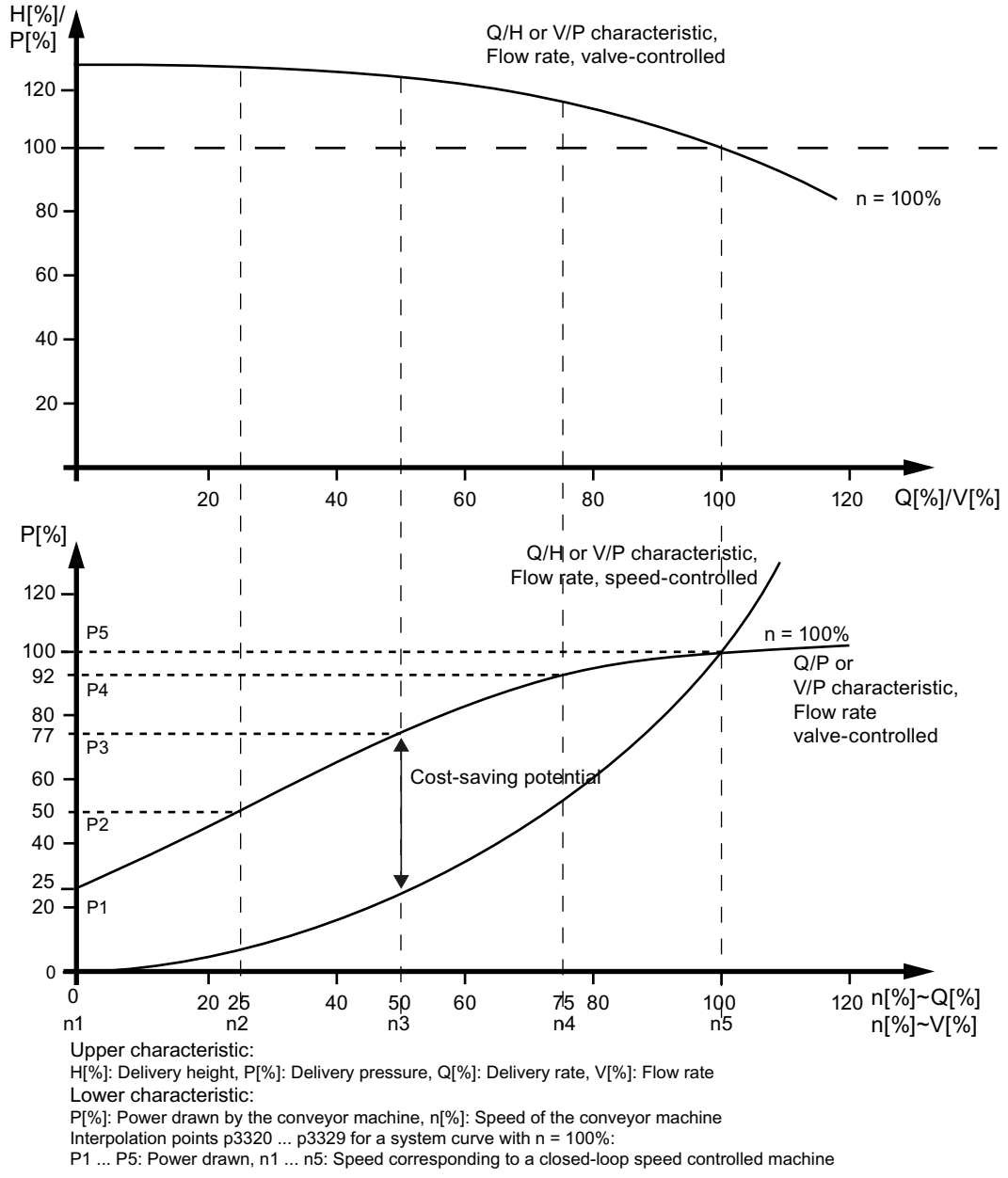

Upper characteristic:
H[%]: Delivery height, P[%]: Delivery pressure, Q[%]: Delivery rate, V[%]: Flow rate
Lower characteristic:
P[%]: Power drawn by the conveyor machine, n[%]: Speed of the conveyor machine
Interpolation points p3320 ... p3329 for a system curve with n = 100%:
P1 ... P5: Power drawn, n1 ... n5: Speed corresponding to a closed-loop speed controlled machine

Figure 8-7 Curve diagram: Energy-saving potential

8.20 Encoder diagnostics

8.20.1 Datalogger

Overview

A datalogger is available to support troubleshooting; this datalogger can localize errors in the encoder evaluation.

Function description

The datalogger reads out several internal signals of the encoder evaluation, which serve as basis for the actual value generation. A change in the fault state serves as trigger for the recording. Data is recorded a short time before the fault state as well as afterwards.

The diagnostics data is saved on the memory card in the following directories:

`/USER/SINAMICS/DATA/SMTRC00.BIN`

…

`/USER/SINAMICS/DATA/SMTRC07.BIN`

`/USER/SINAMICS/DATA/SMTRCIDX.TXT`

The following information is contained in the index file (SMTRCIDX.TXT):

- Displaying the last written BIN file
- Number of still possible write operations (from 10000 downwards).

Note

BIN files can only be evaluated by Siemens.

Alarm A3x930[1)] is output while diagnostics data is being actively recorded. Do not switch off the system during this time.

[1)] x = encoder number (x = 1, 2 or 3)

Activating the function

Set parameter p0437.0 = 1 to activate this function.

The datalogger is automatically active as soon as the current controller time is slower than 125 µs.

8.20.2 Encoder dirty signal

Function description

Some encoders have an additional output, which switches from "high" to "low", if the evaluation electronics in the encoder can no longer determine a reliable position.

In order to inform you about this, the drive only outputs alarm A3x470[1)] when an SMC30 is used.

[1)] x = encoder number (x = 1, 2 or 3)

Commissioning the function

Connect the corresponding encoder signal with the CTRL input (monitoring signal) of the device (terminal X521:7). Parameterization is not required.

Note

The input is automatically set to a high level if a wire is broken: As a consequence, for a broken wire, the encoder is considered to be "good".

8.20.3 Early encoder failure detection

Overview

The early encoder failure detection allows an alarm to be generated at an early stage, before a detected encoder signal level error results in a hard shutdown. r0458.15 = 1 "Evaluation of the function reserve" indicates as to whether early encoder failure detection is supported by your specific hardware.

Function description

For early encoder failure detection, the signals sampled by the encoder disk are locally monitored. Quality values are calculated from the sampled signals. The signal level (root of A^2 + B^2) from the incremental signals is used as quality value. The location-related quality values are analyzed over a longer period of operating time. If the trend indicates a local deterioration, then the drive issues an appropriate alarm message A3x407[1)].

[1)] x = encoder number (x = 1, 2 or 3)

Commissioning the function

You activate early encoder failure detection by entering a signal level limit in p4649. When doing this, note the following:

- The signal level limit must be higher than the threshold to initiate a fault F3x115[1] (> 170 mV) - and less than 500 mV.
- The signal level limit must be adapted, depending on the rate at which the encoder becomes dirty, so that alarm message A3x407[1] is output in plenty of time before the encoder actually fails.
- The threshold must be selected higher for measuring systems that quickly become dirty.
- If the rate at which the encoder becomes dirty is not known, then a practical threshold value is 230 mV.

[1] x = encoder number (x = 1, 2 or 3)

8.20.4 Function diagrams and parameters

Overview of important parameters (see SINAMICS S120/S150 List Manual)

- p0437[0...n] Sensor Module extended configuration

8.21 Tolerant encoder monitoring

Function description

The tolerant encoder monitoring offers the following expanded functionality regarding the evaluation of encoder signals:

- Encoder track monitoring (Page 369)
- Zero mark tolerance (Page 370) (also for other sensor modules)
- Freeze speed raw value (Page 371)
- Adjustable hardware filter (Page 371)
- Edge evaluation of the zero mark (Page 372)
- Pole position adaptation (Page 373)
- Pulse number correction for faults (Page 374)
- Monitoring, tolerance band, pulse number (Page 375)
- Expansion of the encoder evaluation (1x, 4x) (Page 376)
- Setting the measuring time to evaluate speed "0" (Page 377)
- The number of current controller cycles can be set to generate the average value of the speed actual value (Page 377)

These supplementary functions allow you to improve the evaluation of your encoder signals. This may be necessary in special cases where the Control Unit receives incorrect encoder signals or specific properties of the signals must be compensated for.

Some of these supplementary functions can be combined with one another.

Commissioning the function

The tolerant encoder monitoring is commissioned using parameters p0437 and r0459.

r0458.12 = 1 indicates whether your hardware supports the expanded encoder properties.

Note

- You can only parameterize the tolerant encoder monitoring functions when commissioning the encoder. The encoder monitoring parameters cannot be changed while the drive is running!
- The functions described in the following apply to SMC30 modules and to Control Units with internal encoder evaluation.

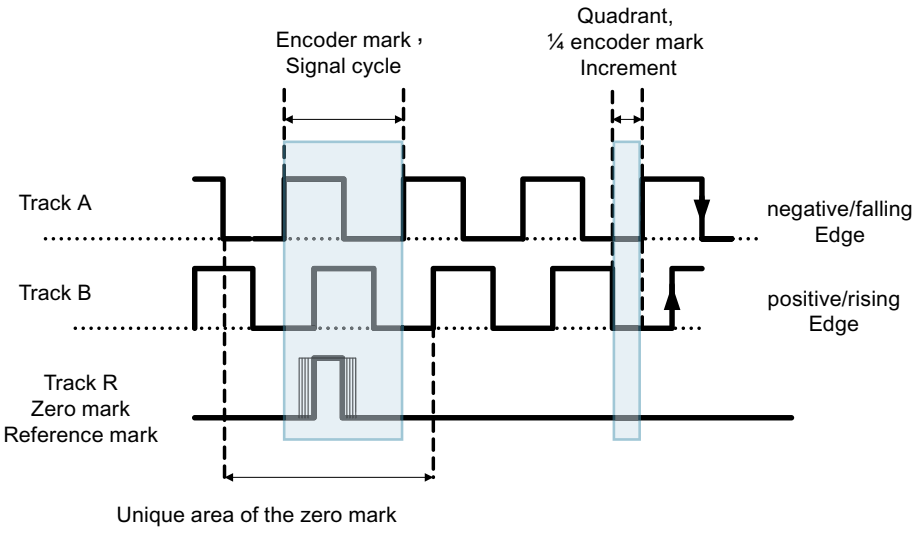

8.21.1 Encoder track monitoring

Overview

For square-wave encoders with push-pull signals, the function extension "Encoder track monitoring" monitors encoder tracks A/B ↔ -A/B, as well as R ↔ -R. The encoder track monitoring monitors the most important properties of the signals (amplitude, offset, phase position).

Commissioning the function

Before you activate encoder track monitoring, you must set the following parameters as specified:

Setting	Reaction
p0404.3 = 1	Switches to the square-wave encoder.
p0405.0 = 1	Sets the signal to bipolar.

Set p0405.2 = 1 to activate the function.

If you selected your encoder from the list of parameter p0400, then the values above are pre-selected and cannot be changed (also refer to the information on p0400 in the SINAMICS S120/ S150 List Manual).

Deactivating track monitoring

If encoder track monitoring is activated, you can deactivate the function by setting p0437.26 = 1.

Evaluate messages

All of the track monitoring functions can be individually evaluated. You can use both HTL as well as TTL encoders.

If a fault is detected, then fault F3x117[1)] is output. The faulty tracks are included in the fault value bit-coded.

Note

For modules CU310-2, CUA32, D410-2 and SMC30 (only article numbers 6SL3055-0AA00-5CA0 and 6SL3055-0AA00-5CA1), there is only a common signal. If you connect a square-wave encoder without R track to one of these modules, then if track monitoring is activated, fault F3x117[1)] is output.

To avoid this fault, at the encoder connection, you must connect the "ground encoder supply" (pin 7) with the "reference signal R" (pin 10), as well as the "encoder supply" (pin 4) with the "inverse reference signal R" (pin 11).

[1)] x = encoder number (x = 1, 2 or 3)

8.21.2 Zero mark tolerance

Overview

The function extension "Zero mark tolerance" allows individual faults to be tolerated regarding the number of encoder pulses between two zero marks.

Commissioning the function

Set parameter p0430.21 = 1 to activate the function.

If the function is activated, then the following responses are executed:

1. The "zero mark tolerance" function starts to become effective after the 2nd zero mark has been detected.
2. After this, if the number of track pulses between two zero marks does not match the configured number of pulses **once**, then alarm A3x400[1)] (alarm threshold, zero mark distance error) or A3x401[1)] (alarm threshold, zero mark failed) is output.
3. The alarm is cleared when the next zero mark is received at the correct position.
4. However, if a new zero mark position error is identified, fault F3x100[1)] (zero mark distance error) or Fx3101[1)] (zero mark failed) is output.

[1)] x = encoder number (x = 1, 2 or 3)

8.21.3 Freezing the speed raw value

Overview

If, for high speed changes, the dn/dt monitoring function responds, then the function extension "freeze speed raw value" gives you the opportunity of briefly specifying the actual speed value therefore equalizing the speed change.

Commissioning the function

Set parameter p0437.6 = 1 to activate the function.

If the function is activated, then the following responses are executed:

1. If the dn/dt monitor responds, the alarm A3x418 " Encoder x: Speed difference per sampling rate exceeded"[1] is output.
2. A frozen actual speed value limited to just two current controller cycles is supplied.
3. The rotor position continues to integrate.
4. The actual value is released again after 2 current controller cycles.

[1] x = encoder number (x = 1, 2 or 3)

8.21.4 Adjustable hardware filter

Overview

The function extension "Adjustable hardware filter" allows an encoder signal to be filtered, therefore suppressing short interference pulses.

Commissioning the function

You commission the function as follows:

1. Set parameter p0438 ≠ 0 to activate the function.
2. In parameter p0438 (square-wave encoder filter time) enter the filter time in the range from 0 to 100 µs. The hardware filter only supports values 0 (no filtering), 0.04 µs, 0.64 µs, 2.56 µs, 10.24 µs and 20.48 µs
   If a value is set that does not match one of the discrete values specified above, the firmware automatically sets the next closest discrete value. The drive does not output an alarm or fault message.
3. You can see the active, effective filter time in parameter r0452.

Note

The zero mark alarms F3x100, F3x101 and F3x131[1)], that are already output for a zero mark with a width of ¼ encoder pulse at half n_max speed, are suppressed when the hardware filter is activated.

[1)] x = encoder number (x = 1, 2 or 3)

Calculating the influence of the filter time on the speed

You can calculate the influence of the filter time on the maximum possible speed using the following formula:

- n_max [rpm] = 60 / (p0408 · 2 · r0452)
  p0408 represents the pulses per revolution of the rotary encoder.

Example

The following values are specified in this example:

- p0408 = 2048
- r0452 = 10.24 [µs]

On the basis of the specified values, calculate the filter time (n_max) using the following formula:

- n_max = 60 / (2048 · 2 · 10.24 · 10^{-6}) = 1430 [rpm]

Result: With the calculated filter time, you can operate the motor up to a maximum of 1430 rpm.

8.21.5 Edge evaluation of the zero mark

Overview

The function extension "Edge evaluation of the zero mark" is suitable for encoders, where the zero mark ≥ 1 pulse(s) wide. In this particular case, errors would otherwise occur as a result of the edge detection of the zero mark.

For a positive direction of rotation, the positive edge of the zero mark is evaluated and for a negative direction of rotation, the negative edge. As a consequence, for encoders where the zero mark is wider than one pulse, it is possible to parameterize them with equidistant zero marks (p0404.12 = 1), i.e. the zero mark checks (F3x100, F3x101[1)]) are activated.

[1)] x = encoder number (x = 1, 2 or 3)

Commissioning the function

Set parameter p0437.1 = 1 to activate the function.

The factory setting p0437.1 = 0 keeps the operation at the known zero mark detection.

Setting the zero mark distance

Under unfavorable conditions, if the drive oscillates around the zero mark for one revolution, a zero mark error can occur with the rough order of magnitude of the zero mark width. This behavior can be avoided using the appropriate value of parameter p4686 (zero mark minimum length). You can assign ¾ of the zero mark width to parameter p4686 in order to achieve the most rugged behavior possible.

In order that the drive, for small inaccuracies, does not output fault F3x100 (N, A) "Encoder x: Zero mark distance error"[1)], a small, adjustable deviation of the zero mark distances is permitted. The parameter p4680 (zero mark monitoring tolerance permissible) makes the system less sensitive to the occurrence of fault F3x100[1)], if p0430.22 = 0 (no pole position adaptation) and p0437.2 = 0 (no pulse number correction for faults) are set.

[1)] x = encoder number (x = 1, 2 or 3)

8.21.6 Pole position adaptation

Overview

If zero marks repeatedly return (e.g. due to a dirty encoder disk), the drive adds the missing pulses to the pole position to correct the pole position error. If too many pulses are added (e.g. due to EMC interferences), then these will be subtracted when the zero mark is exceeded.

Function description

When the pole position adaptation is activated, the incorrect pulses on the A/B track are corrected in the pole position for commutation. The tolerance bandwidth for the zero mark is ±30° electrical. The rate of correction is ¼ of an encoder pulse between two zero marks; this means that sporadically missing or superfluous pulses are corrected.

Note

When the "Commutation with zero mark" function (p0404.15 = 1) is activated, then the system waits until fine synchronization has been completed before making a correction (r1992.8 = 1).

Commissioning the function

Set p0430.22 = 1 to activate the function.

8.21.7 Pulse number correction for faults

Overview

Interference currents or other EMC faults can falsify encoder evaluation. However, it is possible to correct the measured signals using the zero marks.

Commissioning the function

Carry out the following steps to start the function:

1. Set p0437.2 = 1 to activate "Pulse number correction for faults".
2. Define the permissible tolerance (encoder pulses) for the zero mark distance (p4680).
3. Define the limits of the tolerance window, up to which the drive corrects the pulse number (p4681, p4682).
4. Using p4686, define the minimum zero mark length.

Further information on the procedure

The function extension completely corrects encoder pulse errors up to the tolerance window (p4681, p4682) between two zero marks. The rate of correction is ¼ encoder pulses per current controller cycle. As a consequence, it is possible to continually compensate for missing encoder pulses (for example, if the encoder disk is dirty). Using the parameters p4681 and p4682, set the tolerance for the deviating pulse number. If the deviation exceeds the tolerance window size, fault F3x131[1)] is output.

Note

When the "Commutation with zero mark" function (p0404.15 = 1) is activated, then the system waits until fine synchronization has been completed before making a correction (r1992.8 = 1). The pole position for the commutation is also corrected. To do this, you do not have to activate pole position adaptation (p0430.22 = 1). This function does not make any corrections in rotational speed acquisition.

Using p4686, set the minimum zero mark length. With a factory setting of 1, it is prevented that EMC faults result in a zero mark error. Shorter zero marks are only suppressed when "Zero mark edge detection" is parameterized (p0437.1 = 1).

Zero mark deviations of less than the minimum zero mark length (p4686) are not corrected.

A permanently failed zero mark is indicated using the fault F3x101 "Encoder x: Zero mark failed"[1)] or the alarm A3x401[1)] "Alarm threshold zero mark failed".

[1)] x = encoder number (x = 1, 2 or 3)

8.21.8 "Tolerance band pulse number" monitoring

Overview

The function extension "Tolerance band pulse number monitoring" monitors the number of encoder pulses between two zero marks. An alarm is output if the number lies outside a tolerance band that can be selected.

Commissioning the function

Carry out the following steps to start the function:

1. Set parameter p0437.2 = 1 to activate the monitoring.
2. Using parameters p4683 and p4684, set the upper and the lower limits of the tolerance band. Within this tolerance band, the detected number of pulses is considered to be correct.

Further information on the procedure

- After each zero mark, it is again checked as to whether the number of pulses up to the next zero mark lies within the tolerance band.

If ...	Then ...
If the pulse number lies outside of the tolerance band and the function "Pulse number correction for faults" is parameterized via p0437.2 = 1, ...	then alarm A3x422[1)] is output for 5 seconds.
If one of the limits has a value of 0, ...	then alarm A3x4221) is deactivated.

- Display of uncorrected encoder pulses
  For p0437.7 = 1, the number of corrected pulse errors is displayed in r4688 with the correct sign. Set p0437.7 = 0 in order to indicate the corrected pulse errors per zero mark distance in r4688.

If ...	Then ...
If the tolerance band limit is not reached during a drift after a revolution, ...	an alarm is not output.
If the zero mark is exceeded; ...	a new measurement is performed.

- Number of pulses outside the tolerance band

If ...	Then ...
If the tolerance band is violated, ...	then in addition to alarm A3x4221) r4689.1 = 1 is set. **Note:** This value remains for a minimum of 100 ms so that a control system can detect several violations in rapid succession one after the other even for high-speed drives.

You can send the message bits of parameter r4689 to a higher-level controller via PROFIBUS / PROFINET as process data.

- You can send the accumulated correction value to a higher-level controller via PROFIBUS (e.g. p2051[x] = r4688). The controller can then set the contents of the counter to a specific value.

Note

The "tolerance band pulse number monitoring" also functions for external encoders which operate in a drive line-up as leading value encoder (monitoring the position value XIST1 from a direct measuring system).

[1] x = encoder number (x = 1, 2 or 3)

8.21.9 Signal edge evaluation (1x, 4x)

Overview

The "signal edge evaluation" function extension allows square-wave encoders with higher production tolerances or older encoders to be used. Using this function, a "steadier" speed actual value is calculated for encoders with an uneven pulse duty factor of the encoder signals. As a consequence, you can keep the old motors together with the encoders - for example when modernizing plants.

Commissioning the function

Set the parameter p0437 bit 4 and bit 5 as follows to activate the function:

p0437.4	p0437.5	Evaluation
0	0	4 x (factory setting)
0	1	Reserved
1	0	1 x
1	1	Reserved

Further information on the procedure

- For the 4x evaluation, both the rising and falling edges of a contiguous pulse pair on the A and B tracks are evaluated.
- For the 1x evaluation, only the first or the last edge of a contiguous pulse pair on the A and B tracks are evaluated.
- A 4x evaluation of the pulse encoder signals allows a minimum speed to be detected which is a factor of 4 lower than for the 1x evaluation. For incremental encoders with uneven pulse duty factor of the encoder signals or where the encoder signals are not precisely offset by 90°, a 4x evaluation can result in an actual speed value that is somewhat less steady.
- The following formula defines the lowest speed where a distinction can be made to 0:
  n_min = 60 / (x*p0408) [rpm]
  with x = 1 or 4 (x times evaluation)

Note

You can only use the reduction to 1x evaluation in conjunction with the edge zero mark or without zero mark. Detection with an accuracy of one pulse is no longer possible for zero marks with "unambiguous range" or distance-coded zero marks.

8.21.10 Setting the measuring time to evaluate speed "0"

Overview

The function is only necessary for slow-speed drives (up to 40 rpm rated speed) in order to be able to output actual speeds correctly close to "0". For a stationary drive, this prevents that the I component of the speed controller slowly increases and the drive unnecessarily establishes a torque.

Commissioning the function

Enter the required measuring time in parameter p0453. A speed actual value of "0" is output, if, within this time, no pulses are detected from the A/B track.

8.21.11 Sliding averaging of the speed actual value

Overview

For slow-speed drives (< 40 rpm), when using standard encoders with a pulse number of 1024, a problem is encountered due to the fact that the same number of encoder pulses is not available for every current controller cycle (for p0430.20 = 1: Speed calculation without extrapolation, "Incremental difference"). The different number of encoder pulses means that the speed actual value display jumps, although the encoder itself is rotating at a constant speed.

Commissioning the function

Carry out the following steps to start the function:

1. Enter the value "0" (edge time measurement) in parameter p0430.20 for the sliding mean value generation.
2. In parameter p4685, enter the number of current controller cycles over which the average value should be formed to calculate the speed.
   The averaging means that individual incorrect pulses, depending on the number of specified cycles, are smoothed.

8.21.12 Troubleshooting

Overview

The table below gives you an overview of the error patterns and their possible causes.

Table 8-9 Fault profiles and their possible causes

Fault profile	Fault description	Remedy
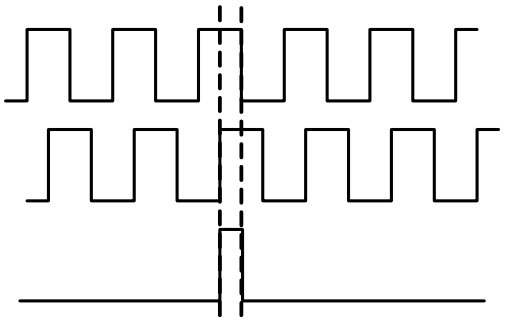	No fault	–
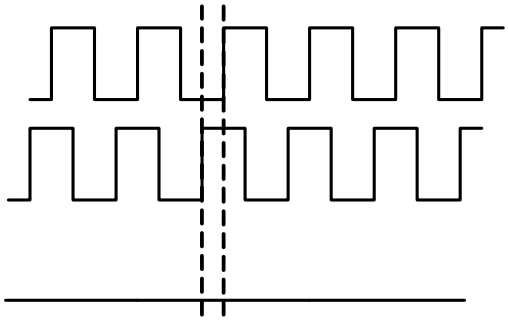	F3x101 (zero mark failed)	Check that the connection assignment is correct (A interchanged with –A or B interchanged with –B)

Fault profile	Fault description	Remedy
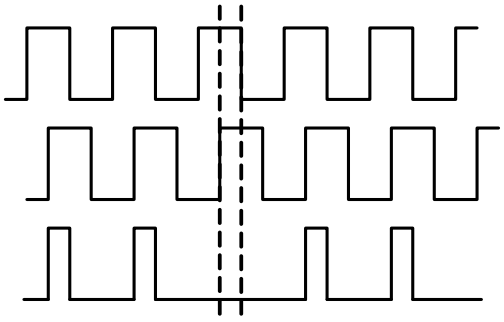	F3x100 (Zero mark distance error)	Check whether the connection assignment is correct (R interchanged with –R)
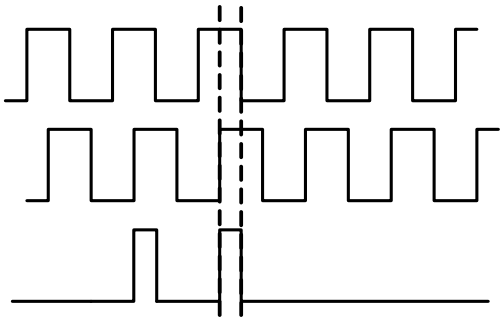	Interjected zero mark	Use zero mark tolerance
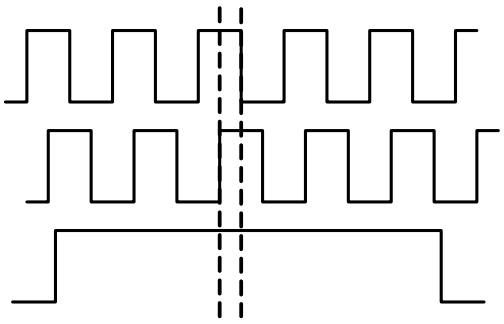	Zero mark too wide	Use edge evaluation of the zero mark

Fault profile	Fault description	Remedy
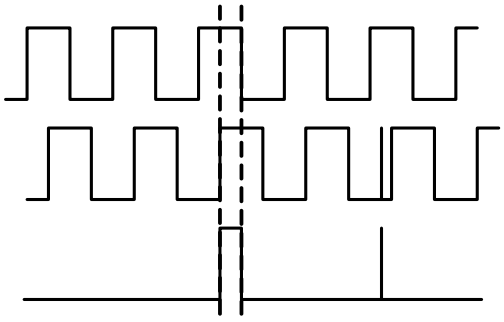	EMC faults	Use an adjustable hardware filter
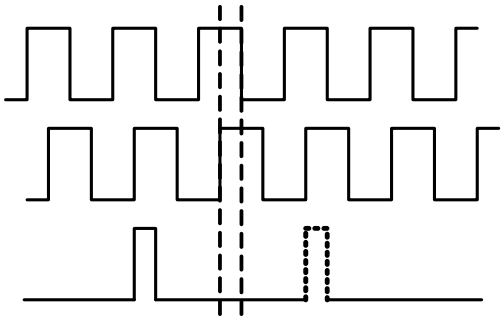	Zero mark to early/too late (interference pulse or pulse loss on the A/B track)	For faults, use pole position adaptation or pulse number correction

8.21.13 Tolerance window and correction

Overview

The following figure gives an overview of the settable tolerance window and offsets.

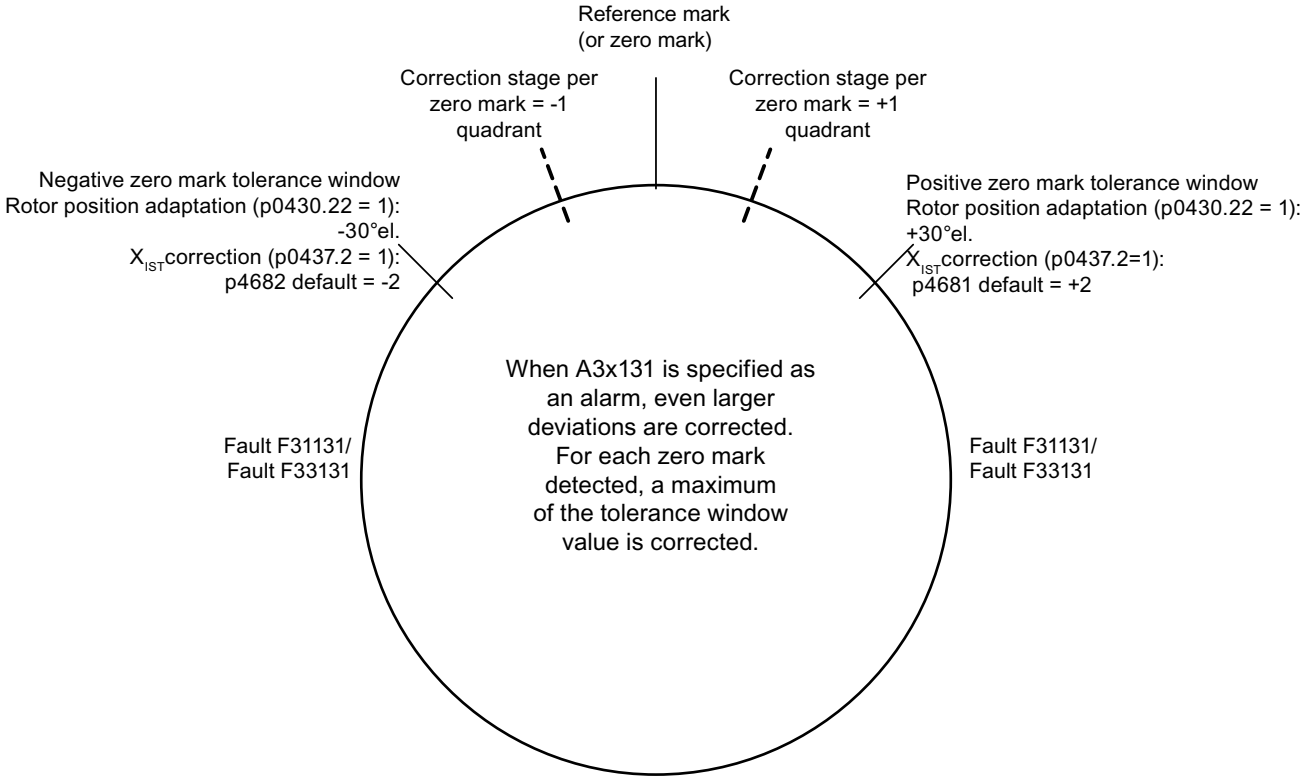

Figure 8-8 Overview: Tolerance window and correction

8.21.14 Dependencies

Overview

The table below gives you an overview of the dependencies between the individual function extensions.

Parameter		Functionality										
		These functions can be freely combined with one another								These functions build on one another from left to right, and can be combined with the adjacent ones		
	Indices	1	2	3	4	5	6	7	8	9	10	11
p0405.2	Track monitoring	x										
p0430.20	Speed calculation mode							x				
p0430.21	Zero mark tolerance		x									
p0430.22	Rotor position adaptation									x		
p0437.1	Zero mark edge detection							x				
p0437.2	Actual position value correction XIST1										x	x
p0437.4	Edge evaluation								x			
p0437.5	Edge evaluation								x			
p0437.6	Freezing the actual speed for dn/dt errors			x								
p0437.7	Uncorrected encoder pulses accumulate										x	x
p0437.26	Deselection, track monitoring	x										
p0438	Square-wave encoder filter time				x							
r0452	Square-wave encoder filter time display				x							
p0453	Pulse evaluation zero speed measuring time					x						
p4680	Zero mark monitoring tolerance permissible							x			x	
p4681	Zero mark monitoring tolerance window limit 1 positive										x	
p4682	Zero mark monitoring tolerance window limit 1 negative										x	
p4683	Zero mark monitoring tolerance window alarm threshold positive											x
p4684	Zero mark monitoring tolerance window alarm threshold negative											x
p4685	Speed actual value averaging						x					
p4686	Zero mark, minimum length							x			x	
p4688	Zero mark monitoring, number of differential pulses										x	x

Parameter		Functionality										
		These functions can be freely combined with one another								These functions build on one another from left to right, and can be combined with the adjacent ones		
	Indices	1	2	3	4	5	6	7	8	9	10	11
p4689	Square-wave encoder diagnostics										x	x
Messages												
F3x117	Inversion signal A and B error	x										
F3x118	Speed difference outside tolerance			x								
F3x131	Deviation position incremental absolute too high										x	
A3x400	Alarm threshold zero mark distance error		x									
A3x401	Alarm threshold zero mark clearance failed		x									
A3x418	Speed difference per sampling rate exceeded			x								
A3x422	Number of pulses square-wave encoder outside tolerance											x

Number In column	Explanation
1	Encoder track monitoring
2	Zero mark tolerance
3	Freezing the speed setpoint
4	Adjustable hardware filter
5	The measuring time can be set to evaluate zero speed
6	Sliding averaging of the speed actual value
7	Edge evaluation of the zero mark
8	Signal edge evaluation (1x, 4x)
9	Pole position adaptation
10	Pulse number correction in the event of faults (pole position for commutation is also corrected)
11	"Tolerance band pulse number" monitoring

8.21.15 Overview of important parameters

Overview of important parameters (see SINAMICS S120/S150 List Manual)

- p0404[0...n] Encoder configuration active
- p0405[0...n] Square-wave encoder track A/B / square-wave encoder A/B
- p0408[0...n] Rotary encoder pulse No.
- p0430[0...n] Sensor Module configuration
- p0437[0...n] Sensor Module extended configuration
- p0438[0...n] Square-wave encoder filter time
- r0452[0...2] Square-wave encoder filter time display
- r0458[0...2] Sensor Module properties
- r0459[0...2] Sensor Module extended properties
- p4680[0...n] Zero mark monitoring tolerance permissible
- p4681[0...n] Zero mark monitoring tolerance window limit 1 positive
- p4682[0...n] Zero mark monitoring tolerance window limit 1 negative
- p4683[0...n] Zero mark monitoring tolerance window alarm threshold positive
- p4684[0...n] Zero mark monitoring tolerance window alarm threshold negative
- p4686[0...n] Zero mark, minimum length
- r4688[0...2] CO: Zero mark monitoring, number of differential pulses
- r4689[0...2] CO: Square-wave encoder diagnostics

8.22 Parking axis / parking encoder

Function description

The "parking" function is used in two ways:

- "Parking axis"
  - Monitoring of all encoders and Motor Modules assigned to the "Motor control" application of a drive are suppressed.
  - All encoders assigned to the "Motor control" application of a drive are prepared for the "removed" state.
  - The Motor Module assigned to the "Motor control" application of a drive is prepared for the "removed Motor Module" state.
- "Parking encoder"
  - Monitoring of a certain encoder is suppressed.
  - The encoder is prepared for the "removed" state.

Parking an axis

When an axis is parked, the power unit and all the encoders assigned to the "motor control" are switched to inactive (r0146[n] = 0).

- Control is carried out via the control/status words of the cyclic telegram (STW2.7 and ZSW2.7) or using parameters p0897 and r0896.0.
- The drive must be brought to a standstill by the higher-level controller (disable pulses, e.g. via STW1.0/OFF1).
- DRIVE-CLiQ communication to downstream components via the deactivated power unit (r0126 = 0) remains active.
- A measuring system that is not assigned to the "motor control" (e.g. direct measuring system) remains active (r0146[n] = 1).
- The drive object remains active (r0106 = 1).

Note

Once the "Parking axis" / "Parking encoder" status has been canceled, you may have to carry out the following actions:

- If the motor encoder has been replaced: determine the commutation angle offset (p1990).
- A new encoder must be referenced again (e.g. to determine the machine zero point).

Example: Parking axis

In the following example, an axis is parked. To ensure that the axis parking is effective, the drive must be brought to a standstill (e.g. via STW1.0 (OFF1). All components assigned to the motor control (e.g. power unit and motor encoder) are shut down.

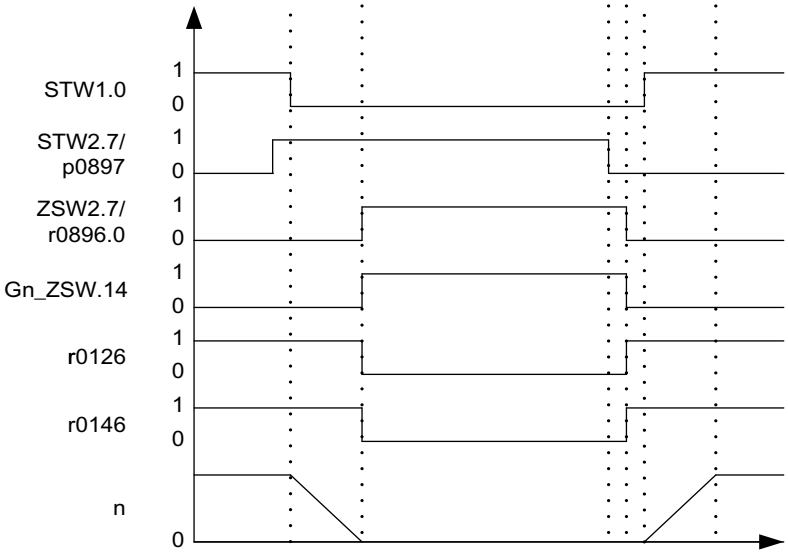

Figure 8-9 Flow diagram: parking axis

Parking an encoder

When an encoder is parked, the encoder being addressed is switched to inactive (r0146 = 0).

- Control is carried out via the encoder control/status words of the cyclic telegram (Gn_STW.14 and Gn_ZSW.14).
- With a parked motor measuring system, the associated drive must be brought to a standstill by the higher-level control system (disable pulses e.g. via STW1.0/OFF1).
- The monitoring functions for the power unit remain active (r0126 = 1).

Note

Removing/replacing parked components

Once parked components have been disconnected/connected, they can only be unparked once they have been successfully integrated in the actual topology (see r7853).

Example: Parking encoder

In the following example, a motor encoder is parked. To activate motor encoder parking, the drive must be stopped (e.g. via STW1.0 (OFF1).

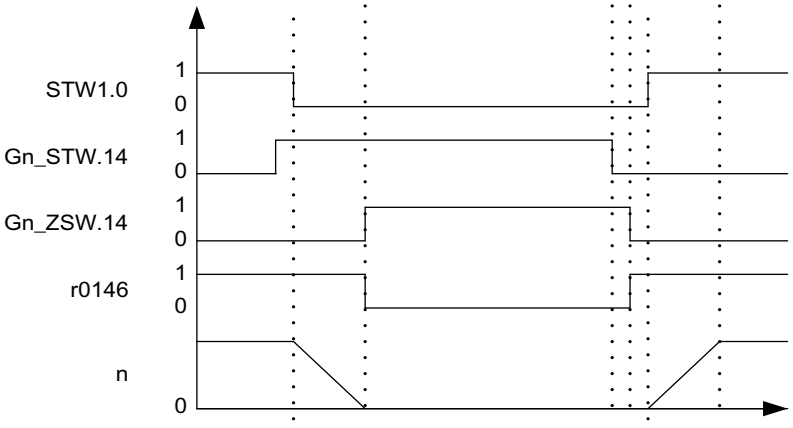

Figure 8-10 Function chart: parking encoder

Overview of important parameters (see SINAMICS S120/S150 List Manual)

- p0105 Activate/deactivate drive object
- r0106 Drive object active/inactive
- p0125[0...n] Activate/deactivate power unit component
- r0126[0...n] Power unit components active/inactive
- p0145[0...n] Enable/disable sensor interface
- r0146[0...n] Sensor interface active/inactive
- p0895[0...n] BI: Activate/deactivate power unit component
- r0896.0 BO: Parking axis status word
- p0897 BI: Parking axis selection

8.23 Position tracking

Overview

Position tracking enables the load position to be reproduced when using gearboxes. It can also be used to extend the position area.

Explanation of used terms

- Encoder range
  The position area that can itself represent the absolute encoder.
- Singleturn encoder
  A rotating absolute encoder, which provides an absolute image of the position within one encoder revolution.
- Multiturn encoder
  An absolute encoder that provides an absolute image of the position over several encoder revolutions (e.g. 4096 revolutions).

Function description

With position tracking, an additional measuring gear can be monitored and also a load gear, if the "position control" function module (p0108.3 = 1) is active. Position tracking of the load gearbox is described in Section "Actual position value processing".

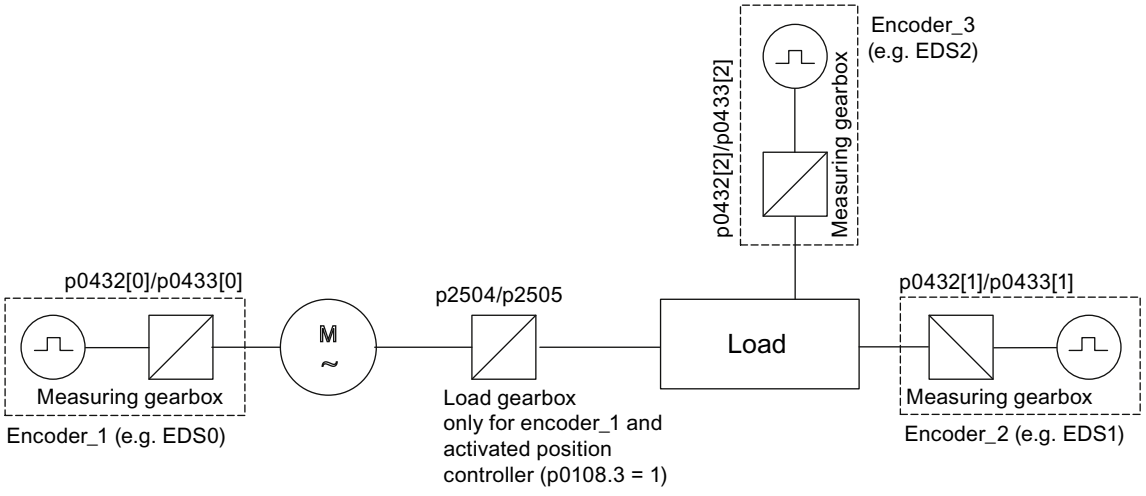

Figure 8-11 Overview: Gearboxes and encoders

The encoder actual position value in r0483 (must be requested via GnSTW.13) is limited to 2^{32} places. When position tracking (p0411.0 = 0) is switched off, the encoder actual position value r0483 comprises the following position information:

- Encoder pulses per revolution (p0408)
- Fine resolution per revolution (p0419)
- Number of resolvable revolutions of the rotary absolute encoder (p0421), this value is fixed at "1" for singleturn encoders.

When position tracking (p0411.0 = 1) is activated, the encoder actual position value r0483 is composed as follows:

- Encoder pulses per revolution (p0408)
- Fine resolution per revolution (p0419)
- Virtual number of resolvable motor revolutions of a rotary absolute encoder (p0412)
  If the measuring gear is absent (n = 1), the actual number of the stored revolutions of a rotary absolute encoder p0421 is used. The position area can be extended by increasing this value. If the measuring gear is available, this value equals the number of resolvable motor revolutions, which is stored in r0483.
- Gearbox ratio (p0433/p0432)

8.23.1 Position tracking with a measuring gearbox

Requirement

- Using an absolute encoder

Function description

If a mechanical gear (measuring gear) is located between an endlessly rotating motor or load and the encoder and position control is carried out using this absolute encoder, an offset occurs (depending on the gear ratio) between the zero position of the encoder and the motor or load whenever encoder overflow occurs.

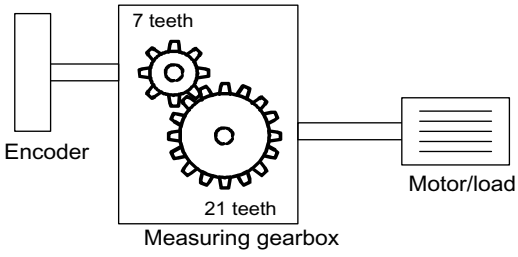

Figure 8-12 Measuring gearbox

In order to determine the position at the motor or load, in addition to the position actual value of the absolute encoder, it is also necessary to have the number of overflows of the absolute encoder.

If the power supply of the control module must be powered-down, then the number of overflows must be saved in a non-volatile memory so that after powering-up the position of the load can be uniquely and clearly determined.

Example

Gear ratio 1:3 (motor revolutions p0433 to encoder revolutions p0432), absolute encoder can count eight encoder revolutions (p0421 = 8).

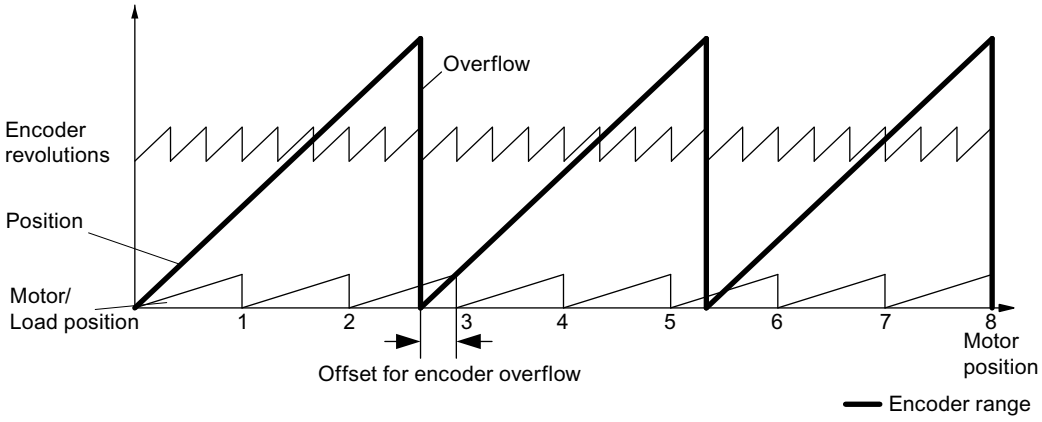

Figure 8-13 Drive with odd-numbered gearboxes without position tracking

In this case, for each encoder overflow, there is a load-side offset of $^1/_3$ of a load revolution, after 3 encoder overflows, the motor and load zero position coincide again. The position of the load can no longer be clearly reproduced after one encoder overflow.

If position tracking is activated via p0411.0 = 1, the gearbox ratio (p0433 / p0432) is calculated with the encoder position actual value (r0483).

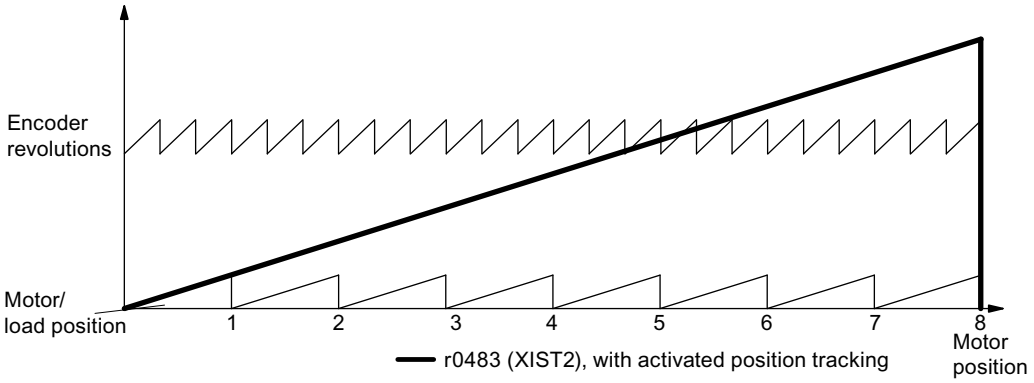

Figure 8-14 Odd-numbered gears with position tracking (p0412 = 8)

Features

- Configuration via p0411
- Virtual multiturn via p0412
- Tolerance window for monitoring the position at power ON p0413
- Input of the measuring gear via p0432 and p0433
- Display via r0483

Commissioning the function

The parameters p0412 (Measuring gear, rotary absolute encoder, revolutions, virtual) and p0413 (Measuring gear, position tracking tolerance window) can only be set via the parameter view.

You can activate the position tracking of the measuring gear during the configuration of the drive.

Measuring gear configuration (p0411)

The following points can be set by configuring this parameter:

- p0411.0: Activation of position tracking
- p0411.1: Setting the axis type (linear axis or rotary axis)
  Here, a rotary axis refers to a modulo axis (modulo offset can be activated through higher-level control or EPOS). With a linear axis, position tracking is mainly used to extend the position area (see section: Virtual multiturn encoder (p0412)).
- p0411.2: Reset position
  Overflows can be reset with this. This is required, for example, if the encoder is turned by more than 1/2 the encoder range while switched off.

Virtual multiturn encoder (p0412)

With a rotary absolute encoder (p0404.1 = 1) with activated position tracking (p0411.0 = 1), p0412 can be used to enter a virtual multiturn resolution. This enables you to generate a virtual multiturn encoder value (r0483) from a singleturn encoder. It must be possible to display the virtual encoder range via r0483.

Note

If the gear factor is not equal to 1, then p0412 always refers to the motor side. The virtual resolution, which is required for the motor, is then used here.

For rotary axes with modulo offset, the virtual multiturn resolution (p0412) is preset as p0421 and can be changed.

For linear axes, the virtual multiturn resolution (p0412) is preset as p0421 and extended by 6 bits for multiturn information (max. overflows 31 positive/negative).

If, as a result of extension of the multiturn information, the displayable area of r0483 (2^{32} bit) is exceeded, the fine resolution (p0419) must be reduced accordingly.

Tolerance window (p0413)

After switch on, the difference between the stored position and the current position is determined and initiated depending on the following:

- Difference within the tolerance window:
  The position is reproduced based on the actual encoder value.
- Difference outside the tolerance window:
  Message F07449 is output.
- The tolerance window is preset to quarter of the encoder range and can be changed.

Note

The position can only be reproduced if, in the powered-down state, the encoder was moved through less than half of the range that it can represent. For the standard EQN1325 encoder, this is 2048 revolutions or half a revolution for singleturn encoders.

Note

The ratio stamped on the gear rating plate is often just a rounded-off value (e.g. 1:7.34). If, for a rotary axis, it is not permissible to have any long-term drift, then the actual ratio of the gear teeth must be requested from the gear manufacturer.

Note regarding using synchronous motors with a measuring gear

Field-oriented control of synchronous motors requires a clear reference between the pole position and encoder position. This reference must also be carefully maintained when using measuring gears: This is the reason that the ratio between the pole pair number and the encoder revolutions must be an integer multiple ≥ 1 (e.g. pole pair number 17, measuring gear 4.25, ratio = 4).

Function diagrams (see SINAMICS S120/S150 List Manual)

- 4704 Encoder evaluation - Position and temperature sensing, encoders 1 ... 3

Overview of important parameters (see SINAMICS S120/S150 List Manual)

- p0402[0...n] Gear unit type selection
- p0411[0...n] Measuring gear configuration
- p0412[0...n] Measuring gear, absolute encoder, rotary revolutions, virtual
- p0413[0...n] Measuring gear, position tracking tolerance window
- p0421[0...n] Absolute encoder rotary multiturn resolution
- p0432[0...n] Gear factor encoder revolutions
- p0433[0...n] Gear factor motor/load revolutions
- r0477 CO: Measuring gear, position difference
- r0485 CO: Measuring gear, raw encoder value, incremental
- r0486 CO: Measuring gear, raw encoder value, absolute

8.24 Encoder as drive object

Overview

Encoders can be linked in as autonomous drive objects (Drive Object = DO) and evaluated. If an encoder is integrated as a drive object, it can be addressed via PROFIBUS / PROFINET as a stand-alone unit.

Requirement

- STARTER V4.1.5 or higher
- New or existing project with a CU320-2

  Note

  The project can also be created offline. Further information on this can be found in Section "Commissioning" in the SINAMICS S120 Commissioning Manual with STARTER.

- Completely configured drive system

Function description

The function "Encoder as a drive object" is only available in the STARTER commissioning tool.

Using an "Encoder" drive object allows you to directly connect an encoder of an upstream machine via a Sensor Module without having to take an indirect route via the 2nd encoder of a drive. The encoder is connected via the encoder interface of a Sensor Module. If the Sensor Module has its own DRIVE-CLiQ interface (e.g. a Sensor Module of the type SME20), then the encoder can be connected to any free DRIVE-CLiQ socket.

Creating an "Encoder" drive object

The creation of an "Encoder" drive object is described using an example of a CU320-2. In this example, the project is created offline using the STARTER commissioning tool.

In the project navigator, you can find the selection of the "Encoder" drive object between "Input/ output components" and "Drives".

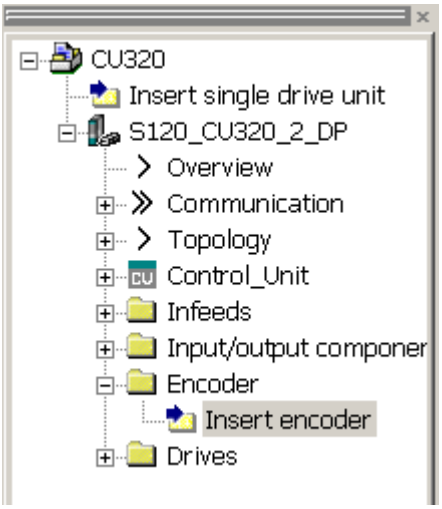

Figure 8-15 Project navigator: "Insert encoder"

Supplementary conditions

To be able to create an "Encoder" drive object, the following conditions must be fulfilled:

- All encoders that can be assigned to a drive can be used.
- Encoder drive objects may be connected to all DRIVE-CLiQ ports.
- Up to 4 DRIVE-CLiQ HUBs (DMC20 or DME20) can be used to establish a star-shaped wiring of the Encoder drive objects. This means that a maximum of 19 possible "Encoder" drive objects can be connected to one Control Unit. This means that the number of possible "Encoder" drive objects is restricted so that a maximum of 24 drive objects can be connected to one Control Unit.
- The DRIVE-CLiQ HUBs must be directly connected to the Control Unit.
- All encoders that can be assigned to a drive can be used.
- "Encoder" drive objects may be connected to all DRIVE-CLiQ ports.
- Up to 4 DRIVE-CLiQ HUBs (DMC20 or DME20) can be used to establish a star-shaped wiring of the "Encoder" drive objects. This means that a maximum of 19 possible "Encoder" drive objects can be connected to one Control Unit.
  (This means that the number of possible "Encoder" drive objects is restricted so that a maximum of 24 drive objects can be connected to one Control Unit.)
- The DRIVE-CLiQ HUBs must be directly connected to the Control Unit.

Procedure

To create an "Encoder" drive object, proceed as follows:

1. Double-click "Insert encoder".
   The "Insert Encoder" dialog box opens.
2. Enter a name for the encoder in the "Name:" input field.
3. Click the "Drive object no." button.
4. Enter a new drive object number in the "Drive object no." input field.
   All assigned drive object numbers are shown in the "Assigned drive object no." list.

5. Click "OK".
   The configuration window for encoders opens.
6. Select your encoder from the "List of standard encoders", or enter the basis data of the encoder under "Enter data".
7. Follow the configuration wizard to set-up the encoder.
8. Finally, click the "Finish" button.

The encoder is inserted in the topology and is now available.

8.25 Terminal Module 41

Description

Terminal Module 41 (TM41) emulates incremental encoder signals (TTL) and outputs them via the interface X520. The signals are based on speed setpoints transferred via process data words (SIMOTION mode) or created on the actual position value of a leading encoder (SINAMICS mode). The emulated incremental encoder signal can be used by external hardware or a higher-level controller.

The number of pulses output or virtual pulses per revolution can be set over a wide range.

With the additional inputs and outputs, these can be used for example to transfer analog speed setpoints or control and status signals, for example OFF1/ON, "ready for operation" or "fault".

Features

Terminal Module 41 is characterized by the following features:

- Pulse encoder emulation, TTL signals according to the RS422 standard (X520)
- 1 analog input
- 4 digital inputs
- 4 bidirectional digital inputs/outputs

Further information

You can find further information about Terminal Module 41 as hardware component in Chapter "Terminal Module TM41" in the "SINAMICS S120 Control Units and Additional System Components" Equipment Manual.

8.25.1 SIMOTION mode

Function description

The SIMOTION mode of the incremental encoder emulation is set using parameter p4400 = 0. The incremental encoder emulation is based on the speed setpoint.

A speed setpoint r2060 is received via PROFIdrive telegram 3, which is interconnected to p1155. The speed setpoint can be filtered using a (p1414.0) PT2 element that can be activated (p1417 and p1418). The speed setpoint can be delayed with the dead time p1412. The number of encoder pulses per revolution can be set using parameter p0408. The distance between the zero marks and the position when enabling the A/B tracks (r4402.1) is entered into parameter p4426 and enabled with p4401.0 = 1.

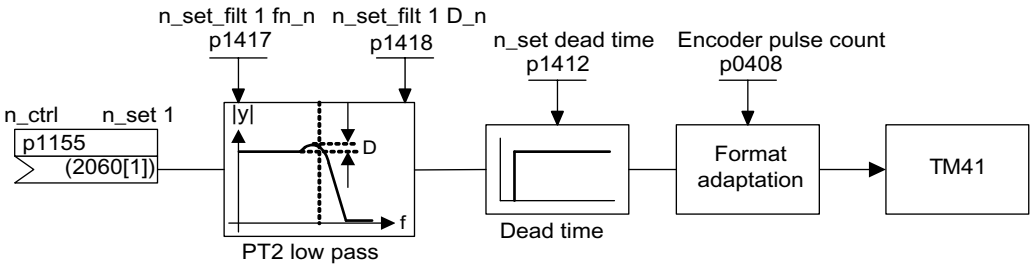

Figure 8-16 Function diagram encoder emulation

Features

- PROFIdrive telegram 3
- Own control word (r0898)
- Own status word (r0899)
- Sequence control (refer to function diagram 9682)
- Settable zero mark position (p4426)
- Operating display (r0002)

8.25.2 SINAMICS mode

Function description

The SINAMICS mode of the incremental encoder emulation is set using parameter p4400 = 1. The incremental encoder emulation is based on the encoder actual position value of the leading encoder.

The actual position values of the leading encoder are interconnected to the Terminal Module 41 via a connector input (p4420). The interconnection is possible for any encoder. This is true no matter which drive object the encoder is assigned to. This means that the actual position values at the TM41 are available as pulse encoder emulation - including the zero mark. The signals of the pulse encoder emulation appear just like the signals of a TTL encoder - and can be processed by an external controller or hardware.

Note

Connector input p4420 should be interconnected with signal source r0479 (diagnostics encoder actual position value Gn_XACT1). The value is updated with each DRIVE-CLiQ base cycle and displayed with the correct sign.

The TM41 supports a step-up/step-down ratio between the output signal of the leading encoder and the output signal of the TM41. The number of encoder pulses per revolution of the leading encoder is set using p4408. The pulse number of the TM41 encoder emulation is set using p0408. The parameters p4408 and p0408 may have any relationship with each other.

The zero mark signal for the TM41 is generated from the zero position of the leading encoder. Parameters p0493, p0494 and p0495 of the drive/encoder object apply to the generation of the zero position of the leading encoder.

Features

- The runtime of the encoder actual position value up to the pulse encoder emulation can be compensated using the deadtime compensation with p4421.
- The pulse number ratio between the encoder to be emulated and the emulating TM41 can be set as required. For each encoder revolution, in the encoder emulation, more or fewer pulses are output than were read-in from the original encoder.
- If the pulse number of the encoder emulation of the TM41 is set too high, this may cause fragmenting of the emulated speed for the leading encoder due to the system.
  Remedy: In p0408, enter a smaller value for the pulse number of the encoder emulation. The following applies: The lower the pulse number of the encoder emulation is set, the higher the rotational speed that can be emulated for the leading encoder.
- If p4422 = 1, input signal p4420 is inverted.
- Only one Encoder Data Set (EDS) can be interconnected to precisely one TM41.
- When the same EDS is interconnected to an additional TM41, only the actual position value can be emulated – but not the zero mark position.
- Using p4401.1 = 1, the zero position is synchronized with the zero mark of the absolute encoder. If you have to remain compatible with older firmware versions, for example for use in an existing controller, set parameter p4401.1 = 0.
  - p4401.1 = 0: No synchronous zero marks
  - p4401.1 = 1: Zero mark synchronization enabled
  - As soon as the absolute encoder passes the zero position of the absolute position, then the zero pulse is output via X520.
- PROFIdrive telegram 3

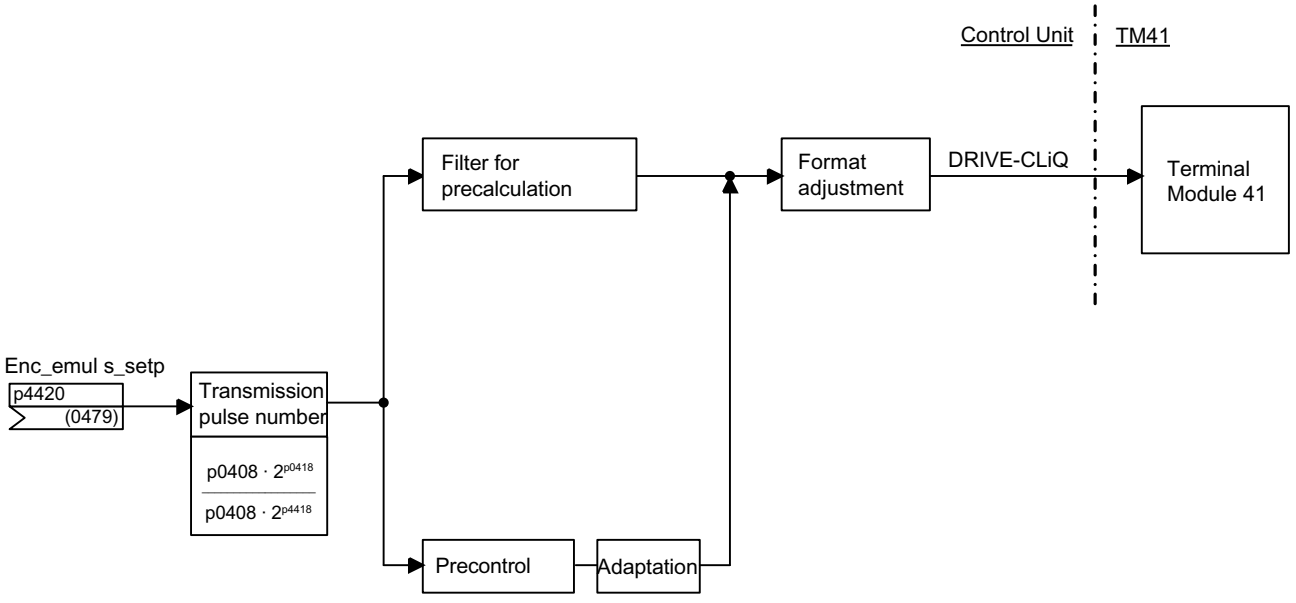

Figure 8-17 Incremental encoder emulation

8.25.3 Zero mark emulation (SINAMICS mode)

Function description

The referencing mode set for the leading encoder is used to determine the zero mark position for the zero mark emulation of the TM41.

Possible referencing modes are:

- Referencing to the zero position of the encoder
  - Encoder zero mark of an incremental encoder
  - Zero passage of the singleturn position of an absolute encoder
  - Pole pitch of the resolver
- Referencing to the zero position of the encoder with selection of the correct zero position using a BERO switching signal (CU parameter p0493)
- Referencing to an external zero mark connected via an input terminal (CU parameter p0495)

Note

Original encoder with several zero marks

If the original encoder (leading encoder) has several zero marks/positions, an additional condition (BERO signal) must be selected for the required zero mark.

Adjustable zero mark offset at the TM41 output

An offset of the pulse grid can be set for the zero mark position of the encoder emulation using p4426.

Example: Pulses per revolution ratio

The leading encoder emits 12 pulses and a zero mark per revolution. However, the application requires 32 pulses per revolution. By setting p4408 and p4418, the required 32 pulses a revolution are available at X520 of the TM41.

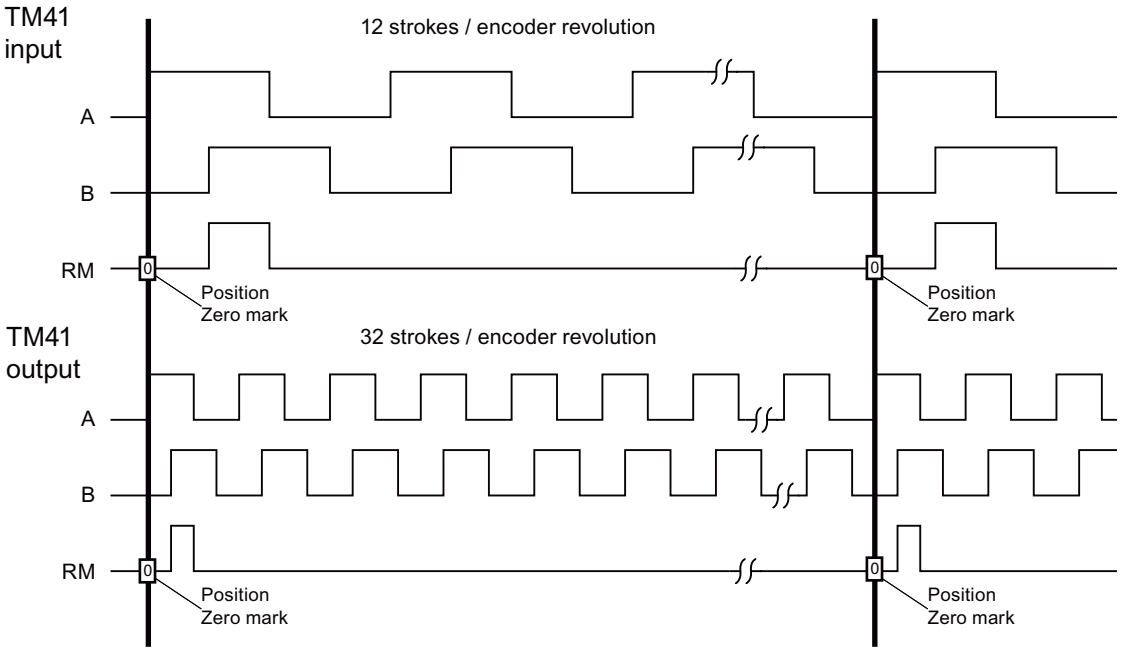

Figure 8-18 Step-up ratio of the encoder pulse number

Example: Pulses per revolution with several zero positions

If the original encoder has several zero positions/marks per revolution (e.g. resolver with several pole pairs), the correct zero mark must be selected via an additional condition. Otherwise, there is no reproducible relationship between the position of the original encoder and the zero mark position of the encoder emulation.

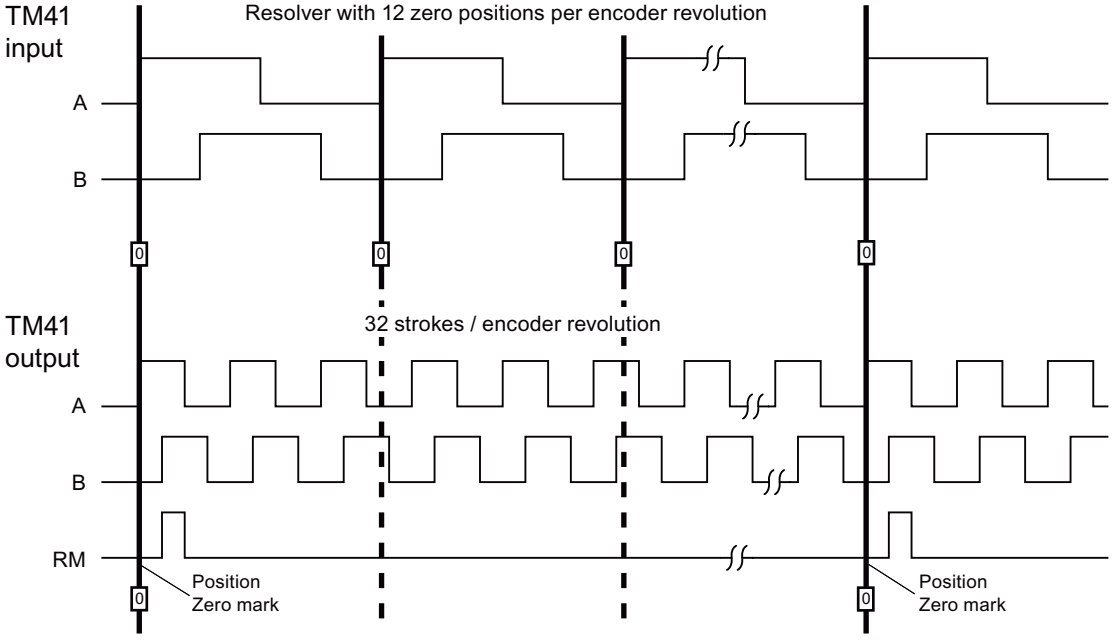

Figure 8-19 Step-up ratio with several zero positions per revolution

Configuring the function

The pulse numbers of the leading encoder (the signal source) are set using p4408 and p4418. To synchronize the generated zero mark with the zero mark of the leading encoder, the pulse number per encoder revolution of the encoder at the TM41 input (p4408) must always precisely coincide with the pulse number per encoder revolution of the encoder interconnected at connector input p4420.

The pulse numbers emulated by the TM41 are set using p0408 and p0418. If p4408 = 0 is set then the values from p0408 and p0418 also apply for the output of the TM41.

Diagnostic options

Parameter r4419 shows the calculated position setpoint after the step-up/step-down. Using the trace function of the Startdrive commissioning tool, you can check the step-up/step-down function based on r4419.

Enabling the zero mark output of the TM41

For p4401.1 = 1, the zero mark from the leading encoder is also output from the TM41. For p4401.1 = 0, TM41 outputs the zero pulse at the position at which the TM41 was located when switching on.

8.25.4 Synchronization of the zero marks (SINAMICS mode)

Overview

After the drive has been powered up, a static offset is obtained as a result of the random switch-on instant of the incremental encoder emulation.

Function description

The function "Synchronization of the zero marks" corrects the static offset that is obtained as a result of the random switch-on instant of the incremental encoder emulation. The positions of the zero marks output at the TM41 are synchronized with the zero marks of the leading encoder. The following conditions are defined for synchronization:

- The reference mark is located at the position at which both track signals A and B have the "high" status.
- The zero position is the positive edge of the A track belonging to the reference mark, which for a positive direction of rotation comes before the zero mark.

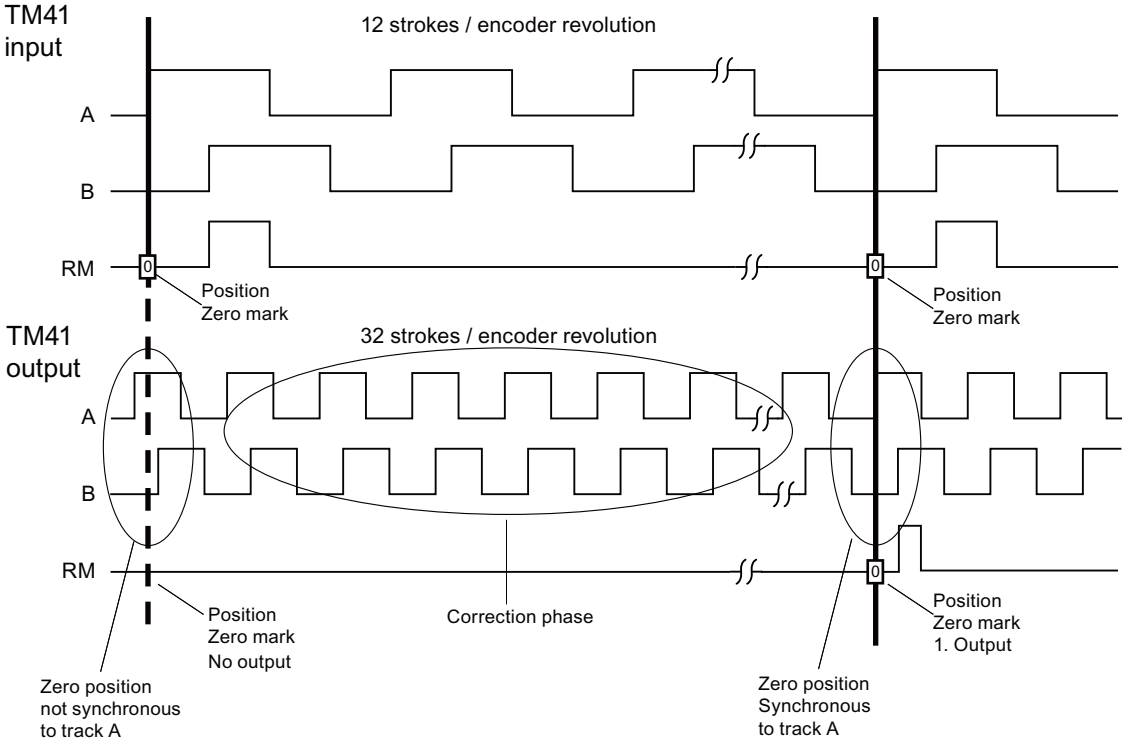

Figure 8-20 Example: Zero mark synchronization

Zero mark synchronization process

- After the SINAMICS system has been powered up, the TM41 drive object requests the zero position of the leading encoder via the encoder interface. The encoder emulation follows the movements of the leading encoder and outputs the track signals A/B. At this point in time, no zero mark is output. The edges of the A track are still not in synchronism with the leading encoder.
- The TM41 receives this position after passing the zero position of the leading encoder. The output of the track signals is now corrected in such a way that the positive edge of the A track is in synchronism with the zero position.
- After successful synchronization, the zero mark is output at the zero positions.

Detecting the zero mark position for new synchronization

If the number of encoder pulses has not been set equal to 2^n (for example p0408 = 1000), then after the higher-level controller has been reset, it is possible that the position of the next zero mark cannot be determined from the actual position value xACT1 signaled from the TM41. For this situation, the control can query the position of the next zero mark from parameter r4427 using an acyclic read request.

8.25.5 Limit frequencies for TM41

Maximum output frequencies for TM41

- Factory setting = 2048; selectable pulses per revolution (p0408) = 32 up to 16384 pulses / revolution;
- The limit frequencies specified in the tables below must not be exceeded.

The following table shows the maximum output frequency for Terminal Module 41 at 750 kHz (p4401.7 = 0).

Table 8-10 Maximum output frequencies for TM41 = 750 kHz

Higher setpoint resolution not activated (p4401.5 = 0)				
Sampling time p4099[3]		125 µs	250 µs	500 µs
Resolution		31.25 Hz	15.625 Hz	7.8125 Hz
SINAMICS mode p4400 = 1	Output frequency f_{max} (p0418 < 17 bit)	1024 kHz	512 kHz	256 kHz
	Output frequency f_{max} (p0418 = 17 bit)	512 kHz	256 kHz	128 kHz
	Output frequency f_{max} (p0418 = 18 bit)	256 kHz	128 kHz	64 kHz
SIMOTION mode p4400 = 0	Output frequency f_{max}	1024 kHz	512 kHz	256 kHz

The following table shows the maximum output frequency for Terminal Module 41 at 1024 kHz (p4401.7 = 1).

Table 8-11 Maximum output frequencies for TM41 = 1024 kHz

Higher setpoint resolution activated (p4401.5 = 1)				
Sampling time p4099[3]		125 µs	250 µs	500 µs
Resolution		0.122 Hz	0.061 Hz	0.031 Hz
SINAMICS mode p4400 = 1	Output frequency f_{max} (p0418 < 17 bit)	1024 kHz	512 kHz	256 kHz
	Output frequency f_{max} (p0418 = 17 bit)	512 kHz	256 kHz	128 kHz
	Output frequency f_{max} (p0418 = 18 bit)	256 kHz	128 kHz	64 kHz
SIMOTION mode p4400 = 0	Output frequency f_{max}	1024 kHz	1024 kHz	1024 kHz

Following error monitoring

If the actual position can no longer follow the entered position setpoint characteristic, then fault F35220 is output. In the SINAMICS mode, the frequency setpoint is limited to the maximum output frequency. The maximum output frequency from the TM41 is transferred to the Control Unit.

8.25.6 Example in the SINAMICS mode

Overview

The signals of the leading encoder should be adapted using the TM41 and transferred to the "Servo" drive object.

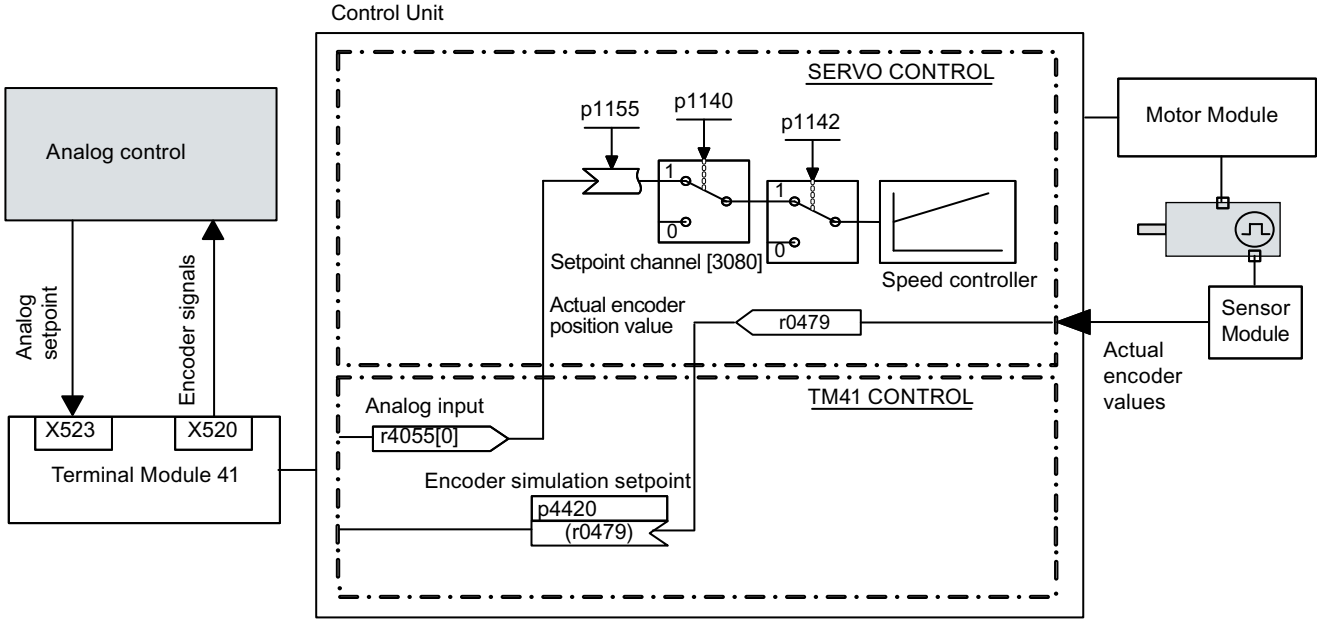

Figure 8-21 Example: TM41

Procedure

Entering the parameter values:

- p4400 = 1 (encoder emulation by means of encoder actual position value)
- p4420 = r0479[n] (servo or vector), n = 0 to 2
- p4408 = sets the gear ratio pulse number (this must correspond to the pulse number of the leading encoder)
- p4418 = sets the fine resolution of the signal source (this must correspond to the fine resolution of the leading encoder)
- p0408 = sets the pulse number of the encoder emulation
- p0418 = sets the fine resolution of the encoder emulation

Note

To be able to signal encoder emulation faults of the TM41 to a higher-level controller, parameter r2139.0...8 CO/BO: Status word faults/alarms 1 must be interconnected via a BICO with a digital output (TM41 or CU) which can be read by the external controller.

8.25.7 Function diagrams and parameters

Function diagrams (see SINAMICS S120/S150 List Manual)

- 9659 Terminal Module 41 (TM41) - Overview
- 9660 Terminal Module 41 (TM41) - digital inputs, isolated (DI 0 ... DI 3)
- 9661 Terminal Module 41 (TM41) - Digital inputs/outputs, bidirectional (DI/DO 0 ... DI/DO 1)
- 9662 Terminal Module 41 (TM41) - Digital inputs/outputs, bidirectional (DI/DO 2 ... DI/DO 3)
- 9663 Terminal Module 41 (TM41) - Analog input 0 (AI 0)
- 9674 Terminal Module 41 (TM41) - Incremental encoder emulation (p4400 = 0)
- 9676 Terminal Module 41 (TM41) - Incremental encoder emulation (p4400 = 1)
- 9678 Terminal Module 41 (TM41) - Control word, sequence control (p4400 = 0)
- 9680 Terminal Module 41 (TM41) - Status word sequence control
- 9682 Terminal Module 41 (TM41) - Sequencer (p4400 = 0)

Overview of important parameters (see SINAMICS S120/S150 List Manual)

General

- r0002 TM41 status display
- p0408 TM41 encoder emulation pulse number
- p0418 TM41 encoder emulation fine resolution Gx_XACT1 (in bits)
- p4099[0...3] TM41 inputs/outputs sampling time
- p4400 TM41 encoder emulation operating mode
- p4401 TM41 encoder emulation mode
- p4402.0...2 CO/BO: TM41 encoder emulation status
- r4419 TM41 encoder emulation diagnostics position setpoint

Incremental encoder emulation using a speed setpoint (p4400 = 0)

- p0840 BI: ON/OFF (OFF1)
- r0898.0...13 CO/BO: Control word, sequence control
- r0899.0...15 CO/BO: Status word, sequence control
- p1155 CI: TM41 encoder simulation speed setpoint 1
- p4426 TM41 encoder emulation pulses for the zero mark

Incremental encoder emulation using the encoder actual position (p4400 = 1)

- p4408 TM41 encoder emulation pulse number leading encoder
- p4418 TM41 encoder emulation fine resolution leading encoder
- p4420 CI: TM41 encoder emulation position setpoint
- p4421 TM41 encoder emulation dead time compensation
- p4422 TM41 encoder emulation position setpoint inversion
- p4426 TM41 encoder emulation pulses for the zero mark

8.26 Upgrade the firmware and project

Overview

The firmware must be upgraded if a more recent firmware version provides an extended functional scope that you would like to use.

Requirement

- Requirement for safe upgrading is a new memory card as of Runtime version V4.6. This memory card has more memory and thus enables the duplication of the data as a backup copy. An adapted boot loader is also included on the new memory card. Older memory cards still function, but prevent a safe upgrade.

  Note

  Make sure that you use a memory card that is suitable for the current firmware version (e.g. V4.8). You can see if the memory card is suitable for a safe upgrade on the label.

Function description

⚠ WARNING

Malfunction due to software manipulation when using exchangeable storage media

Storing files onto exchangeable storage media amounts to an increased risk of malware infection (e.g. viruses and malware). Incorrect parameter assignment can cause machines to malfunction, which can lead to injuries or death.

- Protect files stored on exchangeable storage media from malicious software by with suitable protection measures, e.g. virus scanners.

In principle, upgrading the firmware functions the same for both the CU310-2 and the CU320-2. Projects cannot be transferred between a CU310 or CU310-2 and a CU320 or CU320-2.

The firmware for the SINAMICS drive system is distributed in the system. It is installed on the Control Unit and in every individual DRIVE-CLiQ component.

Control Unit

When it powers up, the Control Unit automatically takes its firmware from the memory card. As a consequence, it does not have to be specifically upgraded. When updating the firmware on the memory card via the web server, the firmware of the Control Unit is upgraded automatically (see Chapter "Updating the firmware via the web server (Page 764)").

DRIVE-CLiQ components

The firmware of the DRIVE-CLiQ components is also provided on the memory card of the Control Unit. With the factory setting p7826 = 1, it is automatically transferred from the memory card to the DRIVE-CLiQ components when commissioned for the first time. When upgraded, the firmware is saved (non-volatile) in the DRIVE-CLiQ components.

Once the project has been downloaded or automatic configuration has been carried out, the firmware is automatically upgraded on all the connected DRIVE-CLiQ components. This upgrades all DRIVE-CLiQ components to the firmware releases that match the memory card.

Update

This operation can take several minutes. This is indicated by the RDY-LED on the corresponding components flashing green/red and the Control Unit RDY-LED flashing orange at 0.5 Hz.

Parameter p7827 indicates the progress.

The update has been completed if the RDY-LED on the Control Unit stops to flash at 0.5 Hz. Once the update process has been completed, the RDY-LED of the respective component goes into a steady light condition, for which the upgrade has been completed and the new firmware has been activated. For the components for which the RDY LED flashes green/red at 2 Hz you must perform a POWER ON to activate the new firmware.

Note

When activating the new firmware, it is possible that a component interrupts cyclic communication. Communication problems will then occur that you must acknowledge.

For individual components, use the "General" Startdrive diagnostics screen to read out the firmware version. The versions of the DRIVE-CLiQ components and that of the Control Unit can also differ. Information can be found in the version overview.

Note

DRIVE-CLiQ components with higher firmware releases are downwards compatible and also operate with DRIVE-CLiQ components that have lower firmware releases.

Note

Upgrade for SINAMICS S120 Chassis

Upgrading S120 Chassis devices is more complex and involves more settings than for Booksize devices. You can find a detailed description of the procedure when upgrading Chassis devices at the following SIEMENS internet site Upgrading S120 Chassis. (https://support.industry.siemens.com/cs/ww/en/view/60494864)

8.26.1 Updating the firmware and STARTER project data using the web server

Function description

Using the web server, you can upgrade or downgrade the firmware – and load existing STARTER project data to your drive. A firmware and existing STARTER project data can be loaded to the drive, either simultaneously or at different instants in time.

Further information

You can find further information on updating the firmware and STARTER project files in Chapter "Updating the firmware via the web server (Page 764)".

8.26.2 Downgrade lock

Function description

The downgrade lock prevents the downgrade of firmware upgrades that have already been performed to correct errors.

Note

Upgrade higher firmware versions

Components with higher firmware versions are fully downwards compatible with components with lower firmware versions. Following a firmware upgrade, a component will also operate without restrictions with components that have a lower firmware version.

Note

Firmware downgrade of a Control Unit

A higher firmware version is also characterized by having a larger range of functions than a lower firmware version. If you downgrade a Control Unit from a higher to a lower firmware version, it is possible that certain functions will no longer be available.

8.26.3 Protection against power failure while updating via the Web server

Function description

From firmware version ≥ V4.6, data on the working partition is duplicated to a backup partition to guarantee that when upgrading via the web server, data is protected and not lost if the power fails. This ensures that when updating data on the memory card no data is lost if a fault situation occurs. Only the system can access this backup partition. The partition is not visible for users.

You can find additional information about saving data in the web server so that is not lost at power failure in Chapter "Saving data in a non-volatile fashion (Page 730)".

Note

Minimum requirements

You cannot use this function with memory cards of older firmware versions (e.g. V4.5). The following requirements must be satisfied for working with automatic backup copies:

- A Control Unit with the correct version (see "Reading off CU version (Page 827)")
- An original memory card for firmware version V4.6 or higher

Amended data on the memory card

If the data on the working partition of the memory card and the backup partition is no longer consistent, the warning "A01073: POWER ON for backup copy on memory card required" is emitted. In this case, an entry is made in the diagnostic buffer of the Control Unit. A POWER ON must therefore be performed to update the data on the backup partition.

Automatic restoration of defective data

If defective data is detected on the memory card, the system automatically restores the relevant data. If, for example, the working partition of the memory card is damaged, this partition is reformatted and restored with the data of the backup partition. In this case the message "F01072: memory card recreated from backup copy" is emitted.

8.27 Essential service mode (ESM) for CU310-2 on Blocksize power units

Requirement

- CU310-2 PN or CU310-2 DP
- Vector control
- PM240-2 Power Module
- Blocksize power units

Function description

When the **E**ssential **S**ervice **M**ode (ESM) is used, a drive can still be operated for as long as possible as needed, even if faults occur.

Essential service mode is only permitted in exceptional situations, where undesirable standstill of a converter could cause significant subsequent damage!

Application: Fan drives

In the case of fire, fan drives in large buildings allow persons to be evacuated through escape routes by extracting smoke and associated gases. In a case such as this, it is justifiable that the converter continues to operate in the essential service mode.

In essential service mode, the converter logs the essential service mode and the faults that occur while in essential service mode in a password-protected memory. This data is only accessible for the service and repair organization.

Activate / deactivate essential service mode

Note

Warranty is lost in the essential service mode

If you activate the essential service mode, all of the warranty claims associated with the converter become null and void. The essential service mode can have the following effects:

- Exceptionally high temperatures inside and outside the converter
- Open fire inside and outside the converter
- Emission of light, noise, particles or gases

Signal p3880 = 1 activates the essential service mode:

- If the motor was switched off by activating essential service mode, the converter switches the motor on.
- If the motor was switched on by activating essential service mode, the converter switches the speed setpoint to "ESM setpoint source".

Signal p3880 = 0 deactivates the essential service mode:

- If one of the OFF1, OFF2 or OFF3 commands is active, the converter switches off the motor.
- If neither OFF1, OFF2 nor OFF3 is active, the converter switches the speed setpoint from the "ESM setpoint source" to the normal setpoint source.

Special features of the essential service mode

The essential service mode (ESM) is characterized by the following features:

Use other signals to switch on and switch off the motor when the essential service mode is active

⚠ WARNING

Unexpected exiting of the essential service mode by selecting "Safe Torque Off"

PM240-2 Power Modules have terminals to select the "Safe Torque Off" (STO) safety function. An active STO function switches the motor off, thus terminating the essential service mode. The termination of essential service mode can cause severe injury or death, e.g. as smoke and associated gases are no longer extracted.

- Set both STO switches to the "OFF" position on the PM240-2 Power Modules.

The OFF1, OFF2 and OFF3 commands for switching off the motor have no effect.

The inverter blocks all functions that switch off the motor to save energy, e.g. PROFIenergy or hibernation mode.

Response to faults when the essential service mode is active

In the "essential service mode", the converter does not switch off the motor when faults develop, but instead responds differently depending on the fault type:

- The converter ignores faults, which do not directly result in the destruction of the converter or the motor.
- The converter attempts to automatically acknowledge faults, which cannot be ignored, using the automatic restart function.
- For faults that cannot be acknowledged, it is possible to switch over the motor to line operation using the bypass function.

Automatic restart during active essential service mode

- The converter ignores the settings in p1206 (faults without automatic restart) and works with the setting "restart after a fault with further start attempts" (p1210 = 6).
- The converter carries out the maximum number of restart attempts set in p1211 corresponding to the settings in p1212 and p1213. If these attempts are not successful, then the converter goes into a fault condition with F07320.

Speed setpoint when the essential service mode is active

- p3881 specifies the speed setpoint. If you have defined an analog input as setpoint source using p3881, then for wire breakage, the converter can switch over to setpoint p3882.
- Wire-break monitoring can only take place with a setting as current input at the analog inputs of the CU310-2 and the TM31. Wire-break monitoring cannot take place with a setting as voltage input in essential service mode, thus there is no switchover to the alternative setpoint p3882.

Interaction between bypass and the essential service mode

- If, when activating the essential service mode, bypass operation is active, converter operation is selected internally in order to ensure that the setpoint is entered via the source intended for the essential service mode.
- If faults are still present after the number of start attempts parameterized in p1211, then the converter goes into a fault condition with F07320. In this case, there is an option of switching over to bypass operation and then directly connecting the motor to the line supply.

Behavior with active speed limitations

In essential service mode, the adjustable speed setpoint of the ESM source observes the settings of active speed limitations:

- If the set ESM speed is less than the minimum speed, the minimum speed is effective in essential service mode.
- The settings of the skip frequency bands and maximum speeds are observed.

Automatic switchover to encoderless operation for encoder faults

By automatically pre-assigning parameter p0491 (Motor encoder fault response ENCODER) with a value of "1", the drive maintains the essential service mode even when the encoder develops a fault condition.

In addition, setting values "5" or "6"can be used. These setting values are lost after a power interruption at the Control Unit or the drive restarts. The drive then continues to operate with the automatic pre-assignment (p0491 = 1).

⚠ WARNING

Pending drive standstill in the essential service mode (ESM)

As a result of the automatic drive switchover to encoderless operation, controlled starting of the drive **after a power interruption** can fail, in spite of the fact that the automatic restart function (AR) is activated. If the drive comes to a standstill, then this can cause severe injury or death, e.g. for ventilation and smoke extraction systems.

- To avoid the motor coming to a standstill, when the essential service mode (ESM) is activated, switchover the drive to encoderless operation.

8.27.1 Configuring the essential service mode

Procedure

To start essential service mode (ESM), proceed as follows:

1. Interconnect a free digital input as signal source to activate ESM.
   You must use a negated digital input if the essential service mode should also be active for a ground fault – or if the control cable is interrupted.
   Example for negated digital input DI 3: Set p3880 = 723.3.
   It is not permissible to interconnect the digital input for ESM activation with other functions.
2. Set the ESM setpoint source via p3881:
   - p3881 = 0: Last known setpoint (r1078 smoothed) - factory setting
   - p3881 = 1: Fixed speed setpoint 15 (p1015)
   - p3881 = 2: Control Unit analog input 0 (AI 0, r0755[0])
   - p3881 = 3: Fieldbus
   - p3881 = 5: TM31 analog input
   - p3881 = 6: Enable OFF1 response
   - p3881 = 7: Enable OFF2 response
3. Set the alternative ESM setpoint source using p3882.
   - p3882 = 0: Last known setpoint (r1078 smoothed) - factory setting
   - p3882 = 1: Fixed speed setpoint 15 (p1015)
   - p3882 = 2: Maximum speed (p1082)
4. Set the source to select the direction of rotation.
   For p3881 = 0, 1, 2, 3 or 5, if you interconnect p3883 to a free digital input of your choice, p3883 inverts the direction of rotation during the essential service mode.
   For example, to interconnect p3883 with DI 4, set p3883 = 722.4.
5. Optional: Switchover to the bypass mode.
   If the converter is not able to acknowledge pending faults with an automatic restart, it signals fault F07320 and does not make any other attempts to restart.
   Proceed as follows if the motor is still to continue operating:
   - Set p1266 = 3889.10.
     The converter switches the motor to bypass mode with r3889.10 = 1.
   - Ensure that the direction of rotation does not change when switching over to bypass operation (correct setting: p3883 = 0).
   - Set p1267.0 = 1.
     The converter switches the motor to bypass mode independent of the speed with control signal p1266.
   - Commission the "Bypass" function (see Chapter "Bypass (Page 278)").

The essential service mode (ESM) is commissioned.

8.27.2 Function diagrams and parameters

Function diagram (see SINAMICS S120/S150 List Manual)

- 3040 Setpoint channel - Direction limitation and direction reversal
- 7033 Technology functions - Emergency operation (ESM, Essential Service Mode

Overview of important parameters (see SINAMICS S120/S150 List Manual)

- p0491 Motor encoder fault response ENCODER
- p1210 Automatic restart mode
- p1211 Automatic restart, startup attempts
- p1212 Automatic restart, delay time startup attempts
- p1213[0...1] Automatic restart monitoring time
- p1266 BI: Bypass control command
- p1267 Bypass changeover source configuration
- p3880 BI: ESM activation signal source
- p3881 ESM setpoint source
- p3882 ESM setpoint source alternative
- p3883 BI: ESM direction of rotation signal source
- p3886 CI: ESM setpoint TM31 analog input
- r3887[0...1] ESM number of activations/faults
- p3888 ESM reset number of activations/faults
- r3889.0...10 CO/BO: ESM status word

8.28 Pulse/direction interface

Function description

Thanks to the pulse/direction interface, in the Servo and Vector control modes, SINAMICS S120 can be used for simple positioning tasks on a controller.

- The encoder interface of the SMC30 (connector X521) is used to connect the controller to the CU320-2.
- The internal encoder interface at connector X23 is used to connect the controller to the CU310-2.

The controller enters the setpoints for the pulse/direction signals to the drive via the encoder interface.

The specified actual speed value r0061 can then be connected as speed setpoint to the fixed setpoint p1155 via BICO.

Note

- More information on the Control Unit CU320-2 and the SMC30 is provided in the SINAMICS S120 Control Units Manual.
- More information on the Control Unit CU310-2 is provided in the SINAMICS S120 AC Drive Manual.

Commissioning the function

Carry out the following steps to configure the function:

SMC30: Wiring input signals

The input signals for the pulse/direction interface are wired via connector X521 of the SMC30:

Table 8-12 Wiring the SMC30

Pin	Signal name	Technical data
1	of pulses	–
2	M	Ground
3	Direction of rotation	–
4	M	Ground
5 ... 8	Not relevant	–

CU310-2: Wiring input signals

The input signals for the pulse/direction interface are wired via connector X23 of the CU310-2:

Table 8-13 Wiring the CU310-2

Pin	Signal name	Technical data
1 ... 11	Not relevant	–
12	M	Ground
13	Direction of rotation	–
14	M	Ground
15	of pulses	–

Activating and parameterizing a function

The pulse/direction interface can be activated with p0405.5 = 1.

Make the settings for the pulse/direction interface (rotary, 24 V, terminal, no track monitoring, no zero mark, etc.) in the parameter view of the Startdrive engineering tool.

Application: Speed-controlled drive

The drive is subject to speed control when operating on the controller. The clock frequency stipulates the speed setpoint. The pulse number is entered in p0408. This is calculated from the clock frequency of the controller and the preferred maximum motor speed. The following formula applies:

Pulse number = (max. clock frequency · 60)/max. speed

Example: If the controller has a maximum clock frequency of 100 kHz and the motor being used is to run at its maximum rated speed of 3000 rpm, the resulting pulse number will be 2000.

Overview of important parameters (see SINAMICS S120/S150 List Manual)

- p0010 Drive, commissioning parameter filter
- r0061 CO: Actual speed value unsmoothed
- p0400[0...n] Encoder type selection
- p0404[0...n] Encoder configuration active
- p0405[0...n] Square-wave signal encoder A/B track
- p0408[0...n] Rotary encoder pulse No.
- r0722.0...21 CO/BO: CU digital inputs, status
- p0738 BI: CU signal source for terminal DI/DO 8
- p0739 BI: CU signal source for terminal DI/DO 9
- p2530 CI: LR position setpoint
- p2550 BI: Position control enable 2

8.29 Derating function for chassis units

Overview

An adapted derating function greatly reduces the noise produced by Chassis format power units (Motor Modules or Power Modules) and enables operation at a multiple of the rated pulse frequency at nearly rated current. This is achieved by monitoring the temperature difference between heat sink and chip. When a temperature alarm threshold is exceeded, the pulse frequency or permitted current limit, respectively, is automatically reduced.

This enables the maximum output current of the power unit to be achieved even at high pulse frequencies.

The derating function is effective for Motor Modules and Power Modules in the Chassis format. Units that are connected in parallel operate in the same manner as single units. The dependency of the output current on the pulse frequency for the Chassis power units is described in the SINAMICS S120 Chassis Power Units Manual.

Function description

In order to optimize the use of the Chassis power unit (Motor Module or Power Module) also at temperatures below the maximum permitted ambient temperature, the maximum output current is controlled as a function of the operating temperature. This function also accounts for the dynamic response (rise and decay curves of the operating temperature) of the thermal characteristics.

A temperature alarm threshold is calculated that is weighted with the current ambient temperature. By weighting the temperature alarm threshold with the current ambient temperature, the power unit can output higher currents close to nominal current even at lower ambient temperatures.

Depending on the setting of parameter p0290 "Power unit overload response", the pulse frequency or the current will be reduced, or no response will occur if the temperature alarm threshold is exceeded. An alarm (e.g. A07805 "Infeed: Power unit overload") is generated even if no response is desired.

The following quantities can result in a response to thermal overload:

- Heat sink temperature via r0037[0]
- Chip temperature via r0037[1]
- Power unit overload after I2t calculation via r0036

Possible measures to avoid thermal overload:

- For servo control, reduction of the output current (closed-loop speed/velocity or torque/force)
- Reduction of the output frequency for U/f control.
- Reduction of the pulse frequency for vector control.

Parameter r0293 "Power unit alarm threshold model temperature" indicates the temperature alarm threshold for the difference between the chip and heat-sink temperatures.

8.30 Parallel connection of motors

Requirement

- STARTER commissioning tool for vector control

Function description

For simple commissioning of group drives (a number of identical motors operating on one power unit), the number of parallel-connected motors can be entered via STARTER (only vector control) or via the expert list (for servo and vector control) (p0306).

An equivalent motor is computed internally depending on the number of motors specified. The motor data identification determines the data for an equivalent motor. Motors connected in parallel can also operate on an encoder (on the 1st motor).

Note

For information about parallel connection of Motor Modules, see Section "Parallel connection of power units (Page 515)".

Features

Parallel connection is characterized by the following features:

- Up to 50 motors connected in parallel can be operated on one frequency converter.
- The original motor data set (p0300 ff.) is not modified. It is merely the data set transfer to the closed-loop control which is organized according to the number of parallel-connected motors.
- The stationary motor data identification also works for parallel connections.
- The rotating measurement function also works if the motors can rotate without distance limit. Uneven loading of the motors or a high degree of gear backlash will negatively affect the accuracy of the rotating measurement result.
- The cable lengths for motors connected in parallel must be as symmetrical as possible to afford the most even possible distribution of current among individual motors.
- Motors connected in parallel with servo control, must be individually thermally monitored. Synchronous motors connected in parallel must have the same EMF so that no unwanted currents flow between the motors.

Commissioning the function (STARTER)

Note

In the STARTER commissioning tool, only motors with vector control can be commissioned. Motors with servo control can only be connected in parallel via the expert list.

Parameter p0306 is assigned in a STARTER commissioning screen. When the subsequent parameters are set, p0306 is included in the calculation of the current limit (p0640) and in the

reference current (p2002). Parameter p0306 has a value range of 1 to 50, and is it dependent on the motor data set (MDS).

1. To connect motors in parallel, select the corresponding motor in the selection screen and activate the "Parallel motor connection" option.
2. Enter the number of motors in the parallel connection in the entry field "Number".
   This display and input function is available for vector control only. For servo control, the parallel connection of motors can only be configured using the expert list (parameter p0306).

Motors with integrated DRIVE-CLiQ interface (SINAMICS Sensor Module Integrated) can also be connected in parallel. The first motor is connected to DRIVE-CLiQ via the encoder. The additional motors must be identical. Using parameter p0306 and the encoder information obtained via DRIVE-CLiQ, it is possible to determine all the necessary motor data.

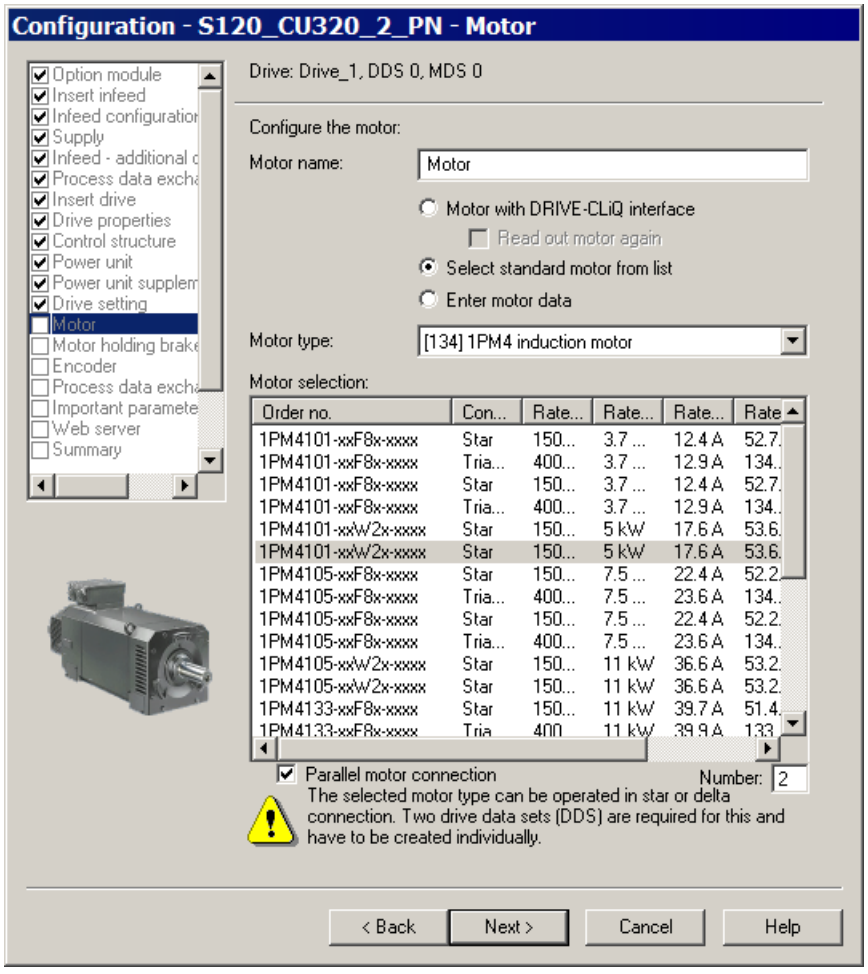

Figure 8-22 Parallel motor connection selection for vector control

Properties of the parallel connection in STARTER

- The rating plate and equivalent circuit diagram parameters are those of the single drive.
- The parallel data set has no code numbers. All motor data is calculated from p0306 and the code numbers of individual motors. The same interlock mechanisms apply as to single drives.
- The "Motor data" screen still displays only the data for the individual motor selected.

Restrictions applicable to parallel connections

The basic governing principle of parallel connections is that the motors involved are mechanically inter-coupled via the load. Where motors need to be decoupled from the connection, the number of motors need to be reduced in p0306 by a DDS/MDS changeover. Since the equivalent circuit diagram changes as a result, it may be necessary to commission these data sets separately (e.g. motor data identification with reduced number of motors). The power unit will otherwise apply false motor data.

An EDS changeover and, e.g. two SMCs must be used in cases where a motor with encoder needs to be decoupled from connections operating with encoder.

Vector control with encoder for parallel-connected drives functions in the same way as for a single drive if the drives are coupled via the load and the speeds do not differ by more than the working-point-dependent pull-out slip.

Counter-example

The gear ratios used to couple the motors with the load are large and the backlash and elasticity in the drive train are therefore high. If the load then causes one of the motors to rotate, but the other is still stationary, the drive without an encoder will stall.

If a motor is defective, the individual motor will be shut down on overcurrent by the motor circuit breaker. The power unit will be shut down by the control (if available) or, in the case of a turn-to-turn fault in the motor, the power unit will go into the fault condition. The motor must then be decoupled from the parallel grouping. Parameter p0306 is changed by the DDS/MDS changeover.

Overview of important parameters (see SINAMICS S120/S150 List Manual)

- p0300[0...n] Motor type selection
- p0306[0...n] Number of motors connected in parallel:
- p0307[0...n] Rated motor power
- p0640[0...n] Current limit
- p2002 Reference current

Function modules

9

Overview

When required, during the basic parameterization you can switch-in various function modules for the selected drive axis.

Requirement

- The drive axis is offline.

Note

You can activate or deactivate function modules only offline.

Function description

Note

The display of the function modules that can be activated is **dynamic** and depends on the selected drive axis and the configuration of this drive axis.

The following table provides an overview of the function modules that can be used. In addition to the individual function modules, the table includes an explanations of how each function module can be used.

Function module	Explanation
Frequently used function modules	
Extended setpoint channel (r0108.8)	Activates the "Setpoint channel" area with 7 configuration screen forms.
Technology controller (r0108.16)	Activates the "Technology controller" area with 4 configuration screen forms.
Basic positioner (r0108.4)	In the "Technology functions" area, activates the "Basic positioner" and "Position control" functions. Supplements the "Basic parameterization" area to include the "Mechanical system" function.
Extended messages/monitoring functions (r0108.17)	In the "Drive functions" area, supplements the "Messages and monitoring" function to include the "Load torque monitoring" function.
Extended brake control (r0108.14)	In the "Drive functions" area, adds the "Brake control" function.
Additional function modules	
Free function blocks (r.0108.18)	Activates the F blocks.
Moment of inertia estimator / OBT	Activates the moment of inertia estimator.
Extended torque control (r0108.1)	In the "Technology functions" area, activates the "Extended torque control" function
Advanced Positioning Control (APC) (r0108.7)	In the "Technology functions" area, activates the "Active oscillation damping (APC)".

Function module	Explanation
Extended current setpoint filter (r0108.21)	In the "Open-loop/closed-loop control" area, extends the "Current setpoint filter" to include an additional 6 filters.
Recorder	Allows fault events to be recorded.
Position control (r0108.3)	In the "Technology functions" area, activates the "Position controller" function. Also supplements the "Basic parameterization" area to include the "Mechanical system" function.
DSC with spline (r0108.6)	In the "Open-loop/closed-loop control" area, extends the interconnection of the "Speed precontrol" function. Adds the "Dynamic Servo Control" secondary screen form.
Extended stop and retract (r0108.9)	In the "Setpoint channel" area, activates the "Extended stop and retract" function.
Cogging torque compensation (r0108.22)	In the parameter view, activates all parameters of the "Cogging torque compensation" parameter group. Cogging torque compensation can only be parameterized via the parameter view. **Note:** The activation of this function module leads to a significant increase in the required computing time per drive axis. The operation of 6 servo axes on one Control Unit can no longer be guaranteed in all constellations and should be reduced to 5 axes.

Activating function modules

Proceed as follows to activate a function module:

1. Click on the desired function module (e.g. technology controller).
   Repeat this step for all additional function modules that you wish to activate.

   Note

   When the "basic positioner" function module is activated, then the "position control" function module is automatically activated as well.

2. Save the project to back up the settings.

Overview of important parameters (see SINAMICS S120/S150 List Manual)

- p0108[0..n] Drive object function module
- p0124[0...n] Main component identification via LED

9.1 Technology controller

Overview

Simple control functions can be implemented with the technology controller. These include:

- Level control
- Temperature control
- Dancer roll position control
- Pressure control
- Flow control
- Simple closed-loop controls without higher-level controller
- Tension control

Function description

The technology controller is designed as a PID controller, whereby the differentiator can be switched to the control deviation channel or the actual value channel (factory setting). The P, I, and D components can be set separately. A value of 0 deactivates the corresponding component. Setpoints can be specified via two connector inputs. The setpoints can be scaled via parameters (p2255 and p2256). A ramp-function generator in the setpoint channel can be used to set the setpoint ramp-up/ramp-down time via parameters p2257 and p2258. The setpoint and actual value channel each have a smoothing element. The smoothing time can be set via parameters p2261 and p2265.

The setpoints can be specified via separate fixed setpoints (p2201 to p2215), the motorized potentiometer, or via the fieldbus (e.g. PROFIBUS).

Precontrol can be integrated via a connector input.

The output can be scaled via parameter p2295 and the control direction reversed. It can be limited via parameters p2291 and p2292 and interconnected as required via a connector output (r2294).

The actual value can be integrated, for example, via an analog input on the TB30.

If a PID controller has to be used for control reasons, the D component is switched to the setpoint/actual value difference (p2263 = 1) unlike in the factory setting. This is always necessary when the D component is to be effective, even if the reference variable changes. The D component can only be activated when p2274 > 0.

Features

The technology controller is characterized by the following features:

- Two scalable setpoints
- Scalable output signal
- Separate fixed values
- Integrated motorized potentiometer
- The output limits can be activated and deactivated via the ramp-function generator.

- The D component can be switched into the control deviation or actual value channel.
- The motorized potentiometer of the technology controller is only active when the drive pulses are enabled.

Commissioning the function

The "Technology controller" function module can be activated in the Startdrive engineering tool via "Basic parameter assignment > Function modules". The parameter r0108.16 shows the current configuration of the function module.

Example: Level control

The objective here is to maintain a constant level in the container.

This is carried out by means of a variable-speed pump in conjunction with a sensor for measuring the level.

The level is determined via an analog input (e.g. AI0 on TB30) and sent to the technology controller. The level setpoint is defined in a fixed setpoint. The resulting controlled variable is used as the setpoint for the speed controller.

In this example, a Terminal Board 30 (TB30) is used.

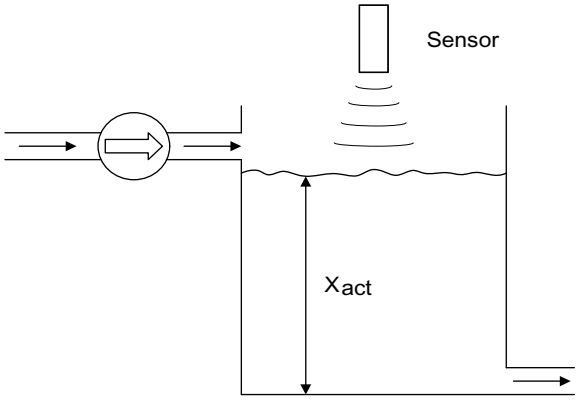

Figure 9-1 Level control: Application

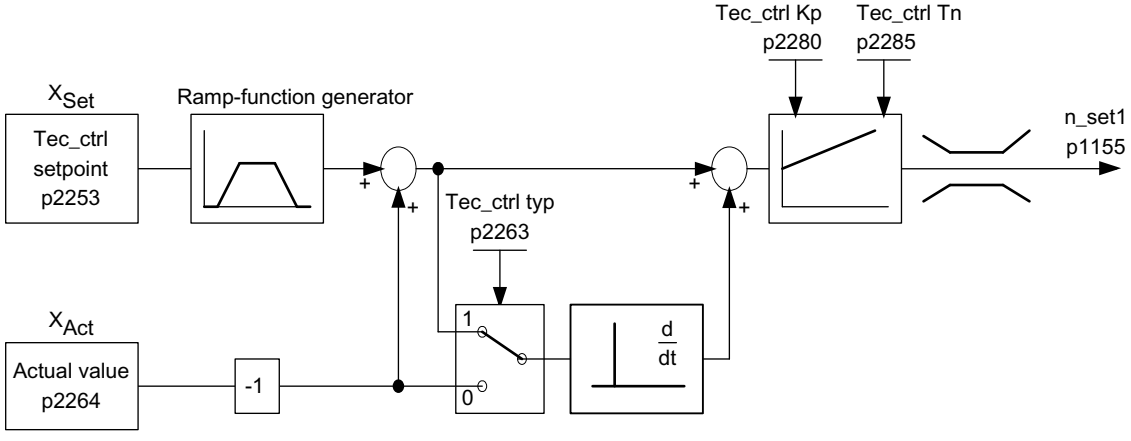

Figure 9-2 Level control: Controller structure

Table 9-1 Important parameters for the level control

Parameter	Designation	Example
p1155	CI: Speed controller, speed setpoint 1	p1155 = r2294 Tec_ctrl output_sig [3080]
p2200	BI: Technology controller enable	p2200 = 1 Technology controller enabled
p2253	CI: Technology controller setpoint 1	p2253 = r2224 Fixed setpoint active [7950]
p2263	Technology controller type	p2263 = 1 D component in fault signal [7958]
p2264	CI: Technology controller actual value (X_{ACTUAL})	p2264 = r4055 [1] Analog input AI1 of TB30
p2280	Technology controller p-gain	p2280 Determine by optimization
p2285	Technology controller integral time	p2285 Determine by optimization

Function diagrams (see SINAMICS S120/S150 List Manual)

- 7950 Technology controller - Fixed values, binary selection (r0108.16 = 1 and p2216 = 2)
- 7951 Technology controller - Fixed values, direct selection (r0108.16 = 1 and p2216 = 1)
- 7954 Technology controller - Motorized potentiometer (r0108.16 = 1)
- 7958 Technology controller - Closed-loop control (r0108.16 = 1)
- 7959 Technology controller - Kp/Tn adaption (r0108.16 = 1)
- 7960 Technology controller - Controller DC link voltage (r0108.16 = 1)

Overview of important parameters (see SINAMICS S120/S150 List Manual)

Fixed setpoints

- p2201[0...n] CO: Technology controller fixed value 1

...

- p2215[0...n] CO: Technology controller fixed value 15
- p2220[0...n] BI: Technology controller fixed value selection bit 0
- p2221[0...n] BI: Technology controller fixed value selection bit 1
- p2222[0...n] BI: Technology controller fixed value selection bit 2
- p2223[0...n] BI: Technology controller fixed value selection bit 3

Motorized potentiometer

- p2230[0...n] Technology controller motorized potentiometer configuration
- r2231 Technology controller motorized potentiometer setpoint memory
- p2235[0...n] BI: Technology controller motorized potentiometer, setpoint, raise
- p2236[0...n] BI: Technology controller motorized potentiometer, setpoint, lower
- p2237[0...n] Technology controller motorized potentiometer maximum value
- p2238[0...n] Technology controller motorized potentiometer minimum value
- p2240[0...n] Technology controller motorized potentiometer start value
- r2245 CO: Technology controller motorized potentiometer, setpoint before RFG

- p2247[0...n] Technology controller motorized potentiometer ramp-up time
- p2248[0...n] Technology controller motorized potentiometer ramp-down time
- r2250 CO: Technology controller motorized potentiometer, setpoint after RFG

Closed-loop control

- p2200[0...n] BI: Technology controller enable
- p2253[0...n] CI: Technology controller setpoint 1
- p2254 [0...n] CI: Technology controller setpoint 2
- p2255 Technology controller setpoint 1 scaling
- p2256 Technology controller setpoint 2 scaling
- p2257 Technology controller ramp-up time
- p2258 Technology controller ramp-down time
- r2260 CO: Technology controller setpoint after ramp-function generator
- p2261 Technology controller setpoint filter time constant
- r2262 CO: Technology controller setpoint after filter
- p2263 Technology controller type
- p2264[0...n] CI: Technology controller actual value
- p2265 Technology controller actual value filter time constant
- r2266 CO: Technology controller actual value after filter
- p2267 Technology controller upper limit actual value
- p2268 Technology controller lower limit actual value
- p2269 Technology controller gain actual value
- p2270 Technology controller actual value function
- p2271 Technology controller actual value inversion (sensor type)
- r2272 CO: Technology controller actual value scaled
- r2273 CO: Technology closed-loop controller
- p2274 Technology controller differentiation time constant
- p2280 Technology controller proportional gain
- p2285 Technology controller integral time
- p2286[0...n] BI: Hold technology controller integrator
- p2289[0...n] CI: Technology controller precontrol signal
- p2291 CO: Technology controller maximum limiting
- p2292 CO: Technology controller minimum limiting
- p2293 Technology controller ramp-up/ramp-down time
- r2294 CO: Technology controller output signal
- p2295 CO: Technology controller output scaling
- p2296[0...n] CI: Technology controller output scaling
- p2297[0...n] CI: Technology controller maximum limiting signal source
- p2298[0...n] CI: Technology controller minimum limiting signal source
- p2299[0...n] CI: Technology controller limitation offset

Adaptation of gain and integral time

- p2252 Technology controller configuration

- p2310 Technology controller Kp adaptation input value signal source
- p2311 Technology controller lower Kp adaptation factor
- p2312 Technology controller upper Kp adaptation factor
- p2313 Technology controller lower Kp adaptation activation point
- p2314 Technology controller upper Kp adaptation activation point
- p2315 Technology controller Kp adaptation scaling signal source
- r2316 Technology controller Kp adaptation output
- p2317 Technology controller Tn adaptation input value signal source
- p2318 Technology controller lower Tn adaptation factor
- p2319 Technology controller upper Tn adaptation factor
- p2320 Technology controller lower Tn adaptation activation point
- p2321 Technology controller upper Tn adaptation activation point
- r2322 Technology controller Tn adaptation output

9.2 Extended monitoring functions

Overview

When the extension is activated, the monitoring functions are extended as follows:

- Speed setpoint monitoring: |n_set | ≤ p2161
- Speed setpoint monitoring: n_set > 0
- Load monitoring

Function description

This function monitors power transmission between the motor and the working machine. Typical applications include V-belts, flat belts, or chains that loop around the belt pulleys or cog wheels for drive and outgoing shafts and transfer the peripheral speeds and forces. The load monitoring can identify blockages in the working machine and interruptions to the power transmission.

During load monitoring, the current speed/torque curve is compared with the programmed speed/torque curve (p2182 to p2190). If the actual value is outside the programmed tolerance bandwidth, a fault or alarm is triggered depending on parameter p2181. Faults or alarms can be delayed using parameter p2192 to prevent false messages caused by brief transitional states.

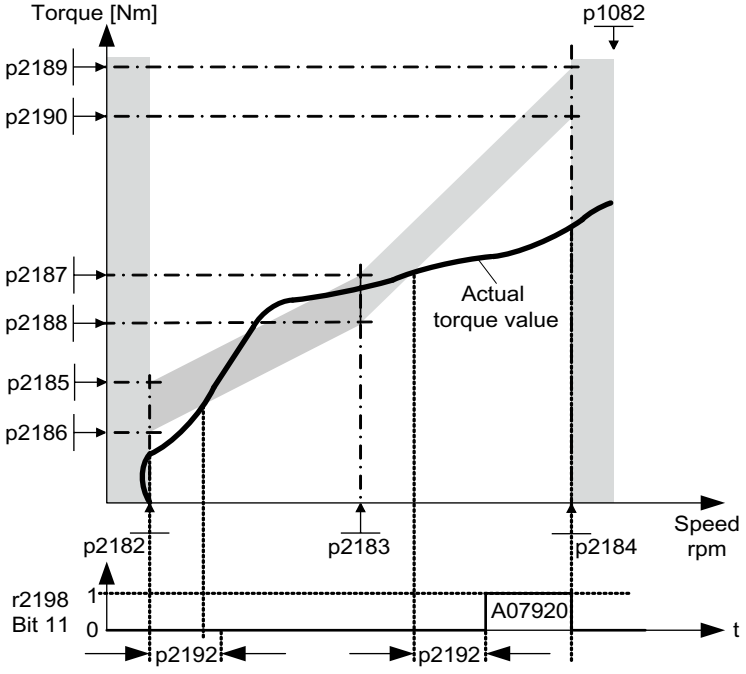

Figure 9-3 Load monitoring

Commissioning the function

This function module can be activated via the commissioning wizard.

You can check the current configuration in parameter r0108.17.

Function diagrams (see SINAMICS S120/S150 List Manual)

- 8010 Signals and monitoring functions - Speed messages 1
- 8011 Signals and monitoring functions - Speed messages 2
- 8013 Signals and monitoring functions - Load monitoring (r0108.17 = 1)

Overview of important parameters (see SINAMICS S120/S150 List Manual)

Load monitoring

- p2181[0...n] Load monitoring, response
- p2182[0...n] Load monitoring, speed threshold 1
- p2183[0...n] Load monitoring, speed threshold 2
- p2184[0...n] Load monitoring, speed threshold 3
- p2185[0...n] Load monitoring, torque threshold 1, upper

...

- p2190[0...n] Load monitoring torque threshold 3, lower
- p2192[0...n] Load monitoring, delay time

Speed setpoint monitoring

- p2150[0...n] Hysteresis speed 3
- p2151[0...n] CI: Speed setpoint for messages
- p2161[0...n] Speed threshold 3
- r2198.4 CO/BO: Status word, monitoring 2; |n_set| ≤ p2161
- r2198.5 CO/BO: Status word, monitoring 2; n_set < 0

9.3 Extended Brake Control

Function description

The "Extended brake control" allows complex brake controls, such as for motor holding brakes and service brakes.

The brake is controlled in the following manner. The order represents the priority:

- Via parameter p1215
- Via binectors p1219[0...3] and p0855
- Via standstill detection
- Via the connector interconnection, threshold value

For an AC drive with "Safe Brake Relay," the "Safe Brake Control" safety function requires that the type of the brake control be set in parameter p1278, to "Brake control with diagnostic evaluation" (p1278 = 0). This parameter is automatically set for Booksize components.

Features

- Forced brake release (p0855, p1215)
- Closing of brake for a 1 signal "unconditionally close holding brake" (p0858)
- Binector inputs for opening or closing the brake (p1218, p1219)
- Connector input for threshold value for opening and closing the brake (p1220)
- OR/AND block, each with two inputs (p1279, r1229.10, r1229.11)
- Holding and operational brakes can be activated
- Function for monitoring brake feedback signals (r1229.4, r1229.5)
- Configurable responses (A07931, A07932)
- Closing of brake after "Enable speed controller" signal has been canceled (p0856)

Commissioning the function

⚠ WARNING

Destruction of the holding brake as a result of incorrect parameterization

If the drive moves against the closed holding brake, this can destroy the holding brake and as a consequence result in death or severe injury.

- If a holding brake is being used, do **not** set p1215 = 0.
- Set all the relevant parameters correctly.

To start the function, proceed as follows:

1. Activate the "Extended brake" function module using the commissioning Wizards.
   You can check that it has been activated in parameter r0108.14.
   Brake control will be activated automatically (p1215 = 1) when the Motor Module has an internal brake control and a connected brake has been found.
2. If there is no internal brake control, activate the control using p1215 = 3.
   Unless you change the default settings, the extended brake control function behaves in exactly the same way as the simple brake control function.
3. In the case of brakes with a feedback signal (p1222), interconnect the inverted signal to the BICO input for the 2nd feedback signal (p1223). You set the switching times of the brake in p1216 and p1217.

Note

It is only permissible to activate brake control monitoring for "Booksize" power units and "Blocksize" power units with "Safe Brake Relay" (p1278 = 0).

Use for braking with feedback

For braking with feedback (p1275.5 = 1), the brake control reacts to the feedback signal contacts of the brake. If the timer p1216 is greater than the time to the feedback signal, the startup is delayed to the corresponding time difference.

In order to startup without delay when possible, the set period p1216 must be shorter than the time until the feedback signal comes. If the period is set shorter, the alarm "A07931, brake does not open" appears, however.

Remedy

1. Activate "Release with feedback signal" (p1275.6 = 1).
   The pulse enable (BO: r1229.3) and setpoint enable (BO: r0899.15) are now independent of the set time level (p1217, p1216). The associated enable is determined only by the feedback signal (BI: p1222, BI: p1223). The timers (p1216, p1217) only influence the alarms A07931 "Brake does not open" and A07932 "Brake does not close".
2. Optional: In order that the alarms no longer appear, set the two timers (p1217, p1216) to 0 ms.
   Result: The monitoring of the brake and the display of the alarms are switched off.

Note

Speed controller response when a brake is opened

Information on the speed controller response in vector control mode is provided in Chapter "Speed controller (Page 219)".

Example 1: Service brake on crane drives

For cranes with manual control, it is important that the drive responds immediately when the control lever is moved (master switch). The drive is switched on with an ON command (p0840) (the pulses are enabled). Speed setpoint (p1142) and speed controller (p0856) are inhibited. The motor is magnetized. The magnetization time required for three-phase motors (1-2 s), therefore, no longer applies.

Now, only the brake opening time will delay the motor starting to rotate following activation of the master switch. If the master switch is moved (deflected), then there is a "setpoint enable from the control" (bit interconnected with p1142, r1229.3, p1224.0). The speed controller is enabled immediately. Once the brake opening time has elapsed (p1216), the speed setpoint is enabled. When the master switch is in the zero position, the speed setpoint is inhibited and the drive brakes along the deceleration ramp of the ramp-function generator. The brake closes when the speed drops below the standstill limit (p1226). After the brake closing time (p1217), the speed controller is inhibited (no motor force!). The extended brake control is used.

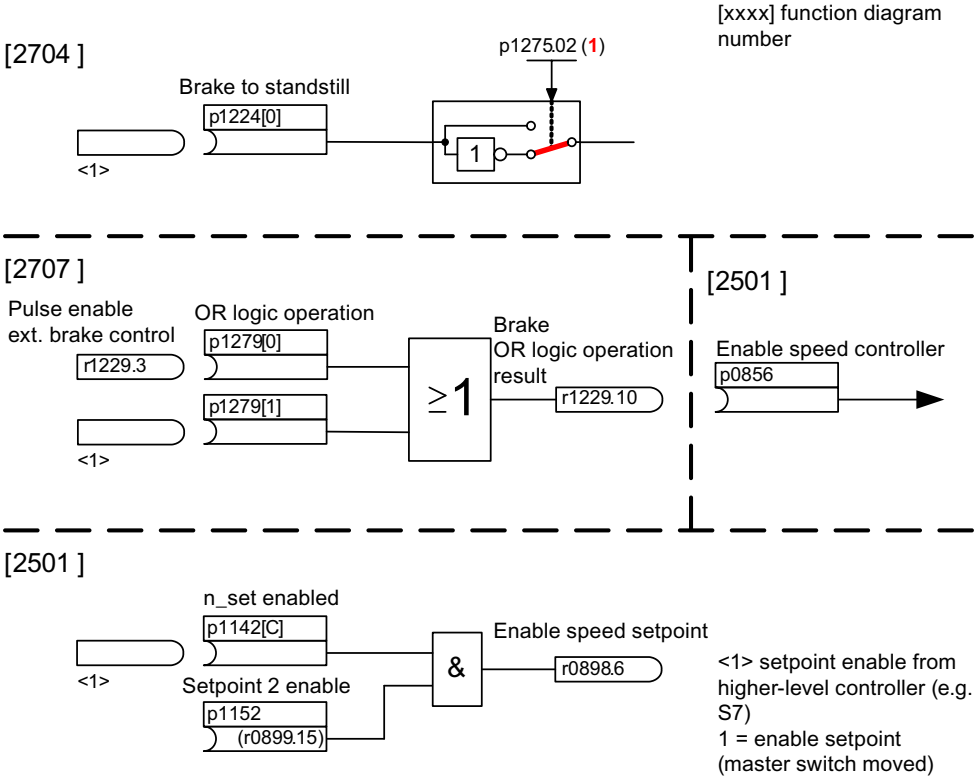

Figure 9-4 Example of operating brake for a crane drive

Example 2: Emergency brake

In the case of emergency braking, electrical and mechanical braking should be realized at precisely the same time. This can be achieved by using OFF3 as a tripping signal for emergency braking:
p1219[0] = r0898.2 and p1275.00 = 1 (OFF3 to "Close brake immediately" and invert signal).

To ensure that the frequency converter does not operate against the brake, the OFF3 ramp (p1135) should be set to 0 seconds. Regenerative energy can be generated, which must be either fed back to the line supply or dissipated by means of a braking resistor.

Example 3: Starting against a closed brake

When the device is switched on, the setpoint is enabled immediately (if the required enable signals are issued), even if the brake has not yet been released (p1152 = 1). The factory setting p1152 = r0899.15 must be separated here. The drive starts to generate torque against the closed brake. The brake is not opened until the motor torque or current (p1220) has exceeded braking threshold 1 (p1221). Depending on the type and design of the brake, the time required to completely open the brake differs. Note that once the braking threshold torque has been exceeded, the operation enabling signal (r0899.2) is interrupted while the brake is being opened (p1216) to ensure that the motor current does not exceed the permissible limit values during this period and/or the motor torque generated does not damage the brake. Interval p1216 must be set on the basis of the time the brake actually requires to release.

Control and status messages for extended brake control

Table 9-2 Controller extended brake control

Signal name	Binector input	Control word sequence control / interconnection parameters
Enable speed setpoint	p1142 BI: Enable speed setpoint	STWA.6
Enable setpoint 2	p1152 BI: Setpoint 2 enable	p1152 = r0899.15
Unconditionally open holding brake	p0855 BI: Unconditionally open holding brake	STWA.7
Enable speed controller	p0856 BI: Enable speed controller	STWA.12
Unconditionally close holding brake	p0858 BI: Unconditionally close holding brake	STWA.14

Table 9-3 Status message of extended brake control

Signal name	Parameter	Brake status word
Command, open brake (continuous signal)	r1229.1	B_STW.1
Pulse enable, extended brake control	r1229.3	B_STW.3
Brake does not open	r1229.4	B_STW.4
Brake does not close	r1229.5	B_STW.5
Brake threshold exceeded	r1229.6	B_STW.6
Value below brake threshold	r1229.7	B_STW.7
Brake monitoring time expired	r1229.8	B_STW.8
Request, pulse enable missing/n_ctrl inhibited	r1229.9	B_STW.9
Brake OR logic operation result	r1229.10	B_STW.10
Brake AND logic operation result	r1229.11	B_STW.11

Function diagrams (see SINAMICS S120/S150 List Manual)

- 2704 Brake control - Extended brake control, stationary state detection (r0108.14 = 1)
- 2707 Brake control - Extended brake control, open/close brake (r0108.14 = 1)
- 2711 Brake control - Extended brake control, signal outputs (r0108.14 = 1)

Overview of important parameters (see SINAMICS S120/S150 List Manual)

- r0108.14 Drive objects, function module; Extended brake control
- r0899.0...15 CO/BO: Status word, sequence control

Standstill monitoring

- r0060 CO: Speed setpoint before the setpoint filter
- r0063 CO: Speed actual value smoothed (for servo)
- r0063[0...2] CO: Actual speed value (for vector)
- p1224[0...3] BI: Close motor holding brake at standstill
- p1225 CI: Standstill detection threshold value
- p1226[0...n] Standstill monitoring speed threshold
- p1227 Standstill detection monitoring time
- p1228 Pulse suppression delay time
- p1276 Motor holding brake standstill detection bypass

Open and close the brake

- p0855[0...n] BI: Unconditionally open holding brake
- p0858[0...n] BI: Unconditionally close holding brake
- p1216 Motor holding brake opening time
- p1217 Motor holding brake closing time
- p1218[0...1] BI: Open motor holding brake
- p1219[0...3] BI: Immediately close motor holding brake
- p1220 CI: Open motor holding brake, signal source, threshold
- p1221 Open motor holding brake, threshold
- p1277 Motor holding brake, delay, braking threshold exceeded
- p1279[0...3] BI: Motor holding brake, OR/AND logic operation

Free blocks

- p1279[0...3] BI: Motor holding brake, OR/AND logic operation

Brake monitoring functions

- p1222 BI: Motor holding brake, feedback signal, brake closed
- p1223 BI: Motor holding brake, feedback signal, brake open

Configuration, control/status words

- p1215 Motor holding brake configuration
- r1229.1...11 CO/BO: Motor holding brake status word
- p1275 Motor holding brake control word
- p1276 Motor holding brake standstill detection bypass
- p1278 Brake control diagnostics evaluation

9.4 Braking Module external

Function description

This function module can be activated via the infeed commissioning wizard.

You can check the current configuration in parameter r0108.26.

The appropriate binectors must be interconnected via digital inputs/outputs (e.g.: Control Unit, TM31 or TB30) with the Braking Module.

In order to obtain the maximum power of a Braking Module, the Vdc_max control must be disabled.

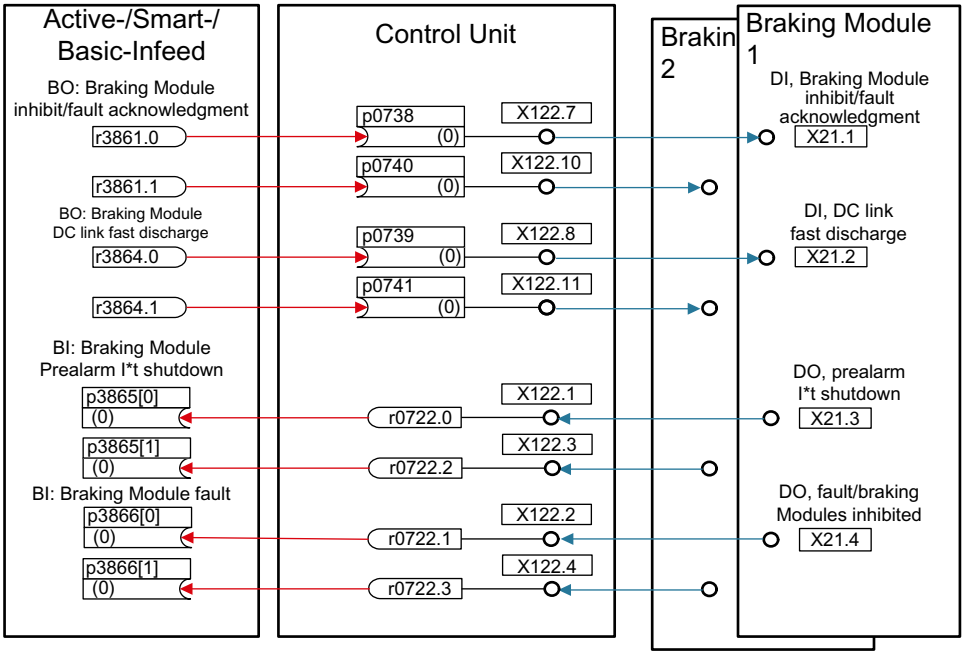

Figure 9-5 Example of controlling two Booksize Braking Modules

Features

- Braking the motor without any possibility of regenerating into the line supply (e.g. power failure)
- Fast DC link discharge (Booksize format)
- The Braking Module external terminals are controlled via the drive object Infeed (Booksize and Chassis format)
- Controlling up to eight Braking Modules in a parallel connection
- Acknowledging faults at the Braking Module External

Acknowledgment of faults

When the Braking Module issues a fault message at binector input p3866, an attempt is made to acknowledge the fault using signal r3861 at terminal X21.1 Booksize or X21.3 Chassis every 10 ms. Alarm A06900 is output simultaneously.

Fast DC link discharge (Booksize)

It is only possible to quickly discharge the DC link via the Braking Module External for the Booksize format. It is activated via binector input p3863 and started after the line contactor opens and the adjustable delay time (p3862) has expired. The fast discharge is completed when the line contactor contact closes.

Note

A fast DC link discharge requires the use of a line contactor with feedback signal (p0860) that is controlled via r0863.1.

Overview of important parameters (see SINAMICS S120/S150 List Manual)

- r0108.26 Drive object function module; Braking Module External
- p3860 Braking Module number of modules connected in parallel
- r3861.0...7 BO: Braking Module inhibit/acknowledgment
- p3862 Braking module, DC link fast discharge delay time
- p3863 BI: Braking Module, activate DC link fast discharge
- p3864.0...7 BO: Braking Module DC link fast discharge
- p3865[0...7] BI: Braking Module prealarm I2t shutdown
- p3866[0...7] BI: Braking Module fault

9.5 Cooling unit

Overview

A cooling unit is responsible for the cooling and the (non-)conductivity in the de-ionized water cooling circuit of a liquid-cooled power unit. The cooling unit is controlled and monitored from a PLC that is part of the cooling unit.

Function description

The "cooling unit" function module here is used as an interface between the Control Unit and the external PLC as well as external sensors of the cooling unit. Signals for control and messages between the PLC and the Control Unit can be exchanged via this interface. The PLC communicates with the Control Unit via terminals and/or via a fieldbus (e.g. PROFIBUS or PROFINET).

Features

- Automatically activated when using liquid-cooled power units
- Evaluation of an external sensor for leakage water
- Evaluation of an external sensor for liquid flow
- Evaluation of an external sensor for conductivity
- Monitoring the liquid intake temperature using external temperature sensors
- Monitoring the flow rating using internal temperature sensors
- Evaluation of signals transmitted from the PLC of the cooling unit
- Acknowledging cooling unit faults

Commissioning the function

You activate the "Cooling unit" function module while configuring the associated power unit (Motor Module or Infeed Module). To commission the function module, proceed as follows:

1. When selecting the power unit, set the cooling type to "Liquid cooling".
2. Complete the configuration.
3. After configuration has been completed, the heat exchanger unit can be seen in the navigation window under "Power Unit > Functions" (also in the shortcut menu of the power unit under "Functions").
4. Double-clicking "Cooling unit" opens the window for setting the monitoring functions.
   In this window, BICO interconnections can be set for communication with the controller of the cooling unit and the cooling water circuit monitoring.

You can check the current configuration in parameter r0108.28.

Function diagrams (see SINAMICS S120/S150 List Manual)

- 9794 Auxiliaries - Cooling unit, control and feedback signals (r0108.28 = 1)
- 9795 Auxiliaries - Cooling unit, sequence control (r0108.28 = 1)

Overview of important parameters (see SINAMICS S120/S150 List Manual)

- r0046.29 CO/BO: Missing enables;
cooling unit ready missing
- r0108.28 Drive object function module;
cooling unit
- p0192.06 Power unit firmware properties;
liquid cooling
- r0204.06 Power unit hardware properties;
liquid cooling with cooling unit (Chassis power unit)
- p0260 Cooling unit startup time 1
- p0261 Cooling unit startup time 2
- p0262 Cooling unit fault conductivity delay time
- p0263 Cooling unit fault liquid flow delay time
- p0264 Cooling unit delay time
- r0265.0...3 BO: Cooling unit control word
- p0266[0...7] BI: Cooling unit feedback signals signal source
- r0267.0...7 BO: Cooling unit status word

9.6 Extended torque control (kT estimator, servo)

Overview

Function module "Extended torque control" increases the torque accuracy. It comprises the following modules:

- k_T estimator (only for synchronous motors)
- Compensation of the voltage emulation error of the converter (p1952, p1953, p1954)
- k_T characteristic (p0645...p0648) (only for synchronous motors)

Note

When this function module is activated, the maximum number of drives that can be controlled from a Control Unit is reduced by at least one drive.

Function description

The adaptation of the torque constants for synchronous motors is used to improve the absolute torque accuracy for the control (closed-loop) of synchronous motors. The magnetization of the permanent magnets varies as a result of production tolerances and temperature fluctuations and saturation effects. The function "k_T estimator" adapts the torque constant k_T [Nm/A] in the control to the prevailing magnetization. It only makes sense to use the k_T estimator in conjunction with the friction characteristic as the k_T estimator corrects the inner motor torque. The frictional losses must be compensated from the friction characteristic using a supplementary torque.

The k_T estimator requires the most accurate values for the motor parameters as possible in order to achieve a high torque accuracy. Before using the k_T estimator, a motor data identification (p1909, p1910) must be performed. In this procedure, the values for stator resistance (p0350), leakage inductance (p0356) and voltage emulation errors (p1952, p1953, p1954) are determined. With p1954 ≠ 0, a change to the DC link voltage and the pulse frequency for the voltage emulation error are taken into account. The cable resistance must be entered in p0352 before motor data identification.

The motor should be at room temperature when the identification routine is carried out. Compensation of the voltage emulation error must be activated (p1780.8 = 1). The motor temperature (p0600) should be sensed using a KTY or PT1000 sensor (p0601 = 2 or 3).

The k_T estimator requires the motor temperature in order to track/correct the temperature-dependent quantities. The estimate is less accurate if a motor temperature sensor is not connected.

The k_T estimator is only activated above a specific speed (p1752). The terminal voltage of the converter always has small inaccuracies. The lower the output voltage and speed, the more inaccurate the estimate. This is the reason why the estimation is deactivated below a specific speed. The estimated value is smoothed using time constant p1795. The correction value for the torque constant is displayed in r1797.

In the range below p1752, the torque accuracy can be improved using the k_T characteristic. For the rotating motor data identification, torque constant kT is identified for various currents and saved in p0645...p0648 as polynomial. The current dependency of the torque constant can be

taken into account. The k_T characteristic can be combined with the $k_T$estimator. Below p1752, the $k_T$characteristic is active, and above, the k_T estimator. In addition to the current dependency, the $k_T$estimator also compensates the influence of the temperature and the reluctance torque.

For induction motors, parameters for the voltage emulation error cannot be determined with the stationary motor data identification routine. When the system is commissioned for the first time (p3900 = 3 or p0340 = 1 or 3), parameters p1952 to p1954 are preassigned so that the voltage emulation errors can also be compensated for induction motors. The stationary motor data identification routine provides more accurate values, so it should always be used for synchronous motors.

Commissioning the function

The "Extended torque control" function module is activated offline. To commission the function module, proceed as follows:

1. Click the drive and right-click to open the shortcut menu "Properties ... ".
   The "Object Properties" window opens.
2. Click the "Function modules" tab.
   The selection of possible function modules opens.
3. Click the "Extended torque control" checkbox to activate this option.
4. Click "OK" to activate the function module.
5. Select the "Connect to selected target devices" option.
6. Call the "Download project to target system" function.

Alternatively, you can also activate function modules in Startdrive under “Basic parameter assignment > Function modules”.

Activation can be checked in parameter r0108.1.

Activating the individual modules

To activate the individual modules, proceed as follows:

- k_T estimator: p1780.3 = 1
- Voltage compensation: p1780.8 = 1
- k_T characteristic: p1780.9 = 1

Function diagrams (see SINAMICS S120/S150 List Manual)

- 7008 Technology functions - kT estimator

Overview of important parameters (see SINAMICS S120/S150 List Manual)

- r0108.1 Drive object function module; extended torque control
- p1780.3 Motor model adaptation configuration; selects motor model PMSM k_T adaptation

- p1780.8 Motor model adaptation configuration;
  compensation of the voltage emulation error in the drive converter
- p1780.9 Motor model adaptation configuration;
  k_T(iq) characteristic active

Motor/drive converter identification

- p0352[0...n] Cable resistance
- p1909[0...n] Motor data identification, control word
- p1910 Motor data identification, stationary

kT estimator

- p1752[0...n] Motor model, changeover speed operation with encoder
- p1795[0...n] Motor model k_T adaptation smoothing time
- r1797[0...n] Motor model k_T adaptation correction value

Compensation of the voltage emulation error of the drive converter

- p1952[0...n] Voltage emulation error, final value
- p1953[0...n] Voltage emulation error, current offset

kT-characteristic

- p1954[0...n] Voltage emulation error, semiconductor voltage

9.7 Position control

Function description

The "Position controller" function module is made up of the following subfunctions:

- Position actual value conditioning (including the lower-level measuring probe evaluation and reference mark search)
- Position controller (including limits, adaptation and the pre-control calculation)
- Monitoring functions (including standstill, positioning, dynamic following error monitoring and cam signals)
- Position tracking of the load gear (motor encoder), using absolute encoders for rotary axes (modulo) as for linear axes.

The individual subfunctions are described below.

9.7.1 Position actual value conditioning

Function description

The actual position value processing converts the actual position value into a neutral distance unit LU (Length Unit). To do this, the function block uses the encoder evaluation / motor control with the available encoder interfaces Gn_XIST1, Gn_XIST2, Gn_STW and Gn_ZSW. These just provide position information in encoder pulses and fine resolution (increments).

The actual position value is conditioned, regardless of whether the position controller is enabled immediately after the system has booted, as soon as valid values are received via the encoder interface.

Parameter p2502 (encoder assignment) is used to define from which encoder (1, 2 or 3), the actual position value is sensed.

The following interconnections are automatically established after the assignment has been made.

- p0480[0] (G1_STW) = encoder control word r2520[0]
- p0480[1] (G2_STW) = encoder control word r2520[1]
- p0480[2] (G3_STW) = encoder control word r2520[2]

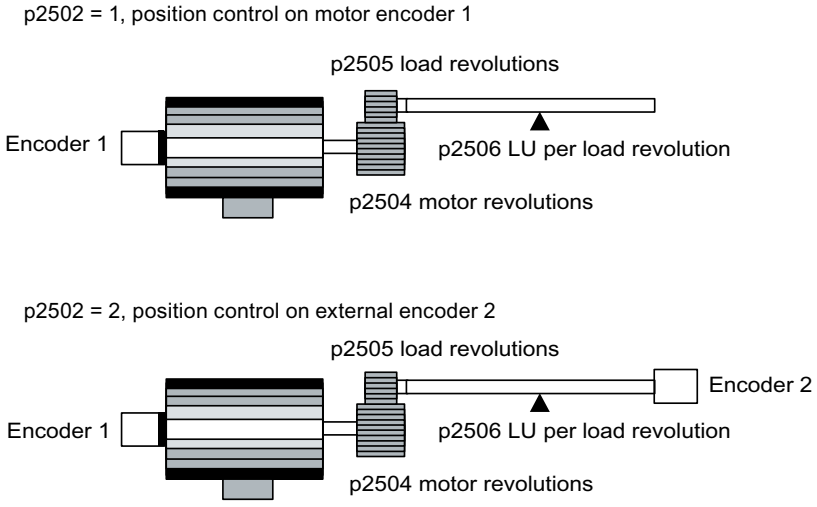

Figure 9-6 Actual position value sensing with rotary encoders

Features

The function is characterized by the following features:

- Correction value (p2512, p2513)
- Setting value (p2514, p2515)
- Position offset (p2516)
- Actual position value (r2521)
- Actual velocity value (r2522)
- Motor revolutions (p2504)
- Load revolutions (p2505)
- Spindle pitch (p2506)
- Position tracking (p2720ff)

Rotary encoder

The link between the physical variables and the neutral length unit LU is established via parameter p2506 (LU per load revolution) for rotary encoders. Parameter p2506 mirrors, together with p2504, p2505, the interrelationship between encoder increments and the neutral length unit LU.

Example

Rotary encoder, ball screw with a pitch of 10 mm/revolution. 10 mm should have a resolution of 1 µm (i.e. 1 LU = 1 µm).

- One load revolution corresponds to 10000 LU
- p2506 = 10000

Note

The effective actual value resolution is obtained from the product of the encoder pulses (p0408) and the fine resolution (p0418) and a measuring gear that is possibly being used (p0402, p0432, p0433).

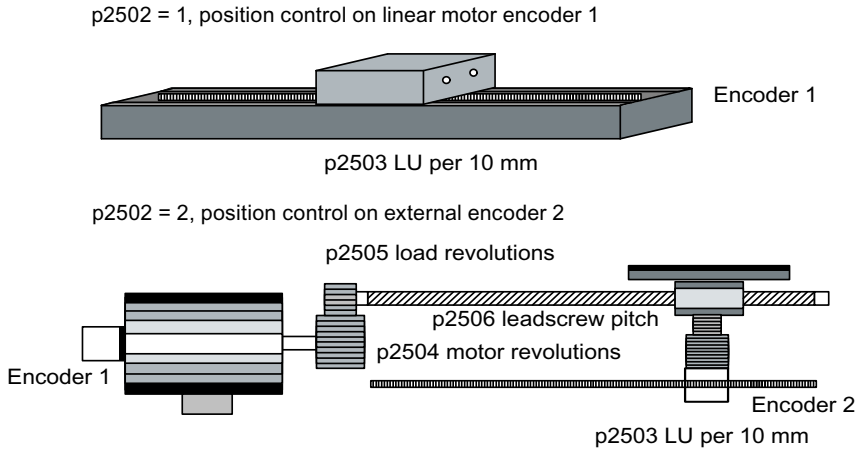

Figure 9-7 Actual position value sensing with rotary encoders

Linear encoder

For a linear encoder, the interrelationship between the physical quantity and the neutral length unit LU is configured using parameter p2503 (LU/10 mm).

Example

Linear encoder, 10 mm should have a resolution of 1 µm (i.e. 1 LU = 1 µm).

- p2503 = 10000

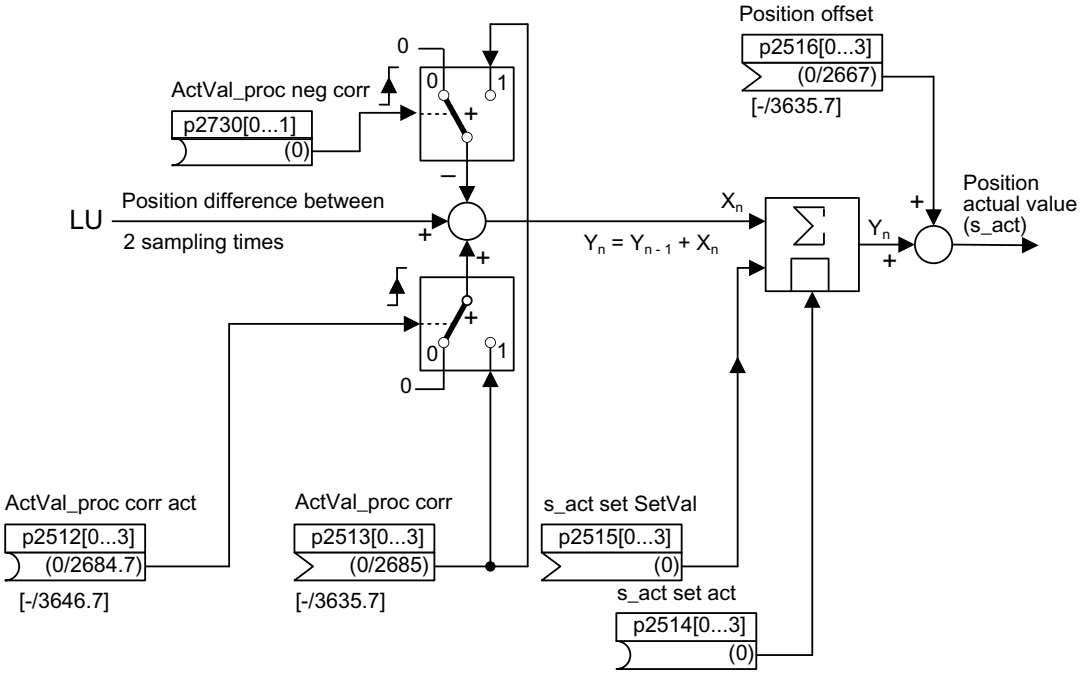

Figure 9-8 Signal flow: Actual position value preprocessing for a linear encoder

A correction can be made using connector input p2513 (correction value, actual position value processing) and a positive edge at binector input p2512 (activates the correction value). When the "basic positioning" function module is activated, p2513 is automatically interconnected with r2685 (EPOS correction value) and p2512 with r2684.7 (activate correction). This interconnection enables modulo offset by EPOS, for example.

The correction value present at the connector input p2513 can be negated and activated via p2730.

p2516 can be used to switch in position offset. Using EPOS, p2516 is automatically interconnected to r2667. Backlash compensation is implemented using this interconnection.

Using the connector input p2515 (position setting value) and a "1" signal at binector input p2514 (set actual position value), a position setting value can be entered.

Note

No evaluation of the incoming encoder increments

When the actual position value is set (p2514 = "1" signal), the actual position value of the position controller is kept at the value of connector p2515 as standard.

Incoming encoder increments are not evaluated. A difference in position cannot be compensated for in this situation.

An inversion of the actual position value resulting from the encoder is undertaken using parameter p0410. An inversion of the axis motion can be entered using a negative value in p2505.

9.7.1.1 Indexed actual value acquisition

Function description

The indexed actual position value acquisition permits, e.g. length measurements on parts as well as the detection of axis positions by a higher-level controller (e.g. SIMATIC S7) in addition to the position control, e.g. of a belt conveyor.

Two more encoders can be operated in parallel with the encoders for actual value preprocessing and position control in order to collect actual values and measured data.

The indexed acquisition of actual values can preprocess an actual position value at each of the three encoder outputs. The parameter p2502[0...3] is used to select the encoder evaluation for position control.

The parameters of the indexed actual value acquisition are indexed four times. The indices 1 to 3 are assigned to the encoder evaluations 1 to 3. The index 0 is assigned to position control.

The parameter r2521[0...3] can be used to retrieve the current actual values of all connected encoders. For example, the actual position value for position control in r2521[0] is identical with the value r2521[1] if the position control uses encoder evaluation 1. The signal source for a position offset can be set in parameter p2516[0...3].

The absolute encoder adjustment is initiated via p2507[0...3] = 2, and its successful completion is reported via p2507[0...3] = 3. The signal source "Reference point coordinate for the position controller" p2598[0] is interconnected with p2599 during basic positioning. The other signal sources are not interconnected in the standard configuration.

The measuring probe evaluation can be enabled for the encoder evaluation x, which is not assigned to position control, via p2509[x]. The signal sources are assigned via p2510[0...3], the edge evaluation is set via p2511[0...3]. The measured value is available in r2523[x] if, in the status word for encoder x (encoder 0: r2526.0..9, encoder1: 2627.0..2, Encoder2: r2628.0..2, encoder3: r2529.0..2) the "Measurement value valid" bit is set.

The actual position values of the different encoders can be read out using parameter r2521[0...3]. These actual position values can be corrected with a signed value from p2513[0...3] after a 0/1 signal from the signal source in p2512[0...3].

In addition, the actual velocity value (r2522[0...3]) and the position offset for absolute encoders p2525[0...3] can be processed for each encoder by the higher-level controller.

Features

- Encoder assignment (p2502[D])
- Absolute encoder adjustment (p2507[E])
- Activate measuring probe evaluation (p2509[0...3])
- Measuring probe evaluation selection (p2510[0..3])
- Measuring probe edge (p2511[0..3])
- Activate actual position value processing, correction value (p2512[0...3])
- Actual position value processing, correction value (p2513[0...3])
- Position offset (p2516[0...3])
- Actual position value (r2521[0...3])

- Actual velocity value (r2522[0...3])
- Measuring probe evaluation/Reference mark search (p2523[0..3])
- Encoder adjustment, offset (p2525[E])
- Status word position controller (r2526)
- Status word encoder1 (r2527)
- Status word encoder2 (r2528)
- Status word encoder3 (r2529)
- EPOS reference point coordinate, signal source (p2598[0...3])
- Function diagram 4010 Position control - Actual position value processing

9.7.1.2 Load gear position tracking

Overview

Position tracking enables the load position to be reproduced when using gearboxes. It can also be used to extend the position area.

Requirement

- Using an absolute encoder

Function description

Position tracking for load gear functions in the same way as position tracking for the measuring gear (see Chapter "Position tracking with a measuring gearbox (Page 389)"). Position tracking is activated via parameter p2720.0 = 1. The position tracking of the load gear, however, is only relevant for the motor encoder (encoder 1). The load gear ratio is entered via parameters p2504 and p2505. Position tracking can be activated with rotary axes (modulo) and linear axes.

Position tracking for the load gear can only be activated once for each motor data set MDS.

The load actual position value in r2723 (must be requested via Gn_STW.13, see Section "Control and status words for encoders") comprises the following information:

- Encoder pulses per revolution (p0408)
- Fine resolution per revolution (p0419)
- Virtual number of stored revolutions of a rotary absolute encoder (p2721)
- Load gear ratio (p2504/p2505)
- Measuring gear ratio (p0433/p0432), if p0411.0 = 1

Note

The sum of p0408, p0419 and p2721 is limited to 32 bits.

Note

Load gear problems and solutions, see example in Section Position tracking -> Measuring gear.

Features

- Configuration via p2720
- Virtual multiturn via p2721
- Tolerance window for monitoring the position at switching on p2722
- Input of the load gear via p2504 and p2505
- Display via r2723

Commissioning the function

You can commission the load gearbox via parameter p2720 as follows:

- p2720.0: Activation of position tracking
- p2720.1: Setting the axis type (linear axis or rotary axis)
  Here, a rotary axis refers to a modulo axis; the modulo offset can be activated from a higher-level controller or EPOS. With a linear axis, position tracking is mainly used to extend the position area (see section: Virtual multiturn encoder (p2721).
- p2720.2: Reset position
  The position values stored in a non-volatile fashion are reset for the following events:
  - When encoder replacement is detected.
  - When the configuration of the encoder data set (EDS) is modified.
  - When the absolute encoder is adjusted again.

Note

If position tracking of the load gear is activated with parameter p2720[0] = 1 (position gear load tracking) after the encoder is adjusted (p2507 = 3), the adjustment will be reset.

If the encoder is adjusted again when load position tracking is active, the load gear position will be reset (overflows).

The permissible position tracking range is mapped on the reproducible encoder range of EPOS.

It is possible to activate position tracking for several DDS.

Further information

Further information on the parameterization of the load gear position tracking is provided in the "SINAMICS S120 Startdrive Commissioning Manual".

Example: Position range extension

With absolute encoders without position tracking, it must be ensured that the traversing range around 0 is less than half the encoder range, because beyond this range, no unique reference remains after switching on and off (see description on parameter p2507). This traversing range can be extended using the virtual multiturn (p2721).

The following diagram illustrates an absolute encoder that can represent eight encoder revolutions (p0421 = 8).

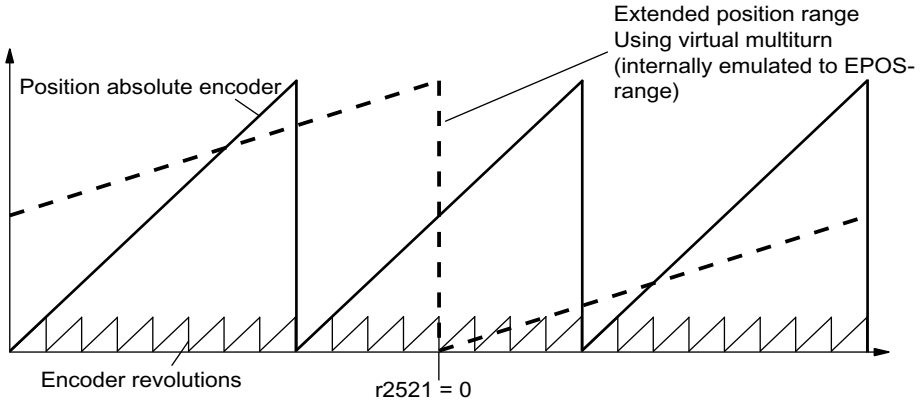

Figure 9-9 Position tracking (p2721 = 24), setting p2504 = p2505 =1 (gear ratio = 1)

In this example, this means:

- Without position tracking, the position for +/- 4 encoder revolutions around r2521 = 0 LU can be reproduced.
- With position tracking, the position for +/- 12 encoder revolutions (+/- 12 load revolutions with load gear) can be reproduced (p2721 = 24).

Practical example:
For a linear axis, the value for p2721 is set to 262144 for an encoder with p0421 = 4096. This means that +/- 131072 encoder revolutions or load revolutions can be reproduced.

For a rotary axis, a value for p2721 = p0421 is set for an encoder.

Virtual multiturn encoder (p2721)

The virtual multiturn resolution is used to set the number of resolvable load rotations for a rotary absolute encoder with activated position tracking. It can be edited only for rotary axes.

With a rotary absolute encoder (p0404.1 = 1) with activated position tracking (p2720.0 = 1), parameter p2721 can be used to enter a virtual multiturn resolution.

Note

If the gear ratio is not equal to 1, then p2721 always refers to the load side. The virtual resolution, which is required for the load, is then set here.

In the case of rotary axes, the virtual multiturn resolution (p2721) is preset to the multiturn resolution value of the encoder (p0421) and can be altered.
Example: Singleturn encoder
Parameter p0421 is preset to p0421 = 1. However, parameter p2721 can be altered

subsequently, e.g. the user can program p2721 = 5. As a result, the encoder evaluation initiates five load rotations before the same absolute value is achieved again.

In the case of linear axes, the virtual multiturn resolution (p2721) is preset to the multiturn resolution value of the encoder (p0421), which is extended by six bits, (max. 32 positive/ negative overflows).
The setting for p2721 cannot be edited again afterwards.
Example: Multiturn encoder
For a linear axis, the value for p2721 is set to 262144 for an encoder with p0421 = 4096. This means that +/- 131072 encoder revolutions or load revolutions can be reproduced.

If, as a result of extension of the multiturn information, the displayable area of r2723 (32 bits) is exceeded, the fine resolution (p0419) must be reduced accordingly.

Tolerance window (p2722)

After switch on, the difference between the stored position and the current position is determined and initiated depending on the following:

Difference within the tolerance window -> the position is reproduced based on the current actual encoder value.

Difference outside the tolerance window -> an appropriate fault (F07449) is output.

The tolerance window is preset to quarter of the encoder range and can be changed.

Note

The position can only be reproduced if, in the powered-down state, the encoder was moved through less than half of the range that it can represent. For the standard EQN1325 encoder, this is 2048 revolutions or half a revolution for singleturn encoders.

Note

The ratio stamped on the gear rating plate is often just a rounded-off value (e.g. 1:7.34). If, for a rotary axis, it is not permissible to have any long-term drift, then the actual ratio of the gearbox teeth must be requested from the gearbox manufacturer.

Multiple drive data sets

Position tracking of the load gear can be activated in multiple drive data sets.

- The load gear is DDS-dependent.
- Load gear position tracking is computed only for the active drive data set and is EDS-dependent.
- The position tracking memory is only available once for each EDS.

- If position tracking is to be continued in different drive data sets with the same mechanical relationships and the same encoder data sets, it must be activated explicitly in all relevant drive data sets. Possible applications for drive data set changeover with continued position tracking:
  - Star/delta changeover
  - Different ramp-up times / controller settings
- When the changeover between drive data sets involves a change in gear unit, the position tracking function starts from the beginning again, i.e. it behaves on changeover as if a POWER ON had occurred.
- For identical mechanical relationships and the same encoder data set, DDS changeover has no effect on the calibration status and reference point status.

Restrictions

- Position tracking cannot be activated for an encoder data set which is used in different drive data sets as encoder1 for different gears. If an attempt is still made to activate position tracking, fault "F07555 Drive encoder: Configuration position tracking" will be displayed with fault value 03 hex.
  A check is generally performed to determine whether the load gear is the same in all DDS in which the relevant encoder data set is used.
  Load gear parameters p2504[D], p2505[D], p2720[D], p2721[D] and p2722[D] must be identical in this case.
- If an encoder data set is used in one DDS as a motor encoder with position tracking and in another DDS as an external encoder, the position tracking starts from the beginning again, i.e. it behaves in the same way as it would do after a POWER ON.
- If position tracking is reset in one drive data set, it is also reset in all other drive data sets which contain this encoder data set.
- The maximum permissible movement of an axis in an inactive drive data sets is half the encoder range (see p2722: tolerance window).

The table below describes the changeover behavior on transition from one DDS to another. A changeover is always executed by DDS0.

An overview of DDS changeover without position tracking load gear can be found in section "Instructions for data set changeover" in Section "EPOS - referencing".

Table 9-4 DDS changeover with load gear position tracking

DDS	0	1	2	3	4	5	6	7	8	9
p0186 (MDS)	0	0	0	0	0	1	2	3	0	4
p0187 (encoder 1)	EDS0	EDS0	EDS0	EDS0	EDS0	EDS4	EDS5	EDS0	EDS0	EDS6
p0188 (encoder 2)	EDS1	EDS1	EDS1	EDS1	EDS3	EDS1	EDS6	EDS1	EDS1	EDS0
p0189 (encoder 3)	EDS2	EDS2	EDS2	EDS2	EDS2	EDS2	EDS6	EDS2	EDS2	EDS2
p2502 (encoder for position control)	Encoder_1	Encoder_1	Encoder_1	Encoder_2	Encoder_2	Encoder_2	Encoder_1	Encoder_1	Encoder_1	Encoder_1

DDS	0	1	2	3	4	5	6	7	8	9
Mechanical relationships p2504/p2505/p2506/ p2503 A, B, C and D designate different mechanical relationships.	A	A	B	A	A	A	D	A	A	C
Load gear position tracking	Activated	Activated	Deactivated	Activated	Activated	Activated	Activated	Activated	Deactivated	Activated

Table 9-5 DDS changeover response

DDS	Changeover response
0	-
1	Changeover during pulse inhibit or operation has no effect
2	Encoder adjustment and referencing bit are reset. Position tracking for EDS0 is no longer calculated and must be re-adjusted when switching back to DDS0.
3	Position tracking for EDS0 is continued and the referencing bit is reset.[1)]
4	Pulse inhibit/operation: Position tracking for EDS0 is continued and the referencing bit is reset.[1)]
5	Position tracking for EDS4 is newly initiated and the referencing bit is reset.[1)] When switching back to DDS0, the same applies to EDS0.
6	Position tracking for EDS5 is newly initiated and the referencing bit is reset.[1)]. When switching back to DDS0, the same applies for EDS0.
7	MDS changeover alone during pulse inhibit or operation has no effect
8	Pulse inhibit/operation: Referencing bit is reset.[1)] Position tracking for EDS0 is no longer calculated and, as a consequence, the actual position value also changes (the offset correction of the position tracking is canceled). When switching back to DDS0, the position tracking for EDS0 is newly initiated and the referencing bit is reset.[1)] It only makes sense to switch back to DDS0 without a new adjustment in DDS0 if the user did not make a new adjustment in DDS8 and the permissible tolerance window (p2722) was not exited.
9	Pulse inhibit/operation: Position tracking for EDS6 is newly initiated and the referencing bit is reset.[1)] When switching back to DDS0, the same applies to EDS0.

[1)] The referencing bit (r2684.11) is reset for a DDS changeover. If, in the new DDS, the EDS already has an adjusted encoder, then the referencing bit is set again.

Definitions:

- Position tracking is continued
  The behavior of the position tracking during the changeover is the same as it would be if the data set had not even been changed.
- Position tracking is newly initiated (the position actual value can change when the changeover is made!)
  The behavior during changeover is the same as the behavior after a POWER ON. The position value read by the absolute encoder is compared to the stored value. If the position difference is within the tolerance window (p2722), the position is corrected correspondingly; if it is outside the range, a corresponding fault F07449 is output
- Position tracking is reset (the position actual value can change when the changeover is made!)
  The stored absolute value is rejected and the overflow counter is reset to zero.

- Position tracking is not calculated (the position actual value changes when the changeover is made!)
  The saved absolute value of the position tracking - including the offset correction from the dissolved DDS - is not used.
- Additional information: The position tracking memory is only available once for each EDS.

9.7.1.3 Function diagrams and parameters

Function diagrams (see SINAMICS S120/S150 List Manual)

- 4010 Position control - Actual position value processing (r0108.3 = 1)
- 4704 Encoder evaluation - Position and temperature sensing, encoders 1 ... 3
- 4710 Encoder evaluation - Actual speed value and pole position sensing encoder 1

Overview of important parameters (see SINAMICS S120/S150 List Manual)

- p2502[0...n] LR encoder assignment
- p2503[0...n] LR length unit LU per 10 mm
- p2504[0...n] LR motor/load motor revolutions
- p2505[0...n] LR motor/load load revolutions
- p2506[0...n] LR length unit LU per load revolution
- r2520[0...2] CO: LR actual position value processing encoder control word
- r2521[0...3] CO: LR actual position value
- r2522[0...3] CO: LR actual velocity value
- r2523[0...3] CO: LR measured value
- r2524 CO: LR LU/revolutions
- p2525[0...n] CO: LR encoder adjustment offset
- r2526.0...9 CO/BO: LR status word
- p2720[0...n] Load gear configuration
- p2721[0...n] Load gear, absolute encoder, rotary revolutions, virtual
- p2722[0...n] Load gear, position tracking, tolerance window
- r2723[0...n] CO: Load gear absolute value
- r2724[0...n] CO: Load gear position difference
- p2730[0...3] BI: LR actual position value processing correction negative act. (edge)

9.7.2 Position controller

Function description

The position controller is a PI controller. The P gain can be adapted using the product of connector input p2537 (position controller adaptation) and parameter p2538 (Kp).

Using connector input p2541 (limit), the speed setpoint of the position controller can be limited without precontrol. This connector input is pre-interconnected with connector output p2540.

The position controller is enabled by an AND link of the binector inputs p2549 (position controller 1 enable) and p2550 (position controller 2 enable).

The position setpoint filter (p2533 time constant position setpoint filter) is a PT1 element, the symmetrizing filter as dead time element (p2535 symmetrizing filter speed precontrol (dead time) and PT1 element (p2536 symmetrizing filter speed precontrol (PT1)). The speed precontrol p2534 (factor, speed precontrol) can be disabled via the value 0.

Features

- Symmetrization (p2535, p2536)
- Limiting (p2540, p2541)
- Precontrol (p2534)
- Adaptation (p2537, p2538)

Note

We only recommend that experts use the position controller functions without using the basic positioner.

Function diagrams (see SINAMICS S120/S150 List Manual)

- 4015 Position control - Position controller (r0108.3 = 1)

Overview of important parameters (see SINAMICS S120/S150 List Manual)

- p2533[0...n] LR position setpoint filter time constant
- p2534[0...n] LR speed precontrol factor
- p2535[0...n] LR speed precontrol symmetrizing filter dead time
- p2536[0...n] LR speed precontrol symmetrizing filter PT1
- p2537 CI: LR position controller adaptation
- p2538[0...n] LR proportional gain
- p2539[0...n] LR integral time
- p2540 CO: LR position controller output speed limit
- p2541 CI: LR position controller output speed limit signal source

9.7.3 Monitoring functions

Function description

The position controller monitors the standstill, positioning and following error.

Standstill monitoring is activated via binector inputs p2551 (setpoint stationary) and p2542 (standstill window). If the standstill window is not reached once the monitoring time (p2543) has elapsed, fault F07450 is triggered.

Positioning monitoring is activated via binector inputs p2551 (setpoint stationary), p2554 = "0" (travel command not active) and p2544 (positioning window). Once the monitoring time (p2545) has elapsed, the positioning window is checked once. If this is not reached, fault F07451 is triggered.

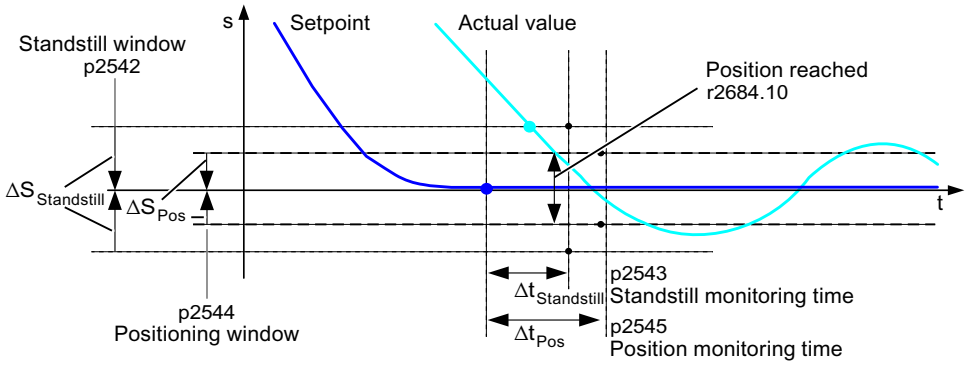

Figure 9-10 Standstill monitoring, positioning window

The standstill monitoring and the positioning monitoring can be deactivated using the value "0" in p2542 and p2544. The standstill window should be greater than or equal to the positioning window (p2542 ≥ p2544). The standstill monitoring time should be less than or equal to the positioning monitoring time (p2543 ≤ p2545).

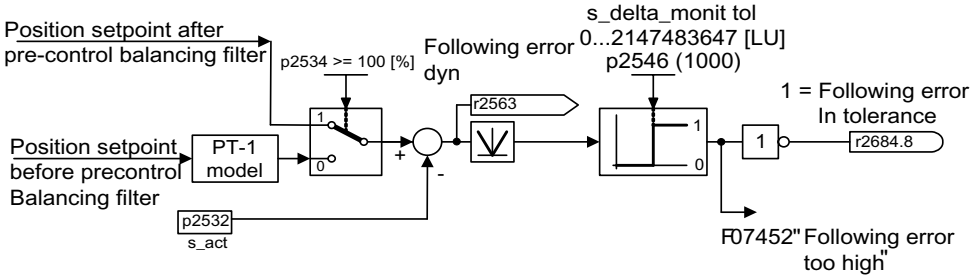

Figure 9-11 Following error monitoring

Following error monitoring is activated via p2546 (following error tolerance). If the absolute value of the dynamic following error (r2563) is greater than p2546, fault F07452 is output and bit r2648.8 is reset.

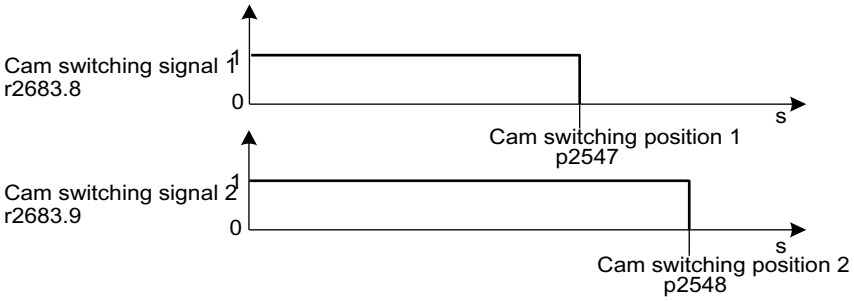

Figure 9-12 Cam controllers

The position controller has two cam controllers. If cam position p2547 or p2548 is passed in the positive direction (r2521 > p2547 or p2548), then cam signals r2683.8 and r2683.9 are reset.

Features

- Standstill monitoring (p2542, p2543)
- Positioning monitoring (p2544, p2545)
- Dynamic following error monitoring (p2546, r2563)
- Cam controllers (p2547, p2548, p2683.8, p2683.9)

Function diagrams (see SINAMICS S120/S150 List Manual)

- 4020 Position control - Standstill monitoring / positioning monitoring (r0108.3 = 1)
- 4025 Position control - Dynamic following error monitoring, cam controllers (r0108.3 = 1)

Overview of important parameters (see SINAMICS S120/S150 List Manual)

- p2530 CI: LR position setpoint
- p2532 CI: LR actual position value
- p2542 LR standstill window
- p2543 LR standstill monitoring time
- p2544 LR positioning window
- p2545 LR position monitoring time
- p2546[0...n] LR dynamic following error monitoring tolerance
- p2547 LR cam switching position 1
- p2548 LR cam switching position 2
- p2551 BI: LR setpoint message present
- p2554 BI: LR travel command message active
- r2563 CO: LR following error, dynamic model
- r2683.8 CO/BO: EPOS status word 1;
  actual position value <= cam switching position 1
- r2683.9 CO/BO: EPOS status word 1;
  actual position value <= cam switching position 2
- r2684.0...15 CO/BO: EPOS status word 2

9.7.4 Measuring probe evaluation and reference mark search

Function description

The "Reference mark search" and "Probe evaluation" functions can be initiated and carried out via binector inputs p2508 and p2509. Binector inputs p2510 and p2511 define the mode for measurement probe evaluation.

The probe signals are recorded via the encoder status and control word. To speed up signal processing, direct measuring probe evaluation can be activated by selecting the input terminals for probes 1/2 via p2517 and p2518. Measuring probe evaluation is carried out in the position controller cycle, whereby the set send cycle of the controller (r2064[1]) must be an integer multiple of the position controller cycle (p0115[4]).

The system outputs a message if the same probe input is already being used (see also p0488, p0489, p0580, and p0680).

The appropriate function is started using a 0/1 edge at the appropriate input p2508 or p2509 via the encoder control word. Status bit r2526.1 (reference function) signals that the function is active (feedback from the encoder status word). Status bit r2526.2 (measurement value valid) shows the presence of the measurement required r2523 (position for reference mark or measurement probe).

Once the function is complete (position determined for reference mark or measurement probe), r2526.1 (reference function active) and r2526.2 (measurement valid) continue to remain active and the measurement is provided by r2523 until the corresponding input p2508 or p2509 is reset (0 signal).

If the function (reference mark search or measuring probe evaluation) has still not been completed and the corresponding input p2508 or p2509 is reset, then the function is interrupted via the encoder control word and status bit r2526.1 (reference function active) is reset via the encoder status word.

If both binector inputs p2508 and p2509 are simultaneously set, this causes the active function to be interrupted and no function is started. This is indicated using alarm A07495 "reference function interrupted" and remains until the signals at the binector inputs are reset. The alarm is also generated if, during an activated function (reference mark search or measuring probe evaluation) a fault is signaled using the encoder status word.

If the "position control" function module is selected, these parameters (p2508 to p2511) are preassigned with "0". If the "basic positioner" function module is selected, the "reference mark search" (for search for reference point) and "measurement probe evaluation" (for the flying referencing function) functions are initiated by the "basic positioner" function module and feedback (r2526, r2523) returned to this.

Function diagrams (see SINAMICS S120/S150 List Manual)

- 4010 Position control - Actual position value processing (r0108.3 = 1)
- 4720 Encoder evaluation - Encoder interface, receive signals, encoders 1 ... 3
- 4730 Encoder evaluation - Encoder interface, send signals, encoders 1 ... 3

Overview of important parameters (see SINAMICS S120/S150 List Manual)

- p2508[0...3] BI: LR activate reference mark search
- p2509[0...3] BI: LR activate measuring probe evaluation
- p2510[0...3] BI: LR measuring probe evaluation, selection
- p2511[0...3] BI: LR measuring probe evaluation edge
- p2517[0...2] LR direct probe 1
- p2518[0...2] LR direct probe 2
- r2523[0...3] CO: LR measured value
- r2526.0...9 CO/BO: LR status word

9.7.5 Commissioning the function

The "position control" function module is integrated in the system as follows:

Procedure

The configuration screen for "Position control" in Startdrive is not made accessible unless the function module "Basic positioner" is activated (r0108.4 = 1) which means that the function module "Position control" (r0108.3 = 1) is automatically activated as well.

The “basic positioner” function module can be activated over “Basic parameter assignment > Function modules.”

To ensure correct, error-free operation of the basic positioner, it is absolutely essential that the "Position control" function module is activated and the position control correctly configured.

If the "position control" function module is active, and to optimize the speed controller, a function generator signal is interconnected to the speed controller input p1160, then the position controller monitoring functions respond. To prevent this from happening, you must disable the position controller (p2550 = 0) and switch it to the tracking mode (p2655 = 1, for control using PROFIdrive telegram 110 PosSTW.0 = 1). In this way, the monitoring functions are switched off and the position setpoint is tracked.

Function diagrams (see SINAMICS S120/S150 List Manual)

- 4010 Position control - Actual position value processing (r0108.3 = 1)
- 4015 Position control - Position controller (r0108.3 = 1)
- 4020 Position control - Standstill monitoring / positioning monitoring (r0108.3 = 1)
- 4025 Position control - Dynamic following error monitoring, cam controllers (r0108.3 = 1)

Overview of important parameters (see SINAMICS S120/S150 List Manual)

- r0108 Drive object function module
- p1160[0...n] CI: Speed controller, speed setpoint 2
- p2550 BI: Position control enable 2

9.8 Basic positioner

Function description

The basic positioner (EPOS) is used to position linear and rotary axes (modulo) in absolute/ relative terms with motor encoder (indirect measuring system) or machine encoder (direct measuring system). EPOS is available for servo control and vector control.

For the basic positioner functionality, the Startdrive engineering tool provides graphic guides through the configuration, commissioning and diagnostic functions. A control panel supports you when using the basic positioner and when operating in the closed-loop speed controlled mode.

The position control (r0108.3 = 1) is also automatically activated when activating the basic positioner (r0108.4 = 1). The required BICO interconnections are automatically made.

Detailed information on the EPOS can also be found in the information system of the Startdrive engineering tool.

Note

The basic positioner requires the position controller functions. The BICO interconnections, which are automatically made by the basic positioner when activated, must be changed by experienced users (experts) only.

Functions of the position control

This means that the following functions are available for the position control:

- Standstill monitoring
- Position monitoring
- Dynamic following error monitoring
- Cam controllers
- Modulo function
- Probe evaluation

For more information, see Chapter "Position control (Page 445)".

Functions of the basic positioner

In addition, the following functions can be carried out using the basic positioner:

- Mechanical system
  - Backlash compensation
  - Modulo offset
  - Position tracking of the load gear (motor encoder) with absolute encoders
- Limits
  - Traversing profile limits
  - Traversing range limits
  - Jerk limitation
- Referencing or adjustment
  - Setting reference point (with stationary axis)
  - Reference point approach
    Separate operating mode including reversing cam functionality, automatic reversal of direction, referencing to "cams and encoder zero mark", only "encoder zero mark" or "external zero mark (BERO)".
  - Flying referencing
    Superimposed referencing is possible during "normal" traversing with the aid of the measurement probe evaluation; normally evaluation of a BERO, for example. Superimposed function for the modes "Jog", "Direct setpoint specification / MDI" and "Traversing blocks".
  - Referencing with incremental measuring systems
  - Absolute encoder adjustment
- Traversing blocks operating mode
  - Positioning using traversing blocks that can be saved in the drive unit including block change enable conditions and specific tasks for an axis that was previously referenced
  - Traversing block editor
  - A traversing block contains the following information: Traversing block number, job (e.g. positioning, wait, GOTO block step, setting of binary outputs), motion parameters (target position, velocity override for acceleration and deceleration), mode (e.g.: skip block, block change enable conditions such as "Continue_with_stop" and "Continue_flying"), task parameters (e.g. delay time, block step conditions)
- Direct setpoint specification mode (MDI)
  - Positioning (absolute, relative) and setting-up (endless closed-loop position control) using direct setpoint specifications (e.g. via the PLC or process data)
  - It is always possible to influence the motion parameters during traversing (on-the-fly setpoint acceptance) as well as on-the-fly change between the Setup and Positioning modes

- Jog mode
  - Position-controlled traversing of the axis with the switchable modes "Endless position-controlled" or "Incremental jog" (to traverse an "increment")
- Standard PROFIdrive positioning telegrams are available (telegrams 7, 9 and 110), the selection of which automatically establishes the internal "connection" to the basic positioner
- Control using PROFIdrive telegrams 7 and 110
  For additional information, see the following manuals:
  - “SINAMICS S120 Function Manual Communication” manual, “Cyclical Communication” chapter
  - SINAMICS S120/S150 List Manual

9.8.1 Mechanical system

Function description

When mechanical force is transferred between a machine part and its drive, generally backlash occurs. If the mechanical system was to be adjusted/designed so that there was absolutely no play, this would result in high wear. Thus, backlash (play) can occur between the machine component and the encoder. For axes with indirect position sensing, mechanical backlash results in a falsification of the traversing distance, as, at direction reversal, the axis travels either too far or not far enough corresponding to the absolute value of the backlash.

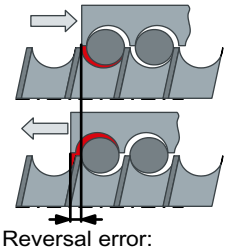

Figure 9-13 Backlash compensation

Note

The backlash compensation is active with the following settings:

- The axis has been referenced for incremental measuring systems
- The axis has been adjusted for absolute measuring systems

In order to compensate the backlash, the determined backlash must be specified in p2583 with the correct polarity. At each direction of rotation reversal, the actual axis value is corrected dependent on the actual traversing direction and displayed in r2667. This value is taken into account in the actual position value using p2516 (position offset).

If a stationary axis is referenced by setting the reference point or an adjusted axis is powered-up with an absolute encoder, then the setting of parameter p2604 (reference point approach, starting direction) is relevant for switching-in the compensation value.

Table 9-6 The compensation value is switched in as a function of p2604

p2604	Traversing direction	Switch in compensation value
0	Positive	None
	Negative	Immediately
1	Positive	Immediately
	Negative	None

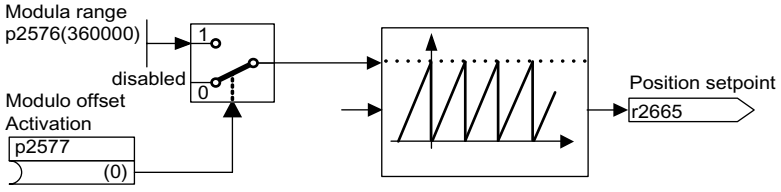

Figure 9-14 Modulo offset

A modulo axis has an unrestricted traversing range. The value range of the position repeats itself after a specific value that can be parameterized (the modulo range or axis cycle), e.g. after one revolution: 360° -> 0°. The modulo range is set in parameter p2576, the offset is activated with parameter p2577. The modulo offset is undertaken at the setpoint end. This is provided with the correct sign via connector output r2685 (correction value) to appropriately correct the actual position value.

EPOS initiates the activation of the correction via a rising edge of binector output r2684.7 (activate correction) (r2685 (correction value) and r2684.7 (activate correction) are already connected as standard with the corresponding binector/connector input of the actual position value processing). Absolute positioning details (e.g. in a traversing task) must always be within the modulo range. Modulo offset can be activated for linear and rotary length units. The traversing range cannot be limited by a software limit switch.

With active modulo offset and the application of absolute encoders, as a result of potential encoder overflows, it must be ensured that there is an integer ratio v between the multiturn resolution and the modulo range.

The ratio v can be calculated as follows:

- Motor encoder without position tracking:
  v = p0421 · p2506 · p0433 · p2505 / (p0432 · p2504 · p2576)
- Motor encoder with position tracking for the measuring gear:
  v = p0412 · p2506 · p2505 / (p2504 · p2576)
- Motor encoder with position tracking for the load gear:
  v = p2721 · p2506 · p0433 / (p0432 · p2576)
- Motor encoder with position tracking for the load and measuring gear:
  v = p2721 · p2506 / p2576

- Direct encoder without position tracking:
  v = p0421 · p2506 · p0433 / (p0432 · p2576)
- Direct encoder with position tracking for the measuring gear:
  v = p0412 · p2506 / p2576

With position tracking it is recommended to change p0412 or p2721.

Features

- Backlash compensation (p2583)
- Modulo offset (p2577)

Commissioning the function

If you activated the "Basic positioner" function module in the Startdrive engineering tool, you will find the "Mechanics" screen form under "Drive axis > Parameter assignment > Basic parameter assignment > Mechanics".

Further information

For additional information on parameterizing the "Mechanics" function can be found in the SINAMICS S120 with Startdrive Commissioning Manual.

Function diagrams (see SINAMICS S120/S150 List Manual)

- 3635 EPOS - Interpolator (r0108.4 = 1)
- 4010 Position control - Actual position value processing (r0108.3 = 1)

Overview of important parameters (see SINAMICS S120/S150 List Manual)

- p2576 EPOS modulo offset modulo range
- p2577 BI: EPOS modulo offset activation
- p2583 EPOS backlash compensation
- r2684.0...15 CO/BO: EPOS status word 2
- r2685 CO: EPOS correction value

9.8.2 Limits

Overview

The following list provides an overview of the functions that can be limited and their parameters.

- Limiting the traversing profiles
  - Maximum velocity (p2571)
  - Maximum acceleration (p2572) / maximum deceleration (p2573)
- Limiting the traversing range
  - Software limit switch (p2578, p2579, p2580, p2581, p2582)
  - Hardware limit switch (p2568, p2569, p2570)
- Jerk limitation
  - Jerk limitation (p2574)
  - Activation of jerk limitation (p2575)

The individual subfunctions are described below.

9.8.2.1 Maximum velocity

Function description

The maximum velocity of an axis is defined using parameter p2571. The velocity should not be set to be greater than the maximum speeds in r1084 and r1087.

The drive is limited to this velocity if a higher velocity is specified or programmed via the override (p2646) for the reference point approach or is programmed in the traversing block.

Parameter p2571 (maximum velocity) defines the maximum traversing velocity in units 1000 LU/min. If the maximum velocity is changed, then this limits the velocity of a traversing task that is presently being executed.

This limit is only effective in the positioning mode for:

- Jog mode
- Processing traversing blocks
- Direct setpoint specification / MDI for positioning and setting-up
- Reference point approach

9.8.2.2 Maximum acceleration/deceleration

Function description

Parameter p2572 (maximum acceleration) and p2573 (maximum deceleration) define the maximum acceleration and the maximum deceleration. In both cases, the units are 1000 LU/s^2.

Both values are relevant for:

- Jog mode
- Processing traversing blocks
- Direct setpoint specification / MDI for positioning and setting up
- Reference point approach

The parameters do not have any effect when faults occur with the fault responses OFF1/OFF2/OFF3.

In the traversing blocks mode, the acceleration and deceleration can be set in multiple integer steps (1%, 2% ... 100%) of the maximum acceleration and deceleration. The acceleration/deceleration override (assignment of 4000 hex = 100%) is specified in the "Direct setpoint specification/MDI" mode for positioning and setting up.

Note

A maximum acceleration or deceleration dependent on the actual velocity (transitioned acceleration) is not supported.

Note

When using the PROFIdrive telegram 110, the velocity override is already connected and has to be supplied by the telegram.

9.8.2.3 Limit traversing range

Function description

The traversing range of a linear axis can be limited using either the software limit switch or the hardware limit switch (STOP cams).

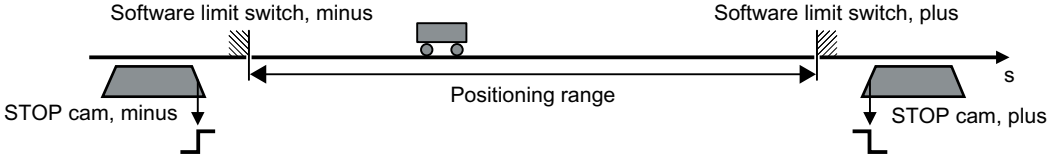

Figure 9-15 Software and hardware limit switches as limits

Activated software limit switches limit the position set value by specifying the connector input p2578 (software limit switch minus) and p2579 (software limit switch plus).

Activated hardware limit switches are evaluated on the converter using the binector inputs p2569 (STOP cams, minus) and p2570 (STOP cams, plus).

Limiting the traversing range using the software limit switch

For this procedure, the position set value of a linear axis is limited in accordance with the specified traversing range over the software limit switch.

The traversing range is limited using software limit switches only if the following requirements are met:

- The software limit switches are activated (p2582 = 1).
- The reference point is set (r2684.11 = 1).
- The modulo correction is not active (p2577 = 0).

The limit is implemented using the connector inputs p2578 for the software limit switch minus and p2579 for the software limit switch plus. In the factory settings, the connector inputs are linked to the connector output p2580 for the software limit switch minus and p2581 for the software limit switch plus. Using parameters p2580 and p2581, you can set the desired end positions of the software limit switch.

Limiting the traversing range using hardware limit switches

When this procedure is used, the converter limits the traversing range of a linear axis using hardware limit switches (STOP cams).

The traversing range is limited using hardware limit switches only if the following requirements are met:

- The hardware limit switches are activated (p2568 = 1).

The signals of the hardware limit switches are evaluated using the digital outputs of the converter. There are two available methods for evaluating the hardware limit switches:

- Edge-triggered evaluation (factory setting)
- Level-triggered evaluation

For limiting the traversing range using hardware limit switches, edge-triggered evaluation has been configured as a factory setting. The signals are evaluated using the binector inputs p2569 for the hardware limit switches minus and p2570 for the hardware limit switches plus. The state of the hardware limit switches is “active” if the signals of the hardware limit switches are recognized as “0” at the binector inputs.

You can test the function of the hardware limit switches by running up to the hardware limit switches in **position-controlled** operation of the axis (e.g. with the “jog” function).

Moving beyond the hardware limit switches (STOP cams)

For maintenance work, it may be necessary for the axis to traverse beyond the activated hardware limit switches (STOP cams).

To ensure the ability for the axis to traverse beyond the hardware limit switches in **position-controlled** operation, proceed as follows:

1. Deactivate the corresponding hardware limit switch (minus or plus).
2. Have the axis with position control traverse beyond the hardware limit switch.

NOTICE
Damaging the machine by traveling past a hardware limit switch Traveling past a hardware limit switch may damage the machine. • Monitor axis motion, and manually stop the axis in plenty of time, e.g. using an Emergency Stop.

If the axis traverses beyond the hardware limit switches in **speed-controlled** operation, the following occurs:

1. When the hardware limit switch is initially approached, the converter stops the axis.
2. Depending on which direction the axis is traversing, the converter reports the fault F07491 (EPOS: STOP cams, minus approached) or F07492 (EPOS: STOP cams, plus approached).

After fault acknowledgment, it is possible for the speed-controlled axis to traverse further in the same direction over the corresponding hardware limit switch.

If the position actual value resolution is not adequate in the **speed-controlled** mode, when returning to the positioning range, the converter cannot identify whether the axis is again within the positioning range. As a consequence, the converter prevents the axis from being traversed in the position-controlled mode.

You must select the level-triggered evaluation of the hardware limit switches to guarantee position-controlled traversing of the axis, even if the position actual value resolution is not adequate:

Requirement

- The hardware limit switch reaches the end of the machine.

Procedure

1. Open the parameter view in Startdrive.
2. Set p2584.01 = 1.
   This setting means you have selected the level-triggered evaluation of the hardware limit switches.

9.8.2.4 Jerk limitation

Function description

Acceleration and deceleration can change suddenly if jerk limiting has not been activated. The diagram below shows the traversing profile when jerk limitation has not been activated. The maximum acceleration (a_{max}) and deceleration (d_{max}) are effective immediately. The drive accelerates until the target speed (v_{target}) is reached and then switches to the constant velocity phase.

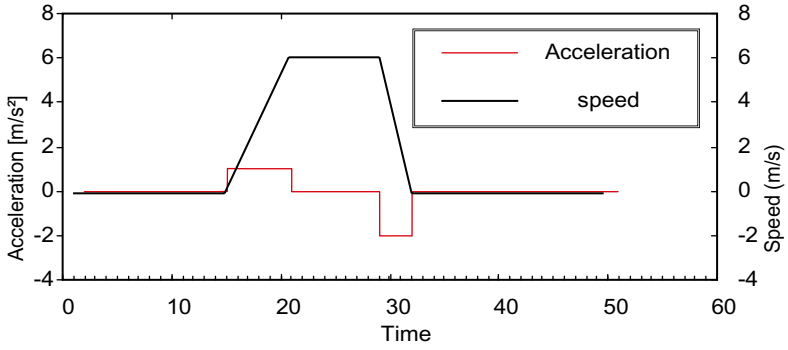

Figure 9-16 Without jerk limitation

Jerk limitation can be used to achieve a ramp-like change of both variables, which ensures "smooth" acceleration and braking as shown in the diagram below. Ideally, acceleration and deceleration should be linear.

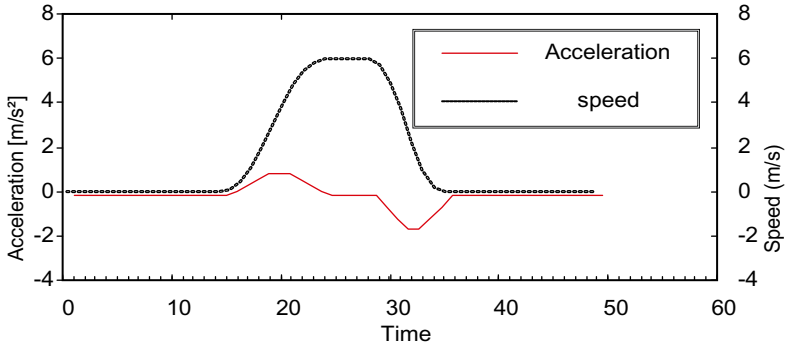

Figure 9-17 Activated jerk limitation

The maximum gradient (r_k) can be set in parameter p2574 (jerk limitation) in the unit LU/s³ for both acceleration and braking. The resolution is 1000 LU/s³. To activate the limitation permanently, set parameter p2575 (Activate jerk limitation) to 1. In this case, limitation cannot be activated or deactivated in traversing block mode by means of the command "JERK". Switching the limitation on/off in the traversing block mode requires parameter p2575 (Activate jerk limitation) to be set to zero. The status signal r2684.6 (Jerk limitation active) indicates whether or not jerk limitation is active.

The limitation is effective for the following activities:

- Jog mode
- Processing traversing blocks

- Direct setpoint specification / MDI for positioning and setting up
- Reference point approach
- Stop responses due to alarms

Jerk limitation is not active when messages are generated with stop responses OFF1/OFF2/ OFF3.

9.8.2.5 Starting against a closed brake

Function description

Under EPOS, if the drive should start against a closed brake, for example, for a suspended load, then the enable signal p0899.2 is briefly withdrawn. The drive pulses are canceled and fault F07490 is output.

To avoid this happening, using p1513 activate a supplementary torque which corresponds to the brake holding torque. As a result, after releasing the brake, the load cannot sag and the drive remains in closed-loop control without fault F07490 being output.

9.8.2.6 Function diagrams and parameters

Function diagrams (see SINAMICS S120/S150 List Manual)

- 3630 EPOS - Traversing range limits (r0108.4 = 1)

Overview of important parameters (see SINAMICS S120/S150 List Manual)

- p2571 EPOS maximum speed
- p2572 EPOS maximum acceleration
- p2573 EPOS maximum delay
- p2646 CI: EPOS velocity override

Software limit switch

- p2578 CI: EPOS software limit switch, minus signal source
- p2579 CI: EPOS software limit switch, plus signal source
- p2580 CO: EPOS software limit switch, minus
- p2581 CO: EPOS software limit switch, plus
- p2582 BI: EPOS software limit switch activation
- r2683.0...14 CO/BO: EPOS status word 1

STOP cam

- p2568 BI: EPOS STOP cam activation
- p2569 BI: EPOS STOP cam, minus
- p2570 BI: EPOS STOP cam, plus
- r2684.0...15 CO/BO: EPOS status word 2

Jerk limitation

- p2574 EPOS jerk limitation
- p2575 BI: EPOS jerk limitation activation

9.8.3 EPOS and safe setpoint velocity limitation

Function description

If safe speed monitoring (SLS) or the safe direction motion monitoring (SDI) is also to be used at the same time as the EPOS positioning function, EPOS must be informed about the activated monitoring limits. Otherwise these speed monitoring limits can be violated by the EPOS setpoint input. By monitoring the limit value, if violated, the drive is stopped therefore exiting the intended motion sequence. In this case, the relevant safety faults are output first, and then the sequential faults created by EPOS.

Using parameter r9733, the safety functions offer EPOS setpoint limiting values, which when taken into account, prevent the safety limit value being violated.

In order to prevent a safety limit violation by the EPOS setpoint specification, you must transfer the setpoint limit value (r9733) as follows to the maximum speed setpoint of EPOS (p2594):

- r9733[0] = p2594[1]
- r9733[1] = p2594[2]

In this regard you must set the delay time for SLS/SOS (p9551), so that the relevant safety monitoring function only becomes active after the maximum required time for the speed to be reduced below the limit. This required braking time is determined by the current speed, the jerk limit in p2574 and the maximum delay in p2573.

9.8.4 Referencing

Function description

After a machine has been switched on, for positioning, the absolute dimension reference must be established to the machine zero. This procedure is referred to as referencing.

The following referencing types are possible:

- Setting the reference point (all encoder types)
- Incremental encoder
  Active referencing (reference point approach; p2597 = 0):
  - Reference cams and encoder zero mark (p2607 = 1)
  - Encoder zero mark (p0495 = 0 or p0494 = 0)
  - External zero mark (p0495 ≠ 0 or p0494 ≠ 0)

- Flying referencing (passive; p2597 = 1)
- Absolute encoder
  - Absolute encoder adjustment
  - Absolute encoder adjustment with offset acceptance
  - Flying referencing (passive; p2597 = 1)

Note

Observe the information about the parameters in Chapter "Function diagrams and parameters (Page 485)".

A connector input is provided to enter reference point coordinates for all types of referencing. This allows, e.g. changes/input via the higher-level controller. However, to permanently enter the reference point coordinate, an adjustable parameter for this quantity is also required. As standard, this adjustable parameter p2599 is interconnected to connector input p2598.

Features

- Reference point offset (p2600)
- Reversing cams (p2613, p2614)
- Reference cam (p2612)
- Binector input start (p2595)
- Binector input setting (p2596)
- Velocity override (p2646)
- Reference point coordinate (p2598, p2599)
- Referencing type selection (p2597)
- Absolute encoder adjustment (p2507)

Note

Referencing of distance-coded zero marks is not supported.

Set reference point

The reference point can be set using a 0/1 edge at binector input p2596 (set reference point) if no traversing commands are active and the actual position value is valid (p2658 = 1 signal). A reference point can also be set for an intermediate stop.

The current actual position of the drive is set here as the reference point using the coordinates specified by connector input p2598 (reference point coordinates). The setpoint (r2665) is adjusted accordingly.

This function also uses actual position value correction for the position controller (p2512 and p2513). Connector input p2598 is connected to adjustable parameter p2599 as standard. The binector input is not effective for the traversing task being presently executed.

Absolute encoder adjustment

When commissioning an absolute encoder for the first time, a mechanical axis position is aligned with the encoder absolute position and then the system is synchronized.

After the drive has been switched off the encoder position information is retained. This means that the axis does not have to be readjusted when the drive powers up.

Note

It is crucial that absolute encoders are adjusted the first time that they are commissioned.

Requirements

The following requirement must be satisfied before the adjustment:

- The axis is located at a defined reference position.

Procedure

1. Call the adjustment using parameter p2507 = 2.
   Please observe the following information relevant for this particular step:
   - Using the reference point coordinate in p2599, an offset value is determined and entered into p2525. The offset value is used to calculate the position actual value (r2521). Using value "3", parameter p2507 signals that the adjustment is valid. In addition, bit r2684.11 (reference point set) is set to a value of "1".
   - If the drive had identified the adjustment, then note (Alarm A7441) is displayed. The user is prompted to save the adjustment from RAM to ROM.
   - Note down the offset value that has possibly been determined so that you can enter this into p2525 when using the "Absolute encoder adjustment with offset acceptance" function.
2. Save the offset of the absolute encoder adjustment in p2525 in a non-volatile fashion in (RAM to ROM).
   Please observe the following information relevant for this particular step:
   - If an adjustment is lost for an already adjusted axis, the axis will remain unadjusted even after a POWER ON of the drive. In this particular case, it is crucial that the axis is readjusted.

   Note

   After being commissioned for the first time, carefully ensure that the drive train and its configuration cannot be mechanically changed or modified. When mechanical changes are made, the synchronization between the encoder actual value and the machine zero is lost. In this particular case, it is crucial that the axis is readjusted.

Rotary absolute encoder

During adjustment with the rotary absolute encoder, a range is aligned symmetrically around the zero point with half the encoder range within which the position is restored after switch off/on.

If position tracking is deactivated (p2720.0 = 0), only one encoder overflow is permitted to occur in this range (for further information, see Chapter Actual position value processing (Page 445)).

If the reference point (p2599) is in the encoder range, the actual position value is set to the reference point during adjustment. Otherwise, adjustment is canceled with F07443.

NOTICE
Unplanned movement of the machine when using the encoder outside the defined encoder range If a rotary absolute encoder is used outside the defined encoder range, then after switching off/switching on, motion can occur that was not planned. This can damage the machine. • After adjustment, ensure that the encoder range that has been set up is not exited. • Activate position tracking (p2720.0) if there is a risk that the encoder range is exited.

Linear absolute value encoder

No overflow occurs with linear absolute encoders, which means that the position can be restored within the entire traversing range after switch off/on once adjustment has been carried out. During adjustment, the actual position value is set in line with the reference point.

Absolute encoder adjustment with offset acceptance

In addition to the previously described method, the adjustment can also be carried out using the "Absolute encoder adjustment with offset acceptance" function.

Adjusting

The "Absolute encoder adjustment with offset acceptance" is realized by determining and accepting an offset value while the drive is being commissioned for the first time.

When determining the offset, the encoder actual value is aligned once with the machine zero; it is then set as being valid, and the system synchronizes to the absolute position that has been determined. It is not necessary that the axis is located at a defined reference position.

After the drive has been switched off the encoder position information is retained. This means that the axis does not have to be readjusted when the drive powers up.

Requirements

The following requirements must be satisfied before the adjustment:

- The offset value p2525 was determined when commissioning the drive for the first time.
- After being commissioned for the first time, the drive train and its configuration was not mechanically changed.

Procedure

Proceed as follows to carry out the "Absolute encoder adjustment with offset acceptance" procedure:

1. Enter the offset value, determined when commissioning the drive for the first time, into parameter p2525.
2. Call "Absolute encoder adjustment with offset acceptance" using parameter p2507 = 4 to accept the offset value and to link with the adjustment point.
   Please observe the following information relevant for this particular step:
   - The offset value is used to calculate the position actual value (r2521). Using value "3", parameter p2507 signals that the adjustment is valid. In addition, bit r2684.11 (= reference point set) is set to a value of "1".
   - The offset value is immediately accepted, and is active without the system having to be restarted. If the drive had identified the adjustment, then note (Alarm A7441) is displayed. The user is prompted to save the adjustment from RAM to ROM.
3. Save the offset of the absolute encoder adjustment in p2525 in a non-volatile fashion in (RAM to ROM).

   Note

   After being commissioned for the first time, carefully ensure that the drive train and its configuration have not been mechanically changed or modified. When mechanical changes are made, the synchronization between the encoder actual value and the machine zero is lost. In this particular case, it is crucial that the axis is readjusted.

4. Check the following machine positions: Check the end positions, software limit switches and reference point using a test run at a low velocity.

Referencing with DRIVE-CLiQ encoders

DRIVE-CLiQ encoders are available as either "multiturn" or "singleturn" absolute encoders. If the "referencing" function is selected via the PROFIdrive encoder interface and if a DRIVE-CLiQ encoder or other type of absolute encoder is connected via the DRIVE-CLiQ interface, the zero point of the singleturn position is used as the reference point.

Further information on commissioning DRIVE-CLiQ encoders is provided in the SINAMICS S120 Commissioning Manual.

9.8.4.1 Reference point approach (incremental measuring system)

Function description

With the reference point approach (in the case of an incremental measuring system), the drive is moved to its reference point. In so doing, the drive itself controls and monitors the complete referencing cycle.

Incremental measuring systems require that after the machine has been powered up, the absolute dimension reference is established to the machine zero point. When powering-up the actual position value x_0 in the non-referenced state is set to $x_0 = 0$. Using the reference point

approach, the drive can be reproducibly moved to its reference point. The geometry with a positive starting direction (p2604 = "0") is shown in the following.

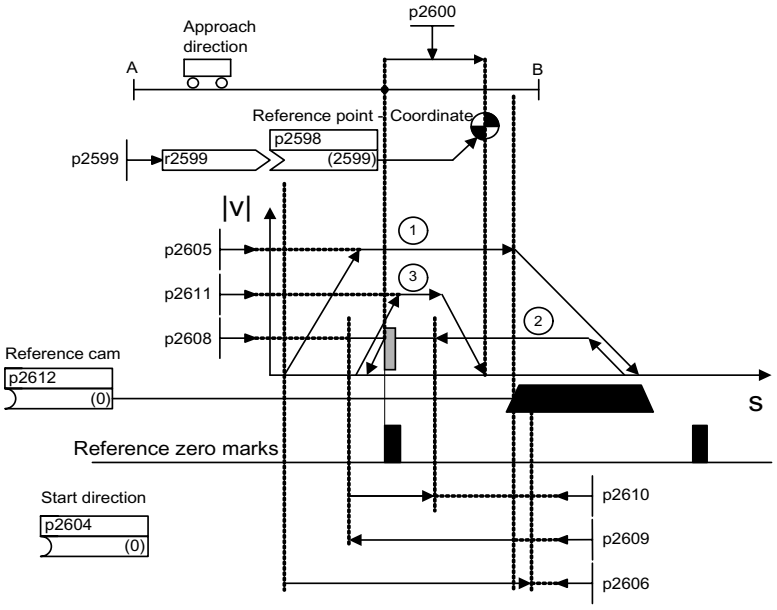

Figure 9-18 Example: Reference point approach with reference cam

The signal on binector input p2595 (start referencing) is used to trigger travel to the reference cam (p2607 = 1) if search for reference is selected at the same time (0 signal at binector input p2597 (referencing type selection)). The signal in binector input p2595 (start referencing) must be set during the entire referencing process otherwise the process is aborted. Once started, the status signal r2684.11 (reference point set) is reset.

The software limit switch monitoring is inactive during the complete reference point approach; only the maximum traversing range is checked. The SW limit switch monitoring is, if required, re-activated after completion.

The velocity override set is only effective during the search for the reference cam (see step 1). This ensures that the "cam end" and "zero mark" positions are always overrun at the same speed. If signal propagation delays arise during switching processes, this ensures that the offset caused during establishment of position is the same in each referencing process.

Axes that only have one zero mark over their complete traversing or modulo range are designated with parameter p2607 = 0 (no reference cam present). After starting the referencing process, synchronization to the reference zero marks is started straight away (see step 2) for these axes.

Step 1: Travel to the reference cam

If there is no reference cam (p2607 = 0), then go to step 2.

When the referencing process is started, the drive accelerates at maximum acceleration (p2572) to the reference cam approach velocity (p2605). The direction of the approach is determined by the signal of binector input p2604 (reference point approach start direction).

When the reference cam is reached, this is communicated to the drive using the signal at binector input p2612 (reference cam); the drive then brakes down to standstill with the maximum deceleration (p2573).

If a signal at binector input p2613 (reversing cam, MINUS) or at binector input p2614 (reversing cam, PLUS) is detected during reference point approach, the search direction is reversed.

If the minus reversing cam is approached in the positive direction of travel or the plus reversing cam in the negative direction of travel, fault F07499 (EPOS: reversing cam approached with the incorrect traversing direction) is output. In this case, the wiring of the reversing cams (BI: p2613, BI: p2614) or the direction of approach to the reversing cam must be checked.

The reversing cams are low active. If both reversing cams are active (p2613 = "0" and p2614 = "0"), the drive remains stationary. As soon as the reference cam is found, then synchronization to the reference zero mark is immediately started (refer to step 2).

If the axis leaves its start position and travels the distance defined in parameter p2606 (max. distance to reference cam) heading towards the reference cam without actually reaching the reference cam, the drive remains stationary and fault F07458 (reference cam not found) is issued.

If the axis is already located at the cam, when referencing is started, then traversing to the reference cam is not executed, but synchronization to the reference zero mark is immediately started (refer to step 2).

Note

The velocity override is effective during the search for the cam. By changing the encoder data set, status signal r2684.11 (reference point set) is reset.

The cam switch must be able to supply both a rising and a falling edge. For a reference point approach with evaluation of the encoder zero mark, for increasing actual position values the 0/1 edge is evaluated and for decreasing actual position values, the 1/0 edge. Inversion of the edge evaluation is not possible at the sensor zero mark.

If the length measuring system has several zero marks which repeat at cyclic intervals (e.g. incremental, rotary measuring system), you must ensure that the cam is adjusted so that the same zero mark is always evaluated.

The following factors may impact the behavior of the "reference cam" control signal:

- Switching accuracy and time delay of reference cam switch
- Position controller cycle of drive
- Interpolation cycle of drive
- Temperature sensitivity of machine’s mechanical system

Step 2: Synchronization to reference zero mark (encoder zero mark or external zero mark)

Reference cam available (p2607 = 1):

In step 2, the drive accelerates to the velocity specified in p2608 (zero mark approach velocity) in the direction opposite to that specified using binector input p2604 (reference point approach start direction). The zero mark is expected at distance p2609 (max. distance to zero mark). The search for the zero mark is active (status bit r2684.0 = "1" (reference point approach active)) as soon as the drive leaves the cam (p2612 = "0") and is within the tolerance band for evaluation (p2609 - p2610). If the position of the zero mark is known (encoder evaluation), the actual position of the drive can be synchronized using the zero mark. The drive starts the search for

reference (refer to step 3). The distance moved between the end of the cam and the zero mark is displayed in diagnostics parameter r2680 (difference between the cam - zero mark).

- Encoder zero mark available (p0494 = 0 or p0495 = 0)[1], no reference cams (p2607 = 0): Synchronization to the reference zero mark begins as soon as the signal at binector input p2595 (start referencing) is detected. The drive accelerates to the velocity, specified in parameter p2608 (zero mark approach velocity) in the direction specified by the signal of binector input p2604 (reference point approach start direction).
  The drive synchronizes to the first zero mark and then starts to travel towards the reference point (refer to step 3).

  Note

  In this case the direction of approach to the reference zero mark is the opposite to the axes with reference cams!

- External zero mark available (p0494 ≠ 0 or p0495 ≠ 0) [1], no reference cams (p2607 = 0): Synchronization to an external zero mark begins as soon as the signal at binector input p2595 (start referencing) is detected. The drive accelerates to the velocity, specified in parameter p2608 (zero mark approach velocity) in the direction specified by the signal of binector input p2604 (reference point approach start direction). The drive synchronizes to the first external zero mark (p0494 or p0495)[1]. The drive continues to travel with the same velocity and travel is started to the reference point (refer to step 3).

  Note

  The velocity override is inoperative during this process.

  An equivalent zero mark can be set and the corresponding digital input selected using parameters p0494 or p0495 [1] (equivalent zero mark input terminal). As standard, for increasing actual position values, the 0/1 edge is evaluated and for decreasing actual position values, the 1/0 edge. For the equivalent zero mark, this can be inverted using parameter p0490 (invert measuring probe or equivalent zero mark).

[1] Observe the explanation provided in Chapter "Function diagrams and parameters (Page 485)".

Step 3: Travel to reference point

Travel to the reference point is started when the drive has successfully synchronized to the reference zero mark (refer to step 2). Once the reference zero mark has been detected, the drive accelerates on-the-fly to the reference point approach velocity set in parameter p2611. The drive moves through the reference point offset (p2600), i.e. the distance between the zero mark and reference point.

If the axis has reached the reference point, then the actual position value and setpoint are set to the value specified using connector input p2598 (reference point coordinate) (as standard,

connector input p2598 is connected with adjustable parameter p2599). The axis is then referenced and the status signal r2684.11 (reference point set) set.

Note

The velocity override is inoperative during this process.

If the braking distance is longer than the reference point offset or a direction reversal is required as a result of the selected reference point offset, then after detecting the reference zero mark, the drive initially brakes to standstill and then travels back.

9.8.4.2 Flying referencing

Function description

Inaccuracies in the actual value acquisition are compensated with flying referencing. This increases the load-side positioning accuracy.

The mode "flying referencing" (also known as post-referencing, positioning monitoring), which is selected using a "1" signal at binector input p2597 (select referencing type), can be used in every mode (jog, traversing block and direct setpoint specification for positioning/setting-up) and is superimposed on the currently active mode. Flying referencing can be selected both with incremental and absolute measuring systems.

With "flying referencing" during incremental positioning (relative), you can select whether the offset value is to be taken into account for the travel path or not (p2603).

"Flying referencing" is activated by a 0/1 edge at binector input p2595 (start referencing). The signal in binector input p2595 (start referencing) must be set during the entire referencing process otherwise the process is aborted.

Status bit r2684.1 (passive/flying referencing active) is linked with binector input p2509 (activate measurement probe evaluation). It activates measurement probe evaluation. Binector inputs p2510 (measurement probe selection) and p2511 (measurement probe edge evaluation) can be used to set which measurement probe (1 or 2) and which measurement edge (0/1 or 1/0) is to be used.

The probe pulse is used to supply connector input p2660 (referencing measured value) with the measured value via parameter r2523. The validity of the measurement is reported to binector input p2661 (measurement valid feedback) via r2526.2.

Note

The following must always apply to the "Flying referencing mode" windows:

p2602 (outer window) > p2601 (inner window).

You can obtain more information on the "Flying referencing" function in the SINAMICS S120/S150 List Manual in function diagram 3614.

The following then happens:

- If the drive has not yet been referenced, status bit r2684.11 (reference point set) is set to "1".
- If the drive has already been referenced, status bit r2684.11 (reference point set) is not reset when starting flying referencing.
- If the drive has already been referenced and the position difference is less than the inner window (p2601), the old actual position value is retained.
- If the drive has already been referenced and the position difference is more than the outer window (p2602), alarm A07489 (reference point offset outside window 2) is output and the status bit r2684.3 (pressure mark outside window 2) set. No offset to the actual position value is undertaken.
- If the drive has already been referenced and the position difference is more than the inner window (p2601) and less that the outer window (p2602), the actual position value is offset.

Note

On-the-fly referencing is superimposed on an active operating mode, it is therefore not an active mode.

In contrast to reference point approach, flying referencing can be carried out superimposed by the machine process.

As standard, for flying referencing, measuring probe evaluation is used; when enabled, the measuring probe is selected (p2510) and the edge evaluation (p2511) (in the factory setting, measuring probe 1 is always the measuring probe, flank evaluation in the factory setting is always the 0/1 edge).

9.8.4.3 Data set switchover

Function description

Using drive data set changeover (DDS), motor data sets (MDS, p0186) and encoder data sets (EDS, p0187 to p0189) can be changed over. The following table shows when the reference bit (r2684.11) or the status of the adjustment with absolute encoders (p2507) is reset.

In the following cases, when a DDS changeover takes place, the actual position value becomes invalid (p2521 = 0) and the reference point (r2684.11 = 0) is reset.

- The EDS that is effective for the position control changes.
- The encoder assignment changes (p2502).
- The mechanical relationships change (p2503...p2506)

With absolute encoders, the status of the adjustment (p2507) is also reset, if the same absolute encoder is selected for the position control although the mechanical conditions have changed (p2503 to p2506).

In the operation state, a fault (F07494) is also output.

The following table contains a few examples for data set changeover. The initial data set is always DDS0.

Table 9-7 DDS changeover without load gear position tracking

DDS	**0**	**1**	**2**	**3**	**4**	**5**	**6**	**7**
p0186 (MDS)	0	0	0	0	0	1	2	3
p0187 (encoder 1)	EDS0	EDS0	EDS0	EDS0	EDS0	EDS4	EDS5	EDS0
p0188 (encoder 2)	EDS1	EDS1	EDS1	EDS1	EDS3	EDS1	EDS6	EDS1
p0189 (encoder 3)	EDS2	EDS2	EDS2	EDS2	EDS2	EDS2	EDS7	EDS2
p2502 (encoder for position control)	Encoder_1	Encoder_1	Encoder_1	Encoder_2	Encoder_2	Encoder_1	Encoder_1	Encoder_1
Mechanical relationships p2504/p2505/ p2506/p2503 A, B and D designate different mechanical relationships.	A	A	B	A	A	A	D	A
Load gear position tracking	Deactivated	Deactivated	Deactivated	Deactivated	Deactivated	Deactivated	Deactivated	Deactivated
Changeover response	---	Changeover during pulse inhibit or operation has no effect	Pulse inhibit: Position actual value preprocessing is newly initiated[1] and referencing bit[2] is reset. Operation: Fault is output. Position actual value preprocessing is newly initiated[1] and referencing bit[2] is reset.	Pulse inhibit: Position actual value preprocessing is newly initiated[1] and referencing bit[3] is reset. Operation: Fault is output. Actual position value conditioning newly set[1] and referencing bit[3] is reset.				MDS changeover alone during pulse inhibit or operation has no effect

1) "Is newly initiated" means: For absolute encoders, the absolute value is read out again and for incremental encoders a restart is performed as after a POWER ON.

2) For incremental encoders r2684.11 ("Reference point set") is reset, and additionally for absolute encoders the status of adjustment (p2507).

3) For incremental encoders r2684.11 ("Reference point set") is reset, and for absolute encoders the status of adjustment (p2507) is not reset in addition, because the encoder data set is different from the original.

9.8.4.4 Function diagrams and parameters

Function diagrams (see SINAMICS S120/S150 List Manual)

- 3612 EPOS - referencing / reference point approach mode (r0108.4 = 1) (p2597 = 0 signal)
- 3614 EPOS - flying referencing mode (r0108.4 = 1) (p2597 = 1 signal)

Overview of important parameters (see SINAMICS S120/S150 List Manual)

- p0494[0...n] Equivalent zero mark, input terminal[1)]
- p0495 Equivalent zero mark, input terminal[1)]
- p2596 BI: EPOS set reference point
- p2597 BI: EPOS referencing type selection
- p2598[0...3] CI: EPOS reference point coordinate, signal source
- p2599 CO: EPOS reference point coordinate value
- p2600 EPOS reference point approach, reference point offset

[1)] Parameter p0494 corresponds to parameter p0495 regarding its significance. In addition, parameter p0494 is dependent on an encoder data set; for example which can be used for the data set switchover for interchangeable machining heads.

9.8.5 Referencing with several zero marks per revolution

Function description

The drive detects several zero marks per revolution when using reduction gears or measuring gears. In this cases, an additional BERO signal allows the correct zero mark to be selected.

Referencing with a reduction gear

The following figure shows an application example for referencing with several zero marks per revolution and selecting the correct zero mark using a BERO signal.

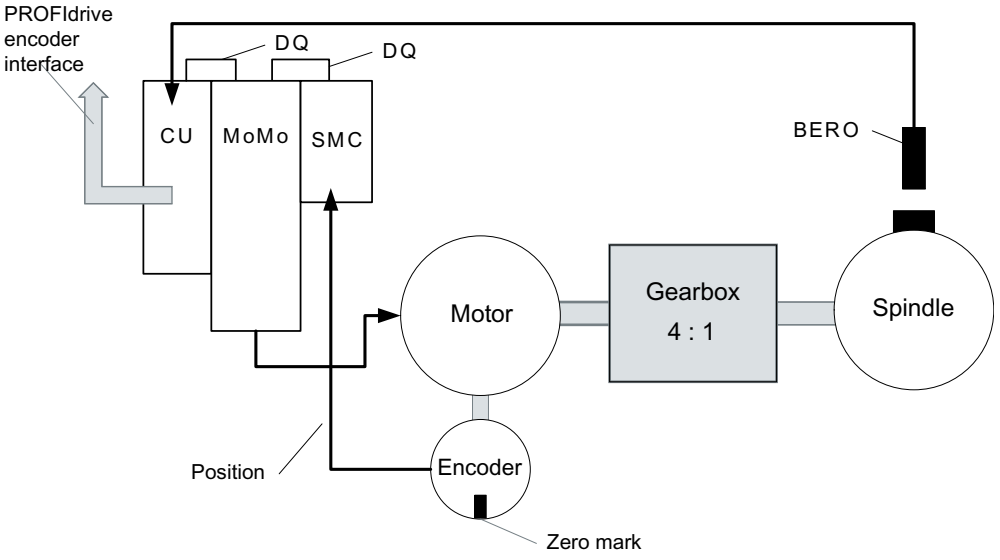

Figure 9-19 Gearbox between motor and spindle

By using a reduction gear between the motor and the load or spindle, the drive detects several revolutions of the motor per mechanical revolution of the load - and therefore also several encoder zero marks.

Since the higher-level control or position control when referencing requires a unique reference between the encoder zero mark and the machine axis (load/spindle), the "correct" zero mark is selected using a BERO signal.

Referencing with a measuring gearbox

The following figure shows an application example for using referencing with several zero marks per revolution with a measuring gear located between the motor/load and encoder.

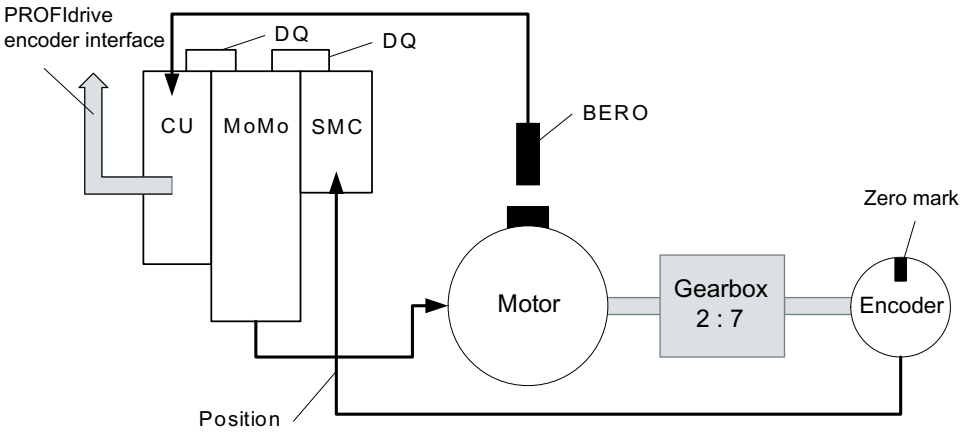

Figure 9-20 Measuring gear between the motor and encoder

As a result of the measuring gear, several encoder zero marks appear within one motor/load revolution. Using the BERO signal, also here, the correct zero mark for referencing can be selected from the several encoder zero marks.

9.8.5.1 Evaluating BERO signals

Requirement

- The position of the zero mark that has the shortest distance to the position when the BERO signal switches is to be determined.
- The appropriate mechanical preconditions must be fulfilled when mounting the BERO.
- Preferred mechanical configuration
  The BERO signal covers the zero mark, as in this case, the zero mark selection is independent of the direction of rotation.
- In order to be able to precisely determine the position of the BERO (in relation to the reference position of the encoder) even at higher speeds, this must be connected to a fast Control Unit input.

Procedure

You have the option of either evaluating the positive or negative signal edge of the BERO signal:

- Positive edge (factory setting)
  For referencing with a positive edge evaluation of the BERO signal, the encoder interface supplies the position of that reference mark, which is directly detected after the positive edge of the BERO signal. If, mechanically, the BERO is sized in such a way that the BERO signal covers the entire width of the encoder zero mark, the required encoder zero mark will be reliably detected in both traversing directions.
- Negative edge
  For referencing with a negative edge evaluation of the BERO signal, synchronization is realized to the next reference mark after leaving the BERO signal.

Setting referencing

Proceed as follows to parameterize referencing with several zero marks:

1. Using parameter p0493, define the fast digital input to which the BERO is connected.
2. Set the corresponding bit of parameter p0490 to 1.
   The signal inversion means that the evaluation uses the negative edge of the BERO signal.

Referencing procedure

The referencing process is performed as follows:

1. Via the PROFIdrive encoder interface, the Control Unit receives the request for a reference mark search.
2. Using the parameterization, the Control Unit determines the zero mark depending on the BERO signal.
3. The Control Unit provides the (possibly corrected) zero mark position as reference mark via the PROFIdrive encoder interface.

Note

At high speeds or if the distance between the BERO signal and the following zero mark is too low, then it is possible that the required, next zero mark is not detected, but instead, a subsequent one due to the computation time. Due to the known zero mark distance, in this particular case, the determined position is correspondingly corrected.

When using a measuring gear, the zero mark position depends on the motor revolution. In this case, a correction is also performed and for each motor revolution a reverse calculation is made back to the position of the zero mark with the shortest distance BERO signal ↔ zero mark.

Overview of important parameters (see SINAMICS S120/S150 List Manual)

- p0488 Probe 1, input terminal
- p0489 Probe 2, input terminal
- p0493 Zero mark selection, input terminal
- p0495 Equivalent zero mark, input terminal
- p0580 Probe, input terminal
- p0680[0...7] Central probe, input terminal
- p2517[0...2] LR direct probe 1
- p2518[0...2] LR direct probe 2

9.8.6 Safely referencing under EPOS

Function description

Some safety functions (e.g. SLP, SP) require safe referencing. If EPOS is active at a drive, when referencing using EPOS, then the absolute position is also automatically transferred to the Safety Integrated functions.

The Safety Integrated functions only evaluate the absolute position if a safety function is parameterized, which requires an absolute value, e.g. SLP.

The following are examples for a load-side position calculation, depending on various encoder mounting versions and axis types.

Example 1

Safety Integrated Extended functions monitor the rotating load. EPOS and Safety Integrated Extended functions use the same rotary encoder at the motor. The rotating load is coupled to the motor via a gear. The speed/position values of the spindle are calculated.

- p2506 = 360000 => a position of 360000LU (r2521) corresponds to 360° (r9708)
- p2506 = 10000 => a position of 10000LU (r2521) corresponds to 360° (r9708)

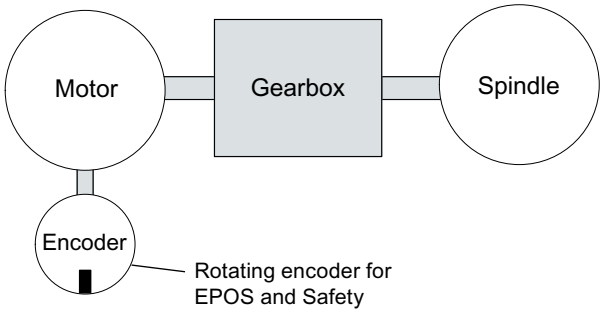

Figure 9-21 Example 1: EPOS and safe referencing (rotary)

The ratio for the gearbox used must be parameterized in p9521/p9522 for Safety Integrated Extended functions and in p2504/p2505 for EPOS. For a gearbox to convert 2 motor revolutions to 1 load revolution, set p9521 = 1, p9522 = 2, p2504 = 2 and p2505 = 1.

Example 2

Safety Integrated Extended functions monitors the linear axis using the rotating motor encoder. EPOS references using the linear scale.

- p2503 = 100000 => a position of 100000LU (r2521) corresponds to 10 mm (r9708)
- p2503 = 10000 => a position of 10000LU (r2521) corresponds to 10 mm (r9708)

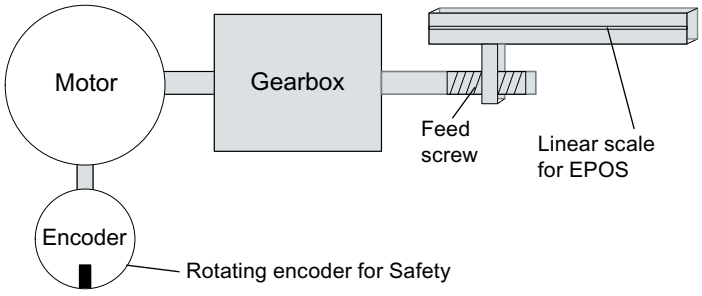

Figure 9-22 Example 2: EPOS and safe referencing (linear)

Safety Integrated Extended function uses the rotating motor encoder. The gearbox is parameterized using p9521/p9522. The spindle pitch is parameterized in p9520. To calculate the load-side absolute position, EPOS directly uses the load-side linear scale. In this example, EPOS does not have to take into account the gearbox ratio and spindle pitch.

Example 3

Safety Integrated Extended functions monitor the linear axis using the rotating motor encoder. EPOS referenced using the same rotary motor encoder.

- p2506 = 10000, p9520 = 5 mm/revolution => a position of 10000LU (r2521) corresponds to 5 mm (r9708)
- p2506 = 5000, p9520 = 5 mm/revolution => a position of 10000LU (r2521) corresponds to 10 mm (r9708)

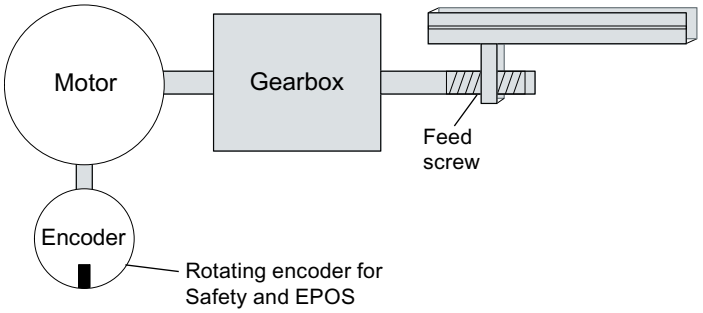

Figure 9-23 Example 3: EPOS and safe referencing (linear)

Using the spindle pitch parameterized in parameter p9520, rotary motion is converted into linear motion. EPOS does not take into account spindle pitch. Instead, the LUs are defined in the number of load revolutions in p2506. The load revolutions refer to the movement of the ball screw, that is, the motion after the gearbox. The ratio for the gearbox used must be parameterized in p9521/p9522 for Safety Integrated Extended functions and in p2504/p2505 for EPOS. For a gearbox to convert from 4 motor revolutions to 3 load revolutions, set:

- p9521 = 3
- p9522 = 4
- p2504 = 4
- p2505 = 3

Flying referencing under Safety Integrated Extended Functions

Flying referencing is frequently used to compensate for any inaccuracies in the actual value sensing, and therefore to optimize positioning accuracy on the load side. The Safety Integrated Extended Functions have lower accuracy requirements than the control. For Safety Integrated Extended Functions, cyclic adjustment is not necessary.

The initial activation signal initiates referencing. If, at the next switching signal, it is detected that the "referenced" state already exists, then no new reference position is transferred to Safety Integrated functions.

9.8.7 Traversing blocks

Function description

Up to 64 different traversing tasks can be saved. The maximum number is set using parameter p2615 (maximum number of traversing tasks). All parameters which describe a traversing task are effective during a block change if:

- The appropriate traversing block number is selected using binector inputs p2625 to p2630 (block selection, bits 0...5) and started using the signal at binector input p2631 (BI: EPOS (activate traversing task).
- A block change is made in a sequence of traversing tasks.
- An external block change p2632 "External block change" is triggered.

Parameterize traversing blocks

Traversing blocks are parameterized using **parameter sets** that have a fixed structure:

- Traversing block number (p2616[0...63])
  Each traversing block must have a traversing block number assigned to it. The traversing blocks are executed in the sequence of the traversing block numbers. Numbers containing the value "-1" are ignored so that the space can be reserved for subsequent traversing blocks, for example.
- Task (p2621[0...63])
  1: POSITIONING
  2: FIXED ENDSTOP
  3: ENDLESS_POS
  4: ENDLESS_NEG
  5: WAIT
  6: GOTO
  7: SET_O
  8: RESET_O
  9: JERK
- Motion parameters
  - Target position or traversing distance (p2617[0...63])
  - Velocity (p2618[0...63])
  - Acceleration override (p2619[0...63])
  - Deceleration override (p2620[0...63])

- Task mode (p2623[0...63])
  Processing a traversing task can be affected by the parameter p2623 (task mode).
  Value = 0000 cccc bbbb aaaa
  - aaaa: Identifiers
    000x → hide/show block (x = 0: show, x = 1: hide)
    A hidden block cannot be selected binary-coded via binector inputs p2625 to p2630. An alarm is output if you attempt to do so.
  - bbbb: Continuation condition
    0000, END: 0/1 edge at p2631
    0001, CONTINUE_WITH_STOP:
    The exact position parameterized in the block is approached (brake to standstill and positioning window monitoring) before block processing can continue.
    0010, CONTINUE_ON-THE-FLY:
    The system switches to the next traversing block "on the fly" when the braking point for the current block is reached (if the direction needs to be changed, this does not occur until the drive stops within the positioning window).
    0011, CONTINUE_EXTERNAL:
    Same as "CONTINUE_ON-THE-FLY", except that an instant block change can be triggered up to the braking point by a 0/1 edge. The 0/1 edge can be triggered via the binector input p2633 when p2632 = 1 or via the measuring probe input p2661, which is connected to parameter r2526.2 of the "position control" function module, when p2632 = 0. Position detection via the probe can be used as an accurate starting position for relative positioning. If an external block change is not triggered, a block change is triggered at the braking point.
    0100, CONTINUE_EXTERNAL_WAIT
    Control signal "External block change" can be used to trigger a flying changeover to the next task at any time during the traveling phase. If "External block change" is not triggered, the axis remains in the parameterized target position until the signal is issued. The difference here is that with CONTINUE_EXTERNAL, a flying changeover is carried out at the braking point if "External block change" has not been triggered, while here the drive waits for the signal in the target position.
    0101, CONTINUE_EXTERNAL_ALARM
    This is the same as CONTINUE_EXTERNAL_WAIT, except that alarm A07463 "External traversing block change in traversing block x not requested" is output when "External block change" is not triggered by the time the drive comes to a standstill. The alarm can be converted to a fault with a stop response so that block processing can be canceled if the control signal is not issued.

– cccc: positioning mode
The POSITION task (p2621 = 1) defines how the position specified in the traversing task is to be approached.
0000, ABSOLUTE:
The position specified in p2617 is approached.
0001, RELATIVE:
The axis is traveled along the value specified in p2617
0010, ABS_POS:
For rotary axes with modulo offset only. The position specified in p2617 is approached in a positive direction.
0011, ABS_NEG:
For rotary axes with modulo offset only. The position specified in p2617 is approached in a negative direction.

- Task parameter (command-dependent significance) (p2622[0...63])

Intermediate stop and reject traversing task

The intermediate stop is activated by a 0 signal at p2640. After activation, the system brakes with the parameterized deceleration value (p2620 or p2645).

The current traversing task can be rejected by a 0 signal at p2641. After activation, the system brakes with the maximum deceleration (p2573).

The "intermediate stop" and "reject traversing task" functions are only effective in "traversing blocks" and "direct setpoint specification / MDI" modes.

POSITIONING

The POSITIONING task initiates motion. The following parameters are evaluated:

- p2616[x] Block number
- p2617[x] Position
- p2618[x] Velocity
- p2619[x] Acceleration override
- p2620[x] Deceleration override
- p2623[x] Task mode

The task is executed until the target position is reached. If, when the task is activated, the drive is already located at the target position, then for the block change enable (CONTINUE_ON-THE-FLY or CONTINUE_EXTERNAL, the text task is selected in the same interpolation cycle. For CONTINUE_WITH_STOP, the next block is activated in the next interpolation cycle. CONTINUE_EXTERNAL_ALARM causes a message to be output immediately.

FIXED STOP

The FIXED STOP task triggers a traversing movement with reduced torque to fixed stop.

The following parameters are relevant:

- p2616[x] Block number
- p2617[x] Position
- p2618[x] Velocity
- p2619[x] Acceleration override
- p2620[x] Deceleration override
- p2623[x] Task mode
- p2622[x] Task parameter clamping torque [0.01 Nm] with rotary motors or clamping force in [1 N] with linear motors.

Possible continuation conditions include END, CONTINUE_WITH_STOP, CONTINUE_EXTERNAL, CONTINUE_EXTERNAL_WAIT.

ENDLESS POS, ENDLESS NEG

Using these tasks, the axis is accelerated to the specified velocity and is moved until:

- A software limit switch is reached.
- A STOP cam signal has been issued.
- The traversing range limit is reached.
- Motion is interrupted by the control signal "no intermediate stop / intermediate stop" (p2640).
- Motion is interrupted by the control signal "do not reject traversing task / reject traversing task" (p2641).
- An external block change is triggered (with the appropriate continuation condition).

The following parameters are relevant:

- p2616[x] Block number
- p2618[x] Velocity
- p2619[x] Acceleration override
- p2623[x] Task mode

All continuation conditions are possible.

JERK

Jerk limitation can be activated (command parameter = 1) or deactivated (task parameter = 0) by means of the JERK task. The signal at the binector input p2575 "Active jerk limitation" must be set to zero. The value parameterized in "jerk limit" p2574 is the jerk limit.

A precise stop is always carried out here regardless of the parameterized continuation condition of the task preceding the JERK task.

The following parameters are relevant:

- p2616[x] Block number
- p2622[x] Task parameter = 0 or 1

All continuation conditions are possible.

WAITING

The WAIT task can be used to set a waiting period which should expire before the following task is processed.

The following parameters are relevant:

- p2616[x] Block number
- p2622[x] Task parameter = delay time in milliseconds ≥ 0 ms
- p2623[x] Task mode

The delay time is entered in milliseconds - but is rounded-off to a multiple of the interpolator cycles p0115[5]. The minimum delay time is one interpolation cycle; this means that if a delay time is parameterized which is less than an interpolation cycle, then the system waits for one interpolation cycle.

Example:

Waiting time: 9 ms
Interpolation cycle: 4 ms
Active waiting time: 12 ms

Regardless of the parameterized continuation condition which is parameterized for the task that precedes the WAIT task, an exact stop is always executed before the waiting time expires. The WAIT task can be executed by an external block change.

Possible continuation conditions include END, CONTINUE_WITH_STOP, CONTINUE_EXTERNAL, CONTINUE_EXTERNAL_WAIT, and CONTINUE_EXTERNAL_ALARM. The fault message is triggered when "External block change" has still not been issued after the waiting time has elapsed.

GOTO

Using the GOTO task, jumps can be executed within a sequence of traversing tasks. The block number which is to be jumped to must be specified as task parameter. A continuation condition is not permissible. If there is a block with this number, then alarm A07468 (jump destination does not exist in traversing block x) is output and the block is designated as being inconsistent.

The following parameters are relevant:

- p2616[x] Block number
- p2622[x] Task parameter = Next traversing block number

Any two of the SET_O, RESET_O and GOTO tasks can be processed in an interpolation cycle and a subsequent POSITION and WAIT task can be started.

SET_O, RESET_O

The tasks SET_O and RESET_O allow up to two binary signals (output 1 or 2) to be simultaneously set or reset. The number of the output (1 or 2) is specified bit-coded in the task parameter.

The following parameters are relevant:

- p2616[x] Block number
- p2622[x] Task parameter = bit-coded output:
  0x1: Output 1
  0x2: Output 2
  0x3: Output 1 + 2

Possible continuation conditions are END, CONTINUE_ON-THE-FLY and CONTINUE_WITH_STOP, and CONTINUE_EXTERNAL_WAIT.

You can assign the binary signals to digital outputs:

- r2683.10 ≙ Output 1
- r2683.11 ≙ Output 2

Any two of the SET_O, RESET_O and GOTO tasks can be processed in an interpolation cycle and a subsequent POSITION and WAIT task can be started.

Function diagrams (see SINAMICS S120/S150 List Manual)

- 3616 EPOS - Traversing blocks mode (r0108.4 = 1)

Overview of important parameters (see SINAMICS S120/S150 List Manual)

- p2616[0...n] EPOS traversing block, block number
- p2617[0...n] EPOS traversing block, position
- p2618[0...n] EPOS traversing block, velocity
- p2619[0...n] EPOS traversing block, acceleration override
- p2620[0...n] EPOS traversing block, delay override
- p2621[0...n] EPOS traversing block, task
- p2622[0...n] EPOS traversing block, task parameter
- p2623[0...n] EPOS traversing block, task mode
- p2625...p2630 BI: EPOS traversing block selection bit 0 ... 5

9.8.8 Travel to fixed stop

Function description

The "Travel to fixed stop" function can be used, for example, to traverse sleeves to a fixed stop against the workpiece with a predefined torque. In this way, the workpiece can be securely clamped. The clamping torque can be parameterized in the traversing task (p2622). An adjustable monitoring window for travel to fixed stop prevents the drive from traveling beyond the window if the fixed stop should break away.

In positioning mode, travel to fixed stop is started when a traversing block is processed with the FIXED STOP command. In this traversing block, in addition to the specification of the dynamic

parameterized position, speed, acceleration override and delay override, the required clamping torque can be specified as task parameter p2622. From the start position onwards, the target position is approached with the parameterized speed. The fixed stop (the workpiece) must be between the start position and the braking point of the axis; that is, the target position is placed inside the workpiece.

The preset torque limit is effective from the start, i.e. travel to fixed stop also occurs with a reduced torque. The preset acceleration and delay overrides and the current speed override are also effective. Dynamic following error monitoring (p2546) in the position controller is not effective when traveling to the fixed stop. As long as the drive travels to the fixed stop or is in fixed stop, the "Travel to fixed stop active" status bit r2683.14 is set.

Fixed stop is reached

As soon as the axis comes into contact with the mechanical fixed stop, the closed-loop control in the drive raises the torque so that the axis can move on. The torque increases up to the value specified in the task and then remains constant. The status bit r2683.12 "Fixed stop reached" is set depending on the binector input p2637 (Fixed stop reached):

- If the following error exceeds the value set in parameter p2634 (fixed stop: maximum following error) (p2637 = r2526.4) or
- If the status is set externally via the signal at binector input p2637 (fixed stop reached) (for p2637 ≠ r2526.4)

In travel to fixed stop, the clamping torque or clamping force in the traversing block is configured via the task parameter. It is specified in the units 0.01 Nm or 1 N (rotary / linear motor). The function module is coupled to the torque limit of the basic system via the connector output r2686[0] (torque limit upper) or r2686[1] (torque limit lower), which are connected to the connector input p1528 (torque limit upper scaling) or p1529 (torque limit lower scaling).

The connector outputs r2686[0] (torque limit upper) and r2686[1] (torque limit lower) are set to 100% when fixed stop is not active. During active fixed stop, r2686[0] (torque limit upper) or r2686[1] (torque limit lower) are evaluated as a percentage of p1522/p1523 in such a way that the specified clamping torque or clamping force is limited.

When the fixed stop is acknowledged (p2637), the "Speed setpoint total" (r2562) is recorded, as long as the binector input p2553 (fixed stop reached message) is set. The speed control holds the setpoint torque due to the applied speed setpoint. The setpoint torque is output for diagnosis via the connector output r2687 (torque setpoint).

If the parameterized clamping torque is reached at the fixed stop, the status bit r2683.13 "Fixed stop clamping torque reached" is set.

Once the "Fixed stop reached" status has been detected, the traversing task "Travel to fixed stop" is ended. The program advances to the next block depending on the task parameterization. The drive remains in fixed stop until the next positioning task is processed or the system is switched to jog mode. The clamping torque is therefore also applied during subsequent waiting tasks. The continuation condition CONTINUE_EXTERNAL_WAIT can be used to specify that the drive must remain at the fixed stop until a step enabling signal is applied externally.

As long as the drive remains in fixed stop, the position setpoint is adjusted to the actual position value (position setpoint = actual position value). Fixed stop monitoring and controller enable are active.

Note

If the drive is in fixed stop, it can be referenced using the control signal "Set reference point".

If the axis leaves the position that it had at detection of the fixed stop by more than the selected monitoring window for the fixed stop p2635, then the status bit r2683.12 is reset. At the same time, the speed setpoint is set to 0, and fault F07484 "Fixed stop outside of the monitoring window" is triggered with the reaction OFF3 (quick stop). The monitoring window can be set using the parameter p2635 ("Fixed stop monitoring window"). It applies to both positive and negative traversing directions and must be selected such that it will only be triggered if the axis breaks away from the fixed stop.

Fixed stop is not reached

If the brake application point is reached without the "fixed stop reached" status being detected, then the fault F07485 "Fixed stop is not reached" is output with fault reaction OFF1, the torque limit is canceled and the drive cancels the traversing block.

Note

The fault can be changed into an alarm (see Chapter "Message configuration" in the SINAMICS S120 Commissioning Manual with Startdrive), which means that the drive program will advance to the next specified block.

The target point must be sufficiently far inside the workpiece.

Interruption to "Travel to fixed stop"

The "travel to fixed stop" traversing task can be interrupted and continued using the "intermediate stop" signal at the binector input p2640. The block is canceled using the binector input signal p2641 "Reject traversing task" or by removing the controller enable. In all of these cases, the drive is correspondingly braked.

Measures are taken to prevent any risk of damage if the block is canceled when an axis has almost reached the fixed stop (setpoint already beyond the fixed stop, but still within the threshold for fixed stop detection). To do this, the setpoint is updated after standstill (position setpoint = actual position value). As soon as the fixed stop is reached, the drive remains in fixed stop even after cancelation. It can be moved away from the fixed stop using jog or by selecting a new traversing task.

Note

The fixed stop monitoring window (p2635) is only activated when the drive is at the fixed stop and remains active until the fixed stop is exited.

Vertical axis

Note

In servo control, a torque limit offset (p1532) can be entered for vertical axes (see also Chapter Vertical axis (Page 181)).

With asymmetrical torque limits p1522 and p1523, the self-weight is taken into account for travel to fixed stop in parameters r2686 and r2687.

If, for example, with a suspended load, p1522 is set to +1000 Nm and p1523 to -200 Nm, then a net weight of 400 Nm (p1522 - p1523) is assumed. If the clamping torque is now configured as 400 Nm, then r2686[0] is preset to 80%, r2686[1] to 0% and r2687 to 800 Nm when travel to fixed stop is activated.

Function diagrams (see SINAMICS S120/S150 List Manual)

- 3616 EPOS - Traversing blocks mode (r0108.4 = 1)
- 3617 EPOS - Travel to fixed stop (r0108.4 = 1)
- 4025 Position control - Dynamic following error monitoring, cam controllers (r0108.3 = 1)

Overview of important parameters (see SINAMICS S120/S150 List Manual)

- p1528[0...n] CI: Torque limit upper/motoring scaling
- p1529[0...n] CI: Torque limit, lower/regenerative scaling
- p1545[0...n] BI: Activate travel to fixed stop
- r2526.0...9 CO/BO: LR status word
- p2622[0...n] EPOS traversing block, task parameter
- p2634[0...n] EPOS fixed stop maximum permissible following error
- p2635 EPOS fixed stop monitoring window
- p2637 BI: EPOS fixed stop reached
- p2638 BI: EPOS fixed stop outside monitoring window
- r2683.0...14 CO/BO: EPOS status word 1
- r2686[0...1] CO: EPOS torque limit effective
- r2686[0...1] CO: EPOS force limiting active (for linear motors)

9.8.9 Direct setpoint input (MDI)

Function description

The "direct setpoint specification" function allows for positioning (absolute, relative) and setup (endless position-controlled) by means of direct setpoint specification (e.g. via the PLC using process data).

During traversing, the motion parameters can also be influenced (on-the-fly setpoint acceptance) and an on-the-fly change can be undertaken between the Setup and Positioning modes. The "direct setpoint specification" mode (MDI) can also be used if the axis is not referenced in the "setup" or "relative positioning" modes, which means that "flying referencing" (see the separate section), flying synchronization, and post-referencing are possible.

The "direct setpoint specification" function is activated by p2647 = 1. A distinction is made between two modes: "positioning" mode (p2653 = 0) and "setup" mode (p2653 = 1).

In "positioning" mode, the parameters (position, velocity, acceleration and deceleration) can be used to carry out absolute (p2648 = 1) or relative (p2648 = 0) positioning with the parameter p2690.

In the "setup" mode, using parameters (velocity, acceleration and deceleration) endless closed-loop position control behavior can be carried out.

It is possible to make a flying changeover between the two modes.

If continuous acceptance (p2649 = 1) is activated, changes to the MDI parameters are accepted immediately. Otherwise the values are only accepted when there is a positive edge at binector input p2650.

Note

Continuous acceptance p2649 = 1 can only be set with free telegram configuration p0922 = 999. No relative positioning is allowed with continuous acceptance.

The positioning direction can be specified using p2651 (positive direction specification) and p2652 (negative direction specification). If both inputs have the same status, the shortest distance is traveled during absolute positioning (p2648 = "1") of modulo axes (p2577 = "1").

To use the positioning function, the drive must be in the "Operation" state (r0002 = 0). The following options are available for starting positioning:

- p2649 is "1" and positive edge on p2647
- p2649 is "0" and p2647 is "1"
  - Positive edge on p2650 or
  - Positive edge on p2649

An overview of the setpoint transfer / direct setpoint specification can be found in the function diagram 3620 (see SINAMICS S120/S150 List Manual).

Features

- Select direct setpoint specification (p2647)
- Select positioning type (p2648)
- Direction selection (p2651, p2652)
- Setting-up (p2653)

- Fixed setpoints
  - CO: Position setpoint (p2690)
  - CO: Velocity setpoint (p2691)
  - CO: Acceleration override (p2692)
  - CO: Deceleration override (p2693)
- Connector inputs
  - CI: MDI position setpoint (p2642)
  - CI: MDI velocity setpoint (p2643)
  - CI: MDI acceleration override (p2644)
  - CI: MDI deceleration override (p2645)
  - CI: Velocity override (p2646)
- Accept (p2649, p2650)

MDI mode with the use of PROFIdrive telegram 110.

If the connector input p2654 is preset with a connector input <> 0 (e.g. with PROFIdrive telegram 110 with r2059[11]), then it will internally manage the control signals "Select positioning type", "Positive direction selection" and "Negative direction selection". The following characteristics are evaluated from the value of the connector input:

- xx0x = absolute -> p2648
- xx1x = relative -> p2648
- xx2x = ABS_POS -> p2648, p2651
- xx3x = ABS_NEG -> p2648, p2652

Intermediate stop and reject traversing task

The intermediate stop is activated by a 0 signal at p2640. After activation, the system brakes with the parameterized deceleration value (p2620 or p2645).

The current traversing task can be rejected by a 0 signal at p2641. After activation, the system brakes with the maximum deceleration (p2573).

The "intermediate stop" and "reject traversing task" functions are only effective in "traversing blocks" and "direct setpoint specification / MDI" modes.

Function diagrams (see SINAMICS S120/S150 List Manual)

- 3618 EPOS - Direct setpoint specification / MDI mode, dynamic values (r0108.4 = 1)
- 3620 EPOS - Direct setpoint specification / MDI mode (r0108.4 = 1)

Overview of important parameters (see SINAMICS S120/S150 List Manual)

- p2577 BI: EPOS modulo offset activation
- p2642 CI: EPOS direct setpoint specification / MDI, position setpoint
- p2643 CI: EPOS direct setpoint specification / MDI, velocity setpoint
- p2644 CI: EPOS direct setpoint specification / MDI, acceleration override
- p2645 CI: EPOS direct setpoint specification / MDI, deceleration override
- p2648 BI: EPOS direct setpoint specification / MDI, positioning type
- p2649 BI: EPOS direct setpoint specification / MDI, acceptance method selection
- p2650 BI: EPOS direct setpoint specification / MDI, setpoint acceptance edge
- p2651 BI: EPOS direct setpoint specification / MDI, positive direction selection
- p2652 BI: EPOS direct setpoint specification / MDI, negative direction selection
- p2653 BI: EPOS direct setpoint specification / MDI, setup selection
- p2654 CI: EPOS direct setpoint specification / MDI, mode adaptation
- p2690 CO: EPOS position, fixed setpoint
- p2691 CO: EPOS velocity, fixed setpoint
- p2692 CO: EPOS acceleration override, fixed setpoint
- p2693 CO: EPOS delay override, fixed setpoint

9.8.10 Jog

Function description

Using parameter p2591 it is possible to change over between jog incremental and jog velocity.

The traversing distances p2587 and p2588 and velocities p2585 and p2586 are entered using the jog signals p2589 and p2590. The traversing distances are only effective for a "1" signal at p2591 (jog incremental). For p2591 = "0" then the axis moves to the start of the traversing range or to the end of the traversing range with the specified velocity.

An overview of the "Jog" function can be found in function diagram 3610 (see SINAMICS S120/S150 List Manual).

Features

- Jog signals (p2589, p2590)
- Velocity (p2585, p2586)
- Incremental (p2587, p2588, p2591)

Function diagrams (see SINAMICS S120/S150 List Manual)

- 3610 EPOS - Jog mode (r0108.4 = 1)

Overview of important parameters (see SINAMICS S120/S150 List Manual)

- p2585 EPOS jog 1 setpoint velocity
- p2586 EPOS jog 2 setpoint velocity
- p2587 EPOS jog 1 travel distance
- p2588 EPOS jog 2 travel distance
- p2589 BI: EPOS jog 1 signal source
- p2590 BI: EPOS jog 2 signal source
- p2591 BI: EPOS jog incremental

9.8.11 Status signals

The status signals relevant to positioning mode are described below.

Tracking mode active (r2683.0)

The "Follow-up active mode" status signal shows that follow-up mode has been activated which can be done by binector input p2655 (follow-up mode) or by a fault. In this status, the position setpoint follows the actual position value, i.e. position setpoint = actual position value.

Setpoint static (r2683.2)

The status signal "setpoint static" indicates that the setpoint velocity has a value of 0. The actual velocity can deviate from zero due to a following error. While the status word has a value of 0, a traversing task is being processed.

Traversing command active (r2684.15)

The status signal "traversing command active" indicates that a traversing command is active. A motion command should be understood to comprise all motions (including jog, setup etc.). Contrary to the status signal "setpoint static", the status signal remains active - e.g. if a traversing command was stopped by a velocity override or intermediate stop.

SW limit switch plus reached (r2683.7)SW limit switch minus reached (r2683.6)

These status signals indicate that the parameterized negative p2578/p2580 or positive p2579/p2581 traversing range limit was reached or passed. If both status signals are 0, the drive is located within the traversing limits.

Stop cam minus active (r2684.13)Stop cam plus active (r2684.14)

These status signals indicate that the STOP cam minus p2569 or STOP cam plus p2570 has been reached or passed. The signals are reset when the cams are left in the direction other than that in which they were approached.

Axis moves forwards (r2683.4)Axis moves backwards (r2683.5)Axis accelerates (r2684.4)Drive decelerates (r2684.5)Drive stationary (zero speed) (r2199.0)

These signals display the current motion status. If the actual absolute speed is less or equal to p2161, then the status signal "drive stationary" is set - otherwise it is deleted. The signals are appropriately set if jog mode, reference point approach or a traversing task is active.

Cam switching signal 1 (r2683.8)Cam switching signal 2 (r2683.9)

The electronic cam function can be implemented using these signals. Cam switching signal 1 is 0 if the actual position is greater than p2547 - otherwise 1. Cam switching signal 2 is 0 if the actual position is greater than p2548 - otherwise 1. This means that the signal is deleted if the drive is located behind (after) the cam switching position. The position controller initiates these signals.

Direct output 1 (r2683.10)Direct output 2 (r2683.11)

If a digital output is parameterized, the function "direct output 1" or "direct output 2", then it can be set by a corresponding command in the traversing task (SET_O) or reset (RESET_O).

Following error in tolerance (r2684.8)

When the axis is traversed, closed-loop position controlled, using a model, the permissible following error is determined from the instantaneous velocity and the selected Kv factor. Parameter p2546 defines a dynamic following error window that defines the permissible deviation from the calculated value. The status signal indicates as to whether the following error is within the window (status 1).

Target position reached (r2684.10)

The status signal "target position reached" indicates that the drive has reached its target position at the end of a traversing command. This signal is set as soon as the actual drive position is within the positioning window p2544 and is reset, if it leaves this window.

The status signal is not set, if

- Signal level 1 at binector input p2554 "signal traversing command active".
- Signal level 0 at binector input p2551 "signal setpoint static".

The status signal remains set, until

- Signal level 1 at binector input p2551 "signal setpoint static".

Reference point set (r2684.11)

The signal is set as soon as referencing has been successfully completed. It is deleted as soon as no reference is there or at the start of the reference point approach.

Acknowledgement, traversing block activated (r2684.12)

A positive edge is used to acknowledge that in the mode "traversing blocks" a new traversing task or setpoint was transferred (the same signal level as binector input p2631 activate traversing task). In the mode "direct setpoint input / MDI for setting-up/positioning" a positive edge is used to acknowledge that a new traversing task or setpoint was transferred (the same signal level as binector input p2650 "edge setpoint transfer", if the transfer type was selected using a signal edge (binector input p2649 "0" signal)).

Velocity limiting active (r2683.1)

If the actual setpoint velocity exceeds the maximum velocity p2571 - taking into account the velocity override - it is limited and the control signal is set.

9.9 Master/slave function for Active Infeed

Overview

The "Master/Slave" function module allows drives to be operated with a redundant infeed unit. Redundancy can only be implemented in the components specified below, such as Line Modules, Motor Modules and Control Units.

This function requires each infeed unit to be controlled by a separate Control Unit. It also requires either a higher-level control system (e.g. SIMATIC S7) to transfer current setpoints using the PROFIBUS slave-to-slave communication capability or TM31 modules which transfer current setpoints in the form of analog signals. If the infeed units are appropriately configured, operation can continue even if an infeed unit has failed. The master is selected by the controller and operated under V_{dc} voltage control (parameter p3513 = 0) with current control. The slaves receive their setpoint directly from the master and are only operated under current control (parameter p3513 = 1).

Electrical isolation from the line with isolating transformers is necessary to prevent equalizing currents from flowing.

The infeed unit can be decoupled from the DC link by means of a DC breaker.

Applications

The function can be used for the following applications:

- Hoisting gear that is to continue functioning in emergency mode (e.g. so that the load can still be placed down).
- Paper and steel works that require a line drive to continue operation at a reduced line velocity.
- Oil production platforms that must continue normal production even if one infeed unit fails (full redundancy).
- Expansion of output range for plants with infeed units of different dimensions.
- Infeed units from line supplies/transformers with phase displacement and/or voltage difference to a common DC link.

Function description

The "Master/Slave" function module is not implemented in the higher-level controller. The "Master/Slave" function module can be found in the firmware of the Control Units and infeed units. The status of the "Master/Slave" function module is indicated by the signal r0108.19 = 1. In the function module, the V_{dc} control band and the current setpoint value specification are implemented using multiplexers of the Active Line Module control.

All infeed units must be parameterized in such a way that they are fully functional as both a master and slave. The infeed units can be switched between master and slave role during operation. Switchover is handled by a higher-level control according to the setting in parameter p3513. A master is configured to operate with V_{dc} control (p3513 = 0) and current control, while the slaves operate only with current control (p3513 = 1). The setpoint input of the active current $I_{active(set)}$ is transferred from the master to the slaves via the communication links between the Control Units.

If the Active Line Module is used for reactive power compensation with external reactive current setpoint, then the reactive current setpoint must also be wired for the slave. The master-to-slave setpoint specifies only the active current.

When Active Line Modules have been deactivated, make sure that the maximum DC-link capacitance $C_{DC\ link}$ for the remaining Active Line Modules is not exceeded during the switch-on procedure (danger of overloading the pre-charging resistors).

Parameter p3422 ($C_{DC\ link}$capacitance) can be changed in operation. This means that the closed-loop control can be directly adjusted via this parameter when the Master/Slave configuration changes, instead of changing the proportional gain of the $V_{DC\ link}$ controller (p3560). When parameter p3422 changes, parameter p3560 is recomputed automatically by the firmware.

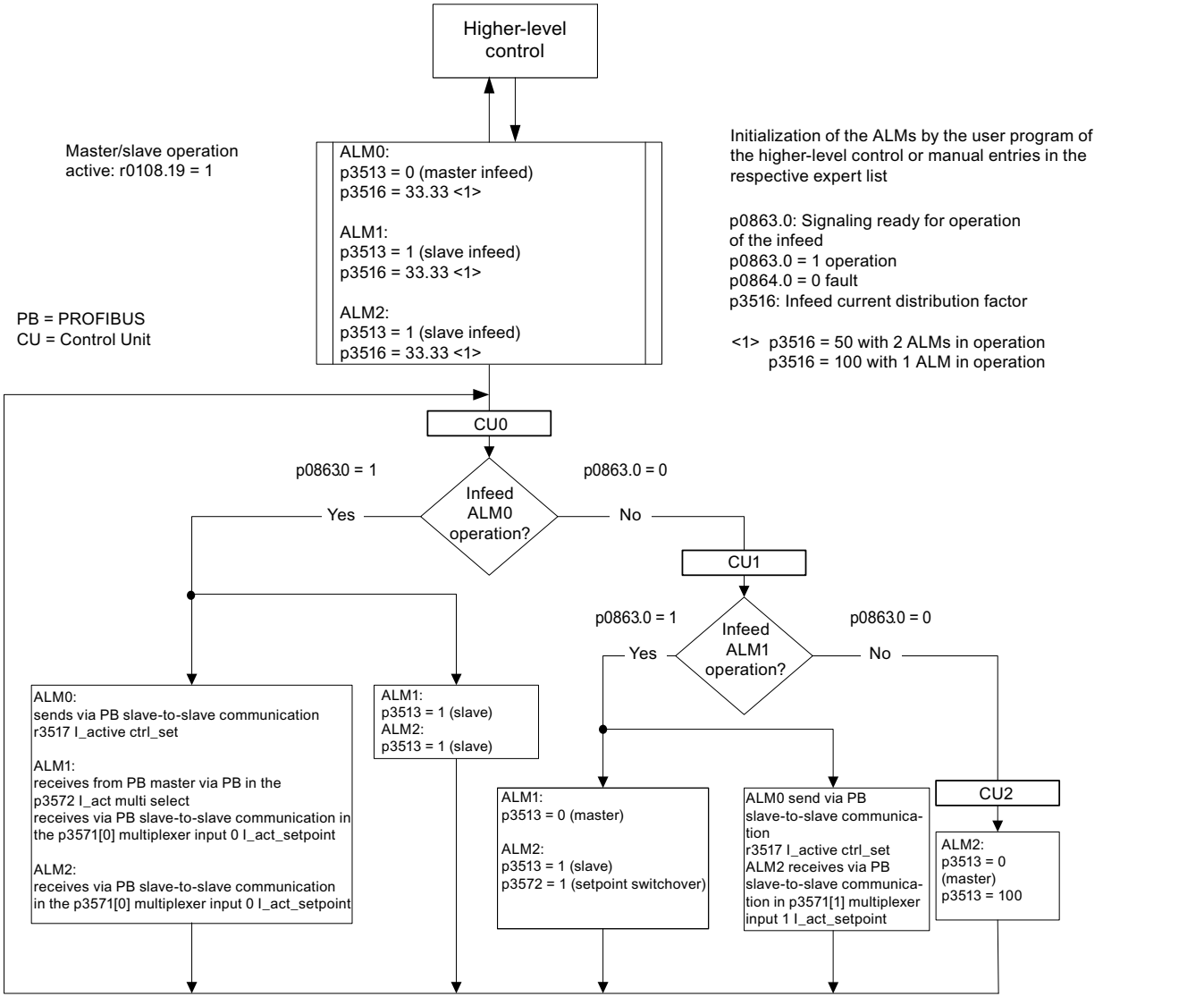

Figure 9-24 Structure diagram: 3 identical Active Line Modules of identical output rating, PROFIBUS communication system

9.9.1 Basic structure

Description

DRIVE-CLiQ can be used to connect an Active Line Module (ALM) to a Control Unit (CU) and Voltage Sensing Module (VSM) to create an infeed train. A Motor Module together with a Sensor Module Cabinet (SMC) or Sensor Module External (SME) forms a drive train. A Control Unit controls the complete drive system.

If one of the components develops a fault, only the affected train will fail. This failure can be signaled, e.g. via read parameter r0863.0, as a message to the higher-level controller. The fault is evaluated in the user program of the higher-level controller, which sends corresponding signals to the other infeed units. If a higher-level controller is not used, the fault can be evaluated by means of DCCs in the Active Line Modules.

All the other trains remain fully functional, which means that they can continue operating normally.

Features

- The "Master/Slave" function only works in conjunction with Active Line Modules.
- One Active Line Module is the master and up to three others are slaves.
- If the master fails, a slave ALM takes on the role of the master.
- The redundant infeed units can continue functioning normally even if one infeed train has failed.
- Electrical isolation between the infeed trains is needed on the line side to prevent circulating currents caused by non-synchronous pulsing patterns.
- The entire infeed system supplies a joint DC busbar (DC link).
- Since the Active Line Module cannot detect whether the DC link is disconnected or a DC-link fuse has blown, an additional circuit to monitor these states must be installed (DC breaker checkback function and fuse signaling contacts).
- The higher-level controller communicates with the CUs and Active Line Modules via PROFIBUS/PROFINET or analog data. If a higher-level controller is not to be used, the control signals must be hard-wired (e.g. via TM31).
- Infeed trains with different outputs can be combined.

Topology

The following figure shows the Master/Slave mode with redundant infeed units in the PROFIBUS communication variant.

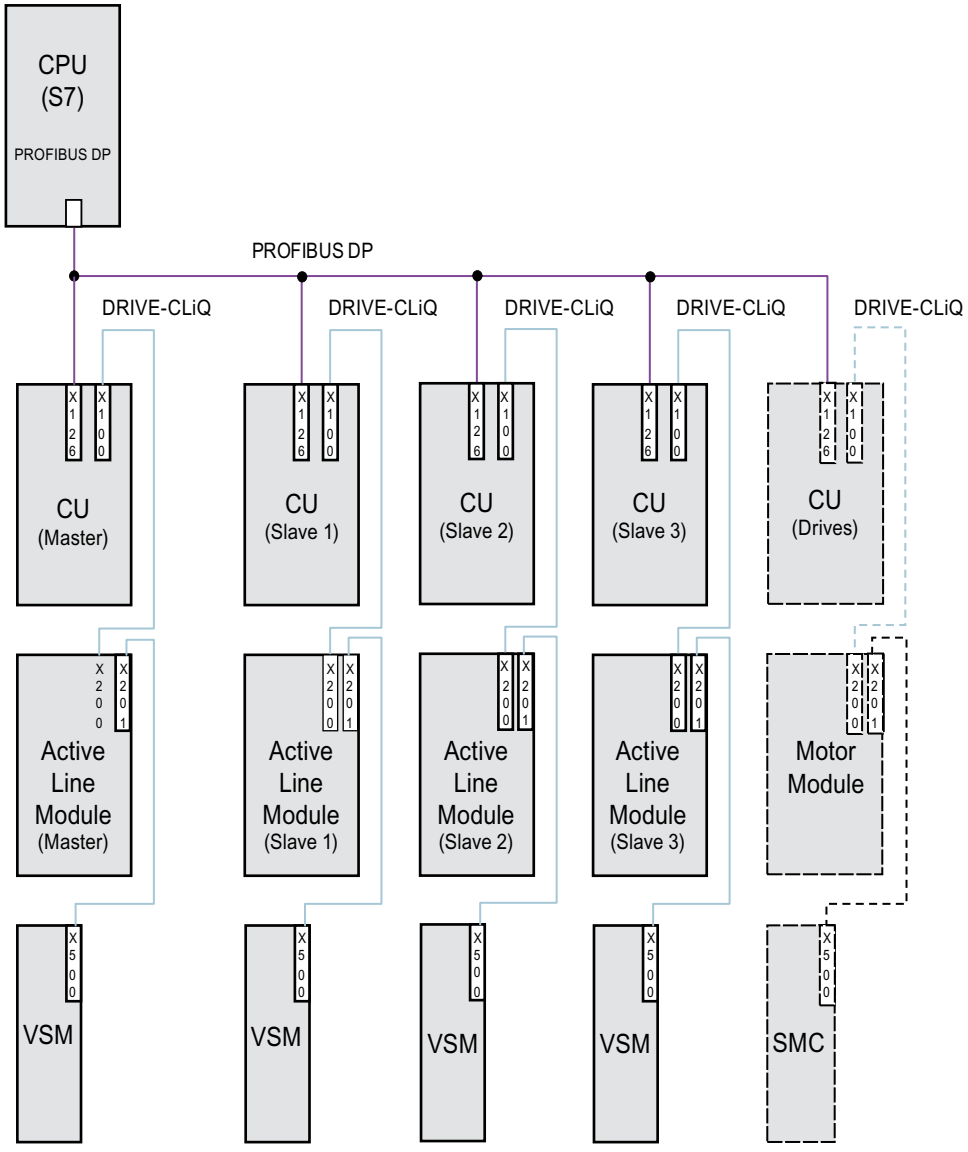

Figure 9-25 Topology structure: Master/Slave mode with redundant infeed units in the PROFIBUS communication variant

Restrictions

- Master/Slave operation can be implemented for a maximum of 4 Active Line Modules.

Electrical isolation of infeed units

To successfully implement the structure, a means of electrically isolating the infeed units from the line supply is required in addition to the SINAMICS components. This is to prevent circulating currents from developing if the pulse patterns of the Active Line Modules are not synchronized.

Two solutions are possible for the electrical isolation:

- Using an isolating transformer for each slave infeed train. The primary side of the transformer is to be connected to the grounded or ungrounded line transformer. The secondary side must never be grounded.
- Using a three-winding transformer for the master and slave infeed units. In this case, only the neutral point of one winding may be grounded to prevent further electrical coupling via ground.

For both solutions, a separate transformer must be used for the infeed units for each Active Line Module (slaves 1 to 3).

Use of a DC switch

When an infeed unit develops a fault, it is disconnected on the line side by the line contactor, on the DC-link side using a DC breaker. Infeed units must not be switched in to a charged DC link. The DC link must be discharged before another infeed train can be switched in.

An infeed unit may only be connected to a charged DC link if a DC breaker with pre-charging branch is installed.

9.9.2 Commissioning the function

Overview

The individual steps for commissioning the "Master/Slave" function are described in the following.

Commissioning the line and DC link identification

Before the "Master/Slave" function is enabled in the Startdrive engineering tool, the line and DC-link identification (see Chapter Line supply and DC link identification (Page 35)) must be put into operation during commissioning for each infeed train.

The corresponding instructions for the commissioning of infeed units in the SINAMICS S120 with Startdrive Commissioning Manual apply.

Once each individual infeed unit has been identified, the correct inductance for current control and the DC link capacitance for voltage control are set.

If a DC breaker for isolating the infeed unit from the DC link is installed, DC link identification must be performed again for all active infeed units after one infeed unit has been disconnected, as it is necessary to acquire the DC link capacitance again. If the DC link capacitance is not

adapted in this way, then the change in capacitance will affect the dynamic response of the V_{dc} control.

Note

Aligning the setpoints of the DC link voltage

The setpoints of the DC link voltage V_{dc} from p3510 of the master and the slaves must be set to the same values to ensure that the V_{dc} tolerance bandwidth monitoring functions correctly.

Activating the function

The "Master/Slave" function is activated in Startdrive for the respective infeed unit using the "Master/Slave" checkbox/option ("Infeed > Parameters > Basic parameter assignment > Function modules"). Parameter r0108.19 can be used to scan for an active function module in the CU or the Active Line Modules (r0108.19 = 1).

All other required parameters are set via the corresponding expert lists for the relevant infeed.

Note

The bus cycle time for Active Line Modules operating in master-slave operation must not exceed 2 ms. If the bus cycle time is higher, then the dynamic response (p3560) must be significantly reduced. This means that load surges can no longer be corrected properly.

Increasing the bus cycle time can cause the DC link voltage to oscillate, an effect which can sometimes be managed by reducing the dynamic response (p3560). The system cannot be guaranteed to function reliably with bus cycle times of > 2 ms.

The Vdc setpoint in p3510 must be set high enough to prevent the standby controller from responding to line overvoltage (the response threshold of 97% can be increased if necessary, but current and voltage harmonics will develop if the setting causes overcontrol).

In any case, the tolerance band must be set wide enough that it will not be violated should the control factor reserve controller still respond because the measures described above have not been implemented.

Switching over Master/Slave

If a power unit fails during operation, the higher-level controller can switch each infeed line from current control (slave operation) to DC link voltage control (master operation) and vice versa (parameter setting for master: p3513= 0, for slave: p3513 = 1).

Switching an ALM to an operational system

In an operational master-slave group, an ALM must first be switched in as a slave.

Shutting down an ALM from an operating group

Shutting down an ALM from the group should be realized in the slave state and with OFF2 (pulse inhibit). If a master fails with a fault (OFF2 response, pulse inhibit), one of the slaves must be immediately switched as master.

Restrictions

- Two masters must not be operated simultaneously in the infeed group.

9.9.3 Types of communication

Description

To implement Master/Slave operation, the CUs must be able to communicate with one another. The master passes the active current setpoint to the slaves. To optimize V_{dc} control (DC-link voltage), the dead times during communication must be kept to a minimum.

PROFIBUS slave-to-slave communication

The data is exchanged directly between the CUs without passing via the DP master. A higher-level controller (e.g., SIMATIC S7) as the PROFIBUS master is needed as "clock generator" for this. The minimum PROFIBUS cycle time that can be set depends on the PROFIBUS master specifications.

Isochronous mode must be set for PROFIBUS. The PROFIBUS cycle time must not exceed 2 ms otherwise the closed-loop control may start to oscillate.

In order to ensure that other infeed units do not switch to fault status when one CU fails, the fault message F01946 "Link to Publisher disconnected" must be deactivated.

The number "1946" can be set in one of the parameters p2101[0..19] and p2101[x] set to "0" in order to block fault message F01946. This means that the drive will not shut down when one slave-to-slave communication node fails.

In a Master/Slave infeed unit, a common current controller cycle is essential, particularly when infeed units with different outputs are used. If the number of PROFIBUS nodes or drives increases, this can affect the bus cycle or current controller sampling time.

Communication using an analog setpoint

The analog setpoint between the CUs with Terminal Module 31 (TM31) can also be used as an alternative to bus communication. The factory setting for the sampling time of analog inputs and/or outputs is 4 ms (TM31 inputs/outputs sampling time p4099[1/2]). The sampling times must be an integer multiple of the basic sampling times (r0110). The lowest common denominator of the current controller cycle for the integrated infeed units must be selected to implement the "Master/Slave" function. The sampling time of the analog inputs/outputs should be the set to the same value as the current controller cycle (e.g. 250 µs). The slave can then use the analog setpoint every second current controller cycle. The dead time is then one cycle.

The advantages of this variant is that the communication system can be configured to be independent of bus and master.

Disadvantages are the additional hardware wiring and the necessity to use one TM31 per CU. This communication method is also more susceptible to EMC-related problems. It is not

absolutely essential to use a higher-level controller (e.g. SIMATIC S7) for this system. Control functions can also be implemented using DCCs in individual CUs.

9.9.4 Explanations for the function diagrams

The function of the "Master/Slave infeed units" function module is shown in function diagrams 8940 and 8948 (see SINAMICS S120/S150 List Manual). Individual function block diagrams are explained in the following.

- **Current setpoint interconnection**
  Parameter p3570 is used to connect the setpoint for the closed-loop current control (active current setpoint from the master). Using parameter p3513, which can be changed in the "ready for operation" state, it is possible to switch between master (V_{dc} control, parameter p3513 = 0) and slave (current control, parameter p3513 = 1) from the higher-level controller.
- **Selection of the current setpoint**
  The current setpoint can be selected by means of a control word (XCS) (p3572) using a multiplexer with four inputs (X0 … X3) (p3571.0 … p3571.3). This means that the current setpoint of the new master can be selected when the old master has failed.
- **Selection of the current distribution factor**
  To prevent a reduction in control dynamics of the DC-link voltage controller for non-symmetrical loads, this current distribution factor must be updated immediately when an infeed unit fails or is activated.
  The current distribution factor is calculated from the number of active infeed units and their rated data. The sum of the current distribution factors of all active infeed units must always equal 100%.
  The current distribution factor can be selected by means of a control word (XCS) (p3577) using a multiplexer with six inputs (X0 ... X5) (p3576.0...5).
  Alternatively, a new current distribution factor can be calculated in the higher-level controller, sent via cyclic PROFIBUS PZD telegrams and interconnected directly to the connector input "Infeed: additional current distribution factor" (p3579).
  A further alternative is to update the current distribution factor via an acyclic PROFIBUS parameter write order of p3516. This produces dead times however.
  For alternatives without multiplexer, this can be used for a different function.
- **V_{dc} control band**
  The V_{dc} limits can be violated in Master/Slave operation if the DC-link load changes abruptly (e.g. load surges or emergency stop). For this reason, the DC-link voltage is monitored on the basis of a V_{dc} control band. The V_{dc} control band defines a specific voltage range with hysteresis - set in parameter p3574.0/1 (upper/lower limit V_{dc} voltage band) and p3574.2/3 (hysteresis upper/lower voltage limit). A signal is generated if the DC-link voltage leaves this voltage range. By evaluating this signal, the slave is changed over from closed-loop current to closed-loop voltage control. When the DC-link voltage returns to within the control band, the slave is switched back to closed-loop current control. The V_{dc} control operates permanently in "standby mode" so that it can be re-activated when necessary.

9.9.5 Function diagrams and parameters

Function diagrams (see SINAMICS S120/S150 List Manual)

- 8940 Active Infeed - Controller modulation depth reserve / controller DC link voltage (p3400.0 = 0)
- 8948 Active Infeed - Master/slave (r0108.19 = 1)

Overview of important parameters (see SINAMICS S120/S150 List Manual)

- p3513 BI: Voltage-controlled operation disable
- p3516 Infeed current distribution factor
- p3570 CI: Master/slave active current setpoint
- p3571[0...3] CI: Master/slave active current setpoint multiplexer input
- p3572 CI: Master/slave active current setpoint multiplexer selection
- r3573 CO: Master/slave active current setpoint multiplexer output
- p3574[0...3] Master/slave DC link voltage monitoring
- r3575.0...2 BO: Master/slave DC link voltage monitoring status
- p3576[0...5] Master/slave current distribution factor multiplex input
- p3577 CI: Master/slave current distribution factor multiplex selection
- r3578 CO: Master/slave current distribution factor multiplex output
- p3579 CI: Master/slave current distribution factor

9.10 Parallel connection of power units

To extend the power range, SINAMICS S120 supports the parallel connection of identical power units - such as Line Modules and/or Motor Modules. The prerequisites for connecting power units in parallel are as follows:

- Same type
- Same type rating
- Same rated voltage
- Same firmware version

Note

For the following power units, when commissioning, a firmware version ≥ V5.2 must be available.

- Active Line Module in the booksize format
- Active Line Modules in the Chassis-2 format
- Motor Modules in the Chassis-2 format

- Active Line Modules in the Booksize format
- Chassis, Chassis-2 or Cabinet format
- The Motor Modules must be operated in the VECTOR control mode.

It makes sense to connect Line Modules and Motor Modules in parallel for the following reasons:

- To boost the converter output if it is not technically or economically feasible to achieve the required power by any other means.
- To increase the availability, for example, to maintain emergency operation (possibly also at a lower rating), if a power unit fails.

Parallel operation is not released under the following conditions:

- Combining different types of Infeed Modules within the same parallel connection (e.g. Basic Line Modules with Smart Line Modules or Basic Line Modules with Active Line Modules).
- Motor Modules in servo control
- Motor Modules in the Booksize and Blocksize formats

Features

The main features of parallel connection are:

- Parallel connection of up to four Motor Modules on one motor
  - Parallel connection of several Motor Modules on one motor with separate winding systems (p7003 = 1) is possible.

    Note

    Motors with separate winding systems are recommended.

  - Parallel connection of several Motor Modules on one motor with a single winding system (p7003 = 0) is possible.
  - Parallel connection of up to 6 Chassis-2 Motor Modules on one motor is possible.

    Note

    Additional information and instructions in the SINAMICS S120 Equipment Manual Chassis Power Units must be carefully taken into consideration.

- Parallel connection of up to 4 power units of the Chassis format on the infeed side (controlled/uncontrolled).
- Parallel connection of up to 6 power units of the Chassis-2 format on the infeed side (controlled).
- A Control Unit, which controls and monitors power units on the grid and motor sides connected in parallel, can control an additional drive, e.g. an auxiliary drive (see Chapter "Additional drive in addition to the parallel connection (Page 529)").
- Parallel-connected power units must be connected to the same Control Unit.
- For Chassis-2 format power units, there are no additional drives / infeeds allowed on a CU if the number of modules connected in parallel is > 4.
- A Control Unit CU320-2 can simultaneously control a maximum of one parallel connection on the line side and one parallel connection on the motor side if the number of modules connected in parallel is ≤ 4 in each case.
- Components at the line and motor sides for decoupling the parallel-connected power units and for ensuring symmetrical current distribution are recommended.
- Simple commissioning, because no special parameterization is necessary.
- Individual power units can be parameterized and diagnosed (troubleshooting) with p7000 ff.

The following power units can be connected in parallel:

- Basic Line Modules (BLM)
  Carefully observe the subsequently described conditions under which BLMs can be connected in parallel.

Version	Condition
6-pulse and 12-pulse	Implementation is only permissible with the associated line reactors.
Additional information	
Detailed information on the specified conditions is provided in "SINAMICS - Low Voltage Engineering Manual (https://support.industry.siemens.com/cs/ww/en/view/83180185)".	

- Smart Line Modules (SLM)
  Carefully observe the subsequently described conditions under which SLMs can be connected in parallel.

Version	Condition
6-pulse and 12-pulse	Implementation is only permissible with the associated line reactors.
6-pulse	The parallel connection must be implemented using a Control Unit.
12-pulse	The parallel connection must be implemented using 2 Control Units.
Additional information	
Detailed information on the specified conditions is provided in "SINAMICS - Low Voltage Engineering Manual (https://support.industry.siemens.com/cs/ww/en/view/83180185)".	

- Active Line Modules (ALM)
  Carefully observe the subsequently described conditions under which ALMs can be connected in parallel.

Version	Condition
6-pulse and 12-pulse	Implementation is only permissible with the associated Active Interface Module.
6-pulse	The parallel connection must be implemented using a Control Unit.
12-pulse	The parallel connection must be implemented using 2 Control Units. The implementation is realized in the master-slave mode.
Additional information	
Detailed information on the specified conditions is provided in "SINAMICS - Low Voltage Engineering Manual (https://support.industry.siemens.com/cs/ww/en/view/83180185)".	

- Motor Modules
  A connection can only be implemented in the VECTOR control mode.

Note

Deactivate edge modulation

With a Chassis parallel connection and motor with a winding system offset by 30° (p7003 = 2), the converter can fail with activated edge modulation.

In this case, deactivate the edge modulation (p1802 ≤ 4).

Note

Exceptions for combined operation of Line Modules

Smart Line Modules may be operated together with Basic Line Modules that have Article numbers ending with a "3" (Chassis) or a "2" (Cabinet) with one or several CUs if precisely defined preconditions and the information in the Configuration Manual are maintained. You will find this information in "SINAMICS - Low Voltage Engineering Manual (https://support.industry.siemens.com/cs/ww/en/view/83180185)".

A slight reduction of the rated current must be considered for parallel connection of power units. The reduction of the rated current (derating) of a power unit for parallel connection is:

- 7.5 % when connecting SINAMICS S120 Basic Line Modules and SINAMICS S120 Smart Line Modules in parallel, each of which has no current compensation control.
- 5.0% when SINAMICS S120 Active Line Modules are connected in parallel with SINAMICS S120 Motor Modules, each of which operate with a current compensation control.

9.10.1 Applications of parallel connections

Power units can be connected in parallel (infeeds) in the following cases:

- 6-pulse circuit
  The modules connected in parallel are supplied from a two-winding transformer.
- 12-pulse circuit
  The modules connected in parallel are supplied via a three-winding transformer, whose secondary windings supply voltages with a phase shift of 30°.

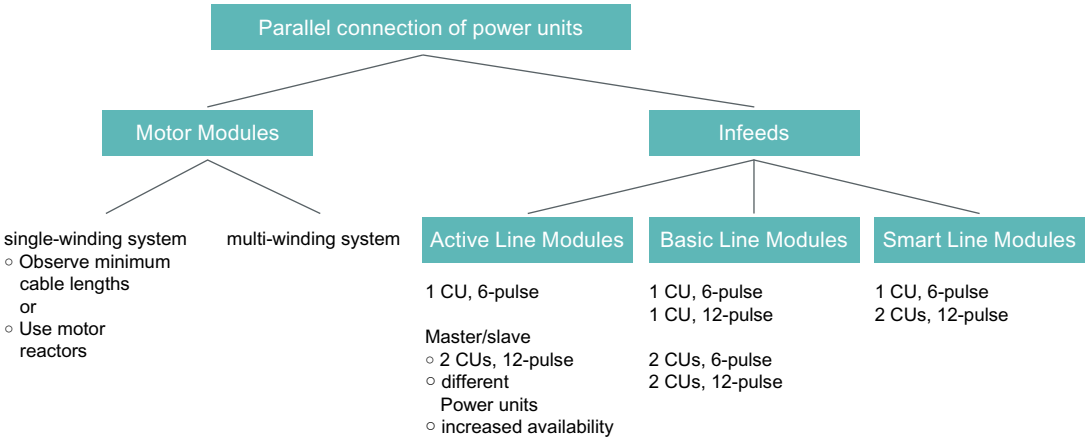

Figure 9-26 Overview: Parallel connection of power units

Note

Additional information on parallel power unit connections, particularly with regard to their configuration, can be found in the "SINAMICS Low Voltage Configuration Manual (http://www.automation.siemens.com/mcms/infocenter/dokumentencenter/ld/Documentsu20Catalogs/lv-umrichter/sinamics-engineering-manual-lv-en.pdf)".

Infeed concepts - parallel (one CU) and parallel redundant (two CUs)

Some applications require redundant infeeds for a DC line-up. This requirement can be fulfilled through the implementation of multiple, independent infeeds which are connected in parallel to the DC line-up. Depending on how the drive is dimensioned, the DC line-up can continue operating at between 50% to 100% output when one infeed fails.

In the cases of the non-redundant variant, a single Control Unit generally controls all parallel-connected power units which then function like a single, high-output infeed. For the redundant parallel connection, each infeed is controlled by a separate Control Unit and is thus completely independent.

The type of circuit required depends on whether the redundancy requirement applies only to the infeed itself or also includes the supply-side transformers or the supply systems (see "SINAMICS Low Voltage Configuration Manual (http://www.automation.siemens.com/mcms/infocenter/dokumentencenter/ld/Documentsu20Catalogs/lv-umrichter/sinamics-engineering-manual-lv-en.pdf)").

6-pulse infeed

With a 6-pulse infeed, the two redundant infeeds with the same power rating are supplied from a line supply via a two-winding transformer. As both infeeds are supplied with exactly the same line voltage, the current distribution is largely symmetrical in normal operation, even with uncontrolled infeeds. The infeeds can thus be dimensioned such that, taking into account a minor current derating factor, each can carry 50% of the total current. However, if one infeed fails, only half the output remains available. If the full output needs to be available when one infeed fails, then each infeed must be dimensioned to carry the full current.

12-pulse infeed

For a 12-pulse infeed, the two redundant infeeds with the same power rating are supplied from a line supply via a three-winding transformer. Depending on the transformer design, the line-side voltages of the two infeeds will include minor tolerances of between about 0.5% to 1%. These can cause slightly asymmetrical current distribution in normal operation when uncontrolled infeeds are used and current derating factors must be applied accordingly. If the full output needs to be available when one infeed fails, then each infeed must be dimensioned to carry the full current.

In addition to the requirements of the three-winding transformer and the SINAMICS infeed, the supply system must also meet certain standards with respect to the voltage harmonics present at the point of common coupling of the three-winding transformer. You can find more in-depth information about the requirements for the feeding supply network in the "SINAMICS - Low Voltage Configuration Manual (http://www.automation.siemens.com/mcms/infocenter/

dokumentencenter/ld/Documentsu20Catalogs/lv-umrichter/sinamics-engineering-manual-lv-en.pdf)".

6-pulse, 12-pulse infeed

When separate Control Units are used, pre-charging may not be synchronized accurately enough, i.e. a converter system must be able to pre-charge the total capacity of the drive line-up. Pre-charging power for the DC link in parallel operation must be dimensioned so that the capacitance of the DC link can be fully charged by a single converter system. Otherwise a separate pre-charging device must be provided.

Configuring a parallel connection

Additional information on configuring parallel power units connections can be found in the "SINAMICS Low Voltage Configuration Manual (http://www.automation.siemens.com/mcms/infocenter/dokumentencenter/ld/Documentsu20Catalogs/lv-umrichter/sinamics-engineering-manual-lv-en.pdf)".

9.10.1.1 Parallel connection of Basic Line Modules

Description

Basic Line Modules are used in cases where regenerative feedback capability is not required. If regenerative operating states occur in the drive line-up, Braking Modules that convert the excess energy to heat in braking resistors must be used.

Basic Line Modules in the Chassis format are available for the following voltages and power ratings:

Line voltage	Rated power
38 to 480 V 3 AC	200 to 710 kW
500 to 690 V 3 AC	250 to 1100 kW

Features

Basic Line Modules have the following features and characteristics:

- The DC-link voltage is greater than the rms value of the line rated voltage by a factor of 1.35.

Rules

The following rules must be observed when connecting Basic Line Modules in parallel:

- Up to four identical Basic Line Modules can be connected in parallel.
- A common Control Unit must always be used to implement the parallel connection.
- Special Line Connection Modules are available for the parallel connection.

- With multiple infeed units, power must be supplied to the systems from a common infeed point (i.e. the modules cannot be operated on different line supplies).
- A current reduction (derating) of 7.5% must be taken into consideration, regardless of the number of modules connected in parallel.

As Basic Line Modules have no current compensation control, the three-winding transformer, power cabling and line reactors must meet the following requirements in order to provide a balanced current:

- Three-winding transformer must be symmetrical, recommended vector groups Dy5d0 or Dy11d0.
- Relative short-circuit voltage of three-winding transformer $u_k \geq 4\%$.
- Difference between relative short-circuit voltages of secondary windings $\Delta u_k \leq 5\%$.
- Difference between no-load voltages of secondary windings $\Delta U \leq 0.5\%$.
- Use of symmetrical power cabling between the transformer and the Basic Line Modules (cables of identical type with the same cross-section and length)
- Using line reactors that match the Basic Line Modules
  Line reactors can be omitted if a double-tier transformer is used and only one Basic Line Module is connected to each secondary winding of the transformer.

A double-tier transformer is generally the only means of meeting the requirements of a three-winding transformer for this application. Line reactors must always be installed if other types of three-winding transformer are used. Alternative solutions for obtaining a phase displacement of 30°, such as two separate transformers with different vector groups, cannot be used due to the inadmissibly high tolerances involved.

6-pulse parallel connection of Basic Line Modules

With the 6-pulse parallel connection, up to four Basic Line Modules are supplied by a common two-winding transformer on the line side and controlled by a common Control Unit.

12-pulse parallel connection of Basic Line Modules

⚠ WARNING

Unexpected motion of individual drives

If several Motor Modules are supplied from one infeed unit, then if the V_{dc_max}control is incorrectly parameterized, individual drives can accelerate in an uncontrolled fashion, which can lead to death or severe injury.

- Only activate the V_{dc_max} control for the Motor Module whose drive has the highest moment of inertia.
- Inhibit this function for all other Motor Modules, or set this function to monitoring only.

For 12-pulse parallel connections, up to four Basic Line Modules are supplied by a three-winding transformer on the line side. In this case, an even number of modules (e.g. two or four) must be divided between the two secondary windings. The Basic Line Modules of both

subsystems are controlled by a common Control Unit - even though the input voltages are 30° out of phase.

There is also the redundant version with which two BLMs in each case are controlled by one Control Unit.

If several Motor Modules are supplied from a non-regenerative infeed unit (e.g. a BLM), or for power failure or overload (for SLM/ALM), the V_{dc_max} control may only be activated for a Motor Module whose drive should have a high moment of inertia.

For the other Motor Modules, this function must be disabled or monitoring must be set.

If the V_{dc_max}control is active for multiple Motor Modules, then the controllers may have negative effects on each other in the case of unfavorable parameter assignment. The drives may become unstable and individual drives may unintentionally accelerate.

Remedy

- activate the V_{dc_max} control:
  - Vector control: p1240 = 1 (factory setting)
  - Servo control: p1240 = 1
  - U/f control: p1280 = 1 (factory setting)
- Inhibit V_{dc_max} control:
  - Vector control: p1240 = 0
  - Servo control: p1240 = 0 (factory setting)
  - U/f control: p1280 = 0
- Activate the V_{dc_max} monitoring
  - Vector control: p1240 = 4 or 6
  - Servo control: p1240 = 4 or 6
  - U/f control: p1280 = 4 or 6

9.10.1.2 Parallel connection of Smart Line Modules

Description

Smart Line Modules are infeed/regenerative feedback units. Like the Basic Line Modules, they supply energy to the connected Motor Modules, but unlike the Basic Line Module, they are capable of feeding back regenerative energy to the line supply.

Smart Line Modules in Chassis format are suitable for connection to grounded (TN, TT) and non-grounded (IT) supply systems. The following voltages and power ratings are available:

Line voltage	Rated power
38 to 480 V 3 AC	250 to 800 kW
500 to 690 V 3 AC	450 to 1400 kW

Features

- The DC-link voltage is greater than the rms value of the line rated voltage by a factor of 1.3.

Rules

The following rules must be observed when connecting Smart Line Modules in parallel:

- Up to four identical Smart Line Modules can be connected in parallel.
- A common Control Unit must always be used to implement the parallel connection.
- A 4% reactor is always required upstream of each Smart Line Module for the purpose of current balancing.
- Special Line Connection Modules are available for the parallel connection.
- For several infeed units, power must be supplied to the systems from a common infeed point (i.e. the modules cannot be operated on different line supplies).
- A derating factor of 7.5% must be taken into consideration, regardless of the number of modules connected in parallel.

6-pulse parallel connection of Smart Line Modules

With the 6-pulse parallel connection, up to four Smart Line Modules are supplied by a common two-winding transformer on the line side and synchronously controlled by a common Control Unit.

As Smart Line Modules have no current compensation control, the current must be balanced by the following measures:

- Use of suitable line reactors for the Smart Line Modules.
- Use of symmetrical power cabling between the transformer and the parallel-connected Smart Line Modules (cables of identical type with the same cross-section and length).
- The current reduction (derating) from the rated value for individual Smart Line Modules in a parallel connection is 7.5%.

12-pulse parallel connection of Smart Line Modules

For 12-pulse parallel connections, up to four Smart Line Modules are supplied by a three-winding transformer on the line side. In this case, an even number of modules, i.e. two or four, must be divided between the two secondary windings. In contrast to Basic Line Modules, the Smart Line Modules of both subsystems have to be controlled by two Control Units due to the 30° phase displacement in the input voltages.

9.10.1.3 Parallel connection of Active Line Modules

Description

Active Line Modules (ALMs) can supply motoring energy and return regenerative energy to the supply system.

The parallel connection of a maximum of 4 identical ALMs of the Chassis format or a maximum of 6 identical ALMs of the Chassis-2 format is supplied by a shared two-winding transformer and controlled synchronously by a shared Control Unit. In the case of a parallel connection of more than 4 power units, a stand-alone CU must be provided that is not used to operate any additional drive objects (DOs). The modules must not be connected to the supply using a three-winding transformer with phase-displaced secondary voltages.

Active Line Modules generate a regulated DC voltage that is kept consistent regardless of fluctuations in the line voltage (the line voltage must range within the permissible tolerances).

Active Line Modules draw an almost sinusoidal current from the supply system and therefore cause virtually no line harmonic distortions.

Active Line Modules are available for the following voltages and power ratings:

Line voltage	Rated power
380 to 480 V 3 AC	132 to 900 kW
500 to 690 V 3 AC	560 to 1400 kW

Features

Connecting Active Line Modules in parallel is characterized by the following features:

- The DC-link voltage is greater than the rms value of the line rated voltage by a factor of 1.5.

Active Line Modules (Chassis and Chassis-2 format)

The following preconditions and rules must be carefully observed when connecting Active Line Modules in the Chassis format and Chassis-2 formats in parallel.

Requirements

The following power unit-specific preconditions apply when connecting Active Line Modules in the Chassis and Chassis-2 formats in parallel:

- Chassis or Chassis-2 format
- For commissioning the parallel connection of ALMs of the Chassis format, a firmware version of ≥ V4.0 must be available.
- When commissioning ALMs, Chassis-2 format connected in parallel, a firmware version of ≥ V5.2 must be available.

Rules

The following rules must be observed when connecting Active Line Modules (ALM) of the Chassis format and Chassis-2 format in parallel:

- Up to 4 identical ALMs of the Chassis format or 6 identical ALMs of the Chassis-2 format can be switched in parallel.
- A common Control Unit (CU) must always be used to implement the parallel connection.
- For the parallel connection of ALMs of the Chassis-2 format with more than 4 modules, the DRIVE-CLiQ line must be separated. Up to 3 ALMs can be operated on one DRIVE-CLiQ line. Additional ALMs must be connected to a separate DRIVE-CLiQ line.
- Special Line Connection Modules are available for the parallel connection.

- In the case of multiple infeed units, the systems must be supplied by a common infeed point. Different networks are, as a result, not permissible.
- A derating factor of 5% must be taken into consideration, regardless of the number of ALMs connected in parallel.

Active Line Modules (Booksize format)

Active Line Modules (ALM) in the Booksize format can be connected in parallel in power versions 55 kW, 80 kW and 120 kW. The following preconditions and rules must be carefully observed when connecting Active Line Modules in the Booksize format in parallel.

Requirements

When connecting Active Line Modules in the Booksize format in parallel, the following power unit-specific requirements apply:

- Booksize format
- When commissioning ALMs of power class 55 kW, 80 kW or 120 kW in parallel, a firmware version ≥ V5.2 must be available.

Rules

The following rules must be observed when connecting Active Line Modules (ALM) of the Booksize format in parallel:

- Up to 2 identical ALMs can be connected in parallel.
- Together with the ALM parallel connection, both VECTOR as well as SERVO Motor Modules can be used.
- A common Control Unit (CU) must always be used to implement the parallel connection.
- In the case of multiple infeed units, the systems must be supplied by a common infeed point. Different networks are, as a result, not permissible.
- A derating factor of 5 % must be taken into consideration.

Balancing the currents

The following measures help to ensure balanced currents in parallel connections of Active Line Modules:

- Reactors in the Active Interface Modules.
- Use of symmetrical power cabling between the transformer and the parallel-connected Active Interface Modules / Active Line Modules (cables of identical type with the same cross-section and length).

Redundant parallel connection of Active Line Modules with several CUs

For a description of parallel connections of multiple Active Line Modules controlled by assigned Control Units, please refer to chapter "Master/slave function for Active Infeed (Page 506)".

Modules with different power ratings can be used.

9.10.1.4 Parallel connection of Motor Modules

Description

The following preconditions and rules must be observed when connecting Motor Modules in parallel.

Requirements

The following power unit-specific preconditions apply when connecting Motor Modules in parallel:

- Chassis or Chassis-2 format
- When commissioning Motor Modules in the Chassis-2 format, a firmware version of ≥ V5.2 must be available.

Rules and notes

The following rules and notes must be observed when connecting Motor Modules in parallel:

- In the Vector control mode, up to 4 Motor Modules in the Chassis format or 6 Motor Modules in the Chassis-2 format can feed a motor in parallel operation. The motor can have electrically isolated winding systems or a common winding system. The type of winding system is set in p7003 (winding in a parallel connection), and influences the following setting options:
  - the required decoupling measures at the outputs of the Motor Modules connected in parallel
  - the possible modulation systems to generate pulse patterns

  Note

  Operation of Motor Modules for separate winding systems

  For separate winding systems, only one Motor Module may be operated per winding.

- In conjunction with the type of infeed, the modulation systems define the maximum attainable output voltage or the motor voltage.

Winding systems for motors in SINAMICS S120 parallel connections

The following motors are permissible:

- Motors with electrically isolated winding systems (multi-winding system) in which the individual systems are not electrically coupled.
- Motors with a common winding system (single winding system) in which all parallel windings in the motor are interconnected in such a way that from the outside they look like a single winding system.

The following are inadmissible:

- Motors with separate winding systems on the line side which have a common, internal neutral.

Below are two examples illustrating the possible configuration of parallel connections of motors with a two-winding system or single winding system.

Parallel connection of two Motor Modules to one motor with double winding system

Motors in the power range from about 1 MW to 4 MW, for which power units connected in parallel are generally used, frequently have several parallel windings. If these parallel windings are separately routed to the terminal box of the motor, a motor is obtained with winding systems that can be separately accessed. In this case, you can dimension a parallel Motor Module connection so that each motor winding system is precisely supplied from one of the Motor Modules connected in parallel. The diagram below shows this type of arrangement.

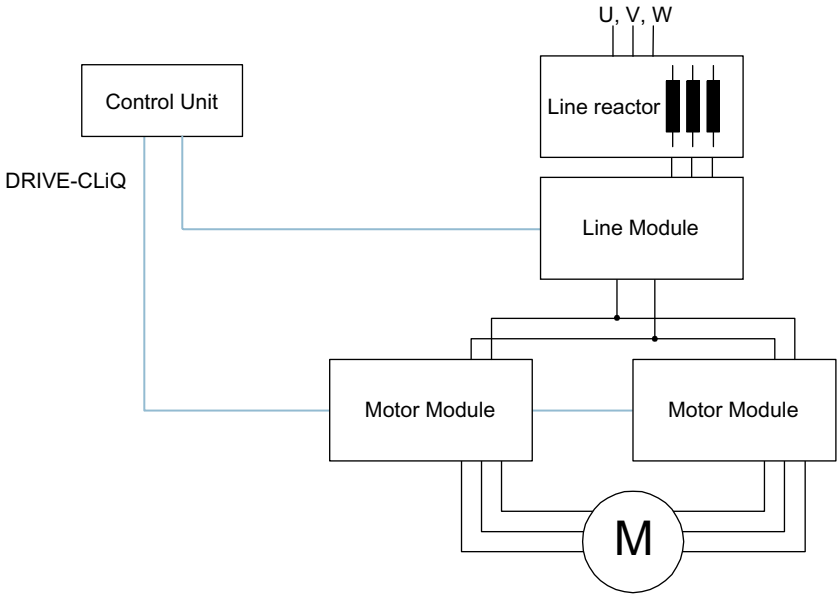

Figure 9-27 Parallel connection of two Motor Modules to one motor with double winding system

Owing to the electrical isolation of the winding systems, this arrangement offers the following advantages:

- No decoupling measures (minimum cable lengths and no motor reactors) are required at the Motor Module output in order to limit any potential circulating currents between the Motor Modules connected in parallel.
- Both types of modulation system, i.e. space vector modulation and pulse-edge modulation can be used, i.e. when the parallel connection is supplied by Basic Line Modules or Smart Line Modules, the maximum obtainable output voltage is almost equal to the three-phase AC line voltage connected to the infeed units (97%). When the parallel connection is supplied by Active Line Modules, a higher output voltage than the input voltage at the three-phase end can be obtained due to the increased DC-link voltage.

In reference to the rated values for individual Motor Modules, the derating factor is 5%.

Parallel connection (Chassis / Chassis-2) of two Active Line Modules and two Motor Modules on one motor with a single winding system

In many cases, it is not possible to use motors with separate winding systems, for example, in the following cases:

- The required number of separate winding systems cannot be realized due to the pole number.
- The motor is delivered by a third party.
- A motor with a common winding system is already present.

In such cases, the outputs of the Motor Modules connected in parallel are interconnected via the motor cables in the motor terminal box.

Active Interface Modules isolate switching-frequency harmonics from the supply connection and thus effect basic interference suppression of the supply system. These modules are essential to the operation of Active Line Modules. The Voltage Sensing Module VSM10 also helps Active Line Modules to operate without any disturbances when the line supply conditions are unfavorable (e.g. significant voltage fluctuations, brief interruptions in the line voltage). For ALMs in the Chassis and Chassis-2 formats, the VSMs are already integrated in the Active Interface Modules.

9.10.2 Commissioning the parallel connection

During commissioning, power units connected in parallel are treated like one power unit on the line or motor side.

In order to ensure the appropriate defaults for the circuit current controller, the type of winding system must be configured in p7003.

Note

Connecting Motor Modules in parallel in the Vector control mode

You have created an OFFLINE project in vector control with parallel-connected Motor Modules and then transfer it ONLINE to the Control Unit (CU). To save the project in the CU, you must perform a POWER ON. The next time you switch on you receive an error message that the ONLINE topology is inconsistent. Load the project now to the programming device. This resolves the inconsistency.

For further detailed information about commissioning, restrictions regarding operation and parameterization options, please refer to the following manuals:

- SINAMICS S120 Commissioning Manual with Startdrive
- SINAMICS S120/S150 List Manual

9.10.3 Additional drive in addition to the parallel connection

Overview

Frequently, a controlled auxiliary drive is required in addition to the main drives, e.g. as excitation controller for shaft-mounted generators in shipbuilding or as lubricating pump drive, fan drive etc.

Description

For drive units with power units connected in parallel (Line Modules, Motor Modules) an additional drive can be supplied as an auxiliary drive. This drive object is supplied via a separate Motor Module from the common DC link and controlled from the CU320-2 via a dedicated DRIVE-CLiQ socket.

Conditions for switching in an auxiliary drive

The secondary conditions for connecting an additional drive object as auxiliary drive to a parallel connection are:

- Only power units of the same type and the same power rating may be connected together in parallel.
- Up to 4 Line Modules and up to 4 Motor Modules can be connected together in parallel.
- All the Power Modules operate on a common DC link.
- Due to the different cycle times, Line Modules and Motor Modules must be connected to separate DRIVE-CLiQ sockets. Mixed operation at one DRIVE-CLiQ socket results in a malfunction.
- Parameter p9620 (signal source for STO/SBC/SS1) of the DOs of all Motor Modules must be interconnected in the same way.
- Automatic commissioning of the additional drive object is not possible.
- The additional drive object must be created offline and then transferred online to the drive.
- The additional drive object must be connected to a separate DRIVE-CLiQ socket.
- The maximum power of the auxiliary drive must be selected so that the maximum power of all the Motor Modules incl. the additional drive - does not exceed the total power rating of the parallel Line Modules.
- Existing supplementary conditions and the resulting logic operations and monitoring functions must be adapted to the new requirements.

Creating a project with the appropriate topology

The desired topology can be created with the STARTER commissioning tool:

- The project is always created offline.
- The Control Unit combines parallel-connected power units to form a large Line Module or Motor Module.

- The auxiliary drive is assigned a separate DRIVE-CLiQ line.
- The DRIVE-CLiQ connections must be implemented corresponding to the topology that has been created

Example of the required topology

You can see an example created with STARTER below. 3 Basic Line Modules, 2 Motor Modules and an auxiliary drive are configured. The parallel connections can be clearly seen in the topology tree as one infeed unit and one drive. You can also see the additional auxiliary drive. The DRIVE-CLiQ connections are shown as a thin line. The three parallel Line Modules are connected to one DRIVE-CLiQ line, the two Motor Modules to the next DRIVE-CLiQ line, and the auxiliary drive to a third line.

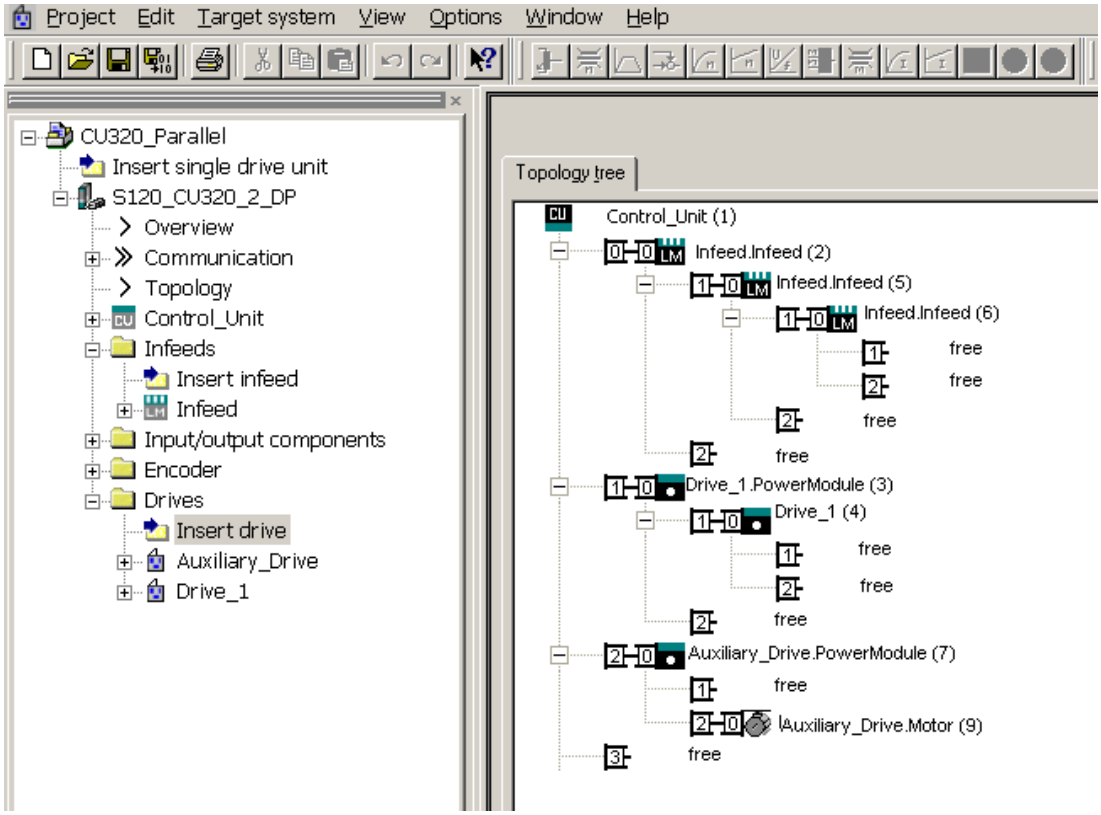

Figure 9-28 Topology with 3 basic Line Modules, 2 Motor Modules and 1 auxiliary drive

Overview of important parameters (see SINAMICS S120/S150 List Manual)

- p0120 Power Module data sets (PDS) number
- p0121[0...n] Power Module component number
- r0289 CO: Power unit output current, maximum
- p0602 Parallel connection power unit number temperature sensor
- p1240[0...n] Vdc controller or Vdc monitoring configuration
- p1280[0...n] Vdc controller or Vdc monitoring configuration (V/f)
- p6397 Motor module phase shift second system

- r7000 Par_circuit number of active power units
- p7001[0..n] Par_circuit enable power units
- r7002[0..n] CO: Par_circuit status power units
- p7003 Par_circuit winding system
- p7010 Par_circuit current unbalance alarm threshold
- p7011 Par_circuit DC link voltage unbalance alarm threshold

...

- r7250[0...4] Par_circuit power unit rated power
- r7251[0...4] Par_circuit power unit rated current
- r7252[0...4] Par_circuit power unit maximum current

..

- r7320[0...n] Par_circuit VSM line filter capacitance phase U
- r7321[0...n] Par_circuit VSM line filter capacitance phase V
- r7322[0...n] Par_circuit VSM line filter capacitance phase W

9.11 Extended stop and retract

Function description

The "extended stop and retract" function module (ESR) allows a workpiece and tool to be separated without causing any damage when a fault situation occurs. The drive axes involved are defined and are retracted and/or stopped in a controlled fashion. For this function, the drives must be operated with servo control.

The drive-integrated ESR functions are described in this manual:

- Extended stopping of the drive
- Extended retraction of the drive
- Generator operation with monitoring to buffer the DC link voltage

ESR functions can be initiated from the higher-level controller using a trigger signal, or independently in the drives themselves in the event of a fault (the function is integrated in the drive). The ESR functions integrated in the drive act on an axis-for-axis basis.

- Using an axis-specific trigger, ESR functions are directly initiated for an individual axis.
- Using a local trigger on the device itself, the ESR functions are simultaneously initiated for those axes under the drive line that are activated for ESR.

Note

ESR functionality under Safety Integrated Functions

If extended stop and retract are to activated simultaneously with Safety Integrated Functions, the following conditions must also be satisfied. Further information can be found in the SINAMICS S120 Function Manual Safety Integrated.

Example

For a machine tool, several drives are simultaneously operational, e.g. a workpiece drive and various feed drives for a tool. In the case of a fault, it is not permissible that the tool remains inserted in the workpiece. This could make both unusable. The tool and workpiece must be separated from one another in a controlled fashion before the drives are allowed to come to a standstill.

The "extended stop and retract" function module allows drive-integrated retraction using the feed drives with subsequent stopping. This means, for example when the line supply fails, a drive can be switched into the generator mode. This then supplies energy for the DC link so that the feed drives can retract the tool from the workpiece and then be subsequently stopped.

9.11.1 Commissioning the function

Requirement

- PG/PC and drive are connected with one another via PROFIBUS or PROFINET.

Procedure

To start the function, proceed as follows:

1. Select the ESR function with parameter p0888:
   - p0888 = 0: No function
   - p0888 = 1: Extended stopping (function integrated in the drive), N-set
   - p0888 = 2: Extended retraction (function integrated in the drive)
   - p0888 = 3: Generator operation (Vdc controller)
   - p0888 = 4: Extended stopping (function integrated in the drive), N-actual
2. Enable the ESR response with p0889 = 1.
3. Transfer the settings to the Control Unit using the "RAM to ROM" function.

The parameterization of p0888 can be changed from a higher-level controller depending on the particular situation - as long as the ESR response is not yet enabled.

In the r0108.9 parameter, you can check the current configuration.

9.11.2 Valid trigger sources

Axis-related trigger sources

Conditions for triggering the function:

- ESR function has been configured in the drive with p0888, e.g. stopping or retraction.
- ESR function has been enabled in the drive with p0889 = 1.
- The pulse enable has been set.

A distinction is made between the following fault sources:

- Internal drive fault
  - Faults with reactions OFF1 or OFF3
  - p0840 (On/OFF1) and p0849 (OFF3) wired to terminal
- Internal trigger signal
  - The source for the ESR trigger signal is set via BICO using p0890.

Triggering for all drives of a Control Unit

Conditions for triggering the function:

- ESR function has been configured in the drive, e.g. stopping or retraction.
- ESR function has been enabled in the drive.
- The pulse enable has been set.

A distinction is made between the following fault sources:

- Communication failure:
  - The Control Unit detects the communication failure and triggers autonomous reactions in all the enabled drives.
  - A status checkback signal is no longer possible.
  - The higher-level control removes the "Master control by PLC" signal (F07220).
  - Interruption of data transmission via the fieldbus (F01910 or F08501).
- External trigger signal
  - An external trigger signal from the control triggers the ESR function via the telegrams 390, 391 or 392.

9.11.3 Invalid trigger sources

The following DRIVE-CLiQ communication failures do not produce an ESR trigger:

Event	Sequence
Pulse suppression of the Motor Modules is pending	The drive performs an OFF2 and coasts to a standstill.
Failure of encoder modules as motor measuring system	The system is switched over to operation without encoder and a parameterized stop reaction is initiated.
Failure of encoder modules as a direct application-specific measuring system	The application is deactivated and a parameterized stop reaction initiated.

9.11.4 Configuring ESR responses

9.11.4.1 Extended stopping

Overview

In the case of a fault, the objective is to stop the drive in a defined fashion. The stopping method is used as long as the drive is still capable of functioning. The function is parameterized and operates on an axis-specific basis. Axes are not coupled.

Procedure

To configure the response for extended shutdown, proceed as follows:

1. Configure the stopping response with the parameter setting p0888 = 1 (N-set) or p0888 = 4 (N-actual).
2. Set the time in parameter p0892 for which the last setpoint from r1438 and the last actual value from r0063 are frozen before braking is initiated.
3. Select the OFF ramp with parameter p0891.

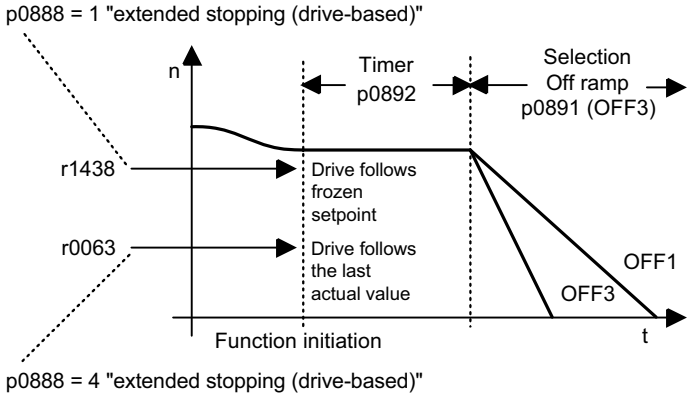

Figure 9-29 OFF ramp with timer

9.11.4.2 Extended retract

Overview

In the case of a fault, the objective is to approach a retraction position. The retraction method is used as long as the drive is still capable of functioning. The function is parameterized and operates on an axis-specific basis. Interpolating coupling of the axes is not realized.

Procedure

To configure the response for extended retraction, proceed as follows:

1. Configure the retract response with p0888 = 2.
2. Define the retraction speed with parameter p0893.

3. Use parameter p0892 to specify how long the retraction speed is to be applied.
4. Select the OFF ramp with parameter p0891.

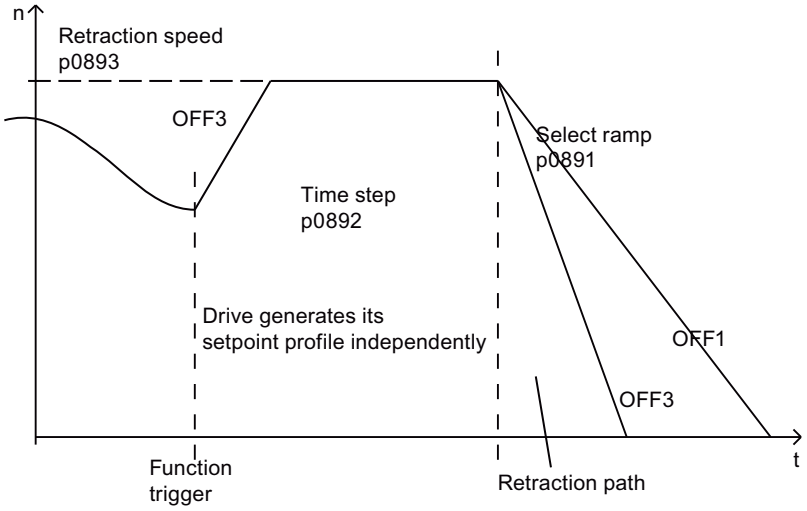

Figure 9-30 OFF ramp with "extended retract"

The retraction speed is not approached suddenly. It is approached via the OFF3 ramp. Parameter p0893 supplies the ramp-function generator with the setpoint for the ESR retraction speed which is actuated by an OFF3 ramp in the case of drive-autonomous motions. The safety setpoint velocity limiting p1051/p1052 and the normal velocity limits r1084/r1087 are active.

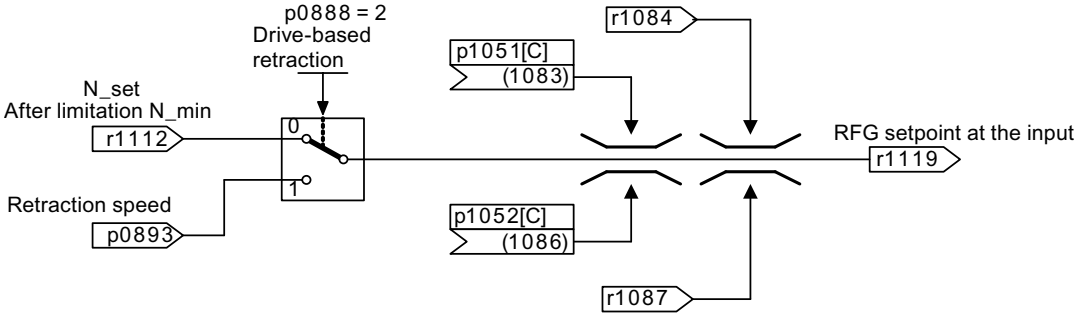

Figure 9-31 Connecting the setpoint channel to the ramp-function generator

9.11.4.3 Regenerative operation

Overview

In the case of a fault, the objective is to buffer the DC link until all of the drives connected to the DC link and enabled by ESR have reached their configured final position. To achieve this, a suitable drive in the drive line-up, for example a spindle drive, is braked in generator operation. The DC-link voltage is then monitored by the V_{dc_min} controller.

Procedure

To configure the response for generator operation, proceed as follows:

1. Set the generator operation of the drive with the parameter setting p0888 = 3.
2. Parameterize the V_{dc} controller.
3. Activate the monitoring of the DC-link voltage for the generator operation with the parameter setting p1240 = 2.
4. Set the permissible lower voltage limit V_{dc_min} of the DC link via parameter p1248.
   The infeed unit detects when the power fails as the DC-link voltage drops and this is then signaled as an alarm.

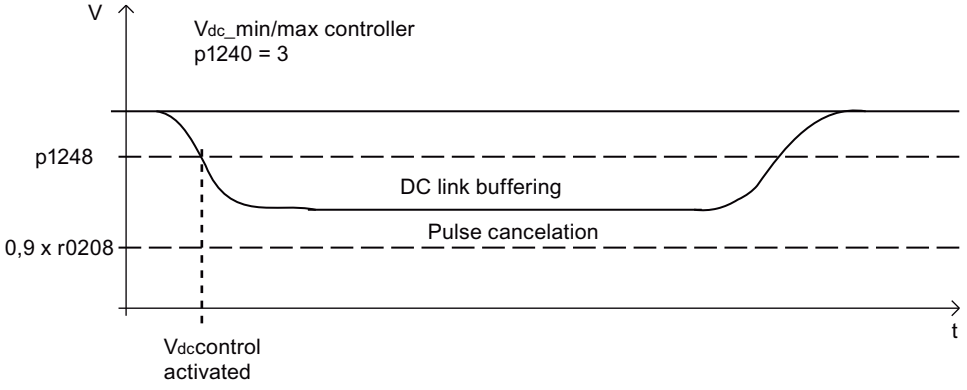

Figure 9-32 DC-link voltage setpoint

9.11.5 Restrictions for ESR

- Operating several axes in the generator mode
  Only use one speed-controlled axis to buffer the DC link. If you have parameterized several axes, faults can occur, which undesirably influence one another and therefore the drive line-up as a whole.
- Motors that are not suitable for generator operation
  Linear motors (1FN) and torque motors (1FW) require an adequately high DC-link voltage to brake. They are not suitable to buffer the DC link when operating in the generator mode.
- ESR and Safety Integrated
  If the Safety Integrated Extended Functions are controlled via PROFIsafe, in the case of a communication failure, Safety Integrated only permits a response time (p9580/p9380) of maximum 800 ms. After this time expires, Safety Integrated requests pulse suppression.

9.11.6 PROFIdrive telegram for ESR

A cyclic bit for CU_STW1 is present in PROFIdrive DO telegrams 390, 391, 392, 393, 394, 395 and 396 to monitor the ESR state.

Table 9-8 CU_STW1

Signal	Meaning	Interconnection parameters
CU_STW1.2	ESR trigger	p0890.9 = r2090.2

Cyclic bits for STW1 and MELDW are present in the telegrams.

Table 9-9 STW1

Signal	Meaning	Interconnection parameters
STW1.9	1 = Enable ESR response	p0889 = r2090.9

Table 9-10 MELDW

Signal	Meaning	Interconnection parameters
MELDW.2	1 = |n_act| < speed threshold value 3 (p2161)	p2082[2] = r2199.0
MELDW.4	1 = Vdc_min controller active (V_{dc}<p1248)	p2082[4] = r0056.15
MELDW.9	1 = ESR response initiated / generator operation active	p2082[9] = r0887.12

9.11.7 Function diagrams and parameters

Function diagrams (see SINAMICS S120/S150 List Manual)

- 2443 PROFIdrive - STW1 control word interconnection (p2038 = 1)
- 2456 PROFIdrive - MELDW status word interconnection
- 2495 PROFIdrive - CU_STW1 control word 1, Control Unit interconnection
- 3082 Setpoint channel - extended stop and retract (ESR, r0108.9 = 1)

Overview of important parameters (see SINAMICS S120/S150 List Manual)

- r0063 CO: actual speed value
- p0108[0...n] Drive object function module
- r0108.9 Drive object function module; extended stop and retract / ESR
- r0887.0...13 BO: ESR status word
- p0888 ESR configuration
- p0889 BI: Enable ESR response
- p0890[0...4] BI: ESR trigger

- p0891 ESR OFF ramp
- p0892 ESR timer
- p0893 ESR velocity / ESR speed
- p1051[0...n] CI: Speed limit in RFG, positive direction of rotation
- p1052[0...n] CI: Velocity limit RFG, negative direction
- r1084 CO: Speed limit positive effective
- r1087 CO: Speed limit negative effective
- p1240[0...n] Vdc controller or Vdc monitoring configuration
- p1248[0...n] Lower DC link voltage threshold
- r1438 CO: Speed controller, speed setpoint
- p9380 SI Motion stop response delay bus failure (Motor Module)
- p9580 SI Motion stop response delay bus failure (Control Unit)

9.12 Moment of inertia estimator

Overview

The "Moment of inertia estimator" function is preferably applied for cases in which a constant repetition of the rotating motor data identification for determining moment of inertia is either too complex or is not possible.

Function description

The "Moment of inertia estimator" function is required for cases in which moments of inertia for the drive change considerably during operation (e.g. when using tools or workpieces with a different moment of inertia).

Note

Application for linear motors

The "Moment of inertia estimator" function can also be applied for linear motors. The following must be considered in the event of deviating designations for the relevant parameters:

- Force (linear) ≙ Torque (rotary)
- Mass (linear) ≙ Moment of inertia (rotary)
- Speed (linear) ≙ Speed (rotary)

Control mode

You can apply the "Moment of inertia estimator" function both in servo control mode and vector control mode. The following applies:

- Servo control type
  The "Moment of inertia estimator" is also required for the "Online tuning (Page 114)" function in the servo control mode.
- Control mode vector
  Moment of inertia precontrol (Page 545) can be configured for vector control. This is especially advantageous for applications, where the moment of inertia cannot be calculated as a result of a constant motor speed.

Operation with encoder

Operation with encoder is possible in both servo control mode and vector control mode. The following applies for operation in servo control mode:

- For operation **without** online tuning activated, the moment of inertia is only effective in the motor control if the speed pre-control or torque pre-control is activated (p1402.4 = 1).
- For operation **with** online tuning activated, the relevant controller parameters are set automatically for speed controller and position controller. The automatic calculation of the controller parameters also depends on the estimated moment of inertia.

Operation without an encoder

Operation without encoder is possible in both servo control mode and vector control mode. The following applies:

- For operation without encoder, the total moment of inertia of the motor and driven machine must be known.
- In controlled operation without encoder (speed < p1755), there is a risk of the motor stalling in the acceleration phase due to inadequate parameterization of the moment of inertia.
  Recommendation: Enter the greatest possible moment of inertia which can occur in the current configuration of your drive in p1498 (load moment of inertia or load mass). Additionally, ensure that the value "0" is entered in the parameter p1400.22 (speed control configuration). This setting ensures that the start value for the moment of inertia estimator is set to the parameterized moment of inertia (J = p0341 · p0342 + p1498) in the event of pulse inhibit. The pulse inhibit should then only be set if the moment of inertia has changed. The setting in parameter p1400.22 then ensures a return to the maximum moment of inertia.
- In controlled operation without encoder (speed > p1755), the speed precontrol or torque precontrol requires the precise moment of inertia to attain optimum speed controller dynamic response. An incorrect moment of inertia at the end of the acceleration phase, results in an undesirable overshoot or undershoot.
  Recommendation: Activate the "Moment of inertia estimator" function. This will prevent any overshoot or undershoot.

Estimating the load torque

In order that the moment of inertia can be estimated, you must first estimate the load torque M_L. Phases with constant speed ≠ 0 are required for calculation of the load torque (e.g. friction force). At low speeds, the inverter calculates the load torque M_L from the actual motor torque. The conditions described as follows must be satisfied in this regard.

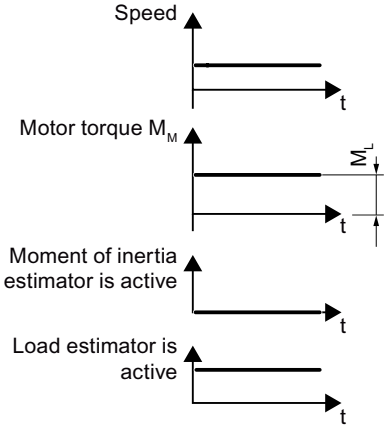

Figure 9-33 Parameters for calculation of the load torque

Conditions

The following conditions must be satisfied for calculation of the load torque:

- Speed absolute value ≥ p1226
- Acceleration · moment of inertia (r1493) < 0.3 · p1560 · p0333

The load torque has stabilized (settled) once one of the following conditions is satisfied.

- Condition 1:

Requirement	Condition
Direction: Measurement is performed in the direction of travel.	If the load was measured for a minimum duration of 3 · p1562.

- Condition 2:

Requirement	Condition
Instant in time: Measurement is performed after a POWER ON.	If p1563 and p1564 are entered from a previous measurement and saved.

The moment of inertia can be calculated in the acceleration phases after the load torque has settled. The start value for the moment of inertia estimator thus corresponds with the parameterized moment of inertia (J = p0341 · p0342 + p1498).

Note

Remaining calculation

If the source of p1502 has a 1 signal, the moment of inertia is **not** estimated.

Accuracy of calculation

The accuracy of the moment of inertia estimation increases as the acceleration rate increases.

Estimating the moment of inertia

For larger speed changes, the converter initially calculates the accelerating torque M_B as the difference between the motor torque M_M, load torque M_L and frictional torque M_R:

- $M_B = M_M - M_L - M_R$

The moment of inertia J of the motor and load is then obtained from the accelerating torque M_B – and the angular acceleration α

- $J = M_B / \alpha$

Conditions

The following conditions must be satisfied to calculate the moment of inertia:

- The acceleration torque M_B must be > p1560 · r0333 (rated motor torque) **and** > 80% of the friction torque (0.4 · (p1563 - p1564)).
- For operation without encoder, the speed must be > p1755 in closed-loop controlled operation.
- The setpoint acceleration must be > 3.2 / number of pole pairs $1/s^2$ or 3.2 · pole pair width m/s^2.

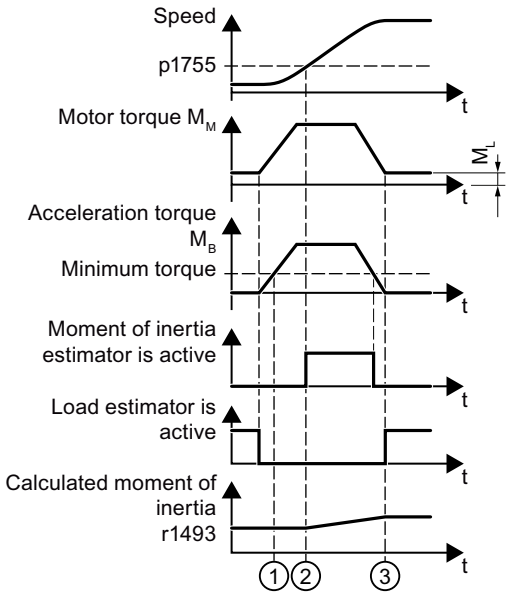

① Acceleration torque M_B

② Speed p1755

③ Motor torque M_M (≙ setpoint acceleration)

Figure 9-34 Parameters for calculating the moment of inertia

Optimizing traversing

For optimization of traversing, refer to the information in the following table.

If ...	Then ...
If the change in inertia is already known, ...	you can delete the measurement memory for the moment of inertia with p1565 = 1. As a consequence, r1407.26 (moment of inertia estimator stabilized) is cleared. Parameter r1407.26 is then only set again if sufficient measurement time with acceleration is available.
If the load or the friction changes, ...	you can delete the settling condition for the load estimation with p1565 = -1. The load estimation must therefore be settled again prior to estimating the moment of inertia.
If the load estimation is completed and the moment of inertia is not settled (r1407.24/26 = 0), ...	we recommend increasing the acceleration. **Note:** If the "Basic positioner" (EPOS) function module is activated, you can increase acceleration with the parameters p2572 and p2573.
If no constant speed setpoints (e.g. sinusoidal) are included in the traversing profile, ...	we recommend activating the load estimation in the event of changes in the speed setpoints via p1400.26 = 0.
If constant speed setpoints are included in the traversing profile, ...	we recommend suppressing the load estimation in the event of changes in the speed setpoints via p1400.26 = 1. This will ensure greater accuracy for load and inertia estimation.

Saving the results permanently

The results of the moment of inertia and load estimator can be taken over by permanently saving (RAM to ROM) after the system has settled (r1407.26 = 1). If there are no significant changes to the moments of inertia, the inertia estimator can be deactivated after saving. The appropriate signal can be read out of SINUMERIK as soon as the moment of inertia estimator has settled.

Note

Online tuning for servo control

The values determined by the load and moment of inertia estimator are deleted by deactivating (p5300 = 0) and then subsequently reactivating online tuning (p5300 = 2).

Restrictions

The following restrictions apply for the "Moment of inertia estimator" function:

- The moment of inertia estimator only provides the correct total moment of inertia if the load does not change during the acceleration or deceleration phases.
- In phases where machining takes place during the speed setpoint change, e.g. thread cutting, the moment inertia estimator can be frozen using a BICO switch (source of p1502 = 1). This means that a previous moment of inertia that was correctly determined is not modified as a result of an incorrect estimation. This condition is also violated when, for example, the friction torque changes significantly with the speed. An excessively high backlash (no frictional connection) and fast periodic movements that decouple the masses elastomechanically, can also have a negative effect on the accuracy of the moment of inertia estimation.
  The following remedial measures are also to be observed in this regard:

If ...	Then ...
If the friction torque changes considerably with the speed, ...	you can accept and activate the "Friction characteristic" function with the parameters p3820ff, p3842 and p3845. This will allow speed dependency for the friction to be taken into account in accordance with the friction characteristic.

9.12.1 Commissioning the function

Procedure

Note

In the servo control mode, the Online tuning (Page 114) function activates the "Moment of inertia estimator" function automatically.

To activate the "Moment of inertia estimator" function module, proceed as follows:

1. Call the configuration of the drive in the Startdrive engineering tool in offline mode. Activate the "Moment of inertia estimator / OBT" function module.
   You can then check under r0108.10 in the parameter view whether the moment of inertia estimator is activated.
2. Make the setting p1400.18 = 1 (moment of inertia estimator active) in the parameter view of the drive object:
   A data set changeover can be used to activate or deactivate the moment of inertia estimator via p1400.

Additional settings and special issues

Note

If the function for adapting the moment of inertia via BICO technology (p1497 connected) is activated, the moment of inertia estimator is **not active**.

- Duration and accuracy of the moment of inertia estimation can be set in the parameters p1561 and p1562. The following applies:

The ...	The ...
The lower the values in both parameters, ...	the shorter the moment of inertia estimator measurements. As a consequence, a quickly changing torque can be better estimated.
The higher the values in both parameters, ...	the more precise the values supplied by the moment of inertia estimator.

- If the load changes during acceleration, you must change the 1 signal in parameter p1502 using a BICO switch.
- The estimated moment of inertia can be monitored in parameter r1493.

9.12.2 Supplementary functions for vector control

9.12.2.1 Moment of inertia precontrol

Overview

The "Moment of inertia precontrol" function can only be applied in the vector control mode.

Requirement

- The "Moment of inertia estimator" function module is activated.

Function description

In applications in which the motor runs predominantly at constant speed, the converter can only rarely calculate the moment of inertia using the "Moment of inertia estimator" (see Chapter "Moment of inertia estimator (Page 540)"). Moment of inertia precontrol is available for situations such as these. The moment of inertia precontrol assumes that there is an approximately linear relationship between the moment of inertia and the load torque.

Configuring the function

Proceed as follows to configure the function:

1. Ensure that the acceleration precontrol scaling is not equal to zero: p1496 ≠ 0.
2. Activate the acceleration model of the speed controller precontrol: p1400.20 = 1.
3. Configure the moment of inertia precontrol using p5310.
   Using bit 0, you can activate the calculation of the characteristic (p5312 … p5315)
   Using bit 1, you can activate the moment of inertia precontrol. The following bit combinations are possible:

p5310.0 = 0, p5310.1 = 0	Moment of inertia precontrol not active
p5310.0 = 0, p5310.1 = 1	Cyclic calculation of the coefficients without moment of inertia precontrol (commissioning)
p5310.0 = 1, p5310.1 = 0	Moment of inertia precontrol activated (without cyclic calculation of the coefficients)
p5310.0 = 1, p5310.1 = 1	Moment of inertia precontrol activated (with cyclic calculation of the coefficients)

The status word of the moment of inertia precontrol is indicated in r5311.

Example: Horizontal conveyors

For a horizontal conveyor, in a first approximation, the moment of inertia depends on the load. The relationship between load torque M_L and torque is saved in the converter as linear characteristic.

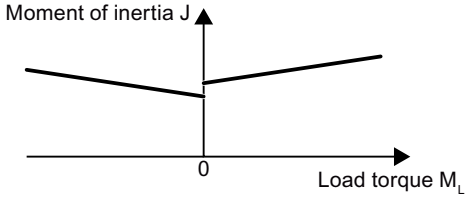

Figure 9-35 Relationship between load torque M_L and torque

The following applies in accordance with the respective direction of rotation:

- Positive direction of rotation:
  Moment of inertia J = p5312 · load torque M_L + p5313
- Negative direction of rotation:
  Moment of inertia J = p5314 · load torque M_L + p5315

You have the following options to determine the characteristic:

- You already know the characteristic from other measurements. In this case, you must set the parameters to known values when commissioning the system.
- The converter iteratively determines the characteristic by performing measurements while the motor is operational.

9.12.2.2 Additional functions

In addition to the precontrol, the following supplementary functions for the moment of inertia estimator are also available for vector control:

- Accelerated moment of inertia estimation (p1400.24 = 1)
  Using this setting, when the drive accelerates steadily, the moment of inertia can be more quickly estimated.
- Speed controller adaptation (p5271.2 = 1)
  The estimated load moment of inertia is taken into account for the speed controller gain.

9.12.3 Function diagrams and parameters

Function diagrams (see SINAMICS S120/S150 List Manual)

- 5035 Servo control - moment of inertia estimator (r0108.10 = 1)
- 6035 Servo control - moment of inertia estimator (r0108.10 = 1)

Overview of important parameters (see SINAMICS S120/S150 List Manual)

- r0108 Drive object function module
- r0333[0...n] Rated motor torque
- p0341[0...n] Motor moment of inertia
- p0342[0...n] Ratio between the total and motor moment of inertia
- p1226[0...n] Speed threshold for standstill detection
- p1400[0...n] Speed control configuration
- p1402[0...n] Current control and motor model configuration
- r1407.0...26/27 CO/BO: Status word, speed controller
- r1493 CO: Total moment of inertia (scaled)
- p1496[0...n] Acceleration precontrol scaling
- p1497[0...n] CI: Moment of inertia scaling signal source
- p1498[0...n] Load moment of inertia
- p1502[0...n] BI: Freezing the moment of inertia estimator
- r1518[0...1] CO: Acceleration torque
- r1538 CO: Upper effective torque limit
- r1539 CO: Lower effective torque limit

- p1560[0...n] Moment of inertia estimator accelerating torque threshold value
- p1561[0...n] Moment of inertia estimator change time moment of inertia
- p1562[0...n] Moment of inertia estimator change time load
- p1563[0...n] CO: Moment of inertia estimator load torque positive direction of rotation
- p1564[0...n] CO: Moment of inertia estimator load torque negative direction of rotation
- p1226[0...n] Speed threshold for standstill detection
- p1755[0...n] Motor model changeover speed encoderless operation
- p5310[0...n] Moment of inertia precontrol configuration
- r5311[0...n] Moment of inertia precontrol status word
- p5312[0...n] Moment of inertia precontrol linear positive
- p5313[0...n] Moment of inertia precontrol constant positive
- p5314[0...n] Moment of inertia precontrol linear negative
- p5315[0...n] Moment of inertia precontrol constant negative
- p5316[0...n] Moment of inertia precontrol change time moment of inertia

9.13 Additional controls for Active Infeed

Function description

With the "Supplementary closed-loop control" function module, parameterizable band-stop filters (Page 40) can be used with whose help path resonances can be attenuated.

The main application for these band-stop filters is in weak line supplies in which the resonance point of the line filter can drop to one quarter of the controller frequency.

Activating the function module

To activate the function module, proceed as follows:

1. Select the infeed unit in the project navigator and open the "Properties" shortcut menu. The "Object properties" dialog then opens.
2. Click the "Function modules" tab.
3. Activate the "Additional closed-loop controls" function module in the function modules selection with a mouse click.

Parameter r0108.03 indicates whether the function module has been activated.

Function diagrams (see SINAMICS S120/S150 List Manual)

- 8940 Active Infeed - controller modulation depth reserve / controller DC link voltage (p3400.0 = 0)
- 8946 Active Infeed - current precontrol / current controller / gating unit (p3400.0 = 0)

9.14 Advanced Position Control (including Active Vibration Suppression)

Requirement

- The "Advanced Position Control" (APC, r0108.7) and "Active Vibration Suppression (AVS/APC-ECO)" (APC, r0108.19) function modules for SINAMICS S120 are only available for servo drives.
- Several APC functions require that a 2nd measuring system is used. Additional information is provided in the description of the various subfunctions.
- Frequencies of up to 100 Hz can be influenced by APC. Whether oscillation can be influenced also depends on the following conditions:
  - How does the mechanical system influence the closed-loop control?
  - How was the control loop set?
- For all functions of the "Advanced Position Control" function module, including "Active Vibration Suppression", license: "Active Vibration Suppressions (APC/AVS)" is required.

Function description

⚠ WARNING

Uncontrolled movement of the drive as a result of incorrect parameter assignment

Incorrect parameterization of the APC results in instability of the speed and position controllers. As a consequence, uncontrolled drive motion can occur that may result in death or serious injury.

- Ensure that the limits are correctly parameterized.

The "Advanced Position Control" (APC) function module provides closed-loop control-related functions to actively dampen mechanical oscillations. The function actively responds to measured oscillations using an appropriate manipulated variable. The motor moves to compensate for the oscillation. If the oscillation frequency changes, e.g. because of the axis loading or mechanical changes, APC is also effective for the changed frequency.

Note

APC functions are calculated in the speed control loop.

Note

APC is not a passive position setpoint filter, as mechanical oscillations are actively dampened based on a closed-loop control strategy.

Mechanical oscillations are always dampened using the motor speed controller (P gain, integrator). When dampening an axis, two counteracting adjustment principles are available.

1. In order to efficiently suppress disturbances, the speed controller is optimally set using a high speed controller gain. However, by optimally setting the speed controller, oscillations on the load side are frequently increased.
2. The speed controller gain must be reduced in order to optimally dampen the axis and to reduce mechanical oscillations. Reducing the speed controller gain, means that disturbance suppression is also reduced.

APC therefore offers several functions that facilitate efficient dampening and disturbance suppression - and allows them to be optimally coordinated with one another. As a consequence, using APC, you achieve two important closed-loop control related objectives:

- Mechanical oscillations are dampened
- Disturbances are efficiently suppressed with a high speed controller gain

Methods for the excitation of mechanical oscillations

Mechanical oscillation is excited using the following methods:

- **Excitation by the command variable** (setpoint motion of the axis)
  With this method, mechanical oscillation is reduced by influencing the reference variable; e.g. by changing the acceleration, by limiting the jerk or by using a setpoint filter. Influencing the reference variable can be realized as follows:
  - Changing the acceleration
  - Limiting the jerk
  - Using a setpoint filter

  The disadvantage of this method is that processing or cycle times are extended. Further, using a setpoint filter frequently results in a higher degree of inaccuracy when emulating contours.
  By using APC, you can reduce mechanical oscillation without having any of the disadvantages listed above.
- **Excitation by disturbing variables** (e.g. as a result of periodic process forces)
  With this method, mechanical oscillation is only influenced using an active closed-loop control strategy.

Irrespective of the method used, any mechanical oscillation must be able to be measured using the measuring system assigned to the particular axis. This is the reason that the following methods are available when using APC.

1. APC is set just using motor variables (motor encoder, current).
2. APC is deployed together with a direct measuring system.
3. APC is deployed with an external acceleration sensor installed in the system.

Note

Intervention of APC in the speed control loop that can be critical for system stability

The functions integrated in APC represent their own control loop - or provide the possibility of intervening in the speed control loop. As a consequence, parameterizing the APC is critical from a stability standpoint.

To optimize APC in conjunction with a direct measuring system, it helps to have a deeper understanding of closed-loop control relationships (e.g. interpretation of frequency responses).

The function descriptions include examples that show how the closed-loop control is influenced by the particular function. Further the descriptions of the functions provide information about the measuring functions that are available for measuring the control loops (also see Chapter "Configuring measuring functions (Page 584)").

The APC function module must be set before optimizing the position control.

Note

Increased CPU time for each drive axis as a result of APC

APC results in a significant increase in the CPU time required for each drive axis. As a consequence, it cannot be guaranteed that 6 servo axes can be operated on one Control Unit in all drive configurations. The number of axes must be reduced step-by-step if the CPU time for the intended process is inappropriately high.

Applications

- **Improve the higher-level position control**
  APC is deployed in order to improve the response of a position control (higher-level position control with respect to the speed control). Damping critical oscillation in the speed control loop often allows a higher position controller gain to be set. This is true, in particular, when the position control uses a direct measuring system for the closed-loop control.
- **Avoid oscillation and instability in the process**
  APC dampens oscillation resulting from periodic machining forces in the process (e.g high load levels when machining steel), which cause oscillation to be excited or instability (regenerative chatter). The process remains stable by dampening this oscillation. Higher machining feed rates or increased swarf thickness are therefore possible.
- **Avoid oscillation of the mechanical structure**
  Oscillations of the mechanical structure are excited in the process by the setpoint motion of the axes. These oscillations have negative effects in the process (e.g. when finishing surfaces in mold making), and the process has to be slowed down. Using APC, mechanical structure oscillations can be dampened and the process made faster.

Subfunctions

The APC function module is subdivided into the following subfunctions:

- Active Vibration Suppression (APC without sensor on the load side) (Page 556):
  - Is a rugged function to dampen oscillation.
  - Does not require a direct measuring system
  - Can be individually activated as function module "Active Vibration Suppression (AVS/ APC-ECO)".
- APC to reduce machining-related oscillation (Page 562):
  - Is a rugged function to dampen machining-related oscillation.
  - Can be used in addition to other functions.
  - Does not require a direct measuring system
- APC with encoder combination and differential position feedback (Page 565):
  - The function is used to influence the speed control loop. The speed control response can be improved (e.g. by increasing the speed controller gain).
  - Requires a direct measuring system.
  - Encoder combination and differential position feedback are functions that are coordinated and harmonized with one another and that should always be used together.
- APC with acceleration feedback (Page 570):
  - The function uses the acceleration measured using the direct measuring system to dampen oscillation.
  - Requires a direct measuring system.
  - An external acceleration sensor can be used instead of measuring the acceleration using a direct measuring system.
- APC with load velocity control (Page 576):
  - Requires a direct measuring system.
  - The function controls the velocity at the direct measuring system. Oscillation is dampened by controlling the velocity at the direct measuring system.

9.14.1 Commissioning the function module

Activating function modules in SINUMERIK

2 APC function modules that require a license are available for SINUMERIK applications ("Advanced Positioning Control(APC)" and "Active Vibration Suppression(AVS/APC-ECO)"). The function modules for SINUMERIK applications cannot be activated using the Startdrive commissioning tool. The function modules can be activated in SINUMERIK Operate via the expert list.

Note

For SINUMERIK 840D sl, the following function modules require a license:

- APC
- AVS/APC ECO

For SINUMERIK 828D, the following function module requires a license:

- AVS/APC ECO

Activating the function modules in Startdrive

2 APC function modules that require a license are available for SINAMICS applications ("Advanced Positioning Control (APC)" and "Active Vibration Suppression (AVS/APC-ECO)"). Both function modules can be activated in the Startdrive commissioning tool under “Drive axis > Parameters > Basic parameter assignment > Function modules."

Setting the ratio

The ratio between the direct measuring system and the motor measuring system can only be set if the following conditions are satisfied.

- APC is activated.
- APC is used in conjunction with a direct measuring system.

The setting can only be made in the screen form "Technology > Position control > Mechanical system" if the following condition is satisfied.

- The "Position controller" function module is activated.

If the "Position controller" function module is not activated, then the ratio must be set using the Expert list. The setting can only be made using the Expert list if the following condition is satisfied.

- The drive is not enabled (r0002 > 0).

Proceed as follows to set the ratio using the Expert List:

1. p0010 = 25: position control commissioning
2. For all drives: Setting the gear ratio
   - p2504 = gearbox motor revolutions (SINUMERIK: MD 31060)
   - p2505 = gearbox load revolutions (SINUMERIK: MD 31050)

3. Only for linear axes:
   - p2503 = 1,000,000
     signifies that the internal resolution is 1 LU = 1 µm.
   - p2506 = leadscrew pitch in µm (SINUMERIK: MD 31030 * 1000)
4. p0010 = 0
5. Backup the drive data by copying from RAM to ROM.

Note

If it is necessary to reverse the measurement direction for the direct measuring system, then both the speed and position must be reversed together (p0410[1].1 = p0410[1].0 = 1) so that p0410[1] = 3H.

If the measuring direction for the direct measuring system matches the measuring direction of the motor measuring system, then p410[1] must be parameterized = 0H.

Licensing

The license for SINAMICS standalone is an axis license. Detailed information about licensing is provided in Chapter "Licensing (Page 776)".

The license for SINAMICS with SINUMERIK is a machine license within SINUMERIK. The license can be activated in SINUMERIK Operate in the menu "Commissioning > Licenses". Activation means that the NC must be switched on (power on).

Preassigning parameters

We recommend the following parameter preassignments:

Parameter	Default value	Explanation
p3702	APC load speed/motor speed weighting	The value is preassigned to "1" to allow compatibility with older firmware versions. Set a starting value of "0" to optimize the encoder combination.
p3778	APC speed limit	Setting the limit for the APC output value. For standard Siemens motors (1FT, 1FK) with rated speeds in the range 2000 to 6000 rpm, we recommend that a speed limit of 500 rpm is set. Set the speed limit so that the required manipulated variable of the APC controller is reached.
p3779	APC speed limit monitoring time	Monitoring time for speed limiting. A suitable value is 50 ms.
p3701	Selecting the direct measuring system	**Measuring systems integrated in the drive:** If a direct measuring system is used, then this must be selected for the APC. In the default setting, the 2nd measuring system of the drive (p3701 = [2] encoder 2) is used. If a 3rd measuring system (p3701 = [3] encoder 3) is available, then this can also be used. **Measuring systems not integrated in the drive:** Direct measuring systems from signal sources that do not belong to the drive can also be used. To do this, BICO sink (p3749) is connected, and the signal scaling is set using p3748. Activation is realized with p3700.9 = 1, where p3701 is ignored. The use of this technique is relevant for master-slave axes (see also the example in Chapter "APC with load velocity control (Page 576)").

Parameter	Default value	Explanation
p3700.1	Using an external acceleration sensor	An external acceleration sensor must first be integrated into the system (e.g. using a TM31 module). The function is activated in the APC using p3700.1 = 1. The acceleration sensor signal must be wired to BICO sink p3750. For this purpose, a highpass filter to filter low frequencies can be set in p3751.
p3700.3 (optional)	Taking into account the setpoint acceleration of the axis	For applications where a high contour precision is required (in the mold making area) we recommend that p3700.3 is set = 1. This means that the actual setpoint acceleration of the axis is taken into account in the APC calculation.

After preassigning the parameters, carry out a RAM to ROM data backup.

Note

Using p3749

- When interconnecting a speed actual value from another axis, we recommend that the "Speed information available" bit (r1992.11) is evaluated (e.g. interconnect to an external fault p2106 ... p2108).
- To avoid an additional dead time as a result of the calculation sequence, we recommend that the drive object of signal source of p3749 is set with a higher priority (p7900). The higher priority applies with respect to the drive currently being processed.

9.14.2 Active Vibration Suppression (APC without sensor on the load side)

Function description

The "Active Vibration Suppression" (AVS) function is a rugged technique to dampen mechanical oscillations - and a direct measuring system is not required. With this technique only the current and speed actual values signals measured at the motor are used. The AVS function is especially suitable for drives involving linear and torque motors, as these are frequently configured without a direct measuring system.

The function can only be used if, at the axis where the oscillation occurs, the oscillation can be measured in the motor current.

Before optimizing the AVS function, the speed control loop (= subordinate control loop) must be optimized.

Note

AVS can also be used in conjunction with a direct measuring system. The combination of AVS and direct measuring system offers, regarding the ruggedness of the technique (e.g. for changes to the mechanical system) advantages when compared to a configuration where only a direct measuring system is used.

If a direct measuring system is available, the closed-loop control (without sensor) can also be combined with the P component (p3760/p3765) of the direct measuring system. This measure allows disturbance suppression and precision to be increased.

Function diagram

The following figure is an excerpt from function diagram 7012.

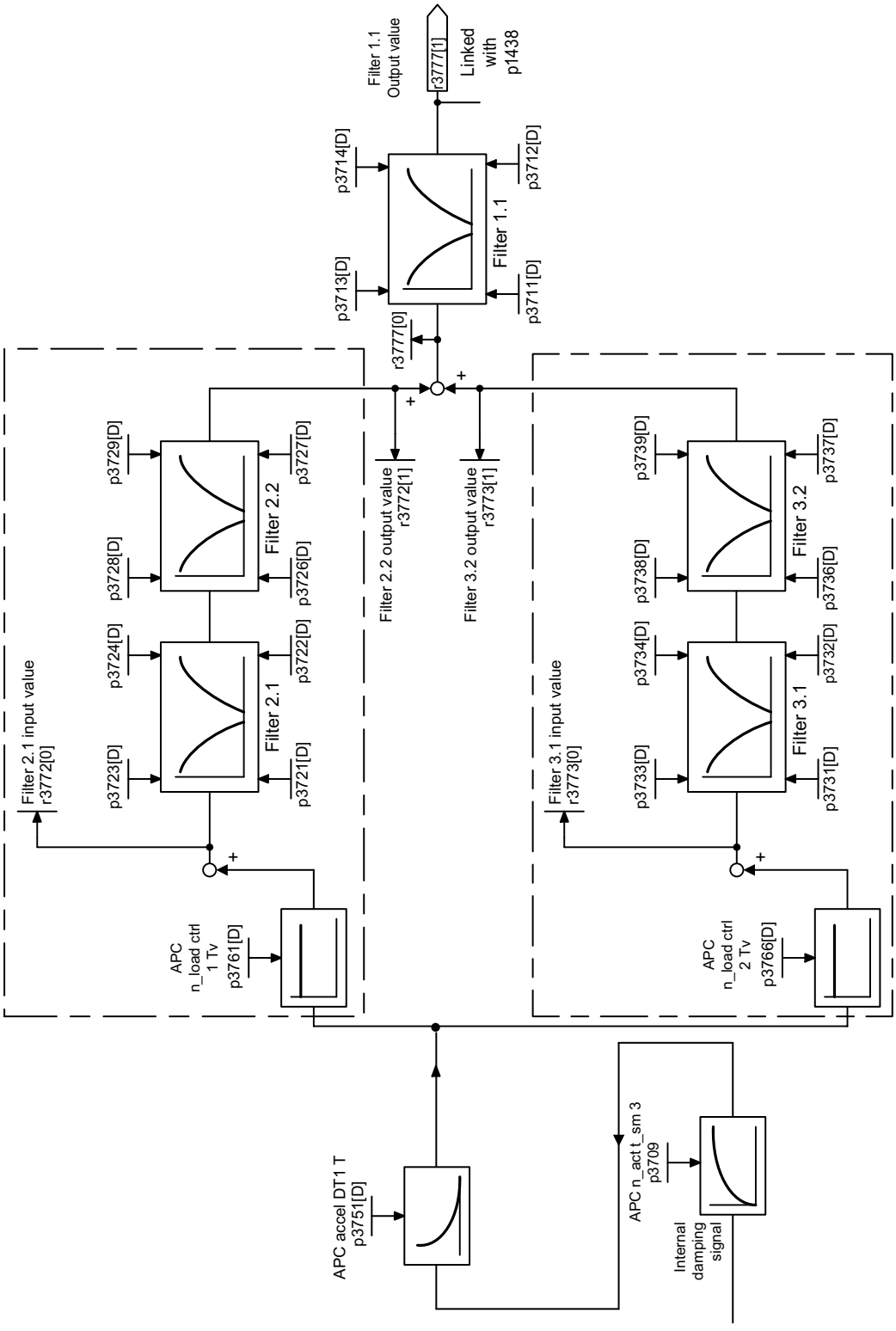

Figure 9-36 APC without sensor on the load side

Examples

The effect of the functions on the frequency response is very similar in both examples.

- The following figure shows how the measurement of an open APC circuit may appear. The stability of the control loop can be identified based on the amplitude reserve at the frequency where the phase goes through -180° (in the example, at 200 Hz). A damping effect is achieved, if, at the oscillation frequency (in the example, 18 Hz) the phase is approximately at 0° - and the amplitude is in the vicinity of 0 dB.

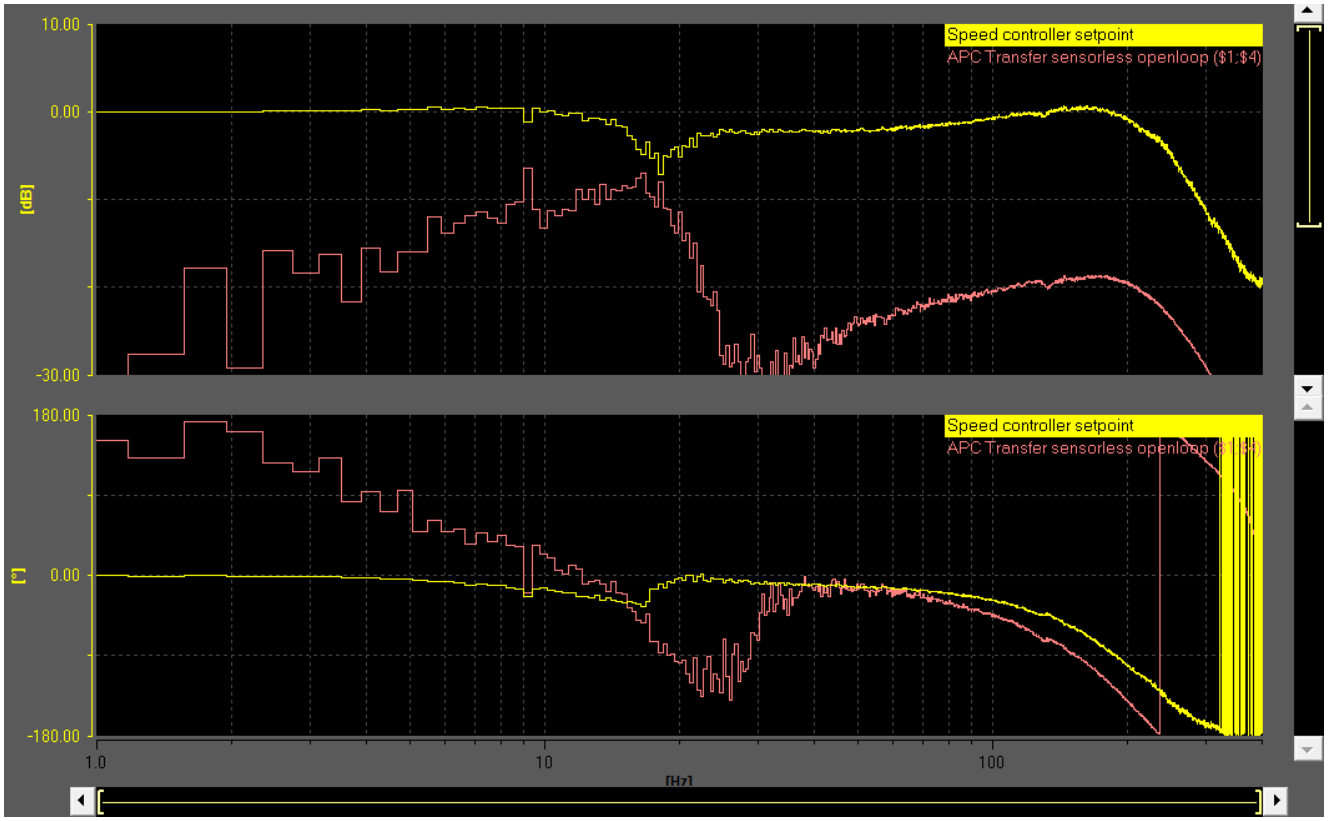

Figure 9-37 APC without sensor on the load side (p3700 = 4) – open circuit

- It only makes sense to measure the closed APC circuit if a direct measuring system is being used. See also the examples in chapter "APC with acceleration feedback (Page 570)". If a direct measuring system is being used, then the APC can be optimally set by measuring the reference frequency response of the position controller. The damping effect as a result of APC can be seen for an oscillation frequency of 22 Hz in the following diagram.

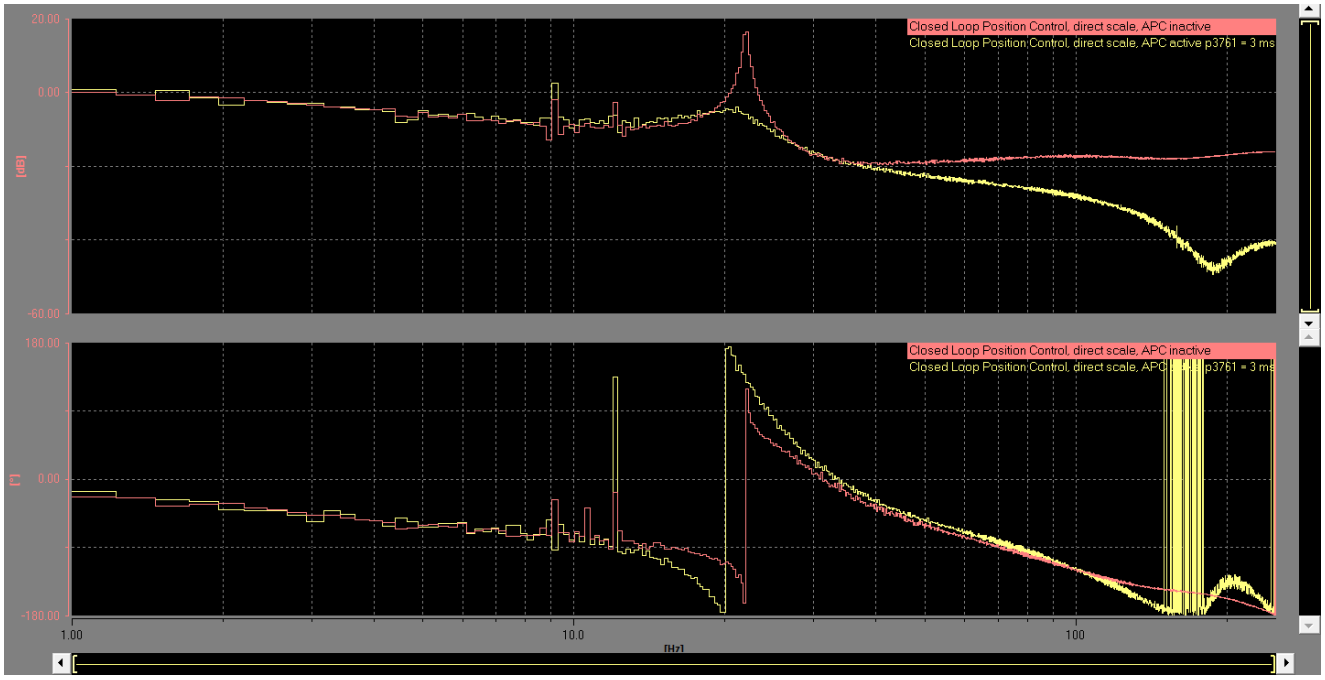

Red: APC inactive: The closed-loop control is at the limit of its stability. The position control gain is too high.

Yellow: APC active (p3761 = 3 ms): The oscillation is dampened. The position control gain can be kept - or even increased slightly.

Figure 9-38 Reference frequency response, position controller, control on a direct measuring system

- The following figures show the positioning behavior with and without APC.

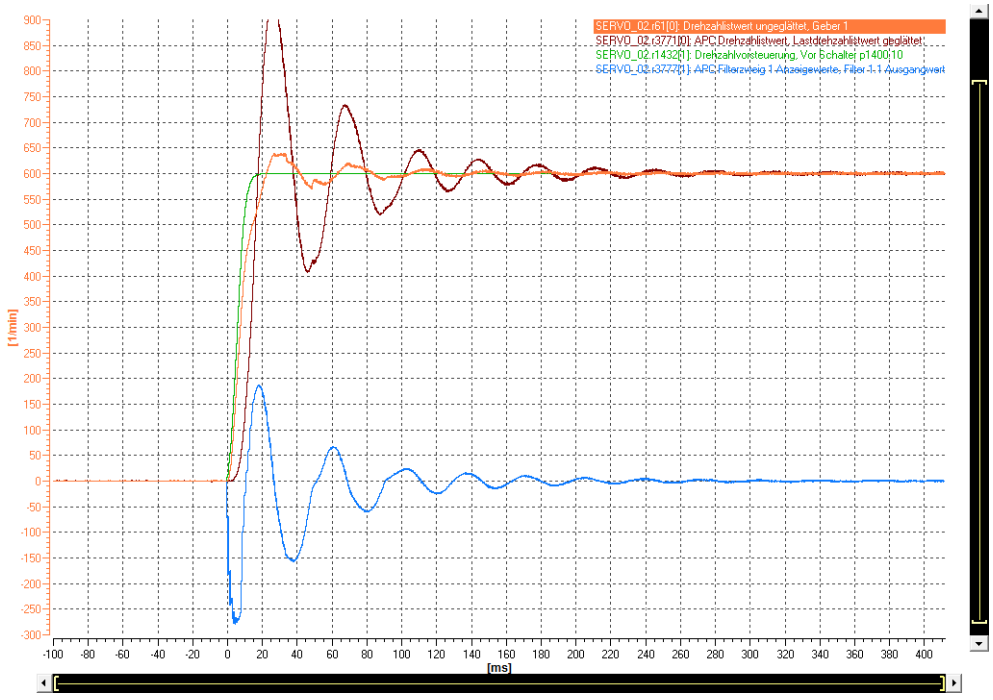

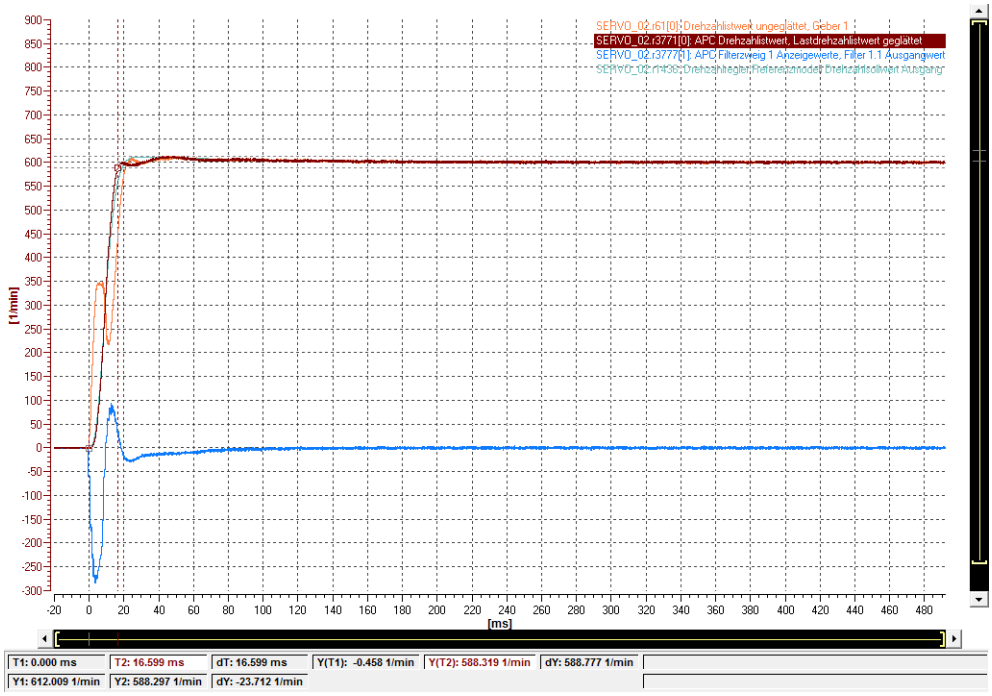

Orange: r0061[0] motor speed/velocity

Brown: r3771[0] load speed/velocity

Blue: r3777[1] APC output

9.14.2.1 Activating the function

Procedure

If the "Advanced Position Control (APC)" function module is activated, then activate AVS using p3700.2 = 1.

Activating function module "Active Vibration Suppression (AVS/APC-ECO)" also automatically activates AVS.

Important notes for parameterization

- The function uses information about the moment of inertia of the motor and axis, which is parameterized outside the APC function module. Parameter p0341 (motor moment of inertia), p0342 (scaling, motor moment of inertia) and p1498 (load moment of inertia) are used. The formula for the overall moment of inertia is (p0341 · p0342 + p1498). The parameters must be correctly parameterized before optimizing the function, as the values are incorporated in the loop gain of the control. Subsequent changes can have a negative impact on the control (e.g. control instability).
- The ratio between the load moment of inertia and motor-side moment of inertia can be adapted using the parameter p3755. The function is especially effective if the ratio between the load moment of inertia and motor-side moment of inertia is optimally set.

- A first optimization of the function can be performed by parameterizing the oscillation frequency of the axis using parameter p3752[0...n] (AVS controller preassignment natural oscillation frequency). Dependent on the parameterization of the oscillation frequency, parameters p3709 (PT1 lowpass filter), p3751 (highpass filter) and p3761 (controller gain) are automatically overwritten with a preassigned default setting. The moments of inertia are incorporated in the calculation (see the first point in this enumeration). Therefore, carefully ensure that these values are correctly preassigned.
- The function is deactivated by entering a value of "0" in p3752. In so doing, the controller gain is reset to "0".
- We recommend that a PT1 lowpass filter (p3709) is used, and that a time constant of about 1/10 of the oscillation frequency in Hz is set.
- The highpass filter is active (p3751). We recommend its use, especially if the axis is subject to steady-state or low-frequency forces.
- If 2 feedback paths are active via p3761 and via p3766, then we recommend that only the 1st feedback path is used (p3761). Depending on the mechanical axis system, values for the gain generally lie in a range between 1 ms and 10 ms.
- The APC filters are also effective, and when required can be used (see Chapter "Additional Information (Page 579)").
- For applications where a high contour precision is required (in the mold making area) we recommend that p3700.3 is set = 1. As a result of this measure, the setpoint motion of the axis is better taken into account within APC.
- We recommend the following parameterization - p3700.4 = 0.

9.14.2.2 Measuring the function

Procedure

The following measuring functions can be used to measure the "APC without sensor on the load side" function:

- APC open circuit
- APC closed-circuit (precondition: a direct measuring system is available.)
- Speed controller reference frequency response
- Position controller reference frequency response

You can find detailed information on how to perform these measurements in Chapter "Measuring frequency responses (Page 582)".

9.14.3 APC to reduce machining-related oscillation

Function description

The "APC function to reduce machining-related oscillation" allows this type of oscillation to be specifically dampened.

General data

- The function is especially suitable for axes equipped with linear motors.
- The function can be used in addition to other APC functions.
- A direct measuring system is not required.

Machining-related oscillation

Machining-related oscillation involves mechanical oscillation, which require a special method to dampen them. An important attribute is that machining-related oscillation only has a very low feedback in the speed control loop and/or in the frequency domain. However, in the time domain their effects can be clearly measured.

Note

Machining-related oscillation has an especially negative impact on the control behavior of axes.

Examples

The following figure shows an example of the position controller reference frequency response sequence for measurement with and without APC.

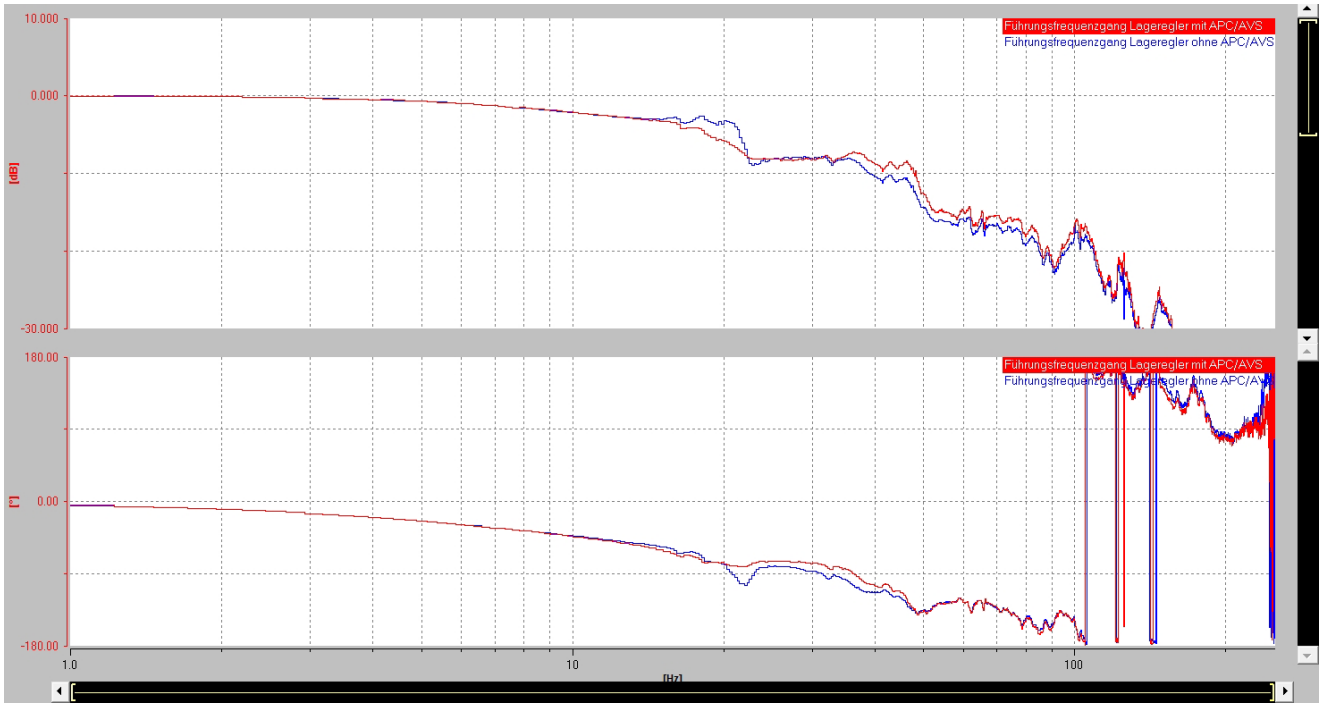

Blue APC is inactive.

Red APC is active with p3754 = 0.5.

Figure 9-39 Example: Measuring the position controller reference frequency response with and without APC

The following figure shows an example of the time domain sequence for measurement with and without APC.



Blue APC is inactive.

Red APC is active with p3754 = 0.5.

Figure 9-40 Example: Measuring the time domain with and without APC

9.14.3.1 Activating the function

Procedure

Before activating the "APC to reduce the machining-related oscillation" function, determine and parameterize the oscillation frequency.

Determining the oscillation frequency

The oscillation frequency is used in the function to determine the oscillation frequency from the frequency response measurement - or is determined from the time domain and is then entered into p3753.

A gain is selected using p3754, which scales the effect of the damping. When selecting a gain, as default you can select between values of "0" and "1". In several applications, higher values than "0" and "1" are required; in these cases, they can be entered in the appropriate parameters.

Activation is instantaneous without any delay by entering a value greater than "0" in p3754. Deactivation is realized by entering a value of "0" in p3754.

Important notes for parameterization

- The "APC to reduce machining-related oscillation" uses the parameters of torque setpoint filter 1 (p3740 to p3743, p3704.12, p3705.12). The function acts directly in the speed control loop, and modifies the speed controller response. To ensure the stability of the function, in a few applications, it is necessary to adapt the controller gain (p1460) and the integral time (p1462) of the speed control loop. A graphic representation of the control loop is provided in section 7 of function diagram 5060 (Servo control - torque setpoint, switching over the control mode).

9.14.3.2 Measuring the function

Procedure

The following functions can be used to measure the "APC to reduce the machining-related oscillation" function:

- Speed controller reference frequency response
- Position controller reference frequency response

You can find detailed information on how to perform these measurements in Chapter "Measuring frequency responses (Page 582)".

9.14.4 APC with encoder combination and differential position feedback:

Function description

The controlled system for speed control can be influenced by the "APC with encoder combination and differential position feedback" function. The encoder combination thus acts upon the zero positions (absorber frequencies) and the differential position feedback on the pole (resonant frequencies) of the system. Frequently, it makes sense to use both functions together.

The encoder combination and the position differential feedback are always optimized when optimizing the speed controller. Maintain the following sequence when parameterizing the system.

1. Parameterizing the position differential feedback
2. Parameterizing the encoder combination

Applications

1. The ratio between the load moment of inertia and the motor moment of inertia is very high. The oscillation frequency is relatively low. In this case, only very minimal speed controller gain can be set. The encoder combination allows shifting of the zero position to higher frequencies. The effective motor-side inertia is increased, so that a higher speed controller gain can be set. The combination with the differential position feedback can increase the speed controller gain.
2. The effect of a natural oscillation at the motor is only very low (e.g. as a result of a high gearbox ratio). This means that the speed controller has no influence on the oscillation. The effects of the oscillation at the motor can be made more obvious by using a combination of encoders and differential position feedback. The speed controller can be set so that oscillation is optimally dampened. This especially makes sense if no additional APC functions are being used.

To dampen oscillation, an additional APC function is also deployed, e.g. acceleration feedback (see Chapter "APC with acceleration feedback (Page 570)").

Note

As a result of the encoder combination and the position differential feedback, it is especially the dominant oscillation forms that are shifted in the control loop. However, this also involves oscillation forms that originate in the mechanical system between the two measuring systems. Further, the stability of the speed control can be influenced by oscillation forms that should not be influenced. As a consequence, when optimizing the system, observe any possible speed control instability that occurs.

Function diagrams

The following figure shows the function diagram for the "APC with encoder combination" function.

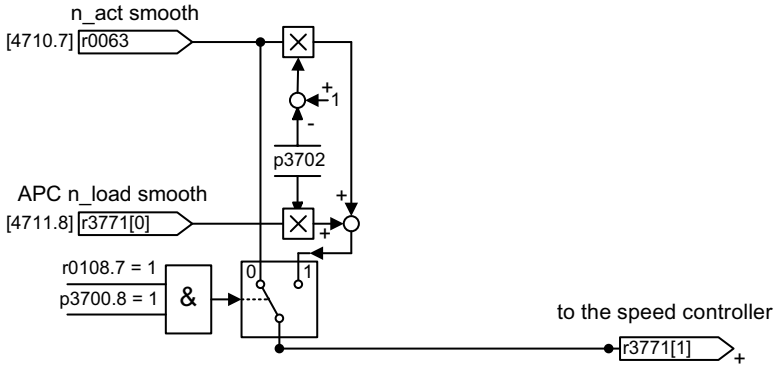

Figure 9-41 APC with encoder combination

The following figure shows the function diagram for the "APC with differential position feedback" function.

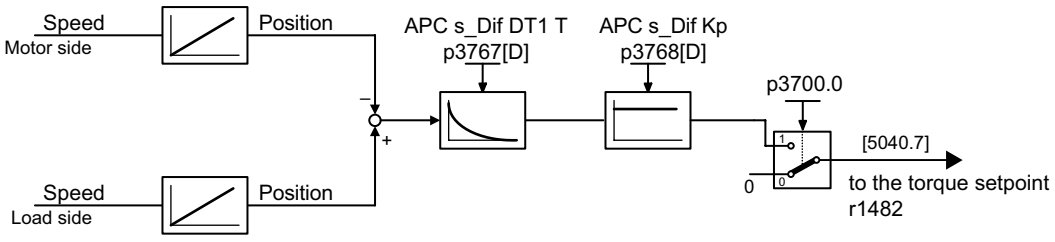

Figure 9-42 APC with differential position feedback

Examples

- The following figure shows an example of the effect the "APC with encoder combination" has on the speed controlled system.

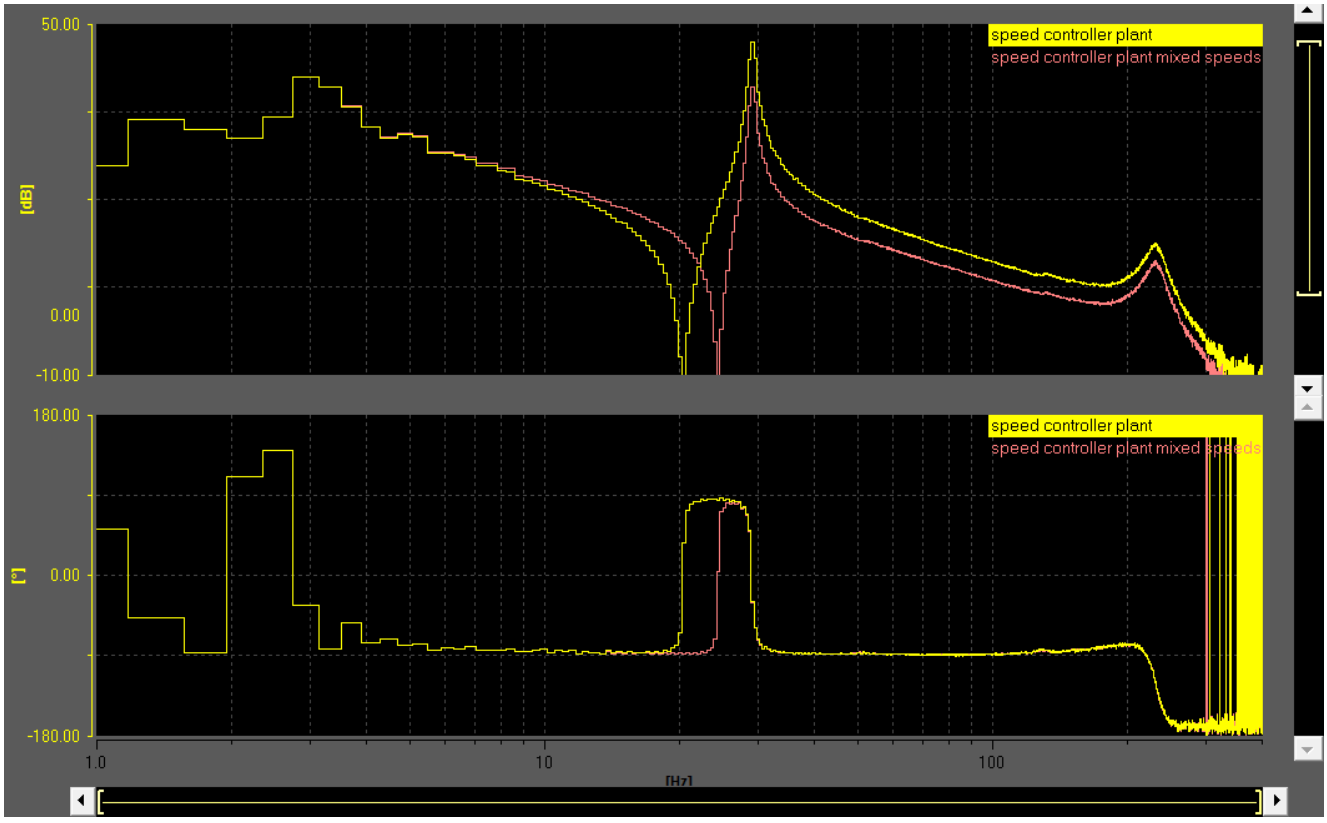

Yellow: Speed controlled system without encoder combination

Red: Speed controlled system with encoder combination (p3702 = 0.3)

Figure 9-43 Effect on the speed controlled system

As a result of the encoder combination, the absorber frequency is increased from 20 Hz to 24 Hz.

- The following figure shows an example of the effect the "APC with differential position feedback" function has on the reference frequency response of the speed controller.

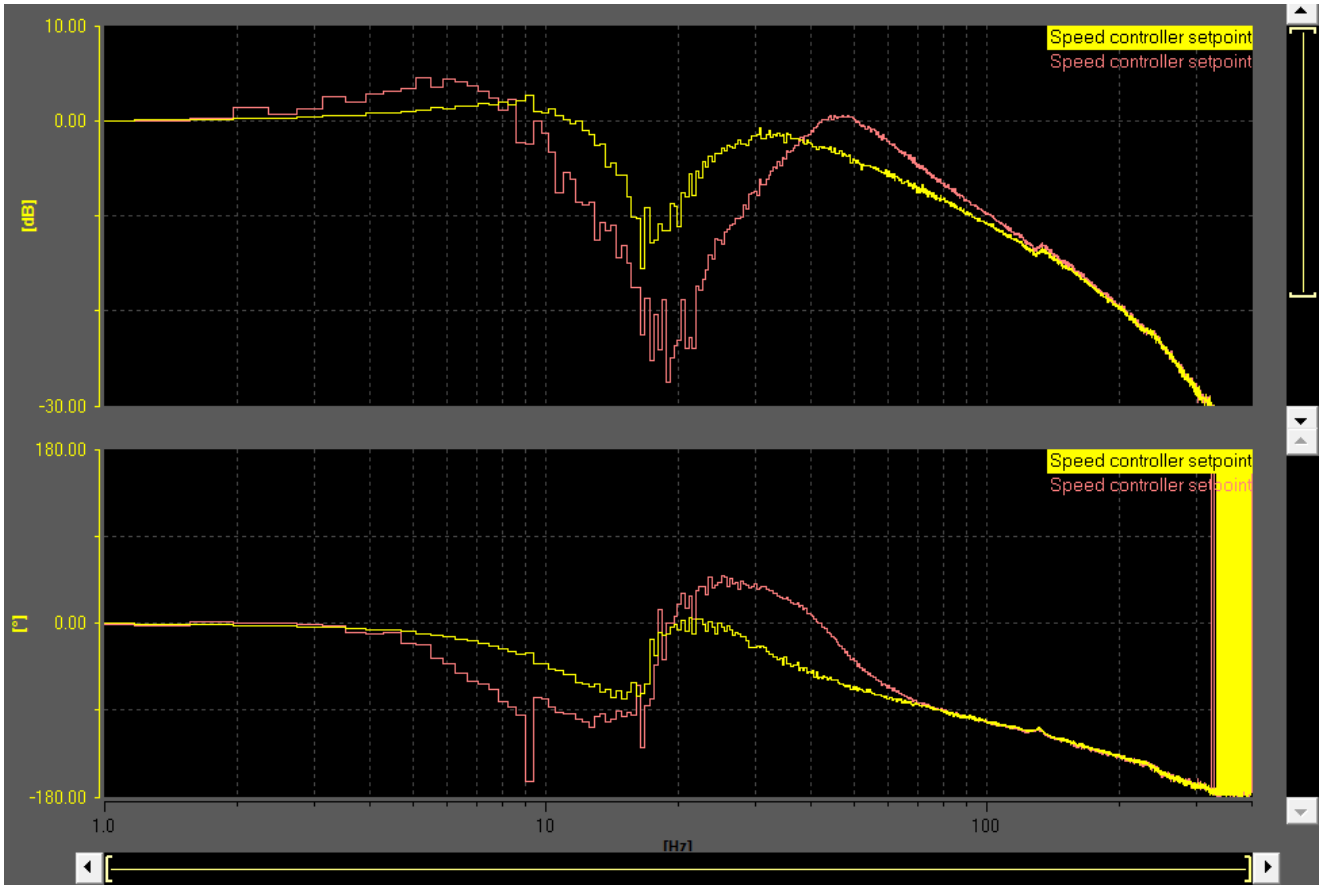

Yellow: Reference frequency response speed controller without differential position feedback

Red: Reference frequency response speed controller with differential position feedback

Figure 9-44 Effect on the speed controller reference frequency response

As a result of the differential position feedback, the resonant position is shifted to a higher frequency. The damping effect of the speed controller is increased with the same controller gain.

9.14.4.1 Important notes for parameterization

- The functions always require a direct measuring system. If an axis is equipped with a measuring system (encoder 2 or encoder 3), then this can be selected using p3701. BICO sink p3749 can be activated by setting p3700.9 = 1. The load speed actual value can now be freely interconnected, e.g. from a master axis.
- The encoder combination is activated using p3700.8 = 1. Position differential feedback is activated using p3700.0 = 1.

Note

If APC was parameterized (p3760, p3761, p3765, p3766 > 0), then this is also activated. If necessary, these parameters must be set to "0".

- The weighting factor for encoder combination p3702 has, for compatibility reasons to previous software releases, a default value of "1". For most applications, this value cannot be activated. This value should be set to "0" before activating the encoder combination. Negative values for p3702 are permissible. The oscillation is then shifted to lower frequencies.
- The gain of the differential pressure feedback is set in p3768. This parameter has stiffness units (Nm/rad). Practical values for this parameter are approximately the stiffness of the axis itself. This value can differ at a different axes.
  Example: The mechanics forms a two-mass oscillating system with an absorber frequency of 20 Hz. The load moment of inertia is 0.01 kgm^2. The stiffness is then given by:

  $$4\pi^2 f^2 j_{last} = 160\ \mathrm{Nm/rad}$$

- A highpass filter for the differential position feedback can be parameterized in parameter p3767. For many applications, the default value is adequate and does not have to be changed.
- In addition to the highpass filter, resonance damping can be set in p3774, which supports the ruggedness and stability of the position differential feedback.

9.14.4.2 Measuring the function

Procedure

The following measuring functions can be used to measure encoder combination and position differential feedback:

- Speed controlled system (only encoder combination visible)
- Speed controller reference frequency response
- Position controller reference frequency response

You can find detailed information on how to perform these measurements in Chapter "Measuring frequency responses (Page 582)".

9.14.5 APC with acceleration feedback

Function description

For the "APC with acceleration feedback" function, the acceleration signal from a direct measuring system is used to dampen the oscillations. This function can only be applied to dampen oscillations which can be measured at the direct measuring system. If this is not the case, an external acceleration sensor can be attached at an appropriate location within the machine and used for APC. The function, for example, is ideal for axes for which the vibration has a limited effect on the motor (e.g. because of a large transmission ratio or a strong gearbox self-locking).

Frequently, when using a direct measuring system, high-frequency resonance points occur in the range > 100 Hz in the control loop, which can result in significant problems when setting APC. In cases such as these, the APC filter must be used in order to ensure control loop

stability. It must also be taken into consideration that resonance effects such as these are dependent on axis positions, for example. The parameterization selected must be stable in the complete machining space of the machine. This is also the reason that using the function without a direct measuring system (see Chapter "Active Vibration Suppression (APC without sensor on the load side) (Page 556)") is frequently a more rugged solution.

Before the function can be optimized, the speed control loop must first be optimized as this forms the subordinate controlled system.

Function diagram

The following figure is an excerpt from function diagram 7012.

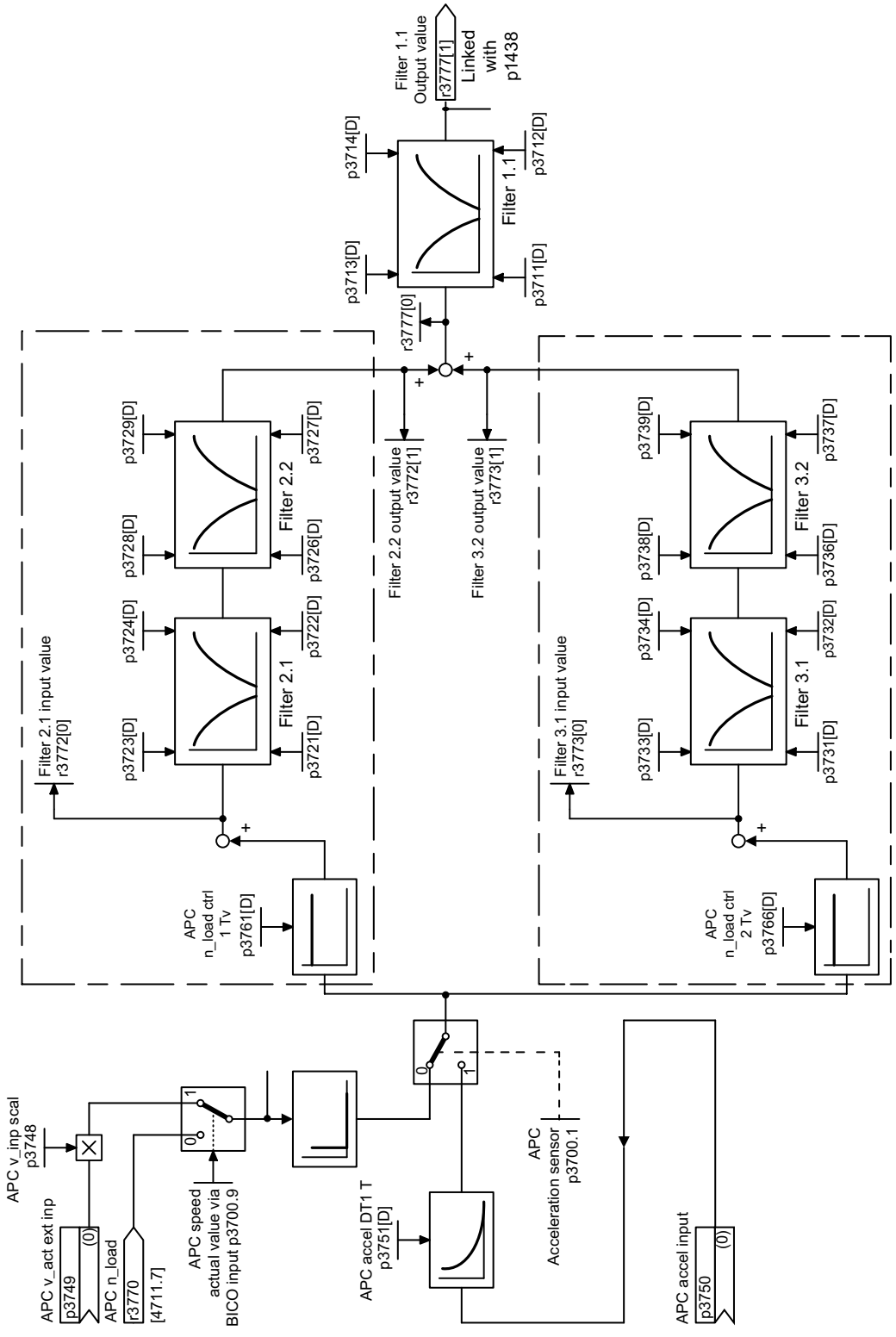

Figure 9-45 APC with acceleration feedback

Examples

- The following figure shows an example of the effect the function has on the reference frequency response.

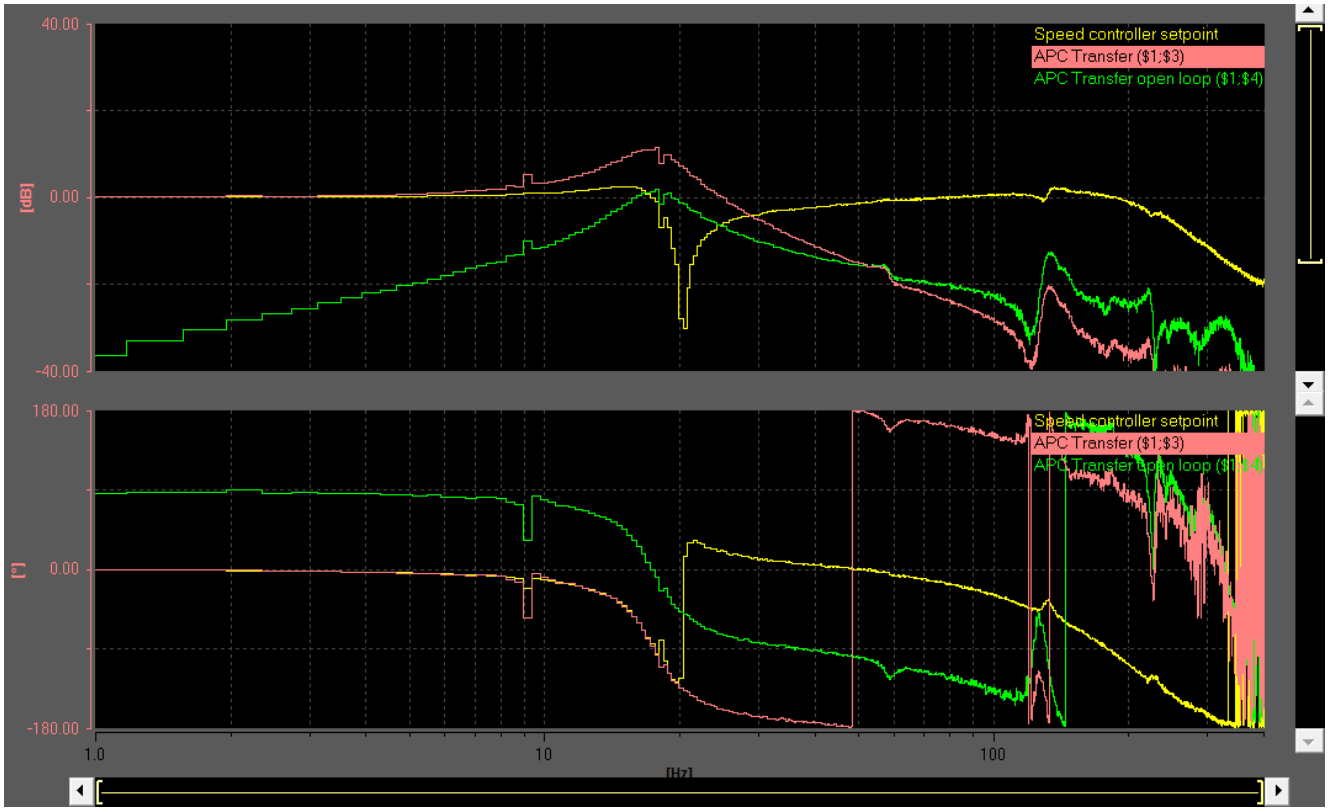

Yellow	Speed controller reference frequency response
Red	APC closed circuit (speed load / speed motor), p3761 = 3 ms
Green	APC open circuit (filter1 output / speed motor), measured with APC active

Figure 9-46 APC circuit closed

- The following figure shows an example of the effect the function has on the motor and load speed in the time range.

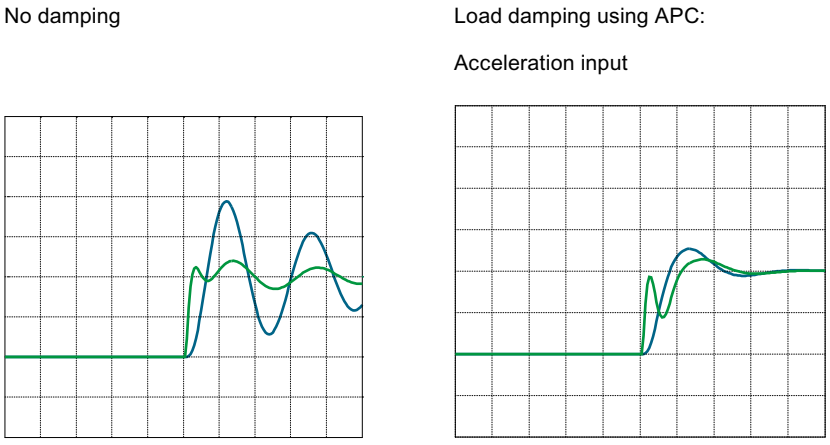

Figure 9-47 APC with acceleration input

At the beginning, the motor must move more in order to combat oscillation.

- The following figures show an example of the effect of combined APC feedbacks.

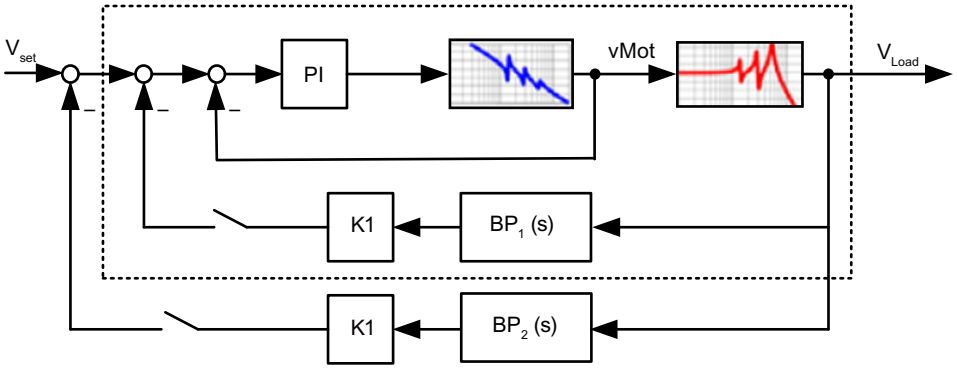

Figure 9-48 Control loop with two APC feedbacks

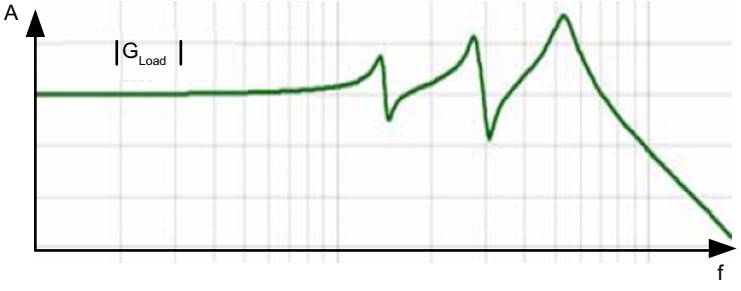

Figure 9-49 Load frequency response without APC

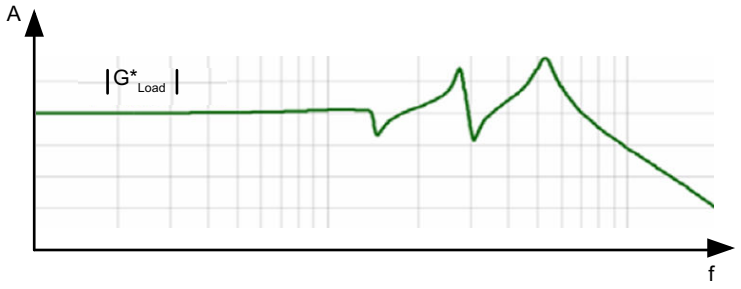

Figure 9-50 Load frequency response with APC: 1 feedback closed

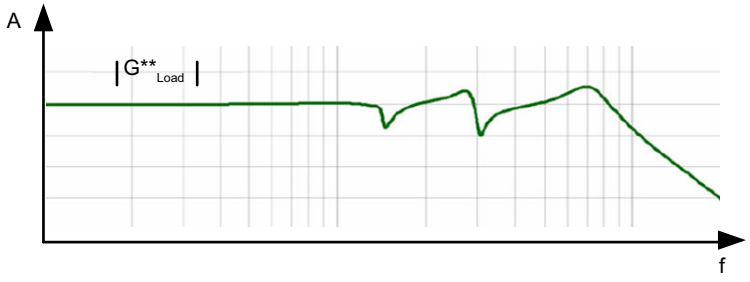

Figure 9-51 Load frequency response with APC: 2 feedbacks closed

9.14.5.1 Important notes for parameterization

The function always requires a direct measuring system. If an axis is equipped with a measuring system (encoder 2 or encoder 3), then this can be selected using p3701. BICO sink p3749 can be activated by setting p3700.9 = 1. The load speed actual value can now be freely interconnected, e.g. from a master axis. Scaling can be set using p3748.

An external acceleration sensor can be used as direct measuring system. This must be integrated in the system (e.g. via TM31) and wired with BICO sink p3750. To eliminate low-frequency disturbances from the measurement signal, a highpass filter can be parameterized using p3751. The acceleration sensor for APC is activated with p3700.1 = 1.

There are two feedback branches for this function. Each branch is parameterized using a gain factor (p3761 and p3766). Frequently, practical values for the gain lie in a range between 1 ms and 10 ms; however, this depends on the mechanical system of the axis.

Filters can be activated for both branches (see function diagram and Chapter "Additional information (Page 579)").

For applications where a high contour precision is required (in the mold making area) we recommend that p3700.3 is set = 1. As a consequence, the setpoint motion of the axis within APC is better taken into account.

We recommend that p3700.4 = 1 is used.

9.14.5.2 Measuring the function

Procedure

The following measuring functions can be used to measure the "APC with acceleration feedback" function:

- APC open circuit
- APC closed circuit
- Speed controller reference frequency response
- Position controller reference frequency response

You can find detailed information on how to perform these measurements in Chapter "Measuring frequency responses (Page 582)".

9.14.6 APC with load velocity control

Function description

A P-control of the load speed is realized parallel to the normal speed control with the "APC with load speed control" function. The oscillation is shifted to higher frequencies and dampened.

The motor makes relatively significant compensating movements as a result of the function.

In its principle of operation, the function has a certain similarity to encoder combination.

It makes sense to use this function, especially together with functions "APC with acceleration feedback (Page 570)" or "APC without sensor on the load side (Page 556)".

Function diagram

The following figure is an excerpt from function diagram 7012.

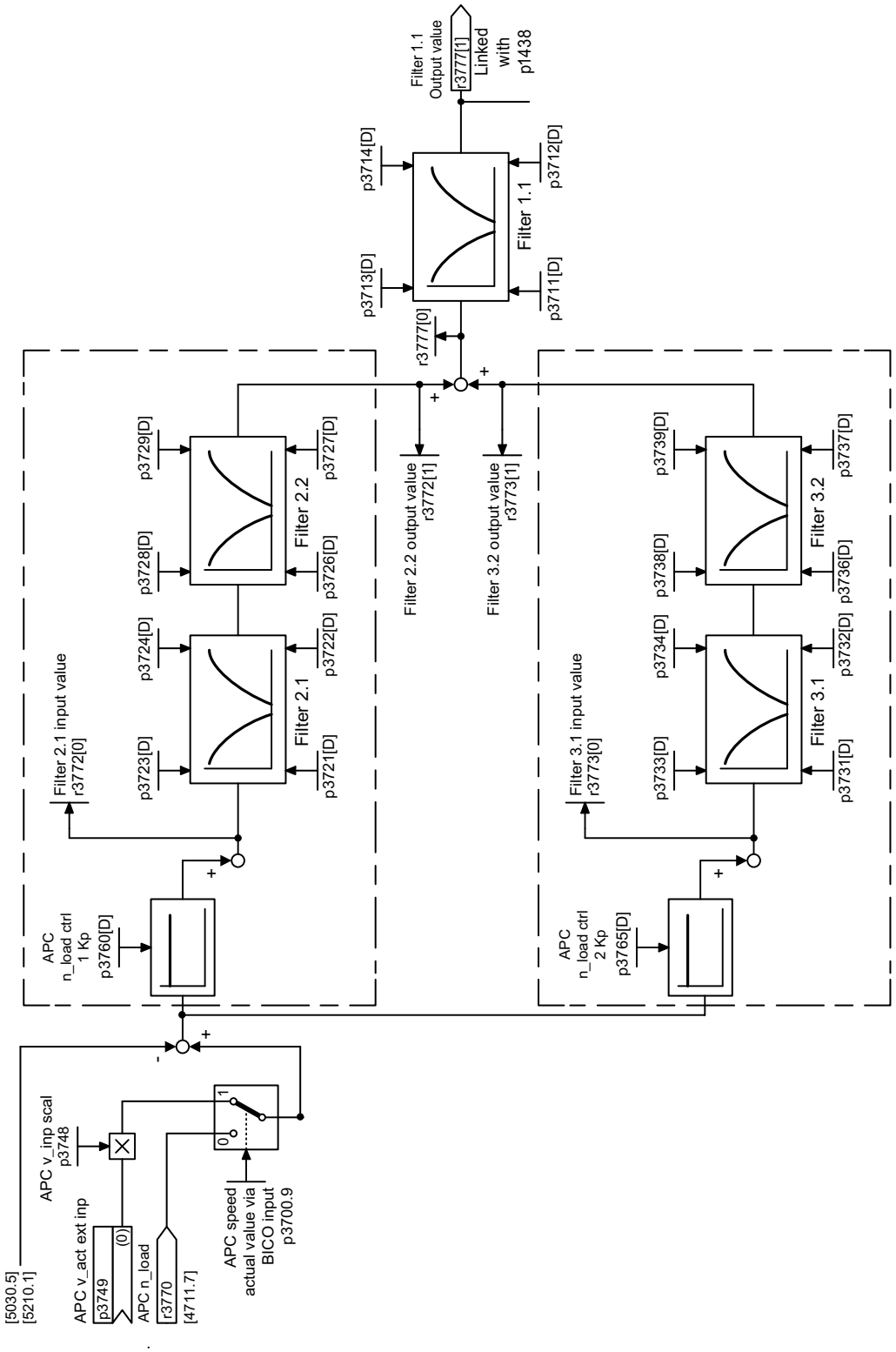

Figure 9-52 APC with load velocity control

Example

The following figure shows an example of the effect the function has on the motor and load speed in the time range.

No damping

Load damping using APC:
Velocity input

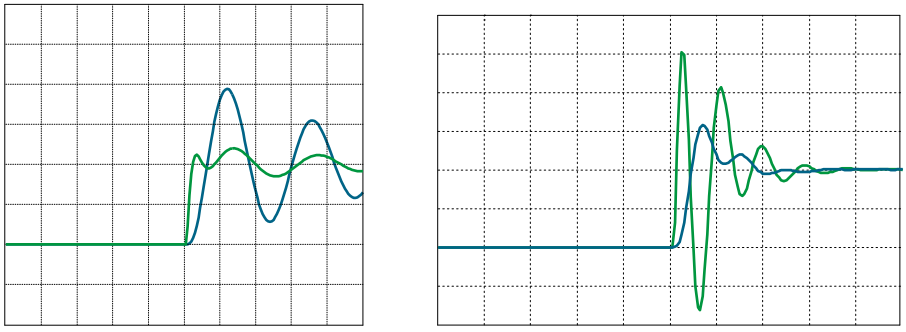

Blue Load speed

Green Motor speed

Figure 9-53 APC with speed input

The motor speed with APC with speed input manifests a significant level of fluctuating loads, which can result in more significant stressing of the mechanical components. Oscillation frequency is increased.

9.14.6.1 Important notes for parameterization

The function always requires a direct measuring system. If an axis is equipped with a measuring system (encoder 2 or encoder 3), then this can be selected using p3701. BICO sink p3749 can be activated by setting p3700.9 = 1. The load speed actual value can now be freely interconnected, e.g. from a master axis. Scaling can be set using p3748.

There are two feedback branches for this function. Each branch is parameterized using a gain factor (p3760 and p3765). Practical values for the gain generally lie between 0 and 1.

Filters can be activated for both branches (see function diagram and Chapter "Additional information (Page 579)").

9.14.6.2 Measuring the function

Procedure

The following measuring functions can be used to measure the "APC load velocity control" functions:

- APC closed circuit
- Speed controller reference frequency response
- Position controller reference frequency response

You can find detailed information on how to perform these measurements in Chapter "Measuring frequency responses (Page 582)".

9.14.7 Additional Information

Setting parameter p3700

The following table provides an overview of the individual bits of parameter p3700 "AVS/APC configuration" and their meanings:

Bit	Value	Meaning
0	0	The value "0" is not applied to the speed setpoint. This setting must be used to measure the filter frequency responses.
	1	The acceleration filter output is applied to the speed setpoint. The differential position feedback is activated.
1	0	The actual encoder value selected with p3701 is used as the APC speed actual value.
	1	The source of p3750 is used as the APC acceleration actual value.
2	0	The actual encoder value selected with p3701 is used as the APC actual value.
	1	A model value without sensor is used as the APC actual value on the load side. PT1 filtering with p3709 acts as smoothing time and a highpass filter with p3751 as a high-pass time constant. Bit 1 can be set but is not effective.
3[1)]	0	–
	1	The setpoint acceleration of the axis is taken into account in the APC calculation. This is especially relevant for applications that require a high contour precision.
4	0	Connecting the APC signal to the P component of the speed controller.
	1	Connecting the APC signal to the P and I components of the speed controller.
8	0	–
	1	The speed weighted with p3702 is used as speed actual value for the speed control. The speed comprises the direct measuring system selected for APC and the motor speed.
9	0	The actual encoder value selected with p3701 is used as the APC actual value.
	1	Instead of the selected encoder actual value, the source of p3749, weighted with p3748, is used. If bit1 or bit2 is simultaneously set, then these modify the acceleration component as a result of p3760 to p3765, while the speed component is still taken from the BICO as a result of p3761 to p3766.

[1)] Additional dependencies when using bit 3:

1. When using SINUMERIK, first activate the "DSC" and "Precontrol" functions.
2. When using the position controller function module, change the standard connection to:
   - r2560 (position controller output) interconnected
   - r2561 (speed precontrol value) interconnected
3. Activate the interpolator: p1400.7 = 1.

Using APC in conjunction with One Button Tuning (OBT)

When using APC in conjunction with One Button Tuning function (OBT), the APC function must first be deactivated.

Note

It is only permissible that the APC function is executed after OBT has been applied.

Procedure:

Proceed as follows to deactivate the APC function:

1. In parameter p3700.0, set the value to "0".
2. In parameter p3754, set the value to "0".

Using the APC filter

The APC filters serve to stabilize the control.

SINUMERIK applications

For SINUMERIK, in HMI Operate screen form-based support is provided using menu "Commissioning > Optimization/test > Active filter > Filter group".

STARTER commissioning tool

In the STARTER commissioning tool (from version 5.1.1), via the navigation path "Drive_x > Technology > Active oscillation damping > Filter setting", you can parameterize the appropriate filter in the "Filter setting" screen form. For older versions, you must use the expert list to make the settings.

- For each filter you can individually select as to whether it should be a general 2nd order filter - or a lowpass (PT2) filter (p3705).
- The transfer function can be found in Chapter "Current setpoint filter" under the sub-heading "Transfer function: General 2nd order filter". The structure of the APC filter is identical to that of current setpoint filters.
- The parameters required to assign the filter parameters are shown in the function block diagram 7012.
- The filter subsampling is helpful for low filter frequencies (p3706 or p3707). Check the filter effect by analyzing the frequency response.

Observe the phase rotation as a result of filtering. The phase rotation may mean that there is not enough phase reserve for the APC control loop.

Dependency on the parameter set

Most APC parameters are dependent on DDS. You can find more detailed information on DDS-dependent parameters of APC for example in the SINAMICS S120_S150_List_Manual. If a DDS switchover is parameterized, then the corresponding APC parameters must also be copied to the data sets.

For the "APC without sensor on the load side" function, parameters p0341, p0342 and p1498 are used to calculate to the moment of inertia. Parameters p0341 and p0342 are dependent on the motor data set. Parameter p1498 is dependent on DDS. These parameters can be used to emulate, for example, different load states of the axis for different APC settings.

Activation parameter p3700 is not dependent on any parameter set. The configuration of APC acts the same on all data sets.

The BICO sinks for the acceleration sensor (p3750) and for the velocity actual value (p3749) are dependent on CDS. If CDS data sets have been created, then these two parameters must be appropriately handled.

Application on master-slave axes

On axes which form a master-slave group with multiple drives, only one direct measuring system is generally integrated. In this particular case, the direct measuring system is assigned to the master. You must observe the following if you want to use APC on a master-slave axis with direct measuring system:

- The efficiency of APC may be reduced if only the master is parameterized.
- To increase the efficiency, also parameterize the slave drives with APC via the BICO link of the speed actual value.

Parameterizing slave drives

Proceed as follows to parameterize slave drives with APC:

1. p3700.9 = 1
2. p3749 = Master.r3771[0]
3. p3748: The scaling must be appropriately set.
   When parameterizing, you must also take into account the following conditions:
   - Different gearbox ratios
   - Different directions of rotation
   - The ratio of the scaling parameters p2000 if the motors used for the master and slave have different rated speeds.

   If the parameter has been correctly set, then Slave.r3771[0] must = Master.r3771[0].

Other remarks

In this document, APC has been subdivided into several subfunctions. APC allows these subfunctions to be almost arbitrarily combined as required. References have been made to applications for which a certain combination appears to make sense - or not.

The speed controller acts as control loop subordinate to the APC control loop. As a consequence, we recommend that the Kp/Tn adaptation of the speed controller is deactivated (p1400.5 = 0).

9.14.8 Measuring frequency responses

9.14.8.1 Use case SINUMERIK

Overview

This chapter describes which measuring functions are available to measure the relevant frequency responses, and how these can be executed.

As APC constitutes its own control loop, we recommend measuring the open circuit with a higher bandwidth (e.g. 4000 Hz with a speed controller cycle of 125 µs) to commence optimization. This measurement can be used as basis to derive whether and which filtering is required to stabilize the control loop. This step is particularly important with application of a direct measuring system.

As optimization progresses, we recommend that the measurements are carried out with a lower bandwidth (e.g. 400 Hz; the lower the oscillation frequency, the lower the bandwidth of the measurement). Selecting a lower bandwidth will increase frequency resolution of the measurement.

Description

There are several predefined measurement functions in HMI Operate to measure APC control loops. Measurement functions "APC open circuit" and "APC closed circuit" are available in the menu "Commissioning > Optimization/test > Speed control loop".

Note

The predefined measurement functions are only displayed in HMI Operate if a value > 0 is entered in parameter p3761.

The encoder combination function can be measured using predefined measurement functions "Speed-controlled system", "Open speed control loop" or "Speed controller reference frequency response". The differential position feedback function can be measured using "Open speed control loop" or "Speed controller reference frequency response".

All APC functions can be measured at the reference frequency response of the position control loop (in menu "Commissioning > Optimization/test > Position control loop" select measurement "Position controller reference frequency response").

9.14.8.2 Application with STARTER

Description

In the STARTER commissioning tool, there are **no** predefined measurement functions to measure the relevant frequency responses of APC. However, with the predefined measurement functions you have the option of recording 2 additional signals. Using mathematical functions, you can display the required frequency responses as Bode diagram in the STARTER trace.

Setting the measuring function

To set the measuring function for the additional signals, proceed as follows:

1. Select the measurement function and the additional signals.

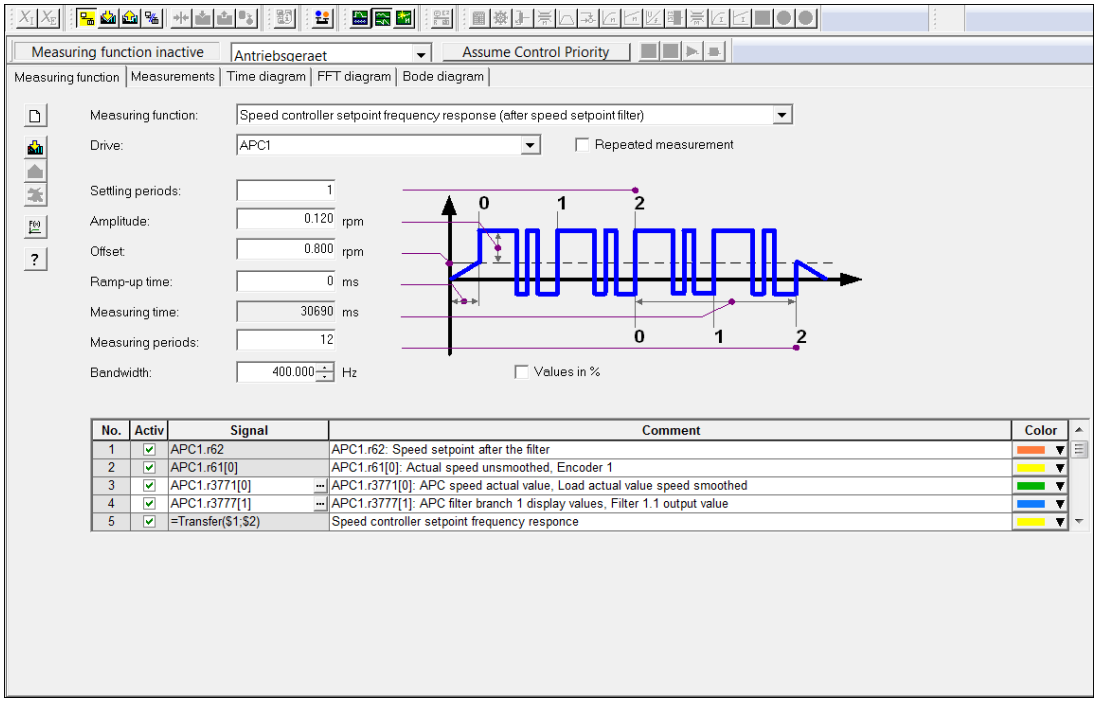

Figure 9-54 Example: Measurement functions and signals

2. Define the transfer functions.

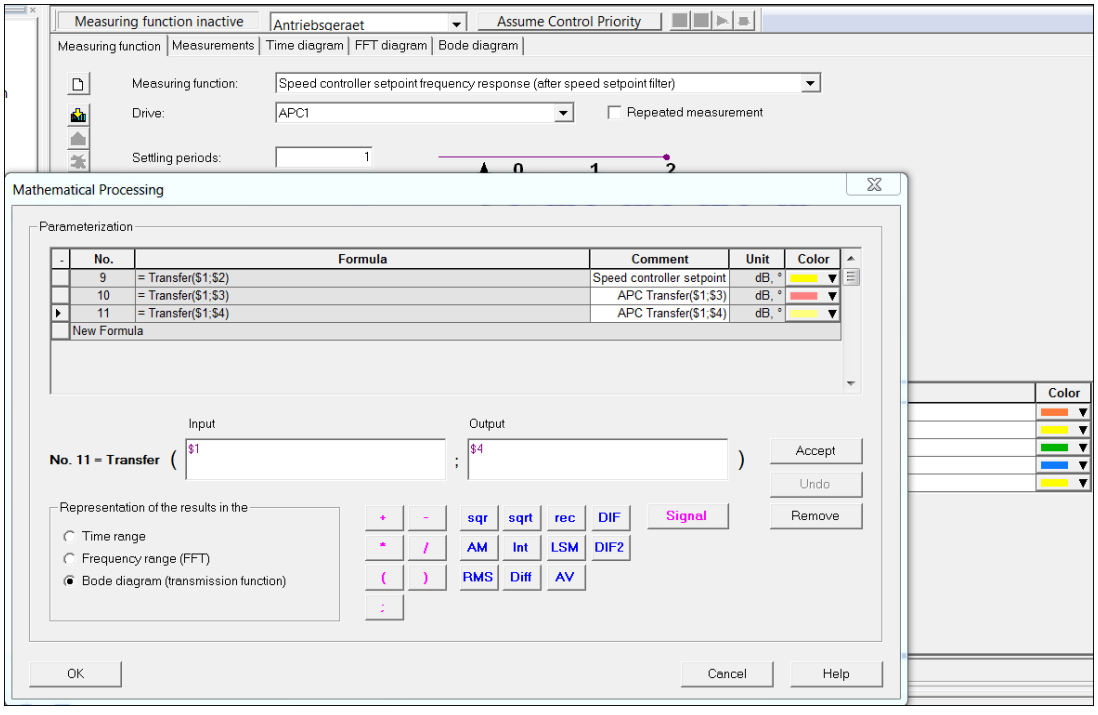

Figure 9-55 Example: Transfer functions

9.14.8.3 Configuring measuring functions

Description

The following table provides an overview of the available measuring functions and their configurability.

Measuring function	Configuration
APC open circuit	**Procedure** 1. Select “Speed controller reference frequency response” as the measuring function. 2. Add signal r3777[1] "APC output value" to the measuring signals. 3. Set the mathematical function: Bode diagram > Input: r0062, output: r3777[1]. **Note** To measure the open circuit, p3761 must be assigned a low derivative action time, e.g. p3761 = 1 ms. APC should be deactivated (p3700.0 = 0).
APC closed circuit	**Procedure** 1. The closed circuit can only be measured if a direct measuring system is available. 2. Select “Speed controller reference frequency response” as the measuring function. 3. Add signal r3771[0] "APC load speed actual value" to the measuring signals. 4. Set the mathematical function: Bode diagram > Input: r0062, output: r3771[0].
Measuring the encoder combination using the speed control loop	**Procedure** 1. As measuring function select "Speed-controlled system" 2. Add signal r1445 "Actual speed smoothed" to the measuring signals. 3. Set the mathematical function: Bode diagram > Input: r0080, output: r1445.
Measure encoder combination and differential position feedback using the speed controller reference frequency response	**Procedure** 1. Select “Speed controller reference frequency response” as the measuring function. 2. Add signal r1445 "Actual speed smoothed" to the measuring signals. 3. Set the mathematical function: Bode diagram > Input: r0062, output: r1445.
Measuring position controller reference frequency response	**Requirement** ● The Position controller function module is activated. **Procedure** 1. Select “Free measuring function (without master control)” as the measuring function. 2. Connect the function generator output CU.r4834[0] to a free speed setpoint (e.g. p1155 or p1430). 3. Add measuring signals: CU.r4834[0] and r2560 "LR speed setpoint". 4. Set the mathematical function: Bode diagram > Input: r4834[0] · p2000/100, output: r2560 · (-1). The factor p2000/100 maps the function generator scaling to the speed. 5. Traverse the axis, for example from an HMI device or the operator panel, with a low velocity. Start the measurement while the axis traverses. **Note** The position controller must be active when traversing the axes. 6. Delete the wiring of the function generator at the speed setpoint manually following conclusion of the measurement.

9.14.9 Function diagrams and parameters

Function diagrams (see SINAMICS S120/S150 List Manual)

- 5030 Servo control - Reference model/precontrol balancing/speed limiting
- 5060 Servo control - Torque setpoint, switchover control mode
- 5210 Servo control - Speed controller without encoder
- 7012 Technology functions - Advanced Positioning Control (APC, r0108.7 = 1)
- 7013 Technology functions - APC differential position gain (APC, r0108.7 = 1)

Overview of important parameters (see SINAMICS S120/S150 List Manual)

- p0341[0...n] Motor moment of inertia
- p0342[0...n] Ratio between the total and motor moment of inertia
- p1498[0...n] Load mass
- p3700 AVS/APC configuration
- p3701 APC encoder selection
- p3702[0...n] APC load speed/motor speed weighting
- p3704[0...n] APC filter activation
- p3705[0...n] APC filter type
- p3706[0...n] Advanced positioning control undersampling filter 2.x
- p3707[0...n] Advanced positioning control undersampling filter 3.x
- p3708[0...n] Advanced Positioning Control actual speed value smoothing time encoder 2
- p3709[0...n] AVS/APC velocity actual value smoothing time encoder 3
- p3711[0...n] Advanced Positioning Control filter 1.1 denominator natural frequency
- p3712[0...n] Advanced Positioning Control filter 1.1 denominator damping
- p3713[0...n] Advanced Positioning Control filter 1.1 counter natural frequency
- p3714[0...n] Advanced Positioning Control filter 1.1 counter damping
- p3721[0...n] Advanced Positioning Control filter 2.1 denominator natural frequency
- p3722[0...n] Advanced Positioning Control filter 2.1 denominator damping
- p3723[0...n] Advanced Positioning Control filter 2.1 counter natural frequency
- p3724[0...n] Advanced Positioning Control filter 2.1 counter damping
- p3726[0...n] Advanced Positioning Control filter 2.2 denominator natural frequency
- p3727[0...n] Advanced Positioning Control filter 2.2 denominator damping
- p3728[0...n] Advanced Positioning Control filter 2.2 counter natural frequency
- p3729[0...n] Advanced Positioning Control filter 2.2 counter damping
- p3731[0...n] Advanced Positioning Control filter 3.1 denominator natural frequency
- p3732[0...n] Advanced Positioning Control filter 3.1 denominator damping
- p3733[0...n] Advanced Positioning Control filter 3.1 counter natural frequency
- p3734[0...n] Advanced Positioning Control filter 3.1 counter damping
- p3736[0...n] Advanced Positioning Control filter 3.2 denominator natural frequency

- p3737[0...n] Advanced Positioning Control filter 3.2 denominator damping
- p3738[0...n] Advanced Positioning Control filter 3.2 counter natural frequency
- p3739[0...n] Advanced Positioning Control filter 3.2 counter damping
- p3740 to p3747 APC torque setpoint filters 1 + 2
- p3748[0...n] APC velocity input scaling
- p3749[0...n] CI: APC velocity actual value external input
- p3750[0...n] CI: Advanced Positioning Control acceleration sensor input
- p3751[0...n] Advanced Positioning Control acceleration sensor high-pass time constant
- p3752[0...n] APC controller preassignment natural oscillation frequency
- p3753 APC torque setpoint filter preassignment natural oscillation frequency
- p3754 APC torque setpoint filter preassignment gain
- p3755 AVS/APC motor moment of inertia factor
- p3760[0...n] Advanced Positioning Control load speed controller 1 P gain
- p3761[0...n] AVS/APC load velocity controller 1 derivative action time
- p3765[0...n] Advanced Positioning Control load speed controller 2 P gain
- p3766[0...n] Advanced Positioning Control load speed controller 2 derivative-action time
- p3767[0...n] Advanced Positioning Control differential position time constant
- p3768[0...n] Advanced Positioning Control differential position amplification factor
- r3769 CO: Advanced Positioning Control differential position force setpoint
- r3770 CO: Advanced Positioning Control load speed
- r3771[0...1] CO: Advanced Positioning Control actual velocity value
- r3772[0...1] Advanced Positioning Control filter branch 2 display values
- r3773[0...1] Advanced Positioning Control filter branch 3 display values
- p3774 APC differential speed gain factor
- r3777[0...1] CO: Advanced Positioning Control filter branch 1 display values
- p3778[0...n] Advanced Positioning Control speed limit
- p3779[0...n] Advanced Positioning Control speed limit monitoring time

9.15 Cogging torque compensation

Overview

Due to the fixed relationship between absolute position and cogging force for synchronous motors, the "Cogging torque compensation" function is particularly suited to these motors for the improvement of radial eccentricity. On the other hand, this function is not suitable for induction motors.

Requirement

- Synchronous motors
- Servo drive objects

Function description

The cogging torque compensation is executed via a compensation table which, depending on the position of the motor measuring system, is read out and precontrolled. The cogging torque compensation can also be performed based on the direction. For this reason, a separate table can be used for the compensation for each direction of motion (p5260, p5261).

The tables for the cogging torque compensation must be filled out using a "learning process". During this learning process, the cogging torque can be measured when moving the motor and stored in the table. If you want to use direction-based cogging torque compensation, you have to perform corresponding learn runs for each direction of motion.

Note

Activation of the "Cogging torque compensation" function module leads to a significant increase in the computing time required for each drive axis. The operation of 6 servo axes on one Control Unit can no longer be guaranteed in all constellations and should be reduced to 5 axes.

Restrictions

- This function can only be applied for servo type drive objects.
- A motor encoder is always required for the cogging torque compensation.
- Transistor-transistor logic or HTL encoders are not suitable for cogging torque compensation.
- The encoder must have absolute information, thus it must be an absolute value encoder or have a clear zero mark or be distance-coded. Due to the premature validity message of absolute information, DQI encoders are only suitable with a bypass (Encoder Data Set switchover after start-up). SINAMICS encoder evaluations with actual hardware required (SMC 10/20, SME12x, ≥ 6SL xxxx-xxxxx-xxx3) and SINAMICS firmware > 04.50.22).
- The compensation is then applied to the torque-generating current setpoint. It is only effective if neither current nor voltage limiting intervenes and the frequency is not higher than the current controller bandwidth.

Example 1: steady, supplementary learning for linear motors

The entire traversing distance cannot be measured for linear motors in a single operation. A learning process can only be initiated once a linear motor has been brought up to speed. We therefore recommend that the traversing distance be measured over several steps.

Procedure

To measure the traversing distance of a linear motor, proceed as follows:

1. After the motor has reached the desired speed, (re)activate the slow learning with p5251.0 = 1.
2. End the slow learning after you have traveled from the right third to the left edge of the traversing distance with p5251.0 = 0.
   The compensation table is now partly filled with values.
3. Check the table indexes calculated from r5254[2] (start value) and r5254[3] (end value) only after the end of this first learning process.
   - If the start value is higher than the final value, the values are learned from the start value up to the end of the table and from 0 up to the final value.
   - If the start value is less than the final value, then the values are learned from the start value up to the final value. This also applies if the table progress when learning is negative. In this particular case, the start value and final value are interchanged after learning.
4. A further learning process is required for the missing part of the compensation table. In this example, measure in the opposite direction from the left third of the traversing distance to the right edge. Ensure that the 2nd learning path overlaps the previously performed 1st learning path previously conducted, otherwise the measurement will be rejected.
   Start the supplementary learning after the desired speed is reached with p5251.1 = 1.
5. After the end of the 2nd learning run, end the supplementary learning with p5251.1 = 0.
   The newly calculated values in the compensation table are brought on to the same level. Overlapping ranges are averaged, the non-overlapping ranges supplemented and the mean value removed.
6. If the linear motor has reached the stop, large torques are stored in the table.
   In this case, delete the high torques and from the edge and then remove the mean values with p5251.2 = 1.
7. Activate the cogging torque compensation with p5250.0 = 1 if this has not already been done.
   The cogging torque compensation is then performed with the values from p5260.
8. So that the values in the compensation table are permanently stored, perform a RAM to ROM.
   If they are not saved, the values in the compensation table need to be recalculated after each POWER ON.

Example 2: Filling process depending on the direction of motion

Compensation depending on the direction of motion is beneficial when the operating point changes depending on the direction of motion given large friction forces.

Procedure

To perform the cogging torque compensation, proceed as follows:

1. So that a compensation table is used for each direction of motion, activate p5250.1 = 1 (prerequisite: p5250.0 = 1).
2. Define the length of the compensation table using p5252.
3. Move the motor with 1.5 revolutions per minute (in positive direction).
4. Activate slow learning for the compensation table of this direction of motion with p5251.0 = 1.
   The compensation table p5260 is filled.
5. Check the mean values for slow learning.
   Wait at least one revolution of the motor. As soon as the mean values (r5254[0]) are ≥ 2, the slow learning can be exited.
6. Then Deactivate slow learning for the positive direction with p5251.0 = 0.
7. Move the motor with -1.5 revolutions per minute (in negative direction).
8. Activate slow learning for the compensation table of this direction of motion with p5251.0 = 1.
   Die compensation table p5261 is filled.
9. Check the mean values for slow learning.
   Wait at least one revolution of the motor. As soon as the mean values (r5254[0]) are ≥ 2, the slow learning can be exited.
10. Then Deactivate slow learning for the negative direction with p5251.0 = 0.
    The cogging torque compensation is then performed with the values from p5260 and p5261.
11. So that the values in the compensation table(s) are permanently stored, perform a RAM to ROM.
    If they are not saved, the values in the compensation table need to be recalculated after each POWER ON.

Note

If the cogging torque compensation is active during slow learning, the compensation tables are switched with the rotational speed hysteresis (p5256). The respective prior table remains active as long as the rotational speed remains in the hysteresis band. A table switch can only take place when the hysteresis range is left.

9.15.1 Activating the function module

Procedure

To activate the function module, proceed as follows:

1. In Startdrive, select “Drive axis > Parameters > Basic parameter assignment > Function modules.”
2. Activate the function module “Cogging torque compensation.”

You can check that it has been activated in parameter r0108.22.

9.15.2 Activate cogging torque compensation

Procedure

To activate the cogging torque compensation, proceed as follows:

1. Set p5250.0 = 1.
   With this setting, only a table independent of the direction of motion is used for the cogging torque compensation (p5260).
2. In order to use an individual table for each direction of movement for the cogging torque compensation, set also p5250.1 = 1.
   With this setting, each direction of motion uses its own table. The compensation values are stored in p5260 (positive direction) and p5261 (negative direction).

   Note

   If this option is activated, **no** additional learning is possible (p5251.1 = 1).

   If you deactivate this option with p5250.1 = 0, table p5260 is once again used for both directions.

9.15.3 Filling compensation tables

Overview

Cogging torque compensation is executed via a table p5260 which, depending on the position of the motor measuring system, is read out and precontrolled. The table is entered in Nm for rotating motors or in N for linear motors.

Making the settings

The following parameter settings are important when filling the compensation tables:

Parameter	Bit	Index	Value	Meaning
p5251	0	-	1	Activate the option “New slow learning” By activating the option, the corresponding compensation table is deleted with the learning process. During the learning process, the cogging torque compensation is automatically deactivated. So that the acceleration torque does not distort the results, this option may only be activated after the normal speed is reached. With slow learning, the motor must be operated at a very low speed (1.5 $^{-1}$) or velocity (0.1 m/min). During the learning run, the cogging torque can be measured when moving the motor and stored in the table. Additional values are averaged when passing through several periods. The number of average periods can be viewed in r5254[0], the actual table index in r5254[1]. The table is only completely filled when r5254[0] ≥ 2.
	1	-	1	Activate the option “Supplementary slow learning”. This setting is used to fill the compensation table in several steps across multiple learning processes. This is required, for example, with a linear motor. During the learning process, the cogging torque compensation is automatically deactivated. This supplementary learning is **only** possible for non-direction-based cogging torque compensation (p5250.1 = 0). During supplementary learning, gaps in the table are filled in. Where there were previously already values in the table and new values are measured due to overlapping, an average is used (old value/new value). An overlap is necessary for supplementary learning. Without overlaps, the values of the supplementary learning are rejected and only the values of the first learning process remain.
	0.1	-	0	Shuts down the slow learning. Following this, the mean value of the measured values in the table is determined and removed.
	2	-	1	Removes the mean value of a compensation table. This setting is required if compensation values calculated through learning must be manually corrected at the start/end of the compensation table. The values in the table to be corrected must be deleted from the range at the edge of the table!
p5252	-	-	n	Used to define the length of a compensation table. When specifying the length, only powers of two are permitted (2^{p5252}). To achieve a sensible compensation (for linear motor), at least 10 compensation values are required for each pole. • Example: linear motor: p0315 = 30 mm, traversing distance = 1500 mm. As a consequence, this results in p5252 ≥ 1024 values.
p5253	-	-	n	Sets the factor for the search velocity for the periodicity during cogging torque compensation. • For rotating motors, the factor refers to one mechanical revolution (p5253 = 0.5 then generates one period of half of one mechanical revolution). • For linear motors, the factor refers to one pole pair width. • For synchronous motors, you should select the complete traversing range as period (i.e. p5253 = traversing distance [mm] / p0315). The motor measuring system must have absolute information here, which is unique regarding the period; whereby an overflow in the actual value representation can destroy this uniqueness.

Parameter	Bit	Index	Value	Meaning
r5254	-	0	n	Shows the mean values per point in the table during slow learning. If a point in the table is passing through several times during slow learning, the newly calculated torques are taken into account under the mean value. The table value is corrected accordingly.
	-	1	n	Shows the currently used table index if the cogging torque compensation or a learn process is active.
	-	2	n	Shows the table index at the start of the slow learning.
	-	3	n	Shows the table index at the end of the slow learning.
r5255	-	0	n (Nm or N)	Cogging torque compensation input Shows the actual torque/actual force when learning
	-	1	n (Nm or N)	Cogging torque compensation output Shows the precontrolled actual torque/actual force.
p5256	-	-	n (rpm or m/min)	Used to switch between the two compensation tables (where p5250.1 = 1) for direction reversal in order to prevent frequent switching between the two tables in the case of actual speed value noise at standstill. In the hysteresis range, the respective previous table remains active. The hysteresis width should be slightly larger than the actual speed value noise at standstill.
p5260	-	0...4095	n (Nm or N)	Compensation values for the cogging torque compensation. These compensation values are filled through a learning process (p5251) and can be changed manually. • Given a non-direction-based cogging torque compensation (p5250.1 = 0) only this table is used. • Given a direction-based cogging torque compensation (p5250.1 = 1) this table is used for the positive direction of motion only. After replacing the encoder and/or motor, the values in the compensation table must be relearned.
p5261	-	0...4095	n (Nm or N)	Compensation values for the cogging torque compensation in the negative direction of motion (p5250.1 = 1). These compensation values are filled through a learning process (p5251) and can be changed manually. After replacing the encoder and/or motor, the values in the compensation table must be relearned.

9.15.4 Compensating periodic position errors

Procedure

You can also compensate periodic position errors using the "Cogging torque compensation" function module. As a result of how the encoder is mounted (not centrally mounted, encoder coupling, encoder radial runout), measuring errors can occur in the speed and position actual value with 1 or 2 periods per revolution. You can compensate for these errors, therefore improving precision and concentric accuracy along with smooth running properties.

Note

In spite of this compensation function, we recommend that encoders are optimally mounted. This minimizes imbalance and the load and stress on couplings and bearings.

To compensate periodic position errors, proceed as follows:

1. Determine the compensation data for the periodic position errors using the rotating motor data identification routine (p1959.0 = 1, p1960).
   It is not permissible that a load is connected to the motor shaft when performing this routine. The motor must be fixed as tightly as possible so that when rotating the stator cannot move. When accepting the identified data, p5265...p5268 are preassigned, which are necessary for the compensation.
2. Set p5250.2 = 1 to activate the compensation of periodic position errors.

Result

The following diagram shows the speed traces for a toothed wheel encoder before (orange) – and after (green) compensation when coasting down. The blue curve shows one mechanical revolution. The periodic speed error was able to be eliminated.



Figure 9-56 Example: Speed before and after compensation

9.15.5 Messages and parameters

Faults and alarms (see SINAMICS S120/S150 List Manual)

A07354 Drive: Cogging torque compensation not possible

Overview of important parameters (see SINAMICS S120/S150 List Manual)

- r0108 Drive object function module
- p5250[0...n] Cogging torque compensation configuration
- p5251 Activate cogging torque compensation learning
- p5252 Cogging torque compensation table length
- p5253 Cogging torque compensation periodicity (intermittency) factor
- r5254[0...3] Cogging torque compensation diagnostics
- r5255[0...1] CO: Cogging torque compensation input/output
- p5256[0...n] Cogging torque compensation direction reversal hysteresis
- p5260[0...4095] Cogging torque compensation table
- p5261[0...4095] Cogging torque compensation table negative direction

Monitoring functions and protective functions 10

10.1 Power unit protection

SINAMICS power units offer comprehensive functions for protecting power components.

Table 10-1 General protection for power units

Protection against:	Precautions	Responses
Overcurrent[1)]	Monitoring with 2 thresholds: • 1. Threshold exceeded	A30031, A30032, A30033 Current limiting of a phase has responded. The pulsing in the phase involved is inhibited. If it is too frequently exceeded F30017 –> OFF2
	• 2. Threshold exceeded	F30001 "Overcurrent" → OFF2
Overvoltage[1)]	Comparison of DC-link voltage with hardware shutdown threshold	F30002 "Overvoltage" → OFF2
Undervoltage[1)]	Comparison of DC-link voltage with hardware shutdown threshold	F30003 "Undervoltage" → OFF2
Short-circuit[1)]	• 2. Monitoring threshold checked for overcurrent	F30001 "Overcurrent" → OFF2
	• Uce monitoring of IGBT modules (chassis only)	F30022 "Uce monitoring" → OFF2 (chassis only)
Ground fault	Monitoring the sum of all phase currents	After threshold in p0287 is exceeded: F30021 "Power unit: Ground fault" → OFF2 Note: The sum of all phase currents is displayed in r0069[6]. For operation, the value in p0287[1] must be greater than the sum of the phase currents when the insulation is intact.
Line phase-failure detection [1)]		F30011 "Line phase-failure in main circuit" → OFF2

[1)] The monitoring thresholds are permanently defined in the converter and cannot be changed.

10.1.1 Thermal monitoring and overload responses

The thermal power unit monitor is responsible for identifying critical situations. If alarm thresholds are exceeded, the user can set parameterizable response options that enable continued operation (e.g. with reduced power) and prevent immediate shutdown. The parameterization options, however, only enable intervention below the shutdown thresholds, which cannot be changed by the user.

The following thermal monitoring functions are active:

- I^2t monitoring - A07805 - F30005
  I^2t monitoring is used to protect components that have a high thermal time constant compared with semiconductors. An overload with regard to I^2t is present when the converter load r0036 is greater than 100% (load in % in relation to rated operation).
- Heat-sink temperature - A05000 - F30004
  Is used to monitor the temperature r0037[0] of the heat sink on the power semiconductors (IGBT).
- Chip temperature - A05001 - F30025
  Significant temperature differences can occur between the IGBT barrier junction and the heat sink. The calculated barrier junction temperature is displayed in r0037[13...18]; the monitoring ensures that the specified maximum barrier junction temperature is not exceeded.

If an overload occurs with respect to any of these three monitoring functions, an alarm is first output. The alarm threshold p0294 (I^2t monitoring) can be parameterized relative to the shutdown (trip) values.

Overload responses

In order to reduce thermal stress and thus losses in the power unit, the following methods and overload reactions are available.

Reducing the pulse frequency

Reducing the pulse frequency is an effective procedure for reducing losses in the power unit. This is due to the fact that the switching losses make up a very large portion of the total losses. In many applications, a temporary reduction in pulse frequency is tolerable.

Disadvantage:

Reducing the pulse frequency increases the current ripple. At a small moment of inertia, this may cause an increase in the torque ripple on the motor shaft and a noise level increase. We recommend using the overload reaction with pulse frequency reduction for applications in which the control engineering is not critical (e.g. for pump and fan drives).

Note

This procedure can be used only if the power unit has a cycle with a pulse frequency greater than the minimal pulse frequency and a reduction of the pulse frequency is permissible.

Reduction of the output current

We recommend this procedure if a pulse frequency reduction is not desired or permissible (e.g. if the pulse frequency has already been set to the lowest level).

Disadvantage:

This procedure makes sense exclusively for drives that must tolerate a rotational speed deviation and must not be operated at a constant torque.

Responses

The Control Unit sets the desired responses using p0290. Through this parameter, the described procedures can be used in various combinations in order to reduce the thermal stress. Depending on the configured procedure, the following

- No reduction (p0290 = 1)
  Select this option if neither reducing the pulse frequency or reducing the output current (= output frequency) can be considered suitable procedures. In this case, the converter does not change its operating point once an alarm threshold has been overshot, which means that the drive can be operated until it reaches its shutdown values. When the trip threshold is reached, the converter switches off and outputs one of the following faults.
  - F30004 (power unit: temperature rise for inverter heat sink)
  - F30005 (power unit: Overload I2t)
  - F30025 (power unit: chip temperature rise)

  The time until shutdown is not defined and depends on the degree of overload. We recommend the set value p0290 = 1 for applications that, based on the process, do not allow set value deviations for individual drives in the group or for which the pulse frequency must absolutely be adhered to.
- Reducing the output current (p0290 = 0, 10)
  For the set value "0" the following applies:
  When a temperature alarm threshold or I^2t alarm threshold is exceeded, the output current (= output frequency) is reduced. If the reduction of the output current is not sufficient for eliminating the thermal stress on the power unit, the drive switches off when the corresponding fault threshold is reached.

  Note

  This setting is not suitable for drives requiring a constant torque.

  For the set value "10" the following applies:
  In addition to the heat sink and chip temperature, the difference between the two temperatures is monitored for Booksize devices. When a temperature threshold is exceeded, the output current (= output frequency) is reduced.

  Note

  This setting only applies to Booksize devices. For Booksize devices with a pulse frequency ≥ 16 kHz, this overload reaction is activated as standard.

- Reducing the pulse frequency (p0290 = 3, 13)
  This procedure is suitable for the following applications:
  - The drive is frequently started and accelerated.
  - The drive has a heavily fluctuating torque profile. Reducing the output current is not desired.
  - The drive is operated at a low dynamic response and occasional overload. A rotational speed deviation is not allowed.

  For the set value "3" the following applies:
  When a temperature alarm threshold is exceeded, the pulse frequency is reduced to a permissible minimum.
  For the set value "13" the following applies:
  In this case, the chip temperature is evaluated based on the load at the current time. If this temperature exceeds the alarm threshold, the pulse frequency is reduced to a permissible minimum. Unlike the set value "3", the pulse frequency is reduced based on the chip temperature evaluation before the temperature alarm threshold has even been reached.
- Reducing the pulse frequency and the output current (p0290 = 2, 12)
  This procedure is suitable for the following applications:
  - The drive is frequently started and accelerated.
  - The drive has a heavily fluctuating torque profile.

  For the set value "2" the following applies:
  When a temperature alarm threshold is exceeded, the pulse frequency is reduced to a permissible minimum. If the pulse frequency reduction is not sufficient for eliminating the thermal stress on the power unit, then the output current is also reduced. When the I²t alarm threshold is reached, only the output current is reduced while the pulse frequency remains at the set value.
  For the set value "12" the following applies:
  In this case, the chip temperature is evaluated based on the load at the current time. If this temperature exceeds the alarm threshold, the pulse frequency is reduced to a permissible minimum. Unlike the set value "2", the pulse frequency is reduced based on the chip temperature evaluation before the temperature alarm threshold has even been reached. The output current is reduced if, in addition to the chip temperature, the alarm thresholds of the heat sink temperature and the I2t monitoring have been exceeded.

Function diagrams (see SINAMICS S120/S150 List Manual)

- 8021 Signals and monitoring functions - thermal monitoring power unit

Overview of important parameters (see SINAMICS S120/S150 List Manual)

- r0036 CO: Power unit overload I2t
- r0037[0...19] CO: Power unit temperatures
- p0290 Power unit overload response
- p0294 Power Module warning I2t overload

10.2 Thermal motor protection

The thermal motor protection monitors the motor temperature and responds to overtemperature conditions with alarms or faults. The motor temperature is either measured with sensors in the motor, or is calculated without sensors, using a temperature model from the operating data of the motor. Combinations of temperature measurement and taking into consideration a motor temperature model are possible. As soon as critical motor temperatures are determined, measures to protect the motor are initiated.

For thermal motor protection with temperature sensors, the motor temperature is directly measured in the motor windings. The temperature sensors are either connected to the Control Unit, the Motor Module or supplementary modules. The determined temperature values are sent to the Control Unit, which then responds according to the parameter settings. When switching on again after a power failure, the actual motor temperatures are immediately available.

With thermal motor protection without temperature sensors, different thermal motor models are used for calculation. The temperatures according to the motor temperature model are calculated from the motor operating data. Whereby, the masses of the motor parts and the type of ventilation, for the I^2t model (for synchronous motors), the motor current in relation to the operating time is taken into consideration in the calculation. For motor temperature protection without a temperature sensor, p0600[0...n] = 0 is set or p0601[0...n] = 0 is set. In addition to motor temperature protection without a temperature sensor, a motor temperature model must be activated with p0612.00 = 1, p0612.01 = 1 or p0612.02 = 1.

If you are using motors from the motor lists, or with integrated DRIVE-CLiQ connection, the relevant motor data is automatically transferred to the Control Unit.

In the VECTOR control mode, the drive response to a detected motor overtemperature can be parameterized using p0610 (motor overtemperature response). The motor may either be switched off immediately – or continue to operate at reduced power, reduced load, under adapted conditions.

10.2.1 Thermal motor models

Motor temperature measurements using temperature sensors protect the motor against overheating. If temperature sensors are not being used, then instead, the thermal motor model can be used as motor protection. Thermal motor models respond more dynamically than temperature sensors, and therefore provide better protection relating to brief overload conditions.

Depending on the particular temperature model, the temperature rise is either assigned to various motor parts (stator, rotor) or is calculated from the motor current and the thermal time

constant. A combination of thermal motor model with additional temperature sensors can also be used.

NOTICE
Damage to the motor when operated without temperature sensors The thermal model cannot protect the motor in the event of incorrect installation, elevated ambient temperature, or incorrect parameter assignment, and as a consequence, the motor can be damaged. • Comply with the motor installation regulations. • Commission the motor as specified.

10.2.1.1 Thermal motor model 1

Thermal motor model 1 is only used for selected synchronous motors, and protects against brief overload conditions. It is based on a continuous current measurement. The dynamic load of the motor is determined from the motor current and the motor model time constant. The actual value of the motor winding temperature can be measured using a temperature sensor and subsequently taken into account.

The model motor temperature is indicated in r0632. It is calculated from the following values:

- Absolute current actual value r0068
- I2t motor model thermal time constant p0611
- Motor stall current p0318
- Measured motor temperature r0035 (if available)
- Motor temperature at rated load p0605 (for expansion p0627)

Commissioning the motor model

You activate the thermal I2t motor model with p0612.00 = 1. The expansion makes it more transparent when setting the motor model. You can additionally activate this expansion using p0612.08 = 1.

Note

When commissioning the motor, thermal motor model 1 (p0612.00 = 1) including expansion (p0612.08 = 1) is automatically activated.

Preconditions for automatic activation:

- Rotating permanent-magnet synchronous motors are used
- There is no motor sensor
- No (other) thermal motor model is activated

Important settings

The most important parameters for thermal motor model 1 and/or for the expansion of this model are subsequently explained.

When the expansion is subsequently activated, the corresponding parameters of the expansion are preassigned with the parameter values before activating the expansion.

Parameters for the following settings:		Explanation
p0612.08 = 0	p0612.08 = 1	
p0605	p5390	Alarm threshold If the model motor temperature (r0632) exceeds the alarm threshold, alarm A07012 "Drive: Motor temperature model 1/3 overtemperature" is output
p0615	p5391	Fault threshold If the model motor temperature (r0632) exceeds the fault threshold, fault F07011 "Drive: Motor overtemperature" is output.
p0605	p0627 + 40°C	Rated temperature (winding) Defines the rated overtemperature of the stator winding referred to the ambient temperature.
1.333 (fixed value)	p5350	Boost factor Defines the boost factor for the copper losses at standstill.
p0612 = 0x1	p0612 = 0x101	Activation Activates the motor module and/or additionally the expansion.
r0632	r0632	Actual temperature Indicates the stator winding temperature of the motor temperature model.
r0034	r0034	Motor utilization Indicates the actual motor utilization level.

Taking into account the ambient temperature

If, for thermal motor model 1, a temperature sensor has not been the parameterized, then motor module 1 automatically uses an ambient temperature of 20°C for the calculation. You can enter one of these ambient temperatures deviating from the standard temperature as follows:

1. Activate the setting p0612.12 = 1.
   This enables parameter p0613. The factory setting is 20 °C.
2. If you wish to take into account an ambient temperature, which deviates from the factory setting, in the motor model, then enter the expected ambient temperature in p0613.

Note

When commissioning the motor, the setting p0612.12 = 1 is automatically activated. p0613 can be parameterized when required.

10.2.1.2 Thermal motor model 2

Thermal motor model 2 is used for induction motors.

Enter the total motor mass in p0344.

- p0625 = ambient temperature
- p0626 = overtemperature, stator iron
- p0627 = overtemperature, stator winding
- p0628 = rotor winding temperature rise

The motor temperatures are calculated on the basis of motor measured values. The calculated temperatures are indicated in the parameters:

- r0630 Motor temperature model ambient temperature
- r0631 Motor temperature model stator iron temperature
- r0632 Motor temperature model stator winding temperature
- r0633 Motor temperature model rotor temperature

When operated with an additional KTY84 or Pt1000 temperature sensor, the calculated temperature value from thermal motor model 2 is continuously corrected to track the measured temperature value. After deactivating the temperature sensor with p0600 = 0 or p0601 = 0, the calculation continues with the last measured temperature value.

Commissioning the motor model

You activate the thermal motor model 2 with p0612.01 = 1. The expansion makes the motor model more precise. You can additionally activate this expansion using p0612.09 = 1.

Note

When commissioning the motor, the expansion of thermal motor model 2 (p0612.09 = 1) is automatically activated.

10.2.1.3 Thermal motor model 3

Thermal motor model 3 is only intended for certain Siemens motors, which do not have their own integrated temperature sensors. Thermal motor model 3 is a thermal 3-mass model. It is activated with p0612.02 = 1. The necessary parameters are automatically transferred when commissioning via DRIVE-CLiQ.

Note

When commissioning, thermal motor model 3 is automatically set after selecting the intended Siemens motor (p0301). The parameters are set to values appropriate for the particular motor type.

The motor temperatures are calculated based on the motor measured values. The calculated temperatures are indicated in the parameters:

- r0034 motor utilization thermal
- p0610 motor overtemperature response
- p0613 motor temperature model ambient temperature
- r0631 Motor temperature model stator iron temperature
- r0632 Motor temperature model stator winding temperature
- r0633 Motor temperature model rotor temperature
- r5387 motor temperature model 3 timer
- p5388 motor temperature current reduction inhibit
- p5389 motor temperature status word faults / alarms

Table 10-2 Important settings

Parameter:	Explanation:
p5390	Alarm threshold If the model motor temperature (r0632) exceeds the alarm threshold, alarm A07012 "Drive: Motor temperature model 1/3 overtemperature" is output
p5391	Fault threshold If the model motor temperature (r0632) exceeds the fault threshold, fault F07011 "Drive: Motor overtemperature" is output.
p5350	Boost factor Defines the boost factor for the copper losses at standstill.

10.2.1.4 Motor overload protection according to IEC/UL 61800-5-1

Overview

The thermal motor models described comply with the motor overload protection according to IEC/UL 61800-5-1. For Siemens motors from the database, the parameters are set automatically for the corresponding motor model. For third-party motors on the other hand, a standard motor data set is created, which may have to be adapted to guarantee conformity with the motor overload protection.

Requirements

To guarantee thermal protection of a configured motor according to IEC/UL 61800-5-1, the following supplementary conditions must be observed and the parameters set as follows:

1. Set the value "12" (messages, no reduction of I_max, temperature storage) in p0610 (motor overtemperature response).
2. Set the corresponding motor model in p0612 (activate motor temperature model) in accordance with the configured motor:
   - Synchronous motors: p0612.0 = Yes (thermal motor type 1)
   - Induction motors: p0612.1 = Yes (thermal motor type 2)
   - For specific Siemens motors without installed temperature sensors: p0612.2 = Yes (thermal motor type 3)
3. Activate the extension for thermal motor type 1 with p0612.8 = Yes.
   OR
   Activate the extension for thermal motor type 2 with p0612.9 = Yes.

Important notes

Additionally, observe the following information regarding further settings and follow the instructions specified therein.

Note

Operation without temperature sensor

If you configured a motor without temperature sensor, set the minimum value for motor ambient temperature at 40 °C in p0613 (synchronous motors) or p0625 (induction motors).

Note

No increase of the trip threshold

The trip threshold parameterized in the motor data set (p0605, p0615 or p5391) may not be increased.

Note

No change of further parameters

Parameters other than those previously described for the thermal motor types may not be changed. If further parameters are changed, the protection function of the motor model can no longer be guaranteed.

10.2.1.5 Function diagrams and parameters

Messages (see SINAMICS S120/S150 List Manual)

- F07011 Drive: Motor overtemperature
- A07012 Drive: Motor temperature model 1/3 overtemperature
- F07013 Drive: Motor temperature model configuration fault
- A07014 Drive: Motor temperature model configuration alarm

Function diagrams (see SINAMICS S120/S150 List Manual)

- 8016 Signals and monitoring functions - thermal monitoring motor, Mot_temp ZSW F/A
- 8017 Signals and monitoring functions - motor temperature model - 1 (I2t)
- 8018 Signals and monitoring functions - motor temperature model 2
- 8019 Signals and monitoring functions - motor temperature model 3

Overview of important parameters (see SINAMICS S120/S150 List Manual)

Thermal motor model 1

- r0034 CO: Motor utilization thermal
- p0318[0...n] Motor stall current
- p0605[0...n] Mot_temp_mod 1/2 threshold and temperature value
- p0610[0...n] Motor overtemperature response
- p0611[0...n] I2t motor model thermal time constant
- p0612[0...n] Mot_temp_mod activation
- p0613[0...n] Mot_temp_mod 1/3 ambient temperature
- p0615[0...n] Mot_temp_mod 1 (I2t) fault threshold
- p0627[0...n] Motor overtemperature, stator winding
- p0632[0...n] Mot_temp_mod stator winding temperature
- p5350[0...n] Mot_temp_mod 1/3 zero speed boost factor
- p5388 BI: Mot_temp current reduction inhibit signal source
- p5389.0...8 CO/BO: Mot_temp status word faults/alarms
- p5390[0...n] Mot_temp_mod 1/3 alarm threshold
- p5391[0...n] Mot_temp_mod 1/3 fault threshold

Thermal motor model 2

- p0344[0...n] Motor weight (for thermal motor type)
- p0610[0...n] Motor overtemperature response
- p0612[0...n] Mot_temp_mod activation
- p0617[0...n] Stator thermally relevant iron component
- p0618[0...n] Stator thermally relevant copper component
- p0619[0...n] Rotor thermally relevant mass

- p0625[0...n] Motor ambient temperature during commissioning
- p0626[0...n] Motor overtemperature, stator iron
- p0627[0...n] Motor overtemperature, stator winding
- p0628[0...n] Motor overtemperature rotor
- r0630[0...n] Mot_temp_mod ambient temperature
- r0631[0...n] Mot_temp_mod stator iron temperature
- r0632[0...n] Mot_temp_mod stator winding temperature
- r0633[0...n] Mot_temp_mod rotor temperature
- p5388 BI: Mot_temp current reduction inhibit signal source
- p5389.0...8 CO/BO: Mot_temp status word faults/alarms

Thermal motor model 3

- r0034 CO: Motor utilization thermal
- p0610[0...n] Motor overtemperature response
- p0612[0...n] Mot_temp_mod activation
- p0613[0...n] Mot_temp_mod 1/3 ambient temperature
- r0631[0...n] Mot_temp_mod stator iron temperature
- r0632[0...n] Mot_temp_mod stator winding temperature
- r0633[0...n] Mot_temp_mod rotor temperature
- p5350[0...n] Mot_temp_mod 1/3 zero speed boost factor
- r5387[0...n] Mot_temp_mod 3: Timer
- p5388 BI: Mot_temp current reduction inhibit signal source
- p5389.0...8 CO/BO: Mot_temp status word faults/alarms
- p5390[0...n] Mot_temp_mod 1/3 alarm threshold
- p5391[0...n] Mot_temp_mod 1/3 fault threshold

10.2.2 Motor temperature sensing

Temperature sensors

The motor temperature is sensed using temperature sensors integrated in the motor windings. The sensors used are selected as standard from the following four different sensor types:

- PTC
- KTY84
- PT100/PT1000
- Bimetallic sensor with NC contact (abbreviated, "bimetal NC contact")

Function of the PTC

The temperature sensor is connected to the Sensor Module at the appropriate terminals (-Temp) and (+Temp) (see the relevant chapter in the SINAMICS S120 Control Units and Supplementary System Components Manual). The threshold value for switching over to an alarm or fault is 1650 Ω.

A PTC usually has a strongly non-linear characteristic, and as a consequence is used just like a switch. When the typical rated response temperature is exceeded, then the resistance changes abruptly (step function). The tripping resistance is ≥1650 Ohm.

- p0600 = 1 activates the motor temperature sensing using sensor 1
- p0601 = 1 sets temperature sensor type "PTC"

Function of the KTY

The temperature sensor is connected to the Sensor Module at the appropriate terminals (-Temp) and (+Temp) (see the relevant chapter in the SINAMICS S120 Control Units and Supplementary System Components Manual). A KTY84/1C130 temperature sensor has an almost linear characteristic and is therefore also suitable for continuously measuring and displaying the motor temperature.

- p0600 = 1 activates the motor temperature sensing using sensor 1
- p0601 = 2 sets temperature sensor type "KTY"

Function of the PT100/PT1000

A PT100 or PT1000 is in principle a PTC with a very linear characteristic, and is suitable for continuous and exact temperature measurements. Not every sensor input is PT100/PT1000-capable.

- p0600 = 1 activates the motor temperature sensing using sensor 1
- p0601 = 5 sets temperature sensor type "PT100"
  or
- p0601 = 6 sets temperature sensor type "PT1000"

Function of the bimetallic NC contact

A bimetallic NC contact at a certain nominal response temperature actuates a switch. The tripping resistance is <100 Ohm. Not every sensor input is bimetal NC contact-capable.

- p0600 = 1 activates the motor temperature sensing using sensor 1
- p0601 = 4 sets temperature sensor type "Bimetallic NC contact"

Temperature sensor type for multiple temperature channels

Set p0601 = 10 if you wish to use several temperature channels. The sensors are then interconnected via BICO

10.2.3 Sensor Modules

Sensor Modules are needed when additional temperature sensors are to be connected via DRIVE-CLiQ. Various Sensor Modules are available to do this:

- Sensor Module Cabinet-Mounted (SMC) for rail mounting in control cabinets
- Sensor Module External (SME) in degree of protection IP67, installed close to the motor

PTC, KTY84, PT1000 temperature sensors - and in some cases - bimetallic NC contacts, can be connected to the Sensor Modules.

Table 10-3 Temperature sensor connection

Device	Interface	+Temp	-Temp	Temperature sensor type
SMC10	X520	13	25	KTY84/PTC/PT1000
SMC20	X520	13	25	KTY84/PTC/PT1000
SMC30	X520	1	8	KTY84/PTC/PT1000
	X531	4	3	KTY84/PTC/PT1000
SMC40	-	-		A temperature sensor cannot be connected
SME20	X100	9	7	KTY84/PTC/PT1000
SME25	-	-		A temperature sensor cannot be connected
SME120	X200	See below		KTY84/PTC/PT1000/bimetallic NC contact
SME125	X200	See below		KTY84/PTC/PT1000/bimetallic NC contact

10.2.3.1 Sensor Module Cabinet-Mounted

A Sensor Module Cabinet-Mounted (SMCx0) evaluates the sensor signals. The results are transferred to the drive for further processing via DRIVE-CLiQ. The SMCx0 is intended for operation in a control cabinet. SMC10, SMC20, SMC30 and SMC40 differ regarding the encoder interfaces. They have the same function for detecting the motor temperature. Alternatively, an SMC30 offers two encoder connections. The encoder can either be connected at interface X520, a 15 pin Sub-D connector – or at interface X521/X531, via terminal strip.

A SMC40 only supports pure digital encoders without incremental signals. These are only encoders with the order designation EnDat 22. In contrast to the other Sensor Modules, the SMC40 is a double SMC. Wiring is via two DRIVE-CLiQ cables. Motor temperature monitoring is not possible with the SMC40.

Note

The SMC40 can only be fully configured when an associated EnDat 2.2 encoder is connected. Without a connected encoder, it is not possible to integrate the SMC40 into the topology.

Note

No safety functions with SMC40

No safety functions are supported with firmware V4.5.

10.2.3.2 Sensor Module External

A Sensor Module External (SME) is required if the sensor interface is to be installed close to the motor sensor outside a control cabinet. The SME has an IP67 degree of protection.

10.2.3.3 Sensor Module SME 20/25

The SME20 and SME25 evaluate encoder and sensor data. The calculated values are transferred to the Control Unit via DRIVE-CLiQ. SME20 and SME25 differ regarding the encoder interface.

A temperature sensor cannot be connected to the SME25 to sense the motor temperature. Instead, use an SME125.

10.2.3.4 Sensor Module External 120/125

A Sensor Module External 120 (SME120) or Sensor Module External 125 (SME125) is required for the following application conditions:

- The sensor interface is installed close to the motor outside a control cabinet
- Several motor temperature channels are required
- The motor temperature sensors do not have safe protective separation
- Safe protective separation is not possible.

SME12x has an IP67 degree of protection. SME12x are particularly suitable for linear and torque motor applications.

If r0458[0...2].8 = 1, up to three temperature sensors can be connected at terminal block X200. Each sensor is assigned to a temperature channel.

The SME12x evaluates the data of the temperature sensors and makes the calculated values available via DRIVE-CLiQ for further processing.

Table 10-4 Assignment of terminal strip X200 for the temperature sensors

Terminal	Function	Channel	Parameter	Temperature sensor type
1	-Temp	2	p4601[0]	KTY84/PTC/PT1000/bimetallic NC contact Linear and torque motors: KTY84/PT1000
2	+Temp			
3	+Temp	3	p4602[0]	KTY84/PTC/PT1000/bimetallic NC contact Linear and torque motors: PTC – triplet 1 or bimetal NC contact
4	-Temp			
5	+Temp	4	p4603[0]	KTY84/PTC/PT1000/bimetallic NC contact Linear and torque motors: PTC – triplet 1 or bimetal NC contact
6	-Temp			

Temperature measurement

- p0600 = 1/2/3 selects the additional motor temperature measurement via channels 2 to 4.
- p0601 = 10 activates the evaluation via several temperature channels SME12x.

KTY84

- p4601[0...n] to p4603[0...n] = 20 sets temperature sensor type KTY.
- If the value in parameter r4620[0...3] is not equal -200 °C, then the temperature display is valid. The actual value of the temperature sensors is displayed:
  - r4620[1] temperature sensors from channel 2
  - r4620[2] temperature sensors from channel 3
  - r4620[3] temperature sensors from channel 4

PT1000

- p4601[0...n] to p4603[0...n] = 60 sets temperature sensor type PT1000.
- If the value in parameter r4620[0...3] is not equal -200 °C, then the temperature display is valid. The actual value of the temperature sensors is displayed:
  - r4620[1] temperature sensors from channel 2
  - r4620[2] temperature sensors from channel 3
  - r4620[3] temperature sensors from channel 4

PTC

- p4601[0...n] to p4603[0...n] = 10/11/12 sets the temperature sensor type PTC, the evaluation type and activates the evaluation.
  - p4601[0...n] = 10 PTC fault
  - p4601[0...n] = 11 PTC alarm
  - p4601[0...n] = 12 PTC alarm and timer
- r4620[0...3] = -200 °C.

Bimetallic NC contact

- p4601[0...n] to p4603[0...n] = 30/31/32 sets the temperature sensor type bimetal NC contact, the evaluation type and activates the evaluation.
  - p4601[0...n] = 30 bimetal NC contact fault
  - p4601[0...n] = 31 bimetal NC contact alarm
  - p4601[0...n] = 32 bimetal NC contact alarm and timer
- r4620[0...3] = -200 °C.

10.2.4 Terminal Modules

Terminal Modules provided the drive system with additional analog and digital data inputs and outputs. They are intended for use in control cabinets. The Terminal Modules are connected via DRIVE-CLiQ with the drive system. Terminal Modules TM31, TM120 and TM150 provide inputs for temperature sensors.

- The TM31 can evaluate one temperature sensor.
- The TM120 can evaluate up to 4 temperature sensors. The sensor inputs have protective separation.
- The TM150 can evaluate up to 12 sensors. The sensors can be split up into a maximum of 3 groups. Each sensor can be freely assigned to one of the group.

Table 10-5 Temperature sensor connection

Device	Interface	Chan-nel	+Temp	-Temp	Temperature sensor type
TM31	X522	0	7	8	KTY84/PTC/PT1000
TM120	X521	0	2	1	KTY84-1C130/PTC/PT1000/bimetallic NC contact, Linear motor: KTY84-1C130/PT1000
		1	4	3	KTY84-1C130/PTC/PT1000/bimetallic NC contact, Linear motor: KTY84-1C130/PT1000
		2	6	5	KTY84-1C130/PTC/PT1000/bimetallic NC contact, Linear motor: KTY84-1C130/PT1000
		3	8	7	KTY84-1C130/PTC/PT1000/bimetallic NC contact, Linear motor: KTY84-1C130/PT1000
TM150	X531[1)]	0	1 3	2 4	KTY84-1C130/PTC/bimetallic NC contact/ PT100/PT1000
	X532[1)]	1	1 3	2 4	KTY84-1C130/PTC/bimetallic NC contact/ PT100/PT1000
	X533[1)]	2	1 3	2 4	KTY84-1C130/PTC/bimetallic NC contact/ PT100/PT1000
	X534[1)]	3	1 3	2 4	KTY84-1C130/PTC/bimetallic NC contact/ PT100/PT1000
	X535[1)]	4	1 3	2 4	KTY84-1C130/PTC/bimetallic NC contact/ PT100/PT1000
	X536[1)]	5	1 3	2 4	KTY84-1C130/PTC/bimetallic NC contact/ PT100/PT1000

[1]) You will find more detailed information on sensor connections in the chapter on "Terminal Module 150".

10.2.5 Terminal Module 31

A Terminal Module 31 (TM31) is used when additional digital and analog inputs/outputs required. The temperature sensor is connected at terminal X522. The values of the fault and/or alarm thresholds can be set in parameter p4102[0..1] from -48 °C to 251 °C. p4102 = 251°C deactivates the alarm and fault threshold. The factory setting is 100 °C for the alarm threshold and 120 °C for the fault threshold.

Temperature measurement

- p0600 = 10 activates the motor temperature measurement via the external sensor.
- p0603 sets the signal source for the evaluation of the motor temperature
- p4100 = 0 disables the evaluation. Then parameter r4105 = -300°C.

PTC

- p4100 = 1 sets the PTC temperature sensor type and activates the evaluation.
- r4105 indicates the following values:
  - If the temperature actual value is less than the nominal response temperature, then -50°C is displayed.
  - If the temperature actual value is higher than the nominal response temperature, then 250 °C is displayed.
  - If the actual temperature value is invalid (F35920 initiated), then -300°C is displayed.
  - If p4100 = 0, -300°C is displayed.

KTY84

- p4100 = 2 sets the KTY84 temperature sensor type and activates the evaluation.
- r4105 indicates the following values:
  - The actual temperature value of the temperature evaluation
  - -300 °C if no sensor has been selected or the temperature actual value is invalid

PT1000

- p4100 = 6 sets temperature sensor type PT1000 and activates the evaluation.
- r4105 indicates the following values:
  - The actual temperature value of the temperature evaluation
  - -300 °C if no sensor has been selected or the temperature actual value is invalid

10.2.6 Terminal Module 120

If the temperature sensors in the installed motors do not have protective separation, then you require a Terminal Module 120 (TM120). Up to four different temperature sensors can be connected to the TM120. The TM120 senses the actual temperature values and evaluates them. The fault and alarm thresholds (p4102) of the actual temperature values can be set from -48° C up to 251° C. Temperature sensors are connected at the TM120 at terminal strip X521 according to the table above.

Note

Fault messages

Fault messages for an individual temperature channel in the TM120 are propagated to all other drive objects connected with the TM120.

As such all other drive objects (connected with the TM120) also trigger a fault.

You will find additional information in the SINAMICS S120 Control Units and Supplementary System Components Manual.

Temperature measurement

- p0600[0...n] = 20 or 21 activates the motor temperature sensing via an external sensor.
- p0601[0...n] = 11 sets the evaluation for several temperature channels.
- p0608[0...3] allocates the temperature channels for the motor temperatures to signal source 2.
- p0609[0...3] allocates the temperature channels for the motor temperatures to signal source 3.
- p4100[0...n] = 0 deactivates temperature evaluation.
- r4101[0...3] indicates the actual resistance value of the respective temperature sensor. The maximum measurable resistance is 2170 Ω.
- p4102[0/2/4/6] sets the alarm thresholds of the temperature sensors to between -48° C and 250° C.
- p4102[1/3/5/7] sets the fault thresholds of the temperature sensors to between -48° C and 250° C.
- p4102[0...7] = 251° C deactivates the alarm and/or fault message that has been set.
- p4610[0...n] to p4613[0...n], assigns up to four temperature sensors to the motor and defines the responses.

- r4620[0...3] ≠ -200° C means:
  - A KTY84/PT1000 is connected.
  - The temperature display is valid.
- r4620[0...3] = -200° C means:
  - A PTC or a bimetal NC contact is connected.
  - There is a temperature sensor fault.
  - The sensor channel has been deactivated.
  - The temperature evaluation has been deactivated.

KTY84

- p4100[0...3] = 2 assigns the temperature sensor type KTY84 to a corresponding channel 1 to 4, and activates the evaluation.
- r4105[0...3] displays the actual temperature value of the measuring channel involved of the temperature evaluation. If no sensor has been selected or if the actual temperature value is invalid, the value -300° C is in the parameter.

PT1000

- p4100[0...3] = 6 assigns the temperature sensor type PT1000 to a corresponding channel 1 to 4, and activates the evaluation.
- r4105[0...3] displays the actual temperature value of the measuring channel involved of the temperature evaluation. If no sensor has been selected or if the actual temperature value is invalid, the value -300° C is in the parameter.

PTC

- p4100[0...3] = 1 sets temperature sensor type PTC to the corresponding channel 1 to 4, and activates the evaluation.
- r4105[0...3] displays the actual temperature value of the temperature evaluation.
  - If the actual temperature value is lower than the rated response temperature, then r4105[0...3] is set to -50° C.
  - If the actual temperature value is higher than the rated response temperature, then r4105[0...3] is set to 250° C.
  - If no sensor has been selected or if the actual temperature value is invalid, then r4105[0...3] is set to -300° C.

Bimetallic NC contact

- p4100[0...3] = 4 sets the temperature sensor type bimetal NC contact, and activates the evaluation.
- r4105[0...3] displays the actual temperature value of the temperature evaluation.
  - If the actual temperature value is lower than the rated response temperature, then r4105[0...3] is set to -50° C.
  - If the actual temperature value is higher than the rated response temperature, then r4105[0...3] is set to 250° C.
  - If no sensor has been selected or if the actual temperature value is invalid, then r4105[0...3] is set to -300° C.

10.2.7 Terminal Module 150

The Terminal Module 150 (TM150) has 6x 4-pole terminals for temperature sensors. Temperature sensors can be connected in a 1x2, 1x3 or 1x4-wire system. In a 2x2-wire system, up to 12 input channels can be evaluated. 12 input channels can be evaluated in the factory setting. The temperature channels of a TM150 can be subdivided into three groups and evaluated together.

The TM150 can acquire the signals from KTY84, PTC, bimetallic NC contact, PT100 and PT1000 temperature sensors and evaluate them. The fault and/or alarm thresholds of the temperature values can be set from -99° C up to 251° C. The temperature sensors are connected at terminal strip X531 to X536 according to the following table.

The TM150 temperature inputs are not isolated.

Note

Fault messages

Fault messages for an individual temperature channel in the TM150 are propagated to all other drive objects connected with the TM150.

As such all other drive objects (connected with the TM150) also trigger a fault.

You can find additional information in the function diagrams 9625, 9626 and 9627 in the SINAMICS S120/S150 List Manual.

Selecting the sensor types

- p4100[0...11] sets the sensor type for the respective temperature channel.
- r4105[0...11] indicates the actual value of the temperature channel.
  - For switching temperature sensors, such as PTC and bimetallic NC contact, two limit values are displayed symbolically:
  - r4105[0...11] = -50° C: The actual temperature value is below the rated response temperature.
  - r4105[0...11] = +250° C: The actual temperature value is above the rated response temperature.

Note

For PTC and bimetallic NC contact the following applies:

What is shown in r4105[0...11] does not correspond to the actual temperature value.

Table 10-6 Selecting the sensor types

Value of p4100[0...11]	Temperature sensor	Temperature display range r4105[0...11]
0	Evaluation disabled	-
1	PTC thermistor	-50° C or +250° C
2	KTY84	-99° C to +250° C
4	Bimetallic NC contact	-50° C or +250° C
5	PT100	-99° C to +250° C
6	PT1000	-99° C to +250° C

Measuring the cable resistances

When using 2-wire sensors, to increase the measuring accuracy, the cable resistance can be measured and saved. To do this, short-circuit the sensor cable as close as possible to the sensor. The procedure is described in the SINAMICS S120/150 List Manual under p4109[0...11]. The measured cable resistance is then taken into account when evaluating the temperature. The cable resistance value is saved in p4110[0...11].

Line filter

A line filter is activated to suppress noise radiated from the line supply. Using p4121, the filter can be set to a 50 Hz or 60 Hz line frequency.

10.2.7.1 Measurement with up to 6 channels

Temperature measurement with a 2-wire sensor

With p4108[0...5] = 0, you evaluate a sensor in a 2-wire system at a 4-wire connection at terminals 1 and 2. Terminals 3 and 4 remain open.

Temperature measurement with a 3-wire sensor

With p4108[0...5] = 2, you evaluate a sensor in a 3-wire system at a 4-wire connection at terminals 3 and 4. The measuring cable is connected at terminal 1. You must short-circuit terminals 2 and 4.

Temperature measurement with a 4-wire sensor

With p4108[0...5] = 3, you evaluate a sensor in a 4-wire system at a 4-wire connection at terminals 3 and 4. The measuring cable is connected at terminals 1 and 2.

You can find additional information in function diagram 9626 in the SINAMICS S120/S150 List Manual.

10.2.7.2 Measurement with up to 12 channels

Temperature measurement with two 2-wire sensors

With p4108[0...5] = 1 you can acquire the signals from two sensors in 2-wire technology. The first sensor is connected to terminals 1 and 2. The 2nd sensor (number = first sensor + 6) is connected at terminals 3 and 4. You can find additional information in function diagram 9627 in the SINAMICS S120/S150 List Manual.

When connecting 2 2 wire sensors to terminal X531, the 1st sensor is assigned to temperature channel 1. The 2nd sensor is assigned to channel 7 (1+6).

Up to 12 temperature sensors can be connected to a TM150.

Note

Connection diagram for 12 temperature channels

The temperature sensors connected to a TM150 are not numbered consecutively. The first 6 temperature channels retain their numbering of 0 to 5. The other 6 temperature channels are consecutively numbered from 6 to 11, starting at terminal X531 (see function diagram 9627 in the SINAMICS S120/S150 Lists Manual).

Example of 8 temperature channels:

2x2 conductors at terminal X531: p4108[0] = 1 ≙ sensor 1 is at channel 0 and sensor 2 is at channel 6
2x2 wires at terminal X532: p4108[1] = 1 ≙ sensor 1 is at channel 1 and sensor 2 is at channel 7
1x3 wires at terminal X533: p4108[2] = 2 ≙ sensor 1 is at channel 2
1x3 conductor is at terminal X534: p4108[3] = 2 ≙ sensor 1 is at channel 3
1x4 conductor is at terminal X535: p4108[4] = 3 ≙ sensor 1 is at channel 4
1x2 conductor is at terminal X536: p4108[5] = 0 ≙ sensor 1 is at channel 5

10.2.7.3 Forming groups of temperature sensors

You can combine the temperature channels to form groups using parameter p4111[0...2]. For each group, the following calculated values are provided from the temperature actual values (r4105[0...11]):

- Maximum: r4112[0...2], (index 0,1,2 = group 0,1,2)
- Minimum: r4113[0...2]
- Average value: r4114[0...2]

Example:

The temperature actual value from channels 0, 3, 7, and 9 should be combined in group 1:

- p4111[1].0 = 1
- p4111[1].3 = 1
- p4111[1].7 = 1
- p4111[1].9 = 1

The calculated values from group 1 are available in the following parameters for interconnection:

- r4112[1] = maximum
- r4113[1] = minimum
- r4114[1] = average value

Note

Forming groups of temperature channels

Only form groups of continuously measuring temperature sensors. The switching temperature sensors PTC and bimetallic NC contacts are only assigned two temperatures - 50° C and +250° C, depending on the state. Within a group with continuous temperature actual values, the calculation of the maximum/minimum/average value temperature is significantly falsified by taking into account switching temperature sensors.

10.2.7.4 Evaluating temperature channels

For each of the individual 12 temperature channels, an alarm threshold and a fault threshold can be set in p4102[0...23]. The even parameter indices contain the alarm threshold and the uneven parameter indices, the fault threshold. The temperature thresholds can be set between -99°C and +251°C for each channel.

If the evaluation of the temperature actual value from p4105[0...11] exceeds the alarm threshold set in p4102[0...23], then an alarm is output at r4104.0...23. Timer p4103[0...11] is started at the same time.

If, after the timer has expired, the temperature actual value is still above the alarm threshold, then an appropriate fault is output. This fault can be acknowledged as soon as the temperature actual value is again below the alarm threshold.

If the evaluation of the temperature actual value from p4105[0...11] has exceeded the fault threshold set in p4102[0...23], then the corresponding fault is immediately activated.

Using p4118[0...11], a hysteresis for p4102[0...23] can be set for each channel.

Using p4119[0...11], a filter can be activated to smooth the temperature signal for each channel.

The time constant of the filter depends on the number of active temperature channels and can be read in r4120.

Failure of a sensor

Using parameter p4117[0...2], the response to the failure of a temperature sensor can be set within a group:

- p4117 = 0 is set. The failed sensor is not taken into account.
- p4117 = 1 is set. The group outputs the value -300 °C to the outputs for the maximum value, minimum value and the mean value.

10.2.7.5 Setting the smoothing time for temperature channels

For long or unshielded temperature cables, interference can cause the TM150 to respond and incorrectly shutdown the drive. To avoid this, a smoothing time can be set for every temperature channel in TM150 for the respective temperature signal.

Setting the smoothing time

The smoothing is realized using a 1st order lowpass filter. The effective smoothing time constant depends on the number of simultaneously active temperature channels, and is indicated in parameter r4120 [0...11].

The smoothing time constant to be set is calculated using the following formula:

Smoothing time constant (p4122) ≥ 2 · active number of channels · 50 ms

Procedure:

1. Open the inputs/outputs of the TM150 component in the STARTER commissioning tool (“Drive unit xy > Input/output component > TM150_component > Inputs/outputs”).
2. Select the desired temperature sensor (e.g. sensor 5) using the tab.

3. Click on the “Smoothing” button in the circuit diagram of the displayed temperature sensor/ channel (for sensor 5: p4119[5] = 1).

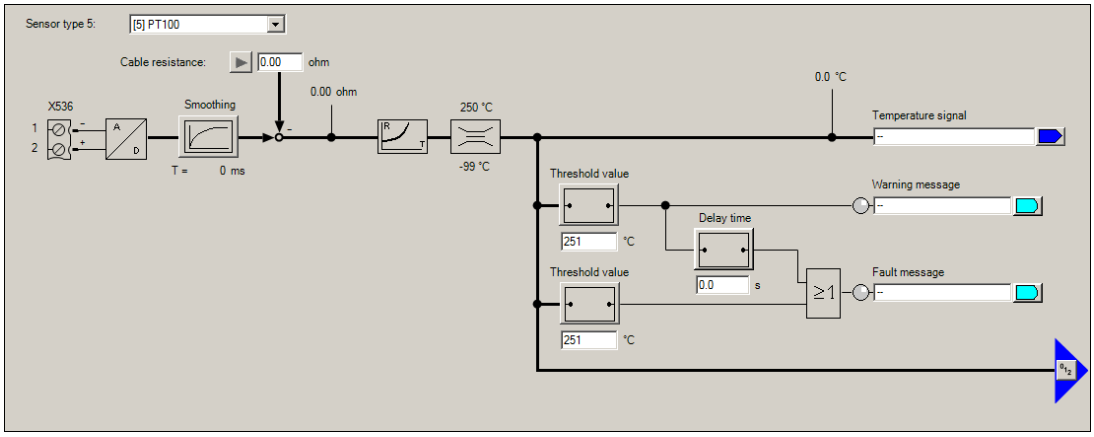

Figure 10-1 Smoothing time of a temperature sensor/channel.

Thus the filter to smooth the temperature signal is activated. Under the "Smoothing" button, an entry field for the necessary smoothing time constant (p4122[0...11]) is displayed.

4. Enter the required smoothing time constant (p4122) into the entry field.
   The smoothing time constants can be calculated using the aforementioned formula. To do this, you have to know over how many temperature channels you wish to configure a smoothing time.
   The implemented smoothing time is displayed after the entry in p4122 beneath the entry field for the selected temperature channel (r4120[0...11]).
5. Repeat steps 2 to 4 for all temperature sensors/channels being used.

10.2.8 Motor Module / Power Module Chassis

Motor Modules have a direct connection for a motor temperature sensor. You can evaluate PTC, KTY84, PT100, PT1000 temperature sensors or bimetallic NC contacts. The terminals of the temperature sensors at a Motor Module depend on their design.

Table 10-7 Temperature sensor connection at the Motor Module

Device	Terminal	+Temp	-Temp
Single Motor Module chassis	X41	4	3
Single Motor Module Chassis-2	X41	3	4
Single Motor Module booksize	X21	1	2
Single Motor Module booksize compact	X21	1	2
Double Motor Module booksize	X21 / X22	1 / 1	2 / 2

Activation of the temperature sensing

With p0600[0...n] = 11, motor temperature sensing via a Motor Module is activated.

Setting the temperature sensor

The temperature sensor type is set using p0601[0...n]. When connecting a temperature sensor to terminal X41 of a chassis unit, you must specify to which power unit the temperature sensor is to be connected when power units are connected in parallel. The desired power unit is connected via p0602.

Note

Bimetallic NC contact is only possible for booksize formats

Temperature sensing using a bimetallic NC contact is only possible with Motor Modules in the booksize format.

Note

PT100 is only possible for the chassis format

Temperature sensing using a PT100 is only possible with Motor Modules in the chassis format.

If r0192.15 = 1 is displayed, then the PT 100 temperature sensor type can be selected with p0601[0...n] = 5.

A motor temperature offset can be set using p0624 [0...n].

Power Module chassis

A Power Module in the chassis format has one temperature channel and can evaluate PTC, KTY84, PT1000 and PT100 temperature sensors (r0192.15 = 1).

Table 10-8 Temperature sensor connection at a Power Module

Device	Terminal	+Temp	-Temp
Power Module chassis	X41	4	3

10.2.9 Connection of the CU310-2 and the CUA31/CUA32 adapters

The Control Unit Adapter CUA31 and CUA32 have one temperature channel. The terminal strip in the CUA31 has an interface for a motor temperature sensor. The temperature sensor can be alternatively connected at the CUA32 via the encoder interface.

The Control Unit CU310-2 DP/PN has two independent temperature channels. The motor temperature sensors can be connected via two interfaces. One of the channels is in the encoder interface, the second channel is on the terminal strip. PTC or KTY84 temperature sensors can be connected and evaluated.

Table 10-9 Temperature sensor connection

Device		Interface	+Temp	-Temp	PTC	KTY	PT100
CU 310-2 DP/PN	Encoder interface	X120	1	2	x	x	-
	Terminal strip	X23	1	8	x	x	-
CUA31	Terminal strip	X210	1	2	x	x	-

Device		Interface	+Temp	-Temp	PTC	KTY	PT100
CUA32	Terminal strip	X210	1	2	x	x	-
	Encoder interface	X220	1	8	x	x	-

CUA31

Setting the temperature measurement and the temperature channels:

- p0600[0...n] = 11 sets the temperature channel via CU terminals.
- p0601[0...n] = 0/1/2/3/5 sets the temperature sensor type and the response.

CUA32

Setting the temperature measurement and the temperature channels:

- p0600[0...n] = 10 sets the temperature sensing via BICO interconnection.
- p4600[0...n] sets the sensor type for temperature channel 1 (encoder interface).
- p4601[0...n] sets the sensor type for temperature channel 2 (terminal strip).

CU310-2 DP/PN (AC Drive)

Setting the temperature sensing and the temperature channels:

- p0600[0...n] = 10 sets the temperature sensing via BICO interconnection.
- p4600[0...n] sets the sensor type for temperature channel 1 (encoder interface).
- p4601[0...n] sets the sensor type for temperature channel 2 (terminal strip).

10.2.10 Motor with DRIVE-CLiQ

The motor and encoder data are saved as an electronic type plate in a motor equipped with a DRIVE-CLiQ connection. This data is transferred to the Control Unit when commissioning. As a consequence, when commissioning this motor type, all of the necessary parameters are pre-assigned and set automatically. The same is true for the parameters required to monitor the motor temperature. Other changes are not required.

The default settings for monitoring the motor temperature are:

- p0600 = 1, motor temperature sensor for monitoring via encoder 1
- p0601 = 2, the motor temperature sensor type is a KTY84.
- p0604[0...n] motor temperature alarm threshold
- p0605[0...n] motor temperature fault threshold
- p0606[0...n] motor temperature timer (timer to changeover from an alarm to a fault value).

10.2.11 Temperature sensor evaluation

Temperature sensing using PT1000 or KTY84

- When the alarm threshold p0604 is exceeded, alarm A07910 is output.
  For vector control, using parameter p0610, you can set the drive response when the alarm is initiated:
  - 0: No response, alarm only A07910, no reduction of I_max
  - 1: Alarm A07910 and fault F07011, reduction of I_max
  - 2: Alarm A07910 and fault F07011, no reduction of I_max
  - 12: Alarm (A07910) and fault (F07011), no reduction of I_max, temperature saved
- When the fault threshold is reached (set via p0605, factory setting = 145 °C), fault F07011 is triggered in conjunction with the setting in p0610.

Temperature measurement via PTC

- Alarm A07910 is triggered once the PTC responds
- Fault F07011 is triggered once the waiting time defined in p0606 has elapsed

Sensor monitoring for wire breakage/short-circuit

- A sensor monitoring function for a short-circuit in the sensor cable is possible for a PTC and a PT1000 or KTY84 sensor. Wire breakage monitoring is possible for a PT1000 or KTY84 sensor:
  If the temperature value lies outside the specified range of -140 °C ... +250 °C, then it is probable that the sensor cable either has a broken wire or short-circuit. The alarm A07015 "Drive: Motor temperature sensor alarm" is initiated. After the wait time in p0607 has expired, fault F07016 "Drive: Motor temperature sensor fault" is output.
- If an induction motor is connected, you can suppress fault F07016 by setting p0607 = 0. The drive then continues to operate with the data calculated in the thermal 3-mass model.
- If the motor temperature sensor set in p0600 is not connected, alarm A07820 "Temperature sensor not connected" is triggered.

10.2.12 Function diagrams and parameters

Function diagrams (see SINAMICS S120/S150 List Manual)

- 8016 Signals and monitoring functions - thermal monitoring motor, Mot_temp ZSW F/A
- 8017 Signals and monitoring functions - motor temperature model - 1 (I2t)
- 8018 Signals and monitoring functions - motor temperature model 2 (thermal 3-mass model)

- 8019 Signals and monitoring functions - motor temperature model 3
- 9576 Terminal Module 31 (TM31) - Temperature evaluation
- 9605 Terminal Module 120 (TM120) - Temperature evaluation, channels 0 and 1
- 9606 Terminal Module 120 (TM120) - Temperature evaluation, channels 2 and 3
- 9625 Terminal Module 150 (TM150) - Temperature evaluation structure (channel 0 ... 11)
- 9626 Terminal Module 150 (TM150) - Temperature evaluation 1x2-, 3-, 4-wire (channel 0 ... 5)
- 9627 Terminal Module 150 (TM150) - Temperature evaluation 2x2-wire (channel 0 ... 11)

Overview of important parameters (see SINAMICS S120/S150 List Manual)

- r0034 CO: Thermal motor load
- r0035 CO: Motor temperature
- r0068 CO: Absolute actual current value
- p0318[0...n] Motor stall current
- p0600[0...n] Motor temperature sensor for monitoring
- p0601[0...n] Motor temperature sensor type
- p0602 Parallel connection power unit number temperature sensor
- p0603 CI: Motor temperature signal source
- p0604[0...n] Mot_temp_mod 2:sensor warning threshold
- p0605[0...n] Mot_temp_mod 1/2 threshold and temperature value
- p0606[0...n] Mot_temp_mod 2/sensor timer
- p0607[0...n] Temperature sensor fault timer
- p0608[0...3] CI: Motor temperature, signal source 2
- p0609[0...3] CI: Motor temperature, signal source 3
- p0610[0...n] Motor overtemperature response
- p0624[0...n] Motor temperature offset PT100
- p0625[0...n] Motor ambient temperature during commissioning
- p4600[0...n] Motor temperature sensor 1 sensor type
- p4601[0...n] Motor temperature sensor 2 sensor type
- p4602[0...n] Motor temperature sensor 3 sensor type
- p4603[0...n] Motor temperature sensor 4 sensor type
- r4620[0...3] Motor temperature measured

Additional parameters for TM31

- p4100 TM31 sensor type
- p4102[0...1] TM31 fault threshold / alarm threshold
- p4103 TM31 temperature evaluation delay time
- r4104.0...1 BO: TM31 temperature evaluation status
- r4105 CO: TM31 actual temperature value

Additional parameters for TM120

- p4100[0...3] TM120 temperature evaluation sensor type

- r4101[0...3] TM120 sensor resistance
- p4102[0...7] TM120 fault threshold / alarm threshold
- p4103[0...3] TM120 temperature evaluation delay time
- r4104.0...7 BO: TM120 temperature evaluation status
- r4105 [0...3] CO: TM120 actual temperature value

Additional parameters for TM150

- p4100[0...11] TM150 sensor type
- r4101[0...11] TM150 sensor resistance
- p4102[0...23] TM150 fault threshold / alarm threshold
- p4103[0...11] TM150 delay time
- r4104.0...23 BO: TM150 temperature evaluation status
- r4105[0...11] CO: TM150 actual temperature value
- p4108[0...5] TM150 terminal block measurement method
- p4109[0...11] TM150 cable resistance measurement
- p4110[0...11] TM150 cable resistance value
- p4111[0...2] TM150 group channel assignment
- r4112[0...2] CO: TM150 group, temperature actual value maximum value
- r4113[0...2] CO: TM150 group, temperature actual value minimum value
- r4114[0...2] CO: TM150 group actual temperature value, average
- p4117[0...2] TM150 group, sensor fault effect
- p4118[0...11] TM150 fault threshold / alarm threshold hysteresis
- p4119[0...11] TM150 activate/deactivate smoothing
- r4120[0...11] TM150 actual value smoothing time in ms
- p4121 TM150 filter, rated line frequency
- p4122[0...11] TM150 smoothing time constant

Thermal motor models

- p0318[0...n] Motor stall current
- p0335[0...n] Type of motor cooling
- p0344[0...n] Motor weight (for thermal motor type)
- p0611[0...n] I2t motor model thermal time constant
- p0612[0...n] Mot_temp_mod activation
- p0615[0...n] Mot_temp_mod 1 (I2t) fault threshold
- p0617[0...n] Stator thermally relevant iron component
- p0618[0...n] Stator thermally relevant copper component
- p0619[0...n] Rotor thermally relevant mass
- p0620[0...n] Thermal adaptation, stator and rotor resistance
- p0625[0...n] Motor ambient temperature during commissioning

10.3 Blocking protection

The "Motor blocked" fault is only output if the speed of the drive is below the adjustable speed threshold (p2175). With vector control, it must also be ensured that the speed controller is at the limit. With V/f control, the current limit must already have been reached.

Once the on delay (p2177) has elapsed, the message "Motor blocked" and fault F07900 are generated.

The enable for blocked motor monitoring can be deactivated using p2144.

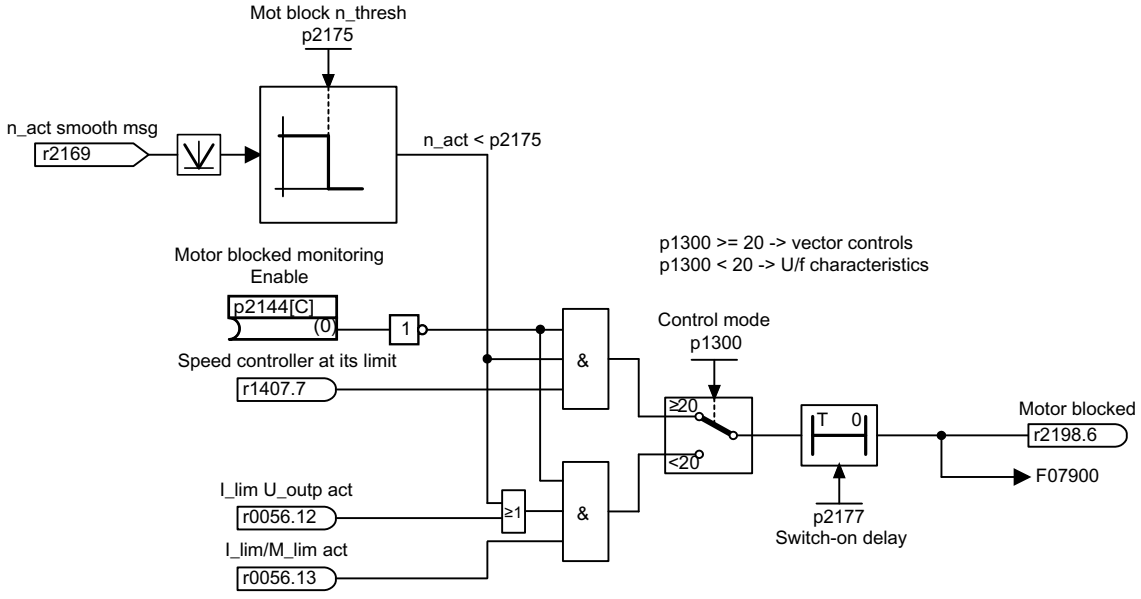

Figure 10-2 Blocking protection

Function diagrams (see SINAMICS S120/S150 List Manual)

- 8012 Signals and monitoring functions - Torque messages, motor locked/stalled

Overview of important parameters (see SINAMICS S120/S150 List Manual)

- p2144[0...n] BI: Blocked motor monitoring enable (negated)
- p2175[0...n] Motor locked speed threshold
- p2177[0...n] Motor locked delay time

10.4 Stall protection (vector control only)

If the adaptation controller output exceeds the speed threshold set in p1744 for stall detection, then r1408.11 (speed adaptation, speed deviation) is set.

If the error threshold value set in p1745 is exceeded when in the low speed range (less than p1755 · (100% - p1756)), then r1408.12 (motor stalled) is set.

If one of the two signals is set, then after the delay time in p2178, fault F7902 (motor stalled) is output.

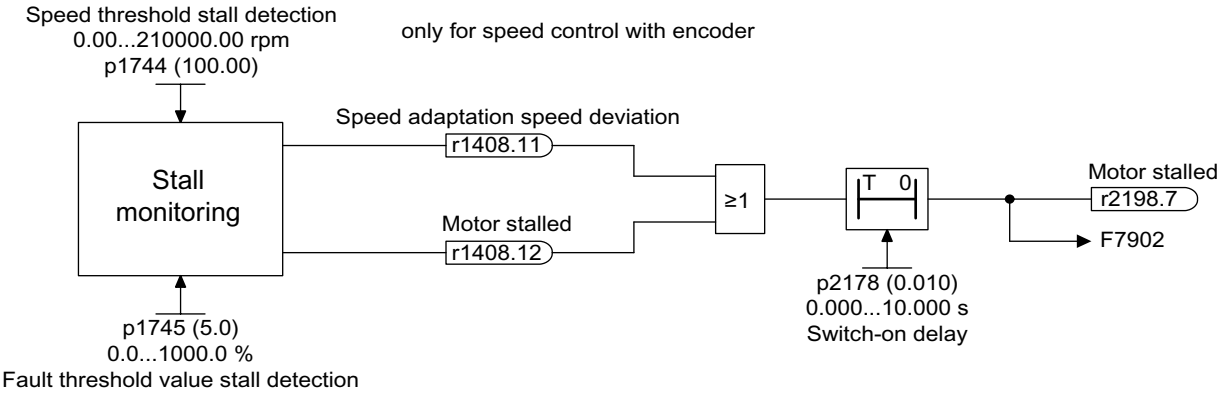

Figure 10-3 Stall protection

Function diagrams (see SINAMICS S120/S150 List Manual)

- 6730 Vector control - Interface to Motor Module (ASM, p0300 = 1)
- 8012 Signals and monitoring functions - Torque messages, motor locked/stalled

Overview of important parameters (see SINAMICS S120/S150 List Manual)

- r1408.0...15 CO/BO: Status word, current controller
- p1744[0...n] Motor model speed threshold stall detection
- p1745[0...n] Motor model error threshold stall detection
- p1755[0...n] Motor model changeover speed encoderless operation
- p1756 Motor model changeover speed encoderless operation
- p2178[0...n] Motor stalled delay time

Safety Integrated Basic Functions 11

11.1 Latest information

Important note for maintaining the operational safety of your system:

NOTICE
Danger to operational safety due to unwanted motion Systems with safety-related characteristics are subject to special operational safety requirements on the part of the operating company. If information on a lack of product safety becomes known in the course of observing a product, this information is declared in various ways. For this reason, we publish a special newsletter containing information on product developments and features that are (or could be) relevant when operating safety-related systems. • You should subscribe to and carefully read the corresponding newsletter in order to obtain the latest information and to allow you to modify your equipment accordingly.

To subscribe to the newsletter, please proceed as follows:

1. Go to the following Siemens internet site in your browser:
   Siemens Drives (http://www.industry.siemens.com/drives/global/en/pages/drive-technology.aspx)
2. Select the desired language for the Web page.

   Note

   Newsletter

   You have to register and log in if you want to subscribe to any newsletters. You will be led automatically through the registration process.

3. Click on "Login / registration".
4. Login with your access data. If you do not yet have a login and password, select "Yes, I would like to register now".
   You can subscribe to the individual newsletters in the following window.
5. Under the "All newsletters" heading on this page, you can see which newsletter is currently available.

6. Open the topic "Products and solutions".
   You will now be shown which newsletter is available for this particular subject area or topic. You can subscribe to the appropriate newsletter by clicking on the "Subscribe" entry. If you require more detailed information on the newsletters, then please use the supplementary function on the website.

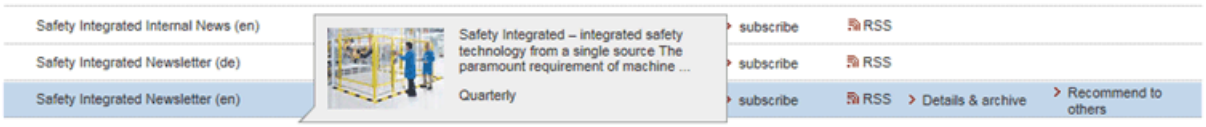

7. At the very least, register for the newsletters for the following product areas:
   – Safety Integrated Newsletter

11.2 General information

Note

Further references

This manual exclusively contains information about the Safety Integrated Basic Functions.

More information about the Safety Integrated Extended Functions and Safety Integrated Advanced Functions can be found in the SINAMICS S120 Safety Integrated function manual.

Note

Handling the safety password

- The safety password protects safety parameters against maloperation. Always assign a strong password, to activate efficient protection.
- To reset the password to the factory setting, you require the valid password.
- The probability of failure (PFH) and certification of the safety functions apply even if no password has been set.
- More information can be found in the SINAMICS S120 Safety Integrated Function Manual.

11.2.1 Explanations, standards and terminology

Safety Integrated

The "Safety Integrated" functions enable the implementation of highly effective application-oriented functions for man and machine protection. This innovate safety technology offers the following benefits:

- Increased safety
- More economic operation
- Greater flexibility
- Higher level of plant availability

Standards and Directives

Various standards and guidelines for safety technology must be observed. Guidelines are binding for both the manufacturer and operator of machines.

Standards generally reflect the state of the art and act as a basis for implementing safety concepts. However, in contrast to directives, standards are not binding.

Below is a list of standards and guidelines for safety technology.

- EU Machinery Directive
  This guideline defines basic protection measures for safety technology.
- EN ISO 12100
  Safety of machinery, basic terminology, general principles for design

- EN 60204-1
  Safety of machinery - Electrical equipment of machines - Part 1: Electrical equipment of machinery - General requirements
- IEC 61508
  Functional safety of electrical and electronic systems
  This standard defines "safety integrity levels" (SIL), which not only describe a certain degree of integrity with regard to safety-oriented software but also defined, quantitative error probability ranges with regard to the hardware.
- IEC 61800-5-2
  Adjustable-speed electrical power drive systems
  Part 5-2: Safety requirements - Functional

Note

Certifications

In conjunction with certified components, the safety functions of the SINAMICS S120 drive system fulfill the following requirements:

- Safety integrity level 2 (SIL 2) to IEC 61508
- Category 3 according to DIN EN ISO 13849-1
- Performance level (PL) d according to DIN EN ISO 13849-1

In addition, the SINAMICS S120 safety functions are normally certified by independent institutions. A list of currently certified components is available on request from your local Siemens office.

Two-channel monitoring structure

All the main hardware and software functions for Safety Integrated are implemented in two independent monitoring channels (e.g. switch-off signal paths, data management, data comparison).

The two drive monitoring channels are implemented using the following components:

- Control Unit
- Motor Module/Power Module belonging to a drive

The monitoring functions in each monitoring channel work on the principle that a defined status must prevail before each action is carried out and a specific acknowledgment must be made after each action.

If these expectations of a monitoring channel are not fulfilled, the drive coasts to a standstill (two-channel) and an appropriate message is output.

Two-channel parameterization

Parameterization of the Safety Integrated functions must be performed in two channels; i.e. there is one parameter each for the 1st and 2nd channel. These two parameters must be identically parameterized.

For safety reasons, you can only configure the Safety-relevant parameters of the first channel with the Startdrive commissioning tool while offline. Startdrive copies the parameters of the second channel automatically.

Since Startdrive generates the safety-relevant parameters of the second channel by copying, this manual contains only the parameters of the first channel. You will find the relevant parameters of the 2nd channel in the parameter description, e.g. in SINAMICS S120/S150 List Manual.

On faults and alarms, only the error number of the 1st channel is stated.

Switch-off signal paths

Two independent switch-off signal paths are available. All switch-off signal paths are low-active, thereby ensuring that the system is always switched to a safe state if a component fails or in the event of an open circuit.

If a fault is discovered in the switch-off signal paths, the "Safe Torque Off" function is activated and a system restart inhibited.

Monitoring cycle

The safety-relevant drive functions are executed cyclically in the monitoring cycle.

The safety monitoring cycle lasts a minimum of 4 ms. Increasing the current controller cycle (p0115) also increases the safety monitoring cycle.

Data cross-check

A cyclic cross-check of the safety-related data in the two monitoring channels is carried out. If any data is inconsistent, a stop response is triggered with any Safety function.

Overview of important parameters (see SINAMICS S120/S150 List Manual)

- r9780 SI monitoring cycle (Control Unit)

11.2.2 Supported functions

The Safety Integrated Functions comprise the following components:

- Safety Integrated Basic Functions
- Safety Integrated Extended Functions
- Safety Integrated Advanced Functions

Safety Integrated Basic Functions

The following functions are part of the standard scope of the drive and can be used without any additional license:

- Safe Torque Off (STO)
  STO is a safety function that prevents the drive from restarting unexpectedly, in accordance with EN 60204-1:2006 Section 5.4.
- Safe Stop 1 (SS1, time controlled)
  Safe Stop 1 is based on the "Safe Torque Off" function. This means that a Category 1 stop in accordance with EN 60204-1:2006 can be implemented.
- Safe Brake Control (SBC)[1) 2)]
  The SBC function permits the safe control of a holding brake. Special requirements:
  [1)] Note regarding Power/Motor Modules in the Chassis format: For the Chassis format, SBC is only supported by Power/Motor Modules with article number ...3 (final digit) or higher. A Safe Brake Adapter is also needed for this format.
  [2)] Note regarding Power/Motor Modules in the Blocksize format: Blocksize Power Modules also require a Safe Brake Relay for this function.

Function	Description
Safe Torque Off (STO)	STO is a safety function that prevents the drive from restarting unexpectedly, in accordance with EN 60204-1:2006 Section 5.4.
Safe Stop 1 (SS1, time controlled)	Safe Stop 1 is based on the "Safe Torque Off" function. This means that a Category 1 stop in accordance with EN 60204-1:2006 can be implemented.
Safe Brake Control (SBC)	The SBC function permits the safe control of a holding brake. Special requirements exist for Power/Motor Modules of the Chassis format[1)] as well as Power Modules of the Blocksize format[2)].

1) SBC is only supported by Power/Motor Modules of the Chassis format that have article number ...3 (final digit) or higher. A Safe Brake Adapter is also needed for this format.

2) Power Modules of the Blocksize format also require a Safe Brake Relay for this function.

Safety Integrated Extended Functions

Note

Scope of functions

The Safety Integrated Extended Functions include the Basic Functions.

An additional license that will be charged is required to use the following Safety Integrated Extended Functions. Extended Functions with encoder require an encoder with safety capability.

- Safe Torque Off (STO)
- Safe Stop 1 (SS1, time and acceleration controlled)
- Safe Brake Control (SBC)
- Safe Stop 2 (SS2)
- Safe Operating Stop (SOS)
- Safely Limited Speed (SLS)

- Safe Speed Monitor (SSM)
- Safe Acceleration Monitor (SAM)
- Safe Brake Ramp (SBR)
- Safe Direction (SDI)
- Safe gearbox stage switchover
- Safety Info Channel (SIC)
- Safe homing
- Safe Brake Test (SBT)[1)]
- Safely Limited Acceleration (SLA)

[1] The Safe Brake Test (SBT) is a **diagnostic function** that is included in the list of Safety Integrated Extended Functions for organizational reasons only.

Safety Integrated Advanced Functions

Note
Scope of functions

The Safety Integrated Advanced Functions include the Basic and Extended Functions

These functions require an additional Safety Advanced license. Advanced functions with encoder require an encoder with safety capability.

- Safely Limited Position (SLP)
- Transferring safe position values (SP)
- Safe Cam (SCA)

11.2.3 Control possibilities

The following options for controlling Safety Integrated Functions are available:

Control via:	Basic	Extended	Advanced
Terminals (on the Control Unit and Motor/Power Module)	x	-	-
PROFIsafe based on PROFIBUS or PROFINET	x	x	x
TM54F	x	x	x
Control without selection	-	SLS, SDI	-
Onboard F-DI/F-DO (CU310-2)	x[1)]	x	x

[1)] Only the F-DI 0 can be used for the control. The F-DO is not available.

Note

PROFIsafe or TM54F

Using a Control Unit, control is possible either via PROFIsafe or TM54F. Mixed operation is not permissible.

11.2.4 Parameters, checksum, version

Properties of Safety Integrated parameters

The following applies to Safety Integrated parameters:

- They are kept separate for each monitoring channel.
- During startup, checksum calculations (Cyclic Redundancy Check, CRC) are performed on the safety parameter data and checked. The display parameters are not contained in the CRC.
- Data storage: The parameters are stored on the non-volatile memory card.
- Resetting safety parameters to the factory setting:
  - A reset of the safety parameters to the factory setting on a drive-specific basis using p3900 and p0010 = 30 is only possible when the safety functions are not enabled (p9301 = p9601 = p10010 = 0).
  - Safety parameters can be reset to the factory setting with p0970 = 5. To do so, the Safety Integrated password must be set. When Safety Integrated is enabled, this can result in faults, which in turn require an acceptance test to be performed. Then save the parameters and carry out a POWER ON.
  - A complete reset of all parameters to the factory settings (p0976 = 1 and p0009 = 30 on the Control Unit) is possible even when the safety functions are enabled (p9301 = p9601 = p10010 ≠ 0).
- The safety parameterization is password-protected against accidental or unauthorized changes.

  Note

  The password protection is only available online.

Checking the checksum

For each monitoring channel, the Safety parameters include one parameter for the actual checksum for the Safety parameters that have undergone a checksum check.

During commissioning, the actual checksum must be transferred to the corresponding parameter for the reference checksum. This can be done for all checksums of a drive object at the same time with parameter p9701.

Basic Functions

- r9798 SI actual checksum SI parameters (Control Unit)
- p9799 SI reference checksum SI parameters (Control Unit)
- r9898 SI actual checksum SI parameters (Motor Module)
- p9899 SI reference checksum SI parameters (Motor Module)

During each ramp-up procedure, the actual checksum is calculated via the Safety parameters and then compared with the reference checksum.

If the actual and reference checksums differ, fault F01650 or F01680 is output and an acceptance test requested.

Safety Integrated versions

The Safety firmware has a separate version ID for the Control Unit and Motor Module.

For the Basic Functions:

- r9770 SI version, drive-autonomous safety functions (Control Unit)
- r9870 SI version (Motor Module)

11.2.5 Handling the Safety password

The safety password protects safety parameters against maloperation. Always assign a strong password, to enable protection.

Note

The safety password does not have the equivalent quality of a password (protection against unauthorized access, e.g. by an attacker), but rather that of write protection (e.g. protection against maloperation).

Note

The password protection is only available online.

Password reset

- You require a valid password to reset the password to the factory setting by resetting the safety parameters.
- Please note that when the factory setting is reset throughout the complete device, then the safety password is also deleted.

Details on handling the safety password

If a password is set, in commissioning mode for Safety Integrated (p0010 = 95), you cannot change safety parameters until you have entered the valid safety password in p9761 for the drives or p10061 for the TM54F. In addition to the specified parameters, a corresponding functionality is available in Startdrive!

- When Safety Integrated is commissioned for the first time, the following applies:
  - Default of p10061 = 0 (SI password entry TM54F)
  - Default of p9761 = 0 (SI password entry drive)

  This means:
  You do not need to enter a safety password during the first commissioning.
- In the case of a series commissioning of Safety or in the case of spare part installation, the following applies:
  - The Safety password is retained on the memory card and in the Startdrive project.
  - No safety password is required in the case of spare part installation.
- Change password for the drives
  - p0010 = 95 Commissioning mode.
  - p9761 = Enter "old safety password".
  - p9762 = Enter "new password".
  - p9763 = Confirm "new password".
  - p0977 = 1; "Copy from RAM to ROM"
  - The new and confirmed safety password is valid immediately.
- Change password for the TM54F
  - p0010 = 95 Commissioning mode.
  - p10061 = Enter "Old TM54F Safety Password" (factory setting "0")
  - p10062 = Enter "new password"
  - p10063 = Acknowledge "new password"
  - p0977 = 1; "Copy from RAM to ROM"
  - The new and acknowledged safety password is valid immediately.
- Change password with Startdrive
  - Click "Enter password" in the Startdrive secondary navigation.
  - Enter the current password.
  - Enter the new password.
  - Enter the new password again.
  - Click "Change password" to accept the new password.

- Reset password with Startdrive
  - Click "Enter password" in the Startdrive secondary navigation.
  - In the subsequent dialog, first enter the old password.
  - Set the new password = 0.
  - Click "Change password" to accept the new password.
  - SINAMICS S120 responds with the message "Please change the password!"
  - Close the message.
  - In the "Change password" dialog box, then click the "Cancel" button.
  - The password has now been reset to the default "0."
- If the safety password is no longer available, you can no longer change the safety configuration. You then have the following options:
  - To commission the SINAMICS S120 completely as new:
    - Restore the factory settings of the entire drive (Control Unit with all connected drives/ components).
    - Commission the drive unit and the drives afresh.
    - Commission Safety Integrated as new.
  - To load another project into the drive (without a Safety password or with a known Safety password). This is possible without a password because this operation is the same as complete new commissioning.
  - If neither option is acceptable to you, please contact "Technical Support" (see "Training and support (Page 22)").

Function diagrams (see SINAMICS S120/S150 List Manual)

- 2818 SI Extended/Advanced Functions - parameter manager

Overview of important parameters (see SINAMICS S120/S150 List Manual)

- p9761 SI password input
- p9762 SI password new
- p9763 SI password acknowledgment
- p10061 SI TM54F password entry
- p10062 SI TM54F password new
- p10063 SI TM54F password confirmation

11.2.6 Forced checking procedure (test stop)

11.2.6.1 Forced checking procedure or test of the switch-off signal paths (test stop) for Safety Integrated Basic

The forced checking procedure (test stop) at the switch-off signal paths is used to detect software/hardware faults at both monitoring channels in time and is automated by means of activation/deactivation of the "Safe Torque Off" (STO) or "Safe Stop 1" (SS1) function.

To fulfill the requirements of ISO 13849-1 regarding timely error detection, the two switch-off signal paths must be tested at least once within a defined time to ensure that they are functioning properly. This functionality must be implemented using the forced checking procedure (test stop), triggered either in the manual mode or by the automated process.

A timer ensures that forced checking procedure (test stop) is carried out in a timely fashion.

- p9659 SI forced checking procedure, timer.

A forced checking procedure (test stop) must be performed on the switch-off signal paths at least once during the time set in this parameter.

Once this time has elapsed, an alarm is output and remains active until forced checking procedure (test stop) is carried out.

The timer returns to the set value each time the STO/SS1 function is deactivated.

Note

Resetting the timer of the Basic Functions

When simultaneously using the Extended Functions, if the forced checking procedure (test stop) is performed, then the timer of the Basic Functions is also reset.

While STO is selected by the Extended Functions, the terminals for the selection of the Basic Functions are not checked for discrepancy. This means that the forced checking procedure (test stop) of the Basic Functions must always be performed without the selection of STO or SS1 by the Extended Functions. It is otherwise not possible to verify the correct control by the terminals.

When the appropriate safety devices are implemented (e.g. protective doors), it can be assumed that running machinery will not pose any risk to personnel. The user is therefore only informed that the forced checking procedure (test stop) is due in the form of an alarm, which requests the user to perform forced checking procedure (test stop) at the next possible opportunity. This alarm does not affect machine operation.

The user must set the time interval for carrying out forced checking procedure (test stop) to between 0.00 and 9000.00 hours depending on the application (factory setting: 8.00 hours).

Examples of when the forced checking procedure (test stop) must be performed:

- When the drives are at a standstill after the system has been switched on (POWER ON).
- When the protective door is opened.
- At defined intervals (e.g. every 8 hours).
- In automatic mode (time and event dependent).
- The maximum time interval is one year (8760 hours).

11.2.6.2 Forced checking procedure (test stop) with POWER ON

Forced checking procedure (test stop) can be automatically executed at POWER ON.

- If the forced checking procedure (test stop) as well as the test of the F-DO for the CU310-2 are to be executed automatically, then set p9507.6 = 1. When testing the F-DO of the CU310-2, you must parameterize p10042 and activate the test in p10046.
- If the forced checking procedure (test stop) of the F-DI and F-DO of the TM54F is to be executed automatically, then set p10048 = 1.
- If you have parameterized the forced checking procedure (test stop) for POWER ON, you can still initiate a forced checking procedure (test stop) at any time as part of the engineered application.
- If the automatically initiated function cannot be correctly completed as a result of a problem (e.g. communication failure), then after the problem has been resolved, the function is automatically restarted.
- After the forced checking procedure (test stop) has been performed successfully, the converter goes into the "Ready" state.
- Timer p9659 is automatically reset as a result of the forced checking procedure (test stop).
- The automatic forced checking procedure (test stop) for POWER ON does not influence the Safety Integrated Functions.

11.3 Safety instructions

Additional safety information and residual risks not specified in this chapter are included in the relevant sections of this Function Manual.

⚠ DANGER

Risk minimization through Safety Integrated

Safety Integrated can be used to minimize the level of risk associated with machines and plants.
Machines and plants can only be operated safely in conjunction with Safety Integrated, however, when the machine manufacturer:

- Precisely knows and observes this technical user documentation - including the documented limitations, safety information and residual risks.
- Carefully constructs and configures the machine/plant. A careful and thorough acceptance test must then be performed by qualified personnel and the results documented.
- Implements and validates all the measures required in accordance with the machine/plant risk analysis by means of the programmed and configured Safety Integrated Functions or by other means.

The use of Safety Integrated does not replace the machine/plant risk assessment carried out by the machine manufacturer as required by the EC machinery directive.
In addition to using Safety Integrated Functions, further risk reduction measures must be implemented.

NOTICE

Danger to life as a result of inactive Safety Integrated Functions after powering up

The Safety Integrated Functions are only activated after the system has completely powered up. System startup is a critical operating state with increased risk. When accidents occur, this can result in death or severe injury.

- Make sure that the machine is safe during the system start-up.

⚠ WARNING

Danger to life as a result of undesirable motor movement when automatically restarting

The Emergency Stop function must bring the machine to a standstill according to Stop Category 0 or 1 (STO or SS1) (EN 60204-1).
It is not permissible that the motor automatically restarts after an Emergency Stop, as this represents danger to life as a result of the associated undesirable motor motion.
When individual safety functions (Safety Integrated Extended Functions or Safety Integrated Advanced Functions) are deactivated, an automatic restart is permitted under certain circumstances depending on the risk analysis (except when Emergency Stop is reset). An automatic start is permitted when a protective door is closed, for example.

- For the cases listed above, ensure that an automatic restart is absolutely not possible.

⚠ WARNING

Danger to life as a result of undesirable motor motion when the system powers up and the drives are activated after changing or replacing hardware and/or software

After hardware and/or software components have been modified or replaced, it is only permissible for the system to run up and the drives to be activated with the protective devices closed. Personnel shall not be present within the danger zone.

- It may be necessary to carry out a partial or complete acceptance test or a simplified functional test after having made certain changes or replacements.
- Before personnel may re-enter the hazardous area, all of the drives should be tested to ensure that they exhibit stable control behavior by briefly moving them in both the plus and minus directions (+/-).
- **When switching on carefully observed the following:**
  The Safety Integrated Functions are only available and can only be selected after the system has completely powered up.

11.4 Safe Torque Off (STO)

In conjunction with a machine function or in the event of a fault, the "Safe Torque Off" (STO) function is used to safely disconnect the torque-generating energy supply to the motor.

A restart is prevented by the two-channel pulse suppression. The switching on inhibited prevents an automatic restart after deselection of STO.

The two-channel pulse suppression function integrated in the Motor Modules / Power Modules is the basis for this function.

Functional features of "Safe Torque Off"

- The function is completely integrated in the drive. It can be selected via terminals, TM54F or PROFIsafe from an external source.
- The function is drive-specific, i.e. it is available for each drive and must be individually commissioned.
- The function must be enabled via parameter.
- When the "Safe Torque Off" function is selected, the following applies:
  - The motor cannot be started accidentally.
  - The pulse suppression safely disconnects the torque-generating energy supply to the motor.
  - The power unit and motor are not electrically isolated.
- The selection/deselection of the STO function also acknowledges the safety faults when the Basic Functions are used. The standard acknowledgment mechanism must also be performed.
- Extended acknowledgement:
  The selection/deselection of STO can also acknowledge the safety messages of the extended safety functions. This requires that the extended message acknowledgement is configured (p9507.0 = 1).
  If in addition to the "Extended Functions", the "Basic Functions via terminals" are also enabled, in addition to selection/deselection of STO via PROFIsafe or TM54F, acknowledgement is also possible by selection/deselection of STO via terminals.
- The status of the "Safe Torque Off" function is displayed using parameters (r9772, r9872, r9773 and r9774).
- Effect on the "Setpoint speed limit effective" (r9733[0...2]):
  For STO (≙ STOP A), a setpoint of 0 is specified in r9733[0...2].

⚠ WARNING

Unplanned motor motion

After the energy feed has been disconnected (STO active) the motor can undesirably move (e.g. the motor can coast down), therefore presenting risk to persons.

- Take suitable measures to prevent undesirable movement, e.g. by using a brake with safety-relevant monitoring. For additional information, see Chapter "Safe Brake Control (SBC) (Page 651)".

⚠ WARNING

Danger due to short, limited movements

If two power transistors simultaneously fail in the power unit (one in the upper and one in the lower inverter bridge), then this can cause cause brief, limited movement.

The maximum movement can be:

- Synchronous rotary motors: Max. movement = 180° / no. of pole pairs
- Synchronous linear motors: Max. movement = pole width

Enabling the "Safe Torque Off" function (Basic Functions)

The "Safe Torque Off" function is enabled via parameter p9601:

- STO for the Safety Integrated Basic Functions:
  - p9601 = 1 hex (Basic Functions via onboard terminals)
  - p9601 = 8 hex (Basic Functions via PROFIsafe)
  - p9601 = 9 hex (Basic Functions via PROFIsafe and onboard terminals)
  - p9601 = 40 hex (basic functions via TM54F)
  - p9601 = 41 hex (basic functions via TM54F and onboard terminals)
- STO via PROFIsafe:
  - p9601.0 = 0
  - p9601.2 = 0
  - p9601.3 = 1
- STO via PROFIsafe and onboard terminals:
  - p9601.0 = 1
  - p9601.2 = 0
  - p9601.3 = 1

- STO via TM54F:
  - p9601.0 = 0
  - p9601.2 = 0
  - p9601.3 = 0
  - p9601.6 = 1
- STO via TM54F and onboard terminals:
  - p9601.0 = 1
  - p9601.2 = 0
  - p9601.3 = 0
  - p9601.6 = 1
- STO via onboard terminals:
  - p9601.0 = 1

Selecting/deselecting "Safe Torque Off"

The following is executed when "Safe Torque Off" is selected:

- Each monitoring channel triggers safe pulse suppression via its switch-off signal path.
- A motor holding brake is closed (if connected and configured).

Deselecting "Safe Torque Off" represents an internal safety acknowledgment. The following is executed if the cause of the fault has been removed:

- Each monitoring channel cancels safe pulse suppression via its switch-off signal path.
- The Safety requirement "Close motor holding brake" is canceled. A motor holding brake is closed by the Safe Brake Control (SBC) function (if connected and configured)."
- Any pending STOP F or STOP A commands are canceled (see r9772 / r9872).
- The messages in the fault memory must also be reset using the general acknowledgment mechanism.

Note

No message during selection/deselection within p9650

If "Safe Torque Off" is selected and deselected through one channel within the time in p9650, the pulses are suppressed without a message being output.

However, if you want a message to be displayed, then you must reconfigure N01620 as an alarm or fault using p2118 and p2119.

Restart after the "Safe Torque Off" function has been selected

1. Deselect the function.
2. Set drive enables.
3. Cancel the "switching on inhibited" and switch the drive back on.
   - 1/0 edge at input signal "ON/OFF1" (cancel "switching on inhibited")
   - 0/1 edge at input signal "ON/OFF1" (switch on drive)

Status for "Safe Torque Off"

The status of the "Safe Torque Off" (STO) function is displayed using the parameters r9772, r9872, r9773 and r9774.

As an alternative, the status of the functions can be displayed using the configurable messages N01620 and N30620 (configured using p2118 and p2119).

Response time for the "Safe Torque Off" function

For the response times when the function is selected/deselected via input terminals, see the table in Section "Response times (Page 655)".

Internal armature short-circuit with the "Safe Torque Off" function

The function "internal armature short-circuit" can be configured together with the "STO" function.

The "STO" safety function has the higher priority when simultaneously selected. If the "STO" function is initiated, then an activated "internal armature short-circuit" is disabled.

Overview of important parameters (see SINAMICS S120/S150 List Manual)

- p0799[0...2] CU inputs/outputs, sampling time
- p9601 SI enable functions integrated in the drive (Control Unit)
- r9772.0...23 CO/BO: SI Status (Control Unit)
- r9773.0...31 CO/BO: SI status (Control Unit + Hydraulic Motor Module)
- r9774.0...31 CO/BO: SI Status (group STO)
- r9780 SI monitoring cycle (Control Unit)

11.5 Safe Stop 1 (SS1, time controlled)

11.5.1 SS1 with OFF3

The "Safe Stop 1" (SS1) function allows the drive to be stopped in accordance with EN 60204-1, Stop Category 1. The drive decelerates with the OFF3 ramp (p1135) once "Safe Stop 1" is selected and switches to "Safe Torque Off" (STO) once the delay time set in p9652 has elapsed.

Note

Selection via terminals

The selection of the "Safe Stop 1" (time-controlled) function via terminals is parameterized by setting a delay > 0 in p9652. In this case, the STO function can no longer be selected directly via terminals, i.e. either STO or SS1 can be selected via terminals.
If the "Safe Stop 1" (time-controlled) function has been selected by parameterizing a delay time in p9652, STO can no longer be selected directly via terminals.

Precondition

- The Basic Functions are enabled via terminals and/or PROFIsafe:
  - p9601 = 1, 8 or 9 (hex)
- Enabling Basic Functions via TM54F
  - p9601.6 = 1
- In order that the drive can brake down to a standstill even when selected through one channel, the time in p9652 must be shorter than the sum of the parameters for the data cross-check (p9650 and p9658). Otherwise the drive will coast down after the time p9650 + p9658 has elapsed.

Functional features of Safe Stop 1

SS1 is enabled by p9652 (delay time) ≠ 0.

- Setting parameter p9652 has the following effect:
  - p9652 = 0
    SS1 is not enabled. Only STO can be selected via TM54F, the onboard terminals and/or PROFIsafe.
  - p9652 > 0
    SS1 is enabled. Only SS1 can be selected via the onboard terminals; with PROFIsafe, a selection of SS1 and STO is possible.
- When SS1 is selected, the drive is braked along the OFF3 ramp (p1135) and STO/SBC is automatically initiated after the delay time has expired (p9652).
  After the function has been selected, the delay timer runs down - even if the function is deselected during this time. In this case, after the delay time has expired, the STO/SBC function is selected and then again deselected immediately.

  Note

  Setting the delay time

  So that the drive is able to travel down the OFF3 ramp completely and any motor holding brake present can be applied, before the pulses have been safely deleted, the delay time should be set as follows:
  - Motor holding brake parameterized: Delay time p9652 ≥ p1135 + p1228 + p1217
  - Motor holding brake not parameterized: Delay time p9652 ≥ p1135 + p1228
  - The setting of parameter p1135 must be oriented towards the actual braking capability of the drive.
- The timer (p9652) after whose expiration STO is activated, is implemented with two channels, although deceleration along the OFF3 ramp is only one channel.
- Effect on "Speed setpoint limit effective" (r9733[0...2]):
  If SS1 (≙ STOP B), setpoint 0 is specified in r9733[0...2].

Status of Safe Stop 1

The status of the "Safe Stop 1" (SS1) function is displayed using the parameters r9772, r9872, r9773 and r9774.

As an alternative, the status of the function can be displayed using the configurable message N01621 (configured using p2118 and p2119).

11.5.2 SS1 with external stop

In drive line-ups (e.g. drives that are mechanically connected via the material), the drive-independent braking on the respective OFF3 ramp can cause problems. If the SS1E function is used, the safe delay time (p9652) is started when the function is selected, but no OFF3 is triggered. The higher-level controller still enters the setpoint. The controller receives the information that SS1E has been selected via the Safety Info Channel.

⚠ WARNING

Any axis motion is possible

During the delay time (p9652), for "Safe Stop 1 (time-controlled) with external stop", any axis movements are possible.

Differences between "SS1 with OFF3" and "SS1 with external stop"

"SS1 with OFF3" and "SS1 with external stop" have the following differences:

- In order to activate "Safe Stop 1 with external stop", **additionally** set p9653 = 1.
- When SS1E is selected, the drive is **not** braked along the OFF3 ramp, but after the delay time has expired (p9652), only STO/SBC is automatically initiated.

11.5.3 Function diagrams and parameters

Function diagrams (see SINAMICS S120/S150 List Manual)

- 2810 SI Basic Functions - STO (Safe Torque Off), SS1 (Safe Stop 1)
- 2811 SI Basic Functions - STO (Safe Torque Off), safe pulse cancellation

Overview of important parameters (see SINAMICS S120/S150 List Manual)

- p1135[0...n] OFF3 ramp-down time
- p1217 Motor holding brake closing time
- p1228 Pulse suppression delay time
- p9601 SI enable functions integrated in the drive (Control Unit)
- p9652 SI Safe Stop 1 delay time (Control Unit)
- r9772.0...23 CO/BO: SI Status (Control Unit)
- r9773.0...31 CO/BO: SI Status (Control Unit + Motor Module)
- r9774.0...31 CO/BO: SI Status (group STO)

Only for "Safe Stop 1 (time-controlled) with external stop"

- p9653 SI Safe Stop 1 drive-based braking response

11.6 Safe Brake Control (SBC)

The "Safe Brake Control" function (SBC) is used to safely control holding brakes that function according to the closed-circuit principle (e.g. motor holding brake).

The opening and closing of the brake is controlled by the Motor Module / Power Module. Terminals are available for this on the device in booksize format. A Safe Brake Relay is also required for the "Safe Brake Control" in the blocksize format. A Safe Brake Adapter is required in the chassis format (starting with article numbers ending with ...3). When the Power Module is configured automatically, the Safe Brake Relay is detected and the motor holding brake type is defaulted (p1278 = 0).

Brake activation via the brake connection on the Motor Module / Safe Brake Relay (SBR) / Safe Brake Adapter (SBA) involves a safe, two-channel method.

Note

No SBC for SINAMICS HLA

SINAMICS HLA does not support Safe Brake Control.

Note

Controlling the brake via a relay for "Safe Brake Control":

If you use the "Safe Brake Control (SBC)" function, the use of relays/contactors can cause faults in the brake control when brakes are switched. For this reason, this type of control is not generally permissible.

⚠ WARNING

Undesirable motor motion due to defective brake

"Safe Brake Control" does not detect mechanical defects of the brake.

A cable break or a short-circuit in the brake winding is only detected when the state changes, i.e. when the brake either opens and/or closes. In SINAMICS S120M, a cable break is only identified when opening the brake.

For devices in Chassis format with connected Safe Brake Adapter, the connecting cable between the Safe Brake Adapter and the motor brake is not monitored for cable break or short-circuit.

The aforementioned defects may trigger unwanted motor motion, which may result in physical injury or death.

- In particular, ensure the brake is not powered from an external source. Information on this topic can be found in EN 61800-5-2, Appendix D.
- During commissioning, test the brake using the diagnostic function "Safe Brake Test (SBT)" (Safety Integrated Extended Function): Detailed information can be found in the "SINAMICS Safety Integrated Function Manual".

Functional features of "Safe Brake Control"

- SBC is executed when "Safe Torque Off" (STO) is selected.
- In contrast to conventional brake control, SBC is executed via two channels.
- SBC is executed regardless of the brake control or mode set in p1215. However, SBC does not make sense for p1215 = 0 or 3.
- The function must be enabled using parameters.
- When the state changes, electrical faults, such as a short-circuit in the brake winding or wire breakage can be detected.

Enabling the "Safe Brake Control" function

The "Safe Brake Control" function is enabled via parameter p9602.

The SBC function can be used only together with STO. The selection of SBC alone is not possible.

2-channel brake control

Note

Connecting the brake

The brake cannot be directly connected to the Motor Module in chassis format. A Safe Brake Adapter is also required.

The brake is controlled from the Control Unit. Two signal paths are available for applying the brake.

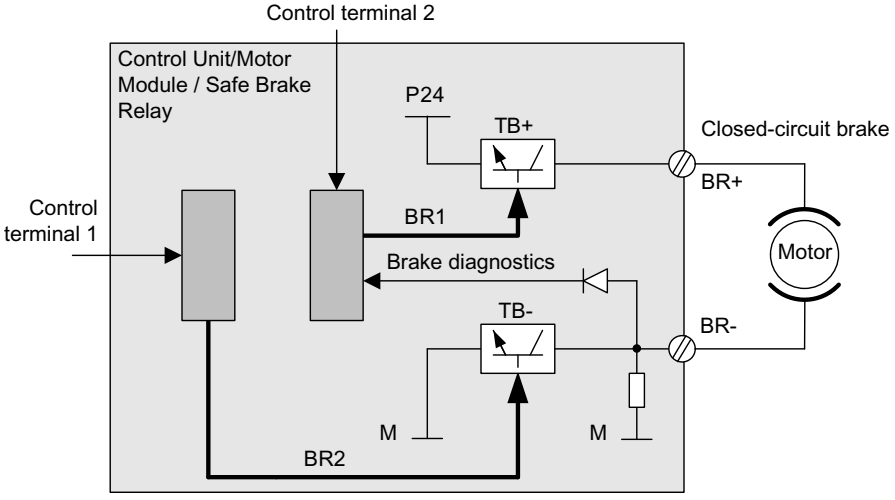

Figure 11-1 2-channel brake control, blocksize (example)

The Motor / Power Module carries out a check to ensure that the "Safe Brake Control" function is working properly and ensures that, if the Control Unit fails or is faulty, the brake current is interrupted and the brake applied.

The brake diagnosis can only reliably detect a malfunction in either of the switches (TB+, TB-) when the status changes, i.e. when the brake is released or applied.

If the Motor Module or Control Unit detects a fault, the brake current is switched off. The brake then closes and a safe state is reached.

11.6.1 SBC for Motor Modules in the chassis format

To be able to set higher power in the brakes of devices of this format, an additional Safe Brake Adapter (SBA) module is needed. For more information about connecting and wiring the Safe Brake Adapter, refer to the "SINAMICS G130/G150/S120 Chassis/S120 Cabinet Modules/ S150 Safety Integrated" Function Manual.

Using parameter p9621, you can define via which digital input the relay (NO contacts) feedback signal of the Safe Brake Adapter is routed to the Control Unit.

To evaluate the feedback signal contacts, you must maintain the wait times caused by the SBA. Parameter p9622 is pre-assigned with the SBA-relay wait times:

- p9622[0] ≙ wait time, switching on
- p9622[1] ≙ wait time, switching off

Further functionality and the activation of the brake, i.e. reaching the safe status, are in this case the same as the above described procedure for booksize devices.

Safe Brake Control with power units in a parallel connection

Note

SBC for parallel connection of power units

Safe Brake Control with power units in a parallel connection is available if r9771.14 = 1.

If you wish to use SBC with SBA for chassis format power units connected in parallel, then it is only permissible that you connect precisely one SBA to a power unit in the parallel connection. The Safe Brake Adapter and therefore the brake are controlled via this power unit.

There are two options for registering this power unit with the system:

- Automatic brake identification when commissioning the system for the first time
  - Requirements:
    - No Safety Integrated functions enabled
    - p1215 = 0 (no motor holding brake available)
  - During the first commissioning, SINAMICS checks at which power unit an SBA is connected. If precisely one SBA is found, the number of the power unit is entered into parameter p7015.
    If several SBAs are found at the parallel-connected power units, message "F07935 drive: Motor holding brake configuration error" is output.
  - For devices in the chassis format, if the SBA feedback signal (SBA_DIAG) is read in via an input of the power unit, then in addition, this digital input is automatically entered into parameter p9621.
- Manually defining the power unit
  - Enter the component number of the power unit, to which the SBA is connected, into parameter p7015. If no SBA is connected to the power unit, faults are detected when controlling the motor holding brake and fault F01630 is output.
  - In parameter p9621 (p9621 = BICO interconnection to r9872.3), enter the digital input of the power unit to which the SBA is connected and via which the SBA feedback signal (SBA_DIAG) is read in.

Note

Disconnecting the brake cable for service purposes

As long as the brake is permanently released and not actuated, it is possible to briefly disconnect the brake cable, e.g. for service purposes, and not receive fault messages. In the case of a fault, message F07935 is only output when the brake is controlled.

11.7 Response times

The Safety Integrated Basic Functions are executed in the monitoring cycle (p9780). PROFIsafe telegrams are evaluated in the PROFIsafe scan cycle, which corresponds to twice the monitoring clock cycle (PROFIsafe scan cycle = 2 · r9780).

Note

Actual value of the monitoring cycle (r9780)

You can only see the actual value of the monitoring cycle (r9780) if you are connected ONLINE with the drive. However, you can use the following values to roughly calculate the response times:

- If P0115[0] = 31.25 µs or 62.5 µs or 125 µs, then r9780 = 4 ms.
- If p0115[0] = 250 µs, then r9780 = 8 ms.
- If p0115[0] = 400 µs or 500 µs, then r9780 = 16 ms.

Note for understanding the tables

The drive system is the component that provides the safety functions. The designation "fault-free drive system" means that the component that provides the safety functions does not have a defect itself:

- Worst case for a fault-free drive system
  For faults outside the drive system (e.g. faulty setpoint input from a control system, limit value violations as a result of the behavior of the motor, closed-loop control, load, etc.), the "Worst case for a fault-free drive system" response time is guaranteed.
- Worst case when a fault exists
  For a single fault within the drive system (e.g. a defect in a switch-off signal path of the power unit, in an encoder actual value measurement, in a microprocessor (Control Unit or Motor Module) etc.), the "Worst case when a fault exists" response time is guaranteed.

11.7.1 Controlling via terminals on the Control Unit and Motor Module

The following table lists the response times from the control via terminals until the response actually occurs.

Table 11-1 Response times for control via terminals on the Control Unit and the Motor Module.

Function	Worst case for	
	Drive system has no fault	A fault is present
STO	2 · r9780 + t_E[1)]	3 · r9780 + t_E[1)]
SBC	4 · r9780 + t_E[1)]	8 · r9780 + t_E[1)]
SS1/SS1E (time-controlled) Selection until STO is initiated	2 · r9780 + p9652 + t_E[1)]	3 · r9780 + p9652 + t_E[1)]
SS1/SS1E (time-controlled) Selection until SBC is initiated	4 · r9780 + p9652 + t_E[1)]	8 · r9780 + p9652 + t_E[1)]
SS1 (time-controlled) Selection until braking is initiated	3 · r9780 + 2 ms + t_E[1)]	4 · r9780 + 2 ms + t_E[1)]

1) The following applies for t_E (debounce time of the digital input being used):

p9651 = 0	t_E[1)] = 2 · p0799 (default = 4 ms)
p9651 ≠ 0	t_E[1)] = p9651 + p0799 + 1 ms

1) The minimum time for t_E is t_E_min = 2 ms.

11.7.2 Control via PROFIsafe

The following table lists the response times from receiving the PROFIsafe telegram at the Control Unit up to initiating the particular response.

Note

Internal SINAMICS response times

The specified response times are internal SINAMICS response times. Program run times in the F-host and the transmission time via PROFIBUS or PROFINET are not taken into account. When calculating the response times between the F-CPU and the converter, you must take into account that faults in the communication can result in a safety function only being selected after the PROFIsafe monitoring time (F_WD_Time) has expired. The PROFIsafe monitoring time (F_WD_Time) must also be included in the calculation when an error occurs.

Table 11-2 Response times when controlling via PROFIsafe

Function	Worst case for	
	Drive system has no fault	A fault is present
STO	5 · r9780 + t_K[2)]	5 · r9780 + t_K[2)]
SBC	6 · r9780 + t_K[2)]	10 · r9780 + t_K[2)]
SS1/SS1E (time controlled) Selection until STO is initiated	5 · r9780 + p9652 + t_K[2)]	5 · r978 + p9652 + t_K[2)]
SS1/SS1E (time controlled) Selection until SBC is initiated	6 · r9780 + p9652 + t_K[2)]	10 · r9780 + p9652 + t_K[2)]
SS1 (time controlled) Selection until braking is initiated	5 · r9780 + 2 ms + t_K[2)]	5 · r9780 + 2 ms + t_K[2)]

[2)] t_K is the time for internal communication within the SINAMICS module. t_K can be determined as follows:

Isochronous communication	t_K = To (for To, see parameter r2064[4])
Non-isochronous communication	t_K = 4 ms Applies to modules on which p2048 (for communication via IF1) or p8848 (for communication via IF2) do not exist.
	t_K = value from p2048 or p8848 Applies to modules on which p2048 (for communication via IF1) or p8848 (for communication via IF2) exist.

11.7.3 Control via TM54F

The following table lists the response times from the control via TM54F until the response actually occurs.

Table 11-3 Response times for control via TM54F

Function	Worst case for	
	Drive system has no fault	A fault is present
STO	3 · r9780 + p10017 + 2 ms	3 · r9780 + p10017 + 2 ms
SBC	4 · r9780 + p10017 + 2 ms	8 · r9780 + p10017 + 2 ms
SS1/SS1E (time-controlled) Selection until STO is initiated	3 · r9780 + p9652 + p10017 + 2 ms	3 · r9780 + p9652 + p10017 + 2 ms
SS1/SS1E (time-controlled) Selection until SBC is initiated	4 · r9780 + p9652 + p10017 + 2 ms	8 · r9780 + p9652 + p10017 + 2 ms
SS1 (time-controlled) Selection until braking is initiated	3 · r9780 + p10017 + 4 ms	3 · r9780 + p10017 + 4 ms

11.8 Controlling via terminals on the Control Unit and Motor/Power Module

Features

- Only for the Basic Functions
- Two-channel structure via two digital inputs (e.g. Control Unit/power unit)
- A debounce function can be applied to the terminals of the Control Unit and the Motor Module to prevent incorrect trips due to signal disturbances or test signals. The filter times are set using parameter p9651.
- Different terminal blocks depending on the format
- Automatic ANDing of up to eight digital inputs (p9620[0...7]) on the Control Unit for Chassis format power units connected in parallel
- The F-DI 0 is available on the CU310-2

Overview of the safety function terminals for SINAMICS S120

The different power unit formats of SINAMICS S120 have different terminal designations for the inputs of the safety functions. These are shown in the following table.

Table 11-4 Inputs for safety functions

Module	1st switch-off signal path (p9620[0])	2nd switch-off signal path (EP terminals)
Control Unit CU320-2	X122.1....6/X132.1…6 DI 0...7/16/17/20/21	–
Booksize / Booksize Compact Single Motor Module	(see CU320-2)	X21.3 and X21.4 (on the Motor Module)
Chassis Single Motor Module / Power Module	(see CU320-2)	X41.1 and X41.2
Booksize / Booksize Compact Double Motor Module	(see CU320-2)	X21.3 and X21.4 (X1 motor connection) X22.3 und X22.4 (X2 motor connection) (on the Motor Module)
Blocksize Power Module with CUA31 / CUA32	(see CU320-2)	X210.3 and X210.4 (on the CUA31 / CUA32)
Control Unit CU310-2	X120.3 X121.1...4	X120.4 and X120.5[1)]
Chassis Power Module with CU310-2	(see CU310-2)	X41.1 and X41.2

Module	1st switch-off signal path (p9620[0])	2nd switch-off signal path (EP terminals)
Blocksize Power Module with CU310-2	(see CU310-2)	STO_A and STO_B (for more detailed information, see "SINAMICS S120 AC Drive Manual ")
SIMOTION CX32-2 controller extension	X122.1...6 DI 0...3/16/17	–

1) **Please note:** For the CU310-2, you must use the EP terminal (DI 17) as a switchoff signal path. As 2nd switch-off signal path, use any free digital input (DI). For further information about the terminals, see the Equipment Manuals.

Note

Function of the EP terminals

The EP terminals are only evaluated if the Safety Integrated Basic Functions are enabled via onboard terminals.

Description of the two-channel structure

The functions are separately selected/deselected for each drive using two terminals.

- Switch-off signal path, Control Unit (CU310-2 / CU320-2)
  The desired input terminal is selected via BICO interconnection (BI: p9620[0]).
- Switch-off signal path, Motor Module / Power Module (with CUA3x or CU310-2)
  The input terminal is the "EP" terminal ("Enable Pulses").

Both terminals must be energized within the tolerance time p9650, otherwise a fault will be output.

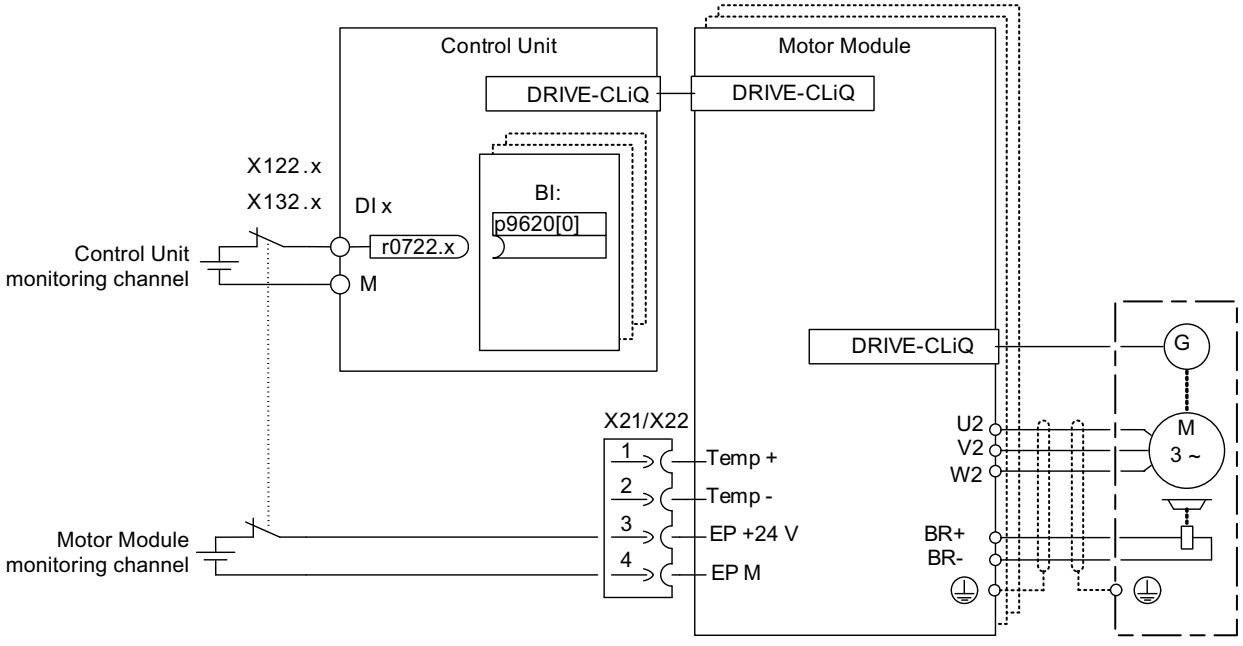

Figure 11-2 Example: Terminals for "Safe Torque Off": Example of Motor Modules Booksize and CU320-2

Grouping drives (not for CU310-2)

To ensure that the function works for more than one drive at the same time, the terminals for the corresponding drives must be grouped together as follows:

1. Switch-off signal path
   Connect the p9620 parameters of all drives that belong to a group with a single DI (r0722.x) of the CU320-2.
2. Switch-off signal path (Motor Module / Power Module with CUA3x)
   Wire the terminals for the individual Motor Modules/Power Modules, belonging to the group, with CUA31/CUA32.

Note

Parameterization of the grouping

The grouping must be configured (DI on Control Unit) and wired (EP terminals) identically in both monitoring channels.

Note

Response of STO for grouping

If a fault in a drive results in a "Safe Torque Off" (STO), this does not automatically mean that the other drives in the same group also switch to "Safe Torque Off" (STO).

The assignment is checked during the test for the switch-off signal paths. The operator selects "Safe Torque Off" for each group. The check is drive-specific.

Example: Terminal groups

It must be possible to select/deselect "Safe Torque Off" separately for group 1 (drives 1 and 2) and group 2 (drives 3 and 4). For this purpose, the same grouping for "Safe Torque Off" must be realized both for the Control Unit and the Motor Modules.

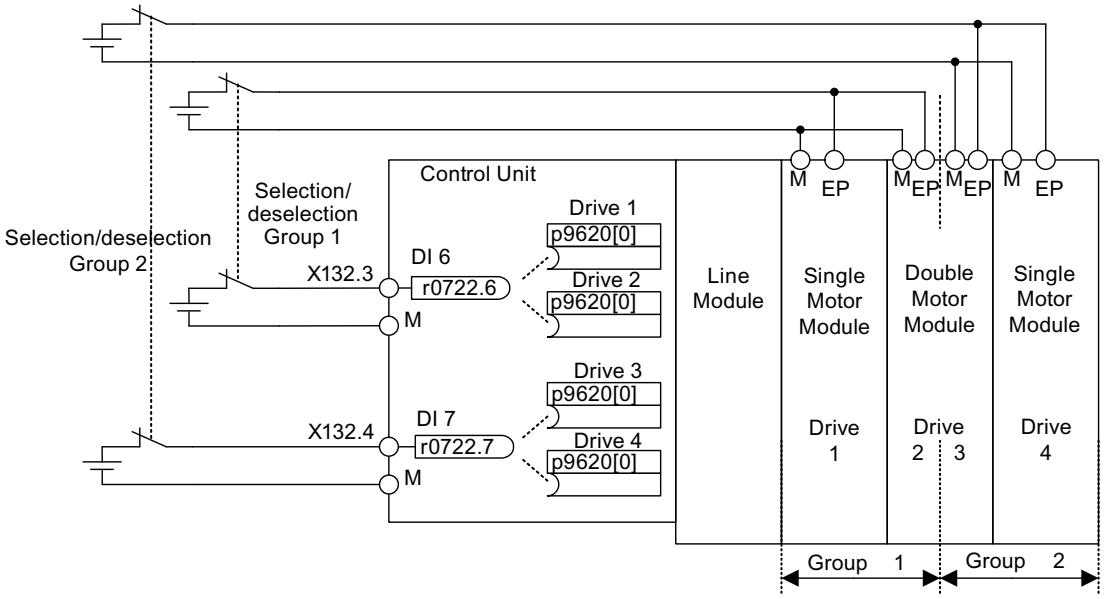

Figure 11-3 Example: Grouping terminals with Motor Modules Booksize and CU320-2

Information on the parallel connection of Chassis format Motor Modules

When Chassis format Motor Modules are connected in parallel, a safe AND element is created on the parallel drive object. The number of indexes in p9620 corresponds to the number of parallel Chassis components in p0120.

11.8.1 Simultaneity and tolerance time of the two monitoring channels_Basic_Functions

The monitoring functions must be selected/deselected simultaneously in both monitoring channels via the input terminals and only have an effect on the associated drive.

- 1 signal: Deselecting the function
- 0 signal: Selecting the function

The time delay that is unavoidable due to mechanical switching, for example, can be adapted via parameters. The tolerance time, within which selection/deselection of the two monitoring channels must occur if they are to be considered "simultaneous," is set in the following parameters:

- p9650 (Basic Functions)
- p10002 (Extended / Advanced Functions)

Note

Parameterization of the tolerance time

In order to avoid that faults are incorrectly initiated, at these inputs the tolerance time must always be set shorter than the shortest time between two switching events (ON/OFF, OFF/ON).

- If the monitoring functions are not selected/deselected within the tolerance time, this is detected by the cross-check, and the following fault (STOP F) is output.
  - F01611 (Basic Functions)
  - C01770 (Extended / Advanced Functions)

  For STO, the following applies: In this case, the pulses have already been canceled as a result of the selection of "Safe Torque Off" on one channel.

  Note

  Timing between the switching operations in the Basic Functions

  Message F01611 with fault value 1000 is output if switching operations occur too frequently. The cause depends on the type of control:
  - Persistent signal changes occurred at the F-DI.
  - STO was permanently triggered via PROFIsafe (also as subsequent response).

  Within the time 5 · p9650, there must be at least two switching operations at the terminals or via PROFIsafe with a minimum time between them of p9650.

- If the "Safe Stop 1" of the Basic Functions is not selected within the tolerance time in two channels, this is detected by the cross-check, and fault F01611 (STOP F) is output. After the set "SI Safe Stop 1 delay time" (p9652), the pulses are suppressed.

  Note

  In order that the drive can brake down to a standstill even when selected through one channel, the time in p9652 must be shorter than the sum of the parameters for the data cross-check (p9650 and p9658). Otherwise, the drive will coast down after the time p9650 + p9658 has elapsed.

Further notes for setting the discrepancy time (also see the following diagram "Discrepancy time") are provided in the "SINAMICS S120/S150 List Manual" for the following message:

- F01611 (Basic Functions)
- C01770 (Extended / Advanced Functions)

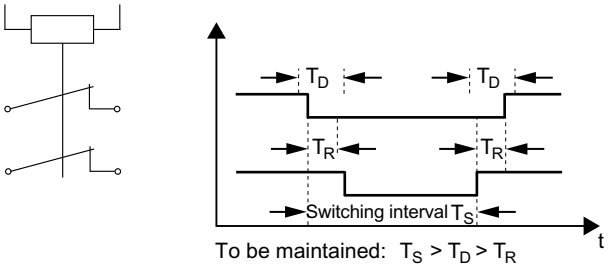

T_S Switching interval
T_D Discrepancy time
T_R Response time

Figure 11-4 Discrepancy time

Overview of important parameters (see SINAMICS S120/S150 List Manual)

- p9650 SI SGE switchover discrepancy time (Control Unit)
- p9652 SI Safe Stop 1 delay time (Control Unit)
- p9658 SI transition time STOP F to STOP A (Control Unit)
- p10002 SI Motion F-DI switchover discrepancy time (CPU 1)

11.8.2 Bit pattern test

Bit pattern test of fail-safe outputs

The converter normally responds immediately to signal changes in its fail-safe inputs. This is not desired in the following case: Several control modules test their fail-safe outputs using bit pattern tests (on/off tests), in order to identify faults due to either short-circuit or cross-circuit faults. When you interconnect a fail-safe input of the converter with a fail-safe output of a control module, the converter responds to these test signals.

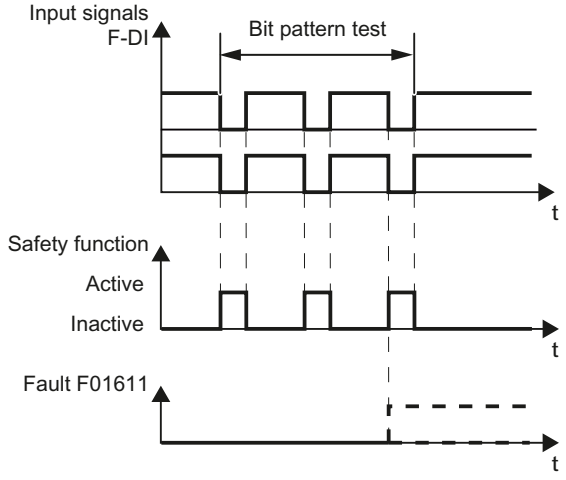

Figure 11-5 Converter response to a bit pattern test

Note

Debounce time for unwanted triggering of Safety Integrated Functions

If the test pulses cause an unwanted triggering of the Safety Integrated functions, these test pulses can be suppressed with the aid of the F-DI input filter (p9651 for Basic Functions). To do this, a value must be entered in p9651 or p10017 that is greater than the duration of a test pulse.

Overview of important parameters (see SINAMICS S120/S150 List Manual)

- p9651 SI STO/SBC/SS1 debounce time (Control Unit)
- p10017 SI Motion digital inputs debounce time (processor 1)

11.9 Control via TM54F

11.9.1 Design

The TM54F is a terminal expansion module for snapping onto a DIN EN 60715 mounting rail: The TM54F features fail-safe digital inputs and outputs for controlling and signaling the states of the Safety Integrated Basic Functions.

Note

DRIVE-CLiQ line of the TM54F

- A TM54F must be connected directly to a Control Unit via DRIVE-CLiQ.
- Each Control Unit can be assigned only one TM54F which is connected via DRIVE-CLiQ.
- Additional DRIVE-CLiQ nodes can be operated at the TM54F, such as Sensor Modules and Terminal Modules (excluding an additional TM54F). It is not permissible that Motor Modules and Line Modules are connected to a TM54F.
- In the case of a CU310-2 Control Unit, it is not possible to connect the TM54F to the DRIVE-CLiQ line of a Power Module. The TM54F can only be connected to the sole DRIVE-CLiQ X100 socket of the Control Unit.

Table 11-5 Overview of the TM54F interfaces

Type	Number
Fail-safe digital outputs (F-DO)	4
Fail-safe digital inputs (F-DI)	10
Sensor [1] power supplies, dynamic response supported [2]	2
Sensor [1] power supply, no dynamic response	1
Digital inputs for checking the F-DO with activated forced checking procedure (test stop)	4

[1] Sensors: Fail-safe devices for command operations and status logging (e.g. emergency stop buttons, safety door locks, position switches, and light arrays/light curtains).

[2] Dynamic response: The sensor power supply is switched on and off by the TM54F when the forced checking procedure (test stop) is active for the sensors, cable routing, and the evaluation electronics.

The TM54F provides four fail-safe digital outputs and ten fail-safe digital inputs. A fail-safe digital output consists of a 24 VDC switching output, an output switching to ground and a digital input for reading back the switching state. A fail-safe digital input is made up of 2 digital inputs.

Function diagrams (see SINAMICS S120/S150 List Manual)

- 2890 SI TM54F - overview

11.9.2 Fault acknowledgment

You have the following options of acknowledging TM54F faults after troubleshooting:

- POWER ON
- Falling edge of the signal "Internal Event ACK" with subsequent acknowledgment on the Control Unit ("fail-safe acknowledgment")

11.9.3 F-DI function

Description

Fail-safe digital inputs (F-DI) consist of 2 digital inputs. At the 2nd digital input, the cathode (M) of the optocoupler is additionally brought out to enable connection of an output of a fail-safe control grounded through a switch. (The anode must be connected to 24 V DC).

Parameter p10040 is used to determine whether an F-DI is operated as NC/NC or NC/NO contact. The status of each DI can be read at parameter r10051. The bits of both drive objects are logically AND'ed and return the status of the relevant F-DI.

Test signals from F-DOs and interference pulses can be filtered out using the input filter (p10017), so that they do not cause any faults.

Explanation of terms:

NC contact/NC contact: to select the safety function, a "zero level" must be present at both inputs.

NC contact / NO contact: to select the safety function, a "zero level" must be present at input 1 and a "1 level" at input 2.

The signal states at the two associated digital inputs (F-DI) must assume the same status configured in p10040 within the monitoring time set in p10002.

To enable the forced checking procedure (test stop), connect the digital inputs of F-DI 0 ... 4 of the TM54F to the dynamic voltage supply L1+ and the digital inputs to F-DI 5 ... 9 to L2+. Additional information for the forced checking procedure (test stop) is provided in Chapter "Forced checking procedure or test of the switch-off signal paths (test stop) for Safety Integrated Basic (Page 640)".

Table 11-6 Overview of the fail-safe inputs in the SINAMICS S120/S150 List Manual:

Module	Function diagram	Inputs
TM54F	2893	F-DI 0 4
	2894	F-DI 5 ... 9

F-DI features

- Fail-safe configuration with 2 digital inputs per F-DI
- Input filter to block test signals with an adjustable suppression time (p10017), see Chapter "Bit pattern test (Page 664)".

- Configurable connection of NC contact/NC contact or NC contact/NO contact using p10040
- Status parameter r10051
- Adjustable time window for monitoring discrepancy at both digital inputs by means of parameter p10002 for all F-DIs

Note

Discrepancy time

To avoid that fault messages are incorrectly triggered ("nuisance tripping"), at these inputs the discrepancy time must always be set less than the shortest time between 2 switching events (ON/OFF, OFF/ON) (see also the following diagram "Discrepancy time").

Further notes for setting the discrepancy time are contained in the "SINAMICS S120/S150 List Manual" for the following messages:

- F01611 (Basic Functions)
- C01770 (Extended / Advanced Functions)

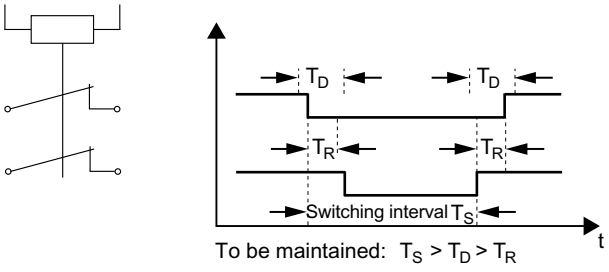

T_S Switching interval

T_D Discrepancy time

T_R Response time

Figure 11-6 Discrepancy time

- Second digital input with additional tap of the optocoupler cathode for connecting a ground-switching output of a fail-safe controller.
- The signal states of the two digital inputs of the F-DIs are frozen at logical 0 (safety function selected) when different signal states are present within a failsafe F-DI until a safe acknowledgment has been carried out by means of an F-DI via parameter p10006 (SI acknowledgment internal event input terminal).
- The monitoring time (p10002) for the discrepancy of the two digital inputs of an F-DI may have to be increased so that switching operations do not trigger an undesired response, thereby necessitating a safe acknowledgment. Therefore, the signal states at the two associated digital inputs (F-DI) must have the same state within this monitoring time, otherwise the following fault will be output F35151 "TM54F: Discrepancy error". This requires safe acknowledgment.

⚠ WARNING

Unwanted movement due to incorrect signal states as a result of diagnostic currents in the switched-off state (logical state "0" or "OFF")

Unlike mechanical switching contacts, e.g. emergency stop switches, diagnostic currents can also flow when the semiconductor is in the switched-off state. If interconnection with digital inputs is faulty, the diagnostic currents can result in incorrect switching states. Incorrect signal states of digital inputs can cause unwanted movements of machine parts and result in serious injury or death.

- Observe the conditions of digital inputs and digital outputs specified in the relevant manufacturer documentation.
- Check the conditions of the digital inputs and digital outputs with regard to currents in the "OFF" state and, if necessary, connect the digital inputs to suitably dimensioned, external resistors to protect against the reference potential of the digital inputs.

More information on this topic is available on the Internet at: Parameterizing and configuring safety hardware (https://support.industry.siemens.com/cs/ww/en/view/39700013).

Function diagrams (see SINAMICS S120/S150 List Manual)

- 2893 SI TM54F - fail-safe digital inputs (F-DI 0 … F-DI 4)
- 2894 SI TM54F - fail-safe digital inputs (F-DI 5 … F-DI 9)

Overview of important parameters (see SINAMICS S120/S150 List Manual)

- p10002 SI TM54F F-DI switchover discrepancy time
- p10017 SI TM54F digital inputs debounce time
- p10040 SI TM54F F-DI input mode
- r10051.0...9 CO/BO: SI TM54F digital inputs, status

11.9.4 Function of the F-DO

Fail-safe digital outputs (F-DO) consist of 2 digital outputs and 1 digital input that checks the switching state for the forced checking procedure (test stop). The 1st digital output switches 24 V DC, and the 2nd switches the ground of the power supply of X514 (TM54F).

The status of each F-DO can be read at parameter r10052. The status of the associated DI can be read at parameter r10053 (only available for TM54F_SL (TM54F Slave Module)).

The actuator connected to the F-DO can also be tested under specific conditions as part of forced checking procedure (test stop). See Chapter "Forced checking procedure or test of the switch-off signal paths (test stop) for Safety Integrated Basic (Page 640)".

Table 11-7 Overview of the fail-safe outputs in the SINAMICS S120/S150 List Manual:

Module	Function diagram	Outputs	Associated checking inputs
TM54F	2895	F-DO 0 ... 3	DI 20 ... 23

F-DO signal sources

A drive group contains several drives with similar characteristics. The groups are parameterized at the p10010 and p10011 parameters.

The following signals are available for interconnecting (p10042, ..., p10045) each one of the four drive groups with the F-DO:

- STO active
- SS2 active
- SLS active
- Safe State
- Active SLS level bit 0
- SDI positive active
- SLP active
- Internal event
- SS1 active
- SOS active
- SSM feedback active
- SOS selected
- Active SLS level bit 1
- SDI negative active
- Active SLP area

The following safe state signals can be requested via p10039[0...3] for each drive group (index 0 corresponds to drive group 1 etc.):

- STO active (power removed/pulse deleted)
- SS2 active
- SLS active
- SDI positive active
- SS1 active
- SOS active
- SLP active
- SDI negative active

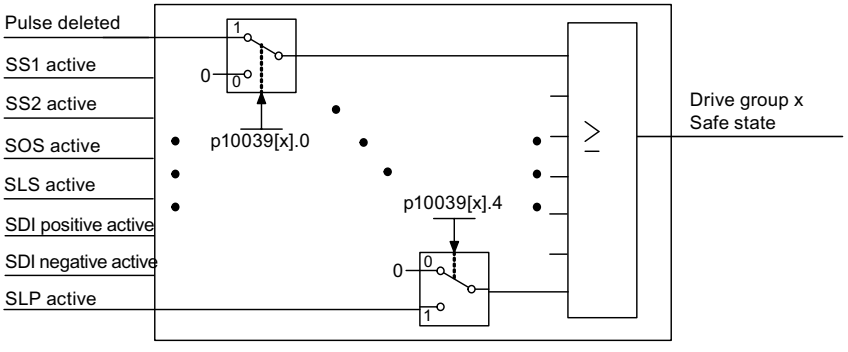

Figure 11-7 Safe state selection (example Extended Functions)

The same signals (high-active) of each drive or drive group are logically linked by means of AND operation. The different signals selected via p10039 are logically OR'ed. Result of these

logic operations is the "Safe State" for each drive group. You will find details in the SINAMICS S120/S150 List Manual in function diagrams 2901 (Basic Functions) and 2906 (Extended Functions).

Each F-DO supports the interconnection of up to 6 signals by way of indexing (p10042[0...5] to p10045[0...5]) and their output as logical AND operation.

Function diagrams (see SINAMICS S120/S150 List Manual)

- 2893 SI TM54F - fail-safe digital inputs (F-DI 0 … F-DI 4)
- 2894 SI TM54F - fail-safe digital inputs (F-DI 5 … F-DI 9)
- 2895 SI TM54F - Failsafe digital outputs (F-DO 0 ... 3), digital inputs (DI 20 ... 23)
- 2900 SI TM54F - Basic Functions control interface (p9601.2/3 = 0 & p9601.6 = 1)
- 2901 SI TM54F - Basic Functions Safe State selection
- 2902 SI TM54F - Basic Functions assignment (F-DO 0 ... F-DO 3)
- 2905 SI TM54F - Extended Functions control interface (p9601.2 = 1 & p9601.3 = 0)
- 2906 SI TM54F - Extended Functions Safe State selection
- 2907 SI TM54F - Extended Functions assignment (F-DO 0 ... F-DO 3)

Overview of important parameters (see SINAMICS S120/S150 List Manual)

- p10039[0...3] SI TM54F Safe State signal selection
- p10042[0...5] SI TM54F F-DO 0 signal sources
- p10043[0...5] SI TM54F F-DO 1 signal sources
- p10044[0...5] SI TM54F F-DO 2 signal sources
- p10045[0...5] SI TM54F F-DO 3 signal sources
- r10051.0... CO/BO: SI TM54F digital inputs, status
- r10052.0...3 CO/BO: SI TM54F digital outputs, status
- r10053.0...3 CO/BO: SI TM54F digital inputs, 20 ... 23 status

11.10 Commissioning the functions "STO", "SBC" and "SS1"

11.10.1 General information on commissioning Safety Integrated Functions

Note

Incompatible version in the Motor Module

If there is no compatible version in the Motor Module, the Control Unit will respond as follows on transition to Safety commissioning mode (p0010 = 95):

- The control unit outputs the fault F01655 (SI CU: aligning the monitoring functions). The fault initiates fault response OFF2.
- The Control Unit triggers safe pulse suppression via its own Safety switch-off signal path.
- If parameterized (p1215, p9602), the motor holding brake is closed.
- The fault can only be acknowledged after the Safety functions have been blocked (p9601).

Note

Duplicate the parameters for the 2nd channel

After you have parameterized all safety functions, the drive must accept the settings.

To accept the settings in the drive, it must be online.

1. To accept the settings and deactivate the safety functions, click the  icon in the toolbar. The following steps are executed:
   - The parameter settings are copied from CPU 1 to CPU 2.
   - Copying RAM to ROM is offered.
   - Safety mode is deactivated, the icon now has a yellow border.
2. Go offline with the drive.
   You can now continue with the further settings of the parameterization. The dialogs are no longer deactivated.

Note

Behavior when copying

For the encoder parameters (p9515 to p9529), which are used for safe motion monitoring, the following procedure applies when copying:

- The following applies to safety-related functions that have not been enabled (p9501 = 0): The parameters are automatically set during startup in the same way as the corresponding encoder parameters (e.g. p0410, p0474, ...).
- The following applies to safety-related functions that have been enabled (p9501 > 0): The parameters are checked against their corresponding encoder parameters (e.g. p0410, p0474, ...).

Further information can be found in the parameter descriptions in the SINAMICS S120/S150 List Manual.

Note

Copying a drive with enabled Safety Integrated Functions

If a drive with enabled Safety Integrated Functions is copied offline, fault F01656 can occur when the project is downloaded. This behavior occurs whenever component numbers change during copying (e.g. different DO number or hardware).

Take care to observe these limitations or perform Safety commissioning again.

Note

Activating changed safety parameters

When exiting the commissioning mode (p0010 = 0), most of the changed parameters immediately become active.

However, for some parameters, a POWER ON is required. In this case, a drive message (A01693 or A30693) will inform you.

11.10.2 Commissioning with Startdrive

11.10.2.1 STO/SS1/SBC (Basic Functions)

Configuring safety functions

In order to configure the Safety Integrated Functions STO, SS1 and SBC proceed as follows:

1. Call up “STO/SS1/SBC.”

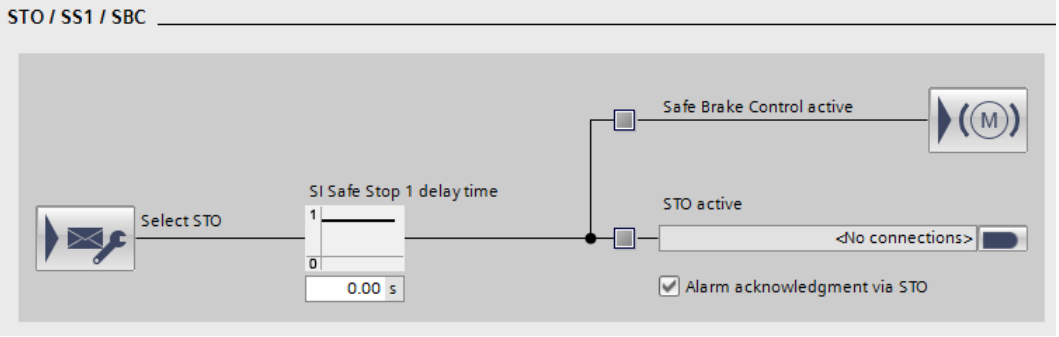

Figure 11-8 Safety Integrated Basic Functions STO, SS1 and SBC

2. Click the button (Select STO) to configure the "STO" function.
The "Control" screen form opens. The display of the screen form depends on the basic settings of the Safety Integrated Basic Functions.

3. In this screen form, configure the controls via the fail-safe inputs and outputs and/or PROFIsafe.

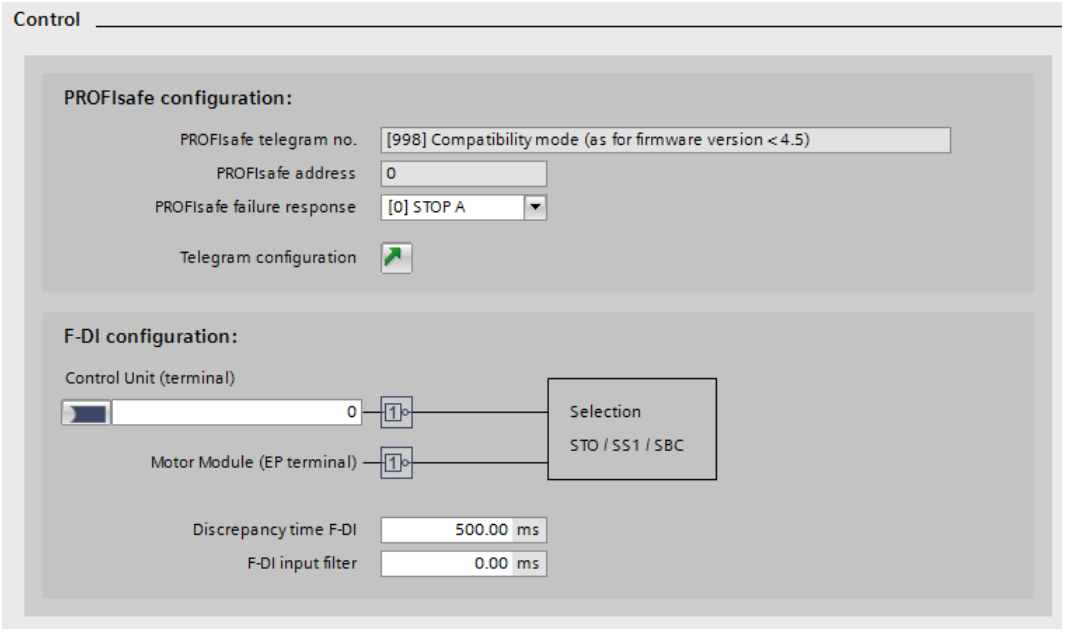

Figure 11-9 Example: Control of STO

4. Call up “STO/SS1/SBC” again.
5. To configure the "SS1" function, set the delay time until the start of "STO" in the "Safe stop 1 delay time" field.
6. Then connect the signal source r9773.1 for the "STO active in the drive" function.
7. Click the button (brake control) to configure the "SBC" function.

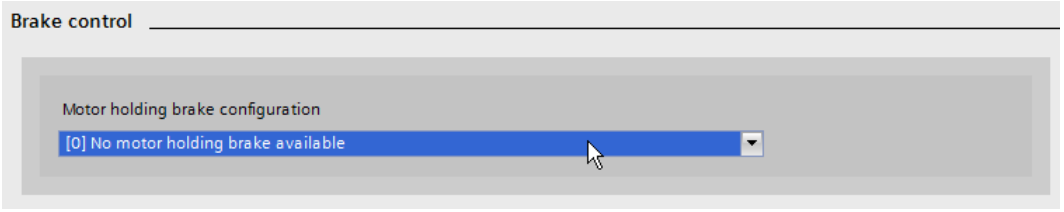

Figure 11-10 Example: Brake control without motor holding brake

8. Click "Save project" in the toolbar to save the changes in the project.
9. Accept these settings in the drive: Chapter "General information on commissioning Safety Integrated Functions (Page 672)"

Result

You have configured the Safety Integrated Basic Functions.

11.10.3 Commissioning via direct parameter access

To commission the Basic Functions "STO", "SBC" and "SS1" via terminals, proceed as follows:

Table 11-8 Commissioning the "STO", "SBC" and "SS1" Basic Functions

No.	Parameter	Description/comments
1	p0010 = 95	Setting **Safety Integrated commissioning mode.** • The following alarms and faults are output: – A01698 (SI CU: Commissioning mode active) During first commissioning only: – F01650 (SI CU: Acceptance test required) with fault value = 130 (no Safety Integrated parameters exist for the Motor Module). – F30650 (SI MM: Acceptance test required) with fault value = 130 (no Safety Integrated parameters exist for the Motor Module). Acceptance test and test certificate, see step 17. • The pulses are safely suppressed. • An existing and parameterized motor holding brake has already been applied. • In this mode, fault F01650 or F30650 with fault value = 2003 is output after a Safety Integrated parameter is changed for the first time. This behavior applies for the entire duration of Safety Integrated commissioning, that means, the "STO" function cannot be selected/deselected while Safety Integrated commissioning mode is active because this would constantly force safe pulse suppression.
2	p9761 = "Value"	**Entering Safety Integrated password.** When Safety Integrated is commissioned for the first time, the following applies: • Safety Integrated password = 0 • Default setting for p9761 = 0 This means that the Safety Integrated password does not need to be set during first commissioning.
3	p9601.0 = 1	**Enabling "Safe Torque Off" function (STO).**
4	p9602 = 1	**Enabling "Safe Brake Control" function (SBC).** • SBC cannot be used alone, but only in conjunction with one of the STO and SS1 functions.
5	p9652 > 0	**Enabling "Safe Stop 1" function (SS1).** • The "Safe Stop 1" function is not activated until at least one Safety Integrated monitoring function has been enabled (i.e. p9601 ≠ 0).

No.	Parameter	Description/comments
6	p9620 = "fast DI on CU" Terminal "EP"	**Set terminals for "Safe Torque Off (STO)".** Wire terminal "EP" (enable pulses) on the Motor Module. • Control Unit monitoring channel: By appropriately interconnecting BI: p9620 for the individual drives, the following is possible: – Selecting/deselecting the STO – Grouping the terminals for STO • Motor Module monitoring channel: By wiring the "EP" terminal accordingly on the individual Motor Modules, the following is possible: – Selecting/deselecting the STO – Grouping the terminals for STO **Note:** The STO terminals must be grouped identically in both monitoring channels.
7	p9650 = "Value"	**Set F-DI changeover tolerance time.** F-DI changeover tolerance time on Control Unit • The parameter is not changed until Safety Integrated commissioning mode has been exited (i.e. when p0010 ≠ 95 is set). • Due to the different runtimes in the two monitoring channels, an F-DI changeover (e.g. selection/deselection of STO) does not take immediate effect. After an F-DI changeover, dynamic data is not subject to a data cross-check during this tolerance time.
8	p9651 = "Value"	**Debounce time for the failsafe digital inputs** to control STO/SBC/SS1
9	p9658 = "Value"	**Set transition period from STOP F to STOP A.** • STOP F is the stop response that is initiated when the data cross-check is violated as a result of fault F01611 or F30611 (SI: Defect in a monitoring channel). STOP F initiates "No stop response" as default setting. • After the parameterized time has expired, STOP A (immediate Safety Integrated pulse inhibit) is triggered by the fault F01600 or F30600 (SI: STOP A triggered). The default setting for p9658 is 0 (i.e. STOP F immediately results in STOP A).
10	p9659 = "Value"	**Time for carrying out forced checking procedure and testing the Safety Integrated shutdown paths.** • After this time has expired, the user is requested to test the switch-off paths as a result of alarm A01699 (SI CU: Necessary to test the switch-off signal paths) (i.e. select/deselect STO). • The commissioning engineer can change the time required for carrying out the forced checking procedure and testing the Safety Integrated shutdown paths.
11	p9762 = "Value" p9763 = "Value"	**Setting a new Safety Integrated password.** Enter a new password. Confirm the new password. • The new password is not valid until it has been entered in p9762 and confirmed in p9763. • As of now, you must enter the new password in p9761 to change Safety Integrated parameters. • Changing the Safety Integrated password does not mean that you have to change the checksums.

No.	Parameter	Description/comments
12	p9621 = "value" p9622[0...1] = "value"	**Parameterizing Safe Brake Adapter.** • Set with p9621 the signal source for the Safe Brake Adapter. • Set with p9622 the wait times for switching on and switching off the Safe Brake Adapter relay.
13	p9700 = 57 hex p9701 = DC hex	**Saving and copying the Safety Integrated Functions parameters.** After setting the specific parameters of the Safety Integrated Functions, they must be copied from the Control Unit into the Motor/Power Module and then activated: • p9700 SI Motion copy function • p9701 SI Motion confirm data change
14	p0010 = 0	**Exiting Safety Integrated commissioning mode.** • The checksums are checked if at least one Safety Integrated monitoring function is enabled (p9601 ≠ 0): If the target checksum on the Control Unit has not been correctly adapted, then fault F01650 (SI CU: Acceptance test required) is output with fault code 2000 and it is not possible to exit the Safety Integrated commissioning mode. If the target checksum on Motor Modules has not been correctly adapted, then fault F01650 (SI CU: Acceptance test required) is output with fault code 2001 and it is not possible to exit the Safety Integrated commissioning mode. • If a Safety Integrated monitoring function has not been enabled (p9601 = 0), the Safety Integrated commissioning mode is exited without the checksums being checked. When the Safety Integrated commissioning mode is exited, the following is carried out: • A POWER ON must be performed after the initial commissioning. This is indicated with the A01693 message.
15	p0971 = 1 p0977 = 1	All drive parameters (entire drive group or only single axis) must be manually saved from RAM to ROM. This data is not saved automatically!
16	POWER ON	**Carry out POWER ON**. After commissioning, a reset must be carried out with POWER ON.
17	-	**Carry out acceptance test and create test certificate**. Once Safety Integrated commissioning is complete, the commissioning engineer must carry out an acceptance test for the enabled Safety Integrated monitoring functions. The results of the acceptance test must be documented in an acceptance certificate.

11.10.4 Safety faults

The fault messages of the Safety Integrated Basic Functions are saved in the standard message buffer and can be read out from there.

When faults associated with Safety Integrated Basic Functions occur, the following stop responses can be initiated:

Table 11-9 Stop responses for Safety Integrated Basic Functions

Stop response	Triggered ...	Action	Effect
STOP A cannot be acknowledged	For all Safety faults with pulse suppression that cannot be acknowledged.	Trigger safe pulse suppression via the switch-off signal path for the relevant monitoring channel. During operation with SBC: Apply motor holding brake.	The motor coasts to a standstill or is braked by the holding brake.
STOP A	For all acknowledgeable Safety faults As a follow-up reaction of STOP F		
	STOP A corresponds to Stop Category 0 in accordance with EN 60204-1. With STOP A, the motor is switched directly to zero torque via the "Safe Torque Off (STO)" function. A motor at standstill cannot be started again accidentally. A moving motor coasts to standstill. This can be prevented by using external braking mechanisms, e.g. holding or operating brake. When STOP A is present, "Safe Torque Off" (STO) is active.		
STOP F	If an error occurs in the data cross-check.	Transition to STOP A.	Follow-up response STOP A with adjustable delay (factory setting without delay) if one of the safety functions is selected
	STOP F is permanently assigned to the data cross-check (DCC). In this way, errors are detected in the monitoring channels. After STOP F, STOP A is triggered. When STOP A is present, "Safe Torque Off" (STO) is active.		

⚠ WARNING

Danger to life due to an uncontrolled movement of the axis

With a vertical axis or pulling load, there is a risk of uncontrolled axis movements when STOP A/F is triggered. This can cause serious injury or death to persons in the danger zone.

- If there is a hazard due to undesirable or unwanted motion in your application, take measures to counter it, for example, by using a brake with safe monitoring. For further information, see Chapter "Safe Brake Control (SBC) (Page 651)."

Acknowledging the Safety faults

There are several options for acknowledging Safety faults (for more details see SINAMICS S120 Commissioning Manual):

1. Faults associated with Safety Integrated Basic Functions must be acknowledged as follows:
   - Remove the cause of the fault.
   - Deselect "Safe Torque Off" (STO).
   - Acknowledge the fault.

   If the Safety commissioning mode is exited when the safety functions are switched off (p0010 = value not equal to 95 for p9601 = 0), then all the Safety faults can be acknowledged.
   Once Safety commissioning mode has been selected again (p0010 = 95), all the faults that were previously present reappear.
2. The higher-level controller sets the signal "Internal Event ACK" via the PROFIsafe telegram (STW bit 7). A falling edge in this signal resets the status "Internal Event" and so acknowledges the fault.

Note

Safety faults can also be acknowledged (as with all other faults) by switching the drive unit off and then on again (POWER ON).

If this action has not eliminated the fault cause, the fault is displayed again immediately after power-up.

Description of faults and alarms

Note

The faults and alarms for SINAMICS Safety Integrated functions are described in SINAMICS S120/S150 List Manual

11.11 Acceptance test and acceptance report

Note

Responsibilities

The machine manufacturer is responsible for carrying out and documenting the acceptance test: In Chapter "Acceptance test (Page 684)" you will find examples of how the acceptance test is carried out and documented for the individual safety functions.

Why is acceptance required?

The EC Machinery Directive and DIN EN ISO 13849-1 stipulate:

- You must check safety-related functions and machine parts after commissioning.
  → Acceptance test.
  For SINAMICS Safety Integrated Functions (SI Functions) this specifically means: The acceptance test is used to check the functionality of the Safety Integrated monitoring and stop functions used in the drive. The test objective is to verify proper implementation of the defined safety functions and test mechanisms (measures for forced checking procedure (test stop)) and to examine the response of specific monitoring functions to explicitly entered values outside tolerance limits. The test must cover all drive-specific Safety Integrated motion monitoring functions and global Safety Integrated functionality of Terminal Modules TM54F (if used).

  Note

  Purpose of the acceptance test

  The measured values (e.g. distance, time) and the system behavior identified (e.g. initiation of a specific stop) can be used for checking the plausibility of the configured safety functions. The objective of an acceptance test is to identify potential configuration errors and/or to document the correct function of the configuration. The measured values are typical values (not worst case values). They represent the behavior of the machine at the time of measurement. These measurements cannot be used to derive real values (e.g. maximum values for over-travel distances).

- You must create an "acceptance report" showing the test results.
  → Documentation.

Requirements

The acceptance test requirements (configuration check) for electrical drive safety functions emanate from DIN EN 61800-5-2, Section 7.1 Point f). The acceptance test "configuration check" is cited in this standard.

- Description of the application including a picture
- Description of the safety-relevant components (including software versions) that are used in the application
- List of the PDS(SR) [Power Drive System(Safety Related)] safety functions used
- Results of all tests of these safety functions, using the specified testing procedure

- List of all safety-relevant parameters and their values in the PDS(SR)
- Checksum, test date and confirmation by testing personnel

Acceptance test

The acceptance test comprises 2 parts:

- Checking whether the safety functions in the converter are correctly set:
  - Does the speed control handle the configured application cases in the machine?
  - Do the set interface, times and monitoring functions match the configuration of the machine?
- Checking whether the safety-relevant functions in the plant or machine function correctly. This part of the acceptance test goes beyond the converter acceptance test:
  - Are all safety equipment such as protective door monitoring devices, light barriers or emergency-off switches connected and ready for operation?
  - Does the higher-level control correctly respond to the safety-relevant feedback signals of the converter?
  - Do the converter settings match the configured safety-relevant function in the machine?

Documentation

The documentation consists of the following parts:

- Description of the safety-relevant components and functions of the machine or plant.
- Report of the acceptance test results.
- Report of the settings of the safety functions.
- Countersigned documentation.

Authorized persons

Personnel from the **machine manufacturer**, who, on account of their technical qualifications and knowledge of the safety functions, are in a position to perform the acceptance test in the correct manner.

⚠ WARNING

Unwanted motion due to incorrect parameter changes

Incorrect parameter changes for SI functions can result in unwanted motion leading to death or severe injury.

- After making a change to a parameter for the Safety Integrated Functions, always perform an acceptance test for the function in question.
- Document the values calculated in an acceptance report.

⚠ WARNING

Unsafe operating states due to manipulation of the Safety Integrated parameters after the acceptance test

Incorrect parameter changes to Safety Integrated functions after an acceptance test can result in unwanted motion resulting in severe injury or death.

- To prevent access to your plants and systems by unauthorized persons, implement access restrictions and take the precautions described in the security information (see Chapter "Safety instructions (Page 642)" and manual "SINUMERIK/SIMOTION/SINAMICS Motion Control Industrial Security").
- To avoid incorrect changes to the configuration and parameters of the Safety Integrated functions, take the precautions described in this manual.
- Check the Safety log book of SINAMICS Safety Integrated at regular intervals. Verify that no changes have been made to the parameters since the last acceptance test was performed.
- If any changes have been made and they are intentional, repeat the acceptance test for the Safety Integrated functions affected. The purpose of the acceptance test is to ensure and document safe operation of the plant. Correct any unintentional changes back to the original values and repeat the acceptance test.

11.11.1 Acceptance test structure

The test of individual Safety Integrated Functions must be carried out by an authorized person and logged in the acceptance report. The report must be signed by the person who carried out the acceptance test. Access rights to SI parameters must be protected by a password. This procedure must be documented in the acceptance report - the password itself must not appear there. Authorized in this sense refers to a person who has the necessary technical training and knowledge of the safety functions and is authorized by the machine manufacturer to carry out the acceptance test.

Note

Further information

- The procedure in Chapter "Acceptance test (Page 684)" is an example and a recommendation.
- An acceptance report template in electronic format is available at your local Siemens sales office.

Note

PFH values

The PFH values of the individual SINAMICS S120 safety components can be found at:

PFH values (PFH values (https://support.industry.siemens.com/cs/ww/en/view/76254308))

Necessity of an acceptance test

A complete acceptance test (as described in this chapter) is required after initial commissioning of Safety Integrated functionality on a machine. The acceptance tests must be carried out for each individual drive. Safety-related function expansions, transfer of the commissioning settings to other series machines, hardware changes, software upgrades or similar, permit the acceptance test to be performed with a reduced scope if necessary. A summary of conditions which determine the necessary test scope or proposals in this context is provided below.

Requirements for the acceptance test

- The machine is properly wired.
- All safety equipment such as protective door monitoring devices, light barriers or emergency limit switches are connected and ready for operation.
- Commissioning of the open-loop and closed-loop control must be completed, as e.g. the over-travel distance may otherwise change as a result of a changed dynamic response of the drive control. These include, for example:
  - Configuration of the setpoint channel
  - Position control in the higher-level controller
  - Drive control

Note on the acceptance test mode

The acceptance test mode can be activated for a definable period (p9558) by setting the appropriate parameters (p9570). It tolerates specific limit violations during the acceptance test. For instance, the setpoint speed limits are no longer active in the acceptance test mode. To ensure that this state is not accidentally kept, the acceptance test mode is automatically exited after the time set in p9558.

It is only worth activating acceptance test mode during the acceptance test of the SS2, SOS, SDI, SLS and SLP functions. It has no effect on other functions.

Normally, SOS can be selected directly or via SS2. To be able to trigger violation of the SOS standstill limits with acceptance test mode active (even in the "SS2 active" state), the setpoint is enabled again by the acceptance test mode after deceleration and transition to SOS to allow the motor to travel. When an SOS violation is acknowledged in the active acceptance test mode, the current position is adopted as the new stop position so that an SOS violation is not immediately identified again.

⚠ WARNING

Axis movement during the acceptance test

If a speed setpoint ≠ 0 is present, the active stop function SS2 is set, and the motor is at a standstill (active SOS), the axis starts to move as soon as the acceptance test is activated. If persons are in the danger zone, accidents causing death or severe injury can occur.

- Take suitable measures to ensure that nobody is in the danger zone during the acceptance test.

11.11.2 Safety Logbook

The "Safety Logbook" function is used to detect changes to Safety Integrated parameters that affect the associated CRC sums. CRCs are only generated when p9601 (SI enable, functions integrated in the drive CU/Motor Module) is > 0.

Data changes are detected when the CRCs of the SI parameters change. Each SI parameter change that is to become active requires the reference CRC to be changed so that the drive can be operated without SI fault messages. In addition to functional SI changes, hardware-dependent changes are also detected (e.g. hardware replacement) through changes to the CRC.

The following changes are recorded by the safety logbook:

- Functional changes are recorded in the checksum r9781[0]:
  - Functional CRCs of the motion monitoring functions (p9729[0...1]), axis specific (Extended and Advanced Functions)
  - Functional cyclic redundancy checks of the basic safety functions integrated in the drive (p9799, SI setpoint checksum SI parameters CU), for each axis.
  - Functional CRCs of the TM54F (p10005[0]), global (Basic, Extended and Advanced Functions)
  - Enabling functions integrated in the drive (p9601), axis specific (Basic, Extended and Advanced Functions)
- Hardware-dependent changes are recorded in the checksum r9781[1]:
  - Hardware-dependent CRC of the motion monitoring functions (p9729[2]), axis specific (Extended and Advanced Functions)
  - Functional CRCs of the TM54F (p10005[1]), global (Basic, Extended and Advanced Functions)

11.11.3 Acceptance test

Note

Conditions for the acceptance test

As far as possible, the acceptance tests are to be carried out at the maximum possible machine speed and acceleration rates to determine the maximum braking distances and braking times that can be expected.

Note

Acceptance test for Basic and Extended Functions

The Safety Integrated acceptance test allows you to select the testable functions depending on the device type and its settings (Basic or Extended Functions, actuation over PROFIsafe or terminals).

Note

Trace recordings

The trace recordings for the Extended Functions allow the analysis of the machine behavior during the test execution. Here, you can use the signal curves to check whether the machine's behavior matches your expectations. The recorded signals allow, for example, the delay times and over-travel distances to be evaluated.

Note

Non-critical alarms

When evaluating the alarm buffer you can tolerate the following alarms:

- A01697 SI Motion: Motion monitoring test required
- A35014 TM54F: Test stop required
  These alarms occur after every system startup and can be evaluated as non-critical.
- A01699 SI CU: Shutdown path test required
  This alarm occurs after the time in p9659 has expired.

You do not need to include these alarms in the acceptance report.

Note

No acceptance test with alarm A01796

If the alarm A01796 is active, the pulses are safely canceled, and an acceptance test is not possible.

11.11.3.1 Preparing the acceptance test

On the "Drive axis_x - Function selection" screen, the acceptance wizard provides all Safety Integrated functions for selection that are available in the drive or for which a license exists. These options take into account whether Basic Functions, Extended Functions or Advanced Functions have been selected as well as the selected actuation.

Requirement

Startdrive is connected to the drive being tested online.

Procedure

To prepare for the acceptance test, proceed as follows:

1. Parameterize the drive being tested completely and put it into operation.
2. Click "Acceptance test" in the project navigator.

3. In the secondary navigation for the desired drive, select all Safety Integrated Functions being tested.
   The active functions are automatically pre-selected. You can change this pre-selection and select/deselect functions.
4. In order to define the function selection for the Safety Integrated acceptance test, click on “Accept.”
   For the functions being tested, entries are shown in the secondary navigation. Navigate with these settings to the individual tests.

Resetting test results

1. In order to delete all tests previously carried out for this drive, click on the “Reset test results” button.
   This restores the initial state, which can be used to carry out the acceptance test again. A confirmation prompt is displayed.
2. Acknowledge the query with "Yes".
   Then the results are reset and you can restart the acceptance test using new settings as needed.

11.11.3.2 Carrying out an acceptance test (example)

After accepting the function selection in the Preparing the acceptance test (Page 685) step, Startdrive shows the functions being tested in the secondary navigation.

You can now work through the tests in any order.

The status of the individual tests is represented as follows:

- Blue: The test is initial and has not yet been started.
- Green: The test was performed successfully.
- Red: The test was aborted with error. The test can be repeated by reselecting the function.

Structure of the acceptance test wizards

The listed wizards have the same structure for every acceptance test.

In the upper area, the workflow represents the individual test steps and their status. The statuses have the following meaning:

- Blue: Active test step.
- Green: Test step completed.

In the area below the workflow, Startdrive displays the instructions for the test steps. You must carry out these test steps. Once you have carried out the instructions, click “Next” to go to the next step. Finally, close the text by clicking on “Finish.” Then Startdrive updates the status for this test in the secondary navigation.

The operator controls for the test steps are located in the lower area. These controls include, for example, the control panel for moving the axis being tested.

Starting and performing the acceptance test

Subsequently, the acceptance test is to be explained using the “SS1” example.

1. Click on one of the functions being tested (SS1 in this case).
   In the working area, the test tool is started.
2. Enter a test designation. This designation also appears later in the acceptance report.
3. As required, change the trace settings for this test or use the default settings. The preassignment is adequate for most applications.
   – In the “Recording Duration” field, enter the desired value for the recording duration.
   – In the “Pre-trigger Duration” field, enter the desired value for the duration that is to be recorded before the trigger.

   A change enables adaptation to the mechanical conditions of the machine, e.g. if the mechanical system of the axis has a very high moment of inertia, which would make longer ramp times necessary for accelerating and braking.
4. Observe the safety information and notes on the start screen form of the acceptance test.
5. Once all precautions have been taken, click on the “Start” button in the “Start acceptance wizard” area.
   The assistant for the selected test is opened.
6. In the first step, traverse the drive so that Emergency Stop can be triggered.
   In the “Move drive using” drop-down list, select whether the drive will traverse using the control panel or using the user program of a higher-level controller.
   – Control panel
     If the drive traverses using the control panel, then the control panel is shown on this screen. Activate the master control, specify a setpoint and start the motor in the desired direction of rotation. Then click "Next” to go to the next step.
   – User program
     Start the traversing process if the drive is being moved using the user program. Once the motor comes to a stop, click on “Next” for the next step.
7. Initiate emergency stop (SS1) on the selected drive. Click on “Next” once the LED displays that SS1 is active.
   The motor is braked along the AUS3 braking ramp. The transition to STO is made based on the parameter assignment (e.g. after expiration of the delay time or when the shut-down speed is undershot). If a brake parameterized via SBC is present, it is closed after transition to STO.
8. Return the control priority when the drive is stationary. Click "Next".
9. The sequence carried out thus far is recorded and represented as a trace.
   Based on the signal record, check the sequence of the test with respect to time and content. In this test, STO must not be triggered until the motor is close to reaching a standstill. Click “Next” once the test sequence matches your expectations.
10. If the sequence does not match your expectations, click “Cancel” to cancel the test.
    In this case, check the correctness of all input conditions and repeat the test if necessary. Example scenario: STO is initiated, even though the motor speed is still high. In this case, faulty parameter assignment may be a possible cause, for example, a delay time for SS1 to STO that is too short or a shutdown speed that is too high.
11. Deselect SS1 and click "Next".

12. The test has been carried out successfully.
    Click “Finish” to close the wizard. The test status in the secondary navigation is updated.
13. Execute the wizards of all further functions similarly through the tests.

11.12 Overview of parameters and function diagrams (WV)

Function diagrams (see SINAMICS S120/S150 List Manual)

- 2800 SI Basic Functions - Parameter manager
- 2802 SI Basic functions - Monitoring functions and faults/alarms
- 2804 SI Basic Functions - SI status CU, MM, CU+MM group STO
- 2806 SI Basic Functions - S_STW1/2 safety control word 1/2, S_ZSW1/2 safety status word 1/2
- 2810 SI Basic Functions - STO (Safe Torque Off), SS1 (Safe Stop 1)
- 2811 SI Basic Functions - STO (Safe Torque Off), safe pulse cancellation
- 2814 SI Basic Functions - SBC (Safe Brake Control), SBA (Safe Brake Adapter)

Overview of important parameters (see SINAMICS S120/S150 List Manual)

Table 11-10 Parameters for Safety Integrated Functions

Parameters	Name	Changeable to ...
p9601	SI enable safety functions	Safety Integrated commissioning (p0010 = 95)
p9602	SI enable safe brake control	
p9610	SI PROFIsafe address (Control Unit)	
p9620	SI signal source for Safe Torque Off	
p9650	SI SGE changeover, tolerance time (Motor Module)	
p9651	SI STO/SBC/SS1 debounce time (Control Unit)	
p9652	SI Safe Stop 1 delay time	
p9658	SI transition time STOP F to STOP A	
p9659	SI timer for the forced checking procedure	
p9761	SI password input	In every operating mode
p9762	SI password new	Safety Integrated commissioning (p0010 = 95)
p9763	SI password acknowledgment	
r9770[0...2]	SI version safety function integrated in the drive	
r9771	SI shared functions	
r9772	SI CO/BO: Status	
r9773	SI CO/BO: Status (Control Unit + Motor Module)	
r9774	SI CO/BO: Status (Safe Torque Off group)	
r9780	SI monitoring clock cycle	
r9794	SI crosswise comparison list	
r9795	SI diagnostics for STOP F	
r9798	SI actual checksum SI parameters	

Parameters	Name	Changeable to ...
p9799	SI reference checksum SI parameters	Safety Integrated commissioning (p0010 = 95)
p10039[0...3]	SI TM54F Safe State signal selection	
p10040	SI TM54F F-DI input mode	
p10041	SI TM54F F-DI test enable	
p10042[0...5]	SI TM54F F-DO 0 signal sources	
p10043[0...5]	SI TM54F F-DO 1 signal sources	
p10044[0...5]	SI TM54F F-DO 2 signal sources	
p10045[0...5]	SI TM54F F-DO 3 signal sources	
p10046	SI TM54F F-DO feedback signal input activation	
p10047[0...3]	SI TM54F F-DO test stop mode	
p10048	SI TM54F F-DI F-DO test stop configuration	
r10051.0...9	CO/BO: SI TM54F digital inputs, status	
r10052.0...3	CO/BO: SI TM54F digital outputs, status	
r10053.0...3	CO/BO: SI TM54F digital inputs, 20 ... 23 status	
r10054	SI TM54F fail-safe events active	
r10055	SI TM54F drive-specific communication status	
r10056.0	CO/BO: SI TM54F status	
p10061	SI TM54F password input	
p10062	SI TM54F password new	
p10063	SI TM54F password confirmation	
r10070	SI TM54F module identification	
r10090[0...3]	SI TM54F version	

Applications

12

12.1 Application examples

You can find SINAMICS application examples on the Internet page "SINAMICS application examples".

We can offer you efficient system strategies, especially as a result of the optimum interaction between SIMATIC control technology and SINAMICS drive systems.

The application examples provide you with:

- Reusable modules for scaling setpoints and actual values
- Explanation of the necessary configuring steps together with screenshots
- Security through already tested programs and modules for accessing parameters
- Significantly lower commissioning times
- Detailed documentation with parts lists of the hardware and software components being used

Further, you can also find technological application examples, such as winders, traversing arms and basic synchronous operation. These application examples also explain how to use free function blocks (FBLOCKS), logic processing integrated in the drive with Drive Control Chart (DCC) and Safety Integrated.

Finding and calling application examples

1. Call the following site in your Internet browser:
   SINAMICS application examples (https://www.automation.siemens.com/mc-app/sinamics-application-examples/Home/Index?language=en)
2. Select the required filter in the search mask.
   Example:

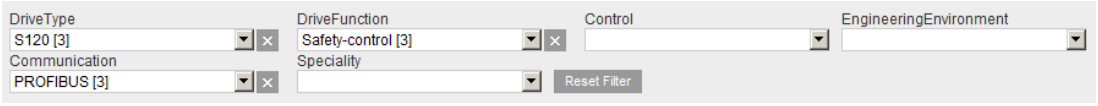

   The result list is updated every time a filter setting is specified.

Application	DriveType	DriveFunction	Control	EngineeringEnvironment	Communication	Speciality
› SINAMICS S: Safety-control of a S120 using S7-300/400 (STEP 7 V5) with PROFIBUS and Safety Integrated (via PROFIsafe)	S120	Safety-control	S7-300/400	STEP 7 V5	PROFIBUS	Safety Integrated
› SINAMICS S: Safety-control of a S120 using S7-300/400 (STEP 7 V5) with PROFIBUS and Safety Integrated (via TM54F)	S120	Safety-control	S7-300/400	STEP 7 V5	PROFIBUS	Safety Integrated
› SINAMICS S: Safety-control of a S120 using S7-300/400 (STEP 7 V5) with PROFINET (Shared Device) and Safety Integrated (via PROFIsafe)	S120	Safety-control	S7-300/400	STEP 7 V5	PROFIBUS PROFINET	Safety Integrated

   Individual filters can be reset by clicking the X to the right of the filter. You can reset all filters simultaneously by clicking the "Reset filters" button.
3. The first details of the required application description can then be displayed in a tooltip. To do this, click the appropriate entry in the result list.
   The required tooltip is then displayed in the Siemens Industry Online Support.

Industry Online Support International ▸ Language ▸ Contact ▸ Help ▸ Support Request

› Home › Product Support

Entry type: **Application example**, Entry ID: **29056318**, Entry date: **10/25/2011**

☆☆☆☆☆ (0)
› Rate

SINAMICS S: Safety-control of a S120 using S7-300/400 (STEP 7 V5) with PROFIBUS and Safety Integrated (via PROFIsafe)

Entry | Associated product(s)

Task

Extended safety functions which have been integrated in the SINAMICS S120 drives shall be activated via PROFIsafe with PROFIBUS. Both drives use different safety functions. The F-CPU is responsible for the safetyrelated logical processing of the input signal. The F-CPU acts as F master and as PROFIBUS master.

This functional example is based on the SINAMICS S120 training case (6ZB2480-0BA00) and the SAFETY training case.

This application gives you an example of how you can configure your communications.

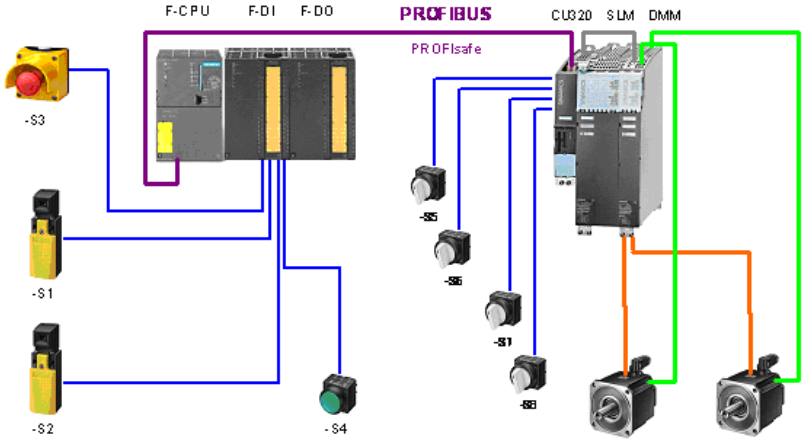

Downloads

Content of downloads	Version	Download

Generally, you can download a detailed application description as PDF via the tooltip.

12.2 Switch on infeed unit via a drive axis

Using this BICO interconnection, a drive object (DO) "X_INF" (= all drive objects "Infeed"; i.e.: A_INF, B_INF, S_INF) can be activated by a "SERVO/VECTOR" drive object. This switch-on version is mainly used for drive units in the "chassis" format if a single Infeed Module and a Motor Module are used.

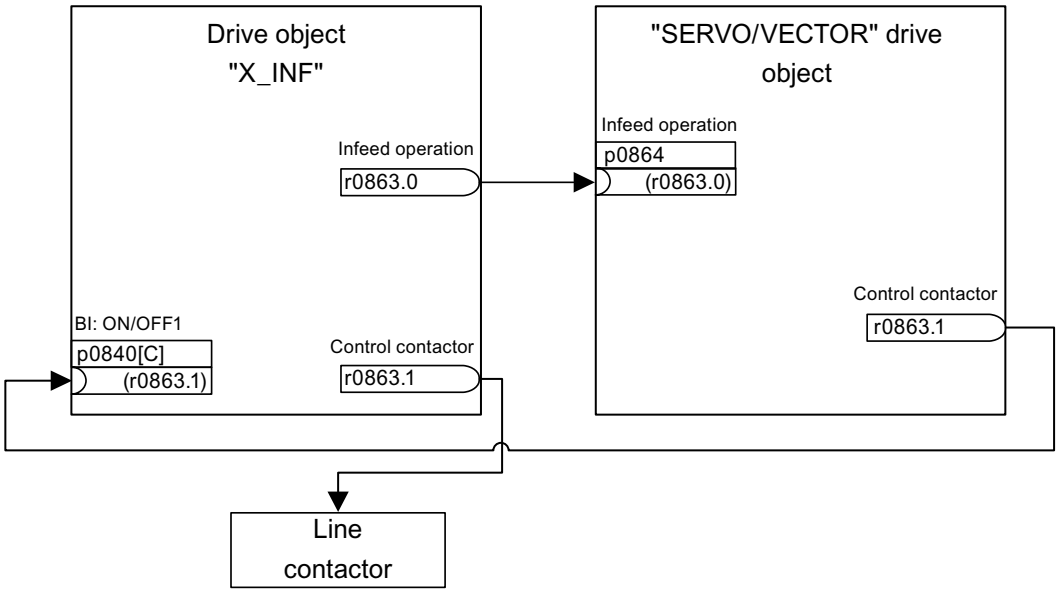

Figure 12-1 BICO interconnection: Switching on an infeed by a drive

If an application requires an automatic restart function (AR), (see Chapter Automatic restart (Page 328)), then the following extended interconnection applies:

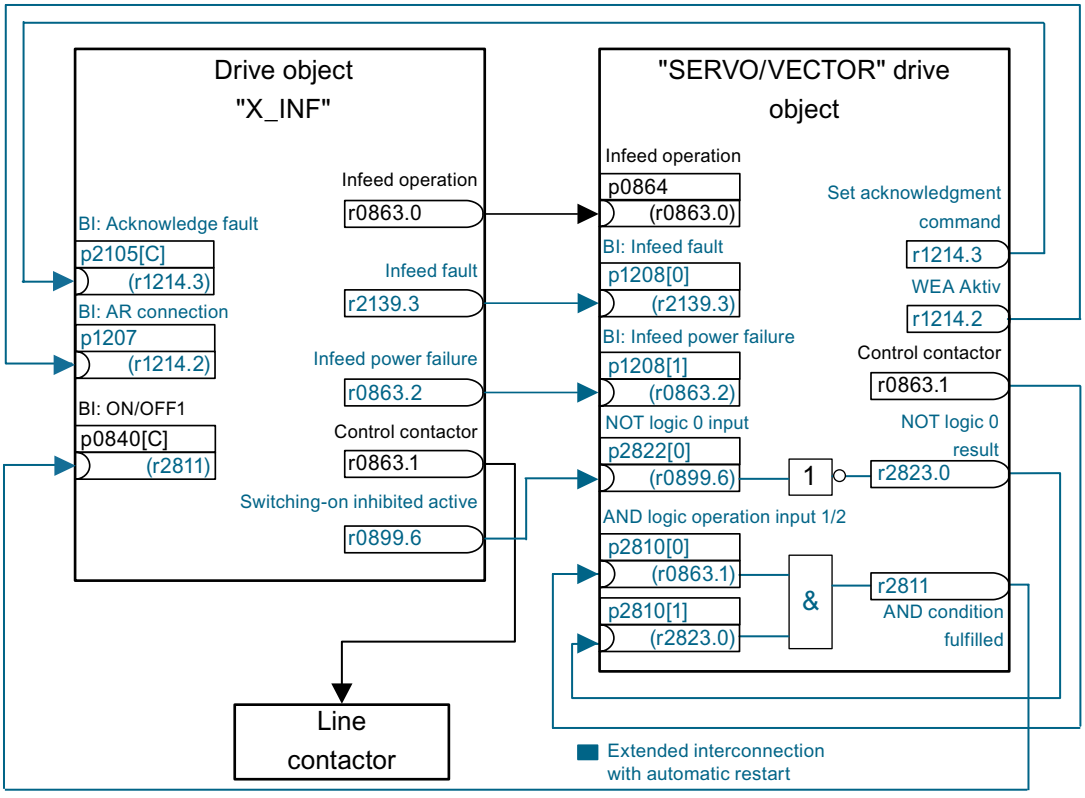

Figure 12-2 BICO interconnection: Switching on an infeed by a drive - in addition with automatic restart

- The "automatic restart" function is only activated on the "SERVO/VECTOR" drive object (p1210).
- In addition to the "AR" function, the following conditions must be fulfilled:
  - The "flying restart" function (p1200) must be activated on the "VECTOR" drive object so that a flying restart can be made.
  - The supply voltage must be reliably available at the Infeed Module (before the switch-on command, an additional line contactor or motor relay must have closed).

Individual steps when restarting:

- After the line supply returns and the electronics has booted, the faults that have occurred at the "SERVO/VECTOR" drive object as a result of its automatic restart are acknowledged depending on the settings in p1210.
- The faults of the X_INF drive object are acknowledged via the BICO connection from r1214.3 to p2105.
- The ON command (p0840) for the Infeed Module is generated via the binector output "control contactor" of the "SERVO/VECTOR" drive object (p0863.1).
  It is AND'ed with the negated binector output "Switching on inhibited" of drive object "X_INF" (r0899.6) so that when the Control Unit restarts (powers up after the 24 V returns), the necessary signal edge is generated.
- The switch-on attempt is interrupted if, during the restart, a fault occurs in the Infeed Module (drive object X_INF).

- A fault in drive object "X_INF" is communicated to the "SERVO/VECTOR" drive object via the BICO connection from p1208.0 to r2139.3 shown above.
- The automatic restart of the X_INF drive object has absolutely no significance for the described switch-on version. It is deactivated for drive object "X_INF".

⚠ WARNING

Unplanned motion when the automatic restart function is active

When the automatic restart is activated, when the line supply returns, unexpected motion can occur that may result in death or serious injury.

- Take the appropriate measures on the plant/system side so that there is no safety risk as a result of an unexpected restart.

Overview of important parameters (see SINAMICS S120/S150 List Manual)

- r0863.0...2 CO/BO: Drive coupling status word / control word
- p0864 BI: Infeed operation
- p0840[0...n] BI: ON/OFF (OFF1)
- r0899.0...15 CO/BO: Status word sequence control
- p1200[0...n] Flying restart operating mode
- p1207 BI: Automatic restart (AR) - connection to the following drive object
- p1208[0...1] BI: Automatic restart modification, infeed
- p1210 Automatic restart mode
- r1214.0...15 CO/BO: Automatic restart status
- p2105[0...n] BI: 3. Acknowledge faults
- r2139.0...15 CO/BO: Status word, faults/alarms 1
- p2810[0...1] BI: AND logic operation inputs
- r2811.0 CO/BO: AND logic operation result
- p2822[0...3] BI: NOT logic operation input
- r2823.0...3 CO/BO: NOT logic operation result

12.3 Control Units without infeed control

To ensure that the drive line-up functions satisfactorily, you must ensure, among other things, that the drives only draw power from the DC link when the infeed is in operation. In a DC link line-up that is controlled by precisely one Control Unit and which includes a drive object X_INF[1)], the BICO interconnection p0864 = p0863.0 is established automatically during commissioning.

[1)] X_INF stands for all drive objects "Infeed"; i.e.: A_INF, B_INF, S_INF

In the following cases, the BICO input p0864 must be supplied manually:

- Smart Line Modules without DRIVE-CLiQ (5 kW and 10 kW)
- DC link line-up with more than one Control Unit

Examples: interconnecting "Infeed ready"

Smart Line Modules without DRIVE-CLiQ (5 kW and 10 kW)

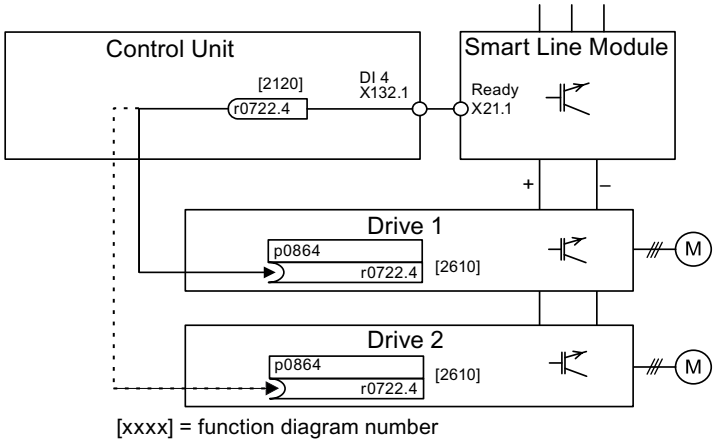

Figure 12-3 Example: interconnecting a Smart Line Module without DRIVE-CLiQ

DC link line-up with several Control Units

In the following example, two Control Units control the drives connected to the same DC link. The source for the "Infeed operation" signal is a digital input in the example.

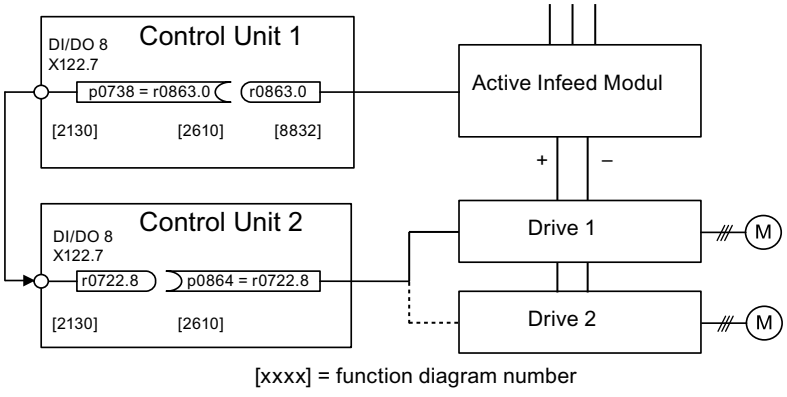

Figure 12-4 Example: interconnection with more than one Control Unit

Overview of important parameters (see SINAMICS S120/S150 List Manual)

- r0722.0...21 CO/BO: CU digital inputs, status
- r0863.0...2 CO/BO: Drive coupling status word / control word
- p0864 BI: Infeed operation

12.4 Quick stop in the event of a power failure or emergency stop (servo)

A drive line-up generally responds when the power fails with an OFF2, even when a Control Supply Module and a Braking Module is being used. This means that the connected motors coast down. The Control Supply Module provides the electronics with power via the supply system or DC link. In this way, controlled movements can be made if a power failure occurs provided that the DC link voltage is still available. The following section describes how all the drives carry out a quick stop (OFF3) if the power fails.

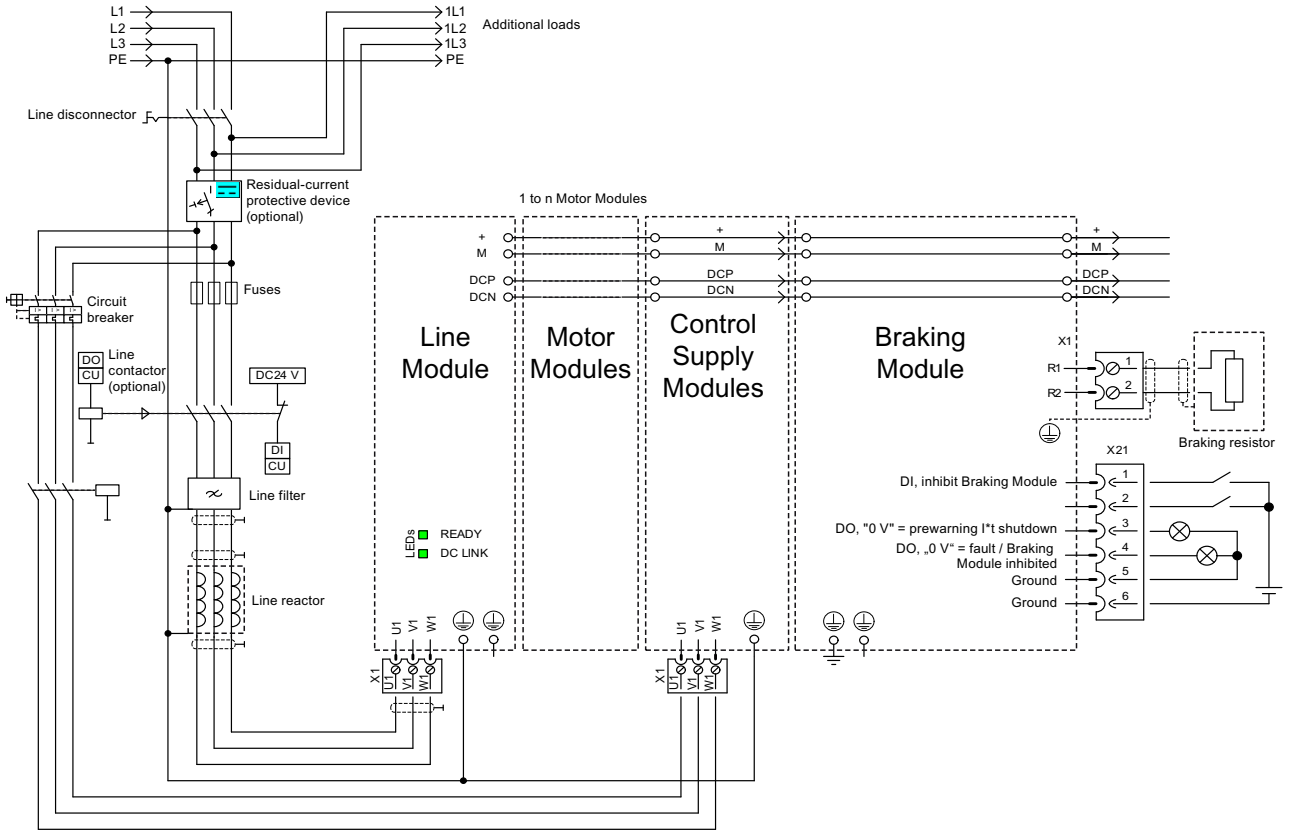

Figure 12-5 Example: interconnection of quick stop due to power failure or emergency off

In addition to the component wiring shown above, each drive object that is to carry out a quick stop if the power fails needs to be parameterized. If parameterization is not carried out, the drive coasts down once a DC link undervoltage has been identified (OFF2). To implement the OFF3 function (quick stop), the following parameters need to be set:

- p1240 = 5 (activates Vdc_min monitoring)
  As well as the DC link monitor, which is always active, this activates another variable alarm threshold, which should be set to a value above the undervoltage shutdown threshold of 360 V ±2 % in p1248.
- p1248 ≤ 570 V (for Active Line Modules)
  p1248 ≤ 510 V (for Smart Line Modules)
  This alarm level (in volts) indicates that the set value has been fallen below. Fault F07403 is triggered when this threshold is reached.

- p2100[x] = 7403
  Here you change the response to fault F07403.
- p2101[x] = 3 (OFF3) response to the fault entered in p2100[x]

12.5 Motor changeover

Description

The motor changeover is used in the following cases, for example:

- Changing over between different motors and encoders
- Changing over different windings in a motor (e.g. star-delta changeover)
- Adapting the motor data

If several motors are operated alternately on a Motor Module, a matching number of drive data sets must be created.

Note

Vector control

For vector control, to switch to a rotating motor the "flying restart (Page 266)" function must be activated (p1200).

Note

When changing over the drive data set between several motors that physically exist with integrated holding brakes, it is not permissible that the internal brake control is used.

Example of a motor changeover for four motors (encoderless)

Requirements

- The first commissioning has been completed.
- 4 motor data sets (MDS), p0130 = 4
- 4 drive data sets (DDS), p0180 = 4
- 4 digital outputs to control the auxiliary contactors
- 4 digital inputs to monitor the auxiliary contactors
- 2 digital inputs for selecting the data set
- 4 auxiliary contactors with auxiliary contacts (1 NO contact)

- 4 motor contactors with positively driven auxiliary contacts (3 NC contacts, 1 NO contact)
- 4 motors, 1 Control Unit, 1 infeed, and 1 Motor Module

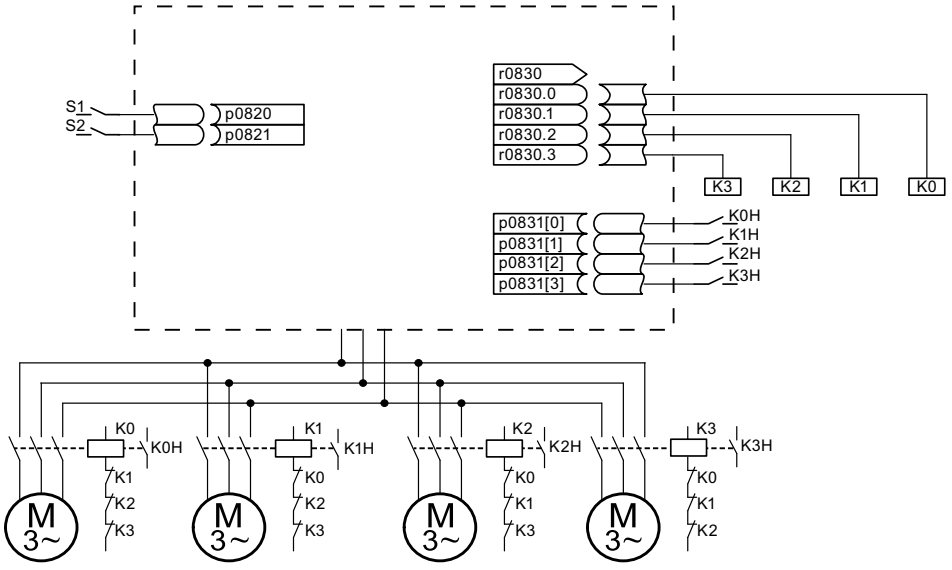

Figure 12-6 Example of motor changeover

Table 12-1 Settings for the example

Parameter	Settings	Remark
p0130	4	Configure four MDS.
p0180	4	Configure four DDS.
p0186[0...3]	0, 1, 2, 3	The MDS are assigned to the DDS.
p0820, p0821	Digital inputs DDS selection	The digital inputs for motor changeover via DDS selection are selected. Binary coding is used (p0820 = bit 0, etc.).
p0822 to p0824	0	
p0826[0...3]	0, 1, 2, 3	Different numbers indicate a different thermal model.
p0827[0...3]	0, 1, 2, 3	Assigning the bit from r0830 to the MDS. If p0827[0] = 1, for example, bit p0830.1 is set when MDS0 is selected via DDS0.
r0830.0 to r0830.3	Digital outputs, contactors	The digital outputs for the contactors are assigned to the bits.
p0831[0...3]	Digital inputs, auxiliary contacts	The digital inputs for the feedback signal of the motor contactors are assigned.
p0833.0..2	0, 0, 0	The drive controls the contactor circuit and pulse inhibition. Parking bit (Gn_ZSW14) is set.

Procedure for changeover between motor data sets

1. Start condition:
   For synchronous motors, the actual speed must be lower than the speed at the start of field weakening. This prevents the regenerative voltage from exceeding the terminal voltage.
2. Pulse inhibit:
   The pulses are inhibited after a new drive data set is selected with p0820 to p0824.

3. Open the motor contactor:
   Motor contactor 1 is opened (r0830 = 0) and the status bit "Motor changeover active" (r0835.0) is set.
4. Change over the drive data set:
   The requested data set is activated (r0051 = requested data set).
5. Energize the motor contactor:
   After the feedback signal (motor contactor opened) for motor contactor 1, the appropriate bit of r0830 is set and motor contactor 2 is energized.
6. Enable the pulses:
   After the feedback signal (motor contactor closed) for motor contactor 2, the bit "motor changeover active" (r0835.0) is reset and the pulses are enabled. The motor has now been changed over.

Example of a star-delta changeover (via speed threshold; encoderless)

Requirements

- The first commissioning has been completed.
- 2 motor data sets (MDS), p0130 = 2
- 2 drive data sets (DDS), p0180 = 2
- 2 digital outputs to control the auxiliary contactors
- 2 digital inputs to monitor the auxiliary contactors
- 1 free speed monitoring (p2155)
- 2 auxiliary contactors with auxiliary contacts (1 NO contact)
- 2 motor contactors with positively driven auxiliary contacts (1 NC contact, 1 NO contact)
- 1 motor, 1 Control Unit, 1 infeed, and 1 Motor Module

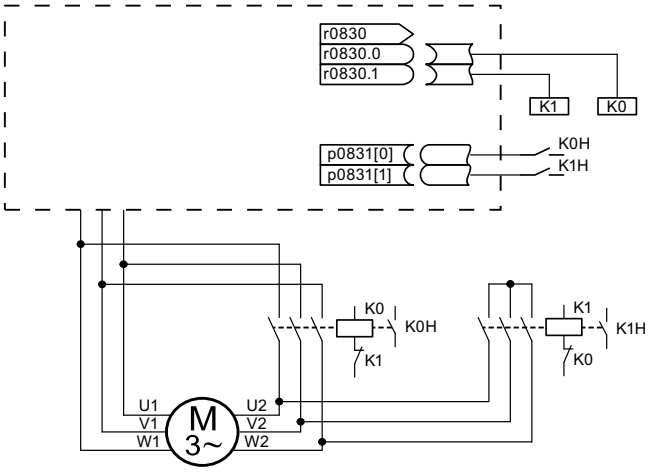

Figure 12-7 Example: star-delta changeover

Table 12-2 Settings for the example

Parameter	Settings	Remark
p0130	2	Configure two MDS.
p0180	2	Configure two DDS.
p0186[0...1]	0, 1	The MDS are assigned to the DDS.
p0820	p2197.2	Changeover to delta connection after speed in p2155 is exceeded.
p0821 to p0824 0	0	
p0826[0...1]	0; 0	Identical numbers signify the same thermal model.
p0827[0...1]	0, 1	Assigning the bit from r0830 to the MDS. If p0827[0] = 1, for example, bit r0830.1 is set when MDS0 is selected via DDS0.
r0830.0 and r0830.1	Digital outputs, contactors	The digital outputs for the contactors are assigned to the bits.
p0831[0...1]	Digital inputs, auxiliary contacts	The digital inputs for the feedback signal of the motor contactors are assigned.
p0833.0..2	0, 0, 0	The drive controls the contactor circuit and pulse inhibition. Parking bit (Gn_ZSW14) is set.
p2155.0...1	Changeover speed	Sets the speed at which the circuit is to be changed over to the delta connection. **Note:** Using p2140, you can define an additional hysteresis for the changeover (refer to function diagram 8010 in the SINAMICS S120/150 List Manual).

Procedure for star-delta changeover

1. Start condition:
   For synchronous motors, the actual speed must be lower than the star field-weakening speed. This prevents the regenerative voltage from exceeding the terminal voltage.
2. Pulse inhibit:
   The pulses are suppressed after the changeover speed (p2155) is reached.
3. Open the motor contactor:
   Motor contactor 1 is opened (r0830 = 0) and the status bit "Motor data set changeover active" (r0835.0) is set.
4. Change over the drive data set:
   The requested data set is activated (r0051 = requested data set).
5. Energize the motor contactor:
   After the feedback signal (motor contactor opened) for motor contactor 1, the appropriate bit of r0830 is set and motor contactor 2 is energized.
6. Enable the pulses:
   After the feedback signal (motor contactor closed) for motor contactor 2, the bit "motor changeover active" (r0835.0) is reset and the pulses are enabled. The changeover is complete.

Function diagrams (see SINAMICS S120/S150 List Manual)

- 8565 Data sets - Drive Data Sets (DDS)
- 8570 Data sets - Encoder Data Sets (EDS)
- 8575 Data sets - Motor Data Sets (MDS)

Overview of important parameters (see SINAMICS S120/S150 List Manual)

- r0051[0...4] CO/BO: Drive data set DDS effective
- p0130 Motor data sets (MDS) number
- p0140 Encoder data sets (EDS) number
- p0180 Drive data set (DDS) number
- p0186 [0...n] Motor data set (MDS) number
- p0187[0...n] Encoder 1 encoder data set number
- p0188[0...n] Encoder 2 encoder data set number
- p0189[0...n] Encoder 3 encoder data set number
- p0820[0...n] BI: Drive data set selection DDS, bit 0

...

- p0824[0...n] BI: Drive data set selection DDS, bit 4
- p0826 [0...n] Motor changeover, motor number
- p0827 [0...n] Motor changeover status word bit number
- p0828 [0...n] BI: Motor changeover feedback
- r0830.0...15 CO/BO: Motor changeover status word
- p0831[0...15] BI: Motor changeover contactor feedback
- p0833 Data set changeover configuration

12.6 Application examples with DMC20

The DRIVE-CLiQ Hub Module Cabinet 20 (DMC20/DME20) is used for the star-shaped distribution of a DRIVE-CLiQ line. With the DMC20, an axis grouping can be expanded with five DRIVE-CLiQ sockets for additional subgroups.

The component is especially suitable for applications which require DRIVE-CLiQ nodes to be removed in groups, without interrupting the DRIVE-CLiQ line and, therefore, the data exchange process.

DME20

DME20 offers the same functions as the DMC20. However, the difference is that it has a different enclosure with degree of protection IP67 for mounting outside a control cabinet.

Features

The DRIVE-CLiQ Hub Module Cabinet 20 (DMC20) has the following features:

- Own drive object
- Six DRIVE-CLiQ ports
- Own faults and alarms

Typical applications:

- Implementation of a distributed topology via a DRIVE-CLiQ cable
- Hot-plugging (a DRIVE-CLiQ connection is withdrawn in operation)

Example: Distributed structure

Several direct length measuring systems are used in a machine. These are to be combined in a control cabinet and connected to the Control Unit via a DRIVE-CLiQ cable.

When a DMC20 is used, up to five measuring systems can be combined.

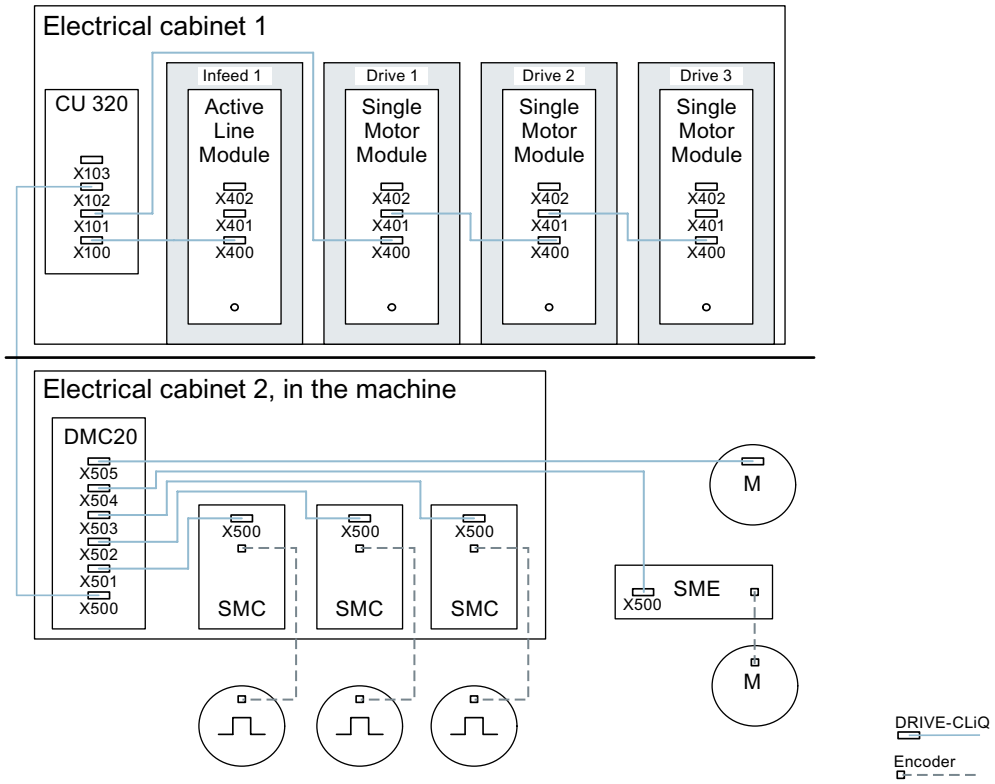

Figure 12-8 Example, distributed topology using DMC20

Example: Hot-plugging

Using the hot-plugging function, components can be withdrawn from the operational drive line-up (the other components continue to operate) on the DRIVE-CLiQ line. This means that all of the drive objects or components involved must first be deactivated/parked using parameter p0105 or STW2.7.

The following requirements must be satisfied:

Hot-plugging only functions when a drive object is connected in a star configuration to a Control Unit or to the DRIVE-CLiQ Hub DMC20/DME20.

The system does not support removing DRIVE-CLiQ connections between the other DRIVE-CLiQ components, e.g. Sensor/Terminal Module to Motor Module, Motor Module to Motor Module.

The complete drive object (Motor Module, motor encoder, Sensor Module) is disabled via p0105.
STW2.7 is used to set the function "Park axis" for all components that are assigned to the motor control (Motor Module, motor encoders). All components that belong to Encoder_2 or

Encoder_3 remain active. The "Park axis" function is only enabled by setting the ZSW2.7 bit in combination with pulse inhibit.

Note

Drives with enabled Safety functions must not be deactivated, see Section "Safety Integrated" for further details.

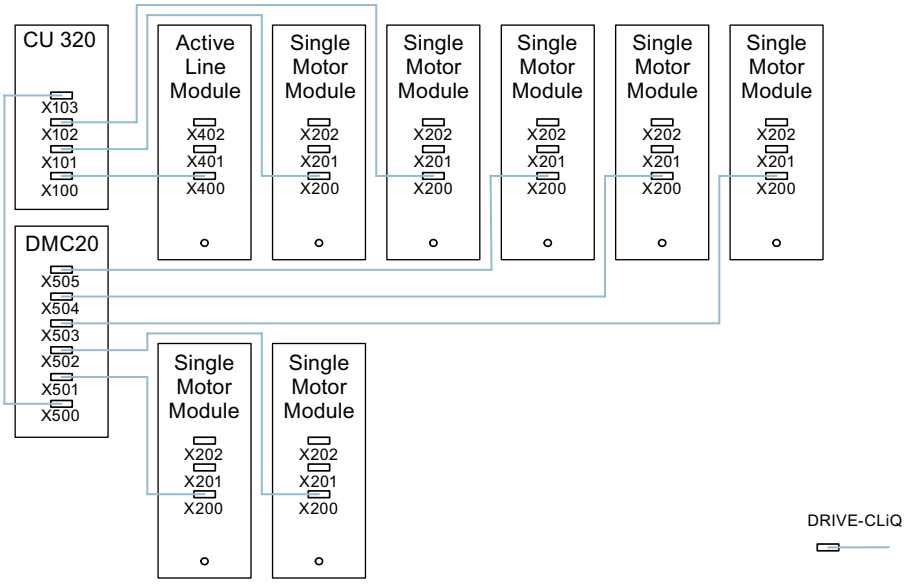

Figure 12-9 Example topology for hot-plugging for vector V/f control

Note

In order to disconnect and isolate the power unit from the DC link, additional measures must be applied - such as DC link wiring through the DC link infeed adapter and DC link disconnecting devices. The safety information and instructions in the Equipment Manual must be carefully observed.

Instructions for offline commissioning with STARTER

With automatic online configuration in STARTER, the DMC20 is detected and integrated in the topology. The following steps must be taken to commission offline:

1. Configure the offline drive device.
2. Right-click "Topology" in the project navigator and call the "Add new object > DRIVE-CLiQ hub" context menu.
3. Configure the topology.

Overview of important parameters (see SINAMICS S120/S150 List Manual)

- p0105 Activate/deactivate drive object
- r0106 Drive object active/inactive
- p0151[0...1] DRIVE-CLiQ Hub Module component number
- p0154 DRIVE-CLiQ Hub Module detection via LED
- r0157 DRIVE-CLiQ Hub Module EEPROM data version
- r0158 DRIVE-CLiQ Hub Module firmware version
- r0896.0 BO: Parking axis status word
- p0897 BI: Parking axis selection

12.7 DCC and DCB extension applications

You can find further application examples, such as applications with DCC, on the Siemens homepage.

Finding and calling application examples

1. Call the following Internet site in your browser:
   SINAMICS application examples (https://www.automation.siemens.com/mc-app/sinamics-application-examples/Home/Index?language=en)
2. If you are looking for applications with DCC, select the "DCC" feature in the search mask.
   All the DCC applications for which you can download application examples are then shown in the results.
   Example:

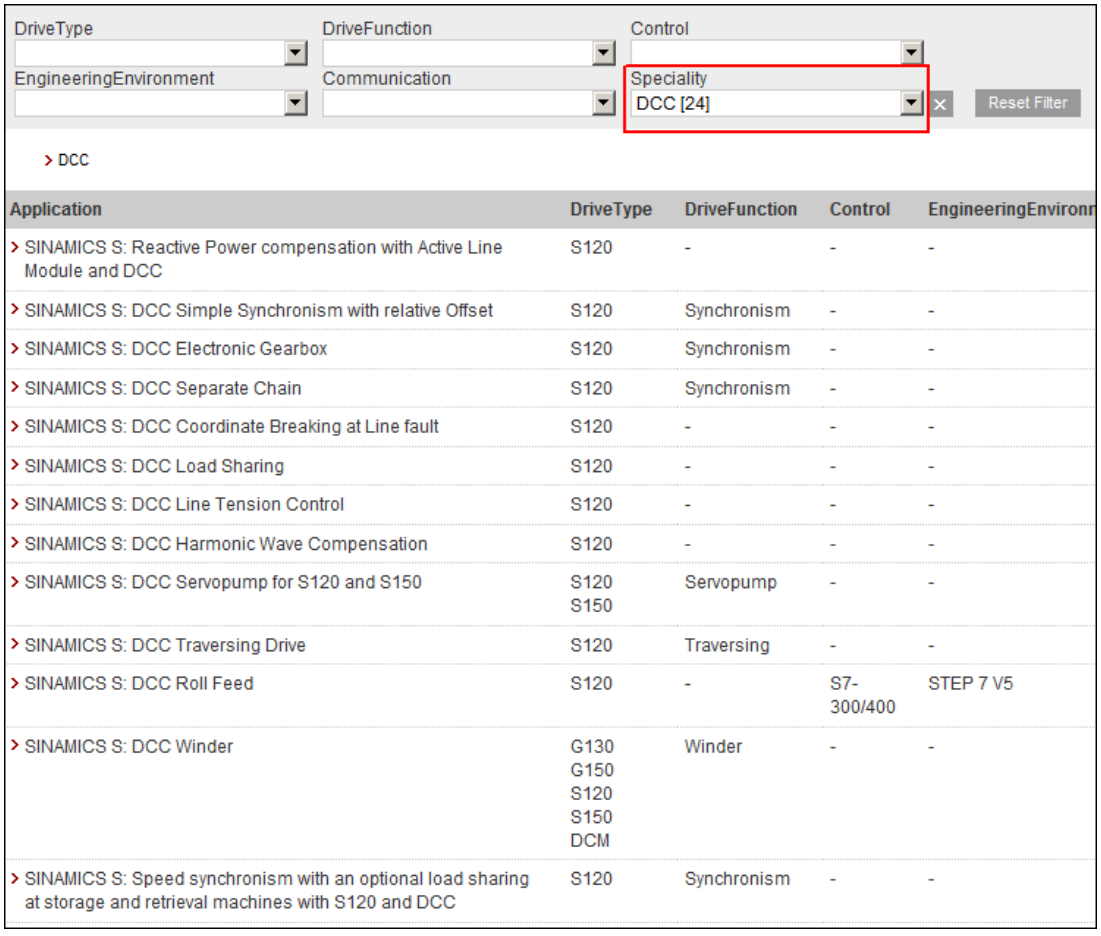

Application	DriveType	DriveFunction	Control	EngineeringEnvironr
> SINAMICS S: Reactive Power compensation with Active Line Module and DCC	S120	-	-	-
> SINAMICS S: DCC Simple Synchronism with relative Offset	S120	Synchronism	-	-
> SINAMICS S: DCC Electronic Gearbox	S120	Synchronism	-	-
> SINAMICS S: DCC Separate Chain	S120	Synchronism	-	-
> SINAMICS S: DCC Coordinate Breaking at Line fault	S120	-	-	-
> SINAMICS S: DCC Load Sharing	S120	-	-	-
> SINAMICS S: DCC Line Tension Control	S120	-	-	-
> SINAMICS S: DCC Harmonic Wave Compensation	S120	-	-	-
> SINAMICS S: DCC Servopump for S120 and S150	S120 S150	Servopump	-	-
> SINAMICS S: DCC Traversing Drive	S120	Traversing	-	-
> SINAMICS S: DCC Roll Feed	S120	-	S7-300/400	STEP 7 V5
> SINAMICS S: DCC Winder	G130 G150 S120 S150 DCM	Winder	-	-
> SINAMICS S: Speed synchronism with an optional load sharing at storage and retrieval machines with S120 and DCC	S120	Synchronism	-	-

Figure 12-10 Overview of the DCC applications with application descriptions

3. Click the required DCC application.
   A tooltip on the required DCC application is then displayed in the Siemens Industry Online Support. Generally, you can download a detailed application description as PDF via the tooltip.

Example: Synchronous operation applications with DCC

You require the "Synchronous operation" drive function and the "DCC" feature as filter settings.

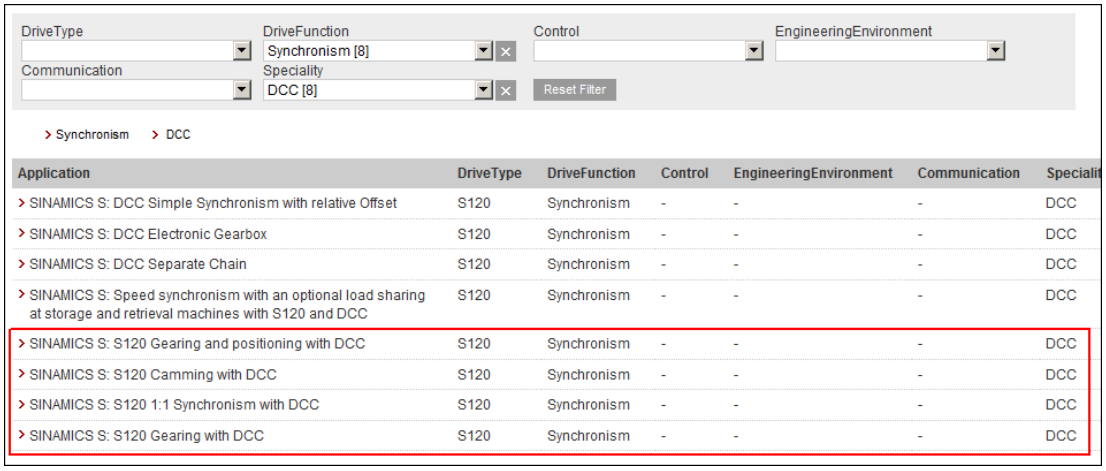

Application	DriveType	DriveFunction	Control	EngineeringEnvironment	Communication	Specialit
SINAMICS S: DCC Simple Synchronism with relative Offset	S120	Synchronism	-	-	-	DCC
SINAMICS S: DCC Electronic Gearbox	S120	Synchronism	-	-	-	DCC
SINAMICS S: DCC Separate Chain	S120	Synchronism	-	-	-	DCC
SINAMICS S: Speed synchronism with an optional load sharing at storage and retrieval machines with S120 and DCC	S120	Synchronism	-	-	-	DCC
SINAMICS S: S120 Gearing and positioning with DCC	S120	Synchronism	-	-	-	DCC
SINAMICS S: S120 Camming with DCC	S120	Synchronism	-	-	-	DCC
SINAMICS S: S120 1:1 Synchronism with DCC	S120	Synchronism	-	-	-	DCC
SINAMICS S: S120 Gearing with DCC	S120	Synchronism	-	-	-	DCC

Figure 12-11 The most important synchronous operation application examples are marked in red in the figure.

Web server

13

13.1 Overview

The web server provides information on a SINAMICS device via its web pages. The server is accessed using an Internet browser (see Chapter "Supported browsers (Page 716)").

The most important functions of the web server are described below.

Note

The display areas "Files", "User Area Configuration" and "User Area" are addressed in detail in separate documentation (see “User-Defined Websites”). For this reason, this manual does not contain a description of these display areas.

Note

Total memory size of user files

The sum of the data stored via the web server must not exceed the total memory size of 100 MB. The total memory size of the stored data influences the backup times. The larger the data quantity, the longer the backup takes.

Configuration

The web server is configured either through the web server itself (see Chapter "System settings (Page 756)") or using the Startdrive commissioning tool. The web server is active by default in the factory setting of the converter.

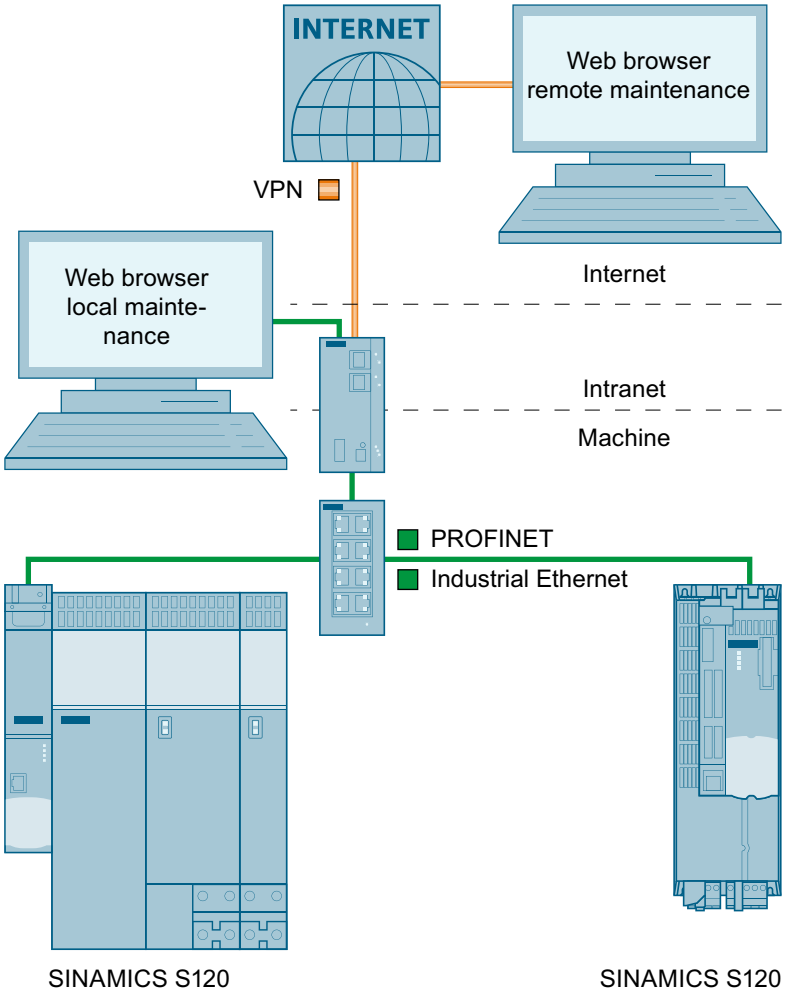

Figure 13-1 Web server structure

Additional information

Additional information regarding configuring the web server in the Startdrive commissioning tool is provided in the SINAMICS S120 Commissioning Manual with Startdrive.

Data transfer

In addition to unsecured transmission using the HTTP protocol, the web server also supports secure transmission using the HTTPS protocol. By inputting the appropriate address, you can decide yourself whether unsecured or secure transmission is used to access the data.

Access rights

The normal protection mechanisms of SINAMICS apply for the web server, including password protection. Further protective mechanisms have been implemented especially for the web server.

Different access options have been set for the defined users "Administrator" and "SINAMICS", depending on the function. An "Administrator" user is intended for commissioning, as he can create and change parameter lists based on his access rights. A "SINAMICS" user is intended for diagnostic tasks as he can view and adapt parameters in the parameter lists based on the access rights assigned as default.

13.2 Fundamentals

13.2.1 Supported browsers

Overview

You can display the content of the web server either on a PC/laptop screen, a tablet PC or a smart phone.

List of supported browsers

The web server integrated in the SINAMICS S120 converter supports the following browsers:

Commissioning device	Operating system	Supported browsers
PC	Windows (from Version 7)	• Microsoft Internet Explorer (Version 11) • Microsoft Edge (Version 14) • Mozilla Firefox (Version 62) • Google Chrome (Version 69)
	Note: We recommend the use of Windows 10, version 1803, dated April 2018 or later.	**Note:** We recommend the use of Google Chrome in the supported version 69.
Tablet / smartphone	Apple iOS (from Version 12.0)	• Google Chrome (Version 69) • Safari (Version 12.0)
	Android (from Version 4.4.4)	• Google Chrome (Version 69)

If the web server does not respond, or if buttons are inactive or are not labeled, although the converter is not fully utilized with internal calculations, load the web server page again as follows:

- With the PC via <F5>
- With the smart phone or tablet via 

13.2.2 Accessing the web server

For access to the web server, the following interfaces are available on the converter:

- Service interface X127 (standard)
- PROFINET interface X150

13.2.2.1 Access via service interface X127

The web server is accessed per default via the service interface X127. The service interface has the following default setting:

- IP address: 169.254.11.22
- Subnet mask: 255.255.0.0
- Accessing the web server
  Access via the service interface is activated as default setting in the web server.
- Communication
  Communication is performed in the factory setting via an HTTP connection.

NOTICE
Software manipulation when using non-encrypted connections (HTTP) The HTTP protocol transfers data without encryption. This facilitates password theft, for example, and can lead to data manipulation by unauthorized parties and thus ultimately to damage. • Limit access to HTTPS connections so that all data is transferred in encrypted form.

Interface X127 can also be connected to an external WLAN access point, and from this an IP address can be sourced via DHCP. This is just a temporary situation, and is only used for commissioning and/or diagnostics with mobile devices. The subsequently described security notes must be carefully observed when doing this.

Additional notes when using interface X127

Note

Ethernet interface X127 is intended for commissioning and diagnostics, which means that it must always be accessible (e.g. for service).

Furthermore, the following restrictions apply to X127:

- Only local access is permissible.
- No networking - or only local networking is permissible in a locked control cabinet.

If it is necessary to remotely access the electrical cabinet, then additional security measures must be applied so that misuse through sabotage, data manipulation by unqualified persons and intercepting confidential data is completely ruled out (also see "Industrial security (Page 27)").

13.2.2.2 Access via PROFINET interface X150

Alternatively, you can access the web server via PROFINET interface X150.

Note

It is not permissible that the IP addresses of the service and PROFINET interfaces are in the same subnet (see Chapter "Access via service interface X127 (Page 717)")

PROFINET interface X150 is preset as follows:

- Accessing the web server
  Access via the PROFINET interface is deactivated as default setting in the web server.
- Communication
  Communication via the PROFINET interface is always established via the secure HTTPS connection.

Note

Security measures for communication via PROFINET

In accordance with the Defense in Depth concept, PROFINET must be isolated from the remaining plant or system network (see Industrial security (Page 27)). Access to cables and possibly open connections must be implemented in a protected fashion, such as in a control cabinet.

13.2.2.3 Preparations

1. Connect the converter to your commissioning device (PG/PC, tablet or smartphone) via service interface X127.
2. Switch the converter on.
   The converter starts up.
3. Start the browser in your commissioning device.
4. Enter the standard IP address (169.254.11.22) of the converter in the input line of your browser.

13.2.2.4 Interfaces and connection type

Using the default configuration of the web server, you can access the SINAMICS frequency converter using the service interface X127, both via an HTTP connection as well as via an encrypted HTTPS connection.

In the standard configuration, interface X150 is deactivated for web server access operations, and can be activated using parameter p8984[1] If interface X150 is activated for access to the web server, then as default setting, access can only be established via a secure HTTPS connection (see Chapter "Configuring the IP connection (Page 759)").

Parameter p8984[1] is a BICO parameter. This means that interface X150 can also be activated for web server access via a key-operated switch.

NOTICE
Software manipulation when using non-encrypted connections (HTTP) The HTTP protocol transfers data without encryption. This facilitates password theft, for example, and can lead to data manipulation by unauthorized parties and thus to damage. • Limit access to HTTPS connections so that all data is transferred in encrypted form.

13.2.3 Access protection

The complete access protection in the web server comprises the following components:

- Access protection in the web server
  Access to the converter is possible via 2 defined users with different access rights ("Administrator" and "SINAMICS") in the web server (see Chapter "Users and access rights (Page 720)").
  It is recommended to use a secure password for both logins.
- Access protection for parameter lists
  Access rights to parameter lists in the web server are defined or changed by the "Administrator" user (see Chapter "Creating a parameter list (Page 747)" and "Changing the list properties (Page 750)").

Note

SINAMICS write and know-how protection

SINAMICS write and/or know-how protection, set using the commissioning tool STARTER or Startdrive, is also effective for access via the web server. These protective measures **cannot** be configured or deactivated in the web server.

If know-how protection is set, then no values are displayed in the parameter list of the web server; instead, a note referring to the fact that know-how protection is activated.

Additional information

- A description of SINAMICS write protection is provided in Chapter "Write protection (Page 805)".
- A description of SINAMICS know-how protection is provided in Chapter "Know-how protection (Page 808)".

Summary

The most effective access protection is a combination of the aforementioned safety mechanisms.

13.2.4 Users and access rights

Access to the converter is possible via 2 defined users in the web server.

- Administrator

Access rights	The "Administrator" user has full access to the converter data displayed in the web server.
Password	For access to the converter, assigning an administrator password is absolutely necessary (see Chapter "Assigning the administrator password (Page 722)").

- SINAMICS

Access rights	The "SINAMICS" user has restricted access rights in the default settings of the web server.
Password	By default, a password is not assigned for the SINAMICS user. We recommend that a password is assigned to avoid access by unauthorized persons.

Note

Configuring passwords for the users

You can configure the passwords of the users "Administrator" and "SINAMICS" in the system settings of the web server with administrator rights (see Chapter "Setting or changing user accounts (Page 756)").

The table below gives you an overview of the access rights assigned in the default settings of the web server.

Functions of the web server	Access rights	
	Administrator	SINAMICS
Home page		
• Password input	Write	Write
Diagnostics		
• Display communication settings	Write	Write
• Adapt message list	Write	Write
• Acknowledge alarms	Write	Write
Settings		
• Adapt parameter list	Write	Write
• Change parameterization	Write	Read
Backup and restore		
• Back up parameter settings externally	Write	None[1)]
• Load externally backed-up parameter settings	Write	None[1)]
• Restoring factory settings	Write	None[1)]
Adapt system settings		
• Set user accounts	Write	None[1)]
• Configure IP connection	Write	None[1)]
Performing a firmware update	Write	None[1)]

Functions of the web server	Access rights	
	Administrator	SINAMICS
Save permanently (copy RAM to ROM)	Write	Write
Call support information	Read	Read

1) This function is reserved for the "Administrator" user and is not displayed for a "SINAMICS" user.

13.2.5 Dialog screen forms in the web server

You make most of the important converter settings in the dialog screen forms of the web server. The web pages are as follows:

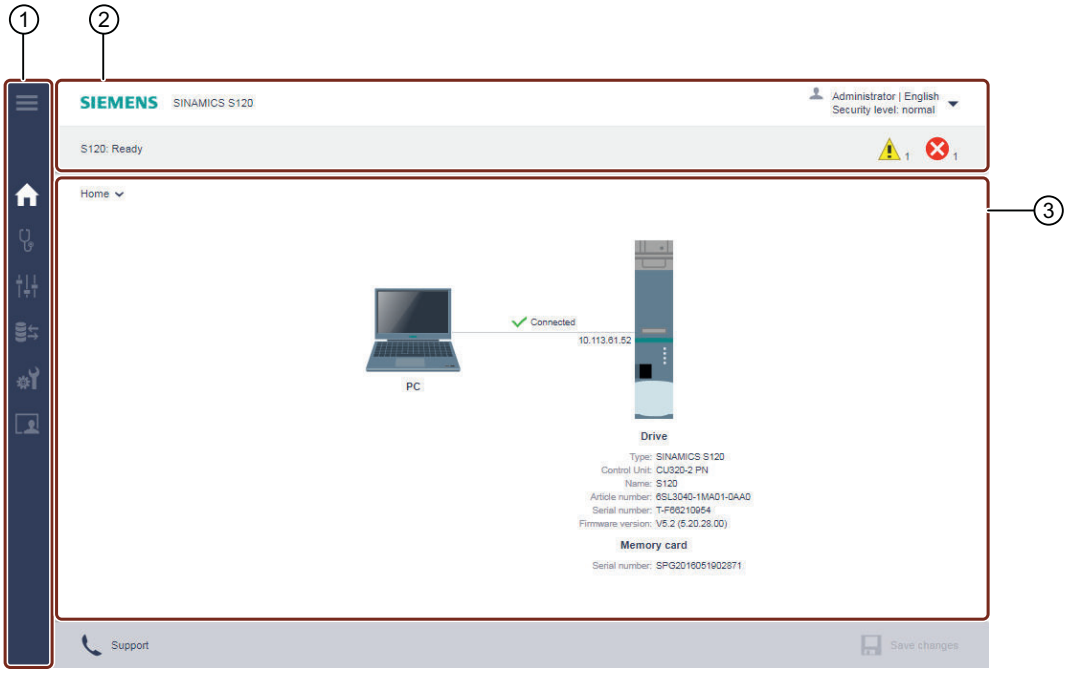

① Navigation bar

② Status bar

- Top: Device designation, drop-down list for the language selection and to log out, display of the security level
- Bottom: Name of the converter (if entered), status of the converter, fault and warning messages

③ Main window (depending on navigation)

Figure 13-2 Example of a dialog screen

In some cases, you must make the parameter settings or read out values which can only be found in the parameter list of the converter. You can find more information in Chapter "Creating and adjusting the parameter list (Page 747)"

13.2.6 Changing parameter values

The parameters are subdivided into adjustable parameters and display parameters.

Individual parameters in the parameter list are shown in precisely the same way as in the dialog screen forms. More information about adapting the parameter list is provided in Chapter "Creating and adjusting the parameter list (Page 747)".

Adjustable parameters

Adjustable parameters are identified by a frame in which you can either enter values or select values via a drop-down list. Invalid values have a red background and cannot be added to the parameter list.

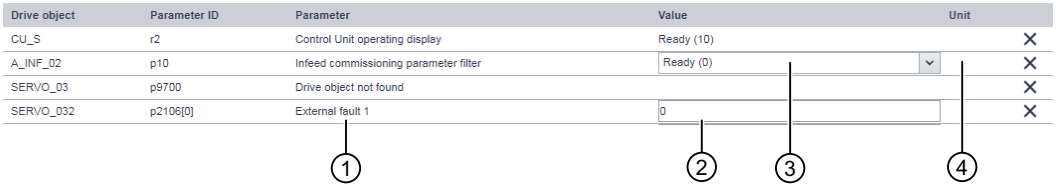

① Name of the parameter
② Input field for the parameter value
③ Select the parameter value via the drop-down menu
④ Unit of the parameter

Figure 13-3 Example: Presentation of an adjustable parameter

Display parameters

Display parameters are for information purposes only and cannot be changed.



① Display parameters with this icon have several indices or bit arrays

Figure 13-4 Example of the representation of a display parameter

13.2.7 Assigning the administrator password

When logging onto the converter for the first time you must assign the administrator password.

Assigning the administrator password

You must log in as administrator to obtain complete access to the converter. A password is required for access as administrator.

Note

Remember the password or store it in a secure place that cannot be accessed by unauthorized persons.

If the password is lost, then you must reset the converter to the factory settings (see Chapter "Password forgotten (Page 758)").

Procedure

Proceed as follows to assign an administrator password:

1. Switch the converter on.
2. Connect the commissioning device (PG/PC, tablet or smartphone) to service interface X127 on the converter using a LAN cable.

   Note

   Observe the time window for password assignment

   Assign the password within 10 minutes after connecting the commissioning device (PG/PC) with service interface X127 on the converter. If a password is not assigned within this time window, the display automatically switches to the login screen of the Webserver. To have the “Define Administrator” screen displayed again, unplug the LAN cable from service interface X127 and then reconnect it to the service interface.

3. Open the browser in your commissioning device and call up the web server of the converter using the standard IP address (e.g. https://169.254.11.22).

Note

Standard IP address changed

If you have changed the standard IP address (169.254.11.22) for accessing the web server in the converter, then enter the address that you have specified instead of the standard IP address.

If you have not assigned a password, the following screen is shown.

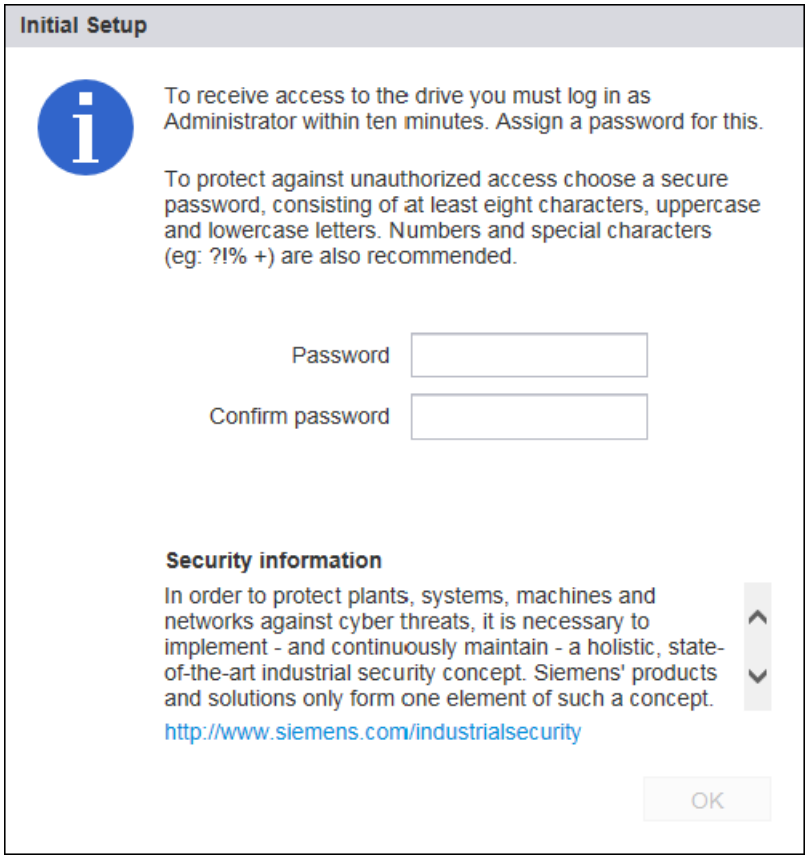

Figure 13-5 Prompt to enter the administrator password

4. Enter an administrator password in the "Password" field.

   Note
   Secure passwords

   To protect against unauthorized access, by an attacker, for example, select a secure password that consists of:

   - At least 8 characters
   - Uppercase and lowercase letters
   - Numbers and special characters (e.g.: ?!%+ ...)

   It is not permissible that the password is used elsewhere.

   Note
   Checking passwords

   When passwords are entered, the converter checks only their length. No check is carried out for special characters or uppercase/lowercase letters!

5. Repeat the password in the "Confirm password" field.
   If the input is not identical in both fields, the "OK" button is not enabled.
6. Confirm the password that you entered with "OK".
7. The display changes to the Login screen form. Log in there with the administrator password (see Chapter “Login/logout (Page 725)“).

Resetting the administrator password

Without the administrator password, you are locked out of accessing SINAMICS data and functions in the web server. In order to assign a new administrator password, proceed as described in the "Password forgotten (Page 758)" chapter.

13.2.8 Login/logout

In order to be able to work with the web server, you must be logged in as "SINAMICS" or "Administrator" user.

For commissioning, you must be logged in as "administrator".

Logging in to the web server

1. Enter the IP address for the converter in the entry line of your browser (default IP address: 169.254.11.22).
   The password prompt appears in the browser.

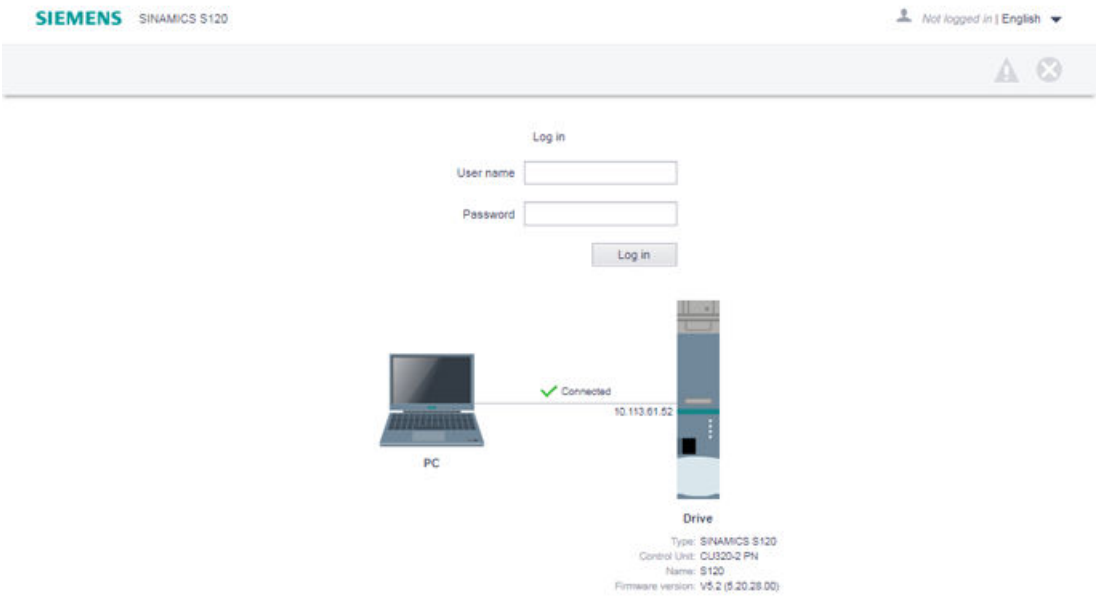

Figure 13-6 Login screen

2. Enter the name of the user (Administrator or SINAMICS) in the "User name" field.
3. Then enter the password of the user.
   Per default, a password is not assigned for the "SINAMICS" user. In this case, you can skip the password input.
4. Click "Login".
   When you have successfully logged in, the browser displays the user name at the top right. The most important elements of your drive system are shown centrally in the view.

Logging out from the web server

1. In the window, click the icon with the user name at the top right.
2. Click "Logout".
   If have changed the converter settings, a save prompt appears. You can select here whether to save or discard the changes.

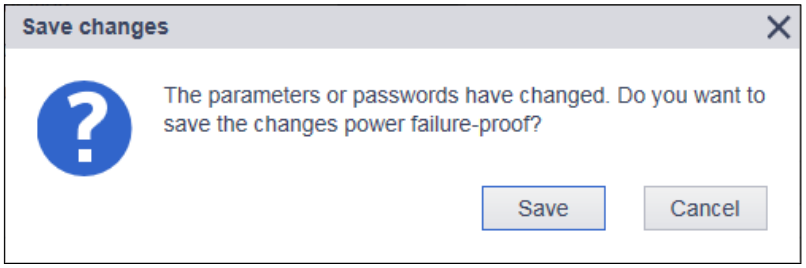

Figure 13-7 Save prompt when logging out

3. If you want to save the changes, click "Save changes".

Automatic logout

If you are not using the web server, access to the web server is automatically logged out after 10 minutes. You must log in again to access the web server.

Any changes that you made are not lost when automatically logging out. After logging in again, you have the option of opening a memory dialog via (see Chapter “Saving data in a non-volatile fashion (Page 730)”).

13.2.9 Layout of the start page

After you have logged in, the web server will display the following start page:



① Navigation bar

② Status bar

- Top: Device designation, drop-down list for the language selection and to log out, display of the security level
- Bottom: Name of the converter (if entered), status of the converter, fault and warning messages

③ Main window (depending on navigation)

④ Action bar:

- Support information
- Saving changes retentively (RAM to ROM)

Figure 13-8 Basic structure of the web server

13.2.9.1 Navigation

The web server provides the following options for navigating:

- Multi-level navigation bar of the web server
- In the active web server view via drop-down lists

Navigation via the navigation bar	Navigation via drop-down lists (drop-down menus)
The navigation bar of the web server has a multi-level structure.	Alternatively, the screen forms can also be called in the active view of the web server via drop-down lists. This also allows easy navigation in small displays (e.g. smartphone).
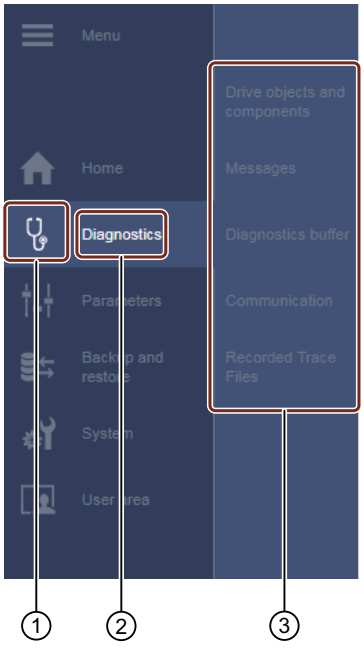	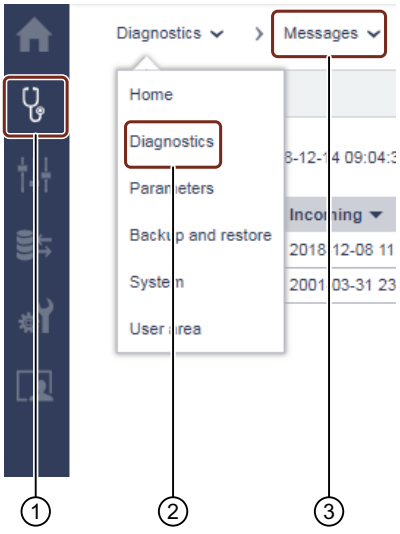

① Main menu as icon
② Main menu in text format
③ Submenus of the active main menu

13.2.9.2 Calling Support information

Using the footer of the web server, you can call up the support addresses for SINAMICS S120.

1. Click "Support" in the footer of the web server.
   The following information is shown:



Figure 13-9 Support addresses

   You can use the links to open or copy the desired support addresses.

2. Click "OK" in order to close the "Support" dialog.

13.2.9.3 Saving data in a non-volatile fashion

Changed settings are saved in the volatile memory of the converter, and retained when the web server is closed. The settings are lost when the drive is switched off.

For this reason, it is important that you store the changes regularly in a power-independent manner (also known as "Copy RAM to ROM"). You can either save the setting for each individual commissioning step or save all the settings made and the tuning results at the end of the commissioning.

1. To save powerfail-proof, click in the footer of the web server.
   A save prompt appears:

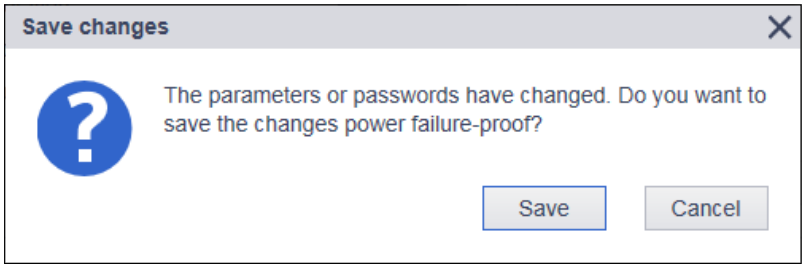

Figure 13-10 Permanent saving prompt

2. Click "Save".
   You have now saved the data in power-independent memory.

13.2.10 Certificates for the secure data transfer

13.2.10.1 Overview

The "Transport Layer Security" (TLS) protocol enables encrypted data transfer between a client and the SINAMICS drive. HTTPS access of the browser to the drive is based on the "Transport Layer Security" protocol. This chapter informs you which steps you need to follow to enable encrypted data transfer between a browser (client) and the SINAMICS (server).

You will find information on the configuration of your IP connection in this chapter: "Configuring the IP connection (Page 759)" .

Protecting the HTTPS access

The encrypted variant of the communication between the browser and the web server using HTTPS requires the creation and installation of certificates.

Basically, there are three ways of creating a server certificate:

- Using the standard configuration
- Use self-created certificates (by means of certificate software, such as OpenSSL)
- Use a server certificate from a certificate authority

Delivery state

A private key is generated as a file on the device as default configuration when you first use HTTPS so that you can access the drive via HTTPS in the SINAMICS delivery state. During an HTTPS access using this key, a warning is issued in the browser that the certificate is unknown.

Duration of validity

The certificates are valid up to 2030.

After expiration of the validity period, install new valid certificates on all the relevant drives.

13.2.10.2 Using the certificate default configuration

Note

Security

The use of a default configuration described in the following is not the most secure way of transferring data using the HTTPS protocol to your drive with the web server.

For this reason, it should only be used in secure networks (e.g. your PROFINET below a PLC) or for direct point-to-point connections on the Service interface X127.

Using the certificate default configuration

Procedure

1. First open an HTTPS web server connection to your drive in the browser.
2. The firmware then creates a new server certificate and a private server key from the root certificate and the private key, if they are not already available. This certificate is individualized for the IP address of the interface used for the communication.
3. Following this, a warning is issued on the standard browser that the certificate is unknown.
4. Import the server certificate into your standard browser or deactivate the security warnings for the SINAMICS websites.
   The exact procedure for the import can be found in the online help of the used browser.

Deactivate warning messages in the supported browsers

To deactivate the warnings in the supported browsers, proceed as follows:

Note

The following browser displays are being used as examples. They may differ from the displays in your browser.

Opera

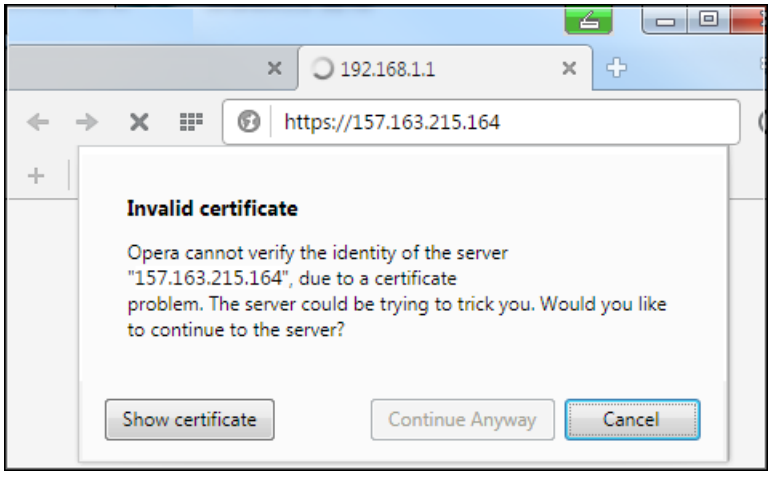

Figure 13-11 Opera1

Click "Still continue" in order to be able to communicate via a secure HTTPS connection.

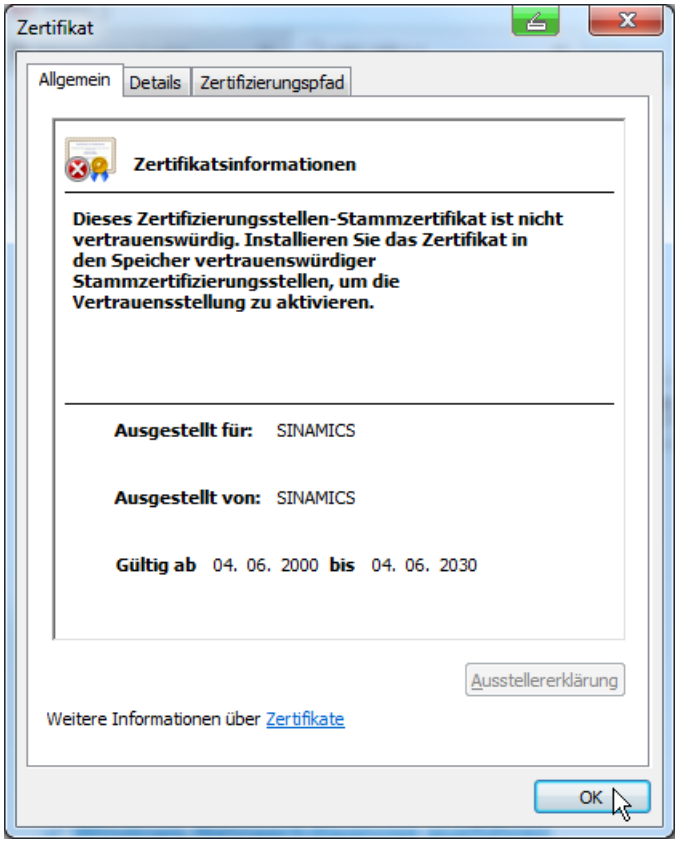

Figure 13-12 Opera2

Mozilla Firefox

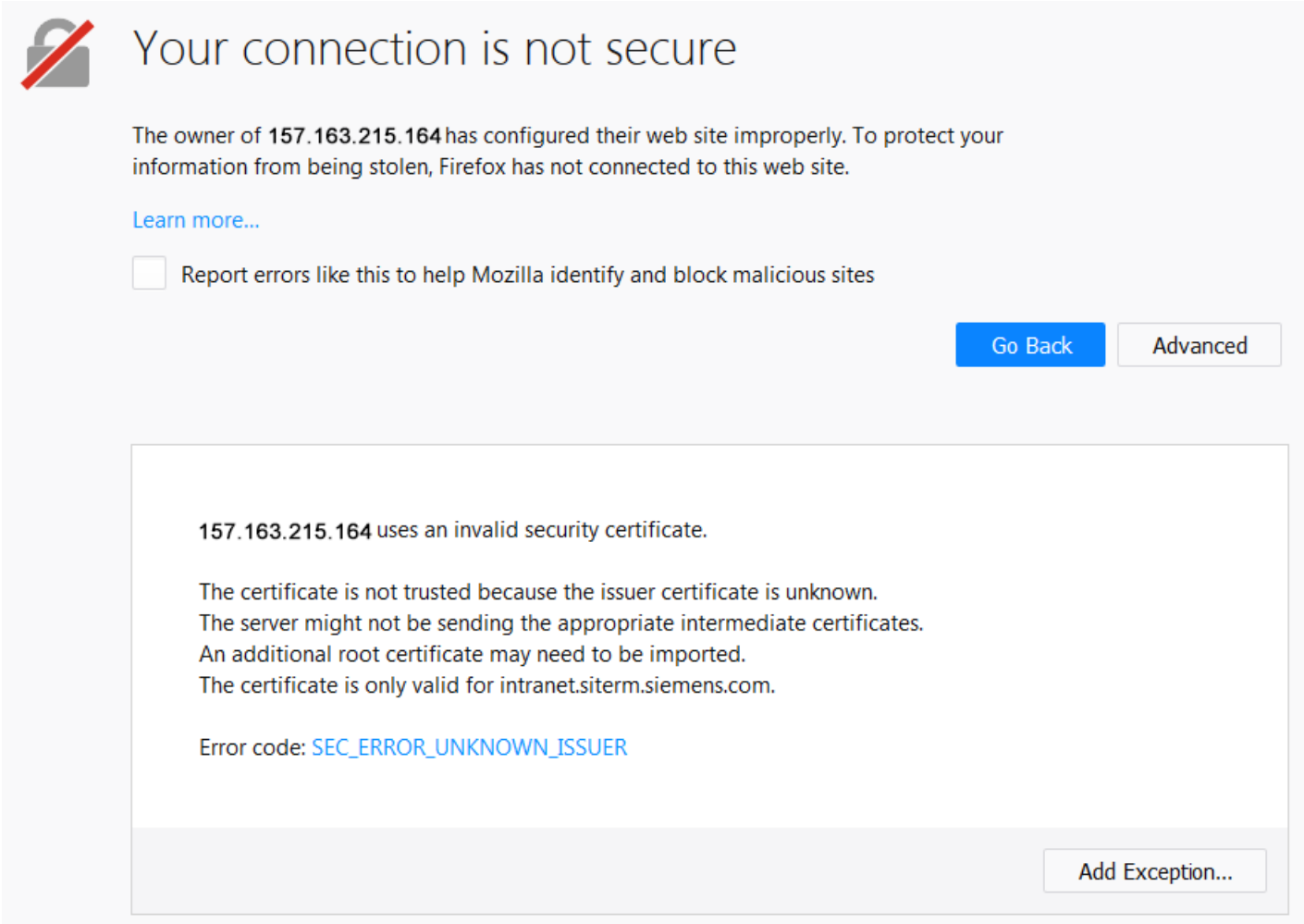

Figure 13-13 Mozilla

1. Click "Extended".
   The information for the security certificate is displayed.
2. Click "Add exception" in order to be able to communicate via a secure HTTPS connection.

Microsoft Internet Explorer 11

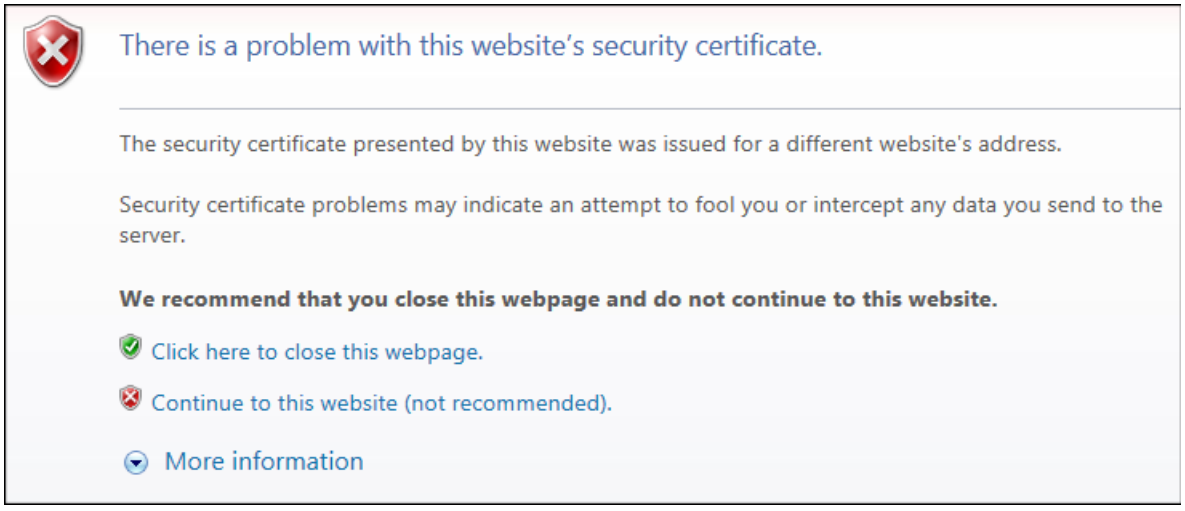

Figure 13-14 Internet Explorer 11

Click "Continue to this website" in order to be able to communicate via a secure HTTPS connection.

Google Chrome

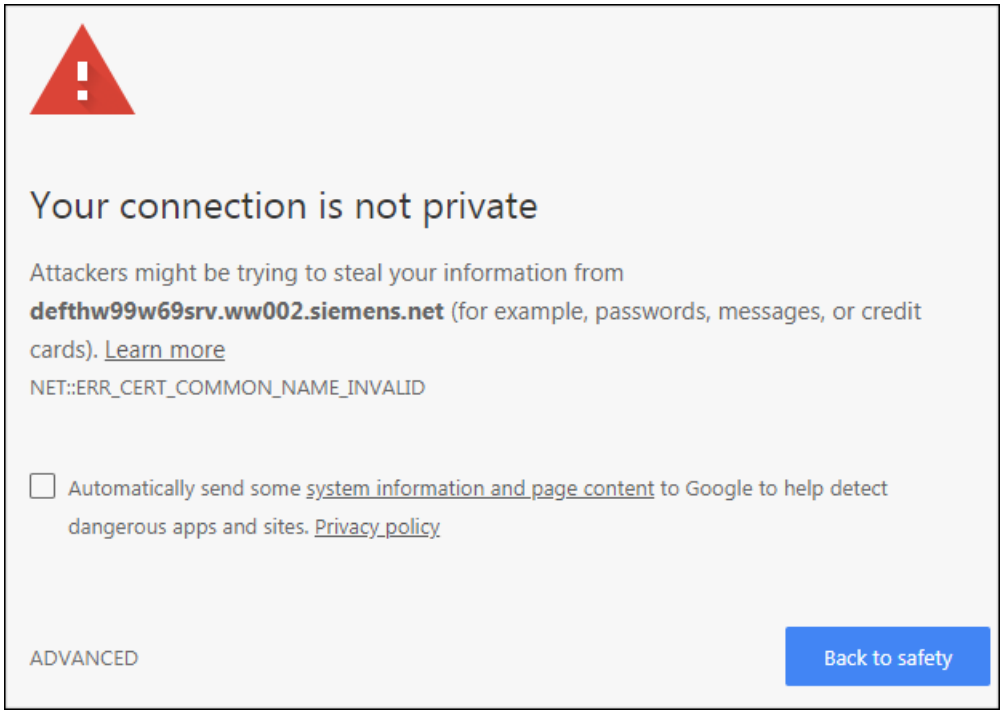

Figure 13-15 Google 1

1. Click "EXTENDED".
   The information for the security certificate is displayed.
2. Click "Continue to <IP address>" in order to be able to communicate via a secure HTTPS connection.

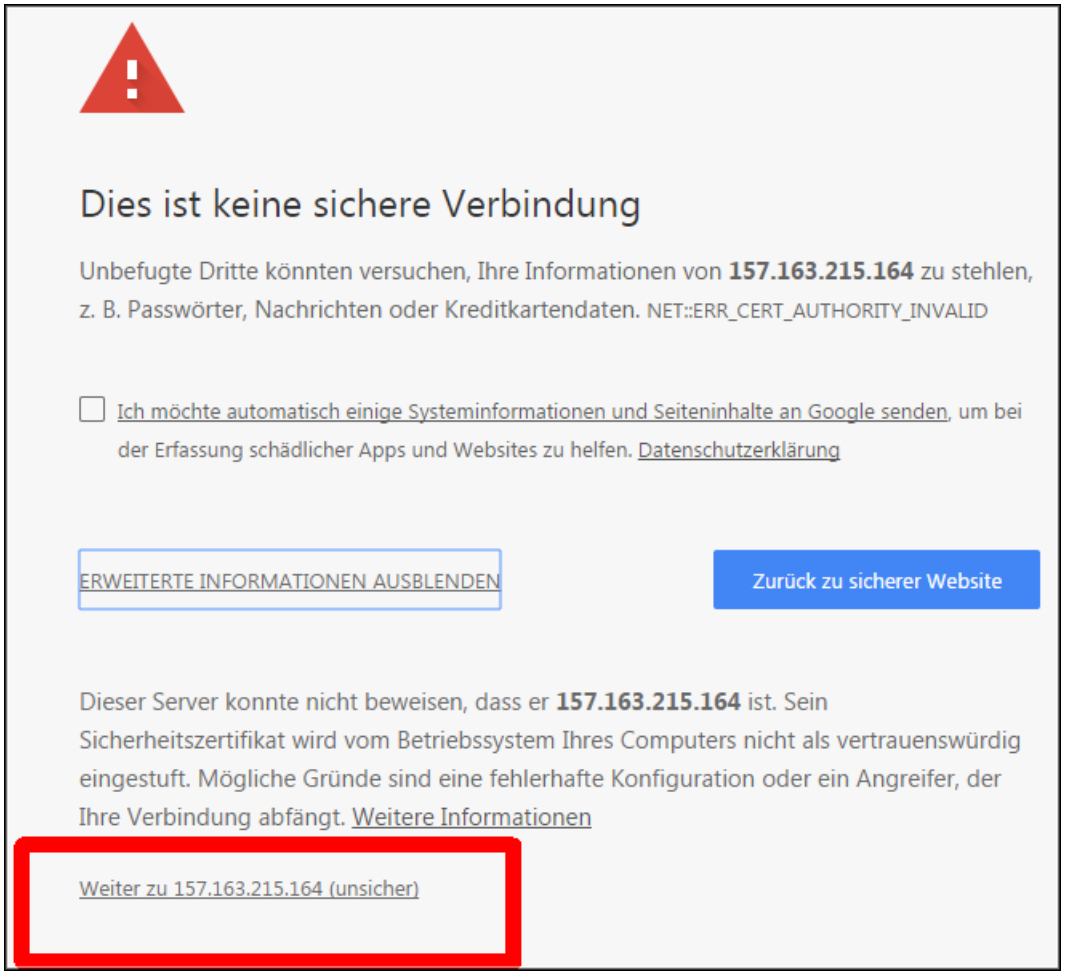

Figure 13-16 Google 2

13.2.10.3 Generating your own certificates

You can either generate your own certificates for the secured data connection or purchase them from a certification authority (CA). In these cases, a server certificate and a private server key are supplied.

- Server certificate: <IP addr>.TLS.crt Example: 192.168.2.90.TLS.crt
- Private server key: <IP addr>.TLS.key Example: 192.168.2.90.TLS.key

Certification authorities, from which you can purchase a certificate can be found on the Internet; the same is true for software so that you can generate a certificate yourself, e.g. OpenSSL.

Using your own certificate

Requirements

You have a suitable SD card for your converter.

You have a server certificate and a private server key.

Procedure

1. Copy the server certificate and the private server key into the following directory on the SD card of your converter:
   OEM\SINAMICS\HMICFG\CERTSTORES\SERVERCERTS
2. Rename the files in SINAMICS.key and SINAMICS.crt.
3. Create a backup copy of both files.
4. Import the certificate (*.crt) in the browser of your commissioning device so that it can communicate with the browser.
   Refer to the instructions (help) of your browser for the importing procedure.
5. Insert the memory card into your converter and switch on the converter.
6. Open an HTTPS web server connection to your drive in the browser (https://169.254.11.22/).

The connection is established once the certificate has been imported.

If the certificate was not imported, the message indicating that the signed CA is unknown is displayed when you open the browser.

13.3 Diagnostic functions

13.3.1 “Drive objects and components” display area

In the “Drive objects and components” display area, you can view information on the drive objects and components as well as on DRIVE-CLiQ wiring errors.

View drive objects

To display of drive objects for your drive, proceed as follows:

Procedure

1. Click in the “Drive objects and components” display area on the “Drive objects” tab.
   Then, the information and messages regarding the drive objects are displayed in a list.

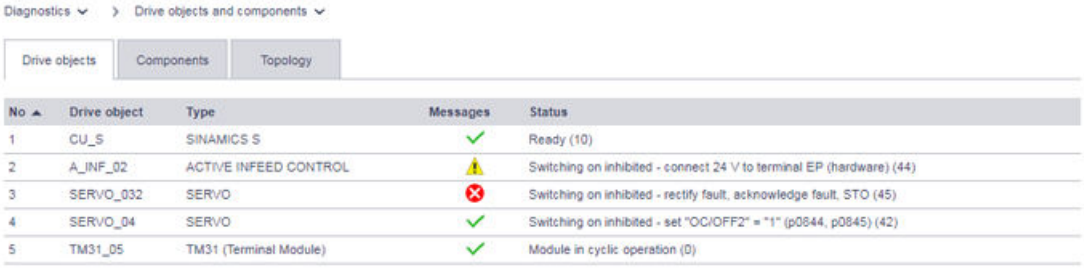

Figure 13-17 Example: Drive objects display area

2. If needed, you can re-sort the individual columns by clicking on the corresponding column head (e.g. Type).
   You can view the entries in ascending ▲ or descending ▼ order.

Note

Re-sorting the entries in a list affects only the list currently being shown. Re-sorting has no effect on other lists.

Displaying and identifying components

In order to view the components of your drive, proceed as follows:

Procedure

1. Click in the “Drive objects and components” display area on the “Components” tab.
   Then, the information and messages regarding the components are displayed in a list.

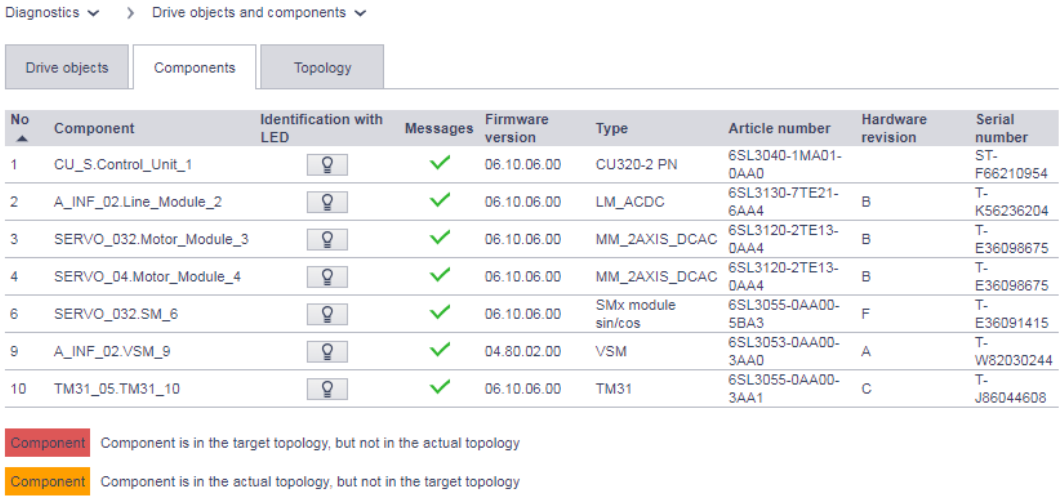

Figure 13-18 Example: “Components” display area

2. In order to carry out an LED flash test for individual components, click on in the corresponding line.
   The ready LED on the corresponding component then begins to flash.
3. If needed, you can re-sort the individual columns by clicking on the corresponding column head (e.g. Type).
   You can view the entries in ascending ▲ or descending ▼ order.

Note

Re-sorting the entries in a list affects only the list currently being shown. Re-sorting has no effect on other lists.

A red or orange marking indicates a DRIVE-CLiQ wiring error on a component. Switch to the “Topology” tab in order to view further information.

Displaying DRIVE-CLiQ wiring errors

In order to view existing DRIVE-CLiQ wiring errors and diagnostic information about the individual components of your drive, proceed as follows:

Procedure

1. Click in the “Drive objects and components” display area on the “Topology” tab.
   Then the diagnostic information about the components is shown in a list. Using the information in the “Separate Port,” “Uplink to Port” and “Uplink to number” columns, you can diagnose wiring errors on the individual components.

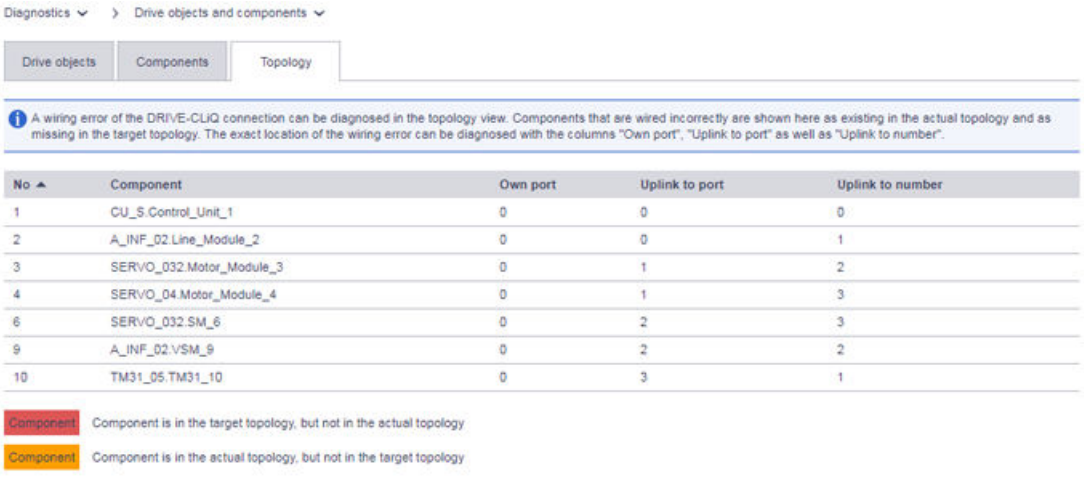

Figure 13-19 Example: Topology display area

2. If needed, you can re-sort the individual columns by clicking on the corresponding column head (e.g. Type).
   You can view the entries in ascending ▲ or descending ▼ order.

Note

Re-sorting the entries in a list affects only the list currently being shown. Re-sorting has no effect on other lists.

13.3.2 “Alarms” display area

In the “Messages” display area, you can view the messages regarding the drive objects. In addition to this, the display area provides you with the following options:

- Filtering according to message text.
- Selecting messages regarding specific drive objects.
- Filtering messages according to date.
- In order to compare current and past states to each other, you can activate the “View message history” option.
- Filtering messages according to the respective message type.
- Acknowledging messages.
- In order to evaluate messages in greater detail, you can view additional details for the messages.

The following description addresses exclusively the fundamental configuration and operation options in the display area “Messages.”

Meaning of the symbols

The symbols indicate the following states of individual drive objects:


Alarm


Fault


Acknowledged fault

Viewing messages and additional information

In order to call up the list of messages, proceed as follows:

1. Select "Diagnostics > Messages" in the navigation.
   OR
2. Click in the header of the web server on the  or  symbols.

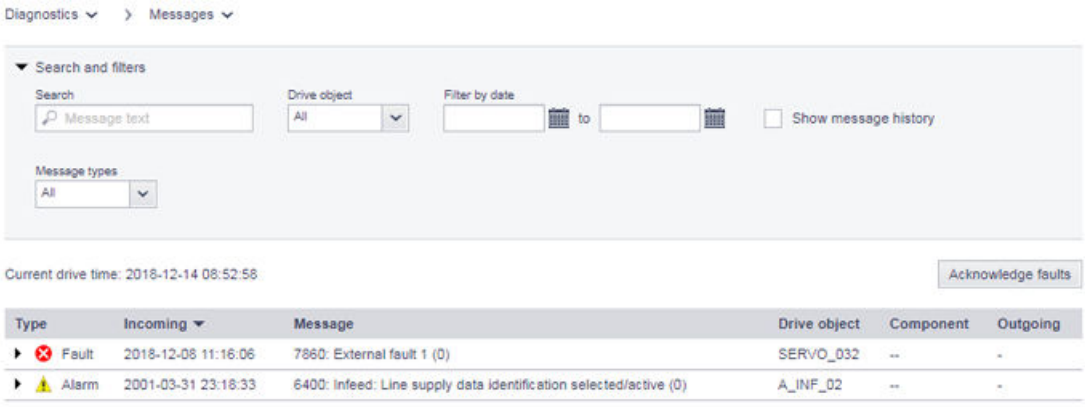

Figure 13-20 Example: Message list

3. In order to view additional details on individual messages, click anywhere in the corresponding line.
   Then, under the corresponding message, an additional line with details and instructions is shown. If additional information has been stored, it appears in the line under the corresponding messages. Otherwise, the line is shown without content.



Figure 13-21 Example: Further information

4. If needed, you can re-sort the individual columns by clicking on the corresponding column head (e.g. Type).
   You can view the entries in ascending ▲ or descending ▼ order.

Note

Re-sorting the entries in a list affects only the list currently being shown. Re-sorting has no effect on other lists.

13.3.2.1 Filtering messages

You can set filters in the message list and therefore limit the display of the messages. You can configure the filter settings using the error bar above the message list. All filters are linked by a logical conjunction (AND).

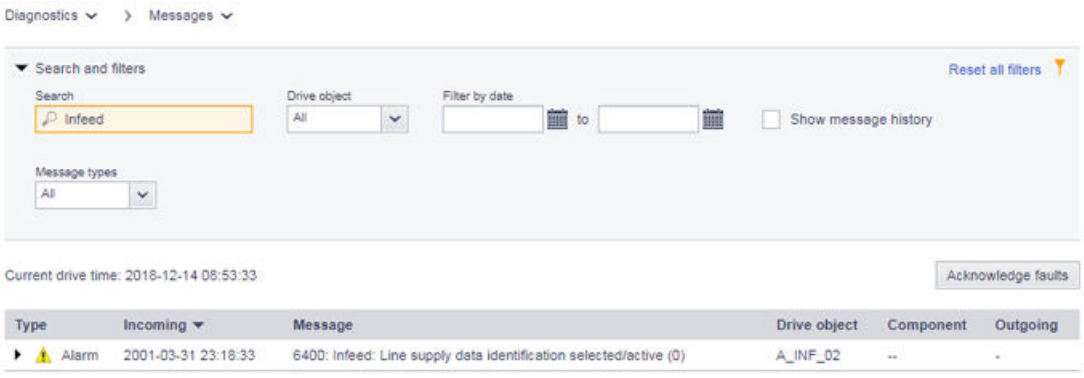

Figure 13-22 Example: Filtering messages

Setting filters

Proceed as follows to set the filters in the “Search and filter” filter bar.

Note

Collapsing the filter bar

The filter bar is opened per default. To close the filter bar, click anywhere in the header of the “Search and filter” bar.

Procedure

1. In the "Search" field, enter a search term (any number of characters) for which you want to search in the message list.
   The search results are displayed in the message list.

   Note

   The search term is applied to the "Message" column in the message list.

2. If necessary, select a drive object and, in the “Filter by date” fields, determine a date range for which you want to display messages.
   After each setting is configured, the search results in the message list are narrowed down further. The filters can be set in any order.

Resetting filters

As long as you are logged in to the web server and the filter settings have not changed, the message list is always displayed with the last filter settings. In order to reset all filter settings in the message list, proceed as follows:

Procedure

1. Click "Reset all filters" at the top right in the filter bar.
   You have now re-set all configured filters. The message list then displays the unfiltered view of the messages again.

13.3.2.2 Acknowledging faults

In order to acknowledge faults in the message list, proceed as follows:

Procedure

1. In order to acknowledge the faults being displayed, click on the "Acknowledge faults" button.
   The displayed faults are acknowledged. Acknowledged faults continue to be displayed in the message list with the symbol.

13.3.3 “Diagnostics buffer” display area

In the “Diagnostics buffer” display area, important operating events are included in the log in the form of a logbook. The relevant data is read out from the non-volatile memory and is available along with its history in the diagnostics buffer for the subsequent analysis of an operating fault.

Note

Detailed information on the diagnostic buffer or fault and warning buffer can be found in the “Messages - Faults and warnings” chapter of the SINAMICS S120 commissioning manual with Startdrive.

Displaying the diagnostic buffer

In order to call up the diagnostic buffer, proceed as follows:

Procedure

1. In the navigation, select “Diagnostics > Diagnostics buffer.”
   The logged events are displayed.

   Note

   In the “Date and time” column, the time - differing from the current drive time - is combined from the following components: "1.1.2000 + Operating hours counter".

Filtering diagnostic buffers

In the event list of the diagnostic buffer, you can set filters, narrowing down the events that are displayed. The filter settings can be configured using the filter list above the event list. All filters are linked by a logical conjunction (AND).

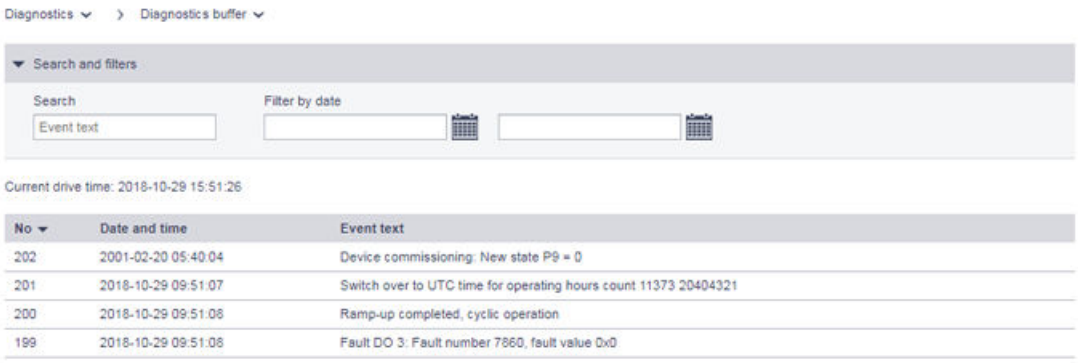

Figure 13-23 Example: Filtering diagnostic buffers

Setting filters

Proceed as follows to set the filters in the “Search and filter” filter bar.

Note

Collapsing the filter bar

The filter bar is opened per default. To close the filter bar, click anywhere in the header of the “Search and filter” bar.

Procedure

1. In the "Search" field, enter a search term (any number of characters) for which you want to search in the diagnostic buffer.
   The search results are displayed in the event list.

   Note

   The search term affects the column “Event text” in the event list.

2. In the “Filter by date” fields, specify a date range for which you want to display events.
   After each setting is configured, the search results in the event list are narrowed down further. The filters can be set in any order.

Resetting filters

As long as you are logged in to the web server and the filter settings have not changed, the event list is always displayed with the last filter settings. In order to reset all filter settings in the event list, proceed as follows:

Procedure

1. Click "Reset all filters" at the top right in the filter bar.
   You have now re-set all configured filters. The event list then displays the unfiltered view of the operating events again.

13.3.4 “Communication” display area

In order to call up the “Communication” display area, proceed as follows:

Procedure

1. Select "Diagnostics > Communication" in the navigation.
   The web server shows a window with the following contents:
   - IP address of the converter
   - Name of the station
   - Information as to whether the connection between the controller and the converter is active.
   - Table with process data for the transfer direction "controller > converter"
   - Table with process data for the transfer direction "converter > controller"



Figure 13-24 Example: Communication display area

The values are displayed in hexadecimal format in the default setting. You can switch the display of individual values between binary and hex format by clicking on the button to the right of the value.

13.3.5 “Trace files” display area

The web server permits the loading of trace files that were created using a multiple trace and stored on the memory card of the drive. All the files in the "USER/SINAMICS/DATA/TRACE" directory of the memory card can be loaded to the web client (i.e. to the PC). The loadable trace files are displayed on the web page with their name.

The trace files can be displayed graphically in the commissioning tool.

Note

Activation and parameterization of the multiple trace

Detailed information on the activation and parameter assignment of a multiple trace can be obtained in the following documentation:

- SINAMICS S120 Commissioning Manual with Startdrive
- Startdrive Online Help

Here, you can also obtain detailed information about how you can load trace files into your PC file system.

Loading trace files from the memory card

In order to load trace files from the memory card to your device/computer, proceed as follows:

Procedure

1. In the main menu, click on the “Diagnostics” entry.
2. In the sub-menu, select the “Trace files” option.
   If you have already saved trace files, these are displayed in the list.
3. In the list, select the trace file that you want to load.
   You are then prompted whether you want to open the trace file or store it in your file system.
4. Save the file in your file system.
   The file stored in the file system can be opened with the commissioning tool.

13.4 Creating and adjusting the parameter list

13.4.1 Overview

In the web server, you can manage up to 20 parameter lists with 40 parameters each. The created parameter lists are saved on the memory card of the drive. As a result, created parameter lists are available for further access even after the drive is switched off.

13.4.2 Creating a parameter list

To create a parameter list, proceed as follows:

1. Click the "Parameter" entry in the navigation.
   Then the "Parameter" display area and the "No list available" tab are shown.
2. In order to create a list, click on the "Create list" tab.
   The "Create user-defined parameter list" dialog opens.

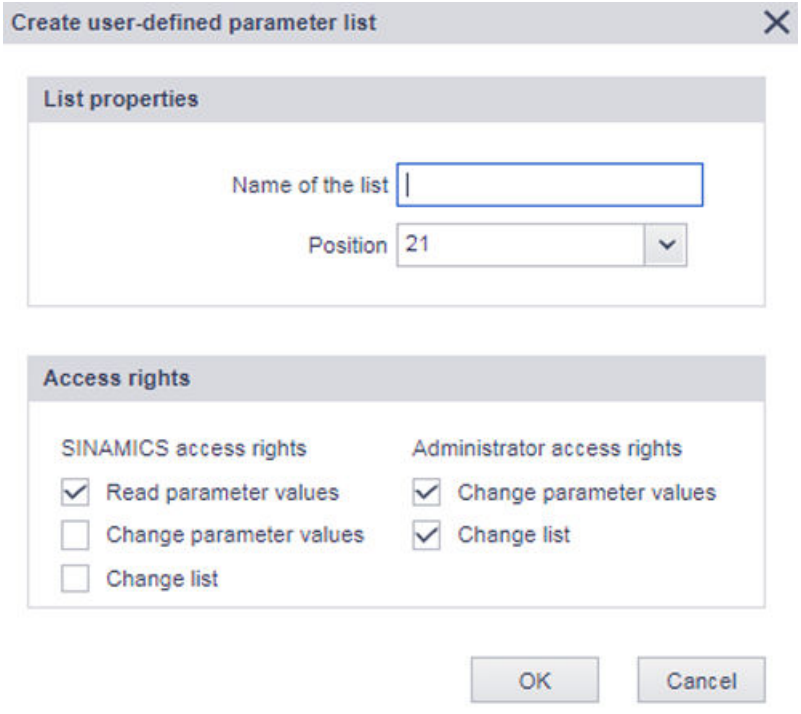

3. In the "Name of the list" entry field, enter a name of the parameter list.

Note

When entering names for parameter lists, **do not use any** special characters (e.g. ?!%+).

4. In the "Position" drop-down list, select a position for the parameter list.
   If needed, you can change the order of the tabs in the "Parameters" display area (see the "Changing the list properties (Page 750)" chapter).

5. If needed, change the access rights for the "SINAMICS" user.
   For the access rights of the "SINAMICS" user, the "Read parameter values" function is pre-configured. Observe the following instructions whenever you want to change the access rights of the "SINAMICS" user.

   Note

   "Change parameter values" function

   Is it absolutely mandatory for the "SINAMICS" user to assign the "Change parameter values"? If YES, then the "Administrator" user can assign the "SINAMICS" user the access rights for the "Change parameter values" function in the "Create user-defined parameter list" dialog. The "Administrator" user can change the access rights for the "Change Change parameter values" function for the "SINAMICS" user at any time (see Chapter "Changing the list properties (Page 750)").

   Note

   "Change list" function

   Never simultaneously assign a "SINAMICS" user the access rights for the "Change list" and "Change parameter values" functions.

6. In order to save your settings, click "OK".
   The "Create user-define parameter list" is closed and the settings are saved. The created parameter list appears as an empty list at the position that you selected.
   OR
   To discard your settings, click "Cancel".
   The "Create user-defined parameter list" dialog is closed and the settings are discarded.

13.4.3 Adding parameters

You can add individual parameters to a previously existing parameter list by proceeding as follows:

1. Click anywhere in the "Add parameters" field.
   The entry and selection boxes in the "Add parameters" field are then displayed. The ③ and ④ selection boxes are activated depending on the parameters entered. Both selection boxes remain deactivated if parameters are entered without adjustable bits and/or indices.

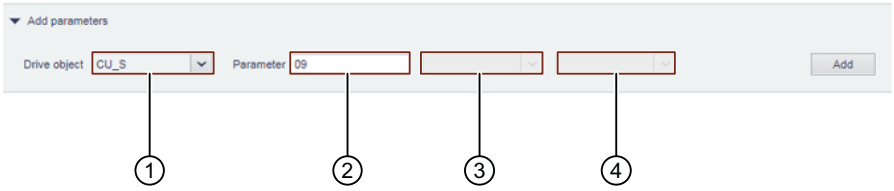

① Selection box: DO (selection in accordance with the present configuration)
Note: You can only change the name of the DO when configuring your drive in the Startdrive commissioning tool.

② Input field: Parameter

③ Selection box: Index value (selection of adjustable indices for index-coded parameters)

④ Selection box: Bit value (selection of configurable bits for bit-coded parameters)

2. Enter a parameter into the "Parameter" input field.

Note

Invalid parameters and/or parameters that cannot be assigned to the selected drive object appear in the entry field with red highlighting and cannot be added to the parameter list.

3. If necessary, select the desired bit and/or index for the parameter that was entered.
4. In order to accept the parameter with the selected settings into the parameter list, click "Add". The parameter is then added to the existing parameter list.

⚠ WARNING

Uncontrolled movement of the drive as a result of incorrect parameter assignment

Faulty parameter assignment may cause uncontrolled drive movements, which may result in death or serious injury.

- Ensure that the limits are correctly parameterized.

13.4.4 Selecting/entering parameters

In an existing parameter list, you can select or enter the parameter values for individual parameters in the “Value” column. Proceed as follows:

1. Select the desired value for a parameter from the corresponding drop-down list.
   OR
   Enter the desired value for a parameter into the corresponding entry field.

Note

Adjustable parameter values

For more information on adjustable parameter values, refer to the SINAMICS S120/S150 list manual.

13.4.5 Changing the parameter sequence

In an existing parameter list, you can change the parameter sequence by appropriately dragging & dropping.

13.4.6 Deleting parameters

In an existing parameter list, you can delete individual parameters as follows:

1. To delete a parameter, click on the cross symbol ✕ in the corresponding line.
   The “Remove parameter from list” dialog opens.
2. Confirm the deletion operation by clicking “Remove.”
   OR
   Click on “Cancel” to cancel the deletion operation.

13.4.7 Changing the list properties

To change the list properties of previously existing parameter lists, proceed as follows:

1. Click on the “List properties” button.
   The “List properties" dialog opens.
2. Make your relevant changes.
   You can change the following properties:
   - Name of the list
   - Position of the list in the tab bar.
   - Access rights of the “SINAMICS” user and/or “Administrator”
3. Confirm your changes by clicking "OK".
   The dialog closes.

13.4.8 Deleting a parameter list

Proceed as follows to delete a previously existing parameter list:

1. Click on the “List properties” button.
   The “List properties" dialog opens.
2. Click on the “Delete this list” button.
   The “Delete list” dialog opens.
3. Confirm the deletion operation by clicking “Delete this list.”
   The dialog closes. You have deleted the parameter list.

13.5 Backup and restore

13.5.1 Overview

The “Back up and restore” function provides you with the following options:

- Backing up parameters that have been configured.
- Assigning a name to the backup file.
- Restoring parameters from a valid parameter backup and loading them to the drive.
- Resetting the drive to factory settings.

Note

Observing the information and instructions

The individual options have their own adjustment areas assigned to them, each with an info box, on the “Back up and restore” screen. Observe all information and instructions in the info boxes.

Procedure

1. Select "Backup and Restore" in the navigation.
   The “Back up and restore” screen is open.

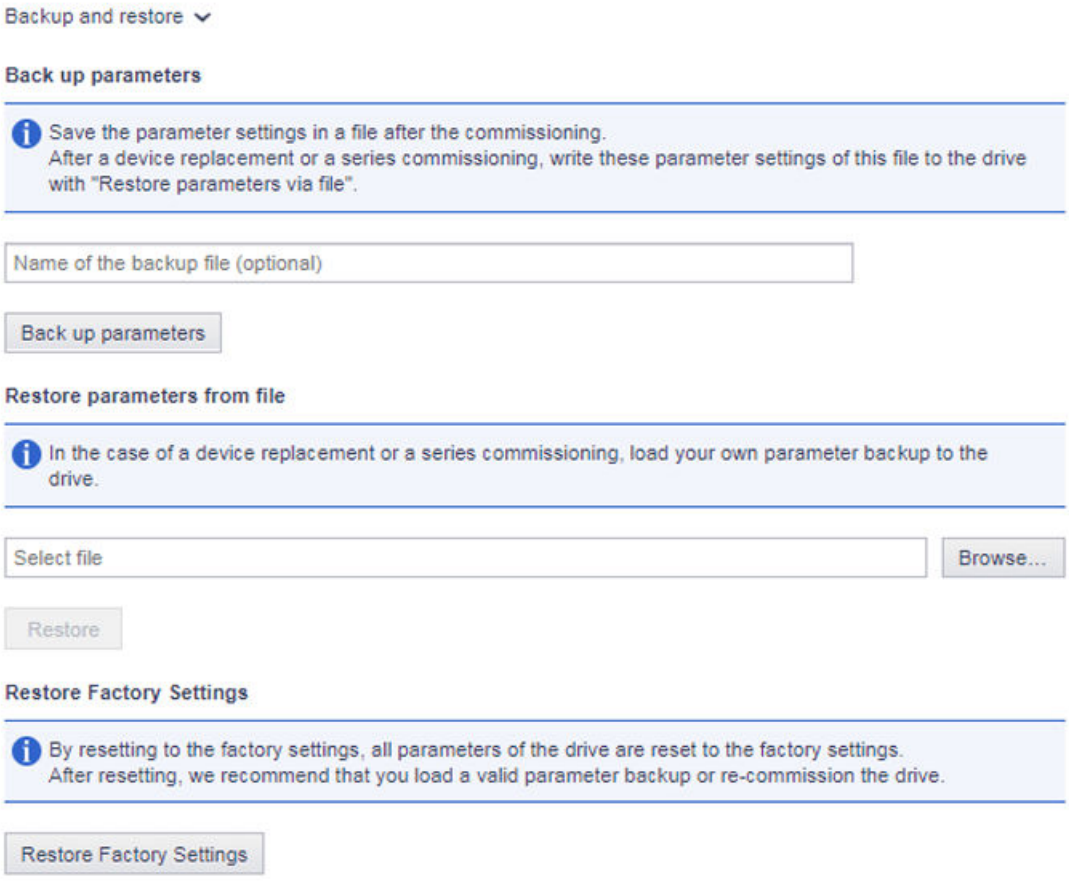

Figure 13-25 Backing up and restoring data

13.5.2 Backing up parameters

You can back up the converter settings externally using the web server.

You can perform the data backup at any time. We recommend a data backup after the commissioning of the converter.

Procedure

1. Save the settings in a non-volatile fashion using .
2. Click "Back up parameters" in the "Parameter Backup" setting area.
   The data backup of the parameters is performed. A message is displayed when the data backup is successful.

   Note

   Defining a storage location for the backup file

   Depending on the browser used, a storage dialog appears at this point in which you can specify where the backup file is to be saved. In some browsers, e.g. Google Chrome, the file is stored in the standard directory for downloads as "Backup.zip".

3. Correct the automatically generated name of the data backup so that the required data backup can be uniquely identified by the name.

   Note

   Checking and editing externally saved parameters

   The data are saved in a format that cannot be edited – furthermore, they cannot be checked or edited.

13.5.3 Restore file parameters

If you load the externally backed-up parameter settings to the converter again, you restore the converter state to the time of the data backup. You can also use the externally backed-up files for a series commissioning.

1. Click "Browse" in the "Restore Parameters From File" setting area.
2. In your file system, select the backup file.
   The backup file is now displayed in the view.
3. Click "Restore" in the "Restore Parameters From File" setting area.
   The data backup is loaded and the converter is restarted. You must log in to the web server again.
4. Log in to the web server again.

13.5.4 Restoring the factory setting

Note

You have forgotten the administrator password

If you have forgotten the administrator password, it is not possible to reset the converter to factory settings over the web server. To reconfigure the administrator password, see "Password forgotten (Page 758)."

Note

Communication settings

If you reset the converter to the factory settings, the IP address of the service interface, the PROFINET IP address and the PROFINET device name are not cleared.

Procedure

In order to reset the converter in the web server to factory settings, proceed as follows:

1. In the "Restore factory settings" adjustment area, click on the "Restore factory settings" button.
2. Acknowledge the confirmation prompt. The converter is reset, and then restarted.
   If the LED on the converter lights up green, resetting is complete.

You have finished resetting the converter to factory settings. When the web server is called again, the initial setup is started (see Chapter "Password forgotten (Page 758)").

13.6 System settings

13.6.1 Setting or changing user accounts

With SINAMICS S120, both user accounts "SINAMICS" and "Administrator" have been predefined and cannot be changed.

You can make the following settings in the user accounts:

- Changing the Administrator password.
- Enabling or locking the "SINAMICS" user.
- Assigning the password for the "SINAMICS" user.
- Changing or deleting the password for a "SINAMICS" user.

Password requirements

To protect against unauthorized access, by an attacker, for example, generate a secure password that consists of:

- At least 8 characters
- Uppercase and lowercase letters
- Numbers and special characters (e. g. ?!%+ etc.)
- Different passwords for different types of access (administrator / user)

Checking the password

The length of the password is checked by the converter. There is no check for uppercase and lowercase letters and special characters!

Remember the passwords or store the passwords in a safe place that cannot be accessed by unauthorized persons.

Changing the password

Proceed as follows to configure the user accounts for the web server:

Changing the password for the "Administrator" user

The "Administrator" user cannot be deactivated in the web server.

You can deactivate the "Administrator" user in the Startdrive commissioning tool. Further information can be found in the following manual:

- SINAMICS S120 Commissioning Manual with Startdrive

Procedure

To change the password for the "Administrator" user, proceed as follows:

1. Select "System > Settings" in the navigation.
2. Select the "User Accounts" tab.

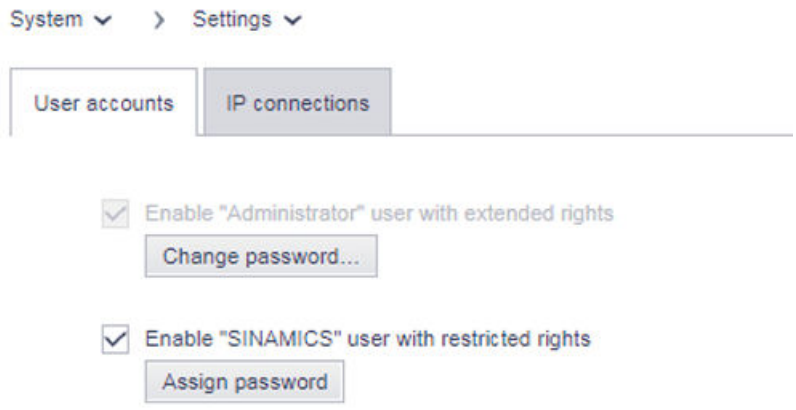

Figure 13-26 Changing the password

3. To change the Administrator password, click "Change password" for the "Administrator" user.
   The password dialog opens.
4. Enter the old password in the "Current password" field.
5. Enter a new password in the "New password" field.
6. Enter the new password again in the "Confirm new password" field.
7. Confirm the password change with "Change".
   The dialog closes.
8. Click to save the data permanently.

You have changed the password of the administrator.

Assigning the password for the "SINAMICS" user.

Before assigning the password for the "SINAMICS" user, you must enable the "SINAMICS" user.

Procedure

To assign the password for the "SINAMICS" user, proceed as follows:

1. Select "System > Settings" in the navigation.
2. Select the "User Accounts" tab.
3. Activate the "Enable "SINAMICS" user with restricted rights" option.
4. For the "SINAMICS" user, click on "Assign password".
   The password dialog opens.
5. Enter a password.
6. Enter the new password again in the "Confirm password" field.

7. Confirm the password input with "Assign".
   The dialog closes.
8. Click to save the data permanently.

You have created the password for the "SINAMICS" user.

Changing/deleting the password for the "SINAMICS" user.

Before changing or deleting the password for the "SINAMICS" user, you must enable the "SINAMICS" user and assign a password.

Procedure

To change or delete the password for the "SINAMICS" user, proceed as follows:

1. Select "System > Settings" in the navigation.
2. Select the "User Accounts" tab.
3. If you want to change the password of the "SINAMICS" user, proceed as for the Administrator password (see "Changing the Administrator password").
   OR
4. If you want to delete the password of the "SINAMICS" user, click "Delete password...".
   A prompt appears.
   Enter the old password and click "Delete".
5. Click to save the data permanently.

You have changed/deleted the password for the "SINAMICS" user.

13.6.2 Password forgotten

Without the password for the "SINAMICS" user or "Administrator", you are locked out of accessing SINAMICS data and functions in the web server. For assigning a new administrator password, you have two options available to you.

Option 1 - Restoring factory settings in the Startdrive commissioning tool

1. Back up the current configuration of the drive in the Startdrive commissioning tool.
   Load the project data from the drive unit to your device or computer ("Load from device").
2. Reset the drive to factory settings.
3. Load the stored configuration from the device/computer back to the drive (“Load to device”).
4. Reconfigure the web server login for the "SINAMICS" user and/or "Administrator" (see Chapters "Setting or changing user accounts (Page 756)" and "Assigning the administrator password (Page 722)").

Option 2 - Restoring the factory settings with a memory card

Note

If you have forgotten the administrator password, it is not possible to reset the converter to factory settings over the web server. You must reset the converter with a memory card.

Requirements

- An existing LAN connection between the commissioning device (device/computer, tablet or smartphone) and the interface X127 on the converter.
- An empty CF memory card with a maximum of 2 GB of storage capacity must be available.
- A converter configured with a known administrator password must be available.

Procedure

1. Select the configuration of a converter whose administrator password you know.
2. Insert the CF memory card (max. 2 GB) into your PG/PC or a suitable card reader and connect the card reader with your PC.
3. Copy the configuration to the memory card.
4. Insert the memory card into the converter and switch on the converter.
5. Open the web browser and enter the standard IP address of the converter (169.254.11.22). The start page of the web server opens.
6. Log in using the known administrator password.
7. Reset the converter to the factory settings (see Chapter "Restoring the factory setting (Page 754)").
8. The converter is reset, and then restarted.
   You have finished resetting the converter to factory settings. When the web server is called up again, the initial setup is started and you can assign a new administrator password (see Chapter "Assigning the administrator password (Page 722)").
9. Re-assign the administrator password.
   Remember the password or store the password in a secure place that cannot be accessed by unauthorized persons.
10. Recommission the converter.
11. Save the changes.

13.6.3 Configuring the IP connection

Communication between the converter and commissioning device is established either via an unsecured HTTP connection (see "Access via service interface X127 (Page 717)") or via a secured HTTPS connection (see "Access via PROFINET interface X150 (Page 717)").

For security reasons, for access via the X127 service interface, we recommend switching over from the unsecured HTTP connection to a secured HTTPS connection. Proceed as described below.

Procedure

1. Select "System > Settings" in the navigation.
2. Select the "IP Connections and Addresses" tab.

3. If you want to switch to a secured connection, activate the "Only permit secure access using HTTPS protocol" option.

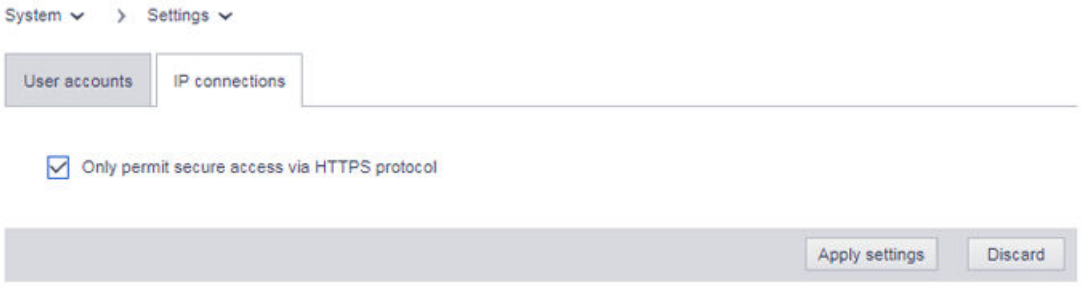

Figure 13-27 IP connections

Note

Switchover from HTTP to HTTPS

If you were logged-in via HTTP, you will be logged-out after activating the option "Only permit secure access using HTTPS protocol". To log in again, you must set a secure HTTPS connection (https://...) to the converter.

Note

Certificates for the secure data transfer

To secure an HTTPS connection, it requires security certificates for the encryption of the access. Detailed information on working with these security certificates can be found in Chapter "Certificates for the secure data transfer (Page 731)".

4. Click "Apply Settings" to save the changes in the RAM of the device.
5. Click to save the data permanently.
   You have configured the IP connection.

13.6.4 Using functions that require a license

To display the license status, click on "Licenses" in the "System" navigation.

Using this page, also enter a license key that you purchased through the Web License Manager.

If you still do not have a license - however, you wish to set up and test functions that require a license, then you have the option of activating the Trial License Mode. Details are provided in the following chapter.

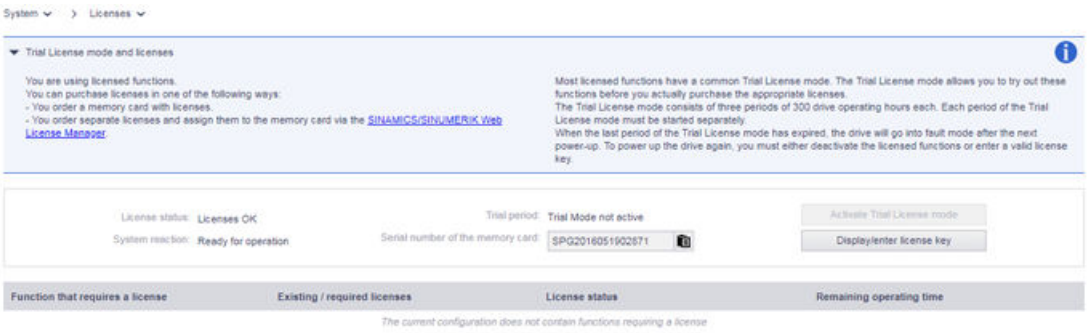

System responses in case of insufficient licensing

The system responses in case of insufficient licensing are demonstrated using 2 case examples.

Use case 1

The following system responses are displayed on the converter and via the web server if:

- Licenses for functions that require them are missing.
- Trial License mode is not activated.

At the converter

- Display by the RDY-LED flashing red at a frequency of 2 Hz



Via the web server

- Fault F13000, "Licensing is insufficient"
- System > Licenses

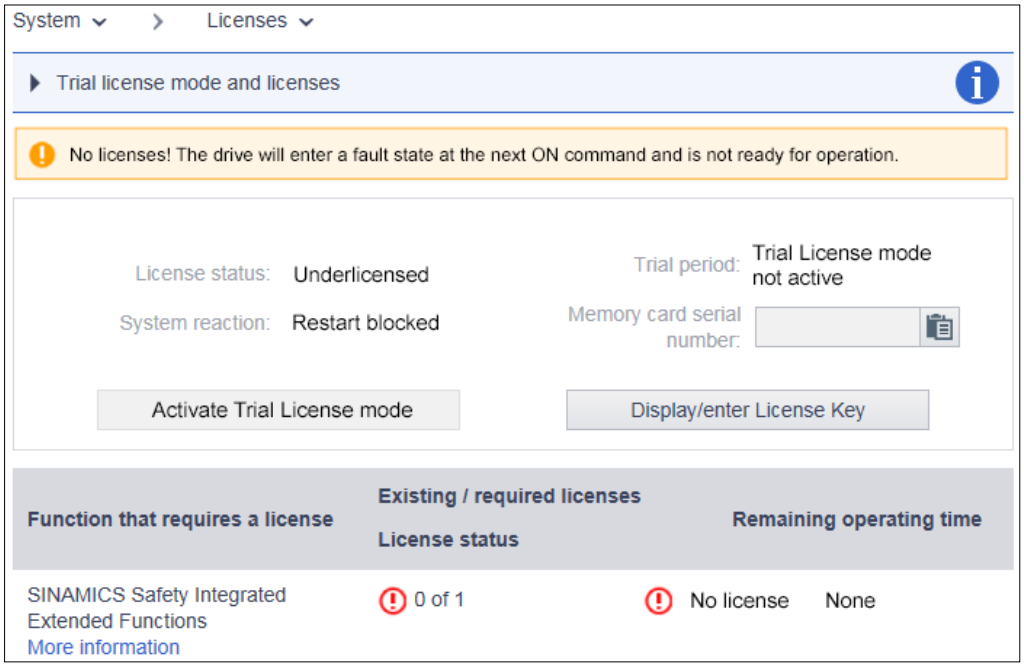

Use case 2

The following system responses are displayed on the converter and via the web server if:

- Licenses for functions that require them are missing.
- Trial License mode is activated.

At the converter

- Displayed when the RDY-LED flashes red/green with a frequency of 2 Hz.



Via the web server

- Message A13030 "Trial License activated"
- System > Licenses

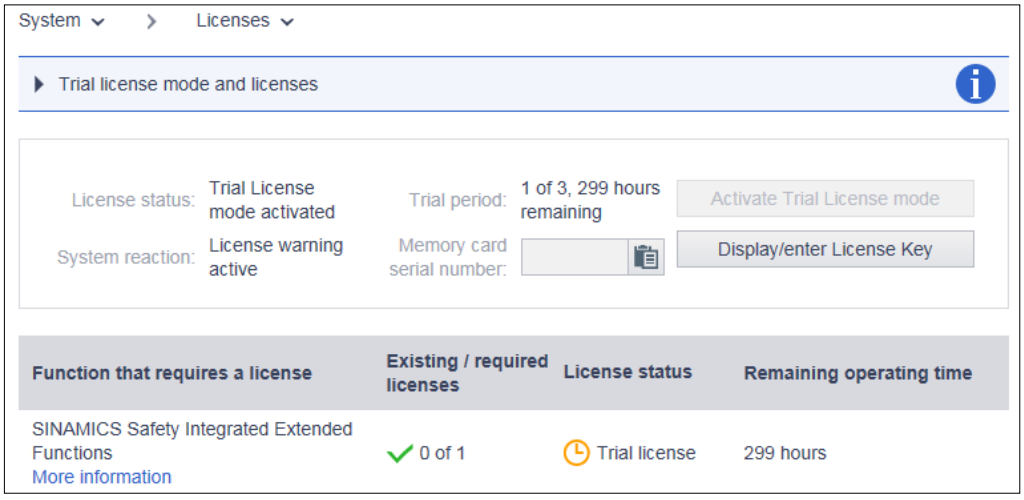

Note

Insufficient licensing

Operation without an adequate license is only permissible when commissioning the drive and when carrying out service work. To do this, activate the Trial License Mode

The drive requires a sufficient license in order for it to operate.

There is a common Trial License Mode for most functions requiring a license. Using the Trial License Mode, you can try out these functions until you actually purchase the licenses.

The Trial License Mode encompasses three periods, each with 300 operating hours of the drive. You must separately start each period of the Trial License Mode.

If the last period of the Trial License Mode has elapsed, the drive goes into a fault condition the next time that it is switched on. To be able to switch on the drive again, you must either activate the functions that require a license or enter a valid license key.

Use the Trial License

In order to use trial license mode, proceed as follows.

Procedure

1. Select "System > Licenses" in the navigation.
2. Click "Activate Trial License Mode".
3. .Acknowledge the confirmation prompt

Message A13030 indicates that the Trial License has been activated.

After the Trial License has expired, alarm A13031 "Trial License Period expired" is output.

Repeat steps 1 and 3 if you want to activate the Trial License for another trial period.

13.6.5 Displaying/entering the license key

You can view the current license key on the license overview page of the web server and enter a new key as required.

1. Select "System > Licenses" in the navigation.
   The license overview page is displayed.

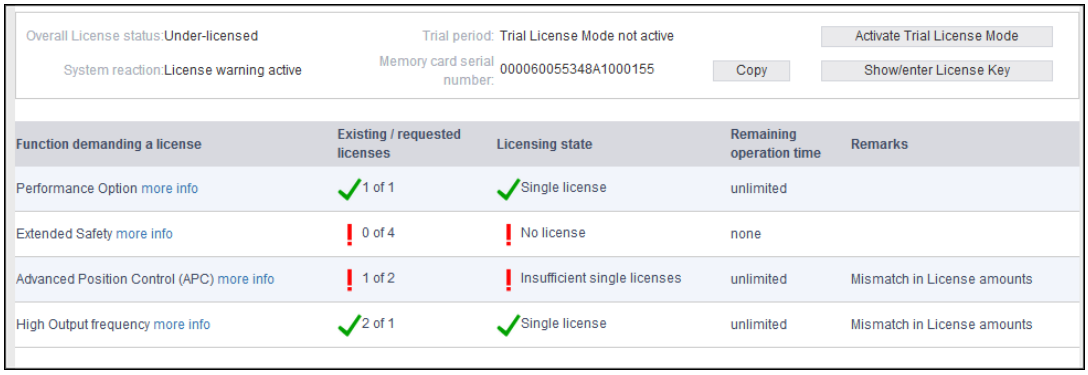

2. In the license overview page, click on "Display/enter license key".
   The current license key (if already available) of your drive is visible in the upper field of the following dialog.

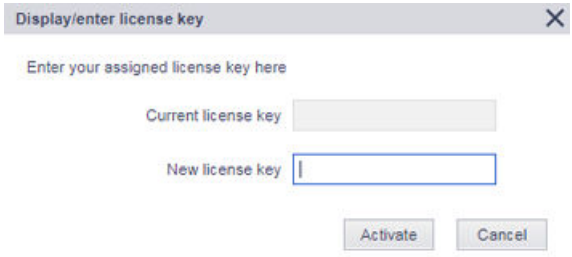

3. To use a new license key, enter it in the "New License key" field (example: E1MQ-4BEA). This allows you to replace a Trial License with a full license.
4. Click on "Activate" to activate the license key that has just been entered.
   The dialog closes. The new license key becomes active the next time the system runs-up.

13.6.6 Updating the firmware via the web server

13.6.6.1 Overview

Using the web server, you can upgrade or downgrade the firmware – and load existing STARTER project files to your drive. A firmware and existing STARTER project files can be loaded in the drive simultaneously (see "Updating the firmware and STARTER project files (Page 765)"), or separately at different points in time (see "Loading STARTER project data into the drive (Page 767)").

Important notes regarding a firmware update

Note

When upgrading to higher firmware versions, the project data are kept. When downgrading to lower firmware versions, the converter is reset to the factory settings. In this case, project data are lost.

Note

From firmware version ≥ V4.6, data on the working partition is duplicated to a backup partition to guarantee that when upgrading via the web server, data is protected and not lost if the power fails. This ensures that when updating data on the memory card no data is lost if a fault situation occurs.

Note

Backing up web server settings

In order that your specific web server settings remain after upgrading the firmware, before upgrading, backup the configuration data and then load them again after the upgrade has been completed. The data should be backed up in this memory card directory: **\OEM\SINAMICS\HMI**.

Further information

Additional information is provided in the SINAMICS S120 Commissioning Manual and in the Startdrive information system.

Available firmware versions

You can find the available firmware versions at the following link: Firmware versions (https://support.industry.siemens.com/cs/ww/en/view/109744577).

13.6.6.2 Updating the firmware and STARTER project files

Requirements

You have saved the zip file with the firmware to a drive, which you can access using the commissioning device (PG/PC, tablet or smartphone).

Procedure

1. Click on "Firmware update" in the "System" navigation.
   The "Firmware update" dialog window opens.

   Note

   Before continuing, refer to the instructions and information from the first infobox and ensure the following for the duration of the firmware update:
   - All drives have been stopped.
   - The power supply is available.
   - The Internet connection is available.
   - The browser is open.
   - Do not actuate function key F5 (refresh function).

2. Click on "Browse" to the right alongside the "Select firmware/project file" entry field.
3. In the folder directory, select the zip file with the firmware version that you wish to load to the converter.
4. If, in addition to the firmware, you also wish to load the STARTER project files into the converter, next to the "Select project file" field, click on "Browse".

   Note

   To be able to load STARTER project files to the converter, STARTER project files must be available as a zip file.

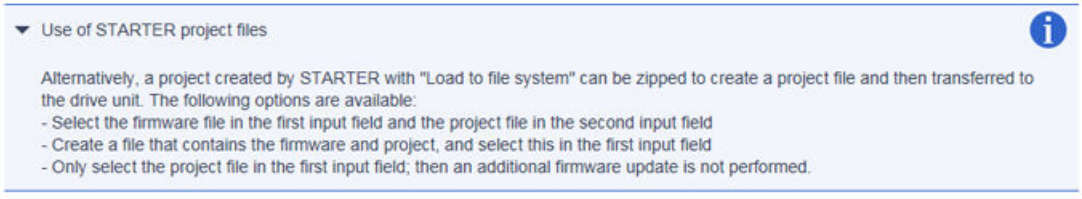

5. In the folder directory, select the zip file with the STARTER project files that you wish to load to the converter.
6. If you do **not** want to back up the status of the converter before the update, deactivate the "Create system restoration point" option.

   Note

   The "Create system restoration point" option is activated as default setting. If you activate the option, then the present status of the drive is backed up - and in case of fault, can be restored. The status of the drive, backed up in the already existing system restoration point, is then overwritten, and can no longer be restored.

7. Start the firmware update.
   During the update, a check is made as to whether there is sufficient free space on the memory card of the converter. The state of the drive objects of the Control Unit is also checked.
   Fault "F01070 project/firmware download to the memory card in progress" is output during the upgrade. If partition 1 and partition 2 are not consistent with respect to each other, the following alarm is output "A01073 POWER ON for backup copy to memory card required". An entry is made in both cases in the diagnostic buffer of the Control Unit.
8. The new firmware is installed.
   This process may take several minutes. The Control Unit is restarted after the firmware update has been completed.

RDY	COM	Explanation of the LED displays
		Firmware update is active. • Do not switch off the power supply. • Do not disconnect the motor from the converter.

9. Check whether the new firmware version is installed.
   The firmware version of the converter is displayed on the home page of the web server under the converter.

13.6.6.3 Loading STARTER project data into the drive

The project files and/or firmware versions generated in the STARTER commissioning tool can be loaded to your converter in the "Firmware update" display area of the web server. Here, you have 2 options:

1. Merge the project files and firmware versions generated in the STARTER commissioning tool and load to the converter.
   This option is described in Step 3 of the previous Chapter "Overview (Page 764)".
2. Load individual projects, generated in the STARTER commissioning tool, into the converter.
   This option is subsequently described.

Loading STARTER project data into the drive

Proceed as follows to load STARTER project files into your drive via the web server:

Requirements

You have saved the zip file with the firmware to a drive, which you can access using the commissioning device (PG/PC, tablet or smartphone).

Procedure

1. Click on "Firmware update" in the "System" navigation.
   The "Firmware update" dialog window opens.

   Note

   Before continuing, refer to the instructions and information from the first infobox and ensure the following for the duration of the firmware update:
   - All drives have been stopped.
   - The power supply is available.
   - The Internet connection is available.
   - The browser is open.
   - Do not actuate function key F5 (refresh function).

2. Click on "Browse" to the right alongside the "Select project file" entry field and select the zip file with the STARTER project which you would like to load to the converter.
3. If you do **not** want to save the status of the converter before upgrading, deactivate the "Create system restoration point" option.

   Note

   Creating a system restoration point

   The "Create a system restoration point" option is activated as standard. We recommend leaving this option activated at all times.

4. Start the firmware update.
5. The new firmware is installed.
   This process may take several minutes. The Control Unit is restarted after the firmware update has been completed.

RDY	COM	Explanation of the LED displays
		Firmware update is active. • Do not switch off the power supply. • Do not disconnect the motor from the converter.

13.6.7 Transferring the configuration using the web server

Using the web server, you can transfer a configuration to the drive memory card. Important applications include series commissioning, duplicating master configurations or quickly obtaining spare parts.

The individual steps are listed in the following:

Procedure

1. Configure the master machine (STARTER offline and also online).
2. Switch STARTER offline.

3. Execute the "Load to file system" function in the STARTER.
   Use the "Save compressed (.zip archive)" option.
4. Download the master configuration via the web browser on the other drives (cloning).

13.6.8 System restoration

Using the "System restoration" function, you can restore an earlier status of your drive with the help of a generated system restoration point.

Procedure

To restore an earlier status of your drive, proceed as follows:

1. Click on "Firmware update" in the "System" navigation.
   The web server displays the "Firmware update" tab.
2. Click on the "System restoration" tab.
   The "System restoration" screen opens.

   Note

   Before continuing, refer to the instructions and information from the first infobox and ensure the following for the duration of the firmware update:
   - All drives have been stopped.
   - The power supply is available.
   - The Internet connection is available.
   - The browser is open.
   - Do not actuate function key F5 (refresh function).
3. If you do not want an automatic restart, deactivate the "Execute a restart automatically" option.

   Note

   Executing a restart automatically

   The "Execute a restart automatically" option is activated as standard. We recommend leaving this option activated at all times.
4. To start the system restoration, click on the "Start system restoration" button.

Basic information about the drive system 14

14.1 Parameter

Overview

The following adjustable and display parameters are available:

- **Adjustable parameters** (write/read)
  These parameters have a direct impact on the behavior of a function.
  Example: Ramp-up and ramp-down time of a ramp-function generator
- **Display parameters** (read-only)
  These parameters are used to display internal variables.
  Example: Current motor current

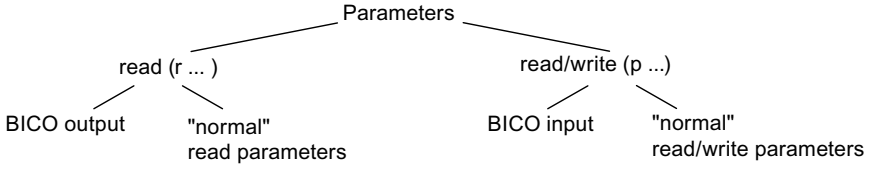

Figure 14-1 Parameter types

All drive parameters can be read via PROFIBUS and changed by means of p parameters using the mechanisms defined in the PROFIdrive profile.

Parameter categories

The parameters of the individual drive objects are categorized into data sets as follows:

- **Data-set-independent parameters**
  These parameters exist only once per drive object.
- **Data-set-dependent parameters**
  These parameters can exist several times for each drive object and can be addressed via the parameter index for reading and writing. A distinction is made between various types of data set:
  - CDS: Command Data Set
    By parameterizing several command data sets and switching between them, the drive can be operated with different pre-configured signal sources.
  - DDS: Drive Data Set
    The drive data set contains the parameters for switching between different drive control configurations.

The CDS and DDS can be switched over during normal operation. Further types of data set also exist, however these can only be activated indirectly by means of a DDS changeover.

- EDS (Encoder Data Set)
- MDS (motor data set)

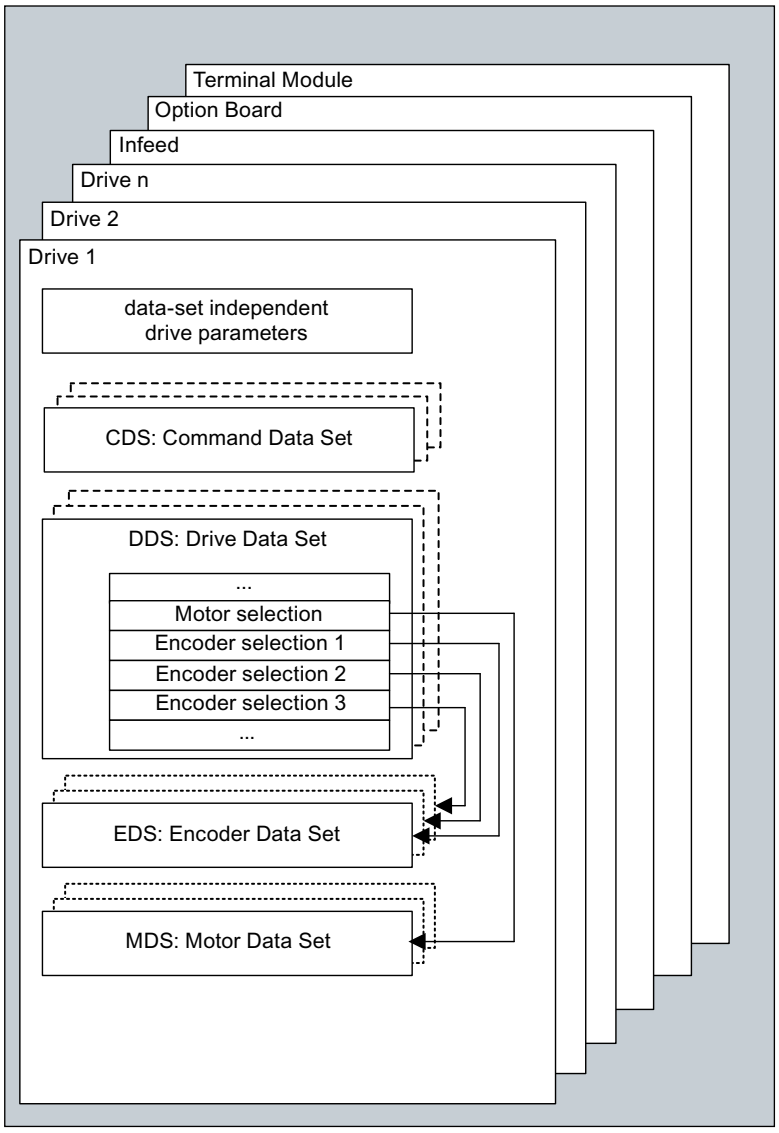

Figure 14-2 Parameter categories

Saving parameters in a non-volatile memory

The modified parameter values are stored in the volatile RAM. When the drive system is switched off, this data is lost.

The data must be saved retentively on the memory card, as described below, so that it is available the next time the drive is switched on.

- Save parameters (device and all drives) using p0977 = 1. The parameter is automatically reset to 0.
- Save parameters in Startdrive using "Copy RAM to ROM".

Resetting parameters

The parameters can be reset to the factory setting as follows:

- Reset parameters for the current drive object using p0970 = . The parameter is automatically reset to 0.
- Reset parameters for all parameters of drive object "Control Unit" (CU_*) using p0009 = 30 (parameter reset) and p0976 = 1. Parameter p0976 is automatically reset to 0.

Access level

The parameters are subdivided into access levels. The SINAMICS S120/S150 List Manual specifies the access level in which the parameter is displayed and can be changed. The required access levels 0 to 4 can be set in p0003.

Table 14-1 Access levels

Access level		Remark
0	User defined	Parameters from the user-defined list (p0013)
1	Standard	Parameters for the simplest operator functions (e.g. p1120 = ramp-function generator ramp-up time)
2	Advanced	Parameters to handle the basic functions of the device.
3	Expert	Expert knowledge is already required for this parameter (e.g. knowledge about BICO parameterization)
4	Service	Expert knowledge is also required for these parameters. Parameters of this access level are no longer password-protected as of firmware V5.1.

Note

Parameter p0003 is CU-specific and available on the Control Unit.

14.2 Drive objects

Description

A drive object (DO) is an independent, "self-contained" software function that has its own parameters and, in some cases, its own faults and alarms. Drive objects can be provided as standard (e.g. I/O evaluation), or you can add single (e.g. terminal board) or multiple objects (e.g. drive control).

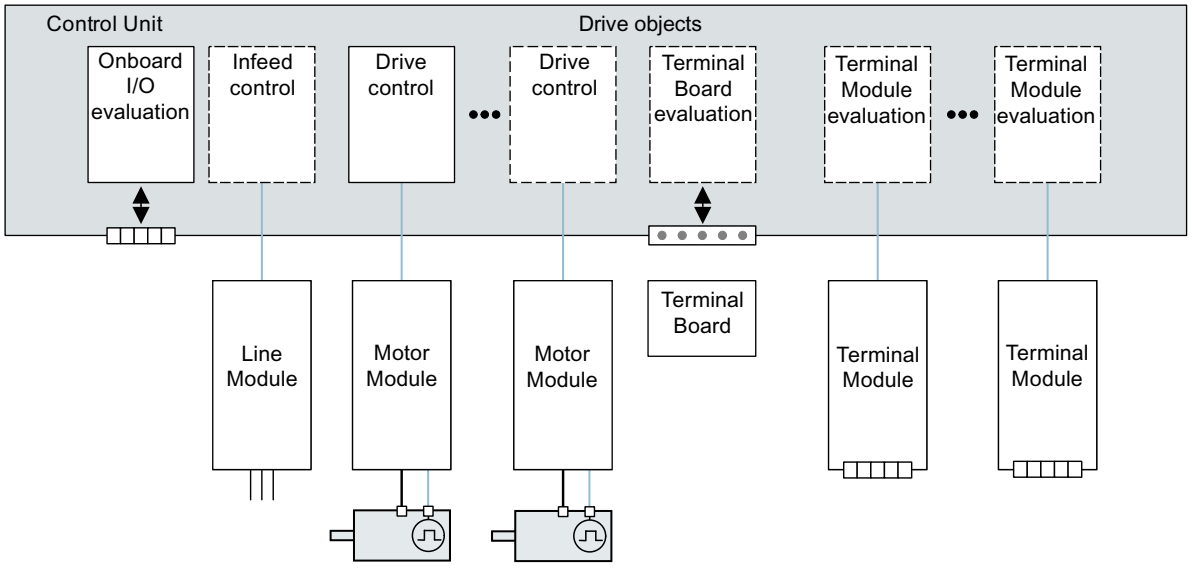

Figure 14-3 Drive objects (DOs)

Overview of the drive objects

- Drive control
  The drive control handles closed-loop control of the motor. At least 1 Motor Module and at least 1 motor and up to 3 sensors are assigned to the drive control.
  Various drive control modes can be configured (e.g. servo control, vector control, etc.).
  Several drive controls can be configured, depending on the performance of the Control Unit and the demands made on the drive controller.
- Control Unit, inputs/outputs
  The I/Os on the Control Unit are evaluated within a DO. High-speed inputs for probes are processed here in addition to bidirectional digital I/Os.
- Properties of a drive object
  - Separate parameter space
  - Separate fault/alarm system
  - Separate PROFIdrive telegram for process data

- Infeed: Line Module infeed control with DRIVE-CLiQ interface
  If a Line Module with a DRIVE-CLiQ interface is used for the infeed unit in a drive system, open-loop/closed-loop control is implemented on the Control Unit within a corresponding DO.
- Infeed: Line Module infeed control with DRIVE-CLiQ interface
  If a Line Module without a DRIVE-CLiQ interface is used for the infeed unit in a drive system, the Control Unit must handle activation and evaluation of the corresponding signals (RESET, READY).
- Option Board evaluation
  An additional DO is responsible for evaluating an inserted option board. The specific method of operation depends on the type of option board.
- Terminal Module evaluation
  A separate DO handles evaluation of the respective optional Terminal Modules.
- Evaluating an external ENCODER
  A dedicated DO is responsible for evaluating an optional additional encoder that can be connected.

Note

Drive objects

A list of all drive objects is provided in the SINAMICS S120/S150 List Manual in Chapter "Overview of parameters".

Configuring drive objects

Various DOs can be created within a Control Unit. When commissioning for the first time, these DOs can be set up using Startdrive.

The DOs are configurable function blocks and are used to execute specific drive functions. If you need to configure additional DOs or delete existing ones after first commissioning, the drive system must be switched to configuration mode. The parameters of a DO cannot be accessed until the DO has been configured and you have switched from configuration mode to parameterization mode.

Note

Each installed DO is allocated a number between 0 and 63 during first commissioning for unique identification.

Overview of important parameters (see SINAMICS S120/S150 List Manual)

- p0101[0...n] Drive object numbers
- r0102[0...1] Number of drive objects
- p0107[0...n] Drive object type
- p0108[0...n] Drive object function module (only for "Control Unit" drive object)
- r0108 Drive object function module (all other drive objects)

14.3 Licensing

14.3.1 Overview

To use the SINAMICS S120 drive system and the activated options, you must assign the purchased licenses to the hardware. When making this assignment, users receive a License Key, which electronically links the relevant option with the hardware.

The License Key is an electronic license stamp that indicates that one or more software licenses are owned.

Actual customer verification of the license for the software that is subject to license is called a "Certificate of License" ("CoL").

Note

Refer to the order documentation (e.g. catalogs) for information on basic functions and functions subject to license.

Properties of the license key

- Is assigned to a specific memory card.
- Is stored retentively on the memory card.
- Is not transferrable.
- Can already be permanently assigned to an ordered memory card during the ordering process.
- Can also be generated subsequently with the "WEB License Manager" from a license database based on the previously ordered and received Certificates of License.

System responses

System response if there is a not a sufficient license for an option

An insufficient license for an option is indicated by the following error and LED on the Control Unit:

- F13000 licensing is insufficient.
- LED READY Red light flashing at 2 Hz



Note

The drive can only be operated with an insufficient license for an option during commissioning and servicing. For this purpose, the Trial License Mode must be activated explicitly.

The drive requires a sufficient license in order for it to operate. Not all options support the Trial License Mode.

System response for an insufficient license for a function module

An insufficient license for a function module is indicated using the following fault and LED on the Control Unit:

- F13000 licensing is insufficient.
- F13010 licensing, function module not licensed.
- The drive is stopped with an OFF1 response.
- LED READY Red light flashing at 2 Hz



Note

It is not possible to operate a drive system with an insufficient license for a function module.

The drive requires a sufficient license in order for it to operate.

System response if there is a not a sufficient license for an technology extension

An insufficient license for a technology extension (also known under the name "OA application") is indicated by the following error and LED on the Control Unit:

- F13000 licensing is insufficient.
- LED READY Red light flashing at 2 Hz



Note

The drive can only be operated with an insufficient license for a technology extension during commissioning and servicing. For this purpose, the Trial License Mode must be activated explicitly.

The drive requires a sufficient license in order for it to operate. Not all technology extensions support the Trial License Mode.

Information on performance expansion

The "Performance" option (Article number: 6SL3074-0AA01-0AA0) is required as of the 4th axis (for SERVO/VECTOR) or as of the 7th V/f axis for the CU320-2 is (see Availability of SW functions (Page 905)). If the number of axes is exceeded, error F13000 is output and the LED READY on the Control Unit flashes red at 2 Hz.

When using axis-granular options, such as the extended safety functions, a license is required for each axis.

14.3.2 Overview of licenses

Overview of licenses

A license overview page is included in the commissioning tool.

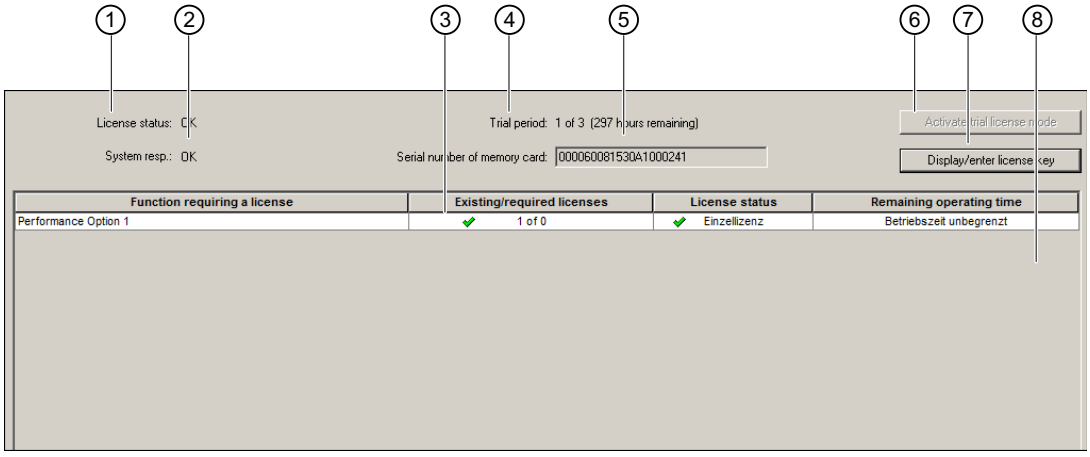

① Display regarding the current license status (e.g. underlicensed)

② System response to the current license status (e.g. prevents the drive from being switched on again.)

③ Displays the required number of licenses compared with the number of licenses included in the license key. (**Note:** For operation, the number of available licenses ≥ the number of licenses required.)

④ Displays the current status of the Trial License (e.g. Trial License Mode not active)

⑤ Button to display and copy the serial number of the memory card

⑥ Button for activating the Trial License Mode

⑦ Button for displaying and entering the License Key

⑧ List of all used functions that require a license

Figure 14-4 Displaying the license overview (example)

The following actions are possible in the license overview:

- Obtain a status overview of the individual licenses of your drive system.
- Display license key and enter (see Chapter "Displaying/entering the License Key (Page 784)").

- Display and copy the serial numbers of the memory cards being used.
- Activating the Trial License Mode (see Chapter "Activating Trial License Mode (Page 781)").

Trial License Mode

General Information

The Trial License Mode comprises a total of 3 Trial License Periods. Each individual Trial License Period has a 300 hour operating time that cannot be changed, and which must be individually activated. A maximum operating time of 900 hours (3 · 300 hours) is obtained for the Trial License Mode.

Note

Using functions in the Trial License Mode

Trial License Mode supports a variety of functions that require licenses. Using Trial License Mode, you can use functions that require licenses for a limited time without purchasing a license.

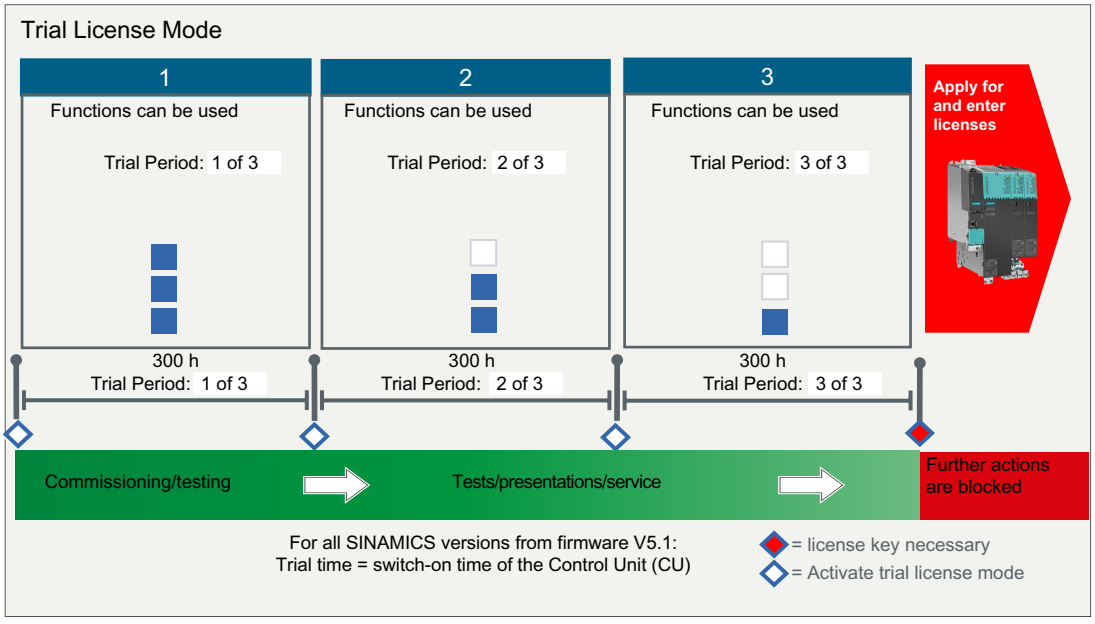

Figure 14-5 Trial License Mode: Trial License Periods and applications

Applications

The 1st Trial License Period is used for commissioning and the tests that are carried out in the commissioning phase. The 2nd and 3rd Trial License Periods are intended for testing, presentations/demonstrations or service.

Activating the Trial License Mode

Trial License Mode can only be activated once. This applies independent of any functions that the user added during the course of the Trial License Mode and the individual Trial License Periods .

Note

Reactivation is not possible!

It is not possible to activate the Trial License Mode once it has been deactivated! The Trial License Mode is deactivated if one of the following conditions applies.

- The operating time of the 3rd (last) Trial License Period has expired.
- The user ignores the request to activate the next Trial License Period and the system is running up again.

Activating individual Trial License Periods

The 1st Trial License Period is automatically activated when the Trial License Mode is activated. The 2nd and 3rd Trial License Periods must be individually activated once the previous Trial License Period expires.

Trial License Periods that have already been activated can no longer be deactivated or stopped. The operating time of activated Trial License Periods is decremented if an additional function requiring a license supported by Trial License Mode is added to the Trial License Mode.

Expiry of a Trial License Period

You receive a message in plenty of time before a Trial License Period expires. You can then activate the next free Trial License Period or you can replace the Trial License Mode by a full license.

Note

Deactivating the Trial License Mode

If you do not activate the next still free Trial License Period, then the Trial License Mode is deactivated the next time the drive runs up. Once the Trial License Mode has been deactivated, you can only continue to operate with a full license.

Deactivating Trial License Periods

It is not possible to deactivate individual Trial License Periods. The Trial License Mode goes on hold if one of the following conditions applies.

- All functions that are activated and require a license were deactivated.
- A valid license key was entered.

While Trial License Mode goes on hold, the operating time of the last activated Trial License Period is frozen and is continued at the next reactivation. The last activated Trial License Period is automatically continued if the system identifies an underlicensed state. In this case, it is not necessary to reactivate the Trial License Mode.

Purchasing a full license

There are 2 options to purchase licenses for functions requiring a license.

- Licenses are ordered together with a memory card.
- When subsequently ordered, licenses can be assigned to your memory card using the "Web License Manager".

14.3.3 Activating Trial License Mode

Requirement

- A project has been created.
- A drive has been created.
- There is an online connection between the PG/PC and the drive unit.

Procedure

Note

Scope of the Trial License Mode

The Trial License Mode comprises a total of 3 Trial License Periods. Each individual Trial License Period has a 300 hour operating time that cannot be changed, and which must be individually activated.

Note

Activating individual Trial License Periods

The 1st Trial License Period is automatically activated when the Trial License Mode is activated. The 2nd and 3rd Trial License Periods must be individually activated once the previous Trial License Period expires.

Note

Trial License Mode is not yet available with Startdrive.

1. Call the license overview page on:
   - STARTER:
     Select the "License overview" subentry in the project navigator.
   - Web server S120:
     Call "Licenses" in the navigation.
2. Click on the "Activate Trial License Mode" button.

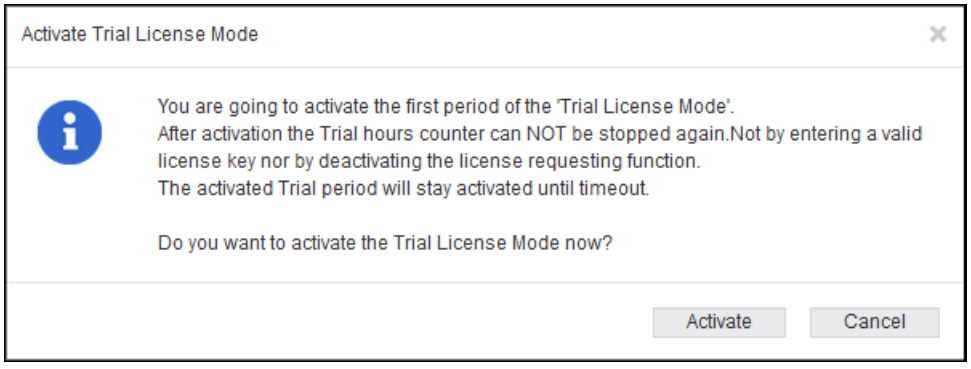

Figure 14-6 Example with STARTER: ActivatingTrial License Mode

3. In the query dialog, click on "Activate" to activate the Trial License Mode .
   Result: The following alarms are displayed:
   - **Alarm A13030** indicates that the Trial License Mode is activated. The status overview then shows the remaining operating time of the functions requiring a license in the Trial License Mode. Alarm A13030 is not displayed if the Trial License Mode was not successfully activated.

     Note

     Trial License Mode not successfully activated

     The Trial License Mode cannot be activated if one of the following conditions applies.
     - The license for the function requiring a license has already been installed and activated.
     - The Trial License Mode does not support the function requiring a license that was selected.

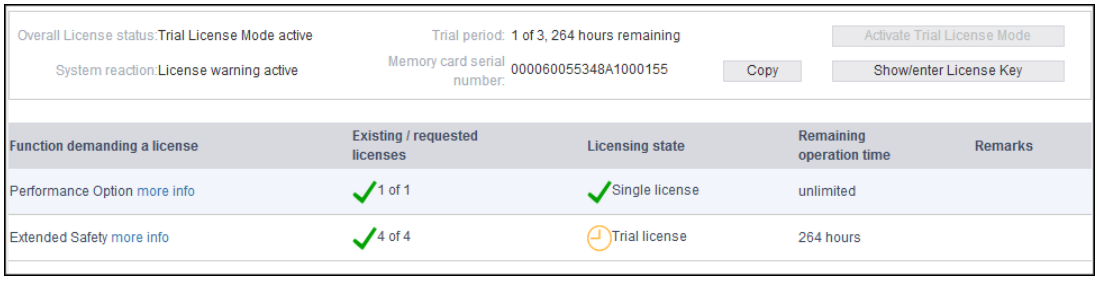

Figure 14-7 Example of web server: Displaying license overview with the active Trial License Period

   - **Alarm A13031** "Trial License Period expired" indicates that the previously activated Trial License Period (e.g. 1 of 3) has expired.

4. Repeat steps 2 and 3 to activate additional Trial License Periods.

   Note

   You can only activate the next Trial License Period after the previous period has expired.

   After the 3rd Trial License Period has expired, you receive **Alarm A13033** "Trial License last Period expired" - and the Trial License Mode is automatically deactivated. Activating the Trial License Mode with additional Trial License Periods is then no longer possible. The next time that the drive runs-up, a lock (inhibit) becomes active. Subfunctions can only be used with a full license!

5. Proceed as follows, to use SINAMICS S120 or subfunctions after the Trial License Mode has expired:
   - Purchase a full license for the affected subfunctionalities.
   - Generate a new License Key (see Chapter "Creating a license key (Page 783)").
   - Enter the new License Key (see Chapter "Displaying/entering the License Key (Page 784)").

14.3.4 Creating a license key

The WEB License Manager informs you about how many and which licenses are assigned to your memory card. If you need additional licenses, you can create a new license key using the WEB License Manager and assign it to your memory card.

Note

A new license is not required for upgrading the firmware. Therefore, do not delete the license key from the memory card (..\KEYS\SINAMICS\KEYS.txt) if you want to upgrade.

The following information is required to work with the "WEB License Manager":

- Serial number for the memory card
  The serial number is on the memory card or can be copied from the license overview.
- License number and delivery note number of the license (shown on the Certificate of License)
- Product name

Creating a license key

1. Call the following link:
   WEB License Manager (https://workplace.automation.siemens.com/pls/swl-pub/SWL_MAIN_MENU.NAVIGATION_HEAD?a_lang_id=E&a_action=)
2. Select the "Direct access" link.
   The progress indicator is at "Login" in the License Manager.
3. Enter the license number and delivery note number of your license and then click "Next".
   The progress indicator is then at "Identify product".
4. Enter the serial number of the memory card.

5. Select the product that you are using, e.g. "SINAMICS S CU320-2 DP". Then click "Next".
   The progress indicator is at "Select licenses". In the "Already assigned licenses" column, you can see which licenses of the selected delivery note have already been assigned and how often.
   In the "Additional licenses to be assigned" column, you can activate the desired licenses or also specify how many additional licenses you require.
6. Activate the additional required licenses and then click "Next".
   The progress indicator is at "Assign licenses". A summary of the selected licenses is displayed here for checking.
7. To start the assignment, click "Assign".
   A prompt appears.
8. When you are sure that the license has been correctly assigned, click "OK".
   The licenses are permanently assigned to the specified hardware. The progress indicator is at "Generate license key". The License Key is displayed and can be saved as a text file or as a PDF.

Displaying the license key

If the License Key on the memory card is accidentally deleted, you can display it again via the WEB License Manager.

1. Call the following link:
   WEB License Manager (https://workplace.automation.siemens.com/pls/swl-pub/SWL_MAIN_MENU.NAVIGATION_HEAD?a_lang_id=E&a_action=)
2. In the navigation, click the "Display license key" option in the "User menu".
   Several input fields can be found on the right of the "Display license key" view.
3. Enter the serial number of your memory card in the "Hardware serial number" field or in the "License no." field. enter your license number and then click the "Display license key" button.
   The current License Key is then displayed.
   You can request this License Key by e-mail in the form of a report. This report contains all previously ordered licenses for this memory card. Missing licenses can be detected and re-ordered on the basis of this report.
4. Enter your address in the "E-mail address" field and then click the "Request license report" button.

14.3.5 Displaying/entering the License Key

A license overview page is included in the Startdrive commissioning tool and in the S120 web server. From this overview page, you can view the current license key, and if required, you can also enter a new key.

Requirements

- A project has been created.
- A drive has been created.
- There is an online connection between the PG/PC and the drive unit.

Procedure

Startdrive

- Call the license overview page.
- Double-click the drive control in the project navigation.
- Double-click the "Parameter" entry.
- Click "License" in the secondary navigation.

Web server

- Here, see Chapter "Displaying/entering the license key (Page 764)".

14.3.6 Messages and parameters

Overview of important alarms and faults (see SINAMICS S120/S150 List Manual)

- F13000 Licensing is not sufficient
- F13010 Licensing, function module not licensed.
- A13030 Trial license activated
- A13031 Trial license period expired
- A13032 Trial license, last period activated
- A13033 Trial license, last period expired

Overview of important parameters (see SINAMICS S120/S150 List Manual)

- p9918 Activate the licensing of a trial license
- p9919 Licensing trial license status
- p9920[0...99] Licensing, enter license key
- p9921 Licensing, activate license key

14.4 BICO technology: Interconnecting signals

Every drive contains a large number of interconnectable input and output variables and internal control variables.

BICO technology (Binector Connector Technology) allows the drive to be adapted to a wide variety of requirements.

Digital and analog signals which can be connected freely by means of BICO parameters, are identified by the prefix BI, BO, CI or CO in their parameter name.

These parameters are identified accordingly in the parameter list or in the function diagrams.

14.4.1 Binectors, connectors

Binectors, BI: Binector Input, BO: Binector Output

A binector is a digital (binary) signal without a unit which can assume the value 0 or 1.

Binectors are subdivided into binector inputs (signal sink) and binector outputs (signal source).

Table 14-2 Binectors

Abbreviation	Symbol	Name	Description
BI		Binector input (signal sink)	Can be interconnected to a binector output as source. The number of the binector output must be entered as a parameter value.
BO		Binector output (signal source)	Can be used as a source for a binector input.

Connectors, CI: Connector Input, CO: Connector Output

A connector is a digital signal, e.g. in 32-bit format. It can be used to emulate words (16 bits), double words (32 bits) or analog signals. Connectors are subdivided into connector inputs (signal sink) and connector outputs (signal source).

Table 14-3 Connectors

Abbreviation	Symbol	Name	Description
CI		Connector input (signal sink)	Can be interconnected to a connector output as source. The number of the connector output must be entered as a parameter value.
CO		Connector output (signal source)	Can be used as a source for a connector input.

14.4.2 Interconnecting signals using BICO technology

To interconnect two signals, a BICO input parameter (signal sink) must be assigned to the desired BICO output parameter (signal source).

The following information is required in order to connect a binector/connector input to a binector/connector output:

- Binectors: Parameter number, bit number, and drive object ID
- Connectors with no index: Parameter number and drive object ID
- Connectors with index: Parameter number, index, and drive object ID
- Data type (signal source for connector output parameter)

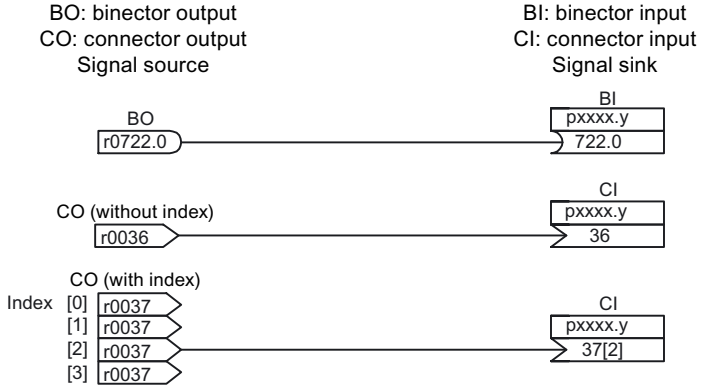

Figure 14-8 Interconnecting signals using BICO technology

Note

A connector input (CI) cannot be interconnected with any connector output (CO, signal source). The same applies to the binector input (BI) and binector output (BO).
For each CI and BI parameter, the parameter list shows under "data type" the information on the data type of the parameter and the data type of the BICO parameter.
For CO parameters and BO parameters, only the data type of the BICO parameter is shown.

Notation:

- Data type BICO input: Data type parameter/Data type BICO parameter
  Example: Unsigned32 / Integer16
- Data type BICO output: Data type BICO parameter
  Example: FloatingPoint32

The possible interconnections between the BICO input (signal sink) and BICO output (signal source) are listed in the table titled "Possible combinations for BICO interconnections"
, which can be found in the "Explanations on the parameter list" section of the SINAMICS S120/S150 List Manual.

The BICO parameter interconnection can be implemented in different command data sets (CDS). The different interconnections are activated by switching data sets. Interconnections across drive objects are also possible.

14.4.3 Internal coding of the binector/connector output parameters

Internal coding is required for writing BICO input parameters via PROFIBUS, for example.

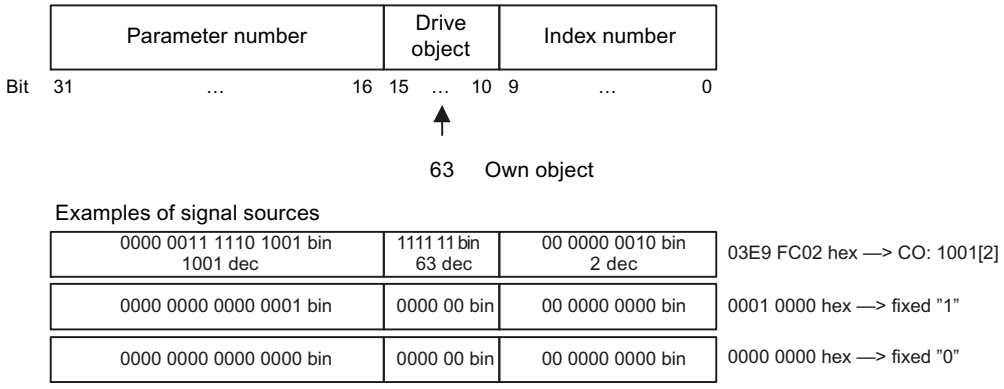

Figure 14-9 Internal coding of the binector/connector output parameters

14.4.4 Sample interconnections

Example 1: Interconnection of digital signals

Suppose you want to operate a drive via terminals DI 0 and DI 1 on the Control Unit using jog 1 and jog 2.

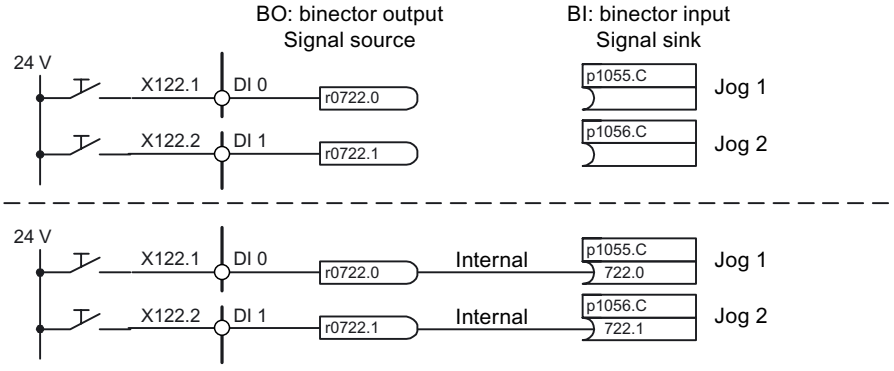

Figure 14-10 Interconnection of digital signals (example)

Example 2: Connection of OC/OFF3 to several drives

The OFF3 signal should be connected to two drives via terminal DI 2 on the Control Unit.

Each drive has the two binector inputs, "1st OFF3" and "2nd OFF3". The two signals are processed via an AND gate to STW1.2 (OFF3).

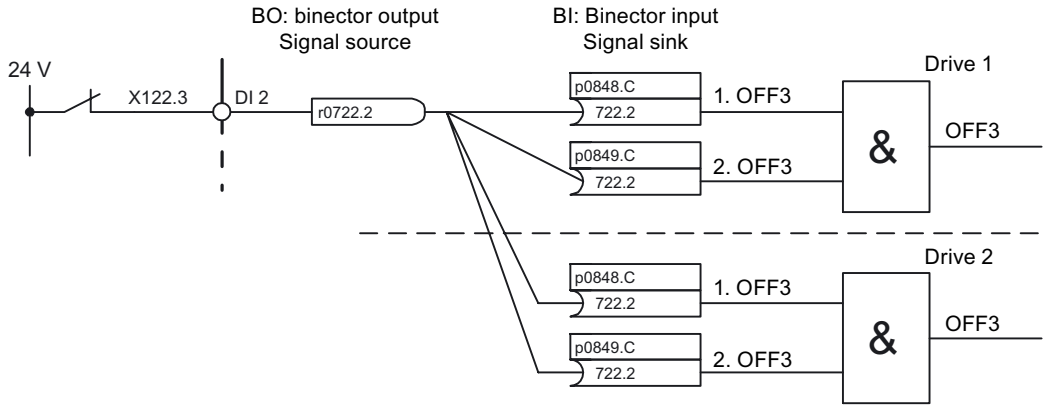

Figure 14-11 Connection of OFF3 to several drives (example)

14.4.5 Notes on BICO technology

BICO interconnections to other drives

The following parameters are available for BICO interconnections to other drives:

- r9490 Number of BICO interconnections to other drives
- r9491[0...9] BI/CI of BICO interconnections to other drives
- r9492[0...9] BO/CO of BICO interconnections to other drives
- p9493[0...9] Reset BICO interconnections to other drives

Copying drives

When a drive is copied, the interconnection is copied with it.

Binector-connector converters and connector-binector converters

Binector-connector converter

- Several digital signals are converted to a 32-bit integer double word or to a 16-bit integer word.
- p2080[0...15] BI: PROFIdrive PZD send bit-serial

Connector-binector converter

- A 32-bit integer double word or a 16-bit integer word is converted to individual digital signals.
- p2099[0...1] CI: PROFIdrive PZD selection receive bit-by-bit

Fixed values for interconnection using BICO technology

The following connector outputs are available for interconnecting any fixed value settings:

- p2900[0...n] CO: Fixed value_%_1
- p2901[0...n] CO: Fixed value_%_2
- p2930[0...n] CO: Fixed value_M_1

Example:

These parameters can be used to interconnect the scaling factor for the main setpoint or to interconnect an additional torque.

14.4.6 Scaling

Signals for the analog outputs

Table 14-4 List of signals for analog outputs

Signal	Parameter	Unit	Scaling (100% = ...)
Speed setpoint before the setpoint filter	r0060	rpm	p2000
Actual speed value, motor encoder	r0061	rpm	p2000
Actual speed value	r0063	rpm	p2000
Drive output frequency	r0066	Hz	Reference frequency
Absolute actual current value	r0068	Arms	p2002
Actual DC-link voltage value	r0070	V	p2001
Total torque setpoint	r0079	Nm	p2003
Actual active power	r0082	kW	r2004
Control deviation	r0064	rpm	p2000
Modulation depth	r0074	%	Reference modulation depth
Torque-generating current setpoint	r0077	A	p2002
Torque-generating actual current value	r0078	A	p2002
Flux setpoint	r0083	%	Reference flux
Flux actual value	r0084	%	Reference flux
Speed controller PI torque output	r1480	Nm	p2003
Speed controller I torque output	r1482	Nm	p2003

Changing scaling parameters p2000 to p2007

Note

If a per unit representation is selected and the reference parameter is subsequently changed (e.g. p2000), the per unit values of some control parameters are automatically adapted so that the control behavior does not change.

14.4.7 Propagation of faults

Overview

In the case of faults that are, for example, triggered by the Control Unit or a Terminal Module, central functions of the drive are also often affected. As a result of propagation, faults that are triggered by one drive object are therefore transferred to other drive objects. This response also applies to the faults that are set in a DCC chart on the Control Unit using a DCC block.

Propagation types

The following types of propagation are available:

- BICO
  The fault is propagated to all active drive objects with closed-loop control functions (infeed, drive) to which there is a BICO interconnection.
- DRIVE
  The fault is propagated to all active drive objects with closed-loop control functions.
- GLOBAL
  The fault is propagated to all active drive objects.
- LOCAL
  The behavior of this propagation type is dependent on parameter p3116.
  - For binector input p3116 = 0 signal, the following applies (factory setting):
    The fault is propagated to the first active drive object with closed-loop control functions.
  - For binector input p3116 = 1 signal, the following applies:
    The fault is not propagated.

14.5 Data sets

14.5.1 CDS: Command data set

The BICO parameters are combined (binector and connector inputs) in a command data set (CDS). These parameters are used to interconnect the signal sources of a drive.

By parameterizing several command data sets and switching between them, the drive can be operated with different pre-configured signal sources.

A command data set contains the following (examples):

- Binector inputs for control commands (digital signals)
  - ON/OFF, enable signals (p0844, etc.)
  - Jog (p1055, etc.)
- Connector inputs for setpoints (analog signals)
  - Voltage setpoint for V/f control (p1330)
  - Torque limits and scaling factors (p1522, p1523, p1528, p1529)

A drive object can – depending on the type – manage up to 4 command data sets. The number of command data sets is configured with p0170.

The following parameters are available for selecting command data sets and for displaying currently selected command data sets - e.g. in the vector mode:

Binector inputs p0810 to p0811 are used to select a command data set. They represent the number of the command data set (0 to 3) in binary format (where p0811 is the most significant bit).

- p0810 BI: Command data set selection CDS bit 0
- p0811 BI: Command data set selection CDS bit 1

If a command data set that does not exist is selected, the current data set remains active. The selected data set is displayed using parameter (r0836).

Note

When using standard telegrams in command data records, make sure that you do not change telegram interconnections as this may lead to inconsistent behavior otherwise. If you wish to change telegram interconnections, please assign the telegram selection with 999 (free telegram).

Example: Changeover between command data set 0 and 1

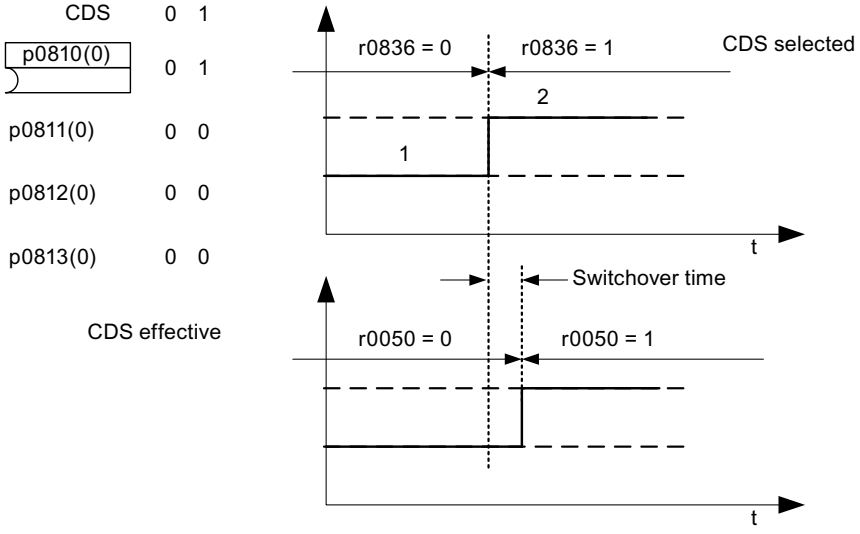

Figure 14-12 Switching the command data set (example)

14.5.2 DDS: Drive Data Set

A drive data set (DDS) contains various adjustable parameters that are relevant for open-loop and closed-loop drive control:

- Numbers of the assigned motor and encoder data sets:
  - p0186: Assigned motor data set (MDS)
  - p0187 to p0189: Up to three assigned encoder data sets (EDS)
- Various control parameters, e.g.:
  - Fixed speed setpoints (p1001 to p1015)
  - Speed limits min./max. (p1080, p1082)
  - Characteristic data of ramp-function generator (p1120 ff)
  - Characteristic data of controller (p1240 ff)
  - ...

The parameters that are grouped together in the drive data set are identified in the SINAMICS S120/S150 List Manual by "Data Set DDS" and are assigned an index [0...n].

It is possible to parameterize several drive data sets. You can switch easily between different drive configurations (control type, motor, encoder) by selecting the corresponding drive data set.

One drive object can manage up to 32 drive data sets. The number of drive data sets is configured with p0180.

Binector inputs p0820 to p0824 are used to select a drive data set. They represent the number of the drive data set (0 to 31) in binary format (where p0824 is the most significant bit).

- p0820 BI: Drive data set selection DDS, bit 0
- p0821 BI: Drive data set selection DDS, bit 1
- p0822 BI: Drive data set selection DDS, bit 2
- p0823 BI: Drive data set selection DDS, bit 3
- p0824 BI: Drive data set selection DDS, bit 4

Supplementary conditions and recommendations

- Recommendation for the number of drive data sets for a drive
  The number of drive data sets for a drive should correspond to the options for changeover. The following must therefore apply:
  p0180 (DDS) ≥ max. (p0120 (PDS), p0130 (MDS))
- Max. number of DDS for one drive object = 32 DDS

14.5.3 EDS: Encoder Data Set

An encoder data set (EDS) contains various adjustable parameters of the connected encoder, which are relevant for configuring the drive; e.g.:

- Encoder interface component number (p0141)
- Encoder component number (p0142)
- Encoder type selection (p0400)

The parameters that are grouped together in the encoder data set are identified in the parameter list by "Data Set EDS" and are assigned an index [0...n].

A separate encoder data set is required for each encoder controlled by the Control Unit. Up to three encoder data sets are assigned to a drive data set via parameters p0187, p0188, and p0189.

An encoder data set can only be changed over using a DDS switchover.

An encoder data set switchover without pulse inhibit (motor is being fed with power) may only be performed on adjusted encoders (pole position identification has been carried out or the commutation angle determined for absolute encoders).

Each encoder must only be assigned to one drive.

Using a power unit for the alternating operation of several motors would be an EDS switchover application. Contactors are switched over so that the power unit can be connected to the different motors. Each of the motors can be equipped with an encoder or can also be operated without an encoder. Each encoder must be connected to its own SMx.

If encoder 1 (p0187) is switched over via DDS, then an MDS must also be switched over.

Note

Switching over between several encoders

In order to be able to switch between two or more encoders using the EDS switched function, you must connect these encoders via various Sensor Modules or DRIVE-CLiQ ports.

When using the same connection for several encoders, the same EDS and the same encoder type must be used. In this case a switched on the analog side (e.g. of the SMC) is recommended. A switched on the DRIVE-CLiQ side is, due to the permissible insertion cycles and the longer times to establish DRIVE-CLiQ communication, only possible with some restrictions.

If a motor is operated with motor encoder 1 and then later with motor encoder 2, two different MDSs must be created with identical motor data.

One drive object can manage up to 16 encoder data sets. The number of encoder data sets configured is specified in p0140.

When a drive data set is selected, the assigned encoder data sets are also selected.

Note

EDS switchover for safe motion monitoring

An encoder which is used for safety functions must not be switched over when a drive data set (DDS) is switched over.

The safety functions check the safety-relevant encoder data for changes when data sets are switched over. If a change is detected, fault F01670 is displayed with a fault value of 10, which results in a non-acknowledgeable STOP A. The safety-relevant encoder data in the various data sets must therefore be identical.

14.5.4 MDS: Motor Data Set

A motor data set (MDS) contains various setting parameters of the connected motor, which are relevant when configuring the drive. It also contains certain display parameters with calculated data.

- Adjustable parameters, e.g.:
  - Motor component number (p0131)
  - Motor type selection (p0300)
  - Rated motor data (p0304 ff.)
  - ...
- Display parameters, e.g.:
  - Calculated rated data (p0330 ff.)
  - ...

The parameters that are grouped together in the motor data set are identified in the SINAMICS S120/S150 List Manual by "Data Set MDS" and are assigned an index [0...n].

A separate motor data set is required for each motor that is controlled by the Control Unit via a Motor Module. The motor data set is assigned to a drive data set via parameter p0186.

A motor data set can only be changed using a DDS changeover. The motor data set changeover is, for example, used for:

- Changing over between different motors
- Changing over different windings in a motor (e.g. star-delta changeover)
- Adapting the motor data

If several motors are operated alternately on a Motor Module, a matching number of drive data sets must be created. Further information about motor changeover, see Section Motor changeover in this manual.

One drive object can manage up to 16 motor data sets. The number of motor data sets in p0130 must not exceed the number of drive data sets in p0180.

For the 611U interface mode (p2038 = 1), the drive data sets are divided into groups of eight (1-8; 9-16;...). Within a group, the assignment to the motor data set must be identical:

p0186[0] = p0186[1] = ... = p0186[7]
p0186[8] = p0186[9] = ... = p0186[15]
p0186[16] = p0186[17] = ... = p0186[23]
p0186[24] = p0186[25] = ... = p0186[31]

If this rule is not observed, alarm A07514 is output. If you need a precise representation of the data set structure of the 611U, 32 drive data sets and 4 motor data sets must be configured.

Example of data set assignment

Table 14-5 Example, data set assignment

DDS	Motor (p0186)	Encoder 1 (p0187)	Encoder 2 (p0188)	Encoder 3 (p0189)
DDS 0	MDS 0	EDS 0	EDS 1	EDS 2
DDS 1	MDS 0	EDS 0	EDS 3	-
DDS 2	MDS 0	EDS 0	EDS 4	EDS 5
DDS 3	MDS 1	EDS 6	-	-

14.5.5 Function diagrams and parameters

Function diagrams (see SINAMICS S120/S150 List Manual)

- 8560 Data sets - Command Data Sets (CDS)
- 8565 Data sets - Drive Data Sets (DDS)

- 8570 Data sets - Encoder Data Sets (EDS)
- 8575 Data sets - Motor Data Sets (MDS)

Overview of important parameters (see SINAMICS S120/S150 List Manual)

- p0120 Power Module data sets (PDS) number
- p0130 Motor data sets (MDS) number
- p0139[0...2] Copy motor data set (MDS)
- p0140 Encoder data sets (EDS) number
- p0170 Command data set (CDS) number
- p0180 Drive data set (DDS) number
- p0186 [0...n] Motor data sets (MDS) number
- p0187[0...n] Encoder 1 encoder data set number
- p0188[0...n] Encoder 2 encoder data set number
- p0189[0...n] Encoder 3 encoder data set number
- p0809[0...2] Copy Command Data Set CDS
- p0810 BI: Command data set selection CDS bit 0
- p0811 BI: Command data set selection CDS bit 1
- p0819[0...2] Copy drive data set DDS
- p0820[0...n] BI: Drive data set selection DDS, bit 0
- p0821[0...n] BI: Drive data set selection DDS, bit 1
- p0822[0...n] BI: Drive data set selection DDS, bit 2
- p0823[0...n] BI: Drive data set selection DDS, bit 3
- p0824[0...n] BI: Drive data set selection DDS, bit 4

14.6 Inputs/outputs

The following digital/analog inputs/outputs are available:

Table 14-6 Overview of inputs/outputs

Component	Digital			Analog	
	Inputs	Bidirectional inputs/outputs	Outputs	Inputs	Outputs
CU320-2	12[1]	8[2]	-	-	-
CU310-2	5+3[3]	8+1[3]	-	1	-
TB30	4	-	4	2	2
TM15	-	24	-	-	-
TM31	8	4	-	2	2
	Relay outputs: 2 Temperature sensor input: 1				
TM41	4	4	-	1	-
	Incremental encoder emulation: 1				
TM120	Temperature sensor inputs: 4				

1) Adjustable: floating or non-floating

2) Six of these are "high-speed inputs"

3) Additional inputs for Safety Integrated Basic Functions

Note

Detailed information on the hardware properties of the inputs/outputs can be found in the SINAMICS S120 Control Units Manual.

For detailed information about the structural relationships between all I/Os of a component and their parameters, please refer to the function diagrams in the SINAMICS S120/S150 List Manual:

14.6.1 Digital inputs/outputs

Signal processing using the digital inputs is shown in the function diagrams listed below.

Properties

- The digital inputs are "high active".
- An open input is interpreted as "low".
- Fixed debounce setting.
  Delay time = 1 to 2 current controller cycles (p0115[0])
- Availability of the input signal for further interconnection.
  - Inverted and not inverted as a binector output
  - As a connector output

- Simulation mode settable and parameterizable.
- Isolation block by block, set by jumper.
  - Jumper open: Isolated.
    The digital inputs function only if a reference ground is connected.
  - Jumper closed, non-isolated.
    The reference potential of the digital inputs is the ground of the Control Unit.
- Sampling time for digital inputs/outputs can be adjusted (p0799).

Function diagrams (see SINAMICS S120/S150 List Manual)

Control Unit 320-2

- 2120 CU320-2 input/output terminals - isolated digital inputs (DI 0...DI 3, DI 16, DI 17)
- 2121 CU320-2 input/output terminals - isolated digital inputs (DI 4...DI 7, DI 20, DI 21)

TB30

- 9100 Terminal Board 30 (TB30) - isolated digital inputs (DI 0 ... DI 3)

TM15

- 9550 Terminal Module 31 (TM31) - isolated digital inputs (DI 0 ... DI 3)
- 9552 Terminal Module 31 (TM31) - isolated digital inputs (DI 4 ... DI 7)

TM41

- 9660 Terminal Module 41 (TM41) - isolated digital inputs (DI 0 ... DI 3)

Control Unit 310-2

- 2020 CU310-2 input/output terminals - isolated digital inputs (DI 0 ... DI 3, DI 22)
- 2021 CU310-2 input/output terminals - isolated digital inputs (DI 16 ... DI 21)
- 2030 CU310-2 input/output terminals - digital input/outputs, bidirectional (DI/DO 8 … DI/DO 9)
- 2031 CU310-2 input/output terminals - digital input/outputs, bidirectional (DI/DO 10 … DI/DO 11)
- 2032 CU310-2 input/output terminals - digital input/outputs, bidirectional (DI/DO 12 … DI/DO 13)
- 2033 CU310-2 input/output terminals - digital input/outputs, bidirectional (DI/DO 14 … DI/DO 15)
- 2038 CU310-2 input/output terminals - digital output (DO 16)

Digital outputs

Signal processing using the digital outputs is shown in the function diagrams listed below.

Properties

- Separate power supply for the digital outputs.
- Source of output signal can be selected by parameter.
- Signal can be inverted by parameter.
- Status of output signal can be displayed
  - As a binector output
  - As a connector output

Note

Before the digital outputs can function, their own electronics power supply must be connected.

Function diagrams (see SINAMICS S120/S150 List Manual)

TB30

- 9102 Terminal Board 30 (TB30) - isolated digital inputs (DI 0 ... DI 3)

TM31

- 9556 Terminal Module 31 (TM31) - Digital relay outputs, electrically isolated (DO 0 ... DO 1)

Control Unit 310-2

- 2038 CU310-2 input/output terminals - digital output (DO 16)

Bidirectional digital inputs/outputs

Signal processing using the bidirectional inputs/outputs is shown in the function diagrams listed below.

Properties

- Can be parameterized as digital input or output.
- When set as digital input:
  - Six "high-speed inputs" on Control Unit
    If these inputs are used, for example, for the "flying measurement" function, they act as "high-speed inputs" with virtually no time delay when the actual value is saved.
  - The properties of the "pure" digital outputs apply.
- When set as digital output:
  - The properties of the "pure" digital outputs apply.
- Sharing of bidirectional input/output resources by the CU and higher-level controller (see Section "Use of bidirectional inputs/outputs on the CU (Page 801)")

Function diagrams (see SINAMICS S120/S150 List Manual)

Control Unit CU310-2

- 2030 CU310-2 input/output terminals - digital input/outputs, bidirectional (DI/DO 8 … DI/DO 9)
- 2031 CU310-2 input/output terminals - digital input/outputs, bidirectional (DI/DO 10 ... DI/DO 11)
- 2032 CU310-2 input/output terminals - digital input/outputs, bidirectional (DI/DO 12 ... DI/DO 13)
- 2033 CU310-2 input/output terminals - digital input/outputs, bidirectional (DI/DO 14 … DI/DO 15)

CU320-2 Control Unit

- 2130 CU320-2 input/output terminals - digital input/outputs, bidirectional (DI/DO 8 and DI/DO 9)
- 2131 CU320-2 input/output terminals - digital input/outputs, bidirectional (DI/DO 10 and DI/DO 11)
- 2132 CU320-2 input/output terminals - digital input/outputs, bidirectional (DI/DO 12 and DI/DO 13)
- 2133 CU320-2 input/output terminals - digital input/outputs, bidirectional (DI/DO 14 and DI/DO 5)

TM15

- 9400 Terminal Module 15 (TM15) - digital inputs/outputs, bidirectional (DI/DO 0 ... DI/DO 7)
- 9401 Terminal Module 15 (TM15) - digital inputs/outputs, bidirectional (DI/DO 8 ... DI/DO 15)
- 9402 Terminal Module 15 (TM15) - digital inputs/outputs, bidirectional (DI/DO 16 ... DI/DO 23)

TM31

- 9560 Terminal Module 31 (TM31) - digital inputs/outputs, bidirectional (DI/DO 8 and DI/DO 9)
- 9562 Terminal Module 31 (TM31) - digital inputs/outputs, bidirectional (DI/DO 10 and DI/DO 1)

TM41

- 9661 Terminal Module 41 (TM41) - digital inputs/outputs, bidirectional (DI/DO 0 and DI/DO 1)
- 9662 Terminal Module 41 (TM41) - digital inputs/outputs, bidirectional (DI/DO 2 and DI/DO 3)

14.6.2 Use of bidirectional inputs/outputs on the CU

The bidirectional inputs/outputs of terminals X122 and X132 on the CU (DO1) can be used by a drive object as well as a higher-level controller (resource sharing).
The assignment to a terminal is defined by means of BICO interconnections which are either connected to a controller via the DO1 telegram p0922 = 39x or to a drive object.

The setting of parameter p0729 indicates how a digital output of a Control Unit has been assigned, i.e. whether the output of an onboard terminal X122 or X132 is assigned directly to the Control Unit or connected via PROFIBUS to a higher-level controller.

- r0729 = 0: The output is assigned to the Control Unit of the drive or terminal output not available.
- r0729 = 1: Output is assigned to the higher-level controller (PROFIBUS connection). Assignment to the controller means:
  - Terminal is parameterized as output x (p0728.x =1) and
  - Terminal is connected with p2901 via BICO, i.e. the control uses the output in conjunction with the DO1 telegram (p0922 = 39x)
  - Use of the terminal's output signal for integrated platform via high-speed bypass channel of the controller (standard channel with DO1 telegram is always written in parallel).

Parameter r0729 is updated if

- the direction of the onboard terminals changes over (p0728), or
- the signal sources for the outputs (p0738 ff) are changed.

Access priorities

- Reparameterization output controller --> output drive via parameter p0738 ff
  The drive output has higher priority than a standard controller output using the DO1 telegram, but direct access by the controller to the terminal (bypass) has higher priority than the drive output.
  When the output is reconfigured to the drive, the controller needs to cancel a bypass to the terminals (if one has been set up) before the new configuration can take effect.
- Reconfiguration input drive --> output controller
  The output of the controller has higher priority. This is the specified behavior.
  The drive is notified of the change so that the affected application can issue an alarm.
- Reconfiguration output drive --> output controller
  The output of the controller has higher priority.
  This is the specified behavior.
  The drive is notified of the change so that the affected application can issue an alarm/fault message is necessary. Readback of the output information can cause problems in the drive, i.e. the drive application checks the interconnection condition of "its" terminals. If the terminal remains assigned to a drive I/O device as required by the drive function, but is assigned simultaneously a controller terminal status, the drive function cannot be guaranteed to work correctly.

Fault reaction to controller failure

The onboard I/Os assigned to the controller are switched to the safe state in response to a fault. This also applies to terminals whose signals are transferred via the bypass channel of the controller. This status is signaled by failure of the DO1 telegram (sign-of-life failure).

14.6.3 Analog inputs

Signal processing using the analog inputs is shown in the function diagrams listed below.

Properties

- Hardware input filter set permanently
- Simulation mode parameterizable
- Adjustable offset
- Signal can be inverted via binector input
- Adjustable absolute-value generation
- Noise suppression (p4068)
- Enabling of inputs via binector input
- Output signal available via connector output
- Scaling
- Smoothing

Note

Parameters p4057 to p4060 of the scaling do not limit the voltage values / current values (for TM31, the input can be used as current input).

Analog input of Control Unit 310-2

Control Unit CU310-2 has an integrated analog input at terminal strip X131, terminals 7 and 8, an analog input. The input is preset as current or voltage input using DIP switch S5. The input can be further differentiated using p0756 [x]:

p0756[x]	Input function
0	0...10 V
2	0...20 mA
3	4...20 mA
4	-10 V to +10 V
5	-20 mA to +20 mA

The characteristic of the analog input can be scaled using parameters p0757 to P0760.

The value of the analog input can be read out from r0755.

Function diagrams (see SINAMICS S120/S150 List Manual)

- 9104 Terminal Board 30 (TB30) - Analog inputs (AI 0 ... AI 1)
- 9566 Terminal Module 31 (TM31) - Analog input 0 (AI 0)
- 9568 Terminal Module 31 (TM31) - Analog input 1 (AI 1)
- 9663 Terminal Module 41 (TM41) - Analog input 0 (AI 0)

CU310-2:

- 2040 CU310-2 input/output terminals - Analog input (AI 0)

Overview of important parameters (see SINAMICS S120/S150 List Manual)

- r0752[0] CO: CU analog input current input voltage/current
- p0753[0] CU analog input smoothing time constant
- p0761[0] CU analog input wire-break monitoring response threshold
- p0762[0] CU analog input wire-break monitoring delay time
- p0763[0] CU analog input offset
- p0766[0] CU analog input activate absolute-value generation
- p0769[0] BI: CU analog input enable signal source

CU310-2:

- r0755[0] CO: CU analog input actual value in percent
- p0756 [0] CU analog input type
- p0757[0] CU analog input characteristic value x1
- p0758[0] CU analog input characteristic value y1
- p0759[0] CU analog input characteristic value x2
- p0760[0] CU analog input characteristic value y2

14.6.4 Analog outputs

Signal processing using the analog outputs is shown in the function diagrams listed below.

Properties

- Adjustable absolute-value generation
- Inversion via binector input
- Adjustable smoothing
- Adjustable transfer characteristic
- Output signal can be displayed via visualization parameter

Note

Parameters p4077 to p4080 of the scaling do not limit the voltage values / current values (for TM31, the output can be used as current output).

Function diagrams (see SINAMICS S120/S150 List Manual)

- 9106 Terminal Board 30 (TB30) - Analog outputs (AO 0 ... AO 1)
- 9572 Terminal Module 31 (TM31) - Analog outputs (AO 0 ... AO 1)

14.7 Write protection

Note

Write protection is only available with the STARTER commissioning tool.

The write protection prevents unauthorized changing of the drive unit settings. If you are working with a commissioning tool, such as STARTER, then write protection is only effective online. The offline project is not write-protected.

The following interfaces are write-protected:

- STARTER commissioning tool
- Parameter changes via fieldbus

No password is required for write protection.

Setting up and activating write protection

1. Go online.
2. Select the required drive unit in the project navigator of your STARTER project.

3. Call the shortcut menu "Write protection drive unit > Activate".

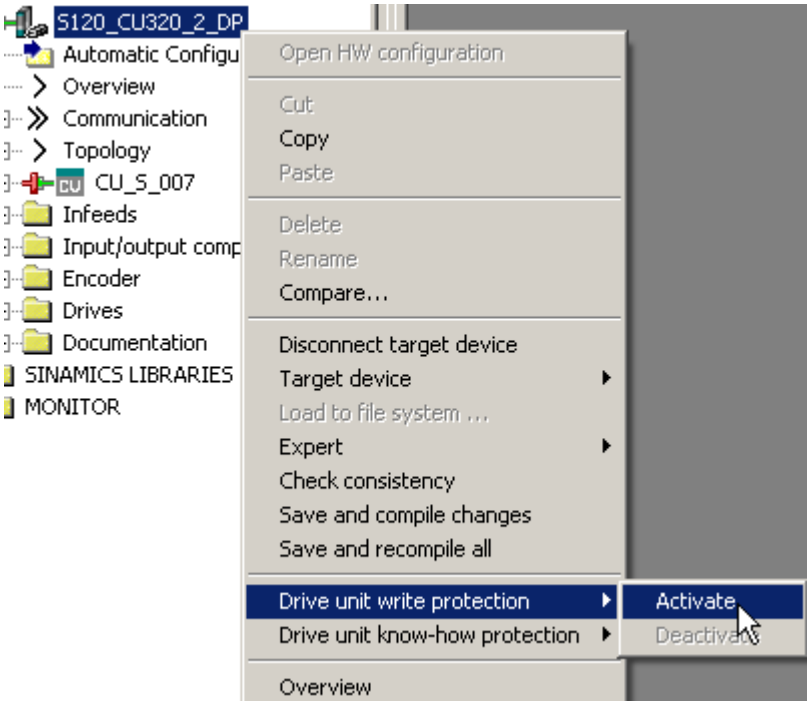

Figure 14-13 Activating write protection

Active write protection can be identified as in the expert list the input fields of adjustable parameters p … are shaded gray.

Note

Know-how protection with active write protection

If write protection is active, the know-how protection setting cannot be changed.

Note

Access via fieldbus

Per default, in spite of write protection, parameters can be changed via fieldbusses with acyclic access. In order to activate write protection for access operations via fieldbuses also, set p7762 to 1 in the expert list.

4. Select the "Copy RAM to ROM" icon to retentively save the settings.

Deactivating write protection

1. Go online.
2. Select the required drive unit in the project navigator of your STARTER project.
3. Call the shortcut menu "Write protection drive unit > Deactivate".
   The hatching in the expert list disappears after deactivation. The parameters can be set again.
4. Select the "Copy RAM to ROM" icon to retentively save the settings.

Exceptions to write protection

Some functions are excluded from write protection, e.g.:

- Deactivating/activating the write protection
- Changing the access level (p0003)
- Saving parameters (p0971)
- Safe removal of the memory card (p9400)
- Restoring the factory setting
- Transferring the settings from an external data backup, e.g. upload into the drive unit from a memory card.

The parameters where write protection does not apply can be found in the SINAMICS S120/150 List Manual in Chapter "Parameters for write protection and know-how protection", Subsection "Parameters with WRITE_NO_LOCK".

Overview of important parameters (see SINAMICS S120/S150 List Manual)

- r7760 Write protection/know-how protection status
- p7761 Write protection
- p7762 Write protection multi-master fieldbus system access behavior

14.8 Know-how protection

14.8.1 Overview

Note

The "Know-how protection" function (KHP) is only available with the STARTER commissioning tool.

The "know-how protection" (KHP) function prevents, for example, strictly confidential company knowledge for configuration and parameter assignment from being read by unauthorized persons.

The know-how protection requires a password. The password must comprise at least 1 and a maximum of 30 characters.

The know-how protection is a pure online function. Therefore, establish a direct connection to the Control Unit before setting the password.

Know-how protection with and without copy protection.

To protect your drive unit settings against unauthorized copying, activate copy protection in addition to know-how protection.

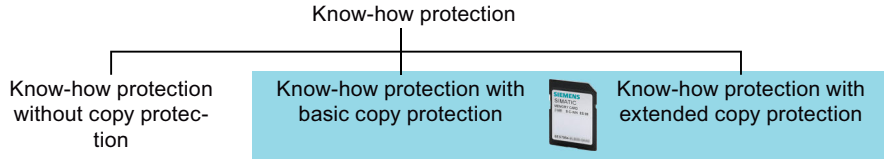

Figure 14-14 Setting options for know-how protection

Know-how protection without copy protection is possible with or without memory card

Know-how protection with copy protection is only possible with a Siemens memory card.

Know-how protection without copy protection

The drive unit can be operated with or without a memory card. You can transfer drive unit settings to other drive units using a memory card, an operator panel, or STARTER.

Know-how protection with basic copy protection

The drive unit can only be operated if the associated memory card with the drive unit settings is inserted into it. After replacing a drive unit, to be able to operate the new one with the settings of the replaced drive unit without knowing the password, the memory card must be inserted in the new drive unit.

Know-how protection with extended copy protection

The drive unit can only be operated if the associated memory card with the drive unit settings is inserted into it. It is not possible to insert and use the memory card in another drive unit without knowing the password.

14.8.2 Know-how protection features

Features when know-how protection is active

The active know-how protection provides the following:

- With just a few exceptions, the values of all adjustable parameters p … are invisible. In STARTER, instead of the parameter values, the text "Know-how protection" is displayed. You can hide know-how protected parameters in the expert list of STARTER using the "Without know-how protection" display filter.
- The values of monitoring parameters r … remain visible.
- STARTER does not display any screen forms.
- Adjustable parameters cannot be changed using commissioning tools.

When know-how protection is active, support can only be provided (from Technical Support) after prior agreement from the machine manufacturer (OEM).

Adjustable parameters that can be changed when know-how protection is active

Several adjustable parameters can be read and changed when know-how protection is active. You can find a list of the readable and adjustable parameters that can be read in the SINAMICS S120/S150 List Manual in Chapter "Parameters for write protection and know-how protection" under "KHP_WRITE_NO_LOCK".

In addition, you can define an exception list of adjustable parameters, which end users may change.

Parameters that can be read when know-how protection is active

Several adjustable parameters can be read but not changed when know-how protection is active. You can find a list of the adjustable parameters that can be read in the SINAMICS S120/S150 List Manual in Chapter "Parameters for write protection and know-how protection" under "KHP_ACTIVE_READ".

Note

Password check for know-how protection

Please note that if the Windows language settings are changed, after activating know-how protection, errors can occur when subsequently checking the password. If you use language-specific special characters, you must ensure that the same language setting is active on the computer for subsequent entry of the password.

Note

Data security of the memory card

After setting up and activating the know-how protection, for encrypted data backup on the memory card, previously backed up, non-encrypted data of the SINAMICS software will be deleted. This is standard deletion procedure, in which only the entries on the memory card are deleted. The data itself is still available and can be reconstructed.

To ensure know-how protection, we recommend the use of a new empty memory card. If you cannot obtain a new memory card in the short term, you should delete all safety-related data on the current memory card.

To completely delete your previous data on the memory card, you must reliably delete this data using a suitable PC tool before activating know-how protection. The data is located on the memory card in the "\\USER\SINAMICS\DATA" directory.

Note

Diagnostics under know-how protection

If service or diagnostics is to be performed when know-how protection is active, then Siemens AG can only provide support in collaboration with the OEM partner.

Functions locked using know-how protection

Active know-how protection inhibits the following functions:

- Download of the drive unit settings using STARTER
- Automatic controller optimization
- Stationary or rotating measurement of the motor data identification
- Deletion of the alarm history and fault history
- The generation of acceptance documents for safety functions

Functions that can be executed for know-how protection

The following functions can be executed when know-how protection is active:

- Restoring the factory settings
- Acknowledging faults
- Displaying faults, alarms, fault history, and alarm history
- Reading-out the diagnostics buffer
- Controlling the drive unit via the control panel in STARTER
- Displaying the generated acceptance documentation for the safety functions

Optional functions that can be executed:

The functions listed below can be executed despite activated know-how protection provided diagnostic functions were permitted when it was activated:

- Trace function
- Function generator
- Measuring function

Functions with restricted executability:

The following listed functions can only be partly executed when know-how protection is active:

- Displaying the topology (actual topology only)
- Uploading adjustable parameters that can be changed or read when know-how protection is active (see List of exceptions (Page 811))

14.8.3 Configuring know-how protection

14.8.3.1 Maintaining the list of exceptions

Before activating the know-how protection, enter the parameters in this exception list that are permitted to remain readable and writable for the end user despite the know-how protection. The exception list can only be created via the expert list. The exception list has no influence on the input screen forms in STARTER.

In the factory setting, the exception list only includes the password for know-how protection. You do not need to change the exception list, if, with exception of the password, you do not require additional adjustable parameters in the exception list.

Factory setting for the exception list:

- p7763 = 1 (exception list contains precisely one parameter)
- p7764[0] = 7766 (parameter number for entering the password)

Note

Parameters belonging to the exception list can be viewed everywhere

All parameters in the exception list can be viewed in the web server and other commissioning tools, even when know-how protection is activated.

Therefore, make sure that no critical parameters are entered in the exception list.

Absolute know-how protection

If you remove password p7766 from the exception list, it is no longer possible to enter or change the password for know-how protection.

You must reset the drive unit to factory settings in order to regain access to the drive unit's adjustable parameters. When restoring the factory settings, you lose what you have configured in the drive unit, and you must recommission the drive unit.

Extending the exception list

1. Using the  symbol on the PC, back up the drive unit settings.
2. Go offline ().
3. Using p7763, in the expert list, define the required number of parameters n (n = 1 … 500) of the exception list.
4. Save the project.
5. Go online.
6. Load the project to the drive unit using the  icon in order to make them effective.
7. In p7764[0 … n-1], assign the required parameter numbers to the indices of p7763.
   You have extended the exception list for know-how protection.

14.8.3.2 Activate know-how protection

Requirements

Before activating know-how protection, the following conditions must be met:

- The drive unit has been fully commissioned.
- You have generated the exception list for know-how protection (see Maintaining the list of exceptions (Page 811)).
- To guarantee know-how protection, you must ensure that the project does not remain at the end user as a file.

Procedure

1. Connect the drive unit to the programming device.
2. Go online with STARTER.
   If you have generated a project offline on your computer, you must load the project into the drive unit and go online.
3. Select the required drive unit in the project navigator of your STARTER project.

4. In the shortcut menu, select "Drive unit know-how protection > Activate".
   The "Activate Know-how Protection for Drive Object" dialog box opens.

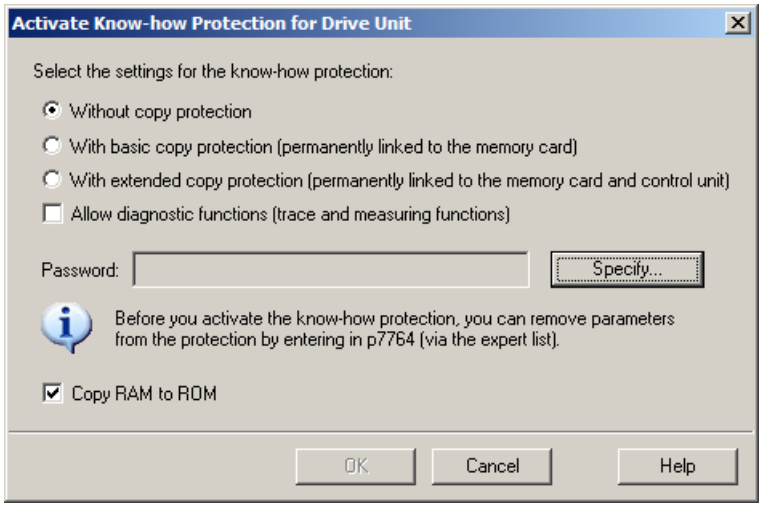

Figure 14-15 Activating

5. The "Without copy protection" option is active by default. When an appropriate memory card is inserted in the Control Unit, you can choose from two copy-protection options:
   - With basic copy protection (permanently linked to the memory card)
   - With extended copy protection (permanently linked to the memory card and Control Unit)

   Select the required copy protection option.

6. Click "Specify".
   The "Know-how Protection for Drive Unit - Specify Password" dialog box opens.

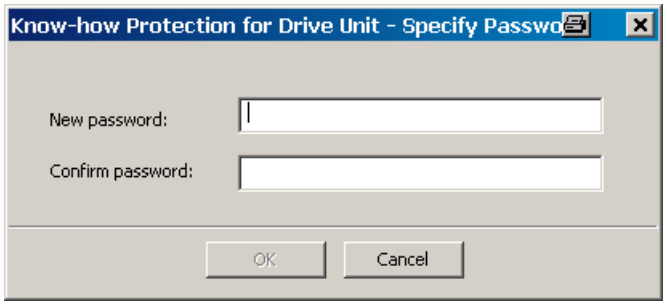

Figure 14-16 Setting the password

7. Enter your password. Length of the password: 1 … 30 characters.
   Recommendations for assigning a password:
   - Only use characters from the ASCII character set.
     If you use arbitrary characters for the password, changing the windows language settings after activating know-how protection can result in problems when subsequently checking a password.
   - For an adequately secure password, the password must have a minimum length of 8 characters, and must include uppercase and lowercase letters as well as a combination of letters, numbers, and special characters.

8. Enter it again in the "Confirm password" field and click "OK" to confirm the entry.
   The dialog box is closed and the password is shown in encrypted form in the "Activate Know-how Protection for Drive Object" dialog box.
9. If, despite active know-how protection, you permit diagnostic functions, activate the "Allow diagnostic functions (trace and measuring functions)" option with a mouse click.
   This allows the trace function, the measuring function and the function generator to be used despite know-how protection.
10. The "Copy RAM to ROM" option is active by default and ensures that the know-how protection is permanently stored in the Control Unit. If you want to use the know-how protection temporarily, deactivate this option.
11. Click "OK".
    Know-how protection is now activated. If larger data volumes are being encrypted, a progress display informs that the encryption or the activation of the know-how protection is still running.
    The text "Know-how protected" then appears instead of the content in all protected parameters of the expert list.

Note

For published DCC parameters, the entry "--" appears in the expert list instead of the text "Know-how protected".

Preventing data reconstruction from the memory card

As soon as know-how protection has been activated, the drive unit only backs up encrypted data to the memory card.

In order to guarantee know-how protection, after activating know-how protection, we recommend that you insert a new, empty memory card. For memory cards that have already been written to, previously backed up data that was not encrypted can be reconstructed.

14.8.3.3 Deactivating know-how protection

Requirements

- The drive unit has been fully commissioned.
- Know-how protection has been activated for the drive unit.

Procedure

1. Connect the drive unit to the programming device.
2. Go online with STARTER.
   If you have generated a project offline on your computer, you must load the project into the drive unit and go online.
3. Select the required drive unit in the project navigator of your STARTER project.

4. In the shortcut menu, select "Drive unit know-how protection > Deactivate"
   The "Deactivate Know-how Protection for Drive Unit" dialog box opens.

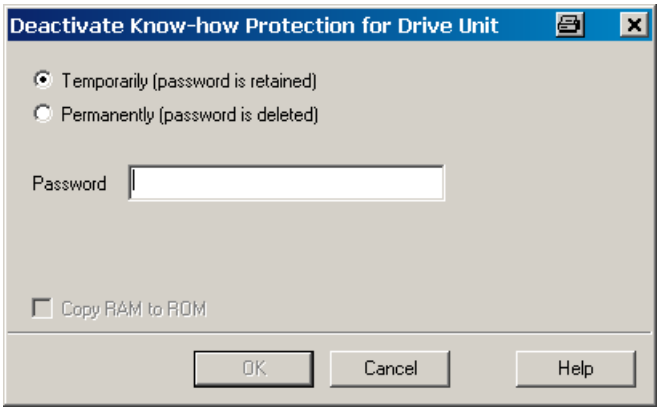

Figure 14-17 Deactivating

5. Select the required option:
   - "Temporarily" deactivating: Know-how protection is active again after switching off and switching on.
   - "Permanently" deactivating: Know-how protection remains deactivated even after switching off and switching on again.

   If you select "Permanently", you can also carry out a data backup on the Control Unit with "Copy RAM to ROM". The checkbox with the same name is active in this case and is automatically activated. If you deactivate this checkbox, you must perform a manual RAM to ROM data backup later if the know-how protection remains deactivated after switching off and on.
6. Enter your password, and click "OK".
   Know-how protection is now deactivated. If larger data volumes are being decrypted, a progress display informs that the decryption or the deactivation of the know-how protection is still running. The values of all parameters are displayed again in the expert list.
   However, after switching off and switching on the power supply, the password remains deleted.

14.8.3.4 Changing the password

Requirement

- Know-how protection has been activated for the drive unit.

Procedure

To change the password for the know-how protection, proceed as follows:

1. Connect the drive unit to the programming device.
2. Go online with STARTER.
   If you have generated a project offline on your computer, you must load the project into the drive unit and go online.

3. Select the required drive unit in the project navigator of your STARTER project.
4. Call the shortcut menu "Drive unit know-how protection > Change password".
   The "Change Password" dialog box opens.

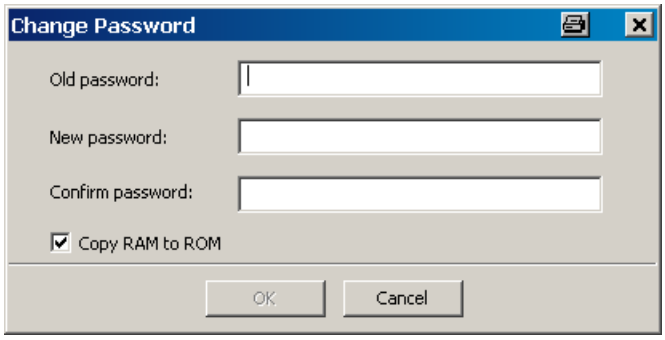

Figure 14-18 Changing the password

5. Enter your old password in the uppermost text box.
6. Enter your new password in the following text box and repeat it in the lowest text box.
7. The "Copy RAM to ROM" option is active by default and ensures that the new password for the know-how protection is permanently stored in the drive unit. If you only want to change the password temporarily, you can deactivate this option.
8. Click "OK" to close the dialog box.
   Once the password has been changed successfully, you will receive a confirmation.

14.8.4 Loading know-how protected data to the file system

Data with know-how protection can be directly loaded or saved to the file system from the drive unit. The activated know-how protection ensures that the data cannot be forwarded to unauthorized third parties.

The following applications are conceivable at the end user:

- Adaptations of encrypted SINAMICS data are required.
- The memory card is defective.
- The Control Unit of the drive is defective.

In these cases, the OEM can create a new encrypted subproject (for a drive object) via STARTER. The serial number of a new memory card or a new Control Unit is saved in this encrypted data record in advance.

Application example: Control Unit is defective

Scenario:

The Control Unit of an end user is defective. The machine manufacturer (OEM) has the end user's STARTER project files of the machine.

Sequence:

1. The end user sends the OEM the serial numbers of the new Control Unit (r7758) and the new memory card (r7843), and specifies the machine in which the Control Unit is installed.
2. The OEM loads the STARTER project data of the end user.
3. The OEM performs the STARTER function "Load to file system" (see Chapter Save data to the file system (Page 816)).
   - The OEM specifies whether the data is to be stored zipped or unzipped.
   - The OEM makes the required know-how protection settings.
4. The OEM sends the stored data to the end user (e.g. by e-mail).
5. The end user copies the "User" directory to the new memory card and inserts it into the new Control Unit.
6. The end user switches on the drive.
   When powering up, the Control Unit checks the new serial numbers and deletes the values p7759 and p7769 if they match.
   After it has powered-up without any errors, the Control Unit is ready for operation. The know-how protection is active.
   If the serial numbers do not match, then fault F13100 is output.
   If required, the end user must re-enter the changed parameters from the OEM exception lists.

Calling the "Load to File System" dialog box

1. Call STARTER.
2. Open the required project.

3. Select the required drive unit in the project navigator of your STARTER project.
4. Call the "Load to file system" function.
   The "Load to File System" dialog box opens.

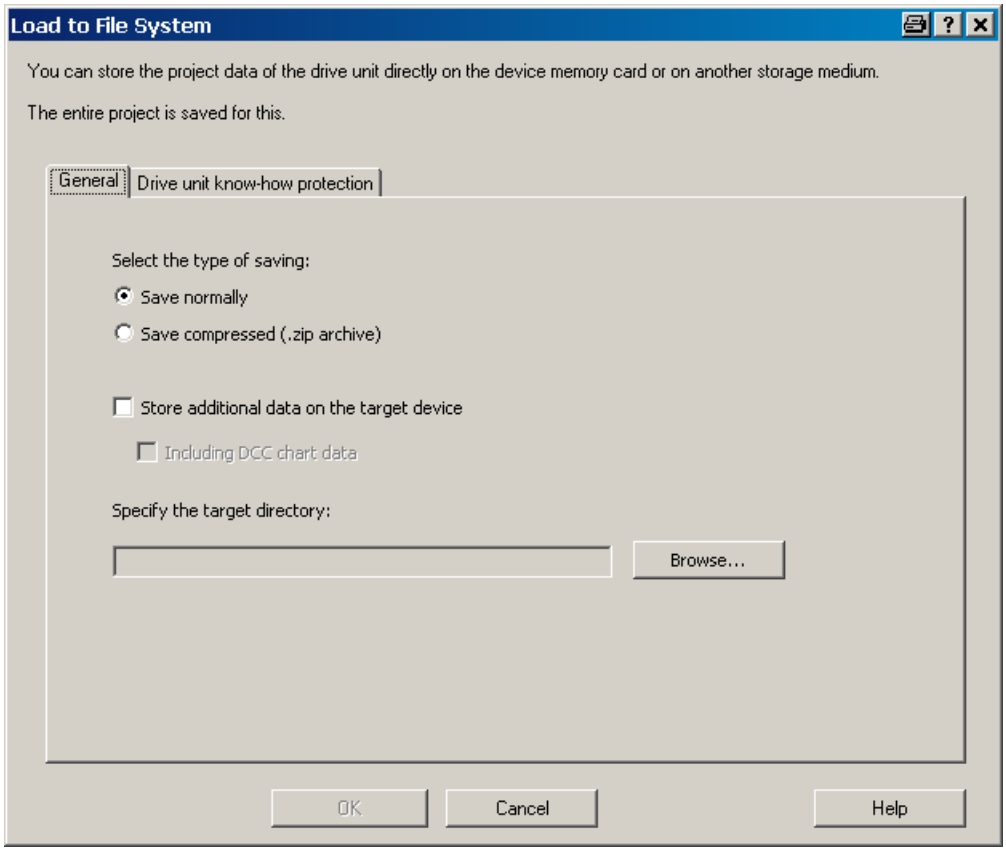

Figure 14-19 Load to file system (default setting)

Specifying the general memory data

The "General" tab is displayed automatically when the dialog is called. The "Save normally" option is activated by default.

1. If you want to save the data in compressed form, click the "Save compressed (.zip archive)" option button.
   The "Store additional data on the target device" option is deactivated in the default setting.
2. If you want to store additional data, such as program sources, on the target device, activate this option.
   – Optionally you can also activate "Including DCC chart data". Graphical chart data can then also be stored.
3. Enter the path for the storage directory in the appropriate input field, or click "Browse" and select the directory in your file system.

Configuring know-how protection

Make the settings for the know-how protection on the "Drive unit know-how protection" tab.

1. Click the "Drive unit know-how protection" tab.

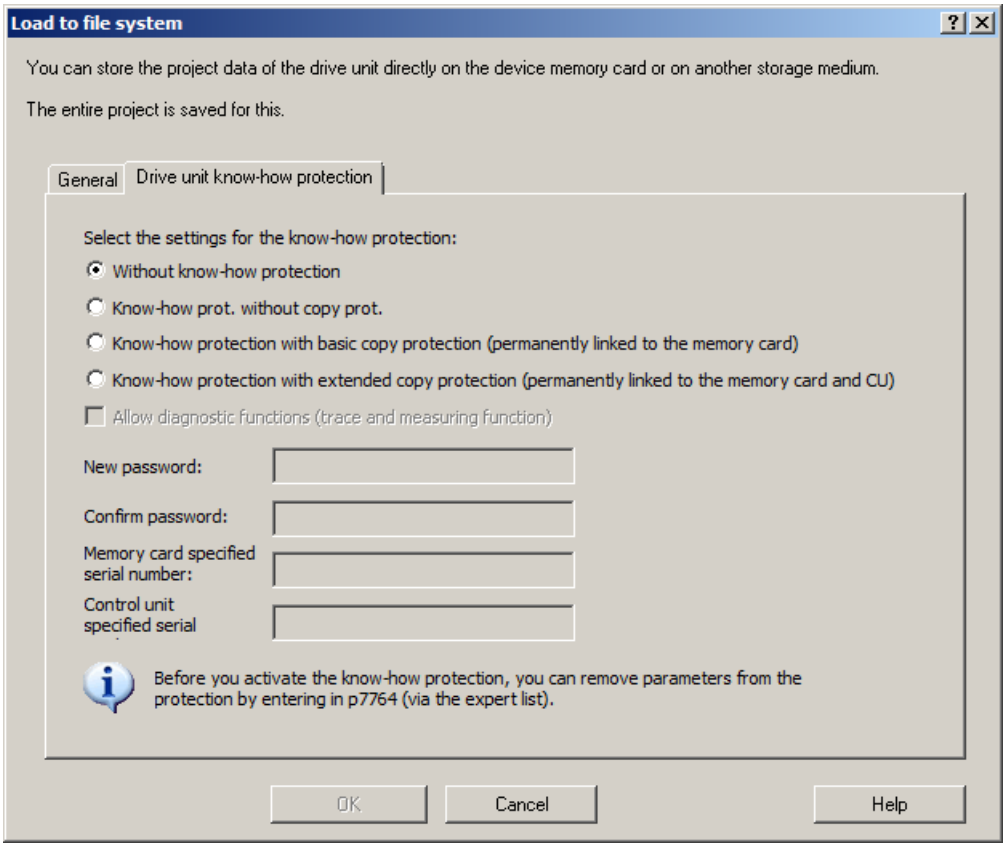

Figure 14-20 Load to file system know-how protection

By default, the "Without know-how protection" option is active. If you really want to store the data without protection (not recommended), you can exit the dialog box with "OK" or "Cancel" at this point.

2. If you want to store with protection, activate one of the following options with a mouse click:
   - "Know-how prot. without copy prot."
     Required inputs: "New password" and "Confirm password"
   - "Know-how protection with basic copy protection (permanently linked to the memory card)"
     Required inputs: "New password", "Confirm password" and "Memory card specified serial number"
   - "Know-how protection with extended copy protection (permanently linked to the memory card and CU)"
     Required inputs: "New password", "Confirm password" "Memory card specified serial number" and "Control unit specified serial number"

   The input fields for the passwords and the serial numbers appropriate for the activated know-how protection are then active.

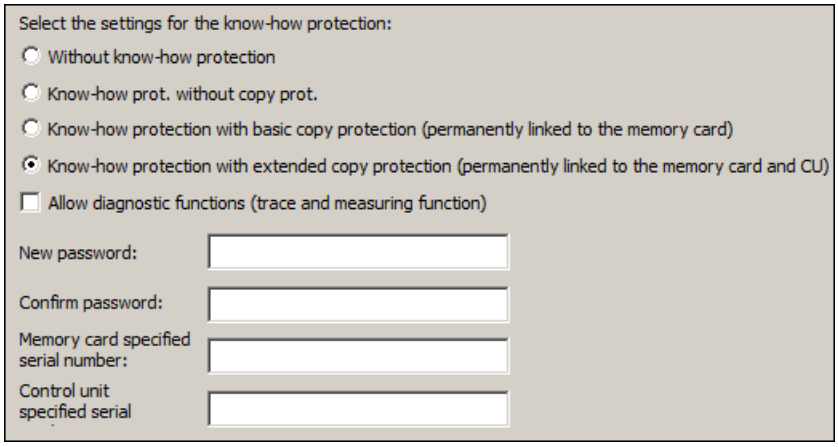

Figure 14-21 Activating load to file system know-how protection

The active input fields are mandatory inputs.

3. Enter the required password in the "New password" field and enter it again in the "Confirm password" field.
4. If the associated input fields are active, enter the serial numbers:
   - The serial number of the new memory card for which the data is intended
   - The serial number of the Control Unit
5. If, despite active know-how protection, you permit diagnostic functions, activate the "Allow diagnostic functions (trace and measuring function)" option with a mouse click.
   This allows the trace function, the measuring function and the function generator to be used despite know-how protection.
6. Click "OK" to confirm the settings you made.

Result

The activation of the know-how protection starts the encryption of the subproject data. If larger data volumes are being encrypted, a progress display informs that the encryption or the activation of the know-how protection is still running. With the aid of this encrypted data, an end user can install a new memory card for the drive unit.

14.8.5 Overview of important parameters

Overview of important parameters (see SINAMICS S120/S150 List Manual)

- r7758[0...19] KHP Control Unit serial number
- p7759[0...19] KHP Control Unit reference serial number
- r7760 Write protection / know-how protection status
- p7763 KHP OEM exception list number of indices for p7764
- p7764[0...n] KHP OEM exception list

- p7765 KHP configuration
- p7766[0...29] KHP password input
- p7767[0...29] KHP password new
- p7768[0...29] KHP password confirmation
- p7769[0...20] KHP memory card reference serial number
- r7843[0...20] Memory card serial number

14.9 Component replacement

14.9.1 Replacing components

To ensure that the entire functionality of a firmware version can be used, it is recommended that all the components in a drive line-up have the same firmware version.

Description

If the type of comparison is set to the highest setting, the following examples apply.

A distinction is made between the following scenarios:

- A component with a different article number
- Components with identical article numbers
  - Topology comparison component replacement active (p9909 = 1)
  - Topology comparison component replacement inactive (p9909 = 0)

When p9909 = 1, the serial number and the hardware version of the new replacement component are automatically transferred from the actual topology to the reference topology, and then saved in the non-volatile memory.

When p9909 = 0, serial numbers and hardware versions are not automatically transferred. In this case, when the data in the electronic rating plate match, the transfer is realized using p9904 = 1 or p9905 = 1.

For the components that have been replaced, the electronic rating plate must match as far as the following data is concerned:

- Component type (e.g. "SMC20")
- Article number (e.g. "6SL3055–0AA00–5B..")

Reading out component numbers from STARTER

In the STARTER commissioning tool, for a selected drive unit, you can read out the numbers of the individual components as follows:

- Version overview
  The components of the drive unit are shown in a list in the version overview of the drive unit. The component number can be read out of the "No" column.
- Topology tree
  The components of the drive unit are shown in a topology view in the topology tree of a drive unit. The component number is shown in brackets to the right of the component name.

Replacing motors with SINAMICS Sensor Module Integrated or with DRIVE-CLiQ Sensor Integrated

If a defect has occurred in a motor with integrated DRIVE-CLiQ interface (SINAMICS Sensor Module Integrated), please contact the Siemens office in your region to arrange for repair.

14.9.2 Examples of replacing components

Example: Replacing a component with different article number

Requirement:

- The replaced component has a different article number.

Table 14-7 Example: Component with a different article number

Action	Reaction	Remark
• Switch off the power supply • Replace the defective component and connect the new one • Switch on the power supply	• Alarm A01420	
• Load the project from the Control Unit to Startdrive (PG) • Configure the replacement drive and select the current component • Load the project to the Control Unit (target system)	• Alarm disappears	The new article number is stored in the RAM of the Control Unit and has to be copied to the non-volatile memory with p0977 = 1 and p0971 = 1. As an alternative, Startdrive can be used to backup data using "Copy RAM to ROM".
The component has been successfully replaced.		

Example: (p9909 = 1) replacing a defective component with an identical article number

Requirement:

- The replaced component has an identical article number.
- The serial number of the new replacement component must not be contained in the stored target topology of the Control Unit.
- Topology comparison component replacement active p9909 = 1.

Sequence:

During startup of the Control Unit, the serial number of the new component is automatically transferred to the target topology and saved.

Example: (p9909 = 0) replacing a defective component with an identical article number

Requirement:

- The replaced component has an identical article number.
- Topology comparison component replacement inactive p9909 = 0.

Table 14-8 Example: Motor Module

Action	Reaction	Remark
• Switch off the power supply • Replace the defective component and connect the new one • Switch on the power supply	• Alarm A01425	
• Set p9905 to "1"	• Alarm disappears • The serial number is copied to the target topology	The serial number is stored in the RAM of the Control Unit and has to be copied to the non-volatile memory with p0977 = 1 and p0971 = 1. As an alternative, Startdrive can be used to backup data using "Copy RAM to ROM".
The component has been successfully replaced.		

Example: Replacing a Motor Module/Power Module with a different power rating

Requirements:

- The replaced power unit has a different power rating
- VECTOR: Power of the Motor Modules / Power Modules not greater than 4 motor current

Table 14-9 Example: Power unit with a different power rating

Action	Reaction	Remark
• Switch off the power supply • Replace the defective component and connect the new one • Switch on the power supply	• Alarm A01420	
• Drive object CU: – p0009 = 1 – p9906 = 2 – p0009 = 0 – p0977 = 1	• Device configuration • Component comparison • Completing the configuration • Data backup	For p9906 = 2: Caution Topology monitoring for all (!) components has been significantly reduced so that, if DRIVE-CLiQ lines are accidentally changed over, this will not be detected.
• Drive object component: – p0201 = r0200 – p0010 = 0 – p0971 = 1	• Use the code number • Completing commissioning • Data backup	The new article number is stored in the RAM of the Control Unit and has to be copied to the non-volatile memory with p0977 = 1 and p0971 = 1. As an alternative, Startdrive can be used to backup data using "Copy RAM to ROM".
The component has been successfully replaced.		

14.10 Data backup

14.10.1 Backing up the non-volatile memory

For operation-relevant data, the CU320-2 and the CU310-2 have a non-volatile memory, the NVRAM (Non-Volatile Random Access Memory). The data of the fault buffer, the diagnostics buffer and message buffer is saved in this memory.

Certain circumstances, for example, a defect in the Control Unit or if the Control Unit has been replaced, require that this data is backed up. After the hardware has been replaced, transfer the backed up data back to the NVRAM of the Control Unit. You can perform these operations using parameter p7775:

1. Using p7775 = 1 backup the NVRAM data to a memory card.
2. Using P7775 = 2, copy NVRAM data from the memory card to the NVRAM.
3. Using P7775 = 3, delete the data in the NVRAM.
   After the data has been successfully cleared, a POWER ON is automatically carried out.

p7775 is automatically set to 0 if the operation was successful. If the operation was not successful, p7775 indicates a corresponding fault value. Further details of the fault values can be found in the SINAMICS S120/S150 List Manual.

Note

NVRAM data change

The data in the NVRAM can only be restored or deleted if the pulse inhibit is set.

Backing up NVRAM data

With p7775 = 1, the NVRAM data of a stand-alone Control Unit is saved in the subdirectory: "... \USER\SINAMICS\NVRAM\PMEMORY.ACX" on the memory card.

When the Control Unit is integrated in a controller, the NVRAM data is saved in the subdirectory: "... \USER\SINAMICS\NVRAM\xx\PMEMORY.ACX" on the memory card. "xx" corresponds to the DRIVE CLiQ port.

When saving, all data is backed up from the NVRAM.

Note

Backing up NVRAM data

The backup of the NVRAM data to the memory card is also possible when the pulses are enabled. However, if the drive is operated when NVRAM data is being transferred, then it is possible that the backed up data is not consistent with the NVRAM data.

Restoring NVRAM data

With p7775 = 2, the NVRAM data is transferred back from the memory card into the Control Unit. When restoring you decide which data you require and want to copy.

There are two reasons that necessitate the NVRAM data being restored.

- Replacing the Control Unit.
- Specific restoration of the NVRAM data as it is possible that there are data errors.

When restoring, the Control Unit always searches first for the "PMEMORY.ACX" file. If the file is available with a valid checksum, then it is loaded.

Replacing the Control Unit:

If a Control Unit has to be replaced, then this is identified by SINAMICS as a result of the modified Control Unit serial number. After the POWER ON, the NVRAM of the Control Unit is first deleted. The new NVRAM data is then loaded.

NVRAM restoration:

A specific restoration of the saved NVRAM data is initiated by setting p7775 = 2. The original file in the NVRAM is first deleted. If the file "PMEMORY.ACX" is available with a valid checksum, it is loaded to the NVRAM.

The following data is not imported again:

- Control Unit operating hours counter
- Control Unit temperature
- Safety logbook
- Crash diagnostics data

Deleting NVRAM data

With p7775 = 3, the NVRAM data is deleted.

The following data is not deleted:

- Control Unit operating hours counter
- Control Unit temperature
- Safety logbook
- Crash diagnostics data

Note

NVRAM and know-how protection

Know-how protection and write protection apply to parameter p7775. If the parameter should be readable despite activated protection mechanisms, then p7775 must be placed in the exception list.

Note

NVRAM and write protection

When write protection is activated, p7775 can only be written to from a higher-level controller using cyclic communication.

You can find additional information on fault, diagnostic and message buffers in the SINAMICS S120 Commissioning Manual with Startdrive.

14.10.2 Redundant data backup on memory card

In conjunction with the "Firmware update via web server" and the associated remote access, the "Redundant data backup on memory card" provides secure access again to the device in the event of an interruption of the connection or the power supply. This redundant data backup cannot be deactivated.

As of firmware version V4.6, the memory cards have a backup partition in addition to the normal working partition. The most important data is duplicated on this backup partition during ramp-up of the CU. This ensures that when you update the data on the memory card a data loss cannot occur due to a power failure. Only the system can access this backup partition. The partition is not visible for users.

If damage to the file system is detected on the memory card, the system reconstructs the data on the working partition from the backup partition at the next ramp-up of the CU. The fault "F01072: memory card recreated from backup copy" is emitted. A running restoration of the data is indicated via the LEDs (FW Loading). Generally, the restoration of the data takes one minute.

The duplication of changed project data on the backup partition takes just a few seconds during ramp-up. After write operations on the working partition (e.g. RAM to ROM), the system automatically recognizes when an update of the backup copy on the backup partition is required and issues the message "A01073 (N): POWER ON required for backup copy on memory card". In this case, perform a POWER ON for the Control Unit or a hardware reset (via p0972).

As of firmware version V4.6, there may be a substantial data backup at the first ramp-up with a memory card. Generally, this data backup only takes a minute and is indicated via the LEDs (FW Loading). Such a data backup is also performed once for a firmware update or hotfix of the memory card via the card reader (as of V4.6).

⚠ WARNING

Incorrect parameterization due to software manipulation when using exchangeable storage media

The storage of files on removable storage media involves a high risk of infection, e.g. via viruses or malware. As a result of incorrect parameterization, machines can malfunction, which in turn can lead to injuries or death.

- Protect the files on removable storage media against harmful software through appropriate protective measures, e.g. virus scanners.

Note

Minimum requirements

Use of this feature is not possible with memory cards of older firmware versions (e.g. V4.5). The following requirements must be satisfied for working with automatic backup copies:

- a Control Unit, correct version (see "Reading off CU version")
- an original memory card for firmware version V4.6 or higher

Note

Special issue relating to the firmware update via the web server

When updating the firmware via the web server, in exceptional circumstances, memory cards with older firmware versions can also be used. However, there is no guarantee of retentive data storage.

Reading off the CU version

The following table lists the versions required to use the "Redundant data backup on memory card" for each Control Unit. The appropriate data is available on your CU type plate.

Control Unit	Version (PRODIS)
CU310-2 DP	≥ E
CU310-2 PN	≥ E
CU320-2 DP	≥ G
CU320-2 PN	≥ D

Overview of important faults and alarms (see SINAMICS S120/S150 List Manual)

- F01072 Memory card restored from backup copy
- A01073 (N) POWER ON required for backup copy on memory card

14.11 DRIVE-CLiQ

14.11.1 DRIVE-CLiQ topology

The term "topology" is used in SINAMICS to refer to a wiring harness with DRIVE-CLiQ cables. A unique component number is allocated to each component during the start-up phase.

DRIVE-CLiQ (Drive Component Link with IQ) is a communication system for connecting various components in SINAMICS (e.g. Control Unit, Line Module, Motor Module, motor and encoder).

DRIVE-CLiQ supports the following properties:

- Automatic detection of components by the Control Unit
- Standard interfaces to all components
- Standardized diagnostics down to component level
- Standardized service down to component level

Electronic rating plate

The electronic rating plate contains the following data:

- Component type (e.g. SMC20)
- Article number (e.g. 6SL3055-0AA0-5BA0)
- Manufacturer (e.g. SIEMENS)
- Hardware version (e.g. A)
- Serial number (e.g. "T-PD3005049)
- Technical specifications (e.g. rated current)

Actual topology

The actual topology corresponds to the actual DRIVE-CLiQ wiring harness.

When the drive system components are started up, the actual topology is detected automatically via DRIVE-CLiQ.

Target topology

The target topology can be specified in two ways and saved on the memory card:

- Using the Startdrive commissioning tool:
  By creating the configuration (OFFLINE), and loading it to the drive device.
- Using quick commissioning (automatic configuration):
  By reading the actual topology and writing the target topology on the memory card.

Note

The target topology is created during the OFFLINE configuration, and is then saved to the Control Unit memory card together with the project data.

Comparison of topologies at Power On

When the drive system boots, the Control Unit compares the detected actual topology and the electronic rating plates with the target topology stored on the memory card. Comparing the topologies prevents a component from being controlled or evaluated incorrectly (e.g. drive 1 and 2).

The match between the actual topology and the saved target topology is checked based on the following criteria:

- Component type (e.g. SMC20, SMC30, TM31, TM41)
- DRIVE-CLiQ wiring
- Serial numbers

Note

Topology comparison when replacing components

It is permissible to replace damaged or failed components of the **same type**. Instead of a new topology comparison, the serial number of the new component is automatically transferred into the target topology.

The specified criteria can be subsequently changed using p9906 (Topology comparison all components comparison level), p9907 (Topology comparison component number) or 9908 (Topology comparison of a component comparison level).

14.11.2 DRIVE-CLiQ diagnostics

Using the DRIVE-CLiQ diagnostics, you can check the connections and cables of DRIVE-CLiQ connections. For data transfer errors, to localize the faulted connection, the error counter in the involved blocks can be evaluated.

In addition to the error counter showing all errors, detailed diagnostics can be carried out for the individual connections. For selected connections, the number of errors is determined for a time interval that can be specified and made traceable using a parameter. As a result of the interconnectability, you can record when data transfer errors occur and correlate them with other events in the drive.

Overview of important parameters (see SINAMICS S120/S150 List Manual)

- r9936[0...199] DRIVE-CLiQ diagnostics, error counter connection
- p9937 DRIVE-CLiQ diagnostics configuration
- p9938 DRIVE-CLiQ detailed diagnostics configuration

- p9939 DRIVE-CLiQ detailed diagnostics time interval
- p9942 DRIVE-CLiQ detailed diagnostics individual connection selection
- r9943 DRIVE-CLiQ detailed diagnostics individual connection error counter

14.11.3 Emergency operating mode for DRIVE-CLiQ components

In order to protect the drive system against excessive voltage when the Control Unit or DRIVE-CLiQ communication fails (e.g. while a spindle is rotating), an autonomous emergency operating mode (independent operation) is integrated in DRIVE-CLiQ components for the following functions:

- Chopper mode (for Basic Line Module 20 kW / 40 kW in combination with an external braking resistor).
- Integrated voltage protection for machines with a high kinetic energy (armature short-circuit controlled by the Motor Modules on the basis of the DC link voltage).

Features

- Resumption and resynchronization of DRIVE-CLiQ communication in emergency mode when necessary (only if clock cycle conditions have not changed) and without POWER ON.
- Changeover from emergency operation to normal operation without POWER ON of the component.
- Defined response with factory setting / project download.

Note

Autonomous (emergency) operation is possible only for Motor Modules and Basic Line Modules with article numbers that end with the code ..3, e.g. 6SL3130-6TE21-6AA3.

Principle of operation

Two task profiles are obtained for autonomous operation:

- Recognize that a component is getting into a critical state and the protective function must be maintained.
- Restore communication with the higher-level controller.

In order to maintain the protective function, the time-slice system must remain active.
The logged-on time-slice system remains active until the protective functions signal that a safe state has been reached and the time slices can therefore be deactivated. When restarting the communication, if the DRIVE-CLiQ master signals that no bus timing changes have been made

with respect to the old parameterization, then synchronization is possible. The time-slice system remains the same as before.

Note

All algorithms for autonomous operation are executed as a background process for the component. They thus have no influence on the computer resources utilized cyclically by the component.

Communication restart includes a topology detection during emergency operation.

Note

When the component is running in emergency mode, it cannot be deactivated.

Preparation for autonomous time-slice operation

The application signals (basic system DRIVE-CLiQ slave components) preparation for autonomous time-slice operation. This occurs, for example, when the "armature short-circuit" protective function is active or in chopper operation.

Changeover from normal to autonomous operation

The application activates autonomous time-slice operation. Changeover takes place instantaneously.

Changeover from autonomous to normal operation

It is always possible to change over into normal operation without a POWER ON.

Resumption of DRIVE-CLiQ communication when autonomous mode is active

A distinction must be made between the following two operating states:

- The DRIVE-CLiQ bus timing, e.g. clock cycle settings, has not changed since the component last booted:
  The DRIVE-CLiQ component boots in cyclic mode.
- The DRIVE-CLiQ timing has changed:
  Autonomous operation must continue at all costs. The DRIVE-CLiQ component refuses to boot until the application signals that autonomous operation is no longer required. The component can then restart with the modified clock cycle settings.

For a 2nd download it is possible that the component is already operational. In order that a 2nd download (reparameterization, factory setting, ...) is possible, the DRIVE-CLiQ master must "deactivate" the protective function (if one is selected) and thus also autonomous time-slice operation. All timing changes can be accepted in this state.

The DRIVE-CLiQ master performs a relevance check on the download (only those settings which affect the time-slice behavior of the component are relevant here).

Reconfigurations, which must be linked to the DRIVE-CLiQ slave with a message "Timing change" are:

- Changes to the DRIVE-CLiQ clock cycle for the component.
- Changes to oversampling settings which require internal reconfiguration of the time-slice system.

Please also note the following:

- Changes to component connections and longer cables between components require adjustments to signal propagation delays and therefore also change the timing.

14.12 System rules, sampling times and DRIVE-CLiQ wiring

14.12.1 Overview of system limits and system utilization

The number and type of controlled axes, infeeds and Terminal Modules as well as the additionally activated functions can be scaled by configuring the firmware.

The software and control functions available in the system are executed cyclically with different sampling times (p0115, p0799, p4099). These sampling times are automatically pre-assigned when configuring the drive (see Chapter "Default setting (Page 842)"). They can be subsequently adapted by the user.

The number of controllable drives, infeed units and Terminal Modules that can be operated with the selected Control Unit depends on several system rules, the set sampling times, the control mode and the activated additional functions.

There are also still dependencies and rules for the components used and the selected DRIVE-CLiQ wiring.

The existing rules are described in greater detail in the following sub-sections. After this there are notes on the number of controllable drives and some example topologies.

In addition to an infeed, the following standard quantity structures are operable with standard clock cycles:

- 12 U/f control axes with 500 µs
- 6 vector axes with 500 µs
- 6 servo axes with 125 µs
- 3 vector axes with 250 µs
- 3 servo axes with 62.5 µs
- 1 servo axis with 31.25 µs (single-axis module)

Note

Special case: Synchronous reluctance motors as vector axis

In the case of synchronous reluctance motors, when using the encoderless technique with test signal, for 250 µs 2 drive axes + 1 infeed unit can be operated - and for 500 µs 4 drive axes + 1 infeed unit.

Consequently, the conversion of an axis from 125 µs to 62.5 µs normally leads to the loss of an axis. This rule can also be used for the clock-cycle mixing to achieve a general estimate of the quantity structure.

Especially for demanding configurations, drives with high dynamic response or a large number of axes with additional utilization of special functions for example, a check using the SIZER engineering tool is recommended. The SIZER engineering tool calculates the feasibility of the project.

Finally, the utilization flag in r9976 indicates whether a topology is operable. If the utilization exceeds 100%, this is indicated with fault F01054. In this case, one or more axes must be dispensed with or the function scope reduced.

14.12.2 System rules

A maximum of 24 drive objects (DOs) can be connected to one Control Unit.

Control Units

- The Control Unit CU310-2 is a single-axis control module for operating the AC/AC Power Modules in Blocksize format (PM240-2 or PM340) and Chassis format. Terminal Modules, Sensor Modules and HUB Modules can also be connected in addition to these.
- The CU320-2 Control Unit is a multi-axis control module for operating Infeed Modules and Motor Modules in Booksize, Chassis and Blocksize formats. Terminal Modules, Sensor Modules and HUB Modules can also be connected in addition to these.

Motor Modules (including closed-loop control modes)

For the CU310-2 Control Unit the following applies:

- The CU310-2 Control Unit is a single-axis control module (servo control, vector control or vector control U/f control) plugged into a PM240-2 or PM340 Power Module, or for operation with a maximum of one AC/AC Power Module in the Chassis format (via the X100 DRIVE-CLiQ connection).

For the CU320-2 Control Unit the following applies:

- The CU320-2 Control Unit is a multi-axis control module for operating Motor Modules in the Booksize, Chassis and Blocksize formats (PM240-2 and PM340 via a Control Unit Adapter).
- For multi-axis modules, each axis counts individually (one Double Motor Module = two Motor Modules).
- A maximum of 6 drive objects may be operated concurrently in servo control and HLA control.
- There can be a maximum of 12 drive objects of the VECTOR type present concurrently.
  - A maximum of 6 drive objects can be operated simultaneously in vector control.
  - A maximum of 12 drive objects can be operated simultaneously in U/f control.
- Mixed operation of control types:
  The following are permitted:
  - Mixed operation of servo control and U/f control.
  - Mixed operation of vector control and U/f control.
  - Mixed operation of HLA and servo control.
  - Mixed operation of HLA and vector control and U/f control.

  The following are not permitted:
  - Mixed operation of servo control and vector control.
  - Mixed operation of HLA and servo control and U/f control.
- The conditions prescribed in Chapter "Number of drives depending on the control mode and cycle times (Page 854)" must be observed for operation of a CU320-2 with a Control Unit Adapter CUA31 or CUA32.

The following applies when connecting Motor Modules in parallel:

- Parallel connection is only permitted in the Chassis or Chassis-2 formats.
- When commissioning Motor Modules in the Chassis-2 format, a firmware version of ≥ V5.2 must be available.
- Parallel connection is only permitted in the VECTOR or U/f control modes.
- A maximum of 4 identical Motor Modules of the Chassis format or a maximum of 6 identical Motor Modules of the Chassis-2 format are permitted in a parallel connection. All modules connected in parallel must have the same output.
- Only one drive object may be created for a parallel connection.
- Only one parallel connection is permitted per Control Unit.

Line Modules

For the CU310-2 Control Unit the following applies:

- Operating Line Modules is not permitted.

For the CU320-2 Control Unit the following applies:

- Only one drive object of the Smart Line Module (SLM), Basic Line Module (BLM) and Active Line Module (ALM) types is permissible in each case.
- Mixed operation of an Active Line Module with a Smart Line Module (SLM) or with a Basic Line Module (BLM) is not permitted.
- Mixed operation of a drive object of the Smart Line Module (SLM) type with a drive object of the Basic Line Module (BLM) type is permitted.
- An active Voltage Sensing Module (VSM) must be assigned to each active Active Line Module (ALM) or Smart Line Module (SLM) of the Chassis format. A violation of this rule causes fault F05061 to be issued.
- Two further Voltage Sensing Modules can be operated with the "network transformer" function module for Active Line Modules (ALM).

The following rules apply to the parallel connection of Line Modules of the Chassis or Chassis-2 formats:

- Parallel connection is permissible for a maximum of 4 Infeed Modules of the Chassis format or a maximum of 6 Infeed Modules of the Chassis-2 format.
- The operation of Infeed Modules with different power ratings is not permissible.
- When commissioning ALMs, Chassis-2 format connected in parallel, a firmware version of ≥ V5.2 must be available.
- An active Voltage Sensing Module (VSM) must be assigned to each Active Line Module (ALM). A violation of this rule causes alarm F05061 to be issued.
- When using Smart Line Modules (SLM), an active Voltage Sensing Module (VSM) must be assigned to at least one Smart Line Module (SLM) in the parallel connection. A violation of this rule causes fault F05061 to be issued.

The following rules apply to the parallel connection of Line Modules of the Booksize format:

- In the Booksize format, a maximum of two Active Line Modules (ALM) from the 55 kW, 80 kW or 120 kW power class are permissible for each parallel connection.
- The operation of Infeed Modules with different power ratings is not permissible.
- When commissioning ALMs in the Booksize format connected in parallel, a firmware version of ≥ V5.2 must be available.
- The use of Voltage Sensing Modules (VSM) is optional.

Terminal Modules

Control Unit CU320-2:

- In total a maximum of 16 drive objects of the types TM15 Base, TM31, TM15, TM17, TM41, TM120 or TM150 can be operated concurrently.
- A maximum of one Terminal Module F (TM54F) can be connected (in addition).

Control Unit CU310-2:

- In total a maximum of eight drive objects of the types TM15 Base, TM31, TM15, TM17, TM41, TM120 or TM150 can be operated concurrently.
- A maximum of three drive objects of the types TM15, TM17 and TM41 may be operated concurrently in each case.
- A maximum of one F Terminal Module (TM54F) can be connected (in addition).

DRIVE-CLiQ Hub Module

- A maximum of eight drive objects can be operated concurrently for a DRIVE-CLiQ Hub Module (DMC20 or DME20). DMC20/DME20 do not count twice here.

14.12.3 Special configurations and topologies

This subchapter discusses known special configurations and topologies, therefore expanding individual tasks from subchapter "System rules (Page 835)".

The applications described should be seen as hypothetical examples. They serve to explain the secondary conditions under which a certain configuration or topology can run.

Note

Detailed knowledge about servo and U/f control required

For the applications described, it is mandatory that users have detailed knowledge and a very good understanding of servo and U/f control.

Using drives with servo control and U/f control together on one Double Motor Module

When using drives with servo control and U/f control together on one Double Motor Module, the following preconditions and secondary conditions apply.

Preconditions

- Double Motor Module
- A Control Unit suitable for multi-axis operation

Supplementary conditions

- When using drives with servo control and U/f control together on one Double Motor Module, for servo control, the higher current controller dynamic response must be deactivated.

Procedure

When commissioning mixed operation (servo and U/f control) and the higher current controller dynamic response is activated at the servo control (p1810.11 = 1), then fault message F30020 (Power unit: Configuration not supported; fault cause 5) is output.

Proceed as follows to acknowledge the fault message and to commission the configuration:

1. Deactivate the higher current controller dynamic response using p1810.11 = 0.
2. After deactivating the higher current controller dynamic response, recalculate the controller gain using p0340 = 4.

Result: You can acknowledge fault message F30020, and commission both axes.

14.12.4 Rules on the sampling times

14.12.4.1 Rules when setting the sampling times

The following rules apply when setting the sampling times:

General rules

- There are a maximum 2 possible cycle levels on the Control Unit, where the lowest sampling times are not integer multiples with respect to one another. All sampling times set must be an integer multiple of the smallest sampling time from one of these two cycle levels.
  Example 1:
  - Smallest sampling time cycle level 1: Active Line Module with 250 µs
  - Smallest sampling time cycle level 2: One VECTOR drive object with 455 µs (p0113 = 1.098 kHz)

  This setting is permitted.
  Additional sampling times must be integer multiples of 250 µs or 455 µs.

Terminal Modules, Terminal Board, Control Unit:

- For the digital inputs/outputs of these components, a minimum sampling time (p0799, p4099, p0115) of 125 µs can be set.

Pulse frequencies and current controller sampling times:

- The current controller sampling times of the drives and infeeds must be synchronous with the set pulse frequency of the power unit (see also p1800 in the SINAMICS S120/S150 Lists Manual). Increasing the current controller cycle time in an integer ratio that is not equal to the configured pulse frequency requires reducing the sampling times.

Line Modules

- For Active Line Modules (ALM) and Smart Line Modules (SLM) in Booksize format the only current controller sampling time which can be set is 125 µs or 250 µs.
- For Active Line Modules (ALM) and Smart Line Modules (SLM) in Chassis format the permitted current controller sampling time depends on the relevant module. The current controller sampling time can either only be set to 250 µs or the current controller sampling time selected can be 400 µs or 375 µs (375 µs for p0092 = 1).
- For Basic Line Modules (BLM) the only current controller sampling time which can be set is 2000 µs (Chassis format) or 250 µs (Booksize format).

Motor Modules

- For Single Motor Modules in Booksize format, a current controller sampling time of minimum 31.25 µs can be set (31.25 µs ≤ p0115[0] ≤ 500 µs).
- For Double Motor Modules in Booksize format, a current controller sampling time of minimum 62.5 µs can be set (62.5 µs ≤ p0115[0] ≤ 500 µs).
- For Motor Modules in Chassis format, a current controller sampling time of minimum 125 µs can be set (125 µs ≤ p0115[0] ≤ 500 µs).
- For Motor Modules in Blocksize format, a current controller sampling time of 62.5 µs, 125 µs, 250 µs or 500 µs can be set (only pulse frequencies in multiples of 2 kHz are permissible). For PM240-2 FS D-F the minimum current controller sampling time is 125 µs.
- For the HLA module, a current controller sampling time of minimum 62.5 µs can be set (62.5 µs ≤ p0115[0] ≤ 250 µs).

Servo control/HLA closed-loop control

- For drives, a current controller sampling time between 31.25 µs and 250 µs can be set (31.25 µs ≤ p0115[0] ≤ 250 µs).
- For drives with HLA modules, a current controller sampling time between 62.5 µs and 250 µs can be set (62.5 µs ≤ p0115[0] ≤ 250 µs).
- The fastest sampling time for a drive object in servo control or HLA is as follows:
  - T_i = 31.25 µs: Exactly one drive object in servo control
  - T_i = 62.5 µs: Max. three drive objects in servo control or HLA
  - T_i = 125 µs: Max. six drive objects in servo control or HLA

Vector control/U/f control

- For drives with vector control, a current controller sampling time between 125 µs and 500 µs can be set (125 µs ≤ p0115[0] ≤ 500 µs). This also applies to operation with U/f control.
- For vector control and vector control, U/f control modes, and when using a sine-wave filter (p0230 > 0), it is only permissible to change the current controller sampling time of the DO involved in multiple integer steps of the default value on account of the design of the sine-wave filter.
- The fastest sampling time of a drive object in vector control mode is obtained as follows:
  - T_i = 250 µs: Max. three drive objects in vector control
  - T_i = 375 µs: Max. four drive objects in vector control
  - T_i = 400 µs: Max. five drive objects in vector control
  - T_i = 500 µs: Max. six drive objects in vector control

Note

Restriction of the number of axes for Chassis in vector control

For active edge modulation or optimized pulse patterns and active wobbling, only half the number of axes is permitted.

Note

Restriction when using Active Line Modules of the Chassis-2 format

If an Active Line Module (ALM) of the Chassis-2 format is driven in a parallel connection together with VECTOR drives, the sampling times within the Motor Modules must be set to 400 µs. To ensure the ability to set faster sampling times, the ALM must be operated on a separate CU.

- The fastest sampling time of a drive object in U/f control mode is obtained as follows:
  - T_i = 500 µs: Max. 12 drive objects in U/f control mode
- When vector control is operated together with vector control, U/f control, a maximum of 11 axes is possible (ALM, TB and TM additionally possible).

Safety functions

- Only Single Motor Modules are permissible for servo axes with a current controller sampling time T_{IReg} ≤ 62.5 µs with the "Safety sensorless" functionality.

14.12.4.2 Rules for isochronous mode

Note

PROFIBUS legend

T_{dp} = PROFIBUS cycle (also DP cycle)

T_{mapc} = master application cycle time

T_i = Input Time (German time of incorporation of actual value)

T_o = Output Time (German time for setpoint value specification)

The following supplementary conditions must be observed for isochronous operation:

- The PROFIBUS cycle T_{dp} must be an integer multiple of 250 µs.
- The PROFIBUS cycle T_{dp} must be an integer multiple of the current controller sampling time.
- The times T_i (time of incorporation of actual value) and T_o (time for setpoint value specification) must be integer multiples of 125 µs.
- The times T_i and T_o must be an integer multiple of the current controller sampling time.
- T_{mapc} is an integer multiple of the speed controller sampling time.
- Because T_i and T_o are always predefined for a PROFIBUS line, all drives of a Control Unit are affected and run with the same setting.
- p0092 = 1 (isochronous operation preassignment/validation) sets default values for the controller cycles for isochronous PROFIdrive operation during the initial commissioning.
  - The current controller sampling times from "Table 14-14 Pulse frequencies and current controller sampling times for servo control (Page 855)" can be set for servo control.
  - The current controller sampling times from "Table 14-16 Pulse frequencies and current controller sampling times for vector control (Page 857)" can be set for vector control.
- The setting rules for the safety actual value acquisition cycle and the safety monitoring cycle must be observed (for details, see SINAMICS S120 Safety Integrated Function Manual):
  - The monitoring cycle (p9500) must be an integer multiple of the actual value acquisition cycle (p9511). For p9511 = 0, the isochronous PROFIBUS cycle T_{dp} is used as the actual value acquisition cycle.
  - Actual value acquisition cycle ≥ 4 × current controller sampling time.
  - The DP cycle should be at least one current controller sampling time longer than the sum of T_i and T_o.

The above conditions mean that the smallest common multiple of the current controller sampling time of all axes operated on the isochronous PROFIBUS and 125 µs is used to set T_i, T_o and T_{dp}.

If isochronous operation is not possible due to incorrect sampling time settings, an appropriate message will be output (A01223, A01224).

Cycle settings for SINAMICS Link

SINAMICS Link permits only three cycle settings:

Table 14-10 Settings for activated isochronous operation

T_i [µs]	T_o [µs]	T_{dp} [µs]
500	500	500
500	1000	1000
1500	1500	1500

14.12.4.3 Default settings for the sampling times

The sampling times of the functions are pre-assigned automatically when the drive is configured.

These default settings are based on the selected mode (vector/servo control) and the activated functions.

If isochronous mode is to be possible with a controller, before the automatic configuration, parameter p0092 must be set to "1" in order that the sampling times are appropriately preset. If isochronous operation is not possible due to incorrect sampling time settings, an appropriate message will be output (A01223, A01224).

If the application requires a change of the preset sampling times, they can be set using parameters p0112 and p0113 or directly using p0115, p0799 and p4099.

Note

Recommendation

Only appropriately qualified experts should change the sampling times set as default values.

When commissioning for the first time, the current controller sampling times (p0115[0]) are automatically preset with factory setting values:

Table 14-11 Factory settings

Construction type	Number	p0112	p0115[0]	p1800
Active Infeed				
Booksize	1	2 (Low)	250 µs	-
Chassis 400 V / ≤ 300 kW 690 V / ≤ 330 kW	 1 1	 2 (Low) 2 (Low)	 250 µs 250 µs	 - -
Chassis 400 V / > 300 kW 690 V / > 330 kW	 1 1	 0 (Expert) 1 (xLow)	 375 µs (p0092 = 1) 400 µs (p0092 = 0)	 - -
Chassis-2	1	2 (Low)	250 µs	4 kHz
Smart Infeed				
Booksize	1	2 (Low)	250 µs	-

Construction type	Number	p0112	p0115[0]	p1800
Chassis 400 V / ≤ 355 kW 690 V / ≤ 450 kW	 1 1	 2 (Low) 2 (Low)	 250 µs 250 µs	 - -
Chassis 400 V / > 355 kW 690 V / > 450 kW	 1 1	 0 (Expert) 1 (xLow)	 375 µs (p0092 = 1) 400 µs (p0092 = 0)	 - -
Basic Infeed				
Booksize	1	4 (High)	250 µs	-
Chassis	1	2 (Low)	2000 µs	-
SERVO				
Booksize	1 ... 6	3 (Standard)	125 µs	4 kHz
Chassis	1 ... 6	1 (xLow)	250 µs	2 kHz
Chassis-2	1 ... 6	1 (xLow)	250 µs	2 kHz
Blocksize	1 ... 5	3 (Standard)	125 µs	4 kHz
VECTOR				
Booksize	1 ... 3 only n_ctrl 1 ... 6 only U/f	3 (Standard)	250 µs	4 kHz
Chassis 400 V / ≤ 250 kW				2 kHz
Booksize	4 ... 6 only n_ctrl	0 (Expert)	500 µs	4 kHz
Chassis 400 V / ≤ 250 kW	7 ... 12 only f_ctrl			2 kHz
Chassis 400 V / > 250 kW 690 V	1 ... 4 only n_ctrl 1 ... 5 only U/f 5 ... 6 only n_ctrl	0 (Expert) 1 (xLow) 0 (Expert)	375 µs (p0092 = 1) 400 µs (p0092 = 0) 500 µs (p0092 = 1)	1.333 kHz 1.25 kHz 1.0 kHz
Chassis-2	1 ... 4 only n_ctrl 1 ... 5 only U/f 5 ... 6 only n_ctrl	0 (Expert) 1 (xLow) 0 (Expert)	375 µs (p0092 = 1) 400 µs (p0092 = 0) 500 µs (p0092 = 0)	1.333 kHz 2.5 kHz 1.0 kHz

Note

If a Blocksize Power Module is connected to a Control Unit, the sampling times of all vector drives are set according to the rules for Blocksize Power Modules (only 250 µs or 500 µs possible).

14.12.4.4 Setting the pulse frequency

The sampling times for the following functions are set by selecting the appropriate values in p0112 for the closed-loop control configuration in µs and are copied to p0115[0...6] depending on the performance levels required:

- Current controller (p0115[0])
- Speed controller (p0115[1])
- Flux controller (p0115[2])
- Setpoint channel (p0115[3])
- Position controller (p0115[4])

- Positioner (p0115[5])
- Technology controller (p0115[6])

The performance levels range from xLow to xHigh. Details of how to set the sampling times are given in the SINAMICS S120/S150 List Manual.

Setting the pulse frequency using the commissioning tool in online operation

Enter the minimum pulse frequency in p0113. For isochronous operation (p0092 = 1), you can only set the parameter so that a resulting current controller sampling time with an integer multiple of 125 µs is obtained. The required pulse frequency can be set after commissioning (p0009 = p0010 = 0) in p1800.

Table 14-12 Pulse frequency for isochronous operation

Control type	p0115[0] Current controller sampling time	p0113 Pulse frequency
Servo control	250 µs	2 kHz
	125 µs	4 kHz
Vector control	500 µs	1 kHz
	250 µs	2 kHz

When commissioning is exited (p0009 = p0010 = 0), the effective pulse frequency (p1800) is appropriately pre-assigned, depending on p0113, and can be subsequently modified.

14.12.4.5 Setting sampling times

If sampling times are required which cannot be set using p0112 > 1, you can directly set the sampling times in expert mode using p0115.

If p0115 is changed online, then the values of higher indices are automatically adapted.

Note

Do not change the sampling times when the commissioning tool is in the offline mode, because in this case if there is an incorrect parameterization, the project download is canceled.

Making and checking settings

1. Activate in the expert list of the Control Unit the drive base configuration with p0009 = 3.
2. In the expert list of the drive object, activate the expert mode with p0112 = 0.
3. Specify the current controller sampling time for the drive object as follows:
   p0115[0] = current controller sampling time.
   For the current controller sampling time, only use the values from "Table 14-14 Pulse frequencies and current controller sampling times for servo control (Page 855)" and "Table 14-16 Pulse frequencies and current controller sampling times for vector control (Page 857)".

4. Close in the expert list of the Control Unit the cycle setting with p0009 = 0.
   A startup is then performed. The speed controller sampling time and flux controller cycle are adapted automatically. They therefore remain an integer multiple of the current controller sampling time.
5. Then check the maximum speed p1082, the set pulse frequency p1800 and start an automatic calculation of the controller data (p0340 = 4).

14.12.4.6 Overview of important parameters

Overview of important parameters (see SINAMICS S120/S150 List Manual)

- p0009 Device commissioning parameter filter
- p0092 Isochronous mode, pre-assignment/check
- p0097 Select drive object type
- r0110[0...2] Basic sampling times
- p0112 Sampling times pre-setting p0115
- p0113 Pulse frequency minimum selection
- r0114[0...9] Pulse frequency minimum recommended
- p0115[0...6] Sampling times for internal control loops
- r0116[0...1] Drive object cycle recommended
- p0118 Current controller computing dead time
- p0340[0...n] Automatic calculation of motor/control parameters
- p0799[0...2] CU inputs/outputs, sampling time
- p1082[0...n] Maximum velocity
- p1800[0...n] Pulse frequency setpoint
- p4099 Inputs/outputs sampling time
- r9780 SI monitoring cycle (Control Unit)
- r9880 SI monitoring cycle (Motor Module)
- r9976[0...7] System utilization

14.12.5 Rules for wiring with DRIVE-CLiQ

Rules apply for wiring components with DRIVE-CLiQ. A distinction is made between binding DRIVE-CLiQ rules, which must be unconditionally observed and recommended rules, which should then be maintained so that the topology, generated offline in the commissioning tool, no longer has to be changed.

The maximum number of DRIVE-CLiQ components and the possible wiring type depend on the following factors:

- The binding DRIVE-CLiQ wiring rules
- The number and type of activated drives and functions on the Control Unit in question

- The computing power of the Control Unit in question
- The set processing and communication cycles

Below you will find the binding wiring rules and some other recommendations as well as a few sample topologies for DRIVE-CLiQ wiring.

The components used in these examples can be removed, replaced with others or supplemented. If components are replaced by another type or additional components are added, then the SIZER configuring tool should be used to check this topology.

If the real topology does not match the topology created offline using the commissioning tool, the offline topology must be changed accordingly before it is downloaded.

14.12.5.1 Binding DRIVE-CLiQ interconnection rules

The following generally binding DRIVE-CLiQ rules must be observed to ensure safe operation of the drive.

- Only one Control Unit is permitted in the role of DRIVE-CLiQ master in a DRIVE-CLiQ topology.
- A maximum of 14 DRIVE-CLiQ nodes can be connected to a Control Unit port on a DRIVE-CLiQ line.

  Note

  One Double Motor Module, one DMC20, one DME20, one TM54F and one CUA32 each correspond to two DRIVE-CLiQ nodes. This also applies to Double Motor Modules, at which just one drive is configured.

- Ring wiring or double wiring of components is not permitted.
- Drive topologies with DRIVE-CLiQ components that are not supported (by the type and the firmware version of the Control Unit) are not permitted.
- The sampling times (p0115[0] and p4099) of all components that are connected to a DRIVE-CLiQ line must be divisible by one another with an integer result, or all the sampling times set for the components must be an integer multiple of a common "base cycle".
  - Example 1: A Line Module with 250 µs and Motor Modules with 125 µs can be operated together on a DRIVE-CLiQ line ("base cycle": 125 µs)
  - Example 2: A Line Module with 250 µs and a Motor Module with 375 µs can be operated together on a DRIVE-CLiQ line ("base cycle": 125 µs)

  If the current controller sampling time T_i at one drive object has to be changed in a sampling time that does not match the other drive objects in the DRIVE-CLiQ line, the following solutions are available:
  - Insert the modified drive object into a separate DRIVE-CLiQ line. Note here that a total of 2 cycle levels are permissible on a Control Unit.
  - Modify the current controller sampling times and/or the sampling times of the inputs/ outputs of the other drive objects similarly so they match the modified sampling time again.

- With the CU310-2 Control Unit the connection to the AC/AC Power Modules in Chassis format is made via the DRIVE-CLiQ connection X100.
- The TM54F must not be operated together on the same DRIVE-CLiQ line as Line Modules or Motor Modules.

Rules and instructions for avoiding overloads

In general any overload must be avoided of a DRIVE-CLiQ line and the components connected to it through too many components with small sampling times. The following rules and instruction apply for this:

- A DRIVE-CLiQ line with components with a sampling time of T_i = 31.25 µs must only be connected to components that are permitted for this sampling time. The following components are permitted:
  - Single Motor Modules in Booksize format
  - Sensor Modules SMC20, SMI20, SMI24, SME20, SME25, SME120 and SME125
  - High-frequency damping modules (HF damping modules)
  - Additional DRIVE-CLiQ lines must be used for additional components.
- With current controller sampling times 31.25 µs and 62.5 µs, the axes on the DRIVE-CLiQ connections must be distributed as follows:
  - DRIVE-CLiQ socket X100: Infeed, axes 2, 4, 6, ...
  - DRIVE-CLiQ socket X101: Axes 1, 3, 5, ...
- For vector U/f control, more than 4 motor modules can only be connected to one DRIVE-CLiQ line of the Control Unit.
- With a current controller sampling time of 31.25 µs, a filter module should be directly connected to a DRIVE-CLiQ socket of the Control Unit.
- For the parallel connection of Active Line Modules of the Chassis-2 format with more than 4 modules, the DRIVE-CLiQ line must be separated. The modules 1 to 3 connected in parallel must be operated at the 1st DRIVE-CLiQ socket. The remaining modules must be operated at the 2nd DRIVE-CLiQ socket.
- A maximum of 5 Motor Modules with Safety Extended Functions may be operated on a DRIVE-CLiQ line. The following condition applies in this regard: T_{IReg} (current controller sampling time) = 125 µs for all axes. In addition to the 5 Motor Modules with Safety Extended Functions, the following modules may also be operated on a DRIVE-CLiQ line:
  - A Line Module if T_{IReg} (current controller sampling time) ≥ 250 µs
  - A Motor Module if T_{IReg} (current controller sampling time) ≥ 125 µs
  - A maximum of 7 Sensor Modules or DRIVE-CLiQ encoders

  Exception: A maximum of 6 Motor Modules with Safety Extended Functions may be operated on one DRIVE-CLiQ line if the number of connected S120M or S220 modules in the line is ≥ 3.

The following applies for the CU Link and the CX32 and NX10/NX15 Control Units:

- In a topology with CU Link, the SINUMERIK NCU is DRIVE-CLiQ master for the NX and the SIMOTION D4xx is master for the CX32.
- The CX32 or NX10/NX15 Control Units are master for the subordinate components.

- The connection to the Control Unit is obtained from the PROFIBUS address of the CX/NX (10 → X100, 11 → X101, 12 → X102, 13 → X103, 14 → X104, 15 → X105).
- It is not permitted to combine SIMOTION Master Control Units and SINUMERIK Slave Control Units.
- It is not permitted to combine SINUMERIK Master Control Units and SIMOTION Slave Control Units.

14.12.5.2 Recommended interconnection rules

The following recommended rules should be observed for the DRIVE-CLiQ wiring:

General

- The following applies to all DRIVE-CLiQ components with the exception of the Control Unit: The DRIVE-CLiQ sockets Xx00 are DRIVE-CLiQ inputs (Uplink), the other DRIVE-CLiQ sockets are outputs (Downlink).
  - The DRIVE-CLiQ cable from the Control Unit should be connected to DRIVE-CLiQ socket X200 on the first Booksize power unit or X400 on the first Chassis power unit.
  - The DRIVE-CLiQ connections between the power units should each be connected from the DRIVE-CLiQ sockets X201 to X200 and/or X401 to X400 on the follow-on component.

Line Modules

- A single Line Module should be connected directly to the Control Unit (recommended DRIVE-CLiQ socket: X100).
  - Several Line Modules should be connected in series.
  - For Active Line Modules of the Chassis-2 format with more than 4 modules connected in parallel, the X101 port is also to be used in order to wire modules 4 through n.

Motor Modules

- No more than 6 Motor Modules should be connected to a DRIVE-CLiQ line on the Control Unit (including with vector, U/f control).
- Motor Modules should be connected directly to the Control Unit in vector control.
  - If DRIVE-CLiQ socket X100 is already assigned to a Line Module, DRIVE-CLiQ socket X101 should be used.
  - Several Motor Modules should be connected in a line.
  - For Motor Modules of the Chassis-2 format with more than 4 modules connected in parallel, the X101 port is also to be used in order to wire modules 4 through n.
- In servo control, Motor Modules should be connected to a DRIVE-CLiQ line together with the Line Module.
  - Several Motor Modules should be connected in a line.
  - If there is already a Line Module present, the first Motor Module should be connected in line to socket X201 of the Line Module.
  - If there is no Line Module present, the first Motor Module should be connected directly to the Control Unit (recommended DRIVE-CLiQ socket: X100).

- If the Motor Modules need to be distributed across two DRIVE-CLiQ lines (e.g. on account of the predetermined current controller sampling times), the next higher DRIVE-CLiQ socket on the Control Unit should be used.
  Example, vector control in the Chassis format:
  - Active Line Module current controller sampling time 400 µs: X100
  - Motor Modules current controller sampling time 250 µs: X101
  - Motor Modules current controller sampling time 400 µs: X102
- Only one end node should be connected to free DRIVE-CLiQ sockets within a DRIVE-CLiQ line (e.g. Motor Modules wired in a line), for example, one Sensor Module or one Terminal Module, without routing to additional components.
- For mixed operation of the servo control and vector U/f control operating modes, separate DRIVE-CLiQ lines should be used for the Motor Modules.
- A Power Module with the CUA31/CUA32 should be connected to the middle or end of the DRIVE-CLiQ line.

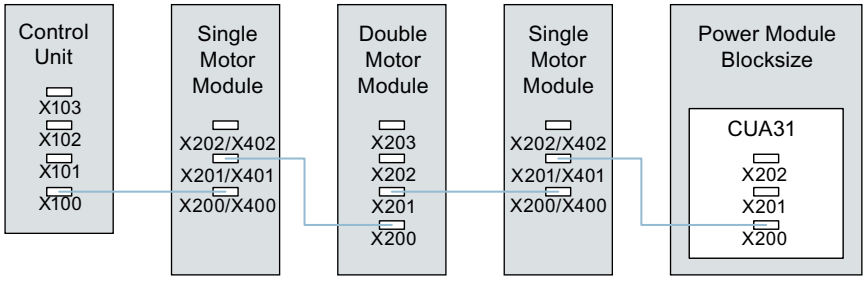

Figure 14-22 DRIVE-CLiQ line example

Encoder, Sensor Modules

- The motor encoder or Sensor Module should be connected to the associated Motor Module. Connecting the motor encoder via DRIVE-CLiQ:
  - Booksize Single Motor Module to terminal X202
  - Booksize Double Motor Module motor X1 to terminal X202 and motor X2 to terminal X203
  - Chassis Single Motor Module to terminal X402
  - Blocksize Power Module with CUA31: Encoder to terminal X202
  - Blocksize Power Module with CU310-2: Encoder to terminal X100 or to terminal X501 of a Terminal Module
  - Chassis Power Module to terminal X402
- If possible, Sensor Modules of direct measuring systems should not be connected to the DRIVE-CLiQ line of Motor Modules, but rather to free DRIVE-CLiQ sockets of the Control Unit.

Note

This restriction does not apply to star-type connections for the Motor Modules.

Voltage Sensing Modules

- When used for the infeed control, the Voltage Sensing Module (VSM) should be connected to DRIVE-CLiQ socket X202 (Booksize format) or X402 (Chassis format) of the associated Line Module.

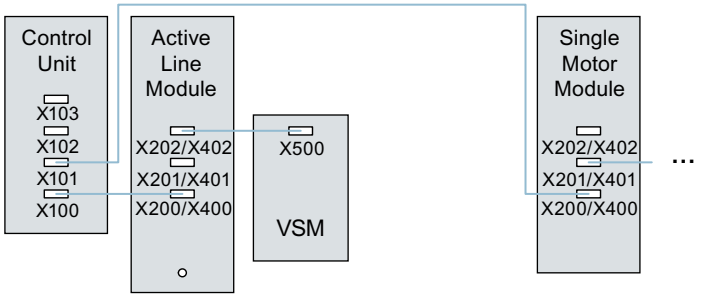

Figure 14-23 Example of a topology with VSM for Booksize and Chassis components

Terminal Modules

- Terminal Modules should be connected to DRIVE-CLiQ socket X103 of the Control Unit in series.
- If possible, Terminal Modules should not be connected to the DRIVE-CLiQ line of Motor Modules, but rather to free DRIVE-CLiQ sockets of the Control Unit.

Note

This restriction does not apply to star-type connections for the Motor Modules.

14.12.5.3 Rules for automatic configuration

With "Automatic Configuration" (Auto commissioning) the Control Unit software creates drive objects for the connected Line Modules, Motor Modules and Terminal Modules. For the Motor Modules the control mode is set via parameter p0097. Parameter p9910 is used to subsequently add components and drive objects.

In addition to auto commissioning, the following DRIVE-CLiQ wiring rules - in conjunction with the settings in parameter p9940 - support automatically assigning components to drive objects.

The subsequently added components and drive objects are always located at the first position in the following list (e.g. DRIVE-CLiQ connection between ① **encoder** and ② **Motor Module**).

- **Encoder - Motor Module**
  - An encoder that is connected directly to a Motor Module or via a Sensor Module, is assigned to this drive object as motor encoder (encoder 1).
  - If a second encoder is connected to a Motor Module in addition to the motor encoder, it is assigned to the drive as encoder 2. The encoder connected at terminal X202, X203 or X402 then becomes the motor encoder (encoder 1).
    An overview of the terminals, depending on the Motor Module type and format, is listed in the following table.

Motor Module type	Format	Terminal
Single Motor Modules (SMM)	Booksize	X202
Double Motor Modules (DMM)	Booksize	X203
Single Motor Modules (SMM)	Chassis / Chassis-2	X402

- **Encoder - Control Unit**
  - When p9940.1 = 1 is set, then encoders connected to Control Unit or Hub Module terminals, are assigned to drive objects as encoder 2. From the terminal, to which the Motor Modules are connected, the encoders connected to the following terminals are assigned to the drive objects of the Motor Modules. The assignment sequence corresponds to the sequence of the Motor Modules in the DRIVE-CLiQ wiring.
    When p9940.1 = 1 is set, then encoders connected to Control Unit or Hub Module terminals, are assigned to drive objects as encoder 2. From the terminal, to which the Motor Modules are connected, the encoders connected to the freely available terminals are assigned to the drive objects of the Motor Modules. The assignment sequence corresponds to the sequence of the Motor Modules in the DRIVE-CLiQ wiring.
- **TM120, TM150 - Motor Module**
  - If a TM120 or TM150 is connected to the Motor Module, the temperature channels of the TM are connected with the motor temperature monitoring of the drive. In this case, the motor encoder may be connected to the TM120 or TM150.
- **VSM - Line Module**
  - If a Voltage Sensing Module (VSM) is connected to a Line Module then it is assigned to the infeed drive object.
    Booksize devices are connected via terminal X202. Chassis and Chassis-2 devices are connected via terminal X402.
- **VSM - Motor Module**
  - If a Motor Module with VECTOR control mode is connected to a VSM, then it is assigned to the drive object.
  - If two VSMs are connected at the Motor Module, then the VSM at terminal X202 or X204 is assigned as the first VSM (p0151[0]) for the line voltage measurement (see p3801) and the second VSM is assigned the motor voltage measurement (see p1200).

Parameters used

- p0097 Select drive object type
- p9910 Target topology accept additional components
- p9940 Configuration auto commissioning (p0097 / p9910)
- p0151 Voltage Sensing Module component number
- p3801 Sync-line-drive drive object number
- p1200 Flying restart operating mode

14.12.5.4 Changing the offline topology in the STARTER commissioning tool

You can change the device topology in the Startdrive commissioning tool by shifting the components in the topology tree. Please refer to SINAMICS S120 Commissioning Manual and the Startdrive online help for details and examples.

14.12.5.5 Modular machine concept: Offline correction of the reference topology

The topology is based on a modular machine concept. The machine concept is created OFFLINE in the Startdrive commissioning tool in the maximum version as reference topology.

The maximum version is the maximum expansion of a particular machine type. In the maximum version, all the machine components that can be used are pre-configured in the reference topology.

Deactivating components/handling non-existent components

In a lower expansion stage of the machine, you must mark drive objects and encoders that are not used in the Startdrive topology. To do this, for the corresponding drive objects and encoder, set parameter p0105 or p0145 = 2 (deactivate component and does not exist). Components set to the value "2" in a project generated OFFLINE must never be inserted in the actual topology at all.

If a component fails, the sub-topology can also be used to allow a machine to continue to operate until the spare part is available. In this case, however, no BICO source must be interconnected from this drive object to other drive objects.

Example of a sub-topology

The starting point is a machine created OFFLINE in the Startdrive commissioning tool. "Drive 1" was not implemented for this machine.

1. You can remove drive object "Drive 1" "OFFLINE" from the reference topology using p0105 = 2.
2. Change over the DRIVE-CLiQ cable from the Control Unit directly to “Drive 2”.

3. Transfer the project with "Download to drive unit".
4. Then execute a "Copy RAM to ROM".

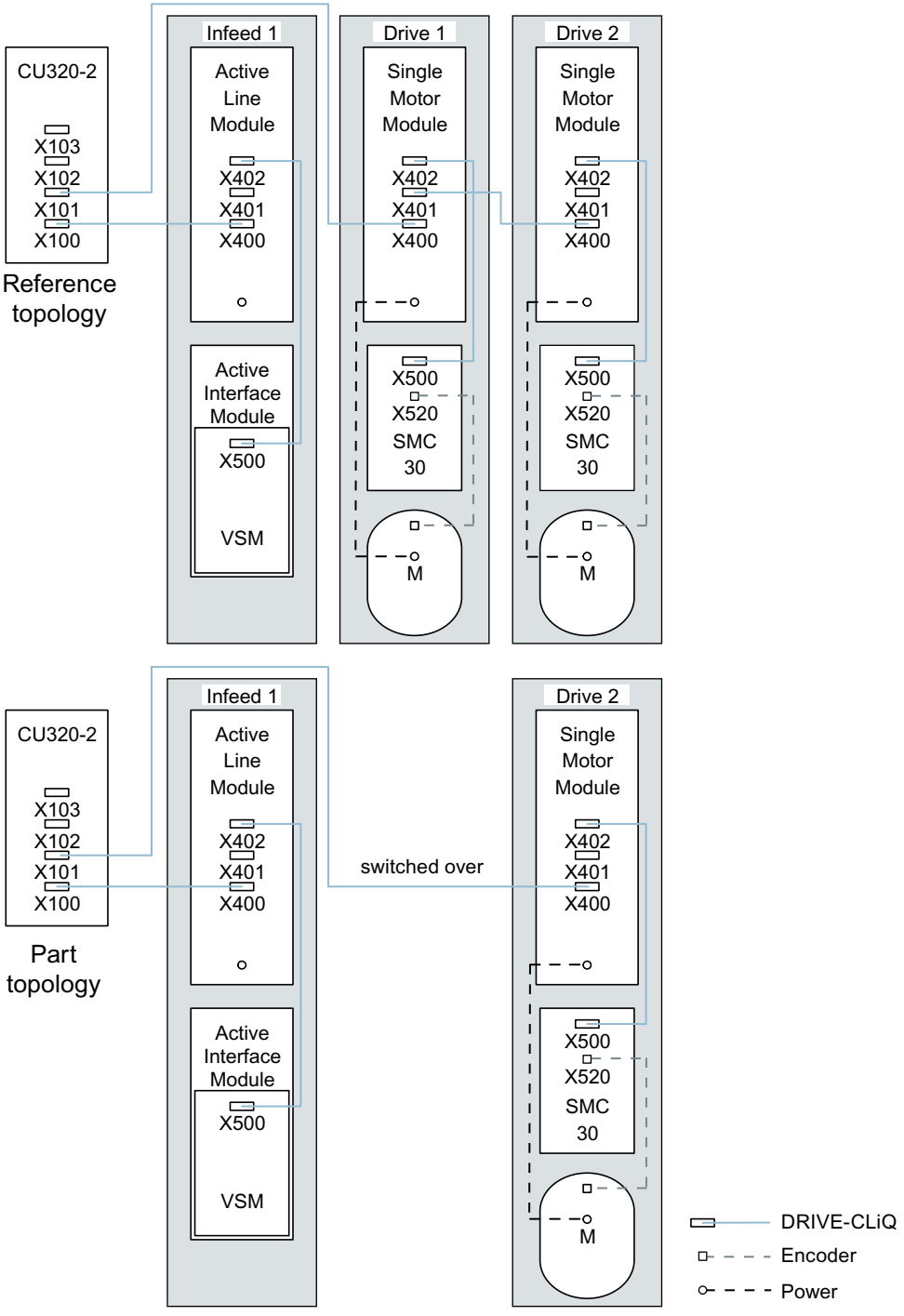

Figure 14-24 Example of a sub-topology

Note

Incorrect SI status display

If a drive in a Safety Integrated drive line-up is deactivated using p0105, then r9774 is not correctly output. The signals of a deactivated drive are no longer updated.

Activating/deactivating components

Drive objects can be activated/deactivated using parameter p0105 and encoders with p0145[0...n] in the Expert list in the same way. If a component is not required at certain times, then for the component, change parameter p0105 or p0145 from "1" to "0". The deactivated components remain inserted, however, they are deactivated. Errors are not displayed from deactivated components.

Overview of important parameters (see SINAMICS S120/S150 List Manual)

- p0105 Activating/deactivating drive object
- r0106 Drive object active/inactive
- p0125 Activate/deactivate power unit component
- r0126 Power unit components active/inactive
- p0145[0...n] Enable/disable sensor interface
- r0146 Sensor interface active/inactive
- p9495 BICO behavior to de-activated drive objects
- p9496 BICO behavior when activating drive objects
- r9498[0...29] BICO BI/CI parameters to de-activated drive objects
- r9499[0...29] BICO BO/CO parameters to de-activated drive objects
- r9774.0...31 CO/BO: SI Status (group STO)

14.12.6 Notes on the number of controllable drives

14.12.6.1 Number of drives depending on the control mode and cycle times

The number of axes that can be operated with a Control Unit depends on the cycle times and the control mode. The number of usable axes and the associated cycle times for each control type are listed below. The other available remaining computation times are available for options (e.g. DCC).

Cycle times for servo control and HLA

The following table lists the number of axes that can be operated with a Control Unit in servo control and HLA. The number of axes is also dependent on the cycle times of the controller:

Table 14-13 Sampling time setting for servo control

Cycle times [µs]		Number		Motor/dir. measuring systems	TM[1]/TB
Current controller	Speed controller	Axes	Infeed		
125	125	6	1 [250 µs]	6 / 6	3 [2000 µs]
62.5	62.5	3	1 [250 µs]	3 / 3	3 [2000 µs]
31.25[2]	31.25[2]	1	1 [250 µs]	1 / 1	3 [2000 µs]

1) Valid for TM31 or TM15IO; restrictions are possible for TM54F, TM41, TM15, TM17, TM120, TM150 depending on the set sampling time.

2) In the cycle level 31.25 µs, you can also create the following objects:
Sensor Module External (SME) and SMC20 that support the current firmware and hardware. These can be recognized from the Article end number ... 3.
No additional axis can be operated in this cycle level.

Adjustable pulse frequencies and current controller sampling times for servo control

The pulse frequencies that can be set depending on the selected current controller sampling time are shown in r0114. Because of the integrating current measurement, pulse frequencies that are a multiple of half the current controller sampling frequency should be preferred. Otherwise, the current is not measured synchronous to the pulse frequency and a fluctuating actual current value results. This causes disturbance in the control circuits and higher losses in the motor (such as pulse frequency 5.333 kHz and current controller sampling time 62.5 µs).

The recommended settings are marked with **XX** in the Table; all other possible settings are marked with X.

Table 14-14 Pulse frequencies and current controller sampling times for servo control

Pulse frequency [kHz]	Current controller sampling time [µs]										
	250.0	187.5	150.0	125.0	100.0	93.75	75.0	62.5	50.0	37.5	31.25
16.0	X	-	-	X	-	-	-	X	-	-	**XX**
13.333	-	-	X	-	-	-	X	-	-	**XX**	-
12.0	X	-	-	-	-	-	-	-	-	-	-
10.666	-	X	-	-	-	X	-	-	-	-	X
10.0	-	-	-	-	X	-	-	-	**XX**	-	-
8.888	-	-	-	-	-	-	-	-	-	X	-
8.0	X	-	-	X	-	-	-	**XX**	-	-	X
6.666	-	-	X	-	-	-	**XX**	-	X	X	-
6.4	-	-	-	-	-	-	-	-	-	-	X
5.333	-	X	-	-	-	**XX**	-	X	-	X	-
5.0	-	-	-	-	**XX**	-	-	-	X	-	-
4.444	-	-	-	-	-	-	X	-	-	-	-
4.0	X	-	-	**XX**	-	-	-	X	-	-	-

Pulse frequency [kHz]	Current controller sampling time [µs]										
	250.0	187.5	150.0	125.0	100.0	93.75	75.0	62.5	50.0	37.5	31.25
3.555	-	-	-	-	-	X	-	-	-	-	-
3.333	-	-	XX	-	X	-	X	-	-	-	-
3.2	-	-	-	-	-	-	-	X	-	-	-
2.666	-	XX	-	X	-	-	-	-	-	-	-
2.5	-	-	-	-	X	-	-	-	-	-	-
2.222	-	-	X	-	-	-	-	-	-	-	-
2.133	-	-	-	-	-	X	-	-	-	-	-
2.0	XX	-	-	X	X	-	-	-	-	-	-
1.777	-	X	-	-	-	-	-	-	-	-	-
1.666	-	-	X	-	-	-	-	-	-	-	-
1.6	-	-	-	X	-	-	-	-	-	-	-
1.333	-	X	X	-	-	-	-	-	-	-	-

Note

Clock cycle mix

Detailed information about the clock cycle mix for servo control is provided in Section Cycle mix for servo control and vector control (Page 861).

Cycle times for vector control

This following table lists the number of axes that can be operated with a Control Unit in the vector control mode. The number of axes is also dependent on the cycle times of the controller:

Table 14-15 Sampling time setting for vector control

Cycle times [µs]		Number		Motor/dir. measuring systems	TM[1]/TB
Current controller	Speed controller	Axes	Infeed[2]		
500 µs	2000 µs	6	1 [250 µs]	6 / 6	3 [2000 µs]
400[3] µs	1600 µs	5	1 [250 µs]	5/5	3 [2000 µs]
250 µs	1000 µs	3	1 [250 µs]	3 / 3	3 [2000 µs]

1) Valid for TM31 or TM15IO; restrictions are possible for TM54F, TM41, TM15, TM17, TM120, TM150 depending on the set sampling time.

2) For power units in Chassis format, the infeed cycle depends on the power rating of the module and can be 400 µs, 375 µs or 250 µs.

3) This setting results in lower remaining computation times.

Note

Restriction when connecting Active Line Modules of the Chassis-2 format in parallel

If an Active Line Module (ALM) of the Chassis-2 format is driven in a parallel connection together with VECTOR drives, the sampling times within the Motor Modules must be set to 400 µs. To ensure the ability to set faster sampling times, the ALM must be operated on a separate CU.

Adjustable pulse frequencies and current controller sampling times for vector control

The pulse frequencies that can be set depending on the selected current controller sampling time are shown in r0114.

This means that maximum 2 cycle levels can be mixed.

Note

Clock cycle mix

Detailed information about the clock cycle mix for servo control is provided in Chapter Cycle mix for servo control and vector control (Page 861).

Table 14-16 Pulse frequencies and current controller sampling times for vector control

Pulse frequency [kHz]	Current controller sampling time [µs]											
	500.0	375.0	312.5	250.0	218.75	200.0	187.5	175.0	156.25	150.0	137.5	125.0
16.0	X	X	X	X	-	-	X	-	-	-	-	X
15.0	-	-	-	-	-	X	-	-	-	-	-	-
14.545	-	-	-	-	-	-	-	-	-	-	X	-
14.0	X	-	-	-	-	-	-	-	-	-	-	-
13.714	-	-	-	-	X	-	-	-	-	-	-	-
13.333	-	X	-	-	-	-	-	-	-	X	-	-
12.8	-	-	X	-	-	-	-	-	X	-	-	-
12.0	X	-	-	X	-	-	-	-	-	-	-	-
11.428	-	-	-	-	-	-	-	X	-	-	-	-
10.666	-	X	-	-	-	-	X	-	-	-	-	-
10.0	X	-	-	-	-	X	-	-	-	-	-	-
9.6	-	-	X	-	-	-	-	-	-	-	-	-
9.142	-	-	-	-	X	-	-	-	-	-	-	-
8.0	X	X	-	X	-	-	-	-	-	-	-	X
7.272	-	-	-	-	-	-	-	-	-	-	X	-
6.666	-	-	-	-	-	-	-	-	-	X	-	-
6.4	-	-	X	-	-	-	-	-	X	-	-	-
6.0	X	-	-	-	-	-	-	-	-	-	-	-
5.714	-	-	-	-	-	-	-	X	-	-	-	-

Pulse frequency [kHz]	Current controller sampling time [µs]											
	500.0	375.0	312.5	250.0	218.75	200.0	187.5	175.0	156.25	150.0	137.5	125.0
5.333	-	X	-	-	-	-	X	-	-	-	-	-
5.0	-	-	-	-	-	X	-	-	-	-	-	-
4.571	-	-	-	-	X	-	-	-	-	-	-	-
4.0	X	-	-	X	-	-	-	-	-	-	-	X
3.636	-	-	-	-	-	-	-	-	-	-	X	-
3.333	-	-	-	-	-	-	-	-	-	X	-	-
3.2	-	-	X	-	-	-	-	-	X	-	-	-
2.857	-	-	-	-	-	-	-	X	-	-	-	-
2.666	-	X	-	-	-	-	X	-	-	-	-	-
2.5	-	-	-	-	-	X	-	-	-	-	-	-
2.285	-	-	-	-	X	-	-	-	-	-	-	-
2.0	X	-	-	X	-	-	-	-	-	-	-	-
1.6	-	-	X	-	-	-	-	-	-	-	-	-
1.333	-	X	-	-	-	-	-	-	-	-	-	-
1.0	X	-	-	-	-	-	-	-	-	-	-	-

Note

Restriction for the Chassis format

If edge modulation and wobbling are activated simultaneously with p1802 ≥ 7 and p1810.2 = 1 respectively, the quantity structure for vector control is halved. Then a maximum of three axes at a current controller sampling time of 500 µs, two axes at 400 µs or one axis at 250 µs are permitted.

Cycle times for U/f control

The following table shows the number of axes which can be operated with a Control Unit in U/f control. The number of axes depends on the current controller sampling time.

Table 14-17 Sampling time setting for U/f control

Cycle times [µs]		Number		Motor / direct measuring systems	TM / TB
Current controller	Speed controller	Drives	Infeed		
500	2000	12	1 [250 µs]	- / -	3 [2000 µs]

Mixed operation of servo control and U/f control

In mixed operation with servo control and U/f control, one axis in servo control at 125 µs uses exactly as much computing power as two axes in U/f control at 500 µs. A maximum of 11 axes are permitted in conjunction with the servo control, where 1 axis can be operated in servo control and 10 axes in U/f control.

Table 14-18 Number of axes for mixed servo control operation

Number of axes in servo control				Number of axes in U/f control	
6	125 µs	3	62.5 µs	0	-
5	125 µs	-	-	2	500 µs
4	125 µs	2	62.5 µs	4	500 µs
3	125 µs	-	-	6	500 µs
2	125 µs	1	62.5 µs	8	500 µs
1	125 µs	-	-	10	500 µs
0	-	0	-	12	500 µs

Mixed operation of vector control and U/f control

In mixed operation with vector control and U/f control, one axis in vector control at 250 µs uses exactly as much computing power as two axes in U/f control at 500 µs. A maximum of 11 axes are permitted in conjunction with the vector control, where 1 axis can be operated in vector control and 10 axes in U/f control.

Table 14-19 Number of axes for mixed vector control operation

Number of axes in vector control				Number of axes in U/f control	
6	500 µs	3	250 µs	0	-
5	500 µs	-	-	2	500 µs
4	500 µs	2	250 µs	4	500 µs
3	500 µs	-	-	6	500 µs
2	500 µs	1	250 µs	8	500 µs
1	500 µs	-	-	10	500 µs
0	-	0	-	12	500 µs

Cycle times of CU310-2 for servo control

Table 14-20 Setting the sampling times for servo control

Cycle times [µs]		Number		Via DQ[2]	Snapped-on	TM[1] / TB
Current controller	Speed controller	Axes	Infeed	Motor Module	Power Module	
125	125	1	-	-	1	3 [2000 µs]
62.5	62.5	1	-	-	1	3 [2000 µs]

1) Valid for TM15, TM17 or TM41; for TM54F, TM31, TM120, TM150 - restrictions are possible dependent on the set sampling time.

2) DQ = DRIVE-CLiQ

If the CU 310-2 is snapped onto a Power Module PM340 or a PM240-2 FS A-C, a minimum current controller sampling time of 62.5 µs is possible. For PM240-2 FS D-F, the minimum current controller sampling time is 125 µs.

Use of DCC

The available remaining computation time can be used for DCC. In this case, the following supplementary conditions apply:

- Max. 75 DCC blocks for 2 ms time slice can be configured for each omitted axis in servo control with 125 µs (≙ 2 U/f axes with 500 µs).
- 50 DCC blocks for a 2 ms time slice correspond to 1.5 U/f axes with 500 µs.

Detailed information about handling and using DCC standard blocks is provided in the "SINAMICS/SIMOTION Editor Description DCC" manual.

Use of EPOS

The following table shows the number of axes that can be operated with a SINAMICS S120 when using a "basic positioner" (EPOS) function module. The number of axes depends on the current controller sampling time.

Table 14-21 Sampling times when using EPOS

Cycle times [µs]		Cycle times [ms]		Number	
Current controller	Speed controller	Position controller	Positioner	Axes	Infeed
250	250	2	8	6	1 [250 µs]
250	250	1	4	5	1 [250 µs]
125	125	1	4	4	1 [250 µs]

The computational effort required for the EPOS function module (with 1 ms position controller / 4 ms positioner) corresponds to the same computational effort of 0.5 U/f axes with 500 µs.

Use of the SINAMICS Web server

The available computation time can be used for the SINAMICS Web server. The following boundary condition applies here:

- The utilization of the system (r9976) **must** be less than 90%.
- A maximum of five users can access data on the same drive via the SINAMICS Web server.

Use of CUA31 / CUA32

The following table shows the number of axes which can be operated when using the Control Unit Adapter CUA31 or CUA32. The number of axes is dependent upon the following conditions:

Table 14-22 Number of axes when using the CUA31 / CUA32

Condition	Number of axes
The CUA31 or CUA32 is the first component in the topology.	5
The CUA31 or CUA32 is **not** the first component in the topology.	6
Current controller sampling time = 62.5 µs	1

14.12.6.2 Cycle mix for servo control and vector control

Supplementary conditions

The rules for setting the sampling time (see Section Rules when setting the sampling times (Page 838)) and the rules on isochronous mode (see Section Rules for isochronous mode (Page 841)) apply.

These rules mean that the smallest common multiple of the current controller sampling times of all axes operated on the isochronous PROFIBUS and 125 µs is used to set T_i, T_o and T_{dp}.

Current controller sampling times for cycle mix

Consequently the smallest common multiple of the current and speed controller sampling times of all axes operated on the isochronous PROFIBUS is used to set the base cycle for T_i, T_o and T_{dp}. For a cycle mix, a compromise must be sought between the base cycle to set T_i, T_o and T_{dp}, and the required pulse frequency.

Table 14-23 Examples of cycle mixes for servo control

Cycle mix: Current controller sampling times [µs]		Base cycle for T_i, T_o [µs]	Base cycle for T_{dp}, T_{mapc} [µs]
250.00	+125.00	250	250
187.50	+125.00	375	750
150.00	+125.00	750	750
125.00	+125.00	125	250
100.00	+125.00	500	500
93.75	+125.00	375	750

Cycle mix: Current controller sampling times [µs]		Base cycle for T_i, T_o [µs]	Base cycle for T_{dp}, T_{mapc}[µs]
75.00	+125.00	375	750
62.50	+125.00	125	250
50.00	+125.00	250	250
37.50	+125.00	750	750
31.25	+125.00	125	250

Base cycles for the isochronous PROFIBUS for a cycle mix with 125 µs

Table 14-24 Examples for cycle mixes for vector control

Cycle mix: Current controller sampling times [µs]		Base cycle for T_i, T_o [µs]	Base cycle for T_{dp} [µs]	Base cycle for T_{mapc} [µs]
500.00	+250.00	500	500	2000
375.00	+250.00	750	750	3000
312.50	+250.00	1250	1250	5000
250.00	+250.00	250	250	1000
218.75	+250.00	1750	1750	7000
200.00	+250.00	1000	1000	4000
187.50	+250.00	750	750	3000
175.00	+250.00	1750	1750	7000
156.25	+250.00	1250	1250	5000
150.00	+250.00	750	750	3000
137.50	+250.00	2750	2750	11000
125.00	+250.00	250	250	1000

Base cycles for the isochronous PROFIBUS for a cycle mix with 250 µs

Note

When the current controller sampling time is set, the speed controller sampling time is automatically preset:

- Servo control: Speed controller sampling time = current controller sampling time
- Vector control: Speed controller sampling time = current controller sampling time x 4

The preassignment of the speed controller sampling time can be changed to influence T_{mapc}. For example, the current controller sampling time can be increased from 800 µs to 1000 µs so that T_{mapc} can be set to be a multiple of 1000 µs.

Asynchronous node on the isochronous PROFIBUS

For cycle mix, lengthened base cycles with the following effects often result on the isochronous PROFIBUS:

- Because the isochronous PROFIBUS can no longer be operated with the default setting, adaptations must be made to the hardware configuration.
- The increased setting values for T_i, T_o and T_{dp} have disadvantageous effects on the dynamics of the position control loop.

Despite a cycle mix, the parameter p2049 can be used to operate the axis with the different current controller sampling time asynchronously on the isochronous PROFIBUS. This allows the default setting of the hardware configuration to be retained.

This, however, causes the advantages of the isochronous operation for the asynchronous axis to be lost:

- The setpoints act at times that differ from T_o, i.e. an interpolating position-controlled operation with other axes is not possible.
- The actual values are read at times that differ from T_i, i.e. the actual values must not be used to control other axes.
  A critical application would be, for example, a spindle that cuts a thread with the programmed thread pitch together with a position-controlled Z-axis by the controller adjusting the plunging depth of the Z-axis depending on the spindle position.

Appendix

A

A.1 List of abbreviations

Note

The following list of abbreviations includes all abbreviations and their meanings used in the entire SINAMICS family of drives.

A

Abbreviation	Derivation of abbreviation	Meaning
A…	Alarm	Warning
AC	Alternating Current	Alternating current
ADC	Analog Digital Converter	Analog digital converter
AI	Analog Input	Analog input
AIM	Active Interface Module	Active Interface Module
ALM	Active Line Module	Active Line Module
AO	Analog Output	Analog output
AOP	Advanced Operator Panel	Advanced Operator Panel
APC	Advanced Positioning Control	Advanced Positioning Control
AR	Automatic Restart	Automatic restart
ASC	Armature Short-Circuit	Armature short-circuit
ASCII	American Standard Code for Information Interchange	American coding standard for the exchange of information
AS-i	AS-Interface (Actuator Sensor Interface)	AS-Interface (open bus system in automation technology)
ASM	Asynchronmotor	Induction motor
AVS	Active Vibration Suppression	Active load vibration damping
AWG	American Wire Gauge	American Wire Gauge (Standard for cross-sections of cables)

B

Abbreviation	Derivation of abbreviation	Meaning
BB	Betriebsbedingung	Operation condition
BERO	-	Contactless proximity switch
BI	Binector Input	Binector input
BIA	Berufsgenossenschaftliches Institut für Arbeitssicherheit	BG Institute for Occupational Safety and Health
BICO	Binector Connector Technology	Binector connector technology

Abbreviation	Derivation of abbreviation	Meaning
BLM	Basic Line Module	Basic Line Module
BO	Binector Output	Binector output
BOP	Basic Operator Panel	Basic operator panel

C

Abbreviation	Derivation of abbreviation	Meaning
C	Capacitance	Capacitance
C…	-	Safety message
CAN	Controller Area Network	Serial bus system
CBC	Communication Board CAN	Communication Board CAN
CBE	Communication Board Ethernet	PROFINET communication module (Ethernet)
CD	Compact Disc	Compact disc
CDS	Command Data Set	Command data set
CF Card	CompactFlash Card	CompactFlash card
CI	Connector Input	Connector input
CLC	Clearance Control	Clearance control
CNC	Computerized Numerical Control	Computer-supported numerical control
CO	Connector Output	Connector output
CO/BO	Connector Output/Binector Output	Connector/binector output
COB-ID	CAN Object-Identification	CAN Object Identification
CoL	Certificate of License	Certificate of License
COM	Common contact of a change-over relay	Center contact of a change-over contact
COMM	Commissioning	Commissioning
CP	Communication Processor	Communications processor
CPU	Central Processing Unit	Central processing unit
CRC	Cyclic Redundancy Check	Cyclic redundancy check
CSM	Control Supply Module	Control Supply Module
CU	Control Unit	Control Unit
CUA	Control Unit Adapter	Control Unit Adapter
CUD	Control Unit DC	Control Unit DC

D

Abbreviation	Derivation of abbreviation	Meaning
DAC	Digital Analog Converter	Digital analog converter
DC	Direct Current	Direct current
DCB	Drive Control Block	Drive Control Block
DCBRK	DC Brake	DC braking
DCC	Drive Control Chart	Drive Control Chart
DCN	Direct Current Negative	Direct current negative
DCP	Direct Current Positive	Direct current positive

Abbreviation	Derivation of abbreviation	Meaning
DDC	Dynamic Drive Control	Dynamic Drive Control
DDS	Drive Data Set	Drive Data Set
DHCP	Dynamic Host Configuration Protocol	Dynamic Host Configuration Protocol (Communication protocol)
DI	Digital Input	Digital input
DI/DO	Digital Input/Digital Output	Digital input/output, bidirectional
DIN	Deutsches Institut für Normung	Deutsches Institut für Normung (German Institute for Standardization)
DMC	DRIVE-CLiQ Hub Module Cabinet	DRIVE-CLiQ Hub Module Cabinet
DME	DRIVE-CLiQ Hub Module External	DRIVE-CLiQ Hub Module External
DMM	Double Motor Module	Double Motor Module
DO	Digital Output	Digital output
DO	Drive Object	Drive object
DP	Decentralized Peripherals	Distributed I/O
DPRAM	Dual Ported Random Access Memory	Dual-Port Random Access Memory
DQ	DRIVE-CLiQ	DRIVE-CLiQ
DRAM	Dynamic Random Access Memory	Dynamic Random Access Memory
DRIVE-CLiQ	Drive Component Link with IQ	Drive Component Link with IQ
DSC	Dynamic Servo Control	Dynamic Servo Control
DSM	Doppelsubmodul	Double submodule
DTC	Digital Time Clock	Timer

E

Abbreviation	Derivation of abbreviation	Meaning
EASC	External Armature Short-Circuit	External armature short-circuit
EDS	Encoder Data Set	Encoder data set
EEPROM	Electrically Erasable Programmable Read-Only Memory	Electrically Erasable Programmable Read-Only Memory
EGB	Elektrostatisch gefährdete Baugruppen	Electrostatic sensitive devices
EIP	EtherNet/IP	EtherNet Industrial Protocol (real-time Ethernet)
ELCB	Earth Leakage Circuit Breaker	Residual current operated circuit breaker
ELP	Earth Leakage Protection	Ground-fault monitoring
EMC	Electromagnetic Compatibility	Electromagnetic compatibility
EMF	Electromotive Force	Electromotive force
EMK	Elektromotorische Kraft	Electromotive force
EMV	Elektromagnetische Verträglichkeit	Electromagnetic compatibility
EN	Europäische Norm	European standard
EnDat	Encoder-Data-Interface	Encoder interface
EP	Enable Pulses	Pulse enable
EPOS	Einfachpositionierer	Basic positioner
ES	Engineering System	Engineering system
ESB	Ersatzschaltbild	Equivalent circuit diagram

Abbreviation	Derivation of abbreviation	Meaning
ESD	Electrostatic Sensitive Devices	Electrostatic sensitive devices
ESM	Essential Service Mode	Essential service mode
ESR	Extended Stop and Retract	Extended stop and retract

F

Abbreviation	Derivation of abbreviation	Meaning
F…	Fault	Fault
FAQ	Frequently Asked Questions	Frequently Asked Questions
FBLOCKS	Free Blocks	Free function blocks
FCC	Function Control Chart	Function control chart
FCC	Flux Current Control	Flux current control
FD	Function Diagram	Function diagram
F-DI	Failsafe Digital Input	Fail-safe digital input
F-DO	Failsafe Digital Output	Fail-safe digital output
FEPROM	Flash-EPROM	Non-volatile write and read memory
FG	Function Generator	Function generator
FI	-	Fault current
FOC	Fiber-Optic Cable	Fiber-optic cable
FP	Funktionsplan	Function diagram
FPGA	Field Programmable Gate Array	Field Programmable Gate Array
F-PLC	Fail-safe PLC	Fail-safe PLC
FW	Firmware	Firmware

G

Abbreviation	Derivation of abbreviation	Meaning
GB	Gigabyte	Gigabyte
GC	Global Control	Global control telegram (broadcast telegram)
GND	Ground	Reference potential for all signal and operating voltages, usually defined as 0 V (also referred to as M)
GSD	Gerätestammdatei	Generic Station Description: Describes the features of a PROFIBUS slave
GSV	Gate Supply Voltage	Gate supply voltage
GUID	Globally Unique Identifier	Globally Unique Identifier

H

Abbreviation	Derivation of abbreviation	Meaning
HF	High frequency	High frequency
HFD	Hochfrequenzdrossel	Radio frequency reactor
HLA	Hydraulic Linear Actuator	Hydraulic linear actuator

Abbreviation	Derivation of abbreviation	Meaning
HLG	Hochlaufgeber	Ramp-function generator
HM	Hydraulic Module	Hydraulic Module
HMI	Human Machine Interface	Human Machine Interface
HTL	High-Threshold Logic	Logic with high interference threshold
HTTP	Hypertext Transfer Protocol	Hypertext Transfer Protocol (communication protocol)
HTTP	Hypertext Transfer Protocol Secure	Hypertext Transfer Protocol Secure (communication protocol)
HW	Hardware	Hardware

I

Abbreviation	Derivation of abbreviation	Meaning
i. V.	In Vorbereitung	Under development: This property is currently not available
I/O	Input/Output	Input/output
I2C	Inter-Integrated Circuit	Internal serial data bus
IASC	Internal Armature Short-Circuit	Internal armature short-circuit
IBN	Inbetriebnahme	Commissioning
ID	Identifier	Identification
IE	Industrial Ethernet	Industrial Ethernet
IEC	International Electrotechnical Commission	International Electrotechnical Commission
IF	Interface	Interface
IGBT	Insulated Gate Bipolar Transistor	Insulated gate bipolar transistor
IGCT	Integrated Gate-Controlled Thyristor	Semiconductor power switch with integrated control electrode
IL	Impulslöschung	Pulse suppression
IP	Internet Protocol	Internet Protocol
IPO	Interpolator	Interpolator
ISO	Internationale Organisation für Normung	International Standards Organization
IT	Isolé Terre	Non-grounded three-phase line supply
IVP	Internal Voltage Protection	Internal voltage protection

J

Abbreviation	Derivation of abbreviation	Meaning
JOG	Jogging	Jogging

K

Abbreviation	Derivation of abbreviation	Meaning
KDV	Kreuzweiser Datenvergleich	Data cross-check
KHP	Know-how protection	Know-how protection
KIP	Kinetische Pufferung	Kinetic buffering
Kp	-	Proportional gain
KTY84-130	-	Temperature sensor

L

Abbreviation	Derivation of abbreviation	Meaning
L		
L	-	Symbol for inductance
LED	Light Emitting Diode	Light emitting diode
LIN	Linearmotor	Linear motor
LR	Lageregler	Position controller
LSB	Least Significant Bit	Least significant bit
LSC	Line-Side Converter	Line-side converter
LSS	Line-Side Switch	Line-side switch
LU	Length Unit	Length unit
LWL	Lichtwellenleiter	Fiber-optic cable

M

Abbreviation	Derivation of abbreviation	Meaning
M	-	Symbol for torque
M	Masse	Reference potential for all signal and operating voltages, usually defined as 0 V (also referred to as GND)
MB	Megabyte	Megabyte
MCC	Motion Control Chart	Motion Control Chart
MDI	Manual Data Input	Manual data input
MDS	Motor Data Set	Motor data set
MLFB	Maschinenlesbare Fabrikatebezeichnung	Machine-readable product code
MM	Motor Module	Motor Module
MMC	Man-Machine Communication	Man-machine communication
MMC	Micro Memory Card	Micro memory card
MRCD	Modular Residual Current protection Device	Modular Residual Current protection Device
MSB	Most Significant Bit	Most significant bit
MSC	Motor-Side Converter	Motor-side converter
MSCY_C1	Master Slave Cycle Class 1	Cyclic communication between master (class 1) and slave

Abbreviation	Derivation of abbreviation	Meaning
MSR	Motorstromrichter	Motor-side converter
MT	Messtaster	Probe

N

Abbreviation	Derivation of abbreviation	Meaning
N. C.	Not Connected	Not connected
N…	No Report	No report or internal message
NAMUR	Normenarbeitsgemeinschaft für Mess- und Regeltechnik in der chemischen Industrie	Standardization association for measurement and control in chemical industries
NC	Normally Closed (contact)	NC contact
NC	Numerical Control	Numerical control
NEMA	National Electrical Manufacturers Association	Standardization association in USA (United States of America)
NM	Nullmarke	Zero mark
NO	Normally Open (contact)	NO contact
NSR	Netzstromrichter	Line-side converter
NTP	Network Time Protocol	Standard for synchronization of the time of day
NVRAM	Non-Volatile Random Access Memory	Non-volatile read/write memory

O

Abbreviation	Derivation of abbreviation	Meaning
OA	Open Architecture	Software component which provides additional functions for the SINAMICS drive system
OAIF	Open Architecture Interface	Version of the SINAMICS firmware as of which the OA application can be used
OASP	Open Architecture Support Package	Expands the commissioning tool by the corresponding OA application
OC	Operating Condition	Operation condition
OCC	One Cable Connection	One-cable technology
OEM	Original Equipment Manufacturer	Original equipment manufacturer
OLP	Optical Link Plug	Bus connector for fiber-optic cable
OMI	Option Module Interface	Option Module Interface

P

Abbreviation	Derivation of abbreviation	Meaning
p…	-	Adjustable parameters
P1	Processor 1	CPU 1
P2	Processor 2	CPU 2
PB	PROFIBUS	PROFIBUS
PcCtrl	PC Control	Master control

Abbreviation	Derivation of abbreviation	Meaning
PD	PROFIdrive	PROFIdrive
PDC	Precision Drive Control	Precision Drive Control
PDS	Power unit Data Set	Power unit data set
PDS	Power Drive System	Drive system
PE	Protective Earth	Protective ground
PELV	Protective Extra Low Voltage	Safety extra-low voltage
PFH	Probability of dangerous failure per hour	Probability of dangerous failure per hour
PG	Programmiergerät	Programming device
PI	Proportional Integral	Proportional integral
PID	Proportional Integral Differential	Proportional integral differential
PLC	Programmable Logical Controller	Programmable logic controller
PLL	Phase-Locked Loop	Phase-locked loop
PM	Power Module	Power Module
PMI	Power Module Interface	Power Module Interface
PMSM	Permanent-magnet synchronous motor	Permanent-magnet synchronous motor
PN	PROFINET	PROFINET
PNO	PROFIBUS Nutzerorganisation	PROFIBUS user organization
PPI	Point to Point Interface	Point-to-point interface
PRBS	Pseudo Random Binary Signal	White noise
PROFIBUS	Process Field Bus	Serial data bus
PS	Power Supply	Power supply
PSA	Power Stack Adapter	Power Stack Adapter
PT1000	-	Temperature sensor
PTC	Positive Temperature Coefficient	Positive temperature coefficient
PTP	Point To Point	Point-to-point
PWM	Pulse Width Modulation	Pulse width modulation
PZD	Prozessdaten	Process data

Q

Abbreviation	Derivation of abbreviation	Meaning
No entries		

R

Abbreviation	Derivation of abbreviation	Meaning
r…	-	Display parameters (read-only)
RAM	Random Access Memory	Memory for reading and writing
RCCB	Residual Current Circuit Breaker	Residual current operated circuit breaker
RCD	Residual Current Device	Residual current device
RCM	Residual Current Monitor	Residual current monitor
REL	Reluctance motor textile	Reluctance motor textile

Abbreviation	Derivation of abbreviation	Meaning
RESM	Reluctance synchronous motor	Synchronous reluctance motor
RFG	Ramp-Function Generator	Ramp-function generator
RJ45	Registered Jack 45	Term for an 8-pin socket system for data transmission with shielded or non-shielded multi-wire copper cables
RKA	Rückkühlanlage	Cooling unit
RLM	Renewable Line Module	Renewable Line Module
RO	Read Only	Read only
ROM	Read-Only Memory	Read-only memory
RPDO	Receive Process Data Object	Receive Process Data Object
RS232	Recommended Standard 232	Interface standard for cable-connected serial data transmission between a sender and receiver (also known as EIA232)
RS485	Recommended Standard 485	Interface standard for a cable-connected differential, parallel, and/or serial bus system (data transmission between a number of senders and receivers, also known as EIA485)
RTC	Real Time Clock	Real-time clock
RZA	Raumzeigerapproximation	Space-vector approximation

S

Abbreviation	Derivation of abbreviation	Meaning
S1	-	Continuous operation
S3	-	Intermittent duty
SAM	Safe Acceleration Monitor	Safe acceleration monitoring
SBC	Safe Brake Control	Safe brake control
SBH	Sicherer Betriebshalt	Safe operating stop
SBR	Safe Brake Ramp	Safe brake ramp monitoring
SBT	Safe Brake Test	Safe brake test
SCA	Safe Cam	Safe cam
SCC	Safety Control Channel	Safety Control Channel
SCSE	Single Channel Safety Encoder	Single-channel safety encoder
SD Card	SecureDigital Card	Secure digital memory card
SDC	Standard Drive Control	Standard Drive Control
SDI	Safe Direction	Safe motion direction
SE	Sicherer Software-Endschalter	Safe software limit switch
SESM	Separately-excited synchronous motor	Separately excited synchronous motor
SG	Sicher reduzierte Geschwindigkeit	Safely limited speed
SGA	Sicherheitsgerichteter Ausgang	Safety-related output
SGE	Sicherheitsgerichteter Eingang	Safety-related input
SH	Sicherer Halt	Safe stop
SI	Safety Integrated	Safety Integrated
SIC	Safety Info Channel	Safety Info Channel

Abbreviation	Derivation of abbreviation	Meaning
SIL	Safety Integrity Level	Safety Integrity Level
SITOP	-	Siemens power supply system
SLA	Safely-Limited Acceleration	Safely limited acceleration
SLM	Smart Line Module	Smart Line Module
SLP	Safely-Limited Position	Safely Limited Position
SLS	Safely-Limited Speed	Safely limited speed
SLVC	Sensorless Vector Control	Sensorless vector control
SM	Sensor Module	Sensor Module
SMC	Sensor Module Cabinet	Sensor Module Cabinet
SME	Sensor Module External	Sensor Module External
SMI	SINAMICS Sensor Module Integrated	SINAMICS Sensor Module Integrated
SMM	Single Motor Module	Single Motor Module
SN	Sicherer Software-Nocken	Safe software cam
SOS	Safe Operating Stop	Safe operating stop
SP	Service Pack	Service pack
SP	Safe Position	Safe position
SPC	Setpoint Channel	Setpoint channel
SPI	Serial Peripheral Interface	Serial peripheral interface
SPS	Speicherprogrammierbare Steuerung	Programmable logic controller
SS1	Safe Stop 1	Safe Stop 1 (time-monitored, ramp-monitored)
SS1E	Safe Stop 1 External	Safe Stop 1 with external stop
SS2	Safe Stop 2	Safe Stop 2
SS2E	Safe Stop 2 External	Safe Stop 2 with external stop
SSI	Synchronous Serial Interface	Synchronous serial interface
SSL	Secure Sockets Layer	Encryption protocol for secure data transfer (new TLS)
SSM	Safe Speed Monitor	Safe feedback from speed monitor
SSP	SINAMICS Support Package	SINAMICS support package
STO	Safe Torque Off	Safe torque off
STW	Steuerwort	Control word

T

Abbreviation	Derivation of abbreviation	Meaning
TB	Terminal Board	Terminal Board
TEC	Technology Extension	Software component which is installed as an additional technology package and which expands the functionality of SINAMICS (previously OA application)
TIA	Totally Integrated Automation	Totally Integrated Automation
TLS	Transport Layer Security	Encryption protocol for secure data transfer (previously SSL)
TM	Terminal Module	Terminal Module

Abbreviation	Derivation of abbreviation	Meaning
TN	Terre Neutre	Grounded three-phase line supply
Tn	-	Integral time
TPDO	Transmit Process Data Object	Transmit Process Data Object
TSN	Time-Sensitive Networking	Time-Sensitive Networking
TT	Terre Terre	Grounded three-phase line supply
TTL	Transistor-Transistor-Logic	Transistor-transistor logic
Tv	-	Rate time

U

Abbreviation	Derivation of abbreviation	Meaning
UL	Underwriters Laboratories Inc.	Underwriters Laboratories Inc.
UPS	Uninterruptible Power Supply	Uninterruptible power supply
USV	Unterbrechungsfreie Stromversorgung	Uninterruptible power supply
UTC	Universal Time Coordinated	Universal time coordinated

V

Abbreviation	Derivation of abbreviation	Meaning
VC	Vector Control	Vector control
Vdc	-	DC link voltage
VdcN	-	Partial DC link voltage negative
VdcP	-	Partial DC link voltage positive
VDE	Verband Deutscher Elektrotechniker	Verband Deutscher Elektrotechniker [Association of German Electrical Engineers]
VDI	Verein Deutscher Ingenieure	Verein Deutscher Ingenieure [Association of German Engineers]
VPM	Voltage Protection Module	Voltage Protection Module
Vpp	Volt peak to peak	Volt peak to peak
VSM	Voltage Sensing Module	Voltage Sensing Module

W

Abbreviation	Derivation of abbreviation	Meaning
WEA	Wiedereinschaltautomatik	Automatic restart
WZM	Werkzeugmaschine	Machine tool

X

Abbreviation	Derivation of abbreviation	Meaning
XML	Extensible Markup Language	Extensible markup language (standard language for Web publishing and document management)

Y

Abbreviation	Derivation of abbreviation	Meaning
No entries		

Z

Abbreviation	Derivation of abbreviation	Meaning
ZK	Zwischenkreis	DC link
ZM	Zero Mark	Zero mark
ZSW	Zustandswort	Status word

A.2 Documentation overview

General documentation/catalogs			
SINAMICS	G110	D 11	- Converter Chassis Units 0.12 kW up to 3 kW
	G120	D 31	- SINAMICS Converters for Single-Axis Drives and SIMOTICS Motors
	G130, G150	D 11	- Converter Chassis Units - Converter Cabinet Units
	S120, S150	D 21	- SINAMICS S120 Chassis Units and Cabinet Modules - SINAMICS S150 Converter Cabinet Units
	S120	D 21.4	- SINAMICS S120 and SIMOTICS
Manufacturer/service documentation			
SINAMICS	G110		- Getting Started - Operating Instructions - List Manuals
	G120		- Getting Started - Operating Instructions - Installation Manuals - Function Manual Safety Integrated - List Manuals
	G130		- Operating Instructions - List Manual
	G150		- Operating Instructions - List Manual
	GM150, SM120/SM150, GL150, SL150		- Operating Instructions - List Manuals
	S110		- Equipment Manual - Getting Started - Function Manual - List Manual
	S120		- Getting Started - Commissioning Manual - Function Manual Drive Functions - Function Manual Communication (from Firmware V5.2) - Function Manual Safety Integrated - Function Manual DCC - List Manual - Equipment Manual for Control Units and Additional System Components - Equipment Manual for Booksize Power Units - Equipment Manual for Booksize Power Units C/D Type - Equipment Manual for Air-Cooled Chassis Power Units - Equipment Manual for Liquid-Cooled Chassis Power Units - Equipment Manual for Water-Cooled Chassis Power Units for Common Cooling Circuits - Equipment Manual Combi - Equipment Manual for Cabinet Modules - Equipment Manual for AC Drives - SINAMICS S120M Equipment Manual Distributed Drive Technology - SINAMICS HLA System Manual Hydraulic Drive
	S150		- Operating Instructions - List Manual
	S210		- SINAMICS S210 Operating Instructions
Motors			- Configuration Manuals, Motors
General			- Configuration Manual, EMC Installation Guideline

A.3 Supported sample topologies

Example topologies: Drives in vector control

The following topology examples demonstrate configurations with Motor Modules in Booksize and Chassis design in vector control.

3 Motor Modules with identical pulse frequencies

A drive line-up with 3 Motor Modules in **Booksize or Chassis** format with identical pulse frequencies in vector control. The Motor Modules can be connected to a DRIVE-CLiQ interface of the Control Unit.

In the following diagram, three Motor Modules are connected to the DRIVE-CLiQ socket X101.

Note

The offline topology generated automatically in the Startdrive engineering tool must be changed manually if this topology has been wired.

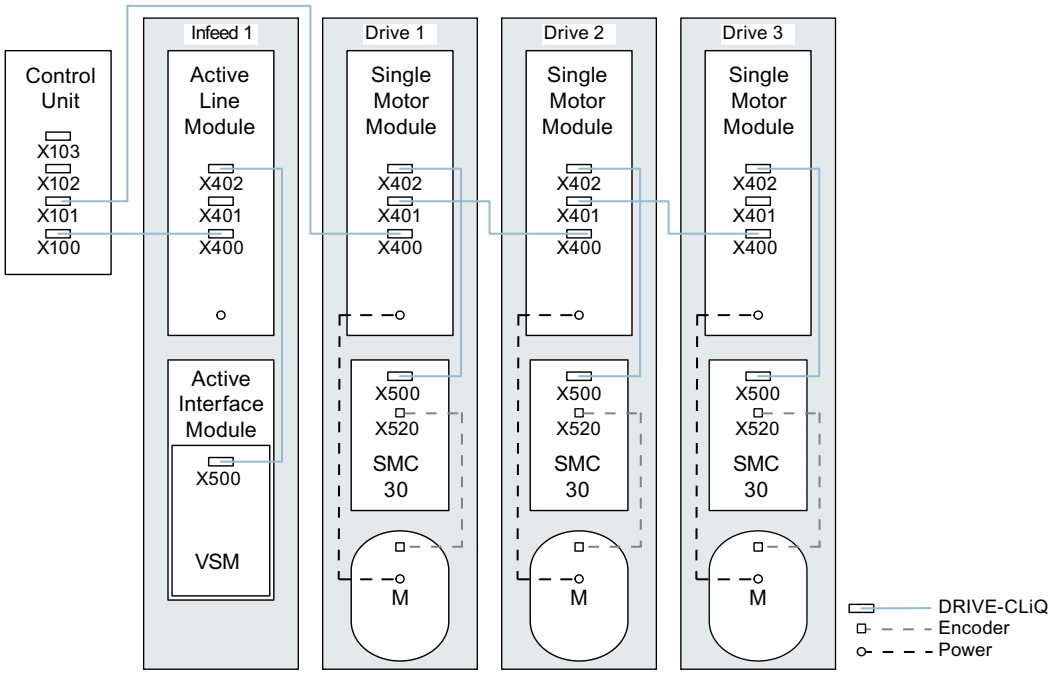

Figure A-1 Motor Modules in Chassis format with identical pulse frequencies

4 Motor Modules with different pulse frequencies

A drive line-up with 4 Motor Modules in **Chassis** format with different pulse frequencies in vector control. Motor Modules with different pulse frequencies should preferably be connected to different DRIVE-CLiQ sockets of the Control Unit. The Motor Modules may also be connected to the same DRIVE-CLiQ line.

In the following diagram, two Motor Modules (400 V, output ≤ 250 kW, pulse frequency 2 kHz) are connected to interface X101 and two Motor Modules (400 V, output > 250 kW, pulse frequency 1.25 kHz) are connected to interface X102.

Note

The OFFLINE topology automatically generated in the Startdrive commissioning tool must be manually modified, if this topology was wired.

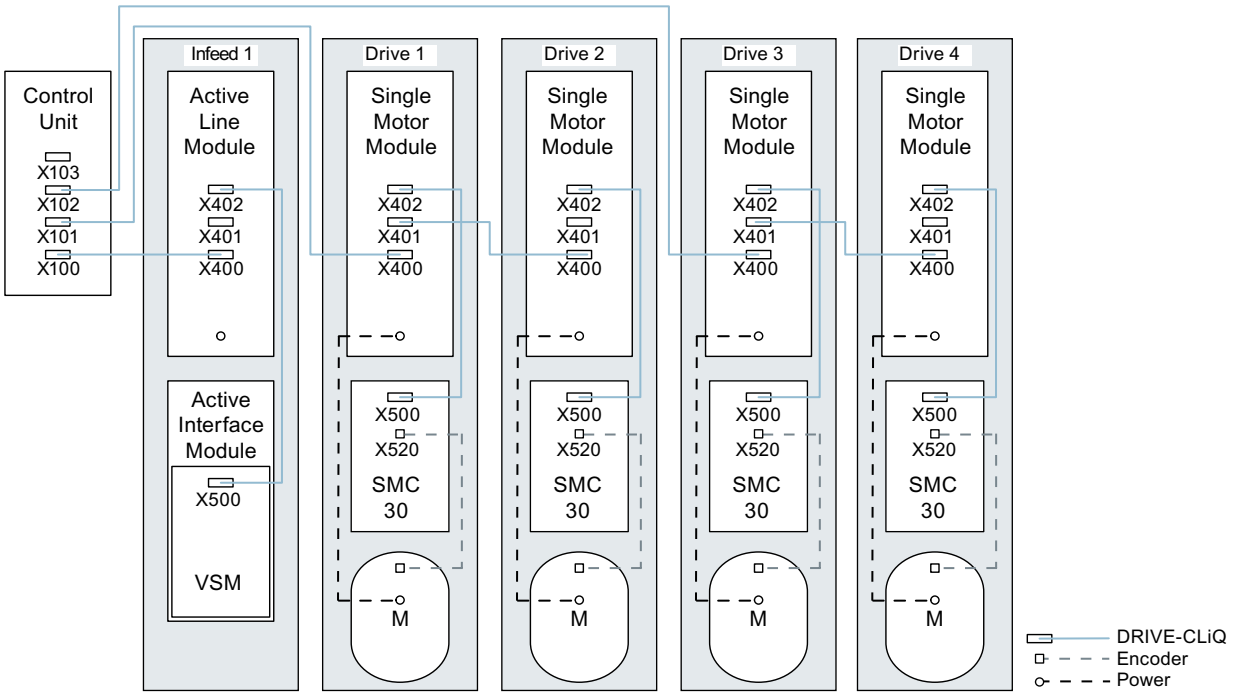

Figure A-2 Motor Modules in Chassis format with different pulse frequencies

Topology example: Line Modules and Motor Modules connected in parallel

Line Modules in Chassis format and Motor Modules in Chassis format of the same type and connected in parallel can be connected to one DRIVE-CLiQ socket of the Control Unit respectively in vector control.

In the following diagram, two Active Line Modules and two Motor Modules are connected to the X100 or X101 socket.

Note

The offline topology generated automatically in the Startdrive engineering tool must be changed manually if this topology has been wired.

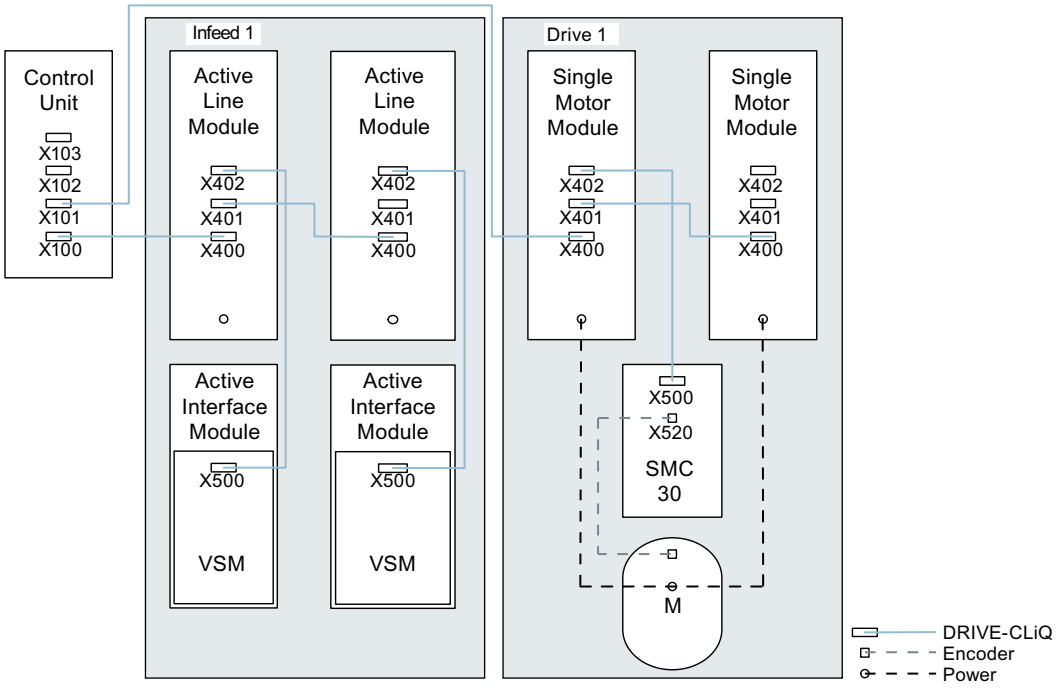

Figure A-3 Power units in Chassis format connected in parallel

Further information

Further information can be obtained in the Chapter "Parallel connection of power units (Page 515)".

Example topologies: Power Modules

The following topology examples demonstrate configurations with Power Modules in Blocksize and Chassis format.

Power modules of the Blocksize format

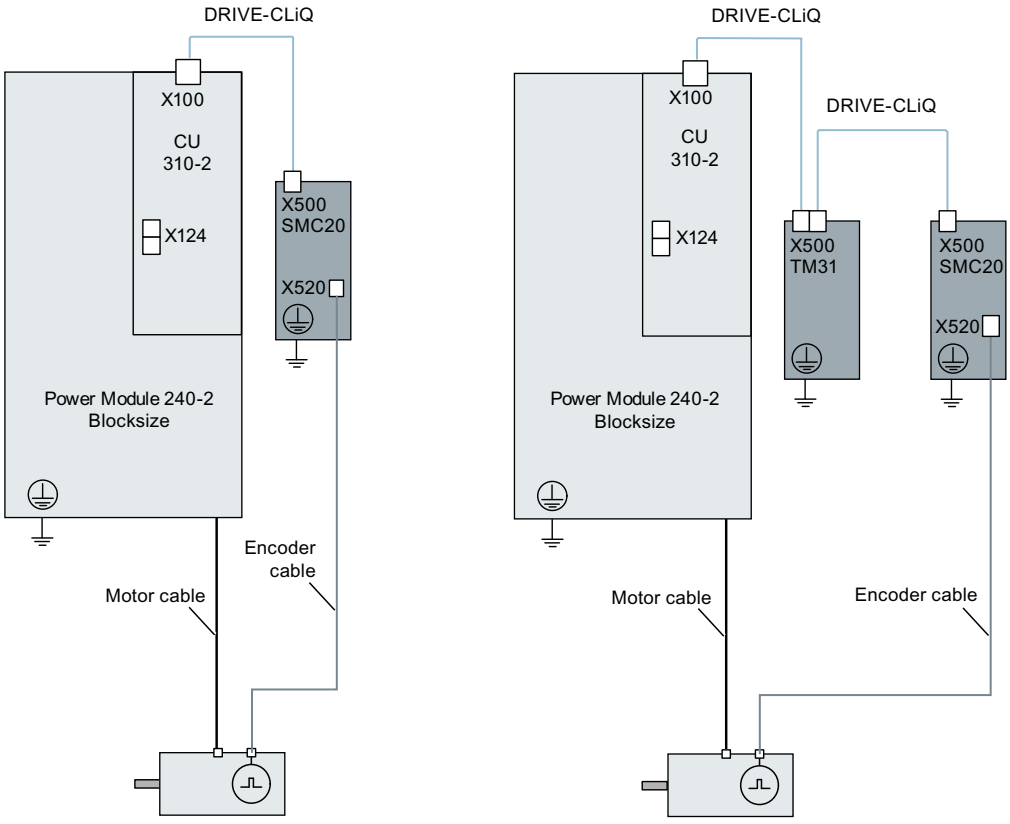

Figure A-4 Power modules of the Blocksize format

Power Modules in Chassis format

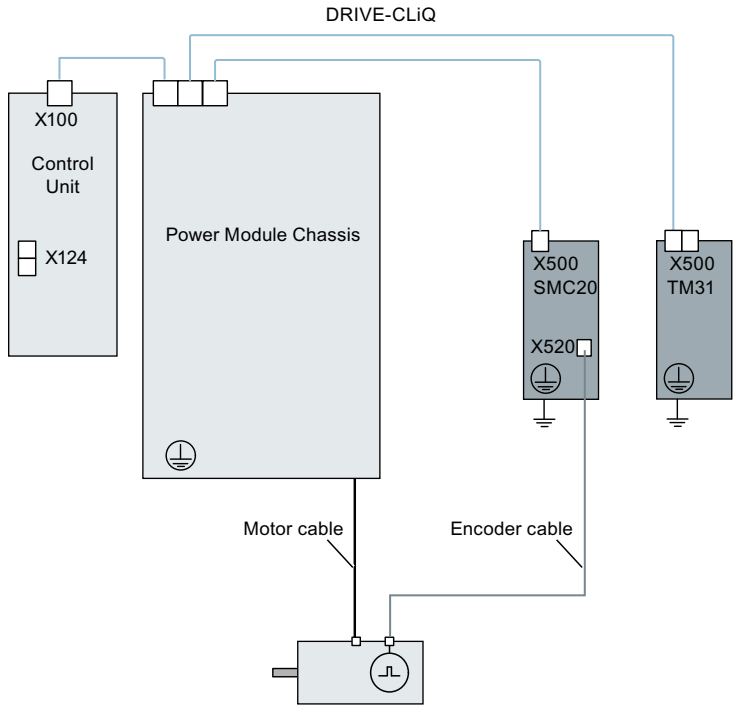

Figure A-5 Power Modules in Chassis format

Example topologies: Drives in servo control

The following topology examples demonstrate configurations with Line Modules, Motor Modules and additional components in servo control.

Sampling time 125 µs

The maximum number of controllable drives in servo control with additional components is shown in the following figure. The sampling times of individual system components are:

- Active Line Module: p0115[0] = 250 µs
- Motor Modules: p0115[0] = 125 µs
- Terminal Module / Terminal Board p4099 = 1 ms

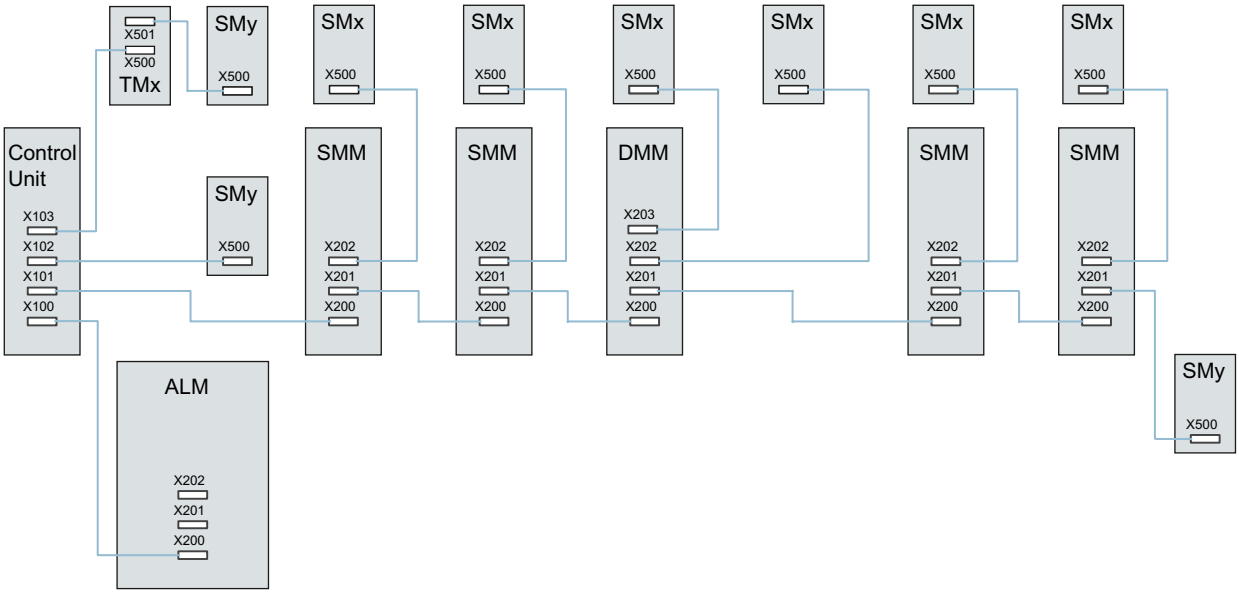

ALM = Active Line Module

SMM = Single Motor Module

DMM = Double Motor Module

SMx = Motor encoder

SMy = Direct measuring system

TMx = TM31, TM15, TB30

Figure A-6 Topology example of a servo drive line-up

Sampling time 62.5 µs

Examples, CU320-2 with 62.5 µs sampling time:

- Topology 1:
  1 ALM (250 µs) + 2 servo (62.5 µs) + 2 servo (125 µs) + 3 TM15 Base (p4099[0] = 2000 µs) + TM54F + 4 Safety Integrated Extended Functions with encoder SI motion monitoring clock cycle (p9500) = 12 ms + SI Motion actual value sensing clock cycle (p9511) = 4 ms + 4 dir. measuring systems.
- Topology 2:
  1 ALM (250 µs) + 2 servo (62.5 µs) + 2 U/f (500 µs) + 3 TM15 Base (p4099[0] = 2000 µs) + 2 Safety Integrated Extended Functions with encoder SI motion monitoring clock cycle (p9500) = 12 ms + SI Motion actual value sensing clock cycle (p9511) = 4 ms + 2 Safety Integrated Extended Functions sensorless + 2 dir. measuring systems.
- Topology 3:
  1 servo (62.5 µs) + 4 U/f is not possible in conjunction with Safety Integrated.

Sampling time 31.25 µs

Examples, CU320-2 with 31.25 µs sampling time:

- Topology 1:
  1 ALM (250 µs) on a line, 1 servo (31.25 µs) on a line, 3 TM15 Base (p4099[0] = 2000 µs) on a line and in series.
- Topology 2:
  1 ALM (250 µs) on a line, 1 servo (31.25 µs) on a line, 1 direct measuring system on a line.

Topology example: Drives in U/f control (vector)

The following diagram shows the maximum number of controllable vector U/f drives with additional components. The sampling times of individual system components are:

- Active Line Module: p0115[0] = 250 µs
- Motor Modules: p0115[0] = 500 µs
- Terminal Module/Terminal Board p4099 = 2 ms

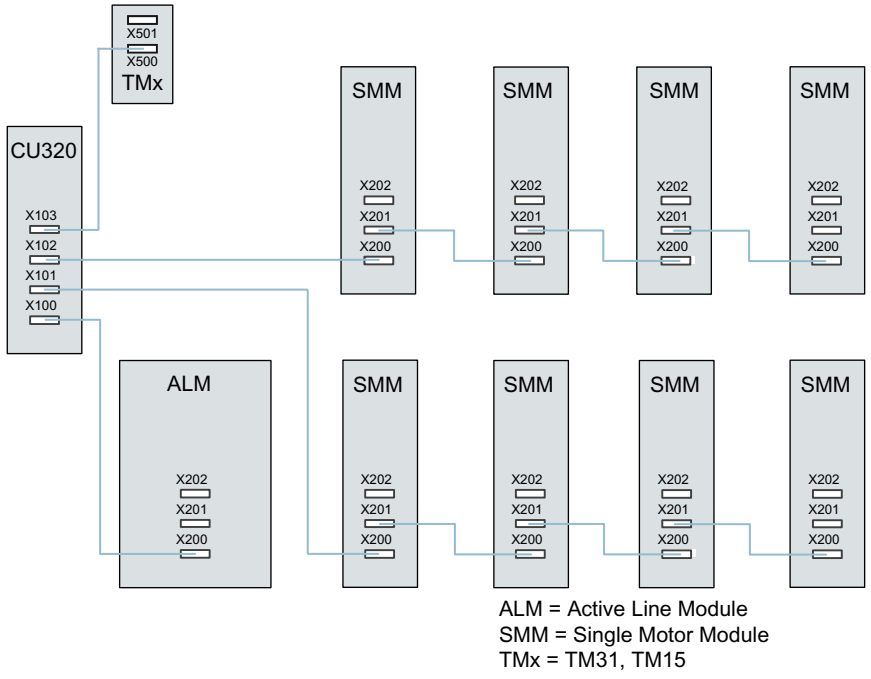

Figure A-7 Drive line-up in U/f control

A.4 Parameterization using the BOP20

A.4.1 Introduction

Description

The Basic Operator Panel 20 (BOP20) has six keys and a two-line display unit with background lighting. The BOP20 can be plugged onto the SINAMICS Control Unit and operated.



Figure A-8 BOP20

The BOP20 supports the following functions:

- Input and changing parameters
- Display of operating modes, parameters and alarms
- Display and acknowledgment of faults
- Powering-up/powering-down while commissioning
- Simulation of a motorized potentiometer

A.4.2 General information about the BOP20

The BOP20 can be used to switch on and switch off drives during the commissioning phase as well as to display and modify parameters. Faults can be diagnosed as well as acknowledged.

The BOP20 is connected to the Control Unit. To do this, the blanking cover must be removed (for additional information on mounting, please refer to the SINAMICS S120 Manual Control Units and Supplementary System Components).

Displays and keys

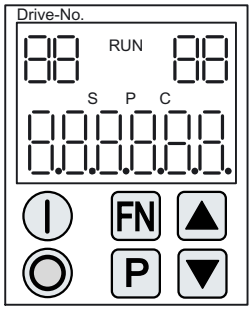

Figure A-9 Overview of displays and keys

Information on the displays

Table A-1 LED

Display	Meaning
top left (2 positions)	The active drive object of the BOP is displayed here. The displays and key operations always refer to this drive object.
RUN	Lit if at least one drive in the drive line-up is in the RUN state (in operation). RUN is also displayed via bit r0899.2 of the drive.
top right (2 positions)	The following is displayed in this field: • More than 6 digits: characters that still exist but are not visible (e.g. "r2" → 2 characters to the right are invisible,"L1" → 1 character to the left is invisible) • Faults: Selects/displays other drives with faults • Designation of BICO inputs (bi, ci) • Designation of BICO outputs (bo, co) • Source object of a BICO interconnection to a drive object different than the active one.
S	Is (bright) if at least one parameter was changed and the value was not transferred into the non-volatile memory.
P	Is lit (bright) if, for a parameter, the value only becomes effective after pressing the P key.
C	Is light (bright) if at least one parameter was changed and the calculation for consistent data management has still not been initiated.
below (6 digit)	Displays, e.g. parameters, indices, faults and alarms.

Information on the keys

Table A-2 Keys

Key	Name	Meaning
	ON	Powering up the drives for which the command "ON/OFF1" should come from the BOP. Binector output r0019.0 is set using this key.
	OFF	Powering down the drives for which the commands "ON/OFF1", "OFF2" or "OFF3" should come from the BOP. The binector outputs r0019.0, .1 and .2 are simultaneously reset when this key is pressed. After the key has been released, binector outputs r0019.1 and .2 are again set to a "1" signal. **Note**: The effectiveness of these keys can be defined by appropriately parameterizing the BICO (e.g. using these keys it is possible to simultaneously control all of the existing drives).
	Functions	The significance of this key depends on the actual display. **Note**: The effectiveness of this key to acknowledge faults can be defined using the appropriate BICO parameterization.
	Parameter	The significance of this key depends on the actual display. If this key is pressed for 3 s, the "Copy RAM to ROM" function is executed. The "S" displayed on the BOP disappears.
	Raise	The significance of these keys is dependent on the actual display and is used to increase or decrease values.
	Lower	

BOP20 functions

Table A-3 Functions

Name	Description
Backlighting	The backlighting can be set using p0007 in such a way that it switches itself off automatically after the set time if no actions are carried out.
Changeover active drive	From the BOP perspective the active drive is defined using p0008 or using the keys "FN" and "Arrow up".
Units	The units are not displayed on the BOP.
Access level	The access level for the BOP is defined using p0003. The higher the access level, the more parameters can be selected using the BOP.
Parameter filter	Using the parameter filter in p0004, the available parameters can be filtered corresponding to their particular function.
Selecting the operating display	Actual values and setpoints are displayed on the operating display. The operating display can be set using p0006.
User parameter list	Using the user parameter list in p0013, parameters can be selected for access.

Name	Description
Unplug while voltage is present	The BOP can be withdrawn and inserted under voltage. • The ON key and OFF key have a function. When withdrawing, the drives are stopped. After inserting, the drives must be switched on again. • The ON key and OFF key have no function. Withdrawing and inserting has no effect on the drives.
Actuating keys	The following applies to the "P" and "FN" keys: • When used in a combination with another key, "P" or "FN" must be pressed first.

Overview of important parameters (see SINAMICS S120/S150 List Manual)

All drive objects

- p0005[0...1] BOP status display selection
- p0006 BOP status display mode
- p0013[0...49] BOP user-defined list
- p0971 Save drive object parameters

Drive object, Control Unit

- r0002 Control Unit status display
- p0003 BOP access level
- p0004 BOP display filter
- p0007 BOP backlighting
- p0008 BOP drive object after powering up
- p0009 Device commissioning parameter filter
- p0011 BOP password input (p0013)
- p0012 BOP password confirmation (p0013)
- r0019.0...14 CO/BO: Control word, BOP
- p0977 Save all parameters

Other drive objects (e.g. SERVO, VECTOR, X_INF, TM41 etc.)

- p0010 Drive, commissioning parameter filter

A.4.3 Displays and using the BOP20

Features

- Status indicator
- Changing the active drive object
- Displaying/changing parameters
- Displaying/acknowledging faults and alarms
- Controlling the drive using the BOP20

Status indicator

The operating display for each drive object can be set using p0005 and p0006. Using the operating display, you can change into the parameter display or to another drive object. The following functions are possible:

- Changing the active drive object
  - Press key “FN” and "Arrow up" → The drive object number at the top left flashes.
  - Select the required drive object using the arrow keys.
  - Confirm with the "P" key.
- Parameter display
  - Press the "P" key.
  - The required parameter can be selected using the arrow keys.
  - Press the “FN” key → "r00000" is displayed.
  - Press the “P” key → Changes back to the operating display.

Parameter display

The parameters are selected in the BOP20 using the number. The parameter display is reached from the operating display by pressing the "P" key. Parameters can be searched for using the arrow keys. The parameter value is displayed by pressing the "P" key again. You can toggle between the drive objects by simultaneously pressing the "FN" key and an arrow key. You can toggle between "r00000" and the parameter that was last displayed by pressing the "FN" key in the parameter display.

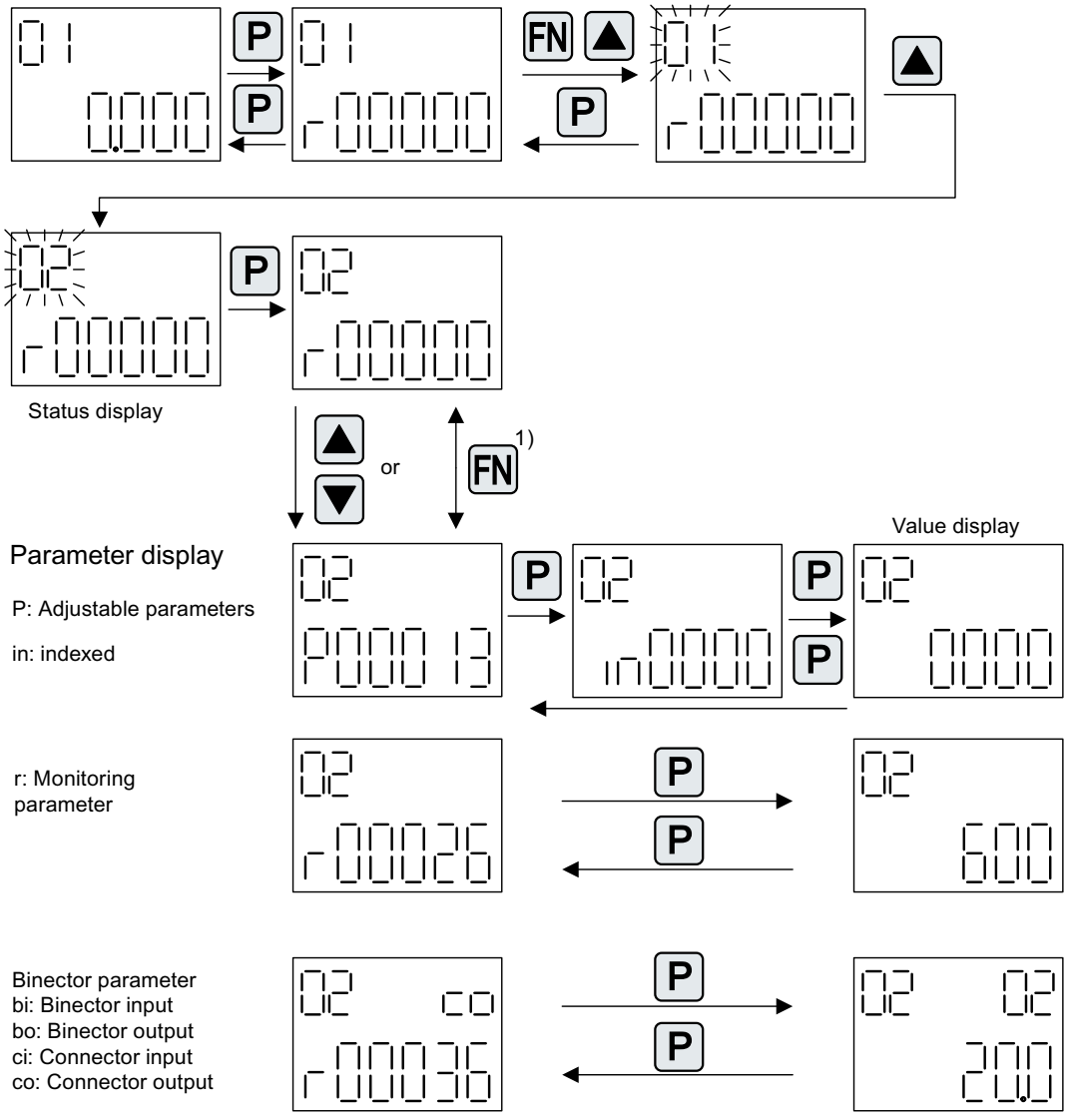

1) You can switch between "r00000" and the parameter that was last displayed by pressing the FN key in the parameter display.

Figure A-10 Parameter display

Value display

To switch from the parameter display to the value display, press the "P" key. In the value display, the values of the adjustable parameters can be increased and decreased using the arrow. The cursor can be selected using the "FN" key.

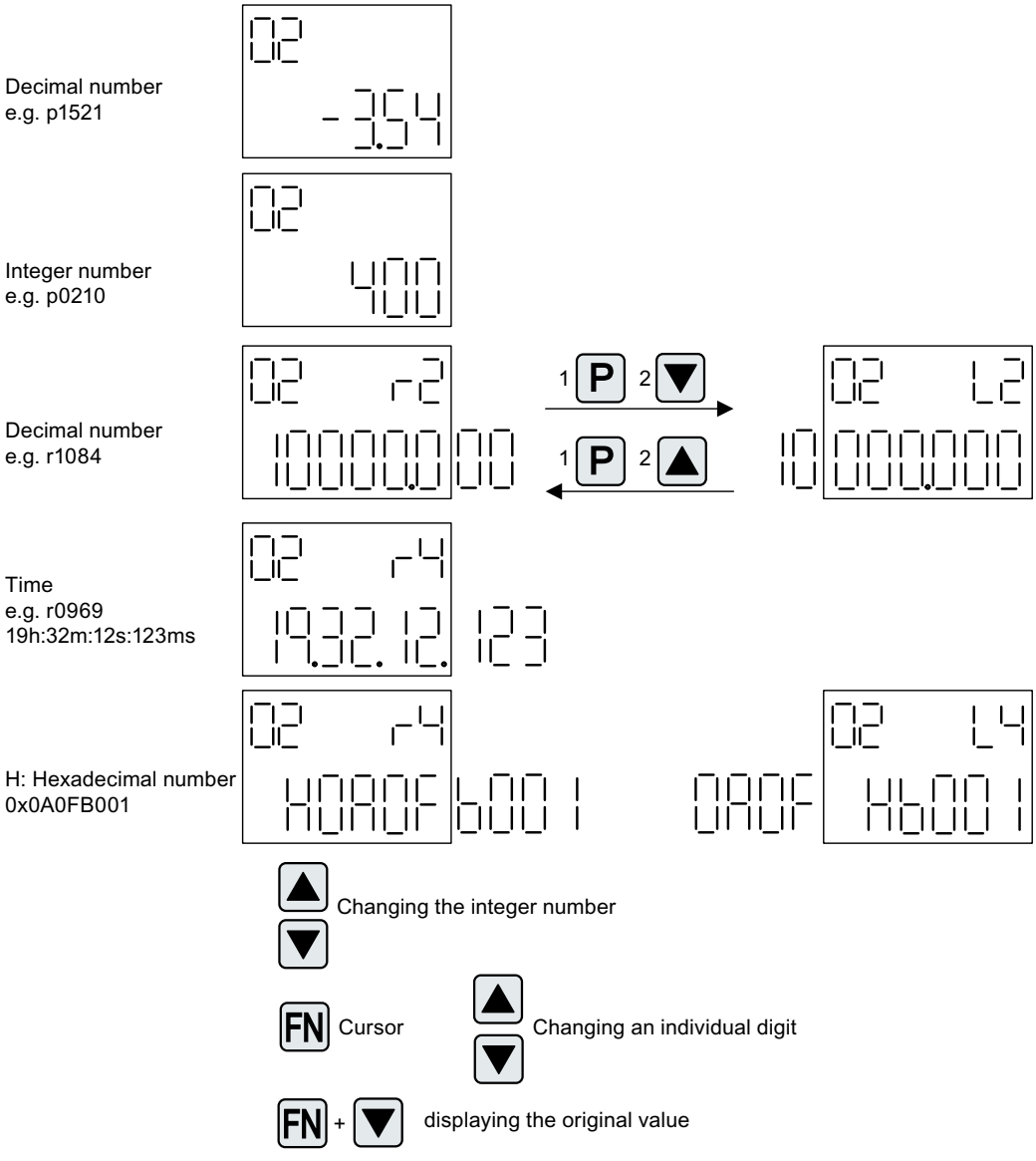

Figure A-11 Value display

Example: Change a parameter

Requirement: The appropriate access level is set (for this particular example, p0003 = 3).

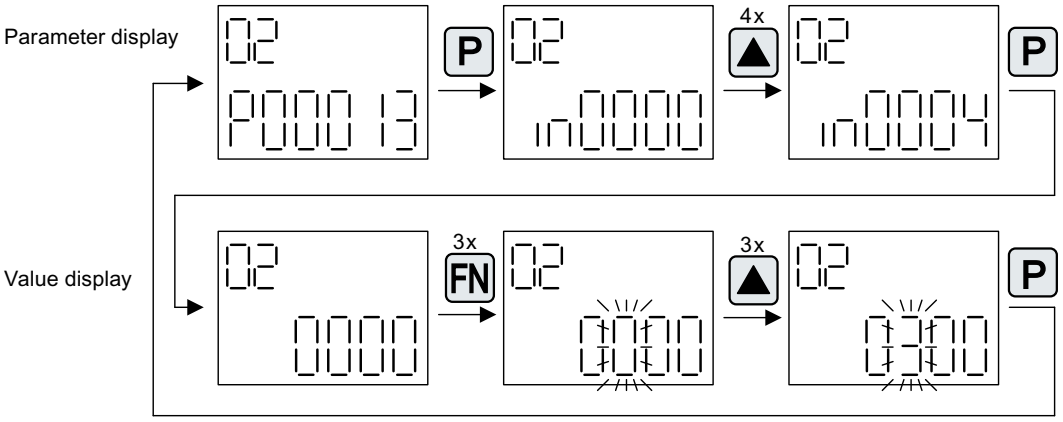

Figure A-12 Example: Changing p0013[4] from 0 to 300

Example: Changing parameters for the binector and connector input

For the binector input p0840[0] (OFF1) of drive object 2 binector output r0019.0 of the Control Unit (drive object 1) is interconnected.

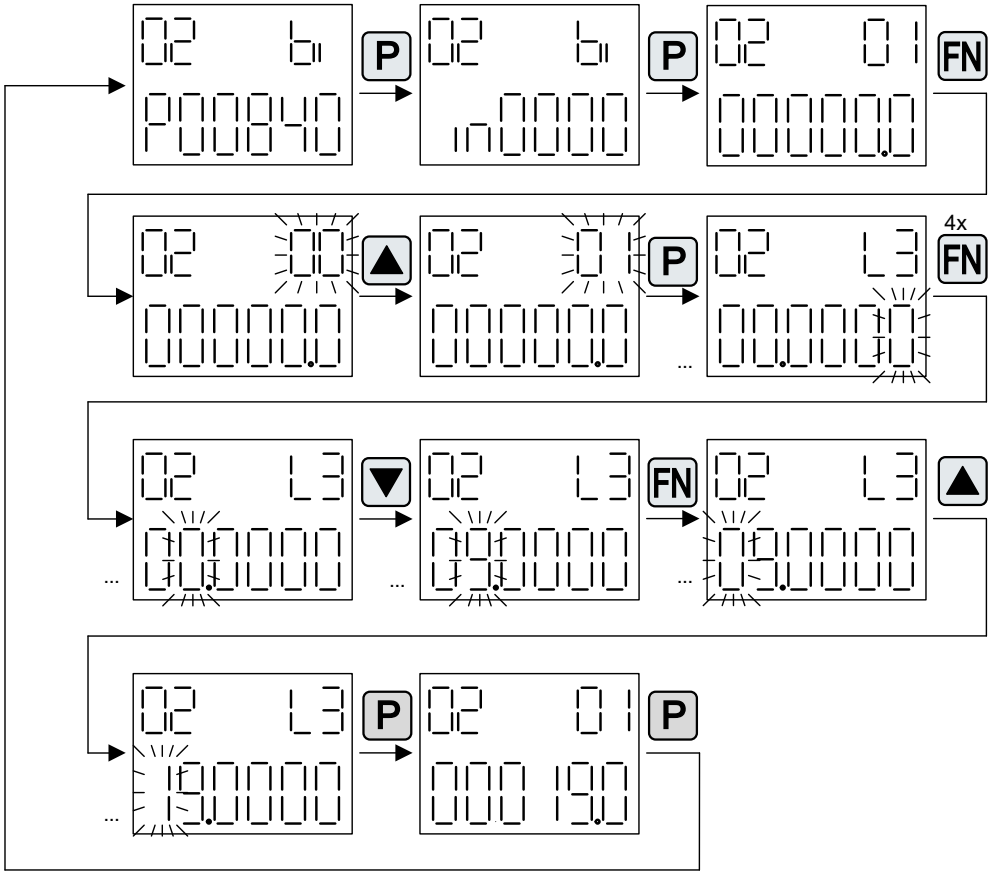

Figure A-13 Example: Changing indexed binector parameters

A.4.4 Fault and alarm displays

Fault display

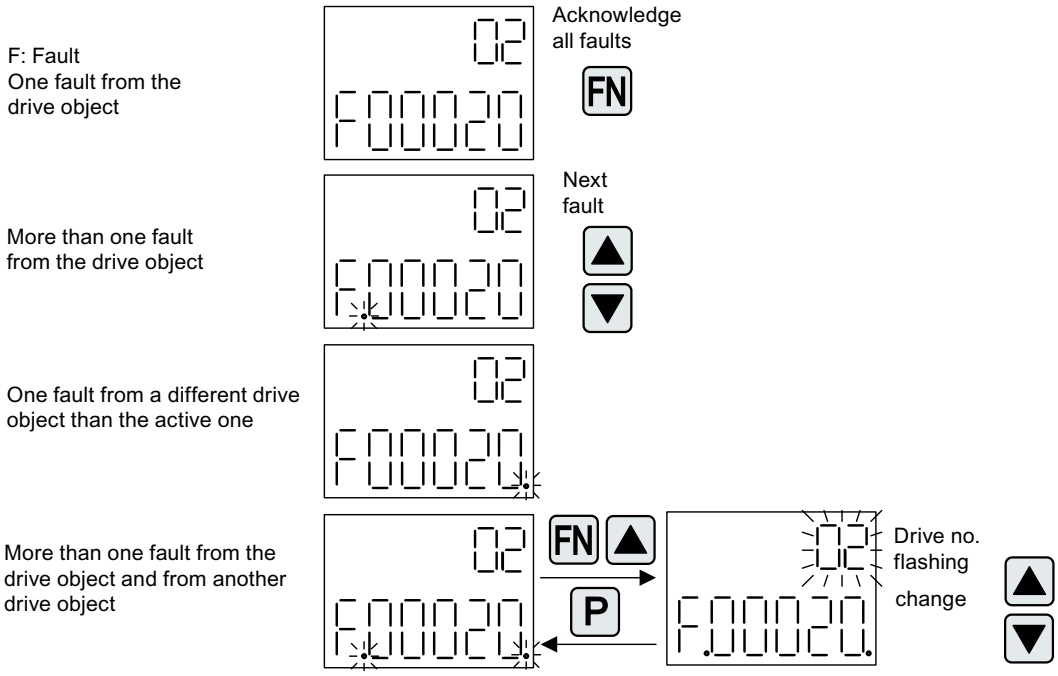

Figure A-14 Faults

Warning display

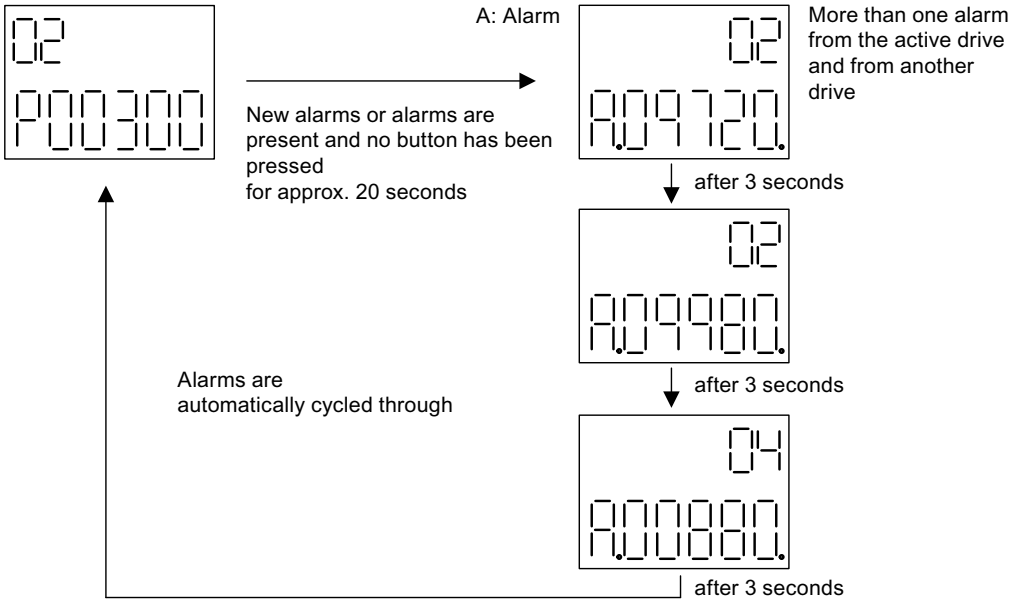

Figure A-15 Warnings

A.4.5 Controlling the drive using the BOP20

When commissioning the drive, it can be controlled via the BOP20. A control word is available on the Control Unit drive object (r0019) for this purpose, which can be interconnected with the appropriate binector inputs of e.g. the drive.

The interconnections do not function if a standard PROFIdrive telegram was selected as its interconnection cannot be disconnected.

Table A-4 BOP20 control word

Bit (r0019)	Name	Example, interconnection parameters
0	ON / OFF (OFF1)	p0840
1	No coast down/coast down (OFF2)	p0844
2	No fast stop/fast stop (OFF3)	p0848
7	Acknowledge fault (0 -> 1)	p2102
13	Motorized potentiometer, raise	p1035
14	Motorized potentiometer, lower	p1036

Note

For simple commissioning, only bit 0 should be interconnected. When interconnecting bits 0 ... 2, then the system is powered-down according to the following priority: OFF2, OFF3, OFF1.

A.4.6 Important functions via BOP20

Description

The BOP20 can be used to execute the following functions (via parameters) that help you handle your project:

- Restoring the factory settings.
- Copying from RAM to ROM.
- Identification via LED
- Acknowledging faults.

Restoring the factory settings

The factory setting of the complete device can be restored in the Control Unit drive object.

- p0009 = 30
- p0976 = 1

Copy RAM to ROM

You can initiate the saving of all parameters to the non-volatile memory (memory card) in the drive object Control Unit:

- Press the P key for 3 seconds.
  OR
- p0009 = 0
- p0977 = 1

Note

This parameter is not accepted if an identification run (e.g. motor data identification) has been selected on a drive.

Identification via LED

The main component of a drive object (e.g. Motor Module) can be identified using the index of p0124. The "Ready" LED on the component starts to flash. The index matches the index in p0107. The drive object type can be identified via this parameter.

On the drive objects, the components can also be identified via the following parameters:

- p0124 Power unit detection via LED
- p0144 Voltage Sensing Module detection via LED
- p0144 Sensor Module detection via LED

Acknowledging faults

To acknowledge all the faults that have been rectified, press the “FN” key.

A.5 Replacing an encoder for SIMOTICS motors

For 1FK7 G2, 1FG1 and 1FT7 motors you can replace a defective encoder by an encoder of the same type. The encoder can be replaced without special tools simply by adjusting the coupling element opposite the motor shaft. You can recognize the motors mentioned as a result of the round, raised encoder mounting at the end of the motor enclosure and from the rating plate.

How do you replace an encoder?

An overview of the possible encoder replacement versions is provided below.

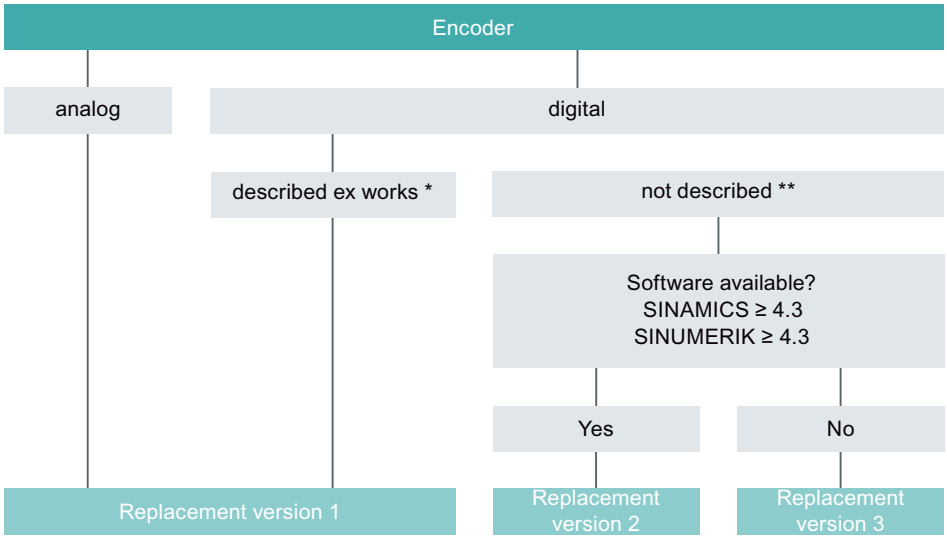

* The encoder contains motor data (an electronic type plate).

** The encoder has no motor data.

Figure A-16 Encoder replacement versions

Note

Recommendation:

1. Always replace the encoder as a complete component (including the Sensor Module).
2. Use replacement version 1.
   Advantage: You order a replacement encoder with a custom-programmed electronic type plate from your Siemens service organization.
   The encoder contains all of the motor data loaded in the factory. You only have to mechanically replace the encoder, and your system is ready to operate again.

How do you determine the replacement encoder you require?

To replace an existing encoder, you need its article number. You have several options of obtaining this article number:

- Read off the article number at the encoder
- Determine the article number through Spares on Web (https://www.sow.siemens.com/)
- Determine the article number using assignment tables (see the service instructions)

Additional information

Do you have any other open questions?

- How do you order a replacement encoder?
- How you replace a defective encoder?
- How do you program an encoder that has not been loaded with data?
- How do you backup the data of the electronic type plate?
- Where do you find the electronic type plate data in the Internet?

Detailed information related to these questions and on the complete encoder replacement process is provided in service instructions "SIMOTICS S-1FK7 G2, S-1FG1 and S-1FT7", which you can download through the SIOS portal at no charge.

See: SIMOTICS servomotors (https://support.industry.siemens.com/cs/ww/en/ps/13348/man)

A.6 Availability of hardware components

Table A-5 Hardware components available as of 03.2006

No.	Hardware component	Article number	Version	Revisions
1	AC Drive (CU320, PM340)	refer to the Catalog		New
2	SMC30	6SL3055-0AA00-5CA1		With SSI support
3	DMC20	6SL3055-0AA00-6AA.		New
4	TM41	6SL3055-0AA00-3PA.		New
5	SME120 SME125	6SL3055-0AA00-5JA. 6SL3055-0AA00-5KA.		New
6	BOP20	6SL3055-0AA00-4BA.		New
7	CUA31	6SL3040-0PA00-0AA.		New

Table A-6 Hardware components available as of 08.2007

No.	Hardware component	Article number	Version	Revisions
1	TM54F	6SL3055-0AA00-3BA.		New
2	Active Interface Module (book-size)	6SL3100-0BE..-.AB.		New
3	Basic Line Module (booksize)	6SL3130-1TE..-0AA.		New
4	DRIVE-CLiQ encoder	6FX2001-5.D..-0AA.		New
5	CUA31 Suitable for Safety Extended Functions via PROFIsafe and TM54	6SL3040-0PA00-0AA1		New
6	CUA32	6SL3040-0PA01-0AA.		New
7	SMC30 (30 mm wide)	6SL3055-0AA00-5CA2		New

Table A-7 Hardware components available as of 10.2008

No.	Hardware component	Article number	Version	Revisions
1	TM31	6SL3055-0AA00-3AA1		New
2	TM41	6SL3055-0AA00-3PA1		New
3	DME20	6SL3055-0AA00-6AB.		New
4	SMC20 (30 mm wide)	6SL3055-0AA00-5BA2		New
5	Active Interface Module booksize 16 kW	6SL3100-0BE21-6AB.		New
6	Active Interface Module booksize 36 kW	6SL3100-0BE23-6AB.		New
7	Smart Line Modules booksize compact	6SL3430-6TE21-6AA.		New

No.	Hardware component	Article number	Version	Revisions
8	Motor Modules booksize compact	6SL3420-1TE13-0AA. 6SL3420-1TE15-0AA. 6SL3420-1TE21-0AA. 6SL3420-1TE21-8AA. 6SL3420-2TE11-0AA. 6SL3420-2TE13-0AA. 6SL3420-2TE15-0AA.		New
9	Power Modules blocksize liquid cooled	6SL3215-1SE23-0AA. 6SL3215-1SE26-0AA. 6SL3215-1SE27-5UA. 6SL3215-1SE31-0UA. 6SL3215-1SE31-1UA. 6SL3215-1SE31-8UA.		New
10	Reinforced DC-link busbars for 50 mm components	6SL3162-2DB00-0AA.		New
11	Reinforced DC-link busbars for 100 mm components	6SL3162-2DD00-0AA.		New

Table A-8 Hardware components available as of 11.2009

No.	Hardware component	Article number	Version	Revisions
1	Control Unit 320-2DP	6SL3040-1MA00-0AA1 Actual 2014: 6SL3040-1MA00-0AA0	4.3	New
2	TM120	6SL3055-0AA00-3KA0	4.3	New
3	SMC10 (30 mm wide)	6SL3055-0AA00-5AA3	4.3	New

Table A-9 Hardware components available as of 01.2011

No.	Hardware component	Article number	Version	Revisions
1	Control Unit 320-2PN	6SL3040-1MA01-0AA1 Actual 2014: 6SL3040-1MA01-0AA0	4.4	New
2	Braking Module booksize compact	6SL3100-1AE23-5AA0	4.4	New
3	SLM 55kW booksize	6SL3130-6TE25-5AA.	4.4	New
4	TM120 evaluation of up to four motor temperature sensors	6SL3055-0AA00-3KA.	4.4	New

Table A-10 Hardware components available as of 04.2011

No.	Hardware component	Article number	Version	Revisions
1	S120 Combi three axes Power Module	6SL3111-3VE21-6FA0 6SL3111-3VE21-6EA0 6SL3111-3VE22-0HA0	4.4	New
2	S120 Combi four axes Power Module	6SL3111-4VE21-6FA0 6SL3111-4VE21-6EA0 6SL3111-4VE22-0HA0	4.4	New

No.	Hardware component	Article number	Version	Revisions
3	S120 Booksize Compact power units Single Motor Module	6SL3420-1TE13-0AA0 6SL3420-1TE15-0AA0 6SL3420-1TE21-0AA0 6SL3420-1TE21-8AA0	4.4	New
4	S120 Booksize Compact power units Double Motor Module	6SL3420-2TE11-7AA0 6SL3420-2TE13-0AA0 6SL3420-2TE15-0AA0	4.4	New
5	Braking Module booksize	6SL3100-1AE31-0AB0	4.4	New

Table A-11 Hardware components available as of 01.2012

No.	Hardware component	Article number	Version	Revisions
1	TM150 evaluation of up to 12 temperature sensors	6SL3055- 0AA0-3LA0	4.5	New
2	CU310-2 PN	6SL3040-1LA01-0AA0	4.5	New
3	CU310-2 DP	6SL3040-1LA00-0AA0	4.5	New

Table A-12 Hardware components available as of Q4 2012

No.	Hardware component	Article number	Version	Revisions
1	Adapter Module 600	6SL3555-2BC10-0AA0	4.5	New

Table A-13 Hardware components available as of 01.2013

No.	Hardware component	Article number	Version	Revisions
1	300% overload, booksize up to 18 A	6SL312.-.....-...4 for Motor Modules with 50 mm and: 3 A, 5 A, 9 A, 18 A, 2x3 A, 2x5 A, 2x9 A	4.6	New
2	SINAMICS S120M	6SL3532-6DF71-0R.. 6SL3540-6DF71-0R.. 6SL3542-6DF71-0R.. 6SL3562-6DF71-0R.. 6SL3563-6DF71-0R..	4.6	New

Table A-14 Hardware components available as of 04.2014

No.	Hardware component	Article number	Version	Revisions
1	S120 Combi: New power unit	6SL3111-4VE21-0EA Four axis Power Modules with high amperage: 24 A, 12 A, 12 A, 12 A	4.7	New
2	PM240-2 Power Module	6SL321.-.P..-.... FSA, FSB and FSC for 200 V and 400 V	4.7	New

Table A-15 Hardware components available as of 04.2015

No.	Hardware component	Article number	Version	Revisions
1	TM31 Terminal Module	6SL3055-0AA00-3AA1	4.7 SP2	Revised
2	TM41 Terminal Module	6SL3055-0AA00-3PA1	4.7 SP2	Revised
3	DRIVE-CLiQ Hub Module DMC20	6SL3055-0AA00-6AA1	4.7 SP2	Revised

Table A-16 Hardware components available as of 10.2015

No.	Hardware component	Article number	Version	Revisions
1	Motor Module with up to 2x overload (Booksize redesign)	6SL3120-1TE21-8AC. (18 A) 6SL3120-1TE23-0AC. (30 A) 6SL3120-2TE21-8AC. (2 x 18 A)	-	New
2	Motor Module with up to 3x overload (Booksize redesign)	6SL3120-1TE13-0AD. (3 A) 6SL3120-1TE15-0AD. (5 A) 6SL3120-1TE21-0AD. (9 A) 6SL3120-1TE21-8AD. (18 A) 6SL3120-1TE23-0AD. (30 A) 6SL3120-2TE13-0AD. (2 x 3 A) 6SL3120-2TE15-0AD. (2 x 5 A) 6SL3120-2TE21-0AD. (2 x 9 A) 6SL3120-2TE21-8AD. (2 x 18 A)	-	New
3	Motor plug connector with push-in connection	6SL3162-2MB00-0AC0	-	New
4	Motor plug connector with screw-type connection	6SL3162-2MA00-0AC0	-	New

Table A-17 Hardware components available as of 07.2016

No.	Hardware component	Article number	Version	Revisions
1	PM240-2 Power Module	6SL321.-.P..-.... FSD, FSE and FSF for 200 V, 400 V and 690 V	4.8	New
2	TM31 Terminal Module	6SL3055-0AA00-3AA1	4.8	Revised
3	TM41 Terminal Module	6SL3055-0AA00-3PA1	4.8	Revised
4	TM54F Terminal Module	6SL3055-0AA00-3BA.	4.8	Revised
5	DRIVE-CLiQ Hub Module DMC20	6SL3055-0AA00-6AA1	4.8	Revised

No.	Hardware component	Article number	Version	Revisions
6	VSM10 Voltage Sensing Module	6SL3053-0AA00-3AA1	4.8	Revised
7	Temperature sensor PT1000	PT1000 is supported by modules with the following article numbers: 6SL312x-xTExx-xAA3 6SL312x-xTExx-xAA4 6SL3120-xTExx-xAC0 6SL3120-xTExx-xAD0 6SL3055-0AA00-5AA3 6SL3055-0AA00-5BA3 6SL3055-0AA00-5CA2 6SL3055-0AA00-5EA3 6SL3055-0AA00-5JA3 6SL3055-0AA00-5KA3 6SL3055-0AA00-3AA1 6SL3055-0AA00-3KA0 6SL3055-0AA00-3LA0 6SL3053-0AA00-3AA1	4.7 HF17	New

Table A-18 Hardware components available from January 2017 or November 2017

No.	Hardware component	Article number	Version	Revisions
1	Absolute encoder with DRIVE-CLiQ Singleturn, synchronous flange VW 6 mm Singleturn, clamping flange VW 10 mm Singleturn, hollow shaft 10 mm Singleturn, hollow shaft 12 mm Multiturn, synchronous flange VW 6 mm Multiturn, clamping flange VW 10 mm Multiturn, hollow shaft 10 mm Multiturn, hollow shaft 12 mm	6FX2001-5FD13-1AA0 6FX2001-5QD13-1AA0 6FX2001-5VD13-1AA0 6FX2001-5WD13-1AA0 6FX2001-5FD25-1AA0 6FX2001-5QD25-1AA0 6FX2001-5VD25-1AA0 6FX2001-5WD25-1AA0	5.1	Revised
2	Active Interface Modules 16 kW 36 kW 55 kW 80 kW 120 kW	 6SL3100-0BE21-6AB. 6SL3100-0BE23-6AB. 6SL3100-0BE25-5AB. 6SL3100-0BE28-0AB. 6SL3100-0BE31-2AB.	5.1	Revised

No.	Hardware component	Article number	Version	Revisions
3	Power Modules PM240-2 Push Through for FSD-FSF		5.1	New
	200 V FSD	6SL3211-1PC26-8UL0		
	200 V FSE	6SL3211-1PC31-1UL0		
	200 V FSF	6SL3211-1PC31-8UL0		
	400 V FSD	6SL3211-1PE27-5UL0, 6SL3211-1PE27-5AL0		
	400 V FSE	6SL3211-1PE31-1UL0, 6SL3211-1PE31-1AL0		
	400 V FSF	6SL3211-1PE32-5UL0, 6SL3211-1PE32-5AL0		
	690 V FSD	6SL3211-1PH24-2UL0, 6SL3211-1PH24-2AL0		
	690 V FSE	6SL3211-1PH26-2UL0, 6SL3211-1PH26-2AL0		
	690 V FSF	6SL3211-1PH31-4UL0, 6SL3211-1PH31-4AL0		
4	Mounting frames for PM240-2 Power Modules		5.1	New
	FSD	6SL3200-0SM17-0AA0		
	FSE	6SL3200-0SM18-0AA0		
	FSF	6SL3200-0SM20-0AA0		
5	C/D type Motor Modules		5.1	New
	24 A C type	6SL3120-1TE22-4AC0		
	24 A D type	6SL3120-1TE22-4AD0		
	45 A C type	6SL3120-1TE24-5AC0		
	60 A C type	6SL3120-1TE26-0AC0		
6	Shield connection plate 100 mm	6SL3162-1AD00-0AA0	5.1	New

Table A-19 Hardware components available from February 2018

No.	Hardware component	Article number	Version	Revisions
1	PM240-2 Power Modules		5.1 SP1	New
	400 V FSG (with internal C2 line filter)	6SL3210-1PE33-0AL0		
		6SL3210-1PE33-7AL0		
		6SL3210-1PE34-8AL0		
	400 V FSG (with internal C3 line filter)	6SL3210-1PE33-0CL0		
		6SL3210-1PE33-7CL0		
		6SL3210-1PE34-8CL0		
	690 V FSG (with internal C3 line filter)	6SL3210- 1PH31-7CL0		
		6SL3210- 1PH32-1CL0		
		6SL3210- 1PH32-5CL0		

Table A-20 Hardware components available from December 2018

No.	Hardware component	Article number	Version	Revisions
Booksize format				
1	Line reactor for 16 kW Smart Line Modules	6SL3100-0EE21-6AA0	5.2	Previously: 6SL3000-0CE21-6AA0
Chassis format				
2	Power Module Liquid Cooled	6SL3315-1TE36-1AA7 6SL3315-1TE37-5AA7 6SL3315-1TG35-8AA7	5.2	New
Chassis-2 format				
3	Motor Modules	6SL3321-1TE36-6AA0 6SL3321-1TE37-4AA0 6SL3321-1TE38-1AA0 6SL3321-1TE38-8AA0 6SL3321-1TE41-0AA0 6SL3321-1TE41-1AA0 6SL3321-1TE41-2AA0 6SL3321-1TE41-4AA0 6SL3321-1TE41-5AA0	5.2	New
4	Active Interface Modules (AIM)	6SL3301-7TE36-4AA0 6SL3301-7TE41-0AA0 6SL3301-7TE41-4AA0		
5	Active Line Modules (ALM)	6SL3331-7TE35-6AA0 6SL3331-7TE36-4AA0 6SL3331-7TE37-5AA0 6SL3331-7TE38-4AA0 6SL3331-7TE38-8AA0 6SL3331-7TE41-0AA0 6SL3331-7TE41-2AA0 6SL3331-7TE41-3AA0 6SL3331-7TE41-4AA0	5.2	New

A.7 Availability of SW functions

Table A-21 New functions, firmware 2.2

No.	SW function	SERVO	VECTOR	HW component
1	Technology controller	x	x	-
2	Two command data sets	-	x	-
3	Extended brake control	x	x	-
4	Automatic restart for vector and Smart Line Modules 5/10 kW	-	x	-
5	The ability to mix servo and vector U/f control modes on one CU	x	x	-
6	Regulated V_{dc} up to 480 V input voltage can be parameterized for Active Line Modules	x	x	-
7	Smart Mode for Active Line Modules Booksize format	x	x	-
8	Extended setpoint channel can be activated	x	-	-
9	Evaluation, linear measuring systems	x	-	-
10	Synchronous motors 1FT6/1FK6/1FK7 with DRIVE-CLiQ resolver	x	-	-

Table A-22 New functions, firmware 2.3

No.	SW function	SERVO	VECTOR	HW component
1	Motor data set changeover (eight motor data sets)	x	x	-
2	Buffer for faults/alarms	x	x	-
3	Rotor/pole position identification	x	x	-
4	Booting with partial topology, parking axis/encoder, deactivating/ activating components	x	x	-
5	Friction characteristic with ten interpolation points, automatic characteristic plot	x	x	-
6	Utilization display	x	x	-
7	Evaluation of distance-coded zero marks for higher-level controllers	x	-	-
8	Vertical axes / electronic weight equalization for higher-level controllers	x	-	-
9	SIMATIC S7 OPs can be directly coupled	x	x	-
10	PROFIBUS NAMUR standard telegrams	-	x	-
11	Parallel connection	-	x	For Chassis drive units
12	Edge modulation	x	x	For Chassis drive units
13	Servo control type	x	-	Also Chassis drive units
14	Terminal Module TM15 (DI/DO functionality)	x	x	-
15	1FN1, 1FN3 linear motors	x	-	-
16	1FW6 torque motors	x	-	-
17	1FE1 synchronous built-in motors	x	-	-
18	2SP1 synchronous spindles	x	-	-
19	1FU8 SIMOSYN motors	x	-	-

No.	SW function	SERVO	VECTOR	HW component
20	1FS6 explosion-protected motors	x	-	-
21	SME20/25 external Sensor Modules for incremental and absolute encoder evaluation	x	x	-

Table A-23 New functions, firmware 2.4 or 2.4 SP1

No.	SW function	SERVO	VECTOR	HW component
1	SINAMICS S120 functionality for AC DRIVE (CU310 DP/PN)	x	x	-
2	Basic positioning	x	x	-
3	Encoder data set changeover (three EDS encoder data sets per drive data set)	x	x	-
4	Two command data sets (CDS)	x	x	-
5	Units changeover SI / US / %	x	x	-
6	Motor data identification servo	x	As of FW2.1	-
7	Increased torque accuracy for synchronous motors (kt estimator)	x	-	-
8	Hub functionality (hot-plugging, distributed encoder, star structure via DMC20)	x	x	-
9	Basic Operator Panel BOP20	x	x	-
10	Evaluation of SSI encoder (SMC30)	x	x	6SL3055–0AA00–5CA1
11	Pulse encoder emulation TM41	x	x	-
12	Automatic restart with Active Line Module	x	x	-
13	PROFIBUS extensions: – Slave-to-slave communication – Y link – Telegram 1 also for servo – Telegram 2, 3, 4 also for vector	 x x x As of FW2.1	 x x As of FW2.1 x	-
14	Safety Integrated Stop category 1 (SS1) with safety-related time	x	x	-
15	Measuring gearbox	x	x	-
16	Setting the pulse frequency grid in fine steps	x	x	-
17	Controller cycles that can be set	x	x	-
18	Possibility of mixing cycles on a DRIVE-CLiQ line	x	x	-
19	Clockwise/counter-clockwise bit (the same as changing the rotating field)	x	x	-
20	Sensor Module for 1FN, 1FW6 with protective separation (SME120/125)	x	-	-
21	Real-time stamps for alarms	x	x	CU320, 6SL3040– ... –0AA1 and Version C or higher (currently 2014: 6SL3040– ... –0AA0)
22	Encoderless closed-loop speed control for torque motors	-	x	-
23	Separately excited synchronous motors with encoder	-	x	-

No.	SW function	SERVO	VECTOR	HW component
24	Drive converter/drive converter, drive converter/line supply (bypass) synchronizing	x	x	For Chassis drive units
25	Voltage Sensing Module (VSM) for Active Line Module			including Booksize units
26	Armature short-circuit braking, synchronous motors	x	-	-
27	CANopen extensions (vector, free process data access, profile DS301)	x	x	-
28	PROFINET IO communication with Option Module CBE20	x	x	-
29	New hardware components are supported (AC DRIVE, SME120/125, BOP20, DMC20, TM41)	x	x	-
30	Position tracking for torque motors (not for EPOS)	x	x	CU320, 6SL3040– ... –0AA1 and Version C or higher (currently 2014: 6SL3040– ... –0AA0)
31	1FW3 torque motors	x	-	-

Table A-24 New functions, firmware 2.5 or 2.5 SP1

No.	SW function	SERVO	VECTOR	HW component
1	DCC (Drive Control Chart) with graphical interconnection editor (DCC-Editor): • Graphically configurable modules (logic, calculation and control functions) • Module types that can be freely instantiated (flexible number of components/devices) • Can be run on SIMOTION and SINAMICS controllers (DCC SINAMICS, DCC SIMOTION)	x	x	-
2	Safety Integrated Extended Functions: • Safety functionality integrated in the drive, controllable via PROFIsafe (PROFIBUS) or secure terminal module TM54F • STO Safe Torque Off (previously Safe Standstill (SH) • SBC Safe Brake Control • SS1 Safe Stop 1, STO after a delay time has expired, standstill without torque • SOS Safe Operating Stop, safe standstill with full torque • SS2 Safe Stop 2; SOS after a delay time has expired, standstill with full torque • SLS Safely Limited Speed • SSM Safe Speed Monitor, safe speed monitor feedback (n < nx) on a secure output **Note:** The Safety Integrated Basic Functions STO and SBC have been implemented as of V2.1 and SS1 as of V2.4 (control via onboard terminals).	x	x	Safety Integrated Extended Functions only for: • Motor Modules (6SL3...– ... –0AA3) • CUA31 (6SL3040-0PA00-0AA1)

No.	SW function	SERVO	VECTOR	HW component
3	EPOS function extensions: • Traversing blocks / new task: "Travel to fixed stop" • Traversing blocks / new continuation conditions: "External block relaying" • Completion of position tracking for absolute encoder (load gear) • Jerk limitation • "Set reference point" also with intermediate stop (Traversing blocks and MDI) • Reversing cam functionality also with reference run without reference cam	x	x	-
4	Support of new motor series/types: • 1FT7 (synchronous servo motor) • 1FN3 continuous load (linear motor for continuous load) • 1PL6 (functionality released since V2.1, now available as list motor)	x	1PL6 only	-
5	Support of new components • Basic Line Module (BLM) in Booksize format	x	x	-
6	Support of new components • Active Interface Module (AIM), Booksize format • TM54F (Terminal Module Failsafe) • CUA32 (Control Unit Adapter for PM340) • DRIVE-CLiQ encoder (machine encoder)	x	x	-
7	Save data (motor and encoder data) from the Sensor Module on motor with DRIVE-CLiQ to memory card and load to "empty" Sensor Module	x	x	-
8	Evaluation of SSI encoders on AC Drive Controller CU310 (onboard interface)	x	x	only for CU310 (6SL3040-0LA00-0AA1) (currently 2014: discontinued)
9	Edge modulation (higher output voltages) in the vector control mode, also with Booksize devices	-	x	only for Motor Modules (6SL3...– ... –0AA3)
10	DC braking	x	x	-
11	Armature short-circuit: Internal	x	x	-
12	Armature short-circuit: Intermittent voltage protection	x	-	only for Motor Modules (6SL3...– ... –0AA3)
13	Automatic firmware update for DRIVE-CLiQ components	x	x	-
14	Save STARTER project directly to memory card	x	x	-
15	The terminal area for Booksize infeeds (BLM, SLM, ALM) can be parameterized to 230 V 3 AC	x	x	Only for infeeds in the Booksize format (6SL3...-... -0AA3)
16	Automatic speed controller setting	x	As of FW2.1	-
17	Technological pump functions	-	x	-

No.	SW function	SERVO	VECTOR	HW component
18	Simultaneous cyclical operation of PROFIBUS and PROFINET on CU320	x	x	-
19	Automatic restart also with servo	x	As of FW2.2	-
20	Operates at 500 µs PROFINET IO	x	-	-
21	Absolute position information (X_IST2) with resolver	x	x	-
22	DC link voltage monitoring depending on the line voltage	x	x	-
23	Automatic line frequency detection	x	x	-
24	Acceleration signal at the ramp-function generator output	x	x	-
25	Reset the drive device via parameter (p0972)	x	x	-
26	Alteration of the basic sampling time during the automatic readjustment of the sampling times depending on the number of drives on CU320 with vector (from 400 µs to 500 µs)	-	x	-
27	Dynamic energy management, extension of the Vdc_min, Vdc_max control	x	x	-
28	Endless trace	x	x	-
29	Extended PROFIBUS monitoring with timer and binector	x	x	-
30	Indexed actual value acquisition Simultaneous evaluation of multiple encoders	x	x	-

Table A-25 New functions, firmware 2.6

No.	SW function	SERVO	VECTOR	HW component
1	Offset pulsing in the synchronous drive line-up	x	x	-
2	Safety Integrated Extended Functions: Internal armature short-circuit and integrated voltage protection	x	x	Safety Integrated Extended Functions only for: • Motor Modules (6SL3...– ... –...3) • CUA31 (6SL3040-0PA00-0AA1)
3	PROFIsafe via PROFINET	x	x	-
4	Pulse frequency wobbling	-	x	Motor Modules Chassis (6SL3...– ... –...3)
5	Position control load gear with multiple drive data sets (DDS)	x	x	-
6	Sensorless vector control (SLVC), new closed-loop control for passive loads	-	x	-
7	Variable signaling function	x	-	-
8	Quick magnetization for induction motors		x	-
9	Flux reduction for induction motors	x	-	-
10	Component status display	x	x	-
11	Downgrade lock	x	x	-
12	Parallel connection of motors	x	x	-

No.	SW function	SERVO	VECTOR	HW component
13	Parallel connection of Motor Modules	-	x	-
14	Parallel connection of power units	x	x	-
15	Master/slave function for Active Infeed	x	x	-
16	Thermal motor monitoring I2t model for synchronous motors	x	-	-
17	New PROFIdrive telegrams 116, 118, 220, 371	x	x	-
18	New RT classes for PROFINET IO	x	x	-
19	Use of bidirectional inputs/outputs on the CU	x	x	-
20	Autonomous operating mode for DRIVE-CLiQ components	x	x	-
21	Central signal for "ready for switching on" state on drive object	x	x	-
22	Support of new motor series/types: 1FN6 continuous load (linear motor for continuous load)	x	-	-

Table A-26 New functions, firmware 4.3

No.	SW function	SERVO	VECTOR	HW component
1	The 1FN6 motor series is supported	x	-	-
-2	DRIVE-CLiQ motors with star-delta changeover are supported	x	-	-
3	Referencing with several zero marks per revolution via the encoder interface	x	-	-
4	Permanent-magnet synchronous motors can be controlled down to zero speed without having to use an encoder	-	x	-
5	"SINAMICS Link": Direct communication between several SINAMICS S120	x	x	-
6	Safety Integrated: • Control of the Basic Functions via PROFIsafe • SLS without encoder for induction motors • SBR without encoder for induction motors • Own threshold value parameters for SBR: Up until now, SSM used parameter p9546	x	x	-
7	Drive object encoder: An encoder can now be directly read-in via the encoder drive object and can then be evaluated by SIMOTION using the TO external encoder.	-	x	-
8	Support of new components • CU320-2 • TM120	x	x	-
9	GSDML file expanded for Profisafe	x	x	-
10	USS protocol at interface X140	x	x	-
11	U/f diagnostics (p1317) permitted as regular operating mode	x	-	-
12	Setpoint-based utilization display, instead of the previous actual value-based utilization display	x	x	-

No.	SW function	SERVO	VECTOR	HW component
13	A performance license is now required from the 4th axis (for servo/ vector) or from the 7th U/f axis, instead of from a utilization of 50% and higher - which was the case up until now.	x	x	-
14	Tolerant encoder monitoring, 2nd part: • Monitoring, tolerance band, pulse number • Switchable edge evaluation for square-wave encoders • Setting the zero speed measuring time for pulse encoder signal evaluation • Changeover measuring procedure, actual value acquisition for square-wave encoder • "LED check" encoder monitoring	x	x	-

Table A-27 New functions, firmware 4.4

No.	SW function	SERVO	VECTOR	HW component
1	Safety Integrated Functions • SDI (Safe Direction) for induction motors (with and without encoder), for synchronous motors with encoder. • Supplementary condition for Safety without encoder (for induction motors): Only possible with devices in booksize and blocksize format. Not for devices in chassis format.	x	x	-
2	Communication • PROFINET address can be written via parameter (e.g. when completely generating the project offline) • Shared device for SINAMICS S PROFINET modules: CU320-2 PN, CU310-2 PN	x	x	-
3	Emergency retraction (ESR = Extended Stop and Retract)	x	x	-
4	TM41: Rounding for pulse encoder emulation (gear ratio; also resolver as encoder)	x	x	-
5	Further pulse frequencies for servo control and isochronous operation (3.2 / 5.33 / 6.4 kHz)	x	-	-
6	Chassis format: Current controller in 125 µs for servo control for higher speeds (up to approx. 700 Hz output frequency)	x	-	-
7	Propagation of faults	x	x	-

Table A-28 New functions, firmware 4.5

No.	SW function	SERVO	VECTOR	HW component
1	Support for new components, CU310-2	x	x	Refer to Appendix A1
2	Support for new components, TM150	x	x	-
3	Support for high-frequency spindles with pulse frequencies up to 32 kHz (a current controller cycle of 31.25 µs)	x	-	-
4	PROFINET: Support for the PROFIenergy profile	x	x	-

No.	SW function	SERVO	VECTOR	HW component
5	PROFINET: Improved usability for Shared Device	x	x	-
6	PROFINET: Smallest selectable send cycle 250 µs	x	x	-
7	PROFINET: Bumpless media redundancy with CU310-2 PN, CU320-2 PN and CU320-2 with CBE20	x	x	-
8	Ethernet/IP communication extension via CBE20	x	x	-
9	SINAMICS Link: Smallest adjustable send clock 0.5 ms	x	x	-
10	Parameterization of SINAMICS Link connections without POWER ON	x	x	-
11	Write protection	x	x	-
12	Know-how protection	x	x	-
13	PMSM (old: PEM) encoderless up to n = 0 rpm	x	x	-
14	Decoupling of the pulse frequency from the current controller cycle, valid only for power units in the chassis format	-	x	-
15	Expansion of the number of process data words for infeeds up to 10 words for the send and receive directions	x	x	-
Safety Integrated Functions				
16	CU310-2 safety functionality via terminals and PROFIsafe	x	x	-
17	Permanent activation of the speed limit and the safe direction of rotation without PROFIsafe or TM54F	x	x	-
18	Safely Limited Position (SLP)	x	x	-
19	Transfer of the Safely Limited Position via PROFIsafe	x	x	-
20	Variably adjustable SLS limit	x	x	-
21	New PROFIsafe telegrams 31, 901, 902	x	x	-

Table A-29 New functions, firmware 4.6

No.	Software function	SERVO	VECTOR	Hardware component
1	Integrated Web server for SINAMICS Project and firmware update via Ethernet on the memory card Protection against power failure while updating via the Web server	x	x	-
2	Replacing a part with know-how protection: Encrypted loading into the file system	x	x	-
3	Parameterizable bandstop filters for Active Infeed control, chassis format	x	x	-
4	Current setpoint filter	x	-	-
5	Shortened rotating measurement	-	x	-
6	Redundant data backup on the memory card	x	x	-
7	Multiple trace	x	x	-
8	Brake control adaptation	x	x	-
9	Fast flying restart	-	x	-
10	Diagnostic alarms for PROFIBUS	x	x	-
11	DCC SINAMICS: Support of DCB libraries generated from the SINAMICS DCB Studio	x	x	-
12	SMC40 (EnDat 2.2)	x	x	-
13	CANopen expansions	x	x	-

No.	Software function	SERVO	VECTOR	Hardware component
14	Support of new components S120M	x	-	-
Safety Integrated Functions				
15	Safety Integrated Extended Functions with two TTL/HTL encoders	x	x	-
16	Safety: Safe Brake Test	x	x	-
17	Safety Info Channel	x	x	-

Table A-30 New functions, firmware 4.7

No.	Software function	SERVO	VECTOR	Hardware component
1	Separately excited synchronous machine: New operating mode, only with HTL encoder and VSM	-	x	-
2	S120 Combi support	x	-	New power unit: 6SL3111-4VE21-0EA
3	Identification & Maintenance data sets (I&M 0...4) support	x	x	-
4	Isochronous reduction for IRT devices	-	x	-
5	Dynamic IP address assignment (DHCP) and temporary device names for PROFINET	x	x	-
6	Fast flying restart with voltage measurement	x	x	-
7	One button tuning	x	-	-
8	Online tuning	x	-	-
9	Adaptive current setpoint filter for online tuning	x	-	-
10	Independent setting of the pulse frequency and the PROFIBUS and PROFINET cycles	x	x	-
11	PROFIenergy for SINAMICS S120	x	x	-
12	Activation of network functionality for booksize modules for renewable energies	x	x	-
13	New mode for ramp-function generator tracking with torque, power or current limit	-	x	-
Safety Integrated Functions				
14	Parameterizable line contactor activation for STO	x	x	-
15	Extension of the safe gearbox switchover	x	x	-
16	Execute test stop automatically during ramp-up	x	x	-
17	Safety Integrated Extended Functions with two TTL/HTL encoders for booksize and blocksize	x	x	-
18	Uniform behavior for component replacement	x	x	-
19	SINAMICS S120 hydraulic drive with Safety Integrated	x	-	-

Table A-31 New functions, firmware 4.8

No.	Software function	SERVO	VECTOR	Hardware component
1	Synchronous reluctance motors	-	x	-
2	Moment of inertia precontrol of the moment of inertia estimator	-	x	-
3	Expansion of the thermal motor models	x	x	-
4	Communication via MODBUS TCP	x	x	-

No.	Software function	SERVO	VECTOR	Hardware component
5	PROFINET system redundancy	x	x	
6	Expansion of SINAMICS Link functionality	x	x	-
7	Optimization of the web server functionality	x	x	-
8	Cogging torque compensation (under license)	x	-	-
9	Advanced Position Control (APC) (under license)	x	-	-
Safety Integrated Functions				
10	SBR can now also be selected for SS1/SS2 with encoder	x	x	-
11	Basic Functions controllable via TM54F	x	x	-
12	Safe Stop 2 with external stop (SS2E)	x	x	-

Table A-32 New functions, firmware 5.1

No.	Software function	SERVO	VECTOR	Hardware component
1	Support of 1PH1 spindle motors	x	x	-
2	Voltage precontrol for servo control	x	-	-
3	One Button Tuning extension	x	-	-
4	Efficiency optimization extension (additional method)	-	x	-
5	Essential service mode for CU310-2 on blocksize power units	-	x	-
6	Time-of-day synchronization via NTP and SNTP	x	x	-
7	Licensing (better overview and introduction of a Trial License Mode)	x	x	-
8	Encoderless control of reluctance motors up to standstill and during standstill License: Advanced synchronous reluctance control	-	x	-
9	Active Vibration Suppression (AVS) License: Active Vibration Suppression (APC/AVS)	x	x	-
Safety Integrated Functions				
10	Safe Cam (SCA)	x	x	-
11	Safely-Limited Acceleration (SLA)	x	x	-
12	Introduction of a new license "Safety Advanced"	x	x	-

Table A-33 New functions, firmware 5.1 SP1

No.	Software function	SERVO	VECTOR	Hardware component
1	EtherNET/IP (EIP) via the onboard PROFINET interface X150 at the CU320-2 PN and CU310-2 PN Control Units	x	x	-
2	If a license requirement does not exist, then the Trial License Mode activation is locked, and the hours counter of an already activated Trial License Period held. • For additional information on this topic, see "Overview of licenses (Page 778)".	x	x	-
3	For CU320-2 PN for X150 the S7 protocol can be deactivated	x	x	-

Table A-34 New functions, firmware 5.2

No.	Software function	SERVO	VECTOR	Hardware component
1	Web server S120 • Feature expansions: 6 standard languages, backup and restore, integrated error and alarm descriptions, integrated telegram diagnostics for PROFINET and PROFIBUS • Change in the user interface design in accordance with S210	x	x	-
2	2x parallel connection of Active Line Modules in Booksize format in the 55 kW, 80 kW or 120 kW power versions	x	x	-
3	Basic positioner (EPOS) • Expansions in the control panel	x	x	-
4	One Button Tuning (OBT) in the Startdrive commissioning tool	x	-	-
Safety Integrated Functions				
5	Commissioning and acceptance test wizard in Startdrive	x	x	-
6	Safe Stop 2 Extended Stop and Retract (SS2ESR)	x	x	-

A.8 Functions of SINAMICS S120 Combi

Description

SINAMICS S120 Combi supports the following functions, which are described in this Function Manual (and in the Safety Integrated Function Manual). Any function not shown in this list is not available for SINAMICS S120 Combi.

Table A-35 Functional scope, SINAMICS S120 Combi

	SW function
Infeed	
	Smart Infeed
	Line contactor control
Servo control	
	Speed controller
	Speed setpoint filter
	Speed controller adaptation
	Torque-controlled operation
	Torque setpoint limitation
	Current controller
	Current setpoint filter
	Note about the electronic motor model
	U/f control for diagnostics
	Optimization of current and speed controller
	Encoderless operation
	Motor data identification (stationary/rotating measurement)
	Pole position identification
	Vdc control
	Dynamic Servo Control (DSC)
	Travel to fixed stop
	Vertical axis
Basic functions	
	Reference parameters/scaling
	OFF3 torque limits
	Simple brake control
	Runtime (operating hours counter)
	Component status display
	Parking axis and parking encoder
	Update of the firmware: Upgrade of firmware and project in STARTER, retrograde lock
Safety Integrated Basic Functions	
Safety Integrated Extended and Advanced Functions (see SINAMICS S120 Safety Integrated Function Manual)	

Topology

Fixed DRIVE-CLiQ topology rules for SINAMICS S120 Combi. The device must always be connected according to the same principle.

System clocks

The sampling times are permanently set to 125 µs for the following functions:

- Current controller
- Speed controller and
- Flux controller

The pulse frequency is permanently set to 4 kHz. This means that a maximum spindle speed of 24000 rpm can be reached.

Available motors

- Synchronous motors: 1FE1, 1FT6, 1FT7, 1FK7, 1FW6
- Induction motors: 1PH7, 1PH4, 1PL6, 1PH8

Index

2

2-channel brake control, 652

A

Absolute encoder
  Adjusting, 476
  Linear absolute value encoder, 477
  Rotary absolute encoder, 476
Absolute encoder adjustment, 449
Acceptance test, (See acceptance test)
  Authorized person, 681
  Preparation, 685
  Record, 680
  Requirements, 680, 681
Access levels, 773
Active Infeed
  Band-stop filters, 40
  Master/Slave, 511
Active Infeed Control, 30, 42
Active Line Module, 29
Active Mode, 31
Active Vibration Suppression, 556
  Activating the function module in SINUMERIK, 554
  Activating the function module in Startdrive, 554
  APC without sensor on the load side, 556
  AVS, 556
Actual value acquisition
  Indexed, 449
Actual values
  Parallel encoders, 449
Additional closed-loop controls, 40, 549
Address
  License manager on the Internet, 776
Adjustable hardware filter, 371
Adjusting
  Absolute encoder, 476
  Offset acceptance, 477
Advanced Position Control, 550
  APC, 550
  APC applied to master-slave axes, 581
  APC to reduce machining-related oscillation, 562
  APC with acceleration feedback, 570
  APC with encoder combination and differential position feedback:, 565
  APC with load velocity control, 576
  Application SINUMERIK, 582
  Dependency on the parameter set, 580
  Measuring frequency responses, 582
  Measuring functions, 584
  Preassigning parameters, 555
  Setting the activation parameter, 579
  Using the APC filter, 580
Advanced Positioning Control
  Activating the function module in SINUMERIK, 554
  Activating the function module in Startdrive, 554
  Licensing, 555
ALM, 29
Analog inputs
  CU310-2, 803
  Properties, 802
  Signal processing, 802
Analog outputs
  Properties, 804
  Signal processing, 804
Analog setpoint
  Communication, 512
APC, 550
  Activating the function module in SINUMERIK, 554
  Activating the function module in Startdrive, 554
  Application STARTER, 582
  Licensing, 555
Asynchronous pulse frequency, 288
Automatic logout
  Web server, 727
Automatic restart
  Vector control, 328
Autotuning
  Current setpoint filter adaptation, 120
  One button tuning, 109
  Online tuning, 114
AVS, 556

AVS/APC-ECO
Activating the function module in SINUMERIK, 554
Activating the function module in Startdrive, 554
Axis
Suspended, 181

B

Band-stop filters
Active Infeed, 40
Basic Functions
SBC, 651
SS1, 648
STO, 644
Basic Infeed open-loop control, 44
Basic Line Module, 29
Parallel connection, 520
Vdc_max controller, 44, 239, 305, 522
Basic parameter assignment
Function modules (servo), 423
Basic positioner, 463
Basic positioning
Referencing, 475
BICO technology
Binector Connector Technology, 786
Converter, 789
Fixed values, 790
Interconnecting signals, 787
Bidirectional I/Os
Resource sharing, 801
Binector, 786
Bit pattern test, 664
BLM, 29
BOP20
Control word, drive, 894
Important functions, 885, 894
Brake control
Extended, 432
Simple, 357
Braking Module external, 438
Braking resistors
Braking resistor connection, 346
Bypass
Vector control, 278
Bypass contactor
Chassis, 58

C

Cam controllers, 459
Certificate of License, 776
Changing
Password, 638
Changing the password
Web server, 757
Chassis Motor Module
Pulse frequency wobbling, 325
Chassis power units
Derating function, 418
Closed-loop position control, 445
Cogging torque compensation, 587
Activating, 590
Application examples, 588
Filling compensation tables, 590
Periodic position errors, 593
Combi, 916
Commissioning
Parallel connection of power units, 528
Communication
Diagnostics, 745
Compensating periodic position errors, 593
Component number
Topology tree, 822
Version overview, 822
Component replacement
Examples, 822
Configuration
Web server, 714
Configure IP connection
Web server, 759
Connection type
HTTP, 718
HTTPS, 718
Connector, 786
Controller setting, automatic
Servo control, 135
Cooling unit, 440
Copy protection
Activating, 812
Creating a parameter list
Web server, 747
CUA31 / CUA32
System sampling times, 861
Current controller (vector)
Current controller adaptation, 243
Current distribution factor, 513
Current setpoint, 513
Current setpoint filter, 241
Servo, 101
Current setpoint filter adaptation
Activating, 120

Adaptation with variable resonant frequencies, 124
Configuring, 120
Deactivating, 120
Internal activation threshold, 123
Online tuning active, 120
Range of movement of the filter, 123
Remedy for insufficient adaptation, 125
Stability of the speed control loop, 124
Start value of the adaptation, 124
Upper and lower limit frequencies, 124
Cycle times
Servo control, 860

D

Damping
Machining-related oscillation, 562
Data backup
Backing up parameters externally, 753
Minimum requirements for a redundant data backup, 828
NVRAM, 825
Restoring the factory setting, 755
Restoring the parameter data, 754
Retentive, 827
Data cross-check, 633
Data reconstruction, 827
Data set switchover, 795
Data sets
Command data set (CDS), 792
Drive data set (DDS), 793
Encoder data set (EDS), 794
Motor data set (MDS), 795
Datalogger, 365
DC brake
Induction motors, 339
DC braking
Activation as a response to a speed threshold, 342
Activation via parameters, 340
As fault response, 341
Deactivation via parameters, 340, 341
OFF1, OFF3, 341
Setting as a response to a speed threshold, 342
Setting via parameters, 340
DC breaker, 510
DCC
System sampling times, 860
DDS changeover, 795
With load gear position tracking, 454, 455
Defective partition on memory card, 827
Deleting the password
Web server, 758
Derating function
Ambient temperature:, 418
Chassis power units, 418
Operating temperature, 418
Diagnostic function
U/f control for servo control, 131
Diagnostics
Calling up messages, 741
Communication, 745
Displaying device information, 738
Filter events, 744
Filtering messages, 742
Digital inputs
Bidirectional, 800
Properties, 798
Signal processing, 798
Digital outputs
Bidirectional, 800
Properties, 800
Signal processing, 800
Direct setpoint specification (MDI), 500
Direction reversal, 327
Directives, 631
DME20, 706
Downgrade lock
Firmware, 409
Drive object, 775
DRIVE-CLiQ
Check connections, 830
Diagnostics, 830
Emergency mode, 831
Encoder, 478
Independent operation, 831
Wiring rules, 845
DRIVE-CLiQ Hub
DMC20, 706
Droop, 228
DSC
Wind-up effect, 173
dv/dt filter compact plus Voltage Peak Limiter
Vector control, 323
dv/dt filter plus Voltage Peak Limiter
Vector control, 321
Dynamic Servo Control (DSC)
External encoders, 173
Dynamic setpoint limiting, 171

E

Early encoder failure detection, 366

Edge evaluation of the zero mark, 372
EDS switchover, 795
Efficiency optimization
Induction motor, 258
Reluctance motor, 260
Vector control, 258
Electronic rating plate, 829
Encoder diagnostics
Early encoder failure detection, 366
Encoder dirty signal, 366
Encoder evaluation, 368
Encoder range, 388
Encoder track monitoring, 369
Enter a new password
Web server, 758
EPOS, 463
Direct setpoint specification (MDI), 500
Flying referencing, 482
Flying referencing using Safety Integrated functions, 490
Intermediate stop, 493, 501
Jog, 502
Limits, 468
Mechanical system, 467
Reject traversing task, 493, 501
Safe referencing, 488
System sampling times, 860
Traversing blocks, 491
ESM
Commissioning, 414
Essential service mode, 411
ESR
Communication failure for Safety, 537
Generator operation, 536
Initiating ESR, 533
Overview, 532
Retraction, 535
Several axes, 537
Stopping, 534
Telegram extensions, 538
Unsuitable motors, 537
Essential service mode
Commissioning, 414
CU310-2, 411
ESM, 411
Essential service mode, 411
Expansion of the encoder evaluation, 376
Extended setpoint channel
Activation for servo control, 60
Servo control, 59
Vector control, 59
Extended Smart Mode, 52
Extended stopping and retraction (ESR), 532
Extended torque control, 442
External armature short-circuit braking
Activating, 333
Braking resistors calculate, 334
Example, 335
Setting, 333
External braking resistors
Example, 334
External encoders
Dynamic Servo Control (DSC), 173

F

F01611
Fault value 1000, 663
Faults and alarms
Forwarding, 791
Propagation, 791
Filter
On/off test, 664
Filter events
Diagnostics, 744
Filtering messages
Diagnostics, 742
Firmware
Downgrade lock, 409
Protection against power failure while updating via the Web server, 409
Fixed setpoints, 64
Fixed speed setpoints, 64
Flying referencing
EPOS, 482
Following error monitoring
Dynamic, 459
Forced checking procedure (test stop)
Automatically when powering up, 641
Basic Functions, 640
Initiated by the application, 641
Freezing the speed raw value, 371
Frequency setpoint
SMC30, 416
Friction characteristic
Technology function, 355
Function module
Additional closed-loop controls, 40, 549
Basic positioner, 463
Braking Module external, 438
Closed-loop position control, 445
Cogging torque compensation, 587
Cooling unit, 440
Extended brake control, 432

Extended monitoring functions, 430
Extended stopping and retraction (ESR), 532
Extended torque control, 442
Master/Slave, 506
Moment of inertia estimator, 540
Parallel connection, 515
Function modules
Servo, 423
Functions
Fixed speed setpoints, 64
Jog, 66
Motorized potentiometer, 62
Servo control, 81
Travel to fixed stop, 176
U/f control for servo control, 131

G

Ground fault test, 313

H

Hardware limit switches (STOP cams)
Limit traversing range, 469
Hot-plugging
DRIVE-CLiQ, 707
HTTPS
Security certificate, 732
With security certificate, 731

I

I/f-controlled operation, 137
IEC61000-2-4 standard, 32
Increased stall power, 128
Independent operation, 831
Induction motors
DC brake, 339
Infeed
12-pulse, 519
6-pulse, 519
Basic Infeed, 44
Pre-charging, 520
Infeed concepts, 518
Infeed units, 29
Inputs/outputs
Overview, 798
Insufficient licensing
System responses, 761
Interconnecting signals using BICO technology, 787
Interconnection using BICO technology, 787
Intermediate stop
EPOS, 493, 501
Internal armature short-circuit, 647
Internal armature short-circuit braking
Activating, 332
Setting, 332
Internal voltage protection
Activating, 337, 343
Deactivating, 337, 343
Setting, 337, 343

J

Jerk limitation
Limits, 472
Jog, 66
EPOS, 502
Jog,

K

Kinetic buffering, 50, 237, 302
Vdc control, 167
Know-how protection, 809
Absolute know-how protection, 811
Activating, 812
Changing the password, 815
Data security of the memory card, 810
Deactivating, 814
Executable functions, 810
For loading to the file system, 817
List of exceptions, 811
Locked functions, 810
Optional functions, 811
Parameters that can be changed, 809
Password check, 809
Restricted functions, 811
With basis copy protection, 808
With extended copy protection, 808
Without copy protection, 808
kT estimator
Servo, 442

L

LED
COM, 767, 768
RDY, 767, 768
License key, 776
Create, 783

Display, 764, 783, 784
Enter, 764, 784
Licensing, 776
Limit traversing range
Hardware limit switches (STOP cams), 469
Software limit switch, 469
Limits
EPOS, 468
Jerk limitation, 472
Maximum acceleration, 468
Maximum deceleration, 468
Maximum velocity, 468
Speed controller, 91
Starting against a closed brake, 473
Torque setpoint, 96
Line contactor control, 56
Line Modules, 29
Line supply and DC link identification, 510
Linear absolute value encoder
Absolute encoder, 477
Load gear, 454, 455
Login
Web server, 726
Logout
Web server, 727
LU, (Example)
Length Unit, 445

M

Machine manufacturer, 681
Main/supplementary setpoint, 65
Master/Slave for Active Infeed
Activation of the function, 511
Current distribution factor, 513
Description of the function module, 506
Function diagram, 513
Operating principle, 506
Topology, 509
VDC-link control band, 513
Maximum acceleration
Limits, 468
Maximum deceleration
Limits, 468
Maximum velocity
Limits, 468
Measuring gearbox, 389
Measuring time to evaluate zero speed, 377
Memory card, 827
Minimum requirements for a redundant data backup, 828
Minimum speed, 71
Modular machine concept, 314
Moment of inertia estimator
Accelerated estimation, 547
Commissioning, 545
Function module, 540
Load torque, 541
Moment of inertia, 542
Moment of inertia precontrol, 546
Speed controller adaptation, 547
Moment of inertia precontrol for vector control, 546
Monitoring cycle, 633
Monitoring functions
Extended, 430
Monitoring, tolerance band, pulse number, 375
Motor changeover, 701
Motor data identification, 245
Motor Modules
Derating, 418
Parallel connection, 515
Motor reactor
Vector control, 319
Motor temperature monitoring, 599
CU310-2, 621
CUA31/32, 621
Motor Module, 620
Motor with DRIVE-CLiQ, 622
Power Module, 621
Sensor Module, 608
SMC, 608
SMC10, 608
SMC20, 608
SMC30, 608
SMC40, 608
SME120/125, 609
Temperature sensor evaluation, 623
Terminal Modules, 611
Thermal motor model 1, 600
Thermal motor model 2, 602
TM120, 613
TM150, 615
TM31, 612
Wire break, short-circuit, 623
Motorized potentiometer, 62
Motors
Two-winding system, 527
Multiturn encoder, 388

N

Non-volatile memory, 825
Number of controllable drives
Notes, 854

Number of current controller cycles to generate the average value of the speed actual value, 377
NVRAM, 825

O

OEM list of exceptions for know-how protection, 811
OFF3
  Torque limits, 354
Offset acceptance
  Adjusting, 477
On/off test, 664
One button tuning
  Configuring, 109
Online tuning
  Activating, 114
  Configuring, 114
  Deactivating, 114
Open actual speed value, 230
Operating hours counter, 360
Operation without an encoder
  Servo control, 137
Output current servo control
  Derating, 418
Overload responses
  Chip temperature, 418
  Heat-sink temperature, 418
  Power unit, 418
Overview of licenses, 778

P

Parallel connection
  Basic Line Modules, 520
  Motor Modules, 515
Parallel connection of power units
  Commissioning, 528
Parameter
  Categories, 771
  Reset, 773
  Save retentively, 772
  Types, 771
Parameterizing with BOP, 885
Password
  Changing, 638, 815
  Defining, 757
Pole position adaptation, 373
Pole position identification
  Servo, 150
  Vector, 253
  With encoder for vector control, 254
  Without encoder for vector control, 253
Position controller, 457
  Monitoring functions, 459
Position tracking, 389, 454, 455
  Load gear, 450
  Measuring gearbox, 388
Positioning monitoring, 459
Power Modules
  Derating, 418
Pre-charging contactor
  Chassis, 58
Precontrol
  Speed, 224
Probe evaluation, 184
  Example, 189
  Handshake, 184
  More than two edges, 187
  Time-critical data transfer, 185
  With handshake, 185
  Without handshake, 186
PROFIBUS
  Slave-to-slave communication, 512
Protection against power failure
  When updating the firmware via the Web server, 409
Pulse frequency
  Derating, 418
  Setting, 843
Pulse frequency wobbling
  Chassis Motor Module, 325
  Vector control, 325
Pulse number correction for faults, 374
Pulse/direction interface, 416

R

Ramp-down generator
  Scaling, 75
Ramp-function generator
  Scaling, 75
Ramp-function generator, extended, 73
Ramp-up with partial topology, 314, 852
Rating plate
  Control Unit, 828
  Solid-state, 829
Ratio between the rated motor current and the rated Motor Module current
  Servo control, 85, 207
  U/f control, 291
  Vector control, 85, 207

Redundancy
Chassis power units, 277
Chassis-2 power units, 277
Redundancy mode
Replacing the power unit, 277
Reference model, 224
Reference variables
Disabling, 309
Protecting, 309
Referencing
Basic positioning, 475
Replacing an encoder, 896
Reset
Parameter, 773
RESM, 215
Close-loop-controlled operation, 216
Response times, 655
Basic Functions via PROFIsafe (CU310-2 and CU320-2), 657
Basic Functions via terminals on the Control Unit and the Motor Module, 656
Basic Functions via TM54F, 658
Rotary absolute encoder
Absolute encoder, 476
Rotating measurement (shortened) for vector control, 250
Rotating measurement for vector control, 248

S

S120 Combi, 916
Safe Brake Adapter
Chassis format, 653
Safe Brake Control
Chassis format, 653
SBC, 651
Safe Stop 1
Basic Functions, 648
SS1, 648
Time-controlled, 648
With OFF3 (Basic Functions), 648
Safe Torque Off
Basic Functions, 644
STO, 644
Safety Integrated, 636
Safety Integrated Basic Functions
Stop responses, 678
Safety Integrated password, 637
Safety logbook, 684
Sampling times, 834
Setting, 844
Save (retentively)
Parameter, 772
Saving data in a non-volatile fashion
Web server, 730
SBA, 653
SBC
Basic Functions, 651
Safe Brake Control, 651
Servo
Current setpoint filter, 101
Servo control, 81
Activating the extended setpoint channel function module, 60
Automatic controller setting for the speed controller, 135
Comparison with vector control, 82, 204
Current controller, 107
Cycle times, 860
Encoderless operation, 137
Properties, 82, 204
Speed controller, 91
Torque setpoint, 96
Torque-controlled operation, 93
Travel to fixed stop, 176
Tuning, 135
U/f control, 131
Vdc control, 167
Voltage precontrol, 193
Servo current controller
Current and torque limitation, 107
Current control, 107
Current controller adaptation, 107
Setpoint addition
Servo control, 87
Setpoint channel
Direction of rotation limiting, 70
Direction reversal, 70
Fixed speed setpoints, 64
Jog, 66
Main/supplementary setpoint, 65
Motorized potentiometer, 62
Ramp-function generator, extended, 73
Setpoint limitation, 71
Setpoint modification, 65
Skip frequency bands, 71
Setpoint modification, 65
Setpoint sources, 60
Setting the fault responses, 337, 343
Short-circuit test, 313
SINAMICS S120 Combi, 916
Sine-wave filter
Vector control, 317

Singleturn encoder, 388
Slip compensation, 300
SLM, 29
Smart Infeed closed-loop control, 50
Smart Line Module, 29
Smart Mode, 31
SMC30
  Frequency setpoint, 416
Software limit switch
  Limit traversing range, 469
Speed actual value
  Open, 230
Speed actual value filter, 242
Speed controller, 219
  Free Kp_n/Tn_n adaptation, 221
  Limits, 91
  Properties, 91
  Reference model, 224
  Speed controller adaptation, 91
  Speed controller precontrol, 224
  Speed setpoint filter, 89
  Speed-dependent Kp_n/Tn_n adaptation, 221
Speed limitation
  Droop, 228
Speed raw value
  Freezing, 371
Speed setpoint filter
  Servo, 89
SS1
  Basic Functions, 648
  Safe Stop 1, 648
  Safe Stop 1 (Basic Functions), 648
  With external stop (Basic Functions), 650
  With OFF3 (Basic Functions), 648
SS1E, 650
  SS1 with external stop (Basic Functions), 650
Stall power limit, 128
Stall power limiting, 128
Stall torque correction factor, 128
Standards, 631
Standstill measurement
  Motor data identification, 245
Startdrive
  Accepting the settings in the drive, 672
  Basic functions, 673
  STO, SS1 and SBC, 673
Starting against a closed brake
  Limits, 473
STO
  Basic Functions, 644
  Safe Torque Off (Basic Functions), 644
STOP A, 678
STOP F, 678
Stop response
  STOP A, 678
  STOP F, 678
Supported browsers
  Web server, 716
Switching operation
  Basic functions, 663
  Timing, 663
Switchover
  Fixed speed setpoints, 64
Synchronization (vector control), 272
Synchronous motor
  Synchronous reluctance motor, 216
Synchronous reluctance motor
  "Flying restart" function, 270
  Close-loop-controlled operation, 216
  Synchronous motor, 216
System responses
  Insufficient licensing, 761
System runtime, 360
System sampling times, 834
  CUA31 / CUA32, 861
  DCC, 860
  EPOS, 860
  Mixed operation, 859
  Servo control, 854
  U/f control, 858
  Vector control, 856

T

Technological application
  SERVO, 86
  Vector, 208, 295
Technology controller, 425
Technology function
  Friction characteristic, 355
Terminal Module 41
  Commissioning, 405
  Example, 404
  Limit frequencies, 403
  SIMOTION mode, 396
  SINAMICS mode, 397
  Zero mark synchronization, 402
Test of switch-off signal paths, 640
Test pulse evaluation, 313
Thermal motor monitoring
  Thermal motor models, 599
Three-winding transformer, 510
TLS, 731
TM120, 613

TM150
Forming groups, 618
Sensor failure, 619
Temperature sensor types, 616
TM31, 612
TM41, 396
Referencing modes, 399
SIMOTION mode, 396
SINAMICS mode, 397
Zero mark emulation, 399
Tolerant encoder monitoring, 368
Topology, parallel connection with an auxiliary drive, 529
Torque control, 232
Extended, 442
Torque limitation, 235
Torque limits
OFF3, 354
Torque setpoint
Limits, 96
Torque-controlled operation
Servo control, 93
Transport Layer Security, 731
Travel to fixed stop, 176
Traversing blocks, 491
Traversing task
Rejecting, 492, 501

U

U/f control, 291
Servo control, 131
Slip compensation, 300
U/f control output frequency
Derating, 418
Underlicensing, 776
Unit changeover, 307
Update of the backup copy, 827

V

Vdc control
Servo control, 167
U/f control, 302
Vector n/m control, 237
Vdc_max control
Vector n/m control, 239
Vdc_min control
Servo, 168
Vector n/m control, 238
Vector U/f control, 303
Vector
Pole position identification, 253
Vector control
Automatic restart, 328
Bypass, 278
Comparison with servo control, 82, 204
Current setpoint filter, 241
dv/dt filter compact plus Voltage Peak Limiter, 323
dv/dt filter plus Voltage Peak Limiter, 321
Motor data identification, 244, 245
Motor reactor, 319
Properties, 82, 204
Pulse frequency wobbling, 325
Rotating measurement, 244, 248
Shortened rotating measurement, 250
Sine-wave filter, 317
Speed actual value filter, 242
Torque control, 232
Torque setpoint, 210
With encoder, 218
Without speed encoder, 209
Vector drives
Voltage Sensing Module, 274
Voltage boost
Servo, 132
Vector, 296
Voltage precontrol, 193
Voltage Sensing Module, 32
VSM
Commissioning, 275
Identification via LED, 275
Vector drives, 274
VSM10, 32

W

WEB License Manager, 776, 783
Web server
Access rights, 715, 720
Automatic logout, 727
Changing the password, 757
Configuration, 714
Configure IP connection, 759
Configuring user accounts, 756
Creating a parameter list, 747
Data backup, 753
Data transfer, 714
Defining a new password, 757
Deleting the password, 758
Enter a new password, 758
Initial login, 723

Login, 726
Logout, 727
Protection against power failure during the firmware update, 409
Restoring the data backup, 754
Restoring the factory setting, 755
Saving data in a non-volatile fashion, 730
Support information, 730
Supported browsers, 716
User, 720
Wind-up effect
DSC, 173
Wiring rules
DRIVE-CLiQ, 845
Write protection
Activating, 805
Deactivating, 806

Z

Zero mark tolerance, 370

Additional information

Siemens:
www.siemens.com

Industry Online Support (service and support):
www.siemens.com/online-support

IndustryMall:
www.siemens.com/industrymall

Siemens AG
Digital Industries
Motion Control
P.O. Box 3180
D-91050 Erlangen
Germany

Scan the QR-Code for product information