



User Manual

# 1300 Series A2

## Class II, Type A2 Biological Safety Cabinet

Operating Manual 7001344 Rev. 5

Chinese translation starts on page 70 of this document

Visit us online to register your warranty
www.thermoscientific.com/labwarranty

Thermo SCIENTIFIC

Dear User,

Congratulations on your purchase of a Thermo Scientific 1300 Series Class II, Type A2 biological safety cabinet. Your six-foot 1300 Series A2 biological safety cabinet has been certified in accordance to YY 0569-2005, and your four-foot 1300 Series A2 biological safety cabinet has been designed in accordance to SFDA standards. These cabinets were all designed to protect the user, the environment, and your research from harmful substances and cross-contamination. This user manual provides instructions on how to use the 1300 Series A2 most effectively and safely.

The 1300 Series A2 offers a unique range of product features that will enhance your safety and improve overall operating efficiency. Should you have any questions on using this product, or need further explanation of any of it's features, contact your local distributor.

This manual covers the models shown below:

| | | |
|---|---|---|
| 1344 | 1.2 m | 230 V, China |
| 1349 | 1.8 m | 230 V, China |
| 1374* | 1.2 m | 230 V, China |
| 1379* | 1.8 m | 230 V, China |

** Includes cabinet, adjustable height stand, UV light and armrest.*

**Registration Number: SFDA(I)20113543141**

**Registration Standard Number: YZB/USA 3532/2011**

**MANUAL NUMBER 7001344**

| REV | ECR/ECN | DATE | DESCRIPTION | By |
|---|---|---|---|---|
| 5 | ECNM-001017 | 06/24/2020 | Added Maintenance Notes in page 6-1. | TFI |
| 4 | 31573 | 10/2/14 | Added FPM in Testing Information (pg 8-10) | ccs |
| 3 | 28381 | 3/2/12 | Updated to current production | ccs |
| 2 | 27594 | 10/20/11 | Revised per B Bruker/George Hou | ccs |
| 1 | 27058/HD-1722 | 2/10/11 | Titled General Notes--Safety, added intended use info, noise db to 65 from 63 | ccs |
| 0 | -- | 2/16/10 | Original | ccs |




**Important** Read this instruction manual. Failure to read, understand and follow the instructions in this manual may result in damage to the unit, injury to operating personnel, and poor equipment performance. ▲

**Caution** All internal adjustments and maintenance must be performed by qualified service personnel. ▲

Material in this manual is for information purposes only. The contents and the product it describes are subject to change without notice. Thermo Fisher Scientific makes no representations or warranties with respect to this manual. In no event shall Thermo be held liable for any damages, direct or incidental, arising out of or related to the use of this manual.

© 2020 Thermo Fisher Scientific. All rights reserved.

# General Notes **Safety**



Important operating and/or maintenance instructions. Read the accompanying text carefully.



Potential electrical hazards. Only qualified persons should perform procedures associated with this symbol.



Equipment being maintained or serviced must be turned off and locked off to prevent possible injury.



Hot surface(s) present which may cause burns to unprotected skin, or to materials which may be damaged by elevated temperatures.



The agents used and/or work performed in this cabinet may be hazardous to your health and the health of others. (The cabinet must be used properly. You must read the operators manual before using.)



Marking of electrical and electronic equipment, which applies to electrical and electronic equipment falling under the Directive 2012/19/EU (WEEE) and the equipment that has been put on the market after 13 August 2005.

This product is required to comply with the European Union's Waste Electrical & Electronic Equipment (WEEE) Directive 2012/19/EU. It is marked with the WEEE symbol. Thermo Fisher Scientific has contracted with one or more recycling/disposal companies in each EU Member State European Country, and this product should be disposed of or recycled through them. Further information on Thermo's compliance with this directive, the recyclers in your country and information on Thermo Scientific products will be available at www.thermofisher.com.

- ✔ Always use the proper protective equipment (clothing, gloves, goggles, etc.)
- ✔ Always dissipate extreme cold or heat and wear protective clothing.
- ✔ Always follow good hygiene practices.
- ✔ Each individual is responsible for his or her own safety.

Intended use:

The 1300 series Class II, Ttype A2 biological safety cabinet can be used in clinical laboratories, is designed to protect the user, the sample and the environment, for users to operate the sample inside the chamber through the front operation window.

Depending on the hazard level of the agents involved, the operator must prepare in writing appropriate decontamination procedures for the device and the accessories used in the sample chamber.

Unintended use:

The unit must not be operated as a Class II safety cabinet, if:

- no repeat test is performed after changes to the installation conditions or after modifications to the technical system,
- the alarm system of the device has issued a failure message and the cause for the failure has not been repaired.

The alarm system must not be tampered with or disabled. If alarm system components have been removed or disabled for service or repairs, the unit must only be released for operation if all alarm system components are functioning again properly.

The filters installed in the device are not capable of separating gaseous substances. Therefore, do not work or store substances in the device:

- which in quantity or concentration are toxic,
- if a reaction with other substances may result in hazardous toxic concentrations or formation of toxic gases,
- that may form combustible or explosive mixtures in combination with air.

# Table of Contents


**General Notes** . . . . . **iii**
Safety . . . . . iv

**Section 1** **Description** . . . . . **1-1**
Safety Systems . . . . . 1-2
HEPA Filters . . . . . 1-4
Paper Catch Grids . . . . . 1-4
Control Panel . . . . . 1-5
Use of the Window . . . . . 1-6
Unit Interface . . . . . 1-7
Chamber Lighting . . . . . 1-8
UV Lights . . . . . 1-9
Work Area . . . . . 1-9

**Section 2** **Installation** . . . . . **2-1**
Optional Exhaust Transition . . . . . 2-2
Exhaust System Accessories . . . . . 2-2
Moving the Unit . . . . . 2-4
Service Valve Connections . . . . . 2-5

**Section 3** **Start-Up** . . . . . **3-1**
Unit w/wo Stand . . . . . 3-1
Unlock Counterweight . . . . . 3-3
Power Connection . . . . . 3-4
Installation Tests . . . . . 3-5

**Section 4** **Operation** . . . . . **4-1**
Calibration Procedure . . . . . 4-2
Unit Start-Up . . . . . 4-3
Operating Modes . . . . . 4-3
Loading the Chamber . . . . . 4-5
Error Messages . . . . . 4-5
Working Recommendations . . . . . 4-6
Procedure Interrupt . . . . . 4-7
Unit Shut-down . . . . . 4-8
Unit Disposal . . . . . 4-8

**Section 5 Cleaning / Decontamination . . . . . 5-1**
Wipe/Spray Disinfection . . . . . 5-1
Pre-disinfection . . . . . 5-2
Cleaning . . . . . 5-2
Final Disinfection . . . . . 5-2
UV Disinfection after Wipe/Spray Disinfection . . . . . 5-3
Disinfection with Formaldehyde . . . . . 5-4
Clean Exterior Surfaces . . . . . 5-4
Clean Window . . . . . 5-4
Clean the Drain Pan . . . . . 5-4
Clean the Paper Catch Grid . . . . . 5-5

**Section 6 Maintenance . . . . . 6-1**
Service . . . . . 6-2
Sample Chamber Lights . . . . . 6-2
Optional UV Lights . . . . . 6-2
Replacements and Repairs . . . . . 6-3
Unit Disposal . . . . . 6-3

**Section 7 Specifications . . . . . 7-1**

**Section 8 Certification Testing . . . . . 8-1**

**Section 9 Data Log/Warranty . . . . . 9-1**

# Section 1 Description

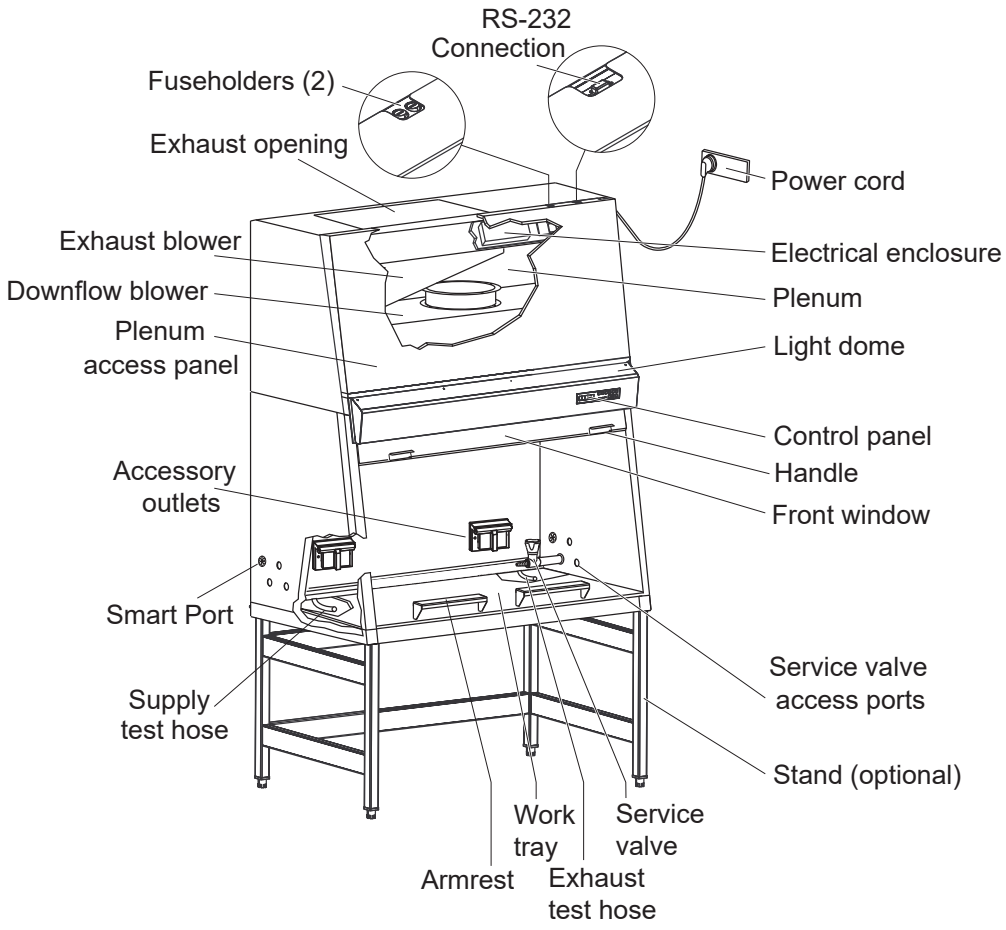


**Figure 1-1.** Unit Components

The plenum assembly consists of a plenum for the downflow blower and a plenum for the exhaust air blower. Each blower includes a filter. The exhaust air is discharged through an opening in the top of the cabinet.

Chamber lighting includes two fluorescent bulbs.

The optional, factory-installed UV light is installed in the ceiling at the front of the sample chamber.

Three service valve access ports are located on each side panel. When installing service valves, remove the center of the port plugs at the perforations.

The optional stand is may be ordered in two configurations; a manually adjustable from 750 mm to 950 mm working height, and a fixed 864 mm working height with attached casters..

A stainless steel one-piece work surface is standard. Optional armrests ensure a comfortable working position for the user and minimize blockage of airflow at the front grille.

Internal outlets, provided as the power source for accessories, are provided standard, a single outlet on each side.

Test hoses (aerosol challenge ports) are located under the work tray. The supply plenum hose is located on the left and the exhaust plenum hose on the right.

**Note** Do not remove the caps of the two test hoses to check for supply and exhaust airflow. ▲

## Safety Systems

**Negative pressure air system**

A negative pressure air system combines with HEPA filters in the supply and exhaust airflow for personal and product protection.

**Personnel protection**

Inflow air along the entire working opening at a constant high velocity prevents leakage from the work opening of the chamber.

Exterior air pressure being higher than the internal air pressure creates negative pressure, ensuring containment in case of cabinet leakage.

**Product protection**

Steady airflow within the air system ensures constant downflow, allowing the HEPA filters to remove contaminants so that the samples are always surrounded by ultra-pure air. Harmful particles are not carried over the sample chamber (protection from cross-contamination).

**HEPA filters**

The downflow air within the chamber and the exhaust air are cleaned by HEPA filters.

**Safety lockout**

To protect from UV radiation, the optional UV light will not turn on if the front window is open. While the UV light is on, the front window is closed and locked. The closed window blocks out the UV rays. Opening the window will cause the UV light to turn off.

## Safety Systems (continued)

**Digital Airflow Verification (DAVe)**

Independent monitoring of inflow and downflow air velocities guarantees that product and personnel protection remain uncompromised. Airflow monitoring determines the velocity of the airflow in the sample chamber as well as the inflow velocity of air through the exhaust opening. As soon as airflow velocities rise above or fall below a specified safety value, an audible and a visual alarm is activated.

**Window position monitoring**

The position sensors detect the size of the front window opening and indicate whether the window is open to the specified work position, closed (energy saving) or in an unsafe intermediate position.

**Thermo Performance Factor**

The Thermo Performance Factor (PER) is a value that indicates the safety status of the cabinet. This value is calculated from data determined by HEPA filter loading, airflow status and values captured during certification. This data is entered into a parameter list of the control software and interconnected. The result is indicated on the display by LEDs.

On certification by qualified personnel with a new HEPA filter, the performance factor of the unit is indicated by green-green LEDs. As the unit ages with use, the colors change. Red-red is unacceptable and the unit should not be used. Any questions as to the safety of the unit should be resolved before use.

## HEPA Filters

The filter system consists of two HEPA filters for downflow (supply) and exhaust air.

Room air is drawn into the sample chamber through the work position window opening. The room air is drawn into the negative pressure drain pan air duct, then pulled into the air plenum in the top portion of the cabinet. The room air is mixed with recirculating HEPA filtered air from the chamber, and filtered proportionally by the downflow and exhaust filters. The filtered air is then supplied as ultra-pure air into the sample chamber of the unit, and exhausted as ultra-pure air into the room environment, or into an external exhaust system via an exhaust transition.

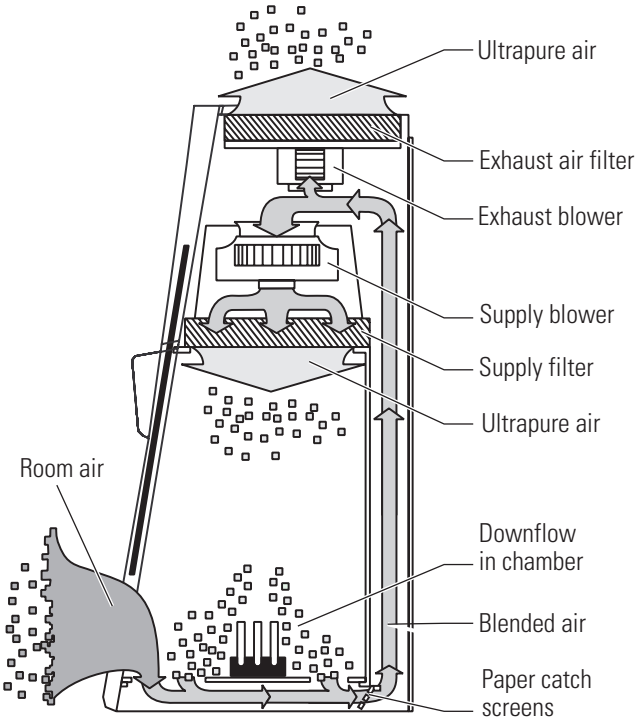


**Figure 1-2.** Airflow Filtering System

## Paper Catch Grids

Sectional paper catch grids are installed beneath the work tray in the air duct between the inner and outer back wall of the unit. These grids prevent large items such as paper towels and tissues from entering the plenum where they may impair the function of the blowers or the filters. The grids can be easily removed for cleaning.

# Control Panel

The control panel is located on the front of the cabinet and consists of keys, status indicators and a numerical display.

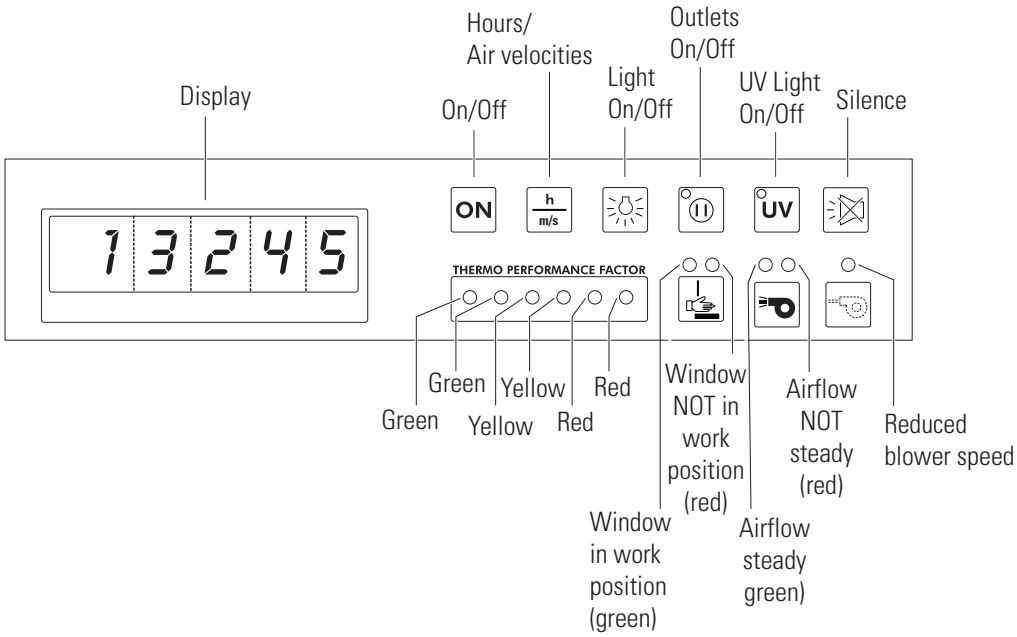


**Figure 1-3.** Control Panel

The display with its 5-digit panel shows the following information, regardless of the activated operating function:

- operating hours of the device
- downflow and inflow air velocities
- remaining time of the UV disinfection routine

The keys turn functions on or off.

Status indicators show:

- window work position
- airflow
- reduced blower speed
- Thermo Performance Factor

## Use of the Window

The sample chamber is accessible through various positions of the front window. The working position of the window is a 250 mm opening. For loading the chamber, the window opens fully. For decontamination and energy saving, enter into Night-Set-Back mode by closing the window. When the window is closed, the blower speed is reduced, minimizing energy consumption and noise emittance without compromising particulate containment inside the work chamber.

**Note** The working and loading window positions are indicated on the user interface, as controlled by micro switches and displayed by status indicators on the control panel. ▲

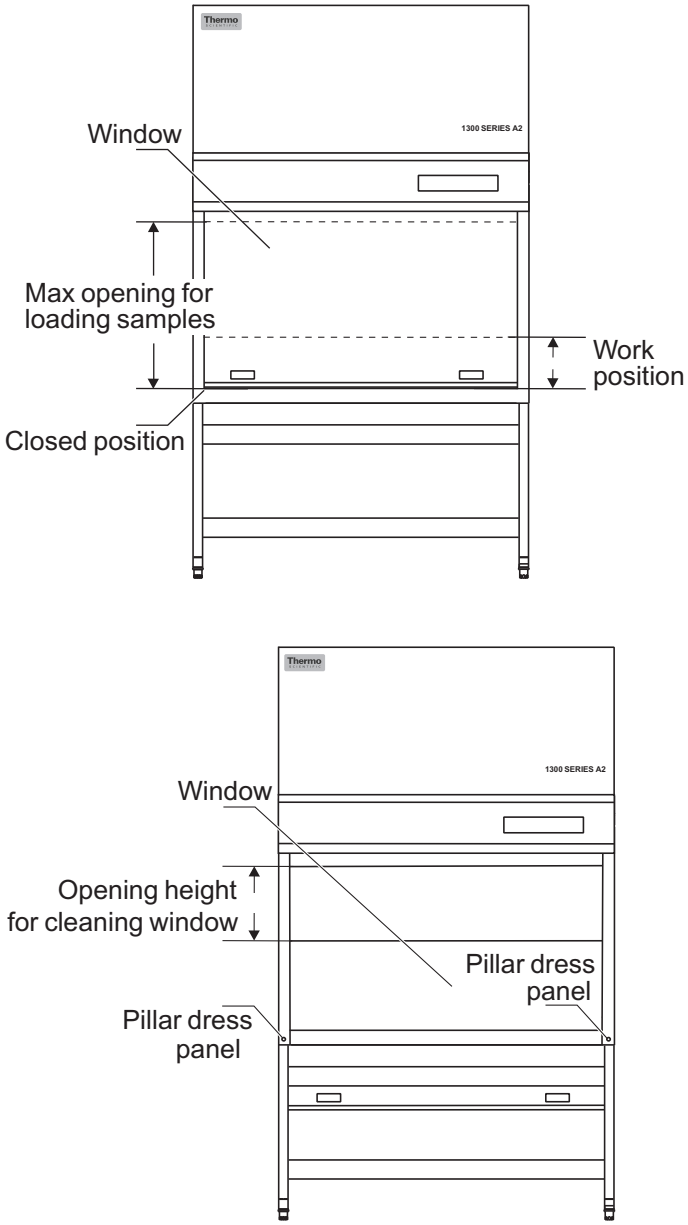


**Figure 1-4.** Window Openings

## Use of the Window (continued)

To position the window at the operating height (250 mm opening), move it to the area of the top 'dimple' (Fig. 1-5) and watch for the GREEN sash position height indicator to illuminate (Fig. 1-6). If the window is moved from the operating height, the sash height indicator will turn RED.

To place the window in the closed or reduced mode position, move it to the area of the lower 'dimple' (Fig. 1-7) and watch for the BLUE reduced mode indicator to illuminate (Fig. 1-8). If the window is not positioned correctly, or is moved from the closed position, the BLUE indicator will be extinguished. When the BLUE reduced mode indicator is not illuminated, the unit will not operate in reduced mode, and the optional UV light will not function.




**Figure 1-5.** 250mm Opening (Work Position)




**Figure 1-6.** Lighted Green LED




**Figure 1-7.** Fully Closed Position (UV, if applicable)




**Figure 1-8.** Lighted Blue LED

## Use of the Window (continued)

Our patented-pending SmartClean™ window design easily lowers below the work position for replacing the sample chamber light bulbs.

**Caution** If the front window jams or is sluggish to move, do not use force! Contact your local distributor immediately. Do not attempt to repair this problem. ▲

## Unit Interface

The standard unit includes accessory outlets, service valve access ports, an RS-232 connection and a remote alarm connection.

The power cord to be connected to the power source is located on the upper back of the cabinet.

The accessory outlets (max 5A) are located on the interior chamber back wall.

On top of the cabinet are the two fuseholders for the 5A circuit breaker fuses and an RS-232 connection (signal source, not customer interface).

Service valve access ports are located on each side of the cabinet. To use these ports, remove the center perforation. Service valves are available as optional accessories.

The remote alarm accessory can be used for external exhaust air system controls, or a failure reporting system.

**Warning** If a gas burner is to be operated in the sample chamber, an appropriate shut-off valve for the gas supply must be installed. Use only laboratory safe burners in the sample chamber. ▲

## Unit Interface (continued)

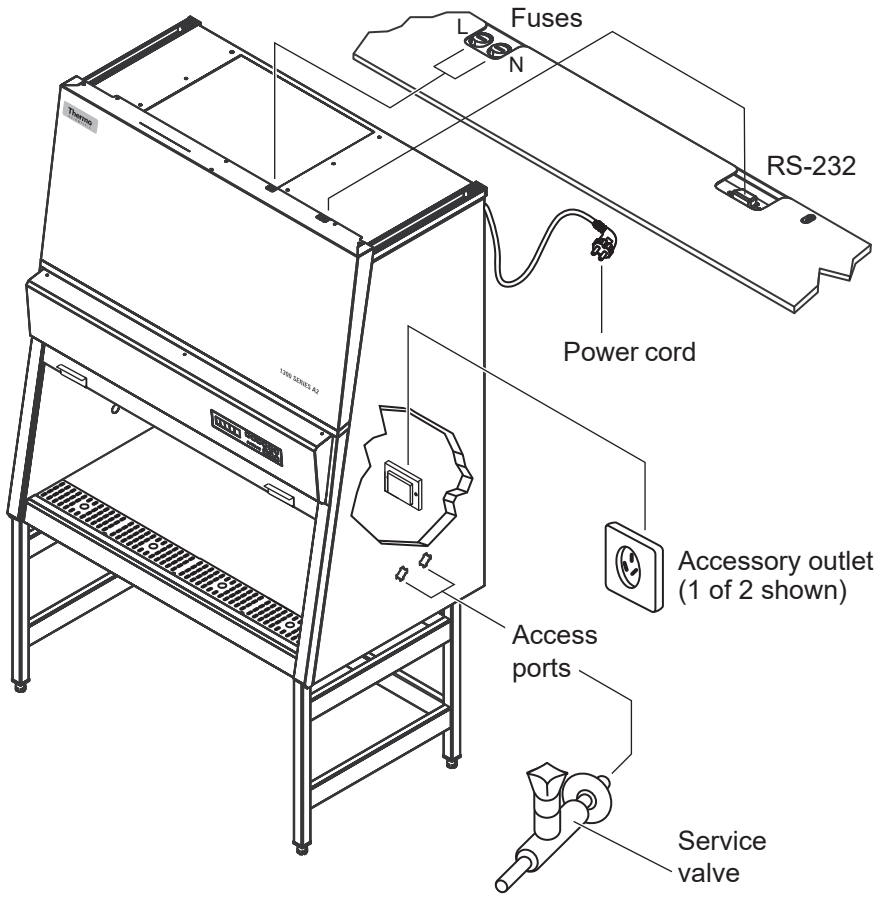


**Figure 1-9.** Interfaces (2 of the 4 access ports on this side are shown)

## Chamber Lighting

The Thermo Scientific 1300 Series A2 offers a bright workspace for a more comfortable working environment. Models with coated rear and side walls resist glare and make it easier for the user to work safely.

Lighting for the sample chamber includes two fluorescent bulbs. The bulbs are installed behind the light canopy.

## UV Lights

The optional, factory-installed UV light is installed at the top of the front section of the sample chamber.

The operating time of the UV light is preset for 1 hour. The UV disinfection procedure can be started by pressing and holding the "UV" key on the control panel, with the window in the closed position. If the window is opened, the procedure is immediately cancelled.

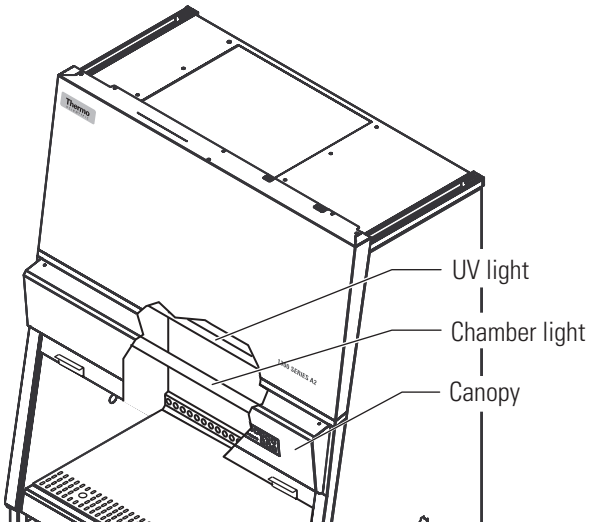


**Figure 1-10.** Lights

**Note** To protect from UV radiation, the UV light can only be turned on when the window is completely closed. ▲

## Work Area

The single piece work tray is provided with the cabinet. It is placed onto the frame above the sample chamber drain pan. It can be removed by lifting up, using the large holes in the work tray.

The working area for optimal product protection extends over the entire width and depth of the work tray. The two optional armrests are positioned in the center of the working area 200 mm from each other. To attach the armrests, insert into the first perforated track of the work tray.

**Warning** Work safety is assured only if the armrests are used correctly! ▲

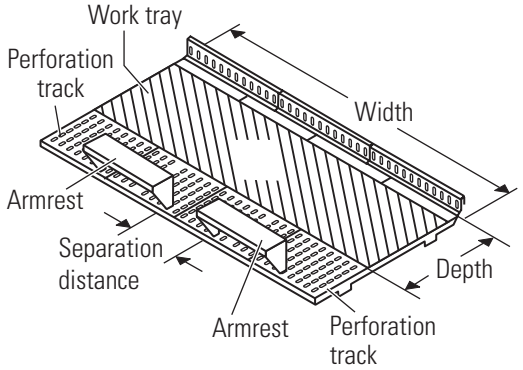


**Figure 1-11.** Work tray

# Section 2 Installation

The operational safety and proper function of the unit depend on the location where it is to be operated. The cabinet should be operated only in the ambient conditions listed below.

- Up to 2000 m above sea level.
- Power outlet accessible to authorized personnel only. Ideally, the outlet should be installed above the biological safety cabinet. The power cord is the mains disconnect.
- Location capable of supporting the weight of the device and non-flammable.
- If the factory-approved stand is not purchased, the holding device must be rated for twice the cabinet weight.
- Drain valve protrudes beneath the unit on the left side. Allow room for this when placing unit on anything other than factory-approved stand.
- Adequate room height. For devices that are not connected to an exhaust system, the distance between the exhaust air opening at the device and the room ceiling must be at least 21.6 cm.
- Equipped with an appropriate ventilation system.
- Room temperature between 10°C and 40°C.
- Relative humidity must not exceed 80%, up to 31°C and decreasing linearly to 50% at 40°C.
- For indoor use only.

Room ventilation should preferably be a ventilation system that complies with the national requirements for the application.

The inlet air and exhaust air openings of the room ventilation must be located so that drafts do not impair the function of the biological safety cabinet air system.

When positioning the cabinet, make sure the counterweight on the back of the unit can move freely. The minimal distance to the wall or adjacent objects should be 8.0 cm, unless upper wall brackets are used.

**Note** For installation, location and space requirements of type A2, Class II cabinets, refer to Annex A of YY0569-2005. ▲

## Optional Exhaust Transition

The test conditions according to YY 0569-2005 were performed with the standard version of the safety cabinet, without exhaust system accessories.

An available accessory for the biological safety cabinet exhaust system is an exhaust thimble connection for the connection to an on-site exhaust system with blower.

## Exhaust System Accessories

The exhaust system components are installed to the exhaust opening on top of the cabinet. The threaded inserts for the retaining screws are pre-installed in the unit. The gap on the exhaust transition should be nominally set at 50 mm (2 in.).

Installation on a 1.2 m model:

1. Turn the unit off and disconnect it from the power source.
2. Thoroughly clean the surfaces around the exhaust opening and of the accessory to be installed, to ensure that they are free of debris.
3. Apply sealant to the contact surfaces.
4. Secure the accessory by tightening the supplied retaining screws (M5) wrench-tight.
5. Using the adjustment nuts on the sliding panel, set the gap height to an opening of 2 inches.
6. Remove any excess sealant.

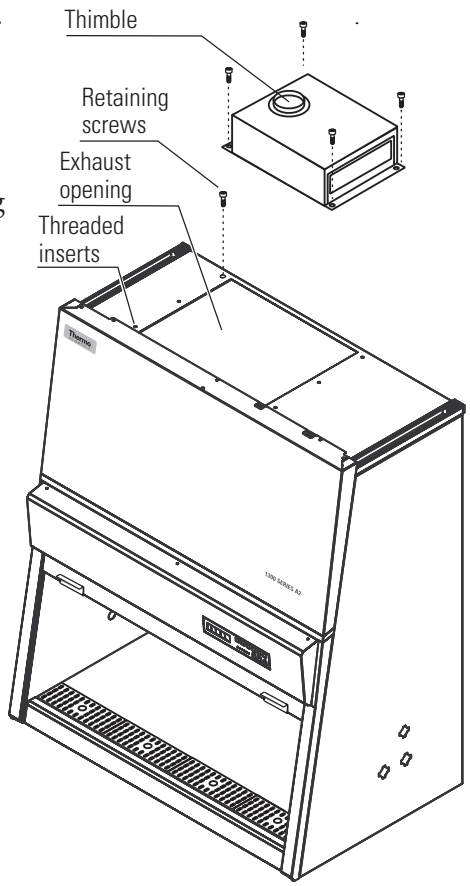


**Figure 2-1.** 1.2 m Thimble

## Exhaust System Accessories (continued)

The exhaust thimble connection is installed to the top of the cabinet using an additional adapter. The threaded inserts for the retaining screws of the adapter are pre-installed to the top of the cabinet.

Installation on a 1.8 m model:

1. Turn the unit off and disconnect it from the power source.
2. Clean the contact surfaces around the exhaust opening, and the upper and lower contact surfaces of the adapter thoroughly to ensure that all grease and dust residue are removed.
3. Secure the adapter to the pre-installed threaded inserts on top of the cabinet using the supplied four retaining screws. Tighten the screws hand-tight.
4. Secure the accessory by tightening the supplied retaining screws (M5) wrench-tight.
5. Using the adjustment nuts on the sliding panel, set the gap height to an opening of 2 inches.

### Connecting Sleeve

1. Place the connecting sleeve onto the connecting opening of the accessory and secure it with the screws.
2. Fit the connecting pipe (200 mm) of the on-site exhaust air system to the connecting sleeve and seal with sealant.
3. Seal the unused connecting opening with the cover. Apply sealant to the cover, place the cover onto the connecting opening at the housing and secure it with the screws.

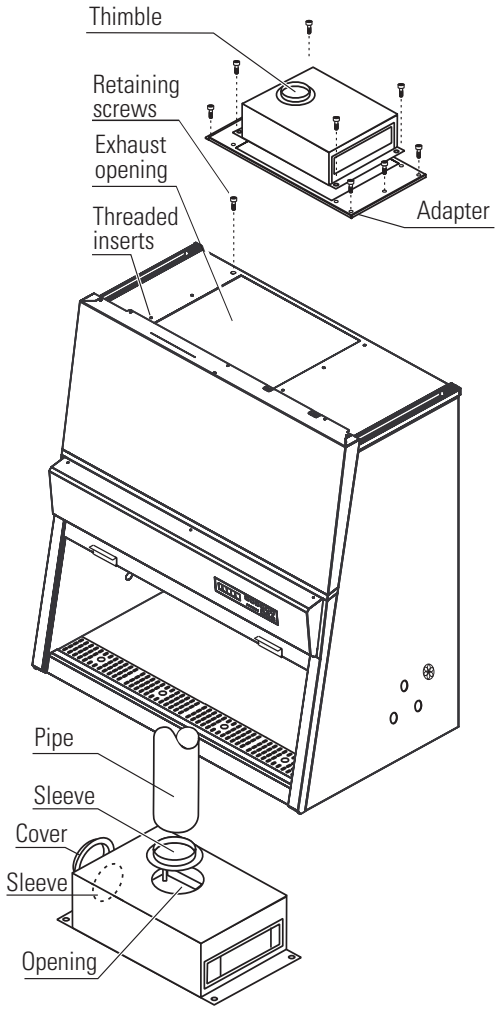


**Figure 2-2.** 1.8 m Thimble and Sleeve

## Moving the Unit

To prevent tilting, always transport the cabinet separate from the stand, using equipment capable of supporting the weight, even for a move within a building.

**Caution** When moving the unit, lift only at points shown in Figure 2-1.

**Caution** Do not allow the weight of the cabinet to rest on the drain pan! ▲

**Warning** The weight of the window is balanced by the counterweight on the back of the cabinet. Do not move the unit unless the counterweight has been locked in place with the shipping screws (see Figure 3-2). ▲

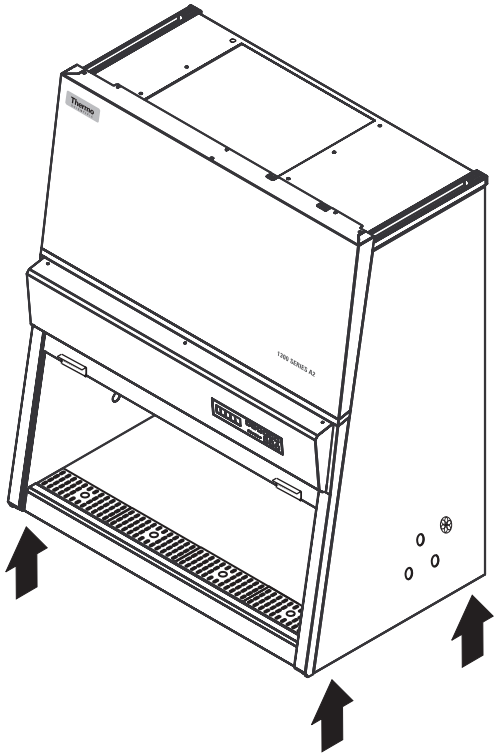

**Figure 2-1.** Lift points

## Service Valve Connections

Install the service valve(s) by removing the centers of the plug (brass) or piercing it at the pre-determined location (plastic).

Installation spacing on side of unit is indicated in Figure 2-3.

**Note** The plugs must only be used for the installation of service valves in accordance with the applicable national regulations. ▲

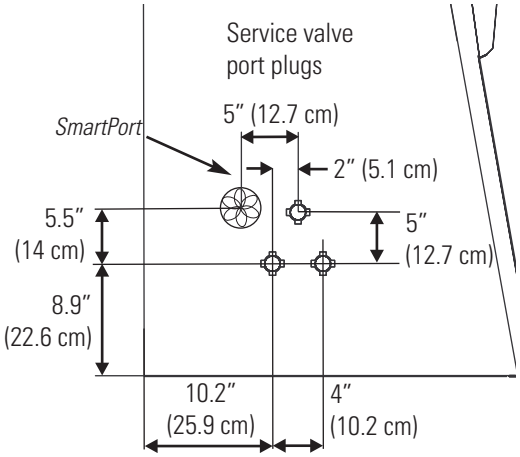


**Figure 2-3.** Valve Location

At each side panel, service valves can be installed through the four service valve port plugs.

1. Move the front window to the fully open position.
2. Turn the unit off and disconnect it from the power source.
3. Score the plug circularly at the pre-determined point (inside and outside). Remove the centers.
4. Referring to Figure 2-4 on the following page, slide the gasket and the bezel onto the threaded pipe of the service valve. Apply a thin bead of silicon to the inner flange of the service valve.
5. From inside the sample chamber, slide the service valve through the desired plug.
6. From the outside, slide the other gasket and the washer onto the service valve threaded pipe and apply a thin bead of silicon to the outer flange of the service valve.
7. Secure the service valve to the side panel using the nut.
8. Establish the connection to the supply line using a union nut.

**Note** If a service valve is removed, the service valve port plug should be re-installed. ▲

## Valve Connections (continued)

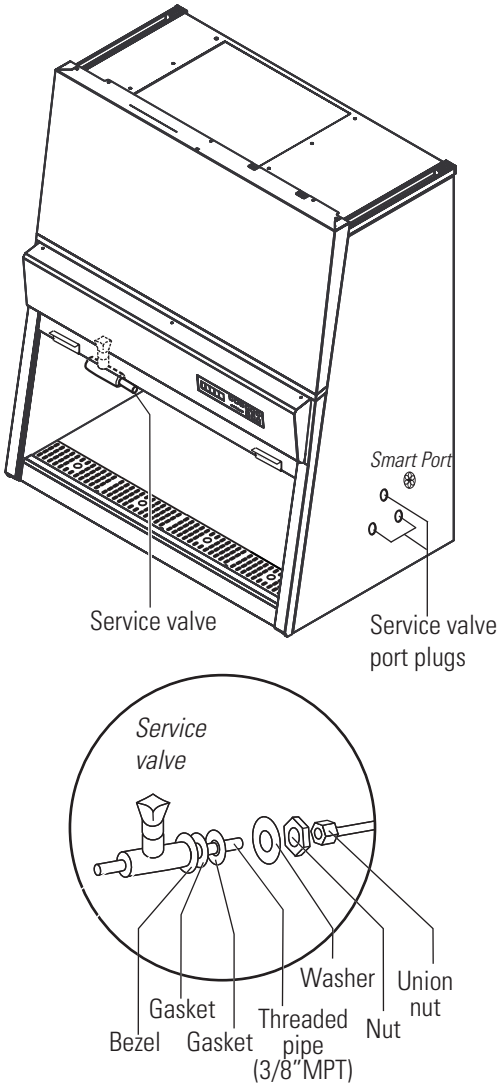


**Figure 2-4.** Valve Assembly and Installation

## Replace the SmartPort™ Before Decontamination

Before starting a decontamination procedure, install a new SmartPort grommet. Two replacements (P/N 114111) are shipped with each unit, or the 1910112 kit containing 4 grommets can be ordered.

SmartPort locations are indicated above (one on each side).

## Universal Piping Connections

Universal piping is a factory-installed option. The piping can be installed on either, or both, sides. Access points, depending on selected installation, are available on the top, side or bottom of the cabinet. Pipe threads are 1/4" FPT. Refer to illustration below.

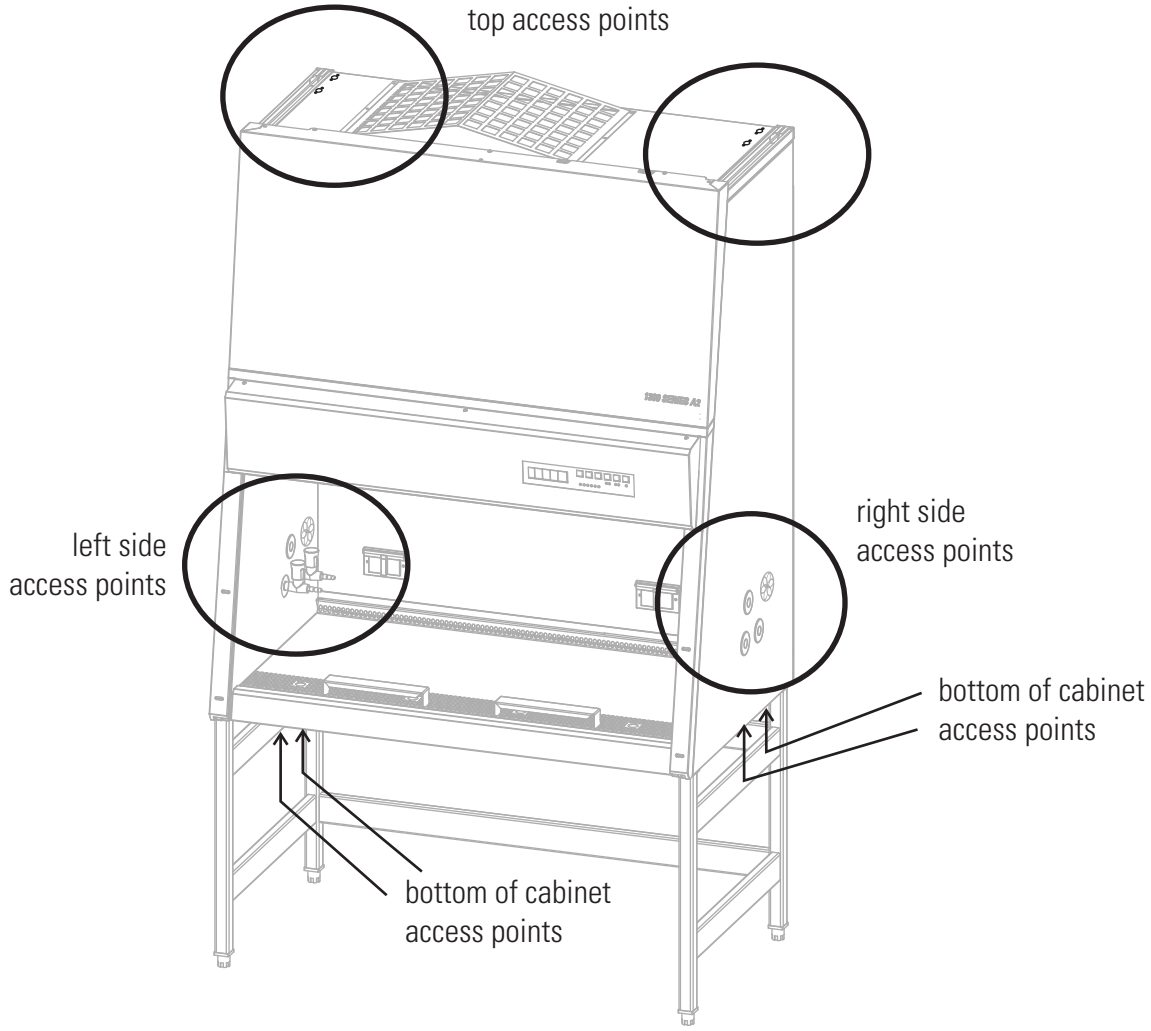


**Figure 2-6.** Possible Universal Piping Access Points

# Section 3 Start-Up

**Caution** Correct assembly and installation is essential for proper start-up and operation. ▲

## Assemble the Stand

For a unit without a stand, place the cabinet onto a stable structure capable of supporting two times the unit weight. Make sure the weight is not resting on the drain pan.

For a unit with a stand, first assemble the stand per the instructions included with the stand. Then fit the cabinet onto the stand. See steps below.

**Caution** Make sure each leveler is turned all the way in, to avoid bending an edge during installation. ▲

1. Locate the four telescoping legs in the side panel packaging. Install adjustable leveler from the hardware bag into the swaged end of the telescoping legs (if not already installed.
   **NOTE:** Make sure leveler is screwed all the way in, before installation. Using a hammer, tap the leveler into place.
2. Locate the left and right side panels. Install the telescoping leg assemblies into the side panels as shown in Figure 3-1.
3. The height-adjustable stand can be set to a height range of 680 - 880 mm. To set the stand to the desired height, pull the legs downward out of the channels to the desired height. Lock the height adjustment in place by installing two lockwashers/screws per channel to the leg.

**Note** All lockwashers are a wedgelock type. The wedges fit together with the smoother sides toward the unit and the screw. See Detail. ▲

4. Locate the two cross members from the packaging. Note they are packaged separately from the side panels. With the label on the crossmember to outside (Figure 3-1), install the crossmembers onto the retaining tabs of the side panels. Place lockwashers on the screws, then install all screws by hand, before tightening to secure in place.
5. To install the cabinet frame to the stand, insert four flatwashers and Allen screws loosely into the threaded holes at the bottom of the cabinet.

# Assemble the Stand (continued)

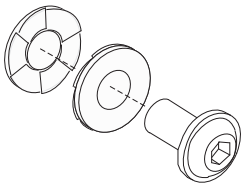

**Detail.** Order of Assembly

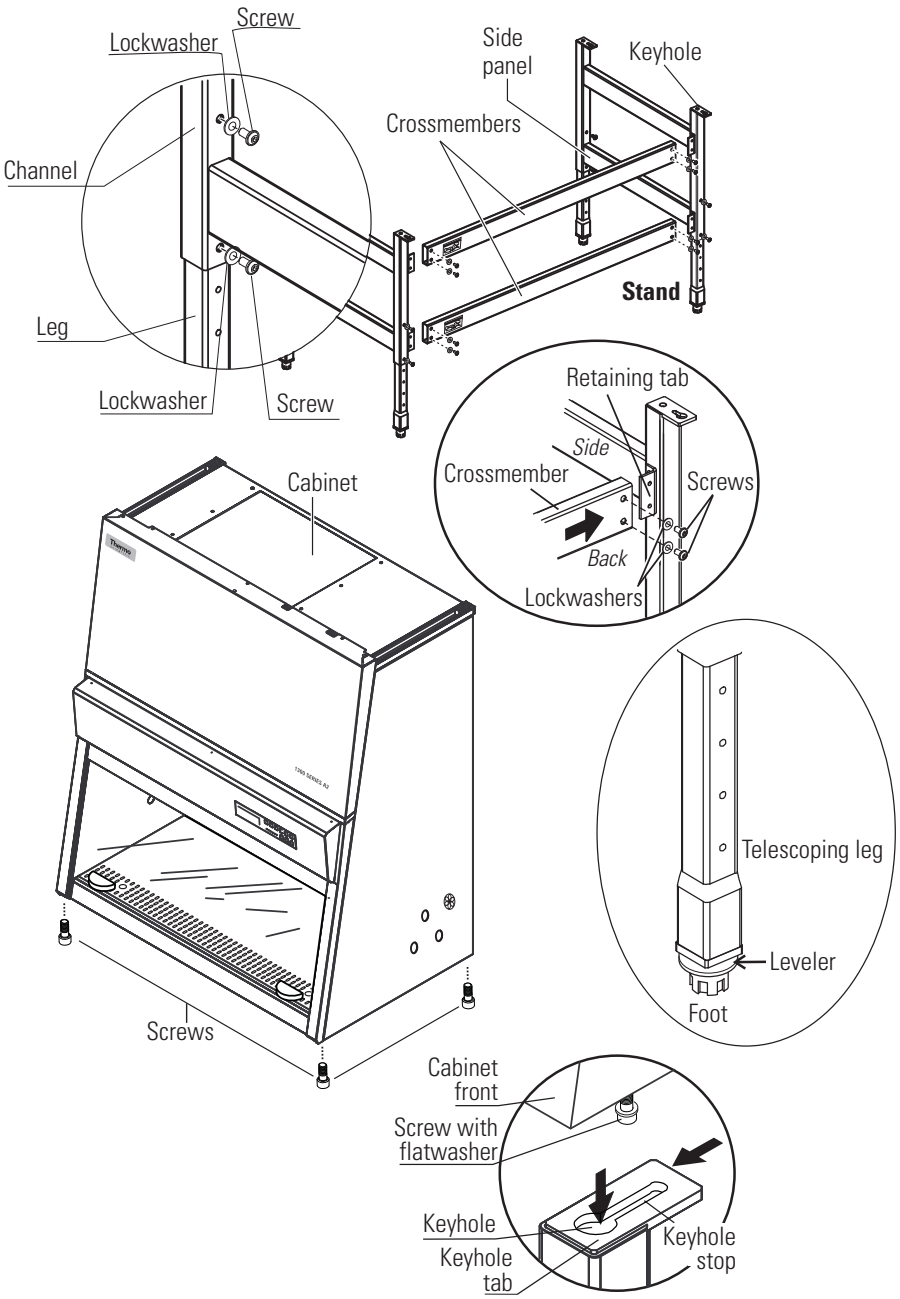


**Figure 3-1.** Stand Assembly

6. Place the safety cabinet onto the stand so that the Allen screws are routed through the holes of the keyhole tabs.
7. Slide the cabinet frame to the keyhole stop (Fig. 3-1).
8. Tighten the four Allen screws.
9. Level the cabinet (instructions follow in this section).

## Unlock Counterweight

The window counterweight is secured to the back of the cabinet to protect it from damage during shipping.

**Caution** The counterweight on the cabinet back compensates for the weight of the front window. Do not try to move the front window before the counterweight has been unlocked. ▲

**Warning** After unlocking, keep hands and fingers away from the motion range of the counterweight! ▲

To unlock the counterweight, remove the shipping screws (see location arrows in Figure 3-2) and retain them for future shipping needs. A Torx wrench is shipped in the manual bag for this purpose.

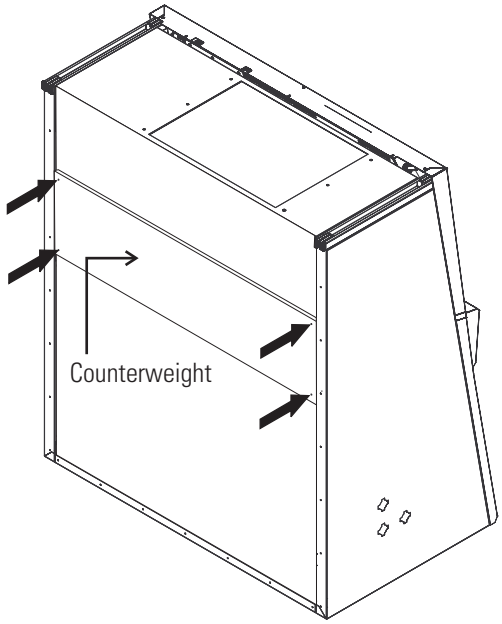


**Figure 3-2.** Unlocking the Counterweight

**Warning** One person should hold the counterweight while a second person removes the screws. This facilitates screw removal and avoids the possibility of stripping the screws. ▲

## Level the Cabinet

**Note** The cabinet should be leveled only after it has been located in the desired working location. ▲

For cabinets without a stand, place a bubble level onto the work tray surface and adjust the cabinet until the level indicates an absolutely horizontal position in all directions.

For cabinets with an optional stand, place a bubble level onto the work tray and adjust the four levelers of the stand using an open end or adjustable wrench until the bubble level indicates an absolutely horizontal position in all directions. Check from right to left, and from back to front.

## Power Connection

**Warning** Contact with electrical components can cause a lethal shock.

**Warning** Before connecting the unit to a power source, check plug and power cord for possible damage. Do not use damaged components to connect the unit to the power source! ▲

1. Before connecting the unit to the power source, verify that the voltage of the outlet matches the specifications on the cabinet nameplate. If the ratings given for voltage (V) and maximum current (A) do not match, do not connect the unit to the power source.

2. Connect the power cord to a properly grounded and fused outlet. The outlet must be fused separately, using a fusible link T15A or using a circuit breaker B15. If the configuration of the receptacle does not match the power plug, consult a qualified electrician to replace or install the correct receptacle.

3. Make sure that the power cord is routed away from the counterweight and cable guide. The left side of the cabinet has additional fastening points that can be used for routing the power cord.

4. Make sure that the power cord is not stretched or pinched.

To protect from accidental disconnection, the power source outlets should be located out of casual reach and be accessible only to authorized persons. Ideally, the outlet should be located above the cabinet to avoid accidental shut-off.

The power supply cord is the mains disconnect.

If the unit includes service valves (gas, water), the valves must be installed properly to ground to the unit's main ground.

On connection to the power source, place the window at the working position. Press and hold the ON button. A green LED in the display indicates power is being supplied to the cabinet. The cabinet is now ready for operation and can be operated using the control panel.

## Installation Tests

**Warning** Do not operate the unit before initial operation, installation and certification tests have been performed. ▲

The installation test must be performed in accordance with the specifications of YY 0569-2005. The cabinet may be operated as a Class II biological safety cabinet, in accordance with YY 0569-2005, if the unit functions listed below were verified and if the test results are within the safety value tolerances as specified in YY 0569-2005.

- Inflow velocity profile test
- Downflow velocity profile test
- HEPA filter leakage test
- Airflow smoke pattern test
- Site installation assessment tests
- A repeat test must also be performed annually, after repairs to the unit or after location changes (more than 50 mm).
- The operator should request a written test report from the authorized service technician.

**Warning** The operational safety of the unit, particularly the personal and product protection, are guaranteed only if all safety functions of the unit have been tested and approved. ▲

**Caution** Thermo will not warrant operational safety if the unit is operated without the required installation and certification test, or if these tests and repeat test are not performed by adequately trained and authorized personnel. ▲

**Caution** The initial operation with subsequent installation test does not include any decontamination measures. The sample chamber and any accessories required must be disinfected and cleaned in accordance with the hygiene guidelines set forth for the desired application. ▲

**Caution** Alarms on this unit are not factory-set. Set alarms to avoid product loss and ensure personnel safety. Refer to Certification section. ▲

# Section 4 Operation

The control panel has been divided into three functions; display, keys, status indicators.

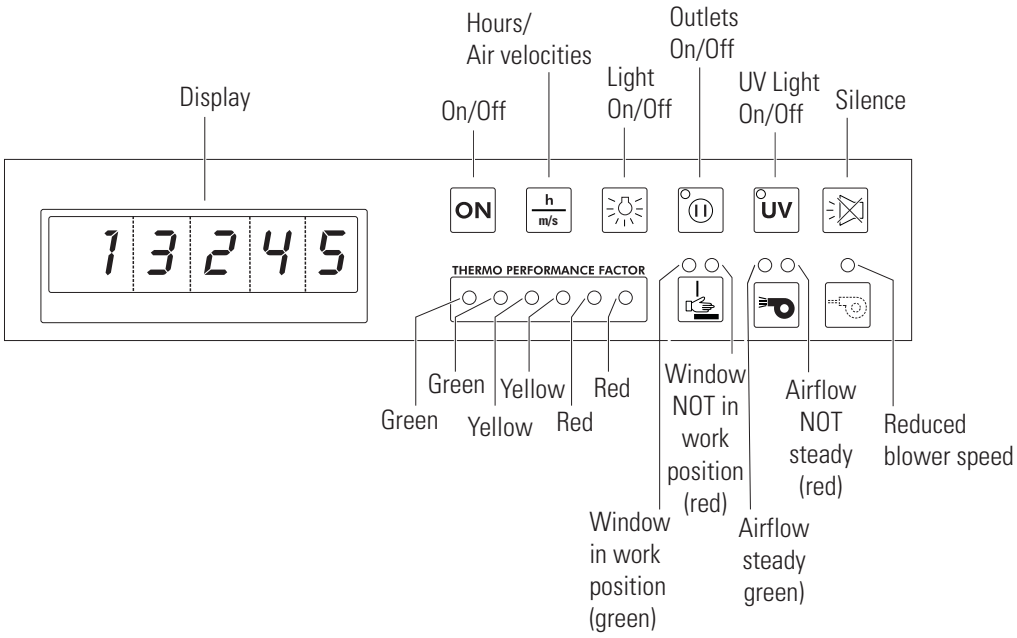


**Figure 4-1.** Control Panel Functions

The **display** shows the information below during each operation.

- during normal operation, the operating hours of the unit,
- during safe work mode, the downflow and exhaust air velocities*,
- with UV light (optional) timer on, the remaining disinfection time.

*Press the **Hours/Velocities key** to switch between the operating hours, and the downflow and exhaust air velocities in safe work mode (with window in the open, safe operating work position).

To enable (I) / disable (0) the alarm ringback function, follow the steps below.

In OFF mode, press and hold the **Hours/Air Velocities** key for approximately five seconds. The display momentarily shows the operating hours, then the switching state:

I = alarm acknowledge function enabled,

0 = alarm acknowledge function disabled.

**Light** key turns the sample chamber light on and off.

The **On/Off** key turns power to the unit on or off.

**Outlet On/Off** key turns power to the internal outlets on and off (the blue LED indicates that voltage is present).

**UV Light** key turns the optional UV light on and off. The yellow LED indicates the UV light has been activated. If the optional UV light is not installed, this key has no function.

This key also activates the UV disinfection procedure. During the procedure, the display alternates between dIS and the remaining preset time (see Section 5 to change this preset).

**Silence** key mutes the audible alarm.

## Unit Start-Up

1. To turn the unit on, press and hold the ON key until the blowers start (audible blower operation), the status indicators (LEDs) illuminate and an audible tone sounds.

**Note** A several seconds delay may occur between key actuation and unit response. ▲

2. Move the window to the work position (250 mm opening). The correct position is reached when the green LED “front window is in work position” illuminates. The side guide rails have markings that define the lower edge of the front window. These markings can be used as an additional orientation aid.

3. Wait until the green LED “airflow is steady” illuminates.

4. The unit is ready for operation.

## Operating Modes

The following are the operating modes for this unit.

- OFF mode
- Window open mode
- Working mode
- Standby mode
- UV mode

**Off mode** means the unit is in an idle state. The unit is turned off (blowers are off). The sample chamber light is enabled. The unit is connected to a power source. The power supply for the internal outlets is enabled when the blue LED “internal power supply on” is lighted.

**Window open mode** is the state in which the window is open and positioned outside of the 250mm working position. To install or remove accessories, the front window can be moved to the maximum open position. For cleaning, the front window can be lowered beyond the closed position (see Use of the Window, Section 1).

The air system blowers are switched on with the red LED “airflow not steady” lighted. The front window is not in the work position, with the red LED “front window not in work position” is lighted. The sample chamber light is enabled. The power supply for the internal outlets is enabled with the blue LED “internal power supply on” is lighted.

**Working mode** is active when the front window is in the working position (250 mm opening) and the air system is operating steadily. The green LEDs “front window is in work position” and “airflow steady” are lighted.

The markings on the side guide rails and the lower edge of the front window are at the same height with no audible alarm signal.

The sample chamber light and power for the internal outlets are enabled with the yellow LED “internal power supply activated” is lighted.

The RS-232 contact is open. The display shows operating hours, downflow velocity and exhaust air velocity.

**Standby mode** is the state in which the window is closed with the blower velocity reduced. The red LED “front window not in work position” and the blue LED “airflow reduced” are lighted.

The sample chamber illumination is enabled. The internal power supply in the sample chamber is enabled. The red LED “airflow not steady” and the blue LED “internal power supply activated” are lighted.

## Operating Modes (continued)

The biological safety cabinet can be turned off (OFF mode) by pressing and holding the ON key for five seconds until all LEDs are off.

**UV mode** means the UV light is on with a set timer running. The window must be in the closed position to protect against UV radiation. The light will not turn on with the window open.

The yellow LED "UV disinfection routine activated" is lighted until the preset time has elapsed. Then, the UV lights turn off automatically, and the status indicator turns off.

The sample chamber illumination is disabled in this mode, as well as the internal power source in the sample chamber.

## Loading the Chamber

1. Move the front window to the maximum opening position. This automatically switches the blowers to full speed.

2. Install needed work materials within the sample chamber work area. Avoid blocking the front air intake grille.

3. Move the front window to the work position (the green status indicator "Front Window in Work" position is illuminated) and wait until the airflow has stabilized (the green status indicator "Airflow Steady" is illuminated).

**Warning** Personal and product protection is ensured only if the airflow system of the device is working properly. If alarm system issues a failure message for more than a few minutes while the front window is in the work position, stop all applications that may jeopardize worker safety. ▲

4. Load the work tray with samples.

5. For work breaks or for extended experimental phases without manual intervention, switch the device to standby mode by closing the window.

## Error Messages

Failure messages are shown on the display as codes ER 3 to ER 7. If one of these codes appears on the display, contact Technical Services immediately.

To isolate the cause of the failure, perform the following tests.

- Check to see if the exhaust opening on top of the cabinet is blocked.
- Ensure that the in-house exhaust air system is activated, if applicable .
- Close doors and windows in the laboratory to prevent drafts.
- Turn off devices in the vicinity of the biological safety cabinet that cause air turbulence, or emit excessive heat.
- Open flames in the sample chamber may impair airflow conditions.

## Working Recommendations

The observance of work rules ensures a minimum of operational safety when handling the biological safety cabinet.

Before starting a procedure, take off all jewelry, put on required personal protective equipment (gloves, goggles, apron), and clean and disinfect the sample chamber surfaces at regular intervals.

During operation:

- Place samples only within the defined work area of the work tray.
- Do not place unnecessary items into the sample chamber.
- Use only disinfected and cleaned accessories for the work process.
- Do not cause air turbulence by quick hand, arm or body movements in the sample chamber or in front of the work opening.
- Do not place accessories into the sample chamber that cause air turbulence or emit excessive heat.
- Do not block air circulation at the ventilation slots of the work tray.

## Working (continued )

- A height-adjustable working chair with an adjustable seat back should be used during extended work periods at the cabinet.
- When the forearm rests on the armrest, is should be in a nearly horizontal position.
- When the upper leg is in a horizontal position, the angle between upper and lower leg should not exceed 90°.
- To compensate between the floor and sitting height, a footrest should be used. The minimal effective size of the footrest should be 450 x 350 mm). The slope should be adjustable to within a range from 5° to 15°. The adjustable height should extend to a minimum of 100 mm above the floor.

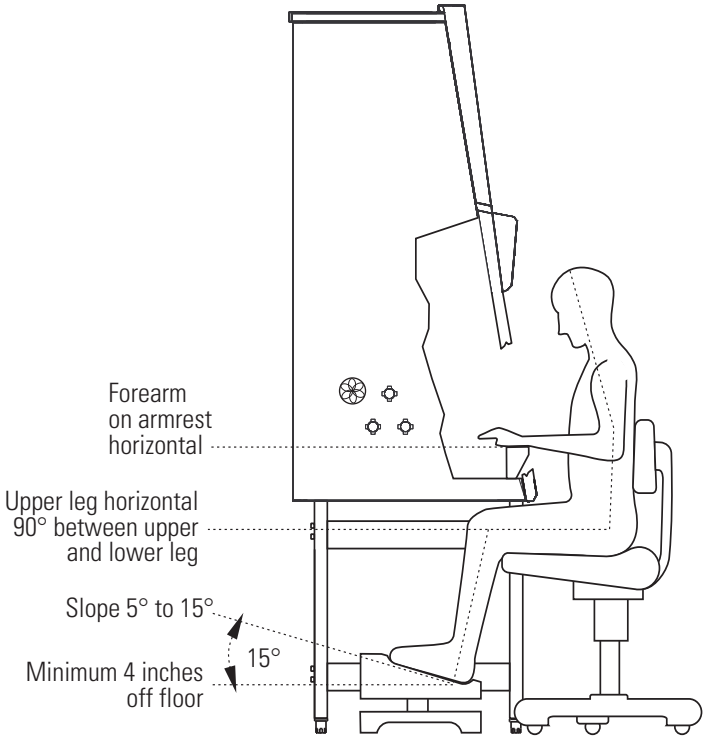


**Figure 4-2.** Sitting Posture

After completing a procedure,

1. Remove samples from the sample chamber and store them properly.
2. Clean and disinfect the sample chamber surfaces, including the work tray and the drain pan.
3. Clean and disinfect all accessories.

## Unit Shut-down

To shut down the unit:

1. Remove all samples from the chamber and store them properly.
2. Remove any accessories from the chamber, and clean and disinfect them.
3. Clean and disinfect the chamber surfaces, work tray, and drain pan.
4. Turn the unit to standby mode by first closing the window. Then press and hold the ON key until the indicators are off (the right indicator segment of the display shows a dot to indicate that voltage is present).

**Caution** For safety reasons, the blowers can be switched off only when the front window is closed. ▲

## Extended Periond Shut-down

If the device is not to be used or is to be stored for an extended period of time, it must be completely decontaminated.

**Warning** To shut the device down, the sample chamber must be disinfected completely and the plenum, including the filters, must be decontaminated using the appropriate and authorized procedures. ▲

1. After the device has been decontaminated, close the window completely.
2. Disconnect the unit from the power source.

## Unit Disposal

All components with the exception of the HEPA filters can be discarded after having been thoroughly cleaned and decontaminated. The HEPA filters must be discarded in accordance with the applicable national, state and local regulations for special solid waste.

**Warning** As this unit can be used for processing and treating infectious substances, it must be decontaminated prior to disposal, in accordance with acceptable standards and procedures.

# Section 5 Cleaning / Decontamination

Several procedures can be used for decontaminating the biological safety cabinet. Which procedure is selected, depends on the potential risk imminent in the agents used, and/or the degree of cleanliness required by an experiment or work process.

One possible decontamination procedure is to clean, rinse and dry with a disinfection liquid or spray, and sterile distilled water.

UV disinfection can also be used. It is particularly suited as a more intense disinfection after the above procedure.

Autoclaving (sterilization with steam) can be used for treating the removable stainless steel components. The bezels of the UV lights, the work tray(s), armrests and paper catch grids are autoclavable components.

Disinfection with formaldehyde can be performed if a sterile sample chamber is required for the work procedure. This sterilization procedure is mandatory before filters are replaced, or before the unit is discarded.

## Care and Cleaning of Stainless Steel

Stainless steel is a combination of many different metals including iron and chromium. Iron, the primary element in stainless steel, wants to corrode (rust) when in its natural state. The chromium content in stainless steel prevents corrosion.

Stainless steel is not corrosion or rust proof, just resistant to stains, or stains “less”. The chromium, in the presence of oxygen, forms a tough, invisible, passive layer of chromium oxide film on the steel surface. If damaged mechanically or chemically, this film is self-healing as long as it has enough oxygen. The presence of any liquid or solid that remains in contact with the stainless steel for a prolonged time can prevent oxygen contact and promote corrosion, as can prolonged contact with cleaners or disinfectants containing chlorine, ammonia, iodine or other caustic agents.

## Care and Cleaning of Stainless Steel (cont.)

1. To properly care for stainless steel, use cleaners and disinfectants free of caustic agents such as chlorine, iodine and ammonia.
2. Always follow the application of any cleaner or disinfectant with a *minimum* of two clean distilled water rinses, then a thorough drying with a clean soft cloth. By rinsing with distilled water and drying, any remaining residue is removed from contact with the stainless steel.

**Caution** Never use abrasive cleaners, scouring pads or steel wool when caring for stainless steel. ▲

If the stainless steel does become stained, corroded or rusted, the iron deposits left on the surface can be removed by neutralizing them with the passivation process. This process uses an acid to neutralize the "free iron" deposits left on the steel where there has been deprivation of oxygen. This stops the spread of the corrosion or rust. It will not return the stainless steel to its original finish.

## Care and Cleaning of Coated Surfaces

All the coated surfaces of this equipment are powder coated. Powder coating is a method of applying a dry powder to electro-statically charged metal, then baking in an oven where the dry powder molecules are melted and fused together. This is by far the most durable finish available today and, if cared for properly, will last for many years. The coated surfaces should be cleaned with a neutral detergent and rinsed twice with clean distilled water, then dried thoroughly with a clean soft cloth. Cleaning or disinfecting coated surfaces without rinsing with clean distilled water and drying thoroughly will result in smearing, streaking and dulling of the coated surfaces. Never use abrasive cleaners, scouring pads or steel wool. If the coated surfaces do become dull, streaked, smeared or marred in some other way, there is no known method to restore the finish.

## Disinfection

1. Remove all samples from the chamber and store them properly.
2. Remove accessories from the cabinet and disinfect them using the disinfection procedure recommended by the accessory manufacturer.
3. The work tray(s) and stainless steel components can be removed from the chamber and disinfected separately.
4. Clean all chamber surfaces with disinfectant.
5. Do not remove the optional UV lights from the sockets. Wipe them thoroughly with a damp cloth. Do not saturate. Be sure to dry completely.

## Rinsing

1. Rinse all surfaces *twice* with clean distilled water.
2. Discard any liquid from the drain pan. Rinse pan.
3. Dry all chamber surfaces completely.

## UV Disinfection After Cleaning

UV disinfection can be performed by using the optional factory installed UV light.

To start the UV disinfection procedure;

1. Close the front window, the air system operates in the reduced mode (blue LED illuminated).
2. Press and hold the UV key on the control panel until the display alternates between dIS and the remaining disinfection time.

To interrupt or cancel the UV disinfection procedure, just press the UV key (the display shows the operating hours) and slide the window up.

### Change the UV Disinfection Time

The UV disinfection time is preset. However, this setting can be changed, if required.

1. Turn the unit on and move the window to the work position.
2. Press and hold the UV key until the preset time is displayed.
3. To increase the time, press the internal power supply key. Each time the key is pressed, the time increases by 30 minutes.
4. To reduce the time, press the sample chamber light key. Each time the key is pressed, reduces the time by 30 minutes.
5. To save the value, press the UV key. The display shows the operating hours again.

**Note** The UV disinfection time is adjustable from 0:00 (disabled) to 24:00 hours. ▲

## Disinfection with Formaldehyde

**Warning** Decontamination with formaldehyde must be performed in accordance with the specifications of YY 0569-2005, Annex B. As this procedure has considerable risks, it must only be performed by specially trained and authorized service personnel! ▲

## Clean Exterior Surfaces

Clean the exterior surfaces of the cabinet using a solution of tepid water and commercially available mild dishwashing agent. Then dry all surfaces using a soft, clean cloth.

## Clean Window

For cleaning, the window can be lowered beyond the closing position (Use of the Window, Section 1).

Creating a gap between the light dome and the window's upper edge ensures that the upper portion of the window can be cleaned and/or disinfected. Use a commercially available window cleaner to clean the window.

## Clean the Drain Pan

Clean the drain pan, using a solution of tepid water and commercially available mild dishwashing agent.

1. Remove the work tray(s) from the chamber.
2. Clean thoroughly to remove residues and deposits.
3. Rinse the drain pan, using clean water.
4. Remove the cleaning liquid from the drain pan and dry the surfaces thoroughly.

**Note** After cleaning, make sure that all cleaning product has been removed completely from the drain pan. ▲

5. Re-install the work tray.

## Clean the Paper Catch Grid

The protective paper catch grids are retained in the airduct wall by their own tension.

1. To remove a grid section, push the retaining tab down until the section can be moved out from under the inner back wall.

2. To install the grid section, first place it on the lip of the back wall, then push the retaining tab down and towards the back until the locking tabs are secured behind the inner back wall.

**Caution** Do not operate the unit without the paper catch grids installed! ▲

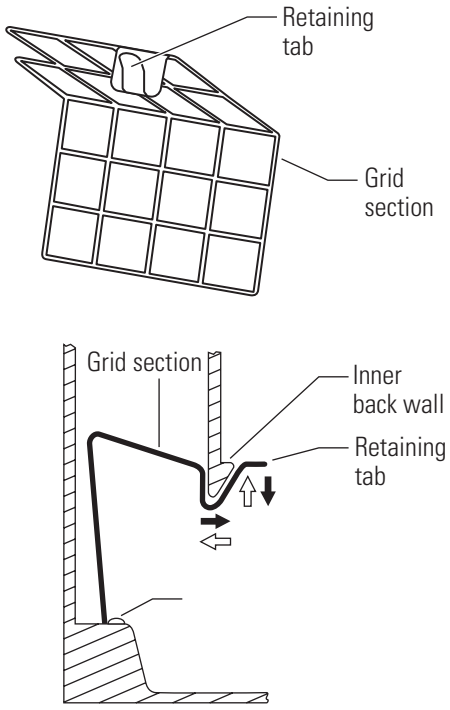


**Figure 5-1.** Protective Paper Catch Grid

# Section 6 Maintenance

The Thermo Performance Factor, the test routine for the bio-safety cabinet, determines the cabinet's system status by way of adjusting various device parameters.

An inspection of the device should be performed if the indicated Thermo Performance Factor drops to a value below 60%. In this event, the corresponding LEDs (yellow or red) of the performance indicator light.

Regardless of the display on the Thermo Performance Factor, the biological safety cabinet should be certified annually.

The annual certification consists of the following checks:

- Electrical safety in accordance with national regulations.
- Functional test of the device.
- Checking all components for possible damage.
- Checking the filter state.
- Verifying device air flows
- Checking the airflow conditions.
- Repeat test in accordance with YY 0569-2005.

**In addition to the annual certification, Thermo Fisher Scientific offers the following inspection points for your consideration.**

- Confirm the unit is within its certification window
- Check and if necessary, clear any debris from under the worktray and paper traps
- Confirm fluorescent and UV (if present) bulbs are clean and working properly
- Ensure all service valves (if applicable) are in working order
- Ensure the counterweight path is clear, unobstructed and the sash can move freely through its full range of travel

    1. As a reminder, Thermo Fisher has specifically designed our sash to jam if the glass attachment point fails. Consequently, if the sash Jams or seems sluggish to move, do not use force! Contact your local distributor immediately.

**Checking these items on a routine basis, will help to ensure your cabinet is always safe and operating as intended.**

**Warning** The diffuser plate on the chamber ceiling serves as protection for the downflow filter and prevents refluxing of downflow air. When scanning the filter surface for a leak test, the perforated plate must be removed. ▲

## Service

As filter replacement is an interference with the safety system of the unit, filters must only be replaced by adequately trained and authorized service personnel.

**Warning** For any service work in a potentially contaminated section of the biological safety cabinet, the unit must first be decontaminated. ▲

## Sample Chamber Lights

The sample chamber is illuminated by two fluorescent bulbs. The spring-loaded sockets of the fluorescent bulbs are installed in the light mounting frame in the sample chamber (Figure 6-1).

1. Switch the unit off and disconnect it from the power source.
2. Move the window to the cleaning position (below closed position) to ensure a sufficient gap between the window's upper edge and the light dome.
3. The fluorescent bulbs are installed in rotating sockets. To remove, rotate the bulb counterclockwise to disengage the latch and remove it from the sockets.
4. To install, slide the bulb contact pins into the rotating socket grooves and rotate the bulb clockwise to latch the sockets.

## Optional UV Lights

The optional, factory installed UV light is installed in the chamber ceiling immediately behind the window. The UV light should be replaced after 1500 operating hours. See Figure 6-1.

1. Turn the unit off and disconnect it from the power source.
2. Move the window to the maximum open position.

## Optional UV Lights (Cont.)

3. Wear protective gloves to prevent skin oils from burning into the bulb. The UV bulb is installed in rotating sockets. To remove, rotate the bulb counterclockwise to disengage the latch and remove it from the sockets.

4. To install, slide the bulb contact pins into the rotating socket grooves and rotate the bulb clockwise to latch the sockets.

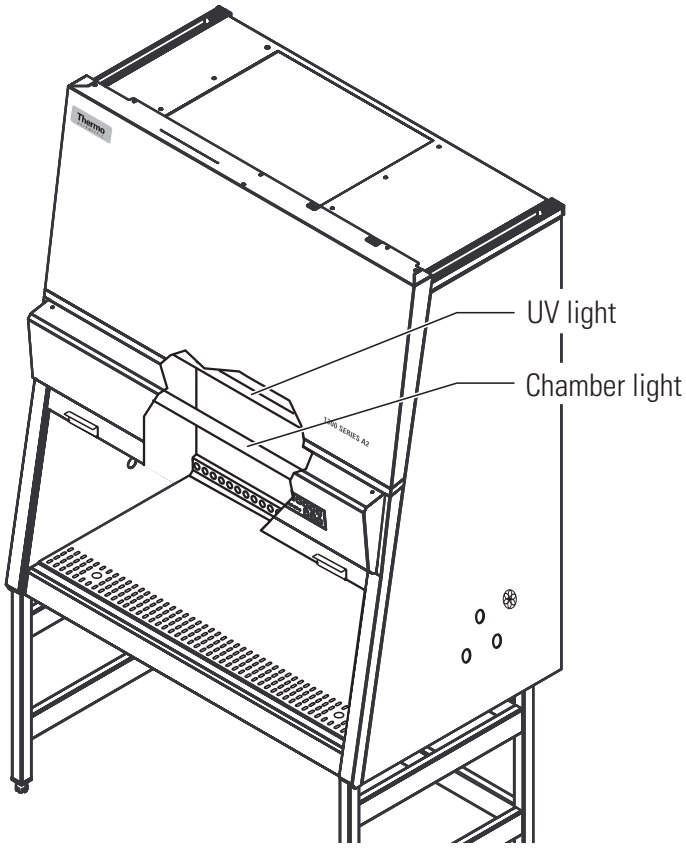


**Figure 6-1.** Light Replacement

## Replacements and Repairs

**Caution** Remote alarm systems can be retrofitted and integrated into the unit controls. Specifically, modifications to the filter system and resulting changes of the airflow may impair personal and product protection. Such work must be performed only by authorized service personnel. ▲

## Unit Disposal

The entire cabinet with the exception of the HEPA filters can be discarded after having been thoroughly cleaned and decontaminated. The HEPA filters must be discarded in accordance with the applicable national, state and local regulations for special solid waste.

**Warning** As this unit can be used for processing and treating infectious substances, it may become contaminated. Prior to disposal, the entire unit with filters must be decontaminated in accordance with acceptable standards and procedures. ▲

# Section 7 Specifications

| **Dimensions** | | | |
|---|---|---|---|
| **Description** | | 1.2 m Models 1344 and 1374 | 1.8 m Models 1349 and 1379 |
| **Exterior dimensions** | | | |
| **Width** | mm | 1300 | 1900 |
| **Depth** | mm | 798 | |
| **Height** | mm | 1568 | |
| **Interior dimensions** | | | |
| **Width** | mm | 1200 | 1800 |
| **Depth** | mm | 630 | |
| **Height** | mm | 780 | |
| **Front window** | | | |
| **Working position** | mm | 250 | |
| **Opening max.** | mm | 535 | |
| **Working area height with adjustable height stand** | | | |
| **Seat position** | mm | 750 | |
| **Side wall access ports** | | | |
| **Diameter** | mm | 23 | |
| **Distance lower edge** | mm | 140 | |
| **Distance from back panel** | | | |
| **First access port** | mm | 150 | |
| **Second access port** | mm | 250 | |

| **Volume, weights, and loads** | | | |
|---|---|---|---|
| **Description** | | 1.2 m Models 1344 and 1374 | 1.8 m Models 1349 and 1379 |
| **Volume** | | | |
| **Drain pan** | liters | 20 | 30 |
| **Weights** | | | |
| **Cabinet** | kg | 170 | 230 |
| **Stand** | kg | 30 | 35 |
| **Loads** | | | |
| **Maximum load on work surface** | kg | 25 | |
| **Maximum load on overall working area** | kg | 50 | 75 |

| **Ambient conditions (indoor use only)** | | |
|---|---|---|
| **Temperature** | | |
| **Max. ambient temp during operation** | °C | 40 |
| **Min. ambient temp during operation** | °C | 10 |
| **Humidity** | | |
| **Max. humidity / operation** | % r.H. | 90, non-condensing |
| **Max. humidity / storage** | % r.H. | 95 |
| **Heat dissipation to environment** | | |
| **Room temperature 20°C** | kJ/s | 0.20 / 0.40 |
| **Room temperature rise** | | |
| **Above room temp with window closed** | °K | < 2 / < 2 |
| **Ergonomics** | | |
| **Noise level*** | dB(A) | <67 / <67 |

**The noise level was determined in accordance with* YY 0569-2005*. The measurement uncertainty is within a range of ± 2 dB.*

| | | |
|---|---|---|
| **Electrical data** | | |
| **Models** | | 230 V Models - 1.2 m / 1.8 m<br>1344,1374 / 1349, 1379 |
| **Voltage** | | |
| **Rated voltage** | V | 1/N/PE AC, 230 V, 50/60 Hz |
| **Blower voltage** | V | 51.5 VDC |
| **Current** | | |
| **Power consumption maximum** | A | 7 / 8 |
| **Leakage current IEC 61010-1, UL61010-1** | mA | < 3.5 |
| **Motherboard fusing** | A | 2 x T 15 A |
| **Outlet fusing** | A | 2 x T 5 A |
| **On-site fusing** | A | Circuit breaker 15 A / Fuse T 15 A |
| **Power** | | |
| **Power input maximum** | W | 1440 / 2000 |
| **Protection** | | |
| **Protection class** | | I |
| **Protection type** | | IP 20 |
| **Overvoltage category (IEC 61010-1, UL61010-1)** | | II |
| **Contamination degree (IEC 61010-1, UL61010-1)** | | 2 |
| **Connecting lines** | | |
| **Mains connection** | | Power Cord (3.7 m) |

| **Airflow system** | | | |
|---|---|---|---|
| **Description** | | 1.2 m Models 1344 and 1374 | 1.8 m Models 1349 and 1379 |
| **Airflows / Airflow velocities** | | | |
| **Inflow** | m/s | 0.50 | |
| **Downflow** | m/s | 0.32 | |
| **Air volume** | | | |
| **Overall volume flow** | $m^3/h$ | 1370 | 2055 |
| **Downflow volume flow** | $m^3/h$ | 830 | 1245 |
| **Exhaust air volume flow** | $m^3/h$ | 540 | 810 |
| **Filters** | | | |
| **Type** | | HEPA | |
| **Material** | | Fiberglass | |
| **Separability in MPPS** | % | 99.995 | |
| **Separability at 0,3 µm particle size** | % | 99.999 | |
| **Downflow** | | | |
| **Width** | mm | 1220 | 1830 |
| **Depth** | mm | 457 | |
| **Height** | mm | 93 | |
| **Exhaust air** | | | |
| **Width** | mm | 610 | 915 |
| **Depth** | mm | 457 | 457 |
| **Height** | mm | 117 | 117 |

# Section 8 Certification Testing

## Classification of the Safety Cabinet

For application in China, the unit has been rated as a Class II safety cabinet, Type A2, in accordance with YY 0569-2005.

For operation as a unit of said classifications, a certification test and repeat test in accordance with YY 0569-2005 should be completed at the time of installation, and at least annually thereafter. As described in the standard recertification should be performed whenever HEPA filters are changed, maintenance repairs are made to internal parts, or the cabinet is relocated. More frequent recertification should be considered when working with safety-critical materials (three to six months).

## Test Terms

**Nominal value:**

Default value as specified by Thermo.

**Measured value:**

Value measured at the location of the safety cabinet.

**Tolerance:**

Acceptable deviation from the nominal value.

**Average value:**

The sum of the measuring values divided by the number of tests. The average value is compared to the nominal value.

**Setpoint:**

Acceptable operating value for the inflow and downflow velocities.

**Inflow velocity (m/s):**

Velocity of the air entering the sample chamber opening.

**Downflow velocity (m/s):**

Velocity of the displacement flow circulating through the work chamber.

**Exhaust velocity (m/s):**

Velocity of the airflow discharged through the exhaust filter opening.

**Exhaust airflow volume ($m^3$/h):**

Amount of air discharged at the exhaust filter.

## Testing

According to YY 0569-2005, tests related to the safety of the personnel, product and environment that must be conducted on-site for Class II, Type A2 biological safety cabinets, at a minimum frequency of annually, are;

- downflow velocity profile test
- inflow velocity test
- airflow smoke patterns test
- HEPA filter leak test
- site installation assessment tests
  - alarm functions
  - exhaust system performance (proper exhaust duct negative pressure and canopy performance).

As described in the standard, in addition to the above, the following tests performed at the request of the customer, or at the discretion of the certification provider.

- comfort and safety tests
  - lighting intensity
  - noise level
  - vibration
  - electrical leakage, ground circuit resistance and polarity tests

**Note** Service with costs: Unless certification was expressly called for in the specification, quotes and/or purchase order, the cost for this on-site testing is to be paid for by the customer. ▲

## Testing (continued)

- **Testing**

  Tests include factory final test, type test, field test and maintenance test according to YY 0569-2005.

- **Factory Final Tests**

  The testing would be conducted before delivery in accordance with the clauses 5.1, 5.2, 5.3, 5.4.1~5.4.5, 5.4.7~5.4.15 on YY0569-2005

- **Type Tests**

  According to clause 7.3 of YY0569-2005, Type test shall be randomly sampled from cabinets for delivery. Samples for type test shall be provided by the manufacturer, and the test must be performed by qualified certification bodies.

  The testing would be conducted in accordance with the clauses 5.1, 5.2, 5.3, 5.4 on YY0569-2005

- **Field Tests**

  Field testing would be performed after installation and cabinet re-location. The testing would be conducted in accordance with the clauses 5.1, 5.4.2, 5.4.7~5.4.9, 5.4.14 on YY 0569-2005

- **Maintenance Tests**

  The testing would be conducted in accordance with the clauses 5.1, 5.4.2, 5.4.7~5.4.9, 5.4.14 on YY 0569-2005 at least once a year. Test also would be performed after filters are changed and interior parts are repaired.

## Test Equipment

For conducting these tests, Thermo recommends testing equipment of the manufacturers listed below.

| Testing equipment | Manufacturer | Application |
|---|---|---|
| Smoke tubes | MSA<br>Pittsburgh, Pennsylvania, 15230 | Airflow pattern test |
| Thermoanemometer | TSI<br>Shoreview, Minnesota 55126 | Downflow velocity test and alternate method for inflow velocity using constricted access |
| Digital Safety Inspector | Ohmic Instruments Co.<br>Easton, Maryland 21601 | Electrical leakage and ground resistance tests |
| GFI Circuit Tester | Leviton Manufacturing<br>Little Neck, New York, 11362 | Electrical leakage, ground resistance, and polarity tests |
| Photometer | Air Techniques<br>Owing Mills, Maryland, 21117 | Filter leak test |
| Aerosol Generator | Air Techniques<br>Owing Mills, Maryland, 21117 | Generation of aerosol mist |
| Vibration Meter | Quest Technologies<br>Oconomowoc, Wisconsin, 53066 | Vibration test |
| Flow HoodAirdata Multimeter | Shortridge Instruments. Inc.<br>Scottsdale, Arizona, 85260 | Inflow velocity test |

# Testing Information

**Inflow Velocity – DIM Method (Primary)**

Description: Inflow velocity using the direct inflow measurement method (DIM).

Equipment: . . .Shortridge ADM-870, or equivalent
. . . . . .Flow hood Series 8400, or equivalent

Method:

1. Move the front window to the work position (250 mm).
2. Attach the flow hood [1] in the work opening [2] and seal the remaining open areas.
3. Operate the system blowers for approximately 20 min.
4. Record at least 5 measurements of the inflow air volume.
5. Average those readings and calculate the inflow velocity (V1) as described below.

# Testing Information (continued)

Inflow Area:

- 1.2 m models 1344/1374: Front opening 0.3 $m^2$
- 1.8 m models 1349/1379: Front opening 0.45 $m^2$

Calculation:

- Inflow Velocity (V1) = Inflow Air Volume (V2)/Actual Inflow Area (A2)

Acceptance:

- 0.5 m/s, ±0.025 m/s

Correction measures:

- Enter the service level and activate S2, change S2 until the desired velocity is reached and save the new value.
- If the velocity can't be adjusted due to clogging of the filters, change the exhaust filter.
- If the filter is in order, change the exhaust blower.

**Note** Check of alarm limits: If S1 or S2 are changed, the alarm limits S3 and S4 must be checked and saved again. ▲

**Inflow Velocity – Constricted Window Method (Secondary)**

Description:

- Inflow velocity measured over several points through a constricted window.

Equipment:

- Thermal Anemometer, or equivalent (hotwire)
- Anemometer Probe Holder

# Testing Information (continued)

Method:

1. Lower the front window to a height of 75 mm.
2. Operate the system blowers for approximately 20 minutes.
3. Insert the thermal anemometer probe into the probe holder. Place the probe holder at the window opening work surface, ensuring it is seated properly. See Figure 8-1. Adjust the probe so the air passing through probe is centered in the window opening (37.5 mm).
4. Beginning 150 mm in from the left inside wall, record successive readings every 150 mm (7 readings for 1.2 m models and 11 readings for 1.8 m models).
5. Average those readings and calculate the inflow velocity (V1) as described below.

Calculation:

- Inflow velocity (V1) = average of actual inflow velocity * factor * 0.3

Acceptance:

- 0.5 m/s, ±0.025 m/s

**Note** The thermoanemometer probe must be positioned at a 10° angle from front vertical and located on the same plane as the inside of the window glass.

Multiply the K factor (0.9929 for 1.2 m, 0.9918 for 1.8 m) by the average velocity reading (V1).

Refer to the data plate on the lower right corner of the unit face. ▲

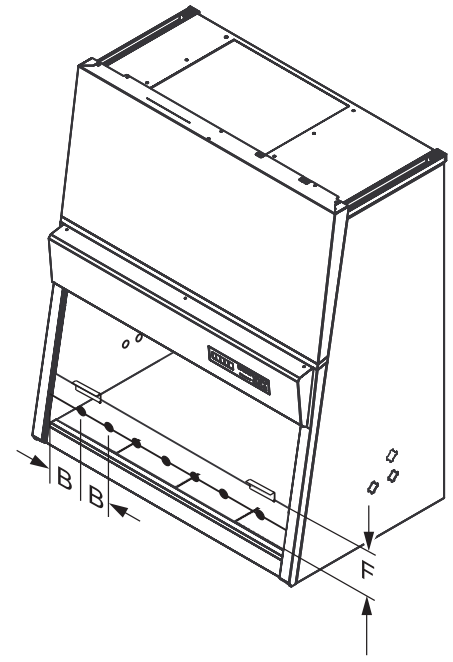


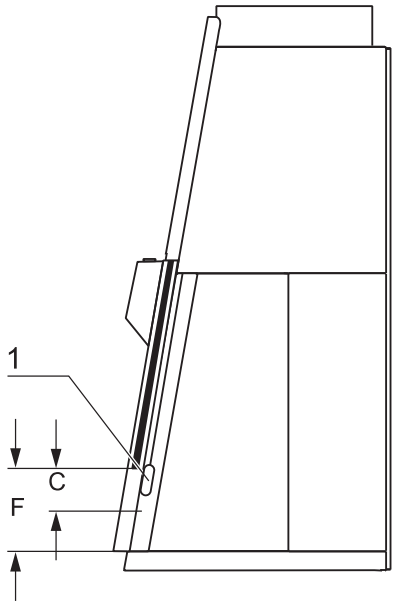


**Figure 8-1.** Constricted Window Method

# Testing Information (continued)

**Inflow Velocity – Calculating Exhaust Flow (Alternative)**

Description:

- Exhaust velocity measurements to determine inflow velocity.

Equipment:

- Thermal Anemometer, or equivalent (hotwire)
- Freestanding Fixture, or equivalent

Method:

1. Operate the unit in the work position for approximately 20 minutes.
2. Insert the anemometer probe into the probe stand, adjusting the height to 100 mm above the exhaust filter.
3. Record the readings on a horizontal plane 100 mm above the effective exhaust filter area, in a grid pattern not to exceed 100 mm x 100 mm.
4. Average the readings and calculate the inflow velocity.

Grid Pattern:

- 1.2m models (1344 / 1374)

20 points

| | | | | | | |
|---|---|---|---|---|---|---|
| | | | | | | 100 |
| | | | | | | 76 |
| | | | | | | 76 |
| | | | | | | 76 |
| | | | | | | 100 |
| 100 | 95 | 95 | 95 | 95 | 100 | mm |

- 1.8m models (1349 / 1379)

32 points

| | | | | | | | | | |
|---|---|---|---|---|---|---|---|---|---|
| | | | | | | | | | 100 |
| | | | | | | | | | 76 |
| | | | | | | | | | 76 |
| | | | | | | | | | 76 |
| | | | | | | | | | 100 |
| 100 | 95 | 95 | 95 | 95 | 95 | 95 | 95 | 100 | mm |

## Testing Information (continued)

Effective Exhaust Filter Area:

- 1.2 m models (1344/1374): 0.427 m x 0.580 m, 0.248 m²
- 1.8 m models (1349/1379): 0.427 m x 0.885 m, 0.378 m²

Inflow Area:

- 1.2 m models (1344/1374): Front opening – 0.3 $m^2$
- 1.8 m models (1349/1379): Front opening – 0.45 $m^2$

Calculation:

- Average exhaust velocity (V2) = Sum of measurements / Number of readings
- Exhaust Volume (V3) = Average velocity (V2) x Effective filter area (A3)
- Inflow velocity (V1) = Exhaust volume (V3) / Work opening area (A2)

Acceptance:

- 0.5 m/s, ±0.025 m/s

**Downflow Velocity – Uniform Cabinet**

Description:

- Measures the velocity of air flow onto work surface through supply filter.

Equipment:

- Thermal Anemometer, or equivalent (hotwire)
- Freestanding Fixture, or equivalent

Method:

1. Operate the unit in the work position for approximately 20 minutes.

2. Insert the anemometer probe into the probe stand, adjusting for a height of 100 mm above the bottom edge of the window opening while in the work position.

# Testing Information (continued)

3. Record the readings on a horizontal plane 100 mm above the bottom edge of the window opening while in the work position, in a grid pattern not to exceed 150 mm x 150 mm.

Grid Pattern:

- 1.2 m models (1344 / 1374)

21 points

| | | | | | | | | |
|---|---|---|---|---|---|---|---|---|
| | | | | | | | | 152 |
| | | | | | | | | 144 |
| | | | | | | | | 144 |
| | | | | | | | | 152 |
| 152 | 149 | 149 | 149 | 149 | 149 | 149 | 152 | mm |

- 1.8 m models (1349 / 1379)

33 points

| | | | | | | | | | | | | |
|---|---|---|---|---|---|---|---|---|---|---|---|---|
| | | | | | | | | | | | | 152 |
| | | | | | | | | | | | | 140 |
| | | | | | | | | | | | | 140 |
| | | | | | | | | | | | | 152 |
| 152 | 149 | 149 | 149 | 149 | 149 | 149 | 149 | 149 | 149 | 149 | 152 | mm |

Calculation:

- Average Downflow Velocity = Sum of all measurements / Number of readings

Acceptance:

- 58-68 FPM

Correction measures:

- Enter the service level and activate S1, change S1 until the desired velocity is reached and save the new value.
- If the velocity can't be adjusted due to clogging of the filters, change the supply filter.
- If the filter is in order, change the supply blower.

**Note** Check of alarm limits: If S1 or S2 are changed, the alarm limits S3 and S4 have to be checked and saved again. ▲

## HEPA Filter Leak Test

Description:

- Determines the integrity of the downflow and exhaust filters.

Equipment:

- Aerosol Photometer, or equivalent
- Aerosol Generator, or equivalent

### Filters that can be Accessed and Scanned

Method:

1. Allow the cabinet to operate for approximately 20 minutes.
2. Remove the work tray and protective covers, as appropriate.
3. Introduce the aerosol from the generator in the center rear of the work area, using a tee fitting to evenly distribute the aerosol.
4. If desired, and if the cabinet has not been used with hazardous materials since an effective decontamination, the upstream concentration can be measured. If desired, connect the photometer sample hose to the appropriate (supply or exhaust) test hose connection (exhaust test hose - right side / supply test hose - left side) from under the work tray.
5. Using either the appropriate upstream challenge measurement or calculated challenge value, set the photometer accordingly.
6. Scan the downstream side and perimeter of the filter as prescribed in YY 0569-2005.

Acceptance:

- Filters scanned – 0.01% of upstream concentration at any point

### Filters that cannot be Accessed or Scanned

Method:

1. Set up as in Steps 1 through 5 above
2. In the duct, downstream of the filter, sample in accordance with YY 0569-2005.

Acceptance:

- Filters not scanned – 0.005% of upstream concentration

## Airflow Pattern Test

Description:

- Determines the internal and external behavior of the air movement.

Equipment:

- Cold smoke (titanium tetrachloride)

Method:

- Downflow:

  Pass smoke across the centerline of the work surface, 100mm above the work opening.

- View Screen Retention:

  Pass smoke 25 mm behind the window opening, 150 mm above the work opening.

- Work Opening Edge Retention:

  Pass smoke around the entire outside work opening, approximately 38 mm away from the cabinet.

- Window Seal Test:

  Pass smoke up both sides and across the top of the window opening from inside the work area, approximately 50 mm from the edges.

Acceptance:

- No smoke shall have dead spots, reflux or escape the cabinet once drawn in.

## Elect. Leakage , Ground Resistance, Polarity Tests

Description:

- Refer to GB 4793.1-1995

## Site Installation Assessment Tests

Description:

- Verify the unit is integrated properly into the facility.

## Airflow Alarms

Description:

- Verify the airflow alarms will activate within 15 seconds when there is a 20% loss.

Equipment:

- Thermal Anemometer or equivalent (hotwire)
- Anemometer probe holder
- Shortridge ADM-870 or equivalent
- Flowhood series 8400 or equivalent

Method:

- Downflow:

  Enter the service level and activate S03.

  Verify that the average downflow velocity is 20% lower than the rated velocity by following the method described previously. Change and save S03 if needed and leave the service level. Enter the service level again and set S01 to the value of S03 -0.5%. The LED "AIRFLOW STABLE" must change from green to red. Leave the service level without saving this value by pressing the "acknowledge alarm" key.

- Inflow:

  Enter the service level and activate S04.

  Verify that the inflow velocity is 20% lower than the rated velocity by following one method described previously. Change and save S04 if needed and leave the service level.

  Enter the service level again and set S02 to the value of S04 -0.5%.

  The LED "Airflow Stable" must change from green to red. Leave the service level without saving this value by pressing the "acknowledge alarm" key.

Acceptance:

- Unit alarm activates within 15 seconds when the downflow and inflow velocity is set to the correct values and the LED „Airflow Stable“ changes from green to red (as described above).

### Sash Alarms

Description:

- Verify the window alarms are operating properly

Equipment:

- Operating manual

Method:

- Raise the window 25 mm above work position

Acceptance:

- Window alarm activates

### Exhaust System Performance

Description:

- Verify the exhaust system is functioning properly

**Canopy Connections**

Equipment:

- Cold smoke (titanium tetrachloride)

Method:

- Pass smoke around the air gap, to ensure negative pressure exists

Acceptance:

- No smoke refluxes back into the room once drawn into the canopy

**Direct Connections**

Equipment:

- Manometer, or equivalent

Method:

- Measure static pressure in the duct between the unit and balancing dampers.

Acceptance:

- Negative pressure exists

**Note** Standard: For additional and detailed information regarding these tests, refer to YY 0569-2005. ▲

| | |
|---|---|
| **Device type:** | **Part number:** |
| **Serial number:** | **Service number:** |
| **Location:** | **Operator's note:** |

| Technician / Company | Notes | Date | Signature |
|---|---|---|---|
| | | | |
| | | | |
| | | | |
| | | | |
| | | | |
| | | | |
| | | | |
| | | | |
| | | | |
| | | | |
| | | | |
| | | | |
| | | | |
| | | | |
| | | | |
| | | | |
| | | | |
| | | | |
| | | | |
| | | | |
| | | | |
| | | | |
| | | | |
| | | | |
| | | | |
| | | | |

Thermo Fisher Scientific
401 Millcreek Road
Marietta, Ohio 45750
United States

www.thermofisher.com

# 1300 系列 A2

**II级, A2型 生物安全柜**

**操作手册 5991355**

Thermo SCIENTIFIC

亲爱的用户：
恭喜您购买了赛默飞世尔 1300 系列Ⅱ级，A2 型生物安全柜。您的 1300Ⅱ级，A2 生物安全柜已经经过了完全符合 YY0569 标准的检测和认证，它能够保护使用者、环境和您的研究免受有害物质污染以及交叉污染。本用户手册提供如何能够最有效和安全地使用 1300 系列 A2 型生物安全柜的指南。

1300 系列 A2 生物安全柜提供了一套独特的产品特点，其特点能增强您的安全性，提高整体操作效率。如果您对于使用此产品有任何问题或者对于它的特点您需要进一步的了解，请联系我们当地的代销商。

该手册包括下列型号

| | | |
|---|---|---|
| 1344,1354 | 1.2m | 230V |
| 1349,1359 | 1.8m | 230V |
| 1374,1384* | 1.2m | 230V |
| 1379,1389* | 1.8m | 230V |

**包括柜体，高度可调节的支架，UV灯和扶手.*




**重要** 阅读操作。没有阅读，理解和遵守该手册可能导致损坏机器，人员受伤和降低机器性能。

**警告** 所有内部的调整和维护必须有专业人员完成。

用户手册只是提供信息为目的。产品和内容的更改不另行通知。赛默飞世尔不代表或承担用户手册的责任。赛默公司不承担与手册有关或无关而引起的任何直接或意外的伤害。

© 2020 赛默飞世尔。 保留所有权利。



重要的操作或/和维修说明。仔细阅读所附内容。



潜在的电气危险。仅专业人员执行该标志相关的程序。



为防止可能伤害，维修设备必须切断电源且锁定。



高温表面表示可能灼伤为保护的皮肤或高温导致损坏的材料。



安全柜内所使用的试剂和（或）从事的工作可能会对你或他人的健康造成危害。（必须正确地使用安全柜，使用前必须阅读操作手册）



电子电器设备标志。适用于2002/96/EC(WEEE)指令下的电子电器设备，该设备于2005年8月13日后投放市场。

该产品符合欧盟2002/96/EC（WEEE）电子电器设备废弃指令。标识WEEE标志。赛默飞世尔在每个欧盟成员国已联系了一个或多个回收和处理的公司，改产品应有他们处理或回收。更多关于赛默公司符合指令，所在国的回收商和产品的信息参见www.thermofisher.com

√始终使用适当的保护设备（衣服，手套，眼镜等）。

√始终驱散极冷或极热并穿有保护衣。

√始终遵守好的卫生习惯。

√个人对自身的安全负责。

# 目录


**第一章** 描述 ..... 1-1
安全系统 ..... 1-2
HEAP过滤器 ..... 1-4
纸屑捕获格栅 ..... 1-4
控制面板 ..... 1-5
窗口使用 ..... 1-6
机器界面 ..... 1-7
工作室照明 ..... 1-8
紫外灯 ..... 1-9
工作区 ..... 1-9

**第二章** 安装 ..... 2-1
选配排气连接 ..... 2-2
排气系统附件 ..... 2-2
移动机器 ..... 2-4
维修阀安装 ..... 2-5

**第三章** 启动 ..... 3-1
有或没有支架 ..... 3-1
放开配重 ..... 3-3
电源连接 ..... 3-4
安装测试 ..... 3-5
查找认证人员 ..... 3-6

**第四章** 操作 ..... 4-1
校准程序 ..... 4-2
启动机器 ..... 4-3
操作模式 ..... 4-3
放置样品进腔体 ..... 4-5
故障信息 ..... 4-5
操作建议 ..... 4-6
操作中断 ..... 4-7
关闭机器 ..... 4-8
处置机器 ..... 4-8

**第五章** 清洁/净化 .....5-1
喷擦消毒.....5-1
消毒准备 .....5-2
清洁.....5-2
最终消毒 .....5-2
喷擦消毒后的紫外灯消毒 .....5-3
甲醛消毒 .....5-4
外表面清洁 .....5-4
清洁窗口.....5-4
清洁集水盆 .....5-4
清洁纸屑捕获栅格 .....5-5

**第六章** 保养维修.....6-1
维修.....6-2
样品室照明.....6-2
选配紫外灯.....6-2
更换和维修.....6-3
机器处置.....6-3

**第七章** 技术参数.....7-1

**第八章** 认证测试.....8-1

**第九章** 数据记录/质保 .....9-1

# 第一章　描述

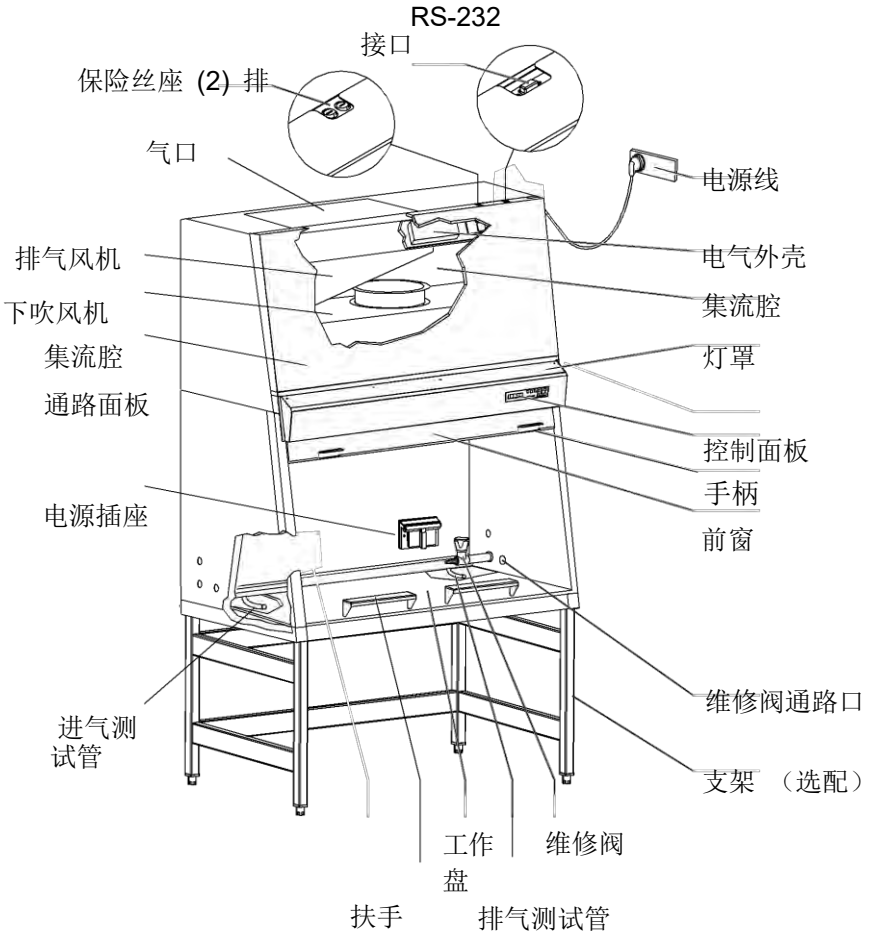


**图 1-1.** 仪器零件

集流腔组件由用于下降气流风机腔体和排气风机腔体组成。每个风机配有一个过滤器。气经由仪器顶部的开口排出。

腔体照明有两个荧光灯跑组成。

选配，工厂安装的紫外灯位于样品室前面的顶上。

各三个维修阀开口位于两个侧面。安装维修阀阀时，移去穿孔中心的插头。

选配支架可以订购两种结构：一种可以手动调节工作高度从750mm-950mm。另一个是864mm的固定高度。带有轮脚。

一整块标准不锈钢工作面，可选配的扶手提供给使用者一个舒的工作位置，同时，确保最少阻止前部栅格的气流。

内部插座给附件提供电源，有下列两种标准结构：

1344,1354, 1374,1384: 单项，
右侧

1349,1359, 1379,1389: 两个单项，左右两侧

测试管（气溶胶验证口）位于工作台下。进气口在左边，排气口在右边。

**注意：**不要移动两个测试口的封口去检测进出口气流。

## 安全系统

负压系统

负压系统有进气和排气的高效过滤器组成，起到保护人员和产品的作用。

人员保护

通过工作窗口的恒定高速进气流阻止腔室开口的泄漏。

外部气压高于内部气压形成负压防止仪器泄漏.

产品保护

空气系统内的稳定气流确保产生恒定的向下气流，使得高效过滤器带走污染物，从而使得产品一直处于超纯空气中。有害的颗粒不会流经样品室。（防护交叉感染）

高效过滤器

样品室内的下降空气和排除空气通过高效过滤器清洁。

# 安全系统 (续)

安全锁定

为了防护紫外辐射，许配测紫外灯在前窗打开时不会点亮。当紫外打开时，前窗关闭或锁死。关闭的窗遮住紫外线。

气流检测

气流检测样品室内流速和通过排风口空气的进风速度。只要气流速度超过或低于特定的数值，将会触发一个可听见和看见的警报。

实际的下降风速和进风风速被实时监测并显示处理。

窗口开口报警

位置传感器觉测前窗开口的尺寸，指示出口是否开到特定的位置，关闭（节能）或位于不安全的中间位置。

Thermo 性能指示

Thermo 性能指示(PER)是用于显示仪器安全状态的数值。数值的获得是通过计算HEPA过滤器的负载，气流状态和认证获得的数值等数据。这个数据形成一组控制软件参数，相关关联。其结果通过LED显示。

通过专业人员对新的HEPA过滤器的认证，PER指示显示为绿灯。随着仪器使用老化，灯光颜色随之变化。红灯仪器不能接受，应该停止使用。在使用前，应该解决所用有关机器的安全问题。

## HEPA 过滤器

过滤系统有下降气流（进气）和排气的两个过滤器组成。

室内空气通过工作区开口吸入样品室。室内空气被抽进负压排气盘管，抽到安全柜顶部集流腔与混合到再循环过滤过的空气，再经过下出风和排风的过滤器按比例分配过滤。一组过滤后的空气作为超纯的气体送到仪器的样品间，另一组超纯气体排到室内或通过排气连接进入外部排气系统。

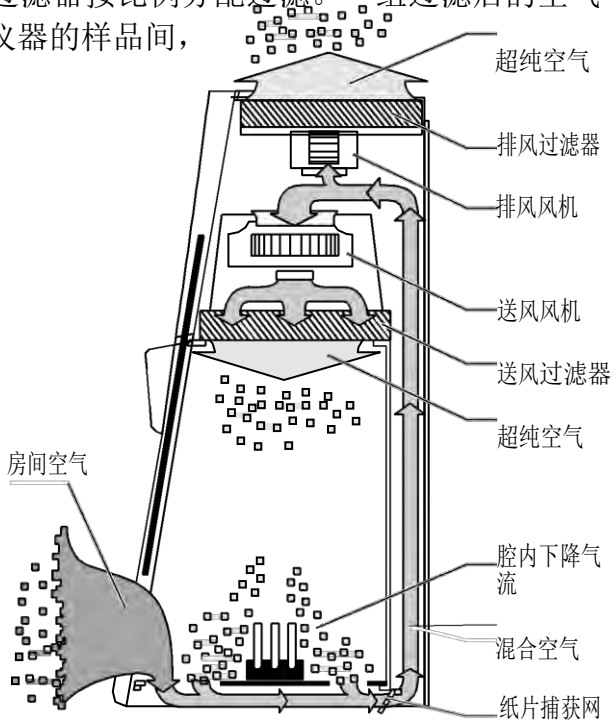


**图1-2** 含流入和外流气体过滤器的HEPA过滤系统

## 纸屑捕获格栅

组合的纸屑捕获栅格安装在工作盘下面的空气管道内，插在仪器内外壁之间。这些栅格用于阻止大件物品如纸巾和棉纸进入集流腔，而削弱风机和过滤器的功能。该栅格易于安装清洗。

## 控制面板

控制面板位于仪器的前部，有键盘，状态显示和数字显示组成。

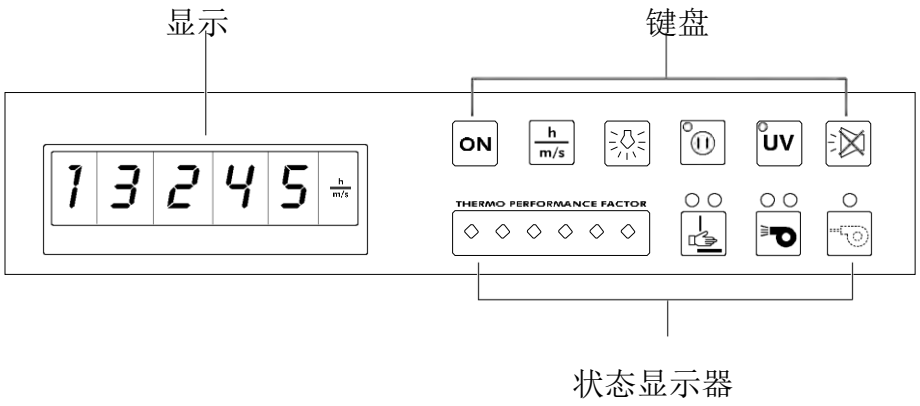


**图1-3.** 控制面板

显示部分有五位面板显示以下信息：

- 仪器的工作时间；
- 向下流和流入气体速率；
- 常规紫外消毒的剩余时间。

键盘是开关功能。

状态指示器显示：

- 窗口工作位置
- 气流
- 降低的通风机的速度
- Thermo性能指示

## 窗口使用

可以通过前窗的不同位置进入样品室。窗口的工作位置是250mm打开。进入样品室时，窗口完全打开。为了清除净化和节约能量，在通风机的速度被降低的时候，窗口可以紧闭。

**注意：**窗口工作位置和装载位置通过微动开关控制，显示在用户界面控制面板的状态显示器上。

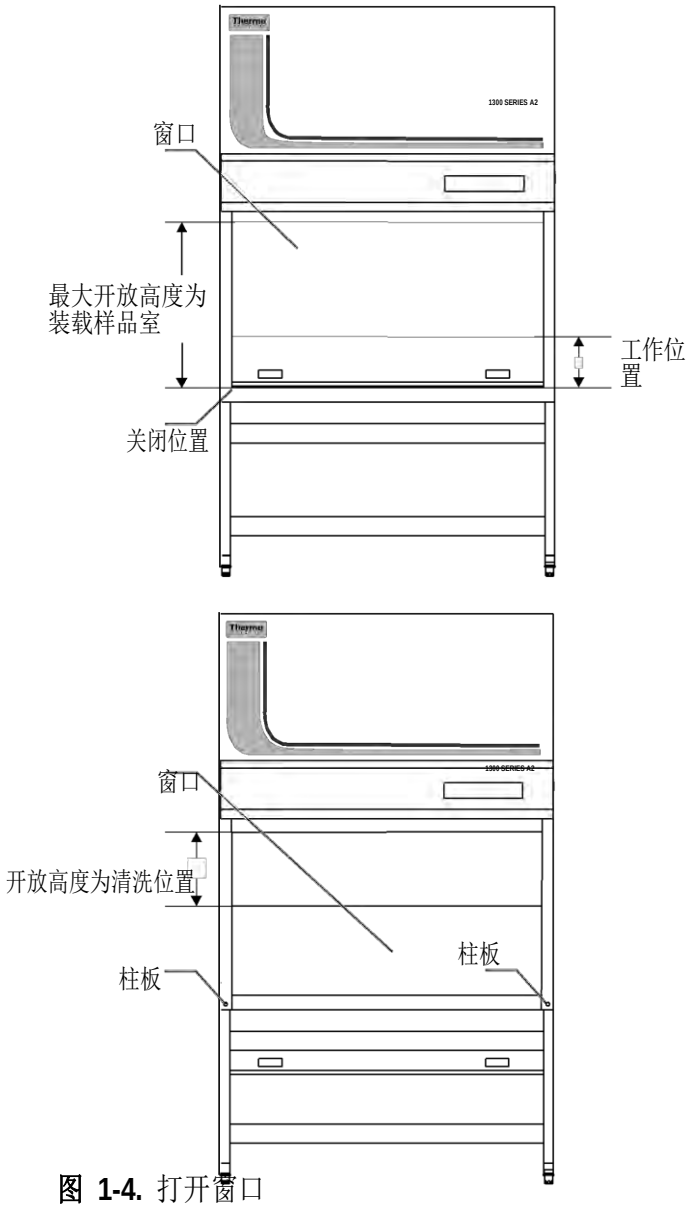


**图 1-4.** 打开窗口

# 窗口使用 (续)

为了定位窗口的操作高度(250 mm开口), 将它移到顶部“凹槽”位置区域(图 1-5)，看到绿色窗框定位指示灯点亮（ 图1-6）。达到正常操作的高度（250 mm开放高度），如果窗口离开了操作高度，窗框高度指示灯会变红

将窗口位置放在关闭位置或缩小开口模式位置，将它移到地位“凹槽”区域（图1-7），会看到蓝色缩小开口模式状态指示灯会变亮。（图1-8）如果窗口位置不正确或者离开了关闭位置，蓝色的状态指示灯会熄灭。当蓝色的缩小开口模式指示灯不变亮，仪器不会在该模式下工作，可选择的紫外灯也不会工作。




**图1-5.** 250mm 开口 (工作位置)

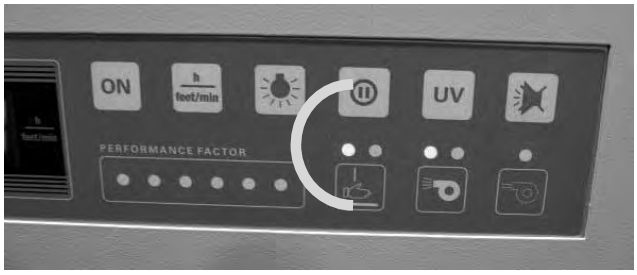


**图-6.**点亮绿色ＬＥＤ灯




**图1-7.** 完全关闭位置 (紫外灯工作)




**图1-8.** 点亮蓝色LED灯

## 窗口使用 (续)

.为了清洗窗口，玻璃可以降到比关闭位置还低的位置，这样可以清洗上面的部分。

1. 降低前窗到可清洗位置。（低于工作位置）

2. 当清洗/维护工作完成时，将前窗回到原位。

**注意：**在这个位置可以同样进行更换样品室指示灯灯的操作。

**警告：**如果前窗被卡住或者移动缓慢，不要用力移动前窗。立即联系当地技术服务部门。不要试图修复这个问题。

## 机器界面

标准的装置包括内部电源输出口，阀门和软管的阀门出口，一个RS-232连接口和一个连接到外部警告系统连接口。

用于连接电源的内部电源输出口位于安全柜背后的上面部分。

这个输出口（最大电流5 A）位于样品室的内壁。在仪器1.2 m处有两个输出口，在仪器61.8 m处有四个输出口。
位于安全柜的顶部是两个为5A的微型保险丝的保险丝夹和有一个RS-232连接口。
维修阀口位于安全柜的每一边。这些出口可以用为电缆的路由选择或安装维修阀。

外部警告系统连接口可以被用作外部排气系统控制或者错误报告系统。

**警告：**如果在样品室内操作一个煤气灯，则必须要安装一个气体供给系统的合适的切断阀。请仅在样品室内使用实验室安全灯具。

## 机器界面 (续)

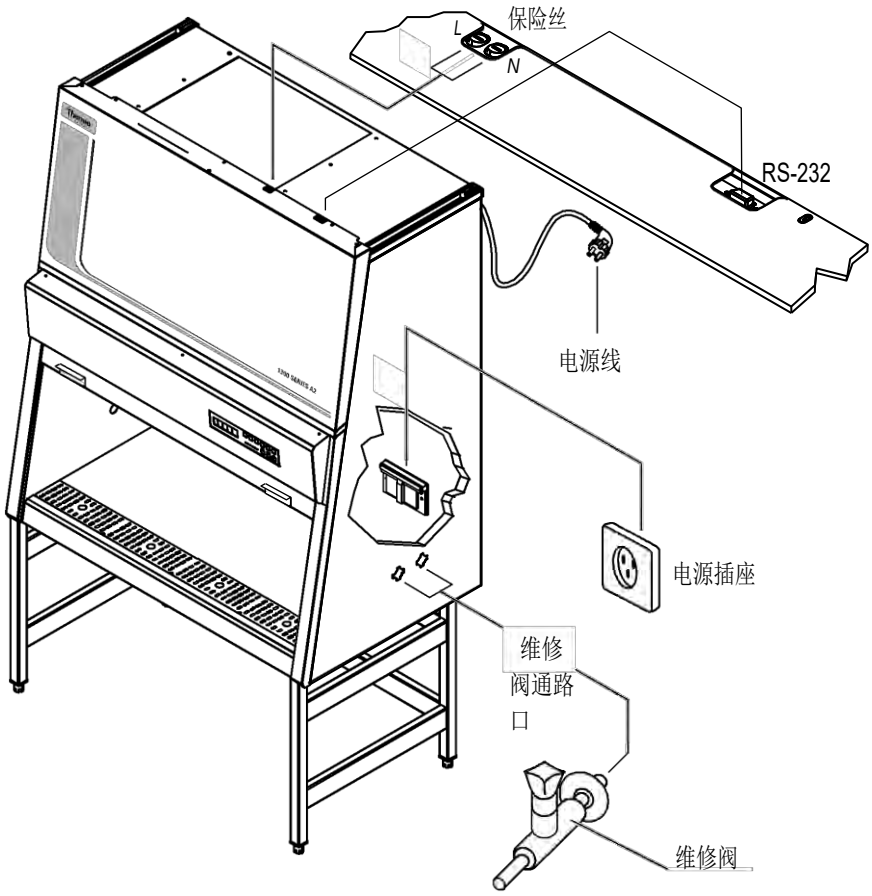


**图 1-9. 机器界面**

## 工作室照明

样品室照明有两个荧光灯泡。这两个灯泡安装在灯罩里面。

## 紫外灯

可选的仪器整合的紫外灯安装在样品室前部的顶部。
紫外灯的操作时间为预设为一个小时。常规紫外消毒可以通过按压操作板上的”UV”键 5 秒启动。 当前窗开着的时候，紫外的常规消毒将立即取消。

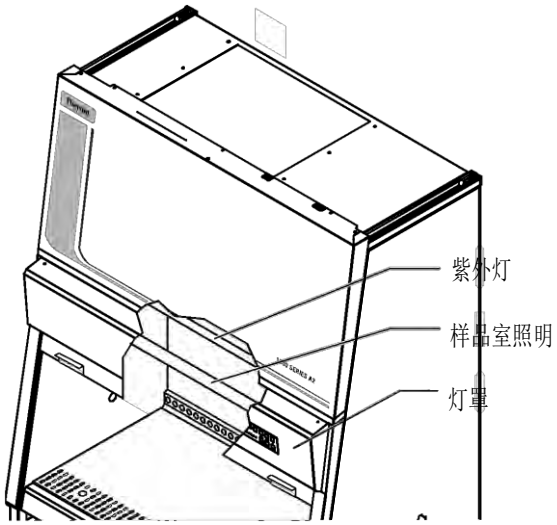


**图 1-10. 照明**

**注意：**为了防护紫外辐射，紫外灯仅在前窗完全关闭的时候方可开启。

## 工作区

仪器随机配有单块工作盘。位于积液盘上方的机架上。在需要大孔的工作环境是，它可以提起移走。

理想的产品保护工作区域延伸到整个工作盘的宽度和深度。选配的两只扶手位于工作区中间，彼此间隔200 mm。通过插进工作盘上穿孔的轨道来安装扶手。

**警告：**只有扶手安装正确，才能保证工作安全!

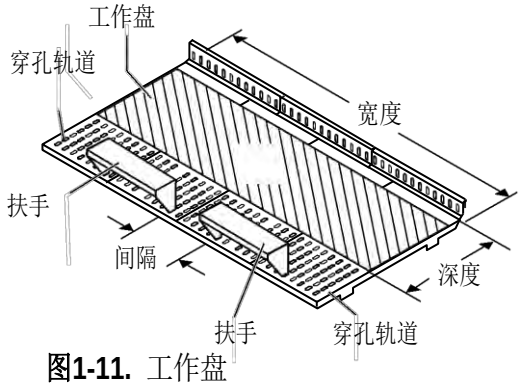


**图1-11.** 工作盘

# 第二章 安装

生物安全柜的操作安全性和功能的正确使用依赖于该仪器安装的位置。生物安全柜安装的位置必须符合以下所列的环境条件。

- 该仪器的电力系统设计为高于海平面2000 m。
- 电源插座必须由授权人员安装。理想情况下，电源插座应该安装在高于安全柜之上。切断电源线是唯一完全切断电源的方式。仪器下面的地板必须能够支撑仪器重量并且必须为非易燃材料。
- 如果没有购买公司认可的支架，支撑装置至少为安全柜重量的两倍以上。
- 放置仪器的房间天花板应有足够的高度。那些没有连接排气系统的仪器部位，仪器排气系统和房间天花板之间的距离必须至少为200 mm（8 in）。
- 该位置必须安装合适的通气系统。
- 房间内的温度为10°C到40°C之间（50°F到104°F）。仪器周围的相对湿度必须在最高31°C时不能超过80%，到40°C时线性地减少到50%。
- 本生物安全柜只能在室内使用。

房间通风应该为一个适宜的通风系统，遵从国家应用条例。
房间的进气或出气口位置应该远离安全柜，以防止气流损伤生物安全柜的功能。

当固定安全柜时，确保机器背面的配重可以自由一定移动，机器距离墙面或相邻物体不小于7.6厘米

## 选配排气连接系统

依据YY0569-2005，在没有排气系统附件下，进行标准配置的安全区进行测试。

生物安全柜排气系统配有一个套管接头用于连接风机与现场的排气系统。

排气系统部件安装在安全柜顶部的开口处。用于固定螺钉的螺孔预埋在机器内。

## 排气系统附件

1. 2 m型号的安装:

1. 关掉机器，并切断电源。
2. 仔细清洁排气口周围和待安装附件的表面。确保没有残片。
3. 在接触表面涂上密封胶。
4. 通过提供的固定M5螺钉板紧固定附件。
5. 去掉多余的密封胶

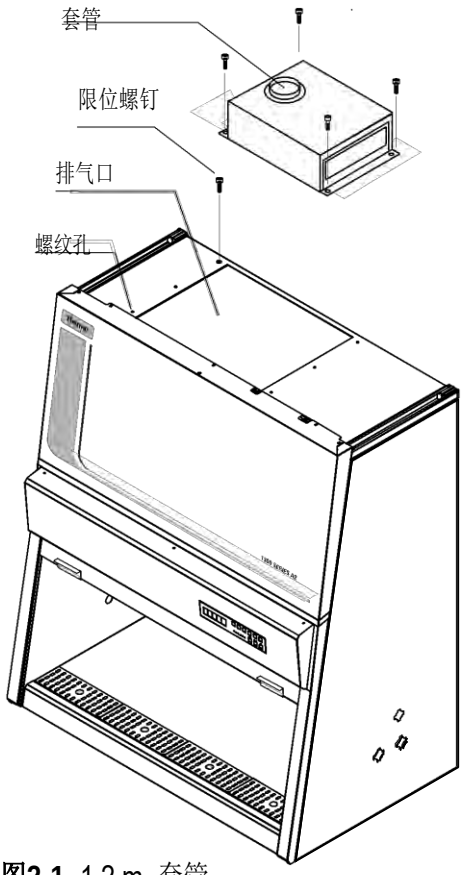


**图2-1.** 1.2 m 套管

## 排气系统附件 (续)

排气系统套管用另外的适配器安装在安全柜顶部的开口处。用于固定螺钉的螺孔预埋在机器内。

1.8 m型号的安装:

1. 关掉机器，并切断电源。

2. 仔细清洁排气口周围接触表面和适配器上下的接触面，确保所有的油脂和灰尘残余清理干净。

3. 用提供的螺钉固定适配器到机器顶部的预装螺纹孔。手动旋紧螺钉。

4. 用板手旋紧提供的M5螺钉来固定附件

**接线套筒**

1. 将连接套筒放置到附件的连接口，并用螺钉固定。
2. 用连接管（200 mm）连接现场的排气系统和连接套 管并用密封胶固定。
3. 用盖子封住未用的开口，盖子上涂上密封胶，将它盖到机架的连接口上并用螺钉固定。

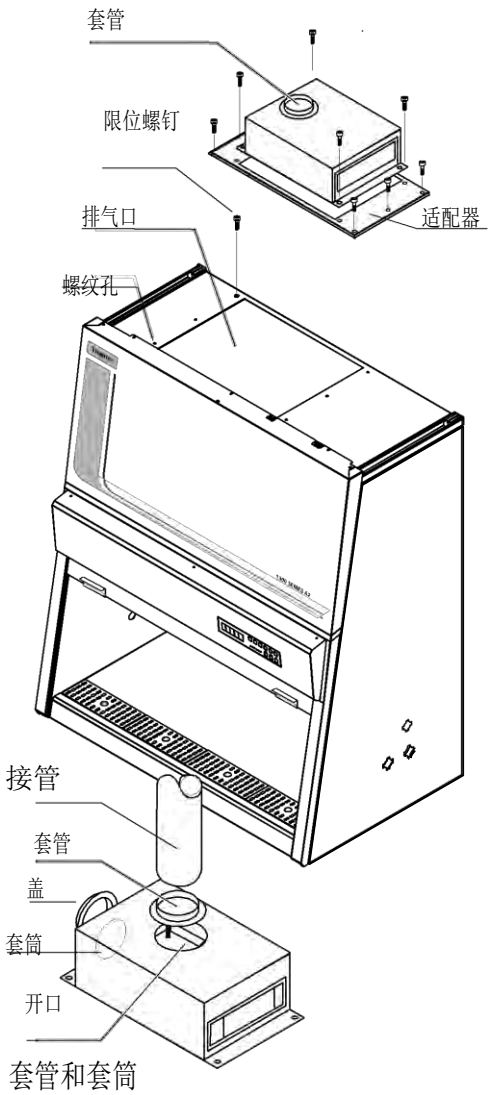


**图2-2.** 1.8 m 套管和套筒

# 移动设备

为了防止倾倒，使用能够承重的设备运送，即使在室内移动时，也要将支架分开。
**警告：**在运输是时，抬起仪器的抬起点见图 2，不允许将安全柜的重量依赖于地板上。

压碎危险：前窗的重量通过平衡物平衡（在仪器的后面）。该仪器必须当使用四个螺丝（见5.3部分）平衡物被锁定时方可搬动。
**警告：**移动仪器时，抬起仪器的抬起点见图2，不允许将安全柜的重量依赖于地板上。

压碎危险：前窗的重量通过平衡物平衡（在仪器的后面）。该仪器必须当使用四个螺丝（见5.3部分）平衡物被锁定时方可搬动。
**提示：**将仪器的重量落到集液盘上。

**警告：**前窗的重量通过仪器后部的配重来平衡。该仪器必须当使用四个螺丝（见3-2）平衡物被固定后，方可搬动。

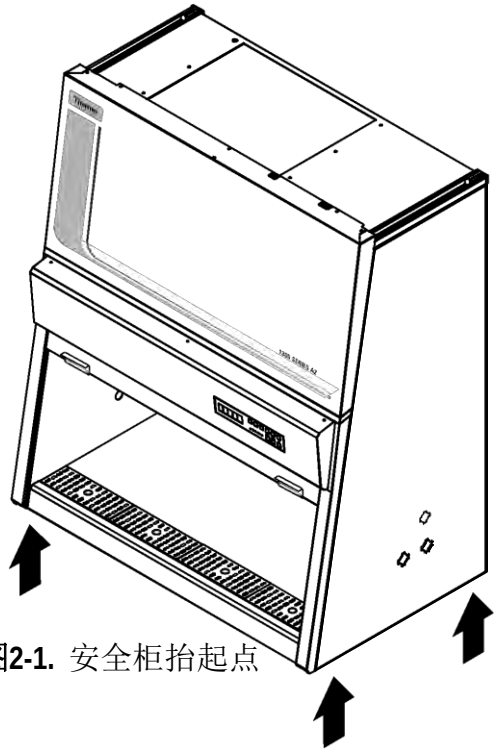

**图2-1.** 安全柜抬起点

# 维修阀安装

通过移去中心的插头（黄铜）和穿透预先指定的位置（塑料）可以安装维修阀。

设备每一侧的安装距离

A1 = 225 mm

A2 = 105 mm

S1 = 275 mm

S2 = 100 mm

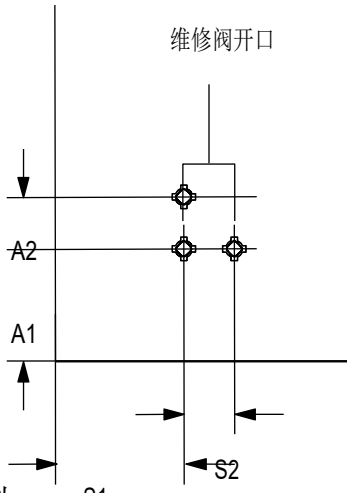


**图2-3.** 维修阀位置

**注意：**只能安装符合国家法规的维修阀插头。

维修阀可以通过三个维修阀安装口安装在每个侧面。

1. 将前窗置于完全打开的位置。
2. 关掉机器，并切断电源。
3. 在内外两面的预定点上刻上圆痕，去掉中间部分。
4. 参见下页图2-4，将垫圈和底座套在维修阀的螺纹管上，在法兰上用上细硅胶。
5. 从样品间内部将维修阀穿进指定的插头。
6. 从外面，在维修阀的螺纹管上套上衬垫和垫圈，在阀门的外法兰上用上洗硅胶。
7. 用螺母将电磁阀固定到侧面板上。
8. 用接头螺母连接上供气管。

**注意：**如果维修阀移走，维修阀安装口插头应该重新封上。

# 维修阀安装 (续)

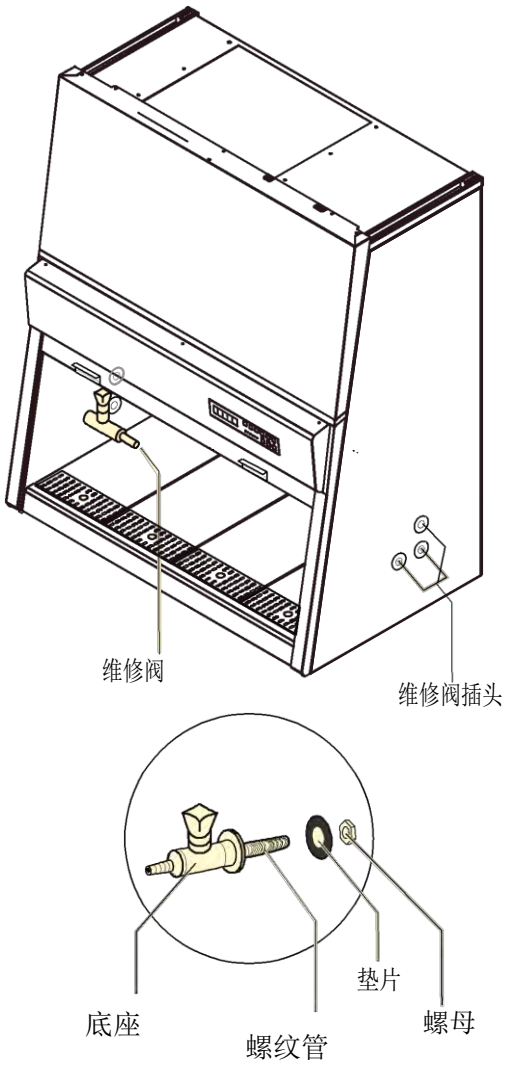


**图2-4.** 阀门总成和安装

# 第三章 启动

**注意：**正确的组装和安装是正确的启动和操作的基础。

## 支架安装

对于无机架仪器, 将机架台仪器置于一个能够支撑仪器重量的两倍的稳定结构上，确保仪器的重量不依赖于集液盘。再移集液盘上的保护薄片。参见下一页的图 3-1。

对于一个有机架仪器，根据操作指南，安装支架的第一步包括底座，再在底座上安装安全柜。具体步骤如下。

**警告：** 确保打开每个调平器都完全窝在里面，以避免在安装过程中折弯。

1. 将伸缩腿放到侧板的包装盒上，取出工具包中的可调节调平器装到一端内陷的伸缩腿上。注意：安装前，确认调平器安全拧入。用榔头将调平器敲到位.
2. 放好左右侧面板。将伸缩腿组装到侧面板上。如图3-1所示。
3. 高度可调节的支架调节范围为680-880 mm。为了将支架设定到想要的高度，将腿向下拖出轨道到想要的高度。通过安装在每个轨道的两个螺钉锁定调到的高度位置。
4. 取出包装箱中的两根横棒。（他们与侧面板分开包装）。装在侧面板的止块上，标签朝外。拧紧到位之前，用手装上所有附带的螺钉。而后在拧紧。
5. 安装仪器外壳到机架上，将四个六角螺钉松落地放入仪器底部的螺丝孔中。
6. 将安全柜置于机架上，那样六角螺丝走在钥匙止块的插孔中。

# 安装支架 (续)

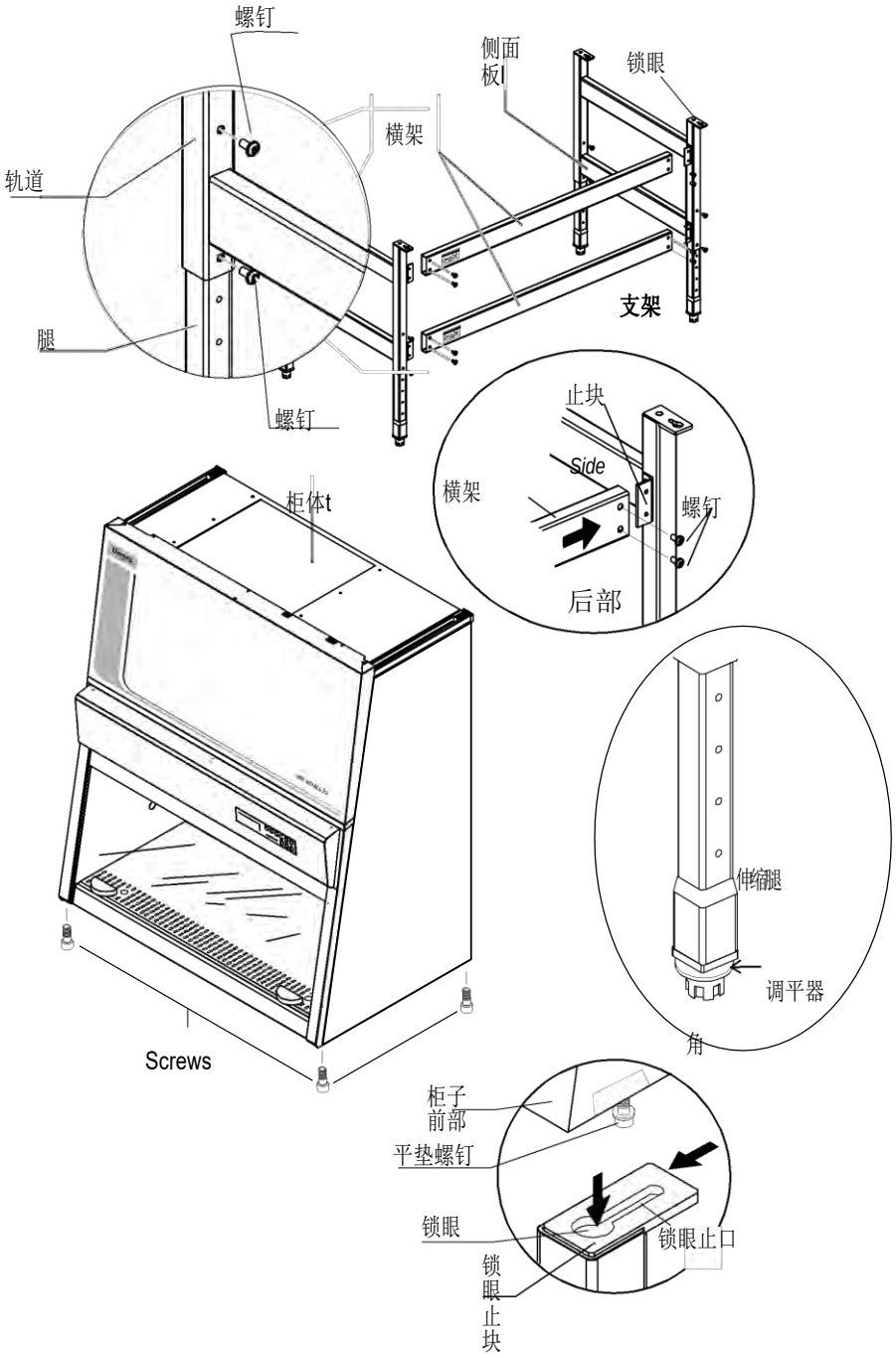


**图 3-1.** 支架总成

7. 滑动仪器结构到固定的插孔。（图3-1）

8. 拧紧四个六角螺丝

9. 安全柜水平放置。（用法说明见下面部分）

## 松开平衡物

前窗的平衡物位于仪器的后部，保护在搬运时仪器免受损坏。

**警告：**位于仪器后面的
平衡物是对前窗重量的补偿。
在平衡物松开之前
前窗不能被移动。

**警告：**压碎风险—在松开后，手及手指远离平衡物移动的范围之内。

松开平衡物，移开四个固定螺丝（位置见图 **3-2.**箭头所示）并保留螺丝。

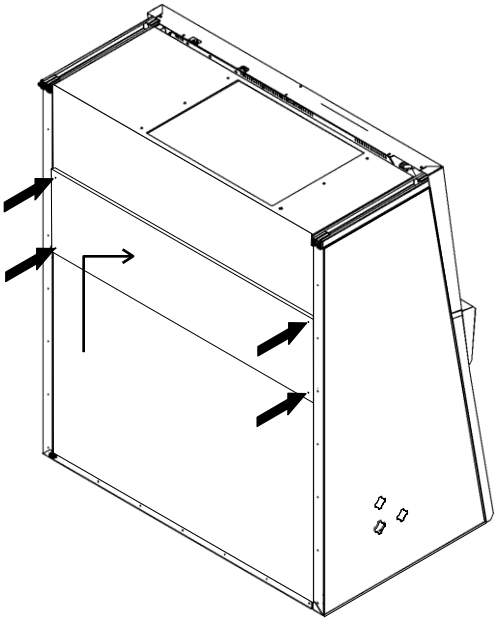

图3-2.松开平衡物

## 安全柜水平放置

**注意：**安全柜放置在工作地点后应该水平放置。

1. 对于无机架仪器，将气泡水准仪置于工作托盘表面，调节结构直至水准仪在所有方向上显示均为绝对的水平位置。
2. 对于有可选机架的仪器，将气泡水准仪置于工作托盘表面，使用开口端或可调的 扳手调节立台的四个脚直到水准仪显示所有方向均为绝对的水平位置。从右到左，从前到后进行。

# 电力连接

**警告：**接触带电器件可能引起致死性电休克。

**警告：**在仪器连到电源之前，检查插头和电源供给电缆可能的损伤。不要使用损坏的元件连接仪器到电源供给系统上。

前窗的平衡物位于仪器的后部，保护在搬运时仪器免受损坏。

1. 将仪器连接到电源供给系统之前，检查出口电压相对应的仪器标示牌的规格。如果分级给定的电压（V）和最大电流（A）不匹配，该仪器不能够连接到电源供给系统上。
2. 将仪器的插头正确连接到接地和保险丝出口上。
   出口必须使用易熔连接 T 15A 或使用断路器 B15 分别融合。如果插座的规格不能和电源插头匹配，请咨询有资质的电工置换或者安装正确的插头。
3. 确保电源电缆路线远离平衡物和电缆导线。仪器的左侧有附加的固定点，可以用于电源电缆的路由选择。

4. 确保电源供给线没有受到拉长或者压缩力。

为了保护偶发的断电，电源供给插座必须远离偶发事件并且仅由授权专业人员安装。理想地，电源插座应位于安全柜的上面。

电源供给电缆是断掉装置和电源的唯一途径。

如果仪器样品室由服务阀（气体，水）供给，该阀必须通过仪器的主要正确接地通过仪器的主要地面接地。

在电源供给系统连接时，将窗口位置放在工作位置上，等待所有的指示灯变绿，仪器现在可以正常运作，控制面板也可以正常使用。

# 安装测试

**警告：**不要在初始操作、安装和认证测试未完成前操作仪器。
安装测试必须符合YY 0569，2055标准。安全柜可以作为II级微生物安全柜操作，符合YY 0569，2055标准。如果该下述仪器功能或功能模式被检查或检测结果在特定的YY 0569，2055标准的安全值之内：

- 流入速率变化图测试
- 向下流速率变化图测试
- HEPA 过滤器泄漏测试
- 气流组织测试
- 场所安装评估测试
- 每年、修复仪器后或仪器放置位置更改（超过 5cm）必须进行重复的测试。
- 操作者应该向授权的服务技术人员索要书面的测试报告。

**警告：**该仪器的安全操作，特别是个人和产品保护仅在该仪器所有安全功能被检测和认可后保证。

**警告：**如果该仪器的所需要安装性能和认证测试或这些测试和重复测试在没有收到充分训练或授权个人进行，赛默飞世尔不担保操作的安全性。

**警告：**初始操作和紧接的安装测试不包含任何的去污染措施。该仪器的样品室和附件必须根据应用程序的卫生指导经过消毒和清洁。

## 查找认证公司

**警告：**服务和认证必须由有资质的人员进行。

生物安全柜认证包含一系列的测试，证实安全柜在生产商的操作参数内运行。为了确保生物安全柜的运行，每个安全柜应该在安装时进行实地测试，此后每年至少一次。安全柜应该在 HEPA 过滤器更换，内部维修或更换位置后进行重新认证。

# 第四章 操作

控制面板分为三大功能，有显示，键盘和状态显示器。

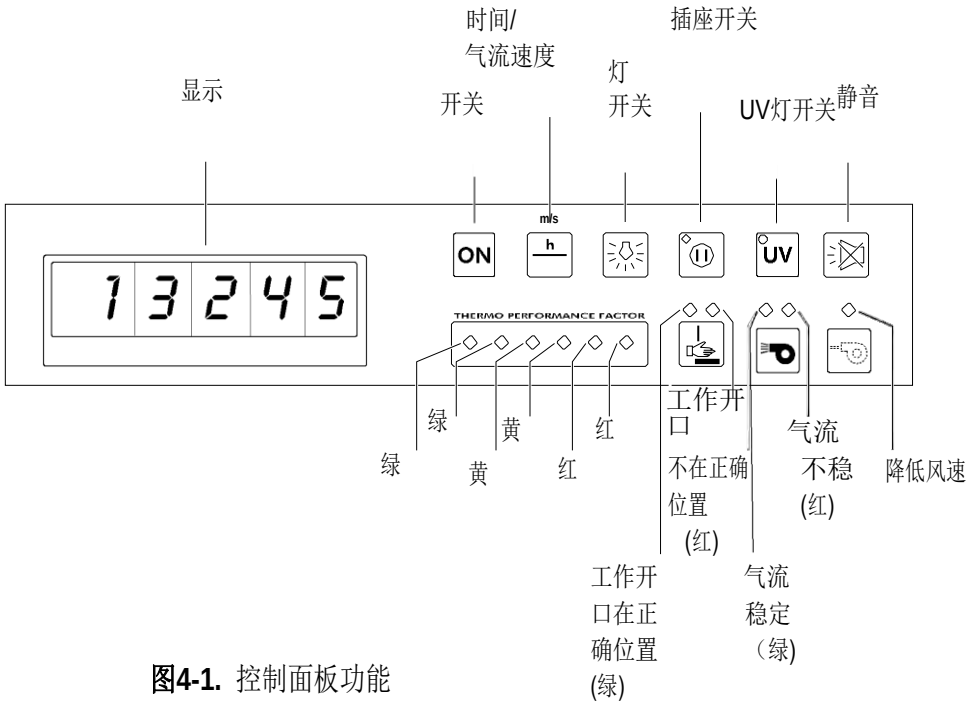


**图4-1.** 控制面板功能

显示部分显示每次操作的以下信息：

- 在每次正常操作时，仪器的工作时间；
- 在安全工作模式时向下流和排气速度；
- 紫外灯（可选择的）照亮的时间，剩余的消毒时间。

按时间/速度按键，在安全工作模式下，切换操作时间和向下流和排气速度（窗口在打开状态，安全操作位置）

打开（I）/关闭（O）报警功能：按如下操作步骤。
在关闭（OFF）模式，按下按键保持约5秒，显示单元立刻显示运行时间，然后可以切换状态：

I 表示报警功能打开,
0 表示报警功能关闭

照明键用于切换样品室的照明的开或关。

开关键用于打开或者关闭仪器的电源的供给。

输出口开关键用于打开或关闭柜内的电源插座的电力供给
（蓝色LED亮指示电力打开）
紫外灯键用于打开或关闭紫外消毒功能（黄色LED亮指示紫外消毒程序运行，如没有选择安装紫外灯装置，则该键没有任何功能）

当可选择的紫外灯打开，显示部分会交替显示dIS和预先设置的剩余时间。

静音键用于报警声的静音

## 启动机器

1. 打开机器，按住ON键直到风机启动（可听见风机运作的声音），状态指示灯（LED）会变亮。

注意：打开开关，从按键动作到设备响应可能会存在几秒钟的延迟

2. 将前工作窗打开到工作位置(250 mm 打开)。当到达正确位置时前工作窗位置绿色指示灯亮起。侧边导轨上设置了用来标定前工作窗下边缘位置的记号，这些记号帮组确定前工作窗的正确位置
3. 等待直到气流稳定绿色指示灯亮起，说明气流已稳定。
4. 设备已准备好，可以使用。

# 操作模式

设备存在以下运行模式：

- 校准模式
- 关闭模式
- 工作窗打开模式
- 工作模式
- 待机模式
- 紫外模式

设备处于停止运行状态的模式。设备开关关闭(气流系统送风设备关闭)．样品室照明打开。机器被连接到电源上。如果内部电源供应打开，则柜内的电源插座指示灯亮起蓝色

工作窗打开模式指明工作窗打开并被置于超过250 mm工作位置的设备状态。为了安装或卸载附件，前工作窗可以打开到最大开放位置。为进行清洁，前工作窗也可被降到关闭位置以下(参见第一部分 窗口的使用).
气流系统送风设备打开，红色指示灯气流稳定亮起。前工作窗不在工作位置，前工作窗红色指示灯亮起。样品室照明打开。样品室内的电源供应打开，如果内 部电源供应打开，则柜内电源插座指示灯亮起蓝色。
工作模式是当前工作窗置于工作位置同时气流系统稳定运行时，设备会进入工作模式。前工作窗气流稳定绿色指示灯亮起。
侧边导轨和前工作窗下沿处于同一高度，无报警声。

样品室照明打开，样品室内的电源供应打开，如果内部电源供应打开，则样品室内电源插座黄色指示灯亮起

RS-232接口打开，开关处于监视接触状态，显示单元会显示：运行时间，流出和流入气流速度。

待机模式前工作窗可以降下将样品室关闭，气流系统的输出减少也会随之减少到相应程度。前工作窗不在工作位置，红色指示灯亮起，气流减少，蓝色指示灯亮起

样品室照明打开。样品室内的电源供应打开。气流不稳定，红色指示灯亮起如果内部电源供应打开，则柜内电源插座蓝色指示灯亮起

## 操作模式 (续)

生物安全柜可以正常关闭(关闭模式)，通过按下 ON 键 5 秒直到所有指示灯熄灭。
紫外模式是运行紫外消毒程序时， 前工作窗必须完全关闭乙方紫外辐射。如果前工作窗未被置于关闭位置，则设备无法进行紫外消毒程序。
紫外消毒程序黄色指示灯亮起直到设定的时间结束然后，紫外灯会自动关闭，指示灯也会熄灭。
样品室照明关闭，样品室内的电源供应也打开。

## 放置样品进腔体

1. 将前工作窗打开到最大位置。自动打开风机全速送风。
2. 将实验辅助物品放入工作盘的操作区域。为了防止阻塞了前面的进风口。
3. 将前工作窗移动到工作位置（前工作窗绿色指示灯亮起）然后等待气流稳定（气流稳定绿色指示灯亮起）。

**警告：**只有在气流系统适当地工作时，操作者和物品才能确保受到防护。如果前工作窗处于工作位置时，警报系统发出故障信息，则应立即停止使用，否则可能会导致有害物从安全柜中泄露

4. 将样品放入工作面。
5. 在工作间隙或在长时间实验的不需要进行动手操作的时段，将设备转换到待机模式。

## 故障信息

故障信息采用文本和数字联合代码ER 3 到 ER 7来表示. 如果显示某一故障信息代码，请马上与技术服务联系。

为了确定故障原因，操作人员必须进行以下检查和测试.

- 检查安全柜顶部的废气排放孔是否堵塞
- 若可能，应确保现场的废气排放系统处于运行状态.
- 关闭实验室的门窗以防止扰动气流
- 关闭安全柜附近的可能造成气流扰动或辐射过多热量的仪器设备
- 在样品室内使用明火可能干扰安全柜的正常气流条件

.

## 操作建议

在安全柜中进行操作时，遵守工作规则能尽可能的保证安全。
在开始工作之前，摘下佩戴的珠宝等饰品，佩戴好实验需要的个人防护品（如保护手套、面部或身体的防护物），定期对昂品柜表面进行消毒。

工作期间:

- 把样品放在工作盘的规定工作区域内。
- 不要把无关的物品放在样品室内。
- 使用经过清洁和消毒的辅助用品。
- 不要在样品室内或在打开的工作窗前快速的移动手、胳膊或身体，以免形成空气湍流。
- 不要在样品室内放置会引起空气湍流和过分辐射热量的辅助物品。
- 不要阻碍气流通过工作盘上的通风槽进行循环。

# 操作建议 (续 )

- 为了防止对操作者的健康造成伤害，在长时间工作时，应使用可调整靠背和高度的工作椅。
- 使前臂依靠在扶手上休息时恰好接近水平高度
- 使大腿水平放置时，小腿和大腿之间的角度不超过90度
- 应使用脚垫（DIN 4556）来补偿地板和座椅之间的高度，脚垫的有效面积不应小于45X35厘米（18X14英寸），斜面的角度应调整到5~15度。应将到地板的高度调整到不低于11厘米（4英寸）。

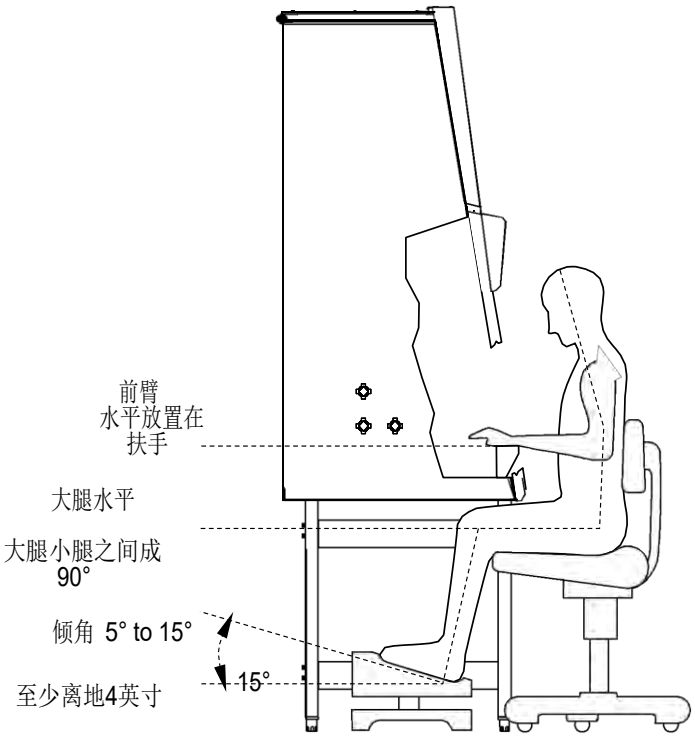


**图 4-2. 坐姿**

**工作完成后:**

1. 将样品从样品室内取出，适当保存。
2. 对样品室表面进行清洁和消毒，包括工作盘和底板。
3. 对所有辅助物品进行清洁和消毒。

## 操作中断

需要中断一项工作时:

1. 从样品室中取出所有样品并适当的保存起来
2. 从样品室中取出所有辅助物品并对它们进行清洁和消毒
3. 对样品室表面进行清洁和消毒，包括工作盘和底板
4. 将安全柜切换到待机模式：关闭前工作窗，按住ON键直到指示灯熄灭（显示单元的右侧指示部分显示一个圆点，说明仍然处于通电状态）

**注意：**出于安全考虑，在前工作窗关闭后才能关闭风机。

## 关闭机器

如果安全柜不再使用或需要长期存放,必须进行彻底净化。
**警告：**需要彻底关闭设备时，必须对样品室进行彻底的高压和消毒处理，包括过滤器，必须通过适当且被认可的措施和程序进行彻底净化。
1．在设备被净化后，完全关闭前工作窗。
2．切断设备电源。

## 处理机器

除HEPA过滤器外，所有的零部件经过清洁消毒后都可以丢弃。HEPA过滤器的处置必须符合相关的国家，州和地方有关固体废弃物的法规。

**警告：** 由于该仪器可用于加工处理传染物质，在处置前必须要进行消毒。符合相关可接受的标准和程序.

# 第五章　清洗/净化

几种安全柜净化程序可用来净化生物安全柜。选择哪一种净化程序应根据试剂的潜在危险程度和工作程序或实验对洁净度的要求做出决定。

一种可供选择的净化程序是使用喷/擦消毒，利用安全柜进行微生物实验的标准消毒程序

也可用紫外照射消毒：尤其适合当作喷擦消毒后的加强消毒程序

蒸汽灭菌可用于可移动的不锈钢器件的消毒。例如工作盘、休息扶手和纸屑捕获网格（参见章节 9.6/ 9.7）

甲醛灭菌：如果工作程序中需要在无菌的样品室中进行，则可采用甲醛消毒程序。在以下情况时，必须进行这一消毒程序， 在更换过滤器之前和在丢弃安全柜之前。

## 喷/擦消毒

喷/擦消毒有三种应用：消毒准备,再清洁，最后消毒。

**警告：**含氯的消毒剂可能会腐蚀某些表面，因此只能使用无氯消毒剂！过度使用含醇量超过70%的消毒剂可能会导致塑料器件变脆。必须使用低含醇量的消毒剂，如果使用超过70%醇含量的消毒剂，则用量必须限制在200克（7盎司），并且不超过2小时。基于季胺类化合物的消毒剂能同时满足对以上条件。

## 消毒准备

1. 从样品室中取出所有样品并将其适当保存
2. 从样品室中取出辅助物品并根据其说明书推荐的消毒程序进行处理。
3. 工作盘和不锈钢器件可以从样品室中取出，分别消毒
4. 进行预消毒，可以对样品室的表面喷洒或抹擦消毒剂
5. 不要从插槽中取下紫外灯，利用湿布彻底擦拭即可，同时注意不能浸泡。
6. 打开设备，使其进入工作模式，经前工作窗移到工作位置
7. 让消毒剂作用到厂家推荐时间，然后让安全柜在工作模式下运行15到20分钟，以便气溶胶被滤器吸收

## 清洗

1. 用温水和商品化的中性洗涤剂可以彻底清除污渍和沉积物
2. 用干净的布和大量清水擦净表面
3. 将底板上的清洁液去掉，用软布擦干样品室表面

## 最终消毒

1. 再次对样品室的表面喷洒或抹擦消毒剂
2. 让消毒剂作用到厂家推荐时间

## 喷洒消毒后的紫外消毒

如果设备装有选购件紫外灯，则可使用紫外消毒程序
开始紫外消毒程序：

1. 关闭前工作窗，气流系统运行在减少模式（红uced mode，蓝色指示灯亮起）

2. 按下操作面板的紫外键，开始紫外消毒程序
   按住紫外键直到出现切换显示dIS和剩余消毒时间

## 变更紫外消毒时间

中断/取消紫外消毒程序可以通过按下紫外键（会显示运行时间）和抬起工作窗。

紫外消毒时间是预先设定的，如有需要可以变更设置

1. 打开安全柜开关，将前工作窗移到工作位置.
2. 按下紫外键直到显示预设时间
3. 增加时间
   按INTERNAL POWER SUPPLY键，每按一下增加30分钟
4. 减少时间
   按INTEGRAL SAMPLE CHAMBER ILLUMINATION键，每按一下减少30分钟
5. 储存设定
   按下紫外键，面板再次显示运行时间.

**注意：**紫外消毒时间可调节范围从0：00（关闭）到24：00小时。

## 甲醛消毒

**警告：**使用甲醛净化必须依据按照规范（YY0569，2055，Annex B）进行。由于甲醛净化具有危险性，因此必须由受过特殊训练并被授权的技术服务人员进行。

## 外表面清洗

用温水混合商品化的中性洗涤剂擦拭设备的外表面，然后用干净的染布擦干。

## 清洁窗口

进行清洁（以及喷/擦消毒）时，可将前工作窗降到关闭位置之下（参见第一部分窗口使用）照明室和前工作窗之间留有间隙，以便对工作窗上部进行清洁和消毒。对前工作窗的清洁可采用商品化的窗户清洁剂‘

## 清洁集水盆

清洁底板应使用温水混合的中性洗涤剂。

1. 从样品室中取出工作盘
2. 彻底去除污渍和沉积物
3. 用干净的布和足量的水擦洗底板.
4. 除去清洁用的液体，让水分充分干燥

**注意：**清洁工作完成后，应确保清洁用物品没有遗留在底板上。

5. 重新安装工作盘

## 清洁纸屑捕获栅格

保护性纸屑捕获网格靠自身张力固定在空气管道中。

1. 取下阻拦网时，向下按固定卡直到阻拦网能从内部后壁下方取出。
2. 安装阻拦网时，首先将它放在底部管壁的唇边上，然后向下按固定卡再向管内推直到固定卡牢固的固定在内部后壁[3]上。

**警告：**不得在没有安装纸屑阻拦网的情况下运行安全柜！

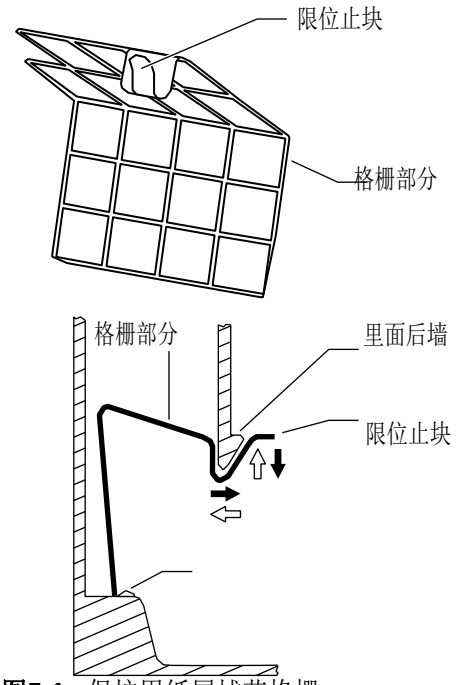


**图5-1.** 保护用纸屑捕获格栅

# 第六章 保养

Thermo性能指示是安全柜的检查程序，通过调整多种设备参数可以确定安全柜的系统状态

如果指示灯显示Thermo性能指数低于60%，应进行检查。此时，相应的LED（黄或红）性能指示灯亮起
无论Thermo性能指示如何，安全柜应每年检查
安全柜的年度检查应包括

- 用电安全应符合国家标准
- 设备的功能测试
- 检查所有可能损坏的部件
- 检查滤器的状态
- 确认设备气流正常
- 检查气流条件.
- 根据YY 0569-2005标准重复测试

**除了手动认证，赛默飞世尔科技还提供了以下检查点来供您参考。**

- 在装置认证窗口中对其进行确认
- 进行检查，必要时清理工作托盘和存纸器下的碎屑
- 确认荧光和紫外光（如存在）灯泡清洁且正常工作
- 确保所有检修阀（如适用）处于正常工作状态
- 确保平衡物通道通畅、不受阻挡，带子在整个行程中可以自由移动

1. 特此提醒，Thermo Fisher 进行了专门设计：如果玻璃附着点出现故障，则带子将会堵塞。因此，如果带子堵塞或看起来移动迟缓，则请勿施加力量！请立即联系当地经销商。

**定期检查这些项目可帮助确保机柜始终处于安全状态，并按照预期方式运行。**

**警告：**样品室顶部的扩散板的作用是保护向下气流的滤器以及防止向下气流回流。当对滤器表面进行防泄露检查时，应将多孔板取下。

# 维修

由于更换滤器将对设备的安全系统产生影响，所以必须由经过培训且有授权的维修人员进行。

**警告：**对安全柜的可能受污染部分进行任何维修工作，都必须先对该部进行净化。

## 样本室照明

样品室由两个日光灯 提供照明。日光灯的弹簧插槽安装在样品室内照明室的固定框上。（图6—1）

1. 将设备关闭，将电源线从插座上切断，防止意外接通。
2. 将前工作窗移到清洁位置确保工作窗上沿和灯室之间有足够的缝隙。
3. 将日光灯安装在旋转卡槽内。取下时反时针转动灯管打开锁扣然后取下。
4. 安装时，将灯管的针脚插入旋转卡槽然后顺时针转动固定。

## 选配紫外灯

可选件，设备整合的紫外灯[1]按装在样品室顶部紧靠工作窗的位置。紫外灯应每运行1500小时进行更换（见图6-1）

1. 将设备关闭，将电源线从插座上切断，防止意外接通.

2. 将前工作窗打开到最大位置。
.

3. 戴上防护手套，以防止皮肤脂屑灼伤灯管。紫外灯管按钻杆在旋转卡槽内。取下时反时针转动以松开锁扣然后取下s.

4. 安装时，将灯管的针脚插入旋转卡槽然后顺时针转动固定。

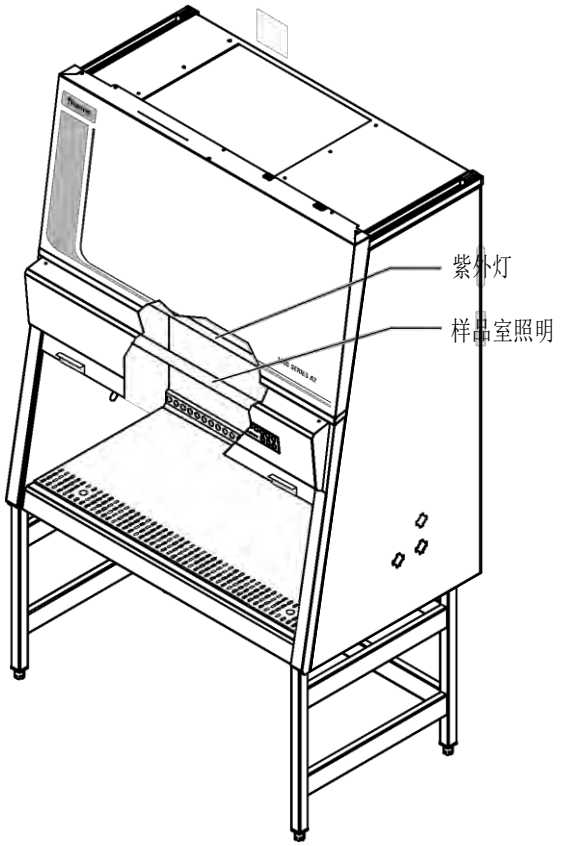


**图 6-1.** 照明灯更换

## 更换和维修

**警告：**可将外部通讯系统，例如故障报告系统，翻新整合到设备控制中去。特别要注意的是是对过滤系统的修正以及造成气流变动的维修可能与人身和物品防护要求不符，因此这些工作必须有经授权的维修人员完成。

## 机器处理

丢弃的安全柜或设备组件包含有可重复利用材料。除了HEPA过滤器外，所有组件均可在彻底清洁和净化后丢弃。HEPA过滤器的丢弃则必须根据国家和地方对特殊固体废弃物相关规定进行。

**警告：**由于设备用于处理感染性物质，所以可能存在污染。在丢弃之前，应按认可的程序和标准对设备进行彻底净化.

# 第七章　技术参数

| 尺寸 | | | | | |
|---|---|---|---|---|---|
| 描述 | | 1. 2 m 尺型1344,1354 和 1374,1384 | | 1.8 m 尺型 1349,1359 和1379,1389 | |
| 外尺寸 | | | | | |
| 宽 | mm | 1300 | | 1900 | |
| 进深 | mm | 802 | 802 | 802 | 802 |
| 高 | mm | 1520 | | | |
| 内尺寸 | | | | | |
| 宽 | mm | 1200 | | 1800 | |
| 进深 | mm | 630 | | | |
| 高 | mm | 780 | | | |
| 前工作窗 | | | | | |
| 工作位置 | mm | 250 | | | |
| 最大打开位置 | mm | 500 | | | |
| 固定高度架子的工作区域高度 | | | | | |
| 座位位置 | mm | 750 | | | |
| 侧面接口 | | | | | |
| 直径 | mm | 23 | 23 | 23 | 23 |
| 距边缘距离 | mm | 150 | 130 | 130 | 130 |
| 到后边缘的位置 | | | | | |
| 第一接口 | mm | 150 | 130 | 130 | 130 |
| 第二接口 | mm | 250 | 246 | 246 | 246 |

| 容积，重量和承重 | | | |
|---|---|---|---|
| 描述 | | 4 –英寸型1344,1354, 1374,1384, | 6 –英寸型 1349，1359，1379，1389 |
| 容积 | | | |
| 引流道 | liters | 20 | 30 |
| 重量 | | | |
| 安全柜 | kg | 170 | 230 |
| 支架 | kg | 30 | 35 |
| 承重 | | | |
| 工作表面最大承重 | kg/lb | 25 | |
| 工作区域最大承重 | kg/lb | 50 | 75 |

| 环境条件 | | | |
|---|---|---|---|
| 描述 | | 1.2m 尺型 1344,1354 和1374,1384 1379.1389 | 1.8m 尺型 1349,1359 和 |
| 温度 | | | |
| 最高运行环境温度 | °C | 40 | |
| 最低运行环境温度 | °C | 10 | |
| 湿度 | | | |
| 最大湿度/ 运行 | % r.H. | 90, 无凝结 | |
| 最大湿度 / 保存 | % r.H. | 95 | |
| 对环境的热散逸 | | | |
| 室温20°C | kJ/s | 0.15 | 0.26 |
| 室内温升指数 | | | |
| 窗户关闭条件下室温之上 | °K | < 2 | < 2 |
| 工效学 | | | |
| 噪声级别 | dB(A) | 63, ±2 | 65, ±2 |

**噪声级别的认定根据 NSF/ANSI 49. 2004.测量误差范围在 ± 2 dB.之内。*

| | | |
|---|---|---|
| **电路数据** | | |
| **型号** | | 230V 尺型 - 1.2 m / 1.8 m<br>1344,1354,1374,1384 / 1349,1359, 1379,1389 |
| **电压** | | |
| **额定电压** | V | 1/N/PE AC, 230 V, 50/60 Hz |
| **风机电压** | V | 51.5 VDC |
| **电流** | | |
| **最大功耗** | A | 7 / 8 |
| **漏电电流IEC 61010-1, UL61010-1** | mA | < 3.5 |
| **主板熔断** | A | 2 x T 15 A |
| **插座熔断** | A | 2 x T 5 A |
| **当场熔断** | A | 开关15 A / 保险丝T 15 A |
| **功率** | | |
| **最大输入** | W | 1440 / 2000 |
| **保护电路** | | |
| **保护级别** | | I |
| **保护类型** | | IP 20 |
| **过电压类别 (IEC 61010-1, UL61010-1)** | | II |
| **污染程度(IEC 61010-1, UL61010-1)** | | 2 |
| **线路** | | |
| **主连接** | | 电缆 (3.7 m) |

| | | | |
|---|---|---|---|
| **气流系统** | | | |
| **描述** | | 1.2m 尺型1344,1354 和 1374,1384 | 1.8m 尺型 1349,1359 和 1379,1389 |
| **气流 / 气流速度** | | | |
| **进入气流** | m/s | 0.50 | |
| **下降气流速度** | m/s | 0.32 | |
| **风量** | | | |
| **整体流量** | m³/h | 1370 | 2055 |
| **下降气流流量** | m³/h | 830 | 1245 |
| **废气流量** | m³/h | 540 | 810 |
| **过滤** | | | |
| **类型** | | HEPA | |
| **材料** | | 玻璃纤维绒毛 | |
| **MPPS分离能力** | % | 99.995 | |
| **对0.3微米直径颗粒的分离能力** | % | 99.999 | |
| **下降气流** | | | |
| **宽度** | mm | 1220 | 1830 |
| **进深** | mm | 457 | |
| **高度** | mm | 93 | |
| **废气** | | | |
| **宽度** | mm | 610 | 915 |
| **进深** | mm | 457 | 457 |
| **高度** | mm | 117 | 117 |

# 第八章 认证测试

## 安全柜的类别

应用于中国的安全柜鉴定为II级A2型，符合YY0569-2005
为了上市类型的一起，在安装时需要进行符合YY0569-2005标准的认证测试和重复检测。之后每年至少一次检测。无论改变了过滤器，内部维修还是仪器重新定位，都需要对仪器再次进行标准验证。当应用关键性安全材料时，需要考虑更加频繁的验证（3-6个月）。

## 测试术语

正常值:

Thermo公司描述的缺省值。

测量值：

在安全柜所在地的实测值。

误差

可接受的与正常值的偏差。

平均值

实测值的总和除以次数。平均值用于比较名义值。

设置点：

可接受的进风和下降风速的工作值。

进风速（m/s）：

空气进入样品间开口的速度。

下降风速（m/s）：

移动气体在工作室内循环的速度。

排气速度（m/s）：

通过排气过滤器排风口排出气体的速度。

排风量($m^3/h$):

在排气过滤排出的气体的总量。

## 测试

根据YY0569-2005要求，关系到人员，产品和环境安全的测试必须在II机A2类生物安全柜安装现场进行。测试频率最少为一年一次。

- 下行风速截面测试
- 进风速度测试
- 气流烟雾测试
- HEPA过滤器泄漏测试
- 场地安装评估测试
  - 报警功能 排气系统性能（合适排气管道负压和屏蔽性能）
  - 排气系统性能（合适排气管道负压和屏蔽性能）

除上述标准测试外，下列测试将根据客户要求或认证人员需要来进行。

- 舒适性和安全测试　灯光强度
  - 灯光强度
  - 噪音值　振动
  - 振动
  - 漏电，接地电阻和电极绝缘

**注意：付费服务：**Unless 现场测试的费用由用户承担，除非规格书，报价和合同中特别注明。

## 测试设备

我们推荐如下工厂的测试设备用于这些测试。

| 测试仪器 | 制造商 | 应用 |
|---|---|---|
| 烟管 | MSA<br>Pittsburgh, Pennsylvania, 15230 | 气流形状测试 |
| 温差式风速仪 | TSI<br>Shoreview, Minnesota 55126 | 下行风速测试 |
| 数字安全测试仪 | Ohmic Instruments Co.<br>Easton, Maryland 21601 | 泄漏电流和接地电阻测试 |
| GFI 电路测试仪 | Leviton Manufacturing<br>Little Neck, New York, 11362 | 泄漏电流，接地电阻和电气绝缘 |
| 光度计 | Air Techniques<br>Owing Mills, Maryland, 21117 | 过滤器泄漏测试 |
| 气溶胶发生器 | Air Techniques<br>Owing Mills, Maryland, 21117 | 产生气雾胶 |
| 振动计 | Quest Technologies<br>Oconomowoc, Wisconsin, 53066 | 振动测试 |
| 万用风罩气流测速表 | Shortridge Instruments. Inc.<br>Scottsdale, Arizona, 85260 | 下行风速测试，备选的收紧窗口的进风风速测试。 |

## 测试信息

进风风速-DIM法 （主要的）

描述：直接进风测试法测试进风风速(DIM).

仪器:. . .Shortridge ADM-870, or equivalent

. . . . . .Flow hood Series 8400, or equivalent

方法:

1. 将前窗开到工作位置(250mm)。
2. 工作开口装上风罩，密封其它开口
3. 系统工作20分钟左右.
4. 至少记录5次进风量
5. 算出均值，按照如下计算流速。

## 测试信息 (续)

进风面积:

- 1.2 m 型号 1344,1354/1374,1384: 开口 0.3 $m^2$
- 1.8 m 型号 1349,1359/1379,1389: 开口 0.45 $m^2$

算式:

- 风速 (V1) = 进风量(V2) /实际进风面积(A2)

允许值：

- 0.5 m/s, ±0.025 m/s

修正测量值:

- 进入维修界面，按S2，调节S2到设定值，保存设置。
- 如果由于过滤器堵塞，不能调节速度，那么就调节排气过滤器
- 过滤器调好后，调节排气风机

**注意：** 检查报警限值: 如果S1或S2改变，报警限值S3和S4必须检查后保存。

进风速度 – 缩小窗口方法（备选法）

描述：

- 进风速度通过缩小窗口上的几个穿口点测试。

仪器:

- 温差式风速机 或类似仪器（灼热丝）
- 风速计探头固定架

## 测试信息 (续)

方法:

1. 降低窗口到75 mm。系统工作约20分。
2. 系统工作约20分钟。
3. 将温差测速计探头插到支架上，固定到工作窗口表面，密封好。见图8-1. 调整探头位置，使得空气从窗口中心流经它(37.5 mm)。
4. 从左侧面150 mm开始，间隔150mm连续记录读数3（1.2 mm规格记录7个点，1.8 mm规格记录11个点）。
5. 算出均值，按下列算式计算出进风速度,V1. 算式：

- 进风速 （V1）= 进风速均值*因子*0.3
- 可接收范围：0.5m/s, ±0.025 m/s

**注意:**温差测速仪探头必须位于前面垂直面10度角处，并内部的玻璃窗位于同一平面。

平均值V1乘以k值(0.9929 用于 1.2 m, 0.9918 用于 1.8m).

参考仪器右下角的数据表

进风速度-算式

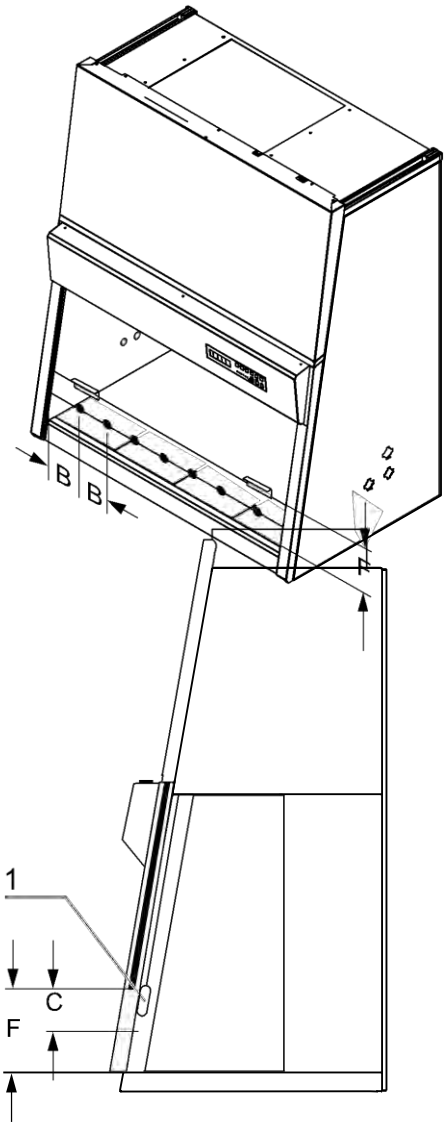


**图 8-1.** 收窄窗口测试方法

## 测试信息（续）

排气气流(可选)

描述:

- 排气速度的测量来确定进风流速
  仪器:
- 温差测速计，或类似（灼热丝）
- 自由站夹具,或类似。
  方法：

1. 仪器在工作位置预热20分钟左右。

2. 将测速计探头放到探头支架，调整高度位于排气过滤器的上方 100 mm

3. 记录有效排气过滤面上方100mm处水平面读数。格栅的面积不超过100mm x 100mm.

4. 算出平均值，计算出进风速度。栅格图样：

- 1.2 m 型号 (1344,1354 / 1374,1384)

24 点

| | | | | | | | | |
|---|---|---|---|---|---|---|---|---|
| | | | | | | | | 152 |
| | | | | | | | | 144 |
| | | | | | | | | 144 |
| | | | | | | | | 152 |
| 152 | 149 | 149 | 149 | 149 | 149 | 149 | 152 | mm |

- 1.8 m 型号(1349,1359 / 1379,1389)

36 点

| | | | | | | | | | | |
|---|---|---|---|---|---|---|---|---|---|---|
| | | | | | | | | | | 152 |
| | | | | | | | | | | 140 |
| | | | | | | | | | | 140 |
| | | | | | | | | | | 152 |
| 152 | 149 | 149 | 149 | 149 | 149 | 149 | 149 | 149 | 152 | mm |

有效排气过滤面积:

- 1.2 m 型号 (1344,1354/1374,1384): 0.427m x 0.580m, 0.248m²
- 1.8 m 型号(1349,1359/1379,1389): 0.427m x 0.885m, 0.378m²

## 测试信息 (续)

进风面积:

- 11.2 m 型号 (1344,1374): 前窗面积 – 0.3 $m^2$
- 1.8 m 型号 (1349,1379): 前窗面积– 0.45 $m^2$

算式:

- 平均排气速度(V2)=测量总和/读书次数
- 排气量(V3)=平均速度(V2)*有效过滤面积(A3)
- 进风速度(V1)=排气量(V3)/工作口面积（A2）

可接收范围:

- 0.5m/s, ±0.025m/s

下行速度 – 均匀安全柜

描述:

- 测量从送风过滤器到工作面的气流速率。

仪器:

- 温差式测试计，或类似（灼热丝）。
- 自由站夹具,或类似。

方法:

1. 仪器在工作位置预热10分钟左右。

2. 将测速计探头插入探头支架，调节到位于窗口底边沿上方100mm处。

3. 记录在工作位置窗口底部上方100mm水平面的读书。格栅图样不超过150mm x 150mm。

## 测试信息 (续)

格栅图样:

• 1.2m 型号 (1344,1354 / 1374,1384)

21 点

| | | | | | | | | |
|---|---|---|---|---|---|---|---|---|
| | | | | | | | | 152 |
| | | | | | | | | 144 |
| | | | | | | | | 144 |
| | | | | | | | | 152 |
| 152 | 149 | 149 | 149 | 149 | 149 | 149 | 152 | mm |

• 1.8m 型号 (1349,1359 / 1379,1389)

33 点

| | | | | | | | | | | |
|---|---|---|---|---|---|---|---|---|---|---|
| | | | | | | | | | | 152 |
| | | | | | | | | | | 140 |
| | | | | | | | | | | 140 |
| | | | | | | | | | | 152 |
| 152 | 149 | 149 | 149 | 149 | 149 | 149 | 149 | 149 | 152 | mm |

算式:

•平均下行速度=总测量值总和/读书个数

校正测试量:

- 进入维修界面，激活S1，调整数字到期望值，保存新数值。
- 由于过滤器堵塞而不能调节速度，则要改变供风过滤器。
- 如果过滤器调节好，调节送风风机。

**注意：** 检查报警限值: 如果S1或S2改变，报警限值S3和S4必须检查后保存。

## HEPA 过滤器泄漏测试

描述:

- 确定下行过滤器和排气过滤器的完整性。

仪器：

- 气溶胶光度计或类似
- 气溶胶发生器或类似

## 可接近扫描过滤器

方法:

1. 仪器预热20分钟左右。
2. 正确地移走工作盘和保护盖.
3. 用T形导管将气溶胶从工作区中后部均匀的释放出来..
4. 依据需要，如果仪器有效净化后没有使用危险性的材料，可以测量上游浓度。依据需要，将连接光度计采样管连接到位于工作盘下面的合适（供气和排气）的测试连接处（右侧，排气测试管。左侧，供气测试管）
5. 使用合适的上游限值测量或计算限值来设定光度计
6. 如标准YY0569-2005所述，扫描下降气流侧和过滤器外周。

可接受度：

- 扫描过滤器 —0.01% 任何一点上游浓度。

## 不可接近或扫描的过滤器

方法:

1. 如上从1到5设置
2. 按照标准YY0569-2005，在管道内采样过滤器的下降气流.

可接受度：

- 不可扫描过滤器 —0.005% 的上游浓度。

## 气流烟雾模式测试

描述:

- 评定内外气流运动

仪器：

- 冷烟 (四钛化氯)

方法:

- 下降气流：

烟雾从工作窗上方 100 mm 工作面中线发出。

•观察屏蔽保持性：

烟雾从窗口后面 25 mm，工作开口上方 150 mm 发出。

•工作开口边缘保持性：

从约距离仪器约 38 mm，工作开口处发出烟雾。

- 窗口密封测试：

从仪器工作区内，从开窗两侧和顶部，距离边沿 50 mm 处发出烟雾。

可接受度：

•一旦注入烟雾，则没有烟雾死点，没有逆流和泄漏。

## 泄漏电流，接地电阻和绝缘性能

描述：

•参考标准GB 4793.1-1995

## 现场安装评估测试

描述:

- 确认仪器合适地整体进入工厂。

# 气流报警

描述:

• 确定气流有20%损失是，气流报警在15内触发。

仪器：

•温差测速计或类似（灼热丝）
•测速计支架
• Shortridge ADM-870 or equivalent
• 风罩 8400 系列或类似

方法：

• 下行气流：

进入维修界面，点击S03

确认平均下行风速低于额定的20%。方法如前所述如下。如果需要，调整和保存S03值，退出维修界面，再次进入维修界面，设置S01到S03-0.5%LED灯“AIRFLOW STABLE”必须从绿变红，点击按键“acknowledge alarm”无需保存退出维修界面。

• 进气:

进入维修界面，点击S04.

确认平均下行风速低于额定的20%。方法如前所述如下。如果需要，调整和保存S04值，退出维修界面，再次进入维修界面，设置S02到S03-0.5%LED灯“AIRFLOW STABLE”必须从绿变红，点击按键“acknowledge alarm”无需保存退出维修界面。

可接受度

• 当下行风速和进风风速设定到正确的值，仪器的报警在15内触发，而且LED “Airflow STABLE“有绿变红（如上所述）。.

## 窗口报警

描述：
•确定窗口报警工作正常。

仪器：
• 操作手册

方法:
• 提高窗口高于正常位置25mm

可接受度：
• 窗口报警触发

## 排气系统性能

描述:
•确定排气系统功能正常
舱盖连接
仪器：
• 冷烟(四氯化钛)
方法:
• 在空气缝隙处放烟，却认负压系统存在。

可接受度：
• 一旦抽进舱盖，则没有烟雾回流到房间内。

直接连接：
仪器：
• 压力计或类似

方法:
• 在平衡节气阀和仪器的导管之间测试静压。

可接受度：
• 有负压存在。

**注意标准**: 有关测试的另外的详细信息，参见YY0569-2005。

| 仪器类型: | 部件号: |
|---|---|
| 序列号: | 维修号: |
| 地点: | 操作者标注: |

| 技术员/公司 | 记录 | 日期 | 签名 |
|---|---|---|---|
| | | | |
| | | | |
| | | | |
| | | | |
| | | | |
| | | | |
| | | | |
| | | | |
| | | | |
| | | | |
| | | | |
| | | | |
| | | | |
| | | | |
| | | | |
| | | | |
| | | | |
| | | | |
| | | | |
| | | | |
| | | | |
| | | | |
| | | | |
| | | | |
| | | | |

Thermo Scientific
Controlled Environment Equipment
401 Millcreek Road
Marietta, Ohio 45750
United States

www.thermofisher.com