ASROCK
B85M-ITX

User Manual



Version 1.1

Published October 2014

Copyright©2014 ASRock INC. All rights reserved.

Copyright Notice:

No part of this documentation may be reproduced, transcribed, transmitted, or translated in any language, in any form or by any means, except duplication of documentation by the purchaser for backup purpose, without written consent of ASRock Inc.

Products and corporate names appearing in this documentation may or may not be registered trademarks or copyrights of their respective companies, and are used only for identification or explanation and to the owners' benefit, without intent to infringe.

Disclaimer:

Specifications and information contained in this documentation are furnished for informational use only and subject to change without notice, and should not be constructed as a commitment by ASRock. ASRock assumes no responsibility for any errors or omissions that may appear in this documentation.

With respect to the contents of this documentation, ASRock does not provide warranty of any kind, either expressed or implied, including but not limited to the implied warranties or conditions of merchantability or fitness for a particular purpose.

In no event shall ASRock, its directors, officers, employees, or agents be liable for any indirect, special, incidental, or consequential damages (including damages for loss of profits, loss of business, loss of data, interruption of business and the like), even if ASRock has been advised of the possibility of such damages arising from any defect or error in the documentation or product.

The terms HDMI™ and HDMI High-Definition Multimedia Interface, and the HDMI logo are trademarks or registered trademarks of HDMI Licensing LLC in the United States and other countries.

This device complies with Part 15 of the FCC Rules. Operation is subject to the following two conditions:

(1) this device may not cause harmful interference, and
(2) this device must accept any interference received, including interference that may cause undesired operation.

CALIFORNIA, USA ONLY

The Lithium battery adopted on this motherboard contains Perchlorate, a toxic substance controlled in Perchlorate Best Management Practices (BMP) regulations passed by the California Legislature. When you discard the Lithium battery in California, USA, please follow the related regulations in advance.
"Perchlorate Material-special handling may apply, see www.dtsc.ca.gov/hazardouswaste/perchlorate"

ASRock Website: http://www.asrock.com

Contents

Chapter 1 Introduction **1**

1.1 Package Contents 1

1.2 Specifications 2

1.3 Unique Features 6

1.4 Motherboard Layout 9

1.5 I/O Panel 11

Chapter 2 Installation **13**

2.1 Installing the CPU 14

2.2 Installing the CPU Fan and Heatsink 17

2.3 Installing Memory Modules (DIMM) 18

2.4 Expansion Slots (PCI and PCI Express Slots) 20

2.5 Jumpers Setup 21

2.6 Onboard Headers and Connectors 22

Chapter 3 Software and Utilities Operation **26**

3.1 Installing Drivers 26

3.2 A-Tuning 27

3.3 Intel® Rapid Start Technology 31

3.4 Intel® Smart Connect Technology 36

3.5 Start8 41

Chapter 4 UEFI SETUP UTILITY **44**

4.1 Introduction 44

4.1.1 UEFI Menu Bar 44

4.1.2 Navigation Keys 45
4.2 Main Screen 46
4.3 OC Tweaker Screen 47
4.4 Advanced Screen 54
4.4.1 CPU Configuration 55
4.4.2 Chipset Configuration 57
4.4.3 Storage Configuration 59
4.4.4 Intel® Rapid Start Technology 61
4.4.5 Intel® Smart Connect Technology 62
4.4.6 ACPI Configuration 63
4.4.7 USB Configuration 65
4.4.8 Trusted Computing 66
4.5 Tools 67
4.6 Hardware Health Event Monitoring Screen 70
4.7 Boot Screen 71
4.8 Security Screen 74
4.9 Exit Screen 75

Chapter 1 Introduction

Thank you for purchasing ASRock B85M-ITX motherboard, a reliable motherboard produced under ASRock's consistently stringent quality control. It delivers excellent performance with robust design conforming to ASRock's commitment to quality and endurance.

In this manual, Chapter 1 and 2 contains the introduction of the motherboard and step-by-step installation guides. Chapter 3 contains the operation guide of the software and utilities. Chapter 4 contains the configuration guide of the BIOS setup.

Because the motherboard specifications and the BIOS software might be updated, the content of this documentation will be subject to change without notice. In case any modifications of this documentation occur, the updated version will be available on ASRock's website without further notice. If you require technical support related to this motherboard, please visit our website for specific information about the model you are using. You may find the latest VGA cards and CPU support list on ASRock's website as well. ASRock website http://www.asrock.com.

1.1 Package Contents

- ASRock B85M-ITX Motherboard (Mini-ITX Form Factor)
- ASRock B85M-ITX Quick Installation Guide
- ASRock B85M-ITX Support CD
- 2 x Serial ATA (SATA) Data Cables (Optional)
- 1 x I/O Panel Shield

1.2 Specifications

Platform	• Mini-ITX Form Factor • All Solid Capacitor design
CPU	• Supports 4th Generation Intel® CoreTM i7 / i5 / i3 / Xeon® / Pentium® / Celeron® in LGA1150 Package • 4 Power Phase Design • Supports Intel® Turbo Boost 2.0 Technology
Chipset	• Intel® B85 • Supports Intel® Small Business Advantage 2.0
Memory	• Dual Channel DDR3 Memory Technology • 2 x DDR3 DIMM slots • Supports DDR3 1600/1333/1066 non-ECC, un-buffered memory • Max. capacity of system memory: 16GB (see CAUTION) • Supports Intel® Extreme Memory Profile (XMP)1.3/1.2
Expansion Slot	• 1 x PCI Express 3.0 x16 slot
Graphics	• Intel® HD Graphics Built-in Visuals and the VGA outputs can be supported only with processors which are GPU integrated. • Supports Intel® HD Graphics Built-in Visuals : Intel® Quick Sync Video with AVC, MVC (S3D) and MPEG-2 Full HW Encode1, Intel® InTruTM 3D, Intel® Clear Video HD Technology, Intel® InsiderTM, Intel® HD Graphics 4400/4600 • Pixel Shader 5.0, DirectX 11.1 • Max. shared memory 1792MB • Three VGA Output options: D-Sub, DVI-D and HDMI • Supports Triple Monitors • Supports HDMI Technology with max. resolution up to 1920x1200 @ 60Hz • Supports DVI-D with max. resolution up to 1920x1200 @ 60Hz

	• Supports D-Sub with max. resolution up to 1920x1200 @ 60Hz • Supports Auto Lip Sync, Deep Color (12bpc), xvYCC and HBR (High Bit Rate Audio) with HDMI (Compliant HDMI monitor is required) • Supports HDCP function with DVI-D and HDMI ports • Supports Full HD 1080p Blu-ray (BD) playback with DVI-D and HDMI ports
Audio	• 7.1 CH HD Audio with Content Protection (Realtek ALC892 Audio Codec) • Premium Blu-ray audio support
LAN	• PCIE x1 Gigabit LAN 10/100/1000 Mb/s • Qualcomm® Atheros® AR8171 • Supports Qualcomm® Atheros® Security Wake On Internet Technology • Supports Wake-On-LAN • Supports Energy Efficient Ethernet 802.3az • Supports PXE
Rear Panel I/O	• 1 x PS/2 Mouse/Keyboard Port • 1 x D-Sub Port • 1 x DVI-D Port • 1 x HDMI Port • 1 x Optical SPDIF Out Port • 1 x eSATA Connector • 4 x USB 2.0 Ports • 2 x USB 3.0 Ports • 1 x RJ-45 LAN Port with LED (ACT/LINK LED and SPEED LED) • HD Audio Jack: Rear Speaker / Central / Bass / Line in / Front Speaker / Microphone

Storage	• 4 x SATA3 6.0 Gb/s connectors, support NCQ, AHCI and "Hot Plug" functions • 1 x eSATA connector, supports NCQ, AHCI and "Hot Plug" functions
Connector	• 1 x Chassis Intrusion header • 1 x TPM header • 1 x CPU Fan connector (4-pin) • 1 x Chassis Fan connector (4-pin) • 1 x 24 pin ATX power connector • 1 x 4 pin 12V power connector • 1 x Front panel audio connector • 1 x USB 2.0 header (supports 2 USB 2.0 ports) • 1 x USB 3.0 header (supports 2 USB 3.0 ports)
BIOS Feature	• 64Mb AMI UEFI Legal BIOS with Multilingual GUI support • ACPI 1.1 Compliance Wake Up Events • SMBIOS 2.3.1 Support • CPU, DRAM, PCH 1.05V, PCH 1.5V Voltage Multi-adjustment
Support CD	• Drivers, Utilities, AntiVirus Software (Trial Version), CyberLink MediaEspresso 6.5 Trial, Google Chrome Browser and Toolbar, Start8 (30 days trial)
Hardware Monitor	• CPU/Chassis Temperature Sensing • CPU/Chassis Tachometer • CPU/Chassis Quiet Fan (Allow Chassis Fan Speed Auto-Adjust by CPU Temperature) • CPU/Chassis Fan Multi-Speed Control • CASE OPEN detection • Voltage Monitoring: +12V, +5V, +3.3V, CPU Vcore
OS	• Microsoft® Windows® 8 / 8 64-bit / 7 / 7 64-bit compliant
Certifications	• FCC, CE, WHQL • ErP/EuP Ready (ErP/EuP ready power supply is required)

** For detailed product information, please visit our website: http://www.asrock.com*

Due to limitation, the actual memory size may be less than 4GB for the reservation for system usage under Windows® 32-bit operating systems. Windows® 64-bit operating systems do not have such limitations. You can use ASRock XFast RAM to utilize the memory that Windows® cannot use.

1.3 Unique Features

ASRock A-Tuning

A-Tuning is ASRock's multi purpose software suite with a new interface, more new features and improved utilities, including XFast RAM, Dehumidifier, Good Night LED, FAN-Tastic Tuning, OC Tweaker and a whole lot more.

ASRock Instant Flash

ASRock Instant Flash is a BIOS flash utility embedded in Flash ROM. This convenient BIOS update tool allows you to update the system BIOS in a few clicks without preparing an additional floppy diskette or other complicated flash utility. Just save the new BIOS file to your USB storage and launch this tool by pressing <F6> or <F2> during POST to enter the BIOS setup menu to access ASRock Instant Flash. Please be noted that the USB flash drive or hard drive must use FAT32/16/12 file system.

ASRock APP Charger

Simply by installing the ASRock APP Charger makes your iPhone/iPad/iPod Touch charge up to 40% faster than before on your computer. ASRock APP Charger allows you to quickly charge many Apple devices simultaneously and even supports continuous charging when your PC enters into Standby mode (S1), Suspend to RAM (S3), hibernation mode (S4) or power off (S5).

ASRock XFast USB

ASRock XFast USB can boost the performance of your USB storage devices. The performance may depend on the properties of the device.

ASRock XFast LAN

ASRock XFast LAN provides faster internet access, which includes the benefits listed below. LAN Application Prioritization: You can configure your application's priority ideally and add new programs to the list. Lower Latency in Game: After setting online game's priority higher, it can lower the latency in games. Traffic Shaping: You can watch Youtube HD videos and download simultaneously. Real-Time Analysis of Your Data: With the status window, you can easily recognize which data streams you are currently transferring.



ASRock XFast RAM

ASRock XFast RAM is included in A-Tuning. It fully utilizes the memory space that cannot be used under Windows® 32-bit operating systems. ASRock XFast RAM shortens the loading time of previously visited websites, making web surfing faster than ever. And it also boosts the speed of Adobe Photoshop 5 times faster. Another advantage of ASRock XFast RAM is that it reduces the frequency of accessing your SSDs or HDDs in order to extend their lifespan.



ASRock Crashless BIOS

ASRock Crashless BIOS allows users to update their BIOS without fear of failing. If power loss occurs during the BIOS updating process, ASRock Crashless BIOS will automatically finish the BIOS update procedure after regaining power. Please note that BIOS files need to be placed in the root directory of your USB disk. Only USB 2.0 ports support this feature.



ASRock OMG (Online Management Guard)

Administrators are able to establish an internet curfew or restrict internet access at specified times via OMG. You may schedule the starting and ending hours of internet access granted to other users. In order to prevent users from bypassing OMG, guest accounts without permission to modify the system time are required.



ASRock Internet Flash

ASRock Internet Flash downloads and updates the latest UEFI firmware version from our servers for you without entering Windows® OS. Please setup network configuration before using Internet Flash.



ASRock System Browser

ASRock System Browser shows the overview of your current PC and the devices connected.



ASRock Dehumidifier Function

Users may prevent motherboard damages due to dampness by enabling "Dehumidifier Function". When enabling Dehumidifier Function, the computer will power on automatically to dehumidify the system after entering S4/S5 state.



ASRock Easy Driver Installer

For users that don't have an optical disk drive to install the drivers from our support CD, Easy Driver Installer is a handy tool in the UEFI that installs the LAN driver to your system via an USB storage device, then downloads and installs the other required drivers automatically.

ASRock Interactive UEFI

ASRock Interactive UEFI is a blend of system configuration tools, cool sound effects and stunning visuals. The unprecedented UEFI provides a more attractive interface and more amusment.

ASRock Fast Boot

With ASRock's exclusive Fast Boot technology, it takes less than 1.5 seconds to logon to Windows 8 from a cold boot. No more waiting! The speedy boot will completely change your user experience and behavior.

ASRock Restart to UEFI

Windows® 8 brings the ultimate boot up experience. The lightning boot up speed makes it hard to access the UEFI setup. ASRock Restart to UEFI allows users to enter the UEFI automatically when turning on the PC. By enabling this function, the PC will enter the UEFI directly after you restart.

ASRock Good Night LED

ASRock Good Night LED technology offers you a better sleeping environment by extinguishing the unessential LEDs. By enabling Good Night LED in the BIOS, the Power/HDD LEDs will be switched off when the system is powered on. Good Night LED will automatically switch off the Power and Keyboard LEDs when the system enters into Standby/Hibernation mode as well.

ASRock USB Key

In a world where time is money, why waste precious time everyday typing usernames to log in to Windows? Why should we even bother memorizing those foot long passwords? Just plug in the USB Key and let your computer log in to windows automatically!

ASRock FAN-Tastic Tuning

ASRock FAN-Tastic Tuning is included in A-Tuning. Configure up to five different fan speeds using the graph. The fans will automatically shift to the next speed level when the assigned temperature is met.

1.4 Motherboard Layout

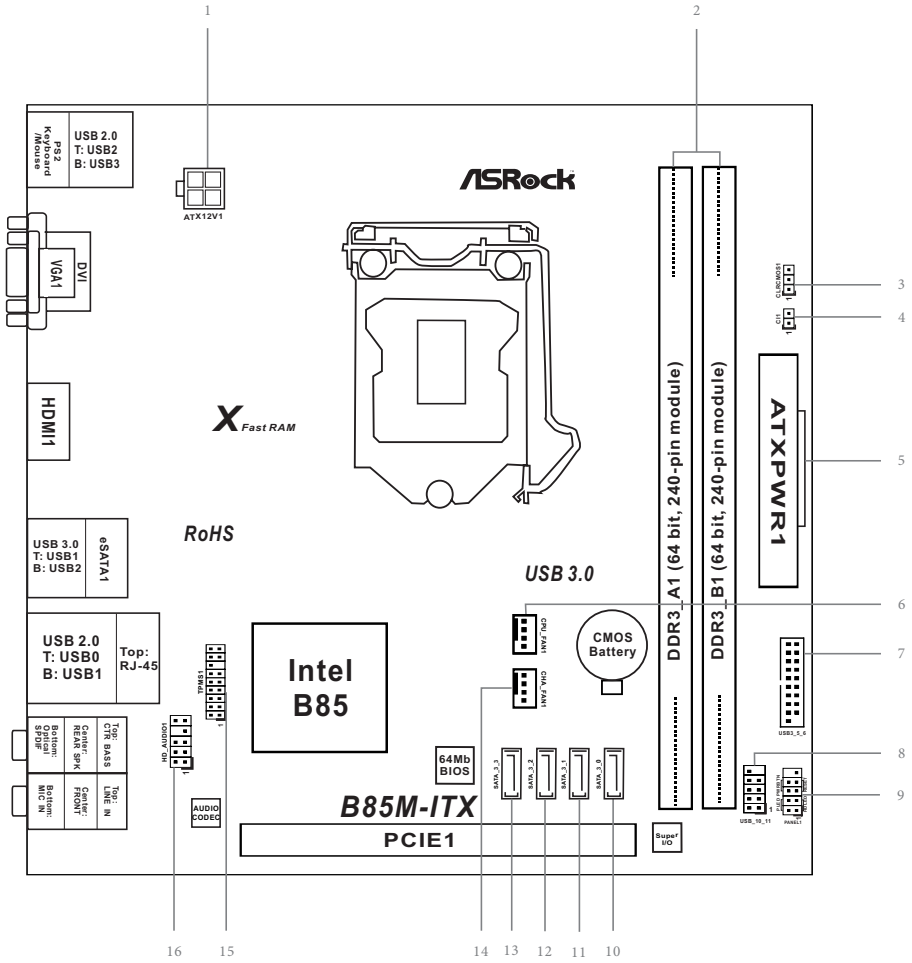

No.	Description
1	ATX 12V Power Connector (ATX12V1)
2	2 x 240-pin DDR3 DIMM Slots (DDR3_A1, DDR3_B1)
3	Clear CMOS Jumper (CLRCMOS1)
4	Chassis Intrusion Header (CI1)
5	ATX Power Connector (ATXPWR1)
6	CPU Fan Connector (CPU_FAN1)
7	USB 3.0 Header (USB3_5_6)
8	USB 2.0 Header (USB10_11)
9	System Panel Header (PANEL1)
10	SATA3 Connector (SATA3_0)
11	SATA3 Connector (SATA3_1)
12	SATA3 Connector (SATA3_2)
13	SATA3 Connector (SATA3_3)
14	Chassis Fan Connector (CHA_FAN1)
15	TPM Header (TPMS1)
16	Front Panel Audio Header (HD_AUDIO1)

1.5 I/O Panel

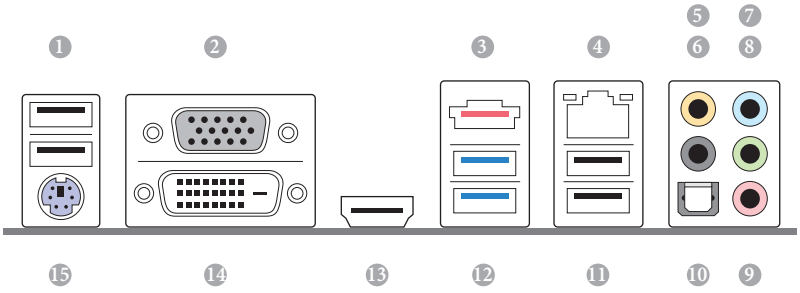

No.	Description	No.	Description
1	USB 2.0 Ports (USB_23)	9	Microphone (Pink)
2	VGA Port	10	Optical SPDIF Out Port
3	eSATA Connector***	11	USB 2.0 Ports (USB_01)
4	LAN RJ-45 Port*	12	USB 3.0 Ports (USB3_12)
5	Central / Bass (Orange)	13	HDMI Port
6	Rear Speaker (Black)	14	DVI-D Port
7	Line In (Light Blue)	15	PS/2 Mouse/Keyboard Port
8	Front Speaker (Lime)**		

** There are two LEDs on each LAN port. Please refer to the table below for the LAN port LED indications.*

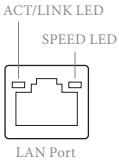

Activity / Link LED		Speed LED	
Status	**Description**	**Status**	**Description**
Off	No Link	Off	10Mbps connection
Blinking	Data Activity	Orange	100Mbps connection
On	Link	Green	1Gbps connection

*** If you use a 2-channel speaker, please connect the speaker's plug into "Front Speaker Jack". See the table below for connection details in accordance with the type of speaker you use.*

Audio Output Channels	Front Speaker (No. 8)	Rear Speaker (No. 6)	Central / Bass (No. 5)	Line In (No. 7)
2	V	--	--	--
4	V	V	--	--
6	V	V	V	--
8	V	V	V	V

To enable Multi-Streaming, you need to connect a front panel audio cable to the front panel audio header. After restarting your computer, you will find the "Mixer" tool on your system. Please select "Mixer ToolBox" , click "Enable playback multi-streaming", and click "ok". Choose "2CH", "4CH", "6CH", or "8CH" and then you are allowed to select "Realtek HDA Primary output" to use the Rear Speaker, Central/Bass, and Front Speaker, or select "Realtek HDA Audio 2nd output" to use the front panel audio.

**** The eSATA connector supports SATA with cables within 1 meters.*

Chapter 2 Installation

This is an Mini-ITX form factor motherboard. Before you install the motherboard, study the configuration of your chassis to ensure that the motherboard fits into it.

Pre-installation Precautions

Take note of the following precautions before you install motherboard components or change any motherboard settings.

- Make sure to unplug the power cord before installing or removing the motherboard. Failure to do so may cause physical injuries to you and damages to motherboard components.
- In order to avoid damage from static electricity to the motherboard's components, NEVER place your motherboard directly on a carpet. Also remember to use a grounded wrist strap or touch a safety grounded object before you handle the components.
- Hold components by the edges and do not touch the ICs.
- Whenever you uninstall any components, place them on a grounded anti-static pad or in the bag that comes with the components.
- When placing screws to secure the motherboard to the chassis, please do not over-tighten the screws! Doing so may damage the motherboard.

2.1 Installing the CPU

1. *Before you insert the 1150-Pin CPU into the socket, please check if the **PnP cap** is on the socket, if the CPU surface is unclean, or if there are any **bent pins** in the socket. Do not force to insert the CPU into the socket if above situation is found. Otherwise, the CPU will be seriously damaged.*
2. *Unplug all power cables before installing the CPU.*

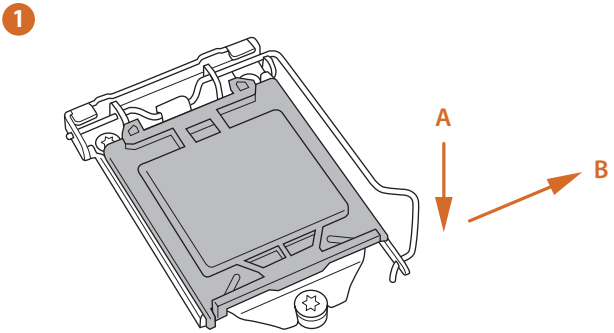

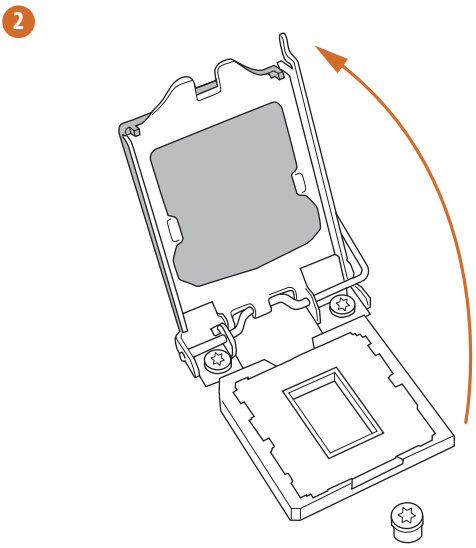

3

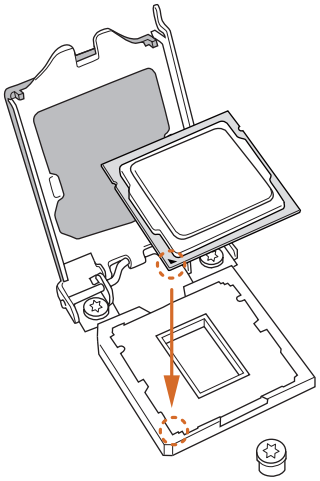

4

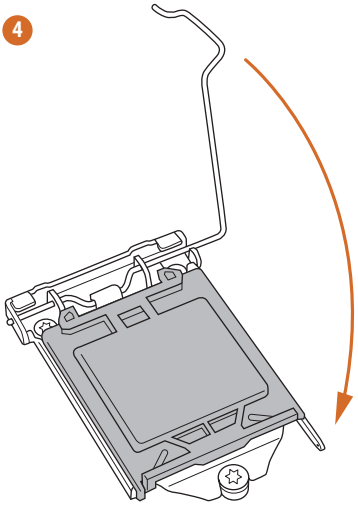

5

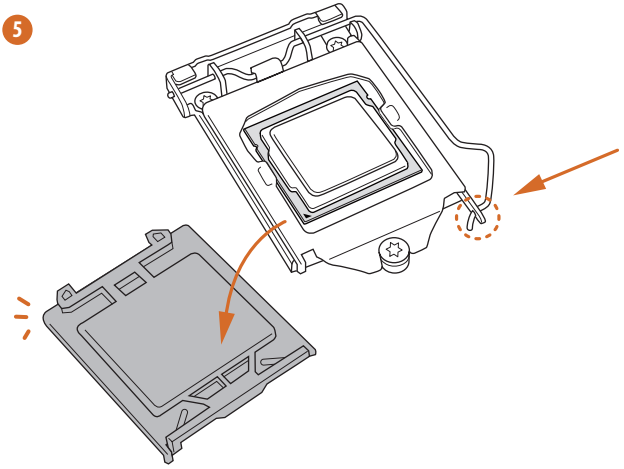

Please save and replace the cover if the processor is removed. The cover must be placed if you wish to return the motherboard for after service.

2.2 Installing the CPU Fan and Heatsink

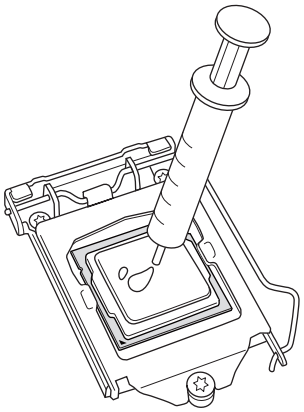

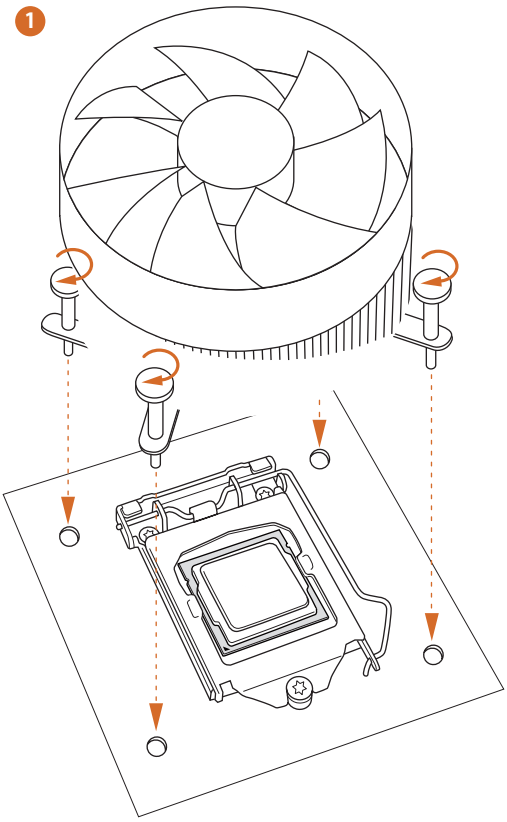

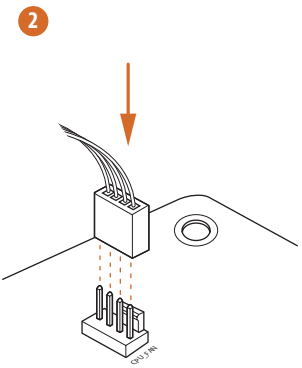

2.3 Installing Memory Modules (DIMM)

This motherboard provides two 240-pin DDR3 (Double Data Rate 3) DIMM slots, and supports Dual Channel Memory Technology.

1. *For dual channel configuration, you always need to install identical (the same brand, speed, size and chip-type) DDR3 DIMM pairs.*
2. *It is unable to activate Dual Channel Memory Technology with only one memory module installed.*
3. *It is not allowed to install a DDR or DDR2 memory module into a DDR3 slot; otherwise, this motherboard and DIMM may be damaged.*

The DIMM only fits in one correct orientation. It will cause permanent damage to the motherboard and the DIMM if you force the DIMM into the slot at incorrect orientation.

1

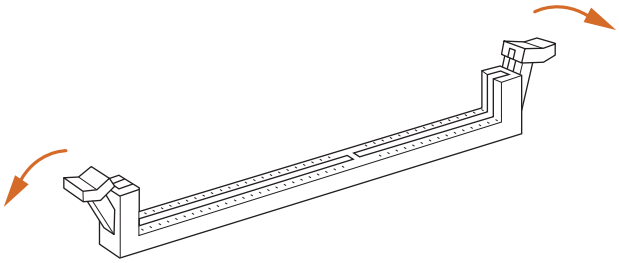

2

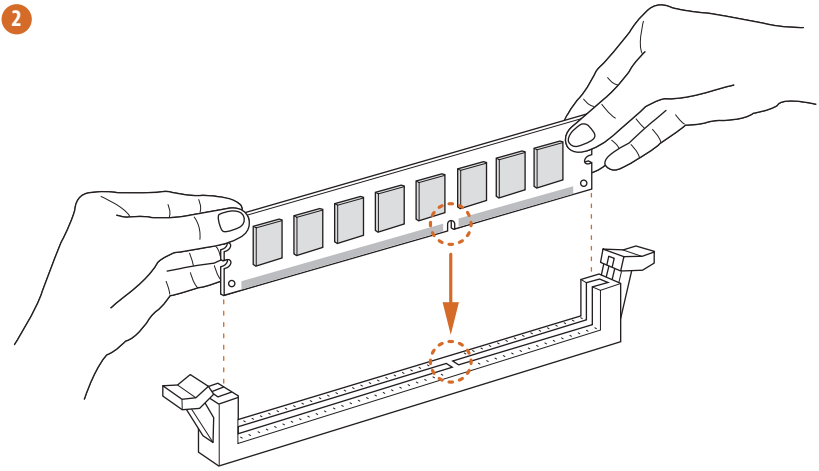

3

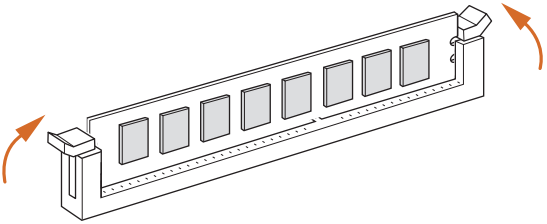

2.4 Expansion Slots (PCI and PCI Express Slots)

There is 1 PCI Express slot on this motherboard.

Before installing an expansion card, please make sure that the power supply is switched off or the power cord is unplugged. Please read the documentation of the expansion card and make necessary hardware settings for the card before you start the installation.

PCIe slots:

PCIE1 (PCIe 3.0 x16 slot) is used for PCI Express x16 lane width graphics cards.

2.5 Jumpers Setup

The illustration shows how jumpers are setup. When the jumper cap is placed on the pins, the jumper is “Short”. If no jumper cap is placed on the pins, the jumper is “Open”. The illustration shows a 3-pin jumper whose pin1 and pin2 are “Short” when a jumper cap is placed on these 2 pins.

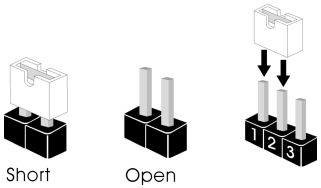

Clear CMOS Jumper (CLRCMOS1) (see p.9, No. 3)	1_2 Default	2_3 Clear CMOS

CLRCMOS1 allows you to clear the data in CMOS. To clear and reset the system parameters to default setup, please turn off the computer and unplug the power cord from the power supply. After waiting for 15 seconds, use a jumper cap to short pin2 and pin3 on CLRCMOS1 for 5 seconds. However, please do not clear the CMOS right after you update the BIOS. If you need to clear the CMOS when you just finish updating the BIOS, you must boot up the system first, and then shut it down before you do the clear-CMOS action. Please be noted that the password, date, time, and user default profile will be cleared only if the CMOS battery is removed.

If you clear the CMOS, the case open may be detected. Please adjust the BIOS option “Clear Status” to clear the record of previous chassis intrusion status.

2.6 Onboard Headers and Connectors

Onboard headers and connectors are NOT jumpers. Do NOT place jumper caps over these headers and connectors. Placing jumper caps over the headers and connectors will cause permanent damage to the motherboard.

System Panel Header
(9-pin PANEL1)
(see p.9, No. 9)

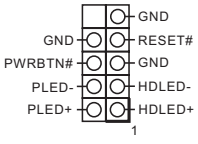

Connect the power switch, reset switch and system status indicator on the chassis to this header according to the pin assignments below. Note the positive and negative pins before connecting the cables.

PWRBTN (Power Switch):
Connect to the power switch on the chassis front panel. You may configure the way to turn off your system using the power switch.

RESET (Reset Switch):
Connect to the reset switch on the chassis front panel. Press the reset switch to restart the computer if the computer freezes and fails to perform a normal restart.

PLED (System Power LED):
Connect to the power status indicator on the chassis front panel. The LED is on when the system is operating. The LED keeps blinking when the system is in S1/S3 sleep state. The LED is off when the system is in S4 sleep state or powered off (S5).

HDLED (Hard Drive Activity LED):
Connect to the hard drive activity LED on the chassis front panel. The LED is on when the hard drive is reading or writing data.

The front panel design may differ by chassis. A front panel module mainly consists of power switch, reset switch, power LED, hard drive activity LED, speaker and etc. When connecting your chassis front panel module to this header, make sure the wire assignments and the pin assignments are matched correctly.

Serial ATA3 Connectors
(SATA3_0:
see p.9, No. 10)
(SATA3_1:
see p.9, No. 11)
(SATA3_2:
see p.9, No. 12)
(SATA3_3:
see p.9, No. 13)



These four SATA3 connectors support SATA data cables for internal storage devices with up to 6.0 Gb/s data transfer rate.

USB 2.0 Headers
(9-pin USB10_11)
(see p.9, No. 8)

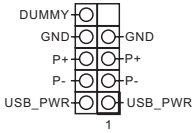

Besides two USB 2.0 ports on the I/O panel, there are one header on this motherboard. Each USB 2.0 header can support two ports.

USB 3.0 Headers
(19-pin USB3_5_6)
(see p.9, No. 7)

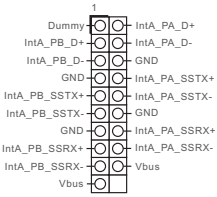

Besides four USB 3.0 ports on the I/O panel, there are one header on this motherboard. Each USB 3.0 header can support two ports.

Front Panel Audio Header
(9-pin HD_AUDIO1)
(see p.9, No. 16)

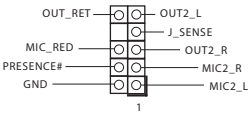

This header is for connecting audio devices to the front audio panel.

1. *High Definition Audio supports Jack Sensing, but the panel wire on the chassis must support HDA to function correctly. Please follow the instructions in our manual and chassis manual to install your system.*
2. *If you use an AC'97 audio panel, please install it to the front panel audio header by the steps below:*
   A. Connect Mic_IN (MIC) to MIC2_L.
   B. Connect Audio_R (RIN) to OUT2_R and Audio_L (LIN) to OUT2_L.
   C. Connect Ground (GND) to Ground (GND).
   D. MIC_RET and OUT_RET are for the HD audio panel only. You don't need to connect them for the AC'97 audio panel.
   E. To activate the front mic, go to the "FrontMic" Tab in the Realtek Control panel and adjust "Recording Volume".

Chassis Fan Connector (4-pin CHA_FAN1) (see p.9, No. 14)	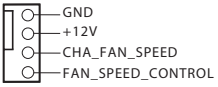	Please connect fan cable to the fan connector and match the black wire to the ground pin.
CPU Fan Connectors (4-pin CPU_FAN1) (see p.9, No. 6)	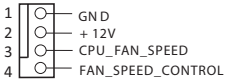	This motherboard provides a 4-Pin CPU fan (Quiet Fan) connector. If you plan to connect a 3-Pin CPU fan, please connect it to Pin 1-3.
ATX Power Connector (24-pin ATXPWR1) (see p.9, No. 5)	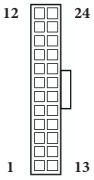	This motherboard provides a 24-pin ATX power connector. To use a 20-pin ATX power supply, please plug it along Pin 1 and Pin 13.

English

ATX 12V Power Connector (8-pin ATX12V1) (see p.9, No. 1)	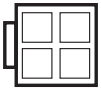	This motherboard provides an 8-pin ATX 12V power connector. To use a 4-pin ATX power supply, please plug it along Pin 1 and Pin 5.
Chassis Intrusion Header (2-pin CI1) (see p.9, No. 4)	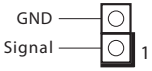	This motherboard supports CASE OPEN detection feature that detects if the chassis cove has been removed. This feature requires a chassis with chassis intrusion detection design.
TPM Header (17-pin TPMS1) (see p.9, No. 15)	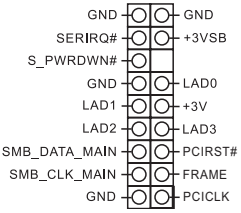	This connector supports Trusted Platform Module (TPM) system, which can securely store keys, digital certificates, passwords, and data. A TPM system also helps enhance network security, protects digital identities, and ensures platform integrity.

Chapter 3 Software and Utilities Operation

3.1 Installing Drivers

The Support CD that comes with the motherboard contains necessary drivers and useful utilities that enhance the motherboard's features.

Running The Support CD

To begin using the support CD, insert the CD into your CD-ROM drive. The CD automatically displays the Main Menu if "AUTORUN" is enabled in your computer. If the Main Menu does not appear automatically, locate and double click on the file "ASRSETUP.EXE" in the Support CD to display the menu.

Drivers Menu

The drivers compatible to your system will be auto-detected and listed on the support CD driver page. Please click **Install All** or follow the order from top to bottom to install those required drivers. Therefore, the drivers you install can work properly.

Utilities Menu

The Utilities Menu shows the application software that the motherboard supports. Click on a specific item then follow the installation wizard to install it.

To improve Windows 7 compatibility, please download and install the following hot fix provided by Microsoft.
"KB2720599": http://support.microsoft.com/kb/2720599/en-us

3.2 A-Tuning

A-Tuning is ASRock's multi purpose software suite with a new interface, more new features and improved utilities, including XFast RAM, Dehumidifier, Good Night LED, FAN-Tastic Tuning, OC Tweaker and a whole lot more.

3.2.1 Installing A-Tuning

When you install the all-in-one driver to your system from ASRock's support CD, A-Tuning will be auto-installed as well. After the installation, you will find the icon "A-Tuning" on your desktop. Double-click the "A-Tuning" icon, A-Tuning main menu will pop up.

3.2.2 Using A-Tuning

There are five sections in AXTU main menu: Operation Mode, Tools, OC Tweaker, System Info and Tech Service.

Operation Mode

Choose an operation mode for your computer.

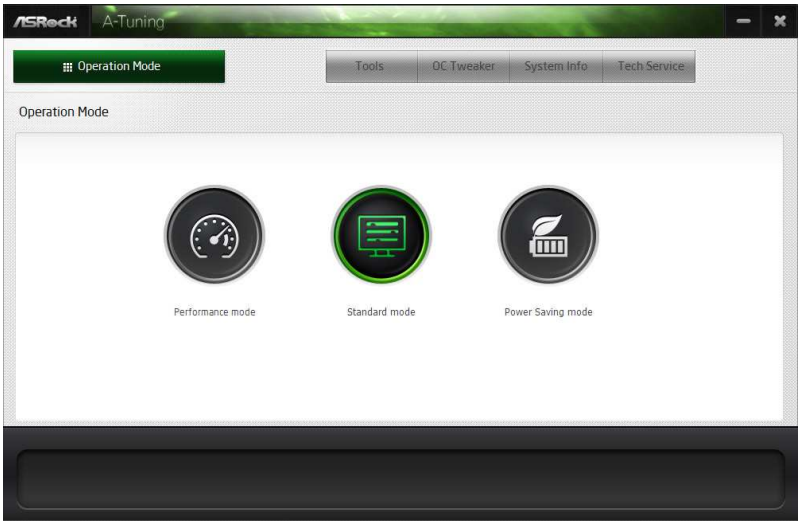

Tools

Various tools and utilities.

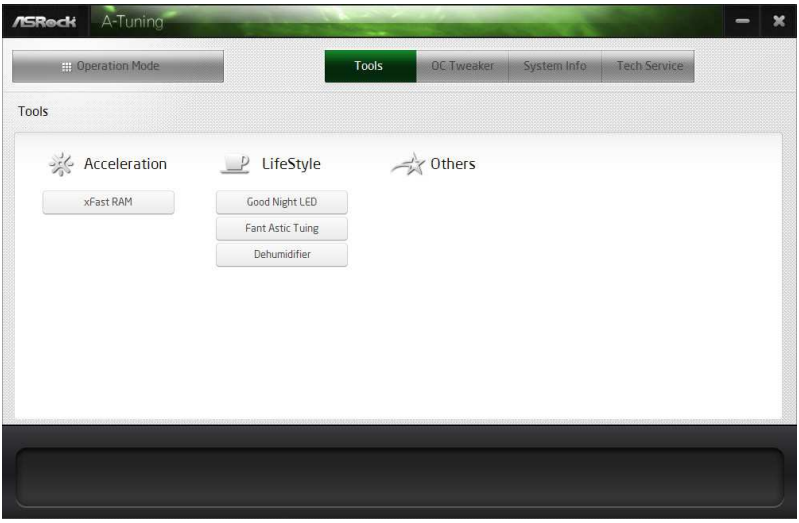

XFast RAM

Boost the system's performance and extend the HDD's or SDD's lifespan! Create a hidden partition, then assign which files should be stored in the RAM drive.

Fast Boot

Fast Boot minimizes your computer's boot time. Please note that Ultra Fast mode is only supported by Windows 8 and the VBIOS must support UEFI GOP if you are using an external graphics card.

OMG

Schedule the starting and ending hours of Internet access granted to other users. Place X marks on the time table to disable the Internet.

Good Night LED

Switch off the Power/HDD/LAN LEDs when the system is on, and automatically switch off the Power and Keyboard LEDs when the system enters into Standby/ Hibernation mode.

FAN-Tastic Tuning

Configure up to five different fan speeds using the graph. The fans will automatically shift to the next speed level when the assigned temperature is met.

Dehumidifier

Prevent motherboard damages due to dampness. Enable this function and configure the period of time until the computer powers on, and the duration of the dehumidifying process.

HDMI-IN

Connect two different devices to one monitor and toggle between the primary and secondary screen without replugging the connectors every time. Please set a hotkey for switching between the two devices.

OC Tweaker

Configurations for overclocking the system.

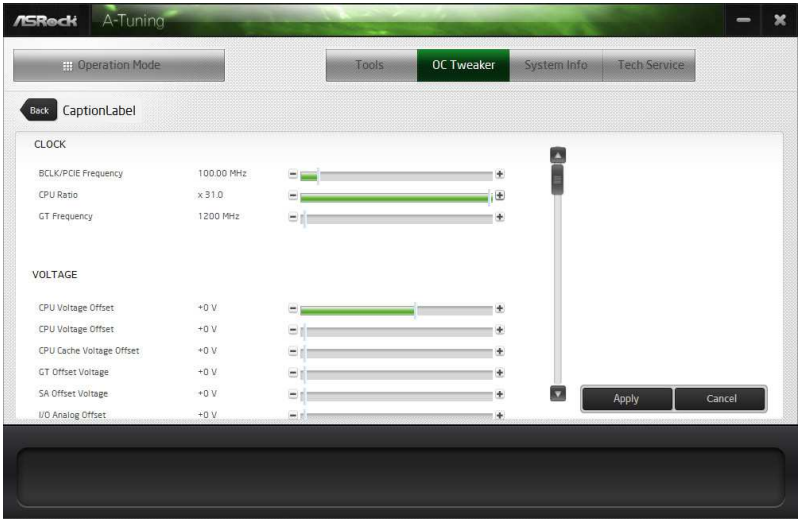

System Info

View information about the system.

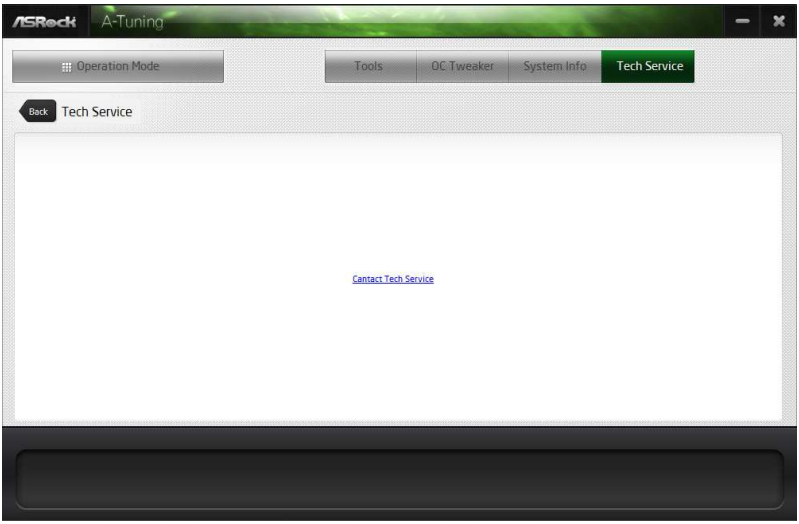

Tech Service

Contact Tech Service.

3.3 Intel® Rapid Start Technology

Intel® Rapid Start Technology enables your system to wake up faster from deep sleep, saving time and power consumption. Feel secure to know that your system will resume to working condition even if an unexpected power loss happens while the PC is in sleep mode.

3.3.1 System Requirements

- Confirm whether your motherboard supports this feature.
- Operating system: Microsoft Windows 8/7 (32- or 64-bit edition)
- Set the SATA mode to AHCI. If Windows 8/7 is already installed under IDE mode, directly changing the SATA mode to AHCI may cause Windows 8/7 to crash while booting. If your system is not in AHCI mode, please follow the instructions below.

There are certain risks. Please backup any important data before operating to avoid loss.

1. Press **Win + R** simultaneously in Windows 8/7, type "Regedit" into the word box then click **OK**.

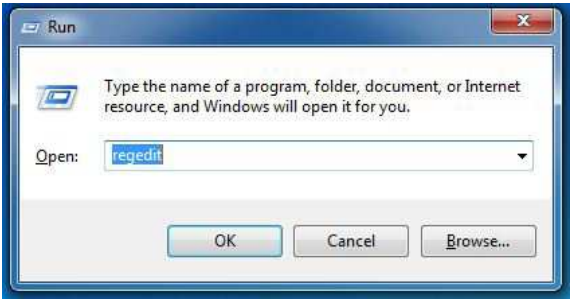

2. Enter into **HKEY_LOCAL_MACHINE\SYSTEM\CurrentControlSet\services\msahci** in Windows Registry Editor. Double click on the value **Start** and change the value from **3** into **0**. Click on **OK**.

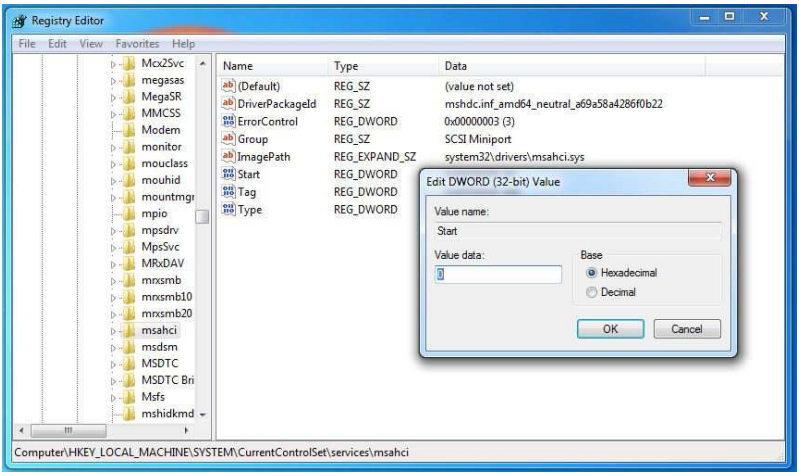

3. Exit the Registry Editor window and restart the computer.
4. Press **F2** to enter BIOS, then go to **Advanced -> Storage Configuration** and change SATA Mode to **AHCI**. Press **F10** to save changes and exit.
5. Enter Windows 8/7. Windows will discover the new device and install AHCI drivers automatically.

3.3.2 Setup Guide

Configuring Rapid Start

Step 1

Run ASRock Rapid Start utility from **Start -> All Programs -> ASRock Utility**.

Step 2

If you have more than one hard drives in your system, you must select one, then choose the **Partition Size** desired for your hidden partition and click on **Create**. The system will automatically create a hidden partition according to your settings. If there are SSD's installed into your system, it is recommended to create the partition on the SSD.



Step 3

When prompted to restart after the setup, click **Yes** to reboot.



Step 4

Double-click the Intel® Rapid Start Technology Manager icon in the Windows system tray.

Step 5

Make sure Rapid Start is on. Drag the slider to configure the time. For example, if the timer value is set to ten minutes, the system will enable Rapid Start mode after entering sleep state for ten minutes. If the timer is set to 0 minutes, Windows will immediately enable Rapid Start mode as it enters sleep state.

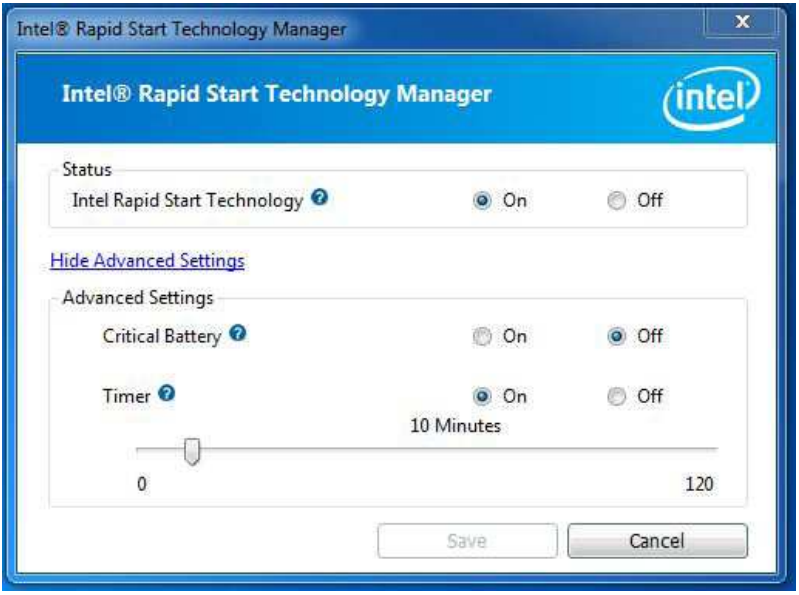

Using Rapid Start

1. You may shut down the computer without terminating the applications or files you are executing currently. Click on Windows Start -> the arrow next to Shut down, and click on **Sleep**.

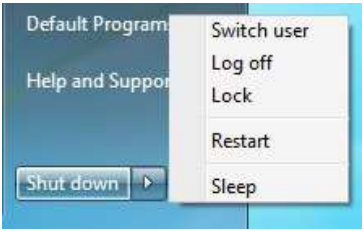

2. Windows system will enter sleep state.
3. According to your settings in Rapid Start Technology Manager, the system will automatically wake up and enable Rapid Start mode after entering sleep

state for a period of time. The power of the computer in Rapid Start mode can be cut off, it will not cause data loss of the programs or files you were executing before entering sleep state.

4. When you wish to continue to use the computer just hit the power button, the system will rapidly return to Windows, the programs and files which you were using before entering sleep state will be accessible immediately.

3.4 Intel® Smart Connect Technology

Intel® Smart Connect Technology is a feature that periodically wakes your computer from Windows® sleep state to refresh email or social networking applications. It saves your waiting time and keeps the content always up-to-date.

3.4.1 System Requirements

- Confirm whether your motherboard supports this feature.
- Operating system: Microsoft Windows 8/7 (32- or 64-bit edition)
- Set the SATA mode to AHCI. If Windows 8/7 is already installed under IDE mode, directly changing the SATA mode to AHCI may cause Windows 8/7 to crash while booting. If your system is not in AHCI mode, please follow the instructions below.

There are certain risks. Please backup any important data before operating to avoid loss.

1. Press **Win + R** simultaneously in Windows 8/7, type "Regedit" into the word box then click **OK**.

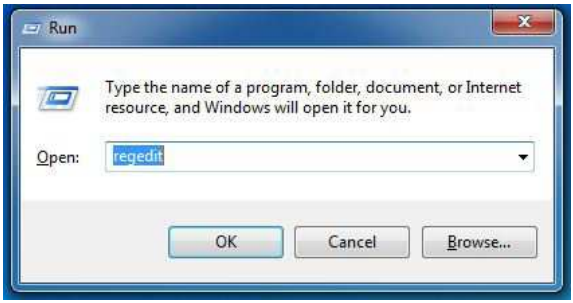

2. Enter into **HKEY_LOCAL_MACHINE\SYSTEM\CurrentControlSet\services\msahci** in Windows Registry Editor. Double click on the value **Start** and change the value from **3** into **0**. Click on **OK**.

3.4.2 Setup Guide

Installing ASRock Smart Connect Utility

Step 1

Install **ASRock Smart Connect Utility**, which is located in the folder at the following path of the Support CD: \ **ASRock Utility > Smart Connect**.

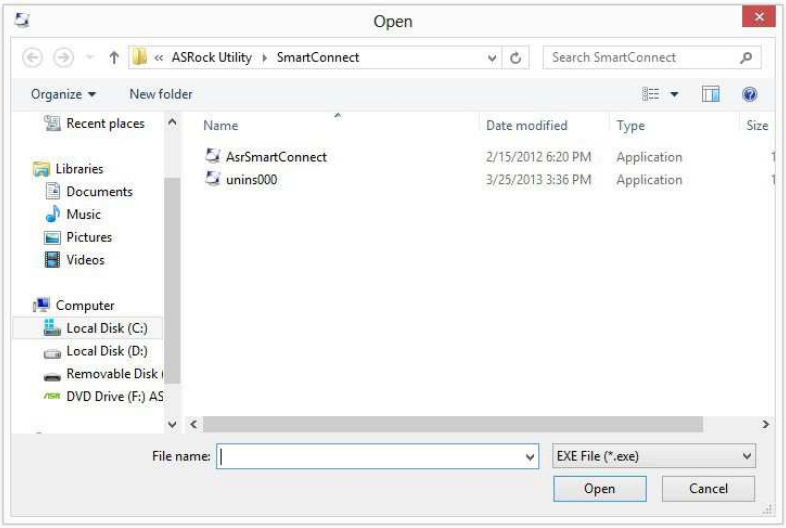

Step 2

Once installed, run ASRock Smart Connect from your desktop or go to Windows **Start -> All Programs -> ASRock Utility**.



Step 3

Click the **Add** button. Take Foxmail as an example, add Foxmail to the Application list.

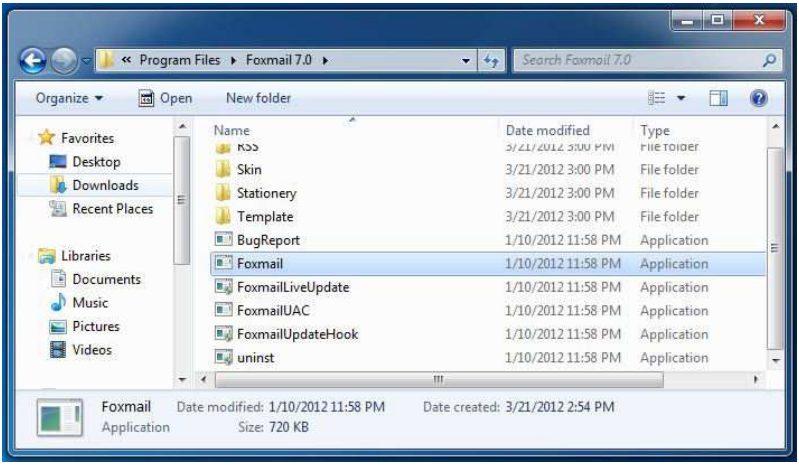

Step 4

Select Foxmail from the **Application List**, then click the arrow pointing right to add this application to the **Smart Connect List**.



Step 5

Click **Apply** to enable Smart Connect.

Step 6

Double-click the Intel® Smart Connect Technology Manager icon in the Windows system tray.

Step 7

Drag the slider to configure how often the system will connect to the network to download updates. Shorter durations will provide more frequent updates, but may cause more power consumption.

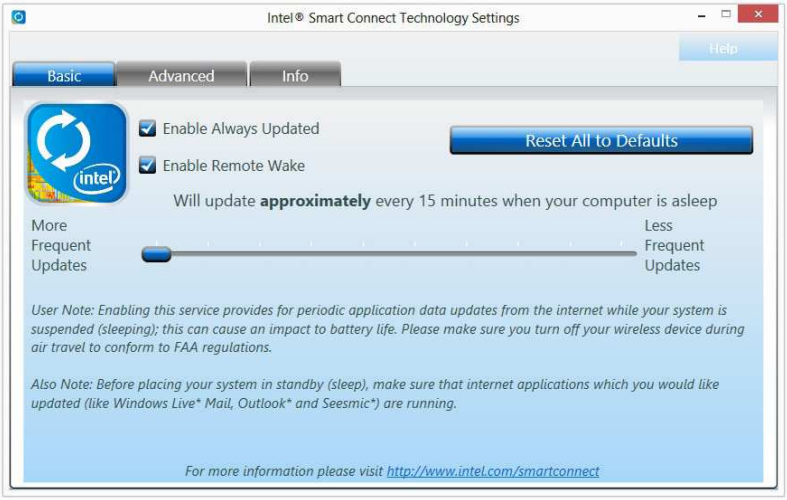

Using Smart Connect

1. Keep the applications which you wish to connect to the internet and receive updates while the system is in sleep state running. Foxmail for instance, keep Foxmail running.

2. Click on Windows Start -> the arrow next to Shut down, and click on **Sleep**.

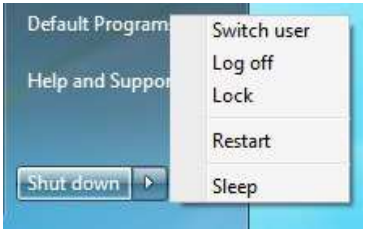

3. Windows system will enter sleep state.

4. The system will wake up from sleep state periodically, and then start to update Foxmail. The screen will not display anything so the computer can maintain minimum power usage. Afterwards, the system will automatically return to sleep state again.

5. Upon waking up the system, you will find the new mail that were sent to you during sleep state are already updated and ready to be read in Foxmail.

3.5 Start8

For those Windows 8 users who miss the Start Menu, Start8 is an ideal solution that brings back the familiar Start Menu along with added customizations for greater efficiency.

3.5.1 Installing Start8

Install **Start8**, which is located in the folder at the following path of the Support CD: **\ ASRock Utility > Start8**.

3.5.2 Configuring Start8

Style

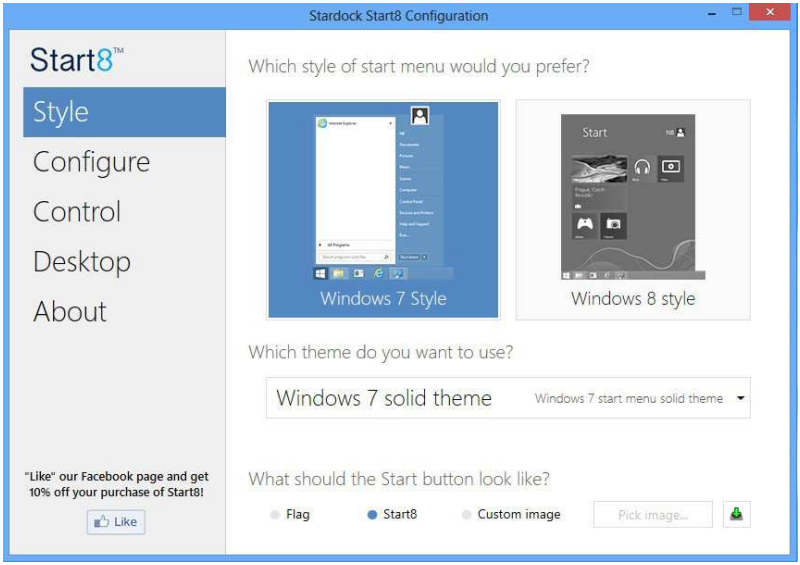

Select between the Windows 7 style and Windows 8 style Start Menu. Then select the theme of the Start Menu and customize the style of the Start icon.

Configure

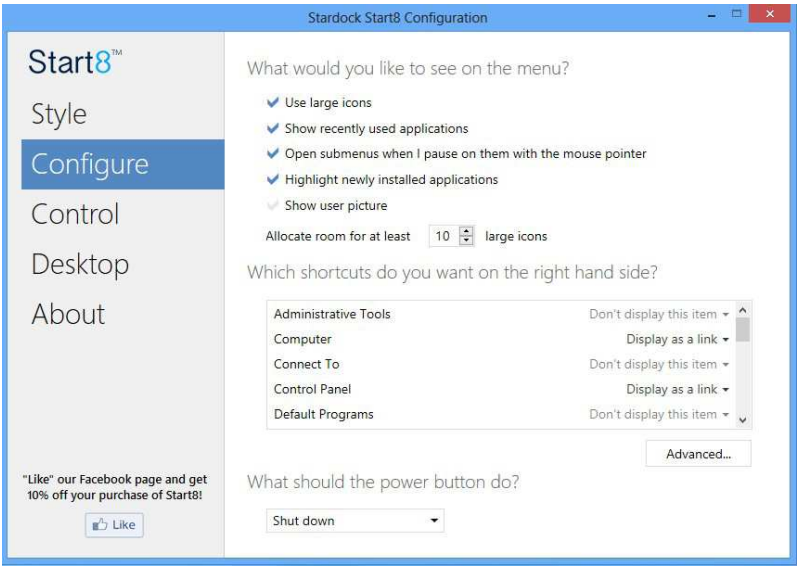

Configure provides configuration options, including icon sizes, which shortcuts you want Start Menu to display, quick access to recently used apps, the functionality of the power button, and more.

Control

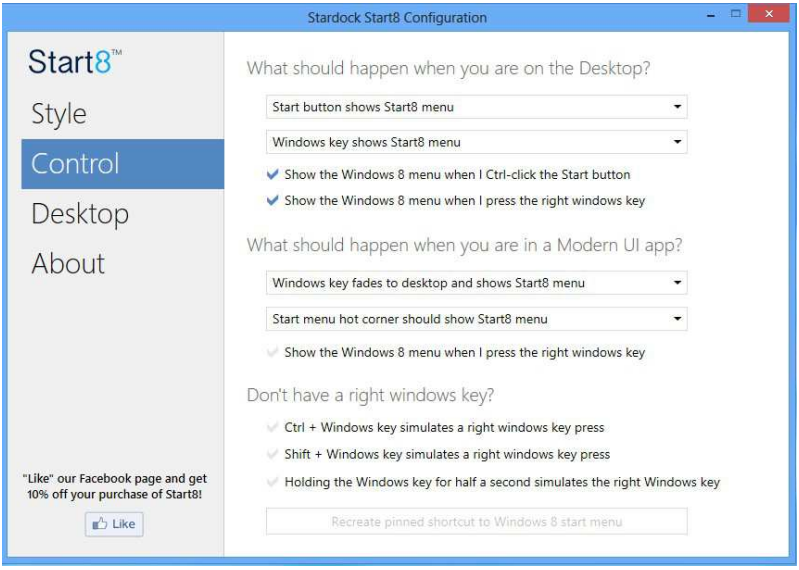

Control lets you configure what a click on the start button or a press on the Windows key does.

Desktop

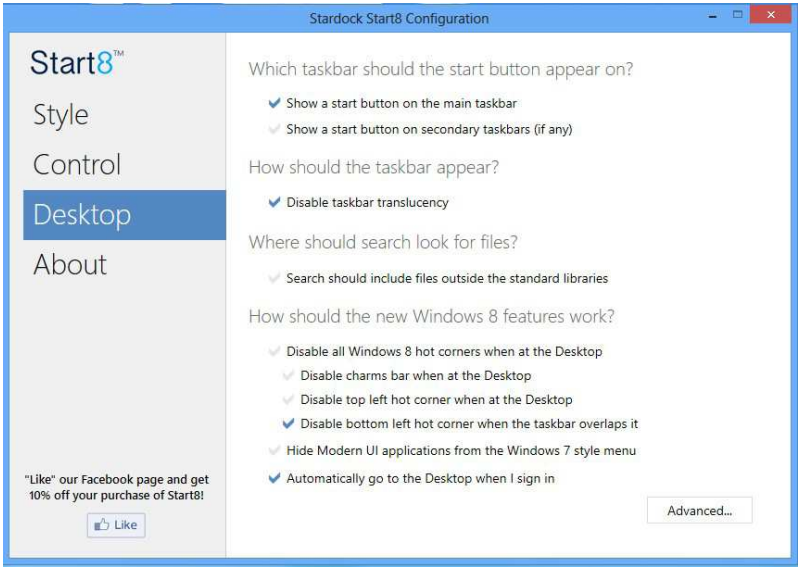

Desktop allows you to disable the hot corners when you are working on the desktop. It also lets you choose whether or not the system boots directly into desktop mode and bypass the Metro user interface.

About

Displays information about Start8.

Chapter 4 UEFI SETUP UTILITY

4.1 Introduction

ASRock Interactive UEFI is a blend of system configuration tools, cool sound effects and stunning visuals. Not only will it make BIOS setup less difficult but also a lot more amusing. This section explains how to use the UEFI SETUP UTILITY to configure your system. You may run the UEFI SETUP UTILITY by pressing <F2> or <Del> right after you power on the computer, otherwise, the Power-On-Self-Test (POST) will continue with its test routines. If you wish to enter the UEFI SETUP UTILITY after POST, restart the system by pressing <Ctl> + <Alt> + <Delete>, or by pressing the reset button on the system chassis. You may also restart by turning the system off and then back on.

Because the UEFI software is constantly being updated, the following UEFI setup screens and descriptions are for reference purpose only, and they may not exactly match what you see on your screen.

4.1.1 UEFI Menu Bar

The top of the screen has a menu bar with the following selections:

Main	For setting system time/date information
OC Tweaker	For overclocking configurations
Advanced	For advanced system configurations
Tool	Useful tools
H/W Monitor	Displays current hardware status
Boot	For configuring boot settings and boot priority
Security	For security settings
Exit	Exit the current screen or the UEFI Setup Utility

4.1.2 Navigation Keys

Use <←> key or <→> key to choose among the selections on the menu bar, and use < ↑ > key or < ↓ > key to move the cursor up or down to select items, then press <Enter> to get into the sub screen. You can also use the mouse to click your required item.

Please check the following table for the descriptions of each navigation key.

Navigation Key(s)	Description
+ / -	To change option for the selected items
<Tab>	Switch to next function
<PGUP>	Go to the previous page
<PGDN>	Go to the next page
<HOME>	Go to the top of the screen
<END>	Go to the bottom of the screen
<F1>	To display the General Help Screen
<F4>	Toggle sound on/off
<F7>	Discard changes and exit the SETUP UTILITY
<F9>	Load optimal default values for all the settings
<F10>	Save changes and exit the SETUP UTILITY
<F12>	Print screen
<ESC>	Jump to the Exit Screen or exit the current screen

4.2 Main Screen

When you enter the UEFI SETUP UTILITY, the Main screen will appear and display the system overview.



Active Page on Entry

Select the default page when entering the UEFI setup utility.

UEFI Guide

UEFI Guide is a quick tutorial for ASRock's UEFI setup Utility. You may abort the tutorial by pressing "esc".

4.3 OC Tweaker Screen

In the OC Tweaker screen, you can set up overclocking features.



Because the UEFI software is constantly being updated, the following UEFI setup screens and descriptions are for reference purpose only, and they may not exactly match what you see on your screen.

CPU Configuration

CPU Ratio

The CPU speed is determined by the CPU Ratio multiplied with the BCLK. Increasing the CPU Ratio will increase the internal CPU clock speed without affecting the clock speed of other components.

Intel SpeedStep Technology

Intel SpeedStep technology allows processors to switch between multiple frequencies and voltage points for better power saving and heat dissipation.

Intel Turbo Boost Technology

Intel Turbo Boost Technology enables the processor to run above its base operating frequency when the operating system requests the highest performance state.

Long Duration Power Limit

Configure Package Power Limit 1 in watts. When the limit is exceeded, the CPU ratio will be lowered after a period of time. A lower limit can protect the CPU and save power, while a higher limit may improve performance.

Long Duration Maintained

Configure the period of time until the CPU ratio is lowered when the Long Duration Power Limit is exceeded.

Short Duration Power Limit

Configure Package Power Limit 2 in watts. When the limit is exceeded, the CPU ratio will be lowered immediately. A lower limit can protect the CPU and save power, while a higher limit may improve performance.

Primary Plane Current Limit

Configure the current limit of the CPU under Turbo Mode in ampere. A lower limit can protect the CPU and save power, while a higher limit may improve performance.

GT Frequency

Configure the frequency of the integrated GPU.

GT Voltage Mode

Auto: For optimized settings.

Adaptive: Add voltage to the integrated GPU when the system is under heavy load.

Override: The voltage is fixed.

GT Adaptive Voltage

Configure the fixed voltage added to the integrated GPU.

GT Voltage Offset

Configure the voltage added to the integrated GPU when the system is under heavy load.

DRAM Timing Configuration

Load XMP Setting

Load XMP settings to overclock the DDR3 memory and perform beyond standard specifications.

DRAM Frequency

If [Auto] is selected, the motherboard will detect the memory module(s) inserted and assign the appropriate frequency automatically.

DRAM Configuration



DRAM Tweaker

Fine tune the DRAM settings by leaving marks in checkboxes. Click OK to confirm and apply your new settings.

CAS# Latency (tCL)

The time between sending a column address to the memory and the beginning of the data in response.

RAS# to CAS# Delay (tRCD)

The number of clock cycles required between the opening of a row of memory and accessing columns within it.

Row Precharge Time (tRP)

The number of clock cycles required between the issuing of the precharge command and opening the next row.

RAS# Active Time (tRAS)

The number of clock cycles required between a bank active command and issuing the precharge command.

Command Rate (CR)

The delay between when a memory chip is selected and when the first active command can be issued.

Write Recovery Time (tWR)

The amount of delay that must elapse after the completion of a valid write operation, before an active bank can be precharged.

Refresh Cycle Time (tRFC)

The number of clocks from a Refresh command until the first Activate command to the same rank.

RAS to RAS Delay (tRRD)

The number of clocks between two rows activated in different banks of the same rank.

Write to Read Delay (tWTR)

The number of clocks between the last valid write operation and the next read command to the same internal bank.

Read to Precharge (tRTP)

The number of clocks that are inserted between a read command to a row precharge command to the same rank.

Four Activate Window (tFAW)

The time window in which four activates are allowed the same rank.

CAS Write Latency (tCWL)

Configure CAS Write Latency.

tREFI

Configure refresh cycles at an average periodic interval.

tCKE

Configure the period of time the DDR3 initiates a minimum of one refresh command internally once it enters Self-Refresh mode.

tRDRD

Configure between module read to read delay.

tRDRDDR

Configure between module read to read delay from different ranks.

tRDRDDD

Use this to change DRAM tRWSR Auto/Manual settings. The default is [Auto].

tWRRD

Configure between module write to read delay.

tWRRDDR

Configure between module write to read delay from different ranks.

tWRRDDD

Use this to change DRAM tRRSR Auto/Manual settings. The default is [Auto].

Configure between module write to read delay from different DIMMs.

tWRWR

Configure between module write to write delay.

tWRWRDR

Configure between module write to write delay from different ranks.

tWRWRDD

Configure between module write to write delay from different DIMMs.

RTL (CHA)

Configure round trip latency for channel A.

RTL (CHB)

Configure round trip latency for channel B.

IO-L (CHA)

Configure IO latency for channel A.

IO-L (CHB)

Configure IO latency for channel B.

ODT WR (CHA)

Configure the memory on die termination resistors' WR for channel A.

ODT WR (CHB)

Configure the memory on die termination resistors' WR for channel B.

ODT NOM (CHA)

Use this to change ODT (CHA) Auto/Manual settings. The default is [Auto].

ODT NOM (CHB)

Use this to change ODT (CHB) Auto/Manual settings. The default is [Auto].

Command Tri State

Enable for DRAM power saving.

MRC Fast Boot

Enable Memory Fast Boot to skip DRAM memory training for booting faster.

FIVR Configuration

FIVR Switch Frequency Signature

Select whether to boost or lower the FIVR Switch Frequency.

FIVR Switch Frequency Offset

Configure the percentage of frequency boost or deduction.

CPU Override Voltage

Configure the voltage added to the CPU when the system is under heavy load.

CPU Voltage Offset

Configure the dynamic CPU voltage added to the CPU.

CPU Cache Override Voltage

Add voltage to the CPU Cache when the system is under heavy load.

CPU Cache Voltage Offset

Configure the voltage for the CPU Cache. Setting the voltage higher may increase system stability when overclocking.

System Agent Voltage Offset

Configure the voltage for the System Agent. Setting the voltage higher may increase system stability when overclocking.

CPU Analog IO Voltage Offset

CPU I/O Analog Voltage.

CPU Digital IO Voltage Offset

CPU I/O Digital Voltage.

CPU Integrated VR Faults

Disable FIVR Faults to raise the threshold to trigger CPU over current protection and over voltage protection for better overclocking capabilities.

CPU Integrated VR Efficiency Mode

Enable FIVR Efficiency Management for power saving. Disable for better performance and overclocking capabilities.

Voltage Configuration

DRAM Voltage

Use this to configure DRAM Voltage. The default value is [Auto].

PCH 1.05V Voltage

Chipset 1.05V Voltage. Use default settings for best performance.

PCH 1.5V Voltage

I/O 1.5V Voltage. Use default settings for best performance.

4.4 Advanced Screen

In this section, you may set the configurations for the following items: CPU Configuration, Chipset Configuration, Storage Configuration, Intel® Rapid Start Technology, Intel® Smart Connect Technology, ACPI Configuration, USB Configuration and Trusted Computing.



Setting wrong values in this section may cause the system to malfunction.

4.4.1 CPU Configuration



Active Processor Cores

Select the number of cores to enable in each processor package.

CPU C States Support

Enable CPU C States Support for power saving. It is recommended to keep C3, C6 and C7 all enabled for better power saving.

Enhanced Halt State (C1E)

Enable Enhanced Halt State (C1E) for lower power consumption.

CPU C3 State Support

Enable C3 sleep state for lower power consumption.

CPU C6 State Support

Enable C6 deep sleep state for lower power consumption.

CPU C7 State Support

Enable C7 deep sleep state for lower power consumption.

Package C State Support

Enable CPU, PCIe, Memory, Graphics C State Support for power saving.

CPU Thermal Throttling

Enable CPU internal thermal control mechanisms to keep the CPU from overheating.

No-Execute Memory Protection

Processors with No-Execution Memory Protection Technology may prevent certain classes of malicious buffer overflow attacks.

Intel Virtualization Technology

Intel Virtualization Technology allows a platform to run multiple operating systems and applications in independent partitions, so that one computer system can function as multiple virtual systems.

Hardware Prefetcher

Automatically prefetch data and code for the processor. Enable for better performance.

Adjacent Cache Line Prefetch

Automatically prefetch the subsequent cache line while retrieving the currently requested cache line. Enable for better performance.

4.4.2 Chipset Configuration



Primary Graphics Adapter

Select a primary VGA.

VT-d

Intel® Virtualization Technology for Directed I/O helps your virtual machine monitor better utilize hardware by improving application compatibility and reliability, and providing additional levels of manageability, security, isolation, and I/O performance.

PCIE1 Link Speed

Select the link speed for PCIE1.

Share Memory

Configure the size of memory that is allocated to the integrated graphics processor when the system boots up.

IGPU Multi-Monitor

Select disable to disable the integrated graphics when an external graphics card is installed. Select enable to keep the integrated graphics enabled at all times.

Render Standby

Power down the render unit when the GPU is idle for lower power consumption.

Onboard HD Audio

Enable/disable onboard HD audio. Set to Auto to enable onboard HD audio and automatically disable it when a sound card is installed.

Front Panel

Enable/disable front panel HD audio.

On/Off Play

With ASRock On/Off Play users can connect their portable audio devices, such as an MP3 player or a mobile phone to the PC and listen to music through the computer's speakers even when the computer is turned off.

Onboard HDMI HD Audio

Enable audio for the onboard digital outputs.

Onboard LAN

Enable or disable the onboard network interface controller.

Deep Sleep

Configure deep sleep mode for power saving when the computer is shut down.

Restore on AC/Power Loss

Select the power state after a power failure. If [Power Off] is selected, the power will remain off when the power recovers. If [Power On] is selected, the system will start to boot up when the power recovers.

Good Night LED

By enabling Good Night LED, the Power/HDD LEDs will be switched off when the system is on. It will also automatically switch off the Power and Keyboard LEDs when the system enters into Standby/Hibernation mode.

4.4.3 Storage Configuration



SATA Controller(s)

Enable/disable the SATA controllers.

SATA Mode Selection

IDE: For better compatibility.

AHCI: Supports new features that improve performance.

AHCI (Advanced Host Controller Interface) supports NCQ and other new features that will improve SATA disk performance but IDE mode does not have these advantages.

SATA Aggressive Link Power Management

SATA Aggressive Link Power Management allows SATA devices to enter a low power state during periods of inactivity to save power. It is only supported by AHCI mode.

Dynamic Storage Accelerator

Keep this option enabled for higher HDD and SDD I/O performance, lower latency and increased system responsiveness.

Hard Disk S.M.A.R.T.

S.M.A.R.T stands for Self-Monitoring, Analysis, and Reporting Technology. It is a monitoring system for computer hard disk drives to detect and report on various indicators of reliability.

4.4.4 Intel® Rapid Start Technology



Intel® Rapid Start Technology

Intel® Rapid Start Technology is a new zero power hibernation mode which allows users to resume in just 5-6 seconds.

4.4.5 Intel® Smart Connect Technology



Intel® Smart Connect Technology

Intel® Smart Connect Technology automatically updates your email and social networks, such as Twitter, Facebook, etc. while the computer is in sleep mode.

4.4.6 ACPI Configuration



Suspend to RAM

Select disable for ACPI suspend type S1. It is recommended to select auto for ACPI S3 power saving.

Check Ready Bit

Enable to enter the operating system after S3 only when the hard disk is ready, this is recommended for better system stability.

ACPI HPET Table

Enable the High Precision Event Timer for better performance and to pass WHQL tests.

PS/2 Keyboard Power On

Allow the system to be waked up by a PS/2 Keyboard.

PCI Devices Power On

Allow the system to be waked up by a PCI device and enable wake on LAN.

RTC Alarm Power On

Allow the system to be waked up by the real time clock alarm. Set it to By OS to let it be handled by your operating system.

USB Keyboard/Remote Power On

Allow the system to be waked up by an USB keyboard or remote controller.

USB Mouse Power On

Allow the system to be waked up by an USB mouse.

4.4.7 USB Configuration

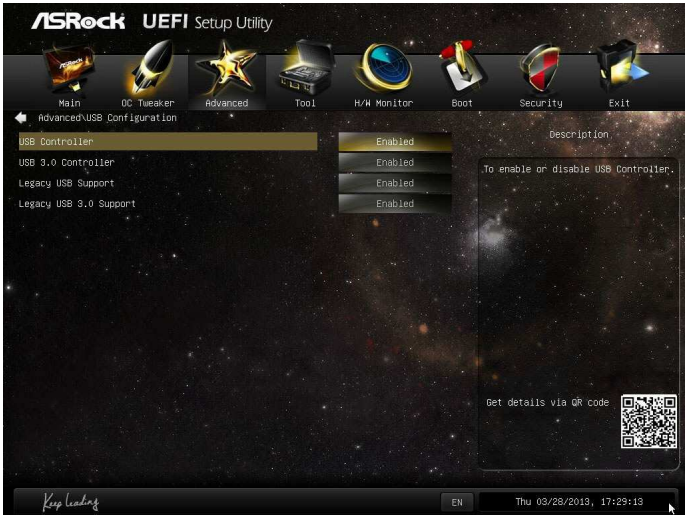

USB Controller

Enable or disable all the USB ports.

USB 3.0 Controller

Enable or disable all the USB 3.0 ports.

Legacy USB Support

Enable or disable Legacy OS Support for USB 2.0 devices. If you encounter USB compatibility issues it is recommended to disable legacy USB support. Select UEFI Setup Only to support USB devices under the UEFI setup and Windows/Linux operating systems only.

Legacy USB 3.0 Support

Enable or disable Legacy OS Support for USB 3.0 devices.

4.4.8 Trusted Computing



Security Device Support

Enable or disable BIOS support for security device.

4.5 Tools



OMG (Online Management Guard)

Administrators are able to establish an internet curfew or restrict internet access at specified times via OMG. You may schedule the starting and ending hours of internet access granted to other users. In order to prevent users from bypassing OMG, guest accounts without permission to modify the system time are required.

UEFI Tech Service

Contact ASRock Tech Service if you are having trouble with your PC. Please setup network configuration before using UEFI Tech Service.

Easy RAID Installer

Easy RAID Installer helps you to copy the RAID driver from the support CD to your USB storage device. After copying the drivers please change the SATA mode to RAID, then you can start installing the operating system in RAID mode.

Easy Driver Installer

For users that don't have an optical disk drive to install the drivers from our support CD, Easy Driver Installer is a handy tool in the UEFI that installs the LAN driver to your system via an USB storage device, then downloads and installs the other required drivers automatically.

Instant Flash

Save UEFI files in your USB storage device and run Instant Flash to update your UEFI.

Internet Flash

ASRock Internet Flash downloads and updates the latest UEFI firmware version from our servers for you. Please setup network configuration before using Internet Flash.

*For BIOS backup and recovery purpose, it is recommended to plug in your USB pen drive before using this function.

Network Configuration

Use this to configure internet connection settings for Internet Flash.



Internet Setting

Enable or disable sound effects in the setup utility.

UEFI Download Server

Select a server to download the UEFI firmware.

Dehumidifier Function

If Dehumidifier Function is enabled, the computer will power on automatically to dehumidify the system after entering S4/S5 state.

Dehumidifier Period

Configure the period of time until the computer powers on and enables Dehumidifier after entering S4/S5 state.

Dehumidifier Duration

Configure the duration of the dehumidifying process before it returns to S4/S5 state.

Dehumidifier CPU Fan Setting

Configure the speed of the CPU fan while Dehumidifier is enabled. The higher the value, the faster the fan speed.

Max: 255

Min: 1

Save User Default

Type a profile name and press enter to save your settings as user default.

Load User Default

Load previously saved user defaults.

4.6 Hardware Health Event Monitoring Screen

This section allows you to monitor the status of the hardware on your system, including the parameters of the CPU temperature, motherboard temperature, fan speed and voltage.



CPU Fan 1 Setting

Select a fan mode for CPU Fans 1, or choose Customize to set 5 CPU temperatures and assign a respective fan speed for each temperature.

Chassis Fan 1 Setting

Select a fan mode for Chassis Fan 1, or choose Customize to set 5 CPU temperatures and assign a respective fan speed for each temperature.

Over Temperature Protection

When Over Temperature Protection is enabled, the system automatically shuts down when the motherboard is overheated.

Case Open Feature

Enable or disable Case Open Feature to detect whether the chassis cover has been removed.

4.7 Boot Screen

This section displays the available devices on your system for you to configure the boot settings and the boot priority.



Fast Boot

Fast Boot minimizes your computer's boot time. In fast mode you may not boot from an USB storage device. Ultra Fast mode is only supported by Windows 8 and the VBIOS must support UEFI GOP if you are using an external graphics card. Please notice that Ultra Fast mode will boot so fast that the only way to enter this UEFI Setup Utility is to Clear CMOS or run the Restart to UEFI utility in Windows.

Boot From Onboard LAN

Allow the system to be waked up by the onboard LAN.

Setup Prompt Timeout

Configure the number of seconds to wait for the setup hot key.

Bootup Num-Lock

Select whether Num Lock should be turned on or off when the system boots up.

Boot Beep

Select whether the Boot Beep should be turned on or off when the system boots up. Please note that a buzzer is needed.

Full Screen Logo

Enable to display the boot logo or disable to show normal POST messages.

AddOn ROM Display

Enable AddOn ROM Display to see the AddOn ROM messages or configure the AddOn ROM if you've enabled Full Screen Logo. Disable for faster boot speed.

Boot Failure Guard

If the computer fails to boot for a number of times the system automatically restores the default settings.

Boot Failure Guard Count

Configure the number of attempts to boot until the system automatically restores the default settings.

CSM (Compatibility Support Module)



CSM

Enable to launch the Compatibility Support Module. Please do not disable unless you're running a WHCK test. If you are using Windows 8 64-bit and all of your devices support UEFI, you may also disable CSM for faster boot speed.

Launch PXE OpROM Policy

Select UEFI only to run those that support UEFI option ROM only. Select Legacy only to run those that support legacy option ROM only. Do not launch?

Launch Storage OpROM Policy

Select UEFI only to run those that support UEFI option ROM only. Select Legacy only to run those that support legacy option ROM only. Do not launch?

Launch Video OpROM Policy

Select UEFI only to run those that support UEFI option ROM only. Select Legacy only to run those that support legacy option ROM only. Do not launch?

4.8 Security Screen

In this section you may set or change the supervisor/user password for the system. You may also clear the user password.



Supervisor Password

Set or change the password for the administrator account. Only the administrator has authority to change the settings in the UEFI Setup Utility. Leave it blank and press enter to remove the password.

User Password

Set or change the password for the user account. Users are unable to change the settings in the UEFI Setup Utility. Leave it blank and press enter to remove the password.

Secure Boot

Enable to support Windows 8 Secure Boot.

4.9 Exit Screen



Save Changes and Exit

When you select this option the following message, "Save configuration changes and exit setup?" will pop out. Select [OK] to save changes and exit the UEFI SETUP UTILITY.

Discard Changes and Exit

When you select this option the following message, "Discard changes and exit setup?" will pop out. Select [OK] to exit the UEFI SETUP UTILITY without saving any changes.

Discard Changes

When you select this option the following message, "Discard changes?" will pop out. Select [OK] to discard all changes.

Load UEFI Defaults

Load UEFI default values for all options. The F9 key can be used for this operation.

Launch EFI Shell from filesystem device

Copy shellx64.efi to the root directory to launch EFI Shell.

Contact Information

If you need to contact ASRock or want to know more about ASRock, you're welcome to visit ASRock's website at http://www.asrock.com; or you may contact your dealer for further information. For technical questions, please submit a support request form at http://www.asrock.com/support/tsd.asp

ASRock Incorporation

2F., No.37, Sec. 2, Jhongyang S. Rd., Beitou District,

Taipei City 112, Taiwan (R.O.C.)

ASRock EUROPE B.V.

Bijsterhuizen 3151

6604 LV Wijchen

The Netherlands

Phone: +31-24-345-44-33

Fax: +31-24-345-44-38

ASRock America, Inc.

13848 Magnolia Ave, Chino, CA91710

U.S.A.

Phone: +1-909-590-8308

Fax: +1-909-590-1026