SIEMENS

SIMATIC

ET 200SP
Analog output module
AQ 2xU/I HF
(6ES7135-6HB00-0CA1)

Equipment Manual

Introduction 1

Industrial cybersecurity 2

Product overview 3

Wiring 4

Parameters/address space 5

Interrupts/diagnostics alarms 6

Technical specifications 7

Parameter data record A

Representation of analog values B

01/2025
A5E33062529-AB

Legal information

Warning notice system

This manual contains notices you have to observe in order to ensure your personal safety, as well as to prevent damage to property. The notices referring to your personal safety are highlighted in the manual by a safety alert symbol, notices referring only to property damage have no safety alert symbol. These notices shown below are graded according to the degree of danger.

⚠ DANGER
indicates that death or severe personal injury **will** result if proper precautions are not taken.

⚠ WARNING
indicates that death or severe personal injury **may** result if proper precautions are not taken.

⚠ CAUTION
indicates that minor personal injury can result if proper precautions are not taken.

NOTICE
indicates that property damage can result if proper precautions are not taken.

If more than one degree of danger is present, the warning notice representing the highest degree of danger will be used. A notice warning of injury to persons with a safety alert symbol may also include a warning relating to property damage.

Qualified Personnel

The product/system described in this documentation may be operated only by **personnel qualified** for the specific task in accordance with the relevant documentation, in particular its warning notices and safety instructions. Qualified personnel are those who, based on their training and experience, are capable of identifying risks and avoiding potential hazards when working with these products/systems.

Proper use of Siemens products

Note the following:

⚠ WARNING
Siemens products may only be used for the applications described in the catalog and in the relevant technical documentation. If products and components from other manufacturers are used, these must be recommended or approved by Siemens. Proper transport, storage, installation, assembly, commissioning, operation and maintenance are required to ensure that the products operate safely and without any problems. The permissible ambient conditions must be complied with. The information in the relevant documentation must be observed.

Trademarks

All names identified by ® are registered trademarks of Siemens Aktiengesellschaft. The remaining trademarks in this publication may be trademarks whose use by third parties for their own purposes could violate the rights of the owner.

Disclaimer of Liability

We have reviewed the contents of this publication to ensure consistency with the hardware and software described. Since variance cannot be precluded entirely, we cannot guarantee full consistency. However, the information in this publication is reviewed regularly and any necessary corrections are included in subsequent editions.

Siemens Aktiengesellschaft
Commercial Vehicles
Postfach 48 48
90026 NÜRNBERG
GERMANY

A5E33062529-AB
Ⓟ 01/2025 Subject to change

Copyright © Siemens 2014 - 2025.
All rights reserved

Table of contents

1 Introduction 5

1.1 ET 200SP Documentation Guide 6
1.1.1 Information classes ET 200SP 6
1.1.2 Basic tools 8
1.1.3 MultiFieldbus Configuration Tool (MFCT) 10
1.1.4 SIMATIC Technical Documentation 11

2 Industrial cybersecurity 13

2.1 Introduction to industrial cybersecurity 13
2.2 Cybersecurity information 13

3 Product overview 15

3.1 Properties 15

4 Wiring 17

4.1 Wiring diagram 17
4.2 Block diagram 19

5 Parameters/address space 21

5.1 Output type and output ranges 21
5.2 Parameters 22
5.3 Explanation of parameters 24
5.4 Address space 25

6 Interrupts/diagnostics alarms 27

6.1 Status and error displays 27
6.2 Interrupts 29
6.3 Diagnostics alarms 30

7 Technical specifications 31

A Parameter data record 35

A.1 Dependencies when configuring with GSD file 35
A.2 Parameter assignment and structure of parameter data record 36

B Representation of analog values 39

B.1 Representation of output ranges 40
B.2 Representation of analog values in the voltage output ranges 41
B.3 Representation of analog values in the current output ranges 42

Introduction

1

Purpose of the documentation

This manual supplements the ET 200SP distributed I/O system (https://support.automation.siemens.com/WW/view/en/58649293) system manual.

Functions that generally relate to the system are described in this system manual.

The information provided in this manual and in the system/function manuals supports you in commissioning the system.

Changes compared to previous version

Compared to the previous version, this manual contains the following change:

- Wiring and block diagrams have been revised.
- The technical specifications have been updated.

Conventions

CPU: When the term "CPU" is used in the following, it applies to the CPUs of the S7-1500 automation system as well as to the CPUs/interface modules of the ET 200SP distributed I/O system.

STEP 7: In this documentation, "STEP 7" is used as a synonym for all versions of the configuration and programming software "STEP 7 (TIA Portal)".

Please also observe notes marked as follows:

Note

A note contains important information on the product described in the documentation, on the handling of the product or on the section of the documentation to which particular attention should be paid.

Recycling and disposal

For environmentally friendly recycling and disposal of your old equipment, contact a certified electronic waste disposal company and dispose of the equipment according to the applicable regulations in your country.

1.1 ET 200SP Documentation Guide

1.1.1 Information classes ET 200SP



The documentation for the SIMATIC ET 200SP distributed I/O system is arranged into three areas.

This arrangement enables you to access the specific content you require.

You can download the documentation free of charge from the Internet (https://support.industry.siemens.com/cs/ww/en/view/109742709).

Basic information



The System Manual describes in detail the configuration, installation, wiring and commissioning of the SIMATIC ET 200SP distributed I/O system.

The STEP 7 online help supports you in the configuration and programming.

Examples:

- ET 200SP System Manual
- System Manual ET 200SP HA/ET 200SP modules for devices used in a hazardous area
- Online help TIA Portal

Device information



Equipment manuals contain a compact description of the module-specific information, such as properties, wiring diagrams, characteristics and technical specifications.

Examples:

- Equipment Manuals CPUs
- Equipment Manuals Interface Modules
- Equipment Manuals Digital Modules
- Equipment Manuals Analog Modules
- Equipment Manuals Motor Starter
- BaseUnits Equipment Manuals
- Equipment Manual Server Module
- Equipment Manuals Communications Modules
- Equipment Manuals Technology Modules

General information



The function manuals contain detailed descriptions on general topics relating to the SIMATIC ET 200SP distributed I/O system.

Examples:

- Function Manual ET 200AL/ET 200SP Mixed Configuration
- Function Manual Diagnostics
- Function Manual Communication
- PROFINET Function Manual
- PROFIBUS Function Manual
- Function Manual Designing Interference-free Controllers
- MultiFieldbus Function Manual

Product Information

Changes and supplements to the manuals are documented in a Product Information. The Product Information takes precedence over the device and system manuals.

You can find the latest Product Information on the ET 200SP distributed I/O system on the Internet. (https://support.industry.siemens.com/cs/de/en/view/73021864)

Manual Collection ET 200SP

The Manual Collection contains the complete documentation on the SIMATIC ET 200SP distributed I/O system gathered together in one file.

You can find the Manual Collection on the Internet.
(https://support.industry.siemens.com/cs/cn/en/view/84133942)

Manual Collection fail-safe modules

The Manual Collection contains the complete documentation on the fail-safe SIMATIC modules, gathered together in one file.

You can find the Manual Collection on the Internet.
(https://support.industry.siemens.com/cs/ww/en/view/109806400)

1.1.2 Basic tools

Tools

The tools described below support you in all steps: from planning, over commissioning, all the way to analysis of your system.

TIA Selection Tool

The TIA Selection Tool tool supports you in the selection, configuration, and ordering of devices for Totally Integrated Automation (TIA).

As successor of the SIMATIC Selection Tools , the TIA Selection Tool assembles the already known configurators for automation technology into a single tool.

With the TIA Selection Tool , you can generate a complete order list from your product selection or product configuration.

You can find the TIA Selection Tool on the Internet.
(https://support.industry.siemens.com/cs/ww/en/view/109767888)

SIMATIC Automation Tool

You can use the SIMATIC Automation Tool to perform commissioning and maintenance activities on various SIMATIC S7 stations as bulk operations independent of TIA Portal.

The SIMATIC Automation Tool offers a wide range of functions:

- Scanning of a PROFINET/Ethernet system network and identification of all connected CPUs
- Assignment of addresses (IP, subnet, Gateway) and device name (PROFINET device) to a CPU
- Transfer of the date and the programming device/PC time converted to UTC time to the module
- Program download to CPU
- RUN/STOP mode switchover
- CPU localization through LED flashing
- Reading out of CPU error information
- Reading the CPU diagnostic buffer
- Reset to factory settings
- Firmware update of the CPU and connected modules

You can find the SIMATIC Automation Tool on the Internet.
(https://support.industry.siemens.com/cs/ww/en/view/98161300)

PRONETA

SIEMENS PRONETA (PROFINET network analysis) is a commissioning and diagnostic tool for PROFINET networks. PRONETA Basic has two core functions:

- In the network analysis, you get an overview of the PROFINET topology. Compare a real configuration with a reference installation or make simple parameter changes, e.g. to the names and IP addresses of the devices.
- The "IO test" is a simple and rapid test of the wiring and the module configuration of a plant, including documentation of the test results.

You can find SIEMENS PRONETA Basic on the Internet:
(https://support.industry.siemens.com/cs/ww/en/view/67460624)

SIEMENS PRONETA Professional is a licensed product that offers you additional functions. It offers you simple asset management in PROFINET networks and supports operators of automation systems in automatic data collection/acquisition of the components used through various functions:

- The user interface (API) offers an access point to the automation cell to automate the scan functions using MQTT or a command line.
- With PROFIenergy diagnostics, you can quickly detect the current pause mode or the readiness for operation of devices that support PROFIenergy and change these as needed.
- The data record wizard supports PROFINET developers in reading and writing acyclic PROFINET data records quickly and easily without PLC and engineering.

You can find SIEMENS PRONETA Professional on the Internet.
(https://www.siemens.com/proneta-professional)

SINETPLAN

SINETPLAN, the Siemens Network Planner, supports you in planning automation systems and networks based on PROFINET. The tool facilitates professional and predictive dimensioning of your PROFINET installation as early as in the planning stage. In addition, SINETPLAN supports you during network optimization and helps you to exploit network resources optimally and to plan reserves. This helps to prevent problems in commissioning or failures during productive operation even in advance of a planned operation. This increases the availability of the production plant and helps improve operational safety.

The advantages at a glance

- Network optimization thanks to port-specific calculation of the network load
- Increased production availability thanks to online scan and verification of existing systems
- Transparency before commissioning through importing and simulation of existing STEP 7 projects
- Efficiency through securing existing investments in the long term and the optimal use of resources

You can find SINETPLAN on the Internet
(https://new.siemens.com/global/en/products/automation/industrial-communication/profinet/sinetplan.html).

1.1.3 MultiFieldbus Configuration Tool (MFCT)

MultiFieldbus Configuration Tool

MultiFieldbus Configuration Tool (MFCT) is a PC-based software and supports the configuration of MultiFieldbus- and DALI-devices. In addition, the MFCT offers convenient options for mass firmware updates of ET 200 devices with MultiFieldbus- support and reading service data for many other Siemens devices.

Functional scope of the MFCT

- MultiFieldbus configuration:
  Engineering, configuration and diagnostics of MultiFieldbus-devices, provision of the required project files (project, UDT-, CSV- and EDS-file), transfer/export of the files to device and/or data memory.
- DALI configuration:
  Device selection and online configuration of DALI devices.
- TM FAST:
  Generation and download of FPGA-UPD- and FPGA-DB-files.
- Maintenance:
  Topology scan of a Ethernet network, reading of service data, parameter assignment and firmware update.
- Settings:
  Language switching German / English, network scanner speed, setting of the network adapter, installation of GSDML-and EDS-files.

System/installation requirements for MFCT

The MFCT runs under Microsoft Windows and does not require installation or administrator rights.

For MFCT you must also install the following software:

- Microsoft .NET Framework 4.8 (You can find an Offline Installer on the Internet. (https://support.microsoft.com/en-us/topic/microsoft-net-framework-4-8-offline-installer-for-windows-9d23f658-3b97-68ab-d013-aa3c3e7495e0))
- NPcap from directory "Misc"
- PG/PC interface from directory "Misc"
- Microsoft C++ Redistributable for x86-systems (you can find the installation data for download on the Internet. (https://aka.ms/vs/15/release/vc_redist.x86.exe))

The download of the tool and further information as well as documentation on the individual functions of the MFCT can be found on the Internet.
(https://support.industry.siemens.com/cs/de/en/view/109773881)

1.1.4 SIMATIC Technical Documentation

Additional SIMATIC documents will complete your information. You can find these documents and their use at the following links and QR codes.

The Industry Online Support gives you the option to get information on all topics. Application examples support you in solving your automation tasks.

Overview of the SIMATIC Technical Documentation

Here you will find an overview of the SIMATIC documentation available in Siemens Industry Online Support:

Industry Online Support International (https://support.industry.siemens.com/cs/ww/en/view/109742705)

Watch this short video to find out where you can find the overview directly in Siemens Industry Online Support and how to use Siemens Industry Online Support on your mobile device:

Quick introduction to the technical documentation of automation products per video (https://support.industry.siemens.com/cs/us/en/view/109780491)

YouTube video: Siemens Automation Products - Technical Documentation at a Glance (https://youtu.be/TwLSxxRQQsA)

Retention of the documentation

Retain the documentation for later use.

For documentation provided in digital form:

1. Download the associated documentation after receiving your product and before initial installation/commissioning. Use the following download options:
   - Industry Online Support International: (https://support.industry.siemens.com)

     The article number is used to assign the documentation to the product. The article number is specified on the product and on the packaging label. Products with new, non-compatible functions are provided with a new article number and documentation.
   - ID link:

     Your product may have an ID link. The ID link is a QR code with a frame and a black frame corner at the bottom right. The ID link takes you to the digital nameplate of your product. Scan the QR code on the product or on the packaging label with a smartphone camera, barcode scanner, or reader app. Call up the ID link.
2. Retain this version of the documentation.

Updating the documentation

The documentation of the product is updated in digital form. In particular in the case of function extensions, the new performance features are provided in an updated version.

1. Download the current version as described above via the Industry Online Support or the ID link.
2. Also retain this version of the documentation.

mySupport

With "mySupport" you can get the most out of your Industry Online Support.

Registration	You must register once to use the full functionality of "mySupport". After registration, you can create filters, favorites and tabs in your personal workspace.
Support requests	Your data is already filled out in support requests, and you can get an overview of your current requests at any time.
Documentation	In the Documentation area you can build your personal library.
Favorites	You can use the "Add to mySupport favorites" to flag especially interesting or frequently needed content. Under "Favorites", you will find a list of your flagged entries.
Recently viewed articles	The most recently viewed pages in mySupport are available under "Recently viewed articles".
CAx data	The CAx data area gives you access to the latest product data for your CAx or CAe system. You configure your own download package with a few clicks: • Product images, 2D dimension drawings, 3D models, internal circuit diagrams, EPLAN macro files • Manuals, characteristics, operating manuals, certificates • Product master data

You can find "mySupport" on the Internet. (https://support.industry.siemens.com/My/ww/en)

Application examples

The application examples support you with various tools and examples for solving your automation tasks. Solutions are shown in interplay with multiple components in the system - separated from the focus on individual products.

You can find the application examples on the Internet.
(https://support.industry.siemens.com/cs/ww/en/ps/ae)

Industrial cybersecurity 2

2.1 Introduction to industrial cybersecurity

Digitalization and the increasing networking of machines and industrial plants are also increasing the risk of cyberattacks. Appropriate protective measures are therefore mandatory, particularly in the case of critical infrastructure facilities.

Refer to the general information and measures on the subject of industrial cybersecurity in the ET 200SP Distributed I/O System (https://support.industry.siemens.com/cs/ww/en/view/58649293) System Manual.

This section provides an overview of security-relevant information pertaining to your SIEMENS device.

2.2 Cybersecurity information

Siemens provides products and solutions with industrial cybersecurity functions that support the secure operation of plants, systems, machines and networks.

In order to protect plants, systems, machines and networks against cyber threats, it is necessary to implement – and continuously maintain – a holistic, state-of-the-art industrial cybersecurity concept. Siemens' products and solutions constitute one element of such a concept.

Customers are responsible for preventing unauthorized access to their plants, systems, machines and networks. Such systems, machines and components should only be connected to an enterprise network or the internet if and to the extent such a connection is necessary and only when appropriate security measures (e.g. firewalls and/or network segmentation) are in place.

For additional information on industrial cybersecurity measures that may be implemented, please visit
https://www.siemens.com/cybersecurity-industry.

Siemens' products and solutions undergo continuous development to make them more secure. Siemens strongly recommends that product updates are applied as soon as they are available and that the latest product versions are used. Use of product versions that are no longer supported, and failure to apply the latest updates may increase customer's exposure to cyber threats.

To stay informed about product updates, subscribe to the Siemens Industrial Cybersecurity RSS Feed under
https://new.siemens.com/cert.

Product overview

3

3.1 Properties

Article number

6ES7135-6HB00-0CA1

View of the module

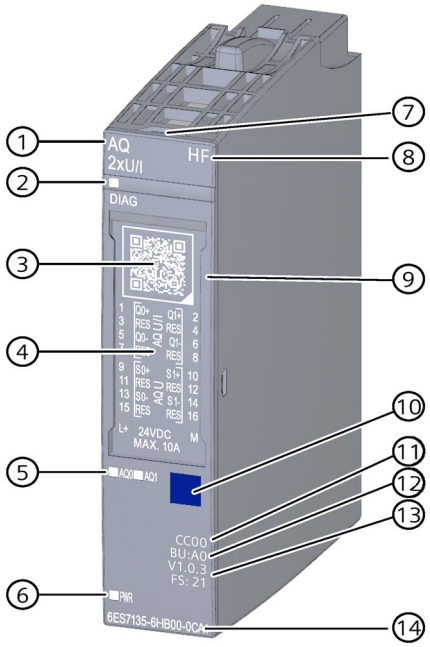

① Module type and designation
② LED for diagnostics
③ QR code for identification link
④ Wiring diagram
⑤ LEDs for channel status
⑥ LED for supply voltage
⑦ Slot for optional equipment labeling plate
⑧ Function class
⑨ Insertion option for optional labeling strip
⑩ Color coding module type
⑪ Color code for selecting the color-coded labels
⑫ BU type
⑬ Firmware and function version
⑭ Article number

Figure 3-1 View of the module AQ 2×U/I HF

Properties

The module has the following technical properties:

- Analog output module with 2 outputs
- Resolution: Up to 16 bits including sign
- Voltage output can be set for each channel
- Current output can be set for each channel
- Configurable diagnostics for each channel

The module supports the following functions:

- Firmware update
- I&M identification data
- Reconfiguration in RUN
- PROFIenergy
- Calibration in runtime
- Isochronous mode (PROFINET IO only)
- Value status (PROFINET IO only)

You can configure the module with STEP 7 (TIA Portal) and with a GSD file.

Accessories

The following accessories must be ordered separately:

- Labeling strips
- Color identification labels
- Reference identification label
- Shield connection

See also

For more information on accessories, refer to the system manual ET 200SP distributed I/O system (http://support.automation.siemens.com/WW/view/en/58649293).

Wiring

4

4.1 Wiring diagram

This section shows the wiring diagram of the AQ 2xU/I HF module with the terminal assignments.

You can find information on wiring the BaseUnit in the System Manual ET 200SP distributed I/O system (http://support.automation.siemens.com/WW/view/en/58649293).

Note

The load group of the module must begin with a light-colored BaseUnit. Keep this in mind also during the configuration.

Pin assignment

The following table shows an example of the pin assignment of the analog output module AQ 2xU/I HF on the BaseUnit BU type A0/A1:

Description	Signal	Terminal	BaseUnit BU type A0/A1	Terminal	Signal	Description
Analog output voltage/current positive, channel 0	Q_0+	1	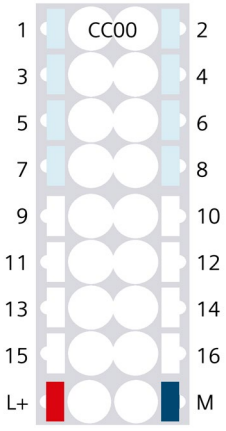	2	Q_1+	Analog output voltage/current positive, channel 1
-	RES[1]	3		4	RES[1]	-
Analog output voltage/current negative, channel 0	Q_0-	5		6	Q_1-	Analog output voltage/current negative, channel 1
-	RES[1]	7		8	RES[1]	-
Analog output sensor cable positive, channel 0	S_0+	9		10	S_1+	Analog output sensor cable positive, channel
-	RES[1]	11		12	RES[1]	-
Analog output sensor cable negative, channel 0	S_0-	13		14	S_1-	Analog output sensor cable negative, channel 1
-	RES[1]	15		16	RES[1]	-
24 V DC supply voltage[2]	L+	L+		M	M	Ground

[1] Reserve, must remain unused for future function extensions

[2] Infeed only with light-colored BaseUnit

Connection types

2-wire connection for voltage output/current output	3-wire connection for voltage output	4-wire connection for voltage output
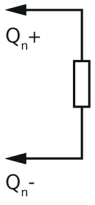	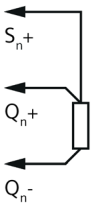	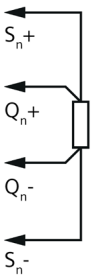

The 3-wire connection and 4-wire connection make compensation for line impedance possible. The compensation is not possible for 2-wire connections due to the missing sensor cable. Select the 4-wire connection for optimum compensation.

4.2 Block diagram

This section contains the block diagram of the AQ 2×U/I HF analog output module.

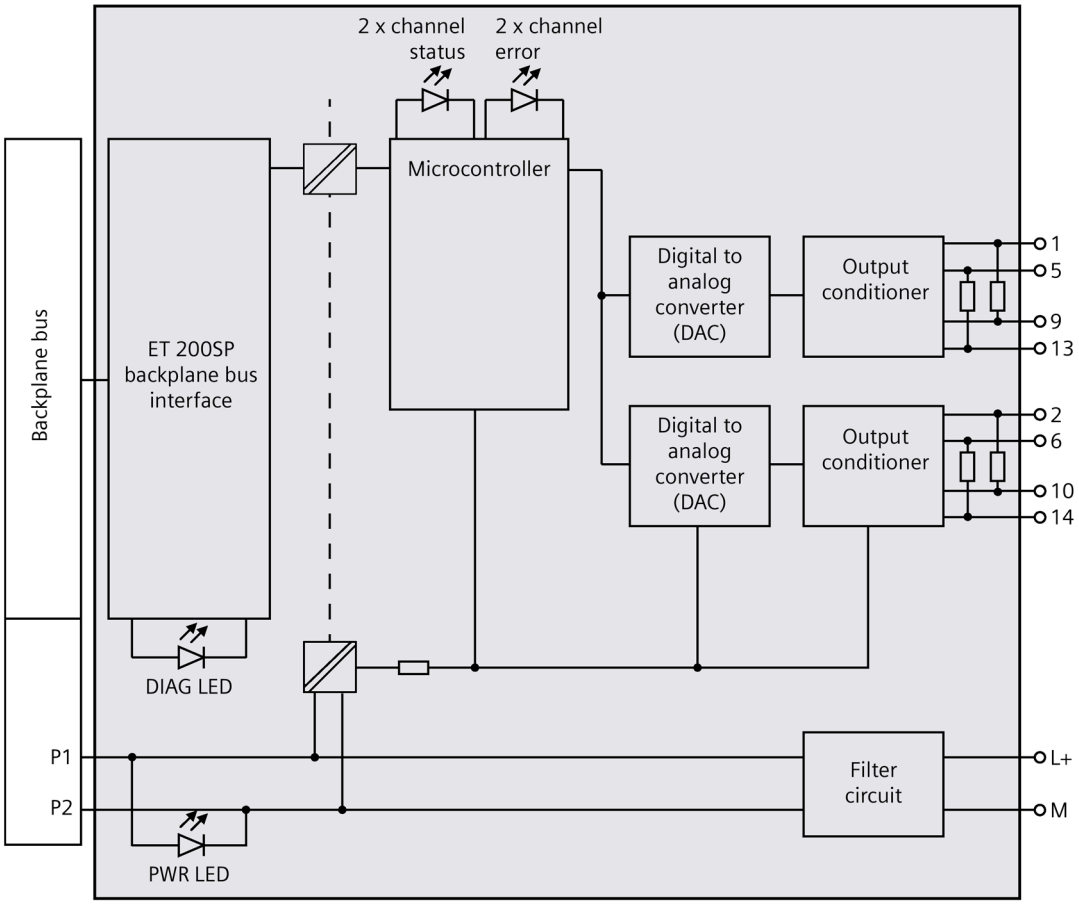

Figure 4-1 Block diagram analog output module AQ 2×U/I HF

Parameters/address space

5

5.1 Output type and output ranges

The following table shows the output type and the respective output ranges.

Table 5- 1 Output ranges

Output type	Output ranges	Resolution
Current	± 20 mA 0 to 20 mA 4 to 20 mA	16 bit including sign 15 bit 14 bit
Voltage	± 10 V ± 5 V 0 to 10 V 1 to 5 V	16 bit including sign 15 bit including sign 15 bit 13 bit

You can find the tables of output ranges and overflow, overload, etc. in the section Representation of analog values (Page 40) and in the function manual Analog value processing (http://support.automation.siemens.com/WW/view/en/67989094).

5.2 Parameters

Parameters of the AQ 2xU/I HF

The following table lists the configurable parameters. The effective range of the configurable parameters depends on the type of configuration. The following configurations are possible:

- Distributed operation on PROFINET IO in an ET 200SP system
- Distributed operation on PROFIBUS DP in an ET 200SP system

When assigning parameters in the user program, use the WRREC instruction to transfer the parameters to the module by means of data records; refer to the section Parameter assignment and structure of parameter data record (Page 36).

The following parameter settings are possible:

Table 5- 2 Configurable parameters and their defaults (GSD file)

Parameter	Value range	Default	Reconfiguration in RUN	Scope with configuration software, e.g. STEP 7 (TIA Portal)	
				GSD file PROFINET IO	GSD file PROFIBUS DP [3]
Diagnostics: Missing supply voltage L+	• Disable • Enable	Disable	Yes	Channel	Channel
Diagnostics: Short-circuit to ground [1]	• Disable • Enable	Disable	Yes	Channel	Channel
Diagnostics: Overflow [3]	• Disable • Enable	Disable	Yes	Channel	Channel
Diagnostics: Underflow [3]	• Disable • Enable	Disable	Yes	Channel	Channel
Diagnostics: Wire break [2]	• Disable • Enable	Disable	Yes	Channel	Channel
Output type/range	• Deactivated • Voltage ±10 V • Voltage ±5 V • Voltage 0..10 V • Voltage 1..5 V • Current ±20 mA • Current 0 - 20 mA • Current 4 - 20 mA	Current 4 - 20 mA	Yes	Channel	Channel

Parameter	Value range	Default	Reconfiguration in RUN	Scope with configuration software, e.g. STEP 7 (TIA Portal)	
Reaction to CPU STOP [3]	• Turn off • Keep last value • Output substitute value	Turn off	Yes	Channel	Module
Substitute value	For permissible substitute values for the various measuring ranges, see device manual AQ 2xU/I HF, Substitute values → Codes for substitute value table	0	Yes	Channel	Channel
Potential group	• Use potential group of the left module (module plugged into a dark-colored BaseUnit) • Enable new potential group (module plugged into light-colored BaseUnit)	Use potential group of the left module	No	Module	Module

[1] No diagnostics detection between -0.5 and +0.5 V (no short-circuit detection)

[2] No diagnostics detection between -3 and +3 mA (no wire break detection)

[3] Due to the limited number of parameters at a maximum of 244 bytes per ET 200SP station with a PROFIBUS GSD configuration, the configuration options are restricted. If required, you can still assign these parameters using data record 128 as described in the "GSD file PROFINET IO" column (see table above). The parameter length of the I/O module is 8 bytes.

Note

Unused channels

"Deactivate" the unused outputs in the parameter assignment.

A deactivated output always returns the value "no current or voltage".

5.3 Explanation of parameters

Diagnostics: Missing supply voltage L+

Enabling of the diagnostics for missing or insufficient supply voltage L+.

Diagnostics: Short-circuit

Enabling of the diagnostics when a short-circuit of the actuator supply occurs.

Diagnostics: Overflow

Enabling of the diagnostics when the output value exceeds the overrange.

Diagnostics: Underflow

Enabling of the diagnostics when the output value falls below the underrange or reaches the minimum output value or underflow.

Diagnostics: Wire break

Enabling of the diagnostics if the line to the actuator is broken.

Substitute value

The substitute value is the value that the module outputs in case of a CPU STOP.

Potential group

A potential group consists of a group of directly adjacent I/O modules within an ET 200SP station, which are supplied via a common supply voltage.

A potential group begins with a light-colored BaseUnit through which the required voltage is supplied for all modules of the potential group. The light-colored BaseUnit interrupts the three self-assembling voltage buses P1, P2, and AUX to the left neighbor.

Specify the slot in which a light-colored BaseUnit with supply voltage infeed or a dark-colored BaseUnit is to be located (see ET 200SP Distributed I/O System (http://support.automation.siemens.com/WW/view/en/58649293) system manual).

All additional I/O modules of this potential group are plugged into dark-colored BaseUnits. You take the potential of the self-assembling voltage buses P1, P2 and AUX from the left neighbor.

A potential group ends with the dark-colored BaseUnit, which follows a light-colored BaseUnit or server module in the station configuration.

5.4 Address space

Address space of the analog output module AQ 2×U/I HF

The following figure shows the assignment of the address space for the AQ 2xU/I HF with value status (Quality Information (QI)). The addresses for the value status are only available if the value status is enabled.

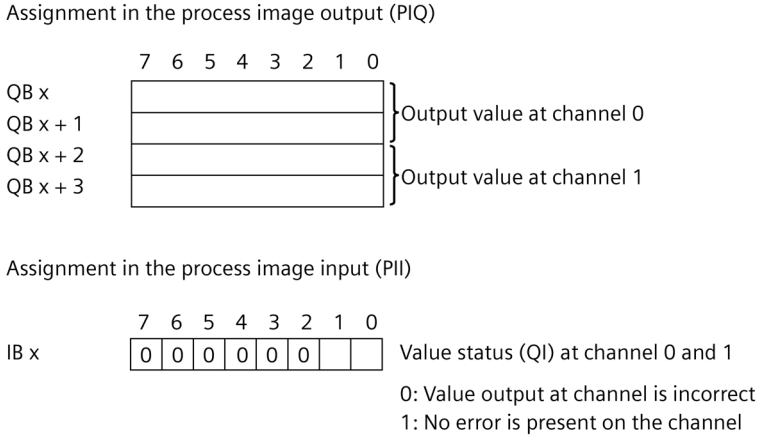

Figure 5-1 Address space of the analog output module AQ 2×U/I HF

Configuration options of the AQ 2xU/I HF

The following configurations are possible:

- Configuration 1: Without value status
- Configuration 2: With value status

Evaluating the value status

An additional byte is occupied in the input address space if you enable the value status for the analog module. Bits 0 to 1 in this byte are assigned to a channel. They provide information about the validity of the analog value.

Bit = 1: No fault is present on the channel.

Bit = 0: The wiring, the value created on the channel, or similar is incorrect.

Interrupts/diagnostics alarms

6

6.1 Status and error displays

LED displays

The figure below shows the LED displays of the AQ 2xU/I HF.

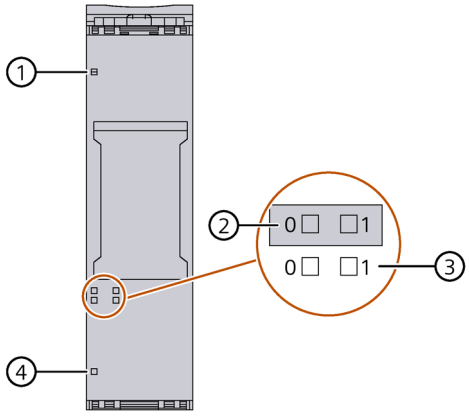

① DIAG (green/red)
② Channel status (green)
③ Channel error (red)
④ PWR (green)

Figure 6-1 LED display

Meaning of the LED displays

The following tables contain the meaning of the status and error displays. Remedies for diagnostics alarms can be found in section Diagnostics alarms (Page 30).

LED DIAG

Table 6- 1 Error display of the DIAG LED

LED DIAG	Meaning
Off	Backplane bus supply of the system is disrupted or switched off.
Flashes	Module parameters not assigned
On	Module parameters assigned and no module diagnostics
Flashes	Module parameters assigned and module diagnostics

Channel status LED

Table 6- 2 Status display of the channel status LED

Channel status	Channel error	Meaning
Off	Off	Channel deactivated or load voltage L+ missing
On	Off	Channel activated and no channel diagnostics
Off	On	Channel activated and channel diagnostics
On	On	Not permitted (error)

PWR LED

Table 6- 3 Status display of the PWR LED

PWR LED	Meaning
Off	Supply voltage L+ missing
On	Supply voltage L+ present

6.2 Interrupts

The analog output module AQ 2×U/I HF supports diagnostic error interrupts.

Diagnostic error interrupt

The module generates a diagnostic error interrupt at the following events:

- Channel temporarily unavailable
- Short-circuit
- Overtemperature
- Wire break
- Violation of high limit
- Violation of low limit
- Error
- Parameter assignment error
- Load voltage missing

You can obtain detailed information on the event in the hardware interrupt organization block with the "RALARM" (read additional interrupt information) instruction and in the STEP 7 online help.

6.3 Diagnostics alarms

Diagnostics alarms

A diagnostics alarm is output and the DIAG LED flashes on the module for each diagnostics event. You can read out the diagnostics alarms, for example, in the diagnostics buffer of the CPU. You can evaluate the error codes with the user program.

Table 6- 4 Diagnostics alarms, their meaning and remedies

Diagnostics alarm	Error code	Meaning	Remedy
Channel temporarily unavailable	1F$_H$	Firmware update is being performed. Channel 0 applies to the entire module. The module is currently not performing any measurements.	–
		The channel is currently being calibrated.	
Short-circuit	1$_H$	Short-circuit of the actuator supply	Correct the process wiring
Overtemperature	4$_H$	Thermal overload of the I/O module	Correct the process wiring
Wire break	6$_H$	Actuator circuit resistance too high	Use a different actuator type or change the wiring, for example, use cables with larger cross-section
		Wire break between the module and actuator	Connect the cable
		Channel not connected (open)	• Deactivate the channel ("Measurement type" parameter) • Connect the channel
Violation of high limit	7$_H$	The output value specified by the user program exceeds the overrange.	Correct the output value
Violation of low limit	8$_H$	The output value specified by the user program falls below the underrange.	Correct the output value
Error	9$_H$	Internal module error has occurred (diagnostics alarm on channel 0 applies to the entire module).	Replace module
Parameter assignment error	10$_H$	The module cannot evaluate parameters for the channel: Module plugged in does not match the configuration. Incorrect parameter assignment.	• Correct the configuration (comparison of preset and actual setup). • Correct the parameter assignment (diagnostics wire break set only with the permitted measuring ranges).
Load voltage missing	11$_H$	Missing or insufficient supply voltage L+	• Check the supply voltage L+ at the BaseUnit • Check BaseUnit type

Technical specifications

7

Technical specifications of AQ 2×U/I HF

The following table lists the technical specifications on the issue date. You will find a data sheet including daily updated technical specifications on the Internet (https://support.industry.siemens.com/cs/ww/de/pv/6ES7135-6HB00-0CA1/td?dl=en).

Article number	6ES7135-6HB00-0CA1
General information	
Product type designation	AQ 2xU/I HF
HW functional status	from FS21
Firmware version	V1.0.3
• FW update possible	Yes
usable BaseUnits	BU type A0, A1
Color code for module-specific color identification plate	CC00
Product function	
• I&M data	Yes; I&M0 to I&M3
• Isochronous mode	Yes
Engineering with	
• STEP 7 TIA Portal configurable/integrated from version	V13 / V13
• STEP 7 configurable/integrated from version	V5.5 SP3 / -
• PCS 7 configurable/integrated from version	V8.1 SP1
• PROFIBUS from GSD version/GSD revision	GSD Revision 5
• PROFINET from GSD version/GSD revision	GSDML V2.3
Operating mode	
• Oversampling	No
• MSO	No
CiR - Configuration in RUN	
Reparameterization possible in RUN	No
Calibration possible in RUN	No
Supply voltage	
Rated value (DC)	24 V
permissible range, lower limit (DC)	19.2 V
permissible range, upper limit (DC)	28.8 V
Reverse polarity protection	Yes
Input current	
Current consumption (rated value)	45 mA; without load
Current consumption, max.	90 mA; 2 channels current output 20 mA

Article number	6ES7135-6HB00-0CA1
Power loss	
Power loss, typ.	0.9 W
Address area	
Address space per module	
• Address space per module, max.	4 byte; + 1 byte for QI information
Hardware configuration	
Automatic encoding	Yes
• Mechanical coding element	Yes
• Type of mechanical coding element	Type A
Analog outputs	
Number of analog outputs	2
Voltage output, short-circuit protection	Yes
Voltage output, short-circuit current, max.	45 mA
Cycle time (all channels), min.	750 µs
Output ranges, voltage	
• 0 to 10 V	Yes; 15 bit
• 1 V to 5 V	Yes; 13 bit
• -5 V to +5 V	Yes; 15 bit incl. sign
• -10 V to +10 V	Yes; 16 bit incl. sign
Output ranges, current	
• 0 to 20 mA	Yes; 15 bit
• -20 mA to +20 mA	Yes; 16 bit incl. sign
• 4 mA to 20 mA	Yes; 14 bit
Connection of actuators	
• for voltage output two-wire connection	Yes
• for voltage output four-wire connection	Yes
• for current output two-wire connection	Yes
Load impedance (in rated range of output)	
• with voltage outputs, min.	2 kΩ
• with voltage outputs, capacitive load, max.	1 µF
• with current outputs, max.	500 Ω
• with current outputs, inductive load, max.	1 mH
Destruction limits against externally applied voltages and currents	
• Voltages at the outputs	30 V
Cable length	
• shielded, max.	1 000 m; 200 m for voltage output

Article number	6ES7135-6HB00-0CA1
Analog value generation for the outputs	
Integration and conversion time/resolution per channel	
• Resolution with overrange (bit including sign), max.	16 bit
Settling time	
• for resistive load	0.05 ms
• for capacitive load	0.05 ms; Max. 47 nF and 20 m cable length
• for inductive load	0.05 ms
Errors/accuracies	
Output ripple (relative to output range, bandwidth 0 to 50 kHz), (+/-)	0.02 %
Linearity error (relative to output range), (+/-)	0.03 %
Temperature error (relative to output range), (+/-)	0.003 %/K
Crosstalk between the outputs, max.	-50 dB
Repeat accuracy in steady state at 25 °C (relative to output range), (+/-)	0.03 %
Operational error limit in overall temperature range	
• Voltage, relative to output range, (+/-)	0.2 %
• Current, relative to output range, (+/-)	0.2 %
Basic error limit (operational limit at 25 °C)	
• Voltage, relative to output range, (+/-)	0.1 %
• Current, relative to output range, (+/-)	0.1 %
Isochronous mode	
Execution and activation time (TCO), min.	500 µs
Bus cycle time (TDP), min.	750 µs
Jitter, max.	5 µs
Interrupts/diagnostics/status information	
Diagnostics function	Yes
Substitute values connectable	Yes
Alarms	
• Diagnostic alarm	Yes
Diagnoses	
• Monitoring the supply voltage	Yes
• Wire-break	Yes; channel-by-channel, only for output type "current"
• Short-circuit	Yes; channel-by-channel, only for output type "voltage"
• Group error	Yes
• Overflow/underflow	Yes; channel by channel

Article number	6ES7135-6HB00-0CA1
Diagnostics indication LED	
• Monitoring of the supply voltage (PWR-LED)	Yes; green PWR LED
• Channel status display	Yes; green LED
• for channel diagnostics	Yes; red LED
• for module diagnostics	Yes; green/red DIAG LED
Potential separation	
Potential separation channels	
• between the channels	No
• between the channels and backplane bus	Yes
• between the channels and the power supply of the electronics	Yes
Isolation	
Isolation tested with	707 V DC (type test)
Ambient conditions	
Ambient temperature during operation	
• horizontal installation, min.	-30 °C; < 0 °C as of FS04
• horizontal installation, max.	60 °C
• vertical installation, min.	-30 °C; < 0 °C as of FS04
• vertical installation, max.	50 °C
Altitude during operation relating to sea level	
• Installation altitude above sea level, max.	5 000 m; restrictions for installation altitudes > 2 000 m, see ET 200SP System Manual
Dimensions	
Width	15 mm
Height	73 mm
Depth	58 mm
Weights	
Weight, approx.	31 g

Dimension drawing

See manual ET 200SP BaseUnits
(http://support.automation.siemens.com/WW/view/en/59753521)

Parameter data record

A

A.1 Dependencies when configuring with GSD file

When configuring the module with a GSD file, remember that the settings of some parameters are dependent on each other.

Configuring with a PROFINET GSD file

The table lists the properties and their dependencies on the measurement type and measuring range for PROFINET.

Measurement type	Measuring range	Diagnostics				
		Underflow	Overflow	Wire break	Short-circuit to ground	Missing supply voltage L+
Deactivated	*	*	*	*	*	*
Voltage	±10 V	x	x	–	x	x
	±5 V	x	x	–	x	x
	0 to 10 V	x	x	–	x	x
	1 to 5 V	x	x	–	x	x
Current	±20 mA	x	x	x	–	x
	0 to 20 mA	x	x	x	–	x
	4 to 20 mA	x	x	x	–	x

x = property is allowed, – = property is **not allowed**, * = property is not relevant

Configuring with a PROFIBUS GSD file

The table lists the properties and their dependencies on the measurement type and measuring range for PROFIBUS.

Measurement type	Measuring range	Diagnostics			
		Underflow / overflow	Wire break	Load voltage L+	Short-circuit to ground
Deactivated	*	*	*	*	*
Voltage	±10 V	x	–	x	x
	±5 V	x	–	x	x
	0 to 10 V	x	–	x	x
	1 to 5 V	x	–	x	x
Current	±20 mA	x	x	x	–
Current (2-wire connection)	0 to 20 mA	x	x	x	–
	4 to 20 mA	x	x	x	–

x = property is allowed, – = property is **not allowed**, * = property is not relevant

A.2 Parameter assignment and structure of parameter data record

The data records of the module have an identical structure, regardless of whether you configure the module with PROFIBUS DP or PROFINET IO.

Parameter assignment in the user program

The module parameter settings can be changed in RUN (for example, the voltage or current values of selected channels can be edited in RUN without having an effect on the other channels).

Changing parameters in RUN

The "WRREC" instruction is used to transfer the parameters to the module using data record 128. The parameters set with STEP 7 will not be changed on the CPU, which means that the parameters set in STEP 7 will be valid again after a restart.

Output parameter STATUS

If errors occur when transferring parameters with the "WRREC" instruction, the module continues operation with the previous parameter assignment. However, the STATUS output parameter contains a corresponding error code.

You will find a description of the "WRREC" instruction and the error codes in the STEP 7 online help.

Structure of data record 128

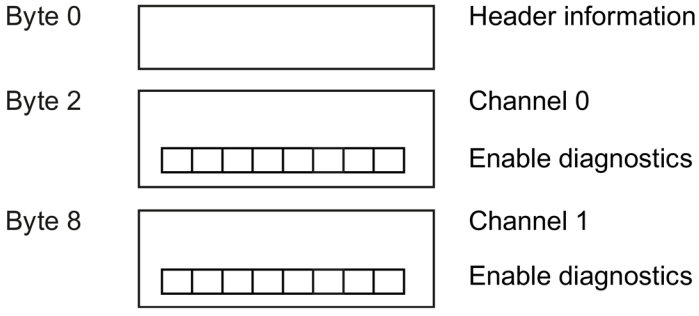

Figure A-1 Structure of data record 128

Header information

The figure below shows the structure of the header information.

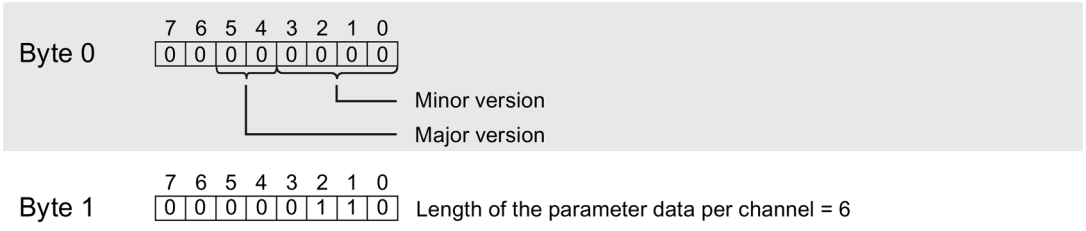

Figure A-2 Header information

Parameters

The figure below shows the structure of the parameters for channels 0 to 1.

You can activate a parameter by setting the corresponding bit to "1".

* x = 2 + (channel number x 6); channel number = 0 to 1

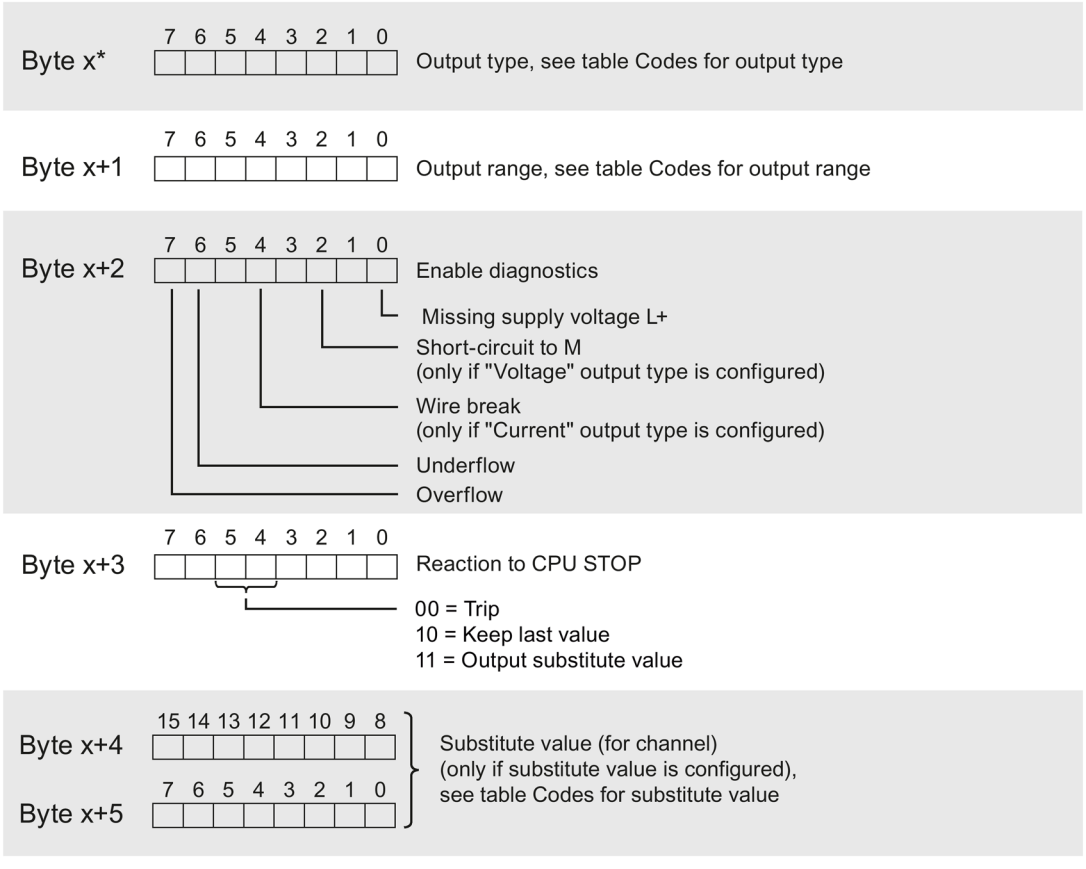

Figure A-3 Structure of byte x to x+5 for channel 0 and 1

Codes for output type

The following table contains the codes for the output types of the analog output module. You must enter these codes in byte x (see previous figure).

Table A- 1 Codes for output type

Output range for voltage	Code
Deactivated	0000 0000
Voltage	0000 0001
Current	0000 0011

Codes for output range

The following table contains the codes for the output ranges of the analog output module. You must enter these codes in byte x+1 (see previous figure).

Table A- 2 Codes for output range

Output range for voltage	Code
±10 V	0000 0000
±5 V	0000 0001
0 to 10 V	0000 0010
1 to 5 V	0000 0011
Output range for current	**Code**
±20 mA	0000 0000
0 to 20 mA	0000 0001
4 to 20 mA	0000 0010

Codes for substitute value

The following table contains the codes for the substitute values. You must enter these codes in bytes x+4 and x+5 (see previous figure).

Table A- 3 Codes for substitute value

Output range for voltage and current	Valid substitute value
±10 V	-32512 to 32511
±5 V	-32512 to 32511
0 to 10 V	0 to 32511
1 to 5 V	-6912 to 32511
±20 mA	-29031 to 29030
0 to 20 mA	0 to 29030
4 to 20 mA	-692 to 29376

Representation of analog values

B

This appendix describes the analog values for all output ranges supported by the AQ 2xU/I HF analog module.

Measured value resolution

The digitized analog value is the same for all output values at the same nominal range. The analog values are represented as a fixed point number in the two's complement.

The resolutions 13, 14, 15, and 16 bit including sign are displayed. Each analog value is entered in the ACCU left-justified. The bits marked with "x" are set to "0".

Table B- 1 Possible resolutions of the analog values

Resolution in bits	Values		Analog value	
	Decimal	Hexadecimal	High byte	Low byte
13	8	8_H	Sign 0 0 0 0 0 0 0	0 0 0 0 1 x x x
14	4	4_H	Sign 0 0 0 0 0 0 0	0 0 0 0 0 1 x x
15	2	2_H	Sign 0 0 0 0 0 0 0	0 0 0 0 0 0 1 x
16	1	1_H	Sign 0 0 0 0 0 0 0	0 0 0 0 0 0 0 1

B.1 Representation of output ranges

In the following tables, you can find the digitized representation of the bipolar and unipolar range output ranges. The resolution is 16 bits.

Table B- 2 Bipolar output ranges

Dec. value	Output value in %	Data word																Range
		2^{15}	2^{14}	2^{13}	2^{12}	2^{11}	2^{10}	2^9	2^8	2^7	2^6	2^5	2^4	2^3	2^2	2^1	2^0	
≥32512	117.589	0	1	1	1	1	1	1	0	1	1	1	1	1	1	1	1	Maximum output value
32511	117.589	0	1	1	1	1	1	1	0	1	1	1	1	1	1	1	1	Overrange
27649	100.004	0	1	1	0	1	1	0	0	0	0	0	0	0	0	0	1	
27648	100.000	0	1	1	0	1	1	0	0	0	0	0	0	0	0	0	0	Nominal range
1	0.003617	0	0	0	0	0	0	0	0	0	0	0	0	0	0	0	1	
0	0.000	0	0	0	0	0	0	0	0	0	0	0	0	0	0	0	0	
-1	-0.003617	1	1	1	1	1	1	1	1	1	1	1	1	1	1	1	1	
-27648	-100.000	1	0	0	1	0	1	0	0	0	0	0	0	0	0	0	0	
-27649	-100.004	1	0	0	1	0	0	1	1	1	1	1	1	1	1	1	1	Underrange
-32512	-117.593	1	0	0	0	0	0	0	1	0	0	0	0	0	0	0	0	
≤ -32513	-117.593	1	0	0	0	0	0	0	1	0	0	0	0	0	0	0	0	Minimum output value

Table B- 3 Unipolar output ranges

Dec. value	Output value in %	Data word																Range
		2^{15}	2^{14}	2^{13}	2^{12}	2^{11}	2^{10}	2^9	2^8	2^7	2^6	2^5	2^4	2^3	2^2	2^1	2^0	
≥32512	117.589	0	1	1	1	1	1	1	1	x	x	x	x	x	x	x	x	Maximum output value
32511	117.589	0	1	1	1	1	1	1	0	1	1	1	1	1	1	1	1	Overrange
27649	100.004	0	1	1	0	1	1	0	0	0	0	0	0	0	0	0	1	
27648	100.000	0	1	1	0	1	1	0	0	0	0	0	0	0	0	0	0	Nominal range
1	0.003617	0	0	0	0	0	0	0	0	0	0	0	0	0	0	0	1	
0	0.000	0	0	0	0	0	0	0	0	0	0	0	0	0	0	0	0	
≤ 0	0	0	0	0	0	0	0	0	0	0	0	0	0	0	0	0	0	Minimum output value

B.2 Representation of analog values in the voltage output ranges

The tables below list the decimal and hexadecimal values (codes) of the possible voltage output ranges.

Table B- 4 Voltage output ranges ±10 V and ±5 V

Values			**Voltage output range**		**Range**
	Dec.	**Hex.**	**±10 V**	**±5 V**	
118.515%	32767	7FFF	11.76 V	5.88 V	Overflow*
	32512	7F00			
117.589%	32511	7EFF	11.76 V	5.88 V	Overrange
	27649	6C01			
100%	27648	6C00	10 V	5 V	Nominal range
75%	20736	5100	7.5 V	3.75 V	
0.003617%	1	1	361.7 µV	180.8 µV	
0%	0	0	0 V	0 V	
	-1	FFFF	-361.7 µV	-180.8 µV	
-75%	-20736	AF00	-7.5 V	-3.75 V	
-100%	-27648	9400	-10 V	-5 V	
	-27649	93FF			Underrange
-117.593%	-32512	8100	-11.76 V	-5.88 V	
	-32513	80FF	-11.76	-5.88 V	Underflow*
-118.519%	-32768	8000			

* outputs positive maximum value or negative minimum value

Table B- 5 Voltage output range 0 V to 10 V

Values			**Voltage output range**	**Range**
	Dec.	**Hex.**	**0 to 10 V**	
118.519%	32767	7FFF	11.76 V	Overflow*
	32512	7F00		
117.589%	32511	7EFF	11.76 V	Overrange
	27649	6C01		
100%	27648	6C00	10 V	Nominal range
75%	20736	5100	7.5 V	
0.003617%	1	1	361.7 µV	
0%	0	0	0 V	
	-1	FFFF	0 V	Underflow*
-118.519%	-32768	8000		

* outputs positive maximum value or negative minimum value

Table B- 6 Voltage output range 1 V to 5 V

Values			Voltage output range	Range
	Dec.	**Hex.**	**1 to 5 V**	
118.519%	32767	7FFF	5.70 V	Overflow*
	32512	7F00		
117.589%	32511	7EFF	5.70 V	Overrange
	27649	6C01		
100%	27648	6C00	5 V	Nominal range
75%	20736	5100	4 V	
0.003617%	1	1	1 V + 144.7 µV	
0%	0	0	1 V	
	-1	FFFF	1 V - 144.7 µV	Underrange
-25%	-6912	E500	0 V	
	-6913	E4FF	0 V	Underflow*
-118.519%	-32768	8000		

* outputs positive maximum value or negative minimum value

B.3 Representation of analog values in the current output ranges

The tables below list the decimal and hexadecimal values (codes) of the possible current output ranges.

Table B- 7 Current output range ±20 mA

Values			Current output range	Range
	Dec.	**Hex.**	**±20 mA**	
118.5149%	32767	7FFF	21 mA	Overflow*
	29031	7167		
105%	29030	7166	21 mA	Overrange
	27649	6C01	20 mA + 723.4 nA	
100%	27648	6C00	20 mA	Nominal range
75%	20736	5100	15 mA	
0.003617%	1	1	723.4 nA	
0%	0	0	0 mA	
	-1	FFFF	-723.4 nA	
-75%	-20736	AF00	-15 mA	
-100%	-27648	9400	-20 mA	
	-27649	93FF	-20 mA + 723.4 nA	Underrange
-105%	-29031	8E99	-21 mA	
	-29032	8E98	-21 mA	Underflow*
-118.519%	-32768	8000		

* outputs positive maximum value or negative minimum value

Table B- 8 Current output range 0 to 20 mA

Values			**Current output range**	**Range**
	Dec.	**Hex.**	**0 to 20 mA**	
118.5149%	32767	7FFF	21 mA	Overflow*
	29031	7167		
105%	29030	7166	21 mA	Overrange
	27649	6C01	20 mA + 723.4 nA	
100%	27648	6C00	20 mA	Nominal range
75%	20736	5100	15 mA	
0.003617%	1	1	723.4 nA	
0%	0	0	0 mA	
	-1	FFFF	0 mA	Underflow*
-118.519%	-32768	8000		

* outputs positive maximum value or negative minimum value

Table B- 9 Current output ranges 4 to 20 mA

Values			**Current output range**	**Range**
	Dec.	**Hex.**	**4 to 20 mA**	
118.5149%	32767	7FFF	21 mA	Overflow*
	29377	72C1		
106.25%	29376	72C0	21 mA	Overrange
	27649	6C01	20 mA + 578.7 nA	
100%	27648	6C00	20 mA	Nominal range
75%	19008	4A40	16 mA	
0.003617%	1	1	4 mA + 578.7 nA	
0%	0	0	4 mA	
	-1	FFFF	3.9995 mA	Underrange
-2.5%	-692	FD4C	3.6 mA	
	-693	FD4B	3.6 mA	Underflow*
-118.519%	-32768	8000		

* outputs positive maximum value or negative minimum value