SIEMENS

SIRIUS

DE	**Ersatzteile für Sanftstarter 3RW55** Explosionszeichnungen
EN	**Spare parts for soft starter 3RW55** Exploded sketches
FR	**Des pièces de rechange pour démarreur progressif 3RW55** Des dessins d'explosion
ES	**Piezas de reparación para arrancador suave 3RW55** Diagramas en explosión
IT	**Pezzi di ricambio perché softstarter 3RW55** Abbozzi esplosi
TR	**3RW55 yumuşak yol verici için yedek parçalar** Parça şemaları
中文	**备用零件为 软起动器 3RW55** 推翻素描

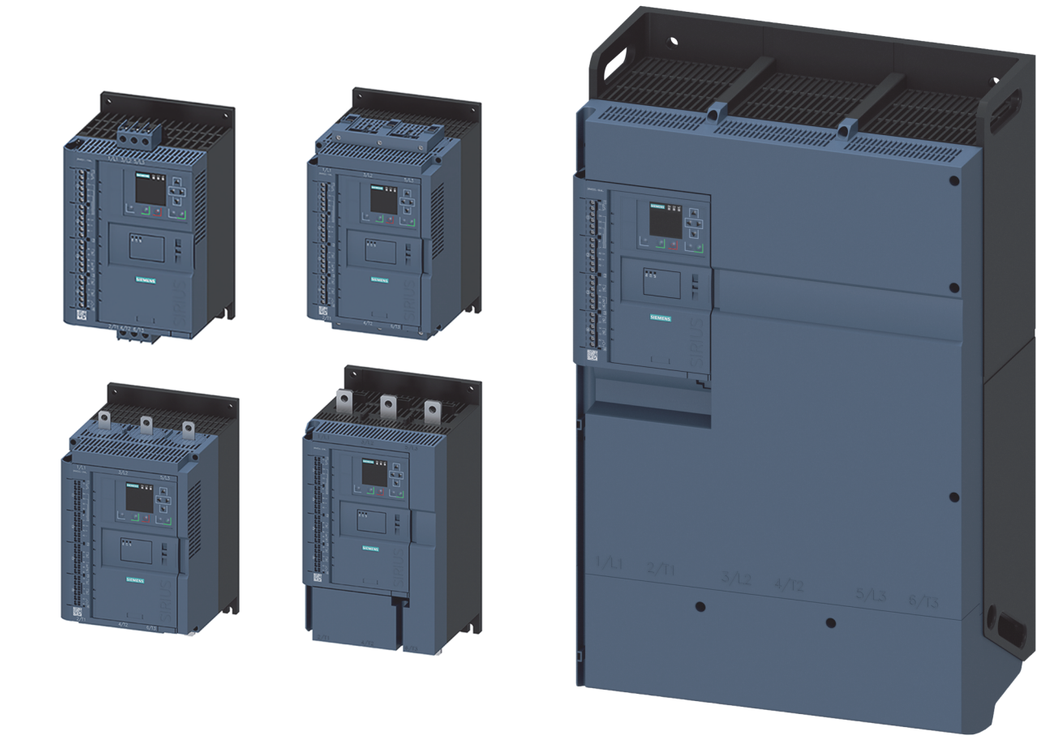

DE		⚠ **GEFAHR**	**Lebensgefahr durch Berührung unter Spannung stehender Teile** Das vorliegende Gerät / Teil führt gefährliche Spannungen. Beim Berühren unter Spannung stehender Teile erleiden Sie Tod oder schwere Körperverletzungen. Die gefährliche Spannung steht im Geräteinneren bis zu 2 Minuten nach Abschalten der Versorgungsspannungen an. Installation, Inbetriebnahme und Wartung nur durch qualifiziertes Fachpersonal. Beachten Sie die Hinweise in den Betriebsanleitungen und Handbüchern des zugehörigen Sanftstarters.
EN		⚠ **DANGER**	**Danger to life when live parts are touched** This device/part carries dangerous voltages. Death or serious injury will result if you touch live parts. The dangerous voltage is still present inside the device for up to 2 minutes after the supply voltages have been disconnected. Installation, commissioning and maintenance by qualified technicians only. Read the information provided in the operating instructions and manuals of the corresponding Soft Starter.
FR		⚠ **DANGER**	**Danger de mort par contact avec les pièces sous tension** Cet appareil / ce composant est soumis à des tensions dangereuses. Un contact avec les pièces sous tension entraîne la mort ou des blessures graves. La tension reste dangereuse à l'intérieur de l'appareil 2 minutes après la coupure des tensions d'alimentation. L'installation, la mise en service et la maintenance doivent être effectuées uniquement par du personnel spécialisé qualifié. Veuillez tenir compte des consignes figurant dans les instructions de service et les manuels du démarreur progressif correspondant.
ES		⚠ **PELIGRO**	**Peligro de muerte al tocar piezas bajo tensión** Existen tensiones peligrosas en el equipo/la pieza. Tocar piezas que están bajo tensión puede provocar lesiones corporales graves o incluso la muerte. La tensión peligrosa sigue estando presente en el interior del equipo hasta 2 minutos después de desconectar las tensiones de alimentación. La instalación, la puesta en marcha y el mantenimiento deben encomendarse exclusivamente a personal especializado. Tenga en cuenta las indicaciones proporcionadas en las instrucciones de servicio y los manuales del arrancador suave en cuestión.
IT		⚠ **PERICOLO**	**Pericolo di morte al contatto con componenti sotto tensione** Nel presente dispositivo / componente sono presenti tensioni pericolose. Il contatto con componenti sotto tensione può comportare pericolo di morte e gravi lesioni fisiche. La tensione pericolosa è presente all'interno del dispositivo per altri 2 minuti dopo la disinserzione delle tensioni di alimentazione. L'installazione, la messa in servizio e la manutenzione possono essere eseguite solo da personale qualificato. Osservare le avvertenze nelle istruzioni operative e nei rispettivi manuali dell'avviatore dolce (o sanftstarter).
TR		⚠ **TEHLİKE**	**Gerilim altındaki parçalara temas nedeniyle ölüm tehlikesi** Mevcut cihaz / parça, tehlikeli gerilimler taşır. Gerilim altındaki parçalara temas etmeniz, ölüm veya ağır bedensel yaralanma ile sonuçlanır. Besleme gerilimi kapatıldıktan sonra 2 dakikaya boyunca cihazın iç kısmında tehlikeli gerilim devam eder. Kurulum, işletime alma ve bakım çalışmalarının, yalnızca kalifiye personel tarafından yapılmasına izin verilir. İlgili yumuşak yol vericinin işletme kılavuzlarındaki ve el kitaplarındaki uyarıları dikkat alın.
中文		⚠ **危险**	**触摸带电部件有生命危险** 该设备 / 部件带有危险电压。触摸带电部件可造成严重身体伤害甚至死亡。电源电压断开后，设备内的危险电压仍然会存在最长 2 分钟。只能由有资质的专业人员进行安装、调试和维护。 请遵守操作说明和相关软起动器手册中的说明。

SIEMENS AG

Technical Support https://support.industry.siemens.com

Support Request https://support.industry.siemens.com/My/ww/en/requests

109753752

A5E41824209001A/RS-AC/003

Last update: 07 March 2022

3RW551.-.....

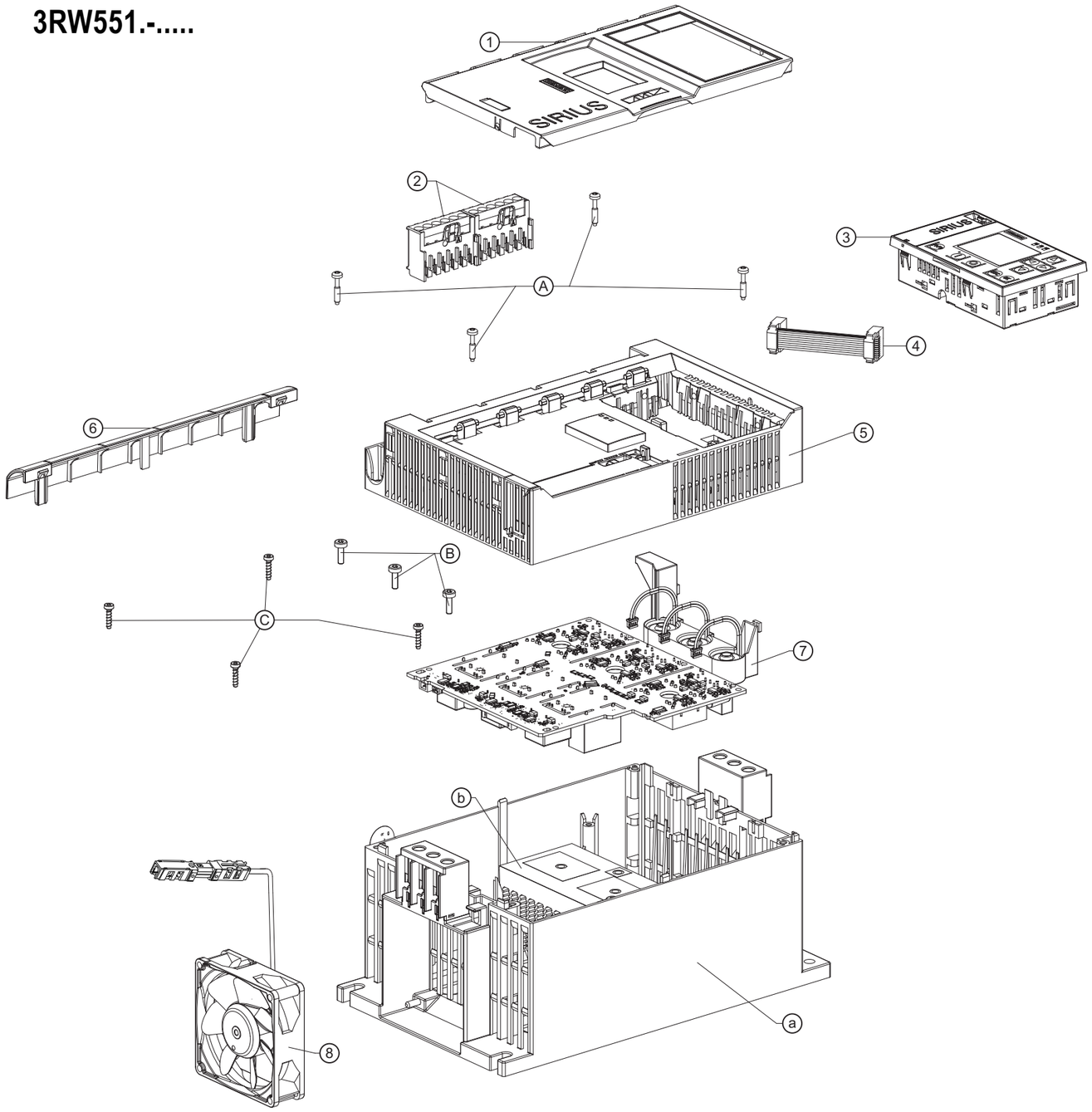

Position	Article Number (Spare Part)	Article Number (Soft Starter)
1	3RW5950-0GL30	3RW55..-.HA..
2	3RW5980-1TR00	3RW551.-1HA.. (2x)
	3RW5980-2TR00	3RW551.-3HA.. (2x)
3	3RW5980-0HF00	3RW55..-.HA..
4	3UF7931-0AA00-0	3RW55..-.HA..
5	3RW5950-1UY00	3RW551.-.HA0.
	3RW5950-1UY10	3RW551.-.HA1.
6	3RW5950-0GD20	3RW55..-.HA..
7	3RW5951-0PA04	3RW5513-.HA.4
	3RW5951-0PA05	3RW5513-.HA.5
	3RW5951-0PB04	3RW5514-.HA.4
	3RW5951-0PB05	3RW5514-.HA.5
	3RW5951-0PC04	3RW5515-.HA.4
	3RW5951-0PC05	3RW5515-.HA.5
	3RW5951-0PD04	3RW5516-.HA.4
	3RW5951-0PD05	3RW5516-.HA.5
	3RW5951-0PE04	3RW5517-.HA.4
	3RW5951-0PE05	3RW5517-.HA.5
8	3RW5983-0FF00	3RW551.-..... (1x)

Position	Assembly	Screws	Tightening torque
A	2 - a	3,5 mm x 19	140 Ncm
B	3 - b	M4 x 12	150 Ncm
C	3 - a	3,5 mm x 14	140 Ncm

3RW552.-.....
3RW553.-.....

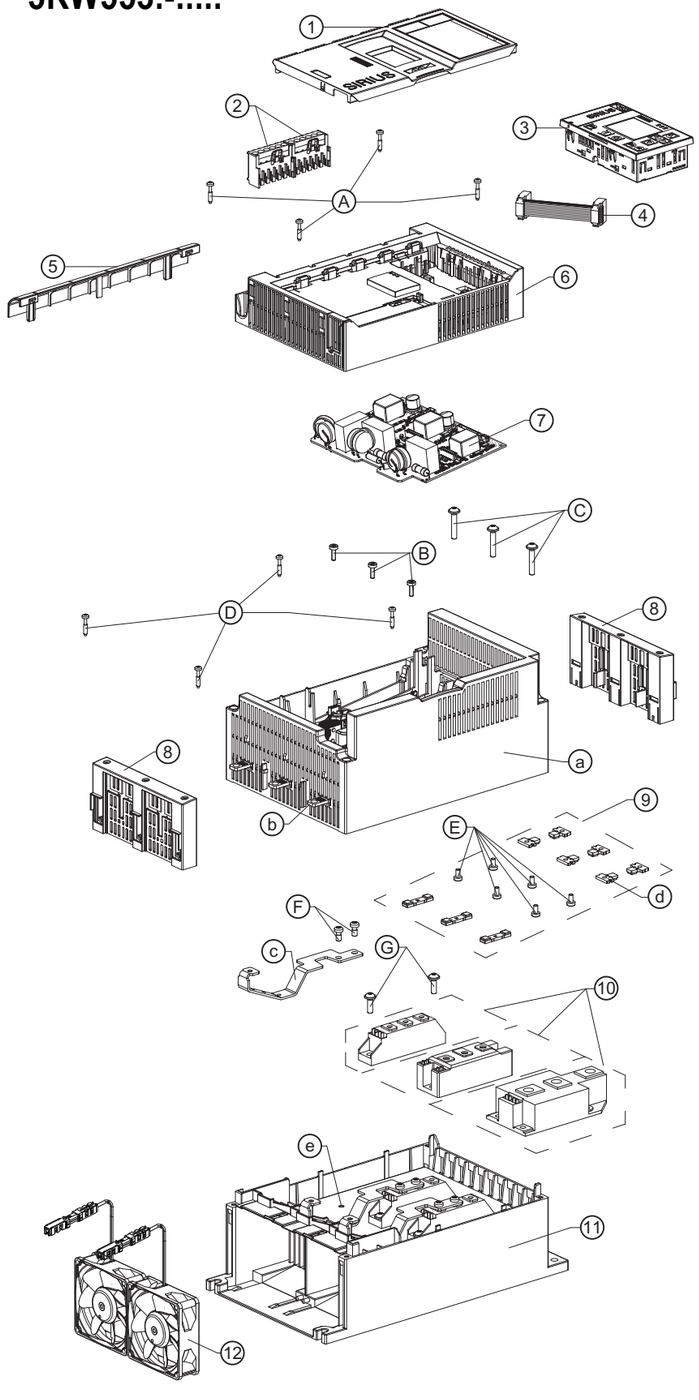

Position	Article Number (Spare Part)	Article Number (Soft Starter)
1	3RW5950-0GL30	3RW55..-.HA..
2	3RW5980-1TR00	3RW552.-1HA.. (2x) 3RW553.-6HA.. (2x)
	3RW5980-2TR00	3RW552.-3HA.. (2x) 3RW553.-2HA.. (2x)
3	3RW5980-0HF00	3RW55..-.HA..
4	3UF7931-0AA00-0	3RW55..-.HA..
5	3RW5950-0GD20	3RW55..-.HA..
6	3RW5950-1UY00	3RW552.-.HA0. 3RW553.-.HA0.
	3RW5950-1UY10	3RW552.-.HA1. 3RW553.-.HA1.
7	3RW5953-0PY04	3RW552.-.HA.4 3RW553.-.HA.4
	3RW5953-0PY06	3RW552.-.HA.6 3RW553.-.HA.6
8	3RW5982-0TB00	3RW552.-.....(2x)
9	3RW5953-0BY00	3RW552.-..... 3RW553.-.....
10	3RW5952-0SF04	3RW5524-.HA.4 (3x)
	3RW5952-0SF06	3RW5521-.HA.6 (3x) 3RW5524-.HA.6 (3x)
	3RW5952-0SH04	3RW5525-.HA.4 (3x) 3RW5526-.HA.4 (3x)
	3RW5952-0SH06	3RW5525-.HA.6 (3x) 3RW5526-.HA.6 (3x)
	3RW5952-0SJ04	3RW5527-.HA.4 (3x)
	3RW5952-0SJ06	3RW5527-.HA.6 (3x)
	3RW5953-0SL04	3RW5534-.HA.4 (3x) 3RW5535-.HA.4 (3x)
	3RW5953-0SL06	3RW5534-.HA.6 (3x) 3RW5535-.HA.6 (3x)
	3RW5953-0SM04	3RW5536-.HA.4 (3x)
	3RW5953-0SM06	3RW5536-.HA.6 (3x)
11	3RW5953-0GB00	3RW552.-..... 3RW553.-.....
12	3RW5983-0FF00	3RW552.-..... (2x) 3RW553.-..... (2x)

Position	Assembly	Screw	Tightening torque
A	2 - a	3,5 mm x 19	140 Ncm
B	b - c	M4 x 12	230 Ncm
C	b - 6	M5 x 28	350 Ncm
C	b - 6	M6 x 29	350 Ncm
C	b - 6	M8 x 30	900 Ncm
D	a - 7	3,5 mm x 19	140 Ncm
E	d - b	M4 x 8	300 Ncm
F	c - 6	M5 x 10	350 Ncm
F	c - 6	M6 x 10	350 Ncm
F	c - 6	M8 x 12	900 Ncm
G	6 - e	M5 x 16	350 Ncm
G	6 - e	M5 x 28	350 Ncm

3RW5543-.....
3RW5544-.....
3RW5545-.....

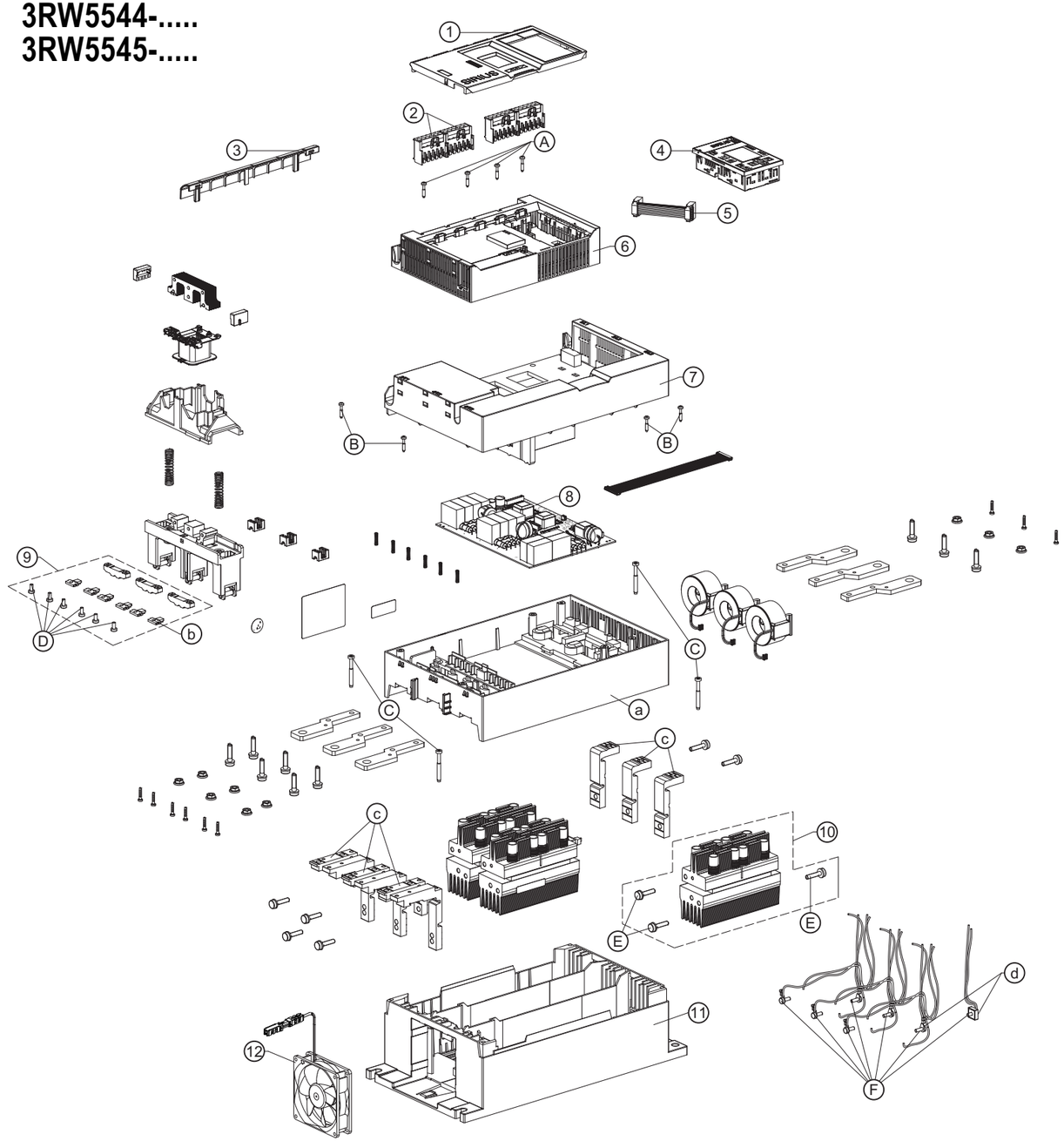

Position	Article Number (Spare Part)	Article Number (Soft Starter)
1	3RW5950-0GL30	3RW55..-.HA..
2	3RW5980-1TR00	3RW554..-6HA.. (2x)
	3RW5980-2TR00	3RW554..-2HA.. (2x)
3	3RW5950-0GD20	3RW55..-.HA..
4	3RW5980-0HF00	3RW55..-.HA..
5	3UF7931-0AA00-0	3RW55..-.HA..
6	3RW5950-1UY00	3RW554.-.HA0.
	3RW5950-1UY10	3RW554.-.HA1.
7	3RW5954-0GF00	3RW554.-.....
8	3RW5954-0PY04	3RW554.-.HA.4
	3RW5954-0PY06	3RW554.-.HA.6
9	3RW5954-0BP00	3RW5543-..... 3RW5544-..... 3RW5545-.....
10	3RW5954-0SN04	3RW5543-.HA.4 (3x)
	3RW5954-0SN06	3RW5543-.HA.6 (3x)
	3RW5954-0SP04	3RW5544-.HA.4 (3x)
	3RW5954-0SP06	3RW5544-.HA.6 (3x)
	3RW5954-0SR04	3RW5545-.HA.4 (3x)
	3RW5954-0SR06	3RW5545-.HA.6 (3x)
11	3RW5954-0GB00	3RW554.-.....
12	3RW5984-0FF00	3RW554.-.....

Position	Assembly	Screw	Tightening torque
A	2 - 3	3,5 mm x 19	140 Ncm
B	3 - a	3,5 mm x 19	140 Ncm
C	a - 7	5 mm x 40	350 Ncm
D	b - c	M4 x 9	300 Ncm
E	c - 6	M6 x 25	1200 Ncm
F	d - 6	M4 x 12	220 Ncm

3RW5546-.....
3RW5547-.....
3RW5548-.....

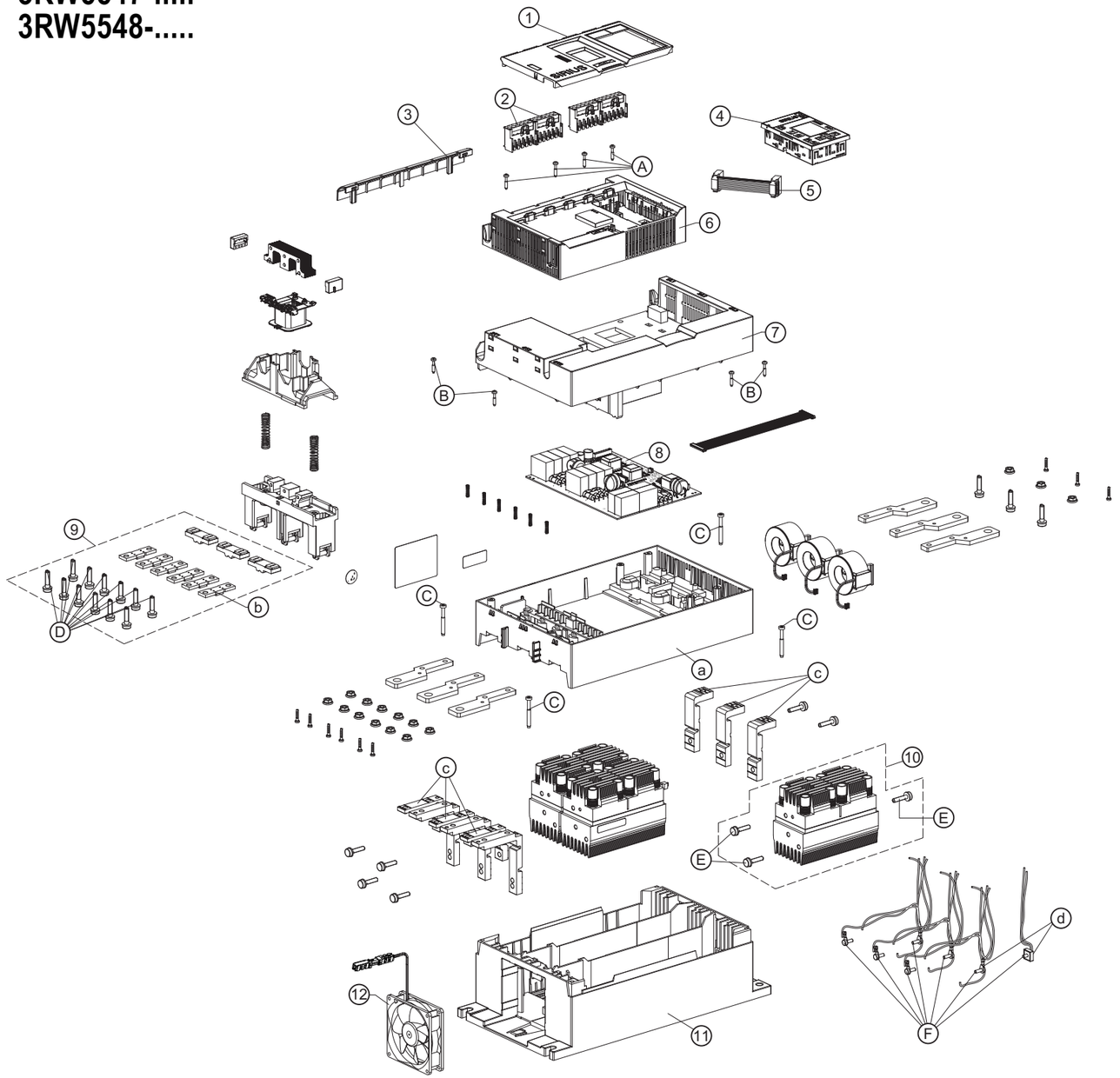

Position	Article Number (Spare Part)	Article Number (Soft Starter)
1	3RW5950-0GL30	3RW55..-.HA..
2	3RW5980-1TR00	3RW554.-6HA.. (2x)
	3RW5980-2TR00	3RW554.-2HA.. (2x)
3	3RW5950-0GD20	3RW55..-.HA..
4	3RW5980-0HF00	3RW55..-.HA..
5	3UF7931-0AA00-0	3RW55..-.HA..
6	3RW5950-1UY00	3RW554.-.HA0.
	3RW5950-1UY10	3RW554.-.HA1.
7	3RW5954-0GF00	3RW554.-.....
8	3RW5954-0PY04	3RW554.-.HA.4
	3RW5954-0PY06	3RW554.-.HA.6
9	3RW5954-0BT00	3RW5546-..... 3RW5547-..... 3RW5548-.....
10	3RW5954-0SR04	3RW5546-.HA.4 (3x)
	3RW5954-0SR06	3RW5546-.HA.6 (3x)
	3RW5954-0ST04	3RW5547-.HA.4 (3x) 3RW5548-.HA.4 (3x)
	3RW5954-0ST06	3RW5547-.HA.6 (3x) 3RW5548-.HA.6 (3x)
11	3RW5954-0GB00	3RW554.-.....
12	3RW5984-0FF00	3RW554.-.....

Position	Assembly	Screw	Tightening torque
A	2 - 3	3,5 mm x 19	140 Ncm
B	3 - a	3,5 mm x 19	140 Ncm
C	a - 7	5 mm x 40	350 Ncm
D	b - c	M4 x 9	300 Ncm
E	c - 6	M6 x 25	1200 Ncm
F	d - 6	M4 x 12	220 Ncm

3RW5552-.....
3RW5553-.....
3RW5554-.....

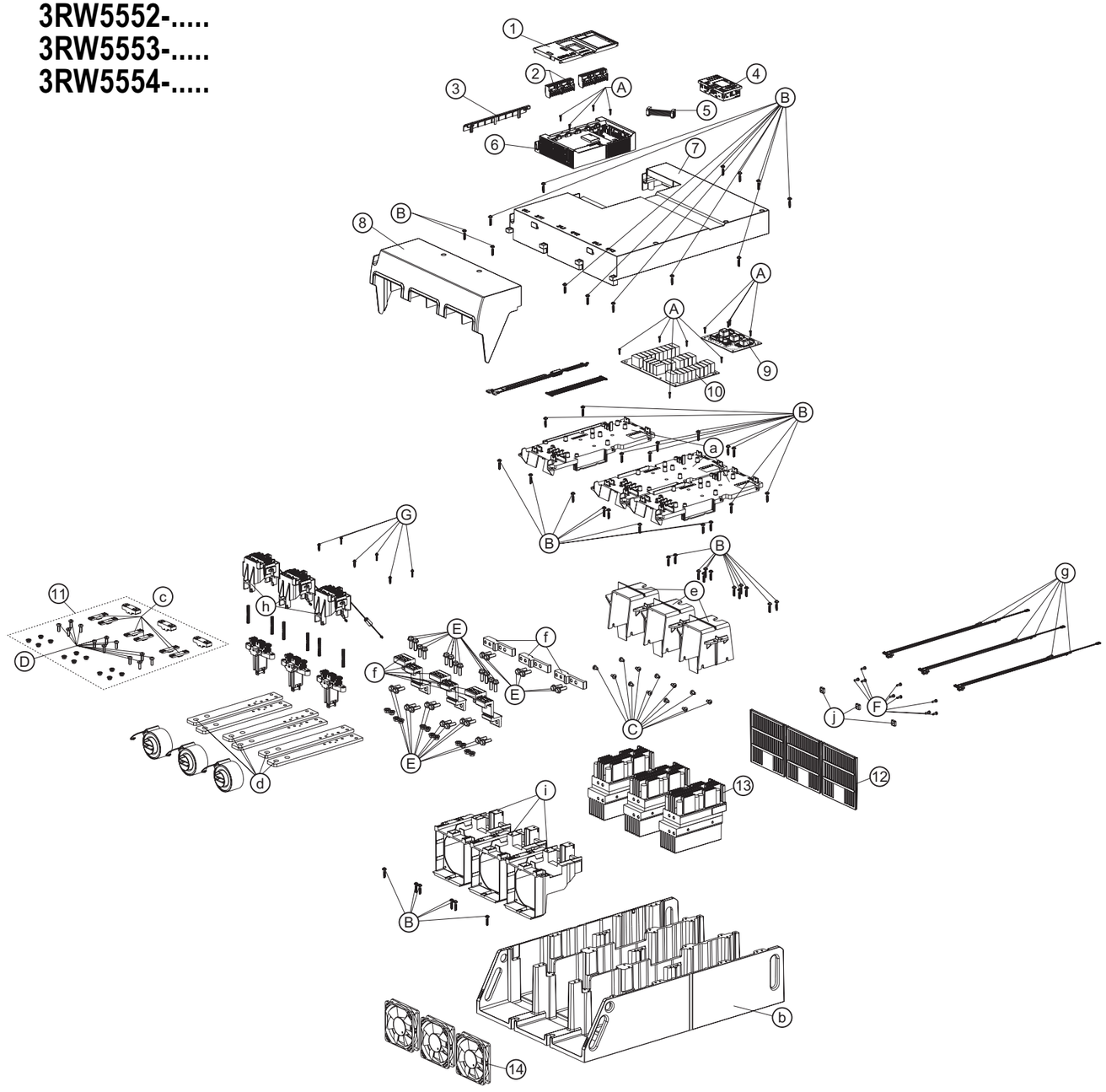

Position	Article Number (Spare Part)	Article Number (Soft Starter)
1	3RW5950-0GL30	3RW55..-.HA..
2	3RW5980-1TR00	3RW555.-6HA.. (2x)
	3RW5980-2TR00	3RW555.-2HA.. (2x)
3	3RW5950-0GD20	3RW55..-.HA..
4	3RW5980-0HF00	3RW55..-.HA..
5	3UF7931-0AA00-0	3RW55..-.HA..
6	3RW5955-1UY00	3RW555.-.HA0.
	3RW5955-1UY10	3RW555.-.HA1.
7	3RW5955-0GF00	3RW555.-.....
8	3RW5955-0TC20	3RW555.-.....
9	3RW5955-0PY14	3RW555.-.HA.4
	3RW5955-0PY16	3RW555.-.HA.6
10	3RW5955-0PY24	3RW555.-.HA.4
	3RW5955-0PY26	3RW555.-.HA.6
11	3RW5955-0BW00	3RW5552-.....
		3RW5553-.....
		3RW5554-.....
12	3RW5955-0GC00	3RW555.-..... (3x)
13	3RW5955-0SU04	3RW5552-.HA.4 (3x)
	3RW5955-0SU06	3RW5552-.HA.6 (3x)
	3RW5955-0SV04	3RW5553-.HA.4 (3x)
	3RW5955-0SV06	3RW5553-.HA.6 (3x)
	3RW5955-0SW04	3RW5554-.HA.4 (3x)
	3RW5955-0SW06	3RW5554-.HA.6 (3x)
14	3RW5985-0FF00	3RW555.-..... (3x)

Position	Assembly	Screw	Tightening torque
A	2 - a 5 - a 6 - a	3,5 mm x 14	120 Ncm
B	3 - b 4 - b a - b e - b i - b	5 mm x 25	400 Ncm
C	e - 9	M6 x 10	400 Ncm
D	c - d	M6 x 18	1000 Ncm
E	f - 9 f - d	M8 x 25	2500 Ncm
F	j - 9 / g - 9	M4 x 12	250 Ncm
G	h - i	3,5 mm x 18	200 Ncm

3RW5556-.....
3RW5558-.....

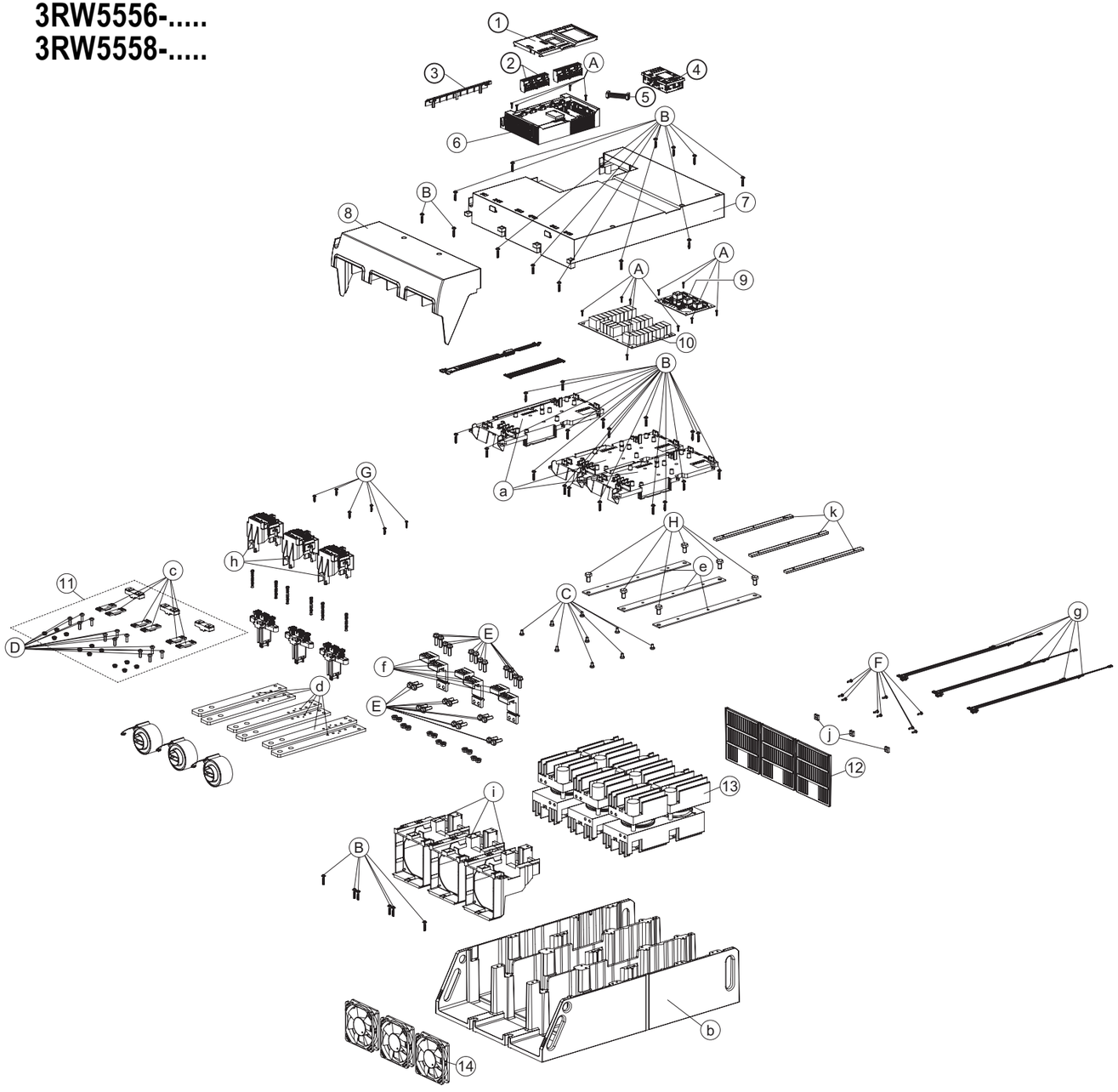

Position	Article Number (Spare Part)	Article Number (Soft Starter)
1	3RW5950-0GL30	3RW55..-.HA..
2	3RW5980-1TR00	3RW555.-6HA.. (2x)
	3RW5980-2TR00	3RW555.-2HA.. (2x)
3	3RW5950-0GD20	3RW55..-.HA..
4	3RW5980-0HF00	3RW55..-.HA..
5	3UF7931-0AA00-0	3RW55..-.HA..
6	3RW5955-1UY00	3RW555.-.HA0.
	3RW5955-1UY10	3RW555.-.HA1.
7	3RW5955-0GF00	3RW555.-.....
8	3RW5955-0TC20	3RW555.-.....
9	3RW5955-0PY14	3RW555.-.HA.4
	3RW5955-0PY16	3RW555.-.HA.6
10	3RW5955-0PY24	3RW555.-.HA.4
	3RW5955-0PY26	3RW555.-.HA.6
11	3RW5955-0BY00	3RW5556-.....
		3RW5558-.....
12	3RW5955-0GC00	3RW555.-..... (3x)
13	3RW5955-0SX04	3RW5556-.HA.4 (3x)
	3RW5955-0SX06	3RW5556-.HA.6 (3x)
	3RW5955-0SY04	3RW5558-.HA.4 (3x)
	3RW5955-0SY06	3RW5558-.HA.6 (3x)
14	3RW5985-0FF00	3RW555.-..... (3x)

Position	Assembly	Screw	Tightening torque
A	2 - a 5 - a 6 - a	3,5 mm x 14	120 Ncm
B	3 - b 4 - b a - b i - b	5 mm x 25	400 Ncm
C	e - k	M6 x 10	400 Ncm
D	c - d	M6 x 18	1000 Ncm
E	f - 9 f - d	M8 x 25	2500 Ncm
F	j - 9 / g - 9	M4 x 12	250 Ncm
G	h - i	3,5 mm x 18	200 Ncm
H	e - b	M10 x 18	2500 Ncm

© Siemens AG 2018