MAKING MODERN LIVING POSSIBLE

efesotomasyon.com



VLT® Low Harmonic Drive Operating Instructions

VLT® AutomationDrive FC 300

efesotomasyon.com

THE REAL DRIVE

Contents

1 How to Read these Operating Instructions 5
Copyright, Limitation of Liability and Revision Rights 5
Approvals 6
Symbols 6

2 Safety 7
General Warning 8
Before Commencing Repair Work 8
Special conditions 8
Avoid unintended start 9
Safe Stop Installation 9
Safe Stop of the Frequency Converter 10
IT Mains 11

3 Introduction to the Low Harmonic Drive 13
Working Principle 13
IEEE519 Compliance 13
Ordering Form Type Code 14

4 How to Install 15
How to Get Started 15
Pre-installation 16
Planning the Installation Site 16
Receiving the Frequency Converter 16
Transportation and Unpacking 16
Lifting 17
Mechanical Dimensions 19
Mechanical Installation 24
Assembly of F Frame Sections 26
Control Wire Connection between Drive and Filter 28
Terminal Locations - Frame size D 29
Terminal Locations - Frame size E 30
Terminal Locations - Frame size F 32
Cooling and Airflow 34
Field Installation of Options 40
Installation of Input Plate Options 40
Installation of Mains Shield for Frequency Converters 40
Frame size F Panel Options 40
Electrical Installation 43
Power Connections 43
Mains Connection 54

Power and Control Wiring for Unscreened Cables 54
Fuses 55
Control Cable Routing 58
Electrical Installation, Control Terminals 58
Connection Examples for Control of Motor with External Signal Provider 60
Start/Stop 60
Pulse Start/Stop 60
Electrical Installation - additional 62
Electrical Installation, Control Cables 62
Switches S201, S202, and S801 64
Final Set-up and Test 65
Additional Connections 67
Mechanical Brake Control 67
Motor Thermal Protection 68

5 How to Operate the Low Harmonic Drive 69
How to operate graphical LCP (GLCP) 69

6 How to Programme the Low Harmonic Drive 81
How to Programme the Frequency Converter 81
Quick Setup Parameters 81
Basic Setup Parameters 85
How to Programme the Active Filter 107
Using the Low Harmonic Drive in NPN Mode 107
Parameter Lists - Frequency Converter 108
Parameter Lists - Active Filter 129
Operation/Display 0-** 129
Digital In/Out 5-** 130
Comm. and Options 8-** 130
Special Functions 14-** 131
FC Information 15-** 131
Data Readouts 16-** 132
AF Settings 300-** 132
AF Readouts301-** 133

7 RS-485 Installation and Set-up 135
RS-485 Installation and Set-up 135
Network Configuration 137
FC Protocol Message Framing Structure 137
Examples 142
How to Access Parameters 143

8 General Specifications 145
Filter Specifications 152
9 Troubleshooting 153
Alarms and Warnings - Frequency Converter (right LCP) 153
Warnings/Alarm Messages 153
Alarms and Warnings - Filter (left LCP) 162
Index 167

1

efesotomasyon.com

1 How to Read these Operating Instructions

1.1.1 Copyright, Limitation of Liability and Revision Rights

This publication contains information proprietary to Danfoss. By accepting and using this manual the user agrees that the information contained herein will be used solely for operating equipment from Danfoss or equipment from other vendors provided that such equipment is intended for communication with Danfoss equipment over a serial communication link. This publication is protected under the Copyright laws of Denmark and most other countries.

Danfoss does not warrant that a software program produced according to the guidelines provided in this manual will function properly in every physical, hardware or software environment.

Although Danfoss has tested and reviewed the documentation within this manual, Danfoss makes no warranty or representation, neither expressed nor implied, with respect to this documentation, including its quality, performance, or fitness for a particular purpose.

In no event shall Danfoss be liable for direct, indirect, special, incidental, or consequential damages arising out of the use, or the inability to use information contained in this manual, even if advised of the possibility of such damages. In particular, Danfoss is not responsible for any costs, including but not limited to those incurred as a result of lost profits or revenue, loss or damage of equipment, loss of computer programs, loss of data, the costs to substitute these, or any claims by third parties.

Danfoss reserves the right to revise this publication at any time and to make changes to its contents without prior notice or any obligation to notify former or present users of such revisions or changes.

1.1.2 Available Literature for VLT AutomationDrive

- The VLT AutomationDrive Operating Instructions - High Power, MG.33.UX.YY provide the necessary information for getting the drive up and running.
- The VLT AutomationDrive Design Guide MG.33.BX.YY entails all technical information about the drive and customer design and applications.
- The VLT AutomationDrive Programming Guide MG.33.MX.YY provides information on how to programme and includes complete parameter descriptions.
- The VLT AutomationDrive Profibus Operating Instructions MG.33.CX.YY provide the information required for controlling, monitoring and programming the drive via a Profibus fieldbus.
- The VLT AutomationDrive DeviceNet Operating Instructions MG.33.DX.YY provide the information required for controlling, monitoring and programming the drive via a DeviceNet fieldbus.

X = Revision number
YY = Language code

Danfoss technical literature is also available online at www.danfoss.com/drives.

1

VLT AutomationDrive
Operating Instructions
Software version: 5.9x

These Operating Instructions can be used for all VLT Automation Low Harmonic Drive frequency converters with software version 5.9x.
The software version number can be seen from par. 15-43 *Software Version*.

NB!
The Low Harmonic Drive has two LCPs, one for the frequency converter (to the right) and one for the active filter (to the left). Each LCP controls only the unit it is connected to and there is no communication between he two LCPs.

1.1.3 Approvals

1.1.4 Symbols

Symbols used in these Operating Instructions.

NB!
Indicates something to be noted by the reader.

Indicates a general warning.

Indicates a high-voltage warning.

* Indicates default setting

2 Safety

2.1.1 Safety note



The voltage of the frequency converter is dangerous whenever connected to mains. Incorrect installation of the motor, frequency converter or fieldbus may cause damage to the equipment, serious personal injury or death. Consequently, the instructions in this manual, as well as national and local rules and safety regulations, must be complied with.

Safety Regulations

1. The frequency converter must be disconnected from mains if repair work is to be carried out. Check that the mains supply has been disconnected and that the necessary time has passed before removing motor and mains plugs.
2. The [STOP/RESET] key on the control panel of the frequency converter does not disconnect the equipment from mains and is thus not to be used as a safety switch.
3. Correct protective earthing of the equipment must be established, the user must be protected against supply voltage, and the motor must be protected against overload in accordance with applicable national and local regulations.
4. The earth leakage currents are higher than 3.5 mA.
5. Protection against motor overload is set by par. 1-90 *Motor Thermal Protection*. If this function is desired, set par. 1-90 to data value [ETR trip] (default value) or data value [ETR warning]. Note: The function is initialised at 1.16 x rated motor current and rated motor frequency. For the North American market: The ETR functions provide class 20 motor overload protection in accordance with NEC.
6. Do not remove the plugs for the motor and mains supply while the frequency converter is connected to mains. Check that the mains supply has been disconnected and that the necessary time has passed before removing motor and mains plugs.
7. Please note that the frequency converter has voltage inputs other than L1, L2 and L3, when load sharing (linking of DC intermediate circuit) and external 24 V DC have been installed. Check that all voltage inputs have been disconnected and that the necessary time has passed before commencing repair work.

Installation at High Altitudes



Installation at high altitude:
At altitudes above 3 km, please contact Danfoss Drives regarding PELV

Warning against Unintended Start

1. The motor can be brought to a stop by means of digital commands, bus commands, references or a local stop, while the frequency converter is connected to mains. If personal safety considerations make it necessary to ensure that no unintended start occurs, these stop functions are not sufficient. 2. While parameters are being changed, the motor may start. Consequently, the stop key [RESET] must always be activated; following which data can be modified. 3. A motor that has been stopped may start if faults occur in the electronics of the frequency converter, or if a temporary overload or a fault in the supply mains or the motor connection ceases.



Warning:
Touching the electrical parts may be fatal - even after the equipment has been disconnected from mains.

Also make sure that other voltage inputs have been disconnected, such as external 24 V DC, load sharing (linkage of DC intermediate circuit), as well as the motor connection for kinetic back up.

efesotomasyon.com

2.1.2 General Warning



Warning:
Touching the electrical parts may be fatal - even after the equipment has been disconnected from mains.
Also make sure that other voltage inputs have been disconnected, (linkage of DC intermediate circuit), as well as the motor connection for kinetic back-up.
Before touching any potentially live parts of the frequency converter, wait at least as follows:
380 - 480 V, 132 - 200 kW, wait at least 20 minutes.
380 - 480 V, 250- 630 kW, wait at least 40 minutes.
Shorter time is allowed only if indicated on the nameplate for the specific unit. Be aware that there may be high voltage on the DC links even when the Control Card LEDs are turned off. A red LED is mounted on a circuit board inside both the drive and the active filter to indicate the DC bus voltages. The red LED will stay lit until the DC link is 50 Vdc or lower.



Leakage Current
The earth leakage current from the frequency converter exceeds 3.5 mA. According to IEC 61800-5-1 a reinforced Protective Earth connection must be ensured by means of: a min. 10mm² Cu or 16mm² Al PE-wire or an addtional PE wire - with the same cable cross section as the Mains wiring - must be terminated separately.
Residual Current Device
This product can cause a D.C. current in the protective conductor. Where a residual current device (RCD) is used for extra protection, only an RCD of Type B (time delayed) shall be used on the supply side of this product. See also RCD Application Note MN.90.GX.02.
Protective earthing of the frequency converter and the use of RCD's must always follow national and local regulations.

2.1.3 Before Commencing Repair Work

1. Disconnect the frequency converter from mains
2. Disconnect DC bus terminals 88 and 89
3. Wait at least the time mentioned in section General Warning above
4. Remove motor cable

2.1.4 Special conditions

Electrical ratings:
The rating indicated on the nameplate of the frequency converter is based on a typical 3-phase mains power supply, within the specified voltage, current and temperature range, which is expected to be used in most applications.

The frequency converters also support other special applications, which affect the electrical ratings of the frequency converter. Special conditions which affect the electrical ratings might be:

- Single phase applications
- High temperature applications which require derating of the electrical ratings
- Marine applications with more severe environmental conditions.

Consult the relevant clauses in these instructions and in the **Design Guide** for information about the electrical ratings.

Installation requirements:
The overall electrical safety of the frequency converter requires special installation considerations regarding:

- Fuses and circuit breakers for over-current and short-circuit protection
- Selection of power cables (mains, motor, brake, loadsharing and relay)
- Grid configuration (IT,TN, grounded leg, etc.)
- Safety of low-voltage ports (PELV conditions).

Consult the relevant clauses in these instructions and in the **Design Guide** for information about the installation requirements.

2.1.5 Avoid unintended start

While the frequency converter is connected to mains, the motor can be started/stopped using digital commands, bus commands, references or via the Local Control Panel.

- Disconnect the frequency converter from mains whenever personal safety considerations make it necessary to avoid unintended start.
- To avoid unintended start, always activate the [OFF] key before changing parameters.
- Unless terminal 37 is turned off, an electronic fault, temporary overload, a fault in the mains supply, or lost motor connection may cause a stopped motor to start.

2.1.6 Safe Stop Installation

To carry out an installation of a Category 0 Stop (EN60204) in conformity with Safety Category 3 (EN954-1), follow these instructions:

1. The bridge (jumper) between Terminal 37 and 24 V DC must be removed. Cutting or breaking the jumper is not sufficient. Remove it entirely to avoid short-circuiting. See jumper on illustration.
2. Connect terminal 37 to 24 V DC by a short-circuit protected cable. The 24 V DC voltage supply must be interruptible by an EN954-1 Category 3 circuit interrupt device. If the interrupt device and the frequency converter are placed in the same installation panel, you can use an unscreened cable instead of a screened one.

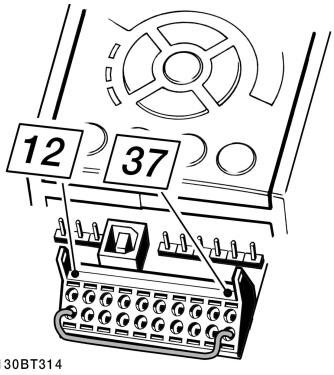

Illustration 2.1: Bridge jumper between terminal 37 and 24 VDC

The illustration below shows a Stopping Category 0 (EN 60204-1) with safety Category 3 (EN 954-1). The circuit interrupt is caused by an opening door contact. The illustration also shows how to connect a non-safety related hardware coast.

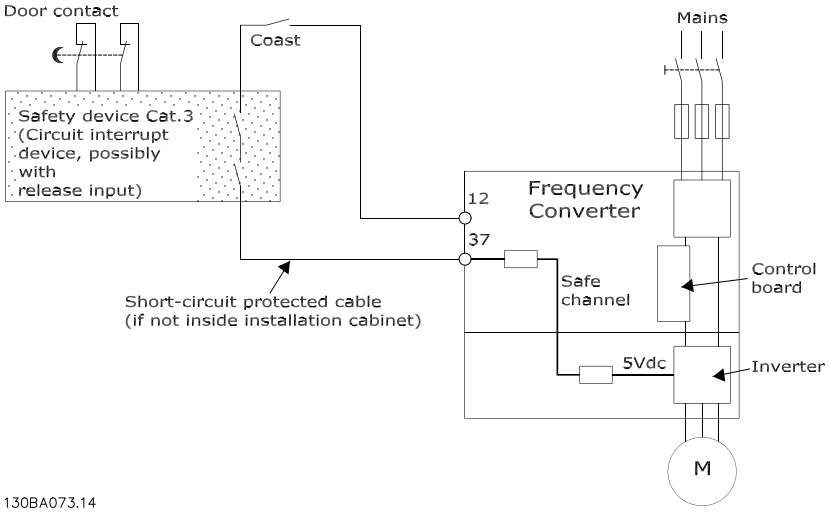

Illustration 2.2: Illustration of the essential aspects of an installation to achieve a Stopping Category 0 (EN 60204-1) with safety Category 3 (EN 954-1).

2.1.7 Safe Stop of the Frequency Converter

2

For versions fitted with a Safe Stop terminal 37 input, the frequency converter can perform the safety function *Safe Torque Off* (As defined by draft CD IEC 61800-5-2) or *Stop Category 0* (as defined in EN 60204-1).

It is designed and approved suitable for the requirements of Safety Category 3 in EN 954-1. This functionality is called Safe Stop. Prior to integration and use of Safe Stop in an installation, a thorough risk analysis on the installation must be carried out in order to determine whether the Safe Stop functionality and safety category are appropriate and sufficient. In order to install and use the Safe Stop function in accordance with the requirements of Safety Category 3 in EN 954-1, the related information and instructions of the *Design Guide* must be followed. The information and instructions of the Operating Instructions are not sufficient for a correct and safe use of the Safe Stop functionality.

Prüf- und Zertifizierungsstelle
im BG-PRÜFZERT

BGIA
Berufsgenossenschaftliches Institut für Arbeitsschutz

Hauptverband der gewerblichen Berufsgenossenschaften

Translation
In any case, the German original shall prevail.

Type Test Certificate

05 06004
No. of certificate

Name and address of the holder of the certificate: (customer)	Danfoss Drives A/S, Ulnaes 1 DK-6300 Graasten, Dänemark
Name and address of the manufacturer:	Danfoss Drives A/S, Ulnaes 1 DK-6300 Graasten, Dänemark

Ref. of customer:	Ref. of Test and Certification Body:	Date of Issue:
	Apf/Köh VE-Nr. 2003 23220	13.04.2005

Product designation:	Frequency converter with integrated safety functions
Type:	VLT® Automation Drive FC 302
Intended purpose:	Implementation of safety function „Safe Stop"
Testing based on:	EN 954-1, 1997-03, DKE AK 226.03, 1998-06, EN ISO 13849-2; 2003-12, EN 61800-3, 2001-02, EN 61800-5-1, 2003-09,
Test certificate:	No.: 2003 23220 from 13.04.2005
Remarks:	The presented types of the frequency converter FC 302 meet the requirements laid down in the test bases. With correct wiring a category 3 according to DIN EN 954-1 is reached for the safety function.

The type tested complies with the provisions laid down in the directive 98/37/EC (Machinery).

Further conditions are laid down in the Rules of Procedure for Testing and Certification of April 2004.

130BA373.11

Head of certification body
(Prof. Dr. rer. nat. Dietmar Reinert)

Certification officer
(Dipl.-Ing. R. Apfeld)

PZB10E
01.05

Postal adress: 53754 Sankt Augustin
Office: Alte Heerstraße 111, 53757 Sankt Augustin
Phone: 0 22 41/2 31-02
Fax: 0 22 41/2 31-22 34

2.1.8 IT Mains

IT mains
Do not connect frequency converters with RFI-filters to mains supplies with a voltage between phase and earth of more than 440 V for 400 Vs and 760 V for 690 V converters.
For 400 V IT mains and delta earth (grounded leg), mains voltage may exceed 440 V between phase and earth.

Par. 14-50 *RFI Filter* can be used to disconnect the internal RFI capacitors from the RFI filter to ground. Par. 14-50 *RFI Filter* on both the drive and the filter must be turned off.

2.1.9 Disposal Instruction



Equipment containing electrical components must not be disposed of together with domestic waste.
It must be separately collected with electrical and electronic waste according to local and currently valid legislation.

3

MG.34.O1.02 - VLT® is a registered Danfoss trademark

3 Introduction to the Low Harmonic Drive

3.1.1 Working Principle

The VLT Low Harmonic Drive is a VLT High Power frequency converter with an integrated active filter. An active filter is a device that actively monitors harmonic distortion levels and injects compensative harmonic current onto the line to cancel out the harmonics.

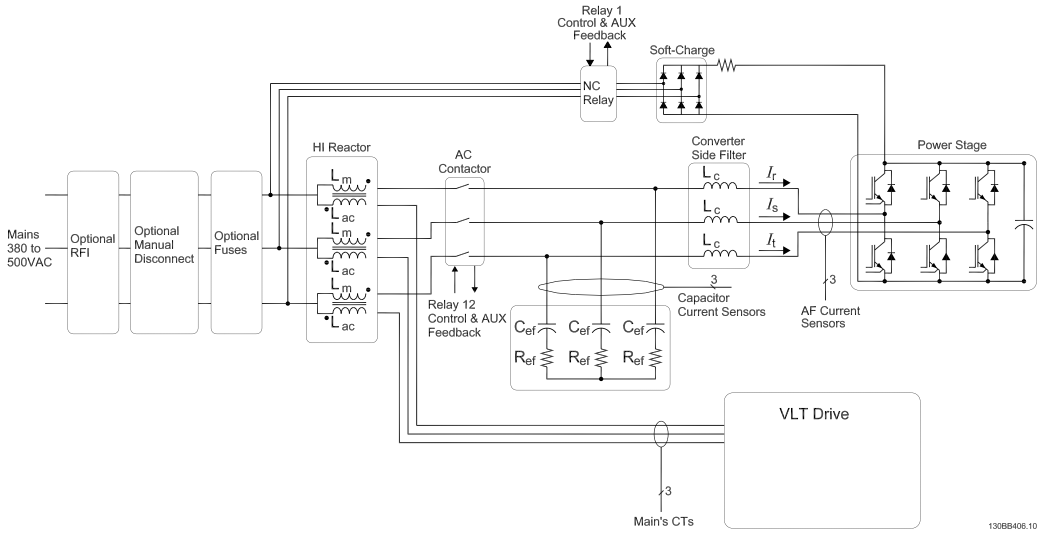

Illustration 3.1: Basic layout for the Low Harmonic Drive

3.1.2 IEEE519 Compliance

Low harmonic drives are designed to draw an ideal sinusoidal current waveform from the supply grid with a power factor of 1. Where traditional non linear load draws pulse shaped currents the low harmonic drive compensates that via the parallel filter path lowering the stress on the supply grid. The Low harmonic drive meet the toughest harmonic standards and has a THiD of less then 5% at full load for <3% pre-distortion on a balanced three-phased grid. The unit is designed to meet IEEE519 recommendation for Isc/Il >20 for both uneven and even individual harmonic levels. The filter portion of the low harmonic drives has a progressive switching frequency which leads to a wide frequency spreads giving lower individual harmonic levels above the 50th.

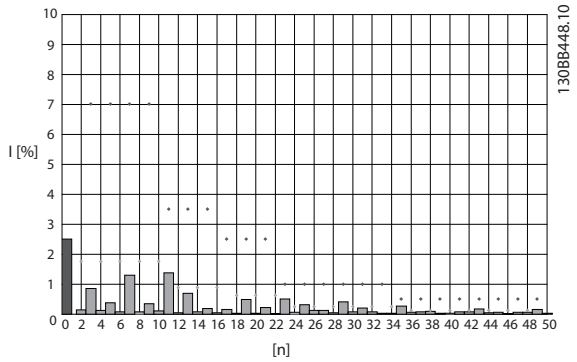

Illustration 3.2: Typical harmonic frequency spectrum and THD value at the mains terminals of the drive
n = harmonic order
◇.....IEEE519 (Isc/IL>20) limits for individual harmonics

3.1.3 Ordering Form Type Code

It is possible to design a VLT Low Harmonic Drive according to the application requirements by using the ordering number system.

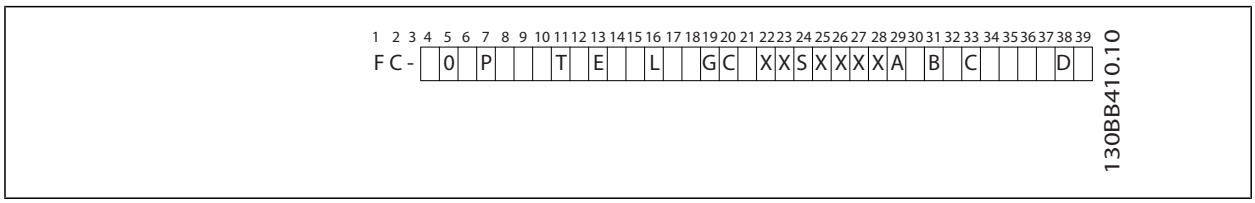

Product groups	1-3	
Frequency converter series	4-6	
Power rating	8-10	
Phases	11	
Mains Voltage	12	
Enclosure	13-15	
Enclosure type		
Enclosure class		
Control supply voltage		
Hardware configuration		
RFI filter	16-17	
Brake	18	
Display (LCP)	19	
Coating PCB	20	
Mains option	21	
Adaptation A	22	
Adaptation B	23	
Software release	24-27	
Software language	28	
A options	29-30	
B options	31-32	
C0 options, MCO	33-34	
C1 options	**35**	
C option software	**36-37**	
D options	**38-39**	

To order a VLT Low Harmonic Drive, type the letter "L" in position 16 of the type code string. Not all choices/options are available for each frequency converter variant. To verify if the appropriate version is available, please consult the Drive Configurator on the Internet. For more information on the options available, please see the *Design Guide*.

4 How to Install

4.1 How to Get Started

4.1.1 About How to Install

This chapter covers mechanical and electrical installations to and from power terminals and control card terminals.
Electrical installation of *options* is described in the relevant Operating Instructions and Design Guide.

4.1.2 How to Get Started

The frequency converter is designed to achieve a quick and EMC-correct installation by following the steps described below.

Read the safety instructions before installing the unit.
Failure to follow recommendations could result in death or serious injury.

Mechanical Installation

- Mechanical mounting

Electrical Installation

- Connection to Mains and Protecting Earth
- Motor connection and cables
- Fuses and circuit breakers
- Control terminals - cables

Quick Setup

- Local Control Panel (LCP) of frequency converter
- Local Control Panel of filter
- Automatic Motor Adaptation, AMA
- Programming

Frame size is depending on enclosure type, power range and mains voltage

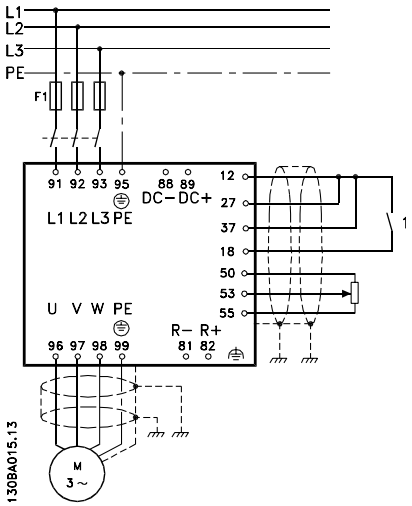

Illustration 4.1: Diagram showing basic installation including mains, motor, start/stop key, and potentiometer for speed adjustment.

4.2 Pre-installation

4.2.1 Planning the Installation Site



NB!
Before performing the installation it is important to plan the installation of the frequency converter. Neglecting this may result in extra work during and after installation.

Select the best possible operation site by considering the following (see details on the following pages, and the respective Design Guides):

- Ambient operating temperature
- Installation method
- How to cool the unit
- Position of the frequency converter
- Cable routing
- Ensure the power source supplies the correct voltage and necessary current
- Ensure that the motor current rating is within the maximum current from the frequency converter
- If the frequency converter is without built-in fuses, ensure that the external fuses are rated correctly.

4.2.2 Receiving the Frequency Converter

When receiving the frequency converter please make sure that the packaging is intact, and be aware of any damage that might have occurred to the unit during transport. In case damage has occurred, contact immediately the shipping company to claim the damage.

4.2.3 Transportation and Unpacking

Before unpacking the frequency converter it is recommended that it is located as close as possible to the final installation site.
Remove the box and handle the frequency converter on the pallet, as long as possible.

4.2.4 Lifting

Always lift the frequency converter in the dedicated lifting eyes. For all D and E frames, use a bar to avoid bending the lifting holes of the frequency converter.

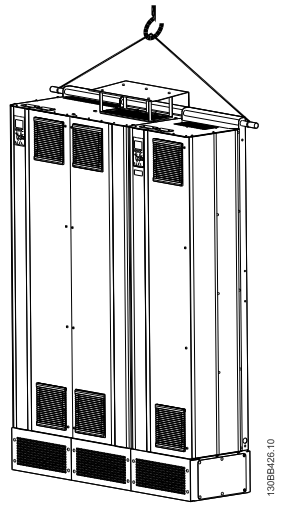

Illustration 4.2: Recommended lifting method, frame sizes D and E.

The lifting bar must be able to handle the weight of the frequency converter. See *Mechanical Dimensions* for the weight of the different frame sizes. Maximum diameter for bar is 2.5 cm (1 inch). The angle from the top of the drive to the lifting cable should be 60° or greater.

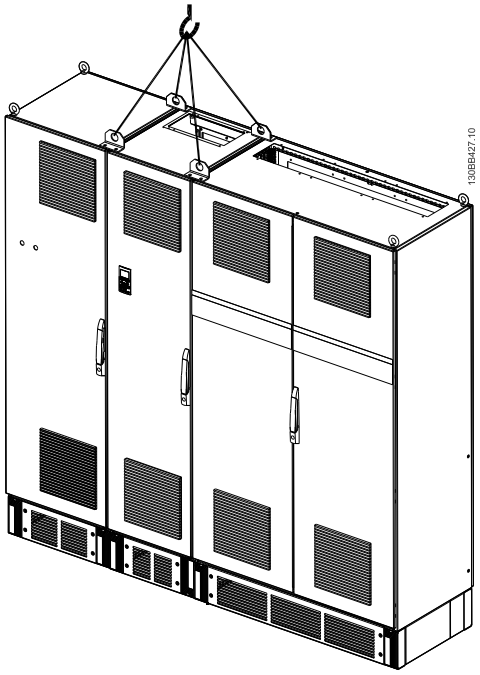

Illustration 4.3: Recommended lifting method, frame size F - filter section.

4

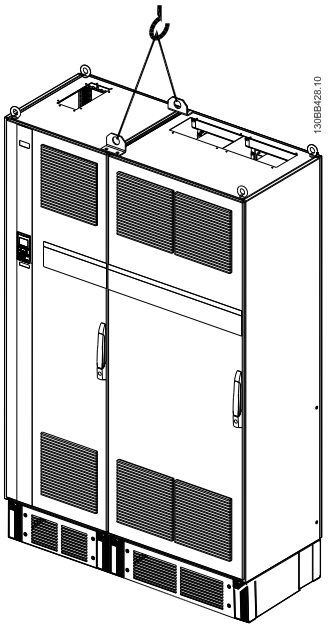

Illustration 4.4: Recommended lifting method, frame size F - drive section.

NB!

Note the plinth is provided in the same packaging as the frequency converter but is not attached to frame size F during shipment. The plinth is required to allow airflow to the drive to provide proper cooling. The F frames should be positioned on top of the plinth in the final installation location. The angle from the top of the drive to the lifting cable should be 60° or greater.

In addition to the drawing above a spreader bar is an acceptable way to lift the F Frame.

NB!

The F size will be shipped as 2 pieces. Instructions on how to assemble the pieces can be found in the "Mechanical Installation" chapter.

4.2.5 Mechanical Dimensions

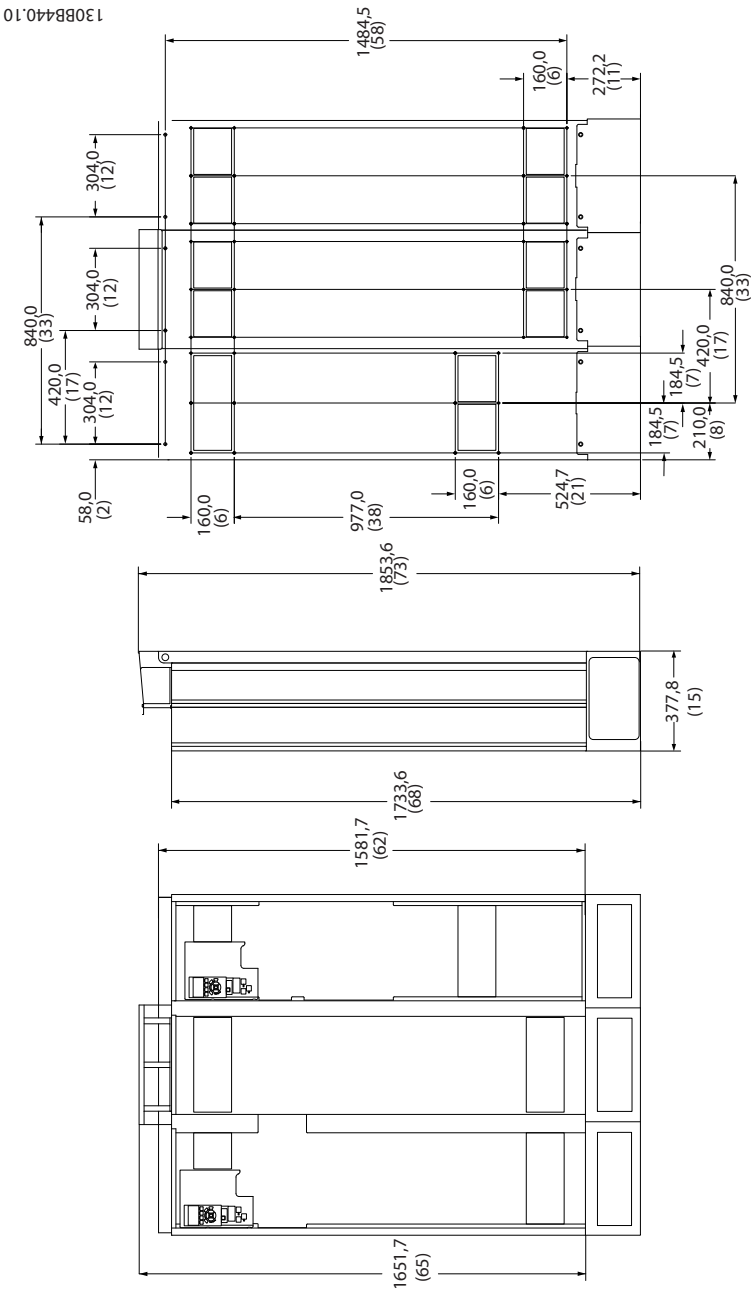

Illustration 4.5: Frame size D11

4

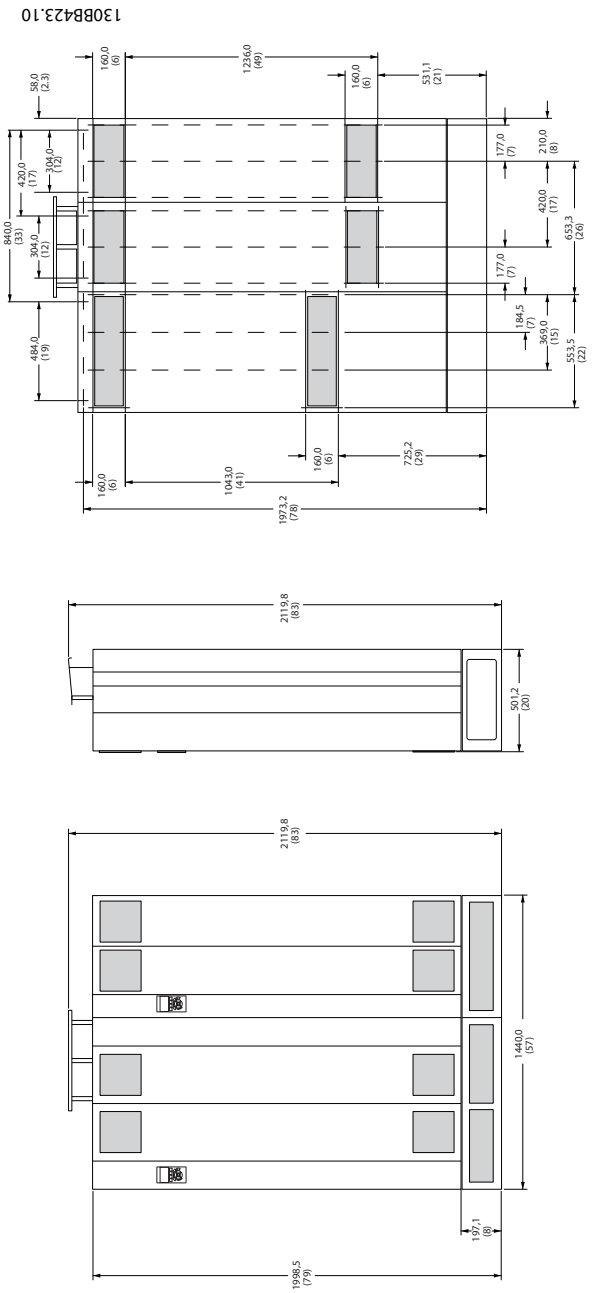

Illustration 4.6: Frame size E7

MG.34.O1.02 - VLT® is a registered Danfoss trademark

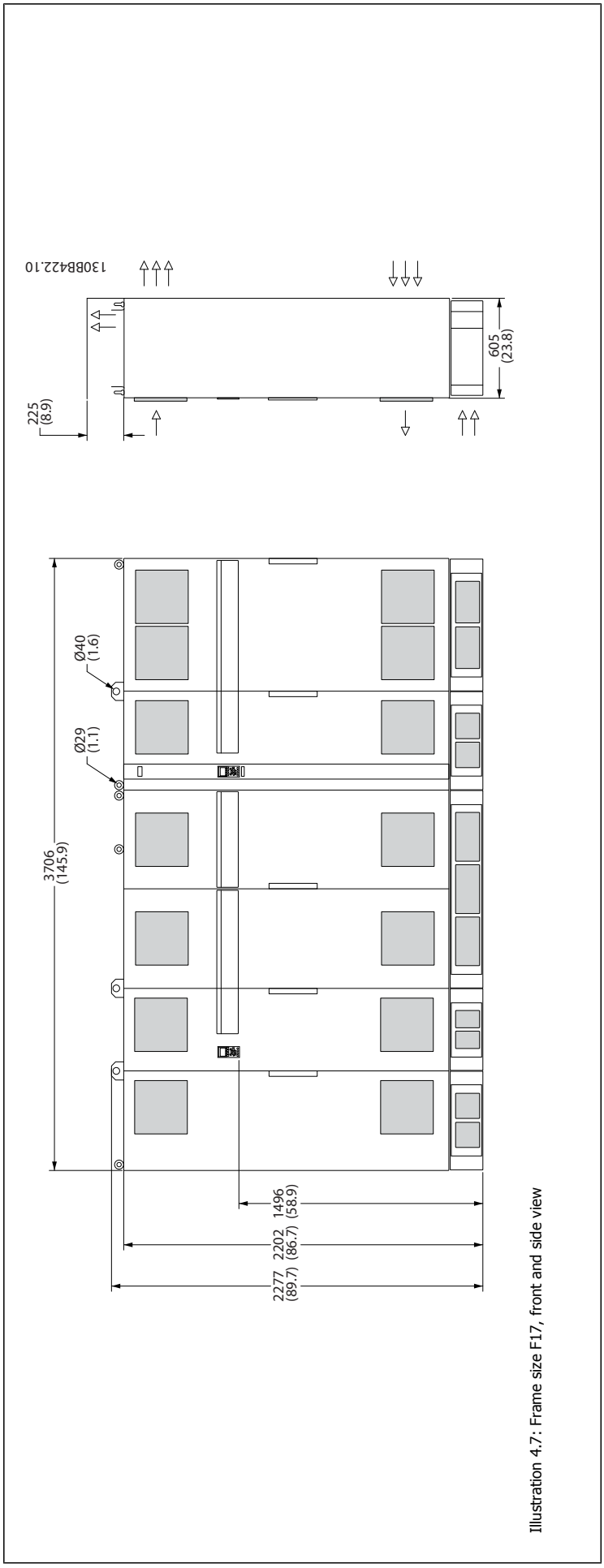

Illustration 4.7: Frame size F17, front and side view

4

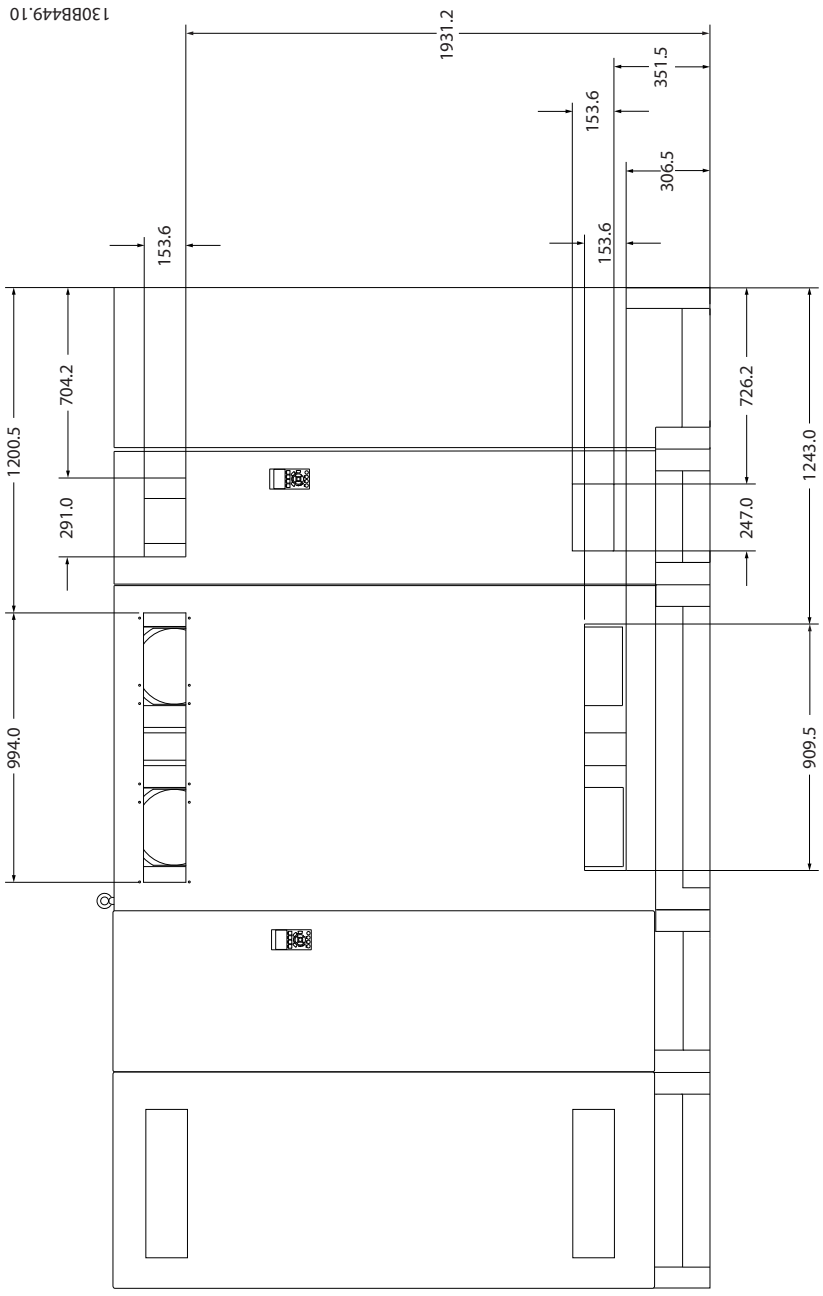

Illustration 4.8: Frame size F17, back view

Mechanical Dimensions and Rated Power

Frame size		D11	E7
			
Enclosure protection	IP	21/54*	21/54*
	NEMA	Type 1	Type 1
High overload rated power - 160% overload torque		132 - 200 kW at 400 V (380 - 480 V)	250 - 400 kW at 400 V (380 - 480 V)
Shipping Dimensions	Height	1712 mm	1942 mm
	Width	1261 mm	1440 mm
	Depth	1016 mm	1016 mm
Drive Dimensions	Height	1750 mm	2000
	Width	1260 mm	1440
	Depth	380 mm	494
	Max Weight	406 kg	646 kg

Frame size		F17
		
Enclosure protection	IP	21/54*
	NEMA	Type 1
High overload rated power - 160% overload torque		450 - 630 kW at 400 V (380 - 480 V)
Shipping Dimensions - filter section/ drive section	Height	2324/ 2324
	Width	2578/ 1569
	Depth	1130/ 1130
Drive Dimensions	Height	2200 mm
	Width	3700 mm
	Depth	600 mm
	Max Weight	2000 kg

* Hybrid IP54 electronics, IP21 magnetics

4.3 Mechanical Installation

Preparation of the mechanical installation of the frequency converter must be done carefully to ensure a proper result and to avoid additional work during installation. Start taking a close look at the mechanical drawings at the end of this instruction to become familiar with the space demands.

4.3.1 Tools Needed

To perform the mechanical installation the following tools are needed:

- Drill with 10 or 12 mm drill
- Tape measure
- Wrench with relevant metric sockets (7-17 mm)
- Extensions to wrench
- Sheet metal punch for conduits or cable glands in IP 21/Nema 1 and IP 54 units
- Lifting bar to lift the unit (rod or tube max. Ø 25 mm (1 inch), able to lift minimum 1000 kg).
- Crane or other lifting aid to place the frequency converter in position
- A Torx T50 tool is needed to install the E1 in IP21 and IP54 enclosure types.

4.3.2 General Considerations

Space

Ensure proper space above and below the frequency converter to allow airflow and cable access. In addition space in front of the unit must be considered to enable opening of the door of the panel.

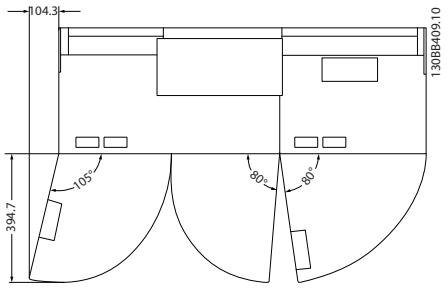

Illustration 4.9: Space in front of IP21/IP54 enclosure type, frame size D11 .

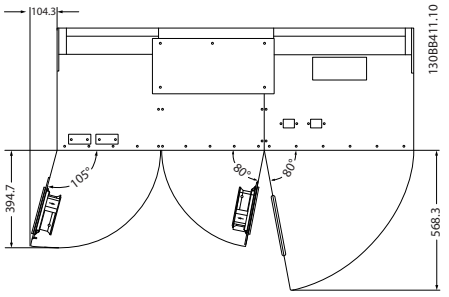

Illustration 4.10: Space in front of IP21/IP54 enclosure type, frame size E7.

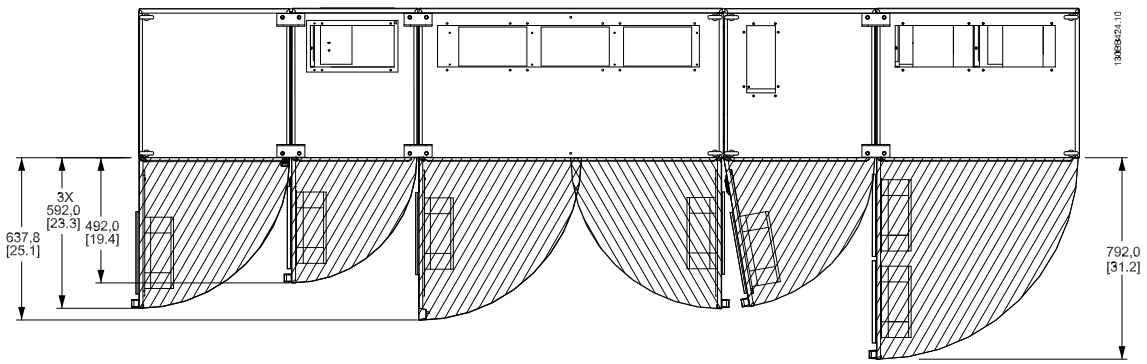

Illustration 4.11: Space in front of IP21/IP54 enclosure type, frame size F17.

Wire access

Ensure that proper cable access is present including necessary bending allowance.

NB!

All cable lugs/ shoes must mount within the width of the terminal bus bar.

4

4.3.3 Assembly of F Frame Sections

Procedure to attach F-frame drive and filter sections together

1. Position filter and drive sections in proximity to one another. The filter section will attach to the left side of the drive section.
2. Open the rectifier section door and remove the cover shielding the bus bars.

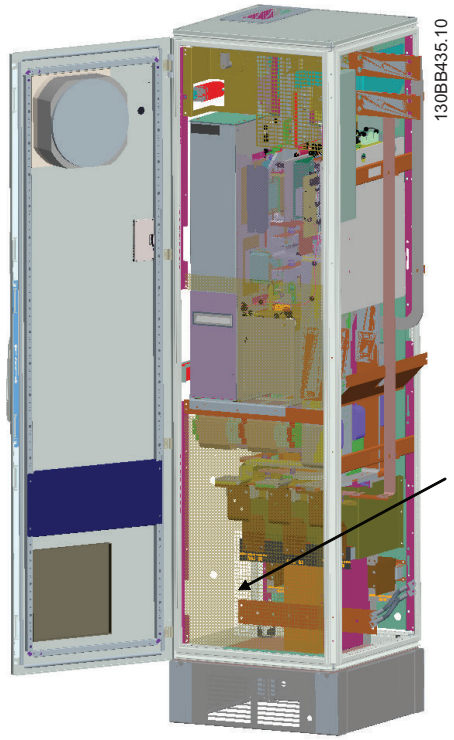

3. Apply included gasket to indicated surface on cabinet.

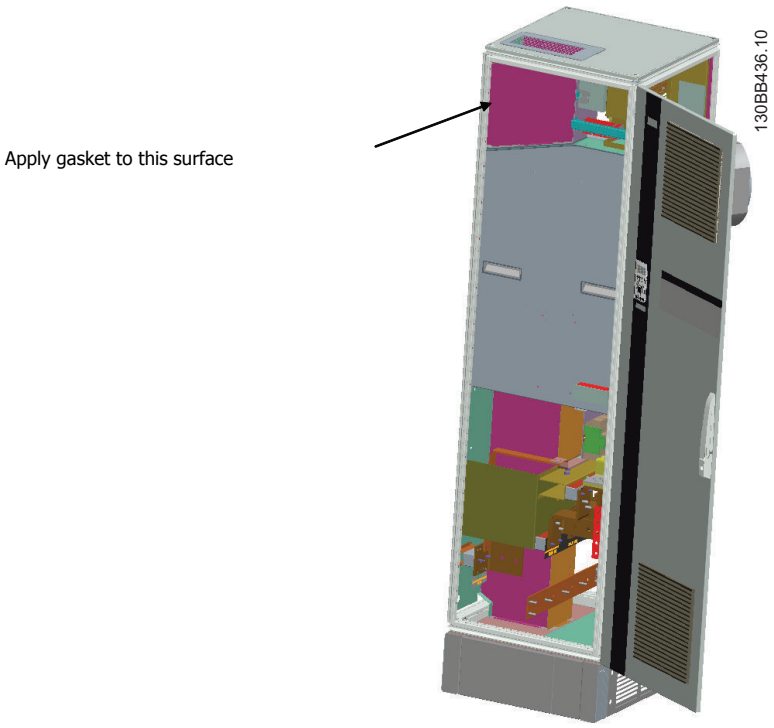

4. Open doors on LCL side of filter, right most cabinet, and remove indicated shields.

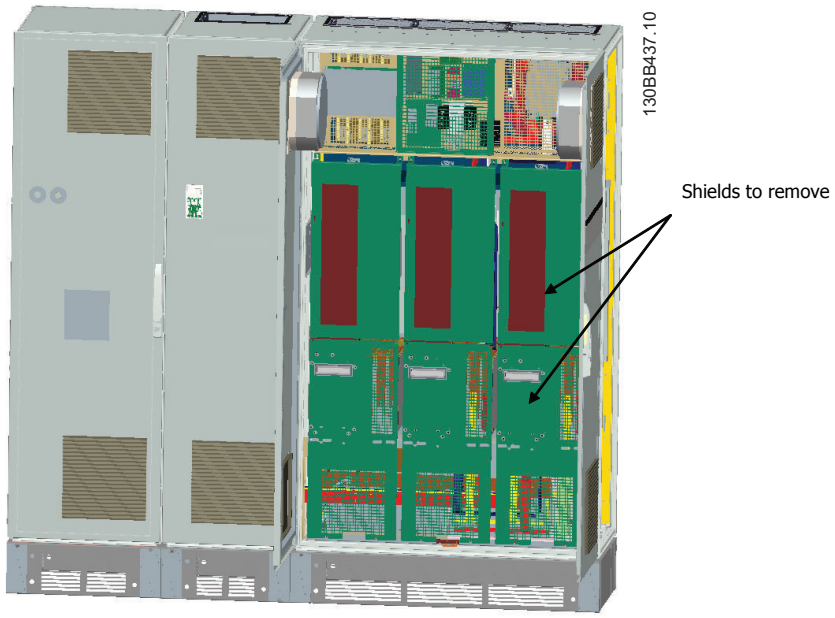

5. Remove indicated inductor module.

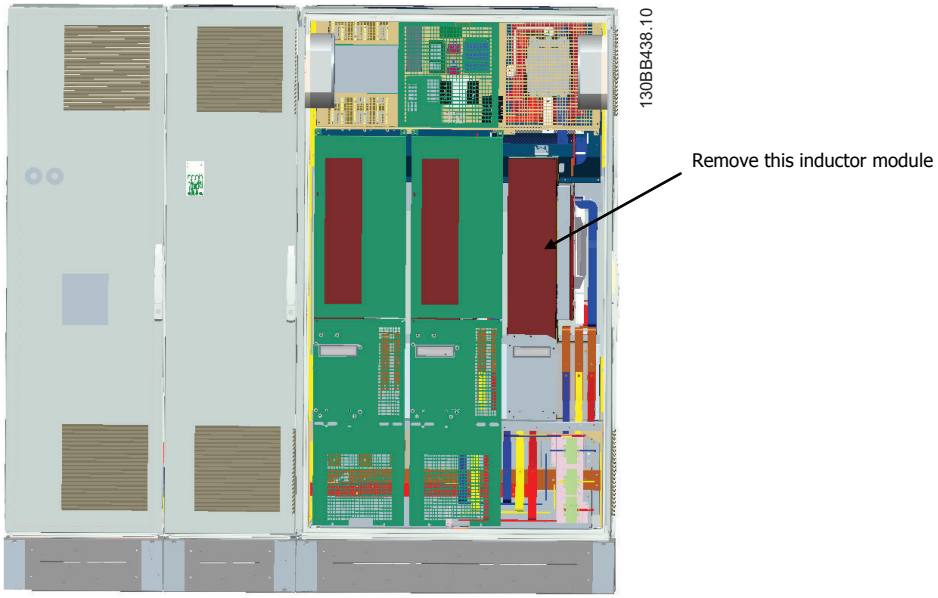

6. After the inductor module is removed, the filter and drive sections can be attached to one another. Four corner brackets and six side brackets will be required for this operation. They will be included in a bag with the appropriate screws. After the internal brackets are installed, the two top "L" shaped brackets will be installed to act as load points for moving the complete assembly.
7. Once all the brackets have been installed, the inductor module can be reassembled to its previous location.
8. Now the three mains bus bars, included in as a kit with the drive, can be attached from the filter section to the rectifier section.

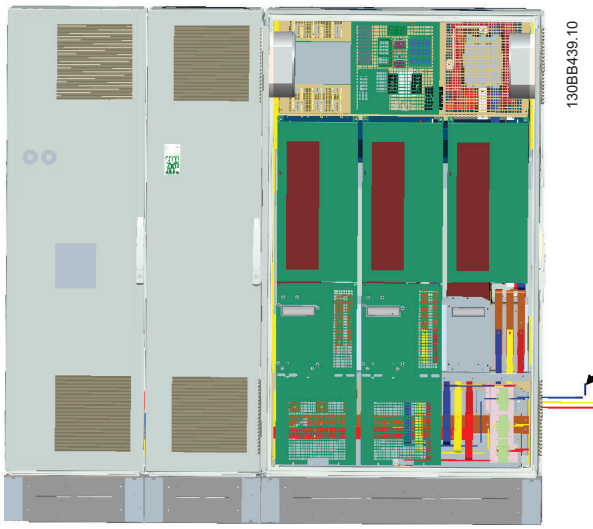

Bus bars connecting to rectifier section of the drive

9. Once the mains bus bars are connected, the lower covers on both the LCL and rectifier sections can be reinstalled.
10. A control wire connection will need to be made between the filter section and the drive section. It will consist of two connectors which will plug into one another near the upper shelf of the LCL cabinet. See description below.
11. The doors can now be closed and locked. The drive is ready for operation.

4.3.4 Control Wire Connection between Drive and Filter

In order to make the filter start when the drive starts, the control cards of the different sections are connected. For D and E frames these connections and the corresponding programming of the drive are already made at the factory. After assembling the two sections of the F frame, the following connections must be made:

1. Connect terminal 20 on the filter control card to terminal 20 on the drive control card. For information on how to connect control wires, see the *Electrical Installation* chapter.
2. Connect terminal 18 on the filter to terminal 29 on the drive.
3. Set par. on the drive LCP to [1], Output. See chapter *How to Operate the Low Harmonic Drive* for information on how to use the LCP.
4. Set par. 5-31, *Terminal 29 Digital Output* to [5] VLT Running.
5. Push the Auto ON button on the filter LCP

NB!
For D and E frames this procedure is not necessary upon reception of the unit. However, if a factory reset is performed the unit must be reprogrammed as specified above.

4.3.5 Terminal Locations - Frame size D

Take the following position of the terminals into consideration when you design for cables access.

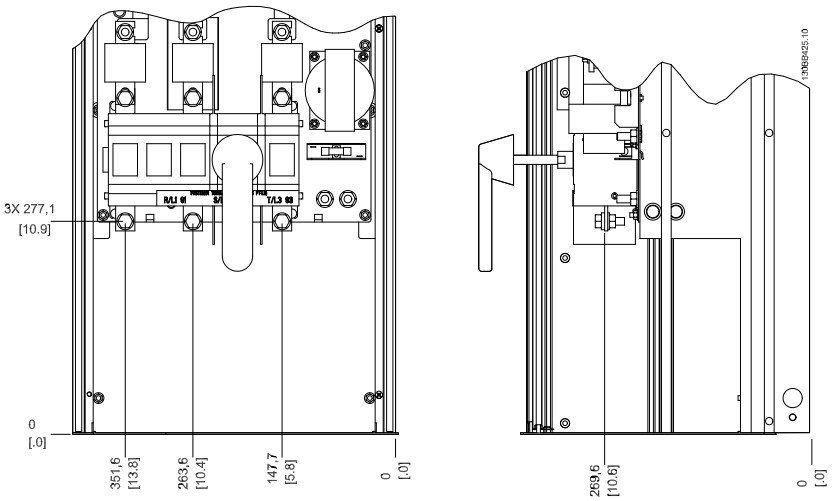

Illustration 4.12: Terminal locations D6 - filter

Section shown

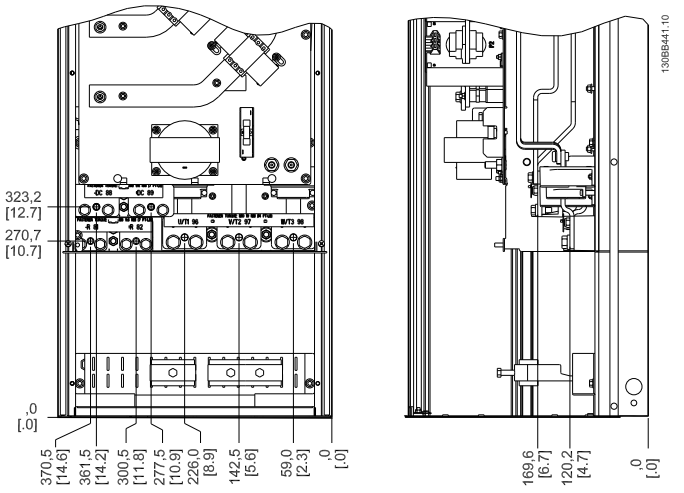

Illustration 4.13: Terminal locations D6 - drive

Section shown

Be aware that the power cables are heavy and hard to bend. Consider the optimum position of the frequency converter for ensuring easy installation of the cables.

NB!
All D frames are available with standard input terminals or disconnect switch

4

4.3.6 Terminal Locations - Frame size E

Take the following position of the terminals into consideration when designing the cable access.

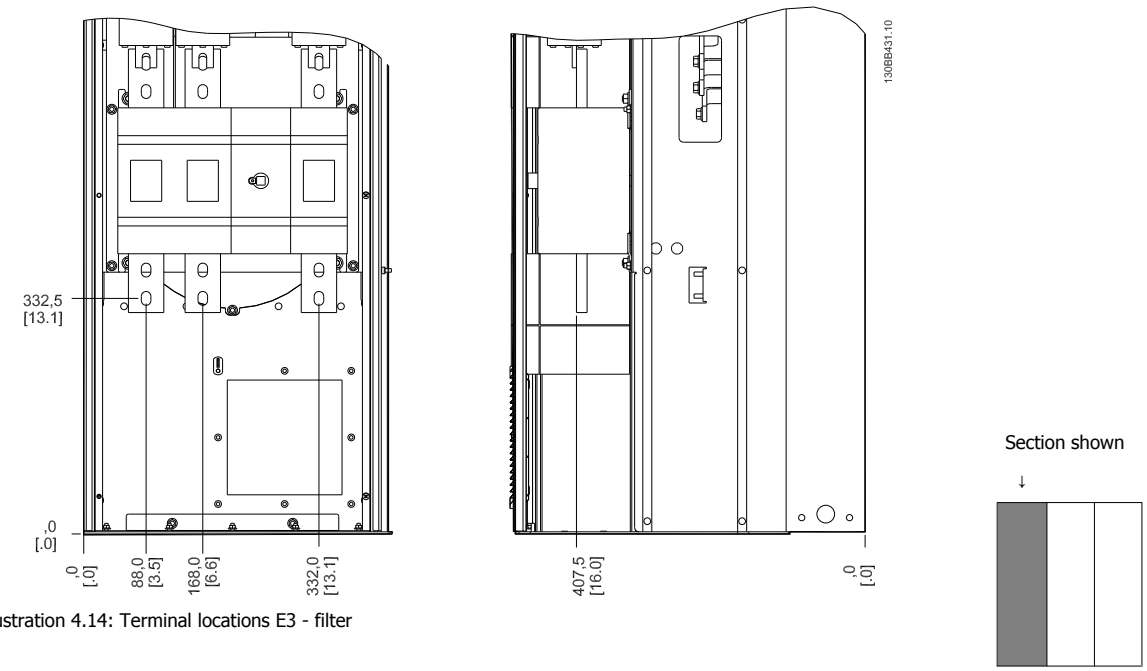

Illustration 4.14: Terminal locations E3 - filter

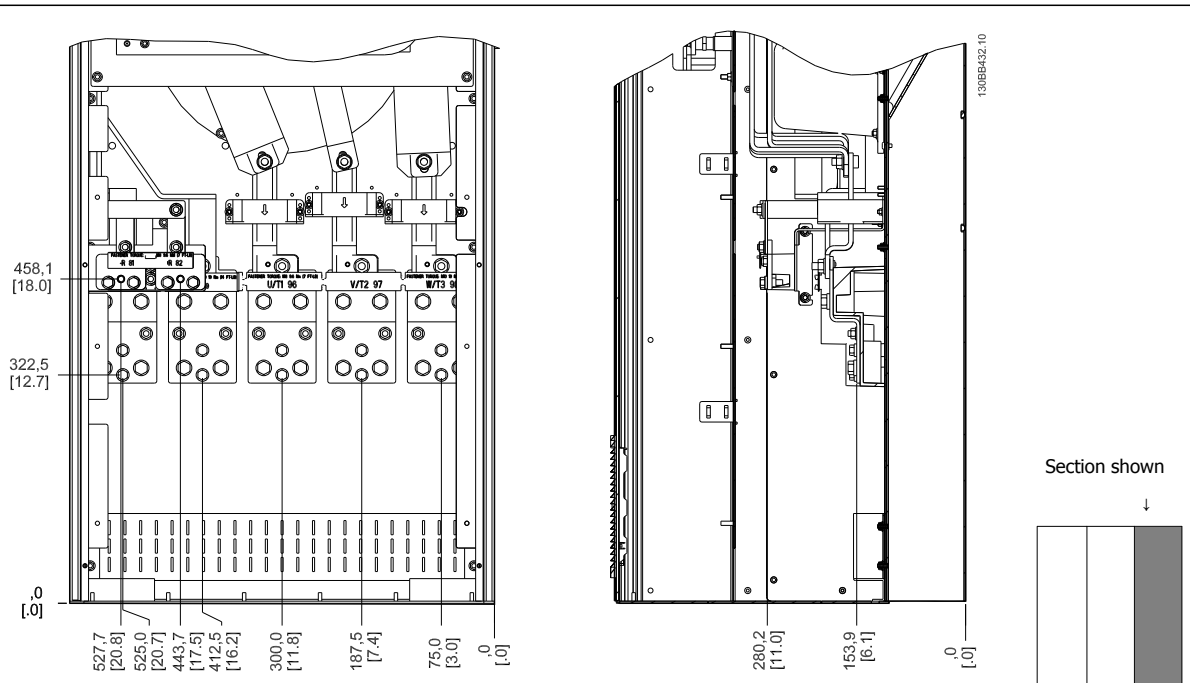

Illustration 4.15: Terminal locations E6 - drive

Note that the power cables are heavy and difficult to bend. Consider the optimum position of the frequency converter for ensuring easy installation of the cables.

Each terminal allows use of up to 4 cables with cable lugs or use of standard box lug. Earth is connected to relevant termination point in the drive.

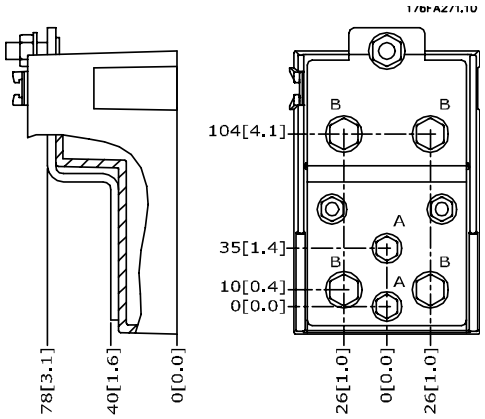

Illustration 4.16: Terminal in details

NB!

Power connections can be made to positions A or B

4

4.3.7 Terminal Locations - Frame size F

Terminal locations - Filter

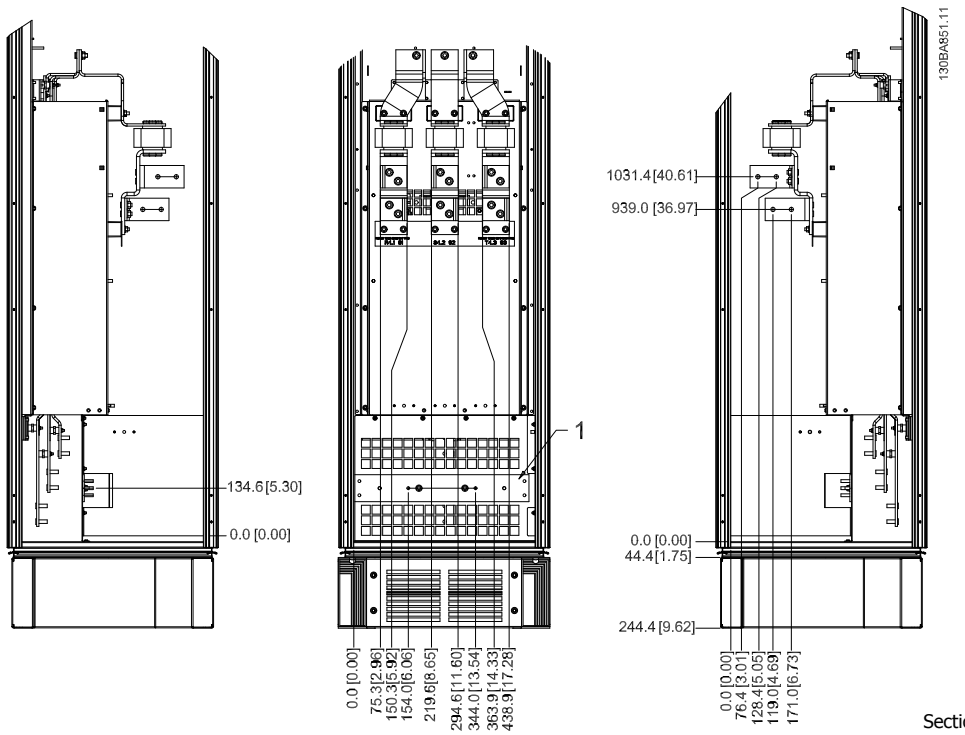

Illustration 4.17: Terminal locations - Filter (Left side, front and right side view). The gland plate is 42 mm below .0 level.

1) Earth ground bar

Section shown

↓

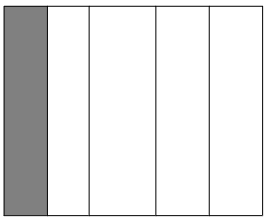

Terminal locations - Rectifier

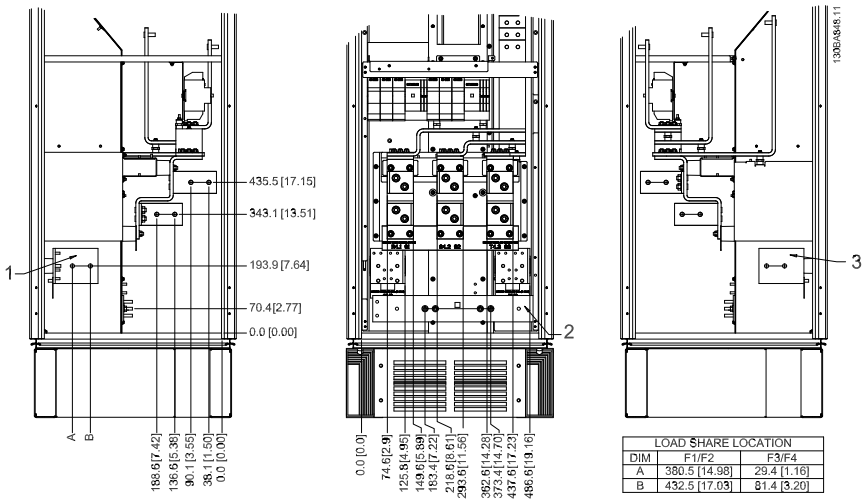

LOAD SHARE LOCATION		
DIM	F1/F2	F3/F4
A	380.5 [14.98]	29.4 [1.16]
B	432.5 [17.03]	81.4 [3.20]

Illustration 4.18: Terminal locations - Rectifier (Left side, front and right side view). The gland plate is 42 mm below .0 level.

1) Loadshare Terminal (-)
2) Earth ground bar
3) Loadshare Terminal (+)

Section shown

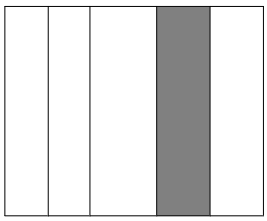

4

Terminal locations - Inverter

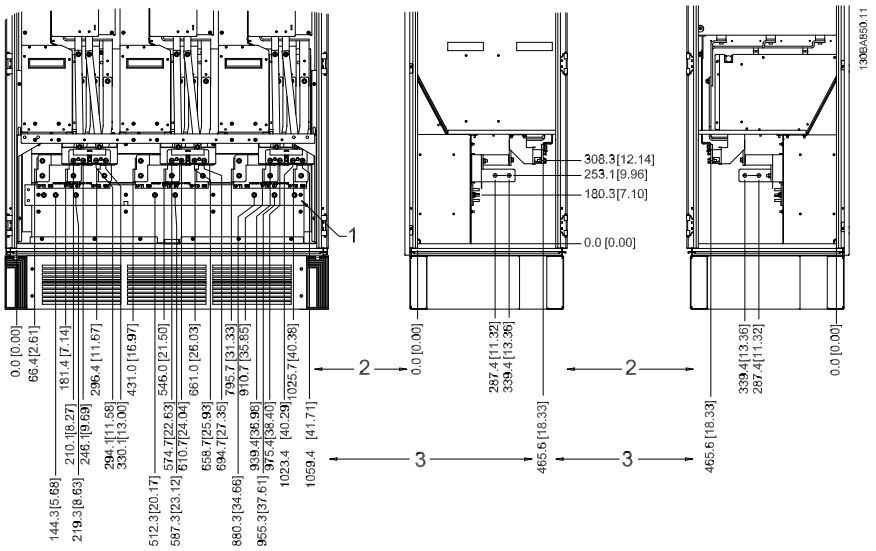

Illustration 4.19: Terminal locations - Inverter Cabinet (front, left and right side view). The gland plate is 42 mm below .0 level.

1) Earth ground bar

2) Motor terminals

3) Brake terminals

Section shown

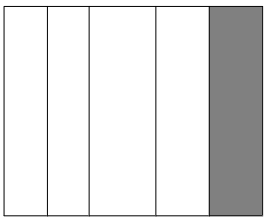

4.3.8 Cooling and Airflow

Cooling

Cooling can be obtained in different ways, by using the cooling ducts in the bottom and the top of the unit, by taking air in and out the back of the unit or by combining the cooling possibilities.

Back cooling

The backchannel air can also be ventilated in and out the back of a Rittal TS8 enclosure. This offers a solution where the backchannel could take air from outside the facility and return the heat loses outside the facility thus reducing air-conditioning requirements.

NB!

A door fan(s) is required on the enclosure to remove the heat losses not contained in the backchannel of the drive and any additional losses generated from other components installed inside the enclosure. The total required air flow must be calculated so that the appropriate fans can be selected. Some enclosure manufacturers offer software for performing the calculations (i.e. Rittal Therm software).

Airflow

The necessary airflow over the heat sink must be secured. The flow rate is shown below.

Enclosure protection	Frame size	Door fan(s) / Top fan airflow Total airflow of multiple fans	Heatsink fan(s) Total airflow of multiple fans
IP21 / NEMA 1	D11	510 m^3/h (300 cfm)	2295 m^3/h (1350 cfm)
IP54 / NEMA 12	E7 P250	680 m^3/h (400 cfm)	2635 m^3/h (1550 cfm)
	E7 P315-P400	680 m^3/h (400 cfm)	2975 m^3/h (1750 cfm)
IP21 / NEMA 1	F17	4900 m^3/h (2884 cfm)	6895 m^3/h (4060 cfm)

Table 4.1: Heatsink Air Flow

NB!

For the drive section, the fan runs for the following reasons:

1. AMA
2. DC Hold
3. Pre-Mag
4. DC Brake
5. 60% of nominal current is exceeded
6. Specific heatsink temperature exceeded (power size dependent)
7. Specific Power Card ambient temperature exceeded (power size dependent)
8. Specific Control Card ambient temperature exceeded

Once the fan is started it will run for minimum 10 minutes.

NB!

For the active filter, the fan runs for the following reasons:

1. Active filter running
2. Active filter not running, but mains current exceeding limit (power size dependent)
3. Specific heatsink temperature exceeded (power size dependent)
4. Specific Power Card ambient temperature exceeded (power size dependent)
5. Specific Control Card ambient temperature exceeded

Once the fan is started it will run for minimum 10 minutes.

External ducts

If additional duct work is added externally to the Rittal cabinet the pressure drop in the ducting must be calculated. Use the charts below to derate the frequency converter according to the pressure drop.

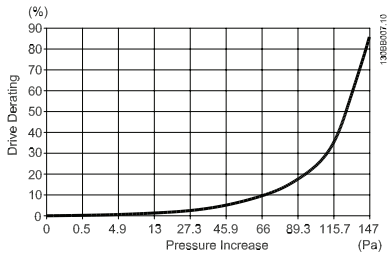

Illustration 4.20: D frame Derating vs. Pressure Change

Drive air flow: 450 cfm (765 m^3/h)

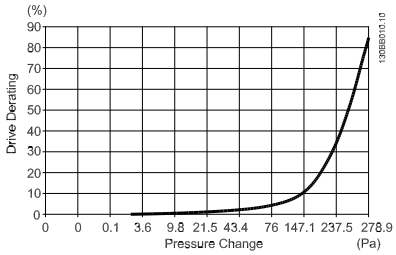

Illustration 4.21: E frame Derating vs. Pressure Change (Small Fan), P315

Drive air flow: 650 cfm (1105 m^3/h)

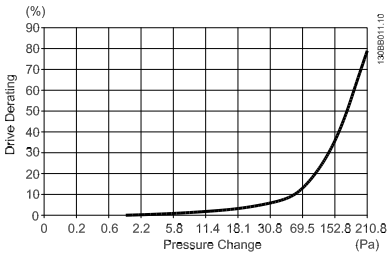

Illustration 4.22: E frame Derating vs. Pressure Change (Large Fan) P355-P450

Drive air flow: 850 cfm (1445 m^3/h)

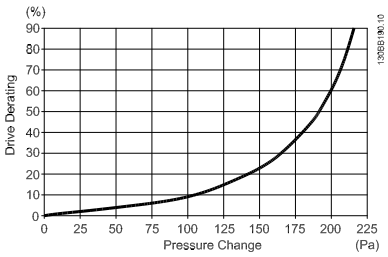

Illustration 4.23: F frame Derating vs. Pressure Change

Drive air flow: 580 cfm (985 m^3/h)

4.3.9 Gland/Conduit Entry - IP21 (NEMA 1) and IP54 (NEMA12)

Cables are connected through the gland plate from the bottom. Remove the plate and plan where to place the entry for the glands or conduits. Prepare holes in the marked area on the drawing.

NB!
The gland plate must be fitted to the frequency converter to ensure the specified protection degree, as well as ensuring proper cooling of the unit. If the gland plate is not mounted, the frequency converter may trip on Alarm 69, Pwr. Card Temp



Illustration 4.24: Example of proper installation of the gland plate.

Frame size D11

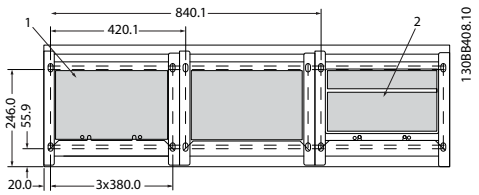

Frame size E7

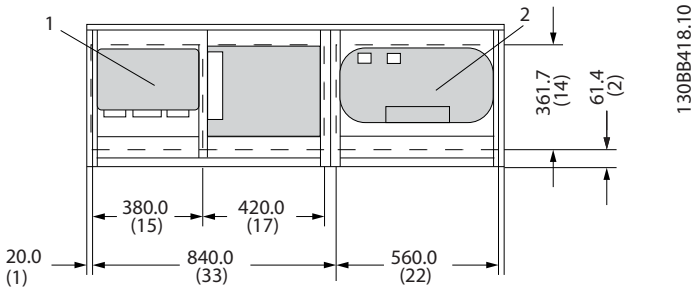

Cable entries viewed from the bottom of the frequency converter
1) Mains cable connection
2) Motor cable connection

4

Frame size F17

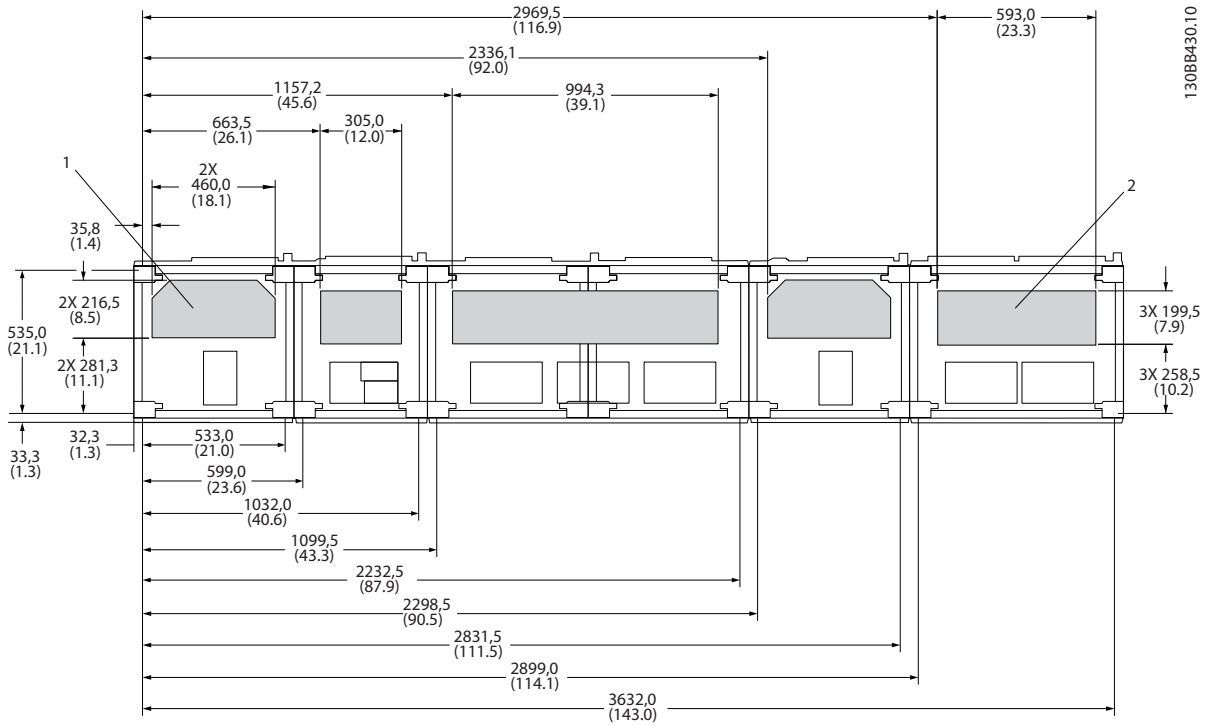

F17: Cable entries viewed from the bottom of the frequency converter

1) Mains cable connection

2) Motor cable connection

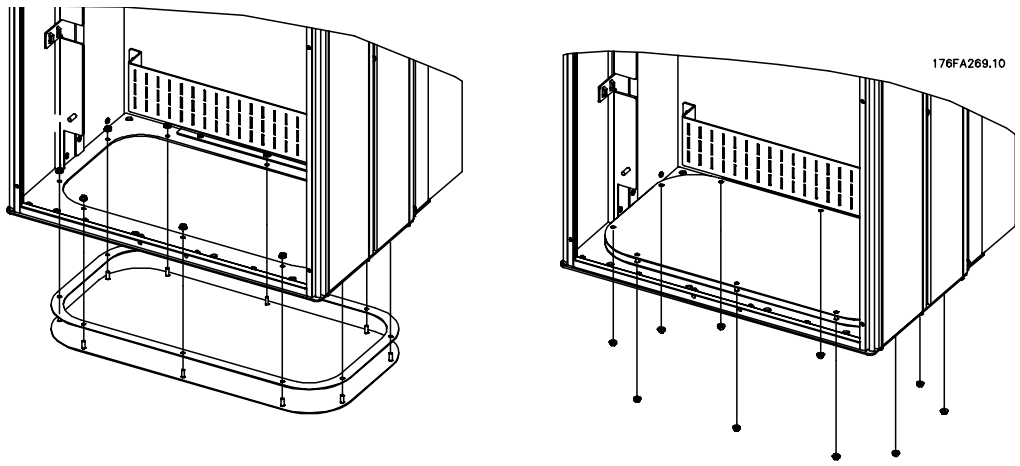

Illustration 4.25: Mounting of bottom plate, E7

The bottom plate of the E frame can be mounted from either in- or outside of the enclosure, allowing flexibility in the installation process, i.e. if mounted from the bottom the glands and cables can be mounted before the frequency converter is placed on the pedestal.

4.3.10 IP21 Drip Shield Installation (Frame size D)

To comply with the IP21 rating, a separate drip shield is to be installed as explained below:

- Remove the two front screws
- Insert the drip shield and replace screws
- Torque the screws to 5,6 Nm (50 in-lbs)

NB!
Drip shield is necessary on both filter and drive section.

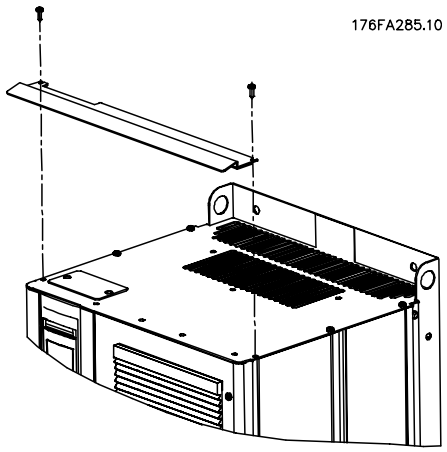

Illustration 4.26: Drip shield installation.

4.4 Field Installation of Options

4.4.1 Installation of Input Plate Options

This section is for the field installation of input option kits available for frequency converters in all D and E frames.
Do not attempt to remove RFI filters from input plates. Damage may occur to RFI filters if they are removed from the input plate.



NB!
Where RFI filters are available, there are two different type of RFI filters depending on the input plate combination and the RFI filters interchangeable. Field installable kits in certain cases are the same for all voltages.

4

	380 - 480 V 380 - 500 V	Fuses	Disconnect Fuses	RFI	RFI Fuses	RFI Disconnect Fuses
D11		176F8443	176F8441	176F8445	176F8449	176F8447
E7	FC 102/ 202: 315 kW FC 302: 250 kW	176F0253	176F0255	176F0257	176F0258	176F0260
	FC 102/ 202: 355-450 kW FC 302: 315-400 kW	176F0254	176F0256	176F0257	176F0259	176F0262



NB!
For further information, please see the Instruction Sheet, *175R5795*

4.4.2 Installation of Mains Shield for Frequency Converters

The mains shield is for installation with D and E frames and satisfy BG-4 requirements.

Ordering numbers:
D frames: 176F0799
E frames: 176F1851



NB!
For further information, please see the Instruction Sheet, *175R5923*

4.5 Frame size F Panel Options

Space Heaters and Thermostat
Mounted on the cabinet interior of frame size F frequency converters, space heaters controlled via automatic thermostat help control humidity inside the enclosure, extending the lifetime of drive components in damp environments. The thermostat default settings turn on the heaters at 10° C (50° F) and turn them off at 15.6° C (60° F).

Cabinet Light with Power Outlet
A light mounted on the cabinet interior of frame size F frequency converters increase visibility during servicing and maintenance. The housing the light includes a power outlet for temporarily powering tools or other devices, available in two voltages:

- 230V, 50Hz, 2.5A, CE/ENEC
- 120V, 60Hz, 5A, UL/cUL

Transformer Tap Setup

If the Cabinet Light & Outlet and/or the Space Heaters & Thermostat are installed Transformer T1 requires it taps to be set to the proper input voltage. A 380-480/ 500 V380-480 V drive will initially be set to the 525 V tap and a 525-690 V drive will be set to the 690 V tap to insure no over-voltage of secondary equipment occurs if the tap is not changed prior to power being applied. See the table below to set the proper tap at terminal T1 located in the rectifier cabinet. For location in the drive, see illustration of rectifier in the *Power Connections* section.

Input Voltage Range	Tap to Select
380V-440V	400V
441V-490V	460V

NAMUR Terminals

NAMUR is an international association of automation technology users in the process industries, primarily chemical and pharmaceutical industries in Germany. Selection of this option provides terminals organized and labeled to the specifications of the NAMUR standard for drive input and output terminals. This requires MCB 112 PTC Thermistor Card and MCB 113 Extended Relay Card.

RCD (Residual Current Device)

Uses the core balance method to monitor ground fault currents in grounded and high-resistance grounded systems (TN and TT systems in IEC terminology). There is a pre-warning (50% of main alarm set-point) and a main alarm set-point. Associated with each set-point is an SPDT alarm relay for external use. Requires an external "window-type" current transformer (supplied and installed by customer).

- Integrated into the drive's safe-stop circuit
- IEC 60755 Type B device monitors AC, pulsed DC, and pure DC ground fault currents
- LED bar graph indicator of the ground fault current level from 10–100% of the set-point
- Fault memory
- TEST / RESET button

Insulation Resistance Monitor (IRM)

Monitors the insulation resistance in ungrounded systems (IT systems in IEC terminology) between the system phase conductors and ground. There is an ohmic pre-warning and a main alarm set-point for the insulation level. Associated with each set-point is an SPDT alarm relay for external use. Note: only one insulation resistance monitor can be connected to each ungrounded (IT) system.

- Integrated into the drive's safe-stop circuit
- LCD display of the ohmic value of the insulation resistance
- Fault Memory
- INFO, TEST, and RESET buttons

IEC Emergency Stop with Pilz Safety Relay

Includes a redundant 4-wire emergency-stop push-button mounted on the front of the enclosure and a Pilz relay that monitors it in conjunction with the drive's safe-stop circuit and the mains contactor located in the options cabinet.

Manual Motor Starters

Provide 3-phase power for electric blowers often required for larger motors. Power for the starters is provided from the load side of any supplied contactor, circuit breaker, or disconnect switch. Power is fused before each motor starter, and is off when the incoming power to the drive is off. Up to two starters are allowed (one if a 30A, fuse-protected circuit is ordered). Integrated into the drive's safe-stop circuit.
Unit features include:

- Operation switch (on/off)
- Short-circuit and overload protection with test function
- Manual reset function

30 Ampere, Fuse-Protected Terminals

- 3-phase power matching incoming mains voltage for powering auxiliary customer equipment
- Not available if two manual motor starters are selected
- Terminals are off when the incoming power to the drive is off
- Power for the fused protected terminals will be provided from the load side of any supplied contactor, circuit breaker, or disconnect switch.

24 VDC Power Supply

- 5 amp, 120 W, 24 VDC
- Protected against output over-current, overload, short circuits, and over-temperature

- For powering customer-supplied accessory devices such as sensors, PLC I/O, contactors, temperature probes, indicator lights, and/or other electronic hardware
- Diagnostics include a dry DC-ok contact, a green DC-ok LED, and a red overload LED

External Temperature Monitoring

Designed for monitoring temperatures of external system components, such as the motor windings and/or bearings. Includes eight universal input modules plus two dedicated thermistor input modules. All ten modules are integrated into the drive's safe-stop circuit and can be monitored via a fieldbus network (requires the purchase of a separate module/bus coupler).

Universal inputs (8)

Signal types:

- RTD inputs (including Pt100), 3-wire or 4-wire
- Thermocouple
- Analog current or analog voltage

Additional features:

- One universal output, configurable for analog voltage or analog current
- Two output relays (N.O.)
- Dual-line LC display and LED diagnostics
- Sensor lead wire break, short-circuit, and incorrect polarity detection
- Interface setup software

Dedicated thermistor inputs (2)

Features:

- Each module capable of monitoring up to six thermistors in series
- Fault diagnostics for wire breakage or short-circuits of sensor leads
- ATEX/UL/CSA certification
- A third thermistor input can be provided by the PTC Thermistor Option Card MCB 112, if necessary

4.6 Electrical Installation

4.6.1 Power Connections

Cabling and Fusing

NB!

Cables General

All cabling must comply with national and local regulations on cable cross-sections and ambient temperature. UL applications require 75 °C copper conductors. 75 and 90 °C copper conductors are thermally acceptable for the frequency converter to use in non UL applications.

The power cable connections are situated as shown below. Dimensioning of cable cross section must be done in accordance with the current ratings and local legislation. See the *Specifications section* for details.

For protection of the frequency converter, the recommended fuses must be used or the unit must be with built-in fuses. Recommended fuses can be seen in the tables of the fuse section. Always ensure that proper fusing is made according to local regulation.

The mains connection is fitted to the mains switch if this is included.

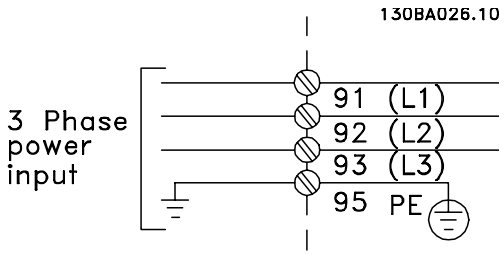

NB!

To comply with EMC emission specifications, screened/armoured cables are recommended. If an unscreened/unarmoured cable is used, see section *Power and Control Wiring for Unscreened Cables*.

See section *General Specifications* for correct dimensioning of motor cable cross-section and length.

Screening of cables:

Avoid installation with twisted screen ends (pigtails). They spoil the screening effect at higher frequencies. If it is necessary to break the screen to install a motor isolator or motor contactor, the screen must be continued at the lowest possible HF impedance.

Connect the motor cable screen to both the de-coupling plate of the frequency converter and to the metal housing of the motor.

Make the screen connections with the largest possible surface area (cable clamp). This is done by using the supplied installation devices within the frequency converter.

Cable-length and cross-section:

The frequency converter has been EMC tested with a given length of cable. Keep the motor cable as short as possible to reduce the noise level and leakage currents.

Switching frequency:

When frequency converters are used together with Sine-wave filters to reduce the acoustic noise from a motor, the switching frequency must be set according to the instruction in par. 14-01 *Switching Frequency*.

Term. no.	96	97	98	99	
	U	V	W	PE[1)]	Motor voltage 0-100% of mains voltage. 3 wires out of motor
	U1 W2	V1 U2	W1 V2	PE[1)]	Delta-connected 6 wires out of motor
	U1	V1	W1	PE[1)]	Star-connected U2, V2, W2 U2, V2 and W2 to be interconnected separately.

[1)]Protected Earth Connection

NB!

In motors without phase insulation paper or other insulation reinforcement suitable for operation with voltage supply (such as a frequency converter), fit a Sine-wave filter on the output of the frequency converter.

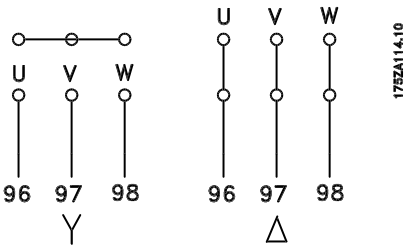

4

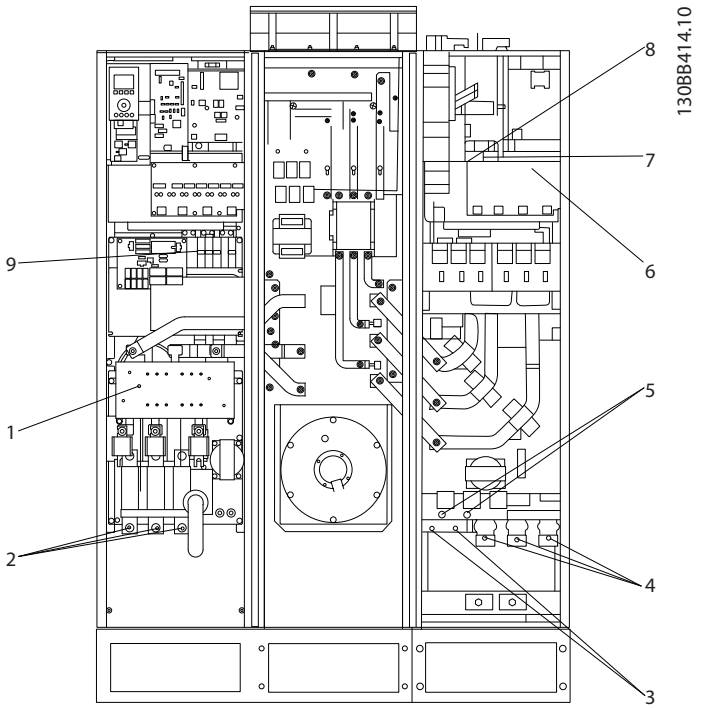

Illustration 4.27: Frame size D11

1) RFI
2) Line
   R S T
   L1 L2 L3
3) Brake option
   -R +R
   81 82
4) Motor
   U V W
   96 97 98
   T1 T2 T3
5) Load sharing option
   -DC +DC
   88 89
6) AUX Fan
   100 101 102 103
   L1 L2 L1 L2
7) Temp Switch
   106 104 105
8) AUX Relay
   01 02 03
   04 05 06
9) Fan/ SMPS fuse

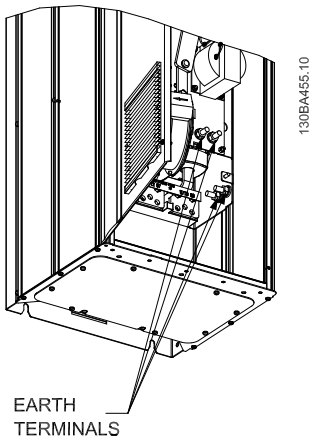

Illustration 4.28: Position of earth terminals (drive section)

4

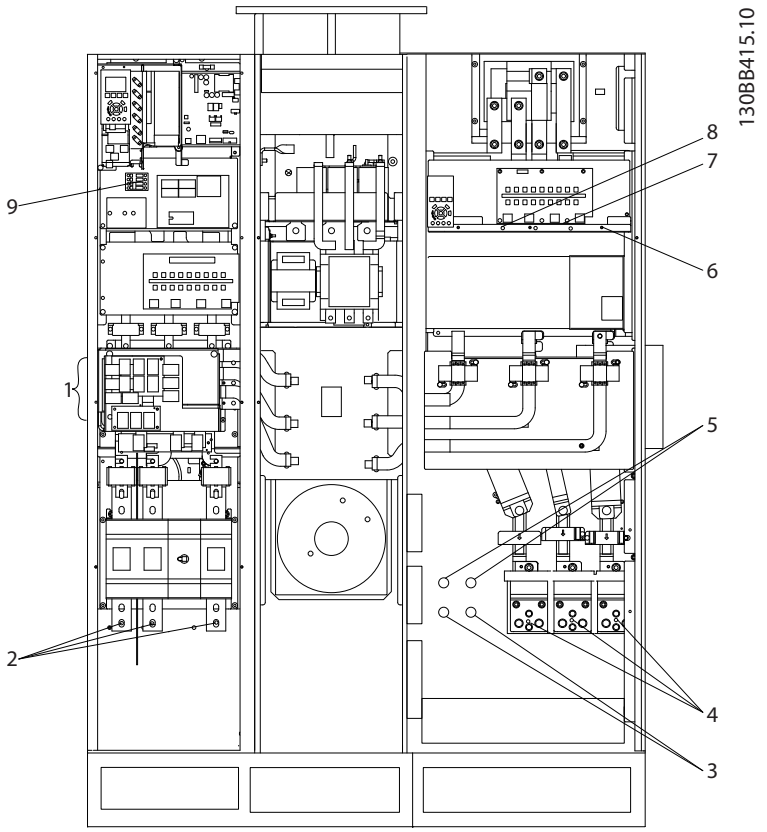

Illustration 4.29: Frame size E7

1) RFI

2) Line

R	S	T
L1	L2	L3

3) Brake option

-R	+R
81	82

4) Motor

U	V	W
96	97	98
T1	T2	T3

5) Load sharing option

-DC	+DC
88	89

6) AUX Fan

100	101	102	103
L1	L2	L1	L2

7) Temp Switch

106	104	105

8) AUX Relay

01	02	03
04	05	06

9) Fan/ SMPS fuse

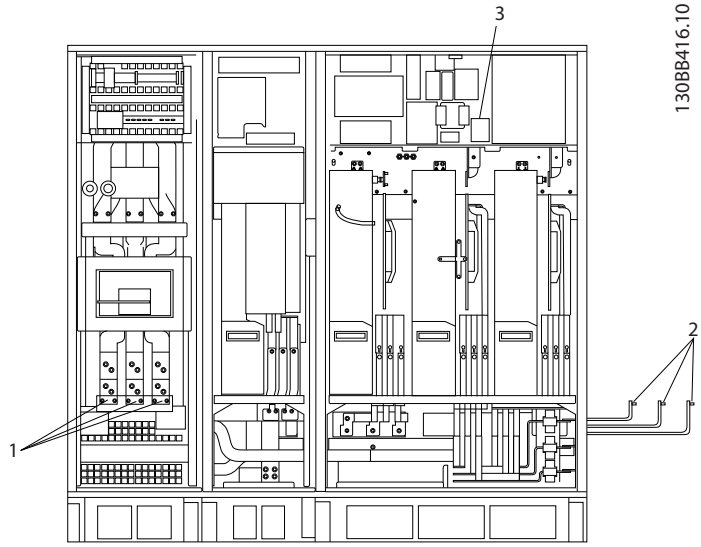

Illustration 4.30: Active Filter, frame size F17

Section shown

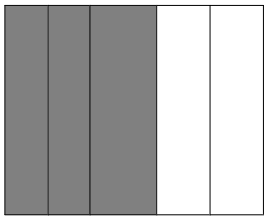

1) Line
R S T

L1 L2 L3

2) Bus bars to rectifier section of drive

3) Fuse block

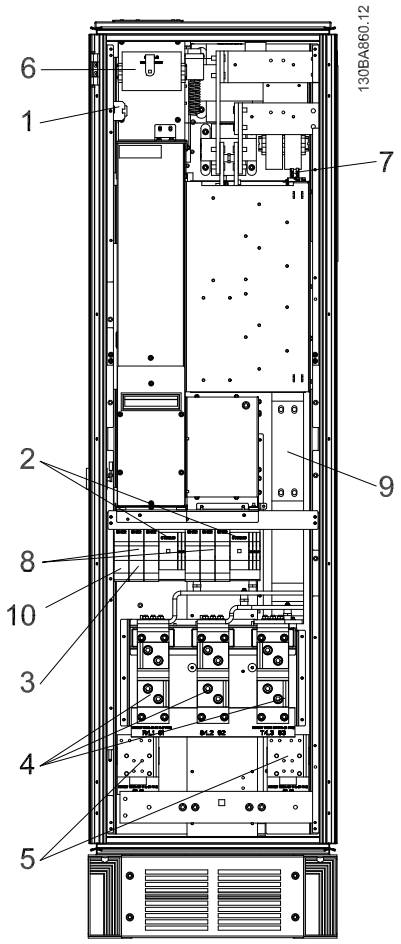

Illustration 4.31: Rectifier Cabinet, frame size F17

Section shown

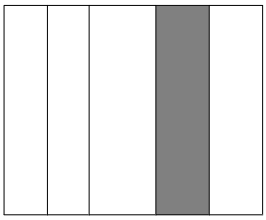

1) 24 V DC, 5 A
   T1 Output Taps
   Temp Switch
   106 104 105
2) Manual Motor Starters
3) 30 A Fuse Protected Power Terminals
4) Connection point to filter
   R S T
   L1 L2 L3
5) Loadsharing
   -DC +DC
   88 89
6) Control Transformer Fuses (2 or 4 pieces). See fuse tables for part numbers
7) SMPS Fuse. See fuse tables for part numbers
8) Manual Motor Controller fuses (3 or 6 pieces). See fuse tables for part numbers
9) Line Fuses, F1 and F2 frame (3 pieces). See fuse tables for part numbers
10) 30 Amp Fuse Protected Power fuses

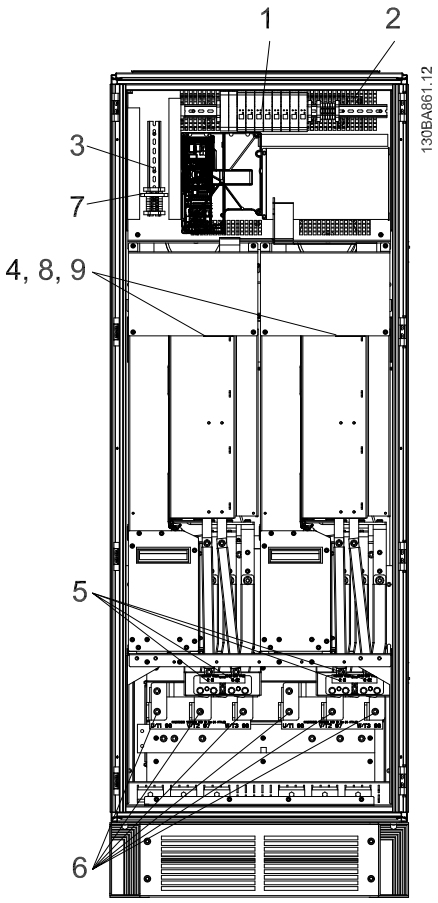

Section shown

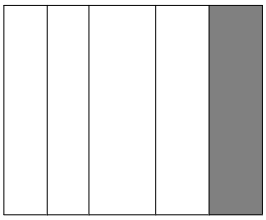

Illustration 4.32: Inverter Cabinet, frame size F17

1) External Temperature Monitoring
2) AUX Relay
   01 02 03
   04 05 06
3) NAMUR
4) AUX Fan
   100 101 102 103
   L1 L2 L1 L2
5) Brake
   -R +R
   81 82
6) Motor
   U V W
   96 97 98
   T1 T2 T3
7) NAMUR Fuse. See fuse tables for part numbers
8) Fan Fuses. See fuse tables for part numbers
9) SMPS Fuses. See fuse tables for part numbers

4.6.2 Earthing

The following basic issues need to be considered when installing a frequency converter, so as to obtain electromagnetic compatibility (EMC).

- Safety earthing: Please note that the frequency converter has a high leakage current and must be earthed appropriately for safety reasons. Apply local safety regulations.
- High-frequency earthing: Keep the earth wire connections as short as possible.

Connect the different earth systems at the lowest possible conductor impedance. The lowest possible conductor impedance is obtained by keeping the conductor as short as possible and by using the greatest possible surface area.
The metal cabinets of the different devices are mounted on the cabinet rear plate using the lowest possible HF impedance. This avoids having different HF voltages for the individual devices and avoids the risk of radio interference currents running in connection cables that may be used between the devices. The radio interference will have been reduced.
In order to obtain a low HF impedance, use the fastening bolts of the devices as HF connection to the rear plate. It is necessary to remove insulating paint or similar from the fastening points.

4.6.3 Extra Protection (RCD)

ELCB relays, multiple protective earthing or earthing can be used as extra protection, provided that local safety regulations are complied with.

In the case of an earth fault, a DC component may develop in the fault current.

If ELCB relays are used, local regulations must be observed. Relays must be suitable for protection of 3-phase equipment with a bridge rectifier and for a brief discharge on power-up.

See also the section *Special Conditions* in the Design Guide.

4.6.4 RFI Switch

Mains supply isolated from earth
If the frequency converter is supplied from an isolated mains source (IT mains, floating delta and grounded delta) or TT/TN-S mains with grounded leg, the RFI switch is recommended to be turned off (OFF) [1] via par. 14-50 *RFI Filter* on the drive and par. 14-50 *RFI Filter* on the filter. For further reference, see IEC 364-3. In case optimum EMC performance is needed, parallel motors are connected or the motor cable length is above 25 m, it is recommended to set par. 14-50 *RFI Filter* to [ON].
[1] Not available for 525-600/690 V frequency converters in frame sizes D, E and F.
In OFF, the internal RFI capacities (filter capacitors) between the chassis and the intermediate circuit are cut off to avoid damage to the intermediate circuit and to reduce the earth capacity currents (according to IEC 61800-3).
Please also refer to the application note *VLT on IT mains, MN.90.CX.02.* It is important to use isolation monitors that are capable for use together with power electronics (IEC 61557-8).

4.6.5 Torque

When tightening all electrical connections it is very important to tighten with the correct torque. Too low or too high torque results in a bad electrical connection. Use a torque wrench to ensure correct torque

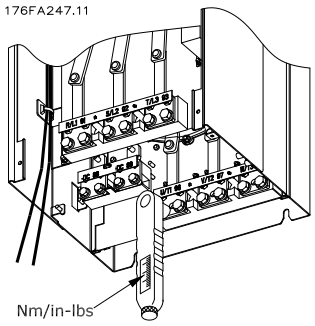

Illustration 4.33: Always use a torque wrench to tighten the bolts.

4

Frame size	Terminal	Torque	Bolt size
D	Mains Motor	19-40 Nm (168-354 in-lbs)	M10
	Load sharing Brake	8.5-20.5 Nm (75-181 in-lbs)	M8
E	Mains Motor Load sharing	19-40 Nm (168-354 in-lbs)	M10
	Brake	8.5-20.5 Nm (75-181 in-lbs)	M8
F	Mains Motor	19-40 Nm (168-354 in-lbs)	M10
	Load sharing	19-40 Nm (168-354 in-lbs)	M10
	Brake	8.5-20.5 Nm (75-181 in-lbs)	M8
	Regen	8.5-20.5 Nm (75-181 in-lbs)	M8

Table 4.2: Torque for terminals

4.6.6 Shielded Cables

It is important that shielded and armoured cables are connected in a proper way to ensure high EMC immunity and low emissions.

Connection can be made using either cable glands or clamps:

- EMC cable glands: Generally available cable glands can be used to ensure an optimum EMC connection.
- EMC cable clamp: Clamps allowing easy connection are supplied with the frequency converter.

4.6.7 Motor Cable

The motor must be connected to terminals U/T1/96, V/T2/97, W/T3/98 located on the far right of the unit. Earth to terminal 99. All types of three-phase asynchronous standard motors can be used with a frequency converter unit. The factory setting is for clockwise rotation with the frequency converter output connected as follows:

Terminal No.	Function
96, 97, 98, 99	Mains U/T1, V/T2, W/T3 Earth

- Terminal U/T1/96 connected to U-phase
- Terminal V/T2/97 connected to V-phase
- Terminal W/T3/98 connected to W-phase

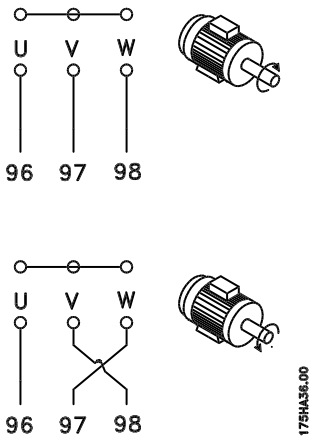

The direction of rotation can be changed by switching two phases in the motor cable or by changing the setting of par. 4-10 *Motor Speed Direction*. Motor rotation check can be performed using par. 1-28 *Motor Rotation Check* and following the steps shown in the display.

F frame Requirements

Motor phase cable quantities must be multiples of 2, resulting in 2, 4, 6, or 8 (1 cable is not allowed) to obtain equal amount of wires attached to both inverter module terminals. The cables are required to be equal length within 10% between the inverter module terminals and the first common point of a phase. The recommended common point is the motor terminals.

Output junction box requirements: The length, minimum 2.5 meters, and quantity of cables must be equal from each inverter module to the common terminal in the junction box.

NB!
If a retrofit applications requires unequal amount of wires per phase please consult the factory for requirements and documentation or use the top/bottom entry side cabinet option, instruction 177R0097.

4.6.8 Brake Cable Drives with Factory Installed Brake Chopper Option

(Only standard with letter B in position 18 of typecode).

The connection cable to the brake resistor must be screened and the max. length from frequency converter to the DC bar is limited to 25 metres (82 feet).

Terminal No.	Function
81, 82	Brake resistor terminals

The connection cable to the brake resistor must be screened. Connect the screen by means of cable clamps to the conductive back plate at the frequency converter and to the metal cabinet of the brake resistor.
Size the brake cable cross-section to match the brake torque. See also *Brake Instructions, MI.90.Fx.yy* and *MI.50.Sx.yy* for further information regarding safe installation.

Please note that voltages up to 790 VDC, depending on the supply voltage, may occur on the terminals.

F Frame Requirements

The brake resistor(s) must be connected to the brake terminals in each inverter module.

4.6.9 Brake Resistor Temperature Switch

Frame size D-E-F
Torque: 0.5-0.6 Nm (5 in-lbs)
Screw size: M3

This input can be used to monitor the temperature of an externally connected brake resistor. If the connection between 104 and 106 is removed, the frequency converter will trip on warning / alarm 27, "Brake IGBT".
A KLIXON switch must be installed that is `normally closed' in series with the existing connection on either 106 or 104. Any connection to this terminal must be double insulated to high voltage to maintain PELV.
Normally closed: 104-106 (factory installed jumper).

Terminal No.	Function
106, 104, 105	Brake resistor temperature switch.

If the temperature of the brake resistor gets too high and the thermal switch drops out, the frequency converter will stop braking. The motor will start coasting.

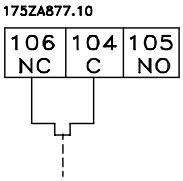

4.6.10 Load Sharing

Terminal No.	Function
88, 89	Loadsharing

The connection cable must be screened and the max. length from the frequency converter to the DC bar is limited to 25 metres (82 feet).
Load sharing enables linking of the DC intermediate circuits of several frequency converters.

Please note that voltages up to 1099 VDC may occur on the terminals.
Load Sharing calls for extra equipment and safety considerations. For further information, see load sharing Instructions MI.50.NX.YY.

Please note that mains disconnect may not isolate the frequency converter due to DC link connection

4.6.11 Mains Connection

Mains must be connected to terminals 91, 92 and 93 located on the far left of the unit. Earth is connected to the terminal to the right of terminal 93.

Terminal No.	Function
91, 92, 93	Mains R/L1, S/L2, T/L3
94	Earth



NB!
Check the name plate to ensure that the mains voltage of the frequency converter matches the power supply of your plant.

4

Ensure that the power supply can supply the necessary current to the frequency converter.

If the unit is without built-in fuses, ensure that the appropriate fuses have the correct current rating.

4.6.12 External Fan Supply

Frame size D-E-F
In case the frequency converter is supplied by DC or if the fan must run independently of the power supply, an external power supply can be applied. The connection is made on the power card.

Terminal No.	Function
100, 101	Auxiliary supply S, T
102, 103	Internal supply S, T

The connector located on the power card provides the connection of line voltage for the cooling fans. The fans are connected from factory to be supplied form a common AC line (jumpers between 100-102 and 101-103). If external supply is needed, the jumpers are removed and the supply is connected to terminals 100 and 101. A 5 Amp fuse should be used for protection. In UL applications this should be LittleFuse KLK-5 or equivalent.

4.6.13 Power and Control Wiring for Unscreened Cables



Induced Voltage!
Run motor cables from multiple drives separately. Induced voltage from output motor cables run together can charge equipment capacitors even with the equipment turned off and locked out. Failure to run output cables separately could result in death or serious injury.



Run drive input power, motor wiring, and control wiring in three separate metallic conduits or raceways for high frequency noise isolation. Failure to isolate power, motor, and control wiring could result in less than optimum controller and associated equipment performance.

Because the power wiring carries high frequency electrical pulses, it is important that input power and motor power are run in separate conduit. If the incoming power wiring is run in the same conduit as the motor wiring, these pulses can couple electrical noise back onto the building power grid. Control wiring should always be isolated from the high voltage power wiring.
When screened/armoured cable is not used, at least three separate conduits must be connected to the panel option (see figure below).

- Power wiring into the enclosure
- Power wiring from the enclosure to the motor
- Control wiring

4.6.14 Fuses

Branch circuit protection:

In order to protect the installation against electrical and fire hazard, all branch circuits in an installation, switch gear, machines etc., must be short-circuited and over-current protected according to national/international regulations.

Short-circuit protection:

The frequency converter must be protected against short-circuit to avoid electrical or fire hazard. Danfoss recommends using the fuses mentioned below to protect service personnel and equipment in case of an internal failure in the drive. The frequency converter provides full short-circuit protection in case of a short-circuit on the motor output.

Over-current protection

Provide overload protection to avoid fire hazard due to overheating of the cables in the installation. The frequency converter is equipped with an internal over-current protection that can be used for upstream overload protection (UL-applications excluded). See par. 4-18 *Current Limit*. Moreover, fuses or circuit breakers can be used to provide the over-current protection in the installation. Over-current protection must always be carried out according to national regulations.

Non UL compliance

If UL/cUL is not to be complied with, we recommend using the following fuses, which will ensure compliance with EN50178:

P132 - P200	380 - 480 V	type gG
P250 - P400	380 - 480 V	type gR

UL Compliance

380-480 V, frame sizes D, E and F

The fuses below are suitable for use on a circuit capable of delivering 100,000 Arms (symmetrical), 240V, or 480V, or 500V, or 600V depending on the drive voltage rating. With the proper fusing the drive Short Circuit Current Rating (SCCR) is 100,000 Arms.

Size/ Type	Bussmann E1958 JFHR2**	Bussmann E4273 T/JDDZ**	SIBA E180276 JFHR2	LittelFuse E71611 JFHR2**	Ferraz-Shawmut E60314 JFHR2**	Bussmann E4274 H/JDDZ**	Bussmann E125085 JFHR2*	Internal Option Bussmann
P132	FWH-400	JJS-400	2061032.40	L50S-400	A50-P400	NOS-400	170M4012	170M4016
P160	FWH-500	JJS-500	2061032.50	L50S-500	A50-P500	NOS-500	170M4014	170M4016
P200	FWH-600	JJS-600	2062032.63	L50S-600	A50-P600	NOS-600	170M4016	170M4016

Table 4.3: Frame size D, Line fuses, 380-480 V

Size/Type	Bussmann PN*	Rating	Ferraz	Siba
P250	170M4017	700 A, 700 V	6.9URD31D08A0700	20 610 32.700
P315	170M6013	900 A, 700 V	6.9URD33D08A0900	20 630 32.900
P355	170M6013	900 A, 700 V	6.9URD33D08A0900	20 630 32.900
P400	170M6013	900 A, 700 V	6.9URD33D08A0900	20 630 32.900

Table 4.4: Frame size E, Line fuses, 380-480 V

Size/Type	Bussmann PN*	Rating	Siba	Internal Bussmann Option
P450	170M7081	1600 A, 700 V	20 695 32.1600	170M7082
P500	170M7081	1600 A, 700 V	20 695 32.1600	170M7082
P560	170M7082	2000 A, 700 V	20 695 32.2000	170M7082
P630	170M7082	2000 A, 700 V	20 695 32.2000	170M7082

Table 4.5: Frame size F, Line fuses, 380-480 V

Size/Type	Bussmann PN*	Rating	Siba
P450	170M8611	1100 A, 1000 V	20 781 32.1000
P500	170M8611	1100 A, 1000 V	20 781 32.1000
P560	170M6467	1400 A, 700 V	20 681 32.1400
P630	170M6467	1400 A, 700 V	20 681 32.1400

Table 4.6: Frame size F, Inverter module DC Link Fuses, 380-480 V

*170M fuses from Bussmann shown use the -/80 visual indicator, -TN/80 Type T, -/110 or TN/110 Type T indicator fuses of the same size and amperage may be substituted for external use

**Any minimum 500 V UL listed fuse with associated current rating may be used to meet UL requirements.

Supplementary fuses

Frame size	Bussmann PN*	Rating
D, E and F	KTK-4	4 A, 600 V

Table 4.7: SMPS Fuse

Size/Type	Bussmann PN*	LittelFuse	Rating
P132-P250, 380-480 V	KTK-4		4 A, 600 V
P315-P630, 380-480 V		KLK-15	15A, 600 V

Table 4.8: Fan Fuses

Size/Type		Bussmann PN*	Rating	Alternative Fuses
P450-P630, 380-480 V	2.5-4.0 A	LPJ-6 SP or SPI	6 A, 600 V	Any listed Class J Dual Element, Time Delay, 6A
P450-P630, 380-480 V	4.0-6.3 A	LPJ-10 SP or SPI	10 A, 600 V	Any listed Class J Dual Element, Time Delay, 10 A
P450-P630, 380-480 V	6.3 - 10 A	LPJ-15 SP or SPI	15 A, 600 V	Any listed Class J Dual Element, Time Delay, 15 A
P450-P630, 380-480 V	10 - 16 A	LPJ-25 SP or SPI	25 A, 600 V	Any listed Class J Dual Element, Time Delay, 25 A

Table 4.9: Manual Motor Controller Fuses

Frame size	Bussmann PN*	Rating	Alternative Fuses
F	LPJ-30 SP or SPI	30 A, 600 V	Any listed Class J Dual Element, Time Delay, 30 A

Table 4.10: 30 A Fuse Protected Terminal Fuse

Frame size	Bussmann PN*	Rating	Alternative Fuses
D	LP-CC-8/10	0.8A, 600V	Any listed Class CC, 0.8A
E	LP-CC-1 1/2	1.5A, 600V	Any listed Class CC, 1.5A
F	LPJ-6 SP or SPI	6 A, 600 V	Any listed Class J Dual Element, Time Delay, 6 A

Table 4.11: Control Transformer Fuse

Frame size	Bussmann PN*	Rating
F	GMC-800MA	800 mA, 250 V

Table 4.12: NAMUR Fuse

Frame size	Bussmann PN*	Rating	Alternative Fuses
F	LP-CC-6	6 A, 600 V	Any listed Class CC, 6 A

Table 4.13: Safety Relay Coil Fuse with PILS Relay

4.6.15 Mains Disconnectors - Frame Size D, E and F

Frame size	Power & Voltage	Type
D	P132-P200 380-480V	OT400U12-91
E	P250 380-480V	ABB OETL-NF600A
E	P315-P400 380-480V	ABB OETL-NF800A
F	P450 380-480V	Merlin Gerin NPJF36000S12AAYP
F	P500-P630 380-480V	Merlin Gerin NRK36000S20AAYP

4.6.16 F Frame circuit breakers

Frame size	Power & Voltage	Type
F	P450 380-480V	Merlin Gerin NPJF36120U31AABSCYP
F	P500-P630 380-480V	Merlin Gerin NRJF36200U31AABSCYP

4.6.17 F Frame Mains Contactors

Frame size	Power & Voltage	Type
F	P450-P500 380-480V	Eaton XTCE650N22A
F	P560-P630 380-480V	Eaton XTCEC14P22B

4.6.18 Motor Insulation

For motor cable lengths ≤ the maximum cable length listed in the General Specifications tables the following motor insulation ratings are recommended because the peak voltage can be up to twice the DC link voltage, 2.8 times the mains voltage, due to transmission line effects in the motor cable. If a motor has lower insulation rating it recommended to use a du/dt or sine wave filter.

Nominal Mains Voltage	Motor Insulation
$U_N \leq 420$ V	Standard U_{LL} = 1300 V
420 V < $U_N \leq 500$ V	Reinforced U_{LL} = 1600 V

4.6.19 Motor Bearing Currents

It is generally recommended that motors of a rating 110kW or higher operating via Variable Frequency Drives should have NDE (Non-Drive End) insulated bearings installed to eliminate circulating bearing currents due to the physical size of the motor. To minimize DE (Drive End) bearing and shaft currents proper grounding of the drive, motor, driven machine, and motor to the driven machine is required. Although failure due to bearing currents is low and very dependent on many different items, for security of operation the following are mitigation strategies which can be implemented.

Standard Mitigation Strategies:

1. Use an insulated bearing
2. Apply rigorous installation procedures

   Ensure the motor and load motor are aligned

   Strictly follow the EMC Installation guideline

   Reinforce the PE so the high frequency impedance is lower in the PE than the input power leads

   Provide a good high frequency connection between the motor and the frequency converter for instance by screened cable which has a 360° connection in the motor and the frequency converter

   Make sure that the impedance from frequency converter to building ground is lower that the grounding impedance of the machine. This can be difficult for pumps- Make a direct earth connection between the motor and load motor.

3. Apply conductive lubrication
4. Try to ensure the line voltage is balanced to ground. This can be difficult for IT, TT, TN-CS or Grounded leg systems
5. Use an insulated bearing as recommended by the motor manufacturer (note: Motors from reputable manufacturers will typically have these fitted as standard in motors of this size)

If found to be necessary and after consultation with Danfoss:

6. Lower the IGBT switching frequency
7. Modify the inverter waveform, 60° AVM vs. SFAVM
8. Install a shaft grounding system or use an isolating coupling between motor and load
9. Use minimum speed settings if possible
10. Use a dU/dt or sinus filter

4.6.20 Control Cable Routing

Tie down all control wires to the designated control cable routing as shown in the picture. Remember to connect the shields in a proper way to ensure optimum electrical immunity.

Fieldbus connection

Connections are made to the relevant options on the control card. For details see the relevant fieldbus instruction. The cable must be placed in the provided path inside the frequency converter and tied down together with other control wires (see pictures).

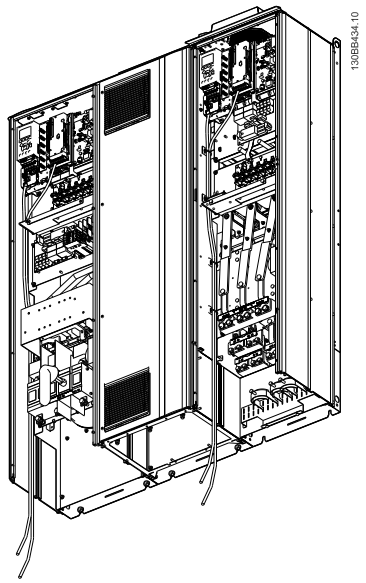

Control card wiring path for the D11

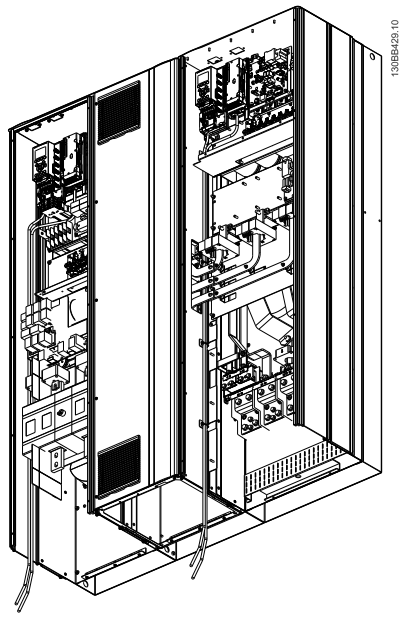

Control card wiring path for the E7

4.6.21 Access to Control Terminals

All terminals to the control cables are located beneath the LCP (both filter and drive LCP). They are accessed by opening the door of the unit.

4.6.22 Electrical Installation, Control Terminals

To connect the cable to the terminal:

1. Strip insulation by about 9-10 mm
2. Insert a screwdriver[1)] in the square hole.
3. Insert the cable in the adjacent circular hole.

4. Remove the screwdriver. The cable is now mounted in the terminal.

To remove the cable from the terminal:

1. Insert a screw driver[1)] in the square hole.
2. Pull out the cable.

[1)] Max. 0.4 x 2.5 mm

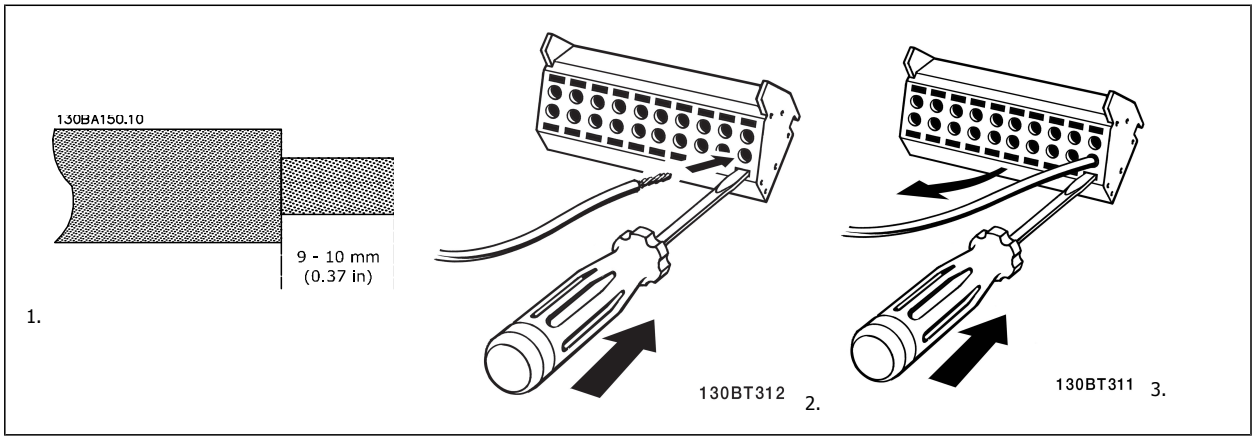

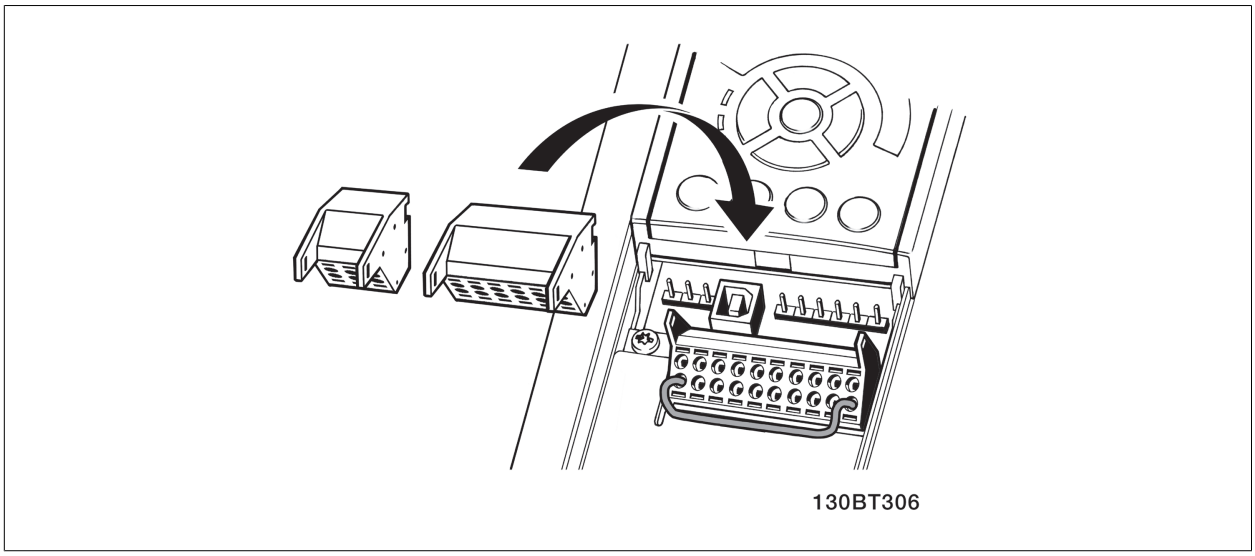

4.7 Connection Examples for Control of Motor with External Signal Provider

NB!
The following examples refer only to the drive control card (right LCP), *not* the filter.

4

4.7.1 Start/Stop

Terminal 18 = par. 5-10 *Terminal 18 Digital Input* [8] *Start*
Terminal 27 = par. 5-12 *Terminal 27 Digital Input* [0] *No operation* (Default *coast inverse*)

Terminal 37 = Safe stop

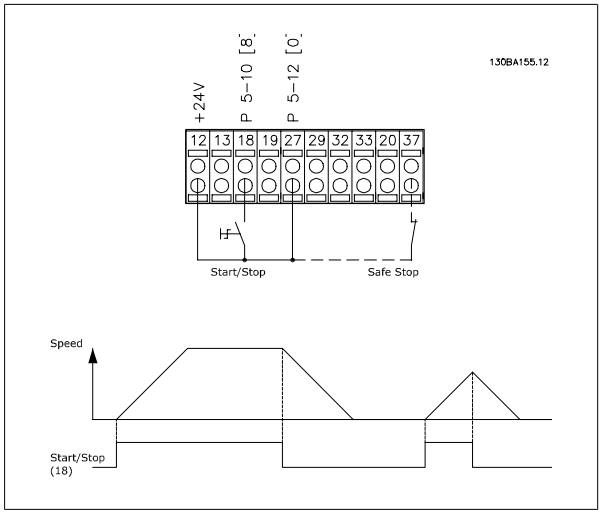

4.7.2 Pulse Start/Stop

Terminal 18 = par. 5-10 *Terminal 18 Digital Input* [9] *Latched start*
Terminal 27= par. 5-12 *Terminal 27 Digital Input* [6] *Stop inverse*

Terminal 37 = Safe stop

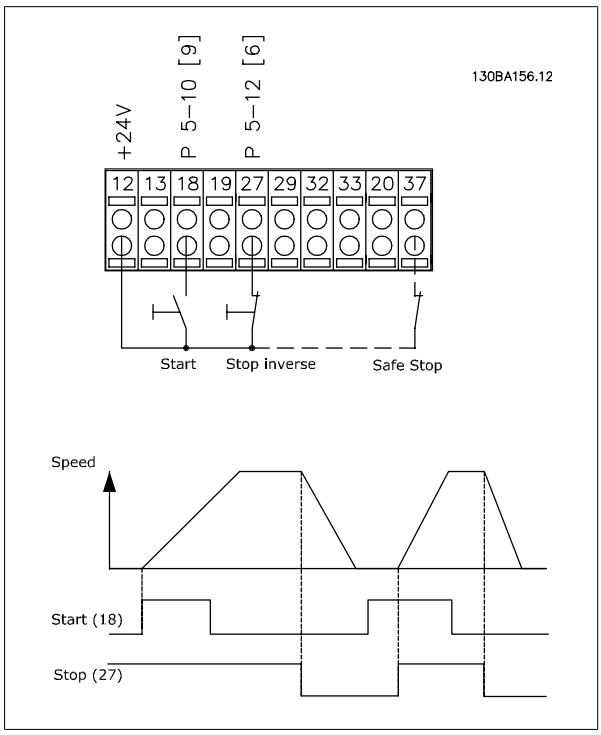

4.7.3 Speed Up/Down

Terminals 29/32 = Speed up/down:

Terminal 18 = par. 5-10 *Terminal 18 Digital Input* Start [9] (default)

Terminal 27 = par. 5-12 *Terminal 27 Digital Input* Freeze reference [19]

Terminal 29 = par. 5-13 *Terminal 29 Digital Input* Speed up [21]

Terminal 32 = par. 5-14 *Terminal 32 Digital Input* Speed down [22]

NOTE: Terminal 29 only in FC x02 (x=series type).

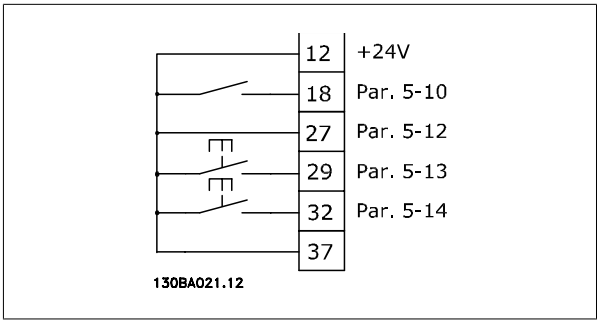

4

4.7.4 Potentiometer Reference

Voltage reference via a potentiometer:

Reference Source 1 = [1] *Analog input 53* (default)

Terminal 53, Low Voltage = 0 Volt

Terminal 53, High Voltage = 10 Volt

Terminal 53, Low Ref./Feedback = 0 RPM

Terminal 53, High Ref./Feedback = 1500 RPM

Switch S201 = OFF (U)

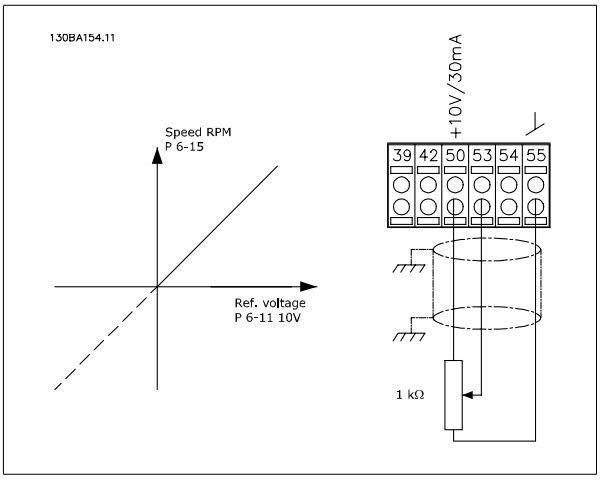

4

4.8 Electrical Installation - additional

4.8.1 Electrical Installation, Control Cables

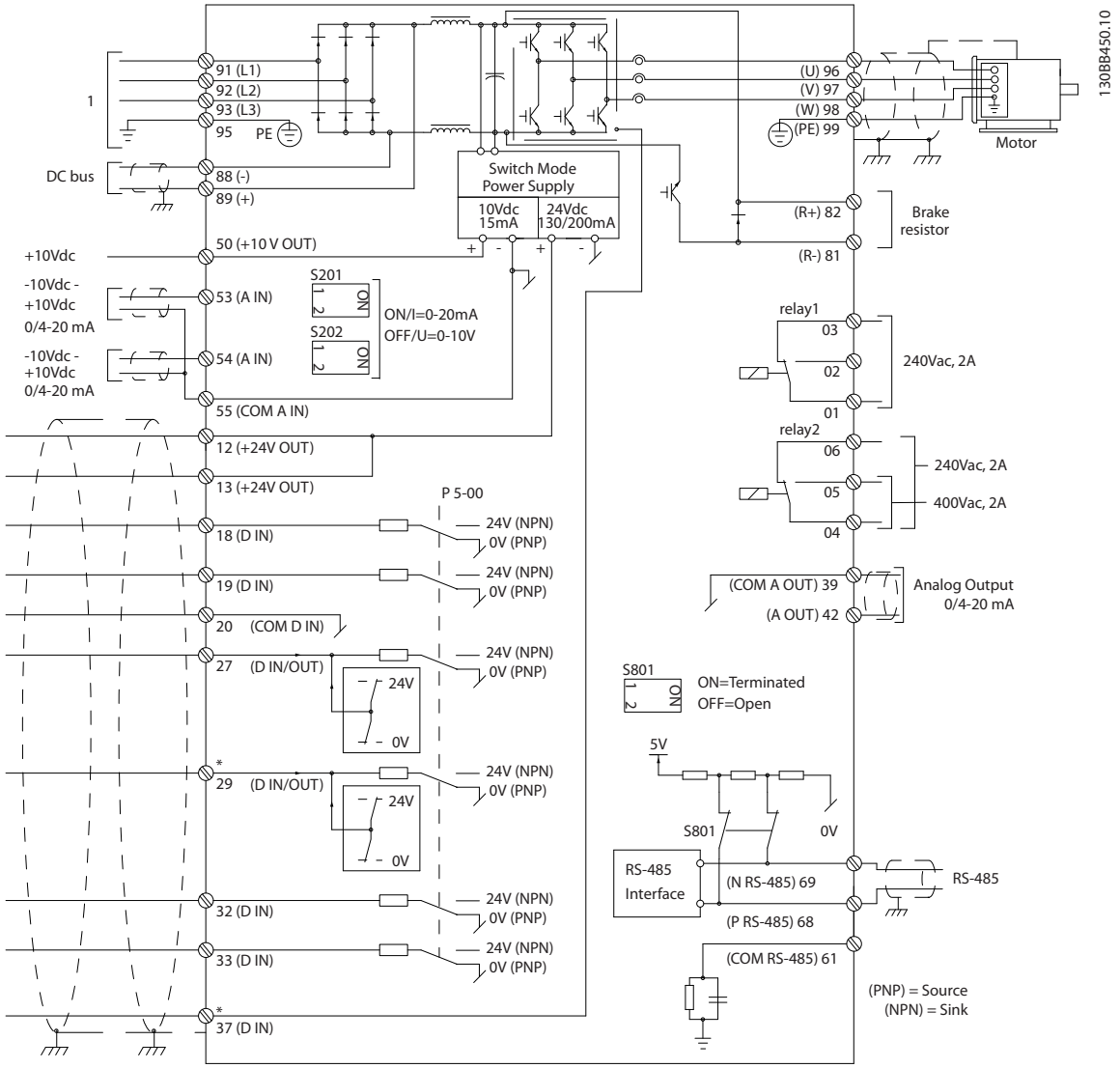

Illustration 4.34: Diagram showing all electrical terminals without options.

1:Connection to filter

Terminal 37 is the input to be used for Safe Stop. For instructions on Safe Stop installation please refer to the section *Safe Stop Installation* in the frequency converter Design Guide. See also sections Safe Stop and Safe Stop Installation.

Very long control cables and analogue signals may in rare cases and depending on installation result in 50/60 Hz earth loops due to noise from mains supply cables.

If this occurs, it may be necessary to break the screen or insert a 100 nF capacitor between screen and chassis.

The digital and analog inputs and outputs must be connected separately to the control cards of the unit (both filter and drive, terminal 20, 55, 39) to avoid earth currents from both groups to affect other groups. For example, switching on the digital input may disturb the analog input signal.

Input polarity of control terminals

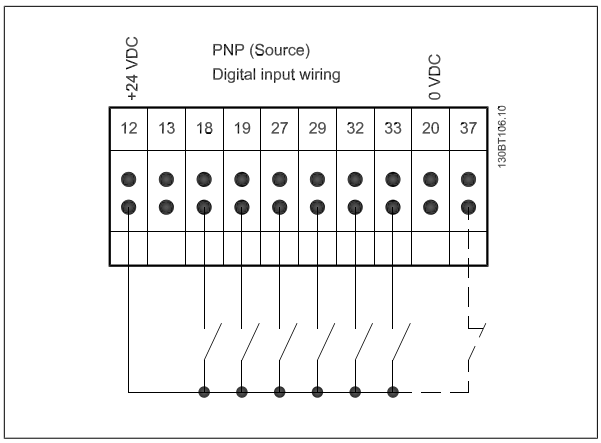

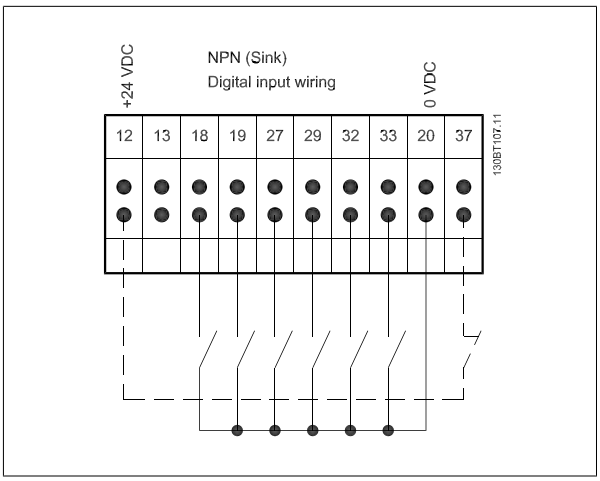

NB!
To comply with EMC emission specifications, screened/armoured cables are recommended. If an unscreened/unarmoured cable is used, see section *Power and Control Wiring for Unscreened Cables*. If unscreened control cables are used, it is recommended to use ferrite cores to improve EMC performance.

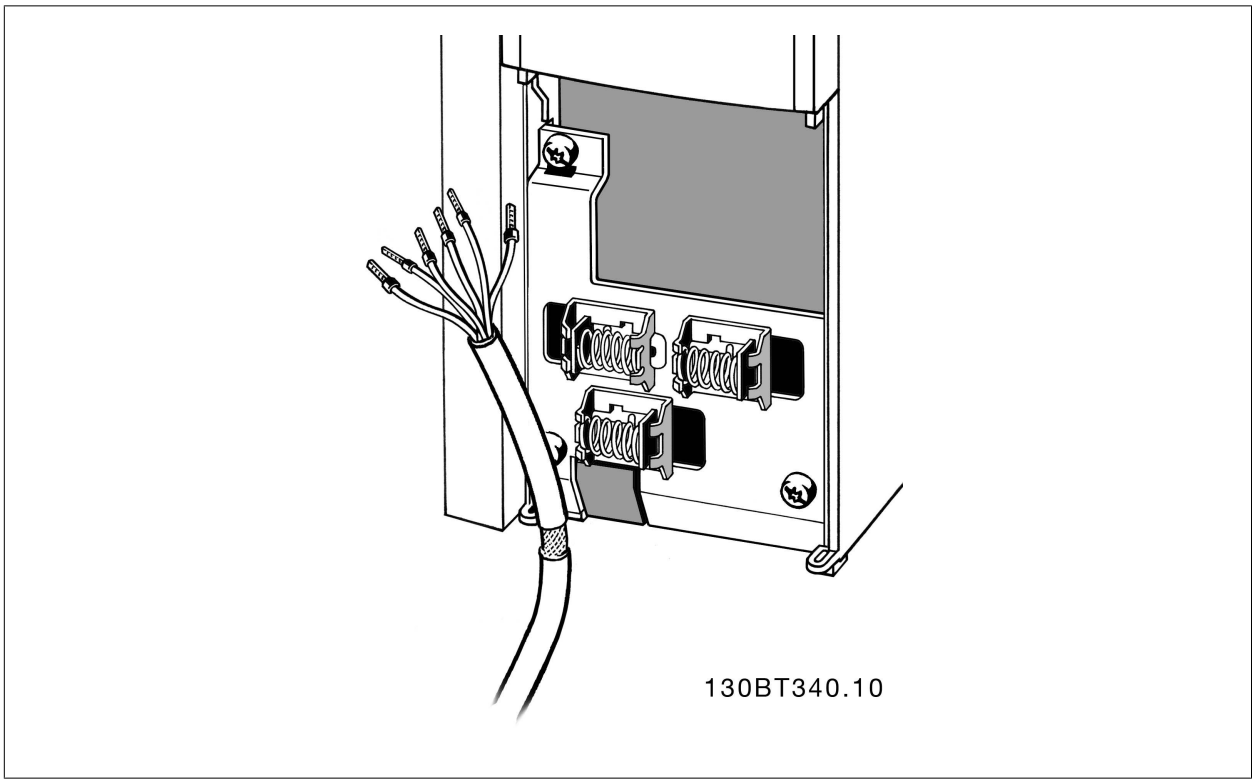

Connect the wires as described in the Operating Instruction for the frequency converter. Remember to connect the shields in a proper way to ensure optimum electrical immunity.

4.8.2 Switches S201, S202, and S801

Switches S201 (A53) and S202 (A54) are used to select a current (0-20 mA) or a voltage (-10 to 10 V) configuration of the analog input terminals 53 and 54 respectively.

Switch S801 (BUS TER.) can be used to enable termination on the RS-485 port (terminals 68 and 69).

See drawing *Diagram showing all electrical terminals* in section *Electrical Installation.*

Default setting:

S201 (A53) = OFF (voltage input)

S202 (A54) = OFF (voltage input)

S801 (Bus termination) = OFF

NB!
When changing the function of S201, S202 or S801 be careful not to use force for the switch over. It is recommended to remove the LCP fixture (cradle) when operating the switches. The switches must not be operated with power on the frequency converter.

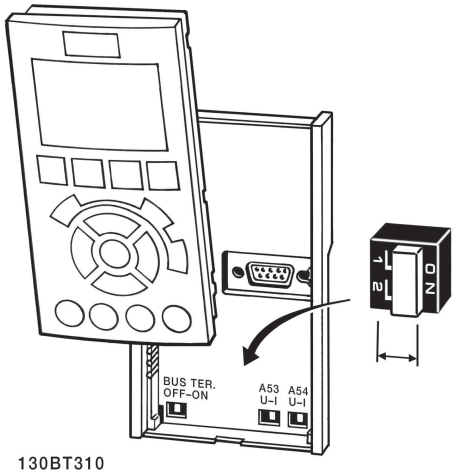

4.9 Final Set-up and Test

To test the set-up and ensure that the frequency converter is running, follow these steps.

Step 1. Locate the motor name plate

NB!
The motor is either star- (Y) or delta- connected (Δ). This information is located on the motor name plate data.

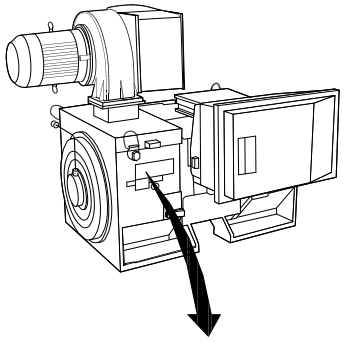

THREE PHASE INDUCTION MOTOR

MOD MCV 315E	Nr. 135189 12 04				IL/IN 6.5	
kW 400	PRIMARY				SF 1.15	
HP 536	V 690	A 410.6	CONN Y		COSf 0.85	40
mm 1481	V	A	CONN		AMB 40	°C
Hz 50	V	A	CONN		ALT 1000	m
DESIGN N	SECONDARY				RISE 80	°C
DUTY S1	V	A	CONN		ENCLOSURE IP23	
INSUL I	EFFICIENCY %	95.8%	100%	95.8%	75%	WEIGHT 1.83 ton

⚠ CAUTION

130BA767.10

Step 2. Enter the motor name plate data in this parameter list.
To access this list first press the [QUICK MENU] key then select "Q2 Quick Setup".

1.	Par. 1-20 *Motor Power [kW]* Par. 1-21 *Motor Power [HP]*
2.	Par. 1-22 *Motor Voltage*
3.	Par. 1-23 *Motor Frequency*
4.	Par. 1-24 *Motor Current*
5.	Par. 1-25 *Motor Nominal Speed*

Step 3. Activate the Automatic Motor Adaptation (AMA)

Performing an AMA will ensure optimum performance. The AMA measures the values from the motor model equivalent diagram.

1. Connect terminal 37 to terminal 12 (if terminal 37 is available).
2. Connect terminal 27 to terminal 12 or set par. 5-12 *Terminal 27 Digital Input* to 'No function' (par. 5-12 *Terminal 27 Digital Input* [0])
3. Activate the AMA par. 1-29 *Automatic Motor Adaptation (AMA)*.
4. Choose between complete or reduced AMA. If a Sine-wave filter is mounted, run only the reduced AMA, or remove the Sine-wave filter during the AMA procedure.
5. Press the [OK] key. The display shows "Press [Hand on] to start".
6. Press the [Hand on] key. A progress bar indicates if the AMA is in progress.

Stop the AMA during operation

1. Press the [OFF] key - the frequency converter enters into alarm mode and the display shows that the AMA was terminated by the user.

Successful AMA

1. The display shows "Press [OK] to finish AMA".
2. Press the [OK] key to exit the AMA state.

Unsuccessful AMA

1. The frequency converter enters into alarm mode. A description of the alarm can be found in the *Warnings and Alarms* chapter.
2. "Report Value" in the [Alarm Log] shows the last measuring sequence carried out by the AMA, before the frequency converter entered alarm mode. This number along with the description of the alarm will assist you in troubleshooting. If you contact Danfoss for service, make sure to mention number and alarm description.



NB!
Unsuccessful AMA is often caused by incorrectly registered motor name plate data or a too big difference between the motor power size and the frequency converter power size.

Step 4. Set speed limit and ramp time

Par. 3-02 *Minimum Reference*
Par. 3-03 *Maximum Reference*

Table 4.14: Set up the desired limits for speed and ramp time.

Par. 4-11 *Motor Speed Low Limit [RPM]* or par. 4-12 *Motor Speed Low Limit [Hz]*
Par. 4-13 *Motor Speed High Limit [RPM]* or par. 4-14 *Motor Speed High Limit [Hz]*

Par. 3-41 *Ramp 1 Ramp up Time*
Par. 3-42 *Ramp 1 Ramp Down Time*

4.10 Additional Connections

4.10.1 Mechanical Brake Control

In hoisting/lowering applications, it is necessary to be able to control an electro-mechanical brake:

- Control the brake using any relay output or digital output (terminal 27 or 29).
- Keep the output closed (voltage-free) as long as the frequency converter is unable to 'support' the motor, for example due to the load being too heavy.
- Select *Mechanical brake control* [32] in par. 5-4* for applications with an electro-mechanical brake.
- The brake is released when the motor current exceeds the preset value in par. 2-20 *Release Brake Current*.
- The brake is engaged when the output frequency is less than the frequency set in par. 2-21 *Activate Brake Speed [RPM]* or par. 2-22 *Activate Brake Speed [Hz]*, and only if the frequency converter carries out a stop command.

If the frequency converter is in alarm mode or in an over-voltage situation, the mechanical brake immediately cuts in.

4.10.2 Parallel Connection of Motors

The frequency converter can control several parallel-connected motors. The total current consumption of the motors must not exceed the rated output current $I_{M,N}$ for the frequency converter.

NB!
Installations with cables connected in a common joint as in the illustration below, is only recommended for short cable lengths.

NB!
When motors are connected in parallel, par. 1-29 *Automatic Motor Adaptation (AMA)* cannot be used.

NB!
The electronic thermal relay (ETR) of the frequency converter cannot be used as motor protection for the individual motor in systems with parallel-connected motors. Provide further motor protection by e.g. thermistors in each motor or individual thermal relays (circuit breakers are not suitable as protection).

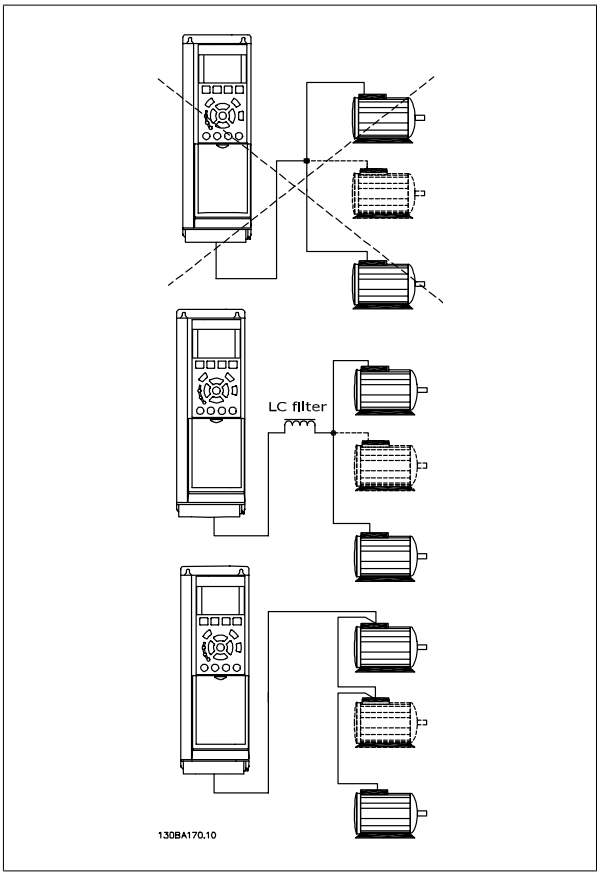

Problems may arise at start and at low RPM values if motor sizes are widely different because small motors' relatively high ohmic resistance in the stator calls for a higher voltage at start and at low RPM values.

4.10.3 Motor Thermal Protection

The electronic thermal relay in the frequency converter has received UL-approval for single motor protection, when par. 1-90 *Motor Thermal Protection* is set for *ETR Trip* and par. 1-24 *Motor Current* is set to the rated motor current (see motor name plate).
For thermal motor protection it is also possible to use the MCB 112 PTC Thermistor Card option. This card provides ATEX certificate to protect motors in explosion hazardous areas, Zone 1/21 and Zone 2/22. Please refer to the *Design Guide* for further information.

MG.34.O1.02 - VLT® is a registered Danfoss trademark

5 How to Operate the Low Harmonic Drive

5.1.1 Ways of operation

The Low Harmonic Drive can be operated in 2 ways:

1. Graphical Local Control Panel (GLCP)
2. RS-485 serial communication or USB, both for PC connection

5.1.2 How to operate graphical LCP (GLCP)

The Low Harmonic Drive is equipped with two LCPs, one on the frequency converter section (to the right) of the drive and one on the active filter section (to the left). The filter LCP is operated the same way as the frequency converter LCP. Each LCP controls only the unit it is connected to and there is no communication between the two LCPs.



NB!
The active filter should be in Auto Mode, i.e. the [Auto On] button must be pressed on the filter LCP

The following instructions are valid for the GLCP (LCP 102).

The GLCP is divided into four functional groups:

1. Graphical display with Status lines.
2. Menu keys and indicator lights (LED's) - selecting mode, changing parameters and switching between display functions.
3. Navigation keys and indicator lights (LEDs).
4. Operation keys and indicator lights (LEDs).

Graphical display:
The LCD-display is back-lit with a total of 6 alpha-numeric lines. All data is displayed on the LCP which can show up to five operating variables while in [Status] mode. The picture below shows an example of the drive LCP. The filter LCP looks identical but displays information related to the filter operation.

Display lines:

a. **Status line:** Status messages displaying icons and graphics.

b. **Line 1-2:** Operator data lines displaying data and variables defined or chosen by the user. By pressing the [Status] key, up to one extra line can be added.

c. **Status line:** Status messages displaying text.

The display is divided into 3 sections:

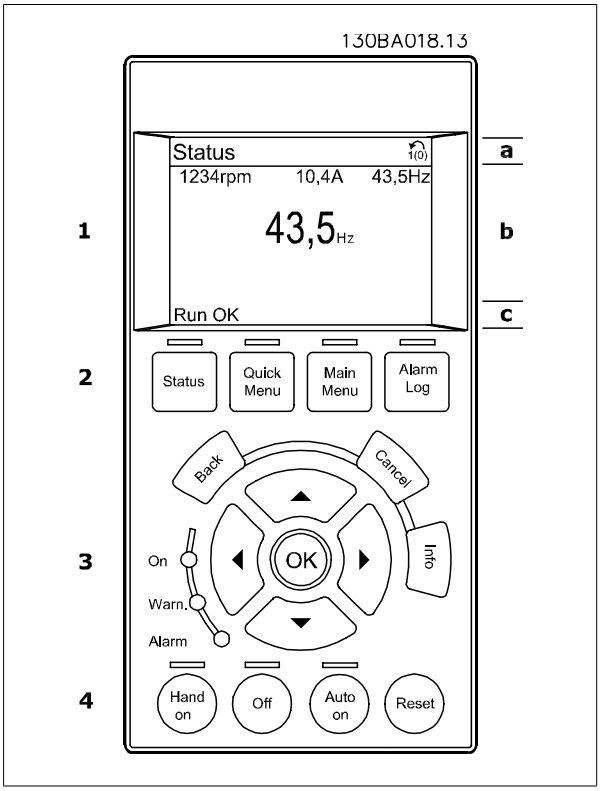

Top section (a)

shows the status when in status mode or up to 2 variables when not in status mode and in the case of Alarm/Warning.

The number of the Active Set-up (selected as the Active Set-up in par. 0-10) is shown. When programming in another Set-up than the Active Set-up, the number of the Set-up being programmed appears to the right in brackets.

Middle section (b)

shows up to 5 variables with related unit, regardless of status. In case of alarm/warning, the warning is shown instead of the variables.

It is possible to toggle between three status read-out displays by pressing the [Status] key.
Operating variables with different formatting are shown in each status screen - see below.

Several values or measurements can be linked to each of the displayed operating variables. The values / measurements to be displayed can be defined via par. 0-20, 0-21, 0-22, 0-23, and 0-24.

Each value / measurement readout parameter selected in par. 0-20 to par. 0-24 has its own scale and number of digits after a possible decimal point. Larger numeric values are displayed with few digits after the decimal point.
Ex.: Current readout
5.25 A; 15.2 A 105 A.

Status display I

This read-out state is standard after start-up or initialization.
Use [INFO] to obtain information about the value/measurement linked to the displayed operating variables (1.1, 1.2, 1.3, 2, and 3).
See the operating variables shown in the display in this illustration. 1.1, 1.2 and 1.3 are shown in small size. 2 and 3 are shown in medium size.

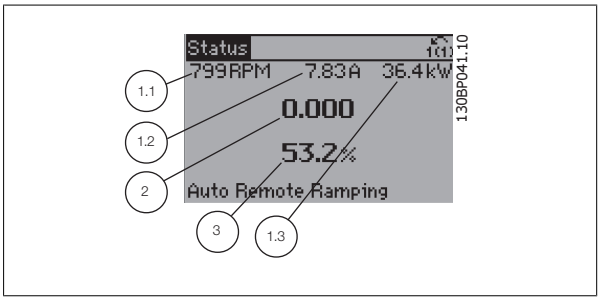

MG.34.O1.02 - VLT® is a registered Danfoss trademark

Status display II

See the operating variables (1.1, 1.2, 1.3, and 2) shown in the display in this illustration.

In the example, Speed, Motor current, Motor power and Frequency are selected as variables in the first and second lines.

1.1, 1.2 and 1.3 are shown in small size. 2 is shown in large size.

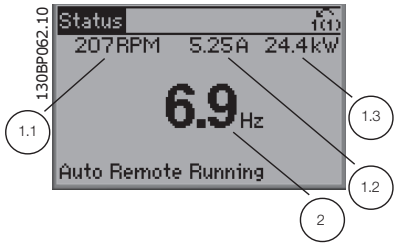

Status display III:

This state displays the event and action of the Smart Logic Control. For further information, see section *Smart Logic Control*.

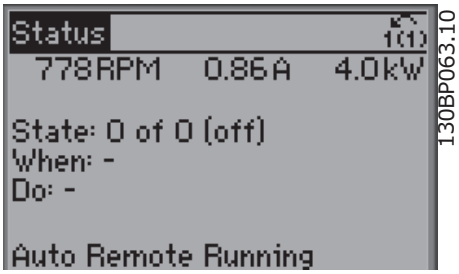

NB!

Status display III is not available on the filter LCP

Bottom section

always shows the state of the frequency converter in Status mode.

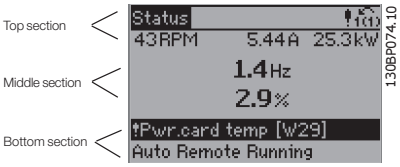

Display contrast adjustment

Press [status] and [▲] for darker display

Press [status] and [▼] for brighter display

Indicator lights (LEDs):

If certain threshold values are exceeded, the alarm and/or warning LED lights up. A status and alarm text appear on the control panel.

The On LED is activated when the frequency converter receives power from mains voltage, a DC bus terminal, or an external 24 V supply. At the same time, the back light is on.

- Green LED/On: Control section is working.
- Yellow LED/Warn.: Indicates a warning.
- Flashing Red LED/Alarm: Indicates an alarm.



130BP044.10

GLCP keys

Menu keys

The menu keys are divided into functions. The keys below the display and indicator lamps are used for parameter set-up, including choice of display indication during normal operation.

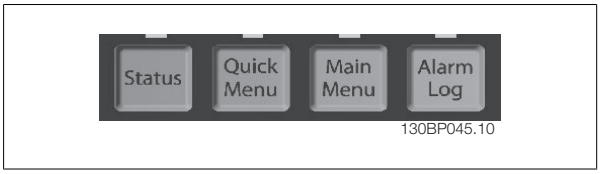

[Status]

Indicates the status of the frequency converter (and/or the motor) or the filter respectively. On the drive LCP, 3 different readouts can be chosen by pressing the [Status] key:

5 line readouts, 4 line readouts or Smart Logic Control.

Smart Logic Control is not available for the filter.

Use **[Status]** for selecting the mode of display or for changing back to Display mode from either the Quick Menu mode, the Main Menu mode or Alarm mode. Also use the [Status] key to toggle single or double read-out mode.

5

[Quick Menu]

Allows quick set-up of the frequency converter or the filter. **The most common functions can be programmed here.**

The [Quick Menu] consists of:

- **Q1: My Personal Menu**
- **Q2: Quick Setup**
- **Q5: Changes Made**
- **Q6: Loggings**

Since the active filter is an integrated part of the Low Harmonic Drive only a minimum of programming is necessary. The filter LCP is mainly used to display information about filter operation such as THD of voltage or current, corrected current, injected current or Cos ϕ and True Power Factor.

The Quick Menu parameters can be accessed immediately unless a password has been created via par. 0-60, 0-61, 0-65 or 0-66.

It is possible to switch directly between Quick Menu mode and Main Menu mode.

[Main Menu]

is used for programming all parameters.

The Main Menu parameters can be accessed immediately unless a password has been created via par. 0-60, 0-61, 0-65 or 0-66.

It is possible to switch directly between Main Menu mode and Quick Menu mode.

Parameter shortcut can be carried out by pressing down the **[Main Menu]** key for 3 seconds. The parameter shortcut allows direct access to any parameter.

[Alarm Log]

displays an Alarm list of the five latest alarms (numbered A1-A5). To obtain additional details about an alarm, use the arrow keys to manoeuvre to the alarm number and press [OK]. Information is displayed about the condition of the frequency converter or filter before it enters the alarm mode.

[Back]

reverts to the previous step or layer in the navigation structure.

[Cancel]

last change or command will be cancelled as long as the display has not been changed.

[Info]

displays information about a command, parameter, or function in any display window. [Info] provides detailed information when needed.

Exit Info mode by pressing either [Info], [Back], or [Cancel].



Navigation keys

The four navigation arrows are used to navigate between the different choices available in **[Quick Menu]**, **[Main Menu]** and **[Alarm Log]**. Use the keys to move the cursor.

[OK]

is used for choosing a parameter marked by the cursor and for enabling the change of a parameter.



130BT117.10

Operation keys

for local control are found at the bottom of the control panel.



130BP046.10

5

[Hand on]

enables control of the frequency converter via the GLCP. [Hand on] also starts the motor, and it is now possible to give the motor speed reference by means of the arrow keys. The key can be *Enabled* [1] or *Disabled* [0] via par. *0-40 [Hand on] Key on LCP.*

The following control signals will still be active when [Hand on] is activated:

- [Hand on] - [Off] - [Auto on]
- Reset
- Coasting stop inverse (motor coasting to stop)
- Reversing
- Set-up select lsb - Set-up select msb
- Stop command from serial communication
- Quick stop
- DC brake

NB!

External stop signals activated by means of control signals or a serial bus will override a "start" command via the LCP.

[Off]

stops the connected motor (when pressed on the drive LCP) or the filter (when pressed on the filter LCP). The key can be *Enabled* [1] or *Disabled* [0] via par. *0-41 [Off] key on LCP.* If no external stop function is selected and the [Off] key is inactive the motor can only be stopped by disconnecting the mains supply.

[Auto on]

enables the frequency converter to be controlled via the control terminals and/or serial communication. When a start signal is applied on the control terminals and/or the bus, the frequency converter will start. The key can be *Enabled* [1] or *Disabled* [0] via par. *0-42 [Auto on] key on LCP.*

NB!

[Auto on] must be pressed on the filter LCP.



NB!
An active HAND-OFF-AUTO signal via the digital inputs has higher priority than the control keys [Hand on] – [Auto on].

[Reset]
is used for resetting the frequency converter or filter after an alarm (trip). The key can be *Enabled* [1] or *Disabled* [0] via par. 0-43 *Reset Keys on LCP*.

The parameter shortcut
can be carried out by holding down the [Main Menu] key for 3 seconds. The parameter shortcut allows direct access to any parameter.

5.1.3 Changing Data

1. Press [Quick Menu] or [Main Menu] key.
2. Use [▲] and [▼] keys keys to find parameter group to edit.
3. Press [OK] key.
4. Use [▲] and [▼] keys to find parameter to edit.
5. Press [OK] key.
6. Use [▲] and [▼] keys to select correct parameter setting. Or, to move to digits within a number, use keys. Cursor indicates digit selected to change. [▲] key increases the value, [▼] key decreases the value.
7. Press [Cancel] key to disregard change, or press [OK] key to accept change and enter new setting.

5.1.4 Changing a text value

If the selected parameter is a text value, change the text value by means of the up/down navigation keys.
The up key increases the value, and the down key decreases the value. Place the cursor on the value to be saved and press [OK].



Illustration 5.1: Display example.

5.1.5 Changing a group of numeric data values

If the chosen parameter represents a numeric data value, change the chosen data value by means of the [◂] and [▸] navigation keys as well as the up/down [▲] [▼] navigation keys. Use the ◂] and [▸] navigation keys to move the cursor horizontally.

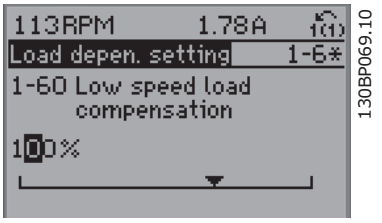

Illustration 5.2: Display example.

Use the up/down navigation keys to change the data value. The up key enlarges the data value, and the down key reduces the data value. Place the cursor on the value to be saved and press [OK].

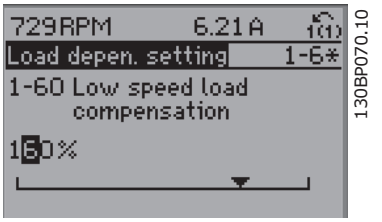

Illustration 5.3: Display example.

5.1.6 Changing of data value, Step-by-Step

Certain parameters can be changed step by step or infinitely variably. This applies to par. 1-20 *Motor Power [kW]*, par. 1-22 *Motor Voltage* and par. 1-23 *Motor Frequency*.
The parameters are changed both as a group of numeric data values and as numeric data values infinitely variably.

5.1.7 Read-out and programming of indexed parameters

Parameters are indexed when placed in a rolling stack.
Par. 15-30 *Alarm Log: Error Code* to par. 15-32 *Alarm Log: Time* contain a fault log which can be read out. Choose a parameter, press [OK], and use the up/down navigation keys to scroll through the value log.

Use par. 3-10 *Preset Reference* as another example:
Choose the parameter, press [OK], and use the up/down navigation keys keys to scroll through the indexed values. To change the parameter value, select the indexed value and press [OK]. Change the value by using the up/down keys. Press [OK] to accept the new setting. Press [Cancel] to abort. Press [Back] to leave the parameter.

5.1.8 Quick Transfer of Parameter Settings when Using GLCP

Once the set-up of a frequency converter is complete, it is recommended to store (backup) the parameter settings in the GLCP or on a PC via MCT 10 Set-up Software Tool.



Stop the motor before performing any of these operations.

Data storage in LCP:

1. Go to par. 0-50 *LCP Copy*
2. Press the [OK] key
3. Select "All to LCP"
4. Press the [OK] key

All parameter settings are now stored in the GLCP indicated by the progress bar. When 100% is reached, press [OK].

The GLCP can now be connected to another frequency converter and the parameter settings copied to this frequency converter.

Data transfer from LCP to Frequency converter:

1. Go to par. 0-50 *LCP Copy*
2. Press the [OK] key
3. Select "All from LCP"
4. Press the [OK] key

The parameter settings stored in the GLCP are now transferred to the frequency converter indicated by the progress bar. When 100% is reached, press [OK].

5.1.9 Initialisation to Default Settings

There are two ways to initialise the frequency converter to default: Recommended initialisation and manual initialisation.
Please be aware that they have different impact according to the below description.

Recommended initialisation (via par. 14-22 *Operation Mode*)

1. Select par. 14-22 *Operation Mode*
2. Press [OK]
3. Select "Initialisation" (for NLCP select "2")
4. Press [OK]
5. Remove power to unit and wait for display to turn off.
6. Reconnect power and the frequency converter is reset. Note that first start-up takes a few more seconds
7. Press [Reset]

Par. 14-22 *Operation Mode* initialises all except:
Par. 14-50 *RFI Filter*
Par. 8-30 *Protocol*
Par. 8-31 *Address*
Par. 8-32 *Baud Rate*
Par. 8-35 *Minimum Response Delay*
Par. 8-36 *Max Response Delay*
Par. 8-37 *Maximum Inter-Char Delay*
Par. 15-00 *Operating Hours* to par. 15-05 *Over Volt's*
Par. 15-20 *Historic Log: Event* to par. 15-22 *Historic Log: Time*
Par. 15-30 *Alarm Log: Error Code* to par. 15-32 *Alarm Log: Time*



NB!
Parameters selected in par. 0-25 *My Personal Menu*, will stay present, with default factory setting.

Manual initialisation

NB!
When carrying out manual initialisationrestore, serial communication, RFI filter settings and fault log settings are reset.
Removes parameters selected in par. 0-25 *My Personal Menu*.

1. Disconnect from mains and wait until the display turns off.

2a. Press [Status] - [Main Menu] - [OK] at the same time while power up for Graphical LCP (GLCP)

2b. Press [Menu] while power up for LCP 101, Numerical Display

3. Release the keys after 5 s

4. The frequency converter is now programmed according to default settings

This parameter initialises all except:

Par. 15-00 *Operating Hours*
Par. 15-03 *Power Up's*
Par. 15-04 *Over Temp's*
Par. 15-05 *Over Volt's*

5

5.1.10 RS-485 Bus Connection

Both filter portion and frequency converter can be connected to a controller (or master) together with other loads using the RS-485 standard interface. Terminal 68 is connected to the P signal (TX+, RX+), while terminal 69 is connected to the N signal (TX-,RX-).

Always use parallel connections for the Low harmonic Drive to ensure that both filter and drive part is connected..

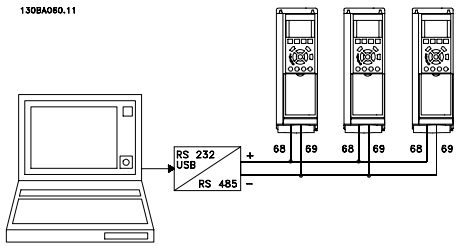

Illustration 5.4: Connection example.

In order to avoid potential equalizing currents in the screen, earth the cable screen via terminal 61, which is connected to the frame via an RC-link.

Bus termination
The RS-485 bus must be terminated by a resistor network at both ends. If the drive is the first or the last device in the RS-485 loop, set the switch S801 on the control card for ON.
For more information, see the paragraph *Switches S201, S202, and S801*.

5.1.11 How to connect a PC to the frequency converter

To control or program the frequency converter (and the filter part) from a PC, install the PC-based Configuration Tool MCT 10.
The PC is connected via a standard (host/device) USB cable to both devices, or via the RS-485 interface as shown in the VLT HVAC FC 102 *Design Guide, chapter How to Install > Installation of misc. connections*.

NB!
The USB connection is galvanically isolated from the supply voltage (PELV) and other high-voltage terminals. The USB connection is connected to protection earth on the frequency converter. Use only an isolated laptop as PC connection to the USB connector on the frequency converter.

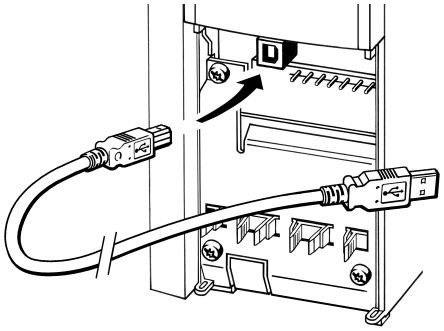

130BT308

Illustration 5.5: For control cable connections, see section on *Control Terminals*.

5

5.1.12 PC software tools

PC-based Configuration Tool MCT 10

The Low Harmonic Drive is equipped with two serial communication ports. Danfoss provides a PC tool for communication between PC and frequency converter, PC-based Configuration Tool MCT 10. Please check the section on *Available Literature* for detailed information on this tool.

MCT 10 set-up software

MCT 10 has been designed as an easy to use interactive tool for setting parameters in our frequency converters. The software can be downloaded from the Danfoss internet site *http://www.Danfoss.com/BusinessAreas/DrivesSolutions/Softwaredownload/DDPC+Software+Program.htm*.
The MCT 10 set-up software will be useful for:

- Planning a communication network off-line. MCT 10 contains a complete frequency converter database
- Commissioning frequency converters on line
- Saving settings for all frequency converters
- Replacing a frequency converter in a network
- Simple and accurate documentation of frequency converter settings after commissioning.
- Expanding an existing network
- Future developed frequency converters will be supported

MCT 10 set-up software supports Profibus DP-V1 via a Master class 2 connection. It makes it possible to on line read/write parameters in a frequency converter via the Profibus network. This will eliminate the need for an extra communication network.

Save frequency converter settings:

1. Connect a PC to the unit via USB com port. (NOTE: Use a PC, which is isolated from the mains, in conjunction with the USB port. Failure to do so may damage equipment.)
2. Open MCT 10 Set-up Software
3. Choose "Read from drive"
4. Choose "Save as"

All parameters are now stored in the PC.

Load frequency converter settings:

1. Connect a PC to the frequency converter via USB com port
2. Open MCT 10 Set-up software
3. Choose "Open"– stored files will be shown

4. Open the appropriate file
5. Choose "Write to drive"

All parameter settings are now transferred to the frequency converter.

A separate manual for MCT 10 Set-up Software is available*: MG.10.Rx.yy*.

The MCT 10 Set-up software modules

The following modules are included in the software package:

	**MCT Set-up 10 Software**
	Setting parameters
	Copy to and from frequency converters
	Documentation and print out of parameter settings incl. diagrams
	Ext. user interface
	Preventive Maintenance Schedule
	Clock settings
	Timed Action Programming
	Smart Logic Controller Set-up

Ordering number:

Please order the CD containing MCT 10 Set-up Software using code number 130B1000.

MCT 10 can also be downloaded from the Danfoss Internet: *WWW.DANFOSS.COM, Business Area: Motion Controls*.

6 How to Programme the Low Harmonic Drive

6.1 How to Programme the Frequency Converter

6.1.1 Quick Setup Parameters

0-01 Language

Option:		Function:
		Defines the language to be used in the display. The frequency converter can be delivered with 4 different language packages. English and German are included in all packages. English cannot be erased or manipulated.
[0] *	English	Part of Language packages 1 - 4
[1]	Deutsch	Part of Language packages 1 - 4
[2]	Francais	Part of Language package 1
[3]	Dansk	Part of Language package 1
[4]	Spanish	Part of Language package 1
[5]	Italiano	Part of Language package 1
	Svenska	Part of Language package 1
[7]	Nederlands	Part of Language package 1
	Chinese	Part of Language package 2
	Suomi	Part of Language package 1
	English US	Part of Language package 4
	Greek	Part of Language package 4
	Bras.port	Part of Language package 4
	Slovenian	Part of Language package 3
	Korean	Part of Language package 2
	Japanese	Part of Language package 2
	Turkish	Part of Language package 4
	Trad.Chinese	Part of Language package 2
	Bulgarian	Part of Language package 3
	Srpski	Part of Language package 3
	Romanian	Part of Language package 3
	Magyar	Part of Language package 3
	Czech	Part of Language package 3
	Polski	Part of Language package 4
	Russian	Part of Language package 3
	Thai	Part of Language package 2

	Bahasa Indonesia	Part of Language package 2
[99]	Unknown	

1-20 Motor Power [kW]

Range:		Function:
Application dependent*	[Application dependant]	Enter the nominal motor power in kW according to the motor nameplate data. The default value corresponds to the nominal rated output of the unit. This parameter cannot be adjusted while the motor is running. This parameter is visible in LCP if par. 0-03 *Regional Settings* is *International* [0]. **NB!** Four sizes down, one size up from nominal VLT rating.

1-22 Motor Voltage

Range:		Function:
Application dependent*	[Application dependant]	Enter the nominal motor voltage according to the motor nameplate data. The default value corresponds to the nominal rated output of the unit. This parameter cannot be adjusted while the motor is running.

1-23 Motor Frequency

Range:		Function:
Application dependent*	[20 - 1000 Hz]	Min - Max motor frequency: 20 - 1000 Hz. Select the motor frequency value from the motor nameplate data. If a value different from 50 Hz or 60 Hz is selected, it is necessary to adapt the load independent settings in par. 1-50 *Motor Magnetisation at Zero Speed* to par. 1-53 *Model Shift Frequency*. For 87 Hz operation with 230/400 V motors, set the nameplate data for 230 V/50 Hz. Adapt par. 4-13 *Motor Speed High Limit [RPM]* and par. 3-03 *Maximum Reference* to the 87 Hz application.

1-24 Motor Current

Range:		Function:
Application dependent*	[Application dependant]	Enter the nominal motor current value from the motor nameplate data. This data is used for calculating motor torque, motor thermal protection etc.

NB!
This parameter cannot be adjusted while the motor is running.

1-25 Motor Nominal Speed

Range:		Function:
Application dependent*	[100 - 60000 RPM]	Enter the nominal motor speed value from the motor nameplate data. This data is used for calculating automatic motor compensations.

NB!
This parameter cannot be adjusted while the motor is running.

5-12 Terminal 27 Digital Input

Option:	Function:
	Select the function from the available digital input range.

No operation	[0]
Reset	[1]
Coast inverse	[2]
Coast and reset inverse	[3]
Quick stop inverse	[4]
DC-brake inverse	[5]
Stop inverse	[6]
Start	[8]
Latched start	[9]
Reversing	[10]
Start reversing	[11]
Enable start forward	[12]
Enable start reverse	[13]
Jog	[14]
Preset ref bit 0	[16]
Preset ref bit 1	[17]
Preset ref bit 2	[18]
Freeze reference	[19]
Freeze output	[20]
Speed up	[21]
Speed down	[22]
Set-up select bit 0	[23]
Set-up select bit 1	[24]
Catch up	[28]
Slow down	[29]
Pulse input	[32]
Ramp bit 0	[34]
Ramp bit 1	[35]
Mains failure inverse	[36]
DigiPot Increase	[55]
DigiPot Decrease	[56]
DigiPot Clear	[57]
Reset Counter A	[62]
Reset Counter B	[65]

1-29 Automatic Motor Adaptation (AMA)

Option:		Function:
		The AMA function optimizes dynamic motor performance by automatically optimizing the advanced motor parameters (par. 1-30 to par. 1-35) at motor standstill. Activate the AMA function by pressing [Hand on] after selecting [1] or [2]. See also the section *Automatic Motor Adaptation*. After a normal sequence, the display will read: "Press [OK] to finish AMA". After pressing the [OK] key the frequency converter is ready for operation. This parameter cannot be adjusted while the motor is running.
[0] *	OFF	
[1]	Enable complete AMA	Performs AMA of the stator resistance R_S, the rotor resistance R_r, the stator leakage reactance X_1, the rotor leakage reactance X_2 and the main reactance X_h. **FC 301:** The complete AMA does not include X_h measurement for FC 301. Instead, the X_h value is determined from the motor database. Par. 1-35 may be adjusted to obtain optimal start performance.
[2]	Enable reduced AMA	Performs a reduced AMA of the stator resistance R_s in the system only. Select this option if an LC filter is used between the drive and the motor.

Note:

- For the best adaptation of the frequency converter, run AMA on a cold motor.
- AMA cannot be performed while the motor is running.
- AMA cannot be performed on permanent magnet motors.



NB!
It is important to set motor par. 1-2* correctly, since these form part of the AMA algorithm. An AMA must be performed to achieve optimum dynamic motor performance. It may take up to 10 min, depending on the power rating of the motor.



NB!
Avoid generating external torque during AMA.



NB!
If one of the settings in par. 1-2* is changed, par. 1-30 to par. 1-39, the advanced motor parameters, will return to default setting.

3-02 Minimum Reference

Range:		Function:
Application dependent*	[Application dependant]	Enter the Minimum Reference. The Minimum Reference is the lowest value obtainable by summing all references. Minimum Reference is active only when par. 3-00 *Reference Range* is set to *Min.- Max.* [0]. The Minimum Reference unit matches: • The choice of configuration in par. 1-00 *Configuration Mode Configuration Mode*: for *Speed closed loop* [1], RPM; for *Torque* [2], Nm. • The unit selected in par. 3-01 *Reference/Feedback Unit*.

3-03 Maximum Reference

Range:		Function:
Application dependent*	[Application dependant]	Enter the Maximum Reference. The Maximum Reference is the highest value obtainable by summing all references. **The Maximum Reference unit matches:** • The choice of configuration in par. 1-00 *Configuration Mode*: for *Speed closed loop* [1], RPM; for *Torque* [2], Nm. • The unit selected in par. 3-00 *Reference Range*.

3-41 Ramp 1 Ramp up Time

Range:		Function:
Application dependent*	[Application dependant]	Enter the ramp-up time, i.e. the acceleration time from 0 RPM to the synchronous motor speed n_S. Choose a ramp-up time such that the output current does not exceed the current limit in par. 4-18 *Current Limit* during ramping. The value 0.00 corresponds to 0.01 sec. in speed mode. See ramp-down time in par. 3-42 *Ramp 1 Ramp Down Time*. $Par.\ 3-41 = \frac{t_{acc}[s] \times n_s[RPM]}{ref[RPM]}$

3-42 Ramp 1 Ramp Down Time

Range:		Function:
Application dependent*	[Application dependant]	Enter the ramp-down time, i.e. the deceleration time from the synchronous motor speed n_s to 0 RPM. Choose a ramp-down time such that no over-voltage arises in the inverter due to regenerative operation of the motor, and such that the generated current does not exceed the current limit set in par. 4-18 *Current Limit*. The value 0.00 corresponds to 0.01 s in speed mode. See ramp-up time in par. 3-41 *Ramp 1 Ramp up Time*. $Par.\ 3-42 = \frac{t_{dec}[s] \times n_s[RPM]}{ref[RPM]}$

6.1.2 Basic Setup Parameters

0-02 Motor Speed Unit

Option:		Function:
		This parameter cannot be adjusted while the motor is running. The display showing depends on settings in par. 0-02 *Motor Speed Unit* and par. 0-03 *Regional Settings*. The default setting of par. 0-02 *Motor Speed Unit* and par. 0-03 *Regional Settings* depends on which region of the world the frequency converter is supplied to, but can be re-programmed as required. **NB!** Changing the *Motor Speed Unit* will reset certain parameters to their initial value. It is recommended to select the motor speed unit first, before modifying other parameters.
[0]	RPM	Selects display of motor speed variables and parameters (i.e. references, feedbacks and limits) in terms of motor speed (RPM).
[1] *	Hz	Selects display of motor speed variables and parameters (i.e. references, feedbacks and limits) in terms of output frequency to the motor (Hz).

0-50 LCP Copy

Option:		Function:
[0] *	No copy	
[1]	All to LCP	Copies all parameters in all set-ups from the frequency converter memory to the LCP memory.
[2]	All from LCP	Copies all parameters in all set-ups from the LCP memory to the frequency converter memory.
[3]	Size indep. from LCP	Copy only the parameters that are independent of the motor size. The latter selection can be used to programme several frequency converters with the same function without disturbing motor data.
[4]	File from MCO to LCP	
[5]	File from LCP to MCO	
[6]	Data from DYN to LCP	
[7]	Data from LCP to DYN	

This parameter cannot be adjusted while the motor is running.

1-03 Torque Characteristics

Option:		Function:
		Select the torque characteristic required. VT and AEO are both energy saving operations.
[0] *	Constant torque	Motor shaft output provides constant torque under variable speed control.
[1]	Variable torque	Motor shaft output provides variable torque under variable speed control. Set the variable torque level in par. 14-40 *VT Level*.
[2]	Auto Energy Optim.	Automatically optimises energy consumption by minimising magnetisation and frequency via par. 14-41 *AEO Minimum Magnetisation* and par. 14-42 *Minimum AEO Frequency*.
[5]	Constant Power	The function provide a constant power in field weakening area. Follows the formula: $P_{constant} = \frac{Torque \ x \ RPM}{9550}$ This selection maybe unavailable depending on drive configuration.

This parameter cannot be adjusted while the motor is running.

1-04 Overload Mode

Option:		Function:
[0] *	High torque	Allows up to 160% over torque.
[1]	Normal torque	For oversized motor - allows up to 110% over torque.

This parameter cannot be adjusted while the motor is running.

1-90 Motor Thermal Protection

Option:		Function:
		The frequency converter determines the motor temperature for motor protection in two different ways: • Via a thermistor sensor connected to one of the analog or digital inputs (par. 1-93 *Thermistor Source*). • Via calculation (ETR = Electronic Terminal Relay) of the thermal load, based on the actual load and time. The calculated thermal load is compared with the rated motor current $I_{M,N}$ and the rated motor frequency $f_{M,N}$. The calculations estimate the need for a lower load at lower speed due to less cooling from the fan incorporated in the motor.
[0] *	No protection	Continuously overloaded motor, when no warning or trip of the frequency converter is required.
[1]	Thermistor warning	Activates a warning when the connected thermistor or KTY-sensor in the motor reacts in the event of motor over-temperature.
[2]	Thermistor trip	Stops (trips) frequency converter when connected thermistor in motor reacts in the event of motor over-temperature. The thermistor cut-out value must be > 3 kΩ. Integrate a thermistor (PTC sensor) in the motor for winding protection.
[3]	ETR warning 1	Please see detailed description below
[4]	ETR trip 1	
[5]	ETR warning 2	
[6]	ETR trip 2	
[7]	ETR warning 3	
[8]	ETR trip 3	
[9]	ETR warning 4	
[10]	ETR trip 4	

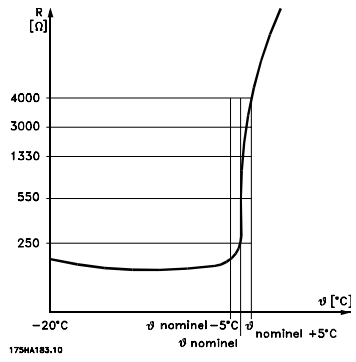

Motor protection can be implemented using a range of techniques: PTC or KTY sensor (see also section *KTY Sensor Connection*) in motor windings; mechanical thermal switch (Klixon type); or Electronic Thermal Relay (ETR).

Using a digital input and 24 V as power supply:
Example: The frequency converter trips when the motor temperature is too high

Parameter set-up:

Set par. 1-90 *Motor Thermal Protection* to *Thermistor Trip* [2]

Set par. 1-93 *Thermistor Source* to *Digital Input* [6]

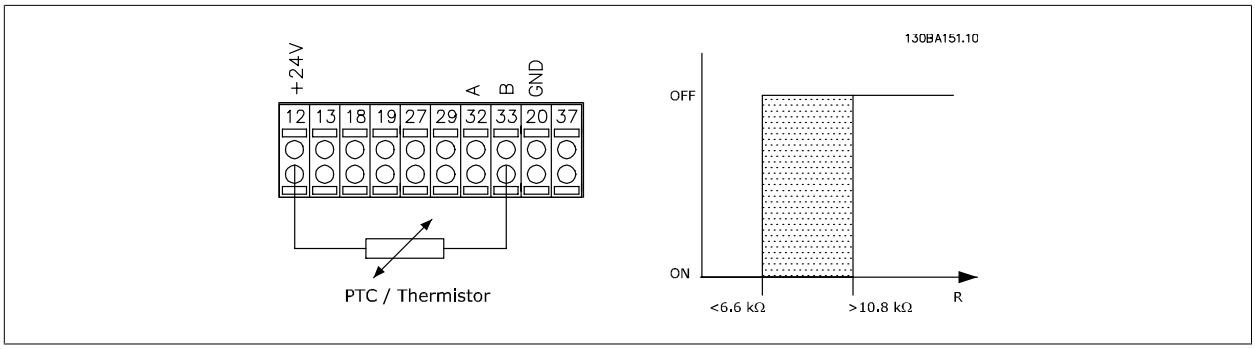

Using a digital input and 10 V as power supply:

Example: The frequency converter trips when the motor temperature is too high.

Parameter set-up:

Set par. 1-90 *Motor Thermal Protection* to *Thermistor Trip* [2]

Set par. 1-93 *Thermistor Source* to *Digital Input* [6]

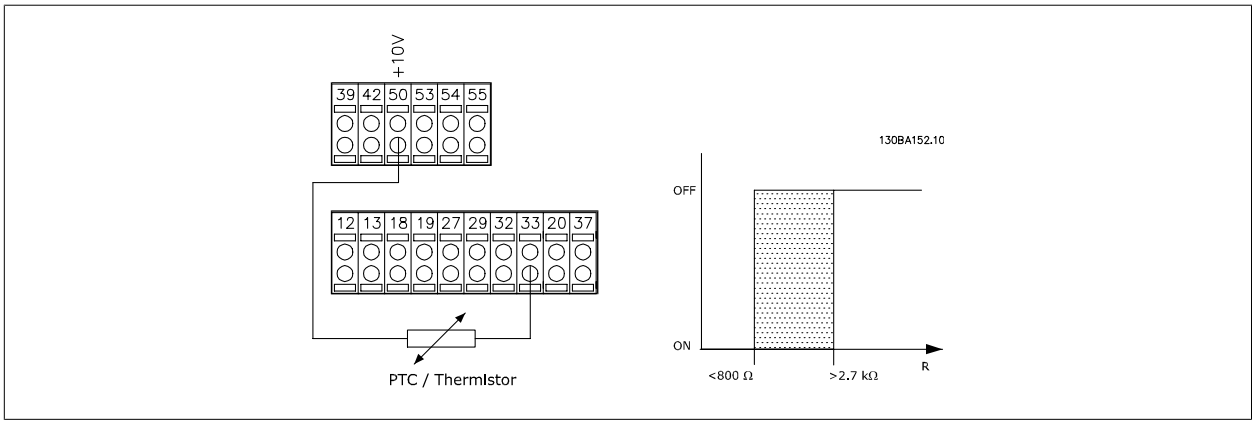

Using an analog input and 10 V as power supply:

Example: The frequency converter trips when the motor temperature is too high.

Parameter set-up:

Set par. 1-90 *Motor Thermal Protection* to *Thermistor Trip* [2]

Set par. 1-93 *Thermistor Source* to *Analog Input 54* [2]

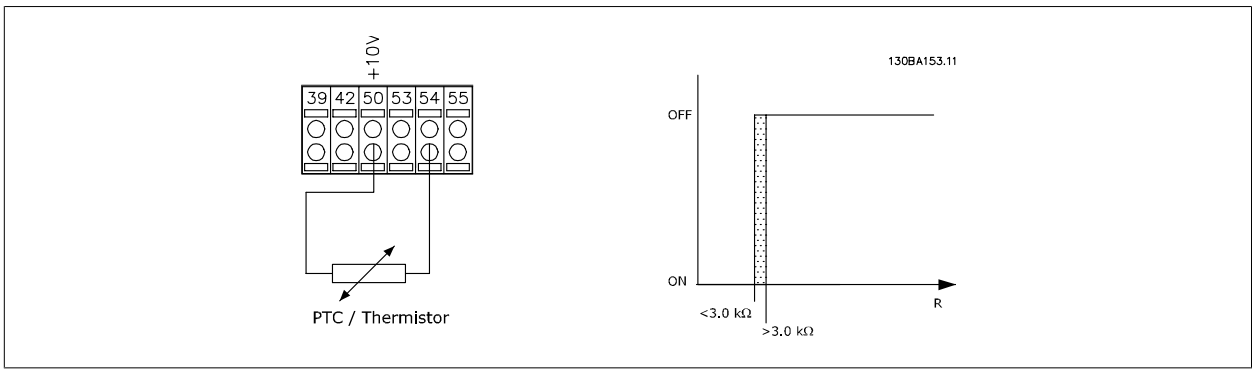

Input Digital/analog	Supply Voltage Volt	Threshold Cut-out Values
Digital	24 V	< 6.6 kΩ - > 10.8 kΩ
Digital	10 V	< 800Ω - > 2.7 kΩ
Analog	10 V	< 3.0 kΩ - > 3.0 kΩ

NB!
Check that the chosen supply voltage follows the specification of the used thermistor element.

Select *ETR Warning 1-4*, to activate a warning on the display when the motor is overloaded.
Select *ETR Trip 1-4* to trip the frequency converter when the motor is overloaded.
Programme a warning signal via one of the digital outputs. The signal appears in the event of a warning and if the frequency converter trips (thermal warning).
ETR (Electronic Terminal Relay) functions 1-4 will calculate the load when the set-up where they were selected is active. For example ETR starts calculating when set-up 3 is selected. For the North American market: The ETR functions provide class 20 motor overload protection in accordance with NEC.

6

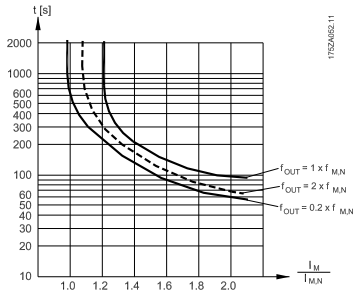

1-93 Thermistor Source

Option:		Function:
		Select the input to which the thermistor (PTC sensor) should be connected. An analog input option [1] or [2] cannot be selected if the analog input is already in use as a reference source (selected in par. 3-15 *Reference 1 Source*, par. 3-16 *Reference 2 Source* or par. 3-17 *Reference 3 Source*). When using MCB112, choice [0] *None* must always be selected.
[0] *	None	
[1]	Analog input 53	
[2]	Analog input 54	
[3]	Digital input 18	
[4]	Digital input 19	
[5]	Digital input 32	
[6]	Digital input 33	

NB!
This parameter cannot be adjusted while the motor is running.

NB!
Digital input should be set to [0] *PNP - Active at 24V* in par. 5-00.

2-10 Brake Function

Option:		Function:
[0] *	Off	No brake resistor is installed.
[1]	Resistor brake	A brake resistor is incorporated in the system, for dissipation of surplus brake energy as heat. Connecting a brake resistor allows a higher DC link voltage during braking (generating operation). The Resistor brake function is only active in frequency converters with an integral dynamic brake.
[2]	AC brake	Is selected to improve braking without using a brake resistor. This parameter controls an overmagnetization of the motor when running with a generatoric load. This function can improve the OVC-function. Increasing the electrical losses in the motor allows the OVC function to increase the braking torque without exceeding the over voltage limit. Please note that AC brake is not as effective as dynamic breaking with resistor. AC brake is for VVC+ and flux mode in both open and closed loop.

2-11 Brake Resistor (ohm)

Range:		Function:
Application dependent*	[Application dependant]	Set the brake resistor value in Ohms. This value is used for monitoring the power to the brake resistor in par. 2-13 *Brake Power Monitoring*. This parameter is only active in frequency converters with an integral dynamic brake. Use this parameter for values without decimals. For a selection with two decimals, use par. 30-81 *Brake Resistor (ohm)*.

2-12 Brake Power Limit (kW)

Range:		Function:
Application dependent*	[Application dependant]	Set the monitoring limit of the brake power transmitted to the resistor. The monitoring limit is a product of the maximum duty cycle (120 sec.) and the maximum power of the brake resistor at that duty cycle. See the formula below.

For 200 - 240 V units:	$P_{resistor} = \frac{390^2 \times dutytime}{R \times 120}$
For 380 - 480 V units	$P_{resistor} = \frac{778^2 \times dutytime}{R \times 120}$
For 380 - 500 V units	$P_{resistor} = \frac{810^2 \times dutytime}{R \times 120}$
For 575 - 600 V units	$P_{resistor} = \frac{943^2 \times dutytime}{R \times 120}$

This parameter is only active in frequency converters with an integral dynamic brake.

2-13 Brake Power Monitoring

Option:		Function:
		This parameter is only active in frequency converters with an integral dynamic brake. This parameter enables monitoring of the power to the brake resistor. The power is calculated on the basis of the resistance (par. 2-11 *Brake Resistor (ohm)*), the DC link voltage, and the resistor duty time.
[0] *	Off	No brake power monitoring required.
[1]	Warning	Activates a warning on the display when the power transmitted over 120 s exceeds 100% of the monitoring limit (par. 2-12 *Brake Power Limit (kW)*). The warning disappears when the transmitted power falls below 80% of the monitoring limit.
[2]	Trip	Trips frequency converter and displays an alarm when the calculated power exceeds 100% of the monitoring limit.
[3]	Warning and trip	Activates both of the above, including warning, trip and alarm.

If power monitoring is set to *Off* [0] or *Warning* [1], the brake function remains active, even if the monitoring limit is exceeded. This may lead to thermal overload of the resistor. It is also possible to generate a warning via a relay/digital outputs. The measuring accuracy of the power monitoring depends on the accuracy of the resistance of the resistor (better than ± 20%).

2-15 Brake Check		
Option:		**Function:**
		Select type of test and monitoring function to check the connection to the brake resistor, or whether a brake resistor is present, and then display a warning or an alarm in the event of a fault.
		NB! The brake resistor disconnection function is tested during power-up. However the brake IGBT test is performed when there is no braking. A warning or trip disconnects the brake function.
		The testing sequence is as follows: 1. The DC link ripple amplitude is measured for 300 ms without braking. 2. The DC link ripple amplitude is measured for 300 ms with the brake turned on. 3. If the DC link ripple amplitude while braking is lower than the DC link ripple amplitude before braking + 1 %: *Brake check has failed by returning a warning or alarm.* 4. If the DC link ripple amplitude while braking is higher than the DC link ripple amplitude before braking + 1 %: *Brake check is OK.*
[0] *	Off	Monitors brake resistor and brake IGBT for a short-circuit during operation. If a short-circuit occurs, warning 25 appears.
[1]	Warning	Monitors brake resistor and brake IGBT for a short-circuit, and runs a test for brake resistor disconnection during power-up.
[2]	Trip	Monitors for a short-circuit or disconnection of the brake resistor, or a short-circuit of the brake IGBT. If a fault occurs, the frequency converter cuts out while displaying an alarm (trip locked).
[3]	Stop and trip	Monitors for a short-circuit or disconnection of the brake resistor, or a short-circuit of the brake IGBT. If a fault occurs, the frequency converter ramps down to coast and then trips. A trip lock alarm is displayed (e.g. warning 25, 27 or 28).
[4]	AC brake	Monitors for a short-circuit or disconnection of the brake resistor, or a short-circuit of the brake IGBT. If a fault occurs, the frequency converter performs a controlled ramp-down. This option is available for FC 302 only.
[5]	Trip Lock	

NB!
Remove a warning arising in connection with *Off* [0] or *Warning* [1] by cycling the mains supply. The fault must be corrected first. For *Off* [0] or *Warning* [1], the frequency converter keeps running even if a fault is located.

This parameter is only active in frequency converters with an integral dynamic brake.

6.1.3 2-2* Mechanical Brake

Parameters for controlling operation of an electro-magnetic (mechanical) brake, typically required in hoisting applications.
To control a mechanical brake, a relay output (relay 01 or relay 02) or a programmed digital output (terminal 27 or 29) is required. Normally this output must be closed during periods when the frequency converter is unable to 'hold' the motor, e.g. due to an excessive load. Select *Mechanical Brake Control* [32] for applications with an electro-magnetic brake in par. 5-40 *Function Relay*, par. 5-30 *Terminal 27 Digital Output*, or par. 5-31 *Terminal 29 Digital Output*. When selecting *Mechanical brake control* [32], the mechanical brake is closed from start up until the output current is above the level selected in par. 2-20 *Release Brake Current*. During stop, the mechanical brake activates when the speed falls below the level specified in par. 2-21 *Activate Brake Speed [RPM]*. If the frequency converter enters an alarm condition or an over-current or over-voltage situation, the mechanical brake immediately cuts in. This is also the case during safe stop.

NB!

Protection mode and trip delay features (par. 14-25 *Trip Delay at Torque Limit* and par. 14-26 *Trip Delay at Inverter Fault*) may delay the activation of the mechanical brake in an alarm condition. These features must be disabled in hoisting applications.

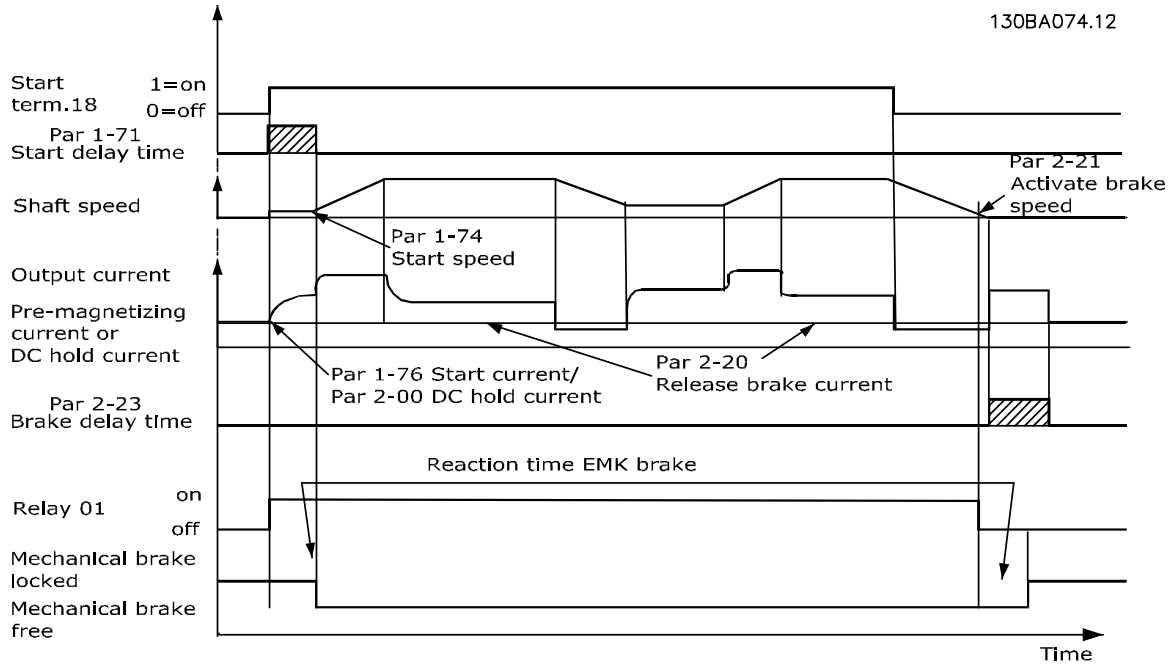

2-20 Release Brake Current

Range:		Function:
Application dependent*	[Application dependant]	Set the motor current for release of the mechanical brake, when a start condition is present. The default value is the maximum current the inverter can provide for the particular power size. The upper limit is specified in par. 16-37 *Inv. Max. Current*.

NB!

When Mechanical brake control output is selected but no mechanical brake is connected, the function will not work by default setting due to too low motor current.

2-21 Activate Brake Speed [RPM]

Range:		Function:
Application dependent*	[0 - 30000 RPM]	Set the motor speed for activation of the mechanical brake, when a stop condition is present. The upper speed limit is specified in par. 4-53 *Warning Speed High*.

2-22 Activate Brake Speed [Hz]

Range:		Function:
Application dependent*	[Application dependant]	Set the motor frequency for activation of the mechanical brake, when a stop condition is present.

2-23 Activate Brake Delay

Range:		Function:
0.0 s*	[0.0 - 5.0 s]	Enter the brake delay time of the coast after ramp-down time. The shaft is held at zero speed with full holding torque. Ensure that the mechanical brake has locked the load before the motor enters coast mode. See *Mechanical Brake Control* section in the Design Guide.

2-24 Stop Delay

Range:		Function:
0.0 s*	[0.0 - 5.0 s]	Set the time interval from the moment when the motor is stopped until the brake closes. This parameter is a part of the stopping function.

2-25 Brake Release Time

Range:		Function:
0.20 s*	[0.00 - 5.00 s]	This value defines the time it takes for the mechanical brake to open. This parameter must act as a time-out when brake feedback is activated.

2-26 Torque Ref

Range:		Function:
0.00 %*	[Application dependant]	The value defines the torque applied against the closed mechanical brake, before release

2-27 Torque Ramp Time

Range:		Function:
0.2 s*	[0.0 - 5.0 s]	The value defines the duration of the torque ramp in clockwise direction.

2-28 Gain Boost Factor

Range:		Function:
1.00*	[1.00 - 4.00]	Only active in flux closed loop. The function ensures a smooth transition from torque control mode to speed control mode when the motor takes over the load from the brake.

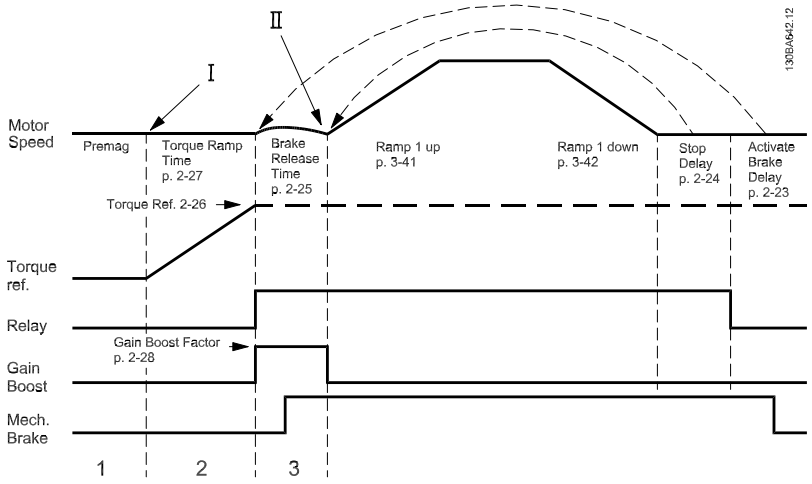

Illustration 6.1: Brake release sequence for hoist mechanical brake control

I) *Activate brake delay*: The frequency converter starts again from the *mechanical brake engaged* position.

II) *Stop delay*: When the time between successive starts is shorter than the setting in par. 2-24 *Stop Delay*, the frequency converter starts without applying the mechanical brake (e.g. reversing).

3-10 Preset Reference

Array [8]

Range: 0-7

Range:		Function:
0.00 %*	[-100.00 - 100.00 %]	Enter up to eight different preset references (0-7) in this parameter, using array programming. The preset reference is stated as a percentage of the value Ref_{MAX} (par. 3-03 *Maximum Reference*) If a Ref_{MIN} different from 0 (par. 3-02 *Minimum Reference*) is programmed, the preset reference is calculated as a percentage of the full reference range, i.e. on the basis of the difference between Ref_{MAX} and Ref_{MIN}. Afterwards, the value is added to Ref_{MIN}. When using preset references, select Preset ref. bit 0 / 1 / 2 [16], [17] or [18] for the corresponding digital inputs in parameter group 5-1*.

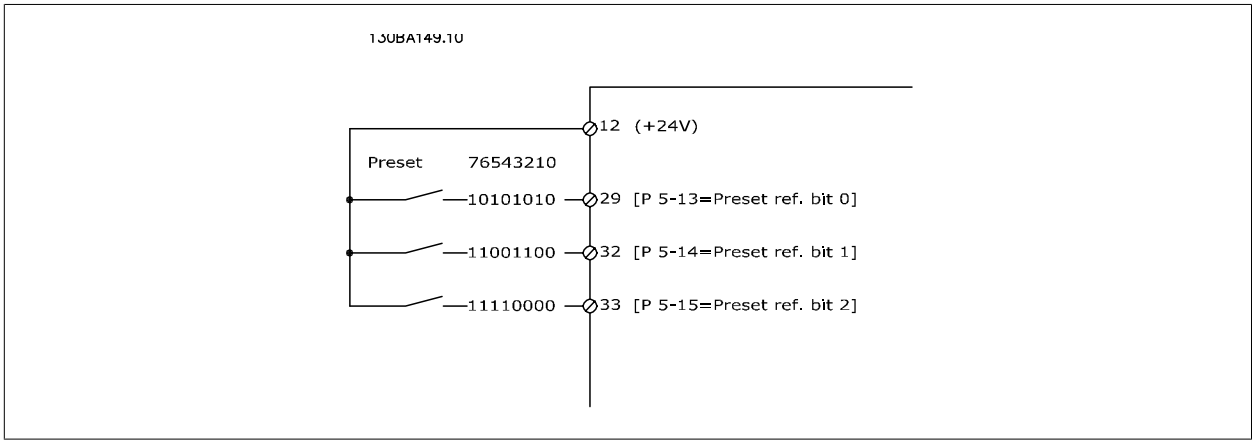

Preset ref. bit	2	1	0
Preset ref. 0	0	0	0
Preset ref. 1	0	0	1
Preset ref. 2	0	1	0
Preset ref. 3	0	1	1
Preset ref. 4	1	0	0
Preset ref. 5	1	0	1
Preset ref. 6	1	1	0
Preset ref. 7	1	1	1

3-11 Jog Speed [Hz]

Range:		Function:
Application dependent*	[Application dependant]	The jog speed is a fixed output speed at which the frequency converter is running when the jog function is activated. See also par. 3-80 *Jog Ramp Time*.

3-15 Reference Resource 1

Option:		Function:
		Select the reference input to be used for the first reference signal. par. 3-15 *Reference Resource 1*, par. 3-16 *Reference Resource 2* and par. 3-17 *Reference Resource 3* define up to three different reference signals. The sum of these reference signals defines the actual reference.
[0] *	No function	
[1] *	Analog input 53	
[2]	Analog input 54	
[7]	Frequency input 29	
[8]	Frequency input 33	
[11]	Local bus reference	

[20]	Digital pot.meter	
[21]	Analog input X30-11	(General Purpose I/O Option Module)
[22]	Analog input X30-12	(General Purpose I/O Option Module)

3-16 Reference Resource 2

Option:		Function:
		Select the reference input to be used for the second reference signal. par. 3-15 *Reference Resource 1*, par. 3-16 *Reference Resource 2* and par. 3-17 *Reference Resource 3* define up to three different reference signals. The sum of these reference signals defines the actual reference.
[0] *	No function	
[1]	Analog input 53	
[2]	Analog input 54	
[7]	Frequency input 29	
[8]	Frequency input 33	
[11]	Local bus reference	
[20] *	Digital pot.meter	
[21]	Analog input X30-11	
[22]	Analog input X30-12	

3-17 Reference Resource 3

Option:		Function:
		Select the reference input to be used for the third reference signal. par. 3-15 *Reference Resource 1*, par. 3-16 *Reference Resource 2* and par. 3-17 *Reference Resource 3* define up to three different reference signals. The sum of these reference signals defines the actual reference.
[0]	No function	
[1]	Analog input 53	
[2]	Analog input 54	
[7]	Frequency input 29	
[8]	Frequency input 33	
[11] *	Local bus reference	
[20]	Digital pot.meter	
[21]	Analog input X30-11	
[22]	Analog input X30-12	

5-00 Digital I/O Mode

Option:		Function:
		Digital inputs and programmed digital outputs are pre-programmable for operation either in PNP or NPN systems.
[0] *	PNP	Action on positive directional pulses (↕). PNP systems are pulled down to GND.
[1]	NPN	Action on negative directional pulses (↕). NPN systems are pulled up to + 24 V, internally in the frequency converter.



NB!
Once this parameter has been changed, it must be activated by performing a power cycle.

This parameter cannot be adjusted while the motor is running.

5-01 Terminal 27 Mode

Option:		Function:
[0] *	Input	Defines terminal 27 as a digital input.
[1]	Output	Defines terminal 27 as a digital output.

Please note that this parameter cannot be adjusted while the motor is running.

5-02 Terminal 29 Mode

Option:		Function:
[0] *	Input	Defines terminal 29 as a digital input.
[1]	Output	Defines terminal 29 as a digital output.

This parameter is available for FC 302 only.
This parameter cannot be adjusted while the motor is running.

6.1.4 5-1* Digital Inputs

Parameters for configuring the input functions for the input terminals.

The digital inputs are used for selecting various functions in the frequency converter. All digital inputs can be set to the following functions:

Digital input function	Select	Terminal
No operation	[0]	All *term 32, 33
Reset	[1]	All
Coast inverse	[2]	All *term 27
Coast and reset inverse	[3]	All
Quick stop inverse	[4]	All
DC-brake inverse	[5]	All
Stop inverse	[6]	All
Start	[8]	All *term 18
Latched start	[9]	All
Reversing	[10]	All *term 19
Start reversing	[11]	All
Enable start forward	[12]	All
Enable start reverse	[13]	All
Jog	[14]	All *term 29
Preset reference on	[15]	All
Preset ref bit 0	[16]	All
Preset ref bit 1	[17]	All
Preset ref bit 2	[18]	All
Freeze reference	[19]	All
Freeze output	[20]	All
Speed up	[21]	All
Speed down	[22]	All
Set-up select bit 0	[23]	All
Set-up select bit 1	[24]	All
Precise stop inverse	[26]	18, 19
Precises start, stop	[27]	18, 19
Catch up	[28]	All
Slow down	[29]	All
Counter input	[30]	29, 33
Pulse input Edge Trigged	[31]	29, 33
Pulse input Time Based	[32]	29, 33
Ramp bit 0	[34]	All
Ramp bit 1	[35]	All
Mains failure inverse	[36]	All
Latched precise start	[40]	18, 19
Latched precise stop inverse	[41]	18, 19
DigiPot Increase	[55]	All
DigiPot Decrease	[56]	All
DigiPot Clear	[57]	All
Digipot Hoist	[58]	All
Counter A (up)	[60]	29, 33
Counter A (down)	[61]	29, 33
Reset Counter A	[62]	All
Counter B (up)	[63]	29, 33
Counter B (down)	[64]	29, 33
Reset Counter B	[65]	All
Mech. Brake Feedb.	[70]	All
Mech. Brake Feedb. Inv.	[71]	All
PID Error Inv.	[72]	All
PID Reset I-part	[73]	All
PID enable	[74]	All
PTC Card 1	[80]	All

FC 300 standard terminals are 18, 19, 27, 29, 32 and 33. MCB 101 terminals are X30/2, X30/3 and X30/4.

Terminal 29 functions as an output only in FC 302.

Functions dedicated to only one digital input are stated in the associated parameter.

All digital inputs can be programmed to these functions:

[0]	No operation	No reaction to signals transmitted to the terminal.
[1]	Reset	Resets frequency converter after a TRIP/ALARM. Not all alarms can be reset.
[2]	Coast inverse	(Default Digital input 27): Coasting stop, inverted input (NC). The frequency converter leaves the motor in free mode. Logic '0' => coasting stop.
[3]	Coast and reset inverse	Reset and coasting stop Inverted input (NC). Leaves motor in free mode and resets frequency converter. Logic '0' => coasting stop and reset.

[4]	Quick stop inverse	Inverted input (NC). Generates a stop in accordance with quick-stop ramp time set in par. 3-81 *Quick Stop Ramp Time*. When motor stops, the shaft is in free mode. Logic '0' => Quick-stop.
[5]	DC-brake inverse	Inverted input for DC braking (NC). Stops motor by energizing it with a DC current for a certain time period. See par. 2-01 *DC Brake Current* to par. 2-03 *DC Brake Cut In Speed [RPM]*. The function is only active when the value in par. 2-02 *DC Braking Time* is different from 0. Logic '0' => DC braking.
[6]	Stop inverse	Stop Inverted function. Generates a stop function when the selected terminal goes from logical level '1' to '0'. The stop is performed according to the selected ramp time (par. 3-42 *Ramp 1 Ramp Down Time*, par. 3-52 *Ramp 2 Ramp down Time*, par. 3-62 *Ramp 3 Ramp down Time*, par. 3-72 *Ramp 4 Ramp Down Time*).
[8]	Start	(Default Digital input 18): Select start for a start/stop command. Logic '1' = start, logic '0' = stop.
[9]	Latched start	The motor starts, if a pulse is applied for min. 2 ms. The motor stops when Stop inverse is activated.
[10]	Reversing	(Default Digital input 19). Change the direction of motor shaft rotation. Select Logic '1' to reverse. The reversing signal only changes the direction of rotation. It does not activate the start function. Select both directions in par. 4-10 *Motor Speed Direction*. The function is not active in process closed loop.
[11]	Start reversing	Used for start/stop and for reversing on the same wire. Signals on start are not allowed at the same time.
[12]	Enable start forward	Disengages the counterclockwise movement and allows for the clockwise direction.
[13]	Enable start reverse	Disengages the clockwise movement and allows for the counterclockwise direction.
[14]	Jog	(Default Digital input 29): Use to activate jog speed. See par. 3-11 *Jog Speed [Hz]*.
[15]	Preset reference on	Shifts between external reference and preset reference. It is assumed that *External/preset* [1] has been selected in par. 3-04 *Reference Function*. Logic '0' = external reference active; logic '1' = one of the eight preset references is active.
[16]	Preset ref bit 0	Preset ref. bit 0,1, and 2 enables a choice between one of the eight preset references according to the table below.
[17]	Preset ref bit 1	Same as Preset ref bit 0 [16].
[18]	Preset ref bit 2	Same as Preset ref bit 0 [16].

NB!
When the frequency converter is at the torque limit and has received a stop command, it may not stop by itself. To ensure that the frequency converter stops, configure a digital output to *Torque limit & stop* [27] and connect this digital output to a digital input that is configured as coast.

Preset ref. bit	2	1	0
Preset ref. 0	0	0	0
Preset ref. 1	0	0	1
Preset ref. 2	0	1	0
Preset ref. 3	0	1	1
Preset ref. 4	1	0	0
Preset ref. 5	1	0	1
Preset ref. 6	1	1	0
Preset ref. 7	1	1	1

[19]	Freeze ref	Freezes the actual reference, which is now the point of enable/condition for Speed up and Speed down to be used. If Speed up/down is used, the speed change always follows ramp 2 (par. 3-51 *Ramp 2 Ramp up Time* and par. 3-52 *Ramp 2 Ramp down Time*) in the range 0 - par. 3-03 *Maximum Reference*.
[20]	Freeze output	Freezes the actual motor frequency (Hz), which is now the point of enable/condition for Speed up and Speed down to be used. If Speed up/down is used, the speed change always follows ramp 2 (par. 3-51 *Ramp 2 Ramp up Time* and par. 3-52 *Ramp 2 Ramp down Time*) in the range 0 - par. 1-23 *Motor Frequency*.

NB!
When Freeze output is active, the frequency converter cannot be stopped via a low 'start [8]' signal. Stop the frequency converter via a terminal programmed for Coasting inverse [2] or Coast and reset, inverse.

[21]	Speed up	Select Speed up and Speed down if digital control of the up/down speed is desired (motor potentiometer). Activate this function by selecting either Freeze reference or Freeze output. When Speed up/ down is activated for less than 400 msec. the resulting reference will be increased/ decreased by 0.1 %. If Speed up/ down is activated for more than 400 msec. the resulting reference will follow the setting in ramping up/ down parameter 3-x1/ 3-x2.

	Shut down	Catch up
Unchanged speed	0	0
Reduced by %-value	1	0
Increased by %-value	0	1
Reduced by %-value	1	1

6

[22]	Speed down	Same as Speed up [21].
[23]	Set-up select bit 0	Select Set-up select bit 0 or Select Set-up select bit 1 to select one of the four set-ups. Set par. 0-10 *Active Set-up* to Multi Set-up.
[24]	Set-up select bit 1	(Default Digital input 32): Same as Set-up select bit 0 [23].
[26]	Precise stop inv.	Prolongs stop signal to give a precise stop independent of speed. Sends an inverted stop signal when the precise stop function is activated in par. 1-83 *Precise Stop Function*. Precise stop inverse function is available for terminals 18 or 19.
[27]	Precise start, stop	Use when Precise ramp stop [0] is selected in par 1-83.

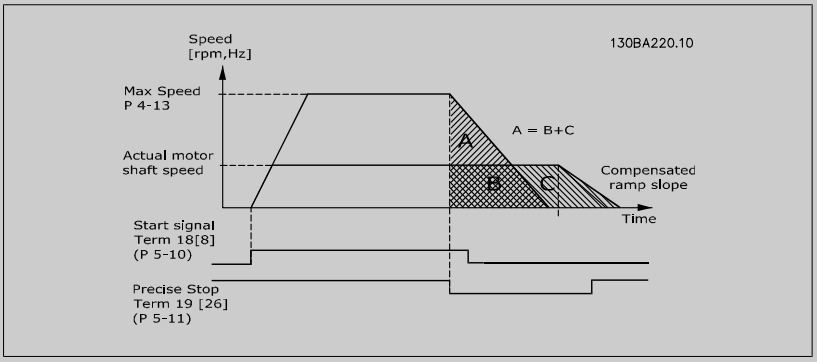

[28]	Catch up	Increases reference value by percentage (relative) set in par. 3-12 *Catch up/slow Down Value*.
[29]	Slow down	Reduces reference value by percentage (relative) set in par. 3-12 *Catch up/slow Down Value*.
[30]	Counter input	Precise stop function in par. 1-83 *Precise Stop Function* acts as Counter stop or speed compensated counter stop with or without reset. The counter value must be set in par. 1-84 *Precise Stop Counter Value*.
[31]	Pulse edge triggered	Edge triggered pulse input measures number of flanks of a pulse input per time division. This gives a higher resolution at high frequencies, but is not as precise at lower frequencies.
[32]	Pulse time based	Time based pulse input measures the duration between flanks. This gives a higher resolution at lower frequencies, but is not as precise at higher frequencies.
[34]	Ramp bit 0	Enables a choice between one of the 4 ramps available, according to the table below.
[35]	Ramp bit 1	Same as Ramp bit 0.

Preset ramp bit	1	0
Ramp 1	0	0
Ramp 2	0	1
Ramp 3	1	0
Ramp 4	1	1

[36]	Mains failure inverse	Activates par. 14-10 *Mains Failure*. Mains failure inverse is active in the Logic .0. situation.
[41]	Latched Precise Stop inverse	Sends a latched stop signal when the precise stop function is activated in par. 1-83 *Precise Stop Function*. The Latched Precise stop inverse function is available for terminals 18 or 19.
[55]	DigiPot Increase	INCREASE signal to the Digital Potentiometer function described in par. group 3-9*
[56]	DigiPot Decrease	DECREASE signal to the Digital Potentiometer function described in par. group 3-9*
[57]	DigiPot Clear	Clears the Digital Potentiometer reference described in par. group 3-9*
[60]	Counter A	(Terminal 29 or 33 only) Input for increment counting in the SLC counter.
[61]	Counter A	(Terminal 29 or 33 only) Input for decrement counting in the SLC counter.
[62]	Reset Counter A	Input for reset of counter A.
[63]	Counter B	(Terminal 29 or 33 only) Input for increment counting in the SLC counter.
[64]	Counter B	(Terminal 29 or 33 only) Input for decrement counting in the SLC counter.
[65]	Reset Counter B	Input for reset of counter B.
[70]	Mech. Brake Feedback	Brake feedback for hoisting applications: Set par 1-01 to [3] *flux w/ motor feedback*; set par 1-72 to [6] *Hoist mech brake Ref.*
[71]	Mech. Brake Feedback inv.	Inverted brake feedback for hoisting applications
[72]	PID error inverse	When enabled, it inverts the resulting error from the process PID controller. Available only if "Configuration Mode" is set to "Surface Winder", "Extended PID Speed OL" or "Extended PID Speed CL".
[73]	PID reset I-part	When enabled, resets the I-part of the Process PID controller. Equivalent to par. 7-40. Available only if "Configuration Mode" is set to "Surface Winder", "Extended PID Speed OL" or "Extended PID Speed CL".
[74]	PID enable	When enabled, enables the extended process PID controller. Equivalent to par. 7-50. Available only if "Configuration Mode" is set "Extended PID Speed OL" or "Extended PID Speed CL".
[80]	PTC Card 1	All Digital Inputs can be set to PTC Card 1 [80]. However, only one Digital Input must be set to this choice.

6.1.5 5-3* Digital Outputs

Parameters for configuring the output functions for the output terminals. The 2 solid-state digital outputs are common for terminals 27 and 29. Set the I/O function for terminal 27 in par. 5-01 *Terminal 27 Mode*, and set the I/O function for terminal 29 in par. 5-02 *Terminal 29 Mode*. These parameters cannot be adjusted while the motor is running.

[0]	No operation	*Default for all digital outputs and relay outputs*
[1]	Control ready	The control card is ready. E.g.: Feedback from a drive where the control is supplied by an external 24 V (MCB107) and the main power to drive is not detected.
[2]	Drive ready	The frequency converter is ready for operation and applies a supply signal on the control board.
[3]	Drive ready / remote control	The frequency converter is ready for operation and is in Auto On mode.
[4]	Enable / no warning	Ready for operation. No start or stop command is been given (start/disable). No warnings are active.
[5]	VLT running	Motor is running and shaft torque present.
[6]	Running / no warning	Output speed is higher than the speed set in par. 1-81 *Min Speed for Function at Stop [RPM]*. The motor is running and there are no warnings.
[7]	Run in range / no warning	Motor is running within the programmed current and speed ranges set in par. 4-50 *Warning Current Low* to par. 4-53 *Warning Speed High*. There are no warnings.
[8]	Run on reference / no warning	Motor runs at reference speed. No warnings.
[9]	Alarm	An alarm activates the output. There are no warnings.
[10]	Alarm or warning	An alarm or a warning activates the output.
[11]	At torque limit	The torque limit set in par. 4-16 *Torque Limit Motor Mode* or par. 4-17 has been exceeded.
[12]	Out of current range	The motor current is outside the range set in par. 4-18 *Current Limit*.
[13]	Below current, low	Motor current is lower than set in par. 4-50 *Warning Current Low*.
[14]	Above current, high	Motor current is higher than set in par. 4-51 *Warning Current High*.

[15]	Out of range	Output frequency is outside the frequency range set in par. 4-50 *Warning Current Low* and par. 4-51 *Warning Current High*.
[16]	Below speed, low	Output speed is lower than the setting in par. 4-52 *Warning Speed Low*.
[17]	Above speed, high	Output speed is higher than the setting in par. 4-53 *Warning Speed High*.
[18]	Out of feedback range	Feedback is outside the range set in par. 4-56 *Warning Feedback Low* and par. 4-57 *Warning Feedback High*.
[19]	Below feedback low	Feedback is below the limit set in par. 4-56 *Warning Feedback Low*.
[20]	Above feedback high	Feedback is above the limit set in par. 4-57 *Warning Feedback High*.
[21]	Thermal warning	The thermal warning turns on when the temperature exceeds the limit in the motor, the frequency converter, the brake resistor, or the thermistor.
[22]	Ready, no thermal warning	Frequency converter is ready for operation and there is no over-temperature warning.
[23]	Remote, ready, no thermal warning	Frequency converter is ready for operation and is in Auto On mode. There is no over-temperature warning.
[24]	Ready, no over-/ under voltage	Frequency converter is ready for operation and the mains voltage is within the specified voltage range (see *General Specifications* section in the Designn Guide).
[25]	Reverse	*Reversing. Logic '1'* when CW rotation of the motor. Logic '0' when CCW rotation of the motor. If the motor is not rotating the output will follow the reference.
[26]	Bus OK	Active communication (no time-out) via the serial communication port.
[27]	Torque limit and stop	Use in performing a coasting stop and in torque limit condition. If the frequency converter has received a stop signal and is at the torque limit, the signal is Logic '0'.
[28]	Brake, no brake warning	Brake is active and there are no warnings.
[29]	Brake ready, no fault	Brake is ready for operation and there are no faults.
[30]	Brake fault (IGBT)	Output is Logic '1' when the brake IGBT is short-circuited. Use this function to protect the frequency converter if there is a fault on the brake modules. Use the output/relay to cut out the main voltage from the frequency converter.
[31]	Relay 123	Relay is activated when Control Word [0] is selected in parameter group 8-**.
[32]	Mechanical brake control	Enables control of an external mechanical brake, see description in the section *Control of Mechanical Brake*, and par. group 2-2*
[33]	Safe stop activated (FC 302 only)	Indicates that the safe stop on terminal 37 has been activated.
[40]	Out of ref range	Active when the actual speed is outside settings in par 4-52 to 4-55.
[41]	Below reference low	Active when actual speed is below speed reference setting.
[42]	Above reference high	Active when actual speed is above speed reference setting
[43]	Extended PID Limit	
[45]	Bus Ctrl	Controls output via bus. The state of the output is set in par. 5-90 *Digital & Relay Bus Control*. The output state is retained in the event of bus time-out.
[46]	Bus Ctrl On at timeout	Controls output via bus. The state of the output is set in par. 5-90 *Digital & Relay Bus Control*. In the event of bus time-out the output state is set high (On).
[47]	Bus Ctrl Off at timeout	Controls output via bus. The state of the output is set in par. 5-90 *Digital & Relay Bus Control*. In the event of bus time-out the output state is set low (Off).
[51]	MCO controlled	Active when a MCO 302 or MCO 305 is connected. The output is controlled from option.
[55]	Pulse output	
[60]	Comparator 0	See par. group 13-1*. If Comparator 0 is evaluated as TRUE, the output will go high. Otherwise, it will be low.
[61]	Comparator 1	See par. group 13-1*. If Comparator 1 is evaluated as TRUE, the output will go high. Otherwise, it will be low.
[62]	Comparator 2	See par. group 13-1*. If Comparator 2 is evaluated as TRUE, the output will go high. Otherwise, it will be low.
[63]	Comparator 3	See par. group 13-1*. If Comparator 3 is evaluated as TRUE, the output will go high. Otherwise, it will be low.

[64]	Comparator 4	See par. group 13-1*. If Comparator 4 is evaluated as TRUE, the output will go high. Otherwise, it will be low.
[65]	Comparator 5	See par. group 13-1*. If Comparator 5 is evaluated as TRUE, the output will go high. Otherwise, it will be low.
[70]	Logic Rule 0	See par. group 13-4*. If Logic Rule 0 is evaluated as TRUE, the output will go high. Otherwise, it will be low.
[71]	Logic Rule 1	See par. group 13-4*. If Logic Rule 1 is evaluated as TRUE, the output will go high. Otherwise, it will be low.
[72]	Logic Rule 2	See par. group 13-4*. If Logic Rule 2 is evaluated as TRUE, the output will go high. Otherwise, it will be low.
[73]	Logic Rule 3	See par. group 13-4*. If Logic Rule 3 is evaluated as TRUE, the output will go high. Otherwise, it will be low.
[74]	Logic Rule 4	See par. group 13-4*. If Logic Rule 4 is evaluated as TRUE, the output will go high. Otherwise, it will be low.
[75]	Logic Rule 5	See par. group 13-4*. If Logic Rule 5 is evaluated as TRUE, the output will go high. Otherwise, it will be low.
[80]	SL Digital Output A	See par. 13-52 *SL Controller Action*. The output will go high whenever the Smart Logic Action [38] *Set dig. out. A high* is executed. The output will go low whenever the Smart Logic Action [32] Set dig. out. A low is executed.
[81]	SL Digital Output B	See par. 13-52 *SL Controller Action*. The input will go high whenever the Smart Logic Action [39] *Set dig. out. A high* is executed. The input will go low whenever the Smart Logic Action [33] *Set dig. out. A low* is executed.
[82]	SL Digital Output C	See par. 13-52 *SL Controller Action*. The input will go high whenever the Smart Logic Action [40] *Set dig. out. A high* is executed. The input will go low whenever the Smart Logic Action [34] *Set dig. out. A low* is executed.
[83]	SL Digital Output D	See par. 13-52 *SL Controller Action*. The input will go high whenever the Smart Logic Action [41] *Set dig. out. A* high is executed. The input will go low whenever the Smart Logic Action [35] *Set dig. out. A low* is executed.
[84]	SL Digital Output E	See par. 13-52 *SL Controller Action*. The input will go high whenever the Smart Logic Action [42] *Set dig. out. A high* is executed. The input will go low whenever the Smart Logic Action [36] *Set dig. out. A low* is executed.
[85]	SL Digital Output F	See par. 13-52 *SL Controller Action*. The input will go high whenever the Smart Logic Action [43] *Set dig. out. A high* is executed. The input will go low whenever the Smart Logic Action [37] *Set dig. out. A low* is executed.
[120]	Local reference active	Output is high when par. 3-13 *Reference Site* = [2] Local or when par. 3-13 *Reference Site* = [0] *Linked to hand auto* at the same time as the LCP is in Hand on mode.

Reference site set in par. 3-13	Local reference active [120]	Remote reference active [121]
Reference site: Local par. 3-13 [2]	1	0
Reference site: Remote par. 3-13 [1]	0	1
Reference site: Linked to Hand/ Auto		
Hand	1	0
Hand -> off	1	0
Auto -> off	0	0
Auto	0	1

[121]	Remote reference active	Output is high when par. 3-13 *Reference Site = Remote* [1] or *Linked to hand/auto* [0] while the LCP is in [Auto on] mode. See above.
[122]	No alarm	Output is high when no alarm is present.
[123]	Start command active	Output is high when there is an active Start command (i.e. via digital input bus connection or [Hand on] or [Auto on]), and no Stop or Start command is active.

[124]	Running reverse	Output is high when the frequency converter is running counter clockwise (the logical product of the status bits 'running' AND 'reverse').
[125]	Drive in hand mode	Output is high when the frequency converter is in Hand on mode (as indicated by the LED light above [Hand on]).
[126]	Drive in auto mode	Output is high when the frequency converter is in Hand on mode (as indicated by the LED light above [Auto on]).

5-40 Function Relay

Array [9]
(Relay 1 [0], Relay 2 [1], Relay 3 [2] (MCB 113), Relay 4 [3] (MCB 113), Relay 5 [4] (MCB 113), Relay 6 [5] (MCB 113), Relay 7 [6] (MCB 105), Relay 8 [7] (MCB 105), Relay 9 [8] (MCB 105))

Option:		**Function:**
[0] *	No operation	All digital and relay outputs are default set to "No Operation".
[1]	Control ready	The control card is ready. E.g.: Feedback from a drive where the control is supplied by an external 24 V (MCB107) and the main power to drive is not detected.
[2]	Drive ready	Drive is ready to operate. Mains and control supplies are OK.
[3]	Drive rdy/rem ctrl	The frequency converter is ready for operation and is in Auto On mode
[4]	Enable / no warning	Ready for operation. No start or stop commands have been applied (start/disable). No warnings are active.
[5]	Running	Motor is running, and shaft torque present.
[6]	Running / no warning	Output speed is higher than the speed set in par. 1-81 Min Speed for Function at Stop [RPM]. The motor is running and no warnings.
[7]	Run in range/no warn	Motor is running within the programmed current and speed ranges set in par. 4-50 *Warning Current Low* and par. 4-53 *Warning Speed High*. No warnings.
[8]	Run on ref/no warn	Motor runs at reference speed. No warnings.
[9]	Alarm	An alarm activates the output. No warnings
[10]	Alarm or warning	An alarm or a warning activates the output.
[11]	At torque limit	The torque limit set in par. 4-16 *Torque Limit Motor Mode* or par. 4-17 *Torque Limit Generator Mode* has been exceeded.
[12]	Out of current range	The motor current is outside the range set in par. 4-18 *Current Limit*.
[13]	Below current, low	Motor current is lower than set in par. 4-50 *Warning Current Low*.
[14]	Above current, high	Motor current is higher than set in par. 4-51 *Warning Current High*.
[15]	Out of speed range	Output speed/frequency is outside the frequency range set in par. 4-52 *Warning Speed Low* and par. 4-53 *Warning Speed High*.
[16]	Below speed, low	Output speed is lower than the setting in par. 4-52 *Warning Speed Low*
[17]	Above speed, high	Output speed is higher than the setting in par. 4-53 *Warning Speed High*.
[18]	Out of feedb. range	Feedback is outside the range set in par. 4-56 *Warning Feedback Low* and par. 4-57 *Warning Feedback High*.
[19]	Below feedback, low	Feedback is below the limit set in par. 4-56 *Warning Feedback Low*.
[20]	Above feedback, high	Feedback is above the limit set in par. 4-57 *Warning Feedback High*.
[21]	Thermal warning	Thermal warning turns on when the temperature exceeds the limit either in motor, frequency converter, brake resistor, or connected thermistor.
[22]	Ready,no thermal W	Frequency converter is ready for operation and there is no over-temperature warning.
[23]	Remote,ready,no TW	Frequency converter is ready for operation and is in Auto On mode. There is no over-temperature warning.

[24]	Ready, Voltage OK	Frequency converter is ready for operation and the mains voltage is within the specified voltage range (see General Specifications section in Design Guide).
[25]	Reverse	Logic '1' when CW rotation of the motor. Logic '0' when CCW rotation of the motor. If the motor is not rotating the output will follow the reference.
[26]	Bus OK	Active communication (no time-out) via the serial communication port.
[27]	Torque limit & stop	Use in performing a coasted stop and frequency converter in torque limit condition. If the frequency converter has received a stop signal and is in torque limit, the signal is Logic '0'.
[28]	Brake, no brake war	Brake is active and there are no warnings.
[29]	Brake ready, no fault	Brake is ready for operation and there are no faults.
[30]	Brake fault (IGBT)	Output is Logic '1' when the brake IGBT is short-circuited. Use this function to protect the frequency converter if there is a fault on the brake module. Use the digital output/relay to cut out the main voltage from the frequency converter.
[31]	Relay 123	Digital output/relay is activated when Control Word [0] is selected in parameter group 8-**.
[32]	Mech brake ctrl	Selection of mechanical brake control. When selected parameters in parameter group 2.2x are active. The output must be reinforced to carry the current for the coil in the brake. Usually solved by connecting an external relay to the selected digital output.
[33]	Safe stop active	(FC 302 only) Indicates that the safe stop on terminal 37 has been activated.
[36]	Control word bit 11	Activate relay 1 by control word from fieldbus. No other functional impact in the frequency converter. Typical application: controlling auxiliary device from fieldbus. The function is valid when FC profile [0] in par 8-10 is selected.
[37]	Control word bit 12	Activate relay 2 FC 302 only) by control word from fieldbus. No other functional impact in the frequency converter. Typical application: controlling auxiliary device from fieldbus. The function is valid when FC profile [0] in par 8-10 is selected.
[38]	Motor feedback error	Failure in the speed feedback loop from motor running in closed loop. The output can eventually be used to prepare switching the drive in open loop in emergency case.
[39]	Tracking error	When the difference between calculated speed and actual speed in par 4-35 is larger than selected the digital output/relay is active.
[40]	Out of ref range	Active when the actual speed is outside settings in par 4-52 to 4-55.
[41]	Below reference, low	Active when actual speed is below speed reference setting.
[42]	Above ref, high	Active when actual speed is above speed reference setting.
[43]	Extended PID Limit	
[45]	Bus ctrl.	Controls digital output/relay via bus. The state of the output is set in par. 5-90 'Digital & Relay Bus Control'. The output state is retained in the event of bus time-out.
[46]	Bus ctrl, 1 if timeout	Controls output via bus. The state of the output is set in par. 5-90 *Digital & Relay Bus Control*. In the event of bus time-out the output state is set high (On).
[47]	Bus ctrl, 0 if timeout	Controls output via bus. The state of the output is set in par. 5-90 *Digital & Relay Bus Control*. In the event of bus time-out the output state is set low (Off).
[51]	MCO controlled	Active when a MCO 302 or MCO 305 is connected. The output is controlled from option.
[60]	Comparator 0	See par. group 13-1* (Smart Logic Control). If Comparator 0 in SLC is TRUE, the output will go high. Otherwise, it will be low.
[61]	Comparator 1	See par. group 13-1* (Smart Logic Control). If Comparator 1 in SLC is TRUE, the output will go high. Otherwise, it will be low.
[62]	Comparator 2	See par. group 13-1* (Smart Logic Control). If Comparator 2 in SLC is TRUE, the output will go high. Otherwise, it will be low.

[63]	Comparator 3	See par. group 13-1* (Smart Logic Control). If Comparator 3 in SLC is TRUE, the output will go high. Otherwise, it will be low.
[64]	Comparator 4	See par. group 13-1* (Smart Logic Control). If Comparator 4 in SLC is TRUE, the output will go high. Otherwise, it will be low.
[65]	Comparator 5	See par. group 13-1* (Smart Logic Control). If Comparator 5 in SLC is TRUE, the output will go high. Otherwise, it will be low.
[70]	Logic rule 0	See par. group 13-4*(Smart Logic Control). If Logic Rule 0 in SLC is TRUE, the output will go high. Otherwise, it will be low.
[71]	Logic rule 1	See par. group 13-4*(Smart Logic Control). If Logic Rule 1 in SLC is TRUE, the output will go high. Otherwise, it will be low.
[72]	Logic rule 2	See par. group 13-4*(Smart Logic Control). If Logic Rule 2 in SLC is TRUE, the output will go high. Otherwise, it will be low.
[73]	Logic rule 3	See par. group 13-4*(Smart Logic Control). If Logic Rule 3 in SLC is TRUE, the output will go high. Otherwise, it will be low.
[74]	Logic rule 4	See par. group 13-4*(Smart Logic Control). If Logic Rule 4 in SLC is TRUE, the output will go high. Otherwise, it will be low.
[75]	Logic rule 5	See par. group 13-4*(Smart Logic Control). If Logic Rule 5 in SLC is TRUE, the output will go high. Otherwise, it will be low.
[80]	SL digital output A	See par. 13-52 'Smart Logic Control Action'. Output A is low on Smart Logic Action [32]. Output A is high on Smart Logic Action [38].
[81]	SL digital output B	See par. 13-52 'Smart Logic Control Action'. Output B is low on Smart Logic Action [33]. Output B is high on Smart Logic Action [39].
[82]	SL digital output C	See par. 13-52 'Smart Logic Control Action'. Output C is low on Smart Logic Action [34]. Output C is high on Smart Logic Action [40].
[83]	SL digital output D	See par. 13-52 'Smart Logic Control Action'. Output D is low on Smart Logic Action [35]. Output D is high on Smart Logic Action [41]
[84]	SL digital output E	See par. 13-52 'Smart Logic Control Action'. Output E is low on Smart Logic Action [36]. Output E is high on Smart Logic Action [42].
[85]	SL digital output F	See par. 13-52 'Smart Logic Control Action'. Output F is low on Smart Logic Action [37]. Output F is high on Smart Logic Action [43].
[120]	Local ref active	Output is high when par. 3-13 Reference Site = [2] Local or when par. 3-13 Reference Site = [0] Linked to hand auto at the same time as the LCP is in Hand on mode.
[121]	Remote ref active	Output is high when par. 3-13 *Reference Site* = Remote [1] or Linked to hand/auto [0] while the LCP is in [Auto on] mode. See above.
[122]	No alarm	Output is high when no alarm is present.
[123]	Start command activ	Output is high when the Start command high (i.e. via digital input, bus connection or [Hand on] or [Auto on]), and a Stop has been last command.

Reference site set in par. 3-13	Local reference active [120]	Remote reference active [121]
Reference site: Local par. 3-13 [2]	1	0
Reference site: Remote par. 3-13 [1]	0	1
Reference site: Linked to Hand/ Auto		
Hand	1	0
Hand -> off	1	0
Auto -> off	0	0
Auto	0	1

[124]	Running reverse	Output is high when the frequency converter is running counter clockwise (the logical product of the status bits 'running' AND 'reverse').
[125]	Drive in hand mode	Output is high when the frequency converter is in Hand on mode (as indicated by the LED light above [Hand on]).
[126]	Drive in auto mode	Output is high when the frequency converter is in 'Auto' mode (as indicated by LED on above [Auto On]).

14-22 Operation Mode

Option: **Function:**

Use this parameter to specify normal operation; to perform tests; or to initialise all parameters except par. 15-03 *Power Up's*, par. 15-04 *Over Temp's* and par. 15-05 *Over Volt's*. This function is active only when the power is cycled to the frequency converter.

Select *Normal operation* [0] for normal operation of the frequency converter with the motor in the selected application.

Select *Control card test* [1] to test the analog and digital inputs and outputs and the +10 V control voltage. The test requires a test connector with internal connections. Use the following procedure for the control card test:

1. Select *Control card test* [1].
2. Disconnect the mains supply and wait for the light in the display to go out.
3. Set switches S201 (A53) and S202 (A54) = 'ON' / I.
4. Insert the test plug (see below).
5. Connect to mains supply.
6. Carry out various tests.
7. The results are displayed on the LCP and the frequency converter moves into an infinite loop.
8. Par. 14-22 *Operation Mode* is automatically set to Normal operation. Carry out a power cycle to start up in Normal operation after a control card test.

If the test is OK:

LCP read-out: Control Card OK.

Disconnect the mains supply and remove the test plug. The green LED on the Control Card will light up.

If the test fails:

LCP read-out: Control Card I/O failure.

Replace the frequency converter or Control card. The red LED on the Control Card is turned on. Test plugs (connect the following terminals to each other): 18 - 27 - 32; 19 - 29 - 33; 42 - 53 - 54

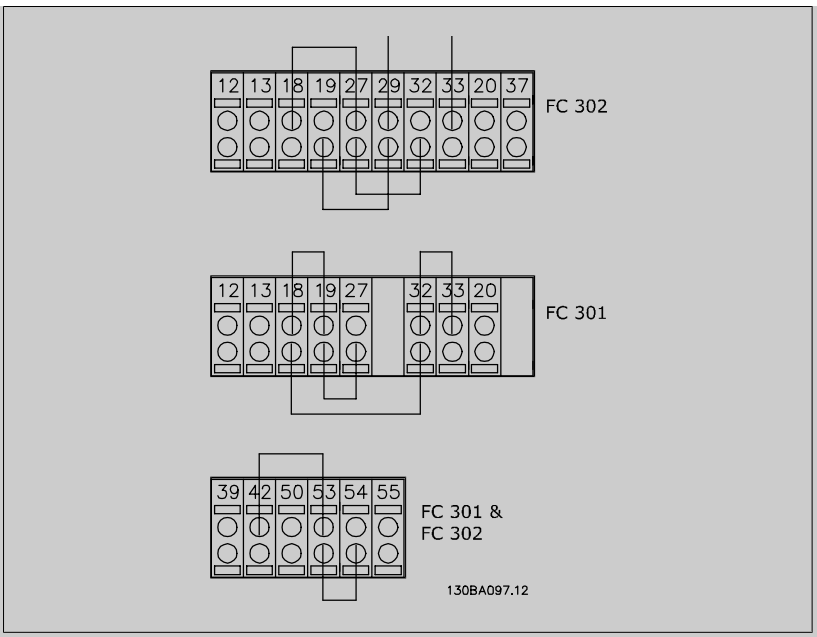

Select *Initialization* [2] to reset all parameter values to default settings, except for par. 15-03 *Power Up's*, par. 15-04 *Over Temp's*, and par. 15-05 *Over Volt's*. The frequency converter will reset during the next power-up.
Par. 14-22 *Operation Mode* will also revert to the default setting *Normal operation* [0].

[0] *	Normal operation
[1]	Control card test
[2]	Initialisation
[3]	Boot mode

14-50 RFI Filter

Option:		Function:
[0]	Off	Select *Off* [0] only if the frequency converter is fed by an isolated mains source (IT mains). In this mode, the internal RFI filter capacitors between chassis and the mains RFI filter circuit are cut-out to reduce the ground capacity currents.
[1] *	On	Select *On* [1] to ensure that the frequency converter complies with EMC standards.

15-43 Software Version

Range:		Function:
0 N/A*	[0 - 0 N/A]	View the combined SW version (or 'package version') consisting of power SW and control SW.

6.2 How to Programme the Active Filter

The factory settings for the filter part of the Low Harmonic Drive are chosen for optimal operation with a minimum of additional programming. All CT-values, as well as frequency, voltage levels and other values directly linked to the drive configuration are pre-set.

It is not recommended to change any other parameters influencing the filter operation. However, selection of read-outs and what information to be displayed on the LCP status lines can be made to fit individual preferences.

To set up the filter two steps are necessary:

- Change the nominal voltage in par. 300-10
- Make sure the filter is in auto mode (press the Auto On button on the LCP)

Overview of parameter groups for the filter part

Group	Title	Function
0-	Operation / Display	Parameters related to the fundamental functions of the filter, function of the LCP buttons and configuration of the LCP display.
5-	Digital In/Out	Parameter group for configuring the digital inputs and outputs.
8-	Communication and Options	Parameter group for configuring communications and options.
14-	Special Functions	Parameter group for configuring special functions.
15-	Unit Information	Parameter group containing active filter information such as operating data, hardware configuration and software versions.
16-	Data Readouts	Parameter group for data read-outs, e.g. actual references, voltages, control, alarm, warning and status words.
300-	AF Settings	Parameter group for setting the Active Filter. Apart from par. 300-10, *Active Filter Nominal Voltage*, it is not recommended to change the settings of this parameter group
301-	AF Readouts	Parameter group for the filter readouts.

Table 6.1: Parameter groups

A list of all parameters accessible from the filter LCP can be found in the section *Parameter Options - Filter*. A more detailed description of the active filter parameters can be found in the VLT Active Filter AAF005 Manual, *MG90VXYY*

6.2.1 Using the Low Harmonic Drive in NPN Mode

The default setting for par. 5-00, *Digital I/O Mode* is PNP mode. If NPN mode is desired, it is necessary to change the wiring in the filter part of the Low Harmonic Drive. Before changing the setting in par. 5-00 to NPN mode, the wire connected to 24V (control terminal 12 or 13) must be changed to terminal 20 (ground).

6.3 Parameter Lists - Frequency Converter

Changes during operation

"TRUE" means that the parameter can be changed while the frequency converter is in operation and "FALSE" means that the it must be stopped before a change can be made.

4-Set-up

'All set-up': the parameters can be set individually in each of the four set-ups, i.e. one single parameter can have four different data values.

'1 set-up': data value will be the same in all set-ups.

Conversion index

This number refers to a conversion figure used when writing or reading to and from the frequency converter.

Conv. index	100	67	6	5	4	3	2	1	0	-1	-2	-3	-4	-5	-6
Conv. factor	1	1/60	1000000	100000	10000	1000	100	10	1	0.1	0.01	0.001	0.0001	0.00001	0.000001

6

Data type	**Description**	**Type**
2	Integer 8	Int8
3	Integer 16	Int16
4	Integer 32	Int32
5	Unsigned 8	Uint8
6	Unsigned 16	Uint16
7	Unsigned 32	Uint32
9	Visible String	VisStr
33	Normalized value 2 bytes	N2
35	Bit sequence of 16 boolean variables	V2
54	Time difference w/o date	TimD

See the frequency converter *Design Guide* for further information about data types 33, 35 and 54.

Parameters for the frequency converter are grouped into various parameter groups for easy selection of the correct parameters for optimized operation of the frequency converter.

0-** Operation and Display parameters for basic frequency converter settings

1-** Load and Motor parameters, includes all load and motor related parameters

2-** Brake parameters

3-** References and ramping parameters, includes DigiPot function

4-** Limits Warnings, setting of limits and warning parameters

5-** Digital inputs and outputs, includes relay controls

6-** Analog inputs and outputs

7-** Controls, setting parameters for speed and process controls

8-** Communication and option parameters, setting of FC RS485 and FC USB port parameters.

9-** Profibus parameters

10-** DeviceNet and CAN Fieldbus parameters

13-** Smart Logic Control parameters

14-** Special function parameters

15-** Drive information parameters

16-** Read out parameters

17-** Encoder Option parameters

32-** MCO 305 Basic parameters

33-** MCO 305 Advanced parameters

34-** MCO Data Readout parameters

6.3.1 0-** Operation/Display

Par. No. #	Parameter description	Default value	4-set-up	FC 302 only	Change during operation	Conversion index	Type
0-0* Basic Settings							
0-01	Language	[0] English	1 set-up		TRUE	-	Uint8
0-02	Motor Speed Unit	[0] RPM	2 set-ups		FALSE	-	Uint8
0-03	Regional Settings	[0] International	2 set-ups		FALSE	-	Uint8
0-04	Operating State at Power-up (Hand)	[1] Forced stop, ref=old	All set-ups		TRUE	-	Uint8
0-09	Performance Monitor	0.0 %	All set-ups		TRUE	-1	Uint16
0-1* Set-up Operations							
0-10	Active Set-up	[1] Set-up 1	1 set-up		TRUE	-	Uint8
0-11	Edit Set-up	[1] Set-up 1	All set-ups		TRUE	-	Uint8
0-12	This Set-up Linked to	[0] Not linked	All set-ups		FALSE	-	Uint8
0-13	Readout: Linked Set-ups	0 N/A	All set-ups		FALSE	0	Uint16
0-14	Readout: Edit Set-ups / Channel	0 N/A	All set-ups		TRUE	0	Int32
0-2* LCP Display							
0-20	Display Line 1.1 Small	1617	All set-ups		TRUE	-	Uint16
0-21	Display Line 1.2 Small	1614	All set-ups		TRUE	-	Uint16
0-22	Display Line 1.3 Small	1610	All set-ups		TRUE	-	Uint16
0-23	Display Line 2 Large	1613	All set-ups		TRUE	-	Uint16
0-24	Display Line 3 Large	1602	All set-ups		TRUE	-	Uint16
0-25	My Personal Menu	SR	1 set-up		TRUE	0	Uint16
0-3* LCP Custom Readout							
0-30	Unit for User-defined Readout	[0] None	All set-ups		TRUE	-	Uint8
0-31	Min Value of User-defined Readout	0.00 CustomReadoutUnit	All set-ups		TRUE	-2	Int32
0-32	Max Value of User-defined Readout	100.00 CustomReadoutUnit	All set-ups		TRUE	-2	Int32
0-37	Display Text 1	0 N/A	1 set-up		TRUE	0	VisStr[25]
0-38	Display Text 2	0 N/A	1 set-up		TRUE	0	VisStr[25]
0-39	Display Text 3	0 N/A	1 set-up		TRUE	0	VisStr[25]
0-4* LCP Keypad							
0-40	[Hand on] Key on LCP	null	All set-ups		TRUE	-	Uint8
0-41	[Off] Key on LCP	null	All set-ups		TRUE	-	Uint8
0-42	[Auto on] Key on LCP	null	All set-ups		TRUE	-	Uint8
0-43	[Reset] Key on LCP	null	All set-ups		TRUE	-	Uint8
0-44	[Off/Reset] Key on LCP	[1] Enabled	All set-ups		TRUE	-	Uint8
0-45	[Drive Bypass] Key on LCP	[1] Enabled	All set-ups		TRUE	-	Uint8
0-5* Copy/Save							
0-50	LCP Copy	[0] No copy	All set-ups		FALSE	-	Uint8
0-51	Set-up Copy	[0] No copy	All set-ups		FALSE	-	Uint8
0-6* Password							
0-60	Main Menu Password	100 N/A	1 set-up		TRUE	0	Int16
0-61	Access to Main Menu w/o Password	[0] Full access	1 set-up		TRUE	-	Uint8
0-65	Quick Menu Password	200 N/A	1 set-up		TRUE	0	Int16
0-66	Access to Quick Menu w/o Password	[0] Full access	1 set-up		TRUE	-	Uint8
0-67	Bus Password Access	0 N/A	All set-ups		TRUE	0	Uint16

6.3.2 1-** Load/Motor

Par. No. #	Parameter description	Default value	4-set-up	FC 302 only	Change during operation	Conversion index	Type
1-0* General Settings							
1-00	Configuration Mode	null	All set-ups		TRUE	-	Uint8
1-01	Motor Control Principle	null	All set-ups		FALSE	-	Uint8
1-02	Flux Motor Feedback Source	[1] 24V encoder	All set-ups	x	FALSE	-	Uint8
1-03	Torque Characteristics	[0] Constant torque	All set-ups		TRUE	-	Uint8
1-04	Overload Mode	[0] High torque	All set-ups		FALSE	-	Uint8
1-05	Local Mode Configuration	[2] As mode par 1-00	All set-ups		TRUE	-	Uint8
1-06	Clockwise Direction	[0] Normal	All set-ups		FALSE	-	Uint8
1-1* Motor Selection							
1-10	Motor Construction	[0] Asynchron	All set-ups		FALSE	-	Uint8
1-2* Motor Data							
1-20	Motor Power [kW]	SR	All set-ups		FALSE	1	Uint32
1-21	Motor Power [HP]	SR	All set-ups		FALSE	-2	Uint32
1-22	Motor Voltage	SR	All set-ups		FALSE	0	Uint16
1-23	Motor Frequency	SR	All set-ups		FALSE	0	Uint16
1-24	Motor Current	SR	All set-ups		FALSE	-2	Uint32
1-25	Motor Nominal Speed	SR	All set-ups		FALSE	67	Uint16
1-26	Motor Cont. Rated Torque	SR	All set-ups		FALSE	-1	Uint32
1-29	Automatic Motor Adaptation (AMA)	[0] Off	All set-ups		FALSE	-	Uint8
1-3* Adv. Motor Data							
1-30	Stator Resistance (Rs)	SR	All set-ups		FALSE	-4	Uint32
1-31	Rotor Resistance (Rr)	SR	All set-ups		FALSE	-4	Uint32
1-33	Stator Leakage Reactance (X1)	SR	All set-ups		FALSE	-4	Uint32
1-34	Rotor Leakage Reactance (X2)	SR	All set-ups		FALSE	-4	Uint32
1-35	Main Reactance (Xh)	SR	All set-ups		FALSE	-4	Uint32
1-36	Iron Loss Resistance (Rfe)	SR	All set-ups		FALSE	-3	Uint32
1-37	d-axis Inductance (Ld)	SR	All set-ups	x	FALSE	-4	Int32
1-39	Motor Poles	SR	All set-ups		FALSE	0	Uint8
1-40	Back EMF at 1000 RPM	SR	All set-ups	x	FALSE	0	Uint16
1-41	Motor Angle Offset	0 N/A	All set-ups		FALSE	0	Int16
1-5* Load Indep. Setting							
1-50	Motor Magnetisation at Zero Speed	100 %	All set-ups		TRUE	0	Uint16
1-51	Min Speed Normal Magnetising [RPM]	SR	All set-ups		TRUE	67	Uint16
1-52	Min Speed Normal Magnetising [Hz]	SR	All set-ups		TRUE	-1	Uint16
1-53	Model Shift Frequency	SR	All set-ups	x	FALSE	-1	Uint16
1-54	Voltage reduction in fieldweakening	0 V	All set-ups		FALSE	0	Uint8
1-55	U/f Characteristic - U	SR	All set-ups		TRUE	-1	Uint16
1-56	U/f Characteristic - F	SR	All set-ups		TRUE	-1	Uint16
1-58	Flystart Test Pulses Current	30 %	All set-ups		FALSE	0	Uint16
1-59	Flystart Test Pulses Frequency	200 %	All set-ups		FALSE	0	Uint16
1-6* Load Depen. Setting							
1-60	Low Speed Load Compensation	100 %	All set-ups		TRUE	0	Int16
1-61	High Speed Load Compensation	100 %	All set-ups		TRUE	0	Int16
1-62	Slip Compensation	SR	All set-ups		TRUE	0	Int16
1-63	Slip Compensation Time Constant	SR	All set-ups		TRUE	-2	Uint16
1-64	Resonance Dampening	100 %	All set-ups		TRUE	0	Uint16
1-65	Resonance Dampening Time Constant	5 ms	All set-ups		TRUE	-3	Uint8
1-66	Min. Current at Low Speed	100 %	All set-ups	x	TRUE	0	Uint8
1-67	Load Type	[0] Passive load	All set-ups	x	TRUE	-	Uint8
1-68	Minimum Inertia	SR	All set-ups	x	FALSE	-4	Uint32
1-69	Maximum Inertia	SR	All set-ups	x	FALSE	-4	Uint32
1-7* Start Adjustments							
1-71	Start Delay	0.0 s	All set-ups		TRUE	-1	Uint8
1-72	Start Function	[2] Coast/delay time	All set-ups		TRUE	-	Uint8
1-73	Flying Start	[0] Disabled	All set-ups		FALSE	-	Uint8
1-74	Start Speed [RPM]	SR	All set-ups		TRUE	67	Uint16
1-75	Start Speed [Hz]	SR	All set-ups		TRUE	-1	Uint16
1-76	Start Current	0.00 A	All set-ups		TRUE	-2	Uint32
1-8* Stop Adjustments							
1-80	Function at Stop	[0] Coast	All set-ups		TRUE	-	Uint8
1-81	Min Speed for Function at Stop [RPM]	SR	All set-ups		TRUE	67	Uint16
1-82	Min Speed for Function at Stop [Hz]	SR	All set-ups		TRUE	-1	Uint16
1-83	Precise Stop Function	[0] Precise ramp stop	All set-ups		FALSE	-	Uint8
1-84	Precise Stop Counter Value	100000 N/A	All set-ups		TRUE	0	Uint32
1-85	Precise Stop Speed Compensation Delay	10 ms	All set-ups		TRUE	-3	Uint8
1-9* Motor Temperature							
1-90	Motor Thermal Protection	[0] No protection	All set-ups		TRUE	-	Uint8
1-91	Motor External Fan	[0] No	All set-ups		TRUE	-	Uint16
1-93	Thermistor Resource	[0] None	All set-ups		TRUE	-	Uint8
1-95	KTY Sensor Type	[0] KTY Sensor 1	All set-ups	x	TRUE	-	Uint8
1-96	KTY Thermistor Resource	[0] None	All set-ups	x	TRUE	-	Uint8
1-97	KTY Threshold level	80 °C	1 set-up	x	TRUE	100	Int16

6.3.3 2-** Brakes

Par. No. #	Parameter description	Default value	4-set-up	FC 302 only	Change during operation	Conversion index	Type
2-0* DC-Brake							
2-00	DC Hold Current	50 %	All set-ups		TRUE	0	Uint8
2-01	DC Brake Current	50 %	All set-ups		TRUE	0	Uint16
2-02	DC Braking Time	10.0 s	All set-ups		TRUE	-1	Uint16
2-03	DC Brake Cut In Speed [RPM]	SR	All set-ups		TRUE	67	Uint16
2-04	DC Brake Cut In Speed [Hz]	SR	All set-ups		TRUE	-1	Uint16
2-05	Maximum Reference	MaxReference (P303)	All set-ups		TRUE	-3	Int32
2-1* Brake Energy Funct.							
2-10	Brake Function	null	All set-ups		TRUE	-	Uint8
2-11	Brake Resistor (ohm)	SR	All set-ups		TRUE	0	Uint16
2-12	Brake Power Limit (kW)	SR	All set-ups		TRUE	0	Uint32
2-13	Brake Power Monitoring	[0] Off	All set-ups		TRUE	-	Uint8
2-15	Brake Check	[0] Off	All set-ups		TRUE	-	Uint8
2-16	AC brake Max. Current	100.0 %	All set-ups		TRUE	-1	Uint32
2-17	Over-voltage Control	[0] Disabled	All set-ups		TRUE	-	Uint8
2-18	Brake Check Condition	[0] At Power Up	All set-ups		TRUE	-	Uint8
2-19	Over-voltage Gain	100 %	All set-ups		TRUE	0	Uint16
2-2* Mechanical Brake							
2-20	Release Brake Current	ImaxVLT (P1637)	All set-ups		TRUE	-2	Uint32
2-21	Activate Brake Speed [RPM]	SR	All set-ups		TRUE	67	Uint16
2-22	Activate Brake Speed [Hz]	SR	All set-ups		TRUE	-1	Uint16
2-23	Activate Brake Delay	0.0 s	All set-ups		TRUE	-1	Uint8
2-24	Stop Delay	0.0 s	All set-ups		TRUE	-1	Uint8
2-25	Brake Release Time	0.20 s	All set-ups		TRUE	-2	Uint16
2-26	Torque Ref	0.00 %	All set-ups		TRUE	-2	Int16
2-27	Torque Ramp Time	0.2 s	All set-ups		TRUE	-1	Uint8
2-28	Gain Boost Factor	1.00 N/A	All set-ups		TRUE	-2	Uint16

6.3.4 3-** Reference/Ramps

Par. No. #	Parameter description	Default value	4-set-up	FC 302 only	Change during operation	Conversion index	Type
3-0* Reference Limits							
3-00	Reference Range	null	All set-ups		TRUE	-	Uint8
3-01	Reference/Feedback Unit	null	All set-ups		TRUE	-	Uint8
3-02	Minimum Reference	SR	All set-ups		TRUE	-3	Int32
3-03	Maximum Reference	SR	All set-ups		TRUE	-3	Int32
3-04	Reference Function	[0] Sum	All set-ups		TRUE	-	Uint8
3-1* References							
3-10	Preset Reference	0.00 %	All set-ups		TRUE	-2	Int16
3-11	Jog Speed [Hz]	SR	All set-ups		TRUE	-1	Uint16
3-12	Catch up/slow Down Value	0.00 %	All set-ups		TRUE	-2	Int16
3-13	Reference Site	[0] Linked to Hand / Auto	All set-ups		TRUE	-	Uint8
3-14	Preset Relative Reference	0.00 %	All set-ups		TRUE	-2	Int32
3-15	Reference Resource 1	null	All set-ups		TRUE	-	Uint8
3-16	Reference Resource 2	null	All set-ups		TRUE	-	Uint8
3-17	Reference Resource 3	null	All set-ups		TRUE	-	Uint8
3-18	Relative Scaling Reference Resource	[0] No function	All set-ups		TRUE	-	Uint8
3-19	Jog Speed [RPM]	SR	All set-ups		TRUE	67	Uint16
3-4* Ramp 1							
3-40	Ramp 1 Type	[0] Linear	All set-ups		TRUE	-	Uint8
3-41	Ramp 1 Ramp up Time	SR	All set-ups		TRUE	-2	Uint32
3-42	Ramp 1 Ramp Down Time	SR	All set-ups		TRUE	-2	Uint32
3-45	Ramp 1 S-ramp Ratio at Accel. Start	50 %	All set-ups		TRUE	0	Uint8
3-46	Ramp 1 S-ramp Ratio at Accel. End	50 %	All set-ups		TRUE	0	Uint8
3-47	Ramp 1 S-ramp Ratio at Decel. Start	50 %	All set-ups		TRUE	0	Uint8
3-48	Ramp 1 S-ramp Ratio at Decel. End	50 %	All set-ups		TRUE	0	Uint8
3-5* Ramp 2							
3-50	Ramp 2 Type	[0] Linear	All set-ups		TRUE	-	Uint8
3-51	Ramp 2 Ramp up Time	SR	All set-ups		TRUE	-2	Uint32
3-52	Ramp 2 Ramp down Time	SR	All set-ups		TRUE	-2	Uint32
3-55	Ramp 2 S-ramp Ratio at Accel. Start	50 %	All set-ups		TRUE	0	Uint8
3-56	Ramp 2 S-ramp Ratio at Accel. End	50 %	All set-ups		TRUE	0	Uint8
3-57	Ramp 2 S-ramp Ratio at Decel. Start	50 %	All set-ups		TRUE	0	Uint8
3-58	Ramp 2 S-ramp Ratio at Decel. End	50 %	All set-ups		TRUE	0	Uint8
3-6* Ramp 3							
3-60	Ramp 3 Type	[0] Linear	All set-ups		TRUE	-	Uint8
3-61	Ramp 3 Ramp up Time	SR	All set-ups		TRUE	-2	Uint32
3-62	Ramp 3 Ramp down Time	SR	All set-ups		TRUE	-2	Uint32
3-65	Ramp 3 S-ramp Ratio at Accel. Start	50 %	All set-ups		TRUE	0	Uint8
3-66	Ramp 3 S-ramp Ratio at Accel. End	50 %	All set-ups		TRUE	0	Uint8
3-67	Ramp 3 S-ramp Ratio at Decel. Start	50 %	All set-ups		TRUE	0	Uint8
3-68	Ramp 3 S-ramp Ratio at Decel. End	50 %	All set-ups		TRUE	0	Uint8
3-7* Ramp 4							
3-70	Ramp 4 Type	[0] Linear	All set-ups		TRUE	-	Uint8
3-71	Ramp 4 Ramp up Time	SR	All set-ups		TRUE	-2	Uint32
3-72	Ramp 4 Ramp Down Time	SR	All set-ups		TRUE	-2	Uint32
3-75	Ramp 4 S-ramp Ratio at Accel. Start	50 %	All set-ups		TRUE	0	Uint8
3-76	Ramp 4 S-ramp Ratio at Accel. End	50 %	All set-ups		TRUE	0	Uint8
3-77	Ramp 4 S-ramp Ratio at Decel. Start	50 %	All set-ups		TRUE	0	Uint8
3-78	Ramp 4 S-ramp Ratio at Decel. End	50 %	All set-ups		TRUE	0	Uint8
3-8* Other Ramps							
3-80	Jog Ramp Time	SR	All set-ups		TRUE	-2	Uint32
3-81	Quick Stop Ramp Time	SR	2 set-ups		TRUE	-2	Uint32
3-82	Quick Stop Ramp Type	[0] Linear	All set-ups		TRUE	-	Uint8
3-83	Quick Stop S-ramp Ratio at Decel. Start	50 %	All set-ups		TRUE	0	Uint8
3-84	Quick Stop S-ramp Ratio at Decel. End	50 %	All set-ups		TRUE	0	Uint8
3-9* Digital Pot.Meter							
3-90	Step Size	0.10 %	All set-ups		TRUE	-2	Uint16
3-91	Ramp Time	1.00 s	All set-ups		TRUE	-2	Uint32
3-92	Power Restore	[0] Off	All set-ups		TRUE	-	Uint8
3-93	Maximum Limit	100 %	All set-ups		TRUE	0	Int16
3-94	Minimum Limit	-100 %	All set-ups		TRUE	0	Int16
3-95	Ramp Delay	SR	All set-ups		TRUE	-3	TimD

6.3.5 4-** Limits / Warnings

Par. No. #	Parameter description	Default value	4-set-up	FC 302 only	Change during operation	Conversion index	Type
4-1* Motor Limits							
4-10	Motor Speed Direction	null	All set-ups		FALSE	-	Uint8
4-11	Motor Speed Low Limit [RPM]	SR	All set-ups		TRUE	67	Uint16
4-12	Motor Speed Low Limit [Hz]	SR	All set-ups		TRUE	-1	Uint16
4-13	Motor Speed High Limit [RPM]	SR	All set-ups		TRUE	67	Uint16
4-14	Motor Speed High Limit [Hz]	SR	All set-ups		TRUE	-1	Uint16
4-16	Torque Limit Motor Mode	SR	All set-ups		TRUE	-1	Uint16
4-17	Torque Limit Generator Mode	100.0 %	All set-ups		TRUE	-1	Uint16
4-18	Current Limit	SR	All set-ups		TRUE	-1	Uint32
4-19	Max Output Frequency	132.0 Hz	All set-ups		FALSE	-1	Uint16
4-2* Limit Factors							
4-20	Torque Limit Factor Source	[0] No function	All set-ups		TRUE	-	Uint8
4-21	Speed Limit Factor Source	[0] No function	All set-ups		TRUE	-	Uint8
4-3* Motor Speed Mon.							
4-30	Motor Feedback Loss Function	[2] Trip	All set-ups		TRUE	-	Uint8
4-31	Motor Feedback Speed Error	300 RPM	All set-ups		TRUE	67	Uint16
4-32	Motor Feedback Loss Timeout	0.05 s	All set-ups		TRUE	-2	Uint16
4-34	Tracking Error Function	[0] Disable	All set-ups		TRUE	-	Uint8
4-35	Tracking Error	10 RPM	All set-ups		TRUE	67	Uint16
4-36	Tracking Error Timeout	1.00 s	All set-ups		TRUE	-2	Uint16
4-37	Tracking Error Ramping	100 RPM	All set-ups		TRUE	67	Uint16
4-38	Tracking Error Ramping Timeout	1.00 s	All set-ups		TRUE	-2	Uint16
4-39	Tracking Error After Ramping Timeout	5.00 s	All set-ups		TRUE	-2	Uint16
4-5* Adj. Warnings							
4-50	Warning Current Low	0.00 A	All set-ups		TRUE	-2	Uint32
4-51	Warning Current High	ImaxVLT (P1637)	All set-ups		TRUE	-2	Uint32
4-52	Warning Speed Low	0 RPM	All set-ups		TRUE	67	Uint16
4-53	Warning Speed High	outputSpeedHighLimit (P413)	All set-ups		TRUE	67	Uint16
4-54	Warning Reference Low	-999999.999 N/A	All set-ups		TRUE	-3	Int32
4-55	Warning Reference High	999999.999 N/A	All set-ups		TRUE	-3	Int32
4-56	Warning Feedback Low	-999999.999 ReferenceFeedbackUnit	All set-ups		TRUE	-3	Int32
4-57	Warning Feedback High	999999.999 ReferenceFeedbackUnit	All set-ups		TRUE	-3	Int32
4-58	Missing Motor Phase Function	null	All set-ups		TRUE	-	Uint8
4-6* Speed Bypass							
4-60	Bypass Speed From [RPM]	SR	All set-ups		TRUE	67	Uint16
4-61	Bypass Speed From [Hz]	SR	All set-ups		TRUE	-1	Uint16
4-62	Bypass Speed To [RPM]	SR	All set-ups		TRUE	67	Uint16
4-63	Bypass Speed To [Hz]	SR	All set-ups		TRUE	-1	Uint16

6.3.6 5-** Digital In/Out

Par. No. #	Parameter description	Default value	4-set-up	FC 302 only	Change during operation	Conversion index	Type
5-0* Digital I/O mode							
5-00	Digital I/O Mode	[0] PNP	All set-ups		FALSE	-	Uint8
5-01	Terminal 27 Mode	[0] Input	All set-ups		TRUE	-	Uint8
5-02	Terminal 29 Mode	[0] Input	All set-ups	x	TRUE	-	Uint8
5-1* Digital Inputs							
5-10	Terminal 18 Digital Input	null	All set-ups		TRUE	-	Uint8
5-11	Terminal 19 Digital Input	null	All set-ups		TRUE	-	Uint8
5-12	Terminal 27 Digital Input	null	All set-ups		TRUE	-	Uint8
5-13	Terminal 29 Digital Input	null	All set-ups	x	TRUE	-	Uint8
5-14	Terminal 32 Digital Input	null	All set-ups		TRUE	-	Uint8
5-15	Terminal 33 Digital Input	null	All set-ups		TRUE	-	Uint8
5-16	Terminal X30/2 Digital Input	null	All set-ups		TRUE	-	Uint8
5-17	Terminal X30/3 Digital Input	null	All set-ups		TRUE	-	Uint8
5-18	Terminal X30/4 Digital Input	null	All set-ups		TRUE	-	Uint8
5-19	Terminal 37 Safe Stop	[1] Safe Stop Alarm	1 set-up		TRUE	-	Uint8
5-20	Terminal X46/1 Digital Input	[0] No operation	All set-ups		TRUE	-	Uint8
5-21	Terminal X46/3 Digital Input	[0] No operation	All set-ups		TRUE	-	Uint8
5-22	Terminal X46/5 Digital Input	[0] No operation	All set-ups		TRUE	-	Uint8
5-23	Terminal X46/7 Digital Input	[0] No operation	All set-ups		TRUE	-	Uint8
5-24	Terminal X46/9 Digital Input	[0] No operation	All set-ups		TRUE	-	Uint8
5-25	Terminal X46/11 Digital Input	[0] No operation	All set-ups		TRUE	-	Uint8
5-26	Terminal X46/13 Digital Input	[0] No operation	All set-ups		TRUE	-	Uint8
5-3* Digital Outputs							
5-30	Terminal 27 Digital Output	null	All set-ups		TRUE	-	Uint8
5-31	Terminal 29 Digital Output	null	All set-ups	x	TRUE	-	Uint8
5-32	Term X30/6 Digi Out (MCB 101)	null	All set-ups		TRUE	-	Uint8
5-33	Term X30/7 Digi Out (MCB 101)	null	All set-ups		TRUE	-	Uint8
5-4* Relays							
5-40	Function Relay	null	All set-ups		TRUE	-	Uint8
5-41	On Delay, Relay	0.01 s	All set-ups		TRUE	-2	Uint16
5-42	Off Delay, Relay	0.01 s	All set-ups		TRUE	-2	Uint16
5-5* Pulse Input							
5-50	Term. 29 Low Frequency	100 Hz	All set-ups	x	TRUE	0	Uint32
5-51	Term. 29 High Frequency	100 Hz	All set-ups	x	TRUE	0	Uint32
5-52	Term. 29 Low Ref./Feedb. Value	0.000 ReferenceFeedbackUnit	All set-ups	x	TRUE	-3	Int32
5-53	Term. 29 High Ref./Feedb. Value	SR	All set-ups	x	TRUE	-3	Int32
5-54	Pulse Filter Time Constant #29	100 ms	All set-ups	x	FALSE	-3	Uint16
5-55	Term. 33 Low Frequency	100 Hz	All set-ups		TRUE	0	Uint32
5-56	Term. 33 High Frequency	100 Hz	All set-ups		TRUE	0	Uint32
5-57	Term. 33 Low Ref./Feedb. Value	0.000 ReferenceFeedbackUnit	All set-ups		TRUE	-3	Int32
5-58	Term. 33 High Ref./Feedb. Value	SR	All set-ups		TRUE	-3	Int32
5-59	Pulse Filter Time Constant #33	100 ms	All set-ups		FALSE	-3	Uint16
5-6* Pulse Output							
5-60	Terminal 27 Pulse Output Variable	null	All set-ups		TRUE	-	Uint8
5-62	Pulse Output Max Freq #27	SR	All set-ups		TRUE	0	Uint32
5-63	Terminal 29 Pulse Output Variable	null	All set-ups	x	TRUE	-	Uint8
5-65	Pulse Output Max Freq #29	SR	All set-ups	x	TRUE	0	Uint32
5-66	Terminal X30/6 Pulse Output Variable	null	All set-ups		TRUE	-	Uint8
5-68	Pulse Output Max Freq #X30/6	SR	All set-ups		TRUE	0	Uint32
5-7* 24V Encoder Input							
5-70	Term 32/33 Pulses per Revolution	1024 N/A	All set-ups		FALSE	0	Uint16
5-71	Term 32/33 Encoder Direction	[0] Clockwise	All set-ups		FALSE	-	Uint8
5-9* Bus Controlled							
5-90	Digital & Relay Bus Control	0 N/A	All set-ups		TRUE	0	Uint32
5-93	Pulse Out #27 Bus Control	0.00 %	All set-ups		TRUE	-2	N2
5-94	Pulse Out #27 Timeout Preset	0.00 %	1 set-up		TRUE	-2	Uint16
5-95	Pulse Out #29 Bus Control	0.00 %	All set-ups	x	TRUE	-2	N2
5-96	Pulse Out #29 Timeout Preset	0.00 %	1 set-up	x	TRUE	-2	Uint16
5-97	Pulse Out #X30/6 Bus Control	0.00 %	All set-ups		TRUE	-2	N2
5-98	Pulse Out #X30/6 Timeout Preset	0.00 %	1 set-up		TRUE	-2	Uint16

6.3.7 6-** Analog In/Out

Par. No. #	Parameter description	Default value	4-set-up	FC 302 only	Change during operation	Conversion index	Type
6-0* Analog I/O Mode							
6-00	Live Zero Timeout Time	10 s	All set-ups		TRUE	0	Uint8
6-01	Live Zero Timeout Function	[0] Off	All set-ups		TRUE	-	Uint8
6-1* Analog Input 1							
6-10	Terminal 53 Low Voltage	0.07 V	All set-ups		TRUE	-2	Int16
6-11	Terminal 53 High Voltage	10.00 V	All set-ups		TRUE	-2	Int16
6-12	Terminal 53 Low Current	0.14 mA	All set-ups		TRUE	-5	Int16
6-13	Terminal 53 High Current	20.00 mA	All set-ups		TRUE	-5	Int16
6-14	Terminal 53 Low Ref./Feedb. Value	0 ReferenceFeedbackUnit	All set-ups		TRUE	-3	Int32
6-15	Terminal 53 High Ref./Feedb. Value	SR	All set-ups		TRUE	-3	Int32
6-16	Terminal 53 Filter Time Constant	0.001 s	All set-ups		TRUE	-3	Uint16
6-2* Analog Input 2							
6-20	Terminal 54 Low Voltage	0.07 V	All set-ups		TRUE	-2	Int16
6-21	Terminal 54 High Voltage	10.00 V	All set-ups		TRUE	-2	Int16
6-22	Terminal 54 Low Current	0.14 mA	All set-ups		TRUE	-5	Int16
6-23	Terminal 54 High Current	20.00 mA	All set-ups		TRUE	-5	Int16
6-24	Terminal 54 Low Ref./Feedb. Value	0 ReferenceFeedbackUnit	All set-ups		TRUE	-3	Int32
6-25	Terminal 54 High Ref./Feedb. Value	SR	All set-ups		TRUE	-3	Int32
6-26	Terminal 54 Filter Time Constant	0.001 s	All set-ups		TRUE	-3	Uint16
6-3* Analog Input 3							
6-30	Terminal X30/11 Low Voltage	0.07 V	All set-ups		TRUE	-2	Int16
6-31	Terminal X30/11 High Voltage	10.00 V	All set-ups		TRUE	-2	Int16
6-34	Term. X30/11 Low Ref./Feedb. Value	0 ReferenceFeedbackUnit	All set-ups		TRUE	-3	Int32
6-35	Term. X30/11 High Ref./Feedb. Value	SR	All set-ups		TRUE	-3	Int32
6-36	Term. X30/11 Filter Time Constant	0.001 s	All set-ups		TRUE	-3	Uint16
6-4* Analog Input 4							
6-40	Terminal X30/12 Low Voltage	0.07 V	All set-ups		TRUE	-2	Int16
6-41	Terminal X30/12 High Voltage	10.00 V	All set-ups		TRUE	-2	Int16
6-44	Term. X30/12 Low Ref./Feedb. Value	0 ReferenceFeedbackUnit	All set-ups		TRUE	-3	Int32
6-45	Term. X30/12 High Ref./Feedb. Value	SR	All set-ups		TRUE	-3	Int32
6-46	Term. X30/12 Filter Time Constant	0.001 s	All set-ups		TRUE	-3	Uint16
6-5* Analog Output 1							
6-50	Terminal 42 Output	null	All set-ups		TRUE	-	Uint8
6-51	Terminal 42 Output Min Scale	0.00 %	All set-ups		TRUE	-2	Int16
6-52	Terminal 42 Output Max Scale	100.00 %	All set-ups		TRUE	-2	Int16
6-53	Terminal 42 Output Bus Control	0.00 %	All set-ups		TRUE	-2	N2
6-54	Terminal 42 Output Timeout Preset	0.00 %	1 set-up		TRUE	-2	Uint16
6-55	Terminal 42 Output Filter	[0] Off	1 set-up		TRUE	-	Uint8
6-6* Analog Output 2							
6-60	Terminal X30/8 Output	null	All set-ups		TRUE	-	Uint8
6-61	Terminal X30/8 Min. Scale	0.00 %	All set-ups		TRUE	-2	Int16
6-62	Terminal X30/8 Max. Scale	100.00 %	All set-ups		TRUE	-2	Int16
6-63	Terminal X30/8 Bus Control	0.00 %	All set-ups		TRUE	-2	N2
6-64	Terminal X30/8 Output Timeout Preset	0.00 %	1 set-up		TRUE	-2	Uint16
6-7* Analog Output 3							
6-70	Terminal X45/1 Output	null	All set-ups		TRUE	-	Uint8
6-71	Terminal X45/1 Min. Scale	0.00 %	All set-ups		TRUE	-2	Int16
6-72	Terminal X45/1 Max. Scale	100.00 %	All set-ups		TRUE	-2	Int16
6-73	Terminal X45/1 Bus Control	0.00 %	All set-ups		TRUE	-2	N2
6-74	Terminal X45/1 Output Timeout Preset	0.00 %	1 set-up		TRUE	-2	Uint16
6-8* Analog Output 4							
6-80	Terminal X45/3 Output	null	All set-ups		TRUE	-	Uint8
6-81	Terminal X45/3 Min. Scale	0.00 %	All set-ups		TRUE	-2	Int16
6-82	Terminal X45/3 Max. Scale	100.00 %	All set-ups		TRUE	-2	Int16
6-83	Terminal X45/3 Bus Control	0.00 %	All set-ups		TRUE	-2	N2
6-84	Terminal X45/3 Output Timeout Preset	0.00 %	1 set-up		TRUE	-2	Uint16

6.3.8 7-** Controllers

Par. No. #	Parameter description	Default value	4-set-up	FC 302 only	Change during operation	Conversion index	Type
7-0* Speed PID Ctrl.							
7-00	Speed PID Feedback Source	null	All set-ups		FALSE	-	Uint8
7-02	Speed PID Proportional Gain	SR	All set-ups		TRUE	-3	Uint16
7-03	Speed PID Integral Time	SR	All set-ups		TRUE	-4	Uint32
7-04	Speed PID Differentiation Time	SR	All set-ups		TRUE	-4	Uint16
7-05	Speed PID Diff. Gain Limit	5.0 N/A	All set-ups		TRUE	-1	Uint16
7-06	Speed PID Lowpass Filter Time	SR	All set-ups		TRUE	-4	Uint16
7-07	Speed PID Feedback Gear Ratio	1.0000 N/A	All set-ups		FALSE	-4	Uint32
7-08	Speed PID Feed Forward Factor	0 %	All set-ups		FALSE	0	Uint16
7-1* Torque PI Ctrl.							
7-12	Torque PI Proportional Gain	100 %	All set-ups		TRUE	0	Uint16
7-13	Torque PI Integration Time	0.020 s	All set-ups		TRUE	-3	Uint16
7-2* Process Ctrl. Feedb							
7-20	Process CL Feedback 1 Resource	[0] No function	All set-ups		TRUE	-	Uint8
7-22	Process CL Feedback 2 Resource	[0] No function	All set-ups		TRUE	-	Uint8
7-3* Process PID Ctrl.							
7-30	Process PID Normal/ Inverse Control	[0] Normal	All set-ups		TRUE	-	Uint8
7-31	Process PID Anti Windup	[1] On	All set-ups		TRUE	-	Uint8
7-32	Process PID Start Speed	0 RPM	All set-ups		TRUE	67	Uint16
7-33	Process PID Proportional Gain	0.01 N/A	All set-ups		TRUE	-2	Uint16
7-34	Process PID Integral Time	10000.00 s	All set-ups		TRUE	-2	Uint32
7-35	Process PID Differentiation Time	0.00 s	All set-ups		TRUE	-2	Uint16
7-36	Process PID Diff. Gain Limit	5.0 N/A	All set-ups		TRUE	-1	Uint16
7-38	Process PID Feed Forward Factor	0 %	All set-ups		TRUE	0	Uint16
7-39	On Reference Bandwidth	5 %	All set-ups		TRUE	0	Uint8
7-4* Adv. Process PID I							
7-40	Process PID I-part Reset	[0] No	All set-ups		TRUE	-	Uint8
7-41	Process PID Output Neg. Clamp	-100 %	All set-ups		TRUE	0	Int16
7-42	Process PID Output Pos. Clamp	100 %	All set-ups		TRUE	0	Int16
7-43	Process PID Gain Scale at Min. Ref.	100 %	All set-ups		TRUE	0	Int16
7-44	Process PID Gain Scale at Max. Ref.	100 %	All set-ups		TRUE	0	Int16
7-45	Process PID Feed Fwd Resource	[0] No function	All set-ups		TRUE	-	Uint8
7-46	Process PID Feed Fwd Normal/ Inv. Ctrl.	[0] Normal	All set-ups		TRUE	-	Uint8
7-49	Process PID Output Normal/ Inv. Ctrl.	[0] Normal	All set-ups		TRUE	-	Uint8
7-5* Adv. Process PID II							
7-50	Process PID Extended PID	[1] Enabled	All set-ups		TRUE	-	Uint8
7-51	Process PID Feed Fwd Gain	1.00 N/A	All set-ups		TRUE	-2	Uint16
7-52	Process PID Feed Fwd Ramp up	0.01 s	All set-ups		TRUE	-2	Uint32
7-53	Process PID Feed Fwd Ramp down	0.01 s	All set-ups		TRUE	-2	Uint32
7-56	Process PID Ref. Filter Time	0.001 s	All set-ups		TRUE	-3	Uint16
7-57	Process PID Fb. Filter Time	0.001 s	All set-ups		TRUE	-3	Uint16

6.3.9 8-** Comm. and Options

Par. No. #	Parameter description	Default value	4-set-up	FC 302 only	Change during operation	Conversion index	Type
8-0* General Settings							
8-01	Control Site	[0] Digital and ctrl.word	All set-ups		TRUE	-	Uint8
8-02	Control Word Source	null	All set-ups		TRUE	-	Uint8
8-03	Control Word Timeout Time	1.0 s	1 set-up		TRUE	-1	Uint32
8-04	Control Word Timeout Function	null	1 set-up		TRUE	-	Uint8
8-05	End-of-Timeout Function	[1] Resume set-up	1 set-up		TRUE	-	Uint8
8-06	Reset Control Word Timeout	[0] Do not reset	All set-ups		TRUE	-	Uint8
8-07	Diagnosis Trigger	[0] Disable	2 set-ups		TRUE	-	Uint8
8-08	Readout Filtering	null	All set-ups		TRUE	-	Uint8
8-1* Ctrl. Word Settings							
8-10	Control Word Profile	[0] FC profile	All set-ups		TRUE	-	Uint8
8-13	Configurable Status Word STW	null	All set-ups		TRUE	-	Uint8
8-14	Configurable Control Word CTW	[1] Profile default	All set-ups		TRUE	-	Uint8
8-3* FC Port Settings							
8-30	Protocol	[0] FC	1 set-up		TRUE	-	Uint8
8-31	Address	1 N/A	1 set-up		TRUE	0	Uint8
8-32	FC Port Baud Rate	null	1 set-up		TRUE	-	Uint8
8-33	Parity / Stop Bits	[0] Even Parity, 1 Stop Bit	1 set-up		TRUE	-	Uint8
8-34	Estimated cycle time	0 ms	2 set-ups		TRUE	-3	Uint32
8-35	Minimum Response Delay	10 ms	All set-ups		TRUE	-3	Uint16
8-36	Max Response Delay	SR	1 set-up		TRUE	-3	Uint16
8-37	Max Inter-Char Delay	SR	1 set-up		TRUE	-5	Uint16
8-4* FC MC protocol set							
8-40	Telegram selection	[1] Standard telegram 1	2 set-ups		TRUE	-	Uint8
8-41	Parameters for signals	0	All set-ups		FALSE	-	Uint16
8-42	PCD write configuration	SR	All set-ups		TRUE	-	Uint16
8-43	PCD read configuration	SR	All set-ups		TRUE	-	Uint16
8-5* Digital/Bus							
8-50	Coasting Select	[3] Logic OR	All set-ups		TRUE	-	Uint8
8-51	Quick Stop Select	[3] Logic OR	All set-ups		TRUE	-	Uint8
8-52	DC Brake Select	[3] Logic OR	All set-ups		TRUE	-	Uint8
8-53	Start Select	[3] Logic OR	All set-ups		TRUE	-	Uint8
8-54	Reversing Select	[3] Logic OR	All set-ups		TRUE	-	Uint8
8-55	Set-up Select	[3] Logic OR	All set-ups		TRUE	-	Uint8
8-56	Preset Reference Select	[3] Logic OR	All set-ups		TRUE	-	Uint8
8-57	Profidrive OFF2 Select	[3] Logic OR	All set-ups		TRUE	-	Uint8
8-58	Profidrive OFF3 Select	[3] Logic OR	All set-ups		TRUE	-	Uint8
8-8* FC Port Diagnostics							
8-80	Bus Message Count	0 N/A	All set-ups		TRUE	0	Uint32
8-81	Bus Error Count	0 N/A	All set-ups		TRUE	0	Uint32
8-82	Slave Messages Rcvd	0 N/A	All set-ups		TRUE	0	Uint32
8-83	Slave Error Count	0 N/A	All set-ups		TRUE	0	Uint32
8-9* Bus Jog							
8-90	Bus Jog 1 Speed	100 RPM	All set-ups		TRUE	67	Uint16
8-91	Bus Jog 2 Speed	200 RPM	All set-ups		TRUE	67	Uint16

6.3.10 9-** Profibus

Par. No. #	Parameter description	Default value	4-set-up	FC 302 only	Change during operation	Conversion index	Type
9-00	Setpoint	0 N/A	All set-ups		TRUE	0	Uint16
9-07	Actual Value	0 N/A	All set-ups		FALSE	0	Uint16
9-15	PCD Write Configuration	SR	2 set-ups		TRUE	-	Uint16
9-16	PCD Read Configuration	SR	2 set-ups		TRUE	-	Uint16
9-18	Node Address	126 N/A	1 set-up		TRUE	0	Uint8
9-22	Telegram Selection	[100] None	1 set-up		TRUE	-	Uint8
9-23	Parameters for Signals	0	All set-ups		TRUE	-	Uint16
9-27	Parameter Edit	[1] Enabled	2 set-ups		FALSE	-	Uint16
9-28	Process Control	[1] Enable cyclic master	2 set-ups		FALSE	-	Uint8
9-44	Fault Message Counter	0 N/A	All set-ups		TRUE	0	Uint16
9-45	Fault Code	0 N/A	All set-ups		TRUE	0	Uint16
9-47	Fault Number	0 N/A	All set-ups		TRUE	0	Uint16
9-52	Fault Situation Counter	0 N/A	All set-ups		TRUE	0	Uint16
9-53	Profibus Warning Word	0 N/A	All set-ups		TRUE	0	V2
9-63	Actual Baud Rate	[255] No baudrate found	All set-ups		TRUE	-	Uint8
9-64	Device Identification	0 N/A	All set-ups		TRUE	0	Uint16
9-65	Profile Number	0 N/A	All set-ups		TRUE	0	OctStr[2]
9-67	Control Word 1	0 N/A	All set-ups		TRUE	0	V2
9-68	Status Word 1	0 N/A	All set-ups		TRUE	0	V2
9-71	Profibus Save Data Values	[0] Off	All set-ups		TRUE	-	Uint8
9-72	ProfibusDriveReset	[0] No action	1 set-up		FALSE	-	Uint8
9-75	DO Identification	0 N/A	All set-ups		TRUE	0	Uint16
9-80	Defined Parameters (1)	0 N/A	All set-ups		FALSE	0	Uint16
9-81	Defined Parameters (2)	0 N/A	All set-ups		FALSE	0	Uint16
9-82	Defined Parameters (3)	0 N/A	All set-ups		FALSE	0	Uint16
9-83	Defined Parameters (4)	0 N/A	All set-ups		FALSE	0	Uint16
9-84	Defined Parameters (5)	0 N/A	All set-ups		FALSE	0	Uint16
9-90	Changed Parameters (1)	0 N/A	All set-ups		FALSE	0	Uint16
9-91	Changed Parameters (2)	0 N/A	All set-ups		FALSE	0	Uint16
9-92	Changed Parameters (3)	0 N/A	All set-ups		FALSE	0	Uint16
9-93	Changed parameters (4)	0 N/A	All set-ups		FALSE	0	Uint16
9-94	Changed parameters (5)	0 N/A	All set-ups		FALSE	0	Uint16
9-99	Profibus Revision Counter	0 N/A	All set-ups		TRUE	0	Uint16

6.3.11 10-** CAN Fieldbus

Par. No. #	Parameter description	Default value	4-set-up	FC 302 only	Change during operation	Conversion index	Type
10-0*	**Common Settings**						
10-00	CAN Protocol	null	2 set-ups		FALSE	-	Uint8
10-01	Baud Rate Select	null	2 set-ups		TRUE	-	Uint8
10-02	MAC ID	SR	2 set-ups		TRUE	0	Uint8
10-05	Readout Transmit Error Counter	0 N/A	All set-ups		TRUE	0	Uint8
10-06	Readout Receive Error Counter	0 N/A	All set-ups		TRUE	0	Uint8
10-07	Readout Bus Off Counter	0 N/A	All set-ups		TRUE	0	Uint8
10-1*	**DeviceNet**						
10-10	Process Data Type Selection	null	All set-ups		TRUE	-	Uint8
10-11	Process Data Config Write	SR	All set-ups		TRUE	-	Uint16
10-12	Process Data Config Read	SR	All set-ups		TRUE	-	Uint16
10-13	Warning Parameter	0 N/A	All set-ups		TRUE	0	Uint16
10-14	Net Reference	[0] Off	2 set-ups		TRUE	-	Uint8
10-15	Net Control	[0] Off	2 set-ups		TRUE	-	Uint8
10-2*	**COS Filters**						
10-20	COS Filter 1	0 N/A	All set-ups		FALSE	0	Uint16
10-21	COS Filter 2	0 N/A	All set-ups		FALSE	0	Uint16
10-22	COS Filter 3	0 N/A	All set-ups		FALSE	0	Uint16
10-23	COS Filter 4	0 N/A	All set-ups		FALSE	0	Uint16
10-3*	**Parameter Access**						
10-30	Array Index	0 N/A	2 set-ups		TRUE	0	Uint8
10-31	Store Data Values	[0] Off	All set-ups		TRUE	-	Uint8
10-32	Devicenet Revision	SR	All set-ups		TRUE	0	Uint16
10-33	Store Always	[0] Off	1 set-up		TRUE	-	Uint8
10-34	DeviceNet Product Code	SR	1 set-up		TRUE	0	Uint16
10-39	Devicenet F Parameters	0 N/A	All set-ups		TRUE	0	Uint32
10-5*	**CANopen**						
10-50	Process Data Config Write.	SR	2 set-ups		TRUE	-	Uint16
10-51	Process Data Config Read.	SR	2 set-ups		TRUE	-	Uint16

6.3.12 12-** Ethernet

Par. No. #	Parameter description	Default value	4-set-up	FC 302 only	Change during operation	Conversion index	Type
12-0* IP Settings							
12-00	IP Address Assignment	null	2 set-ups		TRUE	-	Uint8
12-01	IP Address	0 N/A	1 set-up		TRUE	0	OctStr[4]
12-02	Subnet Mask	0 N/A	1 set-up		TRUE	0	OctStr[4]
12-03	Default Gateway	0 N/A	1 set-up		TRUE	0	OctStr[4]
12-04	DHCP Server	0 N/A	2 set-ups		TRUE	0	OctStr[4]
12-05	Lease Expires	SR	All set-ups		TRUE	0	TimD
12-06	Name Servers	0 N/A	1 set-up		TRUE	0	OctStr[4]
12-07	Domain Name	0 N/A	1 set-up		TRUE	0	VisStr[48]
12-08	Host Name	0 N/A	1 set-up		TRUE	0	VisStr[48]
12-09	Physical Address	0 N/A	1 set-up		TRUE	0	VisStr[17]
12-1* Ethernet Link Parameters							
12-10	Link Status	[0] No Link	1 set-up		TRUE	-	Uint8
12-11	Link Duration	SR	All set-ups		TRUE	0	TimD
12-12	Auto Negotiation	null	2 set-ups		TRUE	-	Uint8
12-13	Link Speed	null	2 set-ups		TRUE	-	Uint8
12-14	Link Duplex	[1] Full Duplex	2 set-ups		TRUE	-	Uint8
12-2* Process Data							
12-20	Control Instance	SR	1 set-up		TRUE	0	Uint8
12-21	Process Data Config Write	SR	All set-ups		TRUE	-	Uint16
12-22	Process Data Config Read	SR	All set-ups		TRUE	-	Uint16
12-28	Store Data Values	[0] Off	All set-ups		TRUE	-	Uint8
12-29	Store Always	[0] Off	1 set-up		TRUE	-	Uint8
12-3* EtherNet/IP							
12-30	Warning Parameter	0 N/A	All set-ups		TRUE	0	Uint16
12-31	Net Reference	[0] Off	2 set-ups		TRUE	-	Uint8
12-32	Net Control	[0] Off	2 set-ups		TRUE	-	Uint8
12-33	CIP Revision	SR	All set-ups		TRUE	0	Uint16
12-34	CIP Product Code	SR	1 set-up		TRUE	0	Uint16
12-35	EDS Parameter	0 N/A	All set-ups		TRUE	0	Uint32
12-37	COS Inhibit Timer	0 N/A	All set-ups		TRUE	0	Uint16
12-38	COS Filter	0 N/A	All set-ups		TRUE	0	Uint16
12-4* Modbus TCP							
12-40	Status Parameter	0 N/A	All set-ups		TRUE	0	Uint16
12-41	Slave Message Count	0 N/A	All set-ups		TRUE	0	Uint32
12-42	Slave Exception Message Count	0 N/A	All set-ups		TRUE	0	Uint32
12-8* Other Ethernet Services							
12-80	FTP Server	[0] Disabled	2 set-ups		TRUE	-	Uint8
12-81	HTTP Server	[0] Disabled	2 set-ups		TRUE	-	Uint8
12-82	SMTP Service	[0] Disabled	2 set-ups		TRUE	-	Uint8
12-89	Transparent Socket Channel Port	SR	2 set-ups		TRUE	0	Uint16
12-9* Advanced Ethernet Services							
12-90	Cable Diagnostic	[0] Disabled	2 set-ups		TRUE	-	Uint8
12-91	MDI-X	[1] Enabled	2 set-ups		TRUE	-	Uint8
12-92	IGMP Snooping	[1] Enabled	2 set-ups		TRUE	-	Uint8
12-93	Cable Error Length	0 N/A	1 set-up		TRUE	0	Uint16
12-94	Broadcast Storm Protection	-1 %	2 set-ups		TRUE	0	Int8
12-95	Broadcast Storm Filter	[0] Broadcast only	2 set-ups		TRUE	-	Uint8
12-96	Port Mirroring	[0] Disable	2 set-ups		TRUE	-	Uint8
12-98	Interface Counters	4000 N/A	All set-ups		TRUE	0	Uint16
12-99	Media Counters	0 N/A	All set-ups		TRUE	0	Uint16

6.3.13 13-** Smart Logic

Par. No. #	Parameter description	Default value	4-set-up	FC 302 only	Change during operation	Conversion index	Type
13-0* SLC Settings							
13-00	SL Controller Mode	null	2 set-ups		TRUE	-	Uint8
13-01	Start Event	null	2 set-ups		TRUE	-	Uint8
13-02	Stop Event	null	2 set-ups		TRUE	-	Uint8
13-03	Reset SLC	[0] Do not reset SLC	All set-ups		TRUE	-	Uint8
13-1* Comparators							
13-10	Comparator Operand	null	2 set-ups		TRUE	-	Uint8
13-11	Comparator Operator	null	2 set-ups		TRUE	-	Uint8
13-12	Comparator Value	SR	2 set-ups		TRUE	-3	Int32
13-2* Timers							
13-20	SL Controller Timer	SR	1 set-up		TRUE	-3	TimD
13-4* Logic Rules							
13-40	Logic Rule Boolean 1	null	2 set-ups		TRUE	-	Uint8
13-41	Logic Rule Operator 1	null	2 set-ups		TRUE	-	Uint8
13-42	Logic Rule Boolean 2	null	2 set-ups		TRUE	-	Uint8
13-43	Logic Rule Operator 2	null	2 set-ups		TRUE	-	Uint8
13-44	Logic Rule Boolean 3	null	2 set-ups		TRUE	-	Uint8
13-5* States							
13-51	SL Controller Event	null	2 set-ups		TRUE	-	Uint8
13-52	SL Controller Action	null	2 set-ups		TRUE	-	Uint8

6.3.14 14-** Special Functions

Par. No. #	Parameter description	Default value	4-set-up	FC 302 only	Change during operation	Conversion index	Type
14-0* Inverter Switching							
14-00	Switching Pattern	null	All set-ups		TRUE	-	Uint8
14-01	Switching Frequency	null	All set-ups		TRUE	-	Uint8
14-03	Overmodulation	[1] On	All set-ups		FALSE	-	Uint8
14-04	PWM Random	[0] Off	All set-ups		TRUE	-	Uint8
14-06	Dead Time Compensation	[1] On	All set-ups		TRUE	-	Uint8
14-1* Mains On/Off							
14-10	Mains Failure	[0] No function	All set-ups		FALSE	-	Uint8
14-11	Mains Voltage at Mains Fault	SR	All set-ups		TRUE	0	Uint16
14-12	Function at Mains Imbalance	[0] Trip	All set-ups		TRUE	-	Uint8
14-13	Mains Failure Step Factor	1.0 N/A	All set-ups		TRUE	-1	Uint8
14-2* Trip Reset							
14-20	Reset Mode	[0] Manual reset	All set-ups		TRUE	-	Uint8
14-21	Automatic Restart Time	10 s	All set-ups		TRUE	0	Uint16
14-22	Operation Mode	[0] Normal operation	All set-ups		TRUE	-	Uint8
14-23	Typecode Setting	null	2 set-ups		FALSE	-	Uint8
14-24	Trip Delay at Current Limit	60 s	All set-ups		TRUE	0	Uint8
14-25	Trip Delay at Torque Limit	60 s	All set-ups		TRUE	0	Uint8
14-26	Trip Delay at Inverter Fault	SR	All set-ups		TRUE	0	Uint8
14-28	Production Settings	[0] No action	All set-ups		TRUE	-	Uint8
14-29	Service Code	0 N/A	All set-ups		TRUE	0	Int32
14-3* Current Limit Ctrl.							
14-30	Current Lim Ctrl, Proportional Gain	100 %	All set-ups		FALSE	0	Uint16
14-31	Current Lim Ctrl, Integration Time	0.020 s	All set-ups		FALSE	-3	Uint16
14-32	Current Lim Ctrl, Filter Time	1.0 ms	All set-ups		TRUE	-4	Uint16
14-35	Stall Protection	[1] Enabled	All set-ups		FALSE	-	Uint8
14-4* Energy Optimising							
14-40	VT Level	66 %	All set-ups		FALSE	0	Uint8
14-41	AEO Minimum Magnetisation	SR	All set-ups		TRUE	0	Uint8
14-42	Minimum AEO Frequency	10 Hz	All set-ups		TRUE	0	Uint8
14-43	Motor Cosphi	SR	All set-ups		TRUE	-2	Uint16
14-5* Environment							
14-50	RFI Filter	[1] On	1 set-up	x	FALSE	-	Uint8
14-51	DC Link Compensation	[1] On	1 set-up		TRUE	-	Uint8
14-52	Fan Control	[0] Auto	All set-ups		TRUE	-	Uint8
14-53	Fan Monitor	[1] Warning	All set-ups		TRUE	-	Uint8
14-55	Output Filter	[0] No Filter	All set-ups		FALSE	-	Uint8
14-56	Capacitance Output Filter	2.0 uF	All set-ups		FALSE	-7	Uint16
14-57	Inductance Output Filter	7.000 mH	All set-ups		FALSE	-6	Uint16
14-59	Actual Number of Inverter Units	SR	1 set-up	x	FALSE	0	Uint8
14-7* Compatibility							
14-72	VLT Alarm Word	0 N/A	All set-ups		FALSE	0	Uint32
14-73	VLT Warning Word	0 N/A	All set-ups		FALSE	0	Uint32
14-74	VLT Ext. Status Word	0 N/A	All set-ups		FALSE	0	Uint32
14-8* Options							
14-80	Option Supplied by External 24VDC	[1] Yes	2 set-ups		FALSE	-	Uint8
14-9* Fault Settings							
14-90	Fault Level	null	1 set-up		TRUE	-	Uint8

6.3.15 15-** Drive Information

Par. No. #	Parameter description	Default value	4-set-up	FC 302 only	Change during operation	Conversion index	Type
15-0* Operating Data							
15-00	Operating Hours	0 h	All set-ups		FALSE	74	Uint32
15-01	Running Hours	0 h	All set-ups		FALSE	74	Uint32
15-02	kWh Counter	0 kWh	All set-ups		FALSE	75	Uint32
15-03	Power Up's	0 N/A	All set-ups		FALSE	0	Uint32
15-04	Over Temp's	0 N/A	All set-ups		FALSE	0	Uint16
15-05	Over Volt's	0 N/A	All set-ups		FALSE	0	Uint16
15-06	Reset kWh Counter	[0] Do not reset	All set-ups		TRUE	-	Uint8
15-07	Reset Running Hours Counter	[0] Do not reset	All set-ups		TRUE	-	Uint8
15-1* Data Log Settings							
15-10	Logging Source	0	2 set-ups		TRUE	-	Uint16
15-11	Logging Interval	SR	2 set-ups		TRUE	-3	TimD
15-12	Trigger Event	[0] False	1 set-up		TRUE	-	Uint8
15-13	Logging Mode	[0] Log always	2 set-ups		TRUE	-	Uint8
15-14	Samples Before Trigger	50 N/A	2 set-ups		TRUE	0	Uint8
15-2* Historic Log							
15-20	Historic Log: Event	0 N/A	All set-ups		FALSE	0	Uint8
15-21	Historic Log: Value	0 N/A	All set-ups		FALSE	0	Uint32
15-22	Historic Log: Time	0 ms	All set-ups		FALSE	-3	Uint32
15-3* Fault Log							
15-30	Fault Log: Error Code	0 N/A	All set-ups		FALSE	0	Uint8
15-31	Fault Log: Value	0 N/A	All set-ups		FALSE	0	Int16
15-32	Fault Log: Time	0 s	All set-ups		FALSE	0	Uint32
15-4* Drive Identification							
15-40	FC Type	0 N/A	All set-ups		FALSE	0	VisStr[6]
15-41	Power Section	0 N/A	All set-ups		FALSE	0	VisStr[20]
15-42	Voltage	0 N/A	All set-ups		FALSE	0	VisStr[20]
15-43	Software Version	0 N/A	All set-ups		FALSE	0	VisStr[5]
15-44	Ordered Typecode String	0 N/A	All set-ups		FALSE	0	VisStr[40]
15-45	Actual Typecode String	0 N/A	All set-ups		FALSE	0	VisStr[40]
15-46	Frequency Converter Ordering No	0 N/A	All set-ups		FALSE	0	VisStr[8]
15-47	Power Card Ordering No	0 N/A	All set-ups		FALSE	0	VisStr[8]
15-48	LCP Id No	0 N/A	All set-ups		FALSE	0	VisStr[20]
15-49	SW ID Control Card	0 N/A	All set-ups		FALSE	0	VisStr[20]
15-50	SW ID Power Card	0 N/A	All set-ups		FALSE	0	VisStr[20]
15-51	Frequency Converter Serial Number	0 N/A	All set-ups		FALSE	0	VisStr[10]
15-53	Power Card Serial Number	0 N/A	All set-ups		FALSE	0	VisStr[19]
15-6* Option Ident							
15-60	Option Mounted	0 N/A	All set-ups		FALSE	0	VisStr[30]
15-61	Option SW Version	0 N/A	All set-ups		FALSE	0	VisStr[20]
15-62	Option Ordering No	0 N/A	All set-ups		FALSE	0	VisStr[8]
15-63	Option Serial No	0 N/A	All set-ups		FALSE	0	VisStr[18]
15-70	Option in Slot A	0 N/A	All set-ups		FALSE	0	VisStr[30]
15-71	Slot A Option SW Version	0 N/A	All set-ups		FALSE	0	VisStr[20]
15-72	Option in Slot B	0 N/A	All set-ups		FALSE	0	VisStr[30]
15-73	Slot B Option SW Version	0 N/A	All set-ups		FALSE	0	VisStr[20]
15-74	Option in Slot C0	0 N/A	All set-ups		FALSE	0	VisStr[30]
15-75	Slot C0 Option SW Version	0 N/A	All set-ups		FALSE	0	VisStr[20]
15-76	Option in Slot C1	0 N/A	All set-ups		FALSE	0	VisStr[30]
15-77	Slot C1 Option SW Version	0 N/A	All set-ups		FALSE	0	VisStr[20]
15-9* Parameter Info							
15-92	Defined Parameters	0 N/A	All set-ups		FALSE	0	Uint16
15-93	Modified Parameters	0 N/A	All set-ups		FALSE	0	Uint16
15-98	Drive Identification	0 N/A	All set-ups		FALSE	0	VisStr[40]
15-99	Parameter Metadata	0 N/A	All set-ups		FALSE	0	Uint16

6.3.16 16-** Data Readouts

Par. No. #	Parameter description	Default value	4-set-up	FC 302 only	Change during operation	Conversion index	Type
16-0* General Status							
16-00	Control Word	0 N/A	All set-ups		FALSE	0	V2
16-01	Reference [Unit]	0.000 ReferenceFeedbackUnit	All set-ups		FALSE	-3	Int32
16-02	Reference %	0.0 %	All set-ups		FALSE	-1	Int16
16-03	Status Word	0 N/A	All set-ups		FALSE	0	V2
16-05	Main Actual Value [%]	0.00 %	All set-ups		FALSE	-2	N2
16-09	Custom Readout	0.00 CustomReadoutUnit	All set-ups		FALSE	-2	Int32
16-1* Motor Status							
16-10	Power [kW]	0.00 kW	All set-ups		FALSE	1	Int32
16-11	Power [hp]	0.00 hp	All set-ups		FALSE	-2	Int32
16-12	Motor Voltage	0.0 V	All set-ups		FALSE	-1	Uint16
16-13	Frequency	0.0 Hz	All set-ups		FALSE	-1	Uint16
16-14	Motor Current	0.00 A	All set-ups		FALSE	-2	Int32
16-15	Frequency [%]	0.00 %	All set-ups		FALSE	-2	N2
16-16	Torque [Nm]	0.0 Nm	All set-ups		FALSE	-1	Int16
16-17	Speed [RPM]	0 RPM	All set-ups		FALSE	67	Int32
16-18	Motor Thermal	0 %	All set-ups		FALSE	0	Uint8
16-19	KTY sensor temperature	0 °C	All set-ups		FALSE	100	Int16
16-20	Motor Angle	0 N/A	All set-ups		TRUE	0	Uint16
16-21	Torque [%] High Res.	0.0 %	All set-ups		FALSE	-1	Int16
16-22	Torque [%]	0 %	All set-ups		FALSE	0	Int16
16-25	Torque [Nm] High	0.0 Nm	All set-ups		FALSE	-1	Int32
16-3* Drive Status							
16-30	DC Link Voltage	0 V	All set-ups		FALSE	0	Uint16
16-32	Brake Energy /s	0.000 kW	All set-ups		FALSE	0	Uint32
16-33	Brake Energy /2 min	0.000 kW	All set-ups		FALSE	0	Uint32
16-34	Heatsink Temp.	0 °C	All set-ups		FALSE	100	Uint8
16-35	Inverter Thermal	0 %	All set-ups		FALSE	0	Uint8
16-36	Inv. Nom. Current	SR	All set-ups		FALSE	-2	Uint32
16-37	Inv. Max. Current	SR	All set-ups		FALSE	-2	Uint32
16-38	SL Controller State	0 N/A	All set-ups		FALSE	0	Uint8
16-39	Control Card Temp.	0 °C	All set-ups		FALSE	100	Uint8
16-40	Logging Buffer Full	[0] No	All set-ups		TRUE	-	Uint8
16-41	LCP Bottom Statusline	0 N/A	All set-ups		TRUE	0	VisStr[50]
16-49	Current Fault Source	0 N/A	All set-ups	x	TRUE	0	Uint8
16-5* Ref. & Feedb.							
16-50	External Reference	0.0 N/A	All set-ups		FALSE	-1	Int16
16-51	Pulse Reference	0.0 N/A	All set-ups		FALSE	-1	Int16
16-52	Feedback [Unit]	0.000 ReferenceFeedbackUnit	All set-ups		FALSE	-3	Int32
16-53	Digi Pot Reference	0.00 N/A	All set-ups		FALSE	-2	Int16
16-6* Inputs & Outputs							
16-60	Digital Input	0 N/A	All set-ups		FALSE	0	Uint16
16-61	Terminal 53 Switch Setting	[0] Current	All set-ups		FALSE	-	Uint8
16-62	Analog Input 53	0.000 N/A	All set-ups		FALSE	-3	Int32
16-63	Terminal 54 Switch Setting	[0] Current	All set-ups		FALSE	-	Uint8
16-64	Analog Input 54	0.000 N/A	All set-ups		FALSE	-3	Int32
16-65	Analog Output 42 [mA]	0.000 N/A	All set-ups		FALSE	-3	Int16
16-66	Digital Output [bin]	0 N/A	All set-ups		FALSE	0	Int16
16-67	Freq. Input #29 [Hz]	0 N/A	All set-ups	x	FALSE	0	Int32
16-68	Freq. Input #33 [Hz]	0 N/A	All set-ups		FALSE	0	Int32
16-69	Pulse Output #27 [Hz]	0 N/A	All set-ups		FALSE	0	Int32
16-70	Pulse Output #29 [Hz]	0 N/A	All set-ups	x	FALSE	0	Int32
16-71	Relay Output [bin]	0 N/A	All set-ups		FALSE	0	Int16
16-72	Counter A	0 N/A	All set-ups		TRUE	0	Int32
16-73	Counter B	0 N/A	All set-ups		TRUE	0	Int32
16-74	Prec. Stop Counter	0 N/A	All set-ups		TRUE	0	Uint32
16-75	Analog In X30/11	0.000 N/A	All set-ups		FALSE	-3	Int32
16-76	Analog In X30/12	0.000 N/A	All set-ups		FALSE	-3	Int32
16-77	Analog Out X30/8 [mA]	0.000 N/A	All set-ups		FALSE	-3	Int16
16-78	Analog Out X45/1 [mA]	0.000 N/A	All set-ups		FALSE	-3	Int16
16-79	Analog Out X45/3 [mA]	0.000 N/A	All set-ups		FALSE	-3	Int16
16-8* Fieldbus & FC Port							
16-80	Fieldbus CTW 1	0 N/A	All set-ups		FALSE	0	V2
16-82	Fieldbus REF 1	0 N/A	All set-ups		FALSE	0	N2
16-84	Comm. Option STW	0 N/A	All set-ups		FALSE	0	V2
16-85	FC Port CTW 1	0 N/A	All set-ups		FALSE	0	V2
16-86	FC Port REF 1	0 N/A	All set-ups		FALSE	0	N2
16-9* Diagnosis Readouts							
16-90	Alarm Word	0 N/A	All set-ups		FALSE	0	Uint32
16-91	Alarm Word 2	0 N/A	All set-ups		FALSE	0	Uint32
16-92	Warning Word	0 N/A	All set-ups		FALSE	0	Uint32
16-93	Warning Word 2	0 N/A	All set-ups		FALSE	0	Uint32
16-94	Ext. Status Word	0 N/A	All set-ups		FALSE	0	Uint32

6.3.17 17-** Motor Feedb.Option

Par. No. #	Parameter description	Default value	4-set-up	FC 302 only	Change during operation	Conversion index	Type
17-1* Inc. Enc. Interface							
17-10	Signal Type	[1] RS422 (5V TTL)	All set-ups		FALSE	-	Uint8
17-11	Resolution (PPR)	1024 N/A	All set-ups		FALSE	0	Uint16
17-2* Abs. Enc. Interface							
17-20	Protocol Selection	[0] None	All set-ups		FALSE	-	Uint8
17-21	Resolution (Positions/Rev)	SR	All set-ups		FALSE	0	Uint32
17-24	SSI Data Length	13 N/A	All set-ups		FALSE	0	Uint8
17-25	Clock Rate	SR	All set-ups		FALSE	3	Uint16
17-26	SSI Data Format	[0] Gray code	All set-ups		FALSE	-	Uint8
17-34	HIPERFACE Baudrate	[4] 9600	All set-ups		FALSE	-	Uint8
17-5* Resolver Interface							
17-50	Poles	2 N/A	1 set-up		FALSE	0	Uint8
17-51	Input Voltage	7.0 V	1 set-up		FALSE	-1	Uint8
17-52	Input Frequency	10.0 kHz	1 set-up		FALSE	2	Uint8
17-53	Transformation Ratio	0.5 N/A	1 set-up		FALSE	-1	Uint8
17-59	Resolver Interface	[0] Disabled	All set-ups		FALSE	-	Uint8
17-6* Monitoring and App.							
17-60	Feedback Direction	[0] Clockwise	All set-ups		FALSE	-	Uint8
17-61	Feedback Signal Monitoring	[1] Warning	All set-ups		TRUE	-	Uint8

6.3.18 18-** Data Readouts 2

Par. No. #	Parameter description	Default value	4-set-up	FC 302 only	Change during operation	Conversion index	Type
18-60 Inputs & Outputs							
18-60	Digital Input 2	0 N/A	All set-ups		FALSE	0	Uint16
18-90 PID Readouts							
18-90	Process PID Error	0.0 %	All set-ups		FALSE	-1	Int16
18-91	Process PID Output	0.0 %	All set-ups		FALSE	-1	Int16
18-92	Process PID Clamped Output	0.0 %	All set-ups		FALSE	-1	Int16
18-93	Process PID Gain Scaled Output	0.0 %	All set-ups		FALSE	-1	Int16
22-00	External Interlock Delay	0 s	All set-ups		TRUE	0	Uint16

6.3.19 30-** Special Features

Par. No. #	Parameter description	Default value	4-set-up	FC 302 only	Change during operation	Conversion index	Type
30-0* Wobbler							
30-00	Wobble Mode	[0] Abs. Freq., Abs. Time	All set-ups		FALSE	-	Uint8
30-01	Wobble Delta Frequency [Hz]	5.0 Hz	All set-ups		TRUE	-1	Uint8
30-02	Wobble Delta Frequency [%]	25 %	All set-ups		TRUE	0	Uint8
30-03	Wobble Delta Freq. Scaling Resource	[0] No function	All set-ups		TRUE	-	Uint8
30-04	Wobble Jump Frequency [Hz]	0.0 Hz	All set-ups		TRUE	-1	Uint8
30-05	Wobble Jump Frequency [%]	0 %	All set-ups		TRUE	0	Uint8
30-06	Wobble Jump Time	SR	All set-ups		TRUE	-3	Uint16
30-07	Wobble Sequence Time	10.0 s	All set-ups		TRUE	-1	Uint16
30-08	Wobble Up/ Down Time	5.0 s	All set-ups		TRUE	-1	Uint16
30-09	Wobble Random Function	[0] Off	All set-ups		TRUE	-	Uint8
30-10	Wobble Ratio	1.0 N/A	All set-ups		TRUE	-1	Uint8
30-11	Wobble Random Ratio Max.	10.0 N/A	All set-ups		TRUE	-1	Uint8
30-12	Wobble Random Ratio Min.	0.1 N/A	All set-ups		TRUE	-1	Uint8
30-19	Wobble Delta Freq. Scaled	0.0 Hz	All set-ups		FALSE	-1	Uint16
30-2* Adv. Start Adjust							
30-20	High Starting Torque Time [s]	0.00 s	All set-ups	x	TRUE	-2	Uint8
30-21	High Starting Torque Current [%]	100.0 %	All set-ups	x	TRUE	-1	Uint32
30-22	Locked Rotor Protection	[0] Off	All set-ups	x	TRUE	-	Uint8
30-23	Locked Rotor Detection Time [s]	0.10 s	All set-ups	x	TRUE	-2	Uint8
30-8* Compatibility (I)							
30-80	d-axis Inductance (Ld)	SR	All set-ups	x	FALSE	-6	Int32
30-81	Brake Resistor (ohm)	SR	1 set-up		TRUE	-2	Uint32
30-83	Speed PID Proportional Gain	SR	All set-ups		TRUE	-4	Uint32
30-84	Process PID Proportional Gain	0.100 N/A	All set-ups		TRUE	-3	Uint16

6.3.20 32-** MCO Basic Settings

Par. No. #	Parameter description	Default value	4-set-up	FC 302 only	Change during operation	Conversion index	Type
32-0* Encoder 2							
32-00	Incremental Signal Type	[1] RS422 (5V TTL)	2 set-ups		TRUE	-	Uint8
32-01	Incremental Resolution	1024 N/A	2 set-ups		TRUE	0	Uint32
32-02	Absolute Protocol	[0] None	2 set-ups		TRUE	-	Uint8
32-03	Absolute Resolution	8192 N/A	2 set-ups		TRUE	0	Uint32
32-05	Absolute Encoder Data Length	25 N/A	2 set-ups		TRUE	0	Uint8
32-06	Absolute Encoder Clock Frequency	262.000 kHz	2 set-ups		TRUE	0	Uint32
32-07	Absolute Encoder Clock Generation	[1] On	2 set-ups		TRUE	-	Uint8
32-08	Absolute Encoder Cable Length	0 m	2 set-ups		TRUE	0	Uint16
32-09	Encoder Monitoring	[0] Off	2 set-ups		TRUE	-	Uint8
32-10	Rotational Direction	[1] No action	2 set-ups		TRUE	-	Uint8
32-11	User Unit Denominator	1 N/A	2 set-ups		TRUE	0	Uint32
32-12	User Unit Numerator	1 N/A	2 set-ups		TRUE	0	Uint32
32-3* Encoder 1							
32-30	Incremental Signal Type	[1] RS422 (5V TTL)	2 set-ups		TRUE	-	Uint8
32-31	Incremental Resolution	1024 N/A	2 set-ups		TRUE	0	Uint32
32-32	Absolute Protocol	[0] None	2 set-ups		TRUE	-	Uint8
32-33	Absolute Resolution	8192 N/A	2 set-ups		TRUE	0	Uint32
32-35	Absolute Encoder Data Length	25 N/A	2 set-ups		TRUE	0	Uint8
32-36	Absolute Encoder Clock Frequency	262.000 kHz	2 set-ups		TRUE	0	Uint32
32-37	Absolute Encoder Clock Generation	[1] On	2 set-ups		TRUE	-	Uint8
32-38	Absolute Encoder Cable Length	0 m	2 set-ups		TRUE	0	Uint16
32-39	Encoder Monitoring	[0] Off	2 set-ups		TRUE	-	Uint8
32-40	Encoder Termination	[1] On	2 set-ups		TRUE	-	Uint8
32-5* Feedback Source							
32-50	Source Slave	[2] Encoder 2	2 set-ups		TRUE	-	Uint8
32-51	MCO 302 Last Will	[1] Trip	2 set-ups		TRUE	-	Uint8
32-6* PID Controller							
32-60	Proportional factor	30 N/A	2 set-ups		TRUE	0	Uint32
32-61	Derivative factor	0 N/A	2 set-ups		TRUE	0	Uint32
32-62	Integral factor	0 N/A	2 set-ups		TRUE	0	Uint32
32-63	Limit Value for Integral Sum	1000 N/A	2 set-ups		TRUE	0	Uint16
32-64	PID Bandwidth	1000 N/A	2 set-ups		TRUE	0	Uint16
32-65	Velocity Feed-Forward	0 N/A	2 set-ups		TRUE	0	Uint32
32-66	Acceleration Feed-Forward	0 N/A	2 set-ups		TRUE	0	Uint32
32-67	Max. Tolerated Position Error	20000 N/A	2 set-ups		TRUE	0	Uint32
32-68	Reverse Behavior for Slave	[0] Reversing allowed	2 set-ups		TRUE	-	Uint8
32-69	Sampling Time for PID Control	1 ms	2 set-ups		TRUE	-3	Uint16
32-70	Scan Time for Profile Generator	1 ms	2 set-ups		TRUE	-3	Uint8
32-71	Size of the Control Window (Activation)	0 N/A	2 set-ups		TRUE	0	Uint32
32-72	Size of the Control Window (Deactiv.)	0 N/A	2 set-ups		TRUE	0	Uint32
32-8* Velocity & Accel.							
32-80	Maximum Velocity (Encoder)	1500 RPM	2 set-ups		TRUE	67	Uint32
32-81	Shortest Ramp	1.000 s	2 set-ups		TRUE	-3	Uint32
32-82	Ramp Type	[0] Linear	2 set-ups		TRUE	-	Uint8
32-83	Velocity Resolution	100 N/A	2 set-ups		TRUE	0	Uint32
32-84	Default Velocity	50 N/A	2 set-ups		TRUE	0	Uint32
32-85	Default Acceleration	50 N/A	2 set-ups		TRUE	0	Uint32
32-9* Development							
32-90	Debug Source	[0] Controlcard	2 set-ups		TRUE	-	Uint8

6.3.21 33-** MCO Adv. Settings

Par. No. #	Parameter description	Default value	4-set-up	FC 302 only	Change during operation	Conversion index	Type
33-0*	**Home Motion**						
33-00	Force HOME	[0] Home not forced	2 set-ups		TRUE	-	Uint8
33-01	Zero Point Offset from Home Pos.	0 N/A	2 set-ups		TRUE	0	Int32
33-02	Ramp for Home Motion	10 N/A	2 set-ups		TRUE	0	Uint32
33-03	Velocity of Home Motion	10 N/A	2 set-ups		TRUE	0	Int32
33-04	Behaviour during HomeMotion	[0] Revers and index	2 set-ups		TRUE	-	Uint8
33-1*	**Synchronization**						
33-10	Synchronization Factor Master (M:S)	1 N/A	2 set-ups		TRUE	0	Int32
33-11	Synchronization Factor Slave (M:S)	1 N/A	2 set-ups		TRUE	0	Int32
33-12	Position Offset for Synchronization	0 N/A	2 set-ups		TRUE	0	Int32
33-13	Accuracy Window for Position Sync.	1000 N/A	2 set-ups		TRUE	0	Int32
33-14	Relative Slave Velocity Limit	0 %	2 set-ups		TRUE	0	Uint8
33-15	Marker Number for Master	1 N/A	2 set-ups		TRUE	0	Uint16
33-16	Marker Number for Slave	1 N/A	2 set-ups		TRUE	0	Uint16
33-17	Master Marker Distance	4096 N/A	2 set-ups		TRUE	0	Uint32
33-18	Slave Marker Distance	4096 N/A	2 set-ups		TRUE	0	Uint32
33-19	Master Marker Type	[0] Encoder Z positive	2 set-ups		TRUE	-	Uint8
33-20	Slave Marker Type	[0] Encoder Z positive	2 set-ups		TRUE	-	Uint8
33-21	Master Marker Tolerance Window	0 N/A	2 set-ups		TRUE	0	Uint32
33-22	Slave Marker Tolerance Window	0 N/A	2 set-ups		TRUE	0	Uint32
33-23	Start Behaviour for Marker Sync	[0] Start Function 1	2 set-ups		TRUE	-	Uint16
33-24	Marker Number for Fault	10 N/A	2 set-ups		TRUE	0	Uint16
33-25	Marker Number for Ready	1 N/A	2 set-ups		TRUE	0	Uint16
33-26	Velocity Filter	0 us	2 set-ups		TRUE	-6	Int32
33-27	Offset Filter Time	0 ms	2 set-ups		TRUE	-3	Uint32
33-28	Marker Filter Configuration	[0] Marker filter 1	2 set-ups		TRUE	-	Uint8
33-29	Filter Time for Marker Filter	0 ms	2 set-ups		TRUE	-3	Int32
33-30	Maximum Marker Correction	0 N/A	2 set-ups		TRUE	0	Uint32
33-31	Synchronisation Type	[0] Standard	2 set-ups		TRUE	-	Uint8
33-4*	**Limit Handling**						
33-40	Behaviour atEnd Limit Switch	[0] Call error handler	2 set-ups		TRUE	-	Uint8
33-41	Negative Software End Limit	-500000 N/A	2 set-ups		TRUE	0	Int32
33-42	Positive Software End Limit	500000 N/A	2 set-ups		TRUE	0	Int32
33-43	Negative Software End Limit Active	[0] Inactive	2 set-ups		TRUE	-	Uint8
33-44	Positive Software End Limit Active	[0] Inactive	2 set-ups		TRUE	-	Uint8
33-45	Time in Target Window	0 ms	2 set-ups		TRUE	-3	Uint8
33-46	Target Window LimitValue	1 N/A	2 set-ups		TRUE	0	Uint16
33-47	Size of Target Window	0 N/A	2 set-ups		TRUE	0	Uint16
33-5*	**I/O Configuration**						
33-50	Terminal X57/1 Digital Input	[0] No function	2 set-ups		TRUE	-	Uint8
33-51	Terminal X57/2 Digital Input	[0] No function	2 set-ups		TRUE	-	Uint8
33-52	Terminal X57/3 Digital Input	[0] No function	2 set-ups		TRUE	-	Uint8
33-53	Terminal X57/4 Digital Input	[0] No function	2 set-ups		TRUE	-	Uint8
33-54	Terminal X57/5 Digital Input	[0] No function	2 set-ups		TRUE	-	Uint8
33-55	Terminal X57/6 Digital Input	[0] No function	2 set-ups		TRUE	-	Uint8
33-56	Terminal X57/7 Digital Input	[0] No function	2 set-ups		TRUE	-	Uint8
33-57	Terminal X57/8 Digital Input	[0] No function	2 set-ups		TRUE	-	Uint8
33-58	Terminal X57/9 Digital Input	[0] No function	2 set-ups		TRUE	-	Uint8
33-59	Terminal X57/10 Digital Input	[0] No function	2 set-ups		TRUE	-	Uint8
33-60	Terminal X59/1 and X59/2 Mode	[1] Output	2 set-ups		FALSE	-	Uint8
33-61	Terminal X59/1 Digital Input	[0] No function	2 set-ups		TRUE	-	Uint8
33-62	Terminal X59/2 Digital Input	[0] No function	2 set-ups		TRUE	-	Uint8
33-63	Terminal X59/1 Digital Output	[0] No function	2 set-ups		TRUE	-	Uint8
33-64	Terminal X59/2 Digital Output	[0] No function	2 set-ups		TRUE	-	Uint8
33-65	Terminal X59/3 Digital Output	[0] No function	2 set-ups		TRUE	-	Uint8
33-66	Terminal X59/4 Digital Output	[0] No function	2 set-ups		TRUE	-	Uint8
33-67	Terminal X59/5 Digital Output	[0] No function	2 set-ups		TRUE	-	Uint8
33-68	Terminal X59/6 Digital Output	[0] No function	2 set-ups		TRUE	-	Uint8
33-69	Terminal X59/7 Digital Output	[0] No function	2 set-ups		TRUE	-	Uint8
33-70	Terminal X59/8 Digital Output	[0] No function	2 set-ups		TRUE	-	Uint8
33-8*	**Global Parameters**						
33-80	Activated Program Number	-1 N/A	2 set-ups		TRUE	0	Int8
33-81	Power-up State	[1] Motor on	2 set-ups		TRUE	-	Uint8
33-82	Drive Status Monitoring	[1] On	2 set-ups		TRUE	-	Uint8
33-83	Behaviour afterError	[0] Coast	2 set-ups		TRUE	-	Uint8
33-84	Behaviour afterEsc.	[0] Controlled stop	2 set-ups		TRUE	-	Uint8
33-85	MCO Supplied by External 24VDC	[0] No	2 set-ups		TRUE	-	Uint8
33-86	Terminal at alarm	[0] Relay 1	2 set-ups		TRUE	-	Uint8
33-87	Terminal state at alarm	[0] Do nothing	2 set-ups		TRUE	-	Uint8
33-88	Status word at alarm	0 N/A	2 set-ups		TRUE	0	Uint16

6.3.22 34-** MCO Data Readouts

Par. No. #	Parameter description	Default value	4-set-up	FC 302 only	Change during operation	Conversion index	Type
34-0* PCD Write Par.							
34-01	PCD 1 Write to MCO	0 N/A	All set-ups		TRUE	0	Uint16
34-02	PCD 2 Write to MCO	0 N/A	All set-ups		TRUE	0	Uint16
34-03	PCD 3 Write to MCO	0 N/A	All set-ups		TRUE	0	Uint16
34-04	PCD 4 Write to MCO	0 N/A	All set-ups		TRUE	0	Uint16
34-05	PCD 5 Write to MCO	0 N/A	All set-ups		TRUE	0	Uint16
34-06	PCD 6 Write to MCO	0 N/A	All set-ups		TRUE	0	Uint16
34-07	PCD 7 Write to MCO	0 N/A	All set-ups		TRUE	0	Uint16
34-08	PCD 8 Write to MCO	0 N/A	All set-ups		TRUE	0	Uint16
34-09	PCD 9 Write to MCO	0 N/A	All set-ups		TRUE	0	Uint16
34-10	PCD 10 Write to MCO	0 N/A	All set-ups		TRUE	0	Uint16
34-2* PCD Read Par.							
34-21	PCD 1 Read from MCO	0 N/A	All set-ups		TRUE	0	Uint16
34-22	PCD 2 Read from MCO	0 N/A	All set-ups		TRUE	0	Uint16
34-23	PCD 3 Read from MCO	0 N/A	All set-ups		TRUE	0	Uint16
34-24	PCD 4 Read from MCO	0 N/A	All set-ups		TRUE	0	Uint16
34-25	PCD 5 Read from MCO	0 N/A	All set-ups		TRUE	0	Uint16
34-26	PCD 6 Read from MCO	0 N/A	All set-ups		TRUE	0	Uint16
34-27	PCD 7 Read from MCO	0 N/A	All set-ups		TRUE	0	Uint16
34-28	PCD 8 Read from MCO	0 N/A	All set-ups		TRUE	0	Uint16
34-29	PCD 9 Read from MCO	0 N/A	All set-ups		TRUE	0	Uint16
34-30	PCD 10 Read from MCO	0 N/A	All set-ups		TRUE	0	Uint16
34-4* Inputs & Outputs							
34-40	Digital Inputs	0 N/A	All set-ups		TRUE	0	Uint16
34-41	Digital Outputs	0 N/A	All set-ups		TRUE	0	Uint16
34-5* Process Data							
34-50	Actual Position	0 N/A	All set-ups		TRUE	0	Int32
34-51	Commanded Position	0 N/A	All set-ups		TRUE	0	Int32
34-52	Actual Master Position	0 N/A	All set-ups		TRUE	0	Int32
34-53	Slave Index Position	0 N/A	All set-ups		TRUE	0	Int32
34-54	Master Index Position	0 N/A	All set-ups		TRUE	0	Int32
34-55	Curve Position	0 N/A	All set-ups		TRUE	0	Int32
34-56	Track Error	0 N/A	All set-ups		TRUE	0	Int32
34-57	Synchronizing Error	0 N/A	All set-ups		TRUE	0	Int32
34-58	Actual Velocity	0 N/A	All set-ups		TRUE	0	Int32
34-59	Actual Master Velocity	0 N/A	All set-ups		TRUE	0	Int32
34-60	Synchronizing Status	0 N/A	All set-ups		TRUE	0	Int32
34-61	Axis Status	0 N/A	All set-ups		TRUE	0	Int32
34-62	Program Status	0 N/A	All set-ups		TRUE	0	Int32
34-64	MCO 302 Status	0 N/A	All set-ups		TRUE	0	Uint16
34-65	MCO 302 Control	0 N/A	All set-ups		TRUE	0	Uint16
34-7* Diagnosis readouts							
34-70	MCO Alarm Word 1	0 N/A	All set-ups		FALSE	0	Uint32
34-71	MCO Alarm Word 2	0 N/A	All set-ups		FALSE	0	Uint32

6.4 Parameter Lists - Active Filter

6.4.1 Operation/Display 0-**

Par. No. #	Parameter description	Default value	4-set-up	FC 302 only	Change during operation	Conversion index	Type
0-0* Basic Settings							
0-01	Language	[0] English	1 set-up		TRUE	-	Uint8
0-04	Operating State at Power-up (Hand)	[1] Forced stop	All set-ups		TRUE	-	Uint8
0-1* Set-up Operations							
0-10	Active Set-up	[1] Set-up 1	1 set-up		TRUE	-	Uint8
0-11	Edit Set-up	[1] Set-up 1	All set-ups		TRUE	-	Uint8
0-12	This Set-up Linked to	[0] Not linked	All set-ups		FALSE	-	Uint8
0-13	Readout: Linked Set-ups	0 N/A	All set-ups		FALSE	0	Uint16
0-14	Readout: Edit Set-ups / Channel	0 N/A	All set-ups		TRUE	0	Int32
0-2* LCP Display							
0-20	Display Line 1.1 Small	30112	All set-ups		TRUE	-	Uint16
0-21	Display Line 1.2 Small	30110	All set-ups		TRUE	-	Uint16
0-22	Display Line 1.3 Small	30120	All set-ups		TRUE	-	Uint16
0-23	Display Line 2 Large	30100	All set-ups		TRUE	-	Uint16
0-24	Display Line 3 Large	30121	All set-ups		TRUE	-	Uint16
0-25	My Personal Menu	ExpressionLimit	1 set-up		TRUE	0	Uint16
0-4* LCP Keypad							
0-40	[Hand on] Key on LCP	[1] Enabled	All set-ups		TRUE	-	Uint8
0-41	[Off] Key on LCP	[1] Enabled	All set-ups		TRUE	-	Uint8
0-42	[Auto on] Key on LCP	[1] Enabled	All set-ups		TRUE	-	Uint8
0-43	[Reset] Key on LCP	[1] Enabled	All set-ups		TRUE	-	Uint8
0-5* Copy/Save							
0-50	LCP Copy	[0] No copy	All set-ups		FALSE	-	Uint8
0-51	Set-up Copy	[0] No copy	All set-ups		FALSE	-	Uint8
0-6* Password							
0-60	Main Menu Password	100 N/A	1 set-up		TRUE	0	Int16
0-61	Access to Main Menu w/o Password	[0] Full access	1 set-up		TRUE	-	Uint8
0-65	Quick Menu Password	200 N/A	1 set-up		TRUE	0	Int16
0-66	Access to Quick Menu w/o Password	[0] Full access	1 set-up		TRUE	-	Uint8

6.4.2 Digital In/Out 5-**

Par. No. #	Parameter description	Default value	4-set-up	FC 302 only	Change during operation	Conversion index	Type
5-0* Digital I/O mode							
5-00	Digital I/O Mode	[0] PNP	All set-ups		FALSE	-	Uint8
5-01	Terminal 27 Mode	[0] Input	All set-ups		TRUE	-	Uint8
5-02	Terminal 29 Mode	[0] Input	All set-ups	x	TRUE	-	Uint8
5-1* Digital Inputs							
5-10	Terminal 18 Digital Input	[8] Start	All set-ups		TRUE	-	Uint8
5-11	Terminal 19 Digital Input	[0] No operation	All set-ups		TRUE	-	Uint8
5-12	Terminal 27 Digital Input	[0] No operation	All set-ups		TRUE	-	Uint8
5-13	Terminal 29 Digital Input	[0] No operation	All set-ups		TRUE	-	Uint8
5-14	Terminal 32 Digital Input	[90] AC Contactor	All set-ups		TRUE	-	Uint8
5-15	Terminal 33 Digital Input	[91] DC Contactor	All set-ups		TRUE	-	Uint8
5-16	Terminal X30/2 Digital Input	[0] No operation	All set-ups		TRUE	-	Uint8
5-17	Terminal X30/3 Digital Input	[0] No operation	All set-ups		TRUE	-	Uint8
5-18	Terminal X30/4 Digital Input	[0] No operation	All set-ups		TRUE	-	Uint8
5-19	Terminal 37 Safe Stop	[1] Safe Stop Alarm	1 set-up		TRUE	-	Uint8
5-20	Terminal X46/1 Digital Input	[0] No operation	All set-ups		TRUE	-	Uint8
5-21	Terminal X46/3 Digital Input	[0] No operation	All set-ups		TRUE	-	Uint8
5-22	Terminal X46/5 Digital Input	[0] No operation	All set-ups		TRUE	-	Uint8
5-23	Terminal X46/7 Digital Input	[0] No operation	All set-ups		TRUE	-	Uint8
5-24	Terminal X46/9 Digital Input	[0] No operation	All set-ups		TRUE	-	Uint8
5-25	Terminal X46/11 Digital Input	[0] No operation	All set-ups		TRUE	-	Uint8
5-26	Terminal X46/13 Digital Input	[0] No operation	All set-ups		TRUE	-	Uint8
5-3* Digital Outputs							
5-30	Terminal 27 Digital Output	[0] No operation	All set-ups		TRUE	-	Uint8
5-31	Terminal 29 Digital Output	[0] No operation	All set-ups	x	TRUE	-	Uint8
5-32	Term X30/6 Digi Out (MCB 101)	[0] No operation	All set-ups		TRUE	-	Uint8
5-33	Term X30/7 Digi Out (MCB 101)	[0] No operation	All set-ups		TRUE	-	Uint8
5-4* Relays							
5-40	Function Relay	[0] No operation	All set-ups		TRUE	-	Uint8
5-41	On Delay, Relay	0.30 s	All set-ups		TRUE	-2	Uint16
5-42	Off Delay, Relay	0.30 s	All set-ups		TRUE	-2	Uint16

6.4.3 Comm. and Options 8-**

Par. No. #	Parameter description	Default value	4-set-up	FC 302 only	Change during operation	Conversion index	Type
8-0* General Settings							
8-01	Control Site	[0] Digital and ctrl.word	All set-ups		TRUE	-	Uint8
8-02	Control Word Source	null	All set-ups		TRUE	-	Uint8
8-03	Control Word Timeout Time	1.0 s	1 set-up		TRUE	-1	Uint32
8-04	Control Word Timeout Function	[0] Off	1 set-up		TRUE	-	Uint8
8-05	End-of-Timeout Function	[1] Resume set-up	1 set-up		TRUE	-	Uint8
8-06	Reset Control Word Timeout	[0] Do not reset	All set-ups		TRUE	-	Uint8
8-3* FC Port Settings							
8-30	Protocol	[1] FC MC	1 set-up		TRUE	-	Uint8
8-31	Address	2 N/A	1 set-up		TRUE	0	Uint8
8-32	FC Port Baud Rate	[2] 9600 Baud	1 set-up		TRUE	-	Uint8
8-35	Minimum Response Delay	10 ms	All set-ups		TRUE	-3	Uint16
8-36	Max Response Delay	5000 ms	1 set-up		TRUE	-3	Uint16
8-37	Max Inter-Char Delay	25 ms	1 set-up		TRUE	-3	Uint16
8-5* Digital/Bus							
8-53	Start Select	[3] Logic OR	All set-ups		TRUE	-	Uint8
8-55	Set-up Select	[3] Logic OR	All set-ups		TRUE	-	Uint8

6.4.4 Special Functions 14-**

Par. No. #	Parameter description	Default value	4-set-up	FC 302 only	Change during operation	Conversion index	Type
14-2* Trip Reset							
14-20	Reset Mode	[0] Manual reset	All set-ups		TRUE	-	Uint8
14-21	Automatic Restart Time	10 s	All set-ups		TRUE	0	Uint16
14-22	Operation Mode	[0] Normal operation	All set-ups		TRUE	-	Uint8
14-23	Typecode Setting	null	2 set-ups		FALSE	-	Uint8
14-28	Production Settings	[0] No action	All set-ups		TRUE	-	Uint8
14-29	Service Code	0 N/A	All set-ups		TRUE	0	Int32
14-5* Environment							
14-50	RFI Filter	[1] On	1 set-up		FALSE	-	Uint8
14-53	Fan Monitor	[1] Warning	All set-ups		TRUE	-	Uint8
14-54	Bus Partner	1 N/A	2 set-ups		TRUE	0	Uint16

6.4.5 FC Information 15-**

Par. No. #	Parameter description	Default value	4-set-up	FC 302 only	Change during operation	Conversion index	Type
15-0* Operating Data							
15-00	Operating Hours	0 h	All set-ups		FALSE	74	Uint32
15-01	Running Hours	0 h	All set-ups		FALSE	74	Uint32
15-03	Power Up's	0 N/A	All set-ups		FALSE	0	Uint32
15-04	Over Temp's	0 N/A	All set-ups		FALSE	0	Uint16
15-05	Over Volt's	0 N/A	All set-ups		FALSE	0	Uint16
15-07	Reset Running Hours Counter	[0] Do not reset	All set-ups		TRUE	-	Uint8
15-1* Data Log Settings							
15-10	Logging Source	0	2 set-ups		TRUE	-	Uint16
15-11	Logging Interval	ExpressionLimit	2 set-ups		TRUE	-3	TimD
15-12	Trigger Event	[0] False	1 set-up		TRUE	-	Uint8
15-13	Logging Mode	[0] Log always	2 set-ups		TRUE	-	Uint8
15-14	Samples Before Trigger	50 N/A	2 set-ups		TRUE	0	Uint8
15-2* Historic Log							
15-20	Historic Log: Event	0 N/A	All set-ups		FALSE	0	Uint8
15-21	Historic Log: Value	0 N/A	All set-ups		FALSE	0	Uint32
15-22	Historic Log: Time	0 ms	All set-ups		FALSE	-3	Uint32
15-3* Fault Log							
15-30	Fault Log: Error Code	0 N/A	All set-ups		FALSE	0	Uint16
15-31	Fault Log: Value	0 N/A	All set-ups		FALSE	0	Int16
15-32	Fault Log: Time	0 s	All set-ups		FALSE	0	Uint32
15-4* Unit Identification							
15-40	FC Type	0 N/A	All set-ups		FALSE	0	VisStr[6]
15-41	Power Section	0 N/A	All set-ups		FALSE	0	VisStr[20]
15-42	Voltage	0 N/A	All set-ups		FALSE	0	VisStr[20]
15-43	Software Version	0 N/A	All set-ups		FALSE	0	VisStr[5]
15-44	Ordered Typecode String	0 N/A	All set-ups		FALSE	0	VisStr[40]
15-45	Actual Typecode String	0 N/A	All set-ups		FALSE	0	VisStr[40]
15-46	Unit Ordering No	0 N/A	All set-ups		FALSE	0	VisStr[8]
15-47	Power Card Ordering No	0 N/A	All set-ups		FALSE	0	VisStr[8]
15-48	LCP Id No	0 N/A	All set-ups		FALSE	0	VisStr[20]
15-49	SW ID Control Card	0 N/A	All set-ups		FALSE	0	VisStr[20]
15-50	SW ID Power Card	0 N/A	All set-ups		FALSE	0	VisStr[20]
15-51	Unit Serial Number	0 N/A	All set-ups		FALSE	0	VisStr[10]
15-53	Power Card Serial Number	0 N/A	All set-ups		FALSE	0	VisStr[19]
15-6* Option Ident							
15-60	Option Mounted	0 N/A	All set-ups		FALSE	0	VisStr[30]
15-61	Option SW Version	0 N/A	All set-ups		FALSE	0	VisStr[20]
15-62	Option Ordering No	0 N/A	All set-ups		FALSE	0	VisStr[8]
15-63	Option Serial No	0 N/A	All set-ups		FALSE	0	VisStr[18]
15-70	Option in Slot A	0 N/A	All set-ups		FALSE	0	VisStr[30]
15-71	Slot A Option SW Version	0 N/A	All set-ups		FALSE	0	VisStr[20]
15-72	Option in Slot B	0 N/A	All set-ups		FALSE	0	VisStr[30]
15-73	Slot B Option SW Version	0 N/A	All set-ups		FALSE	0	VisStr[20]
15-74	Option in Slot C0	0 N/A	All set-ups		FALSE	0	VisStr[30]
15-75	Slot C0 Option SW Version	0 N/A	All set-ups		FALSE	0	VisStr[20]
15-76	Option in Slot C1	0 N/A	All set-ups		FALSE	0	VisStr[30]
15-77	Slot C1 Option SW Version	0 N/A	All set-ups		FALSE	0	VisStr[20]
15-9* Parameter Info							
15-92	Defined Parameters	0 N/A	All set-ups		FALSE	0	Uint16
15-93	Modified Parameters	0 N/A	All set-ups		FALSE	0	Uint16
15-98	Unit Identification	0 N/A	All set-ups		FALSE	0	VisStr[40]
15-99	Parameter Metadata	0 N/A	All set-ups		FALSE	0	Uint16

6.4.6 Data Readouts 16-**

Par. No. #	Parameter description	Default value	4-set-up	FC 302 only	Change during operation	Conversion index	Type
16-0* General Status							
16-00	Control Word	0 N/A	All set-ups		FALSE	0	V2
16-03	Status Word	0 N/A	All set-ups		FALSE	0	V2
16-3* AF Status							
16-30	DC Link Voltage	0 V	All set-ups		FALSE	0	Uint16
16-34	Heatsink Temp.	0 °C	All set-ups		FALSE	100	Uint8
16-35	Inverter Thermal	0 %	All set-ups		FALSE	0	Uint8
16-36	Inv. Nom. Current	ExpressionLimit	All set-ups		FALSE	-2	Uint32
16-37	Inv. Max. Current	ExpressionLimit	All set-ups		FALSE	-2	Uint32
16-39	Control Card Temp.	0 °C	All set-ups		FALSE	100	Uint8
16-40	Logging Buffer Full	[0] No	All set-ups		TRUE	-	Uint8
16-49	Current Fault Source	0 N/A	All set-ups		TRUE	0	Uint8
16-6* Inputs & Outputs							
16-60	Digital Input	0 N/A	All set-ups		FALSE	0	Uint16
16-66	Digital Output [bin]	0 N/A	All set-ups		FALSE	0	Int16
16-71	Relay Output [bin]	0 N/A	All set-ups		FALSE	0	Int16
16-8* Fieldbus & FC Port							
16-80	Fieldbus CTW 1	0 N/A	All set-ups		FALSE	0	V2
16-84	Comm. Option STW	0 N/A	All set-ups		FALSE	0	V2
16-85	FC Port CTW 1	0 N/A	All set-ups		FALSE	0	V2
16-9* Diagnosis Readouts							
16-90	Alarm Word	0 N/A	All set-ups		FALSE	0	Uint32
16-91	Alarm Word 2	0 N/A	All set-ups		FALSE	0	Uint32
16-92	Warning Word	0 N/A	All set-ups		FALSE	0	Uint32
16-93	Warning Word 2	0 N/A	All set-ups		FALSE	0	Uint32
16-94	Ext. Status Word	0 N/A	All set-ups		FALSE	0	Uint32

6

6.4.7 AF Settings 300-**



NB!

Except for par. 300-10, it is not recommended to change the settings in this par. group for the Low Harmonic Drive

Par. No. #	Parameter description	Default value	4-set-up	FC 302 only	Change during operation	Conversion index	Type
300-0* General Settings							
300-00	Harmonic Cancellation Mode	[0] Overall	All set-ups		TRUE	-	Uint8
300-01	Compensation Priority	[0] Harmonics	All set-ups		TRUE	-	Uint8
300-1* Network Settings							
300-10	Active Filter Nominal Voltage	ExpressionLimit	2 set-ups		FALSE	0	Uint32
300-2* CT Settings							
300-20	CT Primary Rating	ExpressionLimit	2 set-ups		FALSE	0	Uint32
300-21	CT Secondary Rating	[1] 5A	2 set-ups		FALSE	-	Uint8
300-22	CT Nominal Voltage	342 V	2 set-ups		FALSE	0	Uint32
300-24	CT Sequence	[0] L1, L2, L3	2 set-ups		FALSE	-	Uint8
300-25	CT Polarity	[0] Normal	2 set-ups		FALSE	-	Uint8
300-26	CT Placement	[1] Load Current	2 set-ups		FALSE	-	Uint8
300-29	Start Auto CT Detection	[0] Off	All set-ups		FALSE	-	Uint8
300-3* Compensation							
300-30	Compensation Points	0.0 A	All set-ups		TRUE	-1	Uint32
300-35	Cosphi Reference	0.500 N/A	All set-ups		TRUE	-3	Uint16

6.4.8 AF Readouts301-**

Par. No. #	Parameter description	Default value	4-set-up	FC 302 only	Change during operation	Conversion index	Type
301-0* Output Currents							
301-00	Output Current [A]	0.00 A	All set-ups		TRUE	-2	Int32
301-01	Output Current [%]	0.0 %	All set-ups		TRUE	-1	Int32
301-1* Unit Performance							
301-10	THD of Current [%]	0.0 %	All set-ups		TRUE	-1	Uint16
301-12	Power Factor	0.00 N/A	All set-ups		TRUE	-2	Uint16
301-13	Cosphi	0.00 N/A	All set-ups		TRUE	-2	Int16
301-14	Leftover Currents	0.0 A	All set-ups		TRUE	-1	Uint32
301-2* Mains Status							
301-20	Mains Current [A]	0 A	All set-ups		TRUE	0	Int32
301-21	Mains Frequency	0 Hz	All set-ups		TRUE	0	Uint8
301-22	Fund. Mains Current [A]	0 A	All set-ups		TRUE	0	Int32

7

MG.34.O1.02 - VLT® is a registered Danfoss trademark

7 RS-485 Installation and Set-up

7.1 RS-485 Installation and Set-up

7.1.1 Overview

RS-485 is a two-wire bus interface compatible with multi-drop network topology, i.e. nodes can be connected as a bus, or via drop cables from a common trunk line. A total of 32 nodes can be connected to one network segment.
Network segments are divided up by repeaters. Please note that each repeater functions as a node within the segment in which it is installed. Each node connected within a given network must have a unique node address, across all segments.
Terminate each segment at both ends, using either the termination switch (S801) of the frequency converters or a biased termination resistor network. Always use screened twisted pair (STP) cable for bus cabling, and always follow good common installation practice.
Low-impedance ground connection of the screen at every node is very important, including at high frequencies. This can be achieved by connecting a large surface of the screen to ground, for example by means of a cable clamp or a conductive cable gland. It may be necessary to apply potential-equalizing cables to maintain the same ground potential throughout the network, particularly in installations where there are long lengths of cable.
To prevent impedance mismatch, always use the same type of cable throughout the entire network. When connecting a motor to the frequency converter, always use screened motor cable.

Cable: Screened twisted pair (STP)
Impedance: 120 Ohm
Cable length: Max. 1200 m (including drop lines)
Max. 500 m station-to-station

7.1.2 Network Connection

Connect the frequency converter to the RS-485 network as follows (see also diagram):

1. Connect signal wires to terminal 68 (P+) and terminal 69 (N-) on the main control board of the frequency converter.
2. Connect the cable screen to the cable clamps.

NB!
Screened, twisted-pair cables are recommended in order to reduce noise between conductors.

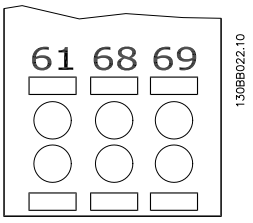

Illustration 7.1: Network Terminal Connection

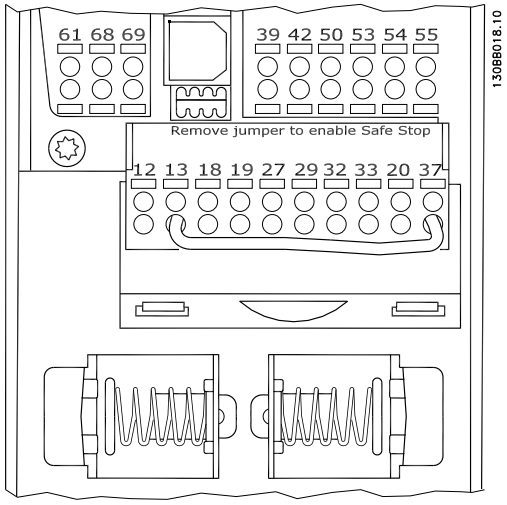

Illustration 7.2: Control card terminals

7.1.3 RS 485 Bus Termination

Use the terminator dip switch on the main control board of the frequency converter to terminate the RS-485 bus.

NB!
The factory setting for the dip switch is OFF.

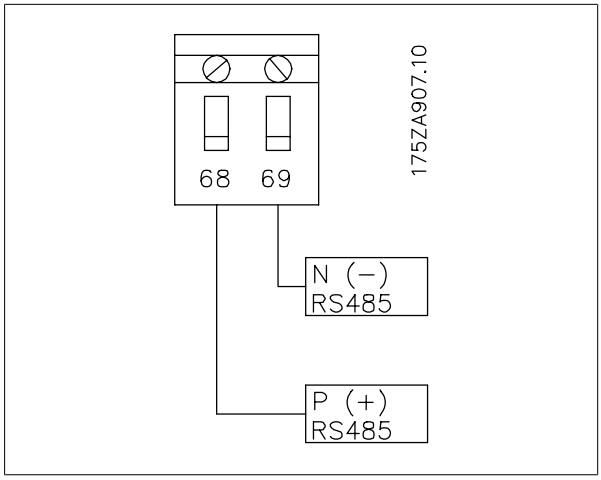

Terminator Switch Factory Setting

7

7.1.4 EMC Precautions

The following EMC precautions are recommended in order to achieve interference-free operation of the RS-485 network.

Relevant national and local regulations, for example regarding protective earth connection, must be observed. The RS-485 communication cable must be kept away from motor and brake resistor cables to avoid coupling of high frequency noise from one cable to another. Normally a distance of 200 mm (8 inches) is sufficient, but keeping the greatest possible distance between the cables is generally recommended, especially where cables run in parallel over long distances. When crossing is unavoidable, the RS-485 cable must cross motor and brake resistor cables at an angle of 90 degrees.

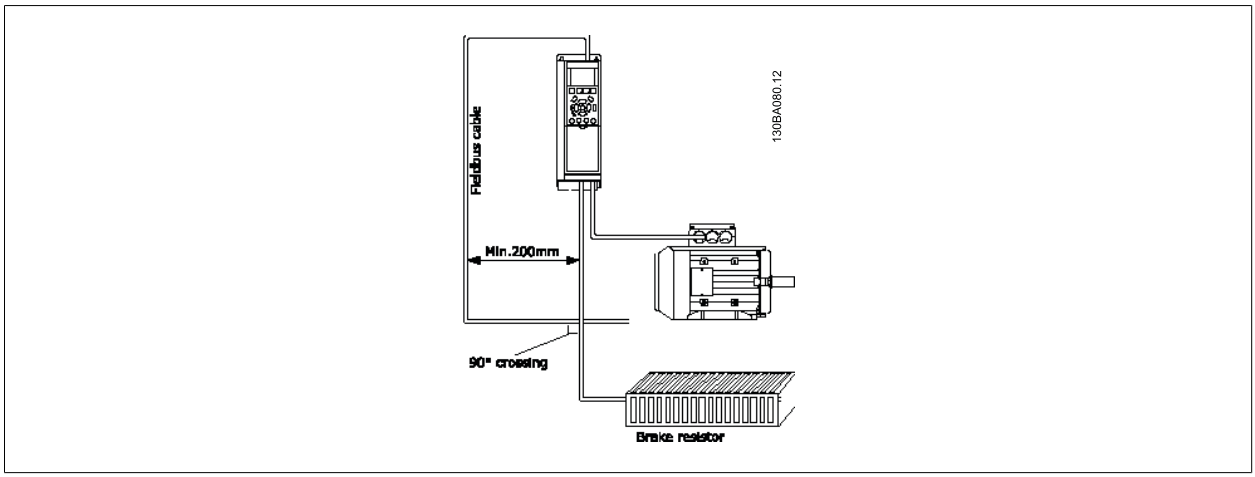

The FC protocol, also referred to as FC bus or Standard bus, is the Danfoss standard fieldbus. It defines an access technique according to the master-slave principle for communications via a serial bus.
One master and a maximum of 126 slaves can be connected to the bus. The individual slaves are selected by the master via an address character in the telegram. A slave itself can never transmit without first being requested to do so, and direct message transfer between the individual slaves is not possible. Communications occur in the half-duplex mode.
The master function cannot be transferred to another node (single-master system).

The physical layer is RS-485, thus utilizing the RS-485 port built into the frequency converter. The FC protocol supports different telegram formats; a short format of 8 bytes for process data, and a long format of 16 bytes that also includes a parameter channel. A third telegram format is used for texts.

7.3 Network Configuration

7.3.1 FC 300 Frequency Converter Set-up

Set the following parameters to enable the FC protocol for the frequency converter.

Parameter Number	Setting
Par. 8-30 *Protocol*	FC
Par. 8-31 *Address*	1 - 126
Par. 8-32 *FC Port Baud Rate*	2400 - 115200
Par. 8-33 *Parity / Stop Bits*	Even parity, 1 stop bit (default)

7.4 FC Protocol Message Framing Structure

7.4.1 Content of a Character (byte)

Each character transferred begins with a start bit. Then 8 data bits are transferred, corresponding to a byte. Each character is secured via a parity bit, which is set at "1" when it reaches parity (i.e. when there is an equal number of 1's in the 8 data bits and the parity bit in total). A character is completed by a stop bit, thus consisting of 11 bits in all.

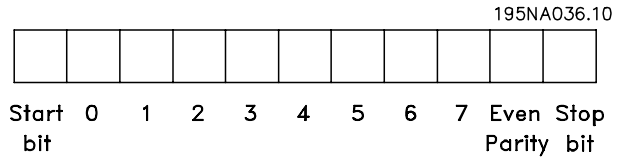

7.4.2 Telegram Structure

Each telegram begins with a start character (STX)=02 Hex, followed by a byte denoting the telegram length (LGE) and a byte denoting the frequency converter address (ADR). A number of data bytes (variable, depending on the type of telegram) follows. The telegram is completed by a data control byte (BCC).

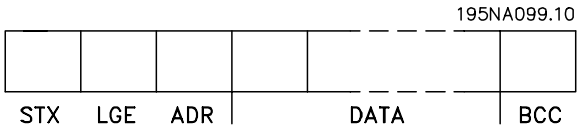

7.4.3 Telegram Length (LGE)

The telegram length is the number of data bytes plus the address byte ADR and the data control byte BCC.

The length of telegrams with 4 data bytes is	LGE = 4 + 1 + 1 = 6 bytes
The length of telegrams with 12 data bytes is	LGE = 12 + 1 + 1 = 14 bytes
The length of telegrams containing texts is	10[1)]+n bytes

[1)] The 10 represents the fixed characters, while the "n'" is variable (depending on the length of the text).

7.4.4 Frequency Converter Address (ADR)

Two different address formats are used.
The address range of the frequency converter is either 1-31 or 1-126.

1. Address format 1-31:
Bit 7 = 0 (address format 1-31 active)
Bit 6 is not used
Bit 5 = 1: Broadcast, address bits (0-4) are not used
Bit 5 = 0: No Broadcast
Bit 0-4 = Frequency converter address 1-31

2. Address format 1-126:
Bit 7 = 1 (address format 1-126 active)
Bit 0-6 = Frequency converter address 1-126
Bit 0-6 = 0 Broadcast

The slave returns the address byte unchanged to the master in the response telegram.

7

7.4.5 Data Control Byte (BCC)

The checksum is calculated as an XOR-function. Before the first byte in the telegram is received, the Calculated Checksum is 0.

7.4.6 The Data Field

The structure of data blocks depends on the type of telegram. There are three telegram types, and the type applies for both control telegrams (master=>slave) and response telegrams (slave=>master).

The three types of telegram are:

Process block (PCD):
The PCD is made up of a data block of four bytes (2 words) and contains:
- Control word and reference value (from master to slave)
- Status word and present output frequency (from slave to master).

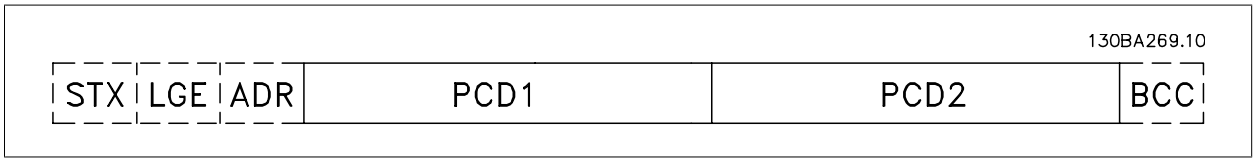

Parameter block:
The parameter block is used to transfer parameters between master and slave. The data block is made up of 12 bytes (6 words) and also contains the process block.

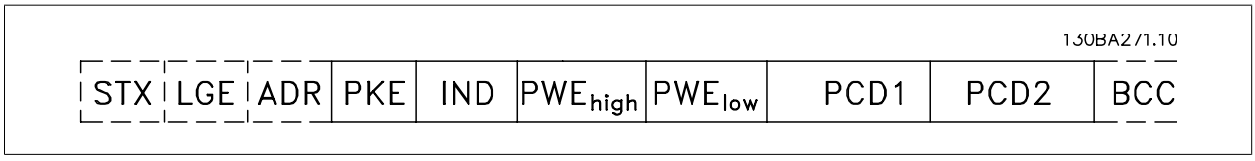

Text block:
The text block is used to read or write texts via the data block.

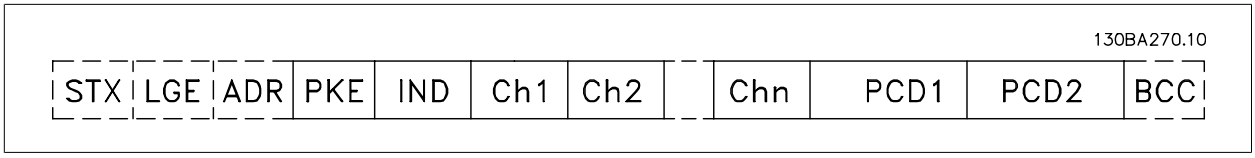

7.4.7 The PKE Field

The PKE field contains two sub-fields: Parameter command and response AK, and Parameter number PNU:

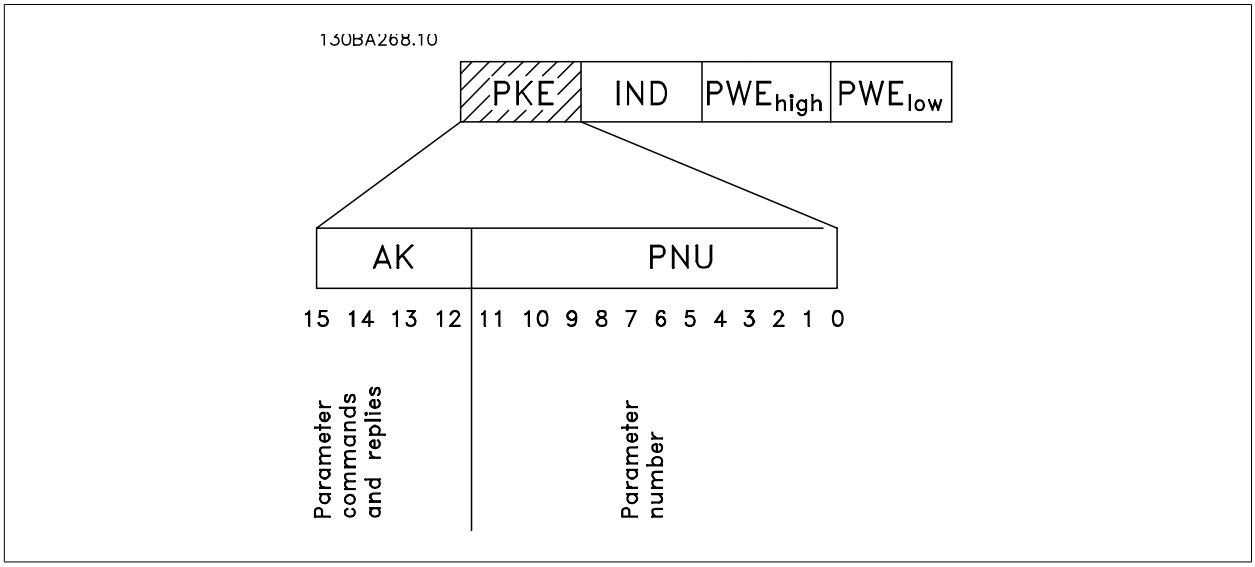

Bits no. 12-15 transfer parameter commands from master to slave and return processed slave responses to the master.

Parameter commands master ⇒ slave

Bit no.				Parameter command
15	14	13	12	
0	0	0	0	No command
0	0	0	1	Read parameter value
0	0	1	0	Write parameter value in RAM (word)
0	0	1	1	Write parameter value in RAM (double word)
1	1	0	1	Write parameter value in RAM and EEprom (double word)
1	1	1	0	Write parameter value in RAM and EEprom (word)
1	1	1	1	Read/write text

Response slave ⇒master

Bit no.				Response
15	14	13	12	
0	0	0	0	No response
0	0	0	1	Parameter value transferred (word)
0	0	1	0	Parameter value transferred (double word)
0	1	1	1	Command cannot be performed
1	1	1	1	text transferred

If the command cannot be performed, the slave sends this response:
0111 Command cannot be performed
- and issues the following fault report in the parameter value (PWE):

PWE low (Hex)	Fault Report
0	The parameter number used does not exit
1	There is no write access to the defined parameter
2	Data value exceeds the parameter's limits
3	The sub index used does not exit
4	The parameter is not the array type
5	The data type does not match the defined parameter
11	Data change in the defined parameter is not possible in the frequency converter's present mode. Certain parameters can only be changed when the motor is turned off
82	There is no bus access to the defined parameter
83	Data change is not possible because factory setup is selected

7.4.8 Parameter Number (PNU)

Bits no. 0-11 transfer parameter numbers. The function of the relevant parameter is defined in the parameter description in the Programming Guide.

7.4.9 Index (IND)

The index is used together with the parameter number to read/write-access parameters with an index, e.g. par. 15-30 *Alarm Log: Error Code*. The index consists of 2 bytes, a low byte and a high byte.

Only the low byte is used as an index.

7.4.10 Parameter Value (PWE)

The parameter value block consists of 2 words (4 bytes), and the value depends on the defined command (AK). The master prompts for a parameter value when the PWE block contains no value. To change a parameter value (write), write the new value in the PWE block and send from the master to the slave.

When a slave responds to a parameter request (read command), the present parameter value in the PWE block is transferred and returned to the master. If a parameter contains not a numerical value but several data options, e.g. par. 0-01 *Language* where [0] corresponds to English, and [4] corresponds to Danish, select the data value by entering the value in the PWE block. See Example - Selecting a data value. Serial communication is only capable of reading parameters containing data type 9 (text string).

Par. 15-40 *FC Type* to par. 15-53 *Power Card Serial Number* contain data type 9.
For example, read the unit size and mains voltage range in par. 15-40 *FC Type*. When a text string is transferred (read), the length of the telegram is variable, and the texts are of different lengths. The telegram length is defined in the second byte of the telegram, LGE. When using text transfer the index character indicates whether it is a read or a write command.

To read a text via the PWE block, set the parameter command (AK) to 'F' Hex. The index character high-byte must be "4".

Some parameters contain text that can be written to via the serial bus. To write a text via the PWE block, set the parameter command (AK) to 'F' Hex. The index characters high-byte must be "5".

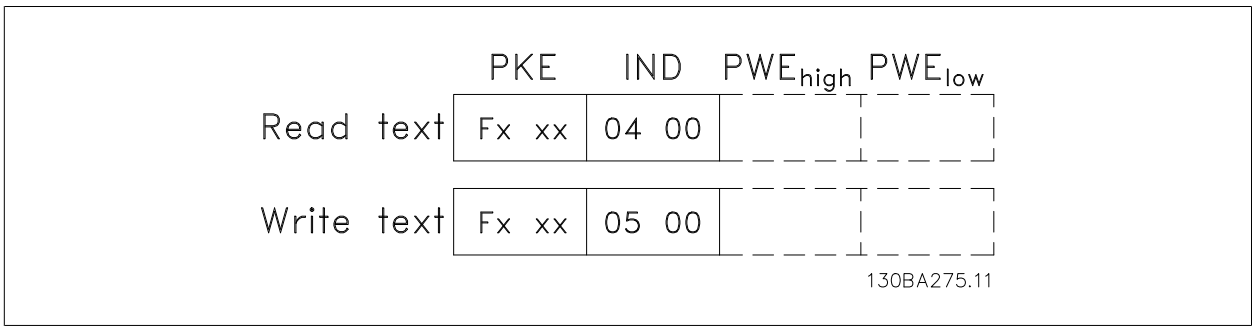

7.4.11 Data Types Supported by FC 300

Unsigned means that there is no operational sign in the telegram.

Data types	Description
3	Integer 16
4	Integer 32
5	Unsigned 8
6	Unsigned 16
7	Unsigned 32
9	Text string
10	Byte string
13	Time difference
33	Reserved
35	Bit sequence

7

7.4.12 Conversion

The various attributes of each parameter are displayed in the section Factory Settings. Parameter values are transferred as whole numbers only. Conversion factors are therefore used to transfer decimals.

Par. 4-12 *Motor Speed Low Limit [Hz]* has a conversion factor of 0.1.
To preset the minimum frequency to 10 Hz, transfer the value 100. A conversion factor of 0.1 means that the value transferred is multiplied by 0.1. The value 100 is thus perceived as 10.0.

Conversion table

Conversion index	Conversion factor
74	0.1
2	100
1	10
0	1
-1	0.1
-2	0.01
-3	0.001
-4	0.0001
-5	0.00001

7.4.13 Process Words (PCD)

The block of process words is divided into two blocks of 16 bits, which always occur in the defined sequence.

PCD 1	PCD 2
Control telegram (master⇒slave Control word)	Reference-value
Control telegram (slave ⇒master) Status word	Present outp. frequency

7.5 Examples

7.5.1 Writing a Parameter Value

Change par. 4-14 *Motor Speed High Limit [Hz]* to 100 Hz.
Write the data in EEPROM.

PKE = E19E Hex - Write single word in par. 4-14 *Motor Speed High Limit [Hz]*
IND = 0000 Hex
PWEHIGH = 0000 Hex
PWELOW = 03E8 Hex - Data value 1000, corresponding to 100 Hz, see Conversion.

The telegram will look like this:

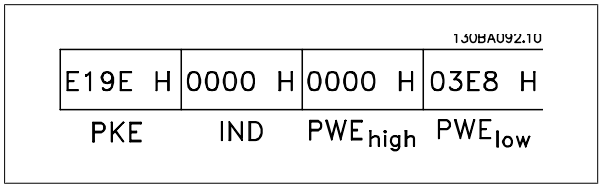

Note: Par. 4-14 *Motor Speed High Limit [Hz]* is a single word, and the parameter command for write in EEPROM is "E". Parameter number 4-14 is 19E in hexadecimal.

The response from the slave to the master will be:

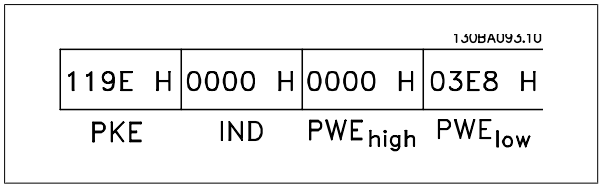

7.5.2 Reading a Parameter Value

Read the value in par. 3-41 *Ramp 1 Ramp Up Time*

PKE = 1155 Hex - Read parameter value in par. 3-41 *Ramp 1 Ramp Up Time*
IND = 0000 Hex
PWEHIGH = 0000 Hex
PWELOW = 0000 Hex

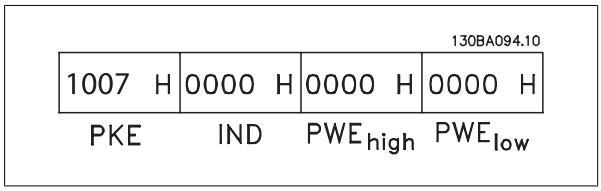

If the value in par. 3-41 *Ramp 1 Ramp Up Time* is 10 s, the response from the slave to the master will be:

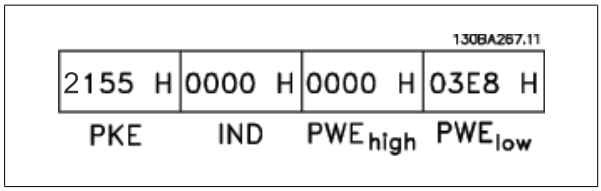

3E8 Hex corresponds to 1000 decimal. The conversion index for par. 3-41 *Ramp 1 Ramp Up Time* is -2, i.e. 0.01.
par. 3-41 *Ramp 1 Ramp Up Time* is of the type *Unsigned 32*.

7.6 How to Access Parameters

7.6.1 Parameter Handling

The PNU (Parameter Number) is translated from the register address contained in the Modbus read or write message. The parameter number is translated to Modbus as (10 x parameter number) DECIMAL.

7.6.2 Storage of Data

The Coil 65 decimal determines whether data written to the frequency converter are stored in EEPROM and RAM (coil 65 = 1) or only in RAM (coil 65 = 0).

7.6.3 IND

The array index is set in Holding Register 9 and used when accessing array parameters.

7.6.4 Text Blocks

Parameters stored as text strings are accessed in the same way as the other parameters. The maximum text block size is 20 characters. If a read request for a parameter is for more characters than the parameter stores, the response is truncated. If the read request for a parameter is for fewer characters than the parameter stores, the response is space filled.

7.6.5 Conversion Factor

The different attributes for each parameter can be seen in the section on factory settings. Since a parameter value can only be transferred as a whole number, a conversion factor must be used to transfer decimals. Please refer to the *Parameters section*.

7.6.6 Parameter Values

Standard Data Types

Standard data types are int16, int32, uint8, uint16 and uint32. They are stored as 4x registers (40001 – 4FFFF). The parameters are read using function 03HEX "Read Holding Registers." Parameters are written using the function 6HEX "Preset Single Register" for 1 register (16 bits), and the function 10HEX "Preset Multiple Registers" for 2 registers (32 bits). Readable sizes range from 1 register (16 bits) up to 10 registers (20 characters).

Non standard Data Types

Non standard data types are text strings and are stored as 4x registers (40001 – 4FFFF). The parameters are read using function 03HEX "Read Holding Registers" and written using function 10HEX "Preset Multiple Registers." Readable sizes range from 1 register (2 characters) up to 10 registers (20 characters).

8

8 General Specifications

Mains supply (L1, L2, L3):	
Supply voltage	380-480 V +5%

Mains voltage low / mains drop-out:

During low mains voltage or a mains drop-out, the FC continues until the intermediate circuit voltage drops below the minimum stop level, which corresponds typically to 15% below the FC's lowest rated supply voltage. Power-up and full torque cannot be expected at mains voltage lower than 10% below the FC's lowest rated supply voltage.

Supply frequency	50/60 Hz ±5%
Max. imbalance temporary between mains phases	3.0 % of rated supply voltage
True Power Factor (λ)	> 0.98 nominal at rated load
Displacement Power Factor (cosφ) near unity	(> 0.98)
THiD	< 5%
Switching on input supply L1, L2, L3 (power-ups)	maximum once/2 min.
Environment according to EN60664-1	overvoltage category III / pollution degree 2

The unit is suitable for use on a circuit capable of delivering not more than 100.000 RMS symmetrical Amperes, 480/690 V maximum.

Motor output (U, V, W):	
Output voltage	0 - 100% of supply voltage
Output frequency	0 - 800* Hz
Switching on output	Unlimited
Ramp times	1 - 3600 sec.

* Voltage and power dependent

Torque characteristics:	
Starting torque (Constant torque)	maximum 110% for 1 min.*
Starting torque	maximum 135% up to 0.5 sec.*
Overload torque (Constant torque)	maximum 110% for 1 min.*

**Percentage relates to the frequency converter's nominal torque.*

Cable lengths and cross sections:	
Max. motor cable length, screened/armoured	150 m
Max. motor cable length, unscreened/unarmoured	300 m
Max. cross section to motor, mains, load sharing and brake *	
Maximum cross section to control terminals, rigid wire	1.5 mm^2/16 AWG (2 x 0.75 mm^2)
Maximum cross section to control terminals, flexible cable	1 mm^2/18 AWG
Maximum cross section to control terminals, cable with enclosed core	0.5 mm^2/20 AWG
Minimum cross section to control terminals	0.25 mm^2

** See Mains Supply tables for more information!*

Digital inputs:	
Programmable digital inputs	4 (6)
Terminal number	18, 19, 27 [1)], 29 [1)], 32, 33,
Logic	PNP or NPN
Voltage level	0 - 24 V DC
Voltage level, logic'0' PNP	< 5 V DC
Voltage level, logic'1' PNP	> 10 V DC
Voltage level, logic '0' NPN	> 19 V DC
Voltage level, logic '1' NPN	< 14 V DC
Maximum voltage on input	28 V DC
Input resistance, R_i	approx. 4 kΩ

All digital inputs are galvanically isolated from the supply voltage (PELV) and other high-voltage terminals.

1) Terminals 27 and 29 can also be programmed as output.

Analog inputs:	
Number of analog inputs	2
Terminal number	53, 54
Modes	Voltage or current
Mode select	Switch S201 and switch S202
Voltage mode	Switch S201/switch S202 = OFF (U)
Voltage level	: 0 to + 10 V (scaleable)
Input resistance, R_i	approx. 10 kΩ
Max. voltage	± 20 V
Current mode	Switch S201/switch S202 = ON (I)
Current level	0/4 to 20 mA (scaleable)
Input resistance, R_i	approx. 200 Ω
Max. current	30 mA
Resolution for analog inputs	10 bit (+ sign)
Accuracy of analog inputs	Max. error 0.5% of full scale
Bandwidth	: 200 Hz

The analog inputs are galvanically isolated from the supply voltage (PELV) and other high-voltage terminals.

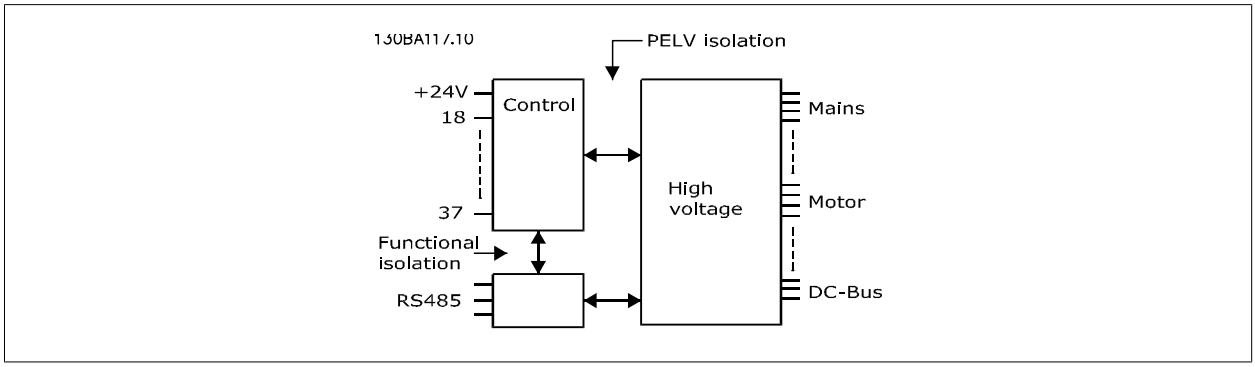

Pulse inputs:	
Programmable pulse inputs	2
Terminal number pulse	29, 33
Max. frequency at terminal, 29, 33	110 kHz (Push-pull driven)
Max. frequency at terminal, 29, 33	5 kHz (open collector)
Min. frequency at terminal 29, 33	4 Hz
Voltage level	see section on Digital input
Maximum voltage on input	28 V DC
Input resistance, R_i	approx. 4 kΩ
Pulse input accuracy (0.1 - 1 kHz)	Max. error: 0.1% of full scale
Analog output:	
Number of programmable analog outputs	1
Terminal number	42
Current range at analog output	0/4 - 20 mA
Max. resistor load to common at analog output	500 Ω
Accuracy on analog output	Max. error: 0.8 % of full scale
Resolution on analog output	8 bit

The analog output is galvanically isolated from the supply voltage (PELV) and other high-voltage terminals.

Control card, RS-485 serial communication:	
Terminal number	68 (P,TX+, RX+), 69 (N,TX-, RX-)
Terminal number 61	Common for terminals 68 and 69

The RS-485 serial communication circuit is functionally seated from other central circuits and galvanically isolated from the supply voltage (PELV).

Digital output:	
Programmable digital/pulse outputs	2
Terminal number	27, 29 [1)]
Voltage level at digital/frequency output	0 - 24 V
Max. output current (sink or source)	40 mA
Max. load at frequency output	1 kΩ
Max. capacitive load at frequency output	10 nF
Minimum output frequency at frequency output	0 Hz
Maximum output frequency at frequency output	32 kHz
Accuracy of frequency output	Max. error: 0.1 % of full scale
Resolution of frequency outputs	12 bit

1) Terminal 27 and 29 can also be programmed as input.

The digital output is galvanically isolated from the supply voltage (PELV) and other high-voltage terminals.

Control card, 24 V DC output:	
Terminal number	12, 13
Max. load	: 200 mA

The 24 V DC supply is galvanically isolated from the supply voltage (PELV), but has the same potential as the analog and digital inputs and outputs.

Relay outputs:	
Programmable relay outputs	2
Relay 01 Terminal number	1-3 (break), 1-2 (make)
Max. terminal load (AC-1)[1)] on 1-3 (NC), 1-2 (NO) (Resistive load)	240 V AC, 2 A
Max. terminal load (AC-15)[1)] (Inductive load @ cosφ 0.4)	240 V AC, 0.2 A
Max. terminal load (DC-1)[1)] on 1-2 (NO), 1-3 (NC) (Resistive load)	60 V DC, 1A
Max. terminal load (DC-13)[1)] (Inductive load)	24 V DC, 0.1A
Relay 02 Terminal number	4-6 (break), 4-5 (make)
Max. terminal load (AC-1)[1)] on 4-5 (NO) (Resistive load)[2)3)]	400 V AC, 2 A
Max. terminal load (AC-15)[1)] on 4-5 (NO) (Inductive load @ cosφ 0.4)	240 V AC, 0.2 A
Max. terminal load (DC-1)[1)] on 4-5 (NO) (Resistive load)	80 V DC, 2 A
Max. terminal load (DC-13)[1)] on 4-5 (NO) (Inductive load)	24 V DC, 0.1A
Max. terminal load (AC-1)[1)] on 4-6 (NC) (Resistive load)	240 V AC, 2 A
Max. terminal load (AC-15)[1)] on 4-6 (NC) (Inductive load @ cosφ 0.4)	240 V AC, 0.2A
Max. terminal load (DC-1)[1)] on 4-6 (NC) (Resistive load)	50 V DC, 2 A
Max. terminal load (DC-13)[1)] on 4-6 (NC) (Inductive load)	24 V DC, 0.1 A
Min. terminal load on 1-3 (NC), 1-2 (NO), 4-6 (NC), 4-5 (NO)	24 V DC 10 mA, 24 V AC 20 mA
Environment according to EN 60664-1	overvoltage category III/pollution degree 2

1) IEC 60947 t 4 and 5

The relay contacts are galvanically isolated from the rest of the circuit by reinforced isolation (PELV).

2) Overvoltage Category II

3) UL applications 300 V AC 2A

Control card, 10 V DC output:	
Terminal number	50
Output voltage	10.5 V ±0.5 V
Max. load	25 mA

The 10 V DC supply is galvanically isolated from the supply voltage (PELV) and other high-voltage terminals.

Control characteristics:	
Resolution of output frequency at 0 - 1000 Hz	: +/- 0.003 Hz
System response time (terminals 18, 19, 27, 29, 32, 33)	: ≤ 2 ms
Speed control range (open loop)	1:100 of synchronous speed
Speed accuracy (open loop)	30 - 4000 rpm: Maximum error of ±8 rpm

All control characteristics are based on a 4-pole asynchronous motor

Surroundings:	
Enclosure, frame size D and E	IP 21, IP 54 (hybrid)
Enclosure, frame size F	IP 21, IP 54 (hybrid)
Vibration test	0.7 g
Relative humidity	5% - 95%(IEC 721-3-3; Class 3K3 (non-condensing) during operation
Aggressive environment (IEC 60068-2-43) H_2S test	class kD
Test method according to IEC 60068-2-43 H_2S (10 days)	
Ambient temperature (at 60 AVM switching mode)	
- with derating	max. 55 ° C[1)]
- with full output power, typical EFF2 motors	max. 50 ° C[1)]
- at full continuous FC output current	max. 45 ° C[1)]

[1)] For more information on derating see the Design Guide, section on Special Conditions.

Minimum ambient temperature during full-scale operation	0 °C
Minimum ambient temperature at reduced performance	- 10 °C
Temperature during storage/transport	-25 - +65/70 °C
Maximum altitude above sea level without derating	1000 m
Maximum altitude above sea level with derating	3000 m

Derating for high altitude, see section on special conditions

EMC standards, Emission	EN 61800-3, EN 61000-6-3/4, EN 55011, IEC 61800-3
EMC standards, Immunity	EN 61800-3, EN 61000-6-1/2, EN 61000-4-2, EN 61000-4-3, EN 61000-4-4, EN 61000-4-5, EN 61000-4-6

See section on special conditions!

8

Control card performance:	
Scan interval	: 5 ms

Control card, USB serial communication:	
USB standard	1.1 (Full speed)
USB plug	USB type B "device" plug



Connection to PC is carried out via a standard host/device USB cable.
The USB connection is galvanically isolated from the supply voltage (PELV) and other high-voltage terminals.
The USB connection is not galvanically isolated from protection earth. Use only isolated laptop/PC as connection to the USB connector on the frequency converter or an isolated USB cable/converter.

Protection and Features:

- Electronic thermal motor protection against overload.
- Temperature monitoring of the heatsink ensures that the frequency converter trips if the temperature reaches a predefined level. An overload temperature cannot be reset until the temperature of the heatsink is below the values stated in the tables on the following pages (Guideline - these temperatures may vary for different power sizes, frame sizes, enclosure ratings etc.).
- The frequency converter is protected against short-circuits on motor terminals U, V, W.
- If a mains phase is missing, the frequency converter trips or issues a warning (depending on the load).
- Monitoring of the intermediate circuit voltage ensures that the frequency converter trips if the intermediate circuit voltage is too low or too high.
- The frequency converter is protected against earth faults on motor terminals U, V, W.

Mains Supply 3 x 380 - 480 VAC

FC 302		P132		P160		P200	
High/ Normal Load*		HO	NO	HO	NO	HO	NO
	Typical Shaft output at 400 V [kW]	132	160	160	200	200	250
	Typical Shaft output at 460 V [HP]	200	250	250	300	300	350
	Typical Shaft output at 480 V [kW]	160	200	200	250	250	315
	EnclosureIP21	D11		D11		D11	
	EnclosureIP54	D11		D11		D11	
	Output current						
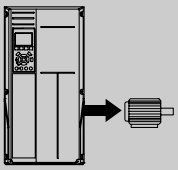	Continuous (at 400 V) [A]	260	315	315	395	395	480
	Intermittent (60 sec overload) (at 400 V) [A]	390	347	473	435	593	528
	Continuous (at 460/ 480 V) [A]	240	302	302	361	361	443
	Intermittent (60 sec overload) (at 460/ 480 V) [A]	360	332	453	397	542	487
	Continuous KVA (at 400 V) [KVA]	180	218	218	274	274	333
	Continuous KVA (at 460 V) [KVA]	191	241	241	288	288	353
	Continuous KVA (at 480 V) [KVA]	208	262	262	313	313	384
Max. input current							
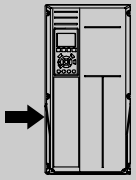	Continuous (at 400 V) [A]	251	304	304	381	381	463
	Continuous (at 460/ 480 V) [A]	231	291	291	348	348	427
	Max. cable size, mains motor, brake and load share [mm^2 (AWG$^{2)}$)]	2 x 185 (2 x 300 mcm)		2 x 185 (2 x 300 mcm)		2 x 185 (2 x 300 mcm)	
	Max. external mains fuses [A] [1]	400		500		630	
	Estimated motor power loss at 400 V [W] [4)]	4029		5130		5621	
	Estimated motor power loss at 460 V [W]	3892		4646		5126	
	Estimated filter losses, 400 V	4954		5714		6234	
	Estimated filter losses, 480 V	5279		5819		6681	
	Weight, enclosure IP21, IP 54 [kg]	380		380		406	
	Efficiency[4)]	0.96					
	Output frequency	0-800 Hz					
	Heatsink overtemp. trip	110 °C		110 °C		110 °C	
	Power card ambient trip	60 °C					

* High overload = 160% torque during 60 s, Normal overload = 110% torque during 60 s

8

Mains Supply 3 x 380 - 480 VAC

FC 302		P250		P315		P355		P400	
High/ Normal Load*		HO	NO	HO	NO	HO	NO	HO	NO
	Typical Shaft output at 400 V [kW]	250	315	315	355	355	400	400	450
	Typical Shaft output at 460 V [HP]	350	450	450	500	500	600	550	600
	Typical Shaft output at 480 V [kW]	315	355	355	400	400	500	500	530
	Enclosure IP21	E7		E7		E7		E7	
	Enclosure IP54	E7		E7		E7		E7	
	Output current								
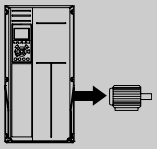	Continuous (at 400 V) [A]	480	600	600	658	658	745	695	800
	Intermittent (60 sec overload) (at 400 V) [A]	720	660	900	724	987	820	1043	880
	Continuous (at 460/ 480 V) [A]	443	540	540	590	590	678	678	730
	Intermittent (60 sec overload) (at 460/ 480 V) [A]	665	594	810	649	885	746	1017	803
	Continuous KVA (at 400 V) [KVA]	333	416	416	456	456	516	482	554
	Continuous KVA (at 460 V) [KVA]	353	430	430	470	470	540	540	582
	Continuous KVA (at 480 V) [KVA]	384	468	468	511	511	587	587	632
Max. input current									
	Continuous (at 400 V) [A]	472	590	590	647	647	733	684	787
	Continuous (at 460/ 480 V) [A]	436	531	531	580	580	667	667	718
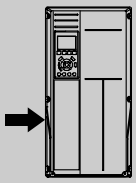	Max. cable size, mains, motor and load share [mm² (AWG[2)])]	4x240 (4x500 mcm)		4x240 (4x500 mcm)		4x240 (4x500 mcm)		4x240 (4x500 mcm)	
	Max. cable size, brake [mm² (AWG[2)])	2 x 185 (2 x 350 mcm)		2 x 185 (2 x 350 mcm)		2 x 185 (2 x 350 mcm)		2 x 185 (2 x 350 mcm)	
	Max. external mains fuses [A] [1]	700		900		900		900	
	Estimated motor power loss at 400 V [W] [4)]	6704		7528		8671		9469	
	Estimated motor power loss at 460 V [W]	5930		6724		7820		8527	
	Estimated filter losses, 400 V	6607		7049		7725		8234	
	Estimated filter losses, 460 V	6670		7023		7697		8099	
	Weight, enclosure IP21, IP 54 [kg]	596		623		646		646	
	Efficiency[4)]	0.96							
	Output frequency	0 - 600 Hz							
	Heatsink overtemp. trip	110 °C							
	Power card ambient trip	68 °C							

* High overload = 160% torque during 60 s, Normal overload = 110% torque during 60 s

8

Mains Supply 3 x 380 - 480 VAC

FC 302		P450		P500		P560		P630	
High/ Normal Load*		HO	NO	HO	NO	HO	NO	HO	NO
	Typical Shaft output at 400 V [kW]	450	500	500	560	560	630	630	710
	Typical Shaft output at 460 V [HP]	600	650	650	750	750	900	900	1000
	Typical Shaft output at 480 V [kW]	530	560	560	630	630	710	710	800
	EnclosureIP21, 54	F17		F17		F17		F17	
	Output current								
	Continuous (at 400 V) [A]	800	880	880	990	990	1120	1120	1260
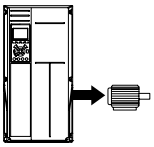	Intermittent (60 sec overload) (at 400 V) [A]	1200	968	1320	1089	1485	1232	1680	1386
	Continuous (at 460/ 480 V) [A]	730	780	780	890	890	1050	1050	1160
	Intermittent (60 sec overload) (at 460/ 480 V) [A]	1095	858	1170	979	1335	1155	1575	1276
	Continuous KVA (at 400 V) [KVA]	554	610	610	686	686	776	776	873
	Continuous KVA (at 460 V) [KVA]	582	621	621	709	709	837	837	924
	Continuous KVA (at 480 V) [KVA]	632	675	675	771	771	909	909	1005
Max. input current									
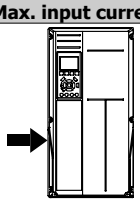	Continuous (at 400 V) [A]	779	857	857	964	964	1090	1090	1227
	Continuous (at 460/ 480 V) [A]	711	759	759	867	867	1022	1022	1129
	Max. cable size,motor [mm² (AWG[2])]	8x150 (8x300 mcm)							
	Max. cable size,mains F1/F2 [mm² (AWG[2])]	8x240 (8x500 mcm)							
	Max. cable size,mains F3/F4 [mm² (AWG[2])]	8x456 (8x900 mcm)							
	Max. cable size, loadsharing [mm² (AWG[2])]	4x120 (4x250 mcm)							
	Max. cable size, brake [mm² (AWG[2])]	4x185 (4x350 mcm)							
	Max. external mains fuses [A] [1]	1600				2000			
	Estimated motor power loss at 400 V [W] [4]	10647		12338		13201		15436	
	Estimated motor power loss at 460 V [W]	9414		11006		12353		14041	
	Max. panel options losses	400							
	Weight, enclosure IP21, IP 54 [kg]	2009							
	Weight drive section [kg]	1004							
	Weight filter section [kg]	1005							
	Efficiency[4]	0.96							
	Output frequency	0-600 Hz							
	Heatsink overtemp. trip	95 °C							
	Power card ambient trip	68 °C							

* High overload = 160% torque during 60 s, Normal overload = 110% torque during 60 s

1) For type of fuse see section *Fuses.*

2) American Wire Gauge.

3) Measured using 5 m screened motor cables at rated load and rated frequency.

4) The typical power loss is at nominal load conditions and expected to be within +/-15% (tolerence relates to variety in voltage and cable conditions). Values are based on a typical motor efficiency (eff2/eff3 border line). Motors with lower efficiency will also add to the power loss in the frequency converter and opposite. If the switching frequency is increased comed to the default setting, the power losses may rise significantly.LCP and typical control card power consumptions are included. Further options and customer load may add up to 30W to the losses. (Though typical only 4W extra for a fully loaded control card, or options for slot A or slot B, each).
Although measurements are made with state of the art equipment, some measurement inaccuracy must be allowed for (+/-5%).

8.2 Filter Specifications

Frame size	D	E	F	
Voltage [V]	380 - 480	380 - 480	380 - 480	
Current, RMS [A]	120	210	330	Nominal value
Peak Current [A]	340	595	935	Amplitude value of the current
RMS overload [%]		No Overload		60 seconds in 10 min
Response time [ms]		< 0.5		
Settling time - reactive current control [ms]		< 40		
Settling time - harmonic current control (filtering) [ms]		< 20		
Overshoot - reactive current control [%]		< 20		
Overshoot - harmonic current control [%]		< 10		

Table 8.1: Power Ranges (LHD with AF)

8

MG.34.O1.02 - VLT® is a registered Danfoss trademark

9 Troubleshooting

9.1 Alarms and Warnings - Frequency Converter (right LCP)

9.1.1 Warnings/Alarm Messages

A warning or an alarm is signalled by the relevant LED on the front of the frequency converter and indicated by a code on the display.

A warning remains active until its cause is no longer present. Under certain circumstances operation of the motor may still be continued. Warning messages may be critical, but are not necessarily so.

In the event of an alarm, the frequency converter will have tripped. Alarms must be reset to restart operation once their cause has been rectified.

This may be done in three ways:

1. By using the [RESET] control button on the LCP.
2. Via a digital input with the "Reset" function.
3. Via serial communication/optional fieldbus.



NB!
After a manual reset using the [RESET] button on the LCP, the [AUTO ON] button must be pressed to restart the motor.

If an alarm cannot be reset, the reason may be that its cause has not been rectified, or the alarm is trip-locked (see also table on following page).

Alarms that are trip-locked offer additional protection, meaning that the mains supply must be switched off before the alarm can be reset. After being switched back on, the frequency converter is no longer blocked and may be reset as described above once the cause has been rectified.

Alarms that are not trip-locked can also be reset using the automatic reset function in par. 14-20 *Reset Mode* (Warning: automatic wake-up is possible!)

If a warning and alarm is marked against a code in the table on the following page, this means that either a warning occurs before an alarm, or else that you can specify whether it is a warning or an alarm that is to be displayed for a given fault.

This is possible, for instance, in par. 1-90 *Motor Thermal Protection*. After an alarm or trip, the motor carries on coasting, and the alarm and warning flash. Once the problem has been rectified, only the alarm continues flashing until the frequency converter is reset.

No.	Description	Warning	Alarm/Trip	Alarm/Trip Lock	Parameter Reference
1	10 Volts low	X			
2	Live zero error	(X)	(X)		Par. 6-01 *Live Zero Time-out Function*
3	No motor	(X)			Par. 1-80 *Function at Stop*
4	Mains phase loss	(X)	(X)	(X)	Par. 14-12 *Function at Mains Imbalance*
5	DC link voltage high	X			
6	DC link voltage low	X			
7	DC over-voltage	X	X		
8	DC under voltage	X	X		
9	Inverter overloaded	X	X		
10	Motor ETR over temperature	(X)	(X)		Par. 1-90 *Motor Thermal Protection*
11	Motor thermistor over temperature	(X)	(X)		Par. 1-90 *Motor Thermal Protection*
12	Torque limit	X	X		
13	Over Current	X	X	X	
14	Earth Fault	X	X	X	
15	Hardware mismatch		X	X	
16	Short Circuit		X	X	
17	Control word time-out	(X)	(X)		Par. 8-04 *Control Word Timeout Function*
22	Hoist Mech. Brake				
23	Internal Fan Fault	X			
24	External Fan Fault	X			Par. 14-53 *Fan Monitor*
25	Brake resistor short-circuited	X			
26	Brake resistor power limit	(X)	(X)		Par. 2-13 *Brake Power Monitoring*
27	Brake chopper short-circuited	X	X		
28	Brake check	(X)	(X)		Par. 2-15 *Brake Check*
29	Heatsink temp	X	X	X	
30	Motor phase U missing	(X)	(X)	(X)	Par. 4-58 *Missing Motor Phase Function*
31	Motor phase V missing	(X)	(X)	(X)	Par. 4-58 *Missing Motor Phase Function*
32	Motor phase W missing	(X)	(X)	(X)	Par. 4-58 *Missing Motor Phase Function*
33	Inrush Fault		X	X	
34	Fieldbus communication fault	X	X		
36	Mains failure	X	X		
37	Phase imbalance		X		
38	Internal Fault		X	X	
39	Heatsink sensor		X	X	
40	Overload of Digital Output Terminal 27	(X)			Par. 5-00 *Digital I/O Mode*, par. 5-01 *Terminal 27 Mode*
41	Overload of Digital Output Terminal 29	(X)			Par. 5-00 *Digital I/O Mode*, par. 5-02 *Terminal 29 Mode*
42	Overload of Digital Output On X30/6	(X)			Par. 5-32 *Term X30/6 Digi Out (MCB 101)*
45	Earth Fault 2	X	X	X	
42	Overload of Digital Output On X30/7	(X)			Par. 5-33 *Term X30/7 Digi Out (MCB 101)*
46	Pwr. card supply		X	X	
47	24 V supply low	X	X	X	
48	1.8 V supply low		X	X	
49	Speed limit	X			
50	AMA calibration failed		X		
51	AMA check U_{nom} and I_{nom}		X		
52	AMA low I_{nom}		X		
53	AMA motor too big		X		

Table 9.1: Alarm/Warning code list

No.	Description	Warning	Alarm/Trip	Alarm/Trip Lock	Parameter Reference
54	AMA motor too small		X		
55	AMA parameter out of range		X		
56	AMA interrupted by user		X		
57	AMA time-out		X		
58	AMA internal fault	X	X		
59	Current limit	X			
60	External Interlock	X	X		
61	Feedback Error	(X)	(X)		Par. 4-30 *Motor Feedback Loss Function*
62	Output Frequency at Maximum Limit	X			
63	Mechanical Brake Low		(X)		Par. 2-20 *Release Brake Current*
64	Voltage Limit	X			
65	Control Board Over-temperature	X	X	X	
66	Heat sink Temperature Low	X			
67	Option Configuration has Changed		X		
68	Safe Stop	(X)	(X)[1)]		Par. 5-19 *Terminal 37 Safe Stop*
69	Pwr. Card Temp		X	X	
70	Illegal FC configuration			X	
71	PTC 1 Safe Stop	X	X[1)]		Par. 5-19 *Terminal 37 Safe Stop*
72	Dangerous Failure			X[1)]	Par. 5-19 *Terminal 37 Safe Stop*
73	Safe Stop Auto Restart				
76	Power Unit Setup	X			
77	Reduced power mode	X			Par. 14-59 *Actual Number of Inverter Units*
78	Tracking Error				
79	Illegal PS config		X	X	
80	Drive Initialized to Default Value		X		
81	CSIV corrupt				
82	CSIV parameter error				
85	Profibus/Profisafe Error				
90	Feedback Monitor	(X)	(X)		Par. 17-61 *Feedback Signal Monitoring*
91	Analogue input 54 wrong settings			X	S202
100-199	See Operating Instructions for MCO 305				
243	Brake IGBT	X	X		
244	Heatsink temp	X	X	X	
245	Heatsink sensor		X	X	
246	Pwr.card supply		X	X	
247	Pwr.card temp		X	X	
248	Illegal PS config		X	X	
250	New spare part			X	Par. 14-23 *Typecode Setting*
251	New Type Code		X	X	

Table 9.2: Alarm/Warning code list

(X) Dependent on parameter

1) Can not be Auto reset via par. 14-20 *Reset Mode*

A trip is the action when an alarm has appeared. The trip will coast the motor and can be reset by pressing the reset button or make a reset by a digital input (par. group 5-1* [1]). The origin event that caused an alarm cannot damage the frequency converter or cause dangerous conditions. A trip lock is an action when an alarm occurs, which may cause damage to frequency converter or connected parts. A Trip Lock situation can only be reset by a power cycling.

LED indication	
Warning	yellow
Alarm	flashing red
Trip locked	yellow and red

Alarm Word Extended Status Word

Bit	Hex	Dec	Alarm Word	Alarm Word 2	Warning Word	Warning Word 2	Extended Status Word
0	00000001	1	Brake Check (A28)	ServiceTrip, Read/ Write	Brake Check (W28)	reserved	Ramping
1	00000002	2	Pwr. Card Temp (A69)	ServiceTrip, (reserved)	Pwr. Card Temp (W69)	reserved	AMA Running
2	00000004	4	Earth Fault (A14)	ServiceTrip, Typecode/Sparepart	Earth Fault (W14)	reserved	Start CW/CCW
3	00000008	8	Ctrl.Card Temp (A65)	ServiceTrip, (reserved)	Ctrl.Card Temp (W65)	reserved	Slow Down
4	00000010	16	Ctrl. Word TO (A17)	ServiceTrip, (reserved)	Ctrl. Word TO (W17)		Catch Up
5	00000020	32	Over Current (A13)	reserved	Over Current (W13)	reserved	Feedback High
6	00000040	64	Torque Limit (A12)	reserved	Torque Limit (W12)	reserved	Feedback Low
7	00000080	128	Motor Th Over (A11)	reserved	Motor Th Over (W11)	reserved	Output Current High
8	00000100	256	Motor ETR Over (A10)	reserved	Motor ETR Over (W10)	reserved	Output Current Low
9	00000200	512	Inverter Overld. (A9)	reserved	Inverter Overld (W9)	reserved	Output Freq High
10	00000400	1024	DC under Volt (A8)	reserved	DC under Volt (W8)		Output Freq Low
11	00000800	2048	DC over Volt (A7)	reserved	DC over Volt (W7)		Brake Check OK
12	00001000	4096	Short Circuit (A16)	reserved	DC Voltage Low (W6)	reserved	Braking Max
13	00002000	8192	Inrush Fault (A33)	reserved	DC Voltage High (W5)		Braking
14	00004000	16384	Mains ph. Loss (A4)	reserved	Mains ph. Loss (W4)		Out of Speed Range
15	00008000	32768	AMA Not OK	reserved	No Motor (W3)		OVC Active
16	00010000	65536	Live Zero Error (A2)	reserved	Live Zero Error (W2)		AC Brake
17	00020000	131072	Internal Fault (A38)	KTY error	10V Low (W1)	KTY Warn	Password Timelock
18	00040000	262144	Brake Overload (A26)	Fans error	Brake Overload (W26)	Fans Warn	Password Protection
19	00080000	524288	U phase Loss (A30)	ECB error	Brake Resistor (W25)	ECB Warn	
20	00100000	1048576	V phase Loss (A31)	reserved	Brake IGBT (W27)	reserved	
21	00200000	2097152	W phase Loss (A32)	reserved	Speed Limit (W49)	reserved	
22	00400000	4194304	Fieldbus Fault (A34)	reserved	Fieldbus Fault (W34)	reserved	Unused
23	00800000	8388608	24 V Supply Low (A47)	reserved	24V Supply Low (W47)	reserved	Unused
24	01000000	16777216	Mains Failure (A36)	reserved	Mains Failure (W36)	reserved	Unused
25	02000000	33554432	1.8V Supply Low (A48)	reserved	Current Limit (W59)	reserved	Unused
26	04000000	67108864	Brake Resistor (A25)	reserved	Low Temp (W66)	reserved	Unused
27	08000000	134217728	Brake IGBT (A27)	reserved	Voltage Limit (W64)	reserved	Unused
28	10000000	268435456	Option Change (A67)	reserved	Encoder loss (W90)	reserved	Unused
29	20000000	536870912	Drive Initialized(A80)	Feedback Fault (A61, A90)	Feedback Fault (W61, W90)		Unused
30	40000000	1073741824	Safe Stop (A68)	PTC 1 Safe Stop (A71)	Safe Stop (W68)	PTC 1 Safe Stop (W71)	Unused
31	80000000	2147483648	Mech. brake low (A63)	Dangerous Failure (A72)	Extended Status Word		Unused

Table 9.3: Description of Alarm Word, Warning Word and Extended Status Word

The alarm words, warning words and extended status words can be read out via serial bus or optional fieldbus for diagnose. See also par. 16-94 *Ext. Status Word*.

WARNING 1, 10 volts low

The control card voltage is below 10 V from terminal 50.

Remove some of the load from terminal 50, as the 10 V supply is overloaded. Max. 15 mA or minimum 590 Ω.

This condition can be caused by a short in a connected potentiometer or improper wiring of the potentiometer.

Troubleshooting: Remove the wiring from terminal 50. If the warning clears, the problem is with the customer wiring. If the warning does not clear, replace the control card.

WARNING/ALARM 2, Live zero error

This warning or alarm will only appear if programmed by the user in par. 6-01 *Live Zero Timeout Function*. The signal on one of the analog inputs is less than 50% of the minimum value programmed for that input. This condition can be caused by broken wiring or faulty device sending the signal.

Troubleshooting:

Check connections on all the analog input terminals. Control card terminals 53 and 54 for signals, terminal 55 common. MCB 101 terminals 11 and 12 for signals, terminal 10 common. MCB 109 terminals 1, 3, 5 for signals, terminals 2, 4, 6 common).

Check that the drive programming and switch settings match the analog signal type.

Perform Input Terminal Signal Test.

WARNING/ALARM 3, No motor

No motor has been connected to the output of the frequency converter. This warning or alarm will only appear if programmed by the user in par. 1-80 *Function at Stop*.

Troubleshooting: Check the connection between the drive and the motor.

WARNING/ALARM 4, Mains phase loss

A phase is missing on the supply side, or the mains voltage imbalance is too high. This message also appears for a fault in the input rectifier on the frequency converter. Options are programmed at par. 14-12 *Function at Mains Imbalance*.

Troubleshooting: Check the supply voltage and supply currents to the frequency converter.

WARNING 5, DC link voltage high

The intermediate circuit voltage (DC) is higher than the high voltage warning limit. The limit is dependent on the drive voltage rating. The frequency converter is still active.

WARNING 6, DC link voltage low

The intermediate circuit voltage (DC) is lower than the low voltage warning limit. The limit is dependent on the drive voltage rating. The frequency converter is still active.

WARNING/ALARM 7, DC overvoltage

If the intermediate circuit voltage exceeds the limit, the frequency converter trips after a time.

Troubleshooting:

Connect a brake resistor

Extend the ramp time

Change the ramp type

Activate functions in par. 2-10 *Brake Function*

Increase par. 14-26 *Trip Delay at Inverter Fault*

WARNING/ALARM 8, DC under voltage

If the intermediate circuit voltage (DC) drops below the under voltage limit, the frequency converter checks if a 24 V backup supply is connected. If no 24 V backup supply is connected, the frequency converter trips after a fixed time delay. The time delay varies with unit size.

Troubleshooting:

Check that the supply voltage matches the frequency converter voltage.

Perform Input voltage test

Perform soft charge and rectifier circuit test

WARNING/ALARM 9, Inverter overloaded

The frequency converter is about to cut out because of an overload (too high current for too long). The counter for electronic, thermal inverter protection gives a warning at 98% and trips at 100%, while giving an alarm. The frequency converter *cannot* be reset until the counter is below 90%.

The fault is that the frequency converter is overloaded by more than 100% for too long.

Troubleshooting:

Compare the output current shown on the LCP keypad with the drive rated current.

Compare the output current shown on the LCP keypad with measured motor current.

Display the Thermal Drive Load on the keypad and monitor the value. When running above the drive continuous current rating, the counter should increase. When running below the drive continuous current rating, the counter should decrease.

Note: See the derating section in the Design Guide for more details if a high switching frequency is required.

WARNING/ALARM 10, Motor overload temperature

According to the electronic thermal protection (ETR), the motor is too hot. Select whether the frequency converter gives a warning or an alarm when the counter reaches 100% in par. 1-90 *Motor Thermal Protection*. The fault is that the motor is overloaded by more than 100% for too long.

Troubleshooting:

Check if motor is over heating.

If the motor is mechanically overloaded

That the motor par. 1-24 *Motor Current* is set correctly.

Motor data in par. 1-20 *Motor Power [kW]* through par. 1-25 *Motor Nominal Speed* are set correctly.

The setting in par. 1-91 *Motor External Fan*.

Run AMA in par. 1-29 *Automatic Motor Adaptation (AMA)*.

WARNING/ALARM 11, Motor thermistor over temp

The thermistor or the thermistor connection is disconnected. Select whether the frequency converter gives a warning or an alarm when the counter reaches 100% in par. 1-90 *Motor Thermal Protection*.

Troubleshooting:

Check if motor is over heating.

Check if the motor is mechanically overloaded.

Check that the thermistor is connected correctly between terminal 53 or 54 (analog voltage input) and terminal 50 (+10 V supply), or between terminal 18 or 19 (digital input PNP only) and terminal 50.

If a KTY sensor is used, check for correct connection between terminal 54 and 55.

If using a thermal switch or thermistor, check the programming of par. 1-93 *Thermistor Resource* matches sensor wiring.

If using a KTY sensor, check the programming of par. 1-95 *KTY Sensor Type*, par. 1-96 *KTY Thermistor Resource*, and par. 1-97 *KTY Threshold level* match sensor wiring.

WARNING/ALARM 12, Torque limit

The torque is higher than the value in par. 4-16 *Torque Limit Motor Mode* (in motor operation) or the torque is higher than the value in par. 4-17 *Torque Limit Generator Mode* (in regenerative operation). par. 14-25 *Trip Delay at Torque Limit* can be used to change this from a warning only condition to a warning followed by an alarm.

WARNING/ALARM 13, Over Current

The inverter peak current limit (approx. 200% of the rated current) is exceeded. The warning lasts about 1.5 sec., then the frequency converter trips and issues an alarm. If extended mechanical brake control is selected, trip can be reset externally.

Troubleshooting:

This fault may be caused by shock loading or fast acceleration with high inertia loads.

Turn off the frequency converter. Check if the motor shaft can be turned.

Check that the motor size matches the frequency converter.

Incorrect motor data in par. 1-20 *Motor Power [kW]* through par. 1-25 *Motor Nominal Speed*.

ALARM 14, Earth (ground) fault

There is a discharge from the output phases to earth, either in the cable between the frequency converter and the motor or in the motor itself.

Troubleshooting:

Turn off the frequency converter and remove the earth fault.

Measure the resistance to ground of the motor leads and the motor with a megohmmeter to check for earth faults in the motor.

Perform current sensor test.

ALARM 15, Hardware mismatch

A fitted option is not operational with the present control board hardware or software.

Record the value of the following parameters and contact your Danfoss supplier:

par. 15-40 *FC Type*

par. 15-41 *Power Section*

par. 15-42 *Voltage*

par. 15-43 *Software Version*

par. 15-45 *Actual Typecode String*

par. 15-49 *SW ID Control Card*

par. 15-50 *SW ID Power Card*

par. 15-60 *Option Mounted*

par. 15-61 *Option SW Version*

9

ALARM 16, Short circuit

There is short-circuiting in the motor or on the motor terminals.
Turn off the frequency converter and remove the short-circuit.

WARNING/ALARM 17, Control word timeout

There is no communication to the frequency converter.
The warning will only be active when par. 8-04 *Control Word Timeout Function* is NOT set to OFF.
If par. 8-04 *Control Word Timeout Function* is set to *Stop* and *Trip*, a warning appears and the frequency converter ramps down until it trips, while giving an alarm.

Troubleshooting:

Check connections on the serial communication cable.

Increase par. 8-03 *Control Word Timeout Time*

Check operation of the communication equipment.

Verify proper installation based on EMC requirements.

WARNING 22, Hoist Mech. Brake:

Report value will show what kind it is.
0 = The torque ref. was not reached before timeout.
1 = There was no brake feedback before timeout.

WARNING 23, Internal fan fault

The fan warning function is an extra protection function that checks if the fan is running / mounted. The fan warning can be disabled in par. 14-53 *Fan Monitor* ([0] Disabled).

For the D, E, and F Frame drives, the regulated voltage to the fans is monitored.

Troubleshooting:

Check fan resistance.

Check soft charge fuses.

WARNING 24, External fan fault

The fan warning function is an extra protection function that checks if the fan is running / mounted. The fan warning can be disabled in par. 14-53 *Fan Monitor* ([0] Disabled).

For the D, E, and F Frame drives, the regulated voltage to the fans is monitored.

Troubleshooting:

Check fan resistance.

Check soft charge fuses.

WARNING 25, Brake resistor short circuit

The brake resistor is monitored during operation. If it short circuits, the brake function is disconnected and the warning appears. The frequency converter still works, but without the brake function. Turn off the frequency converter and replace the brake resistor (see par. 2-15 *Brake Check*).

WARNING/ALARM 26, Brake resistor power limit

The power transmitted to the brake resistor is calculated: as a percentage, as a mean value over the last 120 seconds, on the basis of the resistance value of the brake resistor, and the intermediate circuit voltage. The warning is active when the dissipated braking power is higher than 90%. If *Trip* [2] has been selected in par. 2-13 *Brake Power Monitoring*, the frequency converter cuts out and issues this alarm, when the dissipated braking power is higher than 100%.



Warning: There is a risk of substantial power being transmitted to the brake resistor if the brake transistor is short-circuited.

WARNING/ALARM 27, Brake chopper fault

The brake transistor is monitored during operation and if it short-circuits, the brake function disconnects and issues a warning. The frequency converter is still able to run, but since the brake transistor has short-circuited, substantial power is transmitted to the brake resistor, even if it is inactive.
Turn off the frequency converter and remove the brake resistor.
This alarm/ warning could also occur should the brake resistor overheat. Terminal 104 to 106 are available as brake resistor. Klixon inputs, see section Brake Resistor Temperature Switch.

WARNING/ALARM 28, Brake check failed

Brake resistor fault: the brake resistor is not connected or not working. Check par. 2-15 *Brake Check*.

ALARM 29, Heatsink temp

The maximum temperature of the heatsink has been exceeded. The temperature fault will not be reset until the temperature falls below a defined heatsink temperature. The trip and reset point are different based on the drive power size.

Troubleshooting:

Ambient temperature too high.

Too long motor cable.

Incorrect clearance above and below the drive.

Dirty heatsink.

Blocked air flow around the drive.

Damaged heatsink fan.

For the D, E, and F Frame drives, this alarm is based on the temperature measured by the heatsink sensor mounted inside the IGBT modules. For the F Frame drives, this alarm can also be caused by the thermal sensor in the Rectifier module.

Troubleshooting:

Check fan resistance.

Check soft charge fuses.

IGBT thermal sensor.

ALARM 30, Motor phase U missing

Motor phase U between the frequency converter and the motor is missing.

Turn off the frequency converter and check motor phase U.

ALARM 31, Motor phase V missing

Motor phase V between the frequency converter and the motor is missing.

Turn off the frequency converter and check motor phase V.

ALARM 32, Motor phase W missing

Motor phase W between the frequency converter and the motor is missing.

Turn off the frequency converter and check motor phase W.

ALARM 33, Inrush fault

Too many power-ups have occurred within a short time period. Let unit cool to operating temperature.

WARNING/ALARM 34, Fieldbus communication fault

The fieldbus on the communication option card is not working.

WARNING/ALARM 36, Mains failure

This warning/alarm is only active if the supply voltage to the frequency converter is lost and par. 14-10 *Mains Failure* is NOT set to OFF. Check the fuses to the frequency converter

ALARM 38, Internal fault

It may be necessary to contact your Danfoss supplier. Some typical alarm messages:

0	Serial port cannot be initialized. Serious hardware failure
256-258	Power EEPROM data is defect or too old
512	Control board EEPROM data is defect or too old
513	Communication time out reading EEPROM data
514	Communication time out reading EEPROM data
515	Application Orientated Control cannot recognize the EEPROM data
516	Cannot write to the EEPROM because a write command is on progress
517	Write command is under time out
518	Failure in the EEPROM
519	Missing or invalid Barcode data in EEPROM
783	Parameter value outside of min/max limits
1024-1279	A cantelegram that has to be sent, couldn't be sent
1281	Digital Signal Processor flash timeout
1282	Power micro software version mismatch
1283	Power EEPROM data version mismatch
1284	Cannot read Digital Signal Processor software version
1299	Option SW in slot A is too old
1300	Option SW in slot B is too old
1301	Option SW in slot C0 is too old
1302	Option SW in slot C1 is too old
1315	Option SW in slot A is not supported (not allowed)
1316	Option SW in slot B is not supported (not allowed)
1317	Option SW in slot C0 is not supported (not allowed)
1318	Option SW in slot C1 is not supported (not allowed)
1379	Option A did not respond when calculating Platform Version.
1380	Option B did not respond when calculating Platform Version.
1381	Option C0 did not respond when calculating Platform Version.
1382	Option C1 did not respond when calculating Platform Version.
1536	An exception in the Application Orientated Control is registered. Debug information written in LCP
1792	DSP watchdog is active. Debugging of power part data Motor Orientated Control data not transferred correctly
2049	Power data restarted
2064-2072	H081x: option in slot x has restarted
2080-2088	H082x: option in slot x has issued a powerup-wait
2096-2104	H083x: option in slot x has issued a legal powerup-wait
2304	Could not read any data from power EEPROM
2305	Missing SW version from power unit
2314	Missing power unit data from power unit
2315	Missing SW version from power unit
2316	Missing io_statepage from power unit
2324	Power card configuration is determined to be incorrect at power up
2325	A power card has stopped communicating while main power is applied
2326	Power card configuration is determined to be incorrect after the delay for power cards to register
2327	Too many power card locations have been registered as present
2330	Power size information between the power cards does not match
2561	No communication from DSP to ATACD
2562	No communication from ATACD to DSP (state running)
2816	Stack overflow Control board module
2817	Scheduler slow tasks
2818	Fast tasks
2819	Parameter thread
2820	LCP Stack overflow
2821	Serial port overflow
2822	USB port overflow
2836	cfListMempool to small
3072-5122	Parameter value is outside its limits
5123	Option in slot A: Hardware incompatible with Control board hardware
5124	Option in slot B: Hardware incompatible with Control board hardware
5125	Option in slot C0: Hardware incompatible with Control board hardware
5126	Option in slot C1: Hardware incompatible with Control board hardware
5376-6231	Out of memory

ALARM 39, Heatsink sensor

No feedback from the heatsink temperature sensor.

The signal from the IGBT thermal sensor is not available on the power card. The problem could be on the power card, on the gate drive card, or the ribbon cable between the power card and gate drive card.

WARNING 40, Overload of Digital Output Terminal 27

Check the load connected to terminal 27 or remove short-circuit connection. Check par. 5-00 *Digital I/O Mode* and par. 5-01 *Terminal 27 Mode*.

WARNING 41, Overload of Digital Output Terminal 29

Check the load connected to terminal 29 or remove short-circuit connection. Check par. 5-00 *Digital I/O Mode* and par. 5-02 *Terminal 29 Mode*.

WARNING 42, Overload of Digital Output on X30/6 or Overload of Digital Output on X30/7

For X30/6, check the load connected to X30/6 or remove short-circuit connection. Check par. 5-32 *Term X30/6 Digi Out (MCB 101)*.

For X30/7, check the load connected to X30/7 or remove short-circuit connection. Check par. 5-33 *Term X30/7 Digi Out (MCB 101)*.

ALARM 46, Power card supply
The supply on the power card is out of range.

There are three power supplies generated by the switch mode power supply (SMPS) on the power card: 24 V, 5V, +/- 18V. When powered with 24 VDC with the MCB 107 option, only the 24 V and 5 V supplies are monitored. When powered with three phase mains voltage, all three supplied are monitored.

WARNING 47, 24 V supply low
The 24 VDC is measured on the control card. The external 24 VDC backup power supply may be overloaded, otherwise contact your Danfoss supplier.

WARNING 48, 1.8 V supply low
The 1.8 Volt DC supply used on the control card is outside of allowable limits. The power supply is measured on the control card.

WARNING 49, Speed limit
The speed is not within the specified range in par. 4-11 *Motor Speed Low Limit [RPM]* and par. 4-13 *Motor Speed High Limit [RPM]*.

ALARM 50, AMA calibration failed
Contact your Danfoss supplier.

ALARM 51, AMA check Unom and Inom
The setting of motor voltage, motor current, and motor power is presumably wrong. Check the settings.

ALARM 52, AMA low Inom
The motor current is too low. Check the settings.

ALARM 53, AMA motor too big
The motor is too big for the AMA to be carried out.

ALARM 54, AMA motor too small
The motor is too big for the AMA to be carried out.

ALARM 55, AMA parameter out of range
The parameter values found from the motor are outside acceptable range.

ALARM 56, AMA interrupted by user
The AMA has been interrupted by the user.

ALARM 57, AMA timeout
Try to start the AMA again a number of times, until the AMA is carried out. Please note that repeated runs may heat the motor to a level where the resistance Rs and Rr are increased. In most cases, however, this is not critical.

ALARM 58, AMA internal fault
Contact your Danfoss supplier.

WARNING 59, Current limit
The current is higher than the value in par. 4-18 *Current Limit*.

WARNING 60, External interlock
External interlock has been activated. To resume normal operation, apply 24 VDC to the terminal programmed for external interlock and reset the frequency converter (via serial communication, digital I/O, or by pressing reset button on keypad).

WARNING 61, Tracking error
An error has been detected between calculated motor speed and speed measurement from feedback device. The function for Warning/Alarm/Disable is set in par. 4-30 *Motor Feedback Loss Function*, error setting in par. 4-31 *Motor Feedback Speed Error*, and the allowed error time in par. 4-32 *Motor Feedback Loss Timeout*. During a commissioning procedure the function may be effective.

WARNING 62, Output frequency at maximum limit
The output frequency is higher than the value set in par. 4-19 *Max Output Frequency*

WARNING 64, Voltage limit
The load and speed combination demands a motor voltage higher than the actual DC link voltage.

WARNING/ALARM/TRIP 65, Control card over temperature
Control card over temperature: The cutout temperature of the control card is 80° C.

WARNING 66, Heatsink temperature low
This warning is based on the temperature sensor in the IGBT module.

Troubleshooting:

The heatsink temperature measured as 0° C could indicate that the temperature sensor is defective causing the fan speed to increase to the maximum. If the sensor wire between the IGBT and the gate drive card is disconnected, this warning would result. Also, check the IGBT thermal sensor.

ALARM 67, Option module configuration has changed
One or more options have either been added or removed since the last power-down.

ALARM 68, Safe stop activated
Safe stop has been activated. To resume normal operation, apply 24 VDC to terminal 37, then send a reset signal (via Bus, Digital I/O, or by pressing the reset key. See par. 5-19 *Terminal 37 Safe Stop*.

ALARM 69, Power card temperature
The temperature sensor on the power card is either too hot or too cold.

Troubleshooting:

Check the operation of the door fans.

Check that the filters for the door fans are not blocked.

Check that the gland plate is properly installed on IP 21 and IP 54 (NEMA 1 and NEMA 12) drives.

ALARM 70, Illegal FC Configuration
Actual combination of control board and power board is illegal.

WARNING/ALARM 71, PTC 1 safe stop
Safe Stop has been activated from the MCB 112 PTC Thermistor Card (motor too warm). Normal operation can be resumed when the MCB 112 applies 24 V DC to T-37 again (when the motor temperature reaches an acceptable level) and when the Digital Input from the MCB 112 is deactivated. When that happens, a reset signal must be is be sent (via serial communication, digital I/O, or by pressing reset button on keypad). Note that if automatic restart is enabled, the motor may start when the fault is cleared.

ALARM 72, Dangerous failure
Safe stop with trip lock. Unexpected signal levels on safe stop and digital input from the MCB 112 PTC thermistor card.

Warning 73, Safe stop auto restart
Safe stopped. Note that with automatic restart enabled, the motor may start when the fault is cleared.

Warning 76, Power Unit Setup
The required number of power units does not match the detected number of active power units.

Troubleshooting:

When replacing an F frame module this will occur if the power specific data in the module power card does not match the rest of the drive. Please confirm the spare part and its power card are the correct part number.

WARNING 77, Reduced power mode:
This warning indicates that the drive is operating in reduced power mode (i.e. less than the allowed number of inverter sections). This warning will be generated on power cycle when the drive is set to run with fewer inverters and will remain on.

ALARM 79, Illegal power section configuration
The scaling card is the incorrect part number or not installed. Also MK102 connector on the power card could not be installed.

ALARM 80, Drive initialized to default value
Parameter settings are initialized to default settings after a manual reset.

WARNING 81, CSIV corrupt:
CSIV file has syntax errors.

WARNING 82, CSIV parameter error:
CSIV parameter error

WARNING 85, Dang fail PB:
Profibus/Profisafe Error

ALARM 91, Analog input 54 wrong settings
Switch S202 has to be set in position OFF (voltage input) when a KTY sensor is connected to analog input terminal 54.

ALARM 243, Brake IGBT
This alarm is only for F Frame drives. It is equivalent to Alarm 27. The report value in the alarm log indicates which power module generated the alarm:

1 = left most inverter module.

2 = middle inverter module in F2 or F4 drive.

2 = right inverter module in F1 or F3 drive.

3 = right inverter module in F2 or F4 drive.

5 = rectifier module.

ALARM 244, Heatsink temperature
This alarm is only for F Frame drives. It is equivalent to Alarm 29. The report value in the alarm log indicates which power module generated the alarm:

1 = left most inverter module.

2 = middle inverter module in F2 or F4 drive.

2 = right inverter module in F1 or F3 drive.

3 = right inverter module in F2 or F4 drive.

5 = rectifier module.

ALARM 245, Heatsink sensor
This alarm is only for F Frame drives. It is equivalent to Alarm 39. The report value in the alarm log indicates which power module generated the alarm:

1 = left most inverter module.

2 = middle inverter module in F2 or F4 drive.

2 = right inverter module in F1 or F3 drive.

3 = right inverter module in F2 or F4 drive.

5 = rectifier module.

ALARM 246, Power card supply
This alarm is only for F Frame drives. It is equivalent to Alarm 46. The report value in the alarm log indicates which power module generated the alarm:

1 = left most inverter module.

2 = middle inverter module in F2 or F4 drive.

2 = right inverter module in F1 or F3 drive.

3 = right inverter module in F2 or F4 drive.

5 = rectifier module.

ALARM 247, Power card temperature
This alarm is only for F Frame drives. It is equivalent to Alarm 69. The report value in the alarm log indicates which power module generated the alarm:

1 = left most inverter module.

2 = middle inverter module in F2 or F4 drive.

2 = right inverter module in F1 or F3 drive.

3 = right inverter module in F2 or F4 drive.

5 = rectifier module.

ALARM 248, Illegal power section configuration
This alarm is only for F Frame drives. It is equivalent to Alarm 79. The report value in the alarm log indicates which power module generated the alarm:

1 = left most inverter module.

2 = middle inverter module in F2 or F4 drive.

2 = right inverter module in F1 or F3 drive.

3 = right inverter module in F2 or F4 drive.

5 = rectifier module.

ALARM 250, New spare part
The power or switch mode power supply has been exchanged. The frequency converter type code must be restored in the EEPROM. Select the correct type code in par. 14-23 *Typecode Setting* according to the label on the unit. Remember to select 'Save to EEPROM' to complete.

ALARM 251, New type code
The frequency converter has a new type code.

9.2 Alarms and Warnings - Filter (left LCP)

NB!
This sections covers warnings and alarms on the filter side LCP. For warning and alarms for the frequency converter, please see previous section

A warning or an alarm is signalled by the relevant LED on the front of the filter and indicated by a code on the display.

A warning remains active until its cause is no longer present. Under certain circumstances operation of the unit may still be continued. Warning messages may be critical, but are not necessarily so.

In the event of an alarm, the unit will have tripped. Alarms must be reset to restart operation once their cause has been rectified.

This may be done in four ways:

1. By using the [RESET] control button on the LCP control panel.
2. Via a digital input with the "Reset" function.
3. Via serial communication/optional fieldbus.
4. By resetting automatically using the [Auto Reset] function. See par. 14-20 *Reset Mode* in the**VLT Active Filter AAF 005 Manual**

NB!
After a manual reset using the [RESET] button on the LCP, the [AUTO ON] or [HAND ON] button must be pressed to restart the unit.

If an alarm cannot be reset, the reason may be that its cause has not been rectified, or the alarm is trip-locked (see also table on following page).

Alarms that are trip-locked offer additional protection, means that the mains supply must be switched off before the alarm can be reset. After being switched back on, the unit is no longer blocked and may be reset as described above once the cause has been rectified.

Alarms that are not trip-locked can also be reset using the automatic reset function in par. 14-20 *Reset Mode* (Warning: automatic wake-up is possible!)

If a warning and alarm is marked against a code in the table on the following page, this means that either a warning occurs before an alarm, or it can be specified whether it is a warning or an alarm that is to be displayed for a given fault.

No.	Description	Warning	Alarm/Trip	Alarm/Trip Lock	Parameter Reference
1	10 Volts low	X			
2	Live zero error	(X)	(X)		6-01
4	Mains phase loss		X		
5	DC link voltage high	X			
6	DC link voltage low	X			
7	DC over voltage	X	X		
8	DC under voltage	X	X		
13	Over Current	X	X	X	
14	Earth fault	X	X	X	
15	Hardware mismatch		X	X	
16	Short Circuit		X	X	
17	Control word timeout	(X)	(X)		8-04
23	Internal Fan Fault	X			
24	External Fan Fault	X			14-53
29	Heatsink temp	X	X	X	
33	Inrush fault		X	X	
34	Fieldbus fault	X	X		
35	Option fault	X	X		
38	Internal fault				
39	Heatsink sensor		X	X	
40	Overload of Digital Output Terminal 27	(X)			5-00, 5-01
41	Overload of Digital Output Terminal 29	(X)			5-00, 5-02
42	Overload of Digital Output On X30/6	(X)			5-32
42	Overload of Digital Output On X30/7	(X)			5-33
46	Pwr. card supply		X	X	
47	24 V supply low	X	X	X	
48	1.8 V supply low		X	X	
65	Control Board Over-temperature	X	X	X	
66	Heat sink Temperature Low	X			
67	Option Configuration has Changed		X		
68	Safe Stop Activated		X[1)]		
69	Pwr. Card Temp		X	X	
70	Illegal FC configuration			X	
72	Dangerous Failure			X[1)]	
73	Safe Stop Auto Restart				
76	Power Unit Setup	X			
79	Illegal PS config		X	X	
80	Drive Initialised to Default Value		X		
244	Heatsink temp	X	X	X	
245	Heatsink sensor		X	X	
246	Pwr.card supply		X	X	
247	Pwr.card temp		X	X	
248	Illegal PS config		X	X	
250	New spare part			X	
251	New Type Code		X	X	
300	Mains Cont. fault			X	
301	SC Cont. Fault			X	
302	Cap. Over Current	X	X		
303	Cap. Earth Fault	X	X		
304	DC Over Current	X	X		
305	Mains Freq. Limit		X		
306	Compensation Limit	X			
308	Resistor temp	X		X	
309	Mains Earth Fault	X	X		
311	Switch. Freq. Limit		X		
312	CT Range		X		
314	Auto CT Interrupt		X		
315	Auto CT Error		X		
316	CT Location Error		X		
317	CT Polarity Error		X		
318	CT Ratio Error		X		

Table 9.4: Alarm/Warning code list

A trip is the action when an alarm has appeared. The trip will coast the motor and can be reset by pressing the reset button or make a reset by a digital input (Par. 5-1* [1]). The origin event that caused an alarm cannot damage the frequency converter or cause dangerous conditions. A trip lock is an action when an alarm occurs, which may cause damage to frequency converter or connected parts. A Trip Lock situation can only be reset by a power cycling.

LED indication

Warning	yellow
Alarm	flashing red
Trip locked	yellow and red

Alarm Word and Extended Status Word

Bit	Hex	Dec	Alarm Word	Warning Word	Extended Status Word
0	00000001	1	Mains Cont. Fault	Reserved	Reserved
1	00000002	2	Heatsink Temp	Heatsink Temp	Auto CT Running
2	00000004	4	Earth Fault	Earth Fault	Reserved
3	00000008	8	Ctrl.Card Temp	Ctrl.Card Temp	Reserved
4	00000010	16	Ctrl. Word TO	Ctrl. Word TO	Reserved
5	00000020	32	Over Current	Over Current	Reserved
6	00000040	64	SC Cont. Fault	Reserved	Reserved
7	00000080	128	Cap. Over Current	Cap. Over Current	Reserved
8	00000100	256	Cap. Earth Fault	Cap. Earth Fault	Reserved
9	00000200	512	Inverter Overld.	Inverter Overld.	Reserved
10	00000400	1024	DC under Volt	DC under Volt	Reserved
11	00000800	2048	DC over Volt	DC over Volt	Reserved
12	00001000	4096	Short Circuit	DC Voltage Low	Reserved
13	00002000	8192	Inrush Fault	DC Voltage High	Reserved
14	00004000	16384	Mains ph. Loss	Mains ph. Loss	Reserved
15	00008000	32768	Auto CT Error	Reserved	Reserved
16	00010000	65536	Reserved	Reserved	Reserved
17	00020000	131072	Internal Fault	10V Low	Password Time Lock
18	00040000	262144	DC Over Current	DC Over Current	Password Protection
19	00080000	524288	Resistor temp	Resistor temp	Reserved
20	00100000	1048576	Mains Earth Fault	Mains Earth Fault	Reserved
21	00200000	2097152	Switch. Freq. Limit	Reserved	Reserved
22	00400000	4194304	Fieldbus Fault	Fieldbus Fault	Reserved
23	00800000	8388608	24 V Supply Low	24V Supply Low	Reserved
24	01000000	16777216	CT Range	Reserved	Reserved
25	02000000	33554432	1.8V Supply Low	Reserved	Reserved
26	04000000	67108864	Reserved	Low Temp	Reserved
27	08000000	134217728	Auto CT Interrupt	Reserved	Reserved
28	10000000	268435456	Option Change	Reserved	Reserved
29	20000000	536870912	Unit Initialized	Unit Initialized	Reserved
30	40000000	1073741824	Safe Stop	Safe Stop	Reserved
31	80000000	2147483648	Mains Freq. Limit	Extended Status Word	Reserved

Table 9.5: Description of Alarm Word, Warning Word and Extended Status Word

9

The alarm words, warning words and extended status words can be read out via serial bus or optional fieldbus for diagnosis. See also par. 16-90 *Alarm Word*, par. 16-92 *Warning Word* and par. 16-94 *Ext. Status Word*. "Reserved" means that the bit is not guaranteed to be any particular value. Reserved bits should not be used for any purpose.

9.2.1 Fault messages

WARNING 1, 10 volts low
The control card voltage is below 10 V from terminal 50.
Remove some of the load from terminal 50, as the 10 V supply is overloaded. Max. 15 mA or minimum 590 Ω.

WARNING/ALARM 2, Live zero error
The signal on terminal 53 or 54 is less than 50% of the value set in par. 6-10, 6-12, 6-20 or 6-22 respectively.

WARNING/ALARM 4, Mains phase loss
A phase is missing on the supply side, or the mains voltage imbalance is too high.

WARNING 5, DC link voltage high
The intermediate circuit voltage (DC) is higher than the high voltage warning limit. The unit is still active.

WARNING 6, DC link voltage low
The intermediate circuit voltage (DC) is below the under-voltage limit of the control system. The unit is still active.

WARNING/ALARM 7, DC overvoltage
If the intermediate circuit voltage exceeds the limit, the unit trips.

WARNING/ALARM 8, DC under voltage
If the intermediate circuit voltage (DC) drops below the under voltage limit, the frequency converter checks if a 24 V backup supply is connected. If not, the unit trips. Check that the mains voltage matches the nameplate specification.

WARNING/ALARM 13, Over Current
the unit current limit has been exceeded.

ALARM 14, Earth (ground) fault
There is a discharge from the output phases to earth. Turn off the unit and correct the earth fault.

ALARM 15, Incomp. Hardware
A mounted option is not handled by the present Control Card SW / HW.

ALARM 16, Short circuit
There is a short-circuit in the output. Turn off the unit and correct the error.

WARNING/ALARM 17, Control word timeout
There is no communication to the unit.
The warning will only be active when par. 8-04 *Control Word Timeout Function* is NOT set to OFF.
Possible correction: Increase par. 8-03. Change par. 8-04

WARNING 23, Internal fan fault
Internal fans have failed due to defect hardware or fans not mounted.

WARNING 24, External fan fault
External fans have failed due to defect hardware or fans not mounted.

ALARM 29, Heatsink temp
The maximum temperature of the heatsink has been exceeded. The temperature fault will not be reset until the temperature falls below a defined heatsink temperature.

ALARM 33, Inrush fault
Check whether a 24 Volt external DC supply has been connected.

WARNING/ALARM 34, Fieldbus communication fault
The fieldbus on the communication option card is not working.

WARNING/ALARM 35, Option Fault:
Contact your supplier.

ALARM 38, Internal fault
Contact your Danfoss supplier.

ALARM 39, Heatsink sensor
No feedback from the heatsink temperature sensor.

WARNING 40, Overload of Digital Output Terminal 27
Check the load connected to terminal 27 or remove short-circuit connection.

WARNING 41, Overload of Digital Output Terminal 29
Check the load connected to terminal 29 or remove short-circuit connection.

WARNING 42, Overload of Digital Output on X30/6 or Overload of Digital Output on X30/7
For X30/6, check the load connected to X30/6 or remove short-circuit connection.

For X30/7, check the load connected to X30/7 or remove short-circuit connection.

WARNING 43, Ext. Supply (option)
The external 24 V DC supply voltage on the option is not valid.

ALARM 46, Power card supply
The supply on the power card is out of range.

WARNING 47, 24 V supply low
Contact your Danfoss supplier.

WARNING 48, 1.8 V supply low
Contact your Danfoss supplier.

WARNING/ALARM/TRIP 65, Control card over temperature
Control card over temperature: The cutout temperature of the control card is 80° C.

WARNING 66, Heatsink temperature low
This warning is based on the temperature sensor in the IGBT module.

Troubleshooting:

The heatsink temperature measured as 0° C could indicate that the temperature sensor is defective causing the fan speed to increase to the maximum. If the sensor wire between the IGBT and the gate drive card is disconnected, this warning would result. Also, check the IGBT thermal sensor.

ALARM 67, Option module configuration has changed
One or more options have either been added or removed since the last power-down.

ALARM 68, Safe stop activated
Safe stop has been activated. To resume normal operation, apply 24 VDC to terminal 37, then send a reset signal (via Bus, Digital I/O, or by pressing the reset key. See parameter 5-19, Terminal 37 Safe Stop.

ALARM 69, Power card temperature
The temperature sensor on the power card is either too hot or too cold.

ALARM 70, Illegal FC Configuration
Actual combination of control board and power board is illegal.

Warning 73, Safe stop auto restart
Safe stopped. Note that with automatic restart enabled, the motor may start when the fault is cleared.

WARNING 77, Reduced power mode:
This warning indicates that the drive is operating in reduced power mode (i.e. less than the allowed number of inverter sections). This warning will be generated on power cycle when the drive is set to run with fewer inverters and will remain on.

ALARM 79, Illegal power section configuration
The scaling card is the incorrect part number or not installed. Also MK102 connector on the power card could not be installed.

ALARM 80, Unit initialized to default value
Parameter settings are initialized to default settings after a manual reset.

ALARM 244, Heatsink temperature
Report value indicates source of alarm (from left):
1-4 Inverter
5-8 Rectifier

ALARM 245, Heatsink sensor
No feedback from the heatsink sensor. Report value indicates source of alarm (from left):
1-4 Inverter
5-8 Rectifier

ALARM 246, Power card supply
The supply on the power card is out of range Report value indicates source of alarm (from left):
1-4 Inverter
5-8 Rectifier

ALARM 247, Power card temperature
Power card over temperature Report value indicates source of alarm (from left):
1-4 Inverter
5-8 Rectifier

ALARM 248, Illegal power section configuration
Power size configuration fault on the power card Report value indicates source of alarm (from left):
1-4 Inverter
5-8 Rectifier

ALARM 249, Rect. low temp.
The temperature of the rectifier heat sink is too low. This could indicate that the temperature sensor is defect.

ALARM 250, New spare part
The power or switch mode power supply has been exchanged. The frequency converter type code must be restored in the EEPROM. Select the correct type code in par. 14-23 *Typecode Setting* according to the label on the unit. Remember to select 'Save to EEPROM' to complete.

ALARM 251, New type code
The frequency converter has a new type code.

ALARM 300, Mains Cont. Fault
The feedback from the mains contactor did not match the expected value within the allowed time frame. Contact your supplier.

ALARM 301, SC Cont. Fault
The feedback from the soft charge contactor did not match the expected value within the allowed time frame. Contact your supplier.

ALARM 302, Cap. Over Current
Excessive current was detected through the AC capacitors. Contact your supplier.

ALARM 303, Cap. Earth Fault
An earth fault was detected through the AC capacitor currents. Contact your supplier.

ALARM 304, DC Over Current
Excessive current through the DC link capacitor bank was detected. Contact your supplier.

ALARM 305, Mains Freq. Limit
The mains frequency was outside the limits. Verify that the mains frequency is within product specification.

ALARM 306, Compensation Limit
The needed compensation current exceeds unit capability. Unit is running at full compensation.

ALARM 308, Resistor temp
Excessive resistor heatsink temperature detected.

ALARM 309, Mains Earth Fault
An earth fault was detected in the mains currents. Check the mains for shorts and leakage current.

ALARM 310, RTDC Buffer Full
Contact your supplier.

ALARM 311, Switch. Freq. Limit
The average switching frequency of the unit exceeded the limit. Verify that parameters 300-10 and 300-22 are set correctly. If so, contact your supplier.

ALARM 312, CT Range
Current transformer measurement limitation was detected. Verify that the CTs used are an appropriate ratio.

ALARM 314, Auto CT Interrupt
Auto CT detection was interrupted by the user.

ALARM 315, Auto CT Error
An error was detected while performing auto CT detection. Contact your supplier.

ALARM 316, CT Location Error
The Auto CT function could not determine the correct locations of the CTs.

ALARM 317, CT Polarity Error
The Auto CT function could not determine the correct polarity of the CTs.

ALARM 318, CT Ratio Error
The Auto CT function could not determine the correct primary rating of the CTs.

Index

2

24 Vdc Power Supply 41

3

30 Ampere, Fuse-protected Terminals 41

A

Access To Control Terminals 58
Activate Brake Delay 2-23 91
[Activate Brake Speed Hz] 2-22 91
[Activate Brake Speed Rpm] 2-21 91
Af Readouts 133
Af Settings 132
Airflow 34
Alarm Messages 153
Alarm/warning Code List 163
Alarms And Warnings 162
Ama 65
Analog Inputs 146
Analog Output 146
Approvals 6
Automatic Motor Adaptation (ama) 65, 83

B

Back Cooling 34
Brake Cable 52
Brake Check 2-15 90
Brake Control 157
Brake Function 2-10 89
Brake Power Limit (kw) 2-12 89
Brake Power Monitoring 2-13 89
Brake Release Time 2-25 92
Brake Resistor (ohm) 2-11 89
Brake Resistor Temperature Switch 53

C

Cable Lengths And Cross Sections 145
Cable-length And Cross-section: 43
Cabling 43
Catch Up 98
Changing A Group Of Numeric Data Values 75
Changing A Text Value 75
Changing Data 74
Changing Of Data Value 75
Coasting 73
Comm. And Options 130
Communication Option 159
Control Cables 63
Control Cables 62
Control Card Performance 148
Control Card, 10 V Dc Output 147
Control Card, 24 V Dc Output 147
Control Card, Rs-485 Serial Communication: 146
Control Card, Usb Serial Communication 148
Control Characteristics 147
Control Terminals 58
Cooling 86
Cooling 34
Copyright, Limitation Of Liability And Revision Rights 5

D

Data Readouts 132
Dc Link 157, 165
Default Settings 76, 108
Devicenet 5
Digital I/o Mode 5-00 95
Digital In/out 130
Digital Inputs: 145
Digital Output 147
Disposal Instruction 11
Drip Shield Installation 39
Drives With Factory Installed Brake Chopper Option 52

E

Earthing 50
Elcb Relays 50
Electrical Installation 58, 62
Electronic Terminal Relay 88
Electronic Waste 11
Emc Precautions 136
External Fan Supply 54
External Temperature Monitoring 42

F

Fault Messages 165
Fc Information 131
Fieldbus Connection 58
Frame Size F Panel Options 40
Function Relay 5-40 102
Fuse Tables 55
Fuses 55
Fusing 43

G

Gain Boost Factor 2-28 92
General Considerations 24
General Warning 6
Gland/conduit Entry - Ip21 (nema 1) And Ip54 (nema12) 37
Glcp 76
Graphical Display 69

H

How To Connect A Pc To The Frequency Converter 77
How To Operate Graphical Lcp (glcp) 69

I

Iec Emergency Stop With Pilz Safety Relay 41
Index (ind) 140
Indexed Parameters 75
Indicator Lights (leds): 71
Initialisation 76
Input Polarity Of Control Terminals 63
Installation At High Altitudes 7
Installation Of Input Plate Options 40
Installation Of Mains Shield For Frequency Converters 40
Insulation Resistance Monitor (irm) 41
It Mains 50

J

[Jog Speed Hz] 3-11 93

K

Kty Sensor 157

L

Language 0-01 81
Language Package 1 81
Language Package 2 81
Language Package 3 81
Language Package 4 81
Lcp 102 69
Lcp Copy 0-50 85
Leakage Current 8
Leds 69
Lifting 17
Load Sharing 53

M

Main Menu Mode 72
Main Reactance 83
Mains Connection 54
Mains Supply (l1, L2, L3): 145
Manual Motor Starters 41
Maximum Reference 3-03 84
Mcb 113 102
Mct 10 78
Mechanical Brake Control 67
Mechanical Dimensions 19
Mechanical Installation 24
Minimum Reference 3-02 84
Motor Bearing Currents 57
Motor Cable 51
Motor Current 1-24 82
Motor Frequency 1-23 82
Motor Name Plate 65
Motor Nominal Speed 1-25 82
Motor Output 145
[Motor Power Kw] 1-20 82
Motor Protection 86, 148
Motor Speed Unit 0-02 85
Motor Thermal Protection 68, 86
Motor Voltage 1-22 82

N

Name Plate Data 65
Namur 41
Network Connection 135
Non Ul Compliance 55

O

Operation Mode 14-22 105
Operation/display 129
Output Performance (u, V, W) 145
Overload Mode 1-04 86

P

Parallel Connection Of Motors 67
Parameter Values 143
Pc Software Tools 78
Planning The Installation Site 16
Potentiometer Reference 61
Power Connections 43
Preset Reference 3-10 93

Profibus 5
Profibus Dp-v1 78
Protection 55
Protection And Features 148
Protocol Overview 136
Pulse Inputs 146
Pulse Start/stop 60

Q

Quick Menu 72
Quick Menu Mode 72
Quick Transfer Of Parameter Settings When Using Glcp 76

R

Ramp 1 Ramp Down Time 3-42 84
Ramp 1 Ramp Up Time 3-41 84
Rcd (residual Current Device) 41
Receiving The Frequency Converter 16
Reference Resource 1 3-15 93
Reference Resource 2 3-16 94
Reference Resource 3 3-17 94
Relay Outputs 99
Relay Outputs 147
Release Brake Current 2-20 91
Reset 74
Residual Current Device 8
Rfi Filter 14-50 106
Rfi Switch 50
Rs-485 135
Rs-485 Bus Connection 77

S

Safe Stop Installation 9
Safety Category 3 (en 954-1) 9
Safety Note 7
Screened/armoured 54
Screening Of Cables: 43
Serial Communication 148
Shielded Cables 51
Sine-wave Filter 44
Software Version 15-43 106
Space 24
Space Heaters And Thermostat 40
Special Functions 131
Speed Up/down 61
Start/stop 60
Stator Leakage Reactance 83
Status 72
Status Messages 70
Step-by-step 75
Stop Delay 2-24 92
Stopping Category 0 (en 60204-1) 9
Surroundings 148
Switches S201, S202, And S801 64
Switching Frequency: 43

T

Telegram Length (lge) 137
Terminal 27 Mode 5-01 95
Terminal 29 Mode 5-02 95
Terminal Locations - Frame Size D 1
Thermistor 86
Thermistor Source 1-93 88
Torque 50
Torque Characteristics 1-03 85, 145

Torque For Terminals 51
Torque Ramp Time 2-27 92
Torque Ref 2-26 92

U

Unpacking 16

V

Voltage Level 145
Voltage Reference Via A Potentiometer 61

W

Warning Against Unintended Start 7
Warnings 153
Wire Access 25



www.danfoss.com/drives

Danfoss can accept no responsibility for possible errors in catalogues, brochures and other printed material. Danfoss reserves the right to alter its products without notice. This also applies to products already on order provided that such alterations can be made without subsequential changes being necessary in specifications already agreed.
All trademarks in this material are property of the respective companies. Danfoss and the Danfoss logotype are trademarks of Danfoss A/S. All rights reserved.

130R0505 MG34O102 Rev. 2009-07-09