Whirlpool® Upright Freezer

PRODUCT MODEL NUMBERS

EV161FZT	EV181FZT
EV161NZT	EV181NZT
	EV185NXT
	EV201NZT
	EV209NBT

Electrical: A 115 Volt, 60 Hz., AC only 15 or 20 amp fused (or circuit breaker), grounded electrical supply is required. It is recommended that a separate circuit serving only your freezer be provided. Use an outlet that cannot be turned off by a switch. Do not use an extension cord.

Water Supply: Connect the ice maker to a cold water line with water pressure between 30 and 120 psi.

OVERALL DIMENSIONS

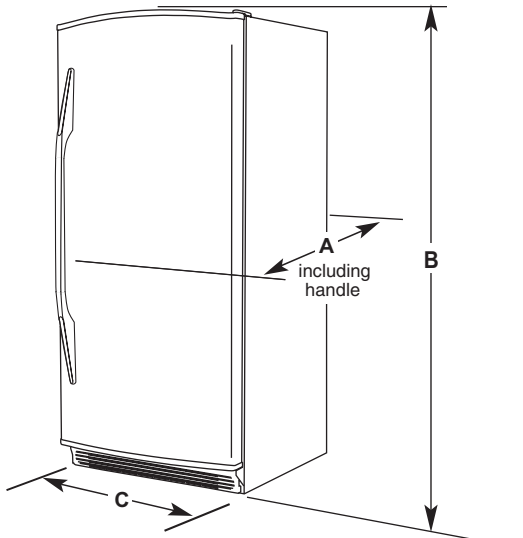

Shown with contoured door.

Door swing is right-fixed.

Model	Depth "A"	Cabinet Height "B"	Width "C"
EV161FZT	30 5/16"	61.0"	30.0"
EV161NZT	31 5/16"	61.0"	30.0"
EV181FZT	30.0"	67.0"	30.0"
EV181NZT	32.0"	67.0"	30.0"
EV185NXT	32.0"	67.0"	30.0"
EV201NZT	32.0"	67.0"	30.0"
EV209NBT	32.0"	67.0"	30.0"

LOCATION REQUIREMENTS

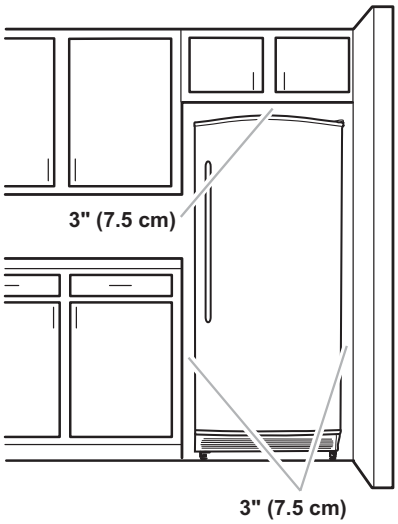

Allow at least 3 in. (7.5 cm) of air space at the top and on both sides of the freezer and 1 in. (2.5 cm) between the back of the freezer and the wall. If the freezer is to be against a wall, leave extra space on the hinge side so the door can open wider.

NOTE: This freezer may be installed side by side with another refrigerator or freezer. Allow for a 3 in. (7.5 cm) clearance at the top and sides and a 1/4 in. (0.64 cm) clearance between the appliances.

IMPORTANT: Do not install the freezer near an oven, radiator, or other heat source, nor in a location where the temperature will fall below 40°F (5°C).

Because Whirlpool Brand policy includes a continuous commitment to improve our products, we reserve the right to change materials and specifications without notice.

Dimensions are for planning purposes only. For complete details, see Installation Instructions packed with product. Specifications subject to change without notice.

Ref. M06.009.0
04-29-10