Whirlpool® Side by Side Refrigerator

PRODUCT MODEL NUMBERS

ED2NHAXN	ED2NHGXN
ED5NHAXN	ED5NHGXN
ED2NHEXN	ED2NHGXR
ED5NHEXN	ED5NHGXR

Electrical: A 115 Volt, 60 Hz., AC only 15 or 20 amp fused, grounded electrical supply is required. It is recommended that a separate circuit serving only your refrigerator be provided. Use an outlet that cannot be turned off by a switch. Do not use an extension cord.

Water: A cold water line with water pressure between 30 and 120 psi (207 - 827 kPa) is required for the water dispenser and ice maker.

Reverse osmosis water supply: The pressure of the water supply coming out of a reverse osmosis system going to the water inlet valve of the refrigerator needs to be between 30 and 120 psi (207 - 827 kPa).

If a reverse osmosis water filtration system is connected to your cold water supply, the water pressure to the reverse osmosis system needs to be a minimum of 40 to 60 psi (276 - 414 kPa).

OVERALL DIMENSIONS

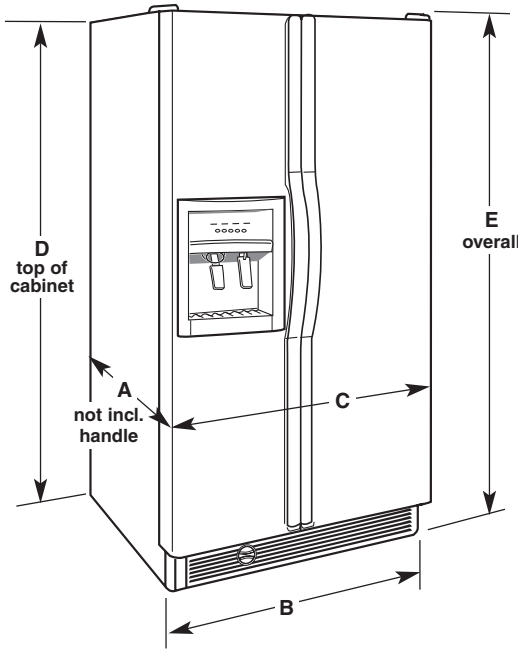

Handle and door style will vary with model.

Dimensions “D” and “E” include rollers extended 3/4".

Model size	Depth "A"	Cab. Width "B"	Door Width "C"	Cab. Height "D"	Overall Height "E"
22 cu.ft.	31 3/8"	32 3/4"	33 1/4"	65 7/8"	66 3/4"
25 cu.ft.	31 3/8"	35 1/2"	36"	68 7/8"	69 3/4"

LOCATION REQUIREMENTS

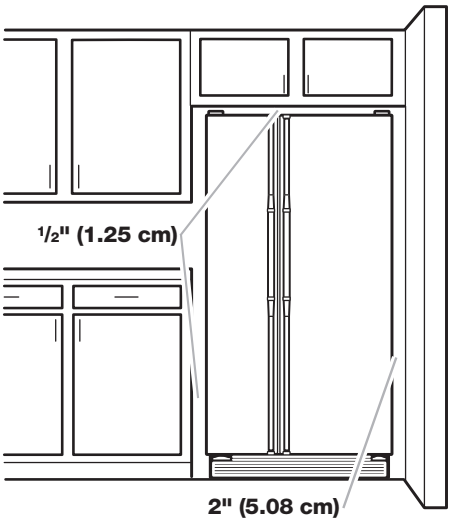

To ensure proper ventilation for your refrigerator, allow for 1⁄2″ (1.25 cm) space on each side and at the top. When installing your refrigerator next to a fixed wall, leave 2″ (5.08 cm) minimum on each side (depending on your model) to allow for the door to swing open. If your refrigerator has a water dispenser and ice maker, allow extra space at the back for the water line connections.

NOTE: Do not install the refrigerator near an oven, radiator, or other heat source, nor in a location where the temperature will fall below 55°F (13°C).

Because Whirlpool Corporation policy includes a continuous commitment to improve our products, we reserve the right to change materials and specifications without notice.

Dimensions are for planning purposes only. For complete details, see Installation Instructions packed with product. Specifications subject to change without notice.

Ref. 2318602
07-25-06