Silicon PIN Photodiode



FEATURES

- Package type: surface-mount
- Package form: top view
- Dimensions (L x W x H in mm): 4.8 x 2.5 x 0.48
- Radiant sensitive area (in mm^2): 5.4
- 0.48 mm low profile package
- Enhanced sensitivity for visible light
- Suitable for visible and near infrared radiation
- Angle of half sensitivity: φ = ± 65°
- Floor life: 168 h, MSL 3, according to J-STD-020
- Material categorization: for definitions of compliance please see www.vishay.com/doc?99912

Pb-free

e4

RoHS COMPLIANT

HALOGEN FREE

GREEN (5-2008)

LINKS TO ADDITIONAL RESOURCES

3D Models Infographics

DESCRIPTION

VEMD8081 is a high speed and high sensitive PIN photodiode with enhanced sensitivity for visible light. It is a low profile surface-mount device (SMD) including the chip with a 5.4 mm^2 sensitive area detecting visible and near infrared radiation.

APPLICATIONS

- High speed photo detector
- Wearables

PRODUCT SUMMARY			
COMPONENT	I_{ra} (µA) at E_e = 1.0 mW/cm², λ = 850 nm, V_R = 5.0 V	φ (°)	$\lambda_{0.1}$ (nm)
VEMD8081	33	± 65	350 to 1100

Note

- Test conditions see table “Basic Characteristics”

ORDERING INFORMATION			
ORDERING CODE	PACKAGING	REMARKS	PACKAGE FORM
VEMD8081	Tape and reel	MOQ: 5000 pcs, 5000 pcs/reel	Top view

Note

- MOQ: minimum order quantity

ABSOLUTE MAXIMUM RATINGS (T_{amb} = 25 °C, unless otherwise specified)				
PARAMETER	TEST CONDITION	SYMBOL	VALUE	UNIT
Reverse voltage		V_R	20	V
Operating temperature range		T_{amb}	-40 to +85	°C
Storage temperature range		T_{stg}	-40 to +85	°C
Soldering temperature	According to reflow solder profile Fig. 8	T_{sd}	260	°C
ESD safety HBM	± 2000 V, 1.5 kΩ, 100 pF, 3 pulses	ESD_{HBM}	≥ 2	kV

For technical questions, contact: detectortechsupport@vishay.com

THIS DOCUMENT IS SUBJECT TO CHANGE WITHOUT NOTICE. THE PRODUCTS DESCRIBED HEREIN AND THIS DOCUMENT ARE SUBJECT TO SPECIFIC DISCLAIMERS, SET FORTH AT www.vishay.com/doc?91000

BASIC CHARACTERISTICS (T_{amb} = 25 °C, unless otherwise specified)						
PARAMETER	**TEST CONDITION**	**SYMBOL**	**MIN.**	**TYP.**	**MAX.**	**UNIT**
Forward voltage	I_F = 50 mA	V_F	-	2.3	3.3	V
Reverse dark current	V_R = 10 V, E = 0	I_{ro}	-	0.5	10	nA
Diode capacitance	V_R = 0 V, f = 1 MHz, E = 0	C_D	-	50	-	pF
	V_R = 3 V, f = 1 MHz, E = 0	C_D	-	20	40	pF
Reverse light current	E_e = 1 mW/cm², λ = 525 nm, V_R = 5 V	I_{ra}	15	20	24	µA
	E_e = 1 mW/cm², λ = 850 nm, V_R = 5 V	I_{ra}	29	33	38	µA
Angle of half sensitivity		φ	-	± 65	-	°
Wavelength of peak sensitivity		λ_p	-	840	-	nm
Range of spectral bandwidth		$\lambda_{0.1}$	-	350 to 1100	-	nm
Rise time	V_R = 10 V, R_L = 50 Ω, λ = 830 nm	t_r	-	110	-	ns
Fall time	V_R = 10 V, R_L = 50 Ω, λ = 830 nm	t_f	-	110	-	ns

BASIC CHARACTERISTICS (T_{amb} = 25 °C, unless otherwise specified)

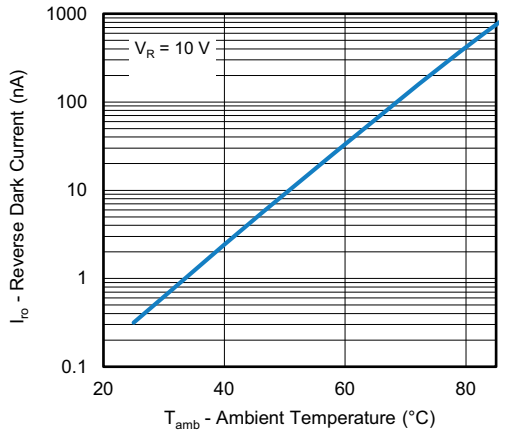

Fig. 1 - Reverse Dark Current vs. Ambient Temperature

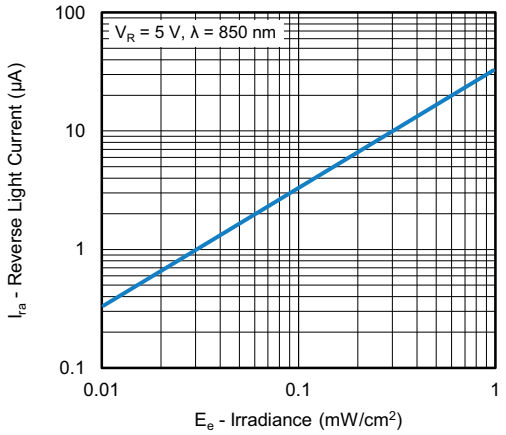

Fig. 3 - Reverse Light Current vs. Irradiance

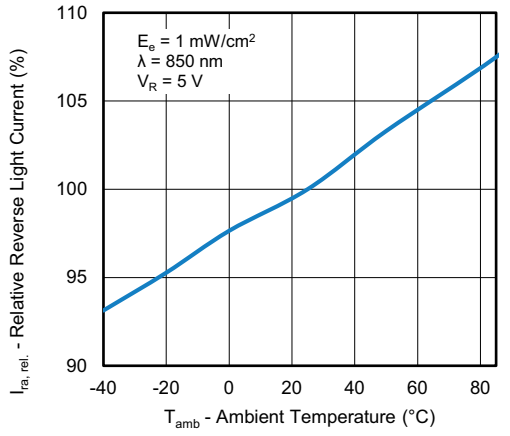

Fig. 2 - Relative Reverse Light Current vs. Ambient Temperature

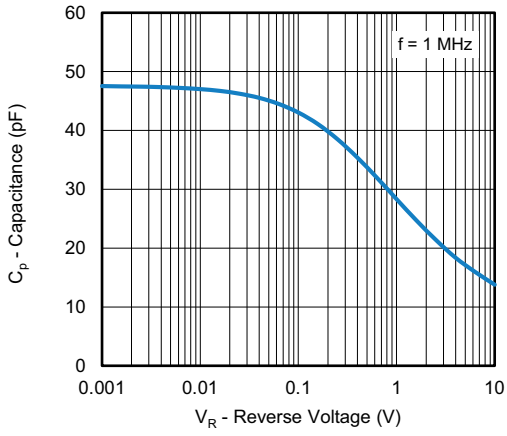

Fig. 4 - Diode Capacitance vs. Reverse Voltage

For technical questions, contact: detectortechsupport@vishay.com

THIS DOCUMENT IS SUBJECT TO CHANGE WITHOUT NOTICE. THE PRODUCTS DESCRIBED HEREIN AND THIS DOCUMENT ARE SUBJECT TO SPECIFIC DISCLAIMERS, SET FORTH AT www.vishay.com/doc?91000

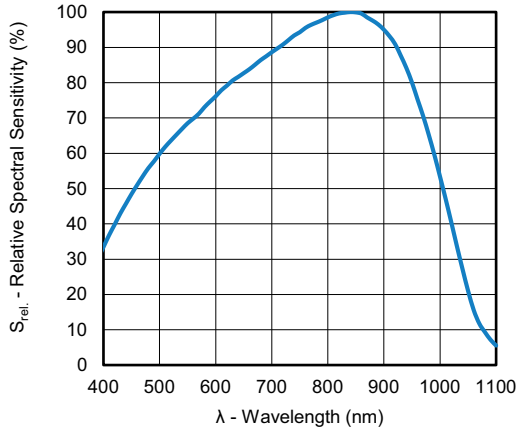

Fig. 5 - Relative Spectral Sensitivity vs. Wavelength

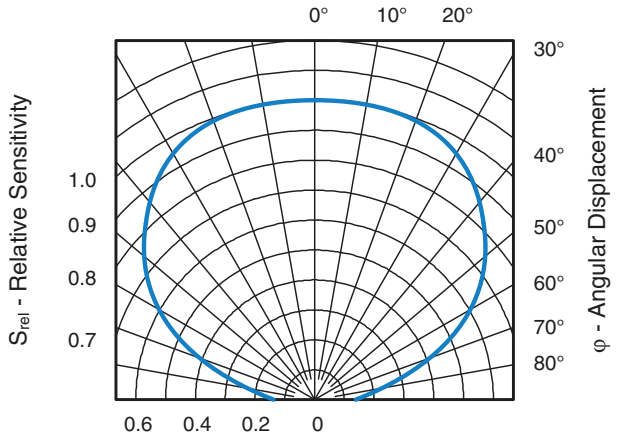

Fig. 6 - Relative Sensitivity vs. Angular Displacement

PACKAGE DIMENSIONS in millimeters

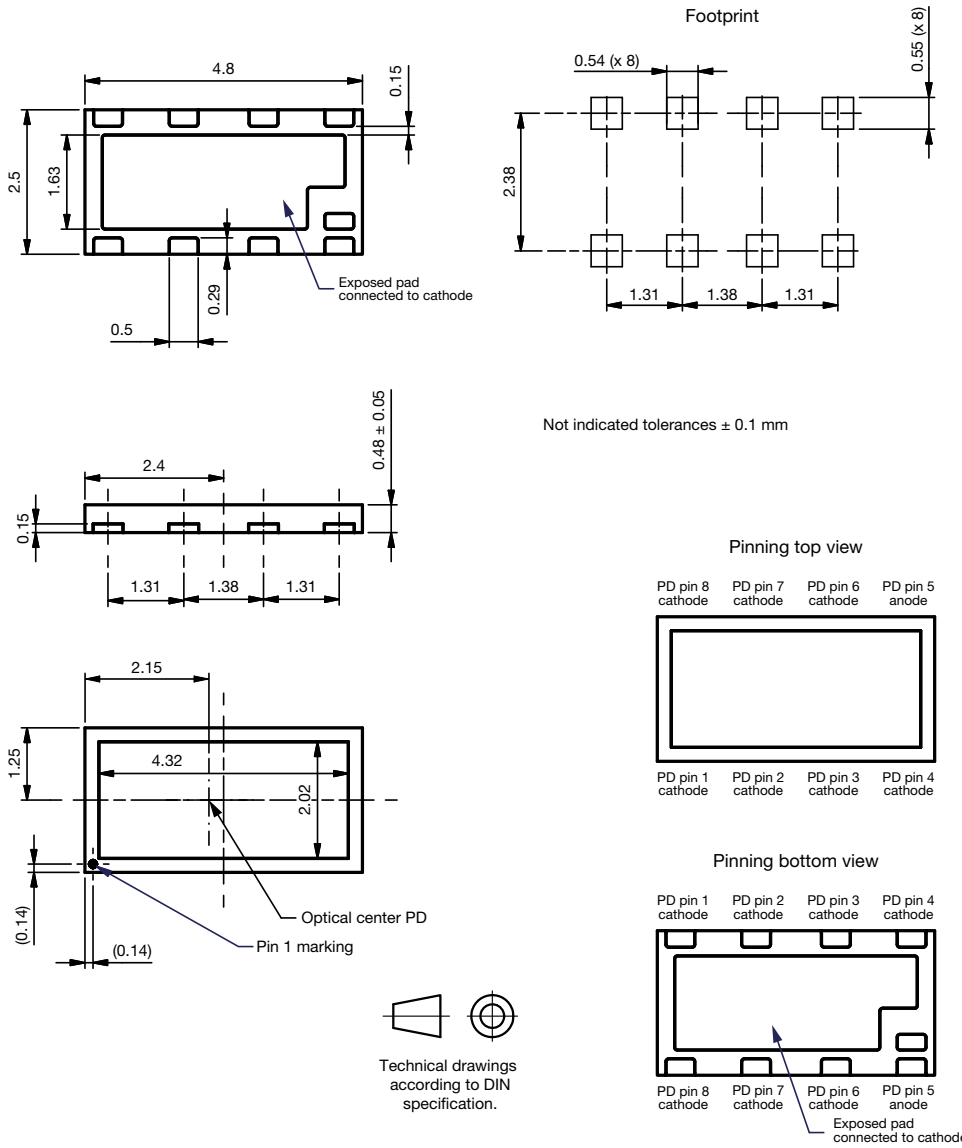

For technical questions, contact: detectortechsupport@vishay.com
THIS DOCUMENT IS SUBJECT TO CHANGE WITHOUT NOTICE. THE PRODUCTS DESCRIBED HEREIN AND THIS DOCUMENT ARE SUBJECT TO SPECIFIC DISCLAIMERS, SET FORTH AT www.vishay.com/doc?91000

TAPE AND REEL DIMENSIONS in millimeters

Non tolerated dimensions ± 0.1 mm
Reel design is representative for different types

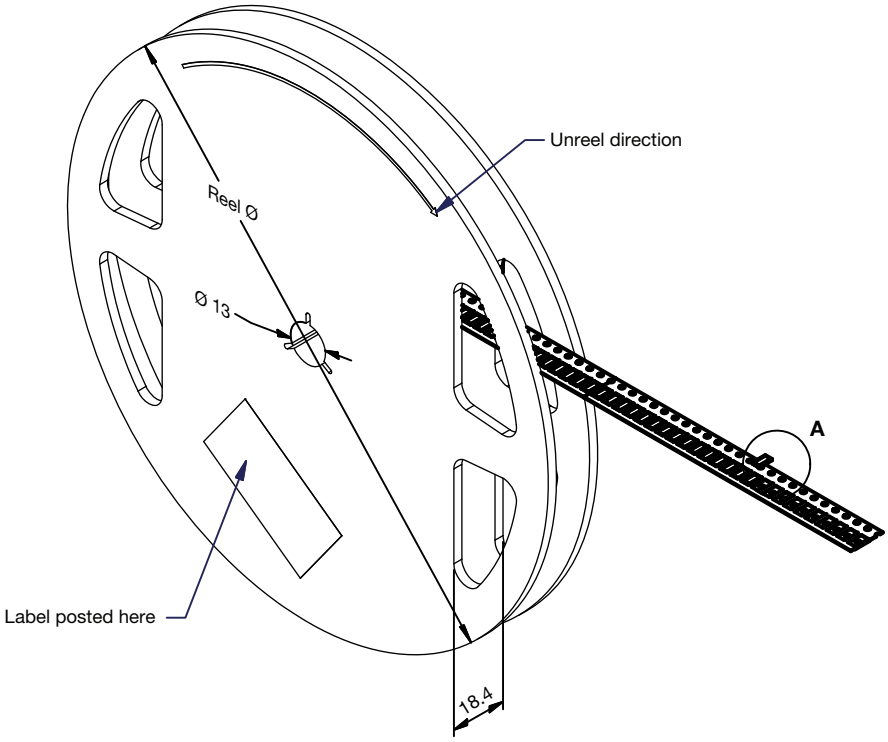

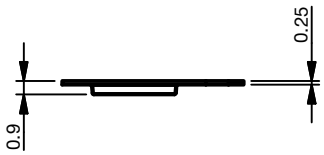

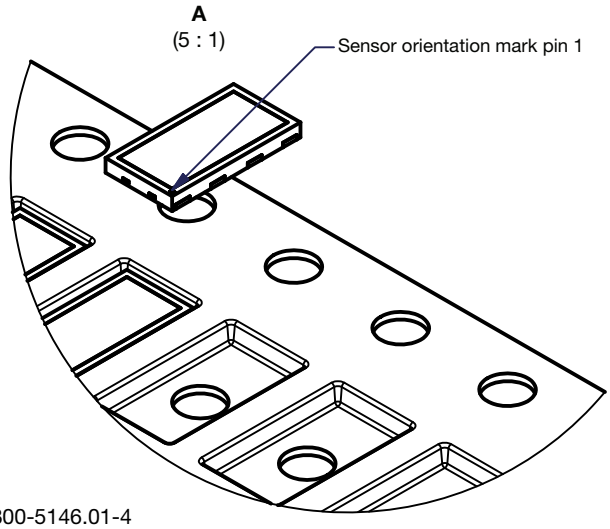

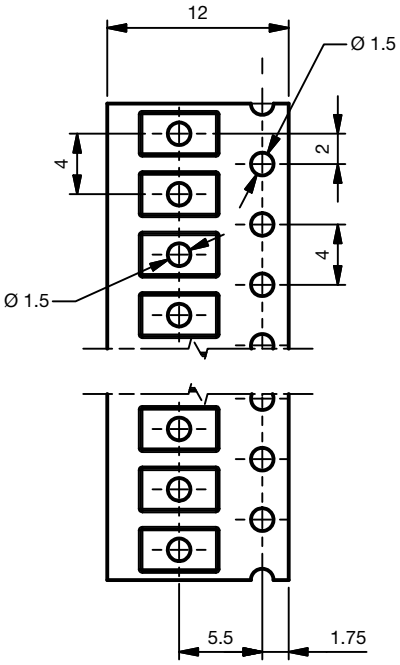

Drawing-No.: 9.800-5146.01-4
Issue: 1; 20.04.2018

For technical questions, contact: detectortechsupport@vishay.com
THIS DOCUMENT IS SUBJECT TO CHANGE WITHOUT NOTICE. THE PRODUCTS DESCRIBED HEREIN AND THIS DOCUMENT ARE SUBJECT TO SPECIFIC DISCLAIMERS, SET FORTH AT www.vishay.com/doc?91000

SOLDER PROFILE

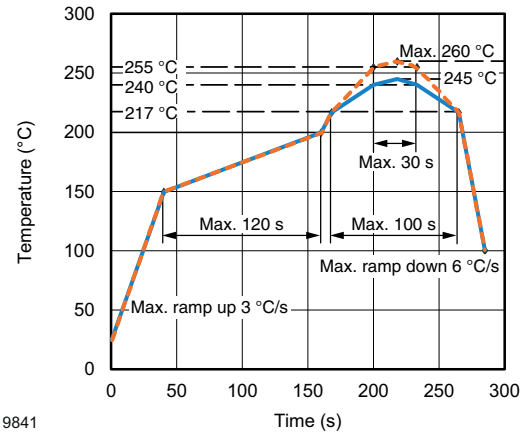

Fig. 7 - Lead (Pb)-free Reflow Solder Profile According to J-STD-020D

DRYPACK

Devices are packed in moisture barrier bags (MBB) to prevent the products from moisture absorption during transportation and storage. Each bag contains a desiccant.

FLOOR LIFE

Time between soldering and removing from MBB must not exceed the time indicated in J-STD-020:

Moisture sensitivity: level 3

Floor life: 168 h

Conditions: $T_{amb} < 30$ °C, RH < 60 %

DRYING

In case of moisture absorption devices should be baked before soldering. Conditions see J-STD-033D or recommended conditions:

192 h at 40 °C (+ 5 °C), RH < 5 %
or
96 h at 60 °C (+ 5 °C), RH < 5 %

For technical questions, contact: detectortechsupport@vishay.com
THIS DOCUMENT IS SUBJECT TO CHANGE WITHOUT NOTICE. THE PRODUCTS DESCRIBED HEREIN AND THIS DOCUMENT ARE SUBJECT TO SPECIFIC DISCLAIMERS, SET FORTH AT www.vishay.com/doc?91000

Disclaimer

ALL PRODUCT, PRODUCT SPECIFICATIONS AND DATA ARE SUBJECT TO CHANGE WITHOUT NOTICE TO IMPROVE RELIABILITY, FUNCTION OR DESIGN OR OTHERWISE.

Vishay Intertechnology, Inc., its affiliates, agents, and employees, and all persons acting on its or their behalf (collectively, “Vishay”), disclaim any and all liability for any errors, inaccuracies or incompleteness contained in any datasheet or in any other disclosure relating to any product.

Vishay makes no warranty, representation or guarantee regarding the suitability of the products for any particular purpose or the continuing production of any product. To the maximum extent permitted by applicable law, Vishay disclaims (i) any and all liability arising out of the application or use of any product, (ii) any and all liability, including without limitation special, consequential or incidental damages, and (iii) any and all implied warranties, including warranties of fitness for particular purpose, non-infringement and merchantability.

Statements regarding the suitability of products for certain types of applications are based on Vishay's knowledge of typical requirements that are often placed on Vishay products in generic applications. Such statements are not binding statements about the suitability of products for a particular application. It is the customer's responsibility to validate that a particular product with the properties described in the product specification is suitable for use in a particular application. Parameters provided in datasheets and / or specifications may vary in different applications and performance may vary over time. All operating parameters, including typical parameters, must be validated for each customer application by the customer's technical experts. Product specifications do not expand or otherwise modify Vishay's terms and conditions of purchase, including but not limited to the warranty expressed therein.

Hyperlinks included in this datasheet may direct users to third-party websites. These links are provided as a convenience and for informational purposes only. Inclusion of these hyperlinks does not constitute an endorsement or an approval by Vishay of any of the products, services or opinions of the corporation, organization or individual associated with the third-party website. Vishay disclaims any and all liability and bears no responsibility for the accuracy, legality or content of the third-party website or for that of subsequent links.

Vishay products are not designed for use in life-saving or life-sustaining applications or any application in which the failure of the Vishay product could result in personal injury or death unless specifically qualified in writing by Vishay. Customers using or selling Vishay products not expressly indicated for use in such applications do so at their own risk. Please contact authorized Vishay personnel to obtain written terms and conditions regarding products designed for such applications.

No license, express or implied, by estoppel or otherwise, to any intellectual property rights is granted by this document or by any conduct of Vishay. Product names and markings noted herein may be trademarks of their respective owners.

© 2025 VISHAY INTERTECHNOLOGY, INC. ALL RIGHTS RESERVED

THIS DOCUMENT IS SUBJECT TO CHANGE WITHOUT NOTICE. THE PRODUCTS DESCRIBED HEREIN AND THIS DOCUMENT ARE SUBJECT TO SPECIFIC DISCLAIMERS, SET FORTH AT www.vishay.com/doc?91000