TWISTED THROTTLE.com

Bolt-On Touring Accessories that fit YOUR motorcycle!

Quick-Lock Evo-Sideracks

Kawasaki KLR 650 A

KFT.08.287.200 Rev: 00

Mounting Instructions

TWISTED THROTTLE products should be installed by a qualified, experienced motorcycle technician. If you are unsure of your ability to properly install a product, please have the product installed by your local motorcycle dealer. TWISTED THROTTLE takes no responsibility for damages caused by improper installation.

All screws, bolts, and nuts, including all replacement hardware provided by TWISTED THROTTLE should be tightened to the torque specified in the OEM maintenance manual for your motorcycle. If no torque specifications are provided in the OEM maintenance manual, the following torques may be used:

M5	3.5 ft-lbs (5 Nm)
M6	7 ft-lbs (9.6 Nm)
M8	13 ft-lbs (18 Nm)

All screws, bolts, and nuts should be checked after driving the first 30 miles (50 km) to ensure that all are tightened to the proper torque.

Medium strength liquid thread-locker (i.e., "Locktite")
should be used to secure all screws, bolts, and nuts.

Twisted Throttle LLC 1080 Kingstown Rd, Building 1 Peace Dale, RI 02879	phone: 401.284.4200 fax: 401.223.6955 www.twistedthrottle.com

TWISTED THROTTLE.com
Bolt-On Touring Accessories that fit YOUR motorcycle!

A

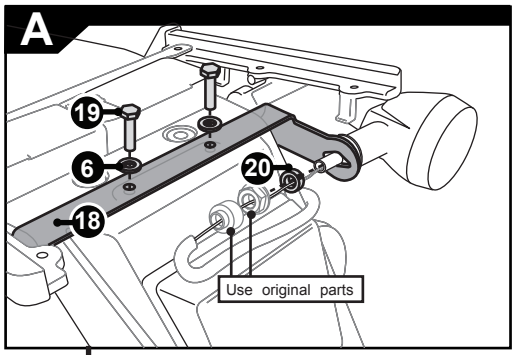

B

Use a coin or screwdriver to detach the quick fasteners of the QUICK-LOCK side carriers.

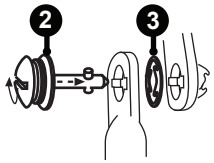

To prevent theft, use one anti-theft QUICK-LOCK on each side of the rear fixing point. (QLS.00.046.100 sold separately)

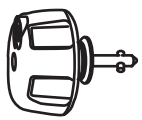

C

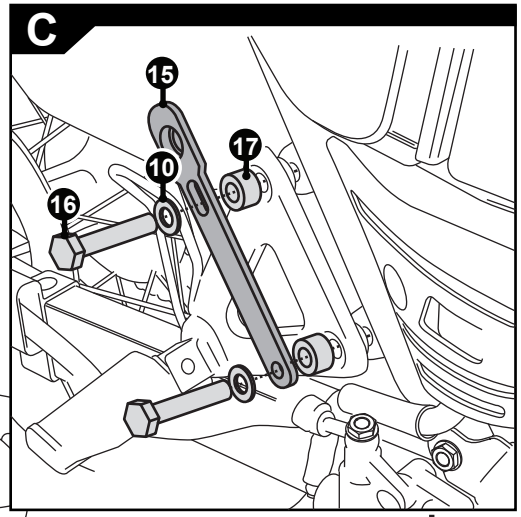

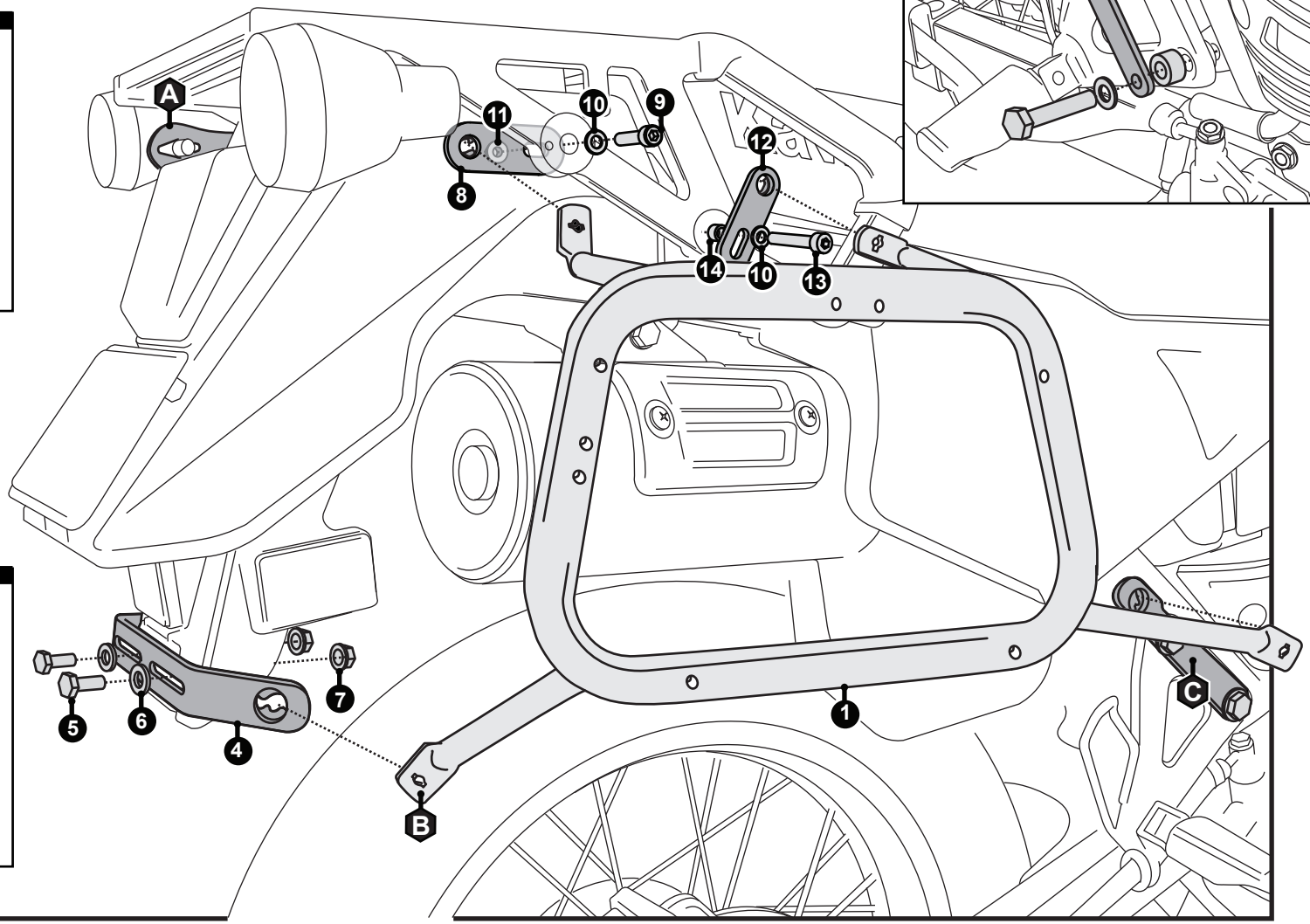

1
Evo-Sidrack

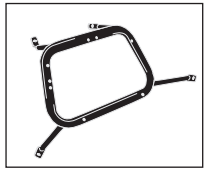

KFT.08.287.961/962
Qty.....2 (L/R)

4
Cross Connector

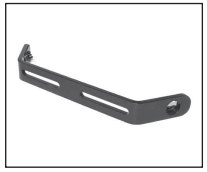

KFT.01.027.004.03
Qty.....1

8
Top Rear Fixing Lug



KFT.00.228.002
Qty.....2

12
Top Front Fixing Lug



KFT.00.064.001
Qty.....2

15
Front Fixing Lug



KFT.08.287.004
Qty.....2

18
Blinker Relocation Bracket



TC-D1.020.02
Qty.....2 (L/R)

21
Cable Extension



TC-D1.020.02
Qty.....2 (L/R)

2
Quick-Lock Fastener



CAM.2312S21-12AHNV
Qty.....8

5
Hex Head Screw



M6x20.....DIN 931
Qty.....2

9
Socket Head Screw



M8x35.....DIN 912
Qty.....2

13
Socket Head Screw



M8x50.....DIN 912
Qty.....2

16
Hex Head Screw



M8x45.....DIN 931
Qty.....2

19
Hex Head Screw



M6x30.....DIN 931
Qty.....2

22
Connector Male

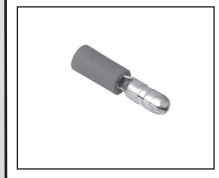

STZ.00.040.RD
Qty.....8

3
Retaining Ring

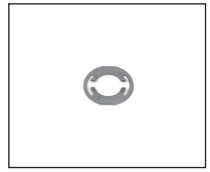

CAM.2312S10-1BP
Qty.....8

6
Washer



M6.....DIN 125
Qty.....2

10
Washer



M8
Qty.....8

14
Spacer



Da:13 Di:8.4 h:10
Qty.....2

17
Spacer

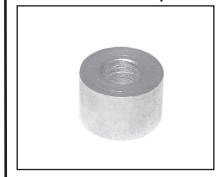

Da:18 Di:8.4 h:12
Qty.....2

20
Spacer

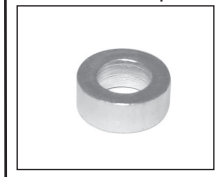

Da:18 Di:10.5 h:7
Qty.....2

23
Connector Female

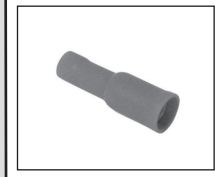

STH.00.040.RD
Qty.....8

7
Lock Nut w/ Flange



M6
Qty.....2

11
Lock Nut w/ Flange



M8
Qty.....2