Portable Clamping System

SJA200

SuperJaws provides fast, hands-free clamping of material up to 956mm / 37 ½", and a massive clamping force of up to 1000kg / 2200lbs. Constructed from tough, powder-coated steel, SuperJaws will hold anything - from car parts and bicycles to timber and tubing. Features include a lock/release switch for fast release of the workpiece, and reversible jaws for extra-wide clamping capacity.

SUPERJAWS



Reversible Sliding Jaws
allow for extra-wide 956mm / 37 ½" clamping width capacity

Tripod Base
for all-terrain stability

Powerful 1 Tonne Clamping Force
allows application of as much or as little clamping pressure required

1 TONNE CLAMPING FORCE

956mm CLAMPING WIDTH

Urethane Jaw Facings
provide a protective, slip-resistant grip

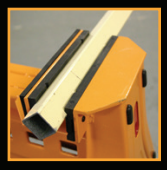

Foot-Operated Clamping
frees up hands for full control of the job



Stand alone design
allows 360° access to the work

Folds Down
for storage & transport



Lock / Release Switch
allows fast, trouble-free release of the jaws

Robust, All-Steel Construction with Power-Coated Finish
for long-lasting operation

Selling Points

- Powerful 1 tonne clamping force
- Reversible sliding jaws allow for extra-wide 956mm / 37 ½" clamping width capacity
- Urethane jaw facings provide a protective, slip-resistant grip
- Robust, all-steel construction with powder-coated finish for long- lasting operation
- Foot-operated clamping frees up hands for full control
- Lock/release switch allows fast, trouble-free release of the jaws

Key Specifications

Clamping Range	0 - 956mm	0 - 37 ½"
Clamping Force	1000kg	2200lbs
Clamping Method	Foot Operated	
Max Load	100kg	220lbs
Folded Size	275 x 775 x 295mm	11 x 30 ½ x 11 ½"
Standing Size	980 x 1000 x 860mm	38 ½ x 39 ½ x 34
Weight	16kg	35lbs

Optional Accessories

SJA460	Log Jaws
SJA470	Engineers Jaws
SJA420	Tool Tray


triton
Precision Power Tools

triton® Portable Clamping System SJA 200

SUPERJAWS

GB Operating and Safety Instructions

NL Bedienings- en veiligheidsvoorschriften

FR Instructions d'utilisation et consignes de sécurité

DE Gebrauchs- und Sicherheitsanweisung

IT Istruzioni per l'uso e la sicurezza

ES Instrucciones de uso y de seguridad

PT Instruções de uso e segurança

JP 取扱説明書および安全の手引き

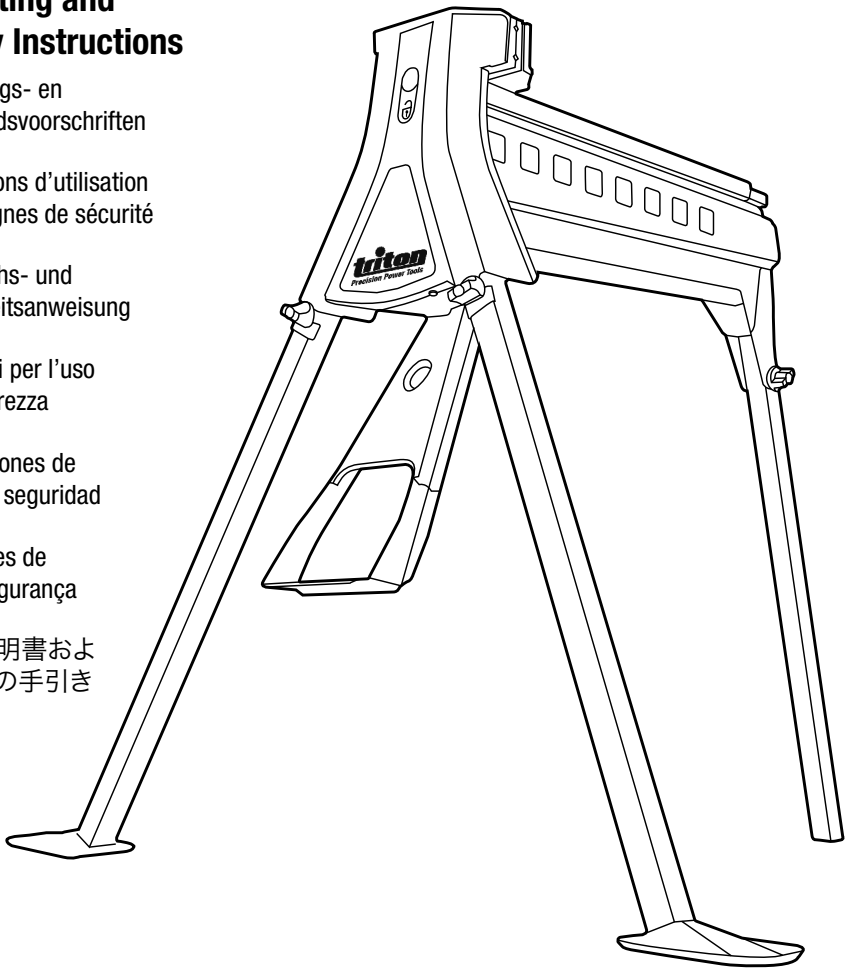

tritontools.com

Thank you for purchasing this Triton tool. This manual contains information necessary for safe and effective operation of this product. This product has unique features and, even if you are familiar with similar products, it is necessary to read this manual carefully to ensure you fully understand the instructions. Ensure all users of the tool read and fully understand this manual.

CONTENTS

Specification	2	Before Use	5
Description of Symbols	2	Operation	6
Product Familiarisation	3	Accessories	8
General Safety	4	Maintenance	8
Intended Use	5	Warranty	9
Unpacking Your Tool	5		

SPECIFICATION

Model No:	SJA200
Clamping range:	0-956mm; 0-37½"
Clamp travel per stroke:	24mm / approx. 1"
Clamping force:	up to 1,000kg / 2,204lbs
Maximum load:	100kg / 220lbs
Folded dimensions:	745 x 278 x 300mm; 29½ x 11 x 11¾"
Standing dimensions:	970 x 960 x 860mm; 38¼ x 37¾ x 34"
Weight:	15kg (33lbs)

DESCRIPTION OF SYMBOLS



Wear hearing protection
Wear eye protection
Wear breathing protection
Wear head protection



Do not use before viewing and understanding the full operating instructions



Caution!



DO NOT use as a step or platform!

GB

PRODUCT FAMILIARISATION

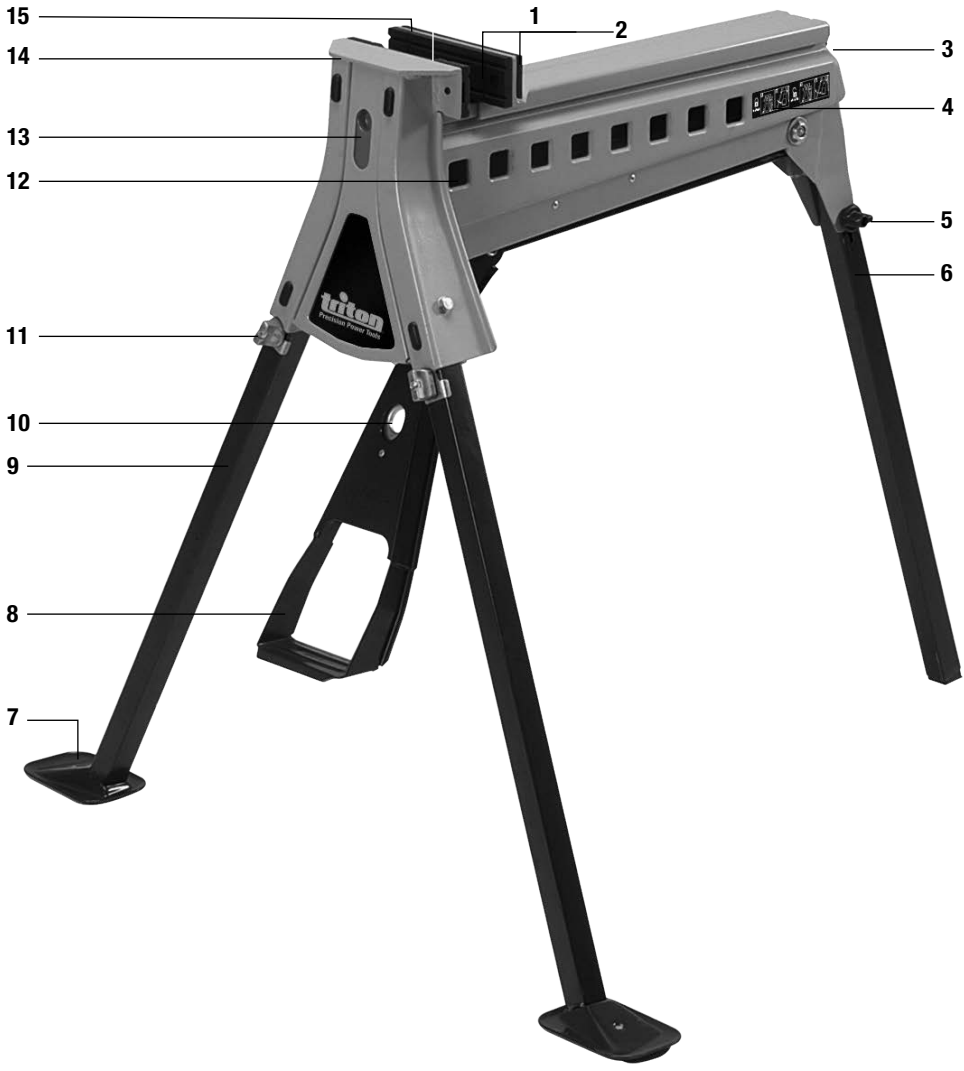

1. Fixed Jaw Urethane Face
2. Moving Jaw Urethane Faces (2pce)
3. Moving Jaw Locking Tab
4. Body
5. Rear Leg Locking Knob
6. Rear Leg
7. Foot Plates
8. Foot Pedal
9. Front Legs
10. Foot Pedal Locking Latch
11. Front Leg Locking Knobs
12. Extension Tray Mounting Holes
13. Lock / Release Switch
14. Fixed Jaw
15. Moving Jaw

GB

GENERAL SAFETY



WARNING Read all safety warnings and all instructions. *Failure to follow the warnings and instructions may result in electric shock, fire and/ or serious injury.*

WARNING: This appliance is not intended for use by persons (including children) with reduced, physical or mental capabilities or lack of experience or knowledge unless they have been given supervision or instruction concerning use of the appliance by a person responsible for their safety. Children must be supervised to ensure that they do not play with the appliance.

Save all warnings and instructions for future reference.

1) Work area safety

a) Keep work area clean and well lit. *Cluttered or dark areas invite accidents.*

b) Do not operate tools in explosive atmospheres, such as in the presence of flammable liquids, gases or dust.

c) Keep children and bystanders away while operating a powered tool. *Distractions can cause you to lose control.*

2) Personal safety

a) Stay alert, watch what you are doing and use common sense when operating a powered tool. Do not use a powered tool while you are tired or under the influence of drugs, alcohol or medication. *A moment of inattention while operating a powered tool may result in serious personal injury.*

b) Use personal protective equipment. Always wear eye protection. *Protective equipment such as dust mask, non-skid safety shoes, hard hat, or hearing protection used for appropriate conditions will reduce personal injuries.*

c) Prevent unintentional starting. *Ensure the switch is in the off-position when not operating the tool and make use of other safety features which prevent unintentional starting*

d) Remove any adjusting key or wrench before turning the powered tool on. *A wrench or a key left attached to a rotating part of the tool may result in personal injury.*

e) Do not overreach. Keep proper footing and balance at all times. *This enables better control of the tool in unexpected situations.*

f) Dress properly. Do not wear loose clothing or jewelry. Keep your hair, clothing and gloves away from moving parts. *Loose clothes, jewelry or long hair can be caught in moving parts.*

g) If devices are provided for the connection of dust extraction and collection facilities, ensure these are connected and properly used. *Use of dust collection can reduce dust-related hazards.*

WARNING: User exposure to tool vibration can result in loss of sense of touch, numbness, tingling and reduced ability to grip. Long term exposure can lead to a chronic condition. If necessary limit the length of time exposed to vibration. Use the figures provided in the specification relating to vibration if provided to calculate the duration and frequency of operating the tool. The 2002/44/EC directive relating to vibration in the workplace may provide useful information even for domestic use of tools. In the first instance of feeling uncomfortable due to vibration STOP using the tool immediately.

WARNING: Always wear ear protection where the sound level exceeds 85dB(A) and limit the time of exposure if necessary. If sound levels are uncomfortable even with ear protection stop using the tool immediately and check the ear protection is correctly fitted and provides the right level of sound attenuation for the level of sound produced by your tool.

3) Tool use and care

a) Maintain tools. Check for misalignment or binding of moving parts, breakage of parts and any other condition that may affect the tool's operation. If damaged, have the tool repaired before use. *Many accidents are caused by poorly maintained tools.*

b) Keep cutting tools sharp and clean. *Properly maintained cutting tools with sharp cutting edges are less likely to bind and are easier to control.*

c) Use the tool's accessories and tool bits etc. in accordance with these instructions, taking into account the working conditions and the work to be performed. *Use of the tool for operations different from those intended could result in a hazardous situation.*

4) Service

a) Have your tool serviced by a qualified repair person using only identical replacement parts. *This will ensure that the safety of the tool is maintained.*

GB

INTENDED USE

SuperJaws is a portable work holder which clamps a variety of workpieces for a multitude of different applications.

UNPACKING YOUR TOOL

- Carefully unpack and inspect your tool. Fully familiarise yourself with all its features and functions
- Ensure that all parts of the tool are present and in good condition. If any parts are missing or damaged, have such parts replaced before attempting to use this tool

BEFORE USE

SETTING UP

1. With SuperJaws placed upside down on the ground, loosen the Rear Leg Locking Knob (5) and slide the Rear Leg (6) from its storage position

- Pivot the Rear Leg just clear of the front face

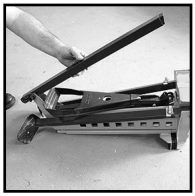

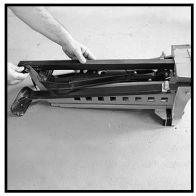

- Slide it all the way forward then lift and slide it fully into its housing at the rear, then tighten the knob

DO NOT extend the rear leg beyond the marked line.

2. Raise the Foot Pedal (8) until it 'clicks' into position

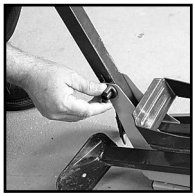



3. Pivot the Front Legs (9) out as far as they will go, then turn the Front Leg Locking Knobs (11) clockwise; until the rounded section of the knob tightens onto the leg housing, as shown



- Several turns may be necessary on initial set-up, until the clamps tighten into place. A half turn is all that is required to release the legs when folding





4. Turn the SuperJaws upright and recheck all legs are locked firmly in position

5. Rotate the Moving Jaw Locking Tab (3) to the horizontal position. SuperJaws is now ready for use





FOLDING

- Folding is the reverse procedure of the steps described above. Ensure that:
- The Lock / Release Switch (13) is in the 'unlock' position
- The Foot Pedal Locking Latch (10) is used to release and fold the Foot Pedal (8)





- The Moving Jaw Locking Tab (3) is in the 'vertical' position to prevent the jaw from sliding out
- The Rear Leg (6) is engaged fully into its housing, and the Rear Leg Locking Knob (5) is tightened firmly





- When in its folded position, the Rear Leg becomes a carrying handle, for easy transportation



GB

OPERATION

BASIC OPERATION
Clamping

1. Check that the Moving Jaw Locking Tab (3) is set to the 'horizontal' position, and push the Moving Jaw (15) back until your workpiece fits between the jaws


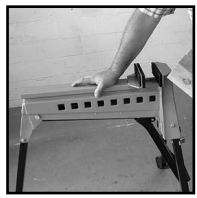

2. Place the workpiece against the Fixed Jaw (14) and slide the moving jaw forward until it touches the workpiece

Note: The jaw can also be advanced forward by pressing the Foot Pedal (8) repeatedly.

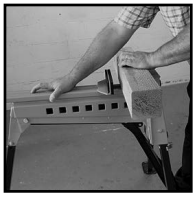


3. Slide the Lock / Release Switch (13) down to the 'lock' position

Note: If preferred the switch can be locked after the work is clamped.

4. Apply downward pressure on the Foot Pedal (8) until sufficient clamping force has been applied



Note: For extra force you may stand on the Foot Pedal (maximum 100kg), but do not jump on it, as you could damage the unit.

Releasing

1. Slide the Lock / Release Switch (13) up to the 'release' position
2. Push on the Foot Pedal (8) then allow it to return up and release the workpiece

Note: Ensure you are supporting the workpiece to prevent it from falling once the jaw is released.

Note: If you have clamped the object very tightly, you may need to exert more pressure on the Foot Pedal before it will release.




3. Slide the Moving Jaw (15) back, and remove your workpiece

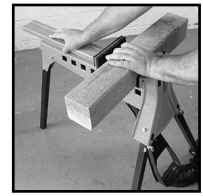

ADVANCED OPERATION

Clamping on one side of the jaw

- Some large or awkward workpieces can only be clamped on one side of the jaws

Note: Always fit a spacer (the same thickness as your workpiece) to the other side of the jaws, to prevent the Moving Jaw (15) from skewing.

Clamping large objects (460mm to 956mm)

- The Moving Jaw (15) can be reversed to accommodate workpieces measuring between 460mm and 956mm:




1. Set the Lock / Release Switch (13) to the 'release' position, and ensure that the Foot Pedal (8) is released
2. Check the Moving Jaw Locking Tab (3) is in the horizontal position
3. Slide the Moving Jaw fully from its tracks




4. Rotate the Moving Jaw by 180°, and re-insert it into the tracks

Notes:

- When clamping objects with the Moving Jaw (15) reversed, ensure the workpiece sits down onto, and is parallel to, the sliding jaw. Avoid clamping workpieces at the top of the jaws (with a gap between the workpiece and the base of the Moving Jaw) as excessive pedal pressure could damage the unit
- When clamping large or heavy materials, provide outboard support (such as a MSA200 Triton Multi-Stand) to prevent SuperJaws from tipping over




GB

Using as an anvil

- The fixed jaw is sufficiently robust to be used as an anvil for strip metal work
- Do not use the Moving Jaw as an anvil, as this could cause damage
- For thicker materials we recommend the use of the optional SJA470 Engineers' Jaws





Using as a press

- When the Lock / Release Switch (13) is in the 'release' position, SuperJaws can be used as a press
- With each full stroke of the Foot Pedal (8), the Moving Jaw (15) will advance approximately 25mm (1")



Ripping a plank

1. When ripping a plank, stop cutting before reaching the jaws
2. Remove the workpiece and re-clamp with sufficient amount of the cut beyond the jaws, so that you can drop in your saw to recommence your cut
3. Before clamping, insert a spacer slightly thicker than your saw cut, at the jaw area, to keep the cut open





Clamping square tubing

- Square tubing or similar can be clamped diagonally into the jaws using the V-grooves for easier, more precise sawing

Note: Use the V-grooves in the urethane jaws to securely hold your material.

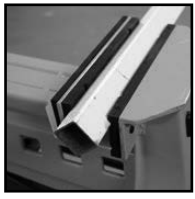

Sharpening chainsaws

- SuperJaws is ideal for clamping a chainsaw or chain blade while sharpening the teeth

Note: If sharpening a chainsaw, use two wooden blocks, either side of the bar, to ensure the clamping jaws are clear of the chain, which can then be rotated as each tooth is filed.



Outdoor use

- SuperJaws is ideal for outdoor use. However, if SuperJaws gets wet, it is important to dry the tool to prevent corrosion. Also re-apply any oil or grease that may have been affected by rain

Bicycles

- SuperJaws is ideal for clamping bicycles during repair and maintenance, and will hold the bicycle securely at the required height. However, modern bicycle frames need careful consideration before clamping. Carbon fibre frames are very easy to damage and should not be clamped. Steel bicycle frames are possible to clamp, so long as the clamping is applied carefully and slowly. Ideally, for any frame, the best solution is to fit an old seat post to the frame and clamp the seat post instead, to prevent the frame being damaged

Note: Clamp so the weight of the bicycle is dispersed evenly across SuperJaws. Bicycles are considerably heavier at the back than at the front.

ADDITIONAL USES

There are many additional uses for SuperJaws which are not featured in this manual. Whatever the use, it is important to heed the following:

- Always check SuperJaws is correctly assembled before use
- Do not overload SuperJaws beyond its load capacity (see 'Specification')
- Make sure the workpiece is correctly balanced
- Do not exert too much force on the workpiece while clamping
- Do not use clamping force beyond 1,000kg; only clamp to the required force
- Do not use this product as a step or for building work platforms for people

GB

ACCESSORIES

Engineers' Jaws SJA470

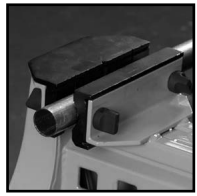

- The bolt-on jaws are manufactured from extremely strong ductile cast iron, and are specially shaped to increase grip when clamping pipe or round sections up to 50mm in diameter. They also have an integral anvil for hammering or bending of heavy metal sections

Log Jaws SJA460



- Suitable for gripping logs or poles, these jaws also bolt onto the standard steel jaws and are formed from steel plate, and zinc-plated for corrosion resistance

Note: Logs or poles up to 175mm in diameter are gripped firmly for chain sawing, drilling, rebating etc.

Extension Tray SJA420



- The Extension Tray fits through the Extension Tray Mounting Holes (12) in either side of the main Body (4). It provides outboard support for the workpiece, keeping it level while clamping into position. A tough, high density polyethylene tray locates onto the support tubes as a convenient place to hold tools, parts and other accessories

Note: For additional support and capacity a second extension tray can be fitted onto the opposite side of SuperJaws

Note: Check with your Triton stockist for additional accessories for your SuperJaws. Spare parts for your SuperJaws can be obtained from toolsparesonline.com.

MAINTENANCE

- Basic maintenance of this product should ensure a long working life
- Any damage to SuperJaws should be repaired and carefully inspected before use by qualified repair personnel
- Servicing should be carried out using only original Triton replacement parts
- Triton Tools will not be responsible for any damage or injury caused by unauthorised repair or mishandling of the machine

Please note:

- Depending on the type of use, it is quite likely this product will receive scratches and marks that will remove paint and result in corrosion over time. Check for corrosion and treat if necessary. Some disassembly may be required to check thoroughly, such as the underside of the moving jaw. Always dry SuperJaws if it gets wet, particularly on any exposed metal surfaces
- Lubricant or grease may be required from time to time, but always apply it in moderation and never apply lubricant if it will affect the way the product operates. Any mechanism should only be lubricated with a light spray lubricant which cannot affect the way it operates
- If SuperJaws becomes damaged or corroded, and requires major repair, such as welding, you can no longer rely on the given figures for clamping force or load capacity. Under these circumstances, SuperJaws should be replaced immediately, as this level of repair will void the guarantee

REMOVING THE URETHANE JAW FACES



- The jaw facings can be removed to achieve a greater clamping range, or for replacement if worn or damaged, or when fitting the optional jaws

Note: Replacement urethane jaw pads are available from your Triton stockist or from www.toolsparesonline.com.

1. The Fixed Jaw Urethane Face (1) is removed by carefully prying it off the Fixed Jaw (14) using a broad screwdriver or similar
2. To remove the Moving Jaw Urethane Faces (2), push the backing face to the right (when viewed from the front of SuperJaws), in order to disengage the connection pins. The backing face can then be removed, allowing the front to be pulled off the Moving Jaw (15)



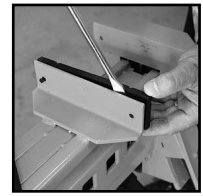

- The pawl carrier pivot pin may occasionally require a small amount of spray lubricant, as shown, if it doesn't pivot smoothly

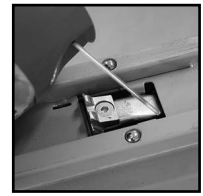

STORAGE

- Store this tool carefully in a secure, dry place out of the reach of children

DISPOSAL

Always adhere to national regulations when disposing of tools that are no longer functional and are not viable for repair

- Do not dispose of tools, with household waste
- Contact your local waste disposal authority for information on the correct way to dispose of tools

WARRANTY

To register your guarantee visit our web site at www.tritontools.com* and enter your details.

Your details will be included on our mailing list (unless indicated otherwise) for information on future releases. Details provided will not be made available to any third party.

PURCHASE RECORD

Date of Purchase: ___ / ___ / ____

Model: SJA200

Serial Number:_____(located on tool housing)

Retain your receipt as proof of purchase

Triton Precision Power Tools guarantees to the purchaser of this product that if any part proves to be defective due to faulty materials or workmanship within 3 YEARS from the date of original purchase, Triton will repair, or at its discretion replace, the faulty part free of charge.

This guarantee does not apply to commercial use nor does it extend to normal wear and tear or damage as a result of accident, abuse or misuse.

* Register online within 30 days.

Terms & conditions apply.

This does not affect your statutory rights

GB