# SWISHER®

**ZTR2766CP, ZTR2766CP-CA**

***27 HP Briggs & Stratton – 66***

# RESPONSE

# COMMERCIAL PRO

with

Patent Pending

RAPID RESPONSE CONTROL SYSTEM

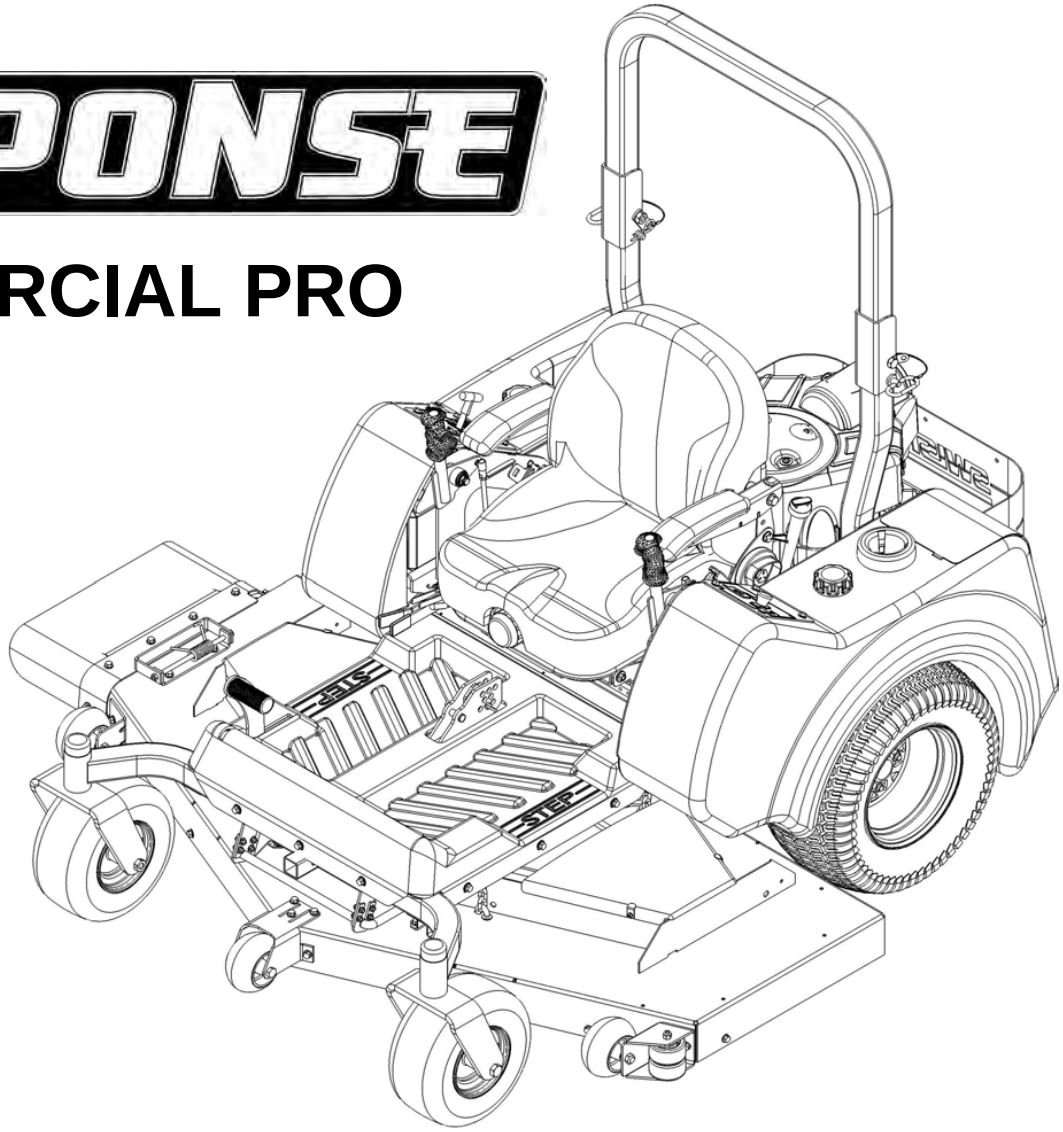

**1602 CORPORATE DRIVE, WARRENSBURG MISSOURI 64093**
**PHONE: 660-747-8183 FAX: 660-747-8650**
**TOLL FREE: 1-800-222-8183**

**Manufacturing quality lawn care equipment since 1945,**
**Celebrating over 70 years of innovation**

MADE IN THE U.S.A
OF U.S. AND GLOBAL PARTS

## OWNER'S MANUAL

STARTING SERIAL # L115-176001

20111 REV 15-176

# LIMITED WARRANTY

The manufacturer's warranty to the original consumer purchaser is:
This product is free from defects in materials and workmanship for a period of three (3) years for residential use and one (1) year for commercial use from the date of purchase by the original consumer purchaser.

A Commercial Warranty is defined as the machine exceeding **250** hours of use within the first year from the date of purchase by the original purchaser. If the machine does not exceed **250** hours of use within the first year it is subject to fall under a Residential Warranty.

As required by CFR § 1060.120, the fuel system related components, which have been certified to this equipment by SAI are to be free of defects in material and workmanship for a period of two (2) years from the date of purchase by the original consumer purchaser.

We will repair or replace, at our discretion, parts found to be defective due to materials or workmanship. This warranty is subject to the following limitations and exclusions:

1) Engine Warranty — All engines utilized on our products have a separate warranty extended to them by the individual engine manufacturer. Any engine service warranty is the responsibility of the engine manufacturer and in no way is Swisher or its agents responsible for the engine warranty. The Briggs & Stratton Engine Service Hotline is 1-800-233-3723.

2) Limitations — This warranty applies only to products which have been properly assembled, adjusted, and operated in accordance with the instructions contained within this manual. This warranty does not apply to any product of Swisher that has been subject to alteration, misuse, abuse, improper assembly or installation, shipping damage, or to normal wear of the product.

3) Exclusions — Excluded from this warranty are normal wear, normal adjustments, normal maintenance, and battery*****(see battery section).

In the event you have a claim under this warranty, you must return the product to an authorized service dealer. All transportation charges, damage or loss incurred during transportation of parts submitted for replacement or repair under this warranty shall be borne by the purchaser. Should you have any questions concerning this warranty, please contact us toll-free at 1-800-222-8183. The model number, serial number, date of purchase and the name of the authorized Swisher dealer from whom you purchased the mower will be needed before any warranty claim can be processed.

THIS WARRANTY DOES NOT APPLY TO ANY INCIDENTAL OR CONSEQUENTIAL DAMAGES AND ANY IMPLIED WARRANTIES ARE LIMITED TO THE SAME TIME PERIODS STATED HEREIN FOR ALL EXPRESSED WARRANTIES. Some states do not allow the limitation of consequential damages or limitations on how long an implied warranty may last, so the above limitations or exclusions may not apply to you. This warranty gives you specific legal rights and you may have other rights, which vary from state-to-state. This is a limited warranty as defined by the Magnuson-Moss Act of 1975.

# TABLE OF CONTENTS


| | | | | | |
|---|---|---|---|---|---|
| **LIMITED WARRANTY……** | 2 | | **OPERATION & FEATURES…….** | 14 |
| **TABLE OF CONTENTS……..** | 3 | | Features…… | 14 -15 |
| **INTRODUCTION……** | 4 | | Starting…… | 15 |
| General…… | 4 | | Grass Height of Cut…… | 16 |
| Before Operating…… | 4 | | Deck Level…… | 16 |
| Uncrating & Assembly…… | 5 | | Brake & Bypass…… | 16 |
| **SYMBOLS & DECALS……** | 6 | | Controls…… | 17 |
| **SAFETY INSTRUCTIONS……** | 7 | | Fuel Shut-Off Vavles…… | 17 |
| General use & Safety Rules…… | 7 | | **SERVICE & ADJUSTMENTS..** | 18 |
| Children Safety…… | 8 | | Adjusting Deck Height…… | 18 |
| Slope Operation…… | 8 | | Parking Brakes…… | 18 |
| ROPS & Seat Belt Use…… | 8 | | Deck Belt Replacement…… | 19 |
| General use & Safety Rules…… | 9 | | Belt Replacement…… | 20 |
| **CUSTOMER** | | | Seat Adjustment…… | 21 |
| **RESPONSIBILITY……** | 10 | | | |
| | | | PTO Clutch Adjustment…… | 21 |
| Operator Presence…… | 10 | | | |
| | | | Hydro Expansion Tanks…… | 21 |
| Tires…… | 10 | | | |
| | | | **WIRING SCHEMATIC……** | 22-23 |
| Blade Maintenance…… | 10 | | | |
| | | | **PARTS BREAKDOWN……** | 24-33 |
| Battery / Charging Tips…… | 10 - 11 | | | |
| | | | **TROUBLESHOOTING……** | 34-35 |
| V-belts…… | 12 | | | |
| | | | **MOWER IDENTIFICATION……** | 36 |
| Engine…… | 12 | | | |
| | | | **REPLACEMENT PARTS……** | 37 |
| Overall Unit Care…… | 12 | | | |
| | | | **NOTES……** | 38-39 |
| Transporting Safety…… | 12 | | | |
| | | | **SWISHER HISTORY……** | 40 |
| **SPECIFICATIONS……** | 13 | | | |
| Maintenance…… | 13 | | | |

# INTRODUCTION

**Congratulations!**

Thank you for purchasing a Swisher Zero Turn mower. This machine is built for the greatest efficiency and rapid mowing of large areas. Innovative handle control design and dual commercial grade hydrostatic transmissions regulated by steering levers contribute to the machine's performance.

**This manual is a valuable document. Following the instructions for use, service, maintenance, etc. can greatly increase the lifespan of your machine.**

> **NOTE:**
>
> If you have never used a Zero Turn mower before, refer to the Operation Controls section of this manual before attempting to operate one for the first time.

## General:

In this operator's manual, left and right, backward and forward are used in relation to the normal operator's position.

## Read Before Operating:

- This machine is constructed only for mowing grass on lawns and other free and even ground without obstacles. The manufacturer's directions concerning operation, maintenance and repairs must be carefully followed.
- This machine must only be operated, maintained and repaired by persons that are familiar with the machine's special characteristics and who are well versed in safety instructions.
- Accident prevention regulations, other general safety regulations, occupational safety rules and traffic regulations must be followed without fail.
- Unauthorized modifications to the design of the machine may absolve the manufacturer from liability for any resulting personal injury or property damage.
- Read engine manufacturer's operating and maintenance instructions.
- Read and observe all safety instructions on your mower and in the manual.
- Check engine oil.
- Check fuel caps to sure that they are in place.
- Know how to set the parking brake.
- Be sure mower blades are turned off – PTO switch pushed down.
- Know how to stop the engine – Turn key to off.
- Know how to stop the unit – Return control handles to neutral.

> **IMPORTANT:**
>
> This engine is not equipped with a spark arrester muffler. It is a violation of California Public Resource Code Section 4442 to use or operate the engine on any forest-covered, brush-covered, or grass-covered land. Other states or federal areas may have similar laws.

# INTRODUCTION

## Uncrating & Assembly:

Tools Required:

- Tire pressure gauge
- Nail bar or claw hammer
- Wire snips

### To remove the mower from the crate:

- Dispose of top and side panels of the crate.
- Remove loose parts and packing material.
- Cut any banding or strapping that may be holding the mower to the crate.
- Disconnect the spark plug wire and place where it cannot make a connection.
- Raise the mower deck to its highest position.
- Disengage the parking brake by releasing the lock plates and lowering both handles down to the "Disengaged" position. **SEE INSTRUCTION DECAL ON FLOOR PAN OR GO TO PAGE 16.**
- Open the transmission bypasses by pulling up on only the inside handle located below the right side of the seat. **SEE INSTRUCTION DECAL ON FLOOR PAN OR GO TO PAGE 16.**
- Carefully push the mower off the crate to a safe and level area.
- Check engine oil. All engines are filled with oil and tested at the factory. Verify oil level and add if necessary before starting engine. **SEE ENGINE OWNER'S MANUAL.**
- Check the battery. If the battery is put into service after the "month & year" of the date on the battery, then it may need to be charged with a 12 volt charger for a minimum of one hour, but no more than 2 hours at a rate of 6 to 10 amps.
- Close the transmission valves by releasing the lock plate and lowering the handle down to the "Disengaged" position. **SEE INSTRUCTION DECAL ON FLOOR PAN OR GO TO PAGE 16.**
- Reconnect spark plug wire.
- Check tire pressure on all four wheels. **REFER TO UNIT SPECIFICATIONS TABLE ON PAGE 12.**
- **Read all operating instructions, safety instructions, and customer responsibilities before operating this machinery.**

# SYMBOLS & DECALS

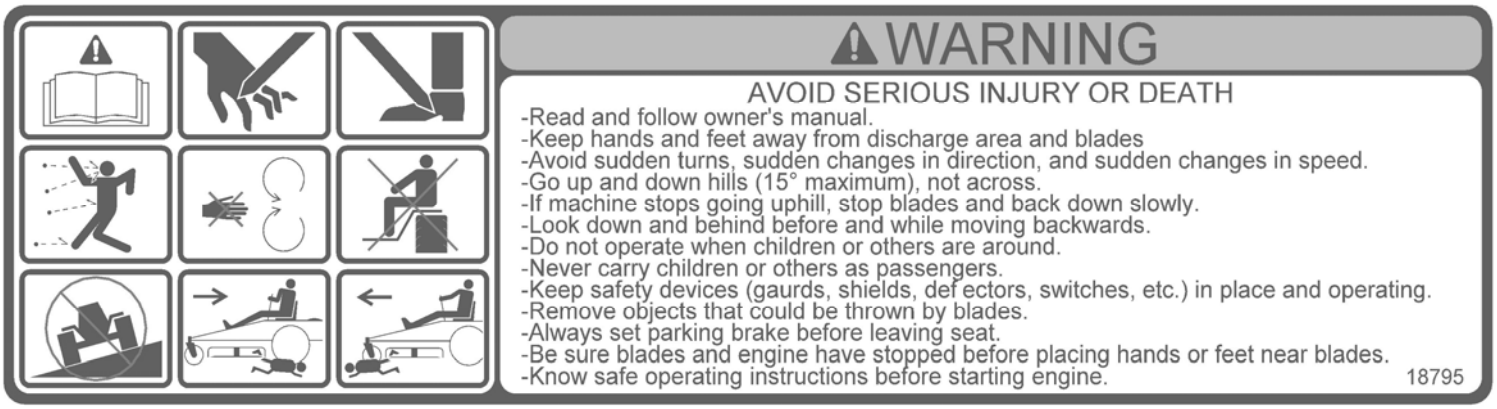


18795 - Warning Decal




ROPS Warning Decal




Operator must be Seated Decal - OD73




Before Exiting Decal - 18797




Notice Do Not Alter Wiring Decal - OD74




No Step Decal - OD11

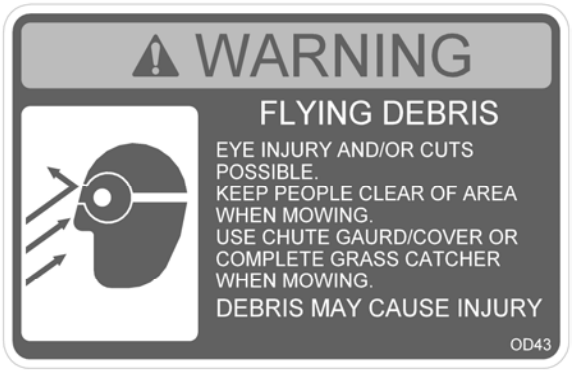


Flying Debris Decal - OD43




Triangle Danger Decal - OD55

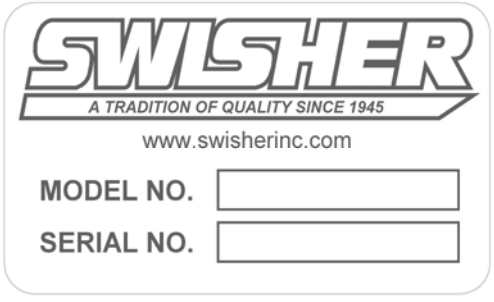


Serial # ID Tag




EPA / CARB Certification Decal

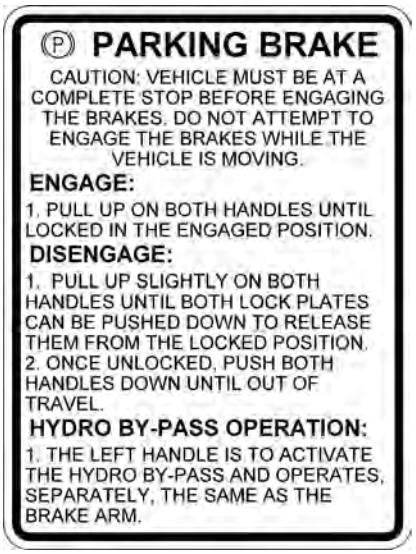


Brake / Bypass Decal - 18944

# SAFETY INSTRUCTIONS

**These instructions are for your safety. Read them carefully.**



**This Safety Alert Symbol indicates important messages in this manual. When you see this symbol, carefully read the message that follows and be alert to the possibility of personal injury.**

## General Use:

> **NOTE:**
>
> Refer to the Operation Controls section of this manual before attempting to operate the mower for the first time.

- Read all instructions in this operator's manual and on the machine before starting it. Ensure that you understand them and then abide by them.
- Learn how to use the machine and its controls safely and learn how to stop quickly. Also learn to recognize the safety decals.
- Only allow the machine to be used by adults who are familiar with its use.
- Make sure nobody else is in the area of the machine when you start the engine, engage the drive, or run the machine.
- Stop the machine if someone enters the work area.
- Clear the area of objects such as stones, toys, steel wire, etc. that may become caught in the blades or thrown.
- **DO NOT use this machine without the Discharge Chute in place.**
- Stop the engine and disconnect the spark plug before cleaning the discharge deck.
- Never take passengers. The machine is only intended for use by one person.
- Always look around before and during reversing maneuvers.
- Slow down before turning.
- Disengage the blades when not mowing.
- Be careful when rounding fixed objects, so that the blades do not hit them.
- Only operate the machine in daylight or other well-lit conditions.
- Keep the machine a safe distance from holes or other irregularities in the ground.
- Never use the machine if you are tired, if you have consumed alcohol or if you are taking other drugs or medications that can affect your vision, judgment or coordination.
- Beware of traffic when working near or crossing a road.
- Never leave the machine unsupervised with the engine running.
- Always shut down the blades, engage the parking brake, stop the engine and remove the ignition key before leaving the machine.
- Never allow children or other persons not trained in the use of the machine to use or service it. Local laws may regulate the age of the user.
- Make sure that you have first aid equipment close at hand when using the machine.
- Never use the machine when barefoot. Always wear protective shoes or boots.
- Always wear protective glasses or a full visor when assembling or driving.
- Always wear ear protection.
- Never wear loose clothing that can get caught in moving parts.

# SAFETY INSTRUCTIONS

## Children:

- Serious accidents may occur if you fail to be on guard for children in the area of the machine. Children are often attracted to the machine and mowing work.
- Never assume that children will stay put where you last saw them.
- Keep children away from the mowing area and under close supervision by another adult.
- Shut off the machine if children enter the work area.
- Never allow a child to ride with you.
- Never allow children to operate the machine.
- Be extra cautious near corners, bushes, trees or other objects that block your view.

**Remember:**

**The operator is responsible for avoiding dangers or accidents.**

## Slope Operation:

- Remove obstacles such as stones, tree branches, etc.
- Mow up and down, not side to side. Never drive the mower on terrain that slopes more than 15 degrees.
- Avoid starting or stopping on a slope. If the tires begin to slip, shut down the blades and drive slowly down the slope.
- Always drive evenly and slowly on slopes.
- Make no sudden changes in speed or direction.
- Avoid unnecessary turns on slopes, and if it proves necessary, turn slowly and gradually downward, if possible.
- Watch for holes, ruts or bumps. On uneven terrain, the machine can tip more easily. Long grass can hide obstacles.
- Drive slowly and use small movements of the steering controls.
- Do not mow wet grass. It is slippery, and the tires can lose their grip, allowing the machine to slide.
- Do not try to stabilize the machine by putting a foot on the ground.

**WARNING**

**When using the machine, approved personal protective equipment shall be used. Personal protective equipment cannot eliminate the risk of injury, but it will reduce the degree of injury if an accident does occur. Ask your retailer for help in choosing the right equipment.**





**Remember:**

**The operator is responsible for avoiding dangers or accidents.**

## Roll Over Protective Structure (ROPS) & Seat Belt Use:

- ALWAYS use the seat belt when the ROPS is in the upright and locked position.
- Do not jump if machine tips.
- If ROPS is foldable:
  - Always keep the ROPS fully extended.
  - WHEN ROPS MUST BE DOWN:
    - Do not use seat belt.
    - Drive with extra care.
- If equipped with foldable seat platform, Do not operate machine without seat platform bolts in place.

# SAFETY INSTRUCTIONS

## General Use Continued…

### Mowing Safety:

- **WARNING – Gasoline is highly flammable.**
  - **Store fuel in containers specifically designed for this purpose.**
  - **Refuel outdoors only and do not smoke while refueling.**
  - **Add fuel before starting the engine. Never remove the cap of the fuel tank or add gasoline while the engine is running or when the engine is hot.**
  - **If gasoline is spilled, do not attempt to start the engine but move the machine away from the area of spillage and avoid creating any source of ignition until gasoline vapors have dissipated.**
  - **Replace all fuel tanks and container caps securely.**
- **Replace faulty or damaged muffler.**
- **Before using, always visually inspect to see that the blades, blade bolts and cutter assembly are not worn or damaged. Replace worn or damaged blades and bolts in sets to preserve balance.**
- **On multi-bladed machines, take care as rotating one blade can cause other blades to rotate.**

### Maintenance & Storage:

- **Keep all nuts, bolts and screws tight to be sure the equipment is in safe working condition.**
- **Never store equipment with gasoline in the tank inside a building(s) where fumes can reach an open flame or spark.**
- **Allow the engine to cool before storing in any enclosure.**
- **To reduce the fire hazard, keep the engine, muffler, battery compartment and gasoline in storage area free of grass, leaves or excessive grease.**
- **Check the grass chute frequently for wear or deterioration.**
- **Replace worn or damaged parts for safety.**
- **If the fuel tank has to be drained, this should be done outdoors in an approved gasoline container and/or properly disposed of.**
- **When machine is to be parked, stored or left unattended, lower the deck unless a positive mechanical lock is used.**

### Training:

**All drivers should seek and obtain professional and practical instruction. Such instruction should emphasize:**

- **The need for care and concentration when working with ride-on machines.**
- **Control of a ride-on machine sliding on a slope will not be regained by the application of the brake. The main reasons for loss of control are:**
  - **Insufficient wheel grip.**
  - **Being driven too fast.**
  - **Inadequate braking.**
  - **The type of machine is unsuitable for its task.**
  - **Lack of awareness of the effect of ground conditions, especially slopes.**
  - **Incorrect hitching and load distribution.**

### Operation:

- **Do not operate the engine in a confined space where dangerous carbon monoxide fumes can collect.**
- **When using any attachments, never direct discharge of material toward bystanders nor allow anyone near the machine while in operation.**
- **Never operate the machine with defective guards or without safety protective devices in place.**
- **Do not change the engine governor settings or over-speed the engine. Operating the engine at excessive speed can increase the hazard of personal injury.**
- **Disengage drive to attachments, stop the engine and disconnect the spark plug wire(s) or remove the ignition key:**
  - **Before clearing blockages or unclogging chute.**
  - **Before checking, clearing or working on the machine.**
  - **After striking a foreign object, inspect the machine for damage and make repairs before restarting and operating the equipment.**
  - **If the machine starts to vibrate abnormally (check immediately), stop the engine and disengage drive to attachment.**
  - **Before refueling.**
  - **Before removing the grass chute.**
  - **Before making height adjustment unless adjustment can be made from the operator's position.**

# CUSTOMER RESPONSIBILITIES

## Operator Presence System:

Be sure check that the operator presence and interlock systems are working properly before every use. If your mower does not function as described, repair the problem immediately.

- The engine should not start unless the parking brake is engaged and the PTO (Blade Engagement Switch) is disengaged (pressed down).
  – See OPERATION FEATURES section of this manual
- When the engine is running and the brake is disengaged, the operator should never leave the seat without first setting the parking brake and shutting off the engine. If the operator attempts to leave the seat without first setting the brake, the engine should shut off.
- When the engine is running and the PTO switch is engaged, any attempt by the operator to leave the seat without first disengaging the PTO switch, should shut off the engine.
- The PTO switch should never engage without the operator on the seat.

## Tires:

- Maintain proper air pressure in all tires (SEE SPECIFICATIONS section)
- Keep tires free of gasoline, oil or insect control chemicals which can harm rubber.
- Avoid stumps, stones, deep ruts, sharp objects and other hazards that may cause tire damage.

## Blade Maintenance:

For best results, mower blades must be kept sharp.
Replace bent or damage blades.

- Engage brakes & safely raise front of mower (SEE WARNING).
- Hold or block blade from turning.
- Loosen blade nut and remove blade.
- Replace blade (SEE SPECIFICATIONS).

**CAUTION**

Stop engine, apply brakes, and remove ignition key for safety. Disconnect spark plug wire. Wear heavy, thick gloves when holding onto blade. Avoid the sharp edge of the blade.

**WARNING**

When it is necessary to raise the mower for any repair or service, use jackstands to provide adequate support. DO NOT rely on hydraulic or mechanical jacks.

## Battery:

**To clean battery and terminals**

- Remove the BLACK terminal guard.
- Disconnect the BLACK battery cable and locate it where it cannot come into contact with the battery.
- Remove the RED terminal guard.
- Disconnect the RED battery cable and locate it where it cannot come into contact with the battery.
- Remove the battery.
- Rinse the battery with plain water and dry.
- Clean terminals and battery cable ends with wire brush until shiny.
- Coat terminals with Dielectric Grease or Petroleum Jelly. (This helps seal and prevent corrosion.)
- Reinstall battery.
- Reconnect the battery cables. Attach the RED cable first then the BLACK cable.

**WARNING**

The battery contains sulfuric acid and electrolytes which are poisonous and corrosive.

# CHARGING TIPS

- To avoid a battery explosion, never attempt to charge a frozen battery.
- **Warning:** Gel and AGM (Absorbed Glass Mat) batteries require a voltage-limited charger. Charging a Gel or AGM battery on a typical shop charger, even one time, may greatly shorten its life.
- **Important:** Never overcharge batteries. Excessive charging will shorten battery life.
- Prior to charging, read the manufacturer's instructions for proper charger hook-up and use.
- Turn off charger prior to hookup to avoid dangerous sparks. **PROTECT YOUR EYES!**
- **Warning:** If the electrolyte is accessible, verify that plates are covered before beginning to charge. At the end of charge, add distilled water as needed to bring levels to the proper height. If water is added, charge for an additional 30 minutes to mix. If electrolyte levels are low but battery is not accessible, remove battery from service.
- The maximum charge rate in amperes should be no more than 1/3 of the battery's reserve capacity minute rating. If the terminal voltage exceeds 16.0 volts while charging, reduce the charge rate.
- Continue charging and reduce the rate as needed until a 2 hour period results in no increase in voltage or decrease in current.
- If violent gassing or spewing of electrolyte occurs or the battery case feels hot to the touch, temporarily reduce or halt charging.

| VOLTAGE | | STATE OF CHARGE | APPROX. BATTERY CHARGING TIME * TO FULL CHARGE AT 80°F/27°C | | | |
|---|---|---|---|---|---|---|
| STANDARD BATTERY | | | MAXIMUM RATE AT | | | |
| 6 V | 12 V | | 50 AMPS | 30 AMPS | 20 AMPS | 10 AMPS |
| 6.3 | 12.6 | 100% | FULL CHARGE | | | |
| 6.2 | 12.4 | 75% | 20 MIN. | 35 MIN. | 48 MIN. | 90 MIN. |
| 6.1 | 12.2 | 50% | 45 MIN. | 75 MIN. | 95 MIN. | 180 MIN. |
| 6 | 12 | 25% | 65 MIN. | 115 MIN. | 145 MIN. | 280 MIN. |
| 5.9 | 11.8 | 0% | 85 MIN. | 150 MIN. | 195 MIN. | 370 MIN. |

***** Test wet batteries every 4-6 months and recharge if necessary.
Always test and charge if necessary before installation.

# CUSTOMER RESPONSIBILITIES

## V-Belts:

Check V-belts for deterioration and wear before each use and replace if necessary. Replace belts if they begin to slip from wear. SEE SPECIFICATION for belt part numbers and SERVICE section of this manual for instructions on how to replace the belt.

## Engine:

REFER TO YOUR ENGINE OWNERS MANUAL.

## Overall Unit Care:

- Reduce the risk of fire by removing grass, leaves and other debris that may have accumulated on the machine.
- Allow the machine time to cool before cleaning or putting it in storage.
- Wash mower periodically. Clean above and below deck.
- Keep all electrical connections clean and tight.

## Driving & Transport on Public Roads:

- Check applicable road traffic regulations before driving and transporting on public roads.
- If the machine is transported, you should always use approved fastening equipment and ensure that the machine is well anchored to the towing vehicle.
- The cutting deck should also be lowered to the lowest position and the parking brake engaged during transport.

## Specifications

| | |
|---|---|
| GASOLINE CAPACITY AND TYPE | DUAL 4.0 GAL TANKS; UNLEADED REGULAR |
| OIL TYPE (SPI-SF-SJ): | SEE ENGINE MANUAL |
| SPARK PLUG | SEE ENGINE MANUAL |
| GROUND SPEED | 0 – 8 mph |
| TIRE SIZE | FRONT: 12 X 6 X 6 w/ 5/8 Bearing / REAR: 20 X 10 X 10 |
| TIRE PRESSURE | FRONT: 40 psi Max / REAR: 22 psi Max |
| BATTERY | 12V / Heavy Duty 300 CCA / Type U1L |
| HYDRO BOLT TORQUE | 27 ±3 ft. lbs |
| BLADE BOLT TORQUE | 35 ft. lbs |
| CUTTING HEIGHT | Approximately 1.5” – 5” |
| DECK WIDTH | 66” |
| BLADES | Three 22 ½” G6 Mulching Blade System |
| PARKING BRAKE | Manual Lever |
| FRONT AXLE | Welded / 2 x 2 x 3/16” Wall Steel Tubing |
| SUSPENSION SEAT | 18” Back w/ Arm Rest / 4” Adjustable Slide / Seat Belt |
| TRANSMISSION | Commercial Grade Hydro-Gear ZT-3100 |
| DECK LIFT | Foot Operated, Spring Assisted |
| UNIT MEASUREMENTS | LENGTH: 81”<br>WIDTH: 76.5” (Including Grass Chute)<br>HEIGHT: 66 ½” / 46” (w/ ROPS folded down)<br>WEIGHT: 860 lbs |

# CUSTOMER RESPONSIBILITIES

## Maintenance Schedule

| | Before Each Use | 8 Hours | 25 Hours | 50 Hours | 100 Hours | Season | Before Storage |
|---|---|---|---|---|---|---|---|
| Check Brake Operation | X | X | | | | | |
| Check Tire Pressure | X | X | | | | | |
| Check Operator Presence | X | | | | | | |
| Parking Brake | X | | | | | | |
| Check for Loose Fasteners | X | | | | X | | X |
| Sharpen/Replace Mower Blades | | | X3 | | | | |
| Check Battery | | | X | | | | X |
| Clean Battery & Terminals | | | X | | | | X |
| Check Belts | X | | | | | | |
| Check Engine Oil | X | X | | | | | |
| Change Engine Oil w/ filter | | | | X1,2 | | | |
| Change Engine Oil w/o filter | | | X1,2 | | | | |
| Replace Oil Filter | | | | | X1,2 | | |
| Clean Air Filter | | | X2 | | | | |
| Inspect Muffler | | | | X | | | |
| Clean Engine Cooling Fins | | | | | X2 | | |
| Replace Spark Plug | | | | | X | X | |
| Replace Fuel Filter | | | | | | X | |

1 – Change more often when operating under a heavy load or in high ambient temperatures.

2 – Service more often when operating in dirty or dusty conditions.

3 – Replace blades more often when mowing in sandy soil.

# OPERATION & FEATURES

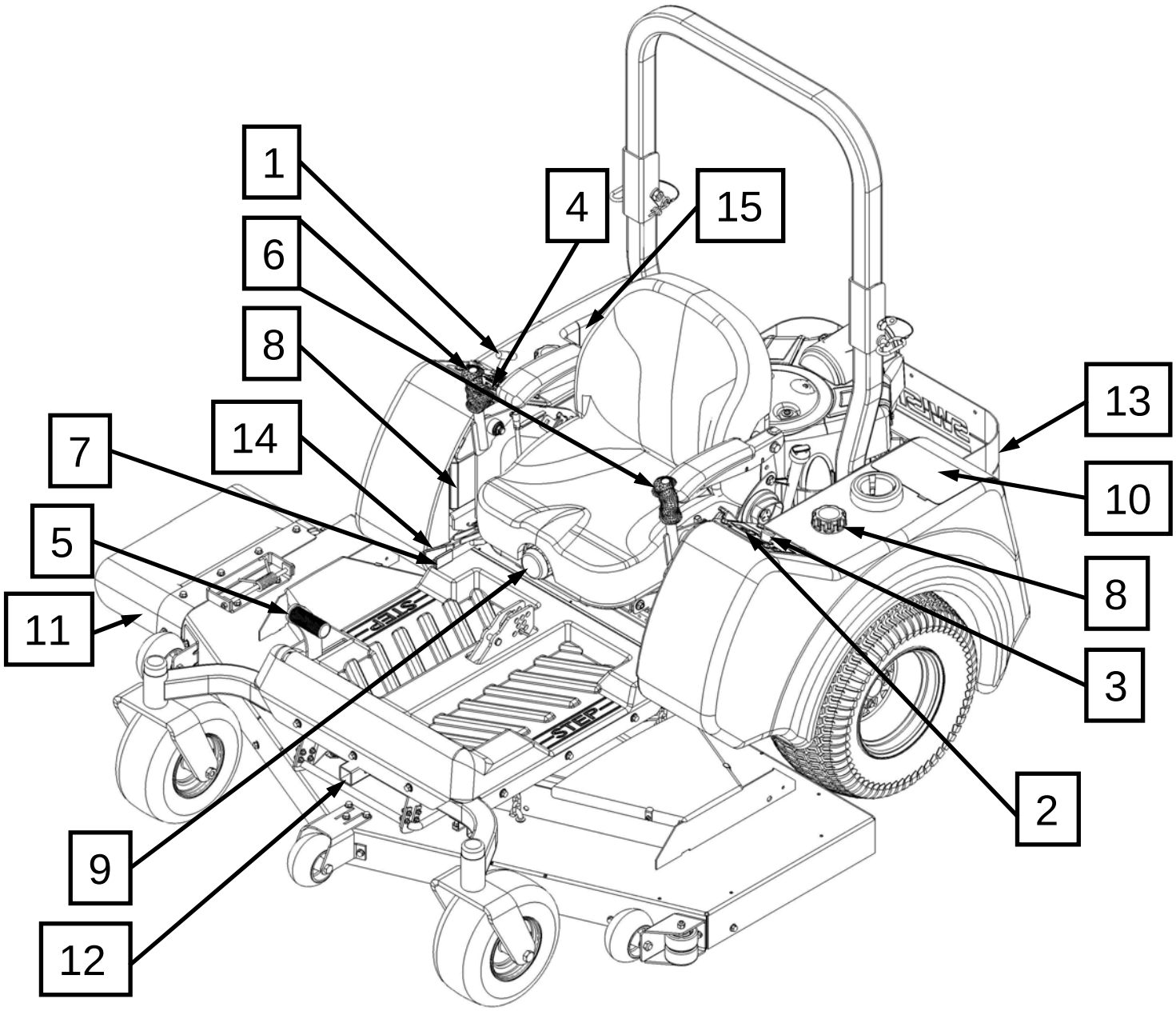


1. Throttle Control – Used to control Engine Speed.
2. Hour Meter – Indicates hours of operation.
3. PTO Switch – Used to engage or disengage the deck blades.
4. Ignition Switch – Used to start or stop the engine.
5. Deck Lift Pedal – Used to raise and lower the cutting deck.
6. Control Lever – Sets the speed of the mower in both the forward and reverse directions and also turns the mower.

7. Hydro Bypass – Engages transmissions for normal operation and disengages transmissions for pushing or pulling the unit.
8. Fuel Tanks – Dual 4.0 gal.
9. Suspension Adjustment Knob
10. Battery
11. Discharge Chute
12. Front Receiver Hitch
13. Rear Receiver Hitch (Not Shown)
14. Brake Lever
15. Toolbox / Storage compartment

# OPERATION & FEATURES

Left Control Panel

Right Control Panel

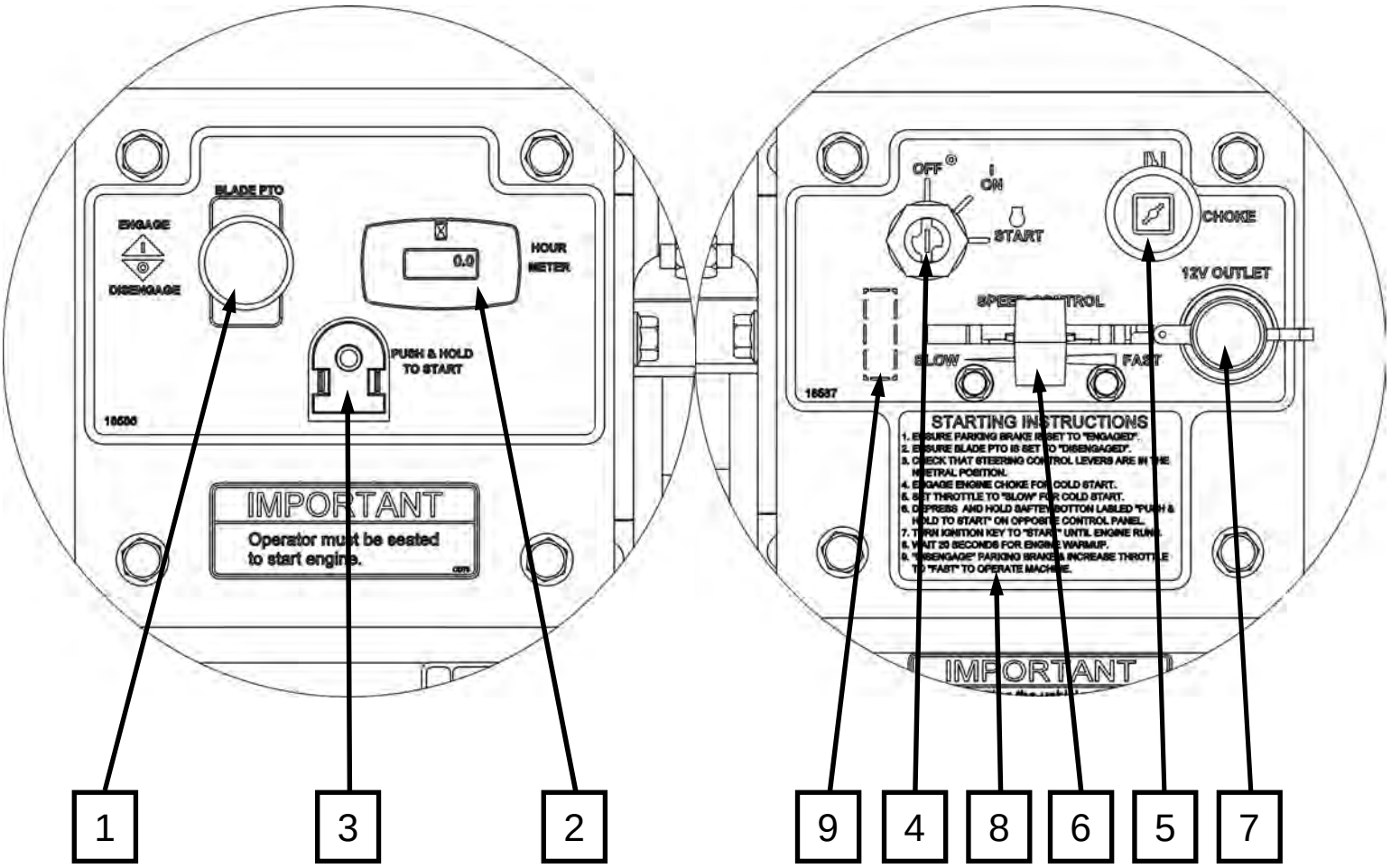


| | |
|---|---|
| 1. | PTO/Blade Engagement Switch |
| 2. | Hour Meter – Indicates hours of operation |
| 3. | Safety Starting Interlock Switch |
| 4. | Key Switch |
| 5. | Choke Cable (Only on 24HP Briggs & Stratton Engines) |

| | |
|---|---|
| 6. | Throttle Control Cable |
| 7. | 12V Accessory Outlet Plug |
| 8. | Starting Instructions Decal |
| 9. | Accessory hole for On/Off Toggle Switch (P/N 18782) |

**NOTE:**
If you have never used a Zero Turn mower before, refer to the Operation Controls section of this manual before attempting to operate one for the first time.

## Starting:

<u>Starting Instructions are also included on the right side control panel decal.</u>

- Before starting the vehicle, be sure all people are clear of the area.
- Operator must be sitting in the seat. Control handles must be in the neutral (vertical) position. PTO must be in the disengage position (pushed down). Brake must be engaged.
- Depress interlock button on left control panel and turn ignition key simultaneously until engine runs.
- Once started, set engine RPM to maximum (Fast) and then engage the blades.

# OPERATION

## Grass Height & Cutting Suggestions:

- Do not attempt to cut wet grass.
- The average lawn should be cut to 2 ½" during the cool season and to over 3" during the hot months. For healthier and better looking lawns, mow often and after moderate growth.
- As a rule, never cut more than 1/3 of the total grass blade length. Correct mowing height can reduce weeds and lawn disease.
- For best performance, grass over 6 inches in height should be mowed twice. The first cut should be set relatively high and the second set to the desired height.
- For best looking results and a healthier lawn, mow in different directions each time you mow.
    - Example: If you mow going north and south, the next time you should mow going east and west.

## Deck Leveling

- Deck leveling is not required as the deck is set level from the factory.
    - The only instance where the deck would not be level is if a component(s) is damaged or broken, which in this instance would need to be replaced.

## Brake / Transmission Bypass Operation

### Brake:

- Be sure the vehicle is not moving before engaging the brake. Only engage the brake on level ground. DO NOT engage the brake on an inclined surface.
- To engage, pull up on the brake handle (outside lever) until the locking plate is seated in the locked position. Note both handles will come up as they are linked together for the brake application.
- To disengage, push down on both lock plates until they are released from the locked position. Once unlocked, push both arms down until they are out of travel.

### Bypass:

- Engaging the Transmission bypass will cause the rear wheels to turn freely. Only engage the bypass on level ground. DO NOT engage the bypass on an inclined surface.
- To engage the Transmission bypass, pull up on the bypass handle (inside lever) only. Note only this handle should come up.
- To disengage, push down on the lock plate until it is released from the locked position. Once unlocked, push the arm down until it is out of travel.

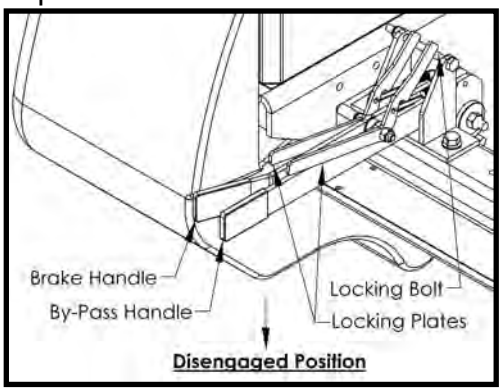


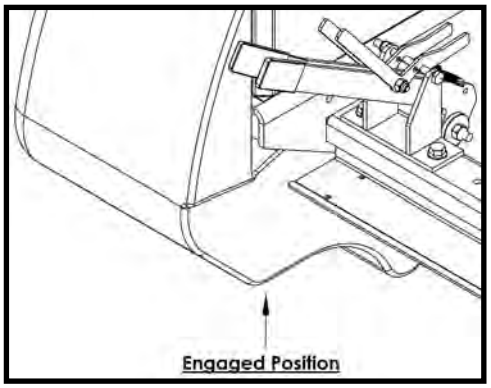


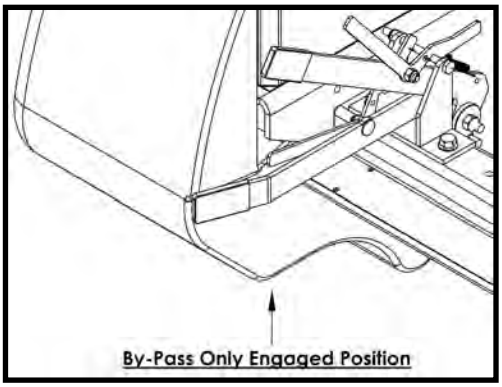

# OPERATION

## Controls

- Be familiar with all controls, their functions and how to operate them before starting the machine.
- Motion control levers on each side of the console control the direction of movement. SEE FIGURE BELOW

## Control Handles

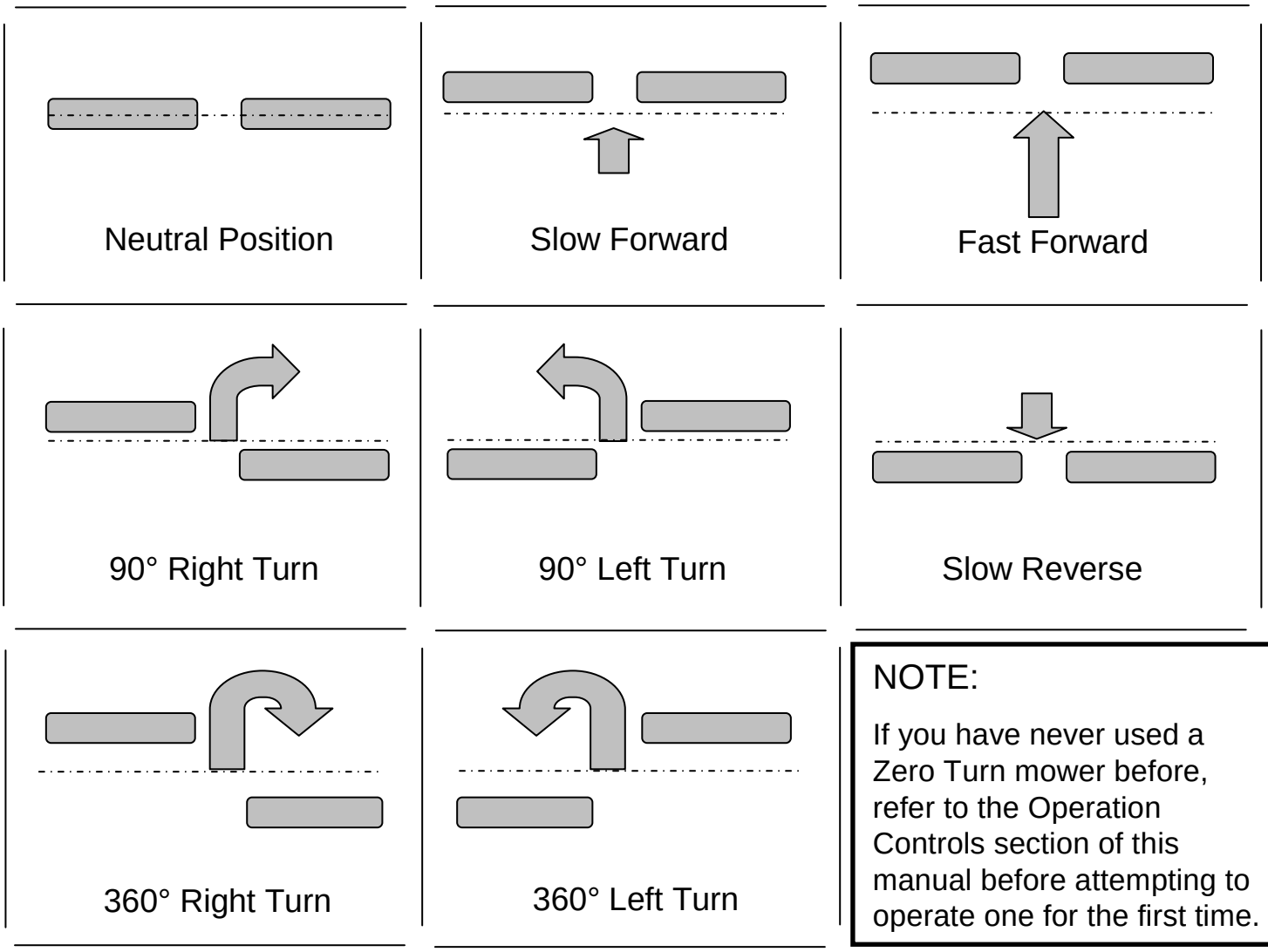


NOTE:

If you have never used a Zero Turn mower before, refer to the Operation Controls section of this manual before attempting to operate one for the first time.

**Note: The pressure required to operate the mower is very slight.**

## Fuel Shut-Off Valves

- The Swisher ZTR2766CP is equipped with two shut-off valves, one for each tank. These are located behind the seat and in front of the engine.
- Only one tank should be used while operating the machine. When that tank runs empty or is close to running empty, turn off that fuel shut-off valve and turn on the opposite shut-off valve. Operating the machine with both valves open could cause the system to pull air from an empty tank.

**"ON" Position (Parallel with fuel line)**

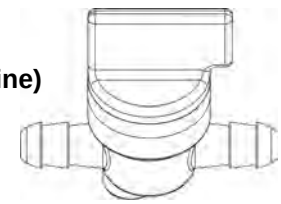

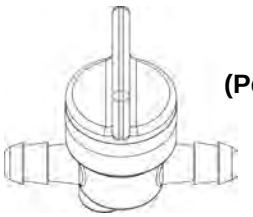

**"OFF" Position (Perpendicular with fuel line)**

# SERVICE & ADJUSTMENTS

## Adjusting The Cutting Height

- Push forward on the Deck Lift Pedal to raise the deck and place the locator pin in one the of the eight hole positions to set the desired cutting height. Once the desired height is selected, slowly release the pedal until the locator pin is engage by the deck lift.
- Position 1 is the highest setting and Position 8 is the lowest position.
- The cutting range is from approximately 1.5” to approximately 5”.

## Parking Brakes / Transmission Bypass Adjustments

- The Swisher ZTR2766CP is equipped with a manual parking brake linked with transmission bypasses. This system must be engaged by the operator before starting the vehicle and also before exiting the vehicle.
- Only when the control handles are in the neutral position and the machine is not moving should the brakes be engaged. DO NOT attempt to engage the brake while the vehicle is moving or on an inclined surface.
- Adjustments for the system are located on the right side between the fuel tank and the seat.

### Checking if adjustments are needed:

•Raise wheels off the ground and place jack stands underneath the vehicle.
•Engage the brakes. To see if the brakes are fully engaged, spin the rear wheel by hand.
•If the rear wheels spin more than 10° while the brake is set to engaged then adjustments are needed.

### Making Adjustments:

•Disengage the brake before performing adjustments.
•Start by loosening the front adjustment nut.
•Tighten the rear adjustment nut while making sure the cable bulkhead does not spin. Pliers may be needed to keep the bulkhead from spinning.
  ▪Make small adjustments approximately an ⅛” to a ¼”.
•Tighten the front adjustment nut once all adjustments are made.
•Re-engage the brake to check if the adjustments were enough to fully engage the brakes. If not repeat the previous steps until the wheels can no longer spin more than 10° while brakes are set to engaged.

### Tracking Adjustments:

See pg 25 for tracking adjustment bolt locations.

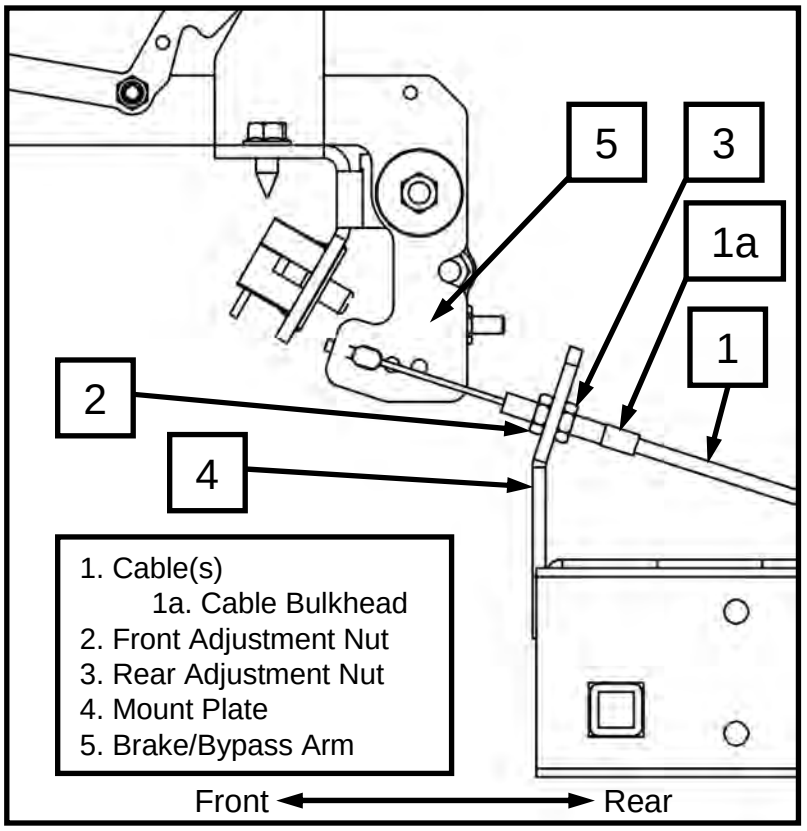


**WARNING**

When it is necessary to raise the mower for any repair or service, use jack stands to provide adequate support. DO NOT rely on hydraulic or mechanical jacks.

# SERVICE & ADJUSTMENTS

## Deck Belt Routing & Replacement

For replacement belt part number refer to Replacement Parts Quick Reference Chart in this manual.

### Removal

- Disconnect spark plug wire.
- Apply parking brake.
- Lower the deck to its lowest position.
- Remove the belt covers.
- Disconnect tension idler(s).
- Roll the belt over the top of the deck pulleys.
  - To remove the Deck Idler belt the Engine-to-Deck belt will need to be removed first.

1. Engine-to-Deck belt
2. Deck idler belt
3. Deck pulleys
4. Inside deck idler
5. Backside deck idler
6. Engine-to-Deck belt idler tensioner
7. Deck idler tensioner
8. Engine Clutch

### Replacement

- Install new belt by placing it around the deck pulleys. Refer to routing diagram below.
- The belt will be loose at this time.
- Tightly secure the belt tension back to its original position.
- Reinstall the belt covers.
- Check for sufficient tension on all belts.
- Reconnect the spark plug.

Front of Unit (Top View)

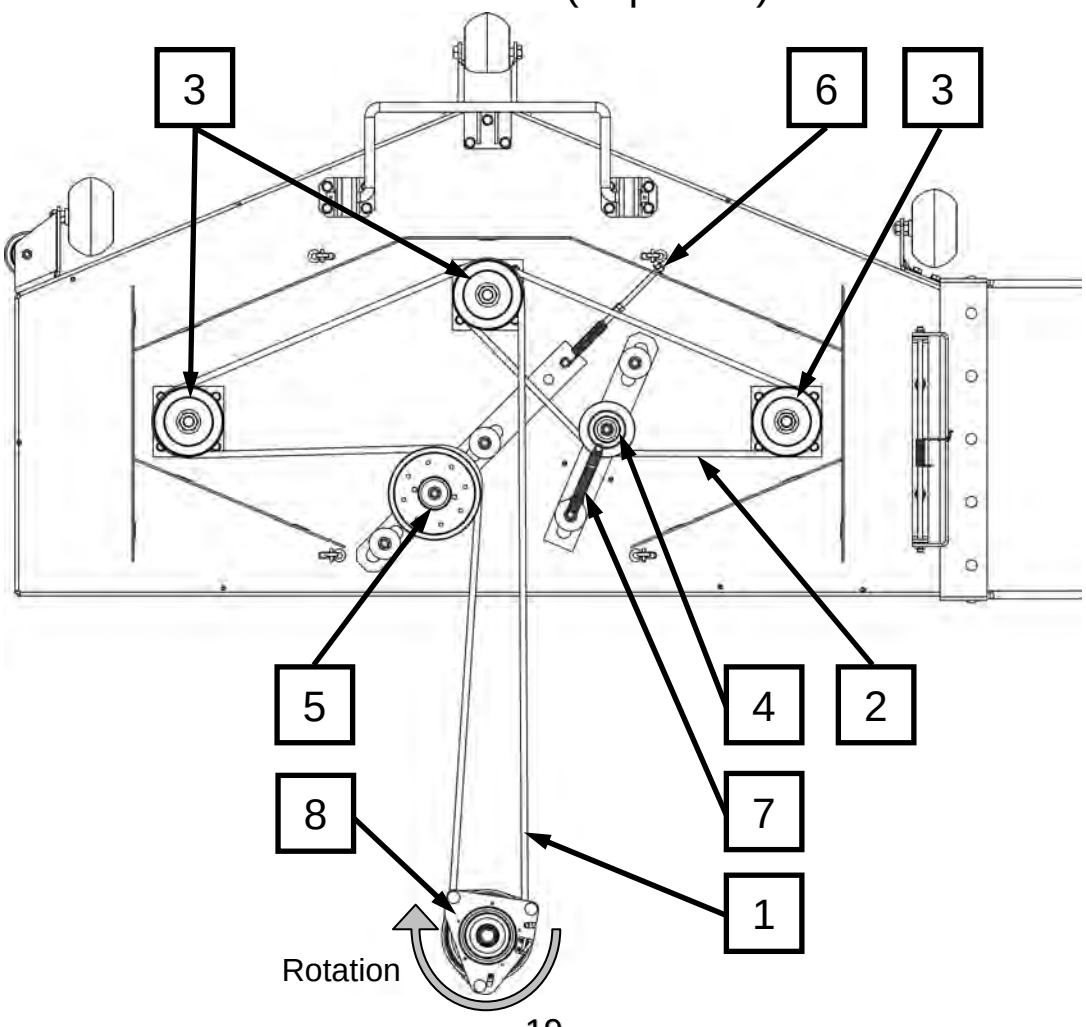

# SERVICE & ADJUSTMENTS

## Hydro Belt Routing & Replacement

For replacement belt part number refer to Replacement Parts Quick Reference Chart in this manual.

1. Left side hydro
2. Right side hydro
3. Hydro belt
4. Engine pulley / Clutch
5. Pivoting idler
6. Idler spring
7. Idler eyebolt
8. Inside stationary idler
9. Large backside stationary idler
10. Small backside stationary idler
11. Clutch stop

### Removal

- Disconnect spark plug wire.
- Apply parking brake.
- Remove both hydro fan covers (18691TK).
- Disconnect wiring from electric clutch.
- Remove clutch stop (18667TK).
- Remove the engine-to-deck belt.
- Loosen the tension on the idler spring.
  - If loosening the spring is not enough, disconnect the idler spring from eyebolt completely.
- Remove belt from the engine pulley and from the hydro pulleys.

### Replacement

- Install new belt by placing it around the hydro pulleys first, then around the idler pulleys and engine pulley. Refer to routing diagram below.
- The belt will be loose at this time.
- Tightly secure the belt tension back to its original position.
- Reinstall the engine-to-deck belt.
- Reconnect wiring to the electric clutch.
- Reattach the clutch stop in the groove of the clutch.
- Reattach the hydro fan covers.
- Check for sufficient tension on all belts.
- Reconnect spark plug wire.

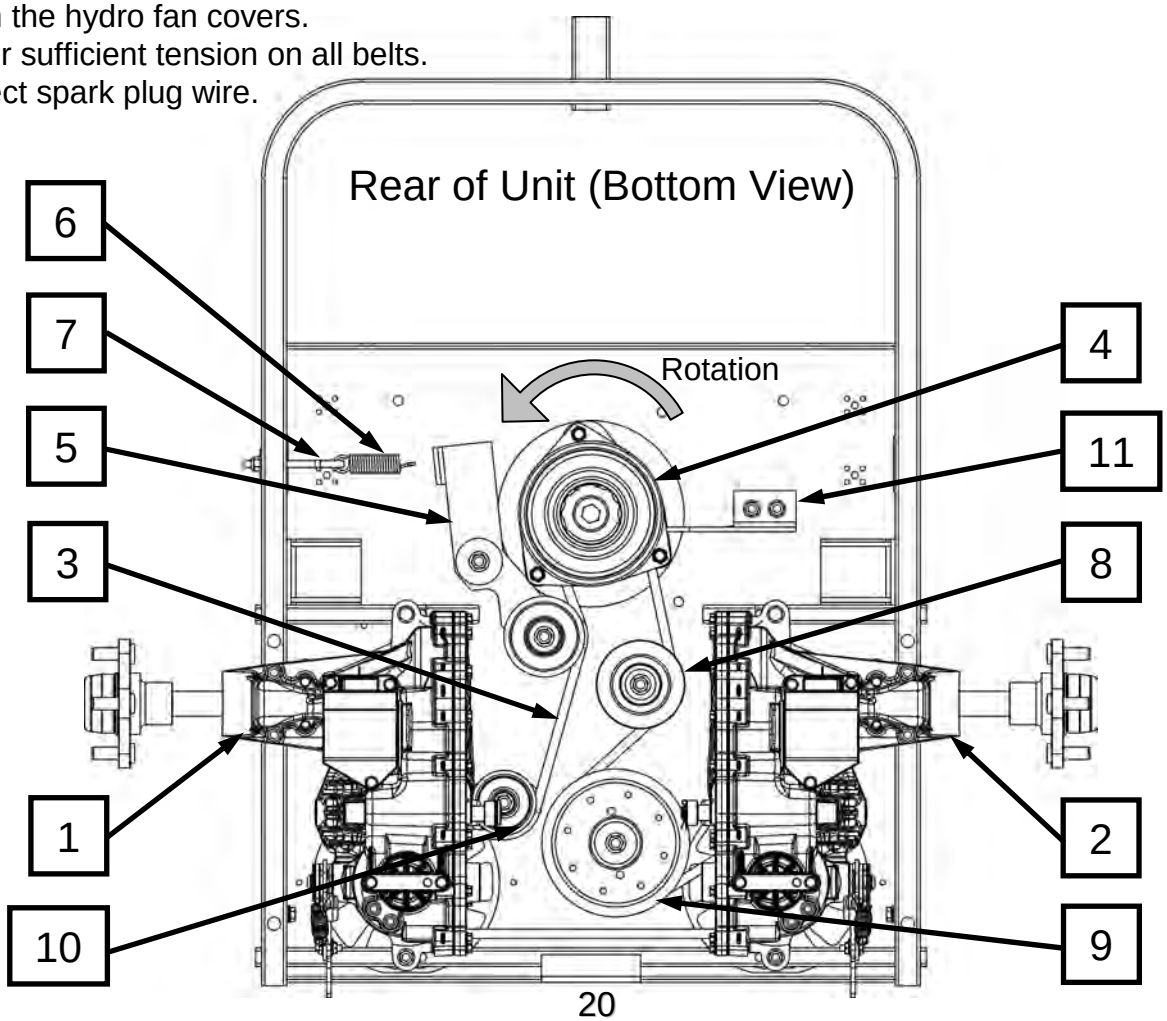

# SERVICE & ADJUSTMENTS

## Seat Adjustment

- The Swisher ZTR2766CP is equipped with a 4” range sliding seat.
- Release the tension on the seat adjustment lever by pushing the grey tip lever to the left. SEE FEATURES section in this manual.
- Using your own weight, slide the seat to the desired position.
- Release the lever and be certain you feel the seat slide lock into place.

## PTO Clutch Adjustment

- Please visit www.ogura-clutch.com/files/pdfIMP/PTOinstallation.pdf to view maintenance, adjustment and installation instructions.

## Hydro Expansion Tank Oil Levels

- The Swisher ZTR2766CP is equipped with two hydrostatic transmission expansion tanks to allow for oil expansion during regular use. These are located directly behind the seat and in front of the engine.
- Oil levels in both expansion tanks (when oil is cold or at ambient temperature) should always be kept at the “full cold” line. Note: Oil levels could rise above this line once the oil has been used and has increased in temperature. Wait until oil has cooled back to the ambient temperature before checking the oil levels. See image below for reference.
- If oil level in either tank is below the “full cold” line please remove the cap and add *oil to the tank until it reaches the “full cold” line.

  *Only use SAE 20w-50 engine oil; preferably with the following specifications:

  - •Viscosity Rating: 162 @ 40°C / 18.1 @100°C
  - •13cSt & 9cSt min @ 110°C
  - •API Classification: SL
- Using another type of oil may void the warranty.

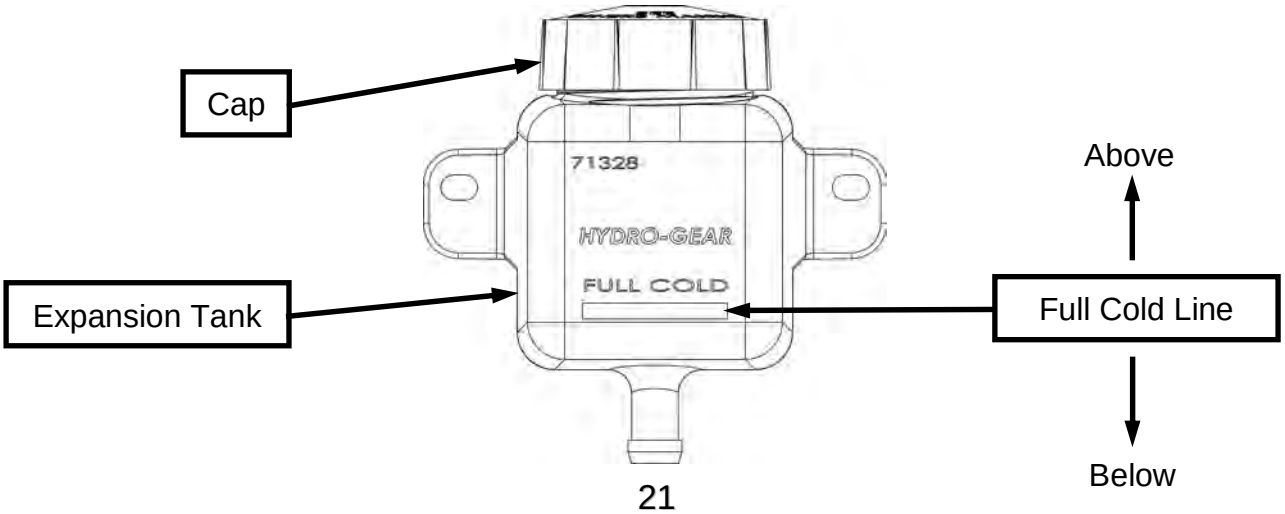

# WIRING HARNESS

RIGHT WIRING HARNESS P/N 18692

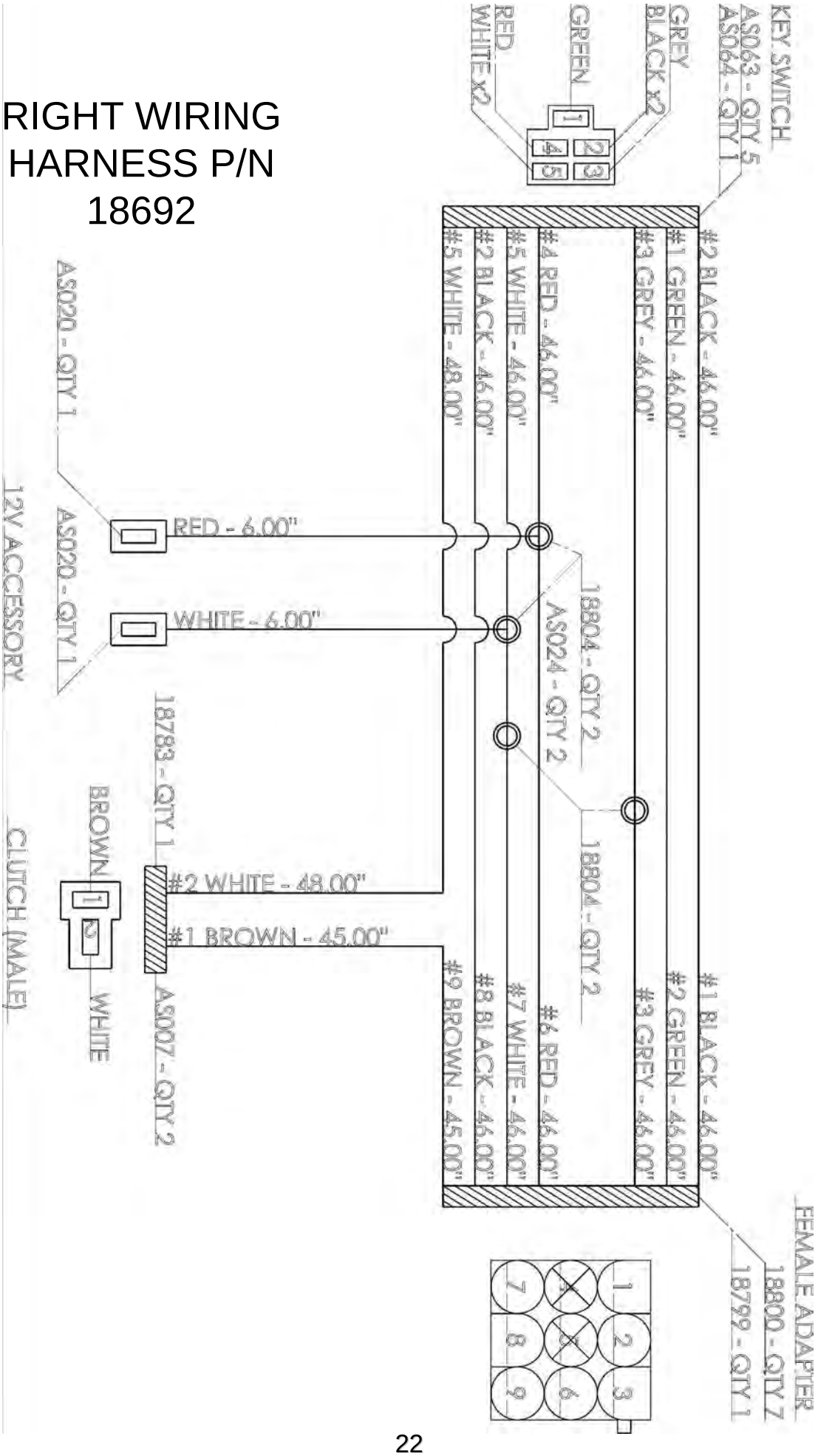

# WIRING HARNESS

## LEFT WIRING HARNESS P/N 18693

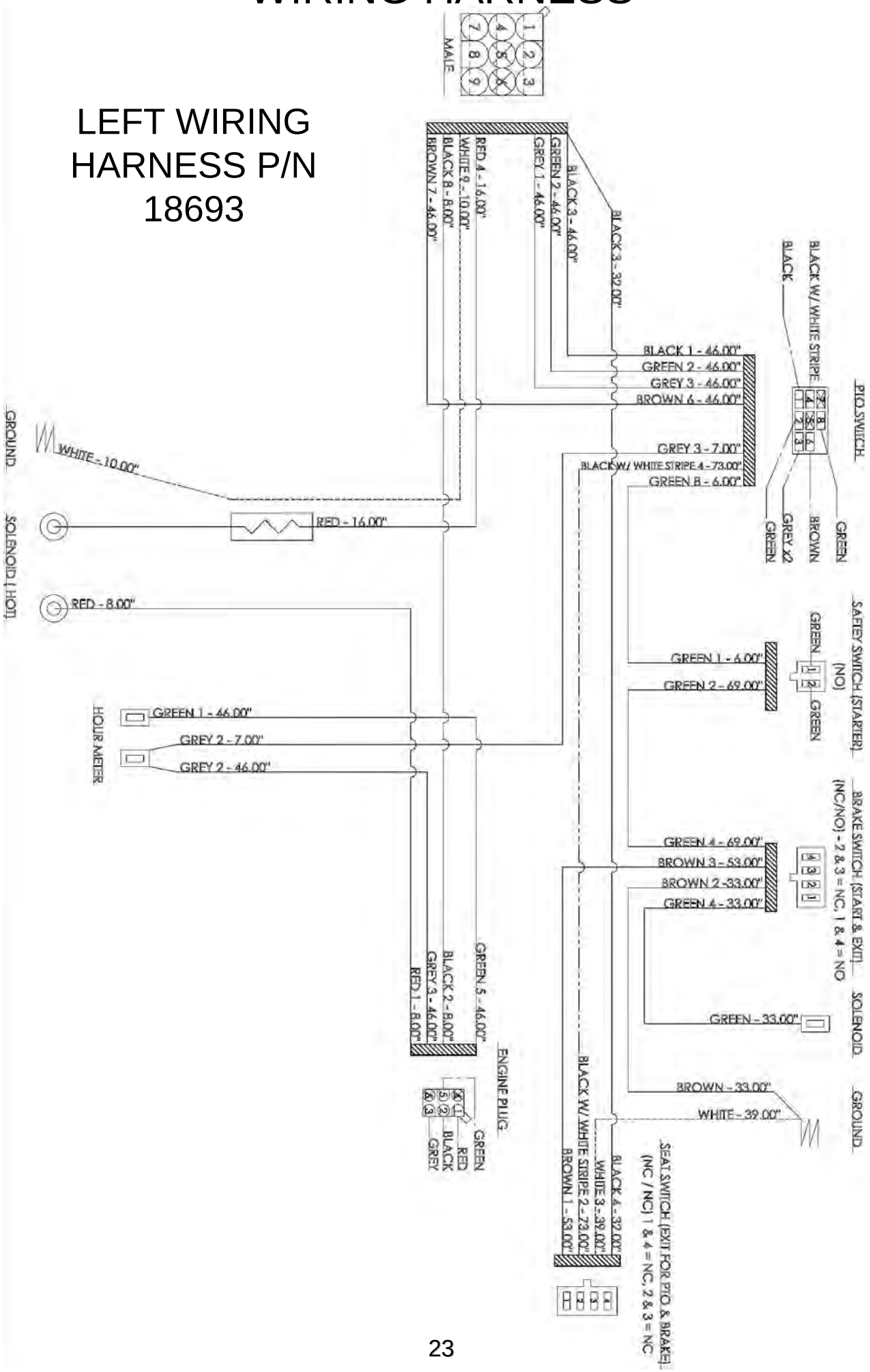

# PARTS BREAKDOWN

| Item # | Part # | Description | Qty. |
|---|---|---|---|
| 1 | 18705TK | Weldment - Frame, Rear; Txt Blk | 1 |
| 2 | 18923TK | Weldment - Front Frame, HD; Txt Blk | 1 |
| 3 | 18860 | Kit - ROPS, Fully Assembled, Txt Blk | 1 |
| 4 | 18737TK | Wrap - Engine; Txt Blk | 1 |
| 5 | B98 | Bearing | 4 |
| 6 | 18581 | Plug - Finishing, 1 x 3 x .083 Tube | 2 |
| 7 | 18629 | Plug - Finishing, 3/4 x 3/4 x .120 Tube | 4 |
| 8 | 18635 | Bolt - Carriage 5/16-18 x 6; GR5, Full Thrd | 4 |
| 9 | 18589 | Bolt - Hex, 1/2-13 x 6 1/4; GR8, ZP | 4 |
| 10 | NB177 | Washer - Mach 1/2 NR 14 GA. | 16 |
| 11 | 12669 | Bolt - 1/2-13 x 3 1/4; GR8, ZY | 4 |
| 12 | NB121 | Nut - 2-Way Jam Lock, 1/2-13, ZY | 8 |
| 13 | 26X249 | Screw - 5/16-18 X 3/4 | 7 |
| 14 | NB515 | Bolt - Serr Flange 5/16-18 x 1 3/4; GR5, ZY | 8 |
| 15 | NB170 | Nut - Serr Flange 5/16-18 ; Case Hrd, ZY | 8 |
| 16 | 18928TK | Plate - Seat Base Support, Txt Blk | 2 |

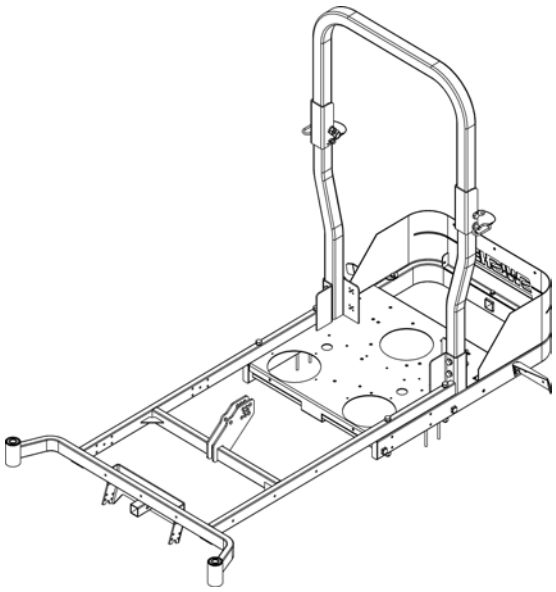

Notes:

Torque settings for bolt number 9 should be set at 25 ft./lbs.

Torque settings for bolt number 11 should be set at 75 ft./lbs.

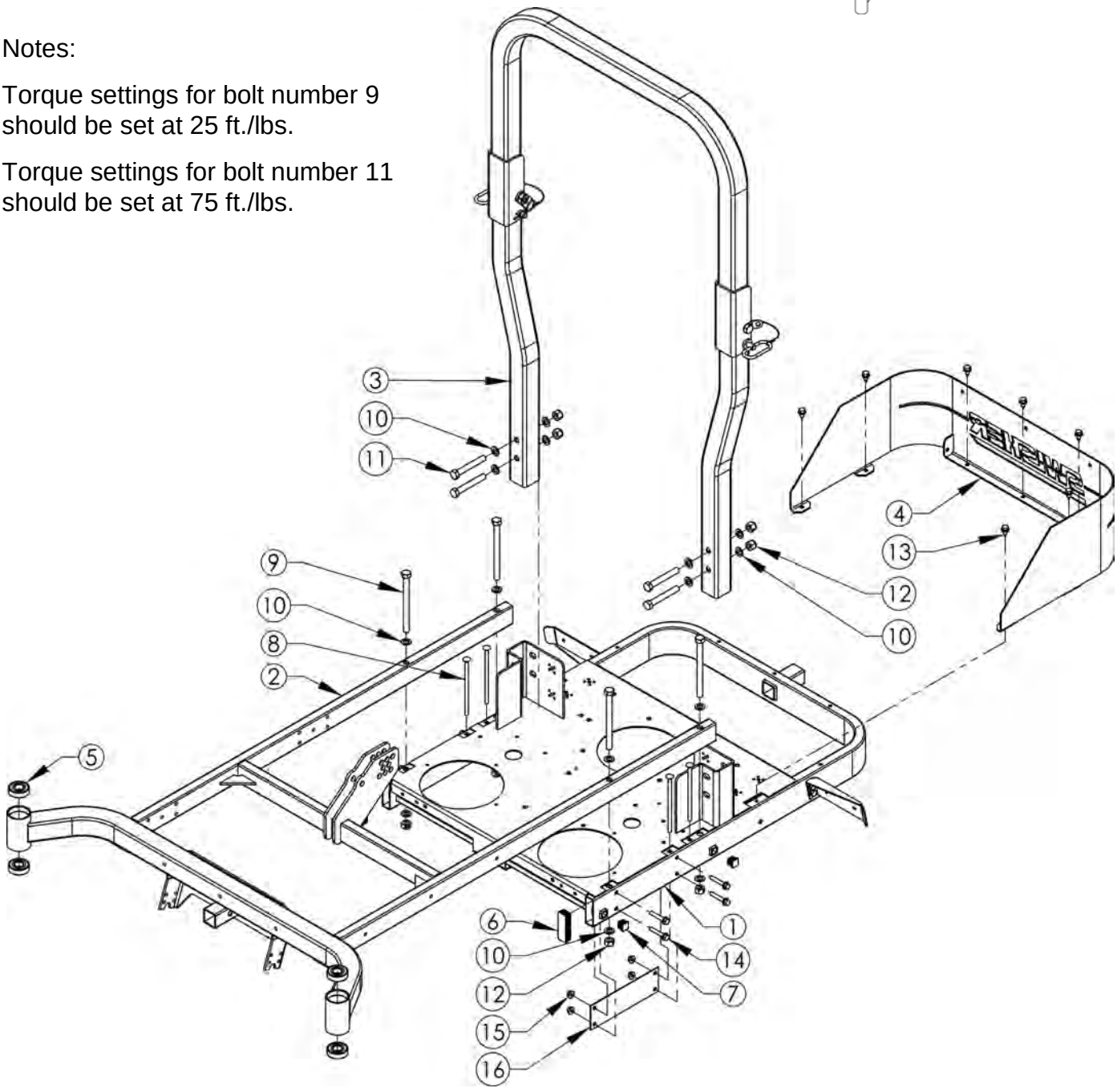

# PARTS BREAKDOWN

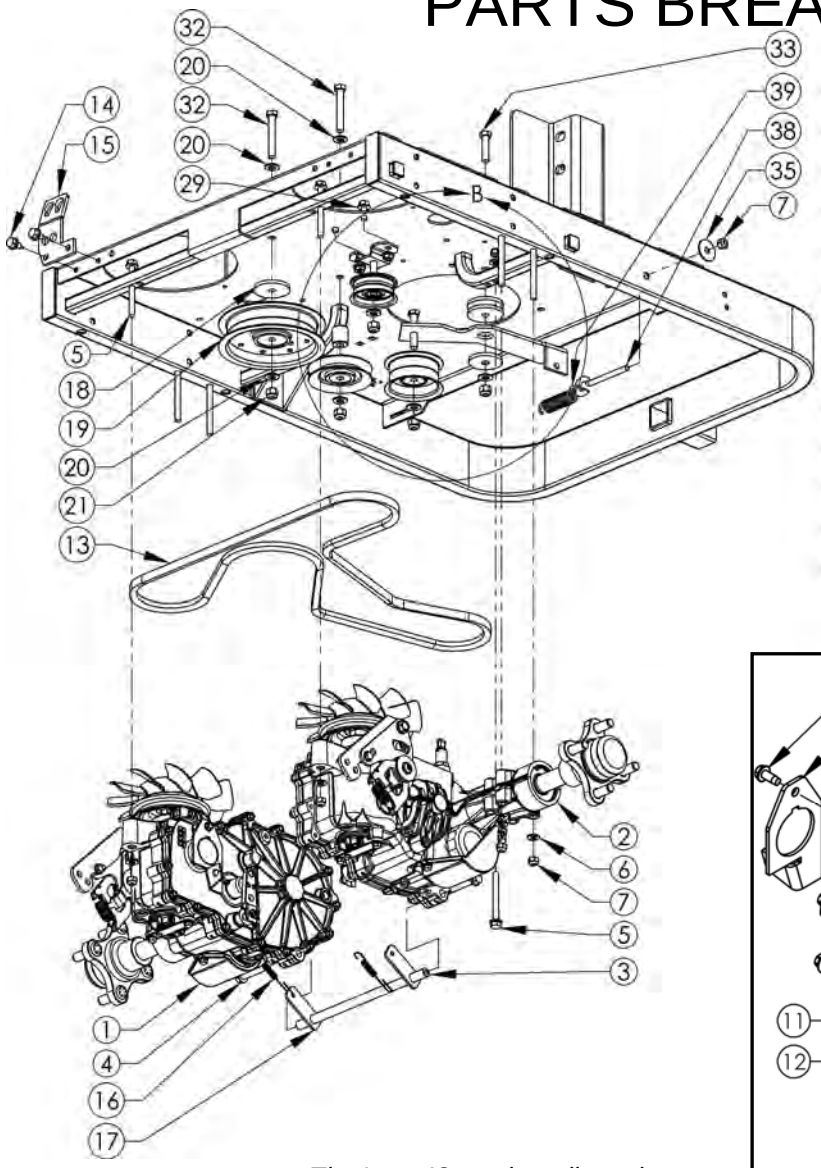


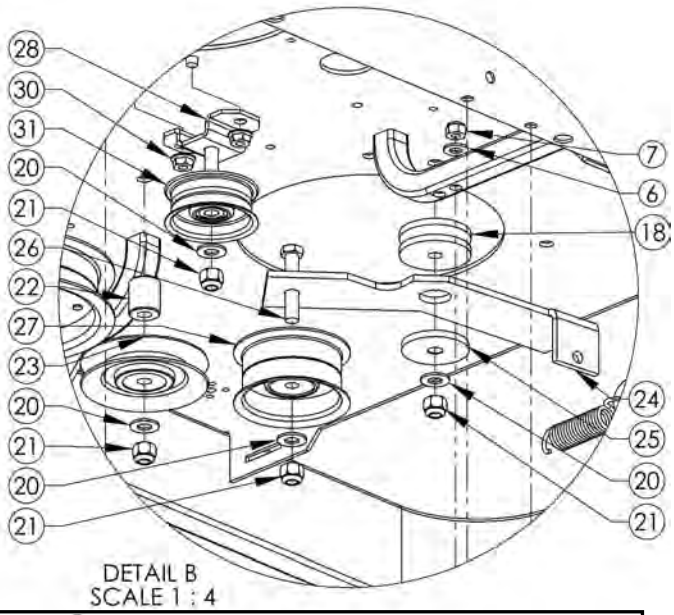


DETAIL B
SCALE 1 : 4

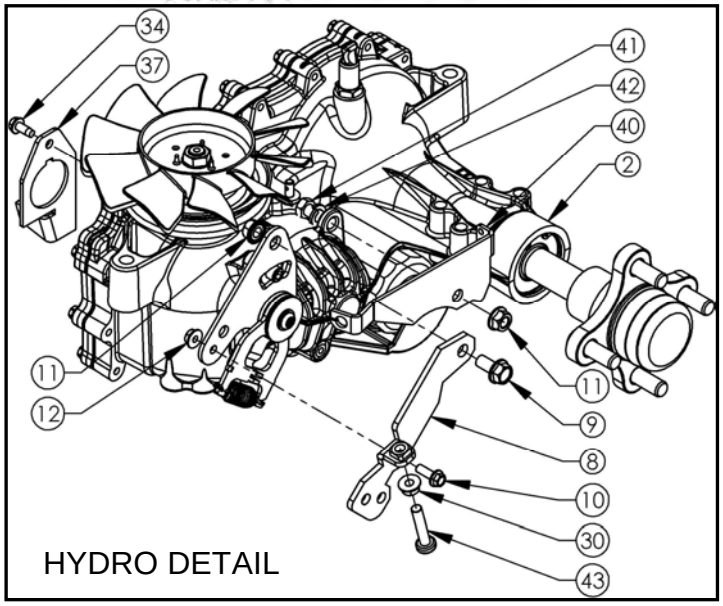


HYDRO DETAIL

Tip: Item 43 can be adjusted to limit the speed of the hydrostat if tracking adjustments are needed.

| Item # | Part # | Description | Qty. |
|---|---|---|---|
| 1 | 20107 | Hydrostat - Hydro-Gear ZT3100, Right | 1 |
| 2 | 20106 | Hydrostat - Hydro-Gear ZT3100, Left | 1 |
| 3 | 18858TK | Weldment - Hydro Link Support; Txt Blk | 1 |
| 4 | NB515 | Bolt - Serr Flange, 5/16-18 x 1 3/4; GR5, ZY | 2 |
| 5 | 18580 | Bolt - Serr Flange, 5/16-18 x 3; GR5, ZP | 4 |
| 6 | NB275 | Washer - SAE Flat, 5/16; ZY | 8 |
| 7 | NB181 | Nut - Nyloc, 5/16-18; ZY | 9 |
| 8 | 19624TK | Weldment - Hydro Control, Left; Txt Blk | 1 |
| | 19625TK | Weldment - Hydro Control, Right; Txt Blk | 1 |
| 9 | NB780 | Bolt - Serr Flange, 3/8-16 x 3/4; GR5, ZY | 2 |
| 10 | NB690 | Bolt - Serr Flange, 1/4-20 x 3/4; GR5, ZY | 2 |
| 11 | NB779 | Nut - Serr Flange, 3/8-16; ZY | 4 |
| 12 | NB524 | Nut - Serr Flange, 1/4-20: GR5, ZY | 2 |
| 13 | 18811 | Belt - Hydro; 1/2 x 80 1/4" | 1 |
| 14 | 26X249 | Screw - .313-18 x .75 | 2 |
| 15 | 18938TK | Bracket - Bulkhead Cable Mount; Txt Blk | 1 |
| 16 | 17465 | Spring - Extension, Hydro Release, ZT | 4 |
| 17 | 18952TK | Plate - Brake Spring Return, Txt Blk | 2 |
| 18 | 6040Z | Washer - Idler, 3/8: ZP | 3 |
| 19 | 18607 | Pulley - Backside Idler, 5" | 1 |
| 20 | NB272 | Washer - SAE Flat, 3/8; Carbon Steel, ZY | 7 |
| 21 | NB182 | Nut - Nyloc, 3/8-16; ZY | 5 |
| 22 | 18628 | Spacer - 7/8 OD x 3/8 ID x 1" | 1 |

| Item # | Part # | Description | Qty. |
|---|---|---|---|
| 23 | 3622 | Pulley - V, Idler; 3.54 OD x 3/8 ID | 1 |
| 24 | 18674TK | Plate - Idler; Txt Blk | 1 |
| 25 | 6037 | Bushing - Idler | 1 |
| 26 | NB198 | Bolt - HCC, 3/8-16 x 2; GR5, ZY | 1 |
| 27 | 7509 | Pulley - Idler, 2 3/4 OD x 3/8 ID | 1 |
| 28 | 18714TK | Weldment - Idler Pulley Offset; Txt Blk | 1 |
| 29 | NB596 | Bolt - Serr Flange, 5/16-18 x 3/4; GR5, ZY | 2 |
| 30 | NB170 | Nut - Serr Flange, 5/16-18; Case Hard, ZY | 4 |
| 31 | B27 | Pulley - Idler, 2.16 OD x 3/8 ID | 1 |
| 32 | NB221 | Bolt - HCC, 3/8-16 x 2 1/2; GR5, ZY | 2 |
| 33 | NB107 | Bolt - HCC, 3/8-16 x 1 1/2; GR5, ZY | 1 |
| 34 | 0025X3 | Screw - 1/4-20 x 1/2, Thread Form Hex | 2 |
| 35 | NB579 | Washer - Fender, 5/16 x 1 1/4; GR2, ZY | 1 |
| 36 | NB231 | Bolt - HTC, 3/8-16 x 2; GR5, ZY | 2 |
| 37 | 18950TK | Bracket - Brake Cable, Left; Txt Blk | 1 |
| | 18949TK | Bracket - Brake Cable, Right; Txt Blk | 1 |
| 38 | NB315 | Eyebolt - 5/16-18 x 3; w/ Gap, ZY | 1 |
| 39 | 7821 | Spring - Latch | 1 |
| 40 | 18941TK | Mount - Bypass Cable, Left; Txt Blk | 1 |
| | 18940TK | Mount - Bypass Cable, Right; Txt Blk | 1 |
| 41 | NB604 | Bolt - 3/8-16 X 1 GR5 ZY | 2 |
| 42 | NB711 | Washer - Split Lock, 3/8 ZY, Medium | 2 |
| 43 | NB591 | Bolt - 5/16-18 X 1 1/2 Torx Pan | 2 |

# PARTS BREAKDOWN

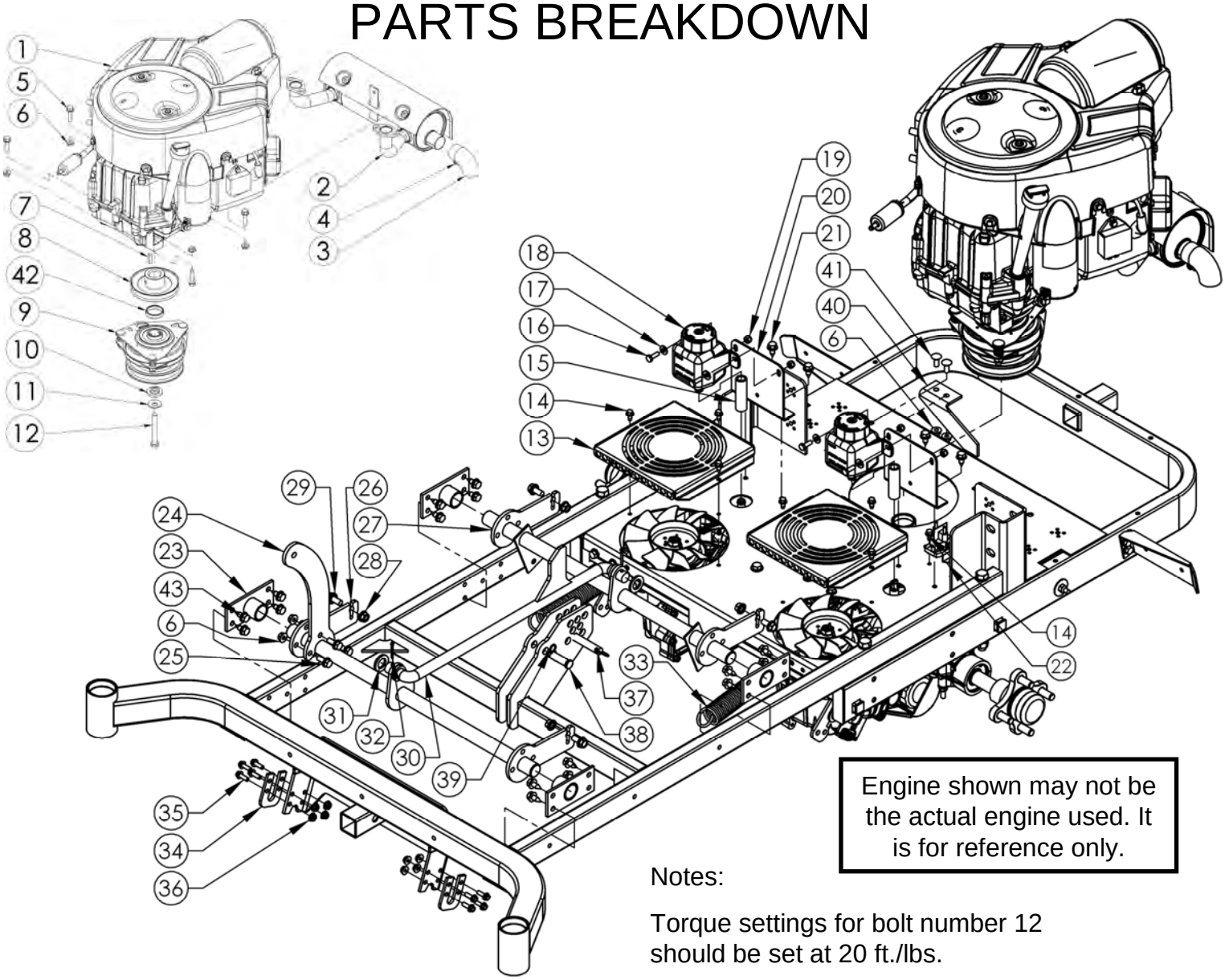


Engine shown may not be the actual engine used. It is for reference only.

Notes:

Torque settings for bolt number 12 should be set at 20 ft./lbs.

| Item # | Part # | Description | Qty. |
|---|---|---|---|
| 1 | 14398 | Engine - 27HP B&S | 1 |
| | | | |
| 2 | 14391 | Muffler - B&S V-Twin | 1 |
| | | | 1 |
| 3 | 226462 | Deflector - Muffler, B&S | 1 |
| | | | 1 |
| 4 | NB783 | Screw - 10-16 x 3/4 | 1 |
| | | | 1 |
| 5 | NB253 | Bolt - Serr Flange, 5/16-18 x 1 1/4 | 4 |
| | | | 4 |
| 6 | NB170 | Nut - Serr Flange, 5/16-18 | 9 |
| | | | 4 |
| 7 | 9031 | Key Stock - 1/4 x 1"; Under Size, Plain Fin. | 1 |
| 8 | 18585 | Pulley - Engine | 1 |
| 9 | 18632 | Clutch - Ogura, 1" Shaft | 1 |
| 10 | 18631 | Bushing - Clutch, Ogura | 1 |
| 11 | 10291 | Washer - Bellville, 1/2 x 1 1/4 x 10GA; GR2 | 1 |
| 12 | NB705 | Bolt - HCF, 7/16-20 x 3 1/4"; GR5, ZY | 1 |
| 13 | 18691TK | Cover - Hydro Fan; Txt Blk | 2 |
| 14 | NB114 | Bolt - TCS, 1/4-20 x 1/2; Unslot, GR2, ZY | 8 |
| 15 | AS161 | Hose - bulk, Oil Drain | 2.5" x2 |
| 16 | NB250 | Bolt - 1/4-20 x 3/4; GR5, ZY | 4 |
| 17 | NB274 | Washer - SAE Flat, 1/4; ZY | 4 |
| 18 | 17015 | Tank Expansion - Hydro Resivoir (71328) | 2 |

| Item # | Part # | Description | Qty. |
|---|---|---|---|
| 19 | NB180 | Nut - Nyloc, 1/4-20 | 4 |
| 20 | 18696TK | Bracket - Hydro Expansion Tank; Txt Blk | 2 |
| 21 | 26X249 | Screw - 5/16-18 x 3/4 | 4 |
| 22 | 1002004 | Solenoid - 3 Pole | 1 |
| 23 | 18709TK | Weldment - Contnmnt. Rocker Shaft; Txt Blk | 4 |
| 24 | 18614TK | Plate - Deck Lift Pedal; Txt Blk | 1 |
| 25 | NB596 | Bolt - Serr Flange, 5/16-18 x 3/4; GR5, ZY | 3 |
| 26 | 19115TK | Weldment - Rocker Shaft, Front; Txt Blk | 1 |
| 27 | 19114TK | Weldment - Rocker Shaft, Rear; Txt Blk | 1 |
| 28 | NB779 | Nut - Serr Flange, 3/8-16; ZY | 4 |
| 29 | NB780 | Bolt - Serr Flange, 3/8-16 x 3/4; GR5, ZY | 4 |
| 30 | 18592 | Weldment - Deck Height Stop Rod | 1 |
| 31 | NB184 | Washer - 3/4ID x 1 1/4 OD x 10 GA. | 2 |
| 32 | NB126 | Pin - Cotter, ⅛ x 1"; Carbon Steel | 2 |
| 33 | 2335 | Spring - Tilt | 2 |
| 34 | 18650TK | Plate - Drag Link Capture; Txt Blk | 2 |
| 35 | NB690 | Bolt - Serr Flange, 1/4-20 x 3/4; GR5, ZY | 8 |
| 36 | NB524 | Nut - Serr Flange, 1/4-20: GR5, ZY | 8 |
| 37 | NB651 | Pin - Ball Lock, 1/2 x 2 1/2 | 1 |
| 38 | 18602 | Pin - Clevis 1/2 OD x 1-33/64 | 1 |
| 39 | NB127 | Pin - Hair, #39; Std, ZY | 1 |
| 40 | 18667TK | Bracket - Clutch Stop, Ogura; Txt Blk | 1 |
| 41 | 10216 | Bolt - Carriage, 5/16-18 x 3/4; GR5, ZY | 2 |
| 42 | 18883 | Spacer - Clutch Stop | 1 |
| 43 | 26X216 | 5/16-18 X 3/4 Rolock Hex | 16 |

# PARTS BREAKDOWN

HANDLE DETAIL

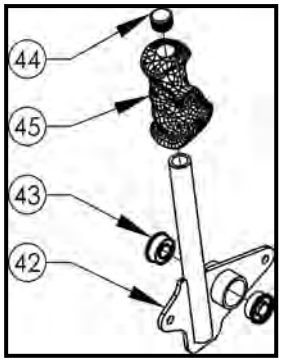


**Notes:**

-Item number 23 (two places) attaches to item number 8 from Page 25 using item numbers 29 & 30.




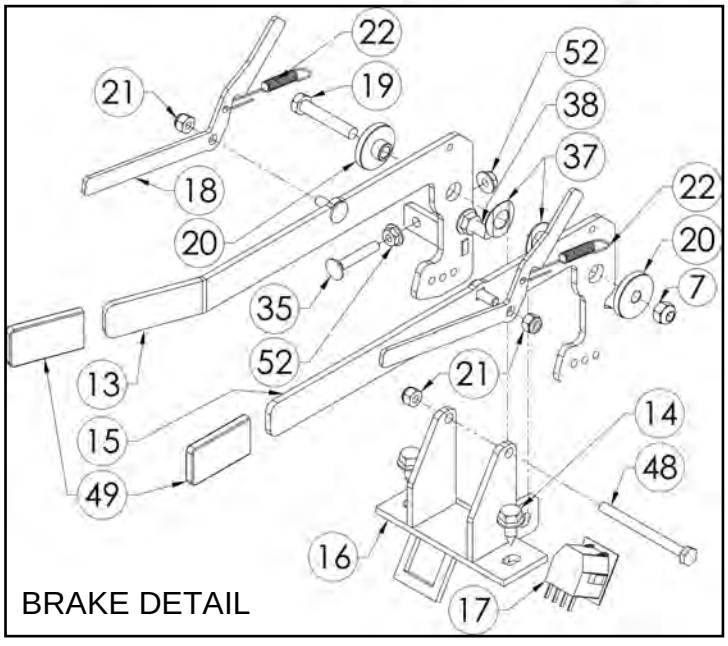


BRAKE DETAIL

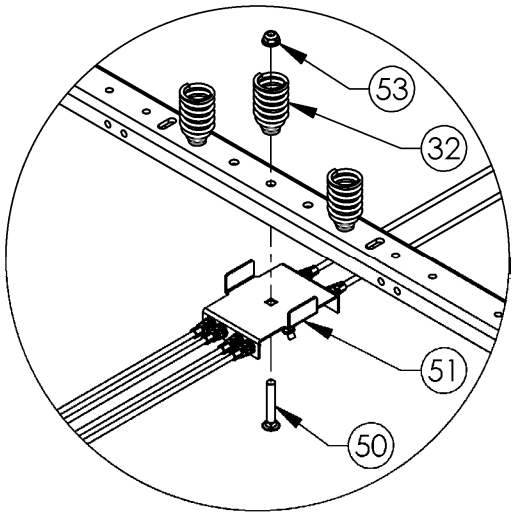


BRAKE & HYDRO BYPASS ASSEMBLY

# PARTS BREAKDOWN

| Item # | Part # | Description | Qty. |
|---|---|---|---|
| 1 | 19367 | Seat - Suspension, Armrest; Seatbelts | 1 |
| 2 | 18679TK | Base - Seat; Txt Blk | 1 |
| 3 | NB513 | Bolt - HCC, 5/16-18 x 4; GR5, Zy | 2 |
| 4 | NB275 | Washer - SAE Flat, 5/16; ZY | 5 |
| 5 | NB170 | Nut - Serr Flange, 5/16-18; Case Hard, ZY | 15 |
| 6 | NB207 | Nut - Jam, Nyloc 3/8-16 ZY | 2 |
| 7 | NB181 | Nut - Nyloc, 5/16-18; ZY | 5 |
| 8 | 18582 | Gas Tank - 4 Gallon, ZT | 2 |
| 9 | 18686TK | Strap - Tank Hold Down; Txt Blk | 2 |
| 10 | NB110 | Bolt - Carriage, 5/16-18 x 2 1/4; GR2, ZY | 2 |
| 11 | 18713TK | Weldment - Tank & Seat Mount; Txt Blk | 1 |
| 12 | NB515 | Bolt - Serr Flange 5/16-18 x 1 3/4; GR5, ZY | 8 |
| 13 | 18931TK | Weldment - Brake Arm, Txt Blk | 1 |
| 14 | 26X249 | Screw - 5/16-18 x 3/4 | 9 |
| 15 | 18951TK | Weldment - Bypass Arm, Txt Blk | 1 |
| 16 | 18936TK | Weldment - Brake Mount Bracket | 1 |
| 17 | 18945 | Switch - 2 Pole, NC/NO | 1 |
| 18 | 18933TK | Plate - Swivel lock, Txt Blk | 2 |
| 19 | NB503 | Bolt - HCC, 5/16-18 x 1 3/4; GR5, ZP | 1 |
| 20 | 14029 | Bushing | 2 |
| 21 | NB180 | Nut - Nyloc, 1/4-20 | 3 |
| 22 | 17465 | Spring - Extension, Hydro Release, ZT | 2 |
| 23 | NB264 | Linkage - Ball, Left; Moridge # 265616 | 2 |
| 24 | NB265 | Nut - Jam, 5/16-24; Left-Hand Thrd; GR2, ZY | 2 |
| 25 | 18627 | Linkage - 5/16-24 x 1; LHT & RHT | 2 |
| 26 | NB190 | Nut - Jam, 5/16-24; GR2, ZY | 2 |
| 27 | NB263 | Linkage - Ball, Right; Moridge # 265615 | 2 |
| 28 | 18723 | Damper - AVM, ZT | 2 |
| 29 | NB159 | Washer - Split Lock, 5/16; Medium Duty, ZY | 4 |
| 30 | NB215 | Nut - Hex, 5/16-24; GR2, ZY | 4 |
| 31 | 18710TK | Weldment - Handle Mount, Right; Txt Blk | 1 |
| 32 | 3609 | Spring - Tapered | 3 |
| 33 | 18685TK | Bracket - Damper Mount, Right; Txt Blk (Hidden) | 1 |
| 34 | 18687TK | Bracket - Damper Mount, Left; Txt Blk (Hidden) | 1 |
| 35 | NB583 | Bolt - Carriage, 1/4-20 x 1 1/2; GR2, ZY | 1 |
| 36 | 18680TK | Bracket - Seat Swivel; Txt Blk | 1 |
| 37 | 18937 | Washer - Wave, 1/2 ID x 1 OD x .087 | 2 |
| 38 | 10548 | Bolt - Serr Flange, 5/16-18 x 1; GR5, ZY | 1 |
| 39 | 009X58 | Bolt - Shoulder, 3/8-16 | 2 |
| 40 | NB177 | Washer - Mach, 1/2 x 14 GA; NR | 2 |
| 41 | 18711TK | Weldment - Handle Mount, Left; Txt Blk | 1 |
| 42 | 18712TK | Weldment - Handle; Txt Blk | 2 |
| 43 | MWB | Bearing - Wheel, 1 ⅛" OD x 1/2" ID | 4 |
| 44 | 18852 | Plug - Plastic, 7/8 OD x 11 GA Tube; Blk | 2 |
| 45 | 18807 | Grip - Hand Conforming, Right | 1 |
| 46 | 18808 | Grip - Hand Conforming, Left | 1 |
| 47 | NB688 | Nut - Nyloc Jam, 1/2-13; ZY | 2 |
| 48 | NB574 | Bolt - 1/4-20 x 3; GR2, ZP | 1 |
| 49 | 2077 | Pivot - Handle Grip | 2 |
| 50 | NB590 | Bolt - Carriage, 5/16-18 X 2 | 1 |
| 51 | 20103 | Assembly - Brake & Hydro Bypass | 1 |
| 52 | NB524 | Nut - Serr Flange, 1/4-20 Grade 5 ZY | 2 |
| 53 | 20105 | Nut - Flange 5/16-18, Nyloc | 1 |
| 54 | 20235 | Screw - Serr Flng 5/16-18X3/4, Type F ZP | 10 |

# PARTS BREAKDOWN

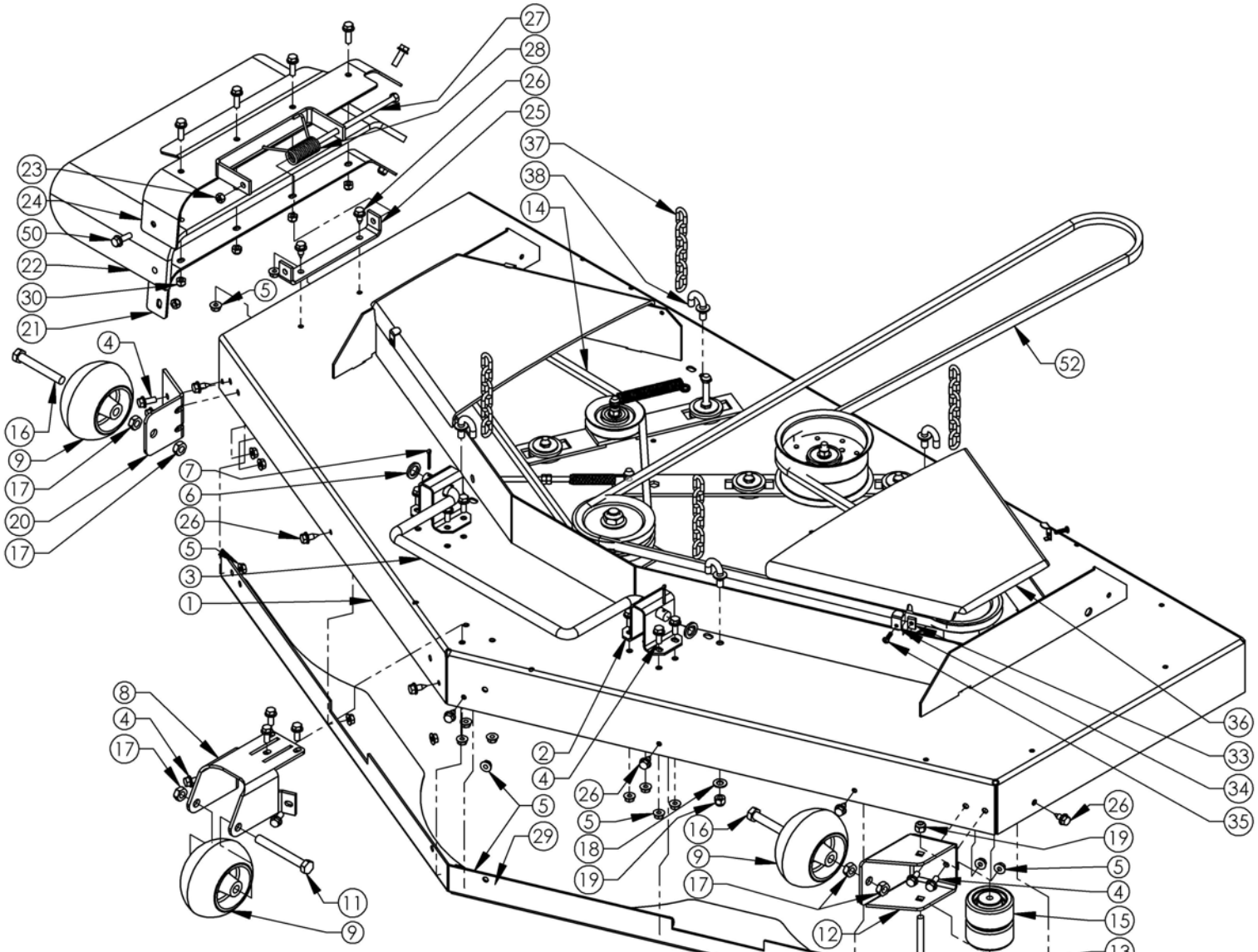


**Notes:**

-Item number 37 (four places) attaches to item number 26 & 27 from Page 26.

-Item number 3 attaches to item number 2 from Page 24 using item numbers 34, 35 & 36 from Page 26.

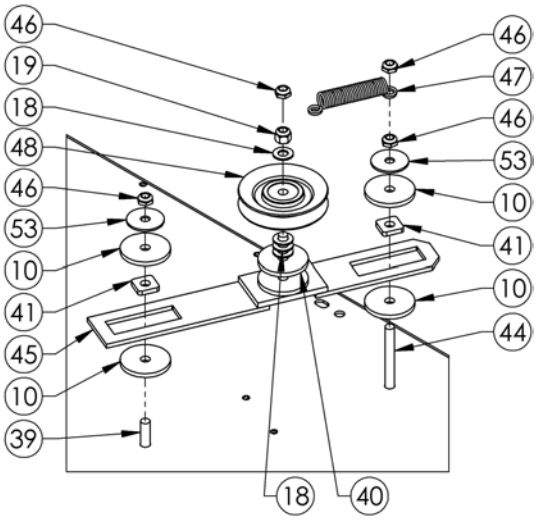


INSIDE IDLER DETAIL

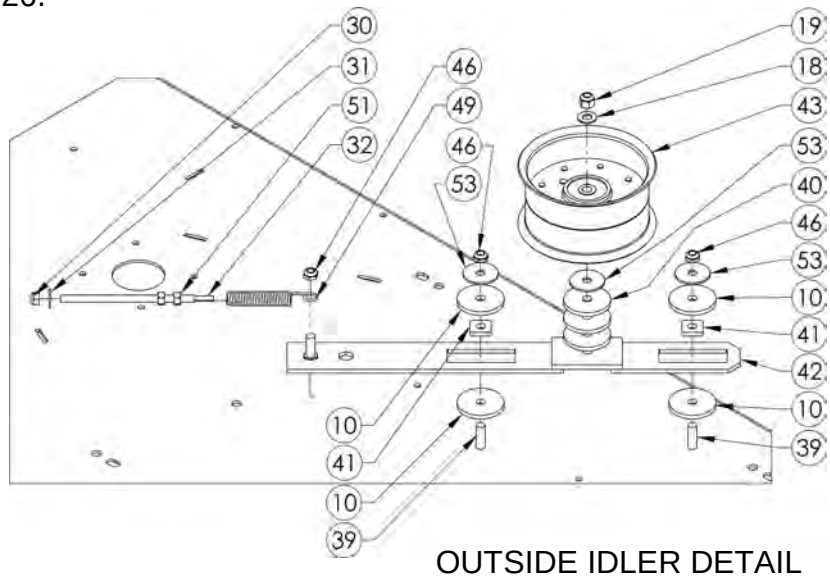


OUTSIDE IDLER DETAIL

# PARTS BREAKDOWN

| Item # | Part # | Description | Qty. |
|---|---|---|---|
| 1 | 19064TK | Weldment - 66" deck; Txt Blk | 1 |
| 2 | 18786TK | Bracket - Deck Stabilizer: Txt Blk | 2 |
| 3 | 18601 | Rod - Drag Link Bar | 1 |
| 4 | NB596 | Bolt - Serr Flange, 5/16-18 x 3/4; GR5, ZY | 17 |
| 5 | NB170 | Nut - Serr Flange, 5/16-18; Case Hard, ZY | 19 |
| 6 | NB178 | Washer - 5/8" ID x 1" OD x 10 GA; ZY | 2 |
| 7 | NB126 | Pin - Cotter, ⅛ x 1"; Carbon Steel, Ext Prng | 2 |
| 8 | 18383TK | Bracket - Middle Toller; Txt Blk | 1 |
| 9 | 3511 | Gauge - Wheel | 3 |
| 10 | 18874 | Washer - UHMW, 2" OD x 3/8" ID x .188" | 8 |
| 11 | NB132 | Bolt - Hex, 1/2-13 x 4; GR5 | 1 |
| 12 | 15779TK | Bracket - Left Wheel; Txt Blk | 1 |
| 13 | NB707 | Bolt - Carriage, 3/8-16 x 4; Full Thread, GR2 | 1 |
| 14 | 19070 | Belt - Deck Idler, 1/2" x 62" | 1 |
| 15 | AS001 | Roller - Anti-Scalp, 3/8 ID | 2 |
| 16 | NB577 | Bolt - 1/2-13 x 3 1/2; GR5, ZY | 2 |
| 17 | NB121 | Nut - Jam Lock, 1/2-13; 2-way, GR A | 5 |
| 18 | NB272 | Washer - SAE Flat, 3/8; Carbon Steel, ZY | 5 |
| 19 | NB182 | Nut - Nyloc, 3/8-16; ZY | 7 |
| 20 | 15780TK | Bracket - Anti-Scalp; Txt Blk | 1 |
| 21 | 14256TK | Bracket - Grass Chute; Txt BLk | 1 |
| 22 | 14258 | Rubber - Grass Chute | 1 |
| 23 | NB558 | Nut - 2-Way Lock, 5/16-18; ZY | 2 |
| 24 | 14434TK | Weldment - Grass Chute; Txt Blk | 1 |
| 25 | 6030TK | Bracket - Grass Chute Mount; Txt Blk | 1 |
| 26 | 26X249 | Screw - 5/16-18 x 3/4 | 9 |
| 27 | NB136 | Rod - 5/16-18 X 8 3/4; ZP | 1 |
| 28 | 166X34 | Spring - Torsion | 1 |
| 29 | 19067TK | Plate - Debris Shield, 66"; Txt Blk | 1 |
| 30 | NB181 | Nut - Nyloc, 5/16-18; ZY | 7 |
| 31 | NB275 | Washer - SAE Flat, 5/16; ZY | 1 |
| 32 | 18622 | Bolt - Spade, 5/16-18; ZY | 1 |
| 33 | 18532 | Nut - Clip, 10-24 | 4 |
| 34 | 18531 | Washer - Bent, 1/4" ID x 18 GA; Belt Cover | 4 |
| 35 | 024203 | Screw - Phillips Truss Head, 10-34; ZP | 4 |
| 36 | 19068 | Cover - Deck Belt, 66" | 2 |
| 37 | 18722 | Chain - Deck Hanger, Six Links | 4 |
| 38 | 18597 | Bolt - Hook, 3/8-16 | 4 |
| 39 | NB618 | Bolt - 3/8-16 x 1 1/4; GR5, ZY | 3 |
| 40 | 6040Z | Washer - Idler, ZP | 5 |
| 41 | 18875 | Spacer - UHMW, 7/8" Sq. x 3/8" ID x .200" | 4 |
| 42 | 18707TK | Weldment - Deck Idler, Backside; Txt Blk | 1 |
| 43 | 18613 | Pulley - 4 1/2" OD x 2 1/2" | 1 |
| 44 | NB164 | Bolt - HTC 3/8-16 x 3; GR5 (Full Thread) | 1 |
| 45 | 18708TK | Weldment - Deck Idler, Inside; Txt Blk | 1 |
| 46 | NB207 | Nut - Nyloc Jam, 3/8-16; ZY | 6 |
| 47 | 18728 | Spring - Idler, Short; ZP | 1 |
| 48 | 3622 | Pulley - V, Idler; 3.54 OD x 3/8 ID | 1 |
| 49 | 4422 | Spring - Idler Tension, Bent Leg | 1 |
| 50 | 10548 | Bolt - Serr Flange, 5/16-18 x 1; GR5 | 6 |
| 51 | NB210Z | Nut - HNC, 5/16-18; GR2, ZY | 2 |
| 52 | 19069 | Belt - Engine to Deck, 1/2 x 130, Gates | 1 |
| 53 | 10177 | Washer - Fender 3/8X1 1/2, Crbn Stl GR 2 | 5 |

# PARTS BREAKDOWN

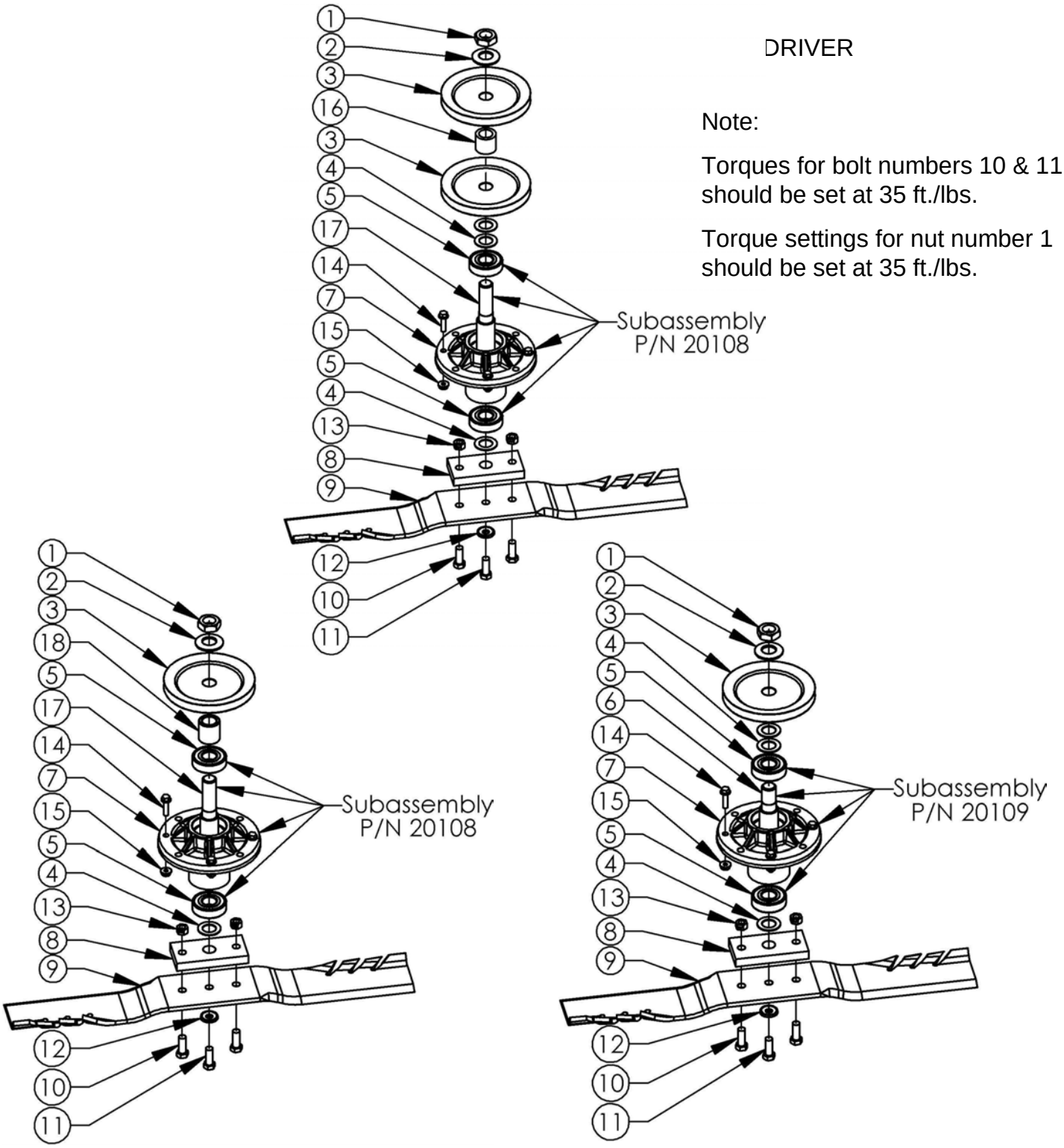


| Item # | Part # | Description | Qty. |
|---|---|---|---|
| 1 | NB175 | Nut - Jam, 3/4-16; GR2 | 3 |
| 2 | AS155 | Washer - Belleville, 3/4 x 1 1/2 x .098 | 3 |
| 3 | 3785 | Pulley - Blade 5" | 4 |
| 4 | NB179 | 3/4 ID X 1 1/4 OD 18 GA Washer | 7 |
| 5 | B98 | Bearing - Blade | 6 |
| 6 | 9077 | Shaft - Blade 5", Long Shoulder | 1 |
| 7 | 19924TK | Blade Driver - Cast Iron Txt Blk | 3 |
| 8 | 9008 | Plate - Blade Mount | 3 |
| 9 | 20115 | Blade - G6 Mulching, 22.5" | 3 |

| Item # | Part # | Description | Qty. |
|---|---|---|---|
| 10 | NB166 | Bolt - 3/8-24 x 1 1/4; GR5, ZY | 6 |
| 11 | NB238N | Bolt - HHc, 3/8-24 x 1; GR5, Nyloc | 3 |
| 12 | NB607 | Washer - SP Belleville, .413 x .945 x .118 | 3 |
| 13 | NB216 | Nut - Two Way Lock, 3/8-24; GR A, ZY | 6 |
| 14 | 13182 | Bolt - Serr Flange, 1/4-20 x 1; GR5 | 12 |
| 15 | NB524 | Nut - Serr Flange, 1/4-20; Case Hard, ZY | 12 |
| 16 | 12823 | Spacer - 3/4 ID x 1, Powder Metal | 1 |
| 17 | 9078 | Shaft - Blade 6", Long Shoulder | 2 |
| 18 | 18620 | Spacer - Pulley, Deck Idler | 1 |

# PARTS BREAKDOWN

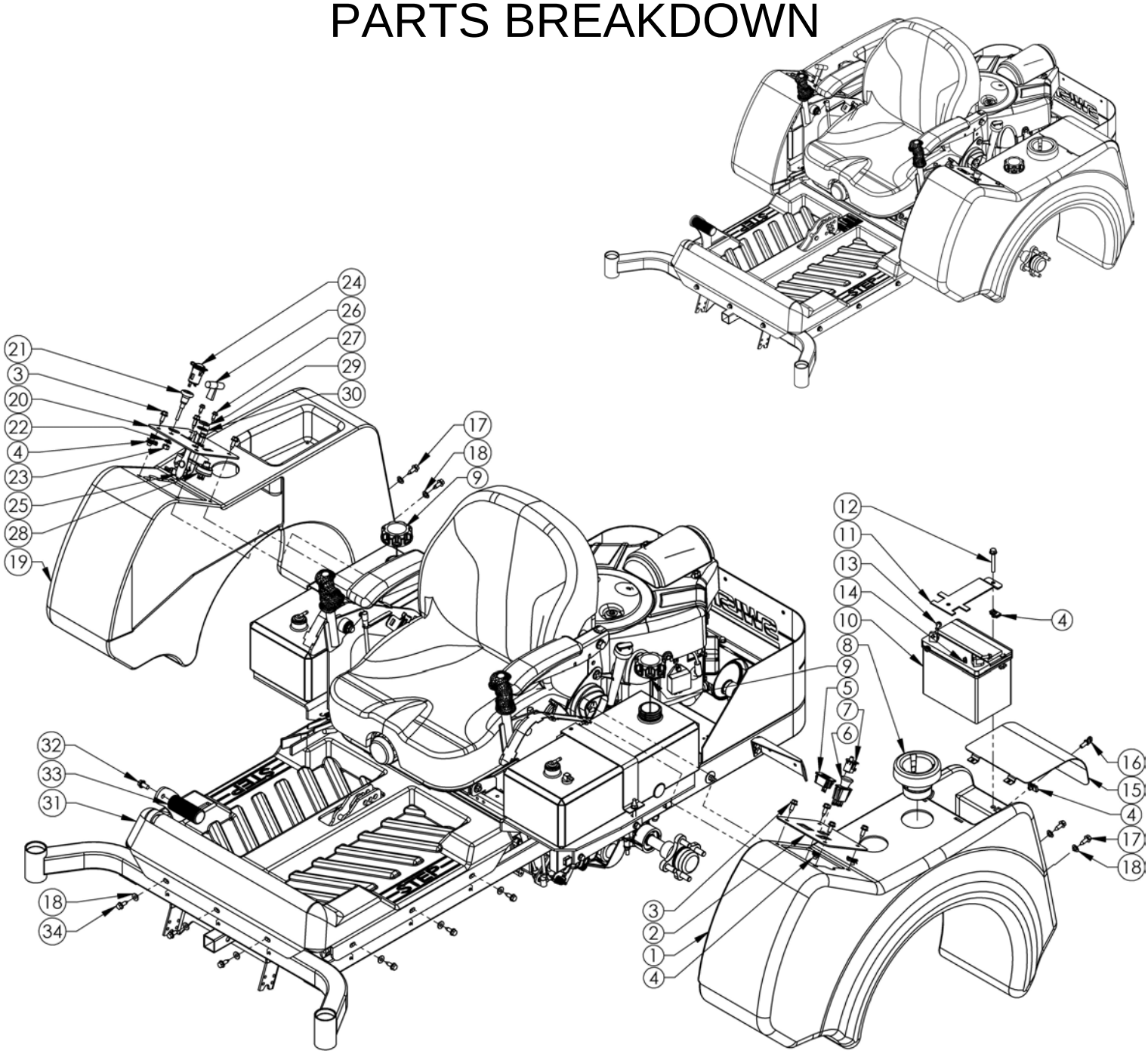


| Item # | Part # | Description | Qty. |
|---|---|---|---|
| 1 | 18997 | Fender - Left | 1 |
| 2 | 18578TK | Panel - Control, Left; Txt Blk | 1 |
| 3 | 18743 | Screw - Thread Cut, 5/16-18X1 | 8 |
| 4 | 3706 | Clip - Timmerman, 5/16-18 | 6 |
| 5 | 17635 | Hour Meter - LCD | 1 |
| 6 | 3605 | Switch - PTO | 1 |
| 7 | 18636 | Switch - Starter | 1 |
| 8 | 1001542 | Holder - GA, Beverage | 1 |
| 9 | 18221 | Cap, Fuel - 2.5 Gallon, Carb Sealed | 2 |
| 10 | EBAT300 | Battery - 12V (8U1L) | 1 |
| 11 | 18698TK | Strap - Battery Hold Down; Txt Blk | 1 |
| 12 | NB622 | Bolt - Serr Flange, 5/16-18 x 2 1/4; GR5, ZY | 1 |
| 13 | NB690 | Bolt - Serr Flange, 1/4-20 x 3/4; GR5, ZY | 2 |
| 14 | NB524 | Nut - Serr Flange, 1/4-20; GR5, ZY | 2 |
| 15 | 18697TK | Cover - Battery, Fender; Txt Blk | 1 |
| 16 | 18802 | Screw - Thumb w/ Shoulder, 5/16-18 x 3/4 | 1 |
| 17 | 18743 | Screw - Thread Cut, 5/16-18X1 | 4 |

| Item # | Part # | Description | Qty. |
|---|---|---|---|
| 18 | 18717 | Spacer - Fender | 13 |
| 19 | 18996 | Fender - Right | 1 |
| 20 | 18639TK | Panel - Control, Right; Txt Blk | 1 |
| 21* | 18606 | Cable - Control, Engine Choke 66" | 1 |
| 22 | NB711 | Washer - Split Lock, 3/8; Medium, ZY | 1 |
| 23 | NB456 | Nut - HNF, 3/8-24; GR2, ZY | 1 |
| 24 | 18745 | Adapter - 12V Power Plug | 1 |
| 25 | 4226 | Cable - Throttle | 1 |
| 26 | 4226K | Knob - T, for Throttle Cable | 1 |
| 27 | 26X263 | Screw - 1/4-20 x 1/2 | 2 |
| 28 | 3623 | Switch - Key | 1 |
| 29 | 9087 | Nut - Key Switch | 1 |
| 30 | 9088 | Washer - Lock, Key Switch | 1 |
| 31 | 18995 | Floor Pan - ZT | 1 |
| 32 | NB780 | Bolt - Serr Flange, 3/8-16 x 3/4; GR5, ZY | 1 |
| 33 | 18603B | Bar - Foot Pedal, Black Oxide | 1 |
| 34 | 18743 | Screw - Thread Cut, 5/16-18X1 | 9 |



*Item 21 Used Only on 24HP B&S Engines

# PARTS BREAKDOWN

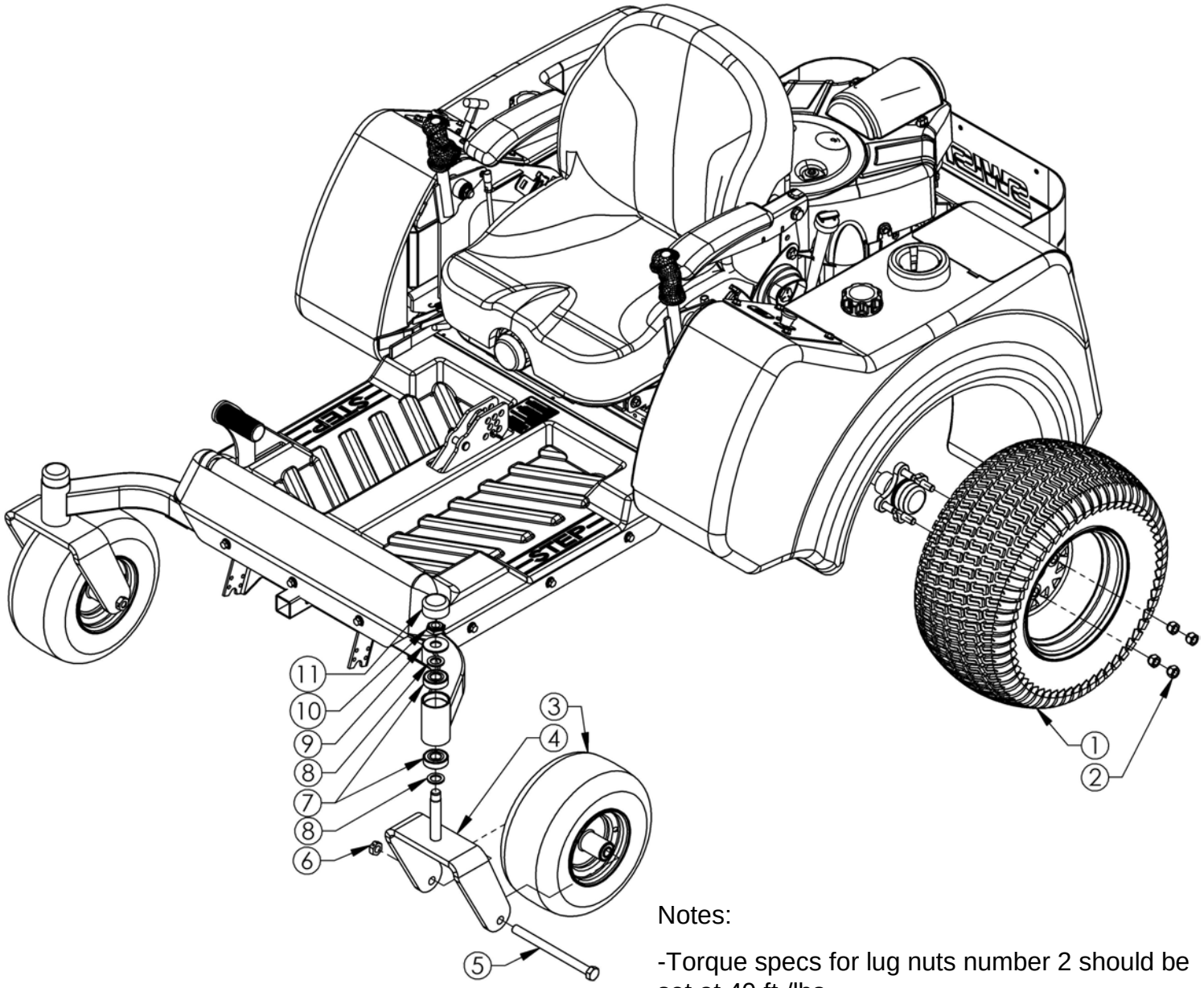


Notes:

-Torque specs for lug nuts number 2 should be set at 40 ft./lbs.

-Nut number 10 should not be fastened tightly. It should only be tight enough to engage the Nyloc nut but also allow the caster (#4) to spin freely. There should be no up and down axial movement in the caster once fastened.

-Bolt & nut numbers 5 & 6 should also not be fastened tightly. They should be tight enough that the bolt has no axial movement side to side but also allow the wheel (#3) to spin freely.

| Item # | Part # | Description | Qty. |
|---|---|---|---|
| 1 | 18784 | Tire/Wheel - 20 x 10-10; Spoked, Blk | 2 |
| 2 | 2203LN | Nut - Lug, Wheel Hub, 1/2-20; GR5, ZY | 8 |
| 3 | 18785 | Tire/Wheel - 12/600 x 6-4Ply; Smooth, Blk | 2 |
| 4 | 18886TK | Weldment - Caster, 1/2"; Txt Blk | 2 |
| 5 | 18953 | Bolt - HCC, 5/8-11 x 8 1/2; GR8, ZY | 2 |
| 6 | NB595 | Nut - 2-way Jam Lock, 5/8-11; GR A | 2 |

| Item # | Part # | Description | Qty. |
|---|---|---|---|
| 7 | B98 | Bearing - Blade | 4 |
| 8 | NB195 | Washer - 13/16 x 1 1/4 x ⅛; Mild, ZY | 4 |
| 9 | 17X195 | Washer - Flat | 2 |
| 10 | NB313 | Nut - Myloc Jam, 3/4-10 | 2 |
| 11 | 094618 | Cap - Hub | 2 |

# TROUBLESHOOTING

| PROBLEM | CAUSE | CORRECTION |
|---|---|---|
| **Engine Will Not Start** | 1. Out of fuel.<br>2. Engine flooded.<br>3. Bad spark plug.<br>4. Dirty air filter.<br>5. Dirty fuel filter.<br>6. Water in fuel.<br>7. Loose or damaged wiring.<br>8. Carburetor out of adjustment.<br>9. Engine valves out of adjustment.<br>10. Extreme cold conditions. | 1. Fill fuel tank.<br>2. Wait several minutes before attempting to restart.<br>3. Replace spark plug.<br>4. Clean or replace air filter.<br>5. Replace fuel filter.<br>6. Drain fuel tank & carburetor, refill tank with fresh gas and replace fuel filter.<br>7. Check all wiring.<br>8. See Engine Manual.<br>9. Contact an authorized service center.<br>10. See Engine Manual. |
| **Engine Hard To Start** | 1. Bad spark plug.<br>2. Dirty air filter.<br>3. Dirty fuel filter.<br>4. Weak or dead battery.<br>5. Carburetor out of adjustment.<br>6. Engine valves out of adjustment.<br>7. Loose or damaged wiring.<br>8. Stale or dirty fuel. | 1. Replace spark plug.<br>2. Clean or replace air filter.<br>3. Replace fuel filter.<br>4. Recharge or replace battery.<br>5. See Engine Manual.<br>6. Contact an authorized service center.<br>7. Check all wiring.<br>8. Drain fuel tank & refill with fresh gasoline. |
| **Engine Will Not Turn Over** | 1. Brake not engaged.<br>2. PTO engaged.<br>3. Weak or dead battery.<br>4. Blown fuse.<br>5. Corroded battery terminals.<br>6. Loose or damaged wiring.<br>7. Faulty ignition switch.<br>8. Faulty solenoid.<br>9. Faulty operator presence switch/switches. | 1. Engage Brake.<br>2. Push PTO switch down to disengage.<br>3. Recharge or replace battery.<br>4. Replace fuse.<br>5. Clean battery terminals – See Battery section of this manual.<br>6. Check all wiring.<br>7. Check/replace ignition switch.<br>8. Check/replace solenoid.<br>9. Contact an authorized service center. |
| **Engine Clicks but Will Not Start** | 1. Weak or dead battery.<br>2. Corroded battery terminals.<br>3. Loose or damaged wiring.<br>4. Faulty solenoid. | 1. Recharge or replace battery.<br>2. Clean battery terminals – See Battery. section of this manual.<br>3. Check all wiring.<br>4. Check/replace solenoid. |
| **Unit Does Not Travel in a Straight Line** | 1. Incorrect tire pressure.<br>2. Rear wheels rotating at different speeds. | 1. Check tire pressure (See Specifications).<br>2. Return-to-Neutral assembly may need adjustments.<br>3. Contact an authorized service center. |
| **Excessive Vibration** | 1. Worn, bent or loose blade.<br>2. Bent blade driver.<br>3. Loose/damaged part or parts.<br>4. Faulty blade driver assembly. | 1. Replace blade. Tighten blade bolt.<br>2. Replace blade driver.<br>3. Tighten loose part or parts. Replace damaged parts.<br>4. Replace blade driver assembly. |

# TROUBLESHOOTING

| PROBLEM | CAUSE | CORRECTION |
|---|---|---|
| **Loss of Power** | 1. Cutting too much grass/ too fast.<br>2. Buildup of grass, leaves and trash under deck.<br>3. Dirty air filter.<br>4. Low oil level/dirty oil.<br>5. Faulty spark plug.<br>6. Dirty fuel filter.<br>7. Stale or dirty fuel.<br>8. Water in fuel.<br>9. Spark plug wire loose.<br>10. Dirty engine air screen/fins.<br>11. Dirty/clogged muffler.<br>12. Loose or damaged wiring.<br>13. Carburetor out of adjustment.<br>14. Engine valves out of adjustment.<br>15. Loose drive belt. | 1. Set in High Cut (position 1)/reduce speed.<br>2. Clean underside of mower deck.<br>3. Clean or replace air filter.<br>4. Check oil level/change oil.<br>5. Clean and re-gap or change plug.<br>6. Replace fuel filter.<br>7. Drain fuel tank & refill tank with fresh gas.<br>8. Drain fuel tank & carburetor, refill tank with fresh gas and replace fuel filter.<br>9. Connect and tighten spark plug wire.<br>10. Clean engine air screen/fins.<br>11. Clean/replace muffler.<br>12. Check all wiring.<br>13. See Engine Manual.<br>14. Contact an authorized service center.<br>15. Adjust idler/replace belt. |
| **Engine Backfires When Turning Engine OFF** | 1. Engine throttle control not set at “SLOW” position for 30 seconds before stopping engine. | 1. Move throttle control to “SLOW” position and allow to idle for 30 seconds before stopping engine. |
| **Poor Cut - Uneven** | 1. Worn, bent or loose blade.<br>2. Mower deck not level.<br>3. Buildup of debris under deck.<br>4. Bent deck.<br>5. Faulty blade driver assembly. | 1. Replace blade. Tighten blade bolt.<br>2. Possible damaged or bent components.<br>3. Clean underside of mower deck.<br>4. Replace deck.<br>5. Replace blade driver assembly. |
| **Battery Will Not Charge** | 1. Bad battery.<br>2. Poor cable connections.<br>3. Faulty solenoid. | 1. Replace battery.<br>2. Check/clean all connections. See section in this manual.<br>3. Replace solenoid. |
| **Loss of Drive** | 1. Bypass linkages in the disengaged position.<br>2. Hydro belt worn, damaged, or broken.<br>3. Idler spring loose or broken.<br>4. Low transmission fluid level | 1. Make sure that the bypass handle is in the drive or disengaged position. Refer to page 16<br>2. Replace Hydro belt.<br>3. Replace Idler spring.<br>4. Add specified transmission fluid. Refer to page 21 |

# MOWER IDENTIFICATION

## Mower Identification

Each mower has its own model number. Each engine has its own model number. The model number for the mower will be found behind the seat. The model number for the engine will be found on the top of the blower fan housing. All mower parts listed herein may be ordered directly from Swisher or your nearest Swisher dealer. All engine parts may be ordered from the nearest dealer of the engine supplied with your mower.

## Unauthorized Replacement Parts

Use only Swisher replacement parts. The replacement of any part on this unit with anything other than Swisher authorized replacement part may adversely affect the performance, durability and safety of this unit and may void the warranty. Swisher disclaims liability for any claims or damages, whether warranty, property damage, personal injury or death arising out of the use of unauthorized replacement parts.

**WHEN ORDERING PARTS, PLEASE HAVE THE FOLLOWING INORMATION AVAILABLE:**

•Date Purchased _____

•Purchased From_____

•PRODUCT – ZTR2766CP ZTR2766CP-CA

•SERIAL NUMBER - _____

•ENGINE MODEL NUMBER - _____

•TYPE - _____

•PART NUMBER WITH PAINT CODE_____

•PART DESCRIPTION_____

**S.A.I.**
1602 CORPORATE DRIVE
WARRENSBURG, MO 64093

**www.swisherinc.com**
TELEPHONE - 1-800-222-8183
FAX - 1-660-747-3160

**cust.serv@swisherinc.com**

# REPLACEMENT PARTS

## Quick Reference

| Swisher Part # | Part Description |
|---|---|
| 18811 | Belt – Hydro, ½ x 80 ¼ |
| 19069 | Belt – Engine to Deck ½ x 130 |
| 19070 | Belt – Deck Idler, ½ x 62 |
| 18784 | Tire/Wheel – 20 x 10-10, Spoked |
| 18785 | Tire/Wheel – 12/600 x 6-4 Ply |
| 20115 | Blade - G6 Mulching, 22.5" |
| AS069 | Fuse – 10 Amp |
| 20109 | Blade – Driver Assembly (Right) |
| 20108 | Blade – Driver Assembly (Center & Left) |



## CAUTION

Use extreme care when working on machinery.

Before performing any maintenance, turn off engine, allow the unit to cool and remove the key. Disconnect spark plug wire.

Set Parking Brake by pulling up on both arms until locked into the “engaged” position. **SEE PAGE 16 FOR BRAKE OPERATION INSTRUCTIONS.**

Do not wear watch or jewelry. Do not wear loose fitting clothes. Observe all common safety practices with tools.

# NOTES

# NOTES

# SWISHER HISTORY








Back before electricity came to rural Missouri Max Swisher was producing lawn mowers from his mother's chicken house. Max never liked to mow grass. He installed a gearbox on his family's lawn mower creating a self-propelled unit. By tying one end of a rope to the mower and the other end to a tree in the center of the yard the mower circled the tree, shortening the rope and guiding the mower in concentric circles. Max enjoyed relaxing under a shade tree while his invention did all the work.

Max had designed his first self-propelled rotary lawn mower to do his dirty work for him. Neighbors noticed his new invention and began asking him to make more. Today, over 65 years later, Swisher is still producing innovative lawn and garden and ATV/UTV equipment designed to give us all more "relaxing in the shade" time.

Swisher products have been featured nationally on television programs such as Regis and Kathie Lee and seen in publications like ATV Magazine, Country Journal, Popular Mechanics Magazine and others. In January 2000 Popular Mechanics Magazine named Max's zero turning radius riding mower one of the 20th century's top household inventions.

Swisher offers value and function in its products to meet your grounds maintenance needs.

**CELEBRATING OVER 70 YEARS OF INNOVATION**
**SINCE 1945**

MADE IN THE U.S.A
OF U.S. AND GLOBAL PARTS