Notice to Users

© 1999 Sony Electronics Inc. Reproduction in whole or in part without written permission is prohibited. All rights reserved. This manual and the software described herein, in whole or in part, may not be reproduced, translated, or reduced to any machine-readable form without prior written approval.

SONY ELECTRONICS INC. PROVIDES NO WARRANTY WITH REGARD TO THIS MANUAL, THE SOFTWARE, OR OTHER INFORMATION CONTAINED HEREIN AND HEREBY EXPRESSLY DISCLAIMS ANY IMPLIED WARRANTIES OF MERCHANTABILITY OR FITNESS FOR ANY PARTICULAR PURPOSE WITH REGARD TO THIS MANUAL, THE SOFTWARE, OR SUCH OTHER INFORMATION. IN NO EVENT SHALL SONY ELECTRONICS INC. BE LIABLE FOR ANY INCIDENTAL, CONSEQUENTIAL, OR SPECIAL DAMAGES, WHETHER BASED ON TORT, CONTRACT, OR OTHERWISE, ARISING OUT OF OR IN CONNECTION WITH THIS MANUAL, THE SOFTWARE, OR OTHER INFORMATION CONTAINED HEREIN OR THE USE THEREOF.

Sony Electronics Inc. reserves the right to make any modification to this manual or the information contained herein at any time without notice. The software described herein may also be governed by the terms of a separate user license agreement.

Sony, VAIO, the VAIO logo, VAIO Smart, VAIO Digital Studio, DVgate, Digital Media Park, PictureGear, i.LINK, and S-Link are trademarks of Sony. Windows and the Windows logo are registered trademarks of Microsoft Corporation. K56flex is a trademark of Lucent Technologies Inc. and Rockwell International. All other trademarks are trademarks of their respective owners.

Safety Information

Owner's Record

The model number and serial number are located on the back of your Sony computer. Record the model and serial numbers in the space provided here. Refer to the model and serial number when you call your Sony Service Center.

Model Number:_____

Serial Number:_____

WARNING

- To prevent fire or shock hazard, do not expose your Sony computer to rain or moisture.
- Never install modem or telephone wiring during a lightning storm.
- Never install telephone jacks in wet locations unless the jack is specifically designed for wet locations
- Never touch uninsulated telephone wire or terminals unless the telephone line has been disconnected at the network interface.
- Use caution when installing or modifying telephone lines.
- Avoid using the modem during an electrical storm.
- Do not use the modem or a telephone to report a gas leak in the vicinity of the leak.


The laser beam used in the optical drive unit is harmful to the eyes. Do not attempt to disassemble the cabinet. Refer servicing to qualified personnel only.

Regulatory Information

This equipment has been tested and found to comply with the limits for a Class B digital device, pursuant to Part 15 of the FCC rules. These limits are designed to provide reasonable protection against harmful interference in a residential installation. This equipment generates, uses, and can

radiate radio frequency energy and, if not installed and used in accordance with the instructions, may cause harmful interference to radio communications. However, there is no guarantee that interference will not occur in a particular installation. If this equipment does cause harmful interference to radio or television reception, which can be determined by turning the equipment off and on, the user is encouraged to try to correct the interference by one or more of the following measures:

- Reorient or relocate the receiving antenna.
- Increase the separation between the equipment and the receiver.
- Connect the equipment into an outlet on a circuit different from that to which the receiver is connected.
- Consult the dealer or an experienced radio/TV technician for help.

You are cautioned that any changes or modifications not expressly approved in this manual could void your authority to operate this equipment.

Only peripherals (computer input/output devices, terminals, printers, etc.) that comply with FCC Class B limits may be attached to this computer product. Operation with non-compliant peripherals is likely to result in interference to radio and television reception.

All cables used to connect peripherals must be shielded and grounded. Operation with cables, connected to peripherals, that are not shielded and grounded, may result in interference to radio and television reception.

FCC Part 68

This equipment complies with Part 68 of the FCC rules. The ringer equivalence number (REN) and the FCC registration number are printed on the modem board. If requested, this information must be supplied to the telephone company.

The REN is used to determine the quantity of devices which may be connected to the phone line. Excessive REN's on the telephone line may result in the devices not ringing in response to an incoming call. In most, but not all areas, the sum of the REN's should not exceed five (5.0). To be certain of the number of devices that may be connected to the line, as determined by the total REN's, contact the telephone company to determine the maximum REN for the calling area.

This modem uses the USOC RJ-11 telephone jack.

If this equipment causes harm to the telephone network, the telephone company will, when practical, notify you in advance that temporary discontinuance of service may be required. If advance notice isn't practical, the telephone company will notify you as soon as possible. Also, you will be advised of your right to file a complaint with the FCC if you believe it is necessary.

The telephone company may make changes in its facilities, equipment, operations or procedures that could affect the operations of the equipment. If this happens, the telephone company will notify you in advance, in order for you to make the necessary modifications
in order to maintain uninterrupted service.

If trouble is experienced with this modem, for repair or warranty information, please contact 1-888-4SONY-PC, or write to the Sony Customer Information Center, One Sony Drive, Park Ridge, NJ 07656.

This equipment cannot be used on telephone-company-provided coin service. Connection to Party Line Service is subject to state tariffs.

Repair of the modem should be made only by a Sony Service Center or Sony authorized agent. For the Sony Service Center nearest you, call 1-888-4SONY-PC (1-888-476-6972).

Telephone Consumer Protection Act of 1991

The Telephone Consumer Protection Act of 1991 makes it unlawful for any person to use a computer or other electronic device to send any message via a telephone facsimile machine unless

such message clearly contains, in a margin at the top or bottom of each transmitted page or on the first page of the transmission, the date and time it is sent and an identification of the business, other entity, or individual sending the message, and the telephone number of the sending machine or such business, other entity, or individual.

In order to program this information into your facsimile, see your fax software documentation.

 You are cautioned that any changes or modifications not expressly approved in this manual could void your authority to operate this equipment.

Read Me First

Welcome

Congratulations on your purchase of the Sony VAIO Digital Studio Computer. Sony has combined leading-edge technology in audio, video, computing, and communications to provide you with state-of-the-art personal computing.

Features

 For a complete description of the specifications of your VAIO Digital Studio Computer, see Specifications.

- **Exceptional performance:** Your computer includes a brand new Intel® Pentium® III processor, a CD-RW drive, and a V.90 compatible data/fax modem.*

* Actual upload and download speeds may vary due to line conditions, ISP support, and government regulations.

- **CD-RW drive:** This drive is the ideal solution for making backups and data archiving, with the ability to store up to 650 MB* of removable, rewritable storage on a single rewritable CD. Save your movies to CD-R or CD-RW media and share videos and images with family and friends.

***** 530 MB after formatting.

- **VAIO Smart Keyboard:** This USB keyboard has programmable shortcut buttons for launching your favorite programs or accessing the Internet.
- **Sony audio and video quality:** High-fidelity positional 3D audio system (A3D), high-powered 3D graphics (AGP), and "Sony-Tuned" MPEG digital video playback enable you to take advantage of today's advanced multimedia applications, games, and entertainment software.
- **S-Link (Control-A1):** This technology allows you to build a database of all your music and video CDs and then record your favorite audio selections on MiniDiscs. Use your computer with a 200 disc mega-storage CD changer and a MiniDisc recording deck.
- **i.LINK (IEEE 1394):** Three built-in i.LINK ports provide you with maximum digital connection capability. The i.LINK name and logo identify a digital interface (IEEE 1394) for high speed communication. By using your VAIO Digital Studio Computer, a Sony Digital Handycam® Camcorder, the DVgate software preinstalled on your computer, and the i.LINK (IEEE 1394) interface, you can easily create and edit your own home videos.
- **Optical Digital Audio Output:** This high-quality digital interface transmits digital audio data via light pulses. Transfer crystal clear digital audio to your MiniDisc recorder.
- **Digital Studio Software**: Enjoy all of your computer's audio and video capabilities with component-like applications that allow you to creatively manipulate digital still images, video clips, and audio tracks.
- **50 free hours of Internet access:** Use the Internet for up to 50 free hours when you sign up with GTE (no credit card required). Limit of two hours per day. Free access expires after 50 hours or 90 days after signing up--whichever occurs first.
- **Preinstalled software titles**: All the software on your computer is preinstalled, configured, and ready for you to use right out of the box.
- **Windows® 98**: Your system includes the latest operating system from Microsoft.
- **Communications:** Access popular online services, browse the Internet, send faxes, and more.

Unpacking Your Computer

Computer and Supplied Accessories

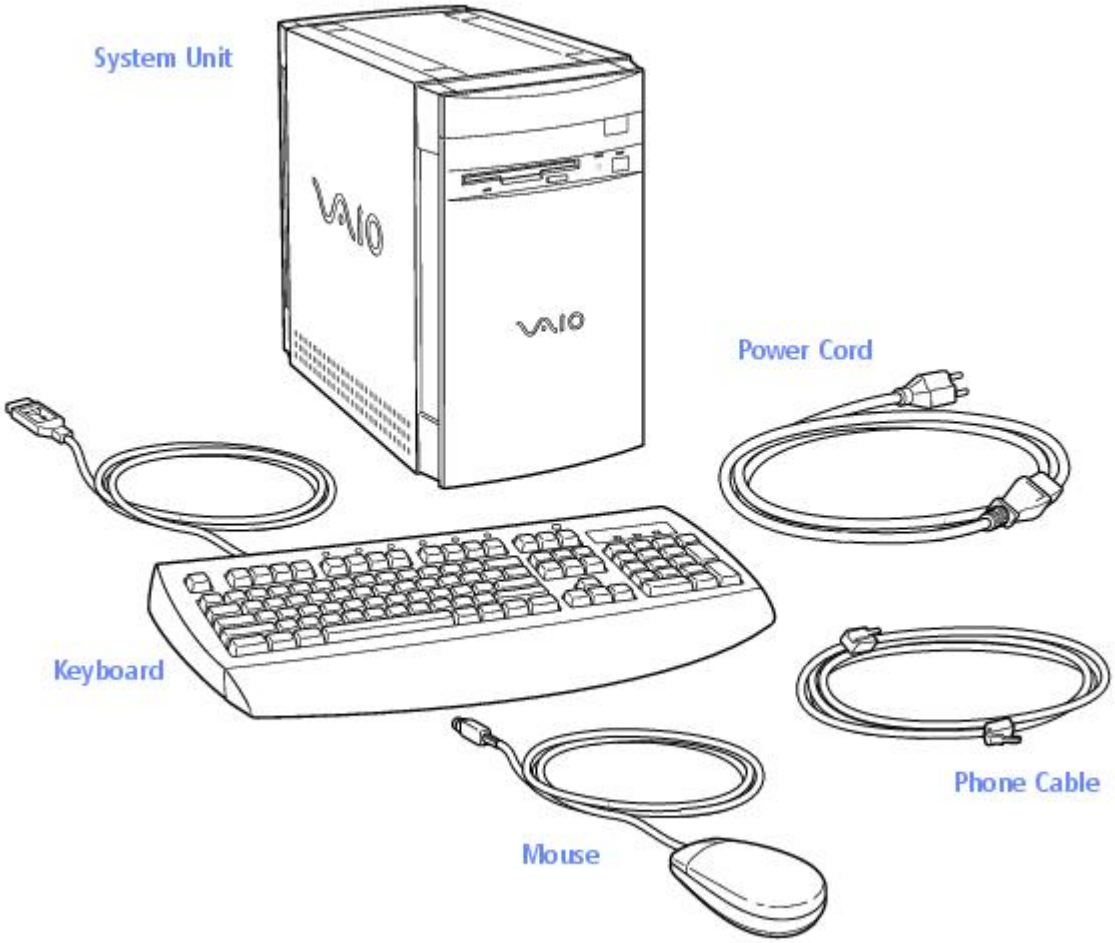

Manuals

- *Read Me First* (this manual) contains features and specifications of your computer. It also includes information on the applications included with your system, how to contact software vendors, and last minute troubleshooting tips.
- The *VAIO Digital Studio Computer User Guide* describes how to get started with your computer, find help, and solve common problems.
- The *Microsoft® Windows®98 Getting Started* manual explains how to use the basic features of the Windows operating system.

Recovery CDs

- System Recovery CD(s)
- Application Recovery CD(s)

Other

- Setting up your VAIO Digital Studio Computer (poster)
- Packet containing special product offers

Software Library

The Software Library contains the Microsoft software license agreement, Sony end-user license agreement, and the following CDs:

- Adobe PhotoDeluxe® Business Edition 3.0
- Gremlin Interactive Ltd. MotorHead
- Microsoft® Encarta® 99 Encyclopedia
- Microsoft® Money/Microsoft® Works

Back Panel Overview

The back panel of your computer contains the connectors where you plug in supplied and optional accessories. The icons on the back panel serve as a map to help you locate the connectors on your computer.

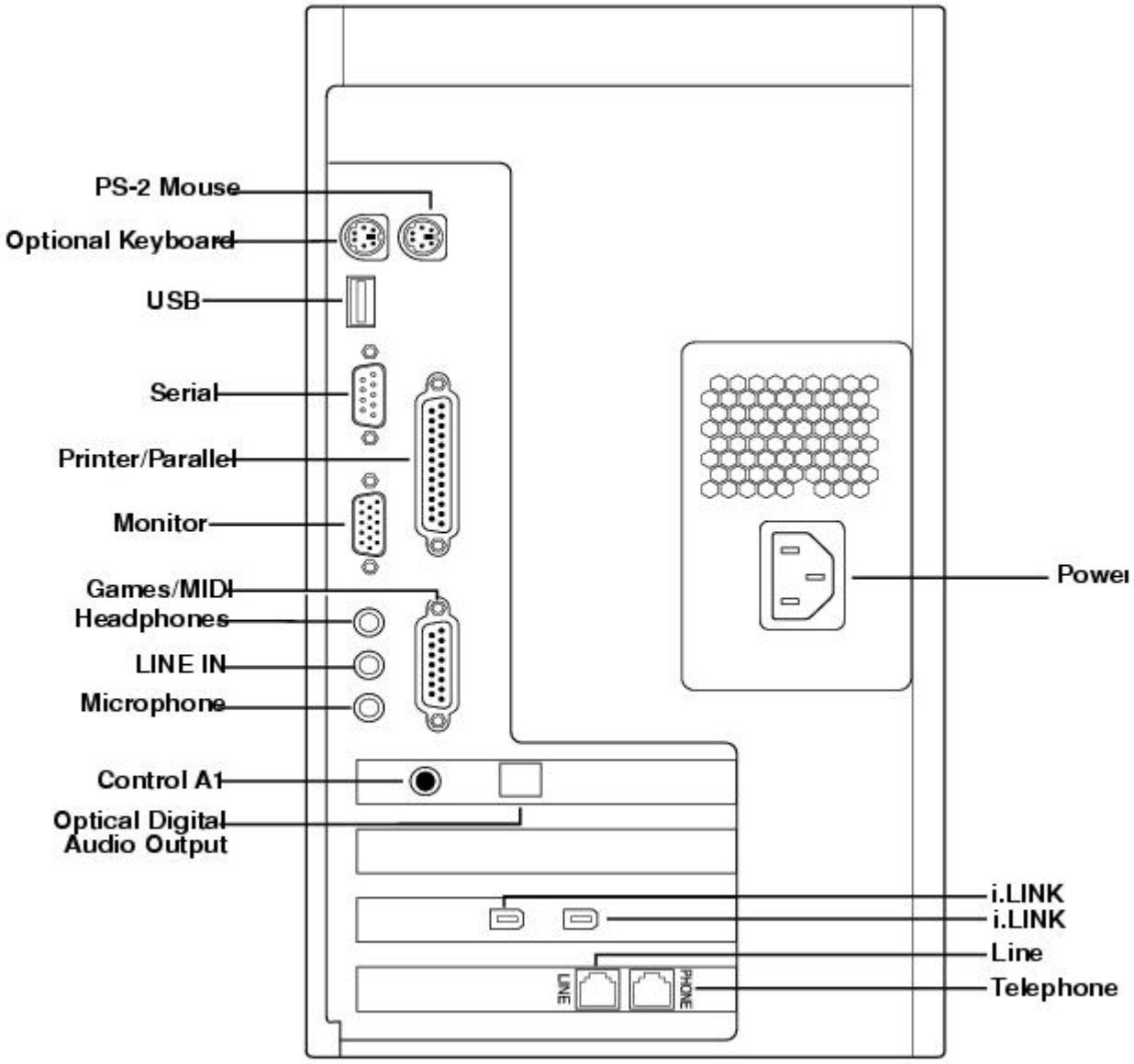

For your convenience, your computer includes USB and i.LINK connectors on both the front and back panels, allowing you to connect to either set of connectors. i.LINK connectors on the back of your system are 6-pin connectors.

Front Panel Overview

The front panel of your VAIO Digital Studio Computer allows for access to the diskette and CD-RW drives. It also includes USB and i.LINK ports to connect USB devices, CD changers, MiniDisc drives, or other components.

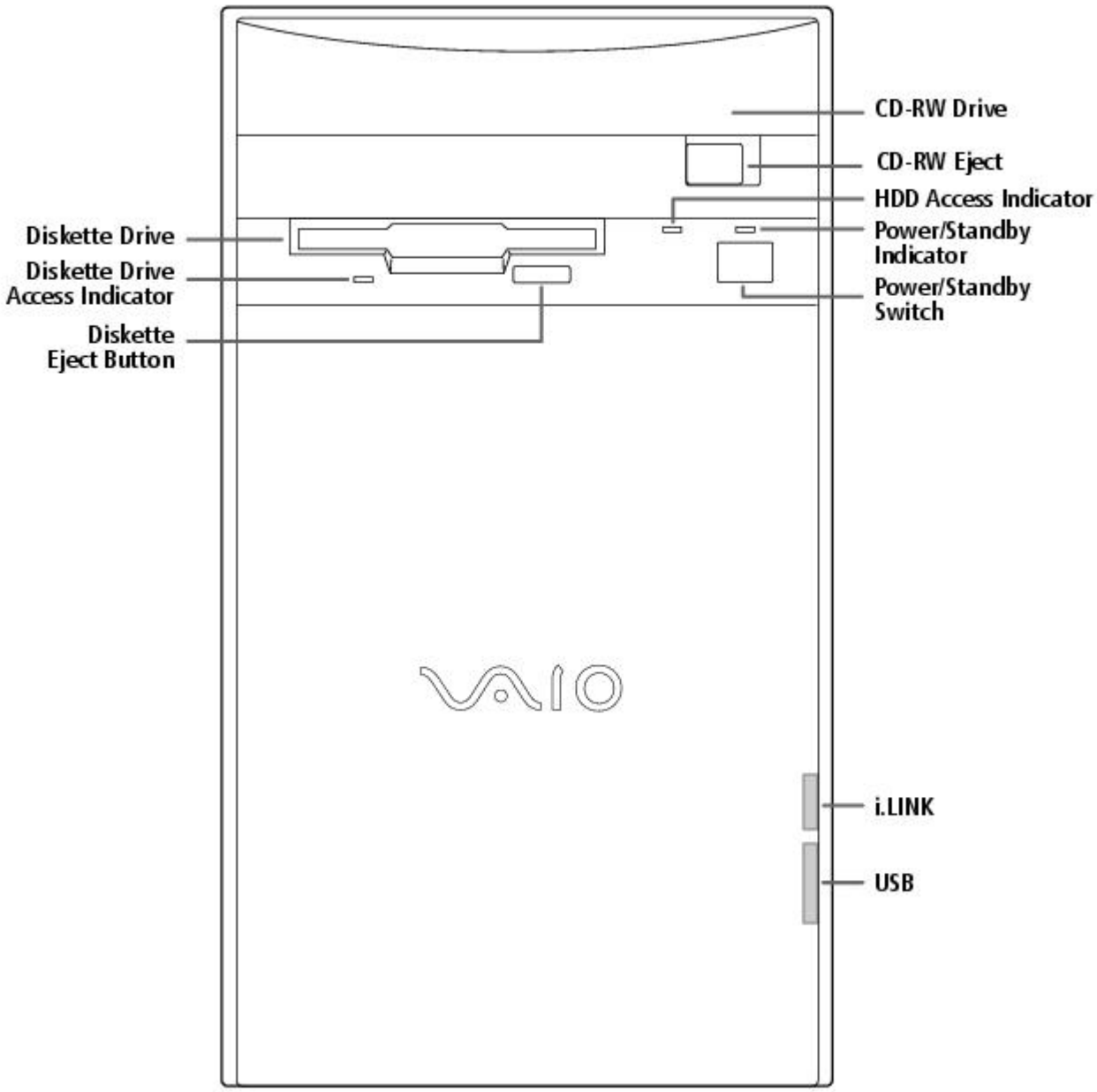

For your convenience, your computer includes USB and i.LINK connectors on both the front and back panels, allowing you to connect to either set of connectors. The i.LINK connector on the front of your system is a 4-pin connector.

Supplementary Information

For the most recent version of this manual, see the online version of Read Me First. You can access this document from the Windows Start Menu by selecting Programs/VAIO Documentation.

Hard Drive Partition

In order to improve the performance of your computer's DVgate Motion software, the hard disk drive on your computer has been formatted with two partitions, C and D. DVgate Motion saves files to the D partition. This prevents large video captures from consuming the available space on your C partition. To maintain optimum performance of DVgate Motion, you should defragment regularly.

VAIO Smart Keyboard Default Settings

The VAIO Smart Keyboard programmable buttons come with the following applications as their default settings:

S1 - Easy Internet Access Browser (Internet)

S2 - Outlook 98 (Mail)

S3 - MotorHead (Game)

S4 - Microsoft® Works (Work)

S5 - Quicken 99 Basic (Finance)

S6 - VAIO Documentation (Help)

All six buttons are reprogrammable.

Using The Standby Mode

To Put Your Computer into Standby Mode

When you are done using your computer, you can put it in Standby mode rather than turn it off completely. There are four ways to put your computer into Standby mode.

- Touch the power switch on the front panel.
- Click Shut Down at the bottom of the Start menu to display the Shut Down Windows dialog box. Select Stand by, and then click OK.
- Press the Standby button on the VAIO Smart Keyboard (the half moon icon).
- Change the timer settings for Standby mode in the Control Panel, as follows:

1. From the Start menu, point to Settings and click Control Panel.
2. Click the Power Management icon.
3. On the Power Schemes tab, change the Power scheme to Home/Office Desk.
4. In the list box for System standby, select an interval of time.
5. Click the OK button and close the Control Panel.

To Resume from Standby Mode

There are two ways to resume system functionality when your computer is in Standby mode. Use either of the following methods.

- Press any key on your keyboard, such as the Enter key.
- Touch the power switch on the front panel.

It may take up to 30 seconds for your system to recover stored information and resume functionality. The screen remains blank while the system is resuming functionality.

Applications That Use the TWAIN Driver

Digital imaging applications, such as Adobe PhotoDeluxe®, allow you to transfer images to your computer from external devices, including scanners or digital cameras. For some devices, a TWAIN driver window appears on the screen. Always close the TWAIN driver window before exiting or minimizing a digital imaging application.

Restoring Outlook 98

For the Add New Components functionality to be available with Microsoft Outlook, you must first run the installation program for Outlook from the Application Recovery CD. When prompted to install the program, select Exit. This decompresses the software, making the Add New Components functionality available.

Inserting Add-in Boards

Your VAIO Digital Studio Computer accommodates PCI add-in boards up to 7.7 inches in length.

Using Devices Connected to the i.LINK (IEEE 1394), S-Link (Control-A1), and Optical Digital Audio Output Connectors

For the latest information on devices known to be compatible with the state-of the-art audio, video, and graphics capabilities of your VAIO computer, check the Sony web site at http://www.sony.com/pcsupport.

Connecting to i.LINK Ports

Your VAIO computer includes a 4-pin i.LINK connector on the front of the system and two 6-pin i.LINK connectors on the back of the system. A 6-pin i.LINK connector can supply power from the computer to the connected device if the device is equipped with a 6-pin connector. Each 6-pin connector supplies 10V to 12V. The total power supplied by both 6-pin i.LINK connectors cannot exceed 6 watts. A 4-pin i.LINK connector cannot supply power to a connected device.

Capturing and Editing Digital Video Clips

- You can capture digital video clips using a digital video camera recorder and DVgate Motion software. Once the clips are saved as AVI files, they can be edited using DVgate Motion, DVgate Clip, or Adobe Premiere® LE. You cannot capture digital video clips directly using the Capture menu in Adobe Premiere LE. Adobe Premiere LE supports an analog capture board for capturing clips. Your VAIO computer is designed for digital video input.
- If there is no audio data associated with an AVI file, the message "Codec compression error" appears. If you do not wish to associate audio with your AVI file, you can add muted sound data by recording audio with the mute option enabled.
- For best performance, when editing AVI files in Adobe Premiere LE, you should use the default setup parameters that shipped with your system. If you change the default setup and want to reinitialize the parameters, follow these steps:

    1. In the Adobe Premiere LE application, select Compression from the Make menu. The Compression Settings dialog box appears.
    2. In the Method list box, select Sony DV software CODEC.
    3. Click OK to close the screen.
    4. From the Make menu, select Preset. The Preset dialog box appears.
    5. Select the parameters for Time Base, Compress, Output, and Preview Option settings as indicated below.

[Time base]

Time base - 29.97fps (required)

[Compress]

File type - AVI (required)
Compress Program Method - Sony DV software CODEC (required)
Compress Program Depth - Millions colors (No other options)
Quality (No control for this item)
Option: Frames per second - 30 (required)
Option: Basic Key Frames (No control for this item)
Option: Optimize Still Off (recommended)
Data rate - Recompress Off (recommended)

[Output options]

Video - On (required)
Video Size - 720x480
4:3 Aspect - Off (required)
VideoType - Field 2 (recommended)
Audio - On (required)
Audio Rate - 44kHz (required)
Audio Format - 16 Bit Stereo or 16 Bit Monaural (required)
Audio Type - Uncompress (required)
Audio Interleave - 1 frame (recommended)
- Less than 30 frames (required)

Audio Sync - 1.0 (required)
Audio Skew - 0.75 (recommended)
- Less than 1.0 (required)

[Preview Option]

Preview Window Size - 360x240

Note that Adobe Premiere LE does not save the Preview Window Size, but uses a default size of 320 x 213 each time the application launches. We recommend that you change this setting to 360 x 240 to improve the quality of preview clips when editing AVI files.

Using Alternate Browsers with America Online®

To use Internet Explorer or Netscape Navigator as your browser with America Online, follow these steps:

1. From the Start menu, point to Settings and then click Control Panel.
2. Click the Internet icon.
3. Click the Connection tab.
4. Click the "Connect to the Internet using local area network" radio button.
5. Click OK.

Using DVgate Motion

When capturing clips:

- Do not use DVgate Motion when the connected digital video peripheral is in Timer Recording mode, as this could produce a malfunction in the peripheral.
- Captures larger than 2 GB (9 minutes and 30 seconds) are automatically continued in a second file.
- You can record stereo audio (stereo 1) while capturing video. You cannot add audio on the stereo 2 track after capturing the video data.
- You cannot use different audio modes on the same tape. You should perform a separate capture for each audio mode you wish to use.
- DVgate Motion does not support hard disk compression. You should not use disk compression if you are planning to work with DVgate Motion.
- Title data is saved in the flash memory of a digital video camera and is not transferred to tape by DVgate Motion.
- To avoid interruption of capture sessions, you should disable the screen saver.
- The drop frame compensation feature does not provide accurate compensation adjustments for tapes recorded in LP mode.
- For tapes that include a mixture of both SP and LP mode, the information displayed by the capture progress indicator may not be accurate.
- Make sure the video head of your digital video device is properly cleaned. Anomalies that you see in captured data could be due to dust or other particles on the video head.
    - The last frame captured is one frame before your selected [OUT] point. The frame you see immediately after clicking the [OUT] button is not captured.

When recording AVI files to tape:

- Do not use DVgate Motion when the connected digital video peripheral is in Timer Recording mode, as this could produce a malfunction in the peripheral.

- You can record only AVI files. MPEG files cannot be recorded.
- To avoid recording problems, such as a single frame appearing in multiple frames, close other applications on your system while recording.
- You cannot use different audio modes on the same tape. If you have AVI files that use different audio modes, they cannot be recorded at the same time, but must be recorded separately.
- Do not attempt to work with AVI files that are smaller than 4 MB.
- DVgate Motion does not support hard disk compression. You should not use disk compression if you are planning to work with DVgate Motion.
- In order to maximize recording capabilities, video and audio data are not available while you are recording.

If DVgate Motion indicates that frames have been dropped, you should try closing all open applications, or you may need to defragment your hard drive.

Restoring Audio Drivers

When you restore the audio drivers from the Application Recovery CD, you need to restart your system to use these drivers. In the Add New Hardware wizard that appears when you restart, click the Next button until you are prompted for the location of the drivers. The audio drivers are located on the Application Recovery CD in G:\drivers\audio\AL98091701\English.

Using AC-3® to Optical Digital Audio Output

MiniDisc player/recorders, DAT player/recorders, and older digital receivers do not support Dolby® Digital (AC-3). You should not use the AC-3 to Optical Digital Audio Output option unless you are using a device that supports Dolby Digital. Please refer to the manual supplied with your equipment to determine if it supports Dolby Digital. If you are unsure and you have selected the AC-3 to Optical Digital Audio Output option, turn down the volume on your equipment before using the DVD player.

Using America Online or Sony Online Support with WinFax® Basic Edition

Once you have configured WinFax Basic Edition, it is automatically available for your use. You cannot use America Online or Sony Online Support when the automatic fax receive feature of WinFax Basic Edition is on. To disable this feature, right click the WinFax icon in the task tray at the bottom right corner of your screen, and then select Exit.

Memory Upgrade Specifications

When upgrading memory, use only 3.3V 64-bit PC-100 168 PIN SDRAM DIMM modules. For more information on Digital Studio Computer compatible memory, call Sony at 1-888-4SONYPC (1-888-476-6972).

About the Software On Your Computer

Your VAIO Digital Studio computer is ready to help you work, play, learn, and communicate as soon as you turn it on. This section gives you an overview of the activities you can perform with your software titles. For support information, see For Answers to Your Software Questions.

Adobe Acrobat® Reader

Adobe Systems Incorporated

Acrobat Reader software allows you to view, navigate, and print electronic documents in Adobe Portable Document Format (PDF), an open file format that is intended to preserve the fidelity of documents created on all major computer platforms.

Adobe PhotoDeluxe® Business Edition

Adobe Systems Incorporated

Create amazing photo effects with PhotoDeluxe. Without learning complex software, you can

enhance, restore, and be creative with your photos. Includes built-in guided activities, stock photos, clip art, and templates to assist you.

Adobe Premiere® LE

Adobe Systems Incorporated

Adobe Premiere LE offers an interface and editing tool for producing movies for video, multimedia, or the web. View source clips and edited footage simultaneously in the monitor window. Create video clips up to three hours long with complete audio-video synchronization.

America Online®

America Online

America Online is the world's most popular Internet online service. Stay in touch with family and friends with Easy-to-Use E-mail, manage your personal finances, get the latest news and sports scores, and chat with thousands of others who share your interests.

AT&T WorldNet® Service

AT&T

Fast, reliable Internet access from AT&T WorldNet Service. AT&T WorldNet Service provides web-based e-mail, a personalized start page from Excite, easy access to the Excite search engine, free web pages, online and live agent technical support, instant messaging, and special shopping discounts at Market Square.

CompuServe®

CompuServe, Inc.

CompuServe is the most comprehensive source of organized business and educational information online today. CompuServe allows you to access the vastness of the Internet without wasting time wading through it. Maximize your time online with CompuServe.

Digital Media Park

Sony Electronics

An integrated suite of multimedia cataloging and playback programs including Media Bar, Media Library, Media Showcase, and MiniDisc Editor. Manage your music by cataloging your entire CD collection, and then create custom MiniDiscs of your favorite songs.

Dr. Solomon's® Anti-Virus

Dr Solomon's Software Inc.

Dr. Solomon's Anti-Virus provides the most comprehensive defense against the spread of viruses, including macro viruses. It can scan inside compressed files and automatically protects your system against viruses sent via e-mail or Internet download.

DVgate Motion

Sony Electronics

Connect a digital video camera recorder to the i.LINK connector and capture your own video clips. You can edit the clips from your video, add others, and combine clips into new movie segments.

DVgate Still

Sony Electronics

Connect a digital video camera recorder to the i.LINK connector and capture your own still images. You can save your images in a variety of popular file formats.

EarthLink Sprint TotalAccess

EarthLink Network, Inc.

An Internet Service Provider that supplies access, information, and assistance to its customers, introducing them to the Internet. Member benefits include e-mail, newsgroups, a Personal Start Page, a free 6 MB web site, a member magazine, and 24-hour technical support.

Microsoft® Encarta® 99 Encyclopedia

Microsoft Corporation

Microsoft Encarta Encyclopedia combines current, comprehensive content with up-to-date multimedia technology, providing users with unique, engaging learning experiences. With the 1999 edition, Encarta provides a wealth of information resources and unique interactive features

Microsoft® Internet Explorer for Windows® 98

Microsoft Corporation

Internet Explorer delivers the web the way you want it. It's safe, easy to use, and you can personalize how you access the web. Outlook Express and other tools in Internet Explorer also help you have a great experience when you are on the web!

Microsoft® Money 99

Microsoft Corporation

Microsoft Money 99 is personal finance software that lets you perform your financial tasks, everything from paying bills to planning for the future, in a smarter, faster way. With Money's online services, you can pay bills and bank from the comfort of home.

Microsoft® Outlook® 98

Microsoft Corporation

Outlook 98 is Microsoft's premier messaging and collaboration client. It combines the leading support for Internet standards-based messaging systems with integrated calendar, contact, and task-management features.

Microsoft® Works

Microsoft Corporation

Works provides users with the right set of core tools that allows them to write letters and reports, track family and friends with the address book, manage home finances, and create a home inventory.

MotorHead

Gremlin Interactive Ltd.

MotorHead is realistic arcade-racing; high-velocity entertainment that puts you behind the wheel for 3D pure racing action. Power across Europe and USA in the Transatlantic Speed League, where second place is simply not an option.

Netscape Communicator®

Netscape Communications

Netscape Communicator is the all-in-one Internet tool that makes it easy to browse the web, send Internet e-mail, chat, read newsgroups, and compose great web documents.

PictureGear

Sony Electronics

This image management software displays images from your hard drive, a Sony digital still camera, or a Sony Mavica® camera. The images appear in a convenient light-table format, so that you can easily view the contents of an entire folder.

Prodigy Internet

Prodigy Communications Corporation

An Internet service that helps you find what you need online faster and smarter. Prodigy delivers powerful online content, such as sports scores, stock quotes, news, and easy access to Excite , plus a personal e-mail account and quality customer service, all at a competitive price.

Quicken® Basic 99

Intuit, Inc

Quicken is the fastest, easiest way to organize your finances. Quicken works just like your checkbook, so it's easy to learn and use. Quicken manages all of your finances, bank accounts, credit cards, investments, and loans. You can even pay your bills online.

SurfMonkey

MediaLive, Inc

SurfMonkey is a web browser and online service for kids ages 6-12 that makes the Internet safe, fun, and easy. A talking monkey guides children through web sites and chat rooms, and can read their e-mail out loud. Children cannot go to inappropriate web sites, parents can screen e-mail messages, and chat messages are monitored.

VAIO Smart Keyboard

Sony Electronics

VAIO Smart Keyboard software operates your new easy to use programmable USB keyboard. Six programmable buttons enable you to launch your favorite applications, open frequently used files, access Explorer, or even open your web browser with just the click of a button.

WinFax® Basic Edition

Symantec Corporation

WinFax Basic Edition incorporates an easy-to-use interface that allows you to send and receive faxes easily. Upgrade to WinFax Pro to receive additional features.

About Your Recovery CDs

Application Recovery CD(s)

Sony Electronics

The Application Recovery CD program allows you to reinstall individual applications and device drivers. Use it to restore corrupted or accidentally erased files.

System Recovery CD(s)

Sony Electronics

The System Recovery CD program allows you to restore the software titles that shipped with your computer if they become corrupted or are erased accidentally. It can be used only to restore the hard disk of the Sony computer you purchased.

For Answers to Your Software Questions

Sony Service Center

For the Sony Service Center nearest you, call at 1-888-4SONYPC (1-888-476-6972).

Acrobat® Reader, Adobe PhotoDeluxe® Business Edition , Adobe Premiere® LE (Adobe Systems Incorporated)

Web site http://www.adobe.com/
phone 206-628-2746 (fee-based support)
fax 206-628-5737
e-mail techdocs@adobe.com
hours M-F, 6 AM-5 PM PT

America Online® (America Online)

Web site http://www.aol.com/
phone 800-827-3338
hours 7 days a week, 6 AM - 2 PM ET

AT&T WorldNet® Service (AT&T)

Web site http://www.att.net/*
phone 800-400-1447
e-mail worldnet@attmail.com
hours 7 days a week, 24 hours a day

* You must be a WorldNet Service customer to access online support.

CompuServe® Interactive (CompuServe Interactive, Inc.)

Web site http://www.compuserve.com/
phone 800-848-8990
hours M-F, 8 AM - 1 AM ET, S-S 10 AM - 10 PM ET

Dr. Solomon's® Anti-Virus (Dr. Solomon's Software Inc.)

Web site http://www.drsolomon.com/
phone 888-377-6566
e-mail support@us.drsolomon.com
hours 7 days a week, 24 hours a day

EarthLink Sprint TotalAccess (EarthLink Network, Inc.)

Web site http://help.earthlink.net/techsupport/
phone 800-395-8410
e-mail support@earthlink.net
hours 7 days a week, 24 hours a day

Easy Internet Access (Encompass, Inc.)

Web site http://www.encmpss.com/
phone 800-927-3000
hours 7 days a week, 24 hours a day

MotorHead (Gremlin Interactive Ltd.)

Web site http://www.gremlin.com/
phone 888-4SONYPC (888-476-6972)
hours 7 days a week, 24 hours a day

Windows® 98 Operating System, Works, Money, Encarta, Internet Explorer (Microsoft Corporation)

Web site http://www.microsoft.com/support/
phone 888-4SONYPC (888-476-6972)*
hours 7 days a week, 24 hours a day
* Support from 1-888-4SONYPC is free of charge for 90 days after the original date of purchase.

Netscape Communicator® (Netscape Communications Corporation)

Web site http://www.netscape.com/
phone 888-4SONYPC (888-476-6972)*
hours 7 days a week, 24 hours a day
* Support from 1-888-4SONYPC is free of charge for 90 days after the original date of purchase.

Prodigy Internet (Prodigy Communications Corporation.)

Web site http://www.prodigy.com/
phone 800-PRODIGY
hours 7 AM - 3 AM ET

Quicken® Basic (Intuit Inc.)

Web site http://www.intuit.com/support/
phone 900-555-4688
hours 7 days a week, 24 hours a day

SurfMonkey (MediaLive, Inc.)

Web site http://www.surfmonkey.com/support/Sub_support.html
phone 408-556-2060
e-mail support@surfmonkey.com
hours 9AM-10PM PT everyday

WinFax® Basic Edition (Symantec Corporation.)

Web site http://www.symantec.com/techsupp/
phone 800-798-0850
fax 800-554-4403 in North America
541-984-2490 outside North America

Specifications

Model **PCV-E518DS**
Processor 500 MHz Pentium® III
Hard Disk Drive 17.28 GB
Standard SDRAM 128 MB PC-100 SDRAM, expandable to 256 MB
Video RAM 8 MB SDRAM
MPEG "Sony Tuned" MPEG Digital Video supports full-screen video playback
Graphics 3D 2X AGP graphics acceleration (Matrox)
Sound Capabilities 3D Positional Audio (Aureal A3D)
Diskette Drive 3.5" 1.44 MB FDD
CD-RW Drive CD-RW Drive (4X max. CD-R writing, 2X max. CD-RW writing, 24X max. reading)
Modem K56flex technology/V.90 compatible data/fax modem[1]
Expansion Capabilities One PCI slot
One additional hard disk drive bay
Connection Capabilities (Front) USB port
i.LINK port (4-pin)
Connection Capabilities (Rear) Optional Keyboard (PS/2-style)
Mouse (PS/2-style)
USB port
Serial port
Parallel (printer)
Game/MIDI
Headphones
Line In
Microphone
VGA Monitor
S-Link (Control-A1)
Optical Digital Audio Out
Two i.LINK ports (6-pin)[2]
Modem line (RJ-11)
Phone line (RJ-11)
Supplied Accessories VAIO Smart keyboard
Sony two-button mouse
RJ-11 phone cable
Power cord
Service 90-day limited service. Extendible to one year from original date of purchase upon registration[3]
Limited Warranty 90-day parts/labor standard. Extendible to one year from original date of purchase upon registration[4]

Power Requirements 200 watts maximum
Dimensions 7" (w) x 12" (h) x 13 3/4" (d) (178mm x 304mm x 330mm)
Weight 17 lbs. (7.71 kg)
Operating Temperature 50º F to 95º F (+10º C to 35º C)

[1] Maximum speed for faxing is 14.4 kbytes/s. Your modem is capable of downloading at 56 kbytes/s using K56flex technology or V.90. Your phone service, online service, or Internet Service Provider however, may not support this technology or operate at this speed.

[2] Six-pin i-LINK connectors on the rear of the system each supply 10V to 12V. The combined total wattage that can be supplied by the two connectors is 6 watts.

[3] Certain restrictions apply

[4] Certain restrictions apply

Specifications are subject to change without notice.

This product meets the standards of the International Energy Star Program for energy efficiency.

© 1999 Sony Electronics Inc. Reproduction in w hole or in part w ithout w ritten permission is prohibited. All rights reserved.

Read Me First

Welcome

Congratulations on your purchase of the Sony VAIO Digital Studio Computer. Sony has combined leading-edge technology in audio, video, computing, and communications to provide you with state-of-the-art personal computing.

Features

 For a complete description of the specifications of your VAIO Digital Studio Computer, see Specifications.

- **Exceptional performance:** Your computer includes a brand new Intel® Pentium® III processor, a CD-RW drive, and a V.90 compatible data/fax modem.*

* Actual upload and download speeds may vary due to line conditions, ISP support, and government regulations.

- **CD-RW drive:** This drive is the ideal solution for making backups and data archiving, with the ability to store up to 650 MB* of removable, rewritable storage on a single rewritable CD. Save your movies to CD-R or CD-RW media and share videos and images with family and friends.

***** 530 MB after formatting.

- **VAIO Smart Keyboard:** This USB keyboard has programmable shortcut buttons for launching your favorite programs or accessing the Internet.
- **Sony audio and video quality:** High-fidelity positional 3D audio system (A3D), high-powered 3D graphics (AGP), and "Sony-Tuned" MPEG digital video playback enable you to take advantage of today's advanced multimedia applications, games, and entertainment software.
- **S-Link (Control-A1):** This technology allows you to build a database of all your music and video CDs and then record your favorite audio selections on MiniDiscs. Use your computer with a 200 disc mega-storage CD changer and a MiniDisc recording deck.
- **i.LINK (IEEE 1394):** Three built-in i.LINK ports provide you with maximum digital connection capability. The i.LINK name and logo identify a digital interface (IEEE 1394) for high speed communication. By using your VAIO Digital Studio Computer, a Sony Digital Handycam® Camcorder, the DVgate software preinstalled on your computer, and the i.LINK (IEEE 1394) interface, you can easily create and edit your own home videos.
- **Optical Digital Audio Output:** This high-quality digital interface transmits digital audio data via light pulses. Transfer crystal clear digital audio to your MiniDisc recorder.
- **Digital Studio Software**: Enjoy all of your computer's audio and video capabilities with component-like applications that allow you to creatively manipulate digital still images, video clips, and audio tracks.
- **50 free hours of Internet access:** Use the Internet for up to 50 free hours when you sign up with GTE (no credit card required). Limit of two hours per day. Free access expires after 50 hours or 90 days after signing up--whichever occurs first.
- **Preinstalled software titles**: All the software on your computer is preinstalled, configured, and ready for you to use right out of the box.
- **Windows® 98**: Your system includes the latest operating system from Microsoft.
- **Communications:** Access popular online services, browse the Internet, send faxes, and more.

Unpacking Your Computer

Computer and Supplied Accessories

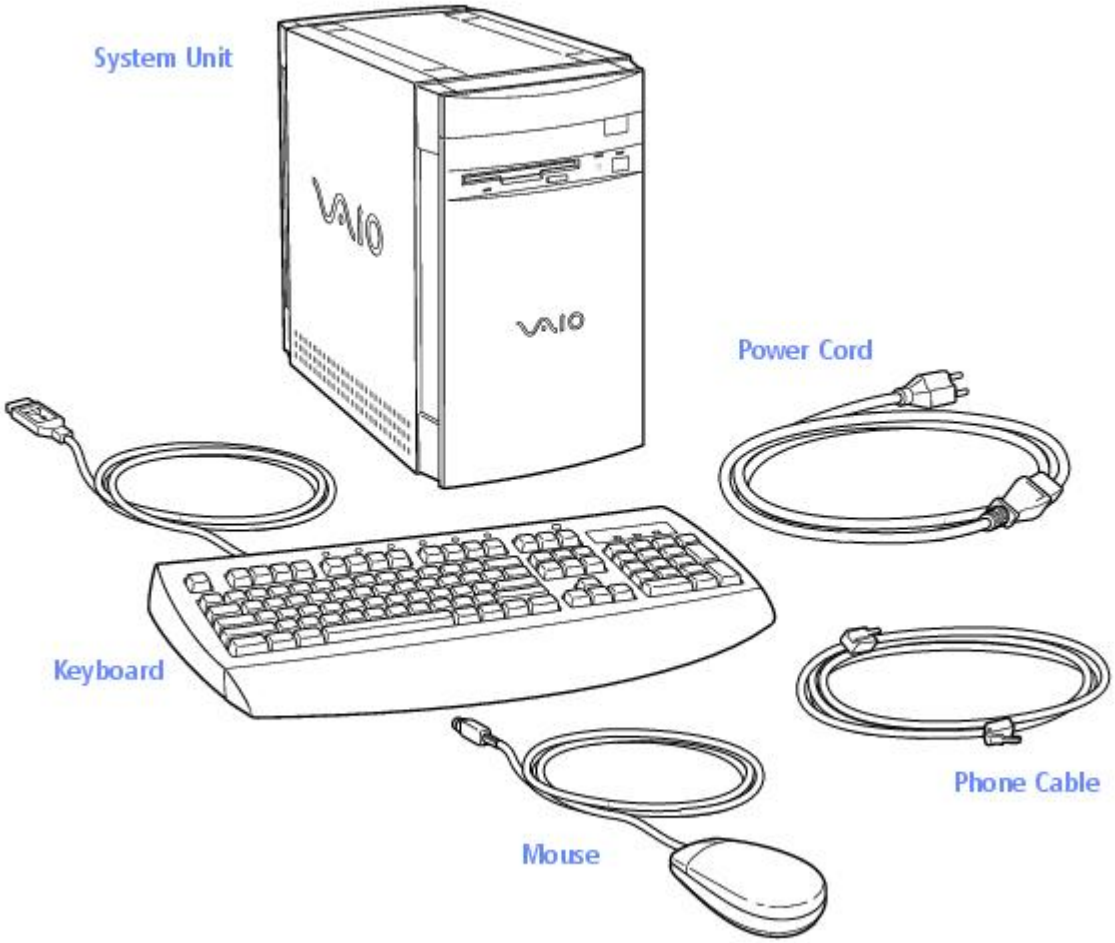

Manuals

- *Read Me First* (this manual) contains features and specifications of your computer. It also includes information on the applications included with your system, how to contact software vendors, and last minute troubleshooting tips.
- The *VAIO Digital Studio Computer User Guide* describes how to get started with your computer, find help, and solve common problems.
- The *Microsoft® Windows®98 Getting Started* manual explains how to use the basic features of the Windows operating system.

Recovery CDs

- System Recovery CD(s)
- Application Recovery CD(s)

Other

- Setting up your VAIO Digital Studio Computer (poster)
- Packet containing special product offers

Software Library

The Software Library contains the Microsoft software license agreement, Sony end-user license agreement, and the following CDs:

- Adobe PhotoDeluxe® Business Edition 3.0
- Gremlin Interactive Ltd. MotorHead
- Microsoft® Encarta® 99 Encyclopedia
- Microsoft® Money/Microsoft® Works

Back Panel Overview

The back panel of your computer contains the connectors where you plug in supplied and optional accessories. The icons on the back panel serve as a map to help you locate the connectors on your computer.

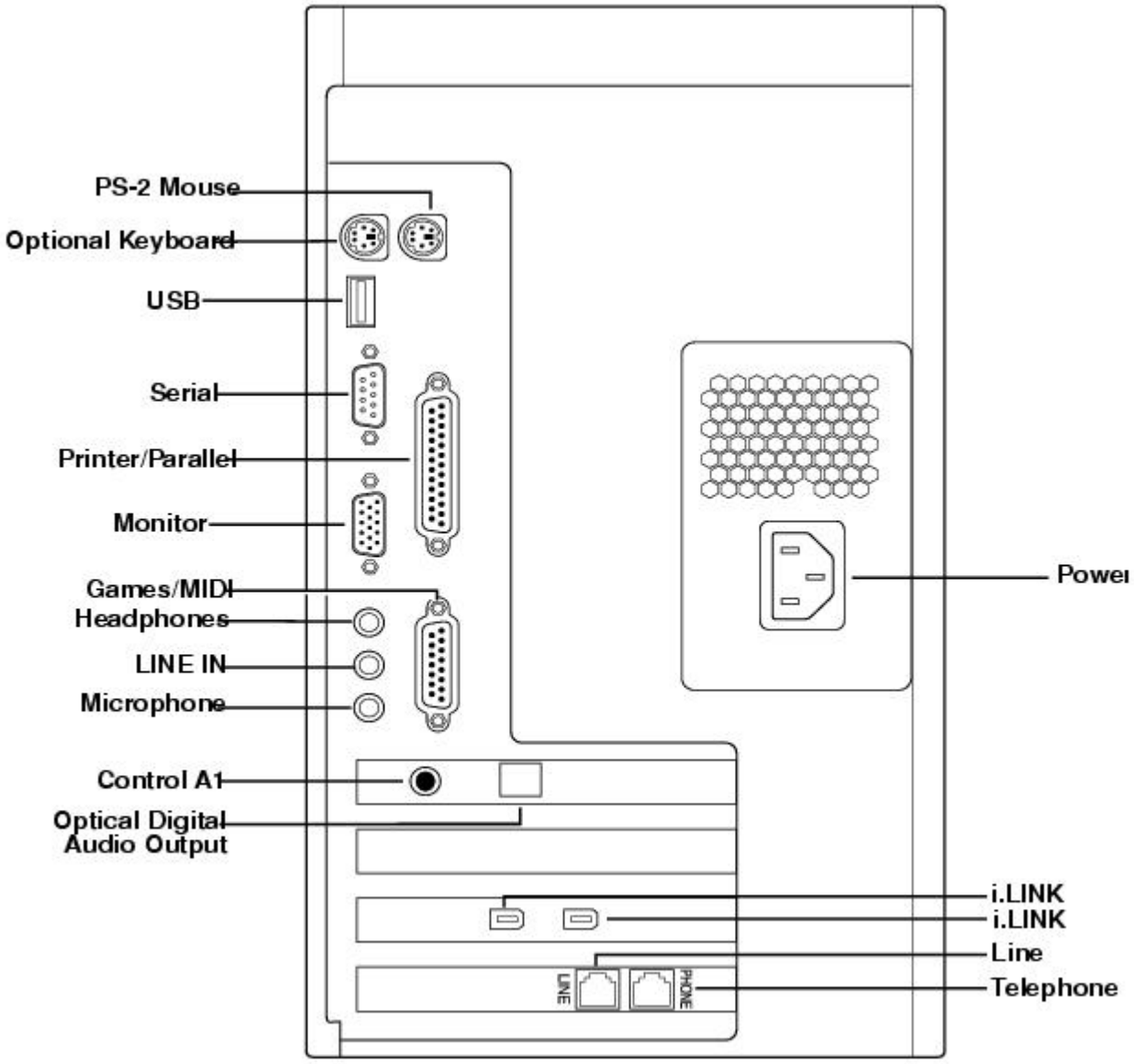

For your convenience, your computer includes USB and i.LINK connectors on both the front and back panels, allowing you to connect to either set of connectors. i.LINK connectors on the back of your system are 6-pin connectors.

Front Panel Overview

The front panel of your VAIO Digital Studio Computer allows for access to the diskette and CD-RW drives. It also includes USB and i.LINK ports to connect USB devices, CD changers, MiniDisc drives, or other components.

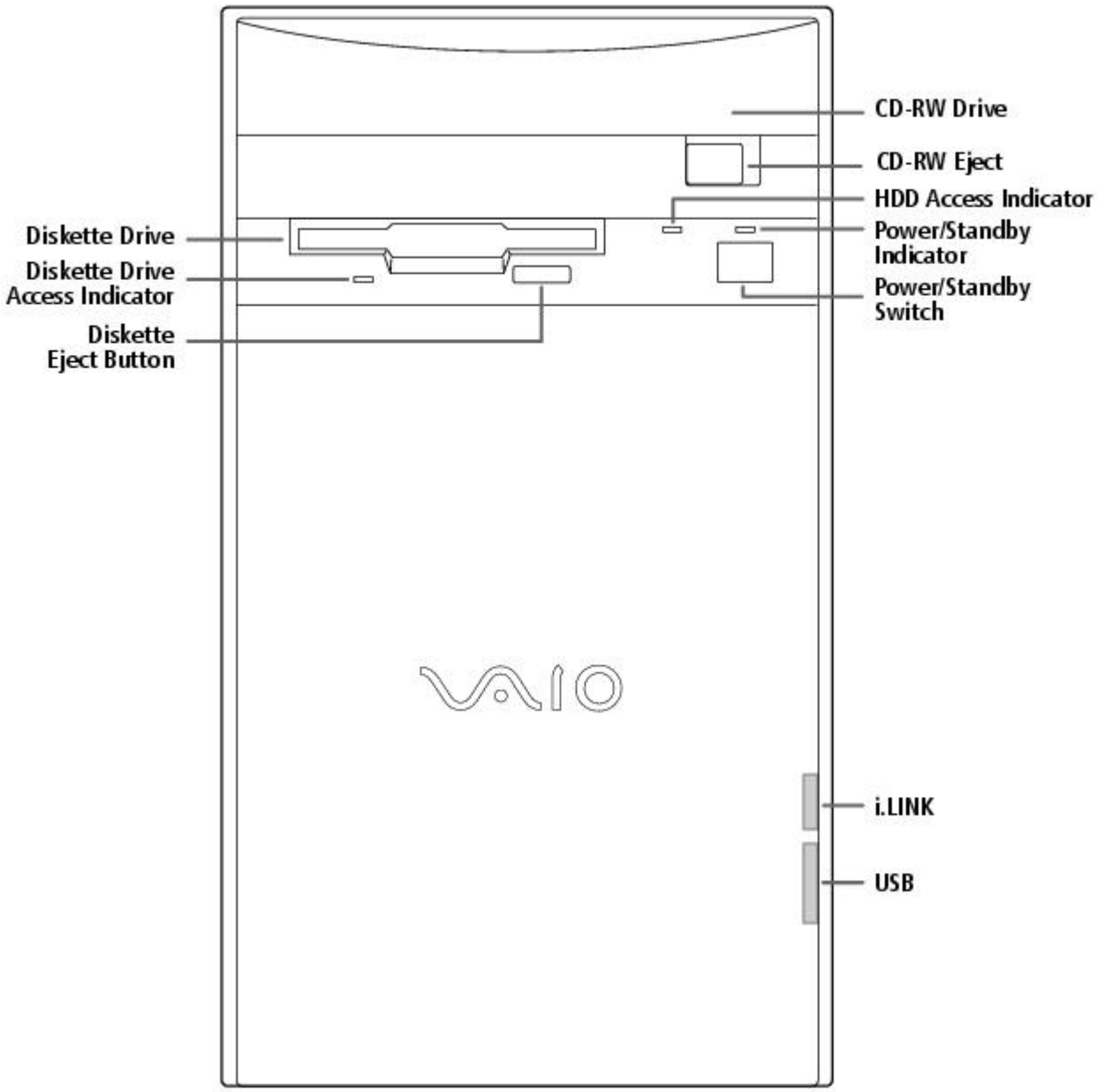

For your convenience, your computer includes USB and i.LINK connectors on both the front and back panels, allowing you to connect to either set of connectors. The i.LINK connector on the front of your system is a 4-pin connector.

Supplementary Information

For the most recent version of this manual, see the online version of Read Me First. You can access this document from the Windows Start Menu by selecting Programs/VAIO Documentation.

Hard Drive Partition

In order to improve the performance of your computer's DVgate Motion software, the hard disk drive on your computer has been formatted with two partitions, C and D. DVgate Motion saves files to the D partition. This prevents large video captures from consuming the available space on your C partition. To maintain optimum performance of DVgate Motion, you should defragment regularly.

VAIO Smart Keyboard Default Settings

The VAIO Smart Keyboard programmable buttons come with the following applications as their default settings:

S1 - Easy Internet Access Browser (Internet)

S2 - Outlook 98 (Mail)

S3 - MotorHead (Game)

S4 - Microsoft® Works (Work)

S5 - Quicken 99 Basic (Finance)

S6 - VAIO Documentation (Help)

All six buttons are reprogrammable.

Using The Standby Mode

To Put Your Computer into Standby Mode

When you are done using your computer, you can put it in Standby mode rather than turn it off completely. There are four ways to put your computer into Standby mode.

- Touch the power switch on the front panel.
- Click Shut Down at the bottom of the Start menu to display the Shut Down Windows dialog box. Select Stand by, and then click OK.
- Press the Standby button on the VAIO Smart Keyboard (the half moon icon).
- Change the timer settings for Standby mode in the Control Panel, as follows:

1. From the Start menu, point to Settings and click Control Panel.
2. Click the Power Management icon.
3. On the Power Schemes tab, change the Power scheme to Home/Office Desk.
4. In the list box for System standby, select an interval of time.
5. Click the OK button and close the Control Panel.

To Resume from Standby Mode

There are two ways to resume system functionality when your computer is in Standby mode. Use either of the following methods.

- Press any key on your keyboard, such as the Enter key.
- Touch the power switch on the front panel.

It may take up to 30 seconds for your system to recover stored information and resume functionality. The screen remains blank while the system is resuming functionality.

Applications That Use the TWAIN Driver

Digital imaging applications, such as Adobe PhotoDeluxe®, allow you to transfer images to your computer from external devices, including scanners or digital cameras. For some devices, a TWAIN driver window appears on the screen. Always close the TWAIN driver window before exiting or minimizing a digital imaging application.

Restoring Outlook 98

For the Add New Components functionality to be available with Microsoft Outlook, you must first run the installation program for Outlook from the Application Recovery CD. When prompted to install the program, select Exit. This decompresses the software, making the Add New Components functionality available.

Inserting Add-in Boards

Your VAIO Digital Studio Computer accommodates PCI add-in boards up to 7.7 inches in length.

Using Devices Connected to the i.LINK (IEEE 1394), S-Link (Control-A1), and Optical Digital Audio Output Connectors

For the latest information on devices known to be compatible with the state-of the-art audio, video, and graphics capabilities of your VAIO computer, check the Sony web site at http://www.sony.com/pcsupport.

Connecting to i.LINK Ports

Your VAIO computer includes a 4-pin i.LINK connector on the front of the system and two 6-pin i.LINK connectors on the back of the system. A 6-pin i.LINK connector can supply power from the computer to the connected device if the device is equipped with a 6-pin connector. Each 6-pin connector supplies 10V to 12V. The total power supplied by both 6-pin i.LINK connectors cannot exceed 6 watts. A 4-pin i.LINK connector cannot supply power to a connected device.

Capturing and Editing Digital Video Clips

- You can capture digital video clips using a digital video camera recorder and DVgate Motion software. Once the clips are saved as AVI files, they can be edited using DVgate Motion, DVgate Clip, or Adobe Premiere® LE. You cannot capture digital video clips directly using the Capture menu in Adobe Premiere LE. Adobe Premiere LE supports an analog capture board for capturing clips. Your VAIO computer is designed for digital video input.
- If there is no audio data associated with an AVI file, the message "Codec compression error" appears. If you do not wish to associate audio with your AVI file, you can add muted sound data by recording audio with the mute option enabled.
- For best performance, when editing AVI files in Adobe Premiere LE, you should use the default setup parameters that shipped with your system. If you change the default setup and want to reinitialize the parameters, follow these steps:

    1. In the Adobe Premiere LE application, select Compression from the Make menu. The Compression Settings dialog box appears.
    2. In the Method list box, select Sony DV software CODEC.
    3. Click OK to close the screen.
    4. From the Make menu, select Preset. The Preset dialog box appears.
    5. Select the parameters for Time Base, Compress, Output, and Preview Option settings as indicated below.

[Time base]

Time base - 29.97fps (required)

[Compress]

File type - AVI (required)
Compress Program Method - Sony DV software CODEC (required)
Compress Program Depth - Millions colors (No other options)
Quality (No control for this item)
Option: Frames per second - 30 (required)
Option: Basic Key Frames (No control for this item)
Option: Optimize Still Off (recommended)
Data rate - Recompress Off (recommended)

[Output options]

Video - On (required)
Video Size - 720x480
4:3 Aspect - Off (required)
VideoType - Field 2 (recommended)
Audio - On (required)
Audio Rate - 44kHz (required)
Audio Format - 16 Bit Stereo or 16 Bit Monaural (required)
Audio Type - Uncompress (required)
Audio Interleave - 1 frame (recommended)
- Less than 30 frames (required)

Audio Sync - 1.0 (required)
Audio Skew - 0.75 (recommended)
- Less than 1.0 (required)

[Preview Option]

Preview Window Size - 360x240

Note that Adobe Premiere LE does not save the Preview Window Size, but uses a default size of 320 x 213 each time the application launches. We recommend that you change this setting to 360 x 240 to improve the quality of preview clips when editing AVI files.

Using Alternate Browsers with America Online®

To use Internet Explorer or Netscape Navigator as your browser with America Online, follow these steps:

1. From the Start menu, point to Settings and then click Control Panel.
2. Click the Internet icon.
3. Click the Connection tab.
4. Click the "Connect to the Internet using local area network" radio button.
5. Click OK.

Using DVgate Motion

When capturing clips:

- Do not use DVgate Motion when the connected digital video peripheral is in Timer Recording mode, as this could produce a malfunction in the peripheral.
- Captures larger than 2 GB (9 minutes and 30 seconds) are automatically continued in a second file.
- You can record stereo audio (stereo 1) while capturing video. You cannot add audio on the stereo 2 track after capturing the video data.
- You cannot use different audio modes on the same tape. You should perform a separate capture for each audio mode you wish to use.
- DVgate Motion does not support hard disk compression. You should not use disk compression if you are planning to work with DVgate Motion.
- Title data is saved in the flash memory of a digital video camera and is not transferred to tape by DVgate Motion.
- To avoid interruption of capture sessions, you should disable the screen saver.
- The drop frame compensation feature does not provide accurate compensation adjustments for tapes recorded in LP mode.
- For tapes that include a mixture of both SP and LP mode, the information displayed by the capture progress indicator may not be accurate.
- Make sure the video head of your digital video device is properly cleaned. Anomalies that you see in captured data could be due to dust or other particles on the video head.
    - The last frame captured is one frame before your selected [OUT] point. The frame you see immediately after clicking the [OUT] button is not captured.

When recording AVI files to tape:

- Do not use DVgate Motion when the connected digital video peripheral is in Timer Recording mode, as this could produce a malfunction in the peripheral.

- You can record only AVI files. MPEG files cannot be recorded.
- To avoid recording problems, such as a single frame appearing in multiple frames, close other applications on your system while recording.
- You cannot use different audio modes on the same tape. If you have AVI files that use different audio modes, they cannot be recorded at the same time, but must be recorded separately.
- Do not attempt to work with AVI files that are smaller than 4 MB.
- DVgate Motion does not support hard disk compression. You should not use disk compression if you are planning to work with DVgate Motion.
- In order to maximize recording capabilities, video and audio data are not available while you are recording.

If DVgate Motion indicates that frames have been dropped, you should try closing all open applications, or you may need to defragment your hard drive.

Restoring Audio Drivers

When you restore the audio drivers from the Application Recovery CD, you need to restart your system to use these drivers. In the Add New Hardware wizard that appears when you restart, click the Next button until you are prompted for the location of the drivers. The audio drivers are located on the Application Recovery CD in G:\drivers\audio\AL98091701\English.

Using AC-3® to Optical Digital Audio Output

MiniDisc player/recorders, DAT player/recorders, and older digital receivers do not support Dolby® Digital (AC-3). You should not use the AC-3 to Optical Digital Audio Output option unless you are using a device that supports Dolby Digital. Please refer to the manual supplied with your equipment to determine if it supports Dolby Digital. If you are unsure and you have selected the AC-3 to Optical Digital Audio Output option, turn down the volume on your equipment before using the DVD player.

Using America Online or Sony Online Support with WinFax® Basic Edition

Once you have configured WinFax Basic Edition, it is automatically available for your use. You cannot use America Online or Sony Online Support when the automatic fax receive feature of WinFax Basic Edition is on. To disable this feature, right click the WinFax icon in the task tray at the bottom right corner of your screen, and then select Exit.

Memory Upgrade Specifications

When upgrading memory, use only 3.3V 64-bit PC-100 168 PIN SDRAM DIMM modules. For more information on Digital Studio Computer compatible memory, call Sony at 1-888-4SONYPC (1-888-476-6972).

About the Software On Your Computer

Your VAIO Digital Studio computer is ready to help you work, play, learn, and communicate as soon as you turn it on. This section gives you an overview of the activities you can perform with your software titles. For support information, see For Answers to Your Software Questions.

Adobe Acrobat® Reader

Adobe Systems Incorporated

Acrobat Reader software allows you to view, navigate, and print electronic documents in Adobe Portable Document Format (PDF), an open file format that is intended to preserve the fidelity of documents created on all major computer platforms.

Adobe PhotoDeluxe® Business Edition

Adobe Systems Incorporated

Create amazing photo effects with PhotoDeluxe. Without learning complex software, you can

enhance, restore, and be creative with your photos. Includes built-in guided activities, stock photos, clip art, and templates to assist you.

Adobe Premiere® LE

Adobe Systems Incorporated

Adobe Premiere LE offers an interface and editing tool for producing movies for video, multimedia, or the web. View source clips and edited footage simultaneously in the monitor window. Create video clips up to three hours long with complete audio-video synchronization.

America Online®

America Online

America Online is the world's most popular Internet online service. Stay in touch with family and friends with Easy-to-Use E-mail, manage your personal finances, get the latest news and sports scores, and chat with thousands of others who share your interests.

AT&T WorldNet® Service

AT&T

Fast, reliable Internet access from AT&T WorldNet Service. AT&T WorldNet Service provides web-based e-mail, a personalized start page from Excite, easy access to the Excite search engine, free web pages, online and live agent technical support, instant messaging, and special shopping discounts at Market Square.

CompuServe®

CompuServe, Inc.

CompuServe is the most comprehensive source of organized business and educational information online today. CompuServe allows you to access the vastness of the Internet without wasting time wading through it. Maximize your time online with CompuServe.

Digital Media Park

Sony Electronics

An integrated suite of multimedia cataloging and playback programs including Media Bar, Media Library, Media Showcase, and MiniDisc Editor. Manage your music by cataloging your entire CD collection, and then create custom MiniDiscs of your favorite songs.

Dr. Solomon's® Anti-Virus

Dr Solomon's Software Inc.

Dr. Solomon's Anti-Virus provides the most comprehensive defense against the spread of viruses, including macro viruses. It can scan inside compressed files and automatically protects your system against viruses sent via e-mail or Internet download.

DVgate Motion

Sony Electronics

Connect a digital video camera recorder to the i.LINK connector and capture your own video clips. You can edit the clips from your video, add others, and combine clips into new movie segments.

DVgate Still

Sony Electronics

Connect a digital video camera recorder to the i.LINK connector and capture your own still images. You can save your images in a variety of popular file formats.

EarthLink Sprint TotalAccess

EarthLink Network, Inc.

An Internet Service Provider that supplies access, information, and assistance to its customers, introducing them to the Internet. Member benefits include e-mail, newsgroups, a Personal Start Page, a free 6 MB web site, a member magazine, and 24-hour technical support.

Microsoft® Encarta® 99 Encyclopedia

Microsoft Corporation

Microsoft Encarta Encyclopedia combines current, comprehensive content with up-to-date multimedia technology, providing users with unique, engaging learning experiences. With the 1999 edition, Encarta provides a wealth of information resources and unique interactive features

Microsoft® Internet Explorer for Windows® 98

Microsoft Corporation

Internet Explorer delivers the web the way you want it. It's safe, easy to use, and you can personalize how you access the web. Outlook Express and other tools in Internet Explorer also help you have a great experience when you are on the web!

Microsoft® Money 99

Microsoft Corporation

Microsoft Money 99 is personal finance software that lets you perform your financial tasks, everything from paying bills to planning for the future, in a smarter, faster way. With Money's online services, you can pay bills and bank from the comfort of home.

Microsoft® Outlook® 98

Microsoft Corporation

Outlook 98 is Microsoft's premier messaging and collaboration client. It combines the leading support for Internet standards-based messaging systems with integrated calendar, contact, and task-management features.

Microsoft® Works

Microsoft Corporation

Works provides users with the right set of core tools that allows them to write letters and reports, track family and friends with the address book, manage home finances, and create a home inventory.

MotorHead

Gremlin Interactive Ltd.

MotorHead is realistic arcade-racing; high-velocity entertainment that puts you behind the wheel for 3D pure racing action. Power across Europe and USA in the Transatlantic Speed League, where second place is simply not an option.

Netscape Communicator®

Netscape Communications

Netscape Communicator is the all-in-one Internet tool that makes it easy to browse the web, send Internet e-mail, chat, read newsgroups, and compose great web documents.

PictureGear

Sony Electronics

This image management software displays images from your hard drive, a Sony digital still camera, or a Sony Mavica® camera. The images appear in a convenient light-table format, so that you can easily view the contents of an entire folder.

Prodigy Internet

Prodigy Communications Corporation

An Internet service that helps you find what you need online faster and smarter. Prodigy delivers powerful online content, such as sports scores, stock quotes, news, and easy access to Excite , plus a personal e-mail account and quality customer service, all at a competitive price.

Quicken® Basic 99

Intuit, Inc

Quicken is the fastest, easiest way to organize your finances. Quicken works just like your checkbook, so it's easy to learn and use. Quicken manages all of your finances, bank accounts, credit cards, investments, and loans. You can even pay your bills online.

SurfMonkey

MediaLive, Inc

SurfMonkey is a web browser and online service for kids ages 6-12 that makes the Internet safe, fun, and easy. A talking monkey guides children through web sites and chat rooms, and can read their e-mail out loud. Children cannot go to inappropriate web sites, parents can screen e-mail messages, and chat messages are monitored.

VAIO Smart Keyboard

Sony Electronics

VAIO Smart Keyboard software operates your new easy to use programmable USB keyboard. Six programmable buttons enable you to launch your favorite applications, open frequently used files, access Explorer, or even open your web browser with just the click of a button.

WinFax® Basic Edition

Symantec Corporation

WinFax Basic Edition incorporates an easy-to-use interface that allows you to send and receive faxes easily. Upgrade to WinFax Pro to receive additional features.

About Your Recovery CDs

Application Recovery CD(s)

Sony Electronics

The Application Recovery CD program allows you to reinstall individual applications and device drivers. Use it to restore corrupted or accidentally erased files.

System Recovery CD(s)

Sony Electronics

The System Recovery CD program allows you to restore the software titles that shipped with your computer if they become corrupted or are erased accidentally. It can be used only to restore the hard disk of the Sony computer you purchased.

For Answers to Your Software Questions

Sony Service Center

For the Sony Service Center nearest you, call at 1-888-4SONYPC (1-888-476-6972).

Acrobat® Reader, Adobe PhotoDeluxe® Business Edition , Adobe Premiere® LE (Adobe Systems Incorporated)

Web site http://www.adobe.com/
phone 206-628-2746 (fee-based support)
fax 206-628-5737
e-mail techdocs@adobe.com
hours M-F, 6 AM-5 PM PT

America Online® (America Online)

Web site http://www.aol.com/
phone 800-827-3338
hours 7 days a week, 6 AM - 2 PM ET

AT&T WorldNet® Service (AT&T)

Web site http://www.att.net/*
phone 800-400-1447
e-mail worldnet@attmail.com
hours 7 days a week, 24 hours a day

* You must be a WorldNet Service customer to access online support.

CompuServe® Interactive (CompuServe Interactive, Inc.)

Web site http://www.compuserve.com/
phone 800-848-8990
hours M-F, 8 AM - 1 AM ET, S-S 10 AM - 10 PM ET

Dr. Solomon's® Anti-Virus (Dr. Solomon's Software Inc.)

Web site http://www.drsolomon.com/
phone 888-377-6566
e-mail support@us.drsolomon.com
hours 7 days a week, 24 hours a day

EarthLink Sprint TotalAccess (EarthLink Network, Inc.)

Web site http://help.earthlink.net/techsupport/
phone 800-395-8410
e-mail support@earthlink.net
hours 7 days a week, 24 hours a day

Easy Internet Access (Encompass, Inc.)

Web site http://www.encmpss.com/
phone 800-927-3000
hours 7 days a week, 24 hours a day

MotorHead (Gremlin Interactive Ltd.)

Web site http://www.gremlin.com/
phone 888-4SONYPC (888-476-6972)
hours 7 days a week, 24 hours a day

Windows® 98 Operating System, Works, Money, Encarta, Internet Explorer (Microsoft Corporation)

Web site http://www.microsoft.com/support/
phone 888-4SONYPC (888-476-6972)*
hours 7 days a week, 24 hours a day
* Support from 1-888-4SONYPC is free of charge for 90 days after the original date of purchase.

Netscape Communicator® (Netscape Communications Corporation)

Web site http://www.netscape.com/
phone 888-4SONYPC (888-476-6972)*
hours 7 days a week, 24 hours a day
* Support from 1-888-4SONYPC is free of charge for 90 days after the original date of purchase.

Prodigy Internet (Prodigy Communications Corporation.)

Web site http://www.prodigy.com/
phone 800-PRODIGY
hours 7 AM - 3 AM ET

Quicken® Basic (Intuit Inc.)

Web site http://www.intuit.com/support/
phone 900-555-4688
hours 7 days a week, 24 hours a day

SurfMonkey (MediaLive, Inc.)

Web site http://www.surfmonkey.com/support/Sub_support.html
phone 408-556-2060
e-mail support@surfmonkey.com
hours 9AM-10PM PT everyday

WinFax® Basic Edition (Symantec Corporation.)

Web site http://www.symantec.com/techsupp/
phone 800-798-0850
fax 800-554-4403 in North America
541-984-2490 outside North America

Specifications

Model **PCV-E518DS**
Processor 500 MHz Pentium® III
Hard Disk Drive 17.28 GB
Standard SDRAM 128 MB PC-100 SDRAM, expandable to 256 MB
Video RAM 8 MB SDRAM
MPEG "Sony Tuned" MPEG Digital Video supports full-screen video playback
Graphics 3D 2X AGP graphics acceleration (Matrox)
Sound Capabilities 3D Positional Audio (Aureal A3D)
Diskette Drive 3.5" 1.44 MB FDD
CD-RW Drive CD-RW Drive (4X max. CD-R writing, 2X max. CD-RW writing, 24X max. reading)
Modem K56flex technology/V.90 compatible data/fax modem[1]
Expansion Capabilities One PCI slot
One additional hard disk drive bay
Connection Capabilities (Front) USB port
i.LINK port (4-pin)
Connection Capabilities (Rear) Optional Keyboard (PS/2-style)
Mouse (PS/2-style)
USB port
Serial port
Parallel (printer)
Game/MIDI
Headphones
Line In
Microphone
VGA Monitor
S-Link (Control-A1)
Optical Digital Audio Out
Two i.LINK ports (6-pin)[2]
Modem line (RJ-11)
Phone line (RJ-11)
Supplied Accessories VAIO Smart keyboard
Sony two-button mouse
RJ-11 phone cable
Power cord
Service 90-day limited service. Extendible to one year from original date of purchase upon registration[3]
Limited Warranty 90-day parts/labor standard. Extendible to one year from original date of purchase upon registration[4]

Power Requirements 200 watts maximum
Dimensions 7" (w) x 12" (h) x 13 3/4" (d) (178mm x 304mm x 330mm)
Weight 17 lbs. (7.71 kg)
Operating Temperature 50º F to 95º F (+10º C to 35º C)

[1] Maximum speed for faxing is 14.4 kbytes/s. Your modem is capable of downloading at 56 kbytes/s using K56flex technology or V.90. Your phone service, online service, or Internet Service Provider however, may not support this technology or operate at this speed.

[2] Six-pin i-LINK connectors on the rear of the system each supply 10V to 12V. The combined total wattage that can be supplied by the two connectors is 6 watts.

[3] Certain restrictions apply

[4] Certain restrictions apply

Specifications are subject to change without notice.

This product meets the standards of the International Energy Star Program for energy efficiency.

© 1999 Sony Electronics Inc. Reproduction in w hole or in part w ithout w ritten permission is prohibited. All rights reserved.

Read Me First

Welcome

Congratulations on your purchase of the Sony VAIO Digital Studio Computer. Sony has combined leading-edge technology in audio, video, computing, and communications to provide you with state-of-the-art personal computing.

Features

 For a complete description of the specifications of your VAIO Digital Studio Computer, see Specifications.

- **Exceptional performance:** Your computer includes a brand new Intel® Pentium® III processor, a CD-RW drive, and a V.90 compatible data/fax modem.*

* Actual upload and download speeds may vary due to line conditions, ISP support, and government regulations.

- **CD-RW drive:** This drive is the ideal solution for making backups and data archiving, with the ability to store up to 650 MB* of removable, rewritable storage on a single rewritable CD. Save your movies to CD-R or CD-RW media and share videos and images with family and friends.

***** 530 MB after formatting.

- **VAIO Smart Keyboard:** This USB keyboard has programmable shortcut buttons for launching your favorite programs or accessing the Internet.
- **Sony audio and video quality:** High-fidelity positional 3D audio system (A3D), high-powered 3D graphics (AGP), and "Sony-Tuned" MPEG digital video playback enable you to take advantage of today's advanced multimedia applications, games, and entertainment software.
- **S-Link (Control-A1):** This technology allows you to build a database of all your music and video CDs and then record your favorite audio selections on MiniDiscs. Use your computer with a 200 disc mega-storage CD changer and a MiniDisc recording deck.
- **i.LINK (IEEE 1394):** Three built-in i.LINK ports provide you with maximum digital connection capability. The i.LINK name and logo identify a digital interface (IEEE 1394) for high speed communication. By using your VAIO Digital Studio Computer, a Sony Digital Handycam® Camcorder, the DVgate software preinstalled on your computer, and the i.LINK (IEEE 1394) interface, you can easily create and edit your own home videos.
- **Optical Digital Audio Output:** This high-quality digital interface transmits digital audio data via light pulses. Transfer crystal clear digital audio to your MiniDisc recorder.
- **Digital Studio Software**: Enjoy all of your computer's audio and video capabilities with component-like applications that allow you to creatively manipulate digital still images, video clips, and audio tracks.
- **50 free hours of Internet access:** Use the Internet for up to 50 free hours when you sign up with GTE (no credit card required). Limit of two hours per day. Free access expires after 50 hours or 90 days after signing up--whichever occurs first.
- **Preinstalled software titles**: All the software on your computer is preinstalled, configured, and ready for you to use right out of the box.
- **Windows® 98**: Your system includes the latest operating system from Microsoft.
- **Communications:** Access popular online services, browse the Internet, send faxes, and more.

Unpacking Your Computer

Computer and Supplied Accessories

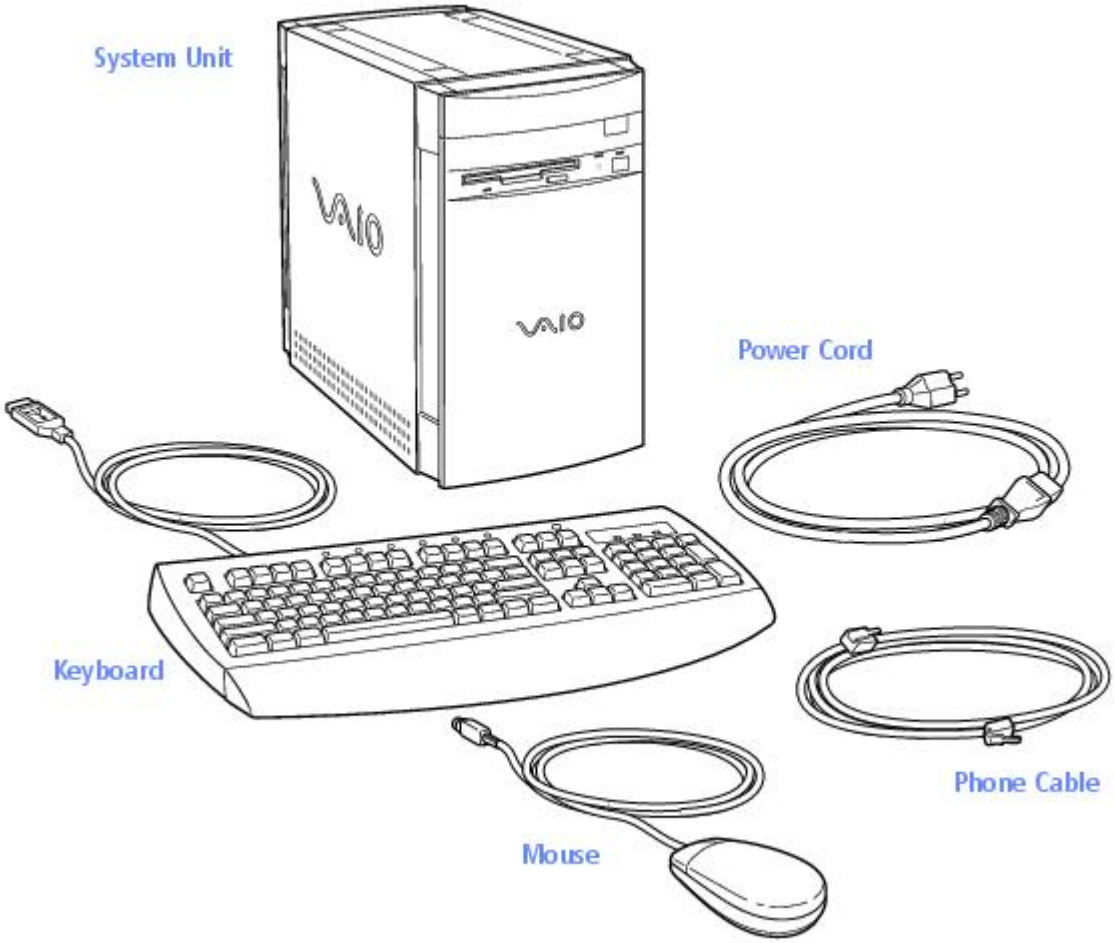

Manuals

- *Read Me First* (this manual) contains features and specifications of your computer. It also includes information on the applications included with your system, how to contact software vendors, and last minute troubleshooting tips.
- The *VAIO Digital Studio Computer User Guide* describes how to get started with your computer, find help, and solve common problems.
- The *Microsoft® Windows®98 Getting Started* manual explains how to use the basic features of the Windows operating system.

Recovery CDs

- System Recovery CD(s)
- Application Recovery CD(s)

Other

- Setting up your VAIO Digital Studio Computer (poster)
- Packet containing special product offers

Software Library

The Software Library contains the Microsoft software license agreement, Sony end-user license agreement, and the following CDs:

- Adobe PhotoDeluxe® Business Edition 3.0
- Gremlin Interactive Ltd. MotorHead
- Microsoft® Encarta® 99 Encyclopedia
- Microsoft® Money/Microsoft® Works

Back Panel Overview

The back panel of your computer contains the connectors where you plug in supplied and optional accessories. The icons on the back panel serve as a map to help you locate the connectors on your computer.

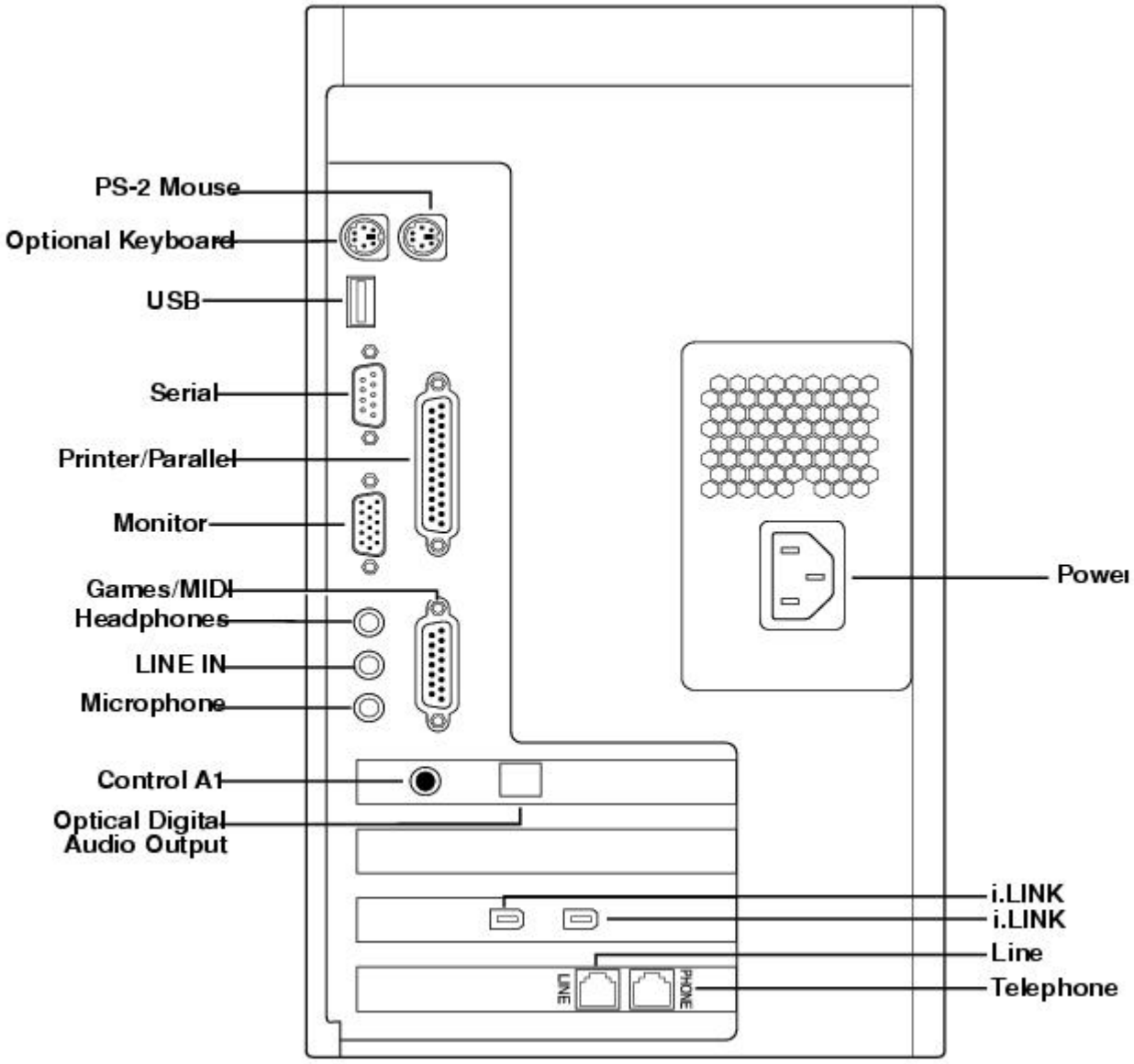

For your convenience, your computer includes USB and i.LINK connectors on both the front and back panels, allowing you to connect to either set of connectors. i.LINK connectors on the back of your system are 6-pin connectors.

Front Panel Overview

The front panel of your VAIO Digital Studio Computer allows for access to the diskette and CD-RW drives. It also includes USB and i.LINK ports to connect USB devices, CD changers, MiniDisc drives, or other components.

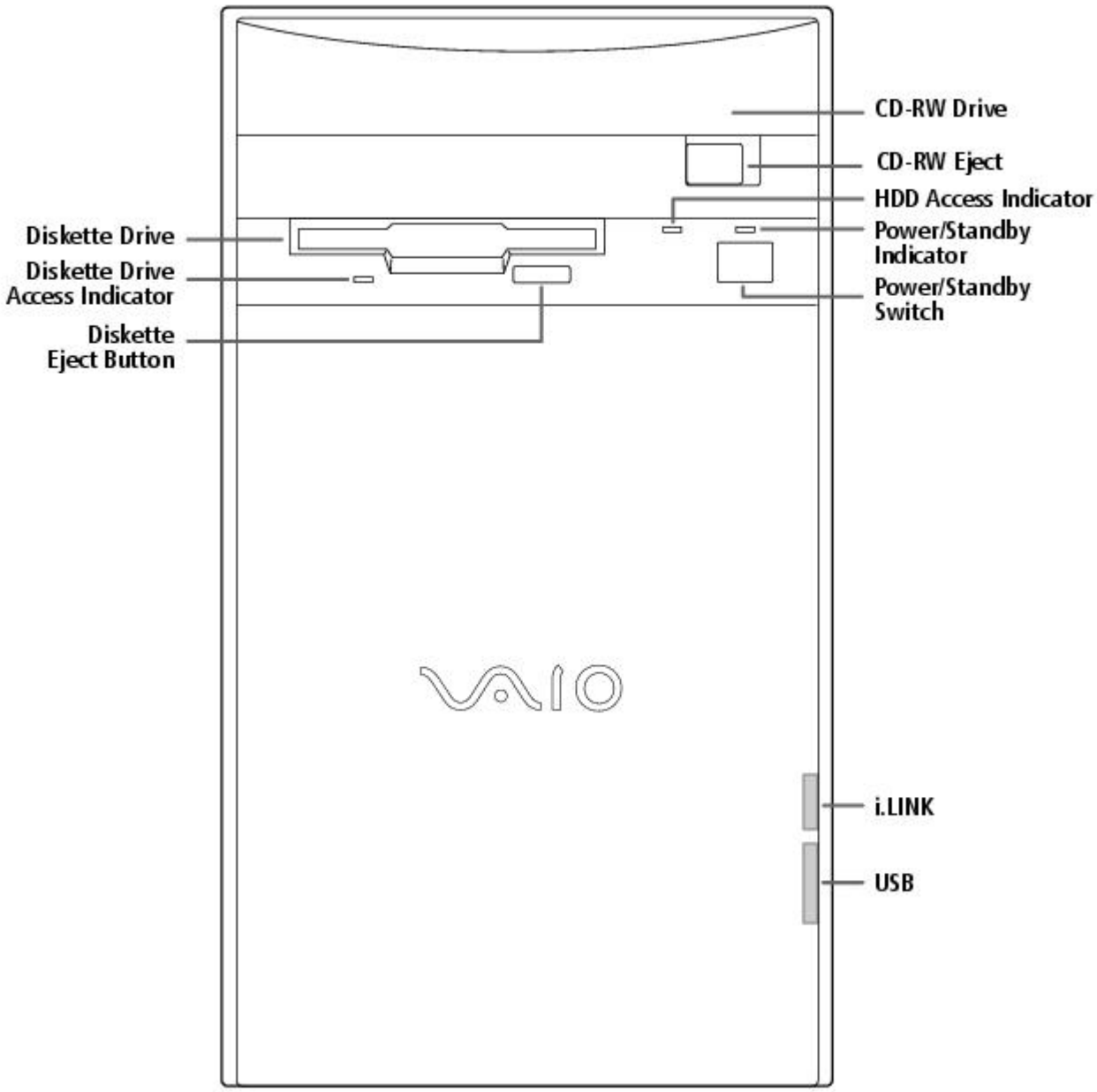

For your convenience, your computer includes USB and i.LINK connectors on both the front and back panels, allowing you to connect to either set of connectors. The i.LINK connector on the front of your system is a 4-pin connector.

Supplementary Information

For the most recent version of this manual, see the online version of Read Me First. You can access this document from the Windows Start Menu by selecting Programs/VAIO Documentation.

Hard Drive Partition

In order to improve the performance of your computer's DVgate Motion software, the hard disk drive on your computer has been formatted with two partitions, C and D. DVgate Motion saves files to the D partition. This prevents large video captures from consuming the available space on your C partition. To maintain optimum performance of DVgate Motion, you should defragment regularly.

VAIO Smart Keyboard Default Settings

The VAIO Smart Keyboard programmable buttons come with the following applications as their default settings:

S1 - Easy Internet Access Browser (Internet)

S2 - Outlook 98 (Mail)

S3 - MotorHead (Game)

S4 - Microsoft® Works (Work)

S5 - Quicken 99 Basic (Finance)

S6 - VAIO Documentation (Help)

All six buttons are reprogrammable.

Using The Standby Mode

To Put Your Computer into Standby Mode

When you are done using your computer, you can put it in Standby mode rather than turn it off completely. There are four ways to put your computer into Standby mode.

- Touch the power switch on the front panel.
- Click Shut Down at the bottom of the Start menu to display the Shut Down Windows dialog box. Select Stand by, and then click OK.
- Press the Standby button on the VAIO Smart Keyboard (the half moon icon).
- Change the timer settings for Standby mode in the Control Panel, as follows:

1. From the Start menu, point to Settings and click Control Panel.
2. Click the Power Management icon.
3. On the Power Schemes tab, change the Power scheme to Home/Office Desk.
4. In the list box for System standby, select an interval of time.
5. Click the OK button and close the Control Panel.

To Resume from Standby Mode

There are two ways to resume system functionality when your computer is in Standby mode. Use either of the following methods.

- Press any key on your keyboard, such as the Enter key.
- Touch the power switch on the front panel.

It may take up to 30 seconds for your system to recover stored information and resume functionality. The screen remains blank while the system is resuming functionality.

Applications That Use the TWAIN Driver

Digital imaging applications, such as Adobe PhotoDeluxe®, allow you to transfer images to your computer from external devices, including scanners or digital cameras. For some devices, a TWAIN driver window appears on the screen. Always close the TWAIN driver window before exiting or minimizing a digital imaging application.

Restoring Outlook 98

For the Add New Components functionality to be available with Microsoft Outlook, you must first run the installation program for Outlook from the Application Recovery CD. When prompted to install the program, select Exit. This decompresses the software, making the Add New Components functionality available.

Inserting Add-in Boards

Your VAIO Digital Studio Computer accommodates PCI add-in boards up to 7.7 inches in length.

Using Devices Connected to the i.LINK (IEEE 1394), S-Link (Control-A1), and Optical Digital Audio Output Connectors

For the latest information on devices known to be compatible with the state-of the-art audio, video, and graphics capabilities of your VAIO computer, check the Sony web site at http://www.sony.com/pcsupport.

Connecting to i.LINK Ports

Your VAIO computer includes a 4-pin i.LINK connector on the front of the system and two 6-pin i.LINK connectors on the back of the system. A 6-pin i.LINK connector can supply power from the computer to the connected device if the device is equipped with a 6-pin connector. Each 6-pin connector supplies 10V to 12V. The total power supplied by both 6-pin i.LINK connectors cannot exceed 6 watts. A 4-pin i.LINK connector cannot supply power to a connected device.

Capturing and Editing Digital Video Clips

- You can capture digital video clips using a digital video camera recorder and DVgate Motion software. Once the clips are saved as AVI files, they can be edited using DVgate Motion, DVgate Clip, or Adobe Premiere® LE. You cannot capture digital video clips directly using the Capture menu in Adobe Premiere LE. Adobe Premiere LE supports an analog capture board for capturing clips. Your VAIO computer is designed for digital video input.
- If there is no audio data associated with an AVI file, the message "Codec compression error" appears. If you do not wish to associate audio with your AVI file, you can add muted sound data by recording audio with the mute option enabled.
- For best performance, when editing AVI files in Adobe Premiere LE, you should use the default setup parameters that shipped with your system. If you change the default setup and want to reinitialize the parameters, follow these steps:

    1. In the Adobe Premiere LE application, select Compression from the Make menu. The Compression Settings dialog box appears.
    2. In the Method list box, select Sony DV software CODEC.
    3. Click OK to close the screen.
    4. From the Make menu, select Preset. The Preset dialog box appears.
    5. Select the parameters for Time Base, Compress, Output, and Preview Option settings as indicated below.

[Time base]

Time base - 29.97fps (required)

[Compress]

File type - AVI (required)
Compress Program Method - Sony DV software CODEC (required)
Compress Program Depth - Millions colors (No other options)
Quality (No control for this item)
Option: Frames per second - 30 (required)
Option: Basic Key Frames (No control for this item)
Option: Optimize Still Off (recommended)
Data rate - Recompress Off (recommended)

[Output options]

Video - On (required)
Video Size - 720x480
4:3 Aspect - Off (required)
VideoType - Field 2 (recommended)
Audio - On (required)
Audio Rate - 44kHz (required)
Audio Format - 16 Bit Stereo or 16 Bit Monaural (required)
Audio Type - Uncompress (required)
Audio Interleave - 1 frame (recommended)
- Less than 30 frames (required)

Audio Sync - 1.0 (required)
Audio Skew - 0.75 (recommended)
- Less than 1.0 (required)

[Preview Option]

Preview Window Size - 360x240

Note that Adobe Premiere LE does not save the Preview Window Size, but uses a default size of 320 x 213 each time the application launches. We recommend that you change this setting to 360 x 240 to improve the quality of preview clips when editing AVI files.

Using Alternate Browsers with America Online®

To use Internet Explorer or Netscape Navigator as your browser with America Online, follow these steps:

1. From the Start menu, point to Settings and then click Control Panel.
2. Click the Internet icon.
3. Click the Connection tab.
4. Click the "Connect to the Internet using local area network" radio button.
5. Click OK.

Using DVgate Motion

When capturing clips:

- Do not use DVgate Motion when the connected digital video peripheral is in Timer Recording mode, as this could produce a malfunction in the peripheral.
- Captures larger than 2 GB (9 minutes and 30 seconds) are automatically continued in a second file.
- You can record stereo audio (stereo 1) while capturing video. You cannot add audio on the stereo 2 track after capturing the video data.
- You cannot use different audio modes on the same tape. You should perform a separate capture for each audio mode you wish to use.
- DVgate Motion does not support hard disk compression. You should not use disk compression if you are planning to work with DVgate Motion.
- Title data is saved in the flash memory of a digital video camera and is not transferred to tape by DVgate Motion.
- To avoid interruption of capture sessions, you should disable the screen saver.
- The drop frame compensation feature does not provide accurate compensation adjustments for tapes recorded in LP mode.
- For tapes that include a mixture of both SP and LP mode, the information displayed by the capture progress indicator may not be accurate.
- Make sure the video head of your digital video device is properly cleaned. Anomalies that you see in captured data could be due to dust or other particles on the video head.
    - The last frame captured is one frame before your selected [OUT] point. The frame you see immediately after clicking the [OUT] button is not captured.

When recording AVI files to tape:

- Do not use DVgate Motion when the connected digital video peripheral is in Timer Recording mode, as this could produce a malfunction in the peripheral.

- You can record only AVI files. MPEG files cannot be recorded.
- To avoid recording problems, such as a single frame appearing in multiple frames, close other applications on your system while recording.
- You cannot use different audio modes on the same tape. If you have AVI files that use different audio modes, they cannot be recorded at the same time, but must be recorded separately.
- Do not attempt to work with AVI files that are smaller than 4 MB.
- DVgate Motion does not support hard disk compression. You should not use disk compression if you are planning to work with DVgate Motion.
- In order to maximize recording capabilities, video and audio data are not available while you are recording.

If DVgate Motion indicates that frames have been dropped, you should try closing all open applications, or you may need to defragment your hard drive.

Restoring Audio Drivers

When you restore the audio drivers from the Application Recovery CD, you need to restart your system to use these drivers. In the Add New Hardware wizard that appears when you restart, click the Next button until you are prompted for the location of the drivers. The audio drivers are located on the Application Recovery CD in G:\drivers\audio\AL98091701\English.

Using AC-3® to Optical Digital Audio Output

MiniDisc player/recorders, DAT player/recorders, and older digital receivers do not support Dolby® Digital (AC-3). You should not use the AC-3 to Optical Digital Audio Output option unless you are using a device that supports Dolby Digital. Please refer to the manual supplied with your equipment to determine if it supports Dolby Digital. If you are unsure and you have selected the AC-3 to Optical Digital Audio Output option, turn down the volume on your equipment before using the DVD player.

Using America Online or Sony Online Support with WinFax® Basic Edition

Once you have configured WinFax Basic Edition, it is automatically available for your use. You cannot use America Online or Sony Online Support when the automatic fax receive feature of WinFax Basic Edition is on. To disable this feature, right click the WinFax icon in the task tray at the bottom right corner of your screen, and then select Exit.

Memory Upgrade Specifications

When upgrading memory, use only 3.3V 64-bit PC-100 168 PIN SDRAM DIMM modules. For more information on Digital Studio Computer compatible memory, call Sony at 1-888-4SONYPC (1-888-476-6972).

About the Software On Your Computer

Your VAIO Digital Studio computer is ready to help you work, play, learn, and communicate as soon as you turn it on. This section gives you an overview of the activities you can perform with your software titles. For support information, see For Answers to Your Software Questions.

Adobe Acrobat® Reader

Adobe Systems Incorporated

Acrobat Reader software allows you to view, navigate, and print electronic documents in Adobe Portable Document Format (PDF), an open file format that is intended to preserve the fidelity of documents created on all major computer platforms.

Adobe PhotoDeluxe® Business Edition

Adobe Systems Incorporated

Create amazing photo effects with PhotoDeluxe. Without learning complex software, you can

enhance, restore, and be creative with your photos. Includes built-in guided activities, stock photos, clip art, and templates to assist you.

Adobe Premiere® LE

Adobe Systems Incorporated

Adobe Premiere LE offers an interface and editing tool for producing movies for video, multimedia, or the web. View source clips and edited footage simultaneously in the monitor window. Create video clips up to three hours long with complete audio-video synchronization.

America Online®

America Online

America Online is the world's most popular Internet online service. Stay in touch with family and friends with Easy-to-Use E-mail, manage your personal finances, get the latest news and sports scores, and chat with thousands of others who share your interests.

AT&T WorldNet® Service

AT&T

Fast, reliable Internet access from AT&T WorldNet Service. AT&T WorldNet Service provides web-based e-mail, a personalized start page from Excite, easy access to the Excite search engine, free web pages, online and live agent technical support, instant messaging, and special shopping discounts at Market Square.

CompuServe®

CompuServe, Inc.

CompuServe is the most comprehensive source of organized business and educational information online today. CompuServe allows you to access the vastness of the Internet without wasting time wading through it. Maximize your time online with CompuServe.

Digital Media Park

Sony Electronics

An integrated suite of multimedia cataloging and playback programs including Media Bar, Media Library, Media Showcase, and MiniDisc Editor. Manage your music by cataloging your entire CD collection, and then create custom MiniDiscs of your favorite songs.

Dr. Solomon's® Anti-Virus

Dr Solomon's Software Inc.

Dr. Solomon's Anti-Virus provides the most comprehensive defense against the spread of viruses, including macro viruses. It can scan inside compressed files and automatically protects your system against viruses sent via e-mail or Internet download.

DVgate Motion

Sony Electronics

Connect a digital video camera recorder to the i.LINK connector and capture your own video clips. You can edit the clips from your video, add others, and combine clips into new movie segments.

DVgate Still

Sony Electronics

Connect a digital video camera recorder to the i.LINK connector and capture your own still images. You can save your images in a variety of popular file formats.

EarthLink Sprint TotalAccess

EarthLink Network, Inc.

An Internet Service Provider that supplies access, information, and assistance to its customers, introducing them to the Internet. Member benefits include e-mail, newsgroups, a Personal Start Page, a free 6 MB web site, a member magazine, and 24-hour technical support.

Microsoft® Encarta® 99 Encyclopedia

Microsoft Corporation

Microsoft Encarta Encyclopedia combines current, comprehensive content with up-to-date multimedia technology, providing users with unique, engaging learning experiences. With the 1999 edition, Encarta provides a wealth of information resources and unique interactive features

Microsoft® Internet Explorer for Windows® 98

Microsoft Corporation

Internet Explorer delivers the web the way you want it. It's safe, easy to use, and you can personalize how you access the web. Outlook Express and other tools in Internet Explorer also help you have a great experience when you are on the web!

Microsoft® Money 99

Microsoft Corporation

Microsoft Money 99 is personal finance software that lets you perform your financial tasks, everything from paying bills to planning for the future, in a smarter, faster way. With Money's online services, you can pay bills and bank from the comfort of home.

Microsoft® Outlook® 98

Microsoft Corporation

Outlook 98 is Microsoft's premier messaging and collaboration client. It combines the leading support for Internet standards-based messaging systems with integrated calendar, contact, and task-management features.

Microsoft® Works

Microsoft Corporation

Works provides users with the right set of core tools that allows them to write letters and reports, track family and friends with the address book, manage home finances, and create a home inventory.

MotorHead

Gremlin Interactive Ltd.

MotorHead is realistic arcade-racing; high-velocity entertainment that puts you behind the wheel for 3D pure racing action. Power across Europe and USA in the Transatlantic Speed League, where second place is simply not an option.

Netscape Communicator®

Netscape Communications

Netscape Communicator is the all-in-one Internet tool that makes it easy to browse the web, send Internet e-mail, chat, read newsgroups, and compose great web documents.

PictureGear

Sony Electronics

This image management software displays images from your hard drive, a Sony digital still camera, or a Sony Mavica® camera. The images appear in a convenient light-table format, so that you can easily view the contents of an entire folder.

Prodigy Internet

Prodigy Communications Corporation

An Internet service that helps you find what you need online faster and smarter. Prodigy delivers powerful online content, such as sports scores, stock quotes, news, and easy access to Excite , plus a personal e-mail account and quality customer service, all at a competitive price.

Quicken® Basic 99

Intuit, Inc

Quicken is the fastest, easiest way to organize your finances. Quicken works just like your checkbook, so it's easy to learn and use. Quicken manages all of your finances, bank accounts, credit cards, investments, and loans. You can even pay your bills online.

SurfMonkey

MediaLive, Inc

SurfMonkey is a web browser and online service for kids ages 6-12 that makes the Internet safe, fun, and easy. A talking monkey guides children through web sites and chat rooms, and can read their e-mail out loud. Children cannot go to inappropriate web sites, parents can screen e-mail messages, and chat messages are monitored.

VAIO Smart Keyboard

Sony Electronics

VAIO Smart Keyboard software operates your new easy to use programmable USB keyboard. Six programmable buttons enable you to launch your favorite applications, open frequently used files, access Explorer, or even open your web browser with just the click of a button.

WinFax® Basic Edition

Symantec Corporation

WinFax Basic Edition incorporates an easy-to-use interface that allows you to send and receive faxes easily. Upgrade to WinFax Pro to receive additional features.

About Your Recovery CDs

Application Recovery CD(s)

Sony Electronics

The Application Recovery CD program allows you to reinstall individual applications and device drivers. Use it to restore corrupted or accidentally erased files.

System Recovery CD(s)

Sony Electronics

The System Recovery CD program allows you to restore the software titles that shipped with your computer if they become corrupted or are erased accidentally. It can be used only to restore the hard disk of the Sony computer you purchased.

For Answers to Your Software Questions

Sony Service Center

For the Sony Service Center nearest you, call at 1-888-4SONYPC (1-888-476-6972).

Acrobat® Reader, Adobe PhotoDeluxe® Business Edition , Adobe Premiere® LE (Adobe Systems Incorporated)

Web site http://www.adobe.com/
phone 206-628-2746 (fee-based support)
fax 206-628-5737
e-mail techdocs@adobe.com
hours M-F, 6 AM-5 PM PT

America Online® (America Online)

Web site http://www.aol.com/
phone 800-827-3338
hours 7 days a week, 6 AM - 2 PM ET

AT&T WorldNet® Service (AT&T)

Web site http://www.att.net/*
phone 800-400-1447
e-mail worldnet@attmail.com
hours 7 days a week, 24 hours a day

* You must be a WorldNet Service customer to access online support.

CompuServe® Interactive (CompuServe Interactive, Inc.)

Web site http://www.compuserve.com/
phone 800-848-8990
hours M-F, 8 AM - 1 AM ET, S-S 10 AM - 10 PM ET

Dr. Solomon's® Anti-Virus (Dr. Solomon's Software Inc.)

Web site http://www.drsolomon.com/
phone 888-377-6566
e-mail support@us.drsolomon.com
hours 7 days a week, 24 hours a day

EarthLink Sprint TotalAccess (EarthLink Network, Inc.)

Web site http://help.earthlink.net/techsupport/
phone 800-395-8410
e-mail support@earthlink.net
hours 7 days a week, 24 hours a day

Easy Internet Access (Encompass, Inc.)

Web site http://www.encmpss.com/
phone 800-927-3000
hours 7 days a week, 24 hours a day

MotorHead (Gremlin Interactive Ltd.)

Web site http://www.gremlin.com/
phone 888-4SONYPC (888-476-6972)
hours 7 days a week, 24 hours a day

Windows® 98 Operating System, Works, Money, Encarta, Internet Explorer (Microsoft Corporation)

Web site http://www.microsoft.com/support/
phone 888-4SONYPC (888-476-6972)*
hours 7 days a week, 24 hours a day
* Support from 1-888-4SONYPC is free of charge for 90 days after the original date of purchase.

Netscape Communicator® (Netscape Communications Corporation)

Web site http://www.netscape.com/
phone 888-4SONYPC (888-476-6972)*
hours 7 days a week, 24 hours a day
* Support from 1-888-4SONYPC is free of charge for 90 days after the original date of purchase.

Prodigy Internet (Prodigy Communications Corporation.)

Web site http://www.prodigy.com/
phone 800-PRODIGY
hours 7 AM - 3 AM ET

Quicken® Basic (Intuit Inc.)

Web site http://www.intuit.com/support/
phone 900-555-4688
hours 7 days a week, 24 hours a day

SurfMonkey (MediaLive, Inc.)

Web site http://www.surfmonkey.com/support/Sub_support.html
phone 408-556-2060
e-mail support@surfmonkey.com
hours 9AM-10PM PT everyday

WinFax® Basic Edition (Symantec Corporation.)

Web site http://www.symantec.com/techsupp/
phone 800-798-0850
fax 800-554-4403 in North America
541-984-2490 outside North America

Specifications

Model **PCV-E518DS**
Processor 500 MHz Pentium® III
Hard Disk Drive 17.28 GB
Standard SDRAM 128 MB PC-100 SDRAM, expandable to 256 MB
Video RAM 8 MB SDRAM
MPEG "Sony Tuned" MPEG Digital Video supports full-screen video playback
Graphics 3D 2X AGP graphics acceleration (Matrox)
Sound Capabilities 3D Positional Audio (Aureal A3D)
Diskette Drive 3.5" 1.44 MB FDD
CD-RW Drive CD-RW Drive (4X max. CD-R writing, 2X max. CD-RW writing, 24X max. reading)
Modem K56flex technology/V.90 compatible data/fax modem[1]
Expansion Capabilities One PCI slot
One additional hard disk drive bay
Connection Capabilities (Front) USB port
i.LINK port (4-pin)
Connection Capabilities (Rear) Optional Keyboard (PS/2-style)
Mouse (PS/2-style)
USB port
Serial port
Parallel (printer)
Game/MIDI
Headphones
Line In
Microphone
VGA Monitor
S-Link (Control-A1)
Optical Digital Audio Out
Two i.LINK ports (6-pin)[2]
Modem line (RJ-11)
Phone line (RJ-11)
Supplied Accessories VAIO Smart keyboard
Sony two-button mouse
RJ-11 phone cable
Power cord
Service 90-day limited service. Extendible to one year from original date of purchase upon registration[3]
Limited Warranty 90-day parts/labor standard. Extendible to one year from original date of purchase upon registration[4]

Power Requirements 200 watts maximum
Dimensions 7" (w) x 12" (h) x 13 3/4" (d) (178mm x 304mm x 330mm)
Weight 17 lbs. (7.71 kg)
Operating Temperature 50º F to 95º F (+10º C to 35º C)

[1] Maximum speed for faxing is 14.4 kbytes/s. Your modem is capable of downloading at 56 kbytes/s using K56flex technology or V.90. Your phone service, online service, or Internet Service Provider however, may not support this technology or operate at this speed.

[2] Six-pin i-LINK connectors on the rear of the system each supply 10V to 12V. The combined total wattage that can be supplied by the two connectors is 6 watts.

[3] Certain restrictions apply

[4] Certain restrictions apply

Specifications are subject to change without notice.

This product meets the standards of the International Energy Star Program for energy efficiency.

© 1999 Sony Electronics Inc. Reproduction in w hole or in part w ithout w ritten permission is prohibited. All rights reserved.

Read Me First

Welcome

Congratulations on your purchase of the Sony VAIO Digital Studio Computer. Sony has combined leading-edge technology in audio, video, computing, and communications to provide you with state-of-the-art personal computing.

Features

 For a complete description of the specifications of your VAIO Digital Studio Computer, see Specifications.

- **Exceptional performance:** Your computer includes a brand new Intel® Pentium® III processor, a CD-RW drive, and a V.90 compatible data/fax modem.*

* Actual upload and download speeds may vary due to line conditions, ISP support, and government regulations.

- **CD-RW drive:** This drive is the ideal solution for making backups and data archiving, with the ability to store up to 650 MB* of removable, rewritable storage on a single rewritable CD. Save your movies to CD-R or CD-RW media and share videos and images with family and friends.

***** 530 MB after formatting.

- **VAIO Smart Keyboard:** This USB keyboard has programmable shortcut buttons for launching your favorite programs or accessing the Internet.
- **Sony audio and video quality:** High-fidelity positional 3D audio system (A3D), high-powered 3D graphics (AGP), and "Sony-Tuned" MPEG digital video playback enable you to take advantage of today's advanced multimedia applications, games, and entertainment software.
- **S-Link (Control-A1):** This technology allows you to build a database of all your music and video CDs and then record your favorite audio selections on MiniDiscs. Use your computer with a 200 disc mega-storage CD changer and a MiniDisc recording deck.
- **i.LINK (IEEE 1394):** Three built-in i.LINK ports provide you with maximum digital connection capability. The i.LINK name and logo identify a digital interface (IEEE 1394) for high speed communication. By using your VAIO Digital Studio Computer, a Sony Digital Handycam® Camcorder, the DVgate software preinstalled on your computer, and the i.LINK (IEEE 1394) interface, you can easily create and edit your own home videos.
- **Optical Digital Audio Output:** This high-quality digital interface transmits digital audio data via light pulses. Transfer crystal clear digital audio to your MiniDisc recorder.
- **Digital Studio Software**: Enjoy all of your computer's audio and video capabilities with component-like applications that allow you to creatively manipulate digital still images, video clips, and audio tracks.
- **50 free hours of Internet access:** Use the Internet for up to 50 free hours when you sign up with GTE (no credit card required). Limit of two hours per day. Free access expires after 50 hours or 90 days after signing up--whichever occurs first.
- **Preinstalled software titles**: All the software on your computer is preinstalled, configured, and ready for you to use right out of the box.
- **Windows® 98**: Your system includes the latest operating system from Microsoft.
- **Communications:** Access popular online services, browse the Internet, send faxes, and more.

Unpacking Your Computer

Computer and Supplied Accessories

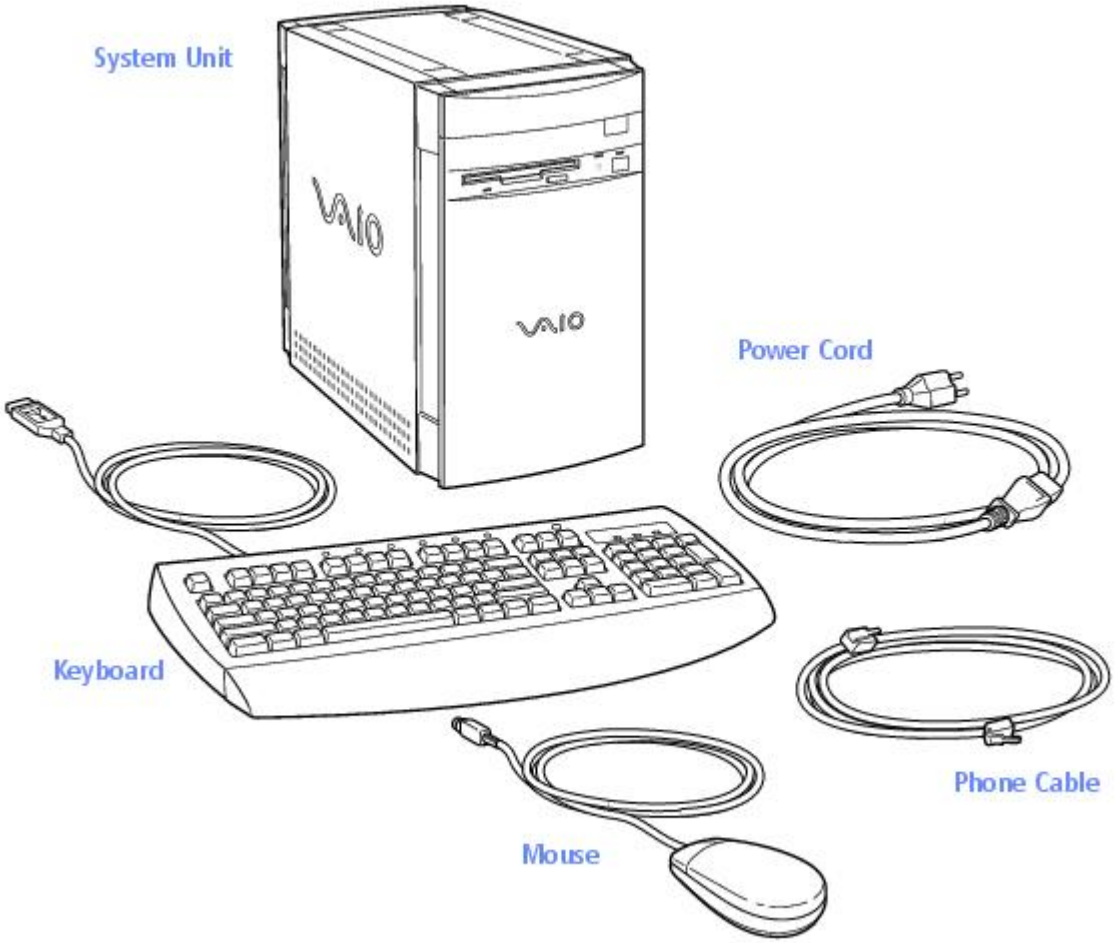

Manuals

- *Read Me First* (this manual) contains features and specifications of your computer. It also includes information on the applications included with your system, how to contact software vendors, and last minute troubleshooting tips.
- The *VAIO Digital Studio Computer User Guide* describes how to get started with your computer, find help, and solve common problems.
- The *Microsoft® Windows®98 Getting Started* manual explains how to use the basic features of the Windows operating system.

Recovery CDs

- System Recovery CD(s)
- Application Recovery CD(s)

Other

- Setting up your VAIO Digital Studio Computer (poster)
- Packet containing special product offers

Software Library

The Software Library contains the Microsoft software license agreement, Sony end-user license agreement, and the following CDs:

- Adobe PhotoDeluxe® Business Edition 3.0
- Gremlin Interactive Ltd. MotorHead
- Microsoft® Encarta® 99 Encyclopedia
- Microsoft® Money/Microsoft® Works

Back Panel Overview

The back panel of your computer contains the connectors where you plug in supplied and optional accessories. The icons on the back panel serve as a map to help you locate the connectors on your computer.

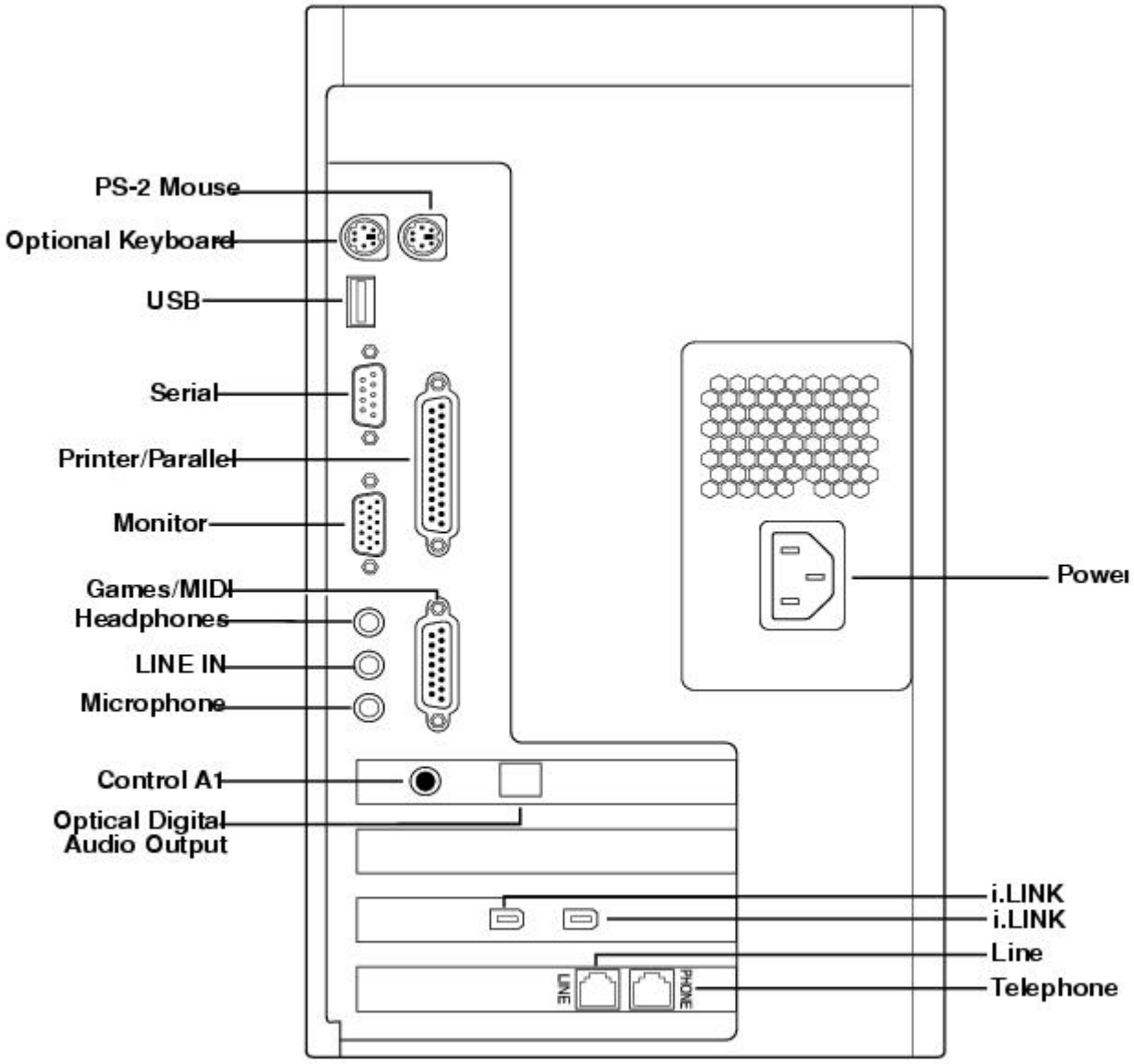

For your convenience, your computer includes USB and i.LINK connectors on both the front and back panels, allowing you to connect to either set of connectors. i.LINK connectors on the back of your system are 6-pin connectors.

Front Panel Overview

The front panel of your VAIO Digital Studio Computer allows for access to the diskette and CD-RW drives. It also includes USB and i.LINK ports to connect USB devices, CD changers, MiniDisc drives, or other components.

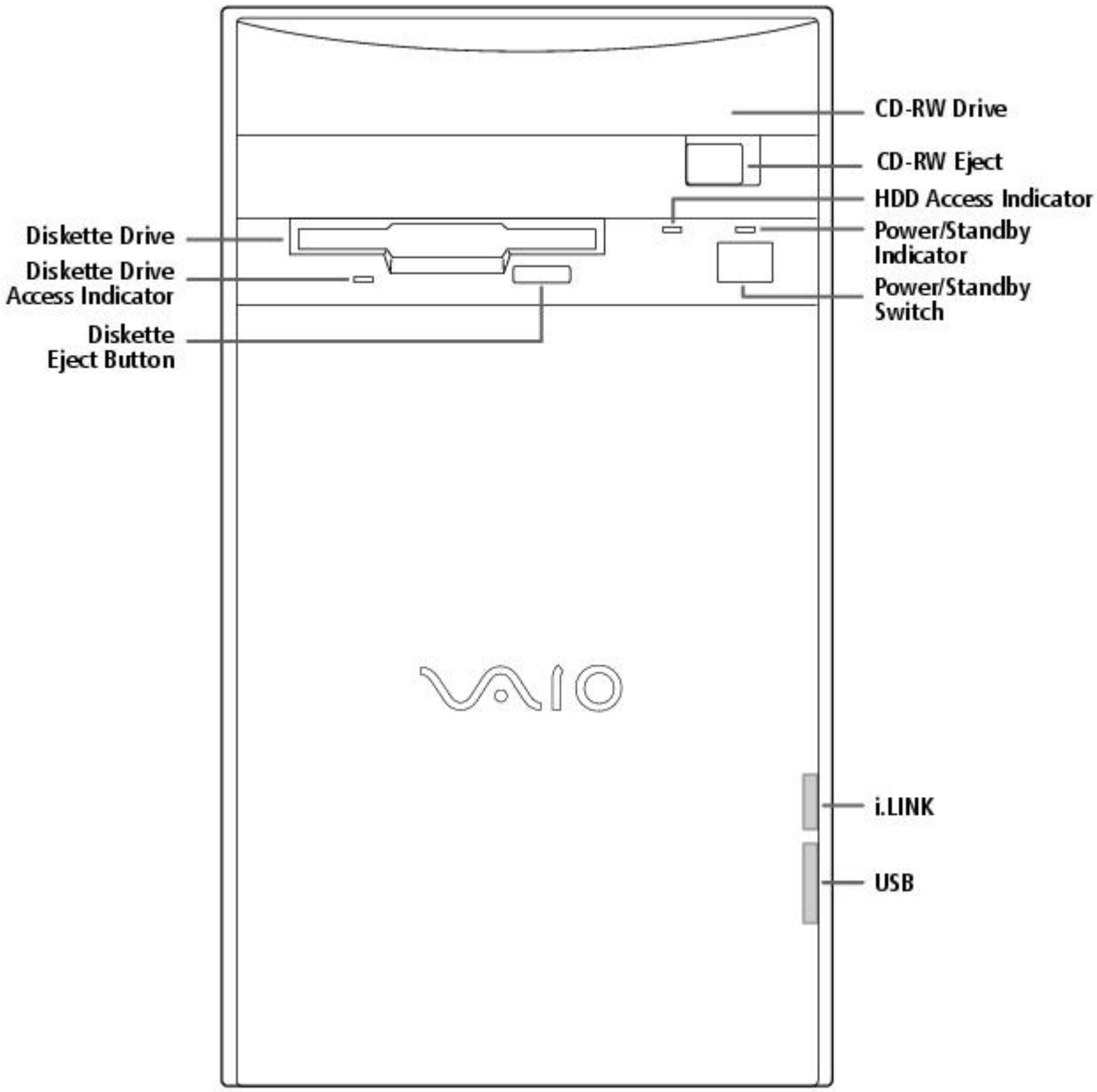

For your convenience, your computer includes USB and i.LINK connectors on both the front and back panels, allowing you to connect to either set of connectors. The i.LINK connector on the front of your system is a 4-pin connector.

Supplementary Information

For the most recent version of this manual, see the online version of Read Me First. You can access this document from the Windows Start Menu by selecting Programs/VAIO Documentation.

Hard Drive Partition

In order to improve the performance of your computer's DVgate Motion software, the hard disk drive on your computer has been formatted with two partitions, C and D. DVgate Motion saves files to the D partition. This prevents large video captures from consuming the available space on your C partition. To maintain optimum performance of DVgate Motion, you should defragment regularly.

VAIO Smart Keyboard Default Settings

The VAIO Smart Keyboard programmable buttons come with the following applications as their default settings:

S1 - Easy Internet Access Browser (Internet)

S2 - Outlook 98 (Mail)

S3 - MotorHead (Game)

S4 - Microsoft® Works (Work)

S5 - Quicken 99 Basic (Finance)

S6 - VAIO Documentation (Help)

All six buttons are reprogrammable.

Using The Standby Mode

To Put Your Computer into Standby Mode

When you are done using your computer, you can put it in Standby mode rather than turn it off completely. There are four ways to put your computer into Standby mode.

- Touch the power switch on the front panel.
- Click Shut Down at the bottom of the Start menu to display the Shut Down Windows dialog box. Select Stand by, and then click OK.
- Press the Standby button on the VAIO Smart Keyboard (the half moon icon).
- Change the timer settings for Standby mode in the Control Panel, as follows:

1. From the Start menu, point to Settings and click Control Panel.
2. Click the Power Management icon.
3. On the Power Schemes tab, change the Power scheme to Home/Office Desk.
4. In the list box for System standby, select an interval of time.
5. Click the OK button and close the Control Panel.

To Resume from Standby Mode

There are two ways to resume system functionality when your computer is in Standby mode. Use either of the following methods.

- Press any key on your keyboard, such as the Enter key.
- Touch the power switch on the front panel.

It may take up to 30 seconds for your system to recover stored information and resume functionality. The screen remains blank while the system is resuming functionality.

Applications That Use the TWAIN Driver

Digital imaging applications, such as Adobe PhotoDeluxe®, allow you to transfer images to your computer from external devices, including scanners or digital cameras. For some devices, a TWAIN driver window appears on the screen. Always close the TWAIN driver window before exiting or minimizing a digital imaging application.

Restoring Outlook 98

For the Add New Components functionality to be available with Microsoft Outlook, you must first run the installation program for Outlook from the Application Recovery CD. When prompted to install the program, select Exit. This decompresses the software, making the Add New Components functionality available.

Inserting Add-in Boards

Your VAIO Digital Studio Computer accommodates PCI add-in boards up to 7.7 inches in length.

Using Devices Connected to the i.LINK (IEEE 1394), S-Link (Control-A1), and Optical Digital Audio Output Connectors

For the latest information on devices known to be compatible with the state-of the-art audio, video, and graphics capabilities of your VAIO computer, check the Sony web site at http://www.sony.com/pcsupport.

Connecting to i.LINK Ports

Your VAIO computer includes a 4-pin i.LINK connector on the front of the system and two 6-pin i.LINK connectors on the back of the system. A 6-pin i.LINK connector can supply power from the computer to the connected device if the device is equipped with a 6-pin connector. Each 6-pin connector supplies 10V to 12V. The total power supplied by both 6-pin i.LINK connectors cannot exceed 6 watts. A 4-pin i.LINK connector cannot supply power to a connected device.

Capturing and Editing Digital Video Clips

- You can capture digital video clips using a digital video camera recorder and DVgate Motion software. Once the clips are saved as AVI files, they can be edited using DVgate Motion, DVgate Clip, or Adobe Premiere® LE. You cannot capture digital video clips directly using the Capture menu in Adobe Premiere LE. Adobe Premiere LE supports an analog capture board for capturing clips. Your VAIO computer is designed for digital video input.
- If there is no audio data associated with an AVI file, the message "Codec compression error" appears. If you do not wish to associate audio with your AVI file, you can add muted sound data by recording audio with the mute option enabled.
- For best performance, when editing AVI files in Adobe Premiere LE, you should use the default setup parameters that shipped with your system. If you change the default setup and want to reinitialize the parameters, follow these steps:

    1. In the Adobe Premiere LE application, select Compression from the Make menu. The Compression Settings dialog box appears.
    2. In the Method list box, select Sony DV software CODEC.
    3. Click OK to close the screen.
    4. From the Make menu, select Preset. The Preset dialog box appears.
    5. Select the parameters for Time Base, Compress, Output, and Preview Option settings as indicated below.

[Time base]

Time base - 29.97fps (required)

[Compress]

File type - AVI (required)
Compress Program Method - Sony DV software CODEC (required)
Compress Program Depth - Millions colors (No other options)
Quality (No control for this item)
Option: Frames per second - 30 (required)
Option: Basic Key Frames (No control for this item)
Option: Optimize Still Off (recommended)
Data rate - Recompress Off (recommended)

[Output options]

Video - On (required)
Video Size - 720x480
4:3 Aspect - Off (required)
VideoType - Field 2 (recommended)
Audio - On (required)
Audio Rate - 44kHz (required)
Audio Format - 16 Bit Stereo or 16 Bit Monaural (required)
Audio Type - Uncompress (required)
Audio Interleave - 1 frame (recommended)
- Less than 30 frames (required)

Audio Sync - 1.0 (required)
Audio Skew - 0.75 (recommended)
- Less than 1.0 (required)

[Preview Option]

Preview Window Size - 360x240

Note that Adobe Premiere LE does not save the Preview Window Size, but uses a default size of 320 x 213 each time the application launches. We recommend that you change this setting to 360 x 240 to improve the quality of preview clips when editing AVI files.

Using Alternate Browsers with America Online®

To use Internet Explorer or Netscape Navigator as your browser with America Online, follow these steps:

1. From the Start menu, point to Settings and then click Control Panel.
2. Click the Internet icon.
3. Click the Connection tab.
4. Click the "Connect to the Internet using local area network" radio button.
5. Click OK.

Using DVgate Motion

When capturing clips:

- Do not use DVgate Motion when the connected digital video peripheral is in Timer Recording mode, as this could produce a malfunction in the peripheral.
- Captures larger than 2 GB (9 minutes and 30 seconds) are automatically continued in a second file.
- You can record stereo audio (stereo 1) while capturing video. You cannot add audio on the stereo 2 track after capturing the video data.
- You cannot use different audio modes on the same tape. You should perform a separate capture for each audio mode you wish to use.
- DVgate Motion does not support hard disk compression. You should not use disk compression if you are planning to work with DVgate Motion.
- Title data is saved in the flash memory of a digital video camera and is not transferred to tape by DVgate Motion.
- To avoid interruption of capture sessions, you should disable the screen saver.
- The drop frame compensation feature does not provide accurate compensation adjustments for tapes recorded in LP mode.
- For tapes that include a mixture of both SP and LP mode, the information displayed by the capture progress indicator may not be accurate.
- Make sure the video head of your digital video device is properly cleaned. Anomalies that you see in captured data could be due to dust or other particles on the video head.
    - The last frame captured is one frame before your selected [OUT] point. The frame you see immediately after clicking the [OUT] button is not captured.

When recording AVI files to tape:

- Do not use DVgate Motion when the connected digital video peripheral is in Timer Recording mode, as this could produce a malfunction in the peripheral.

- You can record only AVI files. MPEG files cannot be recorded.
- To avoid recording problems, such as a single frame appearing in multiple frames, close other applications on your system while recording.
- You cannot use different audio modes on the same tape. If you have AVI files that use different audio modes, they cannot be recorded at the same time, but must be recorded separately.
- Do not attempt to work with AVI files that are smaller than 4 MB.
- DVgate Motion does not support hard disk compression. You should not use disk compression if you are planning to work with DVgate Motion.
- In order to maximize recording capabilities, video and audio data are not available while you are recording.

If DVgate Motion indicates that frames have been dropped, you should try closing all open applications, or you may need to defragment your hard drive.

Restoring Audio Drivers

When you restore the audio drivers from the Application Recovery CD, you need to restart your system to use these drivers. In the Add New Hardware wizard that appears when you restart, click the Next button until you are prompted for the location of the drivers. The audio drivers are located on the Application Recovery CD in G:\drivers\audio\AL98091701\English.

Using AC-3® to Optical Digital Audio Output

MiniDisc player/recorders, DAT player/recorders, and older digital receivers do not support Dolby® Digital (AC-3). You should not use the AC-3 to Optical Digital Audio Output option unless you are using a device that supports Dolby Digital. Please refer to the manual supplied with your equipment to determine if it supports Dolby Digital. If you are unsure and you have selected the AC-3 to Optical Digital Audio Output option, turn down the volume on your equipment before using the DVD player.

Using America Online or Sony Online Support with WinFax® Basic Edition

Once you have configured WinFax Basic Edition, it is automatically available for your use. You cannot use America Online or Sony Online Support when the automatic fax receive feature of WinFax Basic Edition is on. To disable this feature, right click the WinFax icon in the task tray at the bottom right corner of your screen, and then select Exit.

Memory Upgrade Specifications

When upgrading memory, use only 3.3V 64-bit PC-100 168 PIN SDRAM DIMM modules. For more information on Digital Studio Computer compatible memory, call Sony at 1-888-4SONYPC (1-888-476-6972).

About the Software On Your Computer

Your VAIO Digital Studio computer is ready to help you work, play, learn, and communicate as soon as you turn it on. This section gives you an overview of the activities you can perform with your software titles. For support information, see For Answers to Your Software Questions.

Adobe Acrobat® Reader

Adobe Systems Incorporated

Acrobat Reader software allows you to view, navigate, and print electronic documents in Adobe Portable Document Format (PDF), an open file format that is intended to preserve the fidelity of documents created on all major computer platforms.

Adobe PhotoDeluxe® Business Edition

Adobe Systems Incorporated

Create amazing photo effects with PhotoDeluxe. Without learning complex software, you can

enhance, restore, and be creative with your photos. Includes built-in guided activities, stock photos, clip art, and templates to assist you.

Adobe Premiere® LE

Adobe Systems Incorporated

Adobe Premiere LE offers an interface and editing tool for producing movies for video, multimedia, or the web. View source clips and edited footage simultaneously in the monitor window. Create video clips up to three hours long with complete audio-video synchronization.

America Online®

America Online

America Online is the world's most popular Internet online service. Stay in touch with family and friends with Easy-to-Use E-mail, manage your personal finances, get the latest news and sports scores, and chat with thousands of others who share your interests.

AT&T WorldNet® Service

AT&T

Fast, reliable Internet access from AT&T WorldNet Service. AT&T WorldNet Service provides web-based e-mail, a personalized start page from Excite, easy access to the Excite search engine, free web pages, online and live agent technical support, instant messaging, and special shopping discounts at Market Square.

CompuServe®

CompuServe, Inc.

CompuServe is the most comprehensive source of organized business and educational information online today. CompuServe allows you to access the vastness of the Internet without wasting time wading through it. Maximize your time online with CompuServe.

Digital Media Park

Sony Electronics

An integrated suite of multimedia cataloging and playback programs including Media Bar, Media Library, Media Showcase, and MiniDisc Editor. Manage your music by cataloging your entire CD collection, and then create custom MiniDiscs of your favorite songs.

Dr. Solomon's® Anti-Virus

Dr Solomon's Software Inc.

Dr. Solomon's Anti-Virus provides the most comprehensive defense against the spread of viruses, including macro viruses. It can scan inside compressed files and automatically protects your system against viruses sent via e-mail or Internet download.

DVgate Motion

Sony Electronics

Connect a digital video camera recorder to the i.LINK connector and capture your own video clips. You can edit the clips from your video, add others, and combine clips into new movie segments.

DVgate Still

Sony Electronics

Connect a digital video camera recorder to the i.LINK connector and capture your own still images. You can save your images in a variety of popular file formats.

EarthLink Sprint TotalAccess

EarthLink Network, Inc.

An Internet Service Provider that supplies access, information, and assistance to its customers, introducing them to the Internet. Member benefits include e-mail, newsgroups, a Personal Start Page, a free 6 MB web site, a member magazine, and 24-hour technical support.

Microsoft® Encarta® 99 Encyclopedia

Microsoft Corporation

Microsoft Encarta Encyclopedia combines current, comprehensive content with up-to-date multimedia technology, providing users with unique, engaging learning experiences. With the 1999 edition, Encarta provides a wealth of information resources and unique interactive features

Microsoft® Internet Explorer for Windows® 98

Microsoft Corporation

Internet Explorer delivers the web the way you want it. It's safe, easy to use, and you can personalize how you access the web. Outlook Express and other tools in Internet Explorer also help you have a great experience when you are on the web!

Microsoft® Money 99

Microsoft Corporation

Microsoft Money 99 is personal finance software that lets you perform your financial tasks, everything from paying bills to planning for the future, in a smarter, faster way. With Money's online services, you can pay bills and bank from the comfort of home.

Microsoft® Outlook® 98

Microsoft Corporation

Outlook 98 is Microsoft's premier messaging and collaboration client. It combines the leading support for Internet standards-based messaging systems with integrated calendar, contact, and task-management features.

Microsoft® Works

Microsoft Corporation

Works provides users with the right set of core tools that allows them to write letters and reports, track family and friends with the address book, manage home finances, and create a home inventory.

MotorHead

Gremlin Interactive Ltd.

MotorHead is realistic arcade-racing; high-velocity entertainment that puts you behind the wheel for 3D pure racing action. Power across Europe and USA in the Transatlantic Speed League, where second place is simply not an option.

Netscape Communicator®

Netscape Communications

Netscape Communicator is the all-in-one Internet tool that makes it easy to browse the web, send Internet e-mail, chat, read newsgroups, and compose great web documents.

PictureGear

Sony Electronics

This image management software displays images from your hard drive, a Sony digital still camera, or a Sony Mavica® camera. The images appear in a convenient light-table format, so that you can easily view the contents of an entire folder.

Prodigy Internet

Prodigy Communications Corporation

An Internet service that helps you find what you need online faster and smarter. Prodigy delivers powerful online content, such as sports scores, stock quotes, news, and easy access to Excite , plus a personal e-mail account and quality customer service, all at a competitive price.

Quicken® Basic 99

Intuit, Inc

Quicken is the fastest, easiest way to organize your finances. Quicken works just like your checkbook, so it's easy to learn and use. Quicken manages all of your finances, bank accounts, credit cards, investments, and loans. You can even pay your bills online.

SurfMonkey

MediaLive, Inc

SurfMonkey is a web browser and online service for kids ages 6-12 that makes the Internet safe, fun, and easy. A talking monkey guides children through web sites and chat rooms, and can read their e-mail out loud. Children cannot go to inappropriate web sites, parents can screen e-mail messages, and chat messages are monitored.

VAIO Smart Keyboard

Sony Electronics

VAIO Smart Keyboard software operates your new easy to use programmable USB keyboard. Six programmable buttons enable you to launch your favorite applications, open frequently used files, access Explorer, or even open your web browser with just the click of a button.

WinFax® Basic Edition

Symantec Corporation

WinFax Basic Edition incorporates an easy-to-use interface that allows you to send and receive faxes easily. Upgrade to WinFax Pro to receive additional features.

About Your Recovery CDs

Application Recovery CD(s)

Sony Electronics

The Application Recovery CD program allows you to reinstall individual applications and device drivers. Use it to restore corrupted or accidentally erased files.

System Recovery CD(s)

Sony Electronics

The System Recovery CD program allows you to restore the software titles that shipped with your computer if they become corrupted or are erased accidentally. It can be used only to restore the hard disk of the Sony computer you purchased.

For Answers to Your Software Questions

Sony Service Center

For the Sony Service Center nearest you, call at 1-888-4SONYPC (1-888-476-6972).

Acrobat® Reader, Adobe PhotoDeluxe® Business Edition , Adobe Premiere® LE (Adobe Systems Incorporated)

Web site http://www.adobe.com/
phone 206-628-2746 (fee-based support)
fax 206-628-5737
e-mail techdocs@adobe.com
hours M-F, 6 AM-5 PM PT

America Online® (America Online)

Web site http://www.aol.com/
phone 800-827-3338
hours 7 days a week, 6 AM - 2 PM ET

AT&T WorldNet® Service (AT&T)

Web site http://www.att.net/*
phone 800-400-1447
e-mail worldnet@attmail.com
hours 7 days a week, 24 hours a day

* You must be a WorldNet Service customer to access online support.

CompuServe® Interactive (CompuServe Interactive, Inc.)

Web site http://www.compuserve.com/
phone 800-848-8990
hours M-F, 8 AM - 1 AM ET, S-S 10 AM - 10 PM ET

Dr. Solomon's® Anti-Virus (Dr. Solomon's Software Inc.)

Web site http://www.drsolomon.com/
phone 888-377-6566
e-mail support@us.drsolomon.com
hours 7 days a week, 24 hours a day

EarthLink Sprint TotalAccess (EarthLink Network, Inc.)

Web site http://help.earthlink.net/techsupport/
phone 800-395-8410
e-mail support@earthlink.net
hours 7 days a week, 24 hours a day

Easy Internet Access (Encompass, Inc.)

Web site http://www.encmpss.com/
phone 800-927-3000
hours 7 days a week, 24 hours a day

MotorHead (Gremlin Interactive Ltd.)

Web site http://www.gremlin.com/
phone 888-4SONYPC (888-476-6972)
hours 7 days a week, 24 hours a day

Windows® 98 Operating System, Works, Money, Encarta, Internet Explorer (Microsoft Corporation)

Web site http://www.microsoft.com/support/
phone 888-4SONYPC (888-476-6972)*
hours 7 days a week, 24 hours a day
* Support from 1-888-4SONYPC is free of charge for 90 days after the original date of purchase.

Netscape Communicator® (Netscape Communications Corporation)

Web site http://www.netscape.com/
phone 888-4SONYPC (888-476-6972)*
hours 7 days a week, 24 hours a day
* Support from 1-888-4SONYPC is free of charge for 90 days after the original date of purchase.

Prodigy Internet (Prodigy Communications Corporation.)

Web site http://www.prodigy.com/
phone 800-PRODIGY
hours 7 AM - 3 AM ET

Quicken® Basic (Intuit Inc.)

Web site http://www.intuit.com/support/
phone 900-555-4688
hours 7 days a week, 24 hours a day

SurfMonkey (MediaLive, Inc.)

Web site http://www.surfmonkey.com/support/Sub_support.html
phone 408-556-2060
e-mail support@surfmonkey.com
hours 9AM-10PM PT everyday

WinFax® Basic Edition (Symantec Corporation.)

Web site http://www.symantec.com/techsupp/
phone 800-798-0850
fax 800-554-4403 in North America
541-984-2490 outside North America

Specifications

Model **PCV-E518DS**
Processor 500 MHz Pentium® III
Hard Disk Drive 17.28 GB
Standard SDRAM 128 MB PC-100 SDRAM, expandable to 256 MB
Video RAM 8 MB SDRAM
MPEG "Sony Tuned" MPEG Digital Video supports full-screen video playback
Graphics 3D 2X AGP graphics acceleration (Matrox)
Sound Capabilities 3D Positional Audio (Aureal A3D)
Diskette Drive 3.5" 1.44 MB FDD
CD-RW Drive CD-RW Drive (4X max. CD-R writing, 2X max. CD-RW writing, 24X max. reading)
Modem K56flex technology/V.90 compatible data/fax modem[1]
Expansion Capabilities One PCI slot
One additional hard disk drive bay
Connection Capabilities (Front) USB port
i.LINK port (4-pin)
Connection Capabilities (Rear) Optional Keyboard (PS/2-style)
Mouse (PS/2-style)
USB port
Serial port
Parallel (printer)
Game/MIDI
Headphones
Line In
Microphone
VGA Monitor
S-Link (Control-A1)
Optical Digital Audio Out
Two i.LINK ports (6-pin)[2]
Modem line (RJ-11)
Phone line (RJ-11)
Supplied Accessories VAIO Smart keyboard
Sony two-button mouse
RJ-11 phone cable
Power cord
Service 90-day limited service. Extendible to one year from original date of purchase upon registration[3]
Limited Warranty 90-day parts/labor standard. Extendible to one year from original date of purchase upon registration[4]

Power Requirements 200 watts maximum
Dimensions 7" (w) x 12" (h) x 13 3/4" (d) (178mm x 304mm x 330mm)
Weight 17 lbs. (7.71 kg)
Operating Temperature 50º F to 95º F (+10º C to 35º C)

[1] Maximum speed for faxing is 14.4 kbytes/s. Your modem is capable of downloading at 56 kbytes/s using K56flex technology or V.90. Your phone service, online service, or Internet Service Provider however, may not support this technology or operate at this speed.

[2] Six-pin i-LINK connectors on the rear of the system each supply 10V to 12V. The combined total wattage that can be supplied by the two connectors is 6 watts.

[3] Certain restrictions apply

[4] Certain restrictions apply

Specifications are subject to change without notice.

This product meets the standards of the International Energy Star Program for energy efficiency.

© 1999 Sony Electronics Inc. Reproduction in w hole or in part w ithout w ritten permission is prohibited. All rights reserved.

Read Me First

Welcome

Congratulations on your purchase of the Sony VAIO Digital Studio Computer. Sony has combined leading-edge technology in audio, video, computing, and communications to provide you with state-of-the-art personal computing.

Features

 For a complete description of the specifications of your VAIO Digital Studio Computer, see Specifications.

- **Exceptional performance:** Your computer includes a brand new Intel® Pentium® III processor, a CD-RW drive, and a V.90 compatible data/fax modem.*

* Actual upload and download speeds may vary due to line conditions, ISP support, and government regulations.

- **CD-RW drive:** This drive is the ideal solution for making backups and data archiving, with the ability to store up to 650 MB* of removable, rewritable storage on a single rewritable CD. Save your movies to CD-R or CD-RW media and share videos and images with family and friends.

***** 530 MB after formatting.

- **VAIO Smart Keyboard:** This USB keyboard has programmable shortcut buttons for launching your favorite programs or accessing the Internet.
- **Sony audio and video quality:** High-fidelity positional 3D audio system (A3D), high-powered 3D graphics (AGP), and "Sony-Tuned" MPEG digital video playback enable you to take advantage of today's advanced multimedia applications, games, and entertainment software.
- **S-Link (Control-A1):** This technology allows you to build a database of all your music and video CDs and then record your favorite audio selections on MiniDiscs. Use your computer with a 200 disc mega-storage CD changer and a MiniDisc recording deck.
- **i.LINK (IEEE 1394):** Three built-in i.LINK ports provide you with maximum digital connection capability. The i.LINK name and logo identify a digital interface (IEEE 1394) for high speed communication. By using your VAIO Digital Studio Computer, a Sony Digital Handycam® Camcorder, the DVgate software preinstalled on your computer, and the i.LINK (IEEE 1394) interface, you can easily create and edit your own home videos.
- **Optical Digital Audio Output:** This high-quality digital interface transmits digital audio data via light pulses. Transfer crystal clear digital audio to your MiniDisc recorder.
- **Digital Studio Software**: Enjoy all of your computer's audio and video capabilities with component-like applications that allow you to creatively manipulate digital still images, video clips, and audio tracks.
- **50 free hours of Internet access:** Use the Internet for up to 50 free hours when you sign up with GTE (no credit card required). Limit of two hours per day. Free access expires after 50 hours or 90 days after signing up--whichever occurs first.
- **Preinstalled software titles**: All the software on your computer is preinstalled, configured, and ready for you to use right out of the box.
- **Windows® 98**: Your system includes the latest operating system from Microsoft.
- **Communications:** Access popular online services, browse the Internet, send faxes, and more.

Unpacking Your Computer

Computer and Supplied Accessories

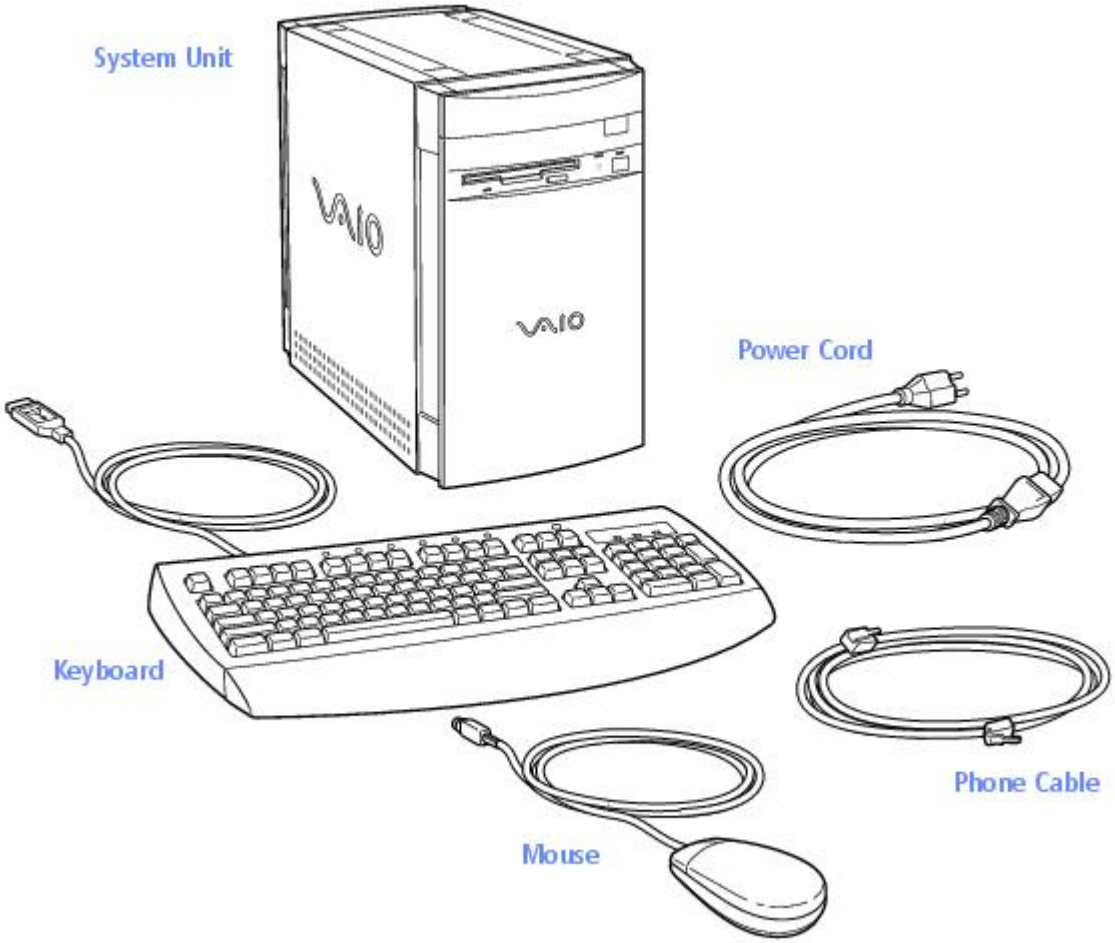

Manuals

- *Read Me First* (this manual) contains features and specifications of your computer. It also includes information on the applications included with your system, how to contact software vendors, and last minute troubleshooting tips.
- The *VAIO Digital Studio Computer User Guide* describes how to get started with your computer, find help, and solve common problems.
- The *Microsoft® Windows®98 Getting Started* manual explains how to use the basic features of the Windows operating system.

Recovery CDs

- System Recovery CD(s)
- Application Recovery CD(s)

Other

- Setting up your VAIO Digital Studio Computer (poster)
- Packet containing special product offers

Software Library

The Software Library contains the Microsoft software license agreement, Sony end-user license agreement, and the following CDs:

- Adobe PhotoDeluxe® Business Edition 3.0
- Gremlin Interactive Ltd. MotorHead
- Microsoft® Encarta® 99 Encyclopedia
- Microsoft® Money/Microsoft® Works

Back Panel Overview

The back panel of your computer contains the connectors where you plug in supplied and optional accessories. The icons on the back panel serve as a map to help you locate the connectors on your computer.

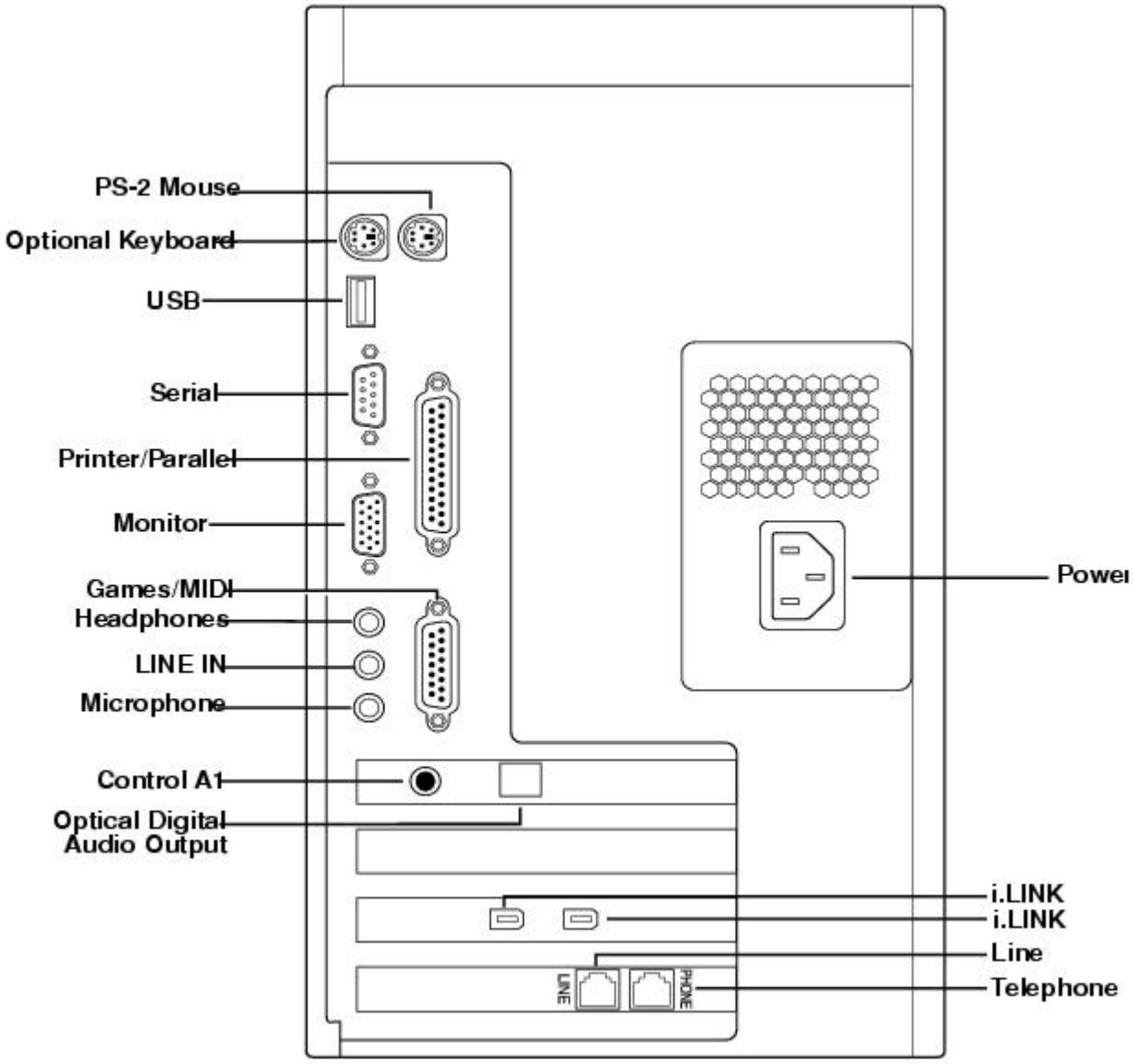

For your convenience, your computer includes USB and i.LINK connectors on both the front and back panels, allowing you to connect to either set of connectors. i.LINK connectors on the back of your system are 6-pin connectors.

Front Panel Overview

The front panel of your VAIO Digital Studio Computer allows for access to the diskette and CD-RW drives. It also includes USB and i.LINK ports to connect USB devices, CD changers, MiniDisc drives, or other components.

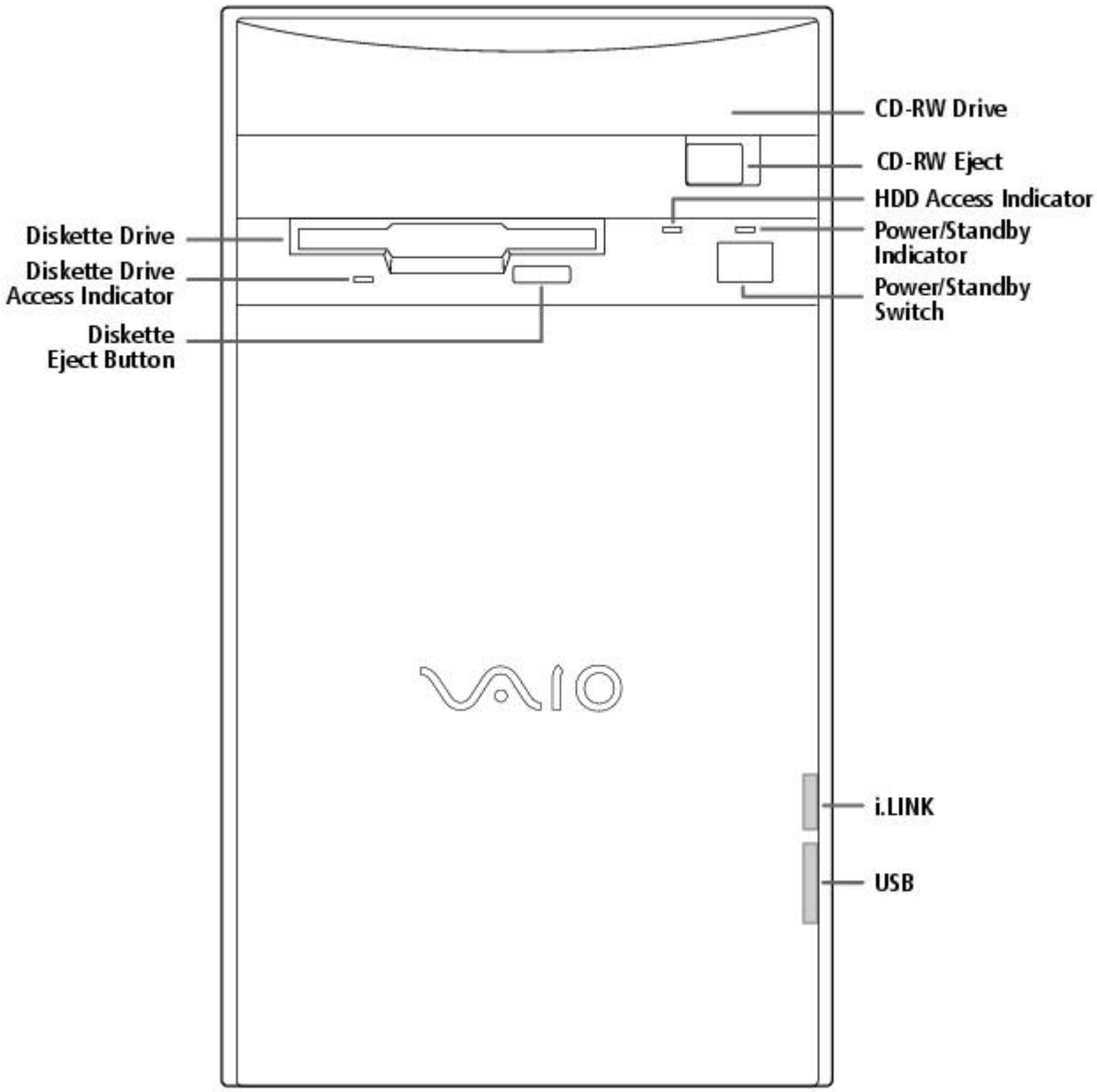

For your convenience, your computer includes USB and i.LINK connectors on both the front and back panels, allowing you to connect to either set of connectors. The i.LINK connector on the front of your system is a 4-pin connector.

Supplementary Information

For the most recent version of this manual, see the online version of Read Me First. You can access this document from the Windows Start Menu by selecting Programs/VAIO Documentation.

Hard Drive Partition

In order to improve the performance of your computer's DVgate Motion software, the hard disk drive on your computer has been formatted with two partitions, C and D. DVgate Motion saves files to the D partition. This prevents large video captures from consuming the available space on your C partition. To maintain optimum performance of DVgate Motion, you should defragment regularly.

VAIO Smart Keyboard Default Settings

The VAIO Smart Keyboard programmable buttons come with the following applications as their default settings:

S1 - Easy Internet Access Browser (Internet)

S2 - Outlook 98 (Mail)

S3 - MotorHead (Game)

S4 - Microsoft® Works (Work)

S5 - Quicken 99 Basic (Finance)

S6 - VAIO Documentation (Help)

All six buttons are reprogrammable.

Using The Standby Mode

To Put Your Computer into Standby Mode

When you are done using your computer, you can put it in Standby mode rather than turn it off completely. There are four ways to put your computer into Standby mode.

- Touch the power switch on the front panel.
- Click Shut Down at the bottom of the Start menu to display the Shut Down Windows dialog box. Select Stand by, and then click OK.
- Press the Standby button on the VAIO Smart Keyboard (the half moon icon).
- Change the timer settings for Standby mode in the Control Panel, as follows:

1. From the Start menu, point to Settings and click Control Panel.
2. Click the Power Management icon.
3. On the Power Schemes tab, change the Power scheme to Home/Office Desk.
4. In the list box for System standby, select an interval of time.
5. Click the OK button and close the Control Panel.

To Resume from Standby Mode

There are two ways to resume system functionality when your computer is in Standby mode. Use either of the following methods.

- Press any key on your keyboard, such as the Enter key.
- Touch the power switch on the front panel.

It may take up to 30 seconds for your system to recover stored information and resume functionality. The screen remains blank while the system is resuming functionality.

Applications That Use the TWAIN Driver

Digital imaging applications, such as Adobe PhotoDeluxe®, allow you to transfer images to your computer from external devices, including scanners or digital cameras. For some devices, a TWAIN driver window appears on the screen. Always close the TWAIN driver window before exiting or minimizing a digital imaging application.

Restoring Outlook 98

For the Add New Components functionality to be available with Microsoft Outlook, you must first run the installation program for Outlook from the Application Recovery CD. When prompted to install the program, select Exit. This decompresses the software, making the Add New Components functionality available.

Inserting Add-in Boards

Your VAIO Digital Studio Computer accommodates PCI add-in boards up to 7.7 inches in length.

Using Devices Connected to the i.LINK (IEEE 1394), S-Link (Control-A1), and Optical Digital Audio Output Connectors

For the latest information on devices known to be compatible with the state-of the-art audio, video, and graphics capabilities of your VAIO computer, check the Sony web site at http://www.sony.com/pcsupport.

Connecting to i.LINK Ports

Your VAIO computer includes a 4-pin i.LINK connector on the front of the system and two 6-pin i.LINK connectors on the back of the system. A 6-pin i.LINK connector can supply power from the computer to the connected device if the device is equipped with a 6-pin connector. Each 6-pin connector supplies 10V to 12V. The total power supplied by both 6-pin i.LINK connectors cannot exceed 6 watts. A 4-pin i.LINK connector cannot supply power to a connected device.

Capturing and Editing Digital Video Clips

- You can capture digital video clips using a digital video camera recorder and DVgate Motion software. Once the clips are saved as AVI files, they can be edited using DVgate Motion, DVgate Clip, or Adobe Premiere® LE. You cannot capture digital video clips directly using the Capture menu in Adobe Premiere LE. Adobe Premiere LE supports an analog capture board for capturing clips. Your VAIO computer is designed for digital video input.
- If there is no audio data associated with an AVI file, the message "Codec compression error" appears. If you do not wish to associate audio with your AVI file, you can add muted sound data by recording audio with the mute option enabled.
- For best performance, when editing AVI files in Adobe Premiere LE, you should use the default setup parameters that shipped with your system. If you change the default setup and want to reinitialize the parameters, follow these steps:

    1. In the Adobe Premiere LE application, select Compression from the Make menu. The Compression Settings dialog box appears.
    2. In the Method list box, select Sony DV software CODEC.
    3. Click OK to close the screen.
    4. From the Make menu, select Preset. The Preset dialog box appears.
    5. Select the parameters for Time Base, Compress, Output, and Preview Option settings as indicated below.

[Time base]

Time base - 29.97fps (required)

[Compress]

File type - AVI (required)
Compress Program Method - Sony DV software CODEC (required)
Compress Program Depth - Millions colors (No other options)
Quality (No control for this item)
Option: Frames per second - 30 (required)
Option: Basic Key Frames (No control for this item)
Option: Optimize Still Off (recommended)
Data rate - Recompress Off (recommended)

[Output options]

Video - On (required)
Video Size - 720x480
4:3 Aspect - Off (required)
VideoType - Field 2 (recommended)
Audio - On (required)
Audio Rate - 44kHz (required)
Audio Format - 16 Bit Stereo or 16 Bit Monaural (required)
Audio Type - Uncompress (required)
Audio Interleave - 1 frame (recommended)
- Less than 30 frames (required)

Audio Sync - 1.0 (required)
Audio Skew - 0.75 (recommended)
- Less than 1.0 (required)

[Preview Option]

Preview Window Size - 360x240

Note that Adobe Premiere LE does not save the Preview Window Size, but uses a default size of 320 x 213 each time the application launches. We recommend that you change this setting to 360 x 240 to improve the quality of preview clips when editing AVI files.

Using Alternate Browsers with America Online®

To use Internet Explorer or Netscape Navigator as your browser with America Online, follow these steps:

1. From the Start menu, point to Settings and then click Control Panel.
2. Click the Internet icon.
3. Click the Connection tab.
4. Click the "Connect to the Internet using local area network" radio button.
5. Click OK.

Using DVgate Motion

When capturing clips:

- Do not use DVgate Motion when the connected digital video peripheral is in Timer Recording mode, as this could produce a malfunction in the peripheral.
- Captures larger than 2 GB (9 minutes and 30 seconds) are automatically continued in a second file.
- You can record stereo audio (stereo 1) while capturing video. You cannot add audio on the stereo 2 track after capturing the video data.
- You cannot use different audio modes on the same tape. You should perform a separate capture for each audio mode you wish to use.
- DVgate Motion does not support hard disk compression. You should not use disk compression if you are planning to work with DVgate Motion.
- Title data is saved in the flash memory of a digital video camera and is not transferred to tape by DVgate Motion.
- To avoid interruption of capture sessions, you should disable the screen saver.
- The drop frame compensation feature does not provide accurate compensation adjustments for tapes recorded in LP mode.
- For tapes that include a mixture of both SP and LP mode, the information displayed by the capture progress indicator may not be accurate.
- Make sure the video head of your digital video device is properly cleaned. Anomalies that you see in captured data could be due to dust or other particles on the video head.
    - The last frame captured is one frame before your selected [OUT] point. The frame you see immediately after clicking the [OUT] button is not captured.

When recording AVI files to tape:

- Do not use DVgate Motion when the connected digital video peripheral is in Timer Recording mode, as this could produce a malfunction in the peripheral.

- You can record only AVI files. MPEG files cannot be recorded.
- To avoid recording problems, such as a single frame appearing in multiple frames, close other applications on your system while recording.
- You cannot use different audio modes on the same tape. If you have AVI files that use different audio modes, they cannot be recorded at the same time, but must be recorded separately.
- Do not attempt to work with AVI files that are smaller than 4 MB.
- DVgate Motion does not support hard disk compression. You should not use disk compression if you are planning to work with DVgate Motion.
- In order to maximize recording capabilities, video and audio data are not available while you are recording.

If DVgate Motion indicates that frames have been dropped, you should try closing all open applications, or you may need to defragment your hard drive.

Restoring Audio Drivers

When you restore the audio drivers from the Application Recovery CD, you need to restart your system to use these drivers. In the Add New Hardware wizard that appears when you restart, click the Next button until you are prompted for the location of the drivers. The audio drivers are located on the Application Recovery CD in G:\drivers\audio\AL98091701\English.

Using AC-3® to Optical Digital Audio Output

MiniDisc player/recorders, DAT player/recorders, and older digital receivers do not support Dolby® Digital (AC-3). You should not use the AC-3 to Optical Digital Audio Output option unless you are using a device that supports Dolby Digital. Please refer to the manual supplied with your equipment to determine if it supports Dolby Digital. If you are unsure and you have selected the AC-3 to Optical Digital Audio Output option, turn down the volume on your equipment before using the DVD player.

Using America Online or Sony Online Support with WinFax® Basic Edition

Once you have configured WinFax Basic Edition, it is automatically available for your use. You cannot use America Online or Sony Online Support when the automatic fax receive feature of WinFax Basic Edition is on. To disable this feature, right click the WinFax icon in the task tray at the bottom right corner of your screen, and then select Exit.

Memory Upgrade Specifications

When upgrading memory, use only 3.3V 64-bit PC-100 168 PIN SDRAM DIMM modules. For more information on Digital Studio Computer compatible memory, call Sony at 1-888-4SONYPC (1-888-476-6972).

About the Software On Your Computer

Your VAIO Digital Studio computer is ready to help you work, play, learn, and communicate as soon as you turn it on. This section gives you an overview of the activities you can perform with your software titles. For support information, see For Answers to Your Software Questions.

Adobe Acrobat® Reader

Adobe Systems Incorporated

Acrobat Reader software allows you to view, navigate, and print electronic documents in Adobe Portable Document Format (PDF), an open file format that is intended to preserve the fidelity of documents created on all major computer platforms.

Adobe PhotoDeluxe® Business Edition

Adobe Systems Incorporated

Create amazing photo effects with PhotoDeluxe. Without learning complex software, you can

enhance, restore, and be creative with your photos. Includes built-in guided activities, stock photos, clip art, and templates to assist you.

Adobe Premiere® LE

Adobe Systems Incorporated

Adobe Premiere LE offers an interface and editing tool for producing movies for video, multimedia, or the web. View source clips and edited footage simultaneously in the monitor window. Create video clips up to three hours long with complete audio-video synchronization.

America Online®

America Online

America Online is the world's most popular Internet online service. Stay in touch with family and friends with Easy-to-Use E-mail, manage your personal finances, get the latest news and sports scores, and chat with thousands of others who share your interests.

AT&T WorldNet® Service

AT&T

Fast, reliable Internet access from AT&T WorldNet Service. AT&T WorldNet Service provides web-based e-mail, a personalized start page from Excite, easy access to the Excite search engine, free web pages, online and live agent technical support, instant messaging, and special shopping discounts at Market Square.

CompuServe®

CompuServe, Inc.

CompuServe is the most comprehensive source of organized business and educational information online today. CompuServe allows you to access the vastness of the Internet without wasting time wading through it. Maximize your time online with CompuServe.

Digital Media Park

Sony Electronics

An integrated suite of multimedia cataloging and playback programs including Media Bar, Media Library, Media Showcase, and MiniDisc Editor. Manage your music by cataloging your entire CD collection, and then create custom MiniDiscs of your favorite songs.

Dr. Solomon's® Anti-Virus

Dr Solomon's Software Inc.

Dr. Solomon's Anti-Virus provides the most comprehensive defense against the spread of viruses, including macro viruses. It can scan inside compressed files and automatically protects your system against viruses sent via e-mail or Internet download.

DVgate Motion

Sony Electronics

Connect a digital video camera recorder to the i.LINK connector and capture your own video clips. You can edit the clips from your video, add others, and combine clips into new movie segments.

DVgate Still

Sony Electronics

Connect a digital video camera recorder to the i.LINK connector and capture your own still images. You can save your images in a variety of popular file formats.

EarthLink Sprint TotalAccess

EarthLink Network, Inc.

An Internet Service Provider that supplies access, information, and assistance to its customers, introducing them to the Internet. Member benefits include e-mail, newsgroups, a Personal Start Page, a free 6 MB web site, a member magazine, and 24-hour technical support.

Microsoft® Encarta® 99 Encyclopedia

Microsoft Corporation

Microsoft Encarta Encyclopedia combines current, comprehensive content with up-to-date multimedia technology, providing users with unique, engaging learning experiences. With the 1999 edition, Encarta provides a wealth of information resources and unique interactive features

Microsoft® Internet Explorer for Windows® 98

Microsoft Corporation

Internet Explorer delivers the web the way you want it. It's safe, easy to use, and you can personalize how you access the web. Outlook Express and other tools in Internet Explorer also help you have a great experience when you are on the web!

Microsoft® Money 99

Microsoft Corporation

Microsoft Money 99 is personal finance software that lets you perform your financial tasks, everything from paying bills to planning for the future, in a smarter, faster way. With Money's online services, you can pay bills and bank from the comfort of home.

Microsoft® Outlook® 98

Microsoft Corporation

Outlook 98 is Microsoft's premier messaging and collaboration client. It combines the leading support for Internet standards-based messaging systems with integrated calendar, contact, and task-management features.

Microsoft® Works

Microsoft Corporation

Works provides users with the right set of core tools that allows them to write letters and reports, track family and friends with the address book, manage home finances, and create a home inventory.

MotorHead

Gremlin Interactive Ltd.

MotorHead is realistic arcade-racing; high-velocity entertainment that puts you behind the wheel for 3D pure racing action. Power across Europe and USA in the Transatlantic Speed League, where second place is simply not an option.

Netscape Communicator®

Netscape Communications

Netscape Communicator is the all-in-one Internet tool that makes it easy to browse the web, send Internet e-mail, chat, read newsgroups, and compose great web documents.

PictureGear

Sony Electronics

This image management software displays images from your hard drive, a Sony digital still camera, or a Sony Mavica® camera. The images appear in a convenient light-table format, so that you can easily view the contents of an entire folder.

Prodigy Internet

Prodigy Communications Corporation

An Internet service that helps you find what you need online faster and smarter. Prodigy delivers powerful online content, such as sports scores, stock quotes, news, and easy access to Excite , plus a personal e-mail account and quality customer service, all at a competitive price.

Quicken® Basic 99

Intuit, Inc

Quicken is the fastest, easiest way to organize your finances. Quicken works just like your checkbook, so it's easy to learn and use. Quicken manages all of your finances, bank accounts, credit cards, investments, and loans. You can even pay your bills online.

SurfMonkey

MediaLive, Inc

SurfMonkey is a web browser and online service for kids ages 6-12 that makes the Internet safe, fun, and easy. A talking monkey guides children through web sites and chat rooms, and can read their e-mail out loud. Children cannot go to inappropriate web sites, parents can screen e-mail messages, and chat messages are monitored.

VAIO Smart Keyboard

Sony Electronics

VAIO Smart Keyboard software operates your new easy to use programmable USB keyboard. Six programmable buttons enable you to launch your favorite applications, open frequently used files, access Explorer, or even open your web browser with just the click of a button.

WinFax® Basic Edition

Symantec Corporation

WinFax Basic Edition incorporates an easy-to-use interface that allows you to send and receive faxes easily. Upgrade to WinFax Pro to receive additional features.

About Your Recovery CDs

Application Recovery CD(s)

Sony Electronics

The Application Recovery CD program allows you to reinstall individual applications and device drivers. Use it to restore corrupted or accidentally erased files.

System Recovery CD(s)

Sony Electronics

The System Recovery CD program allows you to restore the software titles that shipped with your computer if they become corrupted or are erased accidentally. It can be used only to restore the hard disk of the Sony computer you purchased.

For Answers to Your Software Questions

Sony Service Center

For the Sony Service Center nearest you, call at 1-888-4SONYPC (1-888-476-6972).

Acrobat® Reader, Adobe PhotoDeluxe® Business Edition , Adobe Premiere® LE (Adobe Systems Incorporated)

Web site http://www.adobe.com/
phone 206-628-2746 (fee-based support)
fax 206-628-5737
e-mail techdocs@adobe.com
hours M-F, 6 AM-5 PM PT

America Online® (America Online)

Web site http://www.aol.com/
phone 800-827-3338
hours 7 days a week, 6 AM - 2 PM ET

AT&T WorldNet® Service (AT&T)

Web site http://www.att.net/*
phone 800-400-1447
e-mail worldnet@attmail.com
hours 7 days a week, 24 hours a day

* You must be a WorldNet Service customer to access online support.

CompuServe® Interactive (CompuServe Interactive, Inc.)

Web site http://www.compuserve.com/
phone 800-848-8990
hours M-F, 8 AM - 1 AM ET, S-S 10 AM - 10 PM ET

Dr. Solomon's® Anti-Virus (Dr. Solomon's Software Inc.)

Web site http://www.drsolomon.com/
phone 888-377-6566
e-mail support@us.drsolomon.com
hours 7 days a week, 24 hours a day

EarthLink Sprint TotalAccess (EarthLink Network, Inc.)

Web site http://help.earthlink.net/techsupport/
phone 800-395-8410
e-mail support@earthlink.net
hours 7 days a week, 24 hours a day

Easy Internet Access (Encompass, Inc.)

Web site http://www.encmpss.com/
phone 800-927-3000
hours 7 days a week, 24 hours a day

MotorHead (Gremlin Interactive Ltd.)

Web site http://www.gremlin.com/
phone 888-4SONYPC (888-476-6972)
hours 7 days a week, 24 hours a day

Windows® 98 Operating System, Works, Money, Encarta, Internet Explorer (Microsoft Corporation)

Web site http://www.microsoft.com/support/
phone 888-4SONYPC (888-476-6972)*
hours 7 days a week, 24 hours a day
* Support from 1-888-4SONYPC is free of charge for 90 days after the original date of purchase.

Netscape Communicator® (Netscape Communications Corporation)

Web site http://www.netscape.com/
phone 888-4SONYPC (888-476-6972)*
hours 7 days a week, 24 hours a day
* Support from 1-888-4SONYPC is free of charge for 90 days after the original date of purchase.

Prodigy Internet (Prodigy Communications Corporation.)

Web site http://www.prodigy.com/
phone 800-PRODIGY
hours 7 AM - 3 AM ET

Quicken® Basic (Intuit Inc.)

Web site http://www.intuit.com/support/
phone 900-555-4688
hours 7 days a week, 24 hours a day

SurfMonkey (MediaLive, Inc.)

Web site http://www.surfmonkey.com/support/Sub_support.html
phone 408-556-2060
e-mail support@surfmonkey.com
hours 9AM-10PM PT everyday

WinFax® Basic Edition (Symantec Corporation.)

Web site http://www.symantec.com/techsupp/
phone 800-798-0850
fax 800-554-4403 in North America
541-984-2490 outside North America

Specifications

Model **PCV-E518DS**
Processor 500 MHz Pentium® III
Hard Disk Drive 17.28 GB
Standard SDRAM 128 MB PC-100 SDRAM, expandable to 256 MB
Video RAM 8 MB SDRAM
MPEG "Sony Tuned" MPEG Digital Video supports full-screen video playback
Graphics 3D 2X AGP graphics acceleration (Matrox)
Sound Capabilities 3D Positional Audio (Aureal A3D)
Diskette Drive 3.5" 1.44 MB FDD
CD-RW Drive CD-RW Drive (4X max. CD-R writing, 2X max. CD-RW writing, 24X max. reading)
Modem K56flex technology/V.90 compatible data/fax modem[1]
Expansion Capabilities One PCI slot
One additional hard disk drive bay
Connection Capabilities (Front) USB port
i.LINK port (4-pin)
Connection Capabilities (Rear) Optional Keyboard (PS/2-style)
Mouse (PS/2-style)
USB port
Serial port
Parallel (printer)
Game/MIDI
Headphones
Line In
Microphone
VGA Monitor
S-Link (Control-A1)
Optical Digital Audio Out
Two i.LINK ports (6-pin)[2]
Modem line (RJ-11)
Phone line (RJ-11)
Supplied Accessories VAIO Smart keyboard
Sony two-button mouse
RJ-11 phone cable
Power cord
Service 90-day limited service. Extendible to one year from original date of purchase upon registration[3]
Limited Warranty 90-day parts/labor standard. Extendible to one year from original date of purchase upon registration[4]

Power Requirements 200 watts maximum
Dimensions 7" (w) x 12" (h) x 13 3/4" (d) (178mm x 304mm x 330mm)
Weight 17 lbs. (7.71 kg)
Operating Temperature 50º F to 95º F (+10º C to 35º C)

[1] Maximum speed for faxing is 14.4 kbytes/s. Your modem is capable of downloading at 56 kbytes/s using K56flex technology or V.90. Your phone service, online service, or Internet Service Provider however, may not support this technology or operate at this speed.

[2] Six-pin i-LINK connectors on the rear of the system each supply 10V to 12V. The combined total wattage that can be supplied by the two connectors is 6 watts.

[3] Certain restrictions apply

[4] Certain restrictions apply

Specifications are subject to change without notice.

This product meets the standards of the International Energy Star Program for energy efficiency.

© 1999 Sony Electronics Inc. Reproduction in w hole or in part w ithout w ritten permission is prohibited. All rights reserved.

Read Me First

Welcome

Congratulations on your purchase of the Sony VAIO Digital Studio Computer. Sony has combined leading-edge technology in audio, video, computing, and communications to provide you with state-of-the-art personal computing.

Features

 For a complete description of the specifications of your VAIO Digital Studio Computer, see Specifications.

- **Exceptional performance:** Your computer includes a brand new Intel® Pentium® III processor, a CD-RW drive, and a V.90 compatible data/fax modem.*

* Actual upload and download speeds may vary due to line conditions, ISP support, and government regulations.

- **CD-RW drive:** This drive is the ideal solution for making backups and data archiving, with the ability to store up to 650 MB* of removable, rewritable storage on a single rewritable CD. Save your movies to CD-R or CD-RW media and share videos and images with family and friends.

***** 530 MB after formatting.

- **VAIO Smart Keyboard:** This USB keyboard has programmable shortcut buttons for launching your favorite programs or accessing the Internet.
- **Sony audio and video quality:** High-fidelity positional 3D audio system (A3D), high-powered 3D graphics (AGP), and "Sony-Tuned" MPEG digital video playback enable you to take advantage of today's advanced multimedia applications, games, and entertainment software.
- **S-Link (Control-A1):** This technology allows you to build a database of all your music and video CDs and then record your favorite audio selections on MiniDiscs. Use your computer with a 200 disc mega-storage CD changer and a MiniDisc recording deck.
- **i.LINK (IEEE 1394):** Three built-in i.LINK ports provide you with maximum digital connection capability. The i.LINK name and logo identify a digital interface (IEEE 1394) for high speed communication. By using your VAIO Digital Studio Computer, a Sony Digital Handycam® Camcorder, the DVgate software preinstalled on your computer, and the i.LINK (IEEE 1394) interface, you can easily create and edit your own home videos.
- **Optical Digital Audio Output:** This high-quality digital interface transmits digital audio data via light pulses. Transfer crystal clear digital audio to your MiniDisc recorder.
- **Digital Studio Software**: Enjoy all of your computer's audio and video capabilities with component-like applications that allow you to creatively manipulate digital still images, video clips, and audio tracks.
- **50 free hours of Internet access:** Use the Internet for up to 50 free hours when you sign up with GTE (no credit card required). Limit of two hours per day. Free access expires after 50 hours or 90 days after signing up--whichever occurs first.
- **Preinstalled software titles**: All the software on your computer is preinstalled, configured, and ready for you to use right out of the box.
- **Windows® 98**: Your system includes the latest operating system from Microsoft.
- **Communications:** Access popular online services, browse the Internet, send faxes, and more.

Unpacking Your Computer

Computer and Supplied Accessories

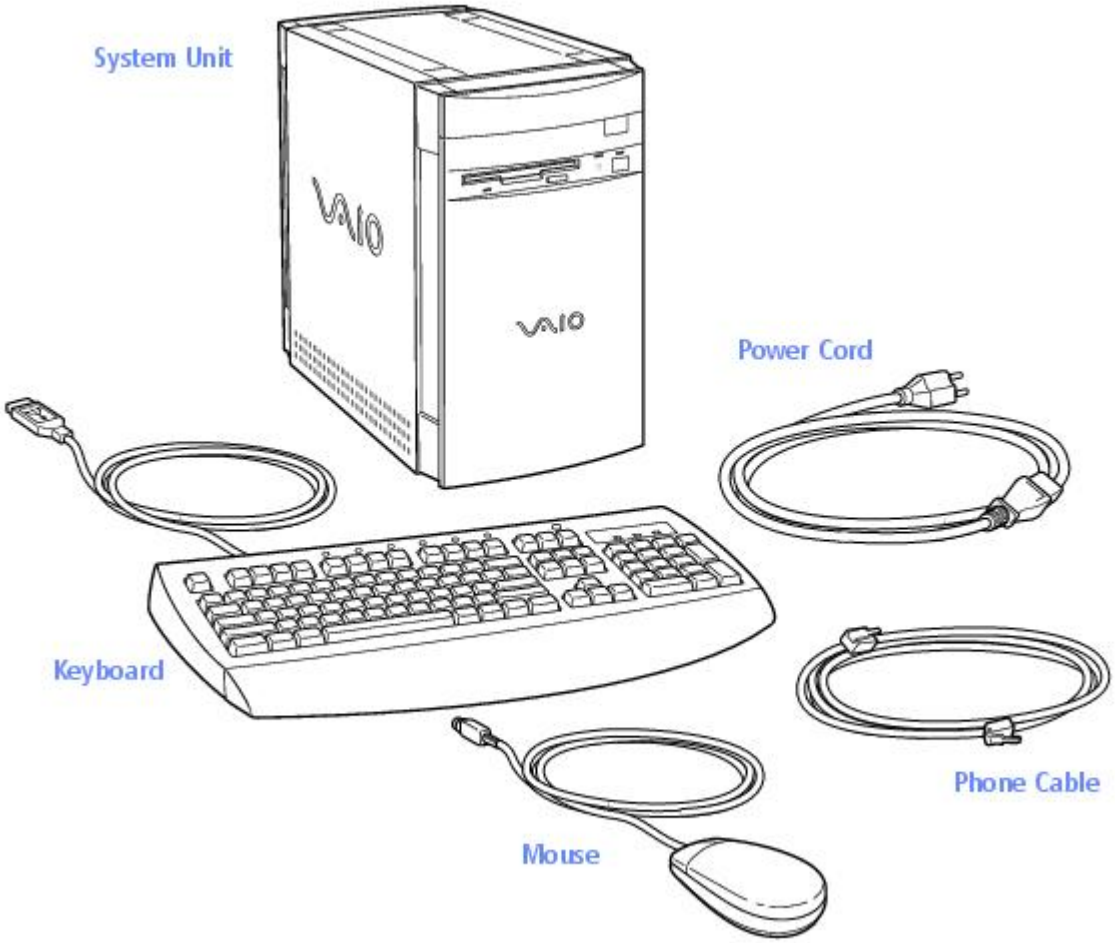

Manuals

- *Read Me First* (this manual) contains features and specifications of your computer. It also includes information on the applications included with your system, how to contact software vendors, and last minute troubleshooting tips.
- The *VAIO Digital Studio Computer User Guide* describes how to get started with your computer, find help, and solve common problems.
- The *Microsoft® Windows®98 Getting Started* manual explains how to use the basic features of the Windows operating system.

Recovery CDs

- System Recovery CD(s)
- Application Recovery CD(s)

Other

- Setting up your VAIO Digital Studio Computer (poster)
- Packet containing special product offers

Software Library

The Software Library contains the Microsoft software license agreement, Sony end-user license agreement, and the following CDs:

- Adobe PhotoDeluxe® Business Edition 3.0
- Gremlin Interactive Ltd. MotorHead
- Microsoft® Encarta® 99 Encyclopedia
- Microsoft® Money/Microsoft® Works

Back Panel Overview

The back panel of your computer contains the connectors where you plug in supplied and optional accessories. The icons on the back panel serve as a map to help you locate the connectors on your computer.

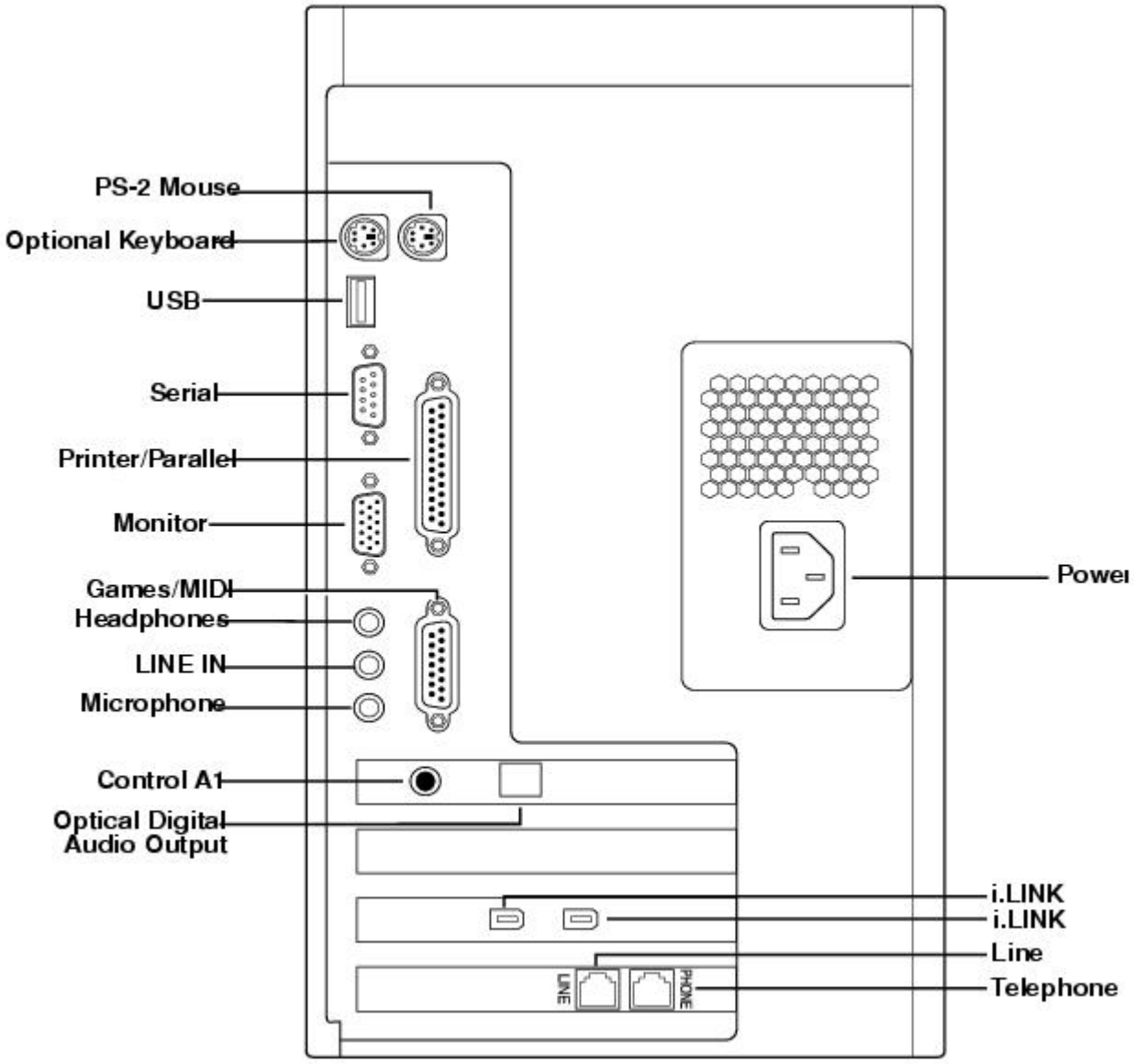

For your convenience, your computer includes USB and i.LINK connectors on both the front and back panels, allowing you to connect to either set of connectors. i.LINK connectors on the back of your system are 6-pin connectors.

Front Panel Overview

The front panel of your VAIO Digital Studio Computer allows for access to the diskette and CD-RW drives. It also includes USB and i.LINK ports to connect USB devices, CD changers, MiniDisc drives, or other components.

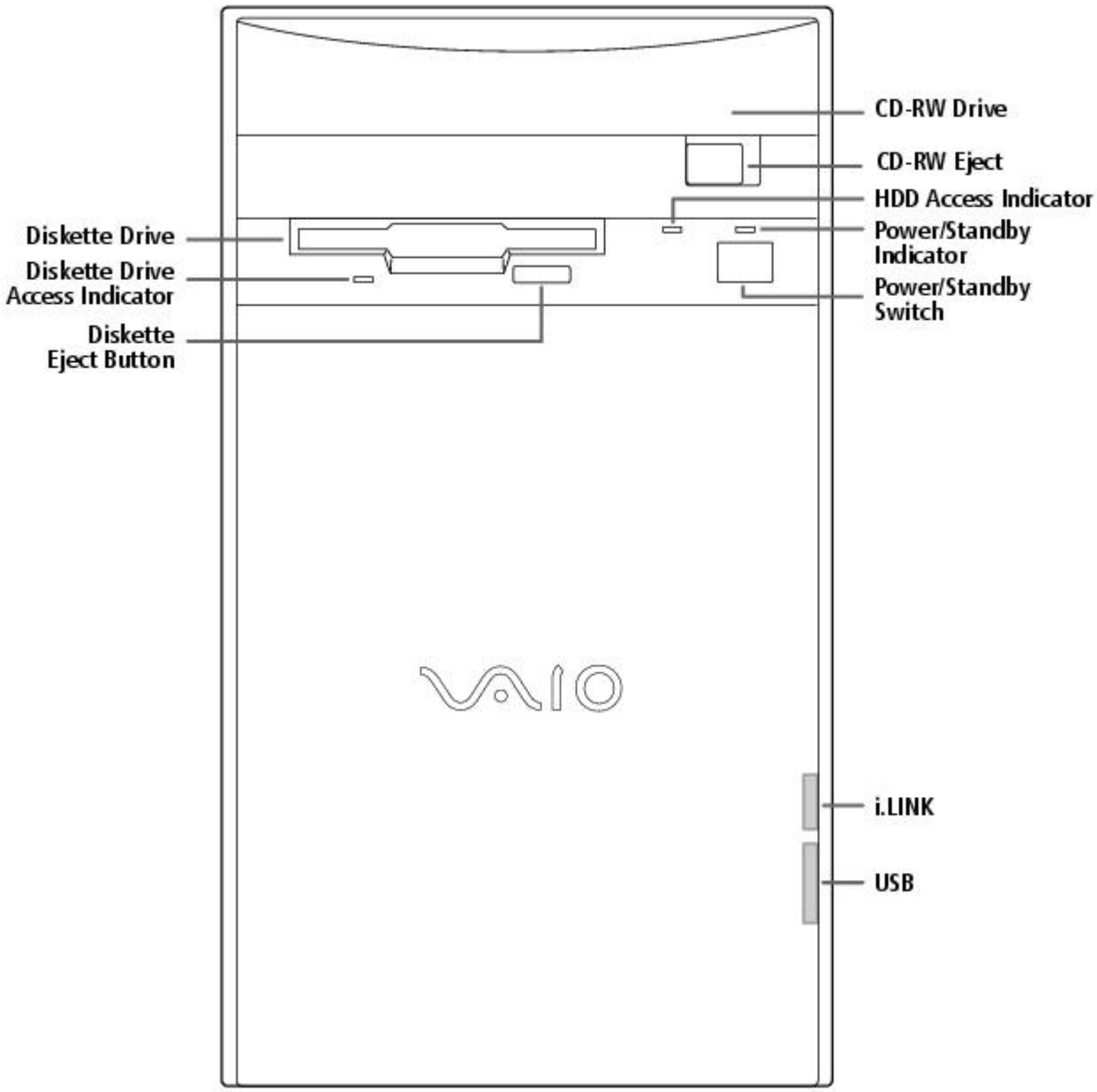

For your convenience, your computer includes USB and i.LINK connectors on both the front and back panels, allowing you to connect to either set of connectors. The i.LINK connector on the front of your system is a 4-pin connector.

Supplementary Information

For the most recent version of this manual, see the online version of Read Me First. You can access this document from the Windows Start Menu by selecting Programs/VAIO Documentation.

Hard Drive Partition

In order to improve the performance of your computer's DVgate Motion software, the hard disk drive on your computer has been formatted with two partitions, C and D. DVgate Motion saves files to the D partition. This prevents large video captures from consuming the available space on your C partition. To maintain optimum performance of DVgate Motion, you should defragment regularly.

VAIO Smart Keyboard Default Settings

The VAIO Smart Keyboard programmable buttons come with the following applications as their default settings:

S1 - Easy Internet Access Browser (Internet)

S2 - Outlook 98 (Mail)

S3 - MotorHead (Game)

S4 - Microsoft® Works (Work)

S5 - Quicken 99 Basic (Finance)

S6 - VAIO Documentation (Help)

All six buttons are reprogrammable.

Using The Standby Mode

To Put Your Computer into Standby Mode

When you are done using your computer, you can put it in Standby mode rather than turn it off completely. There are four ways to put your computer into Standby mode.

- Touch the power switch on the front panel.
- Click Shut Down at the bottom of the Start menu to display the Shut Down Windows dialog box. Select Stand by, and then click OK.
- Press the Standby button on the VAIO Smart Keyboard (the half moon icon).
- Change the timer settings for Standby mode in the Control Panel, as follows:

1. From the Start menu, point to Settings and click Control Panel.
2. Click the Power Management icon.
3. On the Power Schemes tab, change the Power scheme to Home/Office Desk.
4. In the list box for System standby, select an interval of time.
5. Click the OK button and close the Control Panel.

To Resume from Standby Mode

There are two ways to resume system functionality when your computer is in Standby mode. Use either of the following methods.

- Press any key on your keyboard, such as the Enter key.
- Touch the power switch on the front panel.

It may take up to 30 seconds for your system to recover stored information and resume functionality. The screen remains blank while the system is resuming functionality.

Applications That Use the TWAIN Driver

Digital imaging applications, such as Adobe PhotoDeluxe®, allow you to transfer images to your computer from external devices, including scanners or digital cameras. For some devices, a TWAIN driver window appears on the screen. Always close the TWAIN driver window before exiting or minimizing a digital imaging application.

Restoring Outlook 98

For the Add New Components functionality to be available with Microsoft Outlook, you must first run the installation program for Outlook from the Application Recovery CD. When prompted to install the program, select Exit. This decompresses the software, making the Add New Components functionality available.

Inserting Add-in Boards

Your VAIO Digital Studio Computer accommodates PCI add-in boards up to 7.7 inches in length.

Using Devices Connected to the i.LINK (IEEE 1394), S-Link (Control-A1), and Optical Digital Audio Output Connectors

For the latest information on devices known to be compatible with the state-of the-art audio, video, and graphics capabilities of your VAIO computer, check the Sony web site at http://www.sony.com/pcsupport.

Connecting to i.LINK Ports

Your VAIO computer includes a 4-pin i.LINK connector on the front of the system and two 6-pin i.LINK connectors on the back of the system. A 6-pin i.LINK connector can supply power from the computer to the connected device if the device is equipped with a 6-pin connector. Each 6-pin connector supplies 10V to 12V. The total power supplied by both 6-pin i.LINK connectors cannot exceed 6 watts. A 4-pin i.LINK connector cannot supply power to a connected device.

Capturing and Editing Digital Video Clips

- You can capture digital video clips using a digital video camera recorder and DVgate Motion software. Once the clips are saved as AVI files, they can be edited using DVgate Motion, DVgate Clip, or Adobe Premiere® LE. You cannot capture digital video clips directly using the Capture menu in Adobe Premiere LE. Adobe Premiere LE supports an analog capture board for capturing clips. Your VAIO computer is designed for digital video input.
- If there is no audio data associated with an AVI file, the message "Codec compression error" appears. If you do not wish to associate audio with your AVI file, you can add muted sound data by recording audio with the mute option enabled.
- For best performance, when editing AVI files in Adobe Premiere LE, you should use the default setup parameters that shipped with your system. If you change the default setup and want to reinitialize the parameters, follow these steps:

1. In the Adobe Premiere LE application, select Compression from the Make menu. The Compression Settings dialog box appears.
2. In the Method list box, select Sony DV software CODEC.
3. Click OK to close the screen.
4. From the Make menu, select Preset. The Preset dialog box appears.
5. Select the parameters for Time Base, Compress, Output, and Preview Option settings as indicated below.

[Time base]

Time base - 29.97fps (required)

[Compress]

File type - AVI (required)
Compress Program Method - Sony DV software CODEC (required)
Compress Program Depth - Millions colors (No other options)
Quality (No control for this item)
Option: Frames per second - 30 (required)
Option: Basic Key Frames (No control for this item)
Option: Optimize Still Off (recommended)
Data rate - Recompress Off (recommended)

[Output options]

Video - On (required)
Video Size - 720x480
4:3 Aspect - Off (required)
VideoType - Field 2 (recommended)
Audio - On (required)
Audio Rate - 44kHz (required)
Audio Format - 16 Bit Stereo or 16 Bit Monaural (required)
Audio Type - Uncompress (required)
Audio Interleave - 1 frame (recommended)
- Less than 30 frames (required)

Audio Sync - 1.0 (required)
Audio Skew - 0.75 (recommended)
- Less than 1.0 (required)

[Preview Option]

Preview Window Size - 360x240

Note that Adobe Premiere LE does not save the Preview Window Size, but uses a default size of 320 x 213 each time the application launches. We recommend that you change this setting to 360 x 240 to improve the quality of preview clips when editing AVI files.

Using Alternate Browsers with America Online®

To use Internet Explorer or Netscape Navigator as your browser with America Online, follow these steps:

1. From the Start menu, point to Settings and then click Control Panel.
2. Click the Internet icon.
3. Click the Connection tab.
4. Click the "Connect to the Internet using local area network" radio button.
5. Click OK.

Using DVgate Motion

When capturing clips:

- Do not use DVgate Motion when the connected digital video peripheral is in Timer Recording mode, as this could produce a malfunction in the peripheral.
- Captures larger than 2 GB (9 minutes and 30 seconds) are automatically continued in a second file.
- You can record stereo audio (stereo 1) while capturing video. You cannot add audio on the stereo 2 track after capturing the video data.
- You cannot use different audio modes on the same tape. You should perform a separate capture for each audio mode you wish to use.
- DVgate Motion does not support hard disk compression. You should not use disk compression if you are planning to work with DVgate Motion.
- Title data is saved in the flash memory of a digital video camera and is not transferred to tape by DVgate Motion.
- To avoid interruption of capture sessions, you should disable the screen saver.
- The drop frame compensation feature does not provide accurate compensation adjustments for tapes recorded in LP mode.
- For tapes that include a mixture of both SP and LP mode, the information displayed by the capture progress indicator may not be accurate.
- Make sure the video head of your digital video device is properly cleaned. Anomalies that you see in captured data could be due to dust or other particles on the video head.
    - The last frame captured is one frame before your selected [OUT] point. The frame you see immediately after clicking the [OUT] button is not captured.

When recording AVI files to tape:

- Do not use DVgate Motion when the connected digital video peripheral is in Timer Recording mode, as this could produce a malfunction in the peripheral.

- You can record only AVI files. MPEG files cannot be recorded.
- To avoid recording problems, such as a single frame appearing in multiple frames, close other applications on your system while recording.
- You cannot use different audio modes on the same tape. If you have AVI files that use different audio modes, they cannot be recorded at the same time, but must be recorded separately.
- Do not attempt to work with AVI files that are smaller than 4 MB.
- DVgate Motion does not support hard disk compression. You should not use disk compression if you are planning to work with DVgate Motion.
- In order to maximize recording capabilities, video and audio data are not available while you are recording.

If DVgate Motion indicates that frames have been dropped, you should try closing all open applications, or you may need to defragment your hard drive.

Restoring Audio Drivers

When you restore the audio drivers from the Application Recovery CD, you need to restart your system to use these drivers. In the Add New Hardware wizard that appears when you restart, click the Next button until you are prompted for the location of the drivers. The audio drivers are located on the Application Recovery CD in G:\drivers\audio\AL98091701\English.

Using AC-3® to Optical Digital Audio Output

MiniDisc player/recorders, DAT player/recorders, and older digital receivers do not support Dolby® Digital (AC-3). You should not use the AC-3 to Optical Digital Audio Output option unless you are using a device that supports Dolby Digital. Please refer to the manual supplied with your equipment to determine if it supports Dolby Digital. If you are unsure and you have selected the AC-3 to Optical Digital Audio Output option, turn down the volume on your equipment before using the DVD player.

Using America Online or Sony Online Support with WinFax® Basic Edition

Once you have configured WinFax Basic Edition, it is automatically available for your use. You cannot use America Online or Sony Online Support when the automatic fax receive feature of WinFax Basic Edition is on. To disable this feature, right click the WinFax icon in the task tray at the bottom right corner of your screen, and then select Exit.

Memory Upgrade Specifications

When upgrading memory, use only 3.3V 64-bit PC-100 168 PIN SDRAM DIMM modules. For more information on Digital Studio Computer compatible memory, call Sony at 1-888-4SONYPC (1-888-476-6972).

About the Software On Your Computer

Your VAIO Digital Studio computer is ready to help you work, play, learn, and communicate as soon as you turn it on. This section gives you an overview of the activities you can perform with your software titles. For support information, see For Answers to Your Software Questions.

Adobe Acrobat® Reader

Adobe Systems Incorporated

Acrobat Reader software allows you to view, navigate, and print electronic documents in Adobe Portable Document Format (PDF), an open file format that is intended to preserve the fidelity of documents created on all major computer platforms.

Adobe PhotoDeluxe® Business Edition

Adobe Systems Incorporated

Create amazing photo effects with PhotoDeluxe. Without learning complex software, you can

enhance, restore, and be creative with your photos. Includes built-in guided activities, stock photos, clip art, and templates to assist you.

Adobe Premiere® LE

Adobe Systems Incorporated

Adobe Premiere LE offers an interface and editing tool for producing movies for video, multimedia, or the web. View source clips and edited footage simultaneously in the monitor window. Create video clips up to three hours long with complete audio-video synchronization.

America Online®

America Online

America Online is the world's most popular Internet online service. Stay in touch with family and friends with Easy-to-Use E-mail, manage your personal finances, get the latest news and sports scores, and chat with thousands of others who share your interests.

AT&T WorldNet® Service

AT&T

Fast, reliable Internet access from AT&T WorldNet Service. AT&T WorldNet Service provides web-based e-mail, a personalized start page from Excite, easy access to the Excite search engine, free web pages, online and live agent technical support, instant messaging, and special shopping discounts at Market Square.

CompuServe®

CompuServe, Inc.

CompuServe is the most comprehensive source of organized business and educational information online today. CompuServe allows you to access the vastness of the Internet without wasting time wading through it. Maximize your time online with CompuServe.

Digital Media Park

Sony Electronics

An integrated suite of multimedia cataloging and playback programs including Media Bar, Media Library, Media Showcase, and MiniDisc Editor. Manage your music by cataloging your entire CD collection, and then create custom MiniDiscs of your favorite songs.

Dr. Solomon's® Anti-Virus

Dr Solomon's Software Inc.

Dr. Solomon's Anti-Virus provides the most comprehensive defense against the spread of viruses, including macro viruses. It can scan inside compressed files and automatically protects your system against viruses sent via e-mail or Internet download.

DVgate Motion

Sony Electronics

Connect a digital video camera recorder to the i.LINK connector and capture your own video clips. You can edit the clips from your video, add others, and combine clips into new movie segments.

DVgate Still

Sony Electronics

Connect a digital video camera recorder to the i.LINK connector and capture your own still images. You can save your images in a variety of popular file formats.

EarthLink Sprint TotalAccess

EarthLink Network, Inc.

An Internet Service Provider that supplies access, information, and assistance to its customers, introducing them to the Internet. Member benefits include e-mail, newsgroups, a Personal Start Page, a free 6 MB web site, a member magazine, and 24-hour technical support.

Microsoft® Encarta® 99 Encyclopedia

Microsoft Corporation

Microsoft Encarta Encyclopedia combines current, comprehensive content with up-to-date multimedia technology, providing users with unique, engaging learning experiences. With the 1999 edition, Encarta provides a wealth of information resources and unique interactive features

Microsoft® Internet Explorer for Windows® 98

Microsoft Corporation

Internet Explorer delivers the web the way you want it. It's safe, easy to use, and you can personalize how you access the web. Outlook Express and other tools in Internet Explorer also help you have a great experience when you are on the web!

Microsoft® Money 99

Microsoft Corporation

Microsoft Money 99 is personal finance software that lets you perform your financial tasks, everything from paying bills to planning for the future, in a smarter, faster way. With Money's online services, you can pay bills and bank from the comfort of home.

Microsoft® Outlook® 98

Microsoft Corporation

Outlook 98 is Microsoft's premier messaging and collaboration client. It combines the leading support for Internet standards-based messaging systems with integrated calendar, contact, and task-management features.

Microsoft® Works

Microsoft Corporation

Works provides users with the right set of core tools that allows them to write letters and reports, track family and friends with the address book, manage home finances, and create a home inventory.

MotorHead

Gremlin Interactive Ltd.

MotorHead is realistic arcade-racing; high-velocity entertainment that puts you behind the wheel for 3D pure racing action. Power across Europe and USA in the Transatlantic Speed League, where second place is simply not an option.

Netscape Communicator®

Netscape Communications

Netscape Communicator is the all-in-one Internet tool that makes it easy to browse the web, send Internet e-mail, chat, read newsgroups, and compose great web documents.

PictureGear

Sony Electronics

This image management software displays images from your hard drive, a Sony digital still camera, or a Sony Mavica® camera. The images appear in a convenient light-table format, so that you can easily view the contents of an entire folder.

Prodigy Internet

Prodigy Communications Corporation

An Internet service that helps you find what you need online faster and smarter. Prodigy delivers powerful online content, such as sports scores, stock quotes, news, and easy access to Excite , plus a personal e-mail account and quality customer service, all at a competitive price.

Quicken® Basic 99

Intuit, Inc

Quicken is the fastest, easiest way to organize your finances. Quicken works just like your checkbook, so it's easy to learn and use. Quicken manages all of your finances, bank accounts, credit cards, investments, and loans. You can even pay your bills online.

SurfMonkey

MediaLive, Inc

SurfMonkey is a web browser and online service for kids ages 6-12 that makes the Internet safe, fun, and easy. A talking monkey guides children through web sites and chat rooms, and can read their e-mail out loud. Children cannot go to inappropriate web sites, parents can screen e-mail messages, and chat messages are monitored.

VAIO Smart Keyboard

Sony Electronics

VAIO Smart Keyboard software operates your new easy to use programmable USB keyboard. Six programmable buttons enable you to launch your favorite applications, open frequently used files, access Explorer, or even open your web browser with just the click of a button.

WinFax® Basic Edition

Symantec Corporation

WinFax Basic Edition incorporates an easy-to-use interface that allows you to send and receive faxes easily. Upgrade to WinFax Pro to receive additional features.

About Your Recovery CDs

Application Recovery CD(s)

Sony Electronics

The Application Recovery CD program allows you to reinstall individual applications and device drivers. Use it to restore corrupted or accidentally erased files.

System Recovery CD(s)

Sony Electronics

The System Recovery CD program allows you to restore the software titles that shipped with your computer if they become corrupted or are erased accidentally. It can be used only to restore the hard disk of the Sony computer you purchased.

For Answers to Your Software Questions

Sony Service Center

For the Sony Service Center nearest you, call at 1-888-4SONYPC (1-888-476-6972).

Acrobat® Reader, Adobe PhotoDeluxe® Business Edition , Adobe Premiere® LE (Adobe Systems Incorporated)

Web site http://www.adobe.com/
phone 206-628-2746 (fee-based support)
fax 206-628-5737
e-mail techdocs@adobe.com
hours M-F, 6 AM-5 PM PT

America Online® (America Online)

Web site http://www.aol.com/
phone 800-827-3338
hours 7 days a week, 6 AM - 2 PM ET

AT&T WorldNet® Service (AT&T)

Web site http://www.att.net/*
phone 800-400-1447
e-mail worldnet@attmail.com
hours 7 days a week, 24 hours a day

* You must be a WorldNet Service customer to access online support.

CompuServe® Interactive (CompuServe Interactive, Inc.)

Web site http://www.compuserve.com/
phone 800-848-8990
hours M-F, 8 AM - 1 AM ET, S-S 10 AM - 10 PM ET

Dr. Solomon's® Anti-Virus (Dr. Solomon's Software Inc.)

Web site http://www.drsolomon.com/
phone 888-377-6566
e-mail support@us.drsolomon.com
hours 7 days a week, 24 hours a day

EarthLink Sprint TotalAccess (EarthLink Network, Inc.)

Web site http://help.earthlink.net/techsupport/
phone 800-395-8410
e-mail support@earthlink.net
hours 7 days a week, 24 hours a day

Easy Internet Access (Encompass, Inc.)

Web site http://www.encmpss.com/
phone 800-927-3000
hours 7 days a week, 24 hours a day

MotorHead (Gremlin Interactive Ltd.)

Web site http://www.gremlin.com/
phone 888-4SONYPC (888-476-6972)
hours 7 days a week, 24 hours a day

Windows® 98 Operating System, Works, Money, Encarta, Internet Explorer (Microsoft Corporation)

Web site http://www.microsoft.com/support/
phone 888-4SONYPC (888-476-6972)*
hours 7 days a week, 24 hours a day
* Support from 1-888-4SONYPC is free of charge for 90 days after the original date of purchase.

Netscape Communicator® (Netscape Communications Corporation)

Web site http://www.netscape.com/
phone 888-4SONYPC (888-476-6972)*
hours 7 days a week, 24 hours a day
* Support from 1-888-4SONYPC is free of charge for 90 days after the original date of purchase.

Prodigy Internet (Prodigy Communications Corporation.)

Web site http://www.prodigy.com/
phone 800-PRODIGY
hours 7 AM - 3 AM ET

Quicken® Basic (Intuit Inc.)

Web site http://www.intuit.com/support/
phone 900-555-4688
hours 7 days a week, 24 hours a day

SurfMonkey (MediaLive, Inc.)

Web site http://www.surfmonkey.com/support/Sub_support.html
phone 408-556-2060
e-mail support@surfmonkey.com
hours 9AM-10PM PT everyday

WinFax® Basic Edition (Symantec Corporation.)

Web site http://www.symantec.com/techsupp/
phone 800-798-0850
fax 800-554-4403 in North America
541-984-2490 outside North America

Specifications

Model **PCV-E518DS**
Processor 500 MHz Pentium® III
Hard Disk Drive 17.28 GB
Standard SDRAM 128 MB PC-100 SDRAM, expandable to 256 MB
Video RAM 8 MB SDRAM
MPEG "Sony Tuned" MPEG Digital Video supports full-screen video playback
Graphics 3D 2X AGP graphics acceleration (Matrox)
Sound Capabilities 3D Positional Audio (Aureal A3D)
Diskette Drive 3.5" 1.44 MB FDD
CD-RW Drive CD-RW Drive (4X max. CD-R writing, 2X max. CD-RW writing, 24X max. reading)
Modem K56flex technology/V.90 compatible data/fax modem[1]
Expansion Capabilities One PCI slot
One additional hard disk drive bay
Connection Capabilities (Front) USB port
i.LINK port (4-pin)
Connection Capabilities (Rear) Optional Keyboard (PS/2-style)
Mouse (PS/2-style)
USB port
Serial port
Parallel (printer)
Game/MIDI
Headphones
Line In
Microphone
VGA Monitor
S-Link (Control-A1)
Optical Digital Audio Out
Two i.LINK ports (6-pin)[2]
Modem line (RJ-11)
Phone line (RJ-11)
Supplied Accessories VAIO Smart keyboard
Sony two-button mouse
RJ-11 phone cable
Power cord
Service 90-day limited service. Extendible to one year from original date of purchase upon registration[3]
Limited Warranty 90-day parts/labor standard. Extendible to one year from original date of purchase upon registration[4]

Power Requirements 200 watts maximum
Dimensions 7" (w) x 12" (h) x 13 3/4" (d) (178mm x 304mm x 330mm)
Weight 17 lbs. (7.71 kg)
Operating Temperature 50º F to 95º F (+10º C to 35º C)

[1] Maximum speed for faxing is 14.4 kbytes/s. Your modem is capable of downloading at 56 kbytes/s using K56flex technology or V.90. Your phone service, online service, or Internet Service Provider however, may not support this technology or operate at this speed.

[2] Six-pin i-LINK connectors on the rear of the system each supply 10V to 12V. The combined total wattage that can be supplied by the two connectors is 6 watts.

[3] Certain restrictions apply

[4] Certain restrictions apply

Specifications are subject to change without notice.

This product meets the standards of the International Energy Star Program for energy efficiency.

© 1999 Sony Electronics Inc. Reproduction in w hole or in part w ithout w ritten permission is prohibited. All rights reserved.

Read Me First

Welcome

Congratulations on your purchase of the Sony VAIO Digital Studio Computer. Sony has combined leading-edge technology in audio, video, computing, and communications to provide you with state-of-the-art personal computing.

Features

 For a complete description of the specifications of your VAIO Digital Studio Computer, see Specifications.

- **Exceptional performance:** Your computer includes a brand new Intel® Pentium® III processor, a CD-RW drive, and a V.90 compatible data/fax modem.*

* Actual upload and download speeds may vary due to line conditions, ISP support, and government regulations.

- **CD-RW drive:** This drive is the ideal solution for making backups and data archiving, with the ability to store up to 650 MB* of removable, rewritable storage on a single rewritable CD. Save your movies to CD-R or CD-RW media and share videos and images with family and friends.

***** 530 MB after formatting.

- **VAIO Smart Keyboard:** This USB keyboard has programmable shortcut buttons for launching your favorite programs or accessing the Internet.
- **Sony audio and video quality:** High-fidelity positional 3D audio system (A3D), high-powered 3D graphics (AGP), and "Sony-Tuned" MPEG digital video playback enable you to take advantage of today's advanced multimedia applications, games, and entertainment software.
- **S-Link (Control-A1):** This technology allows you to build a database of all your music and video CDs and then record your favorite audio selections on MiniDiscs. Use your computer with a 200 disc mega-storage CD changer and a MiniDisc recording deck.
- **i.LINK (IEEE 1394):** Three built-in i.LINK ports provide you with maximum digital connection capability. The i.LINK name and logo identify a digital interface (IEEE 1394) for high speed communication. By using your VAIO Digital Studio Computer, a Sony Digital Handycam® Camcorder, the DVgate software preinstalled on your computer, and the i.LINK (IEEE 1394) interface, you can easily create and edit your own home videos.
- **Optical Digital Audio Output:** This high-quality digital interface transmits digital audio data via light pulses. Transfer crystal clear digital audio to your MiniDisc recorder.
- **Digital Studio Software**: Enjoy all of your computer's audio and video capabilities with component-like applications that allow you to creatively manipulate digital still images, video clips, and audio tracks.
- **50 free hours of Internet access:** Use the Internet for up to 50 free hours when you sign up with GTE (no credit card required). Limit of two hours per day. Free access expires after 50 hours or 90 days after signing up--whichever occurs first.
- **Preinstalled software titles**: All the software on your computer is preinstalled, configured, and ready for you to use right out of the box.
- **Windows® 98**: Your system includes the latest operating system from Microsoft.
- **Communications:** Access popular online services, browse the Internet, send faxes, and more.

Unpacking Your Computer

Computer and Supplied Accessories

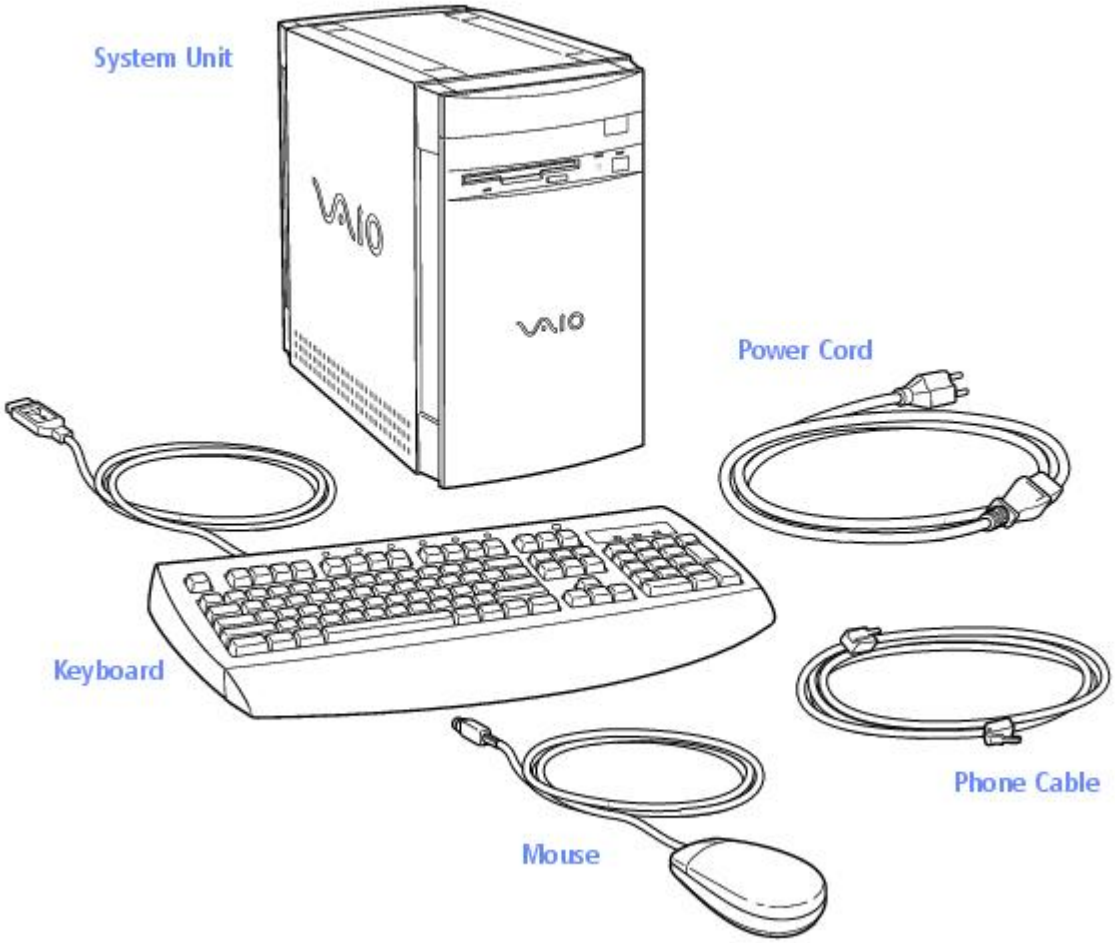

Manuals

- *Read Me First* (this manual) contains features and specifications of your computer. It also includes information on the applications included with your system, how to contact software vendors, and last minute troubleshooting tips.
- The *VAIO Digital Studio Computer User Guide* describes how to get started with your computer, find help, and solve common problems.
- The *Microsoft® Windows®98 Getting Started* manual explains how to use the basic features of the Windows operating system.

Recovery CDs

- System Recovery CD(s)
- Application Recovery CD(s)

Other

- Setting up your VAIO Digital Studio Computer (poster)
- Packet containing special product offers

Software Library

The Software Library contains the Microsoft software license agreement, Sony end-user license agreement, and the following CDs:

- Adobe PhotoDeluxe® Business Edition 3.0
- Gremlin Interactive Ltd. MotorHead
- Microsoft® Encarta® 99 Encyclopedia
- Microsoft® Money/Microsoft® Works

Back Panel Overview

The back panel of your computer contains the connectors where you plug in supplied and optional accessories. The icons on the back panel serve as a map to help you locate the connectors on your computer.

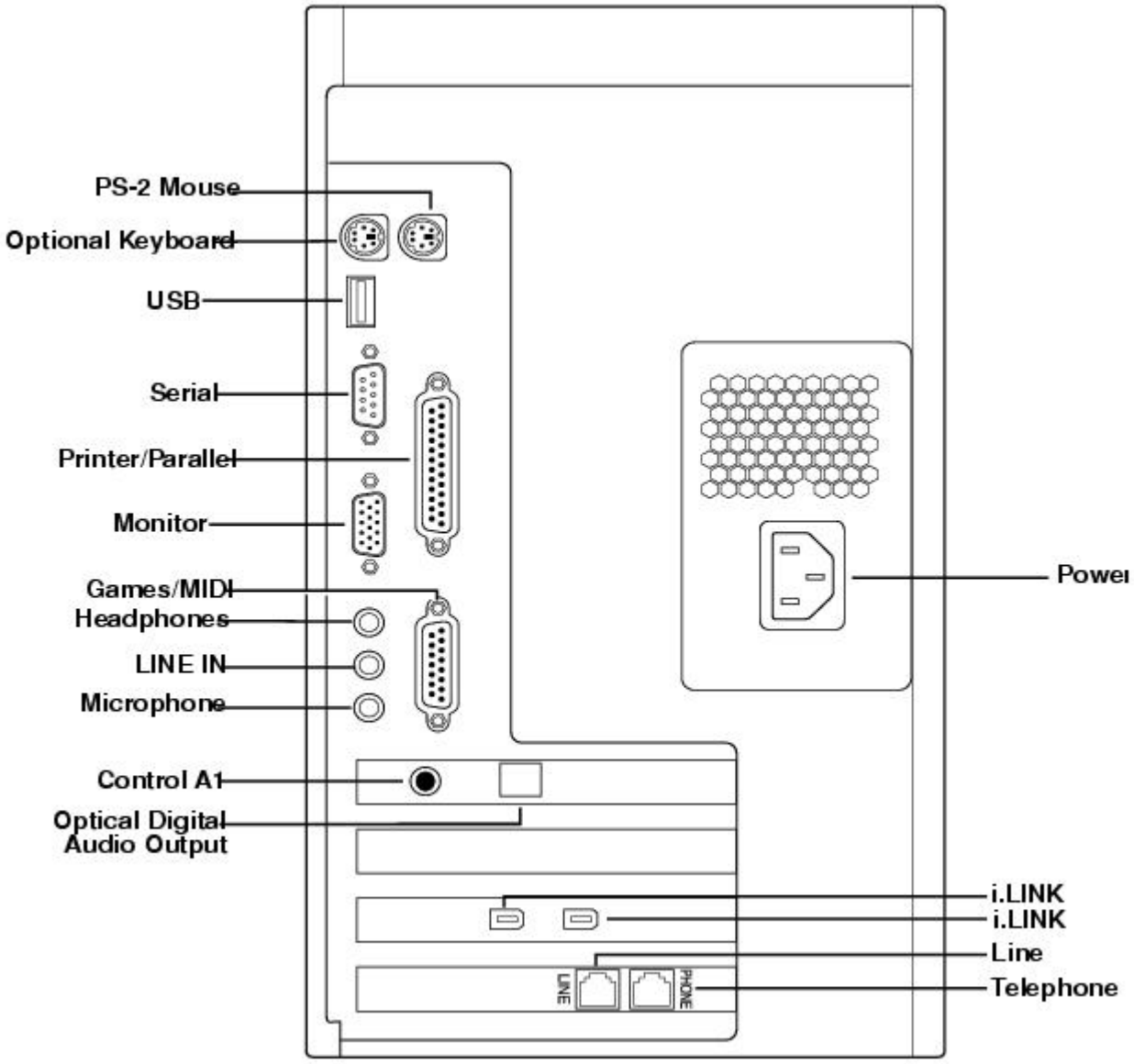

For your convenience, your computer includes USB and i.LINK connectors on both the front and back panels, allowing you to connect to either set of connectors. i.LINK connectors on the back of your system are 6-pin connectors.

Front Panel Overview

The front panel of your VAIO Digital Studio Computer allows for access to the diskette and CD-RW drives. It also includes USB and i.LINK ports to connect USB devices, CD changers, MiniDisc drives, or other components.

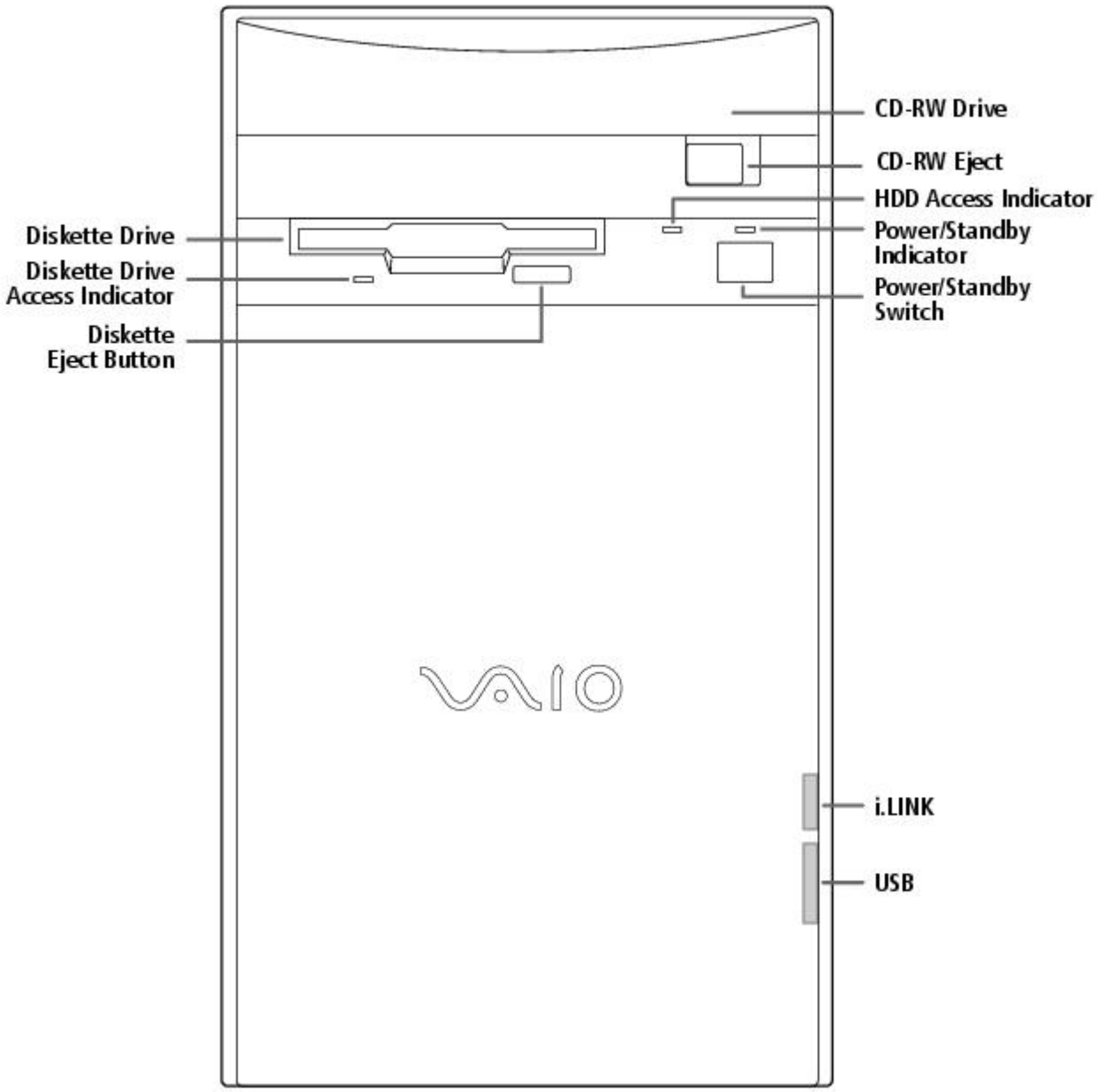

For your convenience, your computer includes USB and i.LINK connectors on both the front and back panels, allowing you to connect to either set of connectors. The i.LINK connector on the front of your system is a 4-pin connector.

Supplementary Information

For the most recent version of this manual, see the online version of Read Me First. You can access this document from the Windows Start Menu by selecting Programs/VAIO Documentation.

Hard Drive Partition

In order to improve the performance of your computer's DVgate Motion software, the hard disk drive on your computer has been formatted with two partitions, C and D. DVgate Motion saves files to the D partition. This prevents large video captures from consuming the available space on your C partition. To maintain optimum performance of DVgate Motion, you should defragment regularly.

VAIO Smart Keyboard Default Settings

The VAIO Smart Keyboard programmable buttons come with the following applications as their default settings:

S1 - Easy Internet Access Browser (Internet)

S2 - Outlook 98 (Mail)

S3 - MotorHead (Game)

S4 - Microsoft® Works (Work)

S5 - Quicken 99 Basic (Finance)

S6 - VAIO Documentation (Help)

All six buttons are reprogrammable.

Using The Standby Mode

To Put Your Computer into Standby Mode

When you are done using your computer, you can put it in Standby mode rather than turn it off completely. There are four ways to put your computer into Standby mode.

- Touch the power switch on the front panel.
- Click Shut Down at the bottom of the Start menu to display the Shut Down Windows dialog box. Select Stand by, and then click OK.
- Press the Standby button on the VAIO Smart Keyboard (the half moon icon).
- Change the timer settings for Standby mode in the Control Panel, as follows:

1. From the Start menu, point to Settings and click Control Panel.
2. Click the Power Management icon.
3. On the Power Schemes tab, change the Power scheme to Home/Office Desk.
4. In the list box for System standby, select an interval of time.
5. Click the OK button and close the Control Panel.

To Resume from Standby Mode

There are two ways to resume system functionality when your computer is in Standby mode. Use either of the following methods.

- Press any key on your keyboard, such as the Enter key.
- Touch the power switch on the front panel.

It may take up to 30 seconds for your system to recover stored information and resume functionality. The screen remains blank while the system is resuming functionality.

Applications That Use the TWAIN Driver

Digital imaging applications, such as Adobe PhotoDeluxe®, allow you to transfer images to your computer from external devices, including scanners or digital cameras. For some devices, a TWAIN driver window appears on the screen. Always close the TWAIN driver window before exiting or minimizing a digital imaging application.

Restoring Outlook 98

For the Add New Components functionality to be available with Microsoft Outlook, you must first run the installation program for Outlook from the Application Recovery CD. When prompted to install the program, select Exit. This decompresses the software, making the Add New Components functionality available.

Inserting Add-in Boards

Your VAIO Digital Studio Computer accommodates PCI add-in boards up to 7.7 inches in length.

Using Devices Connected to the i.LINK (IEEE 1394), S-Link (Control-A1), and Optical Digital Audio Output Connectors

For the latest information on devices known to be compatible with the state-of the-art audio, video, and graphics capabilities of your VAIO computer, check the Sony web site at http://www.sony.com/pcsupport.

Connecting to i.LINK Ports

Your VAIO computer includes a 4-pin i.LINK connector on the front of the system and two 6-pin i.LINK connectors on the back of the system. A 6-pin i.LINK connector can supply power from the computer to the connected device if the device is equipped with a 6-pin connector. Each 6-pin connector supplies 10V to 12V. The total power supplied by both 6-pin i.LINK connectors cannot exceed 6 watts. A 4-pin i.LINK connector cannot supply power to a connected device.

Capturing and Editing Digital Video Clips

- You can capture digital video clips using a digital video camera recorder and DVgate Motion software. Once the clips are saved as AVI files, they can be edited using DVgate Motion, DVgate Clip, or Adobe Premiere® LE. You cannot capture digital video clips directly using the Capture menu in Adobe Premiere LE. Adobe Premiere LE supports an analog capture board for capturing clips. Your VAIO computer is designed for digital video input.
- If there is no audio data associated with an AVI file, the message "Codec compression error" appears. If you do not wish to associate audio with your AVI file, you can add muted sound data by recording audio with the mute option enabled.
- For best performance, when editing AVI files in Adobe Premiere LE, you should use the default setup parameters that shipped with your system. If you change the default setup and want to reinitialize the parameters, follow these steps:

    1. In the Adobe Premiere LE application, select Compression from the Make menu. The Compression Settings dialog box appears.
    2. In the Method list box, select Sony DV software CODEC.
    3. Click OK to close the screen.
    4. From the Make menu, select Preset. The Preset dialog box appears.
    5. Select the parameters for Time Base, Compress, Output, and Preview Option settings as indicated below.

[Time base]

Time base - 29.97fps (required)

[Compress]

File type - AVI (required)
Compress Program Method - Sony DV software CODEC (required)
Compress Program Depth - Millions colors (No other options)
Quality (No control for this item)
Option: Frames per second - 30 (required)
Option: Basic Key Frames (No control for this item)
Option: Optimize Still Off (recommended)
Data rate - Recompress Off (recommended)

[Output options]

Video - On (required)
Video Size - 720x480
4:3 Aspect - Off (required)
VideoType - Field 2 (recommended)
Audio - On (required)
Audio Rate - 44kHz (required)
Audio Format - 16 Bit Stereo or 16 Bit Monaural (required)
Audio Type - Uncompress (required)
Audio Interleave - 1 frame (recommended)
- Less than 30 frames (required)

Audio Sync - 1.0 (required)
Audio Skew - 0.75 (recommended)
- Less than 1.0 (required)

[Preview Option]

Preview Window Size - 360x240

Note that Adobe Premiere LE does not save the Preview Window Size, but uses a default size of 320 x 213 each time the application launches. We recommend that you change this setting to 360 x 240 to improve the quality of preview clips when editing AVI files.

Using Alternate Browsers with America Online®

To use Internet Explorer or Netscape Navigator as your browser with America Online, follow these steps:

1. From the Start menu, point to Settings and then click Control Panel.
2. Click the Internet icon.
3. Click the Connection tab.
4. Click the "Connect to the Internet using local area network" radio button.
5. Click OK.

Using DVgate Motion

When capturing clips:

- Do not use DVgate Motion when the connected digital video peripheral is in Timer Recording mode, as this could produce a malfunction in the peripheral.
- Captures larger than 2 GB (9 minutes and 30 seconds) are automatically continued in a second file.
- You can record stereo audio (stereo 1) while capturing video. You cannot add audio on the stereo 2 track after capturing the video data.
- You cannot use different audio modes on the same tape. You should perform a separate capture for each audio mode you wish to use.
- DVgate Motion does not support hard disk compression. You should not use disk compression if you are planning to work with DVgate Motion.
- Title data is saved in the flash memory of a digital video camera and is not transferred to tape by DVgate Motion.
- To avoid interruption of capture sessions, you should disable the screen saver.
- The drop frame compensation feature does not provide accurate compensation adjustments for tapes recorded in LP mode.
- For tapes that include a mixture of both SP and LP mode, the information displayed by the capture progress indicator may not be accurate.
- Make sure the video head of your digital video device is properly cleaned. Anomalies that you see in captured data could be due to dust or other particles on the video head.
    - The last frame captured is one frame before your selected [OUT] point. The frame you see immediately after clicking the [OUT] button is not captured.

When recording AVI files to tape:

- Do not use DVgate Motion when the connected digital video peripheral is in Timer Recording mode, as this could produce a malfunction in the peripheral.

- You can record only AVI files. MPEG files cannot be recorded.
- To avoid recording problems, such as a single frame appearing in multiple frames, close other applications on your system while recording.
- You cannot use different audio modes on the same tape. If you have AVI files that use different audio modes, they cannot be recorded at the same time, but must be recorded separately.
- Do not attempt to work with AVI files that are smaller than 4 MB.
- DVgate Motion does not support hard disk compression. You should not use disk compression if you are planning to work with DVgate Motion.
- In order to maximize recording capabilities, video and audio data are not available while you are recording.

If DVgate Motion indicates that frames have been dropped, you should try closing all open applications, or you may need to defragment your hard drive.

Restoring Audio Drivers

When you restore the audio drivers from the Application Recovery CD, you need to restart your system to use these drivers. In the Add New Hardware wizard that appears when you restart, click the Next button until you are prompted for the location of the drivers. The audio drivers are located on the Application Recovery CD in G:\drivers\audio\AL98091701\English.

Using AC-3® to Optical Digital Audio Output

MiniDisc player/recorders, DAT player/recorders, and older digital receivers do not support Dolby® Digital (AC-3). You should not use the AC-3 to Optical Digital Audio Output option unless you are using a device that supports Dolby Digital. Please refer to the manual supplied with your equipment to determine if it supports Dolby Digital. If you are unsure and you have selected the AC-3 to Optical Digital Audio Output option, turn down the volume on your equipment before using the DVD player.

Using America Online or Sony Online Support with WinFax® Basic Edition

Once you have configured WinFax Basic Edition, it is automatically available for your use. You cannot use America Online or Sony Online Support when the automatic fax receive feature of WinFax Basic Edition is on. To disable this feature, right click the WinFax icon in the task tray at the bottom right corner of your screen, and then select Exit.

Memory Upgrade Specifications

When upgrading memory, use only 3.3V 64-bit PC-100 168 PIN SDRAM DIMM modules. For more information on Digital Studio Computer compatible memory, call Sony at 1-888-4SONYPC (1-888-476-6972).

About the Software On Your Computer

Your VAIO Digital Studio computer is ready to help you work, play, learn, and communicate as soon as you turn it on. This section gives you an overview of the activities you can perform with your software titles. For support information, see For Answers to Your Software Questions.

Adobe Acrobat® Reader

Adobe Systems Incorporated

Acrobat Reader software allows you to view, navigate, and print electronic documents in Adobe Portable Document Format (PDF), an open file format that is intended to preserve the fidelity of documents created on all major computer platforms.

Adobe PhotoDeluxe® Business Edition

Adobe Systems Incorporated

Create amazing photo effects with PhotoDeluxe. Without learning complex software, you can

enhance, restore, and be creative with your photos. Includes built-in guided activities, stock photos, clip art, and templates to assist you.

Adobe Premiere® LE

Adobe Systems Incorporated

Adobe Premiere LE offers an interface and editing tool for producing movies for video, multimedia, or the web. View source clips and edited footage simultaneously in the monitor window. Create video clips up to three hours long with complete audio-video synchronization.

America Online®

America Online

America Online is the world's most popular Internet online service. Stay in touch with family and friends with Easy-to-Use E-mail, manage your personal finances, get the latest news and sports scores, and chat with thousands of others who share your interests.

AT&T WorldNet® Service

AT&T

Fast, reliable Internet access from AT&T WorldNet Service. AT&T WorldNet Service provides web-based e-mail, a personalized start page from Excite, easy access to the Excite search engine, free web pages, online and live agent technical support, instant messaging, and special shopping discounts at Market Square.

CompuServe®

CompuServe, Inc.

CompuServe is the most comprehensive source of organized business and educational information online today. CompuServe allows you to access the vastness of the Internet without wasting time wading through it. Maximize your time online with CompuServe.

Digital Media Park

Sony Electronics

An integrated suite of multimedia cataloging and playback programs including Media Bar, Media Library, Media Showcase, and MiniDisc Editor. Manage your music by cataloging your entire CD collection, and then create custom MiniDiscs of your favorite songs.

Dr. Solomon's® Anti-Virus

Dr Solomon's Software Inc.

Dr. Solomon's Anti-Virus provides the most comprehensive defense against the spread of viruses, including macro viruses. It can scan inside compressed files and automatically protects your system against viruses sent via e-mail or Internet download.

DVgate Motion

Sony Electronics

Connect a digital video camera recorder to the i.LINK connector and capture your own video clips. You can edit the clips from your video, add others, and combine clips into new movie segments.

DVgate Still

Sony Electronics

Connect a digital video camera recorder to the i.LINK connector and capture your own still images. You can save your images in a variety of popular file formats.

EarthLink Sprint TotalAccess

EarthLink Network, Inc.

An Internet Service Provider that supplies access, information, and assistance to its customers, introducing them to the Internet. Member benefits include e-mail, newsgroups, a Personal Start Page, a free 6 MB web site, a member magazine, and 24-hour technical support.

Microsoft® Encarta® 99 Encyclopedia

Microsoft Corporation

Microsoft Encarta Encyclopedia combines current, comprehensive content with up-to-date multimedia technology, providing users with unique, engaging learning experiences. With the 1999 edition, Encarta provides a wealth of information resources and unique interactive features

Microsoft® Internet Explorer for Windows® 98

Microsoft Corporation

Internet Explorer delivers the web the way you want it. It's safe, easy to use, and you can personalize how you access the web. Outlook Express and other tools in Internet Explorer also help you have a great experience when you are on the web!

Microsoft® Money 99

Microsoft Corporation

Microsoft Money 99 is personal finance software that lets you perform your financial tasks, everything from paying bills to planning for the future, in a smarter, faster way. With Money's online services, you can pay bills and bank from the comfort of home.

Microsoft® Outlook® 98

Microsoft Corporation

Outlook 98 is Microsoft's premier messaging and collaboration client. It combines the leading support for Internet standards-based messaging systems with integrated calendar, contact, and task-management features.

Microsoft® Works

Microsoft Corporation

Works provides users with the right set of core tools that allows them to write letters and reports, track family and friends with the address book, manage home finances, and create a home inventory.

MotorHead

Gremlin Interactive Ltd.

MotorHead is realistic arcade-racing; high-velocity entertainment that puts you behind the wheel for 3D pure racing action. Power across Europe and USA in the Transatlantic Speed League, where second place is simply not an option.

Netscape Communicator®

Netscape Communications

Netscape Communicator is the all-in-one Internet tool that makes it easy to browse the web, send Internet e-mail, chat, read newsgroups, and compose great web documents.

PictureGear

Sony Electronics

This image management software displays images from your hard drive, a Sony digital still camera, or a Sony Mavica® camera. The images appear in a convenient light-table format, so that you can easily view the contents of an entire folder.

Prodigy Internet

Prodigy Communications Corporation

An Internet service that helps you find what you need online faster and smarter. Prodigy delivers powerful online content, such as sports scores, stock quotes, news, and easy access to Excite , plus a personal e-mail account and quality customer service, all at a competitive price.

Quicken® Basic 99

Intuit, Inc

Quicken is the fastest, easiest way to organize your finances. Quicken works just like your checkbook, so it's easy to learn and use. Quicken manages all of your finances, bank accounts, credit cards, investments, and loans. You can even pay your bills online.

SurfMonkey

MediaLive, Inc

SurfMonkey is a web browser and online service for kids ages 6-12 that makes the Internet safe, fun, and easy. A talking monkey guides children through web sites and chat rooms, and can read their e-mail out loud. Children cannot go to inappropriate web sites, parents can screen e-mail messages, and chat messages are monitored.

VAIO Smart Keyboard

Sony Electronics

VAIO Smart Keyboard software operates your new easy to use programmable USB keyboard. Six programmable buttons enable you to launch your favorite applications, open frequently used files, access Explorer, or even open your web browser with just the click of a button.

WinFax® Basic Edition

Symantec Corporation

WinFax Basic Edition incorporates an easy-to-use interface that allows you to send and receive faxes easily. Upgrade to WinFax Pro to receive additional features.

About Your Recovery CDs

Application Recovery CD(s)

Sony Electronics

The Application Recovery CD program allows you to reinstall individual applications and device drivers. Use it to restore corrupted or accidentally erased files.

System Recovery CD(s)

Sony Electronics

The System Recovery CD program allows you to restore the software titles that shipped with your computer if they become corrupted or are erased accidentally. It can be used only to restore the hard disk of the Sony computer you purchased.

For Answers to Your Software Questions

Sony Service Center

For the Sony Service Center nearest you, call at 1-888-4SONYPC (1-888-476-6972).

Acrobat® Reader, Adobe PhotoDeluxe® Business Edition , Adobe Premiere® LE (Adobe Systems Incorporated)

Web site http://www.adobe.com/
phone 206-628-2746 (fee-based support)
fax 206-628-5737
e-mail techdocs@adobe.com
hours M-F, 6 AM-5 PM PT

America Online® (America Online)

Web site http://www.aol.com/
phone 800-827-3338
hours 7 days a week, 6 AM - 2 PM ET

AT&T WorldNet® Service (AT&T)

Web site http://www.att.net/*
phone 800-400-1447
e-mail worldnet@attmail.com
hours 7 days a week, 24 hours a day

* You must be a WorldNet Service customer to access online support.

CompuServe® Interactive (CompuServe Interactive, Inc.)

Web site http://www.compuserve.com/
phone 800-848-8990
hours M-F, 8 AM - 1 AM ET, S-S 10 AM - 10 PM ET

Dr. Solomon's® Anti-Virus (Dr. Solomon's Software Inc.)

Web site http://www.drsolomon.com/
phone 888-377-6566
e-mail support@us.drsolomon.com
hours 7 days a week, 24 hours a day

EarthLink Sprint TotalAccess (EarthLink Network, Inc.)

Web site http://help.earthlink.net/techsupport/
phone 800-395-8410
e-mail support@earthlink.net
hours 7 days a week, 24 hours a day

Easy Internet Access (Encompass, Inc.)

Web site http://www.encmpss.com/
phone 800-927-3000
hours 7 days a week, 24 hours a day

MotorHead (Gremlin Interactive Ltd.)

Web site http://www.gremlin.com/
phone 888-4SONYPC (888-476-6972)
hours 7 days a week, 24 hours a day

Windows® 98 Operating System, Works, Money, Encarta, Internet Explorer (Microsoft Corporation)

Web site http://www.microsoft.com/support/
phone 888-4SONYPC (888-476-6972)*
hours 7 days a week, 24 hours a day
* Support from 1-888-4SONYPC is free of charge for 90 days after the original date of purchase.

Netscape Communicator® (Netscape Communications Corporation)

Web site http://www.netscape.com/
phone 888-4SONYPC (888-476-6972)*
hours 7 days a week, 24 hours a day
* Support from 1-888-4SONYPC is free of charge for 90 days after the original date of purchase.

Prodigy Internet (Prodigy Communications Corporation.)

Web site http://www.prodigy.com/
phone 800-PRODIGY
hours 7 AM - 3 AM ET

Quicken® Basic (Intuit Inc.)

Web site http://www.intuit.com/support/
phone 900-555-4688
hours 7 days a week, 24 hours a day

SurfMonkey (MediaLive, Inc.)

Web site http://www.surfmonkey.com/support/Sub_support.html
phone 408-556-2060
e-mail support@surfmonkey.com
hours 9AM-10PM PT everyday

WinFax® Basic Edition (Symantec Corporation.)

Web site http://www.symantec.com/techsupp/
phone 800-798-0850
fax 800-554-4403 in North America
541-984-2490 outside North America

Specifications

Model **PCV-E518DS**
Processor 500 MHz Pentium® III
Hard Disk Drive 17.28 GB
Standard SDRAM 128 MB PC-100 SDRAM, expandable to 256 MB
Video RAM 8 MB SDRAM
MPEG "Sony Tuned" MPEG Digital Video supports full-screen video playback
Graphics 3D 2X AGP graphics acceleration (Matrox)
Sound Capabilities 3D Positional Audio (Aureal A3D)
Diskette Drive 3.5" 1.44 MB FDD
CD-RW Drive CD-RW Drive (4X max. CD-R writing, 2X max. CD-RW writing, 24X max. reading)
Modem K56flex technology/V.90 compatible data/fax modem[1]
Expansion Capabilities One PCI slot
One additional hard disk drive bay
Connection Capabilities (Front) USB port
i.LINK port (4-pin)
Connection Capabilities (Rear) Optional Keyboard (PS/2-style)
Mouse (PS/2-style)
USB port
Serial port
Parallel (printer)
Game/MIDI
Headphones
Line In
Microphone
VGA Monitor
S-Link (Control-A1)
Optical Digital Audio Out
Two i.LINK ports (6-pin)[2]
Modem line (RJ-11)
Phone line (RJ-11)
Supplied Accessories VAIO Smart keyboard
Sony two-button mouse
RJ-11 phone cable
Power cord
Service 90-day limited service. Extendible to one year from original date of purchase upon registration[3]
Limited Warranty 90-day parts/labor standard. Extendible to one year from original date of purchase upon registration[4]

Power Requirements 200 watts maximum
Dimensions 7" (w) x 12" (h) x 13 3/4" (d) (178mm x 304mm x 330mm)
Weight 17 lbs. (7.71 kg)
Operating Temperature 50º F to 95º F (+10º C to 35º C)

[1] Maximum speed for faxing is 14.4 kbytes/s. Your modem is capable of downloading at 56 kbytes/s using K56flex technology or V.90. Your phone service, online service, or Internet Service Provider however, may not support this technology or operate at this speed.

[2] Six-pin i-LINK connectors on the rear of the system each supply 10V to 12V. The combined total wattage that can be supplied by the two connectors is 6 watts.

[3] Certain restrictions apply

[4] Certain restrictions apply

Specifications are subject to change without notice.

This product meets the standards of the International Energy Star Program for energy efficiency.

© 1999 Sony Electronics Inc. Reproduction in w hole or in part w ithout w ritten permission is prohibited. All rights reserved.

Read Me First

Welcome

Congratulations on your purchase of the Sony VAIO Digital Studio Computer. Sony has combined leading-edge technology in audio, video, computing, and communications to provide you with state-of-the-art personal computing.

Features

 For a complete description of the specifications of your VAIO Digital Studio Computer, see Specifications.

- **Exceptional performance:** Your computer includes a brand new Intel® Pentium® III processor, a CD-RW drive, and a V.90 compatible data/fax modem.*

* Actual upload and download speeds may vary due to line conditions, ISP support, and government regulations.

- **CD-RW drive:** This drive is the ideal solution for making backups and data archiving, with the ability to store up to 650 MB* of removable, rewritable storage on a single rewritable CD. Save your movies to CD-R or CD-RW media and share videos and images with family and friends.

***** 530 MB after formatting.

- **VAIO Smart Keyboard:** This USB keyboard has programmable shortcut buttons for launching your favorite programs or accessing the Internet.
- **Sony audio and video quality:** High-fidelity positional 3D audio system (A3D), high-powered 3D graphics (AGP), and "Sony-Tuned" MPEG digital video playback enable you to take advantage of today's advanced multimedia applications, games, and entertainment software.
- **S-Link (Control-A1):** This technology allows you to build a database of all your music and video CDs and then record your favorite audio selections on MiniDiscs. Use your computer with a 200 disc mega-storage CD changer and a MiniDisc recording deck.
- **i.LINK (IEEE 1394):** Three built-in i.LINK ports provide you with maximum digital connection capability. The i.LINK name and logo identify a digital interface (IEEE 1394) for high speed communication. By using your VAIO Digital Studio Computer, a Sony Digital Handycam® Camcorder, the DVgate software preinstalled on your computer, and the i.LINK (IEEE 1394) interface, you can easily create and edit your own home videos.
- **Optical Digital Audio Output:** This high-quality digital interface transmits digital audio data via light pulses. Transfer crystal clear digital audio to your MiniDisc recorder.
- **Digital Studio Software**: Enjoy all of your computer's audio and video capabilities with component-like applications that allow you to creatively manipulate digital still images, video clips, and audio tracks.
- **50 free hours of Internet access:** Use the Internet for up to 50 free hours when you sign up with GTE (no credit card required). Limit of two hours per day. Free access expires after 50 hours or 90 days after signing up--whichever occurs first.
- **Preinstalled software titles**: All the software on your computer is preinstalled, configured, and ready for you to use right out of the box.
- **Windows® 98**: Your system includes the latest operating system from Microsoft.
- **Communications:** Access popular online services, browse the Internet, send faxes, and more.

Unpacking Your Computer

Computer and Supplied Accessories

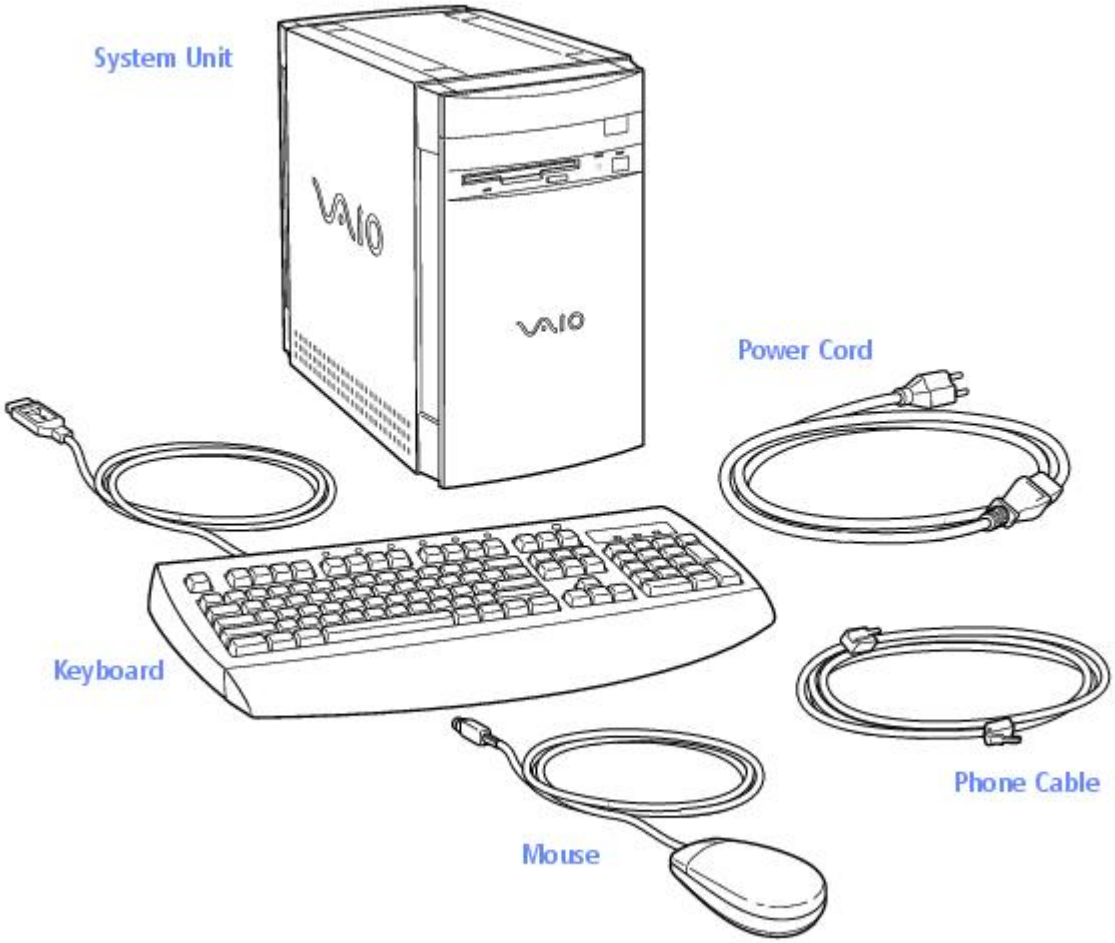

Manuals

- *Read Me First* (this manual) contains features and specifications of your computer. It also includes information on the applications included with your system, how to contact software vendors, and last minute troubleshooting tips.
- The *VAIO Digital Studio Computer User Guide* describes how to get started with your computer, find help, and solve common problems.
- The *Microsoft® Windows®98 Getting Started* manual explains how to use the basic features of the Windows operating system.

Recovery CDs

- System Recovery CD(s)
- Application Recovery CD(s)

Other

- Setting up your VAIO Digital Studio Computer (poster)
- Packet containing special product offers

Software Library

The Software Library contains the Microsoft software license agreement, Sony end-user license agreement, and the following CDs:

- Adobe PhotoDeluxe® Business Edition 3.0
- Gremlin Interactive Ltd. MotorHead
- Microsoft® Encarta® 99 Encyclopedia
- Microsoft® Money/Microsoft® Works

Back Panel Overview

The back panel of your computer contains the connectors where you plug in supplied and optional accessories. The icons on the back panel serve as a map to help you locate the connectors on your computer.

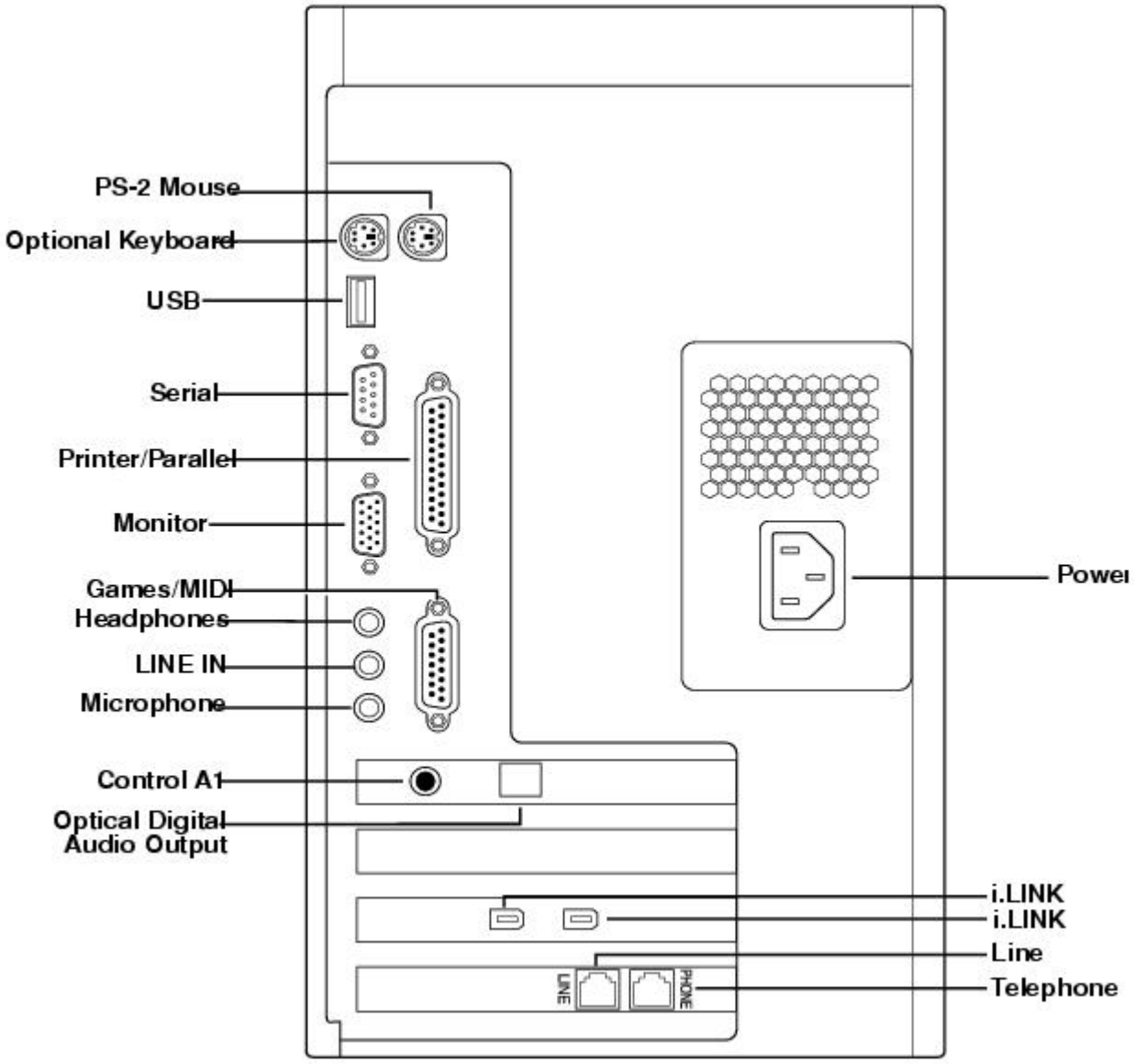

For your convenience, your computer includes USB and i.LINK connectors on both the front and back panels, allowing you to connect to either set of connectors. i.LINK connectors on the back of your system are 6-pin connectors.

Front Panel Overview

The front panel of your VAIO Digital Studio Computer allows for access to the diskette and CD-RW drives. It also includes USB and i.LINK ports to connect USB devices, CD changers, MiniDisc drives, or other components.

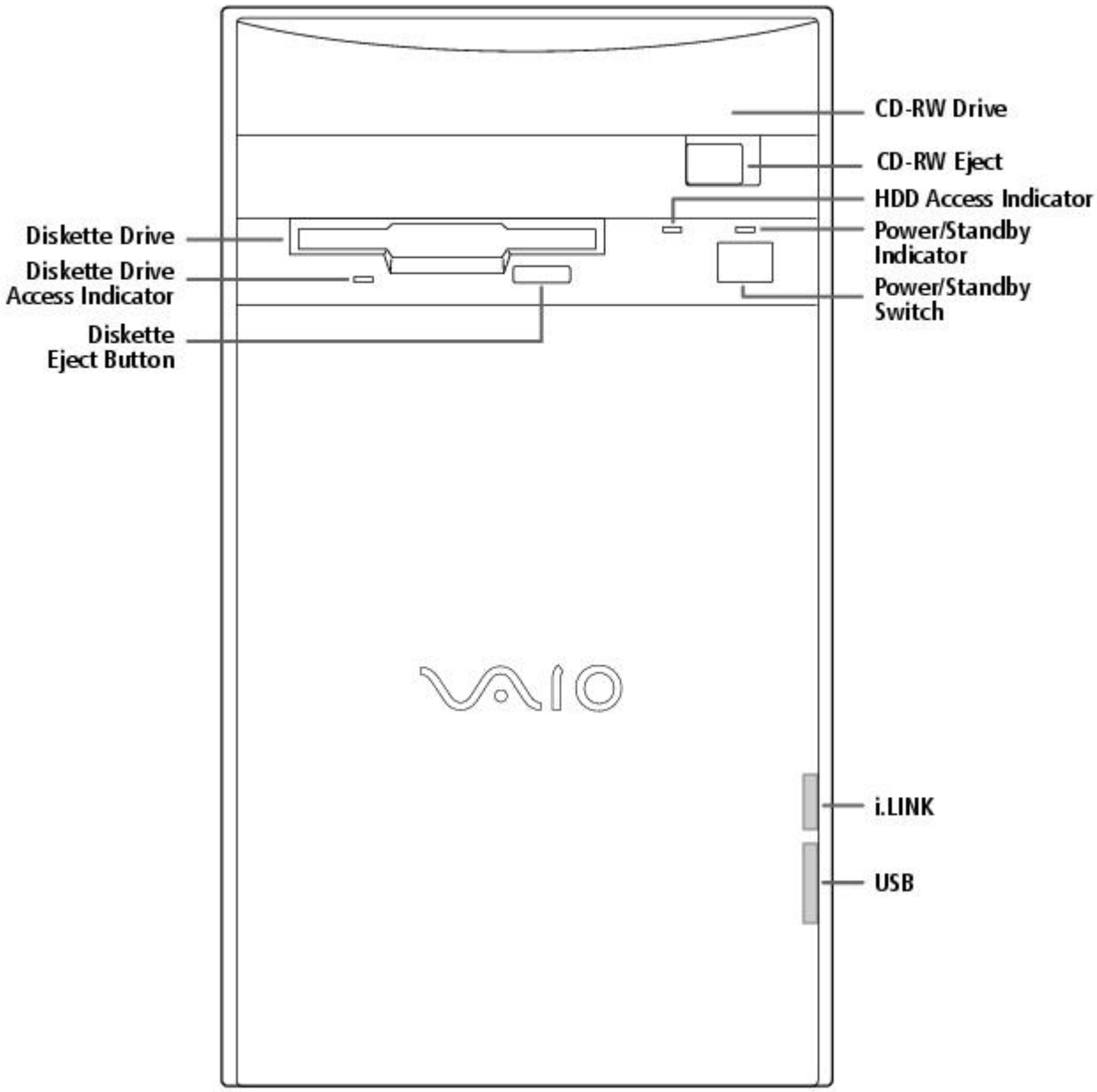

For your convenience, your computer includes USB and i.LINK connectors on both the front and back panels, allowing you to connect to either set of connectors. The i.LINK connector on the front of your system is a 4-pin connector.

Supplementary Information

For the most recent version of this manual, see the online version of Read Me First. You can access this document from the Windows Start Menu by selecting Programs/VAIO Documentation.

Hard Drive Partition

In order to improve the performance of your computer's DVgate Motion software, the hard disk drive on your computer has been formatted with two partitions, C and D. DVgate Motion saves files to the D partition. This prevents large video captures from consuming the available space on your C partition. To maintain optimum performance of DVgate Motion, you should defragment regularly.

VAIO Smart Keyboard Default Settings

The VAIO Smart Keyboard programmable buttons come with the following applications as their default settings:

S1 - Easy Internet Access Browser (Internet)

S2 - Outlook 98 (Mail)

S3 - MotorHead (Game)

S4 - Microsoft® Works (Work)

S5 - Quicken 99 Basic (Finance)

S6 - VAIO Documentation (Help)

All six buttons are reprogrammable.

Using The Standby Mode

To Put Your Computer into Standby Mode

When you are done using your computer, you can put it in Standby mode rather than turn it off completely. There are four ways to put your computer into Standby mode.

- Touch the power switch on the front panel.
- Click Shut Down at the bottom of the Start menu to display the Shut Down Windows dialog box. Select Stand by, and then click OK.
- Press the Standby button on the VAIO Smart Keyboard (the half moon icon).
- Change the timer settings for Standby mode in the Control Panel, as follows:

1. From the Start menu, point to Settings and click Control Panel.
2. Click the Power Management icon.
3. On the Power Schemes tab, change the Power scheme to Home/Office Desk.
4. In the list box for System standby, select an interval of time.
5. Click the OK button and close the Control Panel.

To Resume from Standby Mode

There are two ways to resume system functionality when your computer is in Standby mode. Use either of the following methods.

- Press any key on your keyboard, such as the Enter key.
- Touch the power switch on the front panel.

It may take up to 30 seconds for your system to recover stored information and resume functionality. The screen remains blank while the system is resuming functionality.

Applications That Use the TWAIN Driver

Digital imaging applications, such as Adobe PhotoDeluxe®, allow you to transfer images to your computer from external devices, including scanners or digital cameras. For some devices, a TWAIN driver window appears on the screen. Always close the TWAIN driver window before exiting or minimizing a digital imaging application.

Restoring Outlook 98

For the Add New Components functionality to be available with Microsoft Outlook, you must first run the installation program for Outlook from the Application Recovery CD. When prompted to install the program, select Exit. This decompresses the software, making the Add New Components functionality available.

Inserting Add-in Boards

Your VAIO Digital Studio Computer accommodates PCI add-in boards up to 7.7 inches in length.

Using Devices Connected to the i.LINK (IEEE 1394), S-Link (Control-A1), and Optical Digital Audio Output Connectors

For the latest information on devices known to be compatible with the state-of the-art audio, video, and graphics capabilities of your VAIO computer, check the Sony web site at http://www.sony.com/pcsupport.

Connecting to i.LINK Ports

Your VAIO computer includes a 4-pin i.LINK connector on the front of the system and two 6-pin i.LINK connectors on the back of the system. A 6-pin i.LINK connector can supply power from the computer to the connected device if the device is equipped with a 6-pin connector. Each 6-pin connector supplies 10V to 12V. The total power supplied by both 6-pin i.LINK connectors cannot exceed 6 watts. A 4-pin i.LINK connector cannot supply power to a connected device.

Capturing and Editing Digital Video Clips

- You can capture digital video clips using a digital video camera recorder and DVgate Motion software. Once the clips are saved as AVI files, they can be edited using DVgate Motion, DVgate Clip, or Adobe Premiere® LE. You cannot capture digital video clips directly using the Capture menu in Adobe Premiere LE. Adobe Premiere LE supports an analog capture board for capturing clips. Your VAIO computer is designed for digital video input.
- If there is no audio data associated with an AVI file, the message "Codec compression error" appears. If you do not wish to associate audio with your AVI file, you can add muted sound data by recording audio with the mute option enabled.
- For best performance, when editing AVI files in Adobe Premiere LE, you should use the default setup parameters that shipped with your system. If you change the default setup and want to reinitialize the parameters, follow these steps:

    1. In the Adobe Premiere LE application, select Compression from the Make menu. The Compression Settings dialog box appears.
    2. In the Method list box, select Sony DV software CODEC.
    3. Click OK to close the screen.
    4. From the Make menu, select Preset. The Preset dialog box appears.
    5. Select the parameters for Time Base, Compress, Output, and Preview Option settings as indicated below.

[Time base]

Time base - 29.97fps (required)

[Compress]

File type - AVI (required)
Compress Program Method - Sony DV software CODEC (required)
Compress Program Depth - Millions colors (No other options)
Quality (No control for this item)
Option: Frames per second - 30 (required)
Option: Basic Key Frames (No control for this item)
Option: Optimize Still Off (recommended)
Data rate - Recompress Off (recommended)

[Output options]

Video - On (required)
Video Size - 720x480
4:3 Aspect - Off (required)
VideoType - Field 2 (recommended)
Audio - On (required)
Audio Rate - 44kHz (required)
Audio Format - 16 Bit Stereo or 16 Bit Monaural (required)
Audio Type - Uncompress (required)
Audio Interleave - 1 frame (recommended)
- Less than 30 frames (required)

Audio Sync - 1.0 (required)
Audio Skew - 0.75 (recommended)
- Less than 1.0 (required)

[Preview Option]

Preview Window Size - 360x240

Note that Adobe Premiere LE does not save the Preview Window Size, but uses a default size of 320 x 213 each time the application launches. We recommend that you change this setting to 360 x 240 to improve the quality of preview clips when editing AVI files.

Using Alternate Browsers with America Online®

To use Internet Explorer or Netscape Navigator as your browser with America Online, follow these steps:

1. From the Start menu, point to Settings and then click Control Panel.
2. Click the Internet icon.
3. Click the Connection tab.
4. Click the "Connect to the Internet using local area network" radio button.
5. Click OK.

Using DVgate Motion

When capturing clips:

- Do not use DVgate Motion when the connected digital video peripheral is in Timer Recording mode, as this could produce a malfunction in the peripheral.
- Captures larger than 2 GB (9 minutes and 30 seconds) are automatically continued in a second file.
- You can record stereo audio (stereo 1) while capturing video. You cannot add audio on the stereo 2 track after capturing the video data.
- You cannot use different audio modes on the same tape. You should perform a separate capture for each audio mode you wish to use.
- DVgate Motion does not support hard disk compression. You should not use disk compression if you are planning to work with DVgate Motion.
- Title data is saved in the flash memory of a digital video camera and is not transferred to tape by DVgate Motion.
- To avoid interruption of capture sessions, you should disable the screen saver.
- The drop frame compensation feature does not provide accurate compensation adjustments for tapes recorded in LP mode.
- For tapes that include a mixture of both SP and LP mode, the information displayed by the capture progress indicator may not be accurate.
- Make sure the video head of your digital video device is properly cleaned. Anomalies that you see in captured data could be due to dust or other particles on the video head.
    - The last frame captured is one frame before your selected [OUT] point. The frame you see immediately after clicking the [OUT] button is not captured.

When recording AVI files to tape:

- Do not use DVgate Motion when the connected digital video peripheral is in Timer Recording mode, as this could produce a malfunction in the peripheral.

- You can record only AVI files. MPEG files cannot be recorded.
- To avoid recording problems, such as a single frame appearing in multiple frames, close other applications on your system while recording.
- You cannot use different audio modes on the same tape. If you have AVI files that use different audio modes, they cannot be recorded at the same time, but must be recorded separately.
- Do not attempt to work with AVI files that are smaller than 4 MB.
- DVgate Motion does not support hard disk compression. You should not use disk compression if you are planning to work with DVgate Motion.
- In order to maximize recording capabilities, video and audio data are not available while you are recording.

If DVgate Motion indicates that frames have been dropped, you should try closing all open applications, or you may need to defragment your hard drive.

Restoring Audio Drivers

When you restore the audio drivers from the Application Recovery CD, you need to restart your system to use these drivers. In the Add New Hardware wizard that appears when you restart, click the Next button until you are prompted for the location of the drivers. The audio drivers are located on the Application Recovery CD in G:\drivers\audio\AL98091701\English.

Using AC-3® to Optical Digital Audio Output

MiniDisc player/recorders, DAT player/recorders, and older digital receivers do not support Dolby® Digital (AC-3). You should not use the AC-3 to Optical Digital Audio Output option unless you are using a device that supports Dolby Digital. Please refer to the manual supplied with your equipment to determine if it supports Dolby Digital. If you are unsure and you have selected the AC-3 to Optical Digital Audio Output option, turn down the volume on your equipment before using the DVD player.

Using America Online or Sony Online Support with WinFax® Basic Edition

Once you have configured WinFax Basic Edition, it is automatically available for your use. You cannot use America Online or Sony Online Support when the automatic fax receive feature of WinFax Basic Edition is on. To disable this feature, right click the WinFax icon in the task tray at the bottom right corner of your screen, and then select Exit.

Memory Upgrade Specifications

When upgrading memory, use only 3.3V 64-bit PC-100 168 PIN SDRAM DIMM modules. For more information on Digital Studio Computer compatible memory, call Sony at 1-888-4SONYPC (1-888-476-6972).

About the Software On Your Computer

Your VAIO Digital Studio computer is ready to help you work, play, learn, and communicate as soon as you turn it on. This section gives you an overview of the activities you can perform with your software titles. For support information, see For Answers to Your Software Questions.

Adobe Acrobat® Reader

Adobe Systems Incorporated

Acrobat Reader software allows you to view, navigate, and print electronic documents in Adobe Portable Document Format (PDF), an open file format that is intended to preserve the fidelity of documents created on all major computer platforms.

Adobe PhotoDeluxe® Business Edition

Adobe Systems Incorporated

Create amazing photo effects with PhotoDeluxe. Without learning complex software, you can

enhance, restore, and be creative with your photos. Includes built-in guided activities, stock photos, clip art, and templates to assist you.

Adobe Premiere® LE

Adobe Systems Incorporated

Adobe Premiere LE offers an interface and editing tool for producing movies for video, multimedia, or the web. View source clips and edited footage simultaneously in the monitor window. Create video clips up to three hours long with complete audio-video synchronization.

America Online®

America Online

America Online is the world's most popular Internet online service. Stay in touch with family and friends with Easy-to-Use E-mail, manage your personal finances, get the latest news and sports scores, and chat with thousands of others who share your interests.

AT&T WorldNet® Service

AT&T

Fast, reliable Internet access from AT&T WorldNet Service. AT&T WorldNet Service provides web-based e-mail, a personalized start page from Excite, easy access to the Excite search engine, free web pages, online and live agent technical support, instant messaging, and special shopping discounts at Market Square.

CompuServe®

CompuServe, Inc.

CompuServe is the most comprehensive source of organized business and educational information online today. CompuServe allows you to access the vastness of the Internet without wasting time wading through it. Maximize your time online with CompuServe.

Digital Media Park

Sony Electronics

An integrated suite of multimedia cataloging and playback programs including Media Bar, Media Library, Media Showcase, and MiniDisc Editor. Manage your music by cataloging your entire CD collection, and then create custom MiniDiscs of your favorite songs.

Dr. Solomon's® Anti-Virus

Dr Solomon's Software Inc.

Dr. Solomon's Anti-Virus provides the most comprehensive defense against the spread of viruses, including macro viruses. It can scan inside compressed files and automatically protects your system against viruses sent via e-mail or Internet download.

DVgate Motion

Sony Electronics

Connect a digital video camera recorder to the i.LINK connector and capture your own video clips. You can edit the clips from your video, add others, and combine clips into new movie segments.

DVgate Still

Sony Electronics

Connect a digital video camera recorder to the i.LINK connector and capture your own still images. You can save your images in a variety of popular file formats.

EarthLink Sprint TotalAccess

EarthLink Network, Inc.

An Internet Service Provider that supplies access, information, and assistance to its customers, introducing them to the Internet. Member benefits include e-mail, newsgroups, a Personal Start Page, a free 6 MB web site, a member magazine, and 24-hour technical support.

Microsoft® Encarta® 99 Encyclopedia

Microsoft Corporation

Microsoft Encarta Encyclopedia combines current, comprehensive content with up-to-date multimedia technology, providing users with unique, engaging learning experiences. With the 1999 edition, Encarta provides a wealth of information resources and unique interactive features

Microsoft® Internet Explorer for Windows® 98

Microsoft Corporation

Internet Explorer delivers the web the way you want it. It's safe, easy to use, and you can personalize how you access the web. Outlook Express and other tools in Internet Explorer also help you have a great experience when you are on the web!

Microsoft® Money 99

Microsoft Corporation

Microsoft Money 99 is personal finance software that lets you perform your financial tasks, everything from paying bills to planning for the future, in a smarter, faster way. With Money's online services, you can pay bills and bank from the comfort of home.

Microsoft® Outlook® 98

Microsoft Corporation

Outlook 98 is Microsoft's premier messaging and collaboration client. It combines the leading support for Internet standards-based messaging systems with integrated calendar, contact, and task-management features.

Microsoft® Works

Microsoft Corporation

Works provides users with the right set of core tools that allows them to write letters and reports, track family and friends with the address book, manage home finances, and create a home inventory.

MotorHead

Gremlin Interactive Ltd.

MotorHead is realistic arcade-racing; high-velocity entertainment that puts you behind the wheel for 3D pure racing action. Power across Europe and USA in the Transatlantic Speed League, where second place is simply not an option.

Netscape Communicator®

Netscape Communications

Netscape Communicator is the all-in-one Internet tool that makes it easy to browse the web, send Internet e-mail, chat, read newsgroups, and compose great web documents.

PictureGear

Sony Electronics

This image management software displays images from your hard drive, a Sony digital still camera, or a Sony Mavica® camera. The images appear in a convenient light-table format, so that you can easily view the contents of an entire folder.

Prodigy Internet

Prodigy Communications Corporation

An Internet service that helps you find what you need online faster and smarter. Prodigy delivers powerful online content, such as sports scores, stock quotes, news, and easy access to Excite , plus a personal e-mail account and quality customer service, all at a competitive price.

Quicken® Basic 99

Intuit, Inc

Quicken is the fastest, easiest way to organize your finances. Quicken works just like your checkbook, so it's easy to learn and use. Quicken manages all of your finances, bank accounts, credit cards, investments, and loans. You can even pay your bills online.

SurfMonkey

MediaLive, Inc

SurfMonkey is a web browser and online service for kids ages 6-12 that makes the Internet safe, fun, and easy. A talking monkey guides children through web sites and chat rooms, and can read their e-mail out loud. Children cannot go to inappropriate web sites, parents can screen e-mail messages, and chat messages are monitored.

VAIO Smart Keyboard

Sony Electronics

VAIO Smart Keyboard software operates your new easy to use programmable USB keyboard. Six programmable buttons enable you to launch your favorite applications, open frequently used files, access Explorer, or even open your web browser with just the click of a button.

WinFax® Basic Edition

Symantec Corporation

WinFax Basic Edition incorporates an easy-to-use interface that allows you to send and receive faxes easily. Upgrade to WinFax Pro to receive additional features.

About Your Recovery CDs

Application Recovery CD(s)

Sony Electronics

The Application Recovery CD program allows you to reinstall individual applications and device drivers. Use it to restore corrupted or accidentally erased files.

System Recovery CD(s)

Sony Electronics

The System Recovery CD program allows you to restore the software titles that shipped with your computer if they become corrupted or are erased accidentally. It can be used only to restore the hard disk of the Sony computer you purchased.

For Answers to Your Software Questions

Sony Service Center

For the Sony Service Center nearest you, call at 1-888-4SONYPC (1-888-476-6972).

Acrobat® Reader, Adobe PhotoDeluxe® Business Edition , Adobe Premiere® LE (Adobe Systems Incorporated)

Web site http://www.adobe.com/
phone 206-628-2746 (fee-based support)
fax 206-628-5737
e-mail techdocs@adobe.com
hours M-F, 6 AM-5 PM PT

America Online® (America Online)

Web site http://www.aol.com/
phone 800-827-3338
hours 7 days a week, 6 AM - 2 PM ET

AT&T WorldNet® Service (AT&T)

Web site http://www.att.net/*
phone 800-400-1447
e-mail worldnet@attmail.com
hours 7 days a week, 24 hours a day

* You must be a WorldNet Service customer to access online support.

CompuServe® Interactive (CompuServe Interactive, Inc.)

Web site http://www.compuserve.com/
phone 800-848-8990
hours M-F, 8 AM - 1 AM ET, S-S 10 AM - 10 PM ET

Dr. Solomon's® Anti-Virus (Dr. Solomon's Software Inc.)

Web site http://www.drsolomon.com/
phone 888-377-6566
e-mail support@us.drsolomon.com
hours 7 days a week, 24 hours a day

EarthLink Sprint TotalAccess (EarthLink Network, Inc.)

Web site http://help.earthlink.net/techsupport/
phone 800-395-8410
e-mail support@earthlink.net
hours 7 days a week, 24 hours a day

Easy Internet Access (Encompass, Inc.)

Web site http://www.encmpss.com/
phone 800-927-3000
hours 7 days a week, 24 hours a day

MotorHead (Gremlin Interactive Ltd.)

Web site http://www.gremlin.com/
phone 888-4SONYPC (888-476-6972)
hours 7 days a week, 24 hours a day

Windows® 98 Operating System, Works, Money, Encarta, Internet Explorer (Microsoft Corporation)

Web site http://www.microsoft.com/support/
phone 888-4SONYPC (888-476-6972)*
hours 7 days a week, 24 hours a day
* Support from 1-888-4SONYPC is free of charge for 90 days after the original date of purchase.

Netscape Communicator® (Netscape Communications Corporation)

Web site http://www.netscape.com/
phone 888-4SONYPC (888-476-6972)*
hours 7 days a week, 24 hours a day
* Support from 1-888-4SONYPC is free of charge for 90 days after the original date of purchase.

Prodigy Internet (Prodigy Communications Corporation.)

Web site http://www.prodigy.com/
phone 800-PRODIGY
hours 7 AM - 3 AM ET

Quicken® Basic (Intuit Inc.)

Web site http://www.intuit.com/support/
phone 900-555-4688
hours 7 days a week, 24 hours a day

SurfMonkey (MediaLive, Inc.)

Web site http://www.surfmonkey.com/support/Sub_support.html
phone 408-556-2060
e-mail support@surfmonkey.com
hours 9AM-10PM PT everyday

WinFax® Basic Edition (Symantec Corporation.)

Web site http://www.symantec.com/techsupp/
phone 800-798-0850
fax 800-554-4403 in North America
541-984-2490 outside North America

Specifications

Model **PCV-E518DS**
Processor 500 MHz Pentium® III
Hard Disk Drive 17.28 GB
Standard SDRAM 128 MB PC-100 SDRAM, expandable to 256 MB
Video RAM 8 MB SDRAM
MPEG "Sony Tuned" MPEG Digital Video supports full-screen video playback
Graphics 3D 2X AGP graphics acceleration (Matrox)
Sound Capabilities 3D Positional Audio (Aureal A3D)
Diskette Drive 3.5" 1.44 MB FDD
CD-RW Drive CD-RW Drive (4X max. CD-R writing, 2X max. CD-RW writing, 24X max. reading)
Modem K56flex technology/V.90 compatible data/fax modem[1]
Expansion Capabilities One PCI slot
One additional hard disk drive bay
Connection Capabilities (Front) USB port
i.LINK port (4-pin)
Connection Capabilities (Rear) Optional Keyboard (PS/2-style)
Mouse (PS/2-style)
USB port
Serial port
Parallel (printer)
Game/MIDI
Headphones
Line In
Microphone
VGA Monitor
S-Link (Control-A1)
Optical Digital Audio Out
Two i.LINK ports (6-pin)[2]
Modem line (RJ-11)
Phone line (RJ-11)
Supplied Accessories VAIO Smart keyboard
Sony two-button mouse
RJ-11 phone cable
Power cord
Service 90-day limited service. Extendible to one year from original date of purchase upon registration[3]
Limited Warranty 90-day parts/labor standard. Extendible to one year from original date of purchase upon registration[4]

Power Requirements 200 watts maximum
Dimensions 7" (w) x 12" (h) x 13 3/4" (d) (178mm x 304mm x 330mm)
Weight 17 lbs. (7.71 kg)
Operating Temperature 50º F to 95º F (+10º C to 35º C)

[1] Maximum speed for faxing is 14.4 kbytes/s. Your modem is capable of downloading at 56 kbytes/s using K56flex technology or V.90. Your phone service, online service, or Internet Service Provider however, may not support this technology or operate at this speed.

[2] Six-pin i-LINK connectors on the rear of the system each supply 10V to 12V. The combined total wattage that can be supplied by the two connectors is 6 watts.

[3] Certain restrictions apply

[4] Certain restrictions apply

Specifications are subject to change without notice.

This product meets the standards of the International Energy Star Program for energy efficiency.

© 1999 Sony Electronics Inc. Reproduction in w hole or in part w ithout w ritten permission is prohibited. All rights reserved.

Read Me First

Welcome

Congratulations on your purchase of the Sony VAIO Digital Studio Computer. Sony has combined leading-edge technology in audio, video, computing, and communications to provide you with state-of-the-art personal computing.

Features

 For a complete description of the specifications of your VAIO Digital Studio Computer, see Specifications.

- **Exceptional performance:** Your computer includes a brand new Intel® Pentium® III processor, a CD-RW drive, and a V.90 compatible data/fax modem.*

* Actual upload and download speeds may vary due to line conditions, ISP support, and government regulations.

- **CD-RW drive:** This drive is the ideal solution for making backups and data archiving, with the ability to store up to 650 MB* of removable, rewritable storage on a single rewritable CD. Save your movies to CD-R or CD-RW media and share videos and images with family and friends.

***** 530 MB after formatting.

- **VAIO Smart Keyboard:** This USB keyboard has programmable shortcut buttons for launching your favorite programs or accessing the Internet.
- **Sony audio and video quality:** High-fidelity positional 3D audio system (A3D), high-powered 3D graphics (AGP), and "Sony-Tuned" MPEG digital video playback enable you to take advantage of today's advanced multimedia applications, games, and entertainment software.
- **S-Link (Control-A1):** This technology allows you to build a database of all your music and video CDs and then record your favorite audio selections on MiniDiscs. Use your computer with a 200 disc mega-storage CD changer and a MiniDisc recording deck.
- **i.LINK (IEEE 1394):** Three built-in i.LINK ports provide you with maximum digital connection capability. The i.LINK name and logo identify a digital interface (IEEE 1394) for high speed communication. By using your VAIO Digital Studio Computer, a Sony Digital Handycam® Camcorder, the DVgate software preinstalled on your computer, and the i.LINK (IEEE 1394) interface, you can easily create and edit your own home videos.
- **Optical Digital Audio Output:** This high-quality digital interface transmits digital audio data via light pulses. Transfer crystal clear digital audio to your MiniDisc recorder.
- **Digital Studio Software**: Enjoy all of your computer's audio and video capabilities with component-like applications that allow you to creatively manipulate digital still images, video clips, and audio tracks.
- **50 free hours of Internet access:** Use the Internet for up to 50 free hours when you sign up with GTE (no credit card required). Limit of two hours per day. Free access expires after 50 hours or 90 days after signing up--whichever occurs first.
- **Preinstalled software titles**: All the software on your computer is preinstalled, configured, and ready for you to use right out of the box.
- **Windows® 98**: Your system includes the latest operating system from Microsoft.
- **Communications:** Access popular online services, browse the Internet, send faxes, and more.

Unpacking Your Computer

Computer and Supplied Accessories

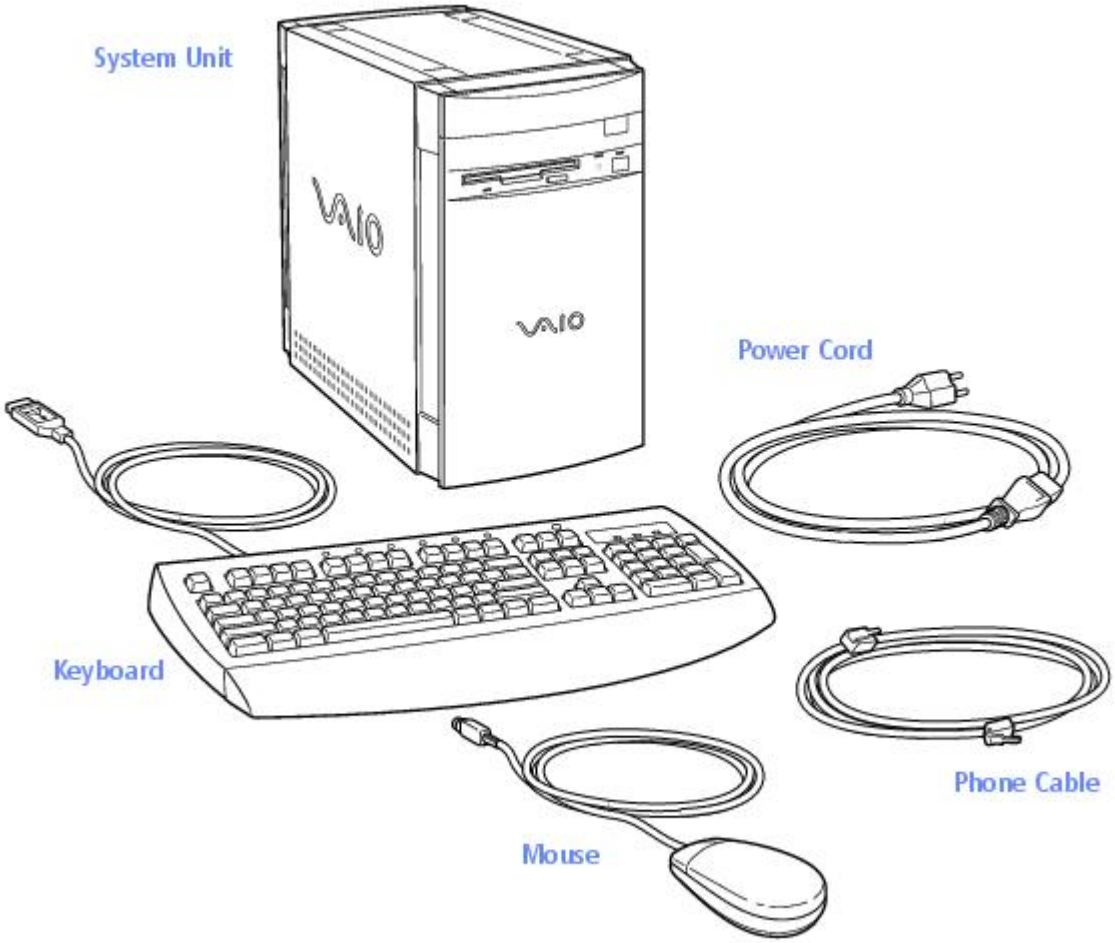

Manuals

- *Read Me First* (this manual) contains features and specifications of your computer. It also includes information on the applications included with your system, how to contact software vendors, and last minute troubleshooting tips.
- The *VAIO Digital Studio Computer User Guide* describes how to get started with your computer, find help, and solve common problems.
- The *Microsoft® Windows®98 Getting Started* manual explains how to use the basic features of the Windows operating system.

Recovery CDs

- System Recovery CD(s)
- Application Recovery CD(s)

Other

- Setting up your VAIO Digital Studio Computer (poster)
- Packet containing special product offers

Software Library

The Software Library contains the Microsoft software license agreement, Sony end-user license agreement, and the following CDs:

- Adobe PhotoDeluxe® Business Edition 3.0
- Gremlin Interactive Ltd. MotorHead
- Microsoft® Encarta® 99 Encyclopedia
- Microsoft® Money/Microsoft® Works

Back Panel Overview

The back panel of your computer contains the connectors where you plug in supplied and optional accessories. The icons on the back panel serve as a map to help you locate the connectors on your computer.

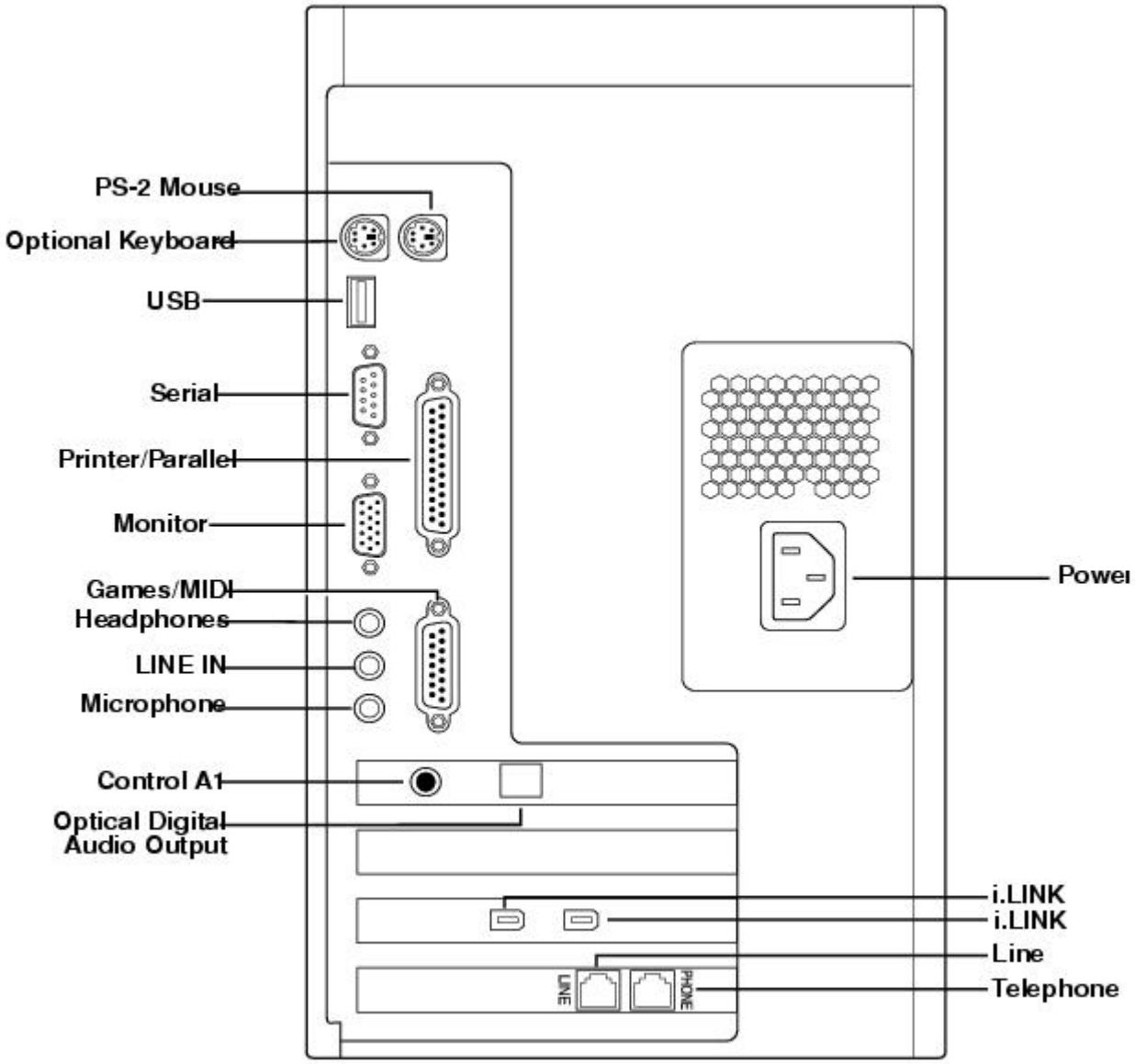

For your convenience, your computer includes USB and i.LINK connectors on both the front and back panels, allowing you to connect to either set of connectors. i.LINK connectors on the back of your system are 6-pin connectors.

Front Panel Overview

The front panel of your VAIO Digital Studio Computer allows for access to the diskette and CD-RW drives. It also includes USB and i.LINK ports to connect USB devices, CD changers, MiniDisc drives, or other components.

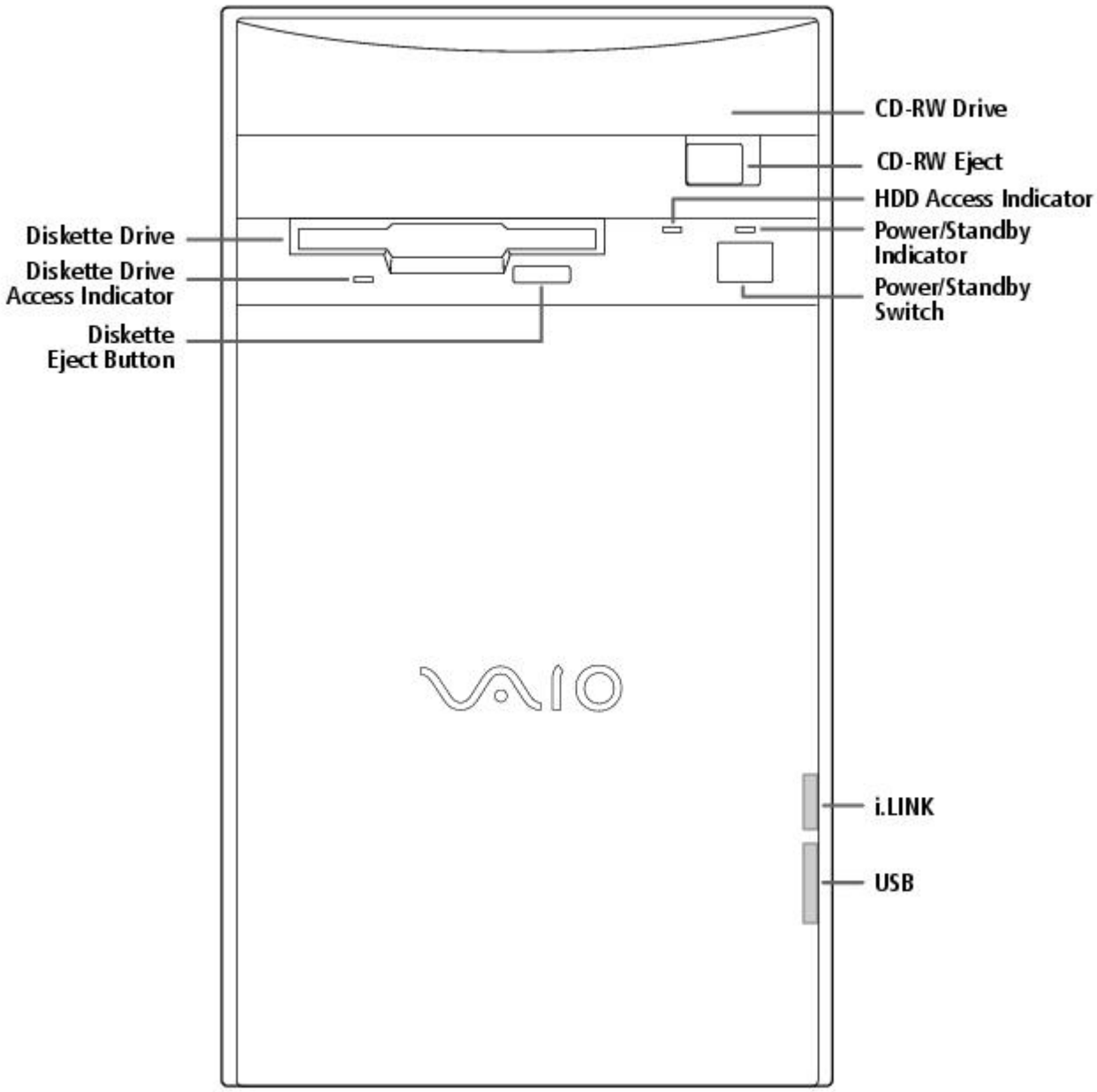

For your convenience, your computer includes USB and i.LINK connectors on both the front and back panels, allowing you to connect to either set of connectors. The i.LINK connector on the front of your system is a 4-pin connector.

Supplementary Information

For the most recent version of this manual, see the online version of Read Me First. You can access this document from the Windows Start Menu by selecting Programs/VAIO Documentation.

Hard Drive Partition

In order to improve the performance of your computer's DVgate Motion software, the hard disk drive on your computer has been formatted with two partitions, C and D. DVgate Motion saves files to the D partition. This prevents large video captures from consuming the available space on your C partition. To maintain optimum performance of DVgate Motion, you should defragment regularly.

VAIO Smart Keyboard Default Settings

The VAIO Smart Keyboard programmable buttons come with the following applications as their default settings:

S1 - Easy Internet Access Browser (Internet)

S2 - Outlook 98 (Mail)

S3 - MotorHead (Game)

S4 - Microsoft® Works (Work)

S5 - Quicken 99 Basic (Finance)

S6 - VAIO Documentation (Help)

All six buttons are reprogrammable.

Using The Standby Mode

To Put Your Computer into Standby Mode

When you are done using your computer, you can put it in Standby mode rather than turn it off completely. There are four ways to put your computer into Standby mode.

- Touch the power switch on the front panel.
- Click Shut Down at the bottom of the Start menu to display the Shut Down Windows dialog box. Select Stand by, and then click OK.
- Press the Standby button on the VAIO Smart Keyboard (the half moon icon).
- Change the timer settings for Standby mode in the Control Panel, as follows:

1. From the Start menu, point to Settings and click Control Panel.
2. Click the Power Management icon.
3. On the Power Schemes tab, change the Power scheme to Home/Office Desk.
4. In the list box for System standby, select an interval of time.
5. Click the OK button and close the Control Panel.

To Resume from Standby Mode

There are two ways to resume system functionality when your computer is in Standby mode. Use either of the following methods.

- Press any key on your keyboard, such as the Enter key.
- Touch the power switch on the front panel.

It may take up to 30 seconds for your system to recover stored information and resume functionality. The screen remains blank while the system is resuming functionality.

Applications That Use the TWAIN Driver

Digital imaging applications, such as Adobe PhotoDeluxe®, allow you to transfer images to your computer from external devices, including scanners or digital cameras. For some devices, a TWAIN driver window appears on the screen. Always close the TWAIN driver window before exiting or minimizing a digital imaging application.

Restoring Outlook 98

For the Add New Components functionality to be available with Microsoft Outlook, you must first run the installation program for Outlook from the Application Recovery CD. When prompted to install the program, select Exit. This decompresses the software, making the Add New Components functionality available.

Inserting Add-in Boards

Your VAIO Digital Studio Computer accommodates PCI add-in boards up to 7.7 inches in length.

Using Devices Connected to the i.LINK (IEEE 1394), S-Link (Control-A1), and Optical Digital Audio Output Connectors

For the latest information on devices known to be compatible with the state-of the-art audio, video, and graphics capabilities of your VAIO computer, check the Sony web site at http://www.sony.com/pcsupport.

Connecting to i.LINK Ports

Your VAIO computer includes a 4-pin i.LINK connector on the front of the system and two 6-pin i.LINK connectors on the back of the system. A 6-pin i.LINK connector can supply power from the computer to the connected device if the device is equipped with a 6-pin connector. Each 6-pin connector supplies 10V to 12V. The total power supplied by both 6-pin i.LINK connectors cannot exceed 6 watts. A 4-pin i.LINK connector cannot supply power to a connected device.

Capturing and Editing Digital Video Clips

- You can capture digital video clips using a digital video camera recorder and DVgate Motion software. Once the clips are saved as AVI files, they can be edited using DVgate Motion, DVgate Clip, or Adobe Premiere® LE. You cannot capture digital video clips directly using the Capture menu in Adobe Premiere LE. Adobe Premiere LE supports an analog capture board for capturing clips. Your VAIO computer is designed for digital video input.
- If there is no audio data associated with an AVI file, the message "Codec compression error" appears. If you do not wish to associate audio with your AVI file, you can add muted sound data by recording audio with the mute option enabled.
- For best performance, when editing AVI files in Adobe Premiere LE, you should use the default setup parameters that shipped with your system. If you change the default setup and want to reinitialize the parameters, follow these steps:

    1. In the Adobe Premiere LE application, select Compression from the Make menu. The Compression Settings dialog box appears.
    2. In the Method list box, select Sony DV software CODEC.
    3. Click OK to close the screen.
    4. From the Make menu, select Preset. The Preset dialog box appears.
    5. Select the parameters for Time Base, Compress, Output, and Preview Option settings as indicated below.

[Time base]

Time base - 29.97fps (required)

[Compress]

File type - AVI (required)
Compress Program Method - Sony DV software CODEC (required)
Compress Program Depth - Millions colors (No other options)
Quality (No control for this item)
Option: Frames per second - 30 (required)
Option: Basic Key Frames (No control for this item)
Option: Optimize Still Off (recommended)
Data rate - Recompress Off (recommended)

[Output options]

Video - On (required)
Video Size - 720x480
4:3 Aspect - Off (required)
VideoType - Field 2 (recommended)
Audio - On (required)
Audio Rate - 44kHz (required)
Audio Format - 16 Bit Stereo or 16 Bit Monaural (required)
Audio Type - Uncompress (required)
Audio Interleave - 1 frame (recommended)
- Less than 30 frames (required)

Audio Sync - 1.0 (required)
Audio Skew - 0.75 (recommended)
- Less than 1.0 (required)

[Preview Option]

Preview Window Size - 360x240

Note that Adobe Premiere LE does not save the Preview Window Size, but uses a default size of 320 x 213 each time the application launches. We recommend that you change this setting to 360 x 240 to improve the quality of preview clips when editing AVI files.

Using Alternate Browsers with America Online®

To use Internet Explorer or Netscape Navigator as your browser with America Online, follow these steps:

1. From the Start menu, point to Settings and then click Control Panel.
2. Click the Internet icon.
3. Click the Connection tab.
4. Click the "Connect to the Internet using local area network" radio button.
5. Click OK.

Using DVgate Motion

When capturing clips:

- Do not use DVgate Motion when the connected digital video peripheral is in Timer Recording mode, as this could produce a malfunction in the peripheral.
- Captures larger than 2 GB (9 minutes and 30 seconds) are automatically continued in a second file.
- You can record stereo audio (stereo 1) while capturing video. You cannot add audio on the stereo 2 track after capturing the video data.
- You cannot use different audio modes on the same tape. You should perform a separate capture for each audio mode you wish to use.
- DVgate Motion does not support hard disk compression. You should not use disk compression if you are planning to work with DVgate Motion.
- Title data is saved in the flash memory of a digital video camera and is not transferred to tape by DVgate Motion.
- To avoid interruption of capture sessions, you should disable the screen saver.
- The drop frame compensation feature does not provide accurate compensation adjustments for tapes recorded in LP mode.
- For tapes that include a mixture of both SP and LP mode, the information displayed by the capture progress indicator may not be accurate.
- Make sure the video head of your digital video device is properly cleaned. Anomalies that you see in captured data could be due to dust or other particles on the video head.
    - The last frame captured is one frame before your selected [OUT] point. The frame you see immediately after clicking the [OUT] button is not captured.

When recording AVI files to tape:

- Do not use DVgate Motion when the connected digital video peripheral is in Timer Recording mode, as this could produce a malfunction in the peripheral.

- You can record only AVI files. MPEG files cannot be recorded.
- To avoid recording problems, such as a single frame appearing in multiple frames, close other applications on your system while recording.
- You cannot use different audio modes on the same tape. If you have AVI files that use different audio modes, they cannot be recorded at the same time, but must be recorded separately.
- Do not attempt to work with AVI files that are smaller than 4 MB.
- DVgate Motion does not support hard disk compression. You should not use disk compression if you are planning to work with DVgate Motion.
- In order to maximize recording capabilities, video and audio data are not available while you are recording.

If DVgate Motion indicates that frames have been dropped, you should try closing all open applications, or you may need to defragment your hard drive.

Restoring Audio Drivers

When you restore the audio drivers from the Application Recovery CD, you need to restart your system to use these drivers. In the Add New Hardware wizard that appears when you restart, click the Next button until you are prompted for the location of the drivers. The audio drivers are located on the Application Recovery CD in G:\drivers\audio\AL98091701\English.

Using AC-3® to Optical Digital Audio Output

MiniDisc player/recorders, DAT player/recorders, and older digital receivers do not support Dolby® Digital (AC-3). You should not use the AC-3 to Optical Digital Audio Output option unless you are using a device that supports Dolby Digital. Please refer to the manual supplied with your equipment to determine if it supports Dolby Digital. If you are unsure and you have selected the AC-3 to Optical Digital Audio Output option, turn down the volume on your equipment before using the DVD player.

Using America Online or Sony Online Support with WinFax® Basic Edition

Once you have configured WinFax Basic Edition, it is automatically available for your use. You cannot use America Online or Sony Online Support when the automatic fax receive feature of WinFax Basic Edition is on. To disable this feature, right click the WinFax icon in the task tray at the bottom right corner of your screen, and then select Exit.

Memory Upgrade Specifications

When upgrading memory, use only 3.3V 64-bit PC-100 168 PIN SDRAM DIMM modules. For more information on Digital Studio Computer compatible memory, call Sony at 1-888-4SONYPC (1-888-476-6972).

About the Software On Your Computer

Your VAIO Digital Studio computer is ready to help you work, play, learn, and communicate as soon as you turn it on. This section gives you an overview of the activities you can perform with your software titles. For support information, see For Answers to Your Software Questions.

Adobe Acrobat® Reader

Adobe Systems Incorporated

Acrobat Reader software allows you to view, navigate, and print electronic documents in Adobe Portable Document Format (PDF), an open file format that is intended to preserve the fidelity of documents created on all major computer platforms.

Adobe PhotoDeluxe® Business Edition

Adobe Systems Incorporated

Create amazing photo effects with PhotoDeluxe. Without learning complex software, you can

enhance, restore, and be creative with your photos. Includes built-in guided activities, stock photos, clip art, and templates to assist you.

Adobe Premiere® LE

Adobe Systems Incorporated

Adobe Premiere LE offers an interface and editing tool for producing movies for video, multimedia, or the web. View source clips and edited footage simultaneously in the monitor window. Create video clips up to three hours long with complete audio-video synchronization.

America Online®

America Online

America Online is the world's most popular Internet online service. Stay in touch with family and friends with Easy-to-Use E-mail, manage your personal finances, get the latest news and sports scores, and chat with thousands of others who share your interests.

AT&T WorldNet® Service

AT&T

Fast, reliable Internet access from AT&T WorldNet Service. AT&T WorldNet Service provides web-based e-mail, a personalized start page from Excite, easy access to the Excite search engine, free web pages, online and live agent technical support, instant messaging, and special shopping discounts at Market Square.

CompuServe®

CompuServe, Inc.

CompuServe is the most comprehensive source of organized business and educational information online today. CompuServe allows you to access the vastness of the Internet without wasting time wading through it. Maximize your time online with CompuServe.

Digital Media Park

Sony Electronics

An integrated suite of multimedia cataloging and playback programs including Media Bar, Media Library, Media Showcase, and MiniDisc Editor. Manage your music by cataloging your entire CD collection, and then create custom MiniDiscs of your favorite songs.

Dr. Solomon's® Anti-Virus

Dr Solomon's Software Inc.

Dr. Solomon's Anti-Virus provides the most comprehensive defense against the spread of viruses, including macro viruses. It can scan inside compressed files and automatically protects your system against viruses sent via e-mail or Internet download.

DVgate Motion

Sony Electronics

Connect a digital video camera recorder to the i.LINK connector and capture your own video clips. You can edit the clips from your video, add others, and combine clips into new movie segments.

DVgate Still

Sony Electronics

Connect a digital video camera recorder to the i.LINK connector and capture your own still images. You can save your images in a variety of popular file formats.

EarthLink Sprint TotalAccess

EarthLink Network, Inc.

An Internet Service Provider that supplies access, information, and assistance to its customers, introducing them to the Internet. Member benefits include e-mail, newsgroups, a Personal Start Page, a free 6 MB web site, a member magazine, and 24-hour technical support.

Microsoft® Encarta® 99 Encyclopedia

Microsoft Corporation

Microsoft Encarta Encyclopedia combines current, comprehensive content with up-to-date multimedia technology, providing users with unique, engaging learning experiences. With the 1999 edition, Encarta provides a wealth of information resources and unique interactive features

Microsoft® Internet Explorer for Windows® 98

Microsoft Corporation

Internet Explorer delivers the web the way you want it. It's safe, easy to use, and you can personalize how you access the web. Outlook Express and other tools in Internet Explorer also help you have a great experience when you are on the web!

Microsoft® Money 99

Microsoft Corporation

Microsoft Money 99 is personal finance software that lets you perform your financial tasks, everything from paying bills to planning for the future, in a smarter, faster way. With Money's online services, you can pay bills and bank from the comfort of home.

Microsoft® Outlook® 98

Microsoft Corporation

Outlook 98 is Microsoft's premier messaging and collaboration client. It combines the leading support for Internet standards-based messaging systems with integrated calendar, contact, and task-management features.

Microsoft® Works

Microsoft Corporation

Works provides users with the right set of core tools that allows them to write letters and reports, track family and friends with the address book, manage home finances, and create a home inventory.

MotorHead

Gremlin Interactive Ltd.

MotorHead is realistic arcade-racing; high-velocity entertainment that puts you behind the wheel for 3D pure racing action. Power across Europe and USA in the Transatlantic Speed League, where second place is simply not an option.

Netscape Communicator®

Netscape Communications

Netscape Communicator is the all-in-one Internet tool that makes it easy to browse the web, send Internet e-mail, chat, read newsgroups, and compose great web documents.

PictureGear

Sony Electronics

This image management software displays images from your hard drive, a Sony digital still camera, or a Sony Mavica® camera. The images appear in a convenient light-table format, so that you can easily view the contents of an entire folder.

Prodigy Internet

Prodigy Communications Corporation

An Internet service that helps you find what you need online faster and smarter. Prodigy delivers powerful online content, such as sports scores, stock quotes, news, and easy access to Excite , plus a personal e-mail account and quality customer service, all at a competitive price.

Quicken® Basic 99

Intuit, Inc

Quicken is the fastest, easiest way to organize your finances. Quicken works just like your checkbook, so it's easy to learn and use. Quicken manages all of your finances, bank accounts, credit cards, investments, and loans. You can even pay your bills online.

SurfMonkey

MediaLive, Inc

SurfMonkey is a web browser and online service for kids ages 6-12 that makes the Internet safe, fun, and easy. A talking monkey guides children through web sites and chat rooms, and can read their e-mail out loud. Children cannot go to inappropriate web sites, parents can screen e-mail messages, and chat messages are monitored.

VAIO Smart Keyboard

Sony Electronics

VAIO Smart Keyboard software operates your new easy to use programmable USB keyboard. Six programmable buttons enable you to launch your favorite applications, open frequently used files, access Explorer, or even open your web browser with just the click of a button.

WinFax® Basic Edition

Symantec Corporation

WinFax Basic Edition incorporates an easy-to-use interface that allows you to send and receive faxes easily. Upgrade to WinFax Pro to receive additional features.

About Your Recovery CDs

Application Recovery CD(s)

Sony Electronics

The Application Recovery CD program allows you to reinstall individual applications and device drivers. Use it to restore corrupted or accidentally erased files.

System Recovery CD(s)

Sony Electronics

The System Recovery CD program allows you to restore the software titles that shipped with your computer if they become corrupted or are erased accidentally. It can be used only to restore the hard disk of the Sony computer you purchased.

For Answers to Your Software Questions

Sony Service Center

For the Sony Service Center nearest you, call at 1-888-4SONYPC (1-888-476-6972).

Acrobat® Reader, Adobe PhotoDeluxe® Business Edition , Adobe Premiere® LE (Adobe Systems Incorporated)

Web site http://www.adobe.com/
phone 206-628-2746 (fee-based support)
fax 206-628-5737
e-mail techdocs@adobe.com
hours M-F, 6 AM-5 PM PT

America Online® (America Online)

Web site http://www.aol.com/
phone 800-827-3338
hours 7 days a week, 6 AM - 2 PM ET

AT&T WorldNet® Service (AT&T)

Web site http://www.att.net/*
phone 800-400-1447
e-mail worldnet@attmail.com
hours 7 days a week, 24 hours a day

* You must be a WorldNet Service customer to access online support.

CompuServe® Interactive (CompuServe Interactive, Inc.)

Web site http://www.compuserve.com/
phone 800-848-8990
hours M-F, 8 AM - 1 AM ET, S-S 10 AM - 10 PM ET

Dr. Solomon's® Anti-Virus (Dr. Solomon's Software Inc.)

Web site http://www.drsolomon.com/
phone 888-377-6566
e-mail support@us.drsolomon.com
hours 7 days a week, 24 hours a day

EarthLink Sprint TotalAccess (EarthLink Network, Inc.)

Web site http://help.earthlink.net/techsupport/
phone 800-395-8410
e-mail support@earthlink.net
hours 7 days a week, 24 hours a day

Easy Internet Access (Encompass, Inc.)

Web site http://www.encmpss.com/
phone 800-927-3000
hours 7 days a week, 24 hours a day

MotorHead (Gremlin Interactive Ltd.)

Web site http://www.gremlin.com/
phone 888-4SONYPC (888-476-6972)
hours 7 days a week, 24 hours a day

Windows® 98 Operating System, Works, Money, Encarta, Internet Explorer (Microsoft Corporation)

Web site http://www.microsoft.com/support/
phone 888-4SONYPC (888-476-6972)*
hours 7 days a week, 24 hours a day
* Support from 1-888-4SONYPC is free of charge for 90 days after the original date of purchase.

Netscape Communicator® (Netscape Communications Corporation)

Web site http://www.netscape.com/
phone 888-4SONYPC (888-476-6972)*
hours 7 days a week, 24 hours a day
* Support from 1-888-4SONYPC is free of charge for 90 days after the original date of purchase.

Prodigy Internet (Prodigy Communications Corporation.)

Web site http://www.prodigy.com/
phone 800-PRODIGY
hours 7 AM - 3 AM ET

Quicken® Basic (Intuit Inc.)

Web site http://www.intuit.com/support/
phone 900-555-4688
hours 7 days a week, 24 hours a day

SurfMonkey (MediaLive, Inc.)

Web site http://www.surfmonkey.com/support/Sub_support.html
phone 408-556-2060
e-mail support@surfmonkey.com
hours 9AM-10PM PT everyday

WinFax® Basic Edition (Symantec Corporation.)

Web site http://www.symantec.com/techsupp/
phone 800-798-0850
fax 800-554-4403 in North America
541-984-2490 outside North America

Specifications

Model **PCV-E518DS**
Processor 500 MHz Pentium® III
Hard Disk Drive 17.28 GB
Standard SDRAM 128 MB PC-100 SDRAM, expandable to 256 MB
Video RAM 8 MB SDRAM
MPEG "Sony Tuned" MPEG Digital Video supports full-screen video playback
Graphics 3D 2X AGP graphics acceleration (Matrox)
Sound Capabilities 3D Positional Audio (Aureal A3D)
Diskette Drive 3.5" 1.44 MB FDD
CD-RW Drive CD-RW Drive (4X max. CD-R writing, 2X max. CD-RW writing, 24X max. reading)
Modem K56flex technology/V.90 compatible data/fax modem[1]
Expansion Capabilities One PCI slot
One additional hard disk drive bay
Connection Capabilities (Front) USB port
i.LINK port (4-pin)
Connection Capabilities (Rear) Optional Keyboard (PS/2-style)
Mouse (PS/2-style)
USB port
Serial port
Parallel (printer)
Game/MIDI
Headphones
Line In
Microphone
VGA Monitor
S-Link (Control-A1)
Optical Digital Audio Out
Two i.LINK ports (6-pin)[2]
Modem line (RJ-11)
Phone line (RJ-11)
Supplied Accessories VAIO Smart keyboard
Sony two-button mouse
RJ-11 phone cable
Power cord
Service 90-day limited service. Extendible to one year from original date of purchase upon registration[3]
Limited Warranty 90-day parts/labor standard. Extendible to one year from original date of purchase upon registration[4]

Power Requirements 200 watts maximum
Dimensions 7" (w) x 12" (h) x 13 3/4" (d) (178mm x 304mm x 330mm)
Weight 17 lbs. (7.71 kg)
Operating Temperature 50º F to 95º F (+10º C to 35º C)

[1] Maximum speed for faxing is 14.4 kbytes/s. Your modem is capable of downloading at 56 kbytes/s using K56flex technology or V.90. Your phone service, online service, or Internet Service Provider however, may not support this technology or operate at this speed.

[2] Six-pin i-LINK connectors on the rear of the system each supply 10V to 12V. The combined total wattage that can be supplied by the two connectors is 6 watts.

[3] Certain restrictions apply

[4] Certain restrictions apply

Specifications are subject to change without notice.

This product meets the standards of the International Energy Star Program for energy efficiency.

© 1999 Sony Electronics Inc. Reproduction in w hole or in part w ithout w ritten permission is prohibited. All rights reserved.

Read Me First

Welcome

Congratulations on your purchase of the Sony VAIO Digital Studio Computer. Sony has combined leading-edge technology in audio, video, computing, and communications to provide you with state-of-the-art personal computing.

Features

 For a complete description of the specifications of your VAIO Digital Studio Computer, see Specifications.

- **Exceptional performance:** Your computer includes a brand new Intel® Pentium® III processor, a CD-RW drive, and a V.90 compatible data/fax modem.*

* Actual upload and download speeds may vary due to line conditions, ISP support, and government regulations.

- **CD-RW drive:** This drive is the ideal solution for making backups and data archiving, with the ability to store up to 650 MB* of removable, rewritable storage on a single rewritable CD. Save your movies to CD-R or CD-RW media and share videos and images with family and friends.

***** 530 MB after formatting.

- **VAIO Smart Keyboard:** This USB keyboard has programmable shortcut buttons for launching your favorite programs or accessing the Internet.
- **Sony audio and video quality:** High-fidelity positional 3D audio system (A3D), high-powered 3D graphics (AGP), and "Sony-Tuned" MPEG digital video playback enable you to take advantage of today's advanced multimedia applications, games, and entertainment software.
- **S-Link (Control-A1):** This technology allows you to build a database of all your music and video CDs and then record your favorite audio selections on MiniDiscs. Use your computer with a 200 disc mega-storage CD changer and a MiniDisc recording deck.
- **i.LINK (IEEE 1394):** Three built-in i.LINK ports provide you with maximum digital connection capability. The i.LINK name and logo identify a digital interface (IEEE 1394) for high speed communication. By using your VAIO Digital Studio Computer, a Sony Digital Handycam® Camcorder, the DVgate software preinstalled on your computer, and the i.LINK (IEEE 1394) interface, you can easily create and edit your own home videos.
- **Optical Digital Audio Output:** This high-quality digital interface transmits digital audio data via light pulses. Transfer crystal clear digital audio to your MiniDisc recorder.
- **Digital Studio Software**: Enjoy all of your computer's audio and video capabilities with component-like applications that allow you to creatively manipulate digital still images, video clips, and audio tracks.
- **50 free hours of Internet access:** Use the Internet for up to 50 free hours when you sign up with GTE (no credit card required). Limit of two hours per day. Free access expires after 50 hours or 90 days after signing up--whichever occurs first.
- **Preinstalled software titles**: All the software on your computer is preinstalled, configured, and ready for you to use right out of the box.
- **Windows® 98**: Your system includes the latest operating system from Microsoft.
- **Communications:** Access popular online services, browse the Internet, send faxes, and more.

Unpacking Your Computer

Computer and Supplied Accessories

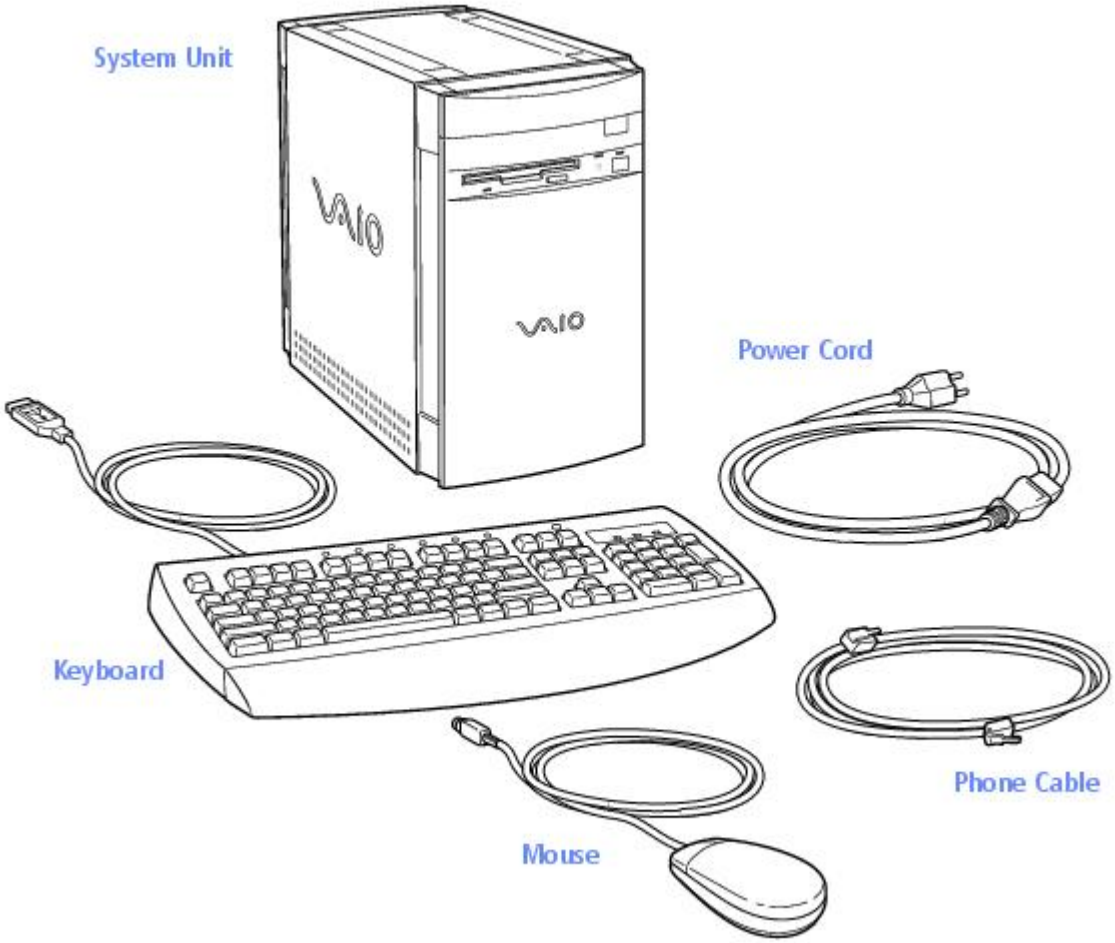

Manuals

- *Read Me First* (this manual) contains features and specifications of your computer. It also includes information on the applications included with your system, how to contact software vendors, and last minute troubleshooting tips.
- The *VAIO Digital Studio Computer User Guide* describes how to get started with your computer, find help, and solve common problems.
- The *Microsoft® Windows®98 Getting Started* manual explains how to use the basic features of the Windows operating system.

Recovery CDs

- System Recovery CD(s)
- Application Recovery CD(s)

Other

- Setting up your VAIO Digital Studio Computer (poster)
- Packet containing special product offers

Software Library

The Software Library contains the Microsoft software license agreement, Sony end-user license agreement, and the following CDs:

- Adobe PhotoDeluxe® Business Edition 3.0
- Gremlin Interactive Ltd. MotorHead
- Microsoft® Encarta® 99 Encyclopedia
- Microsoft® Money/Microsoft® Works

Back Panel Overview

The back panel of your computer contains the connectors where you plug in supplied and optional accessories. The icons on the back panel serve as a map to help you locate the connectors on your computer.

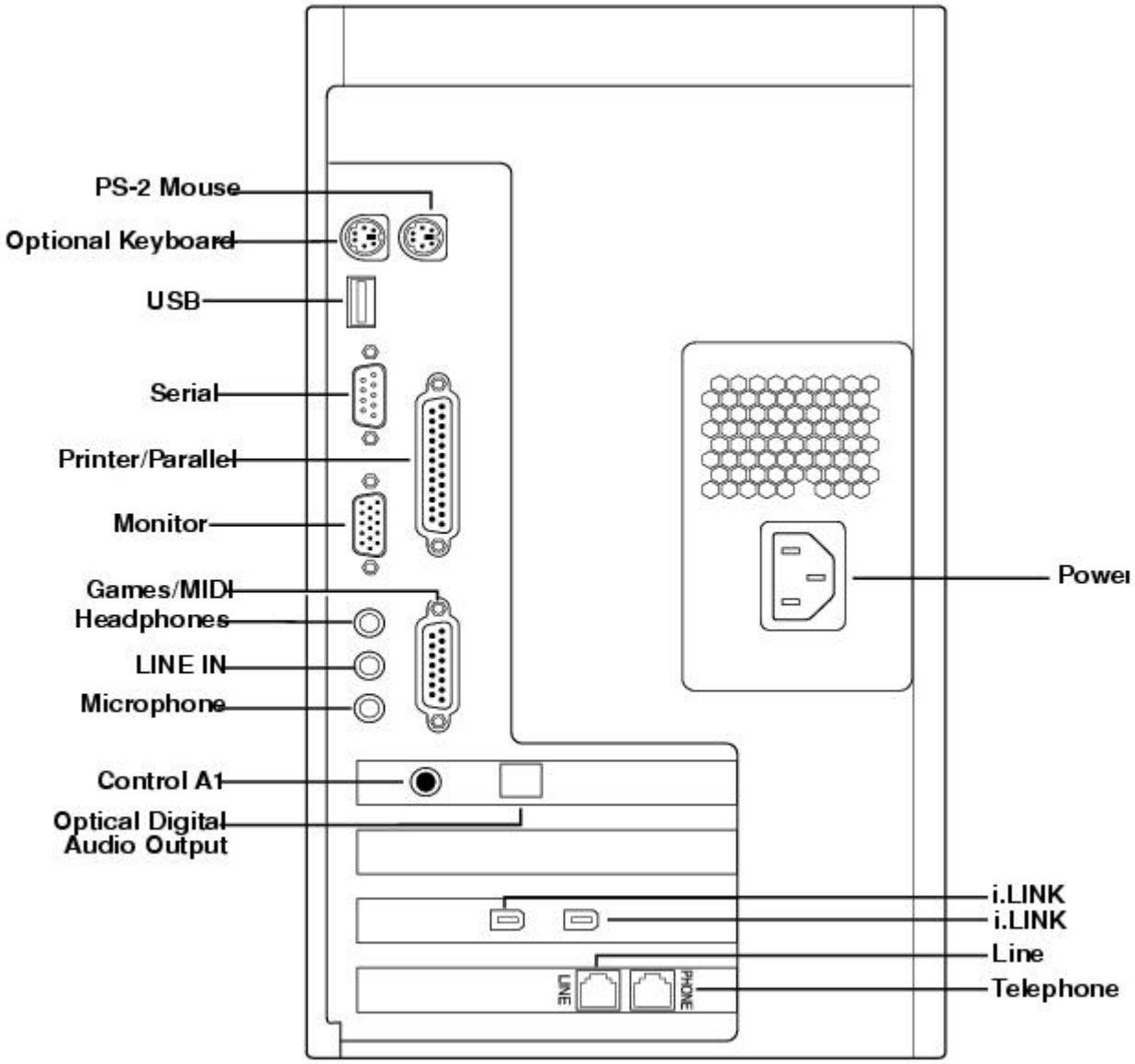

For your convenience, your computer includes USB and i.LINK connectors on both the front and back panels, allowing you to connect to either set of connectors. i.LINK connectors on the back of your system are 6-pin connectors.

Front Panel Overview

The front panel of your VAIO Digital Studio Computer allows for access to the diskette and CD-RW drives. It also includes USB and i.LINK ports to connect USB devices, CD changers, MiniDisc drives, or other components.

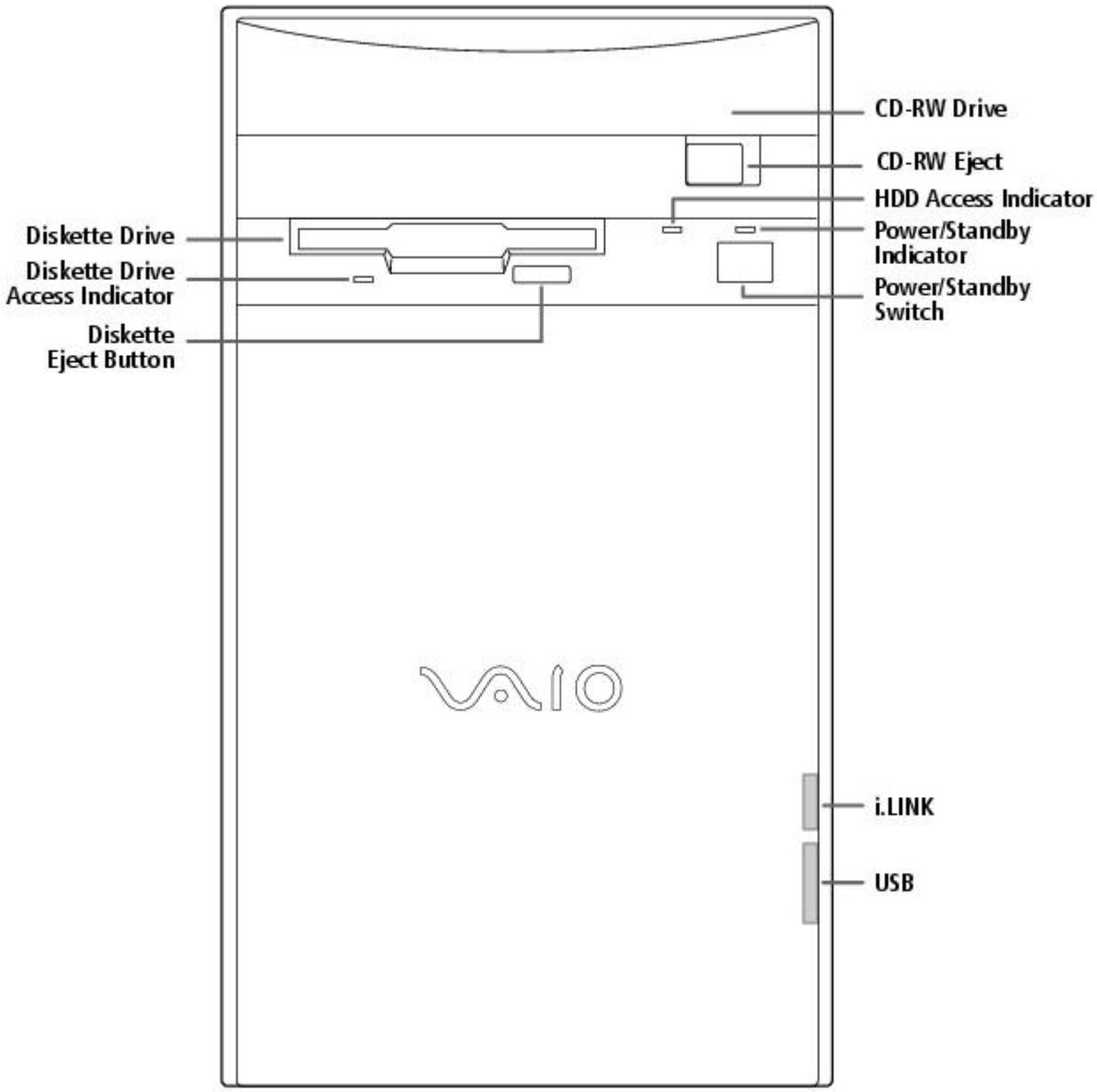

For your convenience, your computer includes USB and i.LINK connectors on both the front and back panels, allowing you to connect to either set of connectors. The i.LINK connector on the front of your system is a 4-pin connector.

Supplementary Information

For the most recent version of this manual, see the online version of Read Me First. You can access this document from the Windows Start Menu by selecting Programs/VAIO Documentation.

Hard Drive Partition

In order to improve the performance of your computer's DVgate Motion software, the hard disk drive on your computer has been formatted with two partitions, C and D. DVgate Motion saves files to the D partition. This prevents large video captures from consuming the available space on your C partition. To maintain optimum performance of DVgate Motion, you should defragment regularly.

VAIO Smart Keyboard Default Settings

The VAIO Smart Keyboard programmable buttons come with the following applications as their default settings:

S1 - Easy Internet Access Browser (Internet)

S2 - Outlook 98 (Mail)

S3 - MotorHead (Game)

S4 - Microsoft® Works (Work)

S5 - Quicken 99 Basic (Finance)

S6 - VAIO Documentation (Help)

All six buttons are reprogrammable.

Using The Standby Mode

To Put Your Computer into Standby Mode

When you are done using your computer, you can put it in Standby mode rather than turn it off completely. There are four ways to put your computer into Standby mode.

- Touch the power switch on the front panel.
- Click Shut Down at the bottom of the Start menu to display the Shut Down Windows dialog box. Select Stand by, and then click OK.
- Press the Standby button on the VAIO Smart Keyboard (the half moon icon).
- Change the timer settings for Standby mode in the Control Panel, as follows:

1. From the Start menu, point to Settings and click Control Panel.
2. Click the Power Management icon.
3. On the Power Schemes tab, change the Power scheme to Home/Office Desk.
4. In the list box for System standby, select an interval of time.
5. Click the OK button and close the Control Panel.

To Resume from Standby Mode

There are two ways to resume system functionality when your computer is in Standby mode. Use either of the following methods.

- Press any key on your keyboard, such as the Enter key.
- Touch the power switch on the front panel.

It may take up to 30 seconds for your system to recover stored information and resume functionality. The screen remains blank while the system is resuming functionality.

Applications That Use the TWAIN Driver

Digital imaging applications, such as Adobe PhotoDeluxe®, allow you to transfer images to your computer from external devices, including scanners or digital cameras. For some devices, a TWAIN driver window appears on the screen. Always close the TWAIN driver window before exiting or minimizing a digital imaging application.

Restoring Outlook 98

For the Add New Components functionality to be available with Microsoft Outlook, you must first run the installation program for Outlook from the Application Recovery CD. When prompted to install the program, select Exit. This decompresses the software, making the Add New Components functionality available.

Inserting Add-in Boards

Your VAIO Digital Studio Computer accommodates PCI add-in boards up to 7.7 inches in length.

Using Devices Connected to the i.LINK (IEEE 1394), S-Link (Control-A1), and Optical Digital Audio Output Connectors

For the latest information on devices known to be compatible with the state-of the-art audio, video, and graphics capabilities of your VAIO computer, check the Sony web site at http://www.sony.com/pcsupport.

Connecting to i.LINK Ports

Your VAIO computer includes a 4-pin i.LINK connector on the front of the system and two 6-pin i.LINK connectors on the back of the system. A 6-pin i.LINK connector can supply power from the computer to the connected device if the device is equipped with a 6-pin connector. Each 6-pin connector supplies 10V to 12V. The total power supplied by both 6-pin i.LINK connectors cannot exceed 6 watts. A 4-pin i.LINK connector cannot supply power to a connected device.

Capturing and Editing Digital Video Clips

- You can capture digital video clips using a digital video camera recorder and DVgate Motion software. Once the clips are saved as AVI files, they can be edited using DVgate Motion, DVgate Clip, or Adobe Premiere® LE. You cannot capture digital video clips directly using the Capture menu in Adobe Premiere LE. Adobe Premiere LE supports an analog capture board for capturing clips. Your VAIO computer is designed for digital video input.
- If there is no audio data associated with an AVI file, the message "Codec compression error" appears. If you do not wish to associate audio with your AVI file, you can add muted sound data by recording audio with the mute option enabled.
- For best performance, when editing AVI files in Adobe Premiere LE, you should use the default setup parameters that shipped with your system. If you change the default setup and want to reinitialize the parameters, follow these steps:

    1. In the Adobe Premiere LE application, select Compression from the Make menu. The Compression Settings dialog box appears.
    2. In the Method list box, select Sony DV software CODEC.
    3. Click OK to close the screen.
    4. From the Make menu, select Preset. The Preset dialog box appears.
    5. Select the parameters for Time Base, Compress, Output, and Preview Option settings as indicated below.

[Time base]

Time base - 29.97fps (required)

[Compress]

File type - AVI (required)
Compress Program Method - Sony DV software CODEC (required)
Compress Program Depth - Millions colors (No other options)
Quality (No control for this item)
Option: Frames per second - 30 (required)
Option: Basic Key Frames (No control for this item)
Option: Optimize Still Off (recommended)
Data rate - Recompress Off (recommended)

[Output options]

Video - On (required)
Video Size - 720x480
4:3 Aspect - Off (required)
VideoType - Field 2 (recommended)
Audio - On (required)
Audio Rate - 44kHz (required)
Audio Format - 16 Bit Stereo or 16 Bit Monaural (required)
Audio Type - Uncompress (required)
Audio Interleave - 1 frame (recommended)
- Less than 30 frames (required)

Audio Sync - 1.0 (required)
Audio Skew - 0.75 (recommended)
- Less than 1.0 (required)

[Preview Option]

Preview Window Size - 360x240

Note that Adobe Premiere LE does not save the Preview Window Size, but uses a default size of 320 x 213 each time the application launches. We recommend that you change this setting to 360 x 240 to improve the quality of preview clips when editing AVI files.

Using Alternate Browsers with America Online®

To use Internet Explorer or Netscape Navigator as your browser with America Online, follow these steps:

1. From the Start menu, point to Settings and then click Control Panel.
2. Click the Internet icon.
3. Click the Connection tab.
4. Click the "Connect to the Internet using local area network" radio button.
5. Click OK.

Using DVgate Motion

When capturing clips:

- Do not use DVgate Motion when the connected digital video peripheral is in Timer Recording mode, as this could produce a malfunction in the peripheral.
- Captures larger than 2 GB (9 minutes and 30 seconds) are automatically continued in a second file.
- You can record stereo audio (stereo 1) while capturing video. You cannot add audio on the stereo 2 track after capturing the video data.
- You cannot use different audio modes on the same tape. You should perform a separate capture for each audio mode you wish to use.
- DVgate Motion does not support hard disk compression. You should not use disk compression if you are planning to work with DVgate Motion.
- Title data is saved in the flash memory of a digital video camera and is not transferred to tape by DVgate Motion.
- To avoid interruption of capture sessions, you should disable the screen saver.
- The drop frame compensation feature does not provide accurate compensation adjustments for tapes recorded in LP mode.
- For tapes that include a mixture of both SP and LP mode, the information displayed by the capture progress indicator may not be accurate.
- Make sure the video head of your digital video device is properly cleaned. Anomalies that you see in captured data could be due to dust or other particles on the video head.
    - The last frame captured is one frame before your selected [OUT] point. The frame you see immediately after clicking the [OUT] button is not captured.

When recording AVI files to tape:

- Do not use DVgate Motion when the connected digital video peripheral is in Timer Recording mode, as this could produce a malfunction in the peripheral.

- You can record only AVI files. MPEG files cannot be recorded.
- To avoid recording problems, such as a single frame appearing in multiple frames, close other applications on your system while recording.
- You cannot use different audio modes on the same tape. If you have AVI files that use different audio modes, they cannot be recorded at the same time, but must be recorded separately.
- Do not attempt to work with AVI files that are smaller than 4 MB.
- DVgate Motion does not support hard disk compression. You should not use disk compression if you are planning to work with DVgate Motion.
- In order to maximize recording capabilities, video and audio data are not available while you are recording.

If DVgate Motion indicates that frames have been dropped, you should try closing all open applications, or you may need to defragment your hard drive.

Restoring Audio Drivers

When you restore the audio drivers from the Application Recovery CD, you need to restart your system to use these drivers. In the Add New Hardware wizard that appears when you restart, click the Next button until you are prompted for the location of the drivers. The audio drivers are located on the Application Recovery CD in G:\drivers\audio\AL98091701\English.

Using AC-3® to Optical Digital Audio Output

MiniDisc player/recorders, DAT player/recorders, and older digital receivers do not support Dolby® Digital (AC-3). You should not use the AC-3 to Optical Digital Audio Output option unless you are using a device that supports Dolby Digital. Please refer to the manual supplied with your equipment to determine if it supports Dolby Digital. If you are unsure and you have selected the AC-3 to Optical Digital Audio Output option, turn down the volume on your equipment before using the DVD player.

Using America Online or Sony Online Support with WinFax® Basic Edition

Once you have configured WinFax Basic Edition, it is automatically available for your use. You cannot use America Online or Sony Online Support when the automatic fax receive feature of WinFax Basic Edition is on. To disable this feature, right click the WinFax icon in the task tray at the bottom right corner of your screen, and then select Exit.

Memory Upgrade Specifications

When upgrading memory, use only 3.3V 64-bit PC-100 168 PIN SDRAM DIMM modules. For more information on Digital Studio Computer compatible memory, call Sony at 1-888-4SONYPC (1-888-476-6972).

About the Software On Your Computer

Your VAIO Digital Studio computer is ready to help you work, play, learn, and communicate as soon as you turn it on. This section gives you an overview of the activities you can perform with your software titles. For support information, see For Answers to Your Software Questions.

Adobe Acrobat® Reader

Adobe Systems Incorporated

Acrobat Reader software allows you to view, navigate, and print electronic documents in Adobe Portable Document Format (PDF), an open file format that is intended to preserve the fidelity of documents created on all major computer platforms.

Adobe PhotoDeluxe® Business Edition

Adobe Systems Incorporated

Create amazing photo effects with PhotoDeluxe. Without learning complex software, you can

enhance, restore, and be creative with your photos. Includes built-in guided activities, stock photos, clip art, and templates to assist you.

Adobe Premiere® LE

Adobe Systems Incorporated

Adobe Premiere LE offers an interface and editing tool for producing movies for video, multimedia, or the web. View source clips and edited footage simultaneously in the monitor window. Create video clips up to three hours long with complete audio-video synchronization.

America Online®

America Online

America Online is the world's most popular Internet online service. Stay in touch with family and friends with Easy-to-Use E-mail, manage your personal finances, get the latest news and sports scores, and chat with thousands of others who share your interests.

AT&T WorldNet® Service

AT&T

Fast, reliable Internet access from AT&T WorldNet Service. AT&T WorldNet Service provides web-based e-mail, a personalized start page from Excite, easy access to the Excite search engine, free web pages, online and live agent technical support, instant messaging, and special shopping discounts at Market Square.

CompuServe®

CompuServe, Inc.

CompuServe is the most comprehensive source of organized business and educational information online today. CompuServe allows you to access the vastness of the Internet without wasting time wading through it. Maximize your time online with CompuServe.

Digital Media Park

Sony Electronics

An integrated suite of multimedia cataloging and playback programs including Media Bar, Media Library, Media Showcase, and MiniDisc Editor. Manage your music by cataloging your entire CD collection, and then create custom MiniDiscs of your favorite songs.

Dr. Solomon's® Anti-Virus

Dr Solomon's Software Inc.

Dr. Solomon's Anti-Virus provides the most comprehensive defense against the spread of viruses, including macro viruses. It can scan inside compressed files and automatically protects your system against viruses sent via e-mail or Internet download.

DVgate Motion

Sony Electronics

Connect a digital video camera recorder to the i.LINK connector and capture your own video clips. You can edit the clips from your video, add others, and combine clips into new movie segments.

DVgate Still

Sony Electronics

Connect a digital video camera recorder to the i.LINK connector and capture your own still images. You can save your images in a variety of popular file formats.

EarthLink Sprint TotalAccess

EarthLink Network, Inc.

An Internet Service Provider that supplies access, information, and assistance to its customers, introducing them to the Internet. Member benefits include e-mail, newsgroups, a Personal Start Page, a free 6 MB web site, a member magazine, and 24-hour technical support.

Microsoft® Encarta® 99 Encyclopedia

Microsoft Corporation

Microsoft Encarta Encyclopedia combines current, comprehensive content with up-to-date multimedia technology, providing users with unique, engaging learning experiences. With the 1999 edition, Encarta provides a wealth of information resources and unique interactive features

Microsoft® Internet Explorer for Windows® 98

Microsoft Corporation

Internet Explorer delivers the web the way you want it. It's safe, easy to use, and you can personalize how you access the web. Outlook Express and other tools in Internet Explorer also help you have a great experience when you are on the web!

Microsoft® Money 99

Microsoft Corporation

Microsoft Money 99 is personal finance software that lets you perform your financial tasks, everything from paying bills to planning for the future, in a smarter, faster way. With Money's online services, you can pay bills and bank from the comfort of home.

Microsoft® Outlook® 98

Microsoft Corporation

Outlook 98 is Microsoft's premier messaging and collaboration client. It combines the leading support for Internet standards-based messaging systems with integrated calendar, contact, and task-management features.

Microsoft® Works

Microsoft Corporation

Works provides users with the right set of core tools that allows them to write letters and reports, track family and friends with the address book, manage home finances, and create a home inventory.

MotorHead

Gremlin Interactive Ltd.

MotorHead is realistic arcade-racing; high-velocity entertainment that puts you behind the wheel for 3D pure racing action. Power across Europe and USA in the Transatlantic Speed League, where second place is simply not an option.

Netscape Communicator®

Netscape Communications

Netscape Communicator is the all-in-one Internet tool that makes it easy to browse the web, send Internet e-mail, chat, read newsgroups, and compose great web documents.

PictureGear

Sony Electronics

This image management software displays images from your hard drive, a Sony digital still camera, or a Sony Mavica® camera. The images appear in a convenient light-table format, so that you can easily view the contents of an entire folder.

Prodigy Internet

Prodigy Communications Corporation

An Internet service that helps you find what you need online faster and smarter. Prodigy delivers powerful online content, such as sports scores, stock quotes, news, and easy access to Excite , plus a personal e-mail account and quality customer service, all at a competitive price.

Quicken® Basic 99

Intuit, Inc

Quicken is the fastest, easiest way to organize your finances. Quicken works just like your checkbook, so it's easy to learn and use. Quicken manages all of your finances, bank accounts, credit cards, investments, and loans. You can even pay your bills online.

SurfMonkey

MediaLive, Inc

SurfMonkey is a web browser and online service for kids ages 6-12 that makes the Internet safe, fun, and easy. A talking monkey guides children through web sites and chat rooms, and can read their e-mail out loud. Children cannot go to inappropriate web sites, parents can screen e-mail messages, and chat messages are monitored.

VAIO Smart Keyboard

Sony Electronics

VAIO Smart Keyboard software operates your new easy to use programmable USB keyboard. Six programmable buttons enable you to launch your favorite applications, open frequently used files, access Explorer, or even open your web browser with just the click of a button.

WinFax® Basic Edition

Symantec Corporation

WinFax Basic Edition incorporates an easy-to-use interface that allows you to send and receive faxes easily. Upgrade to WinFax Pro to receive additional features.

About Your Recovery CDs

Application Recovery CD(s)

Sony Electronics

The Application Recovery CD program allows you to reinstall individual applications and device drivers. Use it to restore corrupted or accidentally erased files.

System Recovery CD(s)

Sony Electronics

The System Recovery CD program allows you to restore the software titles that shipped with your computer if they become corrupted or are erased accidentally. It can be used only to restore the hard disk of the Sony computer you purchased.

For Answers to Your Software Questions

Sony Service Center

For the Sony Service Center nearest you, call at 1-888-4SONYPC (1-888-476-6972).

Acrobat® Reader, Adobe PhotoDeluxe® Business Edition , Adobe Premiere® LE (Adobe Systems Incorporated)

Web site http://www.adobe.com/
phone 206-628-2746 (fee-based support)
fax 206-628-5737
e-mail techdocs@adobe.com
hours M-F, 6 AM-5 PM PT

America Online® (America Online)

Web site http://www.aol.com/
phone 800-827-3338
hours 7 days a week, 6 AM - 2 PM ET

AT&T WorldNet® Service (AT&T)

Web site http://www.att.net/*
phone 800-400-1447
e-mail worldnet@attmail.com
hours 7 days a week, 24 hours a day

* You must be a WorldNet Service customer to access online support.

CompuServe® Interactive (CompuServe Interactive, Inc.)

Web site http://www.compuserve.com/
phone 800-848-8990
hours M-F, 8 AM - 1 AM ET, S-S 10 AM - 10 PM ET

Dr. Solomon's® Anti-Virus (Dr. Solomon's Software Inc.)

Web site http://www.drsolomon.com/
phone 888-377-6566
e-mail support@us.drsolomon.com
hours 7 days a week, 24 hours a day

EarthLink Sprint TotalAccess (EarthLink Network, Inc.)

Web site http://help.earthlink.net/techsupport/
phone 800-395-8410
e-mail support@earthlink.net
hours 7 days a week, 24 hours a day

Easy Internet Access (Encompass, Inc.)

Web site http://www.encmpss.com/
phone 800-927-3000
hours 7 days a week, 24 hours a day

MotorHead (Gremlin Interactive Ltd.)

Web site http://www.gremlin.com/
phone 888-4SONYPC (888-476-6972)
hours 7 days a week, 24 hours a day

Windows® 98 Operating System, Works, Money, Encarta, Internet Explorer (Microsoft Corporation)

Web site http://www.microsoft.com/support/
phone 888-4SONYPC (888-476-6972)*
hours 7 days a week, 24 hours a day
* Support from 1-888-4SONYPC is free of charge for 90 days after the original date of purchase.

Netscape Communicator® (Netscape Communications Corporation)

Web site http://www.netscape.com/
phone 888-4SONYPC (888-476-6972)*
hours 7 days a week, 24 hours a day
* Support from 1-888-4SONYPC is free of charge for 90 days after the original date of purchase.

Prodigy Internet (Prodigy Communications Corporation.)

Web site http://www.prodigy.com/
phone 800-PRODIGY
hours 7 AM - 3 AM ET

Quicken® Basic (Intuit Inc.)

Web site http://www.intuit.com/support/
phone 900-555-4688
hours 7 days a week, 24 hours a day

SurfMonkey (MediaLive, Inc.)

Web site http://www.surfmonkey.com/support/Sub_support.html
phone 408-556-2060
e-mail support@surfmonkey.com
hours 9AM-10PM PT everyday

WinFax® Basic Edition (Symantec Corporation.)

Web site http://www.symantec.com/techsupp/
phone 800-798-0850
fax 800-554-4403 in North America
541-984-2490 outside North America

Specifications

Model **PCV-E518DS**
Processor 500 MHz Pentium® III
Hard Disk Drive 17.28 GB
Standard SDRAM 128 MB PC-100 SDRAM, expandable to 256 MB
Video RAM 8 MB SDRAM
MPEG "Sony Tuned" MPEG Digital Video supports full-screen video playback
Graphics 3D 2X AGP graphics acceleration (Matrox)
Sound Capabilities 3D Positional Audio (Aureal A3D)
Diskette Drive 3.5" 1.44 MB FDD
CD-RW Drive CD-RW Drive (4X max. CD-R writing, 2X max. CD-RW writing, 24X max. reading)
Modem K56flex technology/V.90 compatible data/fax modem[1]
Expansion Capabilities One PCI slot
One additional hard disk drive bay
Connection Capabilities (Front) USB port
i.LINK port (4-pin)
Connection Capabilities (Rear) Optional Keyboard (PS/2-style)
Mouse (PS/2-style)
USB port
Serial port
Parallel (printer)
Game/MIDI
Headphones
Line In
Microphone
VGA Monitor
S-Link (Control-A1)
Optical Digital Audio Out
Two i.LINK ports (6-pin)[2]
Modem line (RJ-11)
Phone line (RJ-11)
Supplied Accessories VAIO Smart keyboard
Sony two-button mouse
RJ-11 phone cable
Power cord
Service 90-day limited service. Extendible to one year from original date of purchase upon registration[3]
Limited Warranty 90-day parts/labor standard. Extendible to one year from original date of purchase upon registration[4]

Power Requirements 200 watts maximum
Dimensions 7" (w) x 12" (h) x 13 3/4" (d) (178mm x 304mm x 330mm)
Weight 17 lbs. (7.71 kg)
Operating Temperature 50º F to 95º F (+10º C to 35º C)

[1] Maximum speed for faxing is 14.4 kbytes/s. Your modem is capable of downloading at 56 kbytes/s using K56flex technology or V.90. Your phone service, online service, or Internet Service Provider however, may not support this technology or operate at this speed.

[2] Six-pin i-LINK connectors on the rear of the system each supply 10V to 12V. The combined total wattage that can be supplied by the two connectors is 6 watts.

[3] Certain restrictions apply

[4] Certain restrictions apply

Specifications are subject to change without notice.

This product meets the standards of the International Energy Star Program for energy efficiency.

© 1999 Sony Electronics Inc. Reproduction in w hole or in part w ithout w ritten permission is prohibited. All rights reserved.

Read Me First

Welcome

Congratulations on your purchase of the Sony VAIO Digital Studio Computer. Sony has combined leading-edge technology in audio, video, computing, and communications to provide you with state-of-the-art personal computing.

Features

 For a complete description of the specifications of your VAIO Digital Studio Computer, see Specifications.

- **Exceptional performance:** Your computer includes a brand new Intel® Pentium® III processor, a CD-RW drive, and a V.90 compatible data/fax modem.*

* Actual upload and download speeds may vary due to line conditions, ISP support, and government regulations.

- **CD-RW drive:** This drive is the ideal solution for making backups and data archiving, with the ability to store up to 650 MB* of removable, rewritable storage on a single rewritable CD. Save your movies to CD-R or CD-RW media and share videos and images with family and friends.

* 530 MB after formatting.

- **VAIO Smart Keyboard:** This USB keyboard has programmable shortcut buttons for launching your favorite programs or accessing the Internet.
- **Sony audio and video quality:** High-fidelity positional 3D audio system (A3D), high-powered 3D graphics (AGP), and "Sony-Tuned" MPEG digital video playback enable you to take advantage of today's advanced multimedia applications, games, and entertainment software.
- **S-Link (Control-A1):** This technology allows you to build a database of all your music and video CDs and then record your favorite audio selections on MiniDiscs. Use your computer with a 200 disc mega-storage CD changer and a MiniDisc recording deck.
- **i.LINK (IEEE 1394):** Three built-in i.LINK ports provide you with maximum digital connection capability. The i.LINK name and logo identify a digital interface (IEEE 1394) for high speed communication. By using your VAIO Digital Studio Computer, a Sony Digital Handycam® Camcorder, the DVgate software preinstalled on your computer, and the i.LINK (IEEE 1394) interface, you can easily create and edit your own home videos.
- **Optical Digital Audio Output:** This high-quality digital interface transmits digital audio data via light pulses. Transfer crystal clear digital audio to your MiniDisc recorder.
- **Digital Studio Software**: Enjoy all of your computer's audio and video capabilities with component-like applications that allow you to creatively manipulate digital still images, video clips, and audio tracks.
- **50 free hours of Internet access:** Use the Internet for up to 50 free hours when you sign up with GTE (no credit card required). Limit of two hours per day. Free access expires after 50 hours or 90 days after signing up--whichever occurs first.
- **Preinstalled software titles**: All the software on your computer is preinstalled, configured, and ready for you to use right out of the box.
- **Windows® 98**: Your system includes the latest operating system from Microsoft.
- **Communications:** Access popular online services, browse the Internet, send faxes, and more.

Unpacking Your Computer

Computer and Supplied Accessories

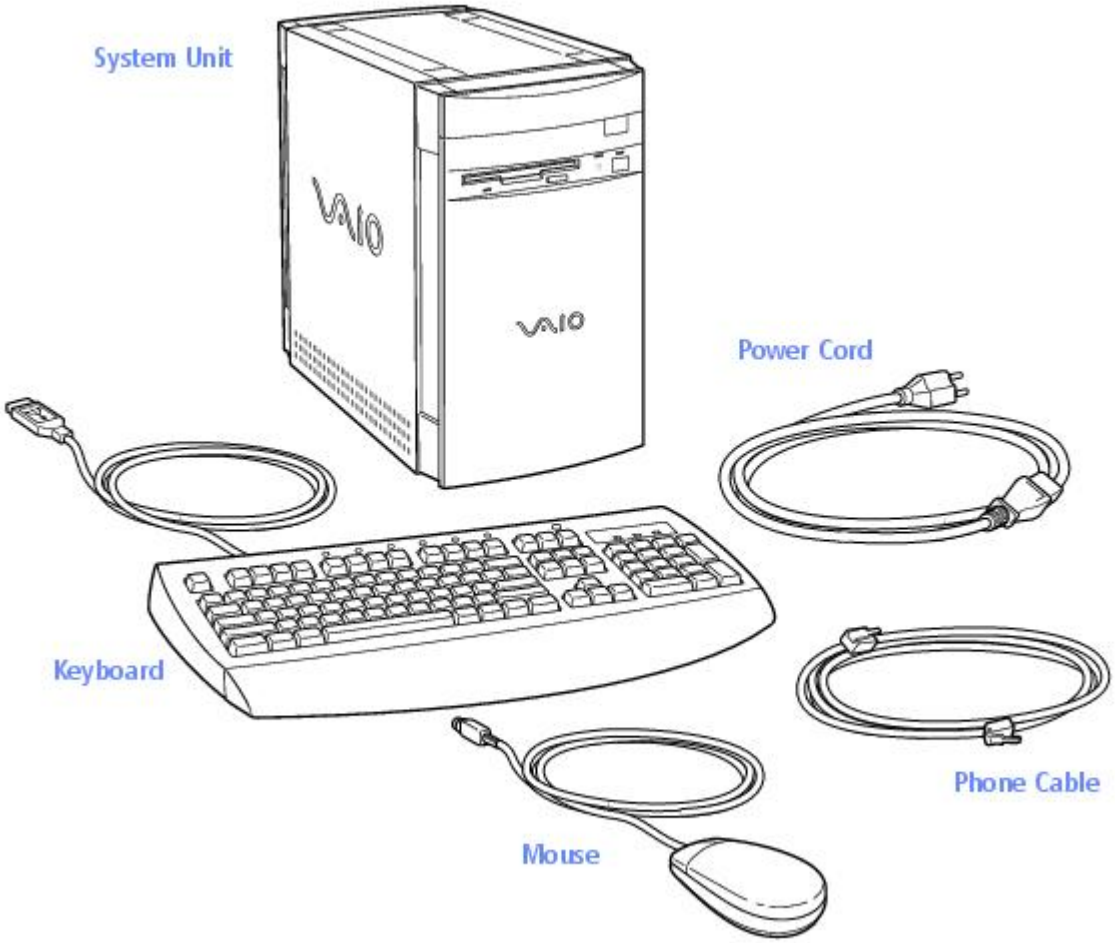

Manuals

- *Read Me First* (this manual) contains features and specifications of your computer. It also includes information on the applications included with your system, how to contact software vendors, and last minute troubleshooting tips.
- The *VAIO Digital Studio Computer User Guide* describes how to get started with your computer, find help, and solve common problems.
- The *Microsoft® Windows®98 Getting Started* manual explains how to use the basic features of the Windows operating system.

Recovery CDs

- System Recovery CD(s)
- Application Recovery CD(s)

Other

- Setting up your VAIO Digital Studio Computer (poster)
- Packet containing special product offers

Software Library

The Software Library contains the Microsoft software license agreement, Sony end-user license agreement, and the following CDs:

- Adobe PhotoDeluxe® Business Edition 3.0
- Gremlin Interactive Ltd. MotorHead
- Microsoft® Encarta® 99 Encyclopedia
- Microsoft® Money/Microsoft® Works

Back Panel Overview

The back panel of your computer contains the connectors where you plug in supplied and optional accessories. The icons on the back panel serve as a map to help you locate the connectors on your computer.

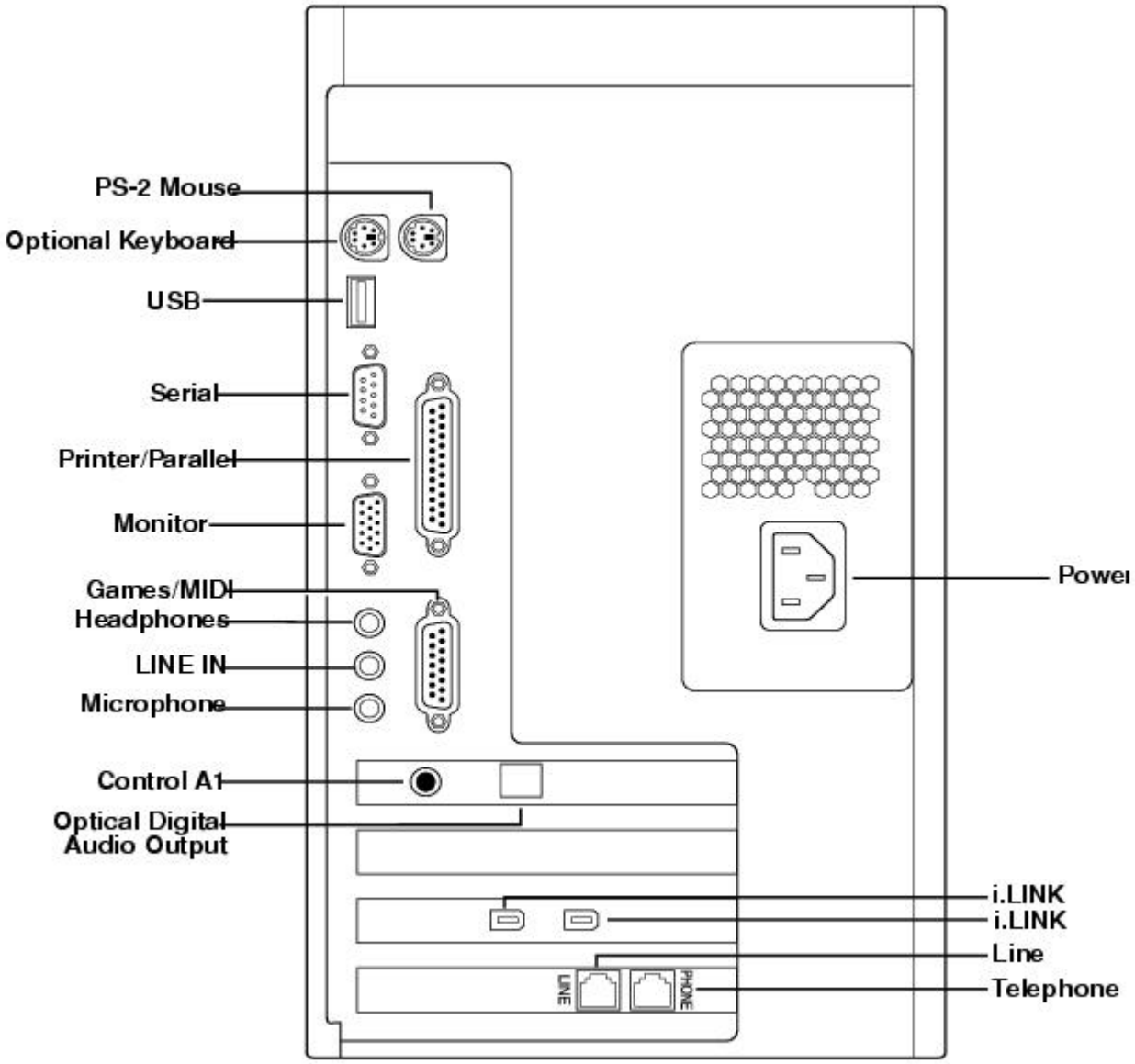

For your convenience, your computer includes USB and i.LINK connectors on both the front and back panels, allowing you to connect to either set of connectors. i.LINK connectors on the back of your system are 6-pin connectors.

Front Panel Overview

The front panel of your VAIO Digital Studio Computer allows for access to the diskette and CD-RW drives. It also includes USB and i.LINK ports to connect USB devices, CD changers, MiniDisc drives, or other components.

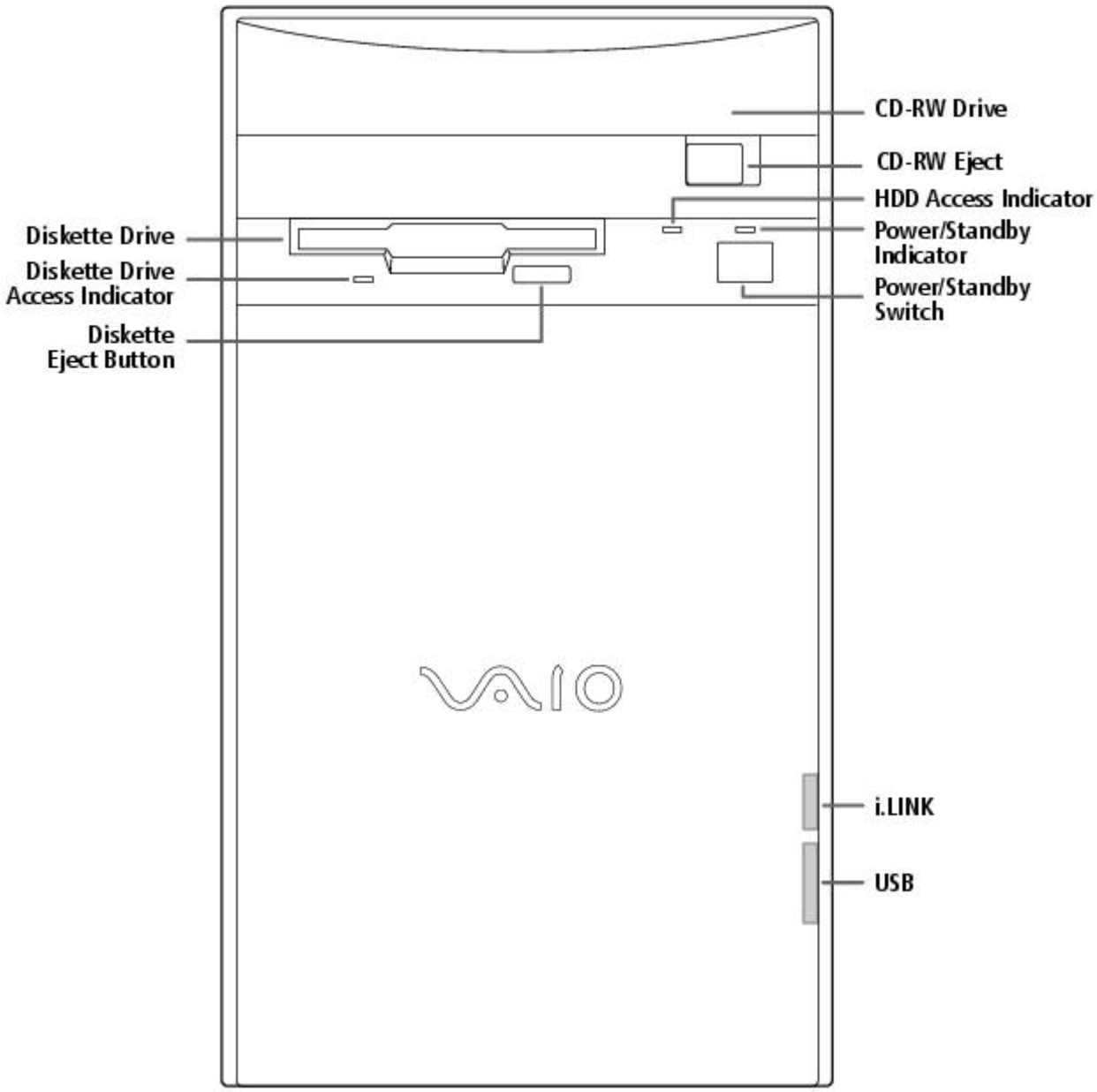

For your convenience, your computer includes USB and i.LINK connectors on both the front and back panels, allowing you to connect to either set of connectors. The i.LINK connector on the front of your system is a 4-pin connector.

Supplementary Information

For the most recent version of this manual, see the online version of Read Me First. You can access this document from the Windows Start Menu by selecting Programs/VAIO Documentation.

Hard Drive Partition

In order to improve the performance of your computer's DVgate Motion software, the hard disk drive on your computer has been formatted with two partitions, C and D. DVgate Motion saves files to the D partition. This prevents large video captures from consuming the available space on your C partition. To maintain optimum performance of DVgate Motion, you should defragment regularly.

VAIO Smart Keyboard Default Settings

The VAIO Smart Keyboard programmable buttons come with the following applications as their default settings:

S1 - Easy Internet Access Browser (Internet)

S2 - Outlook 98 (Mail)

S3 - MotorHead (Game)

S4 - Microsoft® Works (Work)

S5 - Quicken 99 Basic (Finance)

S6 - VAIO Documentation (Help)

All six buttons are reprogrammable.

Using The Standby Mode

To Put Your Computer into Standby Mode

When you are done using your computer, you can put it in Standby mode rather than turn it off completely. There are four ways to put your computer into Standby mode.

- Touch the power switch on the front panel.
- Click Shut Down at the bottom of the Start menu to display the Shut Down Windows dialog box. Select Stand by, and then click OK.
- Press the Standby button on the VAIO Smart Keyboard (the half moon icon).
- Change the timer settings for Standby mode in the Control Panel, as follows:

1. From the Start menu, point to Settings and click Control Panel.
2. Click the Power Management icon.
3. On the Power Schemes tab, change the Power scheme to Home/Office Desk.
4. In the list box for System standby, select an interval of time.
5. Click the OK button and close the Control Panel.

To Resume from Standby Mode

There are two ways to resume system functionality when your computer is in Standby mode. Use either of the following methods.

- Press any key on your keyboard, such as the Enter key.
- Touch the power switch on the front panel.

It may take up to 30 seconds for your system to recover stored information and resume functionality. The screen remains blank while the system is resuming functionality.

Applications That Use the TWAIN Driver

Digital imaging applications, such as Adobe PhotoDeluxe®, allow you to transfer images to your computer from external devices, including scanners or digital cameras. For some devices, a TWAIN driver window appears on the screen. Always close the TWAIN driver window before exiting or minimizing a digital imaging application.

Restoring Outlook 98

For the Add New Components functionality to be available with Microsoft Outlook, you must first run the installation program for Outlook from the Application Recovery CD. When prompted to install the program, select Exit. This decompresses the software, making the Add New Components functionality available.

Inserting Add-in Boards

Your VAIO Digital Studio Computer accommodates PCI add-in boards up to 7.7 inches in length.

Using Devices Connected to the i.LINK (IEEE 1394), S-Link (Control-A1), and Optical Digital Audio Output Connectors

For the latest information on devices known to be compatible with the state-of the-art audio, video, and graphics capabilities of your VAIO computer, check the Sony web site at http://www.sony.com/pcsupport.

Connecting to i.LINK Ports

Your VAIO computer includes a 4-pin i.LINK connector on the front of the system and two 6-pin i.LINK connectors on the back of the system. A 6-pin i.LINK connector can supply power from the computer to the connected device if the device is equipped with a 6-pin connector. Each 6-pin connector supplies 10V to 12V. The total power supplied by both 6-pin i.LINK connectors cannot exceed 6 watts. A 4-pin i.LINK connector cannot supply power to a connected device.

Capturing and Editing Digital Video Clips

- You can capture digital video clips using a digital video camera recorder and DVgate Motion software. Once the clips are saved as AVI files, they can be edited using DVgate Motion, DVgate Clip, or Adobe Premiere® LE. You cannot capture digital video clips directly using the Capture menu in Adobe Premiere LE. Adobe Premiere LE supports an analog capture board for capturing clips. Your VAIO computer is designed for digital video input.
- If there is no audio data associated with an AVI file, the message "Codec compression error" appears. If you do not wish to associate audio with your AVI file, you can add muted sound data by recording audio with the mute option enabled.
- For best performance, when editing AVI files in Adobe Premiere LE, you should use the default setup parameters that shipped with your system. If you change the default setup and want to reinitialize the parameters, follow these steps:

    1. In the Adobe Premiere LE application, select Compression from the Make menu. The Compression Settings dialog box appears.
    2. In the Method list box, select Sony DV software CODEC.
    3. Click OK to close the screen.
    4. From the Make menu, select Preset. The Preset dialog box appears.
    5. Select the parameters for Time Base, Compress, Output, and Preview Option settings as indicated below.

[Time base]

Time base - 29.97fps (required)

[Compress]

File type - AVI (required)
Compress Program Method - Sony DV software CODEC (required)
Compress Program Depth - Millions colors (No other options)
Quality (No control for this item)
Option: Frames per second - 30 (required)
Option: Basic Key Frames (No control for this item)
Option: Optimize Still Off (recommended)
Data rate - Recompress Off (recommended)

[Output options]

Video - On (required)
Video Size - 720x480
4:3 Aspect - Off (required)
VideoType - Field 2 (recommended)
Audio - On (required)
Audio Rate - 44kHz (required)
Audio Format - 16 Bit Stereo or 16 Bit Monaural (required)
Audio Type - Uncompress (required)
Audio Interleave - 1 frame (recommended)
- Less than 30 frames (required)

Audio Sync - 1.0 (required)
Audio Skew - 0.75 (recommended)
- Less than 1.0 (required)

[Preview Option]

Preview Window Size - 360x240

Note that Adobe Premiere LE does not save the Preview Window Size, but uses a default size of 320 x 213 each time the application launches. We recommend that you change this setting to 360 x 240 to improve the quality of preview clips when editing AVI files.

Using Alternate Browsers with America Online®

To use Internet Explorer or Netscape Navigator as your browser with America Online, follow these steps:

1. From the Start menu, point to Settings and then click Control Panel.
2. Click the Internet icon.
3. Click the Connection tab.
4. Click the "Connect to the Internet using local area network" radio button.
5. Click OK.

Using DVgate Motion

When capturing clips:

- Do not use DVgate Motion when the connected digital video peripheral is in Timer Recording mode, as this could produce a malfunction in the peripheral.
- Captures larger than 2 GB (9 minutes and 30 seconds) are automatically continued in a second file.
- You can record stereo audio (stereo 1) while capturing video. You cannot add audio on the stereo 2 track after capturing the video data.
- You cannot use different audio modes on the same tape. You should perform a separate capture for each audio mode you wish to use.
- DVgate Motion does not support hard disk compression. You should not use disk compression if you are planning to work with DVgate Motion.
- Title data is saved in the flash memory of a digital video camera and is not transferred to tape by DVgate Motion.
- To avoid interruption of capture sessions, you should disable the screen saver.
- The drop frame compensation feature does not provide accurate compensation adjustments for tapes recorded in LP mode.
- For tapes that include a mixture of both SP and LP mode, the information displayed by the capture progress indicator may not be accurate.
- Make sure the video head of your digital video device is properly cleaned. Anomalies that you see in captured data could be due to dust or other particles on the video head.
    - The last frame captured is one frame before your selected [OUT] point. The frame you see immediately after clicking the [OUT] button is not captured.

When recording AVI files to tape:

- Do not use DVgate Motion when the connected digital video peripheral is in Timer Recording mode, as this could produce a malfunction in the peripheral.

- You can record only AVI files. MPEG files cannot be recorded.
- To avoid recording problems, such as a single frame appearing in multiple frames, close other applications on your system while recording.
- You cannot use different audio modes on the same tape. If you have AVI files that use different audio modes, they cannot be recorded at the same time, but must be recorded separately.
- Do not attempt to work with AVI files that are smaller than 4 MB.
- DVgate Motion does not support hard disk compression. You should not use disk compression if you are planning to work with DVgate Motion.
- In order to maximize recording capabilities, video and audio data are not available while you are recording.

If DVgate Motion indicates that frames have been dropped, you should try closing all open applications, or you may need to defragment your hard drive.

Restoring Audio Drivers

When you restore the audio drivers from the Application Recovery CD, you need to restart your system to use these drivers. In the Add New Hardware wizard that appears when you restart, click the Next button until you are prompted for the location of the drivers. The audio drivers are located on the Application Recovery CD in G:\drivers\audio\AL98091701\English.

Using AC-3® to Optical Digital Audio Output

MiniDisc player/recorders, DAT player/recorders, and older digital receivers do not support Dolby® Digital (AC-3). You should not use the AC-3 to Optical Digital Audio Output option unless you are using a device that supports Dolby Digital. Please refer to the manual supplied with your equipment to determine if it supports Dolby Digital. If you are unsure and you have selected the AC-3 to Optical Digital Audio Output option, turn down the volume on your equipment before using the DVD player.

Using America Online or Sony Online Support with WinFax® Basic Edition

Once you have configured WinFax Basic Edition, it is automatically available for your use. You cannot use America Online or Sony Online Support when the automatic fax receive feature of WinFax Basic Edition is on. To disable this feature, right click the WinFax icon in the task tray at the bottom right corner of your screen, and then select Exit.

Memory Upgrade Specifications

When upgrading memory, use only 3.3V 64-bit PC-100 168 PIN SDRAM DIMM modules. For more information on Digital Studio Computer compatible memory, call Sony at 1-888-4SONYPC (1-888-476-6972).

About the Software On Your Computer

Your VAIO Digital Studio computer is ready to help you work, play, learn, and communicate as soon as you turn it on. This section gives you an overview of the activities you can perform with your software titles. For support information, see For Answers to Your Software Questions.

Adobe Acrobat® Reader

Adobe Systems Incorporated

Acrobat Reader software allows you to view, navigate, and print electronic documents in Adobe Portable Document Format (PDF), an open file format that is intended to preserve the fidelity of documents created on all major computer platforms.

Adobe PhotoDeluxe® Business Edition

Adobe Systems Incorporated

Create amazing photo effects with PhotoDeluxe. Without learning complex software, you can

enhance, restore, and be creative with your photos. Includes built-in guided activities, stock photos, clip art, and templates to assist you.

Adobe Premiere® LE

Adobe Systems Incorporated

Adobe Premiere LE offers an interface and editing tool for producing movies for video, multimedia, or the web. View source clips and edited footage simultaneously in the monitor window. Create video clips up to three hours long with complete audio-video synchronization.

America Online®

America Online

America Online is the world's most popular Internet online service. Stay in touch with family and friends with Easy-to-Use E-mail, manage your personal finances, get the latest news and sports scores, and chat with thousands of others who share your interests.

AT&T WorldNet® Service

AT&T

Fast, reliable Internet access from AT&T WorldNet Service. AT&T WorldNet Service provides web-based e-mail, a personalized start page from Excite, easy access to the Excite search engine, free web pages, online and live agent technical support, instant messaging, and special shopping discounts at Market Square.

CompuServe®

CompuServe, Inc.

CompuServe is the most comprehensive source of organized business and educational information online today. CompuServe allows you to access the vastness of the Internet without wasting time wading through it. Maximize your time online with CompuServe.

Digital Media Park

Sony Electronics

An integrated suite of multimedia cataloging and playback programs including Media Bar, Media Library, Media Showcase, and MiniDisc Editor. Manage your music by cataloging your entire CD collection, and then create custom MiniDiscs of your favorite songs.

Dr. Solomon's® Anti-Virus

Dr Solomon's Software Inc.

Dr. Solomon's Anti-Virus provides the most comprehensive defense against the spread of viruses, including macro viruses. It can scan inside compressed files and automatically protects your system against viruses sent via e-mail or Internet download.

DVgate Motion

Sony Electronics

Connect a digital video camera recorder to the i.LINK connector and capture your own video clips. You can edit the clips from your video, add others, and combine clips into new movie segments.

DVgate Still

Sony Electronics

Connect a digital video camera recorder to the i.LINK connector and capture your own still images. You can save your images in a variety of popular file formats.

EarthLink Sprint TotalAccess

EarthLink Network, Inc.

An Internet Service Provider that supplies access, information, and assistance to its customers, introducing them to the Internet. Member benefits include e-mail, newsgroups, a Personal Start Page, a free 6 MB web site, a member magazine, and 24-hour technical support.

Microsoft® Encarta® 99 Encyclopedia

Microsoft Corporation

Microsoft Encarta Encyclopedia combines current, comprehensive content with up-to-date multimedia technology, providing users with unique, engaging learning experiences. With the 1999 edition, Encarta provides a wealth of information resources and unique interactive features

Microsoft® Internet Explorer for Windows® 98

Microsoft Corporation

Internet Explorer delivers the web the way you want it. It's safe, easy to use, and you can personalize how you access the web. Outlook Express and other tools in Internet Explorer also help you have a great experience when you are on the web!

Microsoft® Money 99

Microsoft Corporation

Microsoft Money 99 is personal finance software that lets you perform your financial tasks, everything from paying bills to planning for the future, in a smarter, faster way. With Money's online services, you can pay bills and bank from the comfort of home.

Microsoft® Outlook® 98

Microsoft Corporation

Outlook 98 is Microsoft's premier messaging and collaboration client. It combines the leading support for Internet standards-based messaging systems with integrated calendar, contact, and task-management features.

Microsoft® Works

Microsoft Corporation

Works provides users with the right set of core tools that allows them to write letters and reports, track family and friends with the address book, manage home finances, and create a home inventory.

MotorHead

Gremlin Interactive Ltd.

MotorHead is realistic arcade-racing; high-velocity entertainment that puts you behind the wheel for 3D pure racing action. Power across Europe and USA in the Transatlantic Speed League, where second place is simply not an option.

Netscape Communicator®

Netscape Communications

Netscape Communicator is the all-in-one Internet tool that makes it easy to browse the web, send Internet e-mail, chat, read newsgroups, and compose great web documents.

PictureGear

Sony Electronics

This image management software displays images from your hard drive, a Sony digital still camera, or a Sony Mavica® camera. The images appear in a convenient light-table format, so that you can easily view the contents of an entire folder.

Prodigy Internet

Prodigy Communications Corporation

An Internet service that helps you find what you need online faster and smarter. Prodigy delivers powerful online content, such as sports scores, stock quotes, news, and easy access to Excite , plus a personal e-mail account and quality customer service, all at a competitive price.

Quicken® Basic 99

Intuit, Inc

Quicken is the fastest, easiest way to organize your finances. Quicken works just like your checkbook, so it's easy to learn and use. Quicken manages all of your finances, bank accounts, credit cards, investments, and loans. You can even pay your bills online.

SurfMonkey

MediaLive, Inc

SurfMonkey is a web browser and online service for kids ages 6-12 that makes the Internet safe, fun, and easy. A talking monkey guides children through web sites and chat rooms, and can read their e-mail out loud. Children cannot go to inappropriate web sites, parents can screen e-mail messages, and chat messages are monitored.

VAIO Smart Keyboard

Sony Electronics

VAIO Smart Keyboard software operates your new easy to use programmable USB keyboard. Six programmable buttons enable you to launch your favorite applications, open frequently used files, access Explorer, or even open your web browser with just the click of a button.

WinFax® Basic Edition

Symantec Corporation

WinFax Basic Edition incorporates an easy-to-use interface that allows you to send and receive faxes easily. Upgrade to WinFax Pro to receive additional features.

About Your Recovery CDs

Application Recovery CD(s)

Sony Electronics

The Application Recovery CD program allows you to reinstall individual applications and device drivers. Use it to restore corrupted or accidentally erased files.

System Recovery CD(s)

Sony Electronics

The System Recovery CD program allows you to restore the software titles that shipped with your computer if they become corrupted or are erased accidentally. It can be used only to restore the hard disk of the Sony computer you purchased.

For Answers to Your Software Questions

Sony Service Center

For the Sony Service Center nearest you, call at 1-888-4SONYPC (1-888-476-6972).

Acrobat® Reader, Adobe PhotoDeluxe® Business Edition , Adobe Premiere® LE (Adobe Systems Incorporated)

Web site http://www.adobe.com/
phone 206-628-2746 (fee-based support)
fax 206-628-5737
e-mail techdocs@adobe.com
hours M-F, 6 AM-5 PM PT

America Online® (America Online)

Web site http://www.aol.com/
phone 800-827-3338
hours 7 days a week, 6 AM - 2 PM ET

AT&T WorldNet® Service (AT&T)

Web site http://www.att.net/*
phone 800-400-1447
e-mail worldnet@attmail.com
hours 7 days a week, 24 hours a day

* You must be a WorldNet Service customer to access online support.

CompuServe® Interactive (CompuServe Interactive, Inc.)

Web site http://www.compuserve.com/
phone 800-848-8990
hours M-F, 8 AM - 1 AM ET, S-S 10 AM - 10 PM ET

Dr. Solomon's® Anti-Virus (Dr. Solomon's Software Inc.)

Web site http://www.drsolomon.com/
phone 888-377-6566
e-mail support@us.drsolomon.com
hours 7 days a week, 24 hours a day

EarthLink Sprint TotalAccess (EarthLink Network, Inc.)

Web site http://help.earthlink.net/techsupport/
phone 800-395-8410
e-mail support@earthlink.net
hours 7 days a week, 24 hours a day

Easy Internet Access (Encompass, Inc.)

Web site http://www.encmpss.com/
phone 800-927-3000
hours 7 days a week, 24 hours a day

MotorHead (Gremlin Interactive Ltd.)

Web site http://www.gremlin.com/
phone 888-4SONYPC (888-476-6972)
hours 7 days a week, 24 hours a day

Windows® 98 Operating System, Works, Money, Encarta, Internet Explorer (Microsoft Corporation)

Web site http://www.microsoft.com/support/
phone 888-4SONYPC (888-476-6972)*
hours 7 days a week, 24 hours a day
* Support from 1-888-4SONYPC is free of charge for 90 days after the original date of purchase.

Netscape Communicator® (Netscape Communications Corporation)

Web site http://www.netscape.com/
phone 888-4SONYPC (888-476-6972)*
hours 7 days a week, 24 hours a day
* Support from 1-888-4SONYPC is free of charge for 90 days after the original date of purchase.

Prodigy Internet (Prodigy Communications Corporation.)

Web site http://www.prodigy.com/
phone 800-PRODIGY
hours 7 AM - 3 AM ET

Quicken® Basic (Intuit Inc.)

Web site http://www.intuit.com/support/
phone 900-555-4688
hours 7 days a week, 24 hours a day

SurfMonkey (MediaLive, Inc.)

Web site http://www.surfmonkey.com/support/Sub_support.html
phone 408-556-2060
e-mail support@surfmonkey.com
hours 9AM-10PM PT everyday

WinFax® Basic Edition (Symantec Corporation.)

Web site http://www.symantec.com/techsupp/
phone 800-798-0850
fax 800-554-4403 in North America
541-984-2490 outside North America

Specifications

Model **PCV-E518DS**
Processor 500 MHz Pentium® III
Hard Disk Drive 17.28 GB
Standard SDRAM 128 MB PC-100 SDRAM, expandable to 256 MB
Video RAM 8 MB SDRAM
MPEG "Sony Tuned" MPEG Digital Video supports full-screen video playback
Graphics 3D 2X AGP graphics acceleration (Matrox)
Sound Capabilities 3D Positional Audio (Aureal A3D)
Diskette Drive 3.5" 1.44 MB FDD
CD-RW Drive CD-RW Drive (4X max. CD-R writing, 2X max. CD-RW writing, 24X max. reading)
Modem K56flex technology/V.90 compatible data/fax modem[1]
Expansion Capabilities One PCI slot
One additional hard disk drive bay
Connection Capabilities (Front) USB port
i.LINK port (4-pin)
Connection Capabilities (Rear) Optional Keyboard (PS/2-style)
Mouse (PS/2-style)
USB port
Serial port
Parallel (printer)
Game/MIDI
Headphones
Line In
Microphone
VGA Monitor
S-Link (Control-A1)
Optical Digital Audio Out
Two i.LINK ports (6-pin)[2]
Modem line (RJ-11)
Phone line (RJ-11)
Supplied Accessories VAIO Smart keyboard
Sony two-button mouse
RJ-11 phone cable
Power cord
Service 90-day limited service. Extendible to one year from original date of purchase upon registration[3]
Limited Warranty 90-day parts/labor standard. Extendible to one year from original date of purchase upon registration[4]

Power Requirements 200 watts maximum
Dimensions 7" (w) x 12" (h) x 13 3/4" (d) (178mm x 304mm x 330mm)
Weight 17 lbs. (7.71 kg)
Operating Temperature 50º F to 95º F (+10º C to 35º C)

[1] Maximum speed for faxing is 14.4 kbytes/s. Your modem is capable of downloading at 56 kbytes/s using K56flex technology or V.90. Your phone service, online service, or Internet Service Provider however, may not support this technology or operate at this speed.

[2] Six-pin i-LINK connectors on the rear of the system each supply 10V to 12V. The combined total wattage that can be supplied by the two connectors is 6 watts.

[3] Certain restrictions apply

[4] Certain restrictions apply

Specifications are subject to change without notice.

This product meets the standards of the International Energy Star Program for energy efficiency.

© 1999 Sony Electronics Inc. Reproduction in w hole or in part w ithout w ritten permission is prohibited. All rights reserved.

Read Me First

Welcome

Congratulations on your purchase of the Sony VAIO Digital Studio Computer. Sony has combined leading-edge technology in audio, video, computing, and communications to provide you with state-of-the-art personal computing.

Features

 For a complete description of the specifications of your VAIO Digital Studio Computer, see Specifications.

- **Exceptional performance:** Your computer includes a brand new Intel® Pentium® III processor, a CD-RW drive, and a V.90 compatible data/fax modem.*

* Actual upload and download speeds may vary due to line conditions, ISP support, and government regulations.

- **CD-RW drive:** This drive is the ideal solution for making backups and data archiving, with the ability to store up to 650 MB* of removable, rewritable storage on a single rewritable CD. Save your movies to CD-R or CD-RW media and share videos and images with family and friends.

***** 530 MB after formatting.

- **VAIO Smart Keyboard:** This USB keyboard has programmable shortcut buttons for launching your favorite programs or accessing the Internet.
- **Sony audio and video quality:** High-fidelity positional 3D audio system (A3D), high-powered 3D graphics (AGP), and "Sony-Tuned" MPEG digital video playback enable you to take advantage of today's advanced multimedia applications, games, and entertainment software.
- **S-Link (Control-A1):** This technology allows you to build a database of all your music and video CDs and then record your favorite audio selections on MiniDiscs. Use your computer with a 200 disc mega-storage CD changer and a MiniDisc recording deck.
- **i.LINK (IEEE 1394):** Three built-in i.LINK ports provide you with maximum digital connection capability. The i.LINK name and logo identify a digital interface (IEEE 1394) for high speed communication. By using your VAIO Digital Studio Computer, a Sony Digital Handycam® Camcorder, the DVgate software preinstalled on your computer, and the i.LINK (IEEE 1394) interface, you can easily create and edit your own home videos.
- **Optical Digital Audio Output:** This high-quality digital interface transmits digital audio data via light pulses. Transfer crystal clear digital audio to your MiniDisc recorder.
- **Digital Studio Software**: Enjoy all of your computer's audio and video capabilities with component-like applications that allow you to creatively manipulate digital still images, video clips, and audio tracks.
- **50 free hours of Internet access:** Use the Internet for up to 50 free hours when you sign up with GTE (no credit card required). Limit of two hours per day. Free access expires after 50 hours or 90 days after signing up--whichever occurs first.
- **Preinstalled software titles**: All the software on your computer is preinstalled, configured, and ready for you to use right out of the box.
- **Windows® 98**: Your system includes the latest operating system from Microsoft.
- **Communications:** Access popular online services, browse the Internet, send faxes, and more.

Unpacking Your Computer

Computer and Supplied Accessories

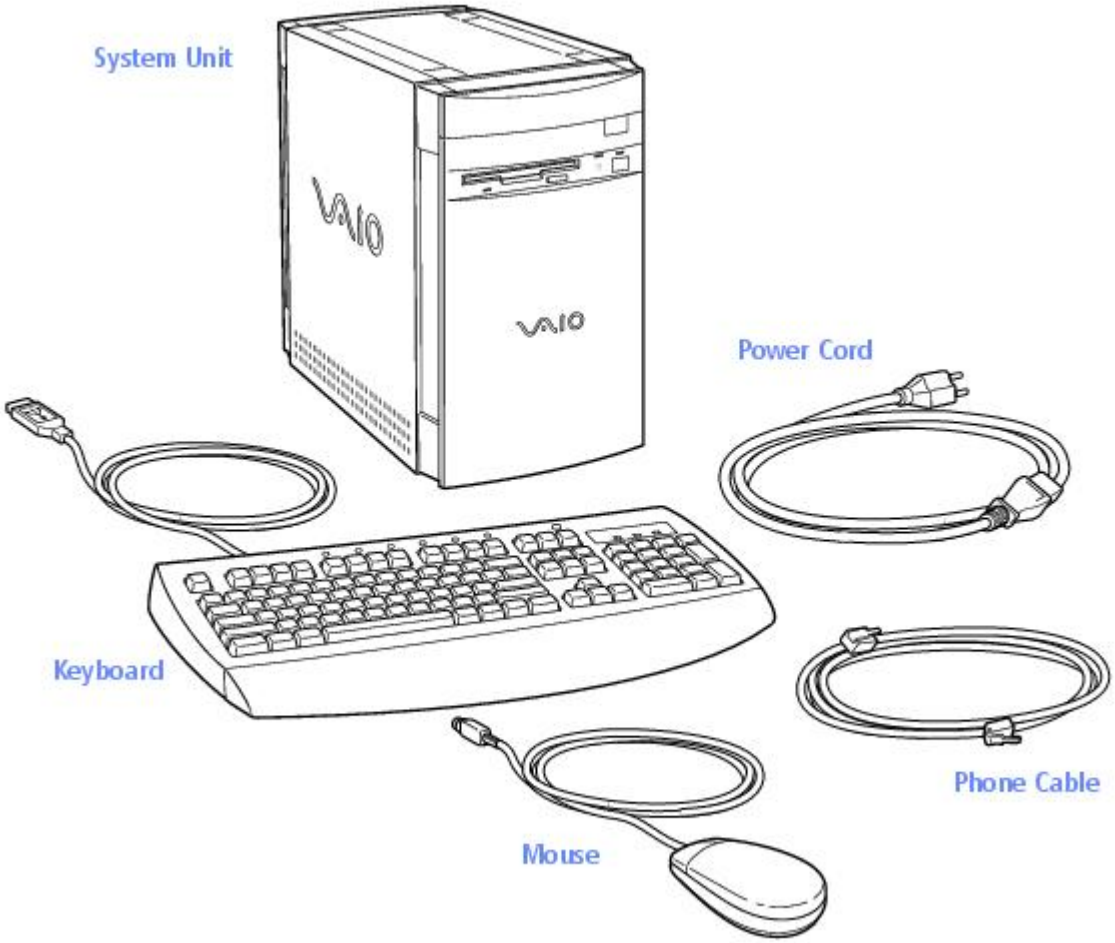

Manuals

- *Read Me First* (this manual) contains features and specifications of your computer. It also includes information on the applications included with your system, how to contact software vendors, and last minute troubleshooting tips.
- The *VAIO Digital Studio Computer User Guide* describes how to get started with your computer, find help, and solve common problems.
- The *Microsoft® Windows®98 Getting Started* manual explains how to use the basic features of the Windows operating system.

Recovery CDs

- System Recovery CD(s)
- Application Recovery CD(s)

Other

- Setting up your VAIO Digital Studio Computer (poster)
- Packet containing special product offers

Software Library

The Software Library contains the Microsoft software license agreement, Sony end-user license agreement, and the following CDs:

- Adobe PhotoDeluxe® Business Edition 3.0
- Gremlin Interactive Ltd. MotorHead
- Microsoft® Encarta® 99 Encyclopedia
- Microsoft® Money/Microsoft® Works

Back Panel Overview

The back panel of your computer contains the connectors where you plug in supplied and optional accessories. The icons on the back panel serve as a map to help you locate the connectors on your computer.

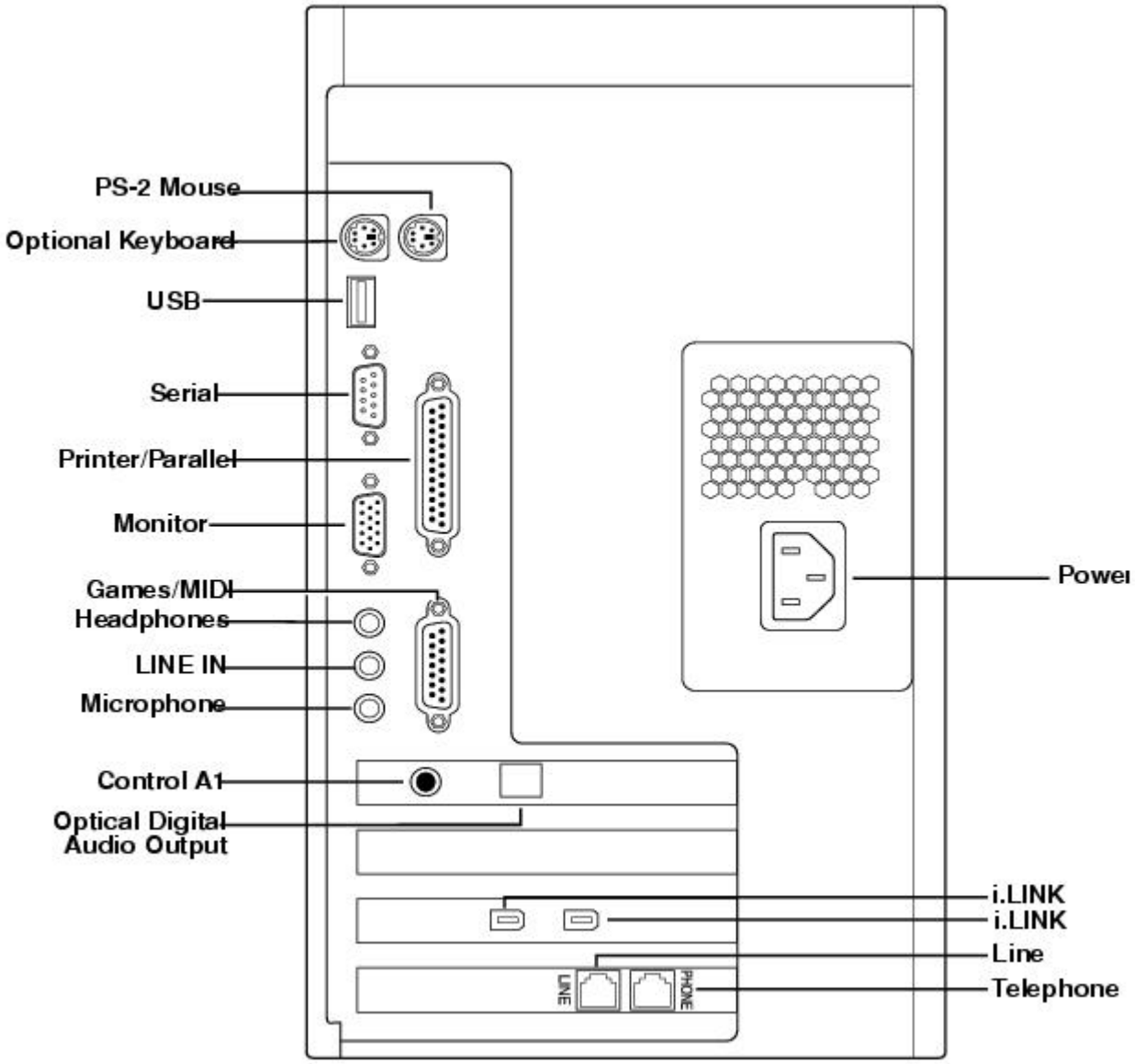

For your convenience, your computer includes USB and i.LINK connectors on both the front and back panels, allowing you to connect to either set of connectors. i.LINK connectors on the back of your system are 6-pin connectors.

Front Panel Overview

The front panel of your VAIO Digital Studio Computer allows for access to the diskette and CD-RW drives. It also includes USB and i.LINK ports to connect USB devices, CD changers, MiniDisc drives, or other components.

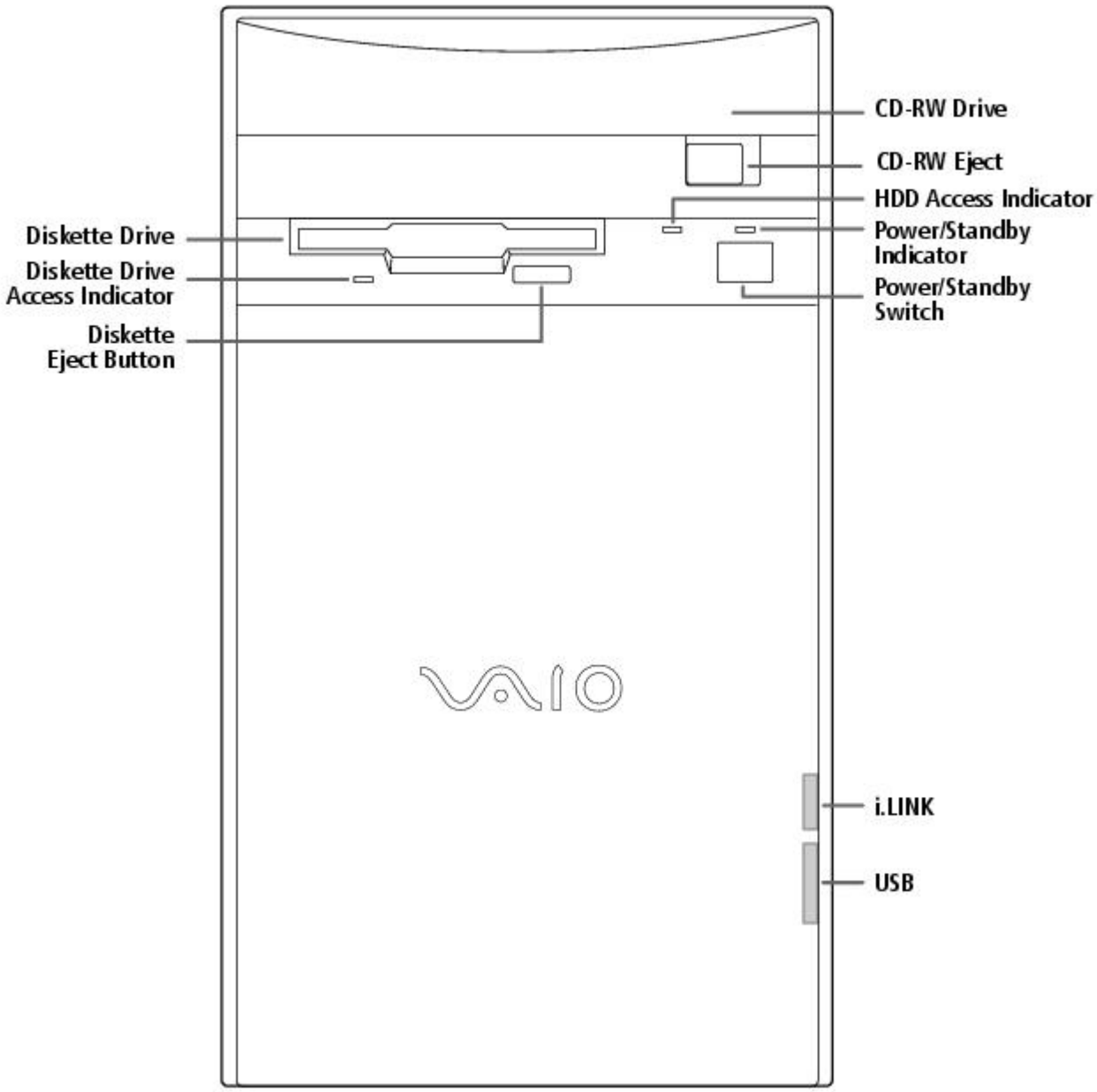

For your convenience, your computer includes USB and i.LINK connectors on both the front and back panels, allowing you to connect to either set of connectors. The i.LINK connector on the front of your system is a 4-pin connector.

Supplementary Information

For the most recent version of this manual, see the online version of Read Me First. You can access this document from the Windows Start Menu by selecting Programs/VAIO Documentation.

Hard Drive Partition

In order to improve the performance of your computer's DVgate Motion software, the hard disk drive on your computer has been formatted with two partitions, C and D. DVgate Motion saves files to the D partition. This prevents large video captures from consuming the available space on your C partition. To maintain optimum performance of DVgate Motion, you should defragment regularly.

VAIO Smart Keyboard Default Settings

The VAIO Smart Keyboard programmable buttons come with the following applications as their default settings:

S1 - Easy Internet Access Browser (Internet)

S2 - Outlook 98 (Mail)

S3 - MotorHead (Game)

S4 - Microsoft® Works (Work)

S5 - Quicken 99 Basic (Finance)

S6 - VAIO Documentation (Help)

All six buttons are reprogrammable.

Using The Standby Mode

To Put Your Computer into Standby Mode

When you are done using your computer, you can put it in Standby mode rather than turn it off completely. There are four ways to put your computer into Standby mode.

- Touch the power switch on the front panel.
- Click Shut Down at the bottom of the Start menu to display the Shut Down Windows dialog box. Select Stand by, and then click OK.
- Press the Standby button on the VAIO Smart Keyboard (the half moon icon).
- Change the timer settings for Standby mode in the Control Panel, as follows:

1. From the Start menu, point to Settings and click Control Panel.
2. Click the Power Management icon.
3. On the Power Schemes tab, change the Power scheme to Home/Office Desk.
4. In the list box for System standby, select an interval of time.
5. Click the OK button and close the Control Panel.

To Resume from Standby Mode

There are two ways to resume system functionality when your computer is in Standby mode. Use either of the following methods.

- Press any key on your keyboard, such as the Enter key.
- Touch the power switch on the front panel.

It may take up to 30 seconds for your system to recover stored information and resume functionality. The screen remains blank while the system is resuming functionality.

Applications That Use the TWAIN Driver

Digital imaging applications, such as Adobe PhotoDeluxe®, allow you to transfer images to your computer from external devices, including scanners or digital cameras. For some devices, a TWAIN driver window appears on the screen. Always close the TWAIN driver window before exiting or minimizing a digital imaging application.

Restoring Outlook 98

For the Add New Components functionality to be available with Microsoft Outlook, you must first run the installation program for Outlook from the Application Recovery CD. When prompted to install the program, select Exit. This decompresses the software, making the Add New Components functionality available.

Inserting Add-in Boards

Your VAIO Digital Studio Computer accommodates PCI add-in boards up to 7.7 inches in length.

Using Devices Connected to the i.LINK (IEEE 1394), S-Link (Control-A1), and Optical Digital Audio Output Connectors

For the latest information on devices known to be compatible with the state-of the-art audio, video, and graphics capabilities of your VAIO computer, check the Sony web site at http://www.sony.com/pcsupport.

Connecting to i.LINK Ports

Your VAIO computer includes a 4-pin i.LINK connector on the front of the system and two 6-pin i.LINK connectors on the back of the system. A 6-pin i.LINK connector can supply power from the computer to the connected device if the device is equipped with a 6-pin connector. Each 6-pin connector supplies 10V to 12V. The total power supplied by both 6-pin i.LINK connectors cannot exceed 6 watts. A 4-pin i.LINK connector cannot supply power to a connected device.

Capturing and Editing Digital Video Clips

- You can capture digital video clips using a digital video camera recorder and DVgate Motion software. Once the clips are saved as AVI files, they can be edited using DVgate Motion, DVgate Clip, or Adobe Premiere® LE. You cannot capture digital video clips directly using the Capture menu in Adobe Premiere LE. Adobe Premiere LE supports an analog capture board for capturing clips. Your VAIO computer is designed for digital video input.
- If there is no audio data associated with an AVI file, the message "Codec compression error" appears. If you do not wish to associate audio with your AVI file, you can add muted sound data by recording audio with the mute option enabled.
- For best performance, when editing AVI files in Adobe Premiere LE, you should use the default setup parameters that shipped with your system. If you change the default setup and want to reinitialize the parameters, follow these steps:

    1. In the Adobe Premiere LE application, select Compression from the Make menu. The Compression Settings dialog box appears.
    2. In the Method list box, select Sony DV software CODEC.
    3. Click OK to close the screen.
    4. From the Make menu, select Preset. The Preset dialog box appears.
    5. Select the parameters for Time Base, Compress, Output, and Preview Option settings as indicated below.

[Time base]

Time base - 29.97fps (required)

[Compress]

File type - AVI (required)
Compress Program Method - Sony DV software CODEC (required)
Compress Program Depth - Millions colors (No other options)
Quality (No control for this item)
Option: Frames per second - 30 (required)
Option: Basic Key Frames (No control for this item)
Option: Optimize Still Off (recommended)
Data rate - Recompress Off (recommended)

[Output options]

Video - On (required)
Video Size - 720x480
4:3 Aspect - Off (required)
VideoType - Field 2 (recommended)
Audio - On (required)
Audio Rate - 44kHz (required)
Audio Format - 16 Bit Stereo or 16 Bit Monaural (required)
Audio Type - Uncompress (required)
Audio Interleave - 1 frame (recommended)
- Less than 30 frames (required)

Audio Sync - 1.0 (required)
Audio Skew - 0.75 (recommended)
- Less than 1.0 (required)

[Preview Option]

Preview Window Size - 360x240

Note that Adobe Premiere LE does not save the Preview Window Size, but uses a default size of 320 x 213 each time the application launches. We recommend that you change this setting to 360 x 240 to improve the quality of preview clips when editing AVI files.

Using Alternate Browsers with America Online®

To use Internet Explorer or Netscape Navigator as your browser with America Online, follow these steps:

1. From the Start menu, point to Settings and then click Control Panel.
2. Click the Internet icon.
3. Click the Connection tab.
4. Click the "Connect to the Internet using local area network" radio button.
5. Click OK.

Using DVgate Motion

When capturing clips:

- Do not use DVgate Motion when the connected digital video peripheral is in Timer Recording mode, as this could produce a malfunction in the peripheral.
- Captures larger than 2 GB (9 minutes and 30 seconds) are automatically continued in a second file.
- You can record stereo audio (stereo 1) while capturing video. You cannot add audio on the stereo 2 track after capturing the video data.
- You cannot use different audio modes on the same tape. You should perform a separate capture for each audio mode you wish to use.
- DVgate Motion does not support hard disk compression. You should not use disk compression if you are planning to work with DVgate Motion.
- Title data is saved in the flash memory of a digital video camera and is not transferred to tape by DVgate Motion.
- To avoid interruption of capture sessions, you should disable the screen saver.
- The drop frame compensation feature does not provide accurate compensation adjustments for tapes recorded in LP mode.
- For tapes that include a mixture of both SP and LP mode, the information displayed by the capture progress indicator may not be accurate.
- Make sure the video head of your digital video device is properly cleaned. Anomalies that you see in captured data could be due to dust or other particles on the video head.
    - The last frame captured is one frame before your selected [OUT] point. The frame you see immediately after clicking the [OUT] button is not captured.

When recording AVI files to tape:

- Do not use DVgate Motion when the connected digital video peripheral is in Timer Recording mode, as this could produce a malfunction in the peripheral.

- You can record only AVI files. MPEG files cannot be recorded.
- To avoid recording problems, such as a single frame appearing in multiple frames, close other applications on your system while recording.
- You cannot use different audio modes on the same tape. If you have AVI files that use different audio modes, they cannot be recorded at the same time, but must be recorded separately.
- Do not attempt to work with AVI files that are smaller than 4 MB.
- DVgate Motion does not support hard disk compression. You should not use disk compression if you are planning to work with DVgate Motion.
- In order to maximize recording capabilities, video and audio data are not available while you are recording.

If DVgate Motion indicates that frames have been dropped, you should try closing all open applications, or you may need to defragment your hard drive.

Restoring Audio Drivers

When you restore the audio drivers from the Application Recovery CD, you need to restart your system to use these drivers. In the Add New Hardware wizard that appears when you restart, click the Next button until you are prompted for the location of the drivers. The audio drivers are located on the Application Recovery CD in G:\drivers\audio\AL98091701\English.

Using AC-3® to Optical Digital Audio Output

MiniDisc player/recorders, DAT player/recorders, and older digital receivers do not support Dolby® Digital (AC-3). You should not use the AC-3 to Optical Digital Audio Output option unless you are using a device that supports Dolby Digital. Please refer to the manual supplied with your equipment to determine if it supports Dolby Digital. If you are unsure and you have selected the AC-3 to Optical Digital Audio Output option, turn down the volume on your equipment before using the DVD player.

Using America Online or Sony Online Support with WinFax® Basic Edition

Once you have configured WinFax Basic Edition, it is automatically available for your use. You cannot use America Online or Sony Online Support when the automatic fax receive feature of WinFax Basic Edition is on. To disable this feature, right click the WinFax icon in the task tray at the bottom right corner of your screen, and then select Exit.

Memory Upgrade Specifications

When upgrading memory, use only 3.3V 64-bit PC-100 168 PIN SDRAM DIMM modules. For more information on Digital Studio Computer compatible memory, call Sony at 1-888-4SONYPC (1-888-476-6972).

About the Software On Your Computer

Your VAIO Digital Studio computer is ready to help you work, play, learn, and communicate as soon as you turn it on. This section gives you an overview of the activities you can perform with your software titles. For support information, see For Answers to Your Software Questions.

Adobe Acrobat® Reader

Adobe Systems Incorporated

Acrobat Reader software allows you to view, navigate, and print electronic documents in Adobe Portable Document Format (PDF), an open file format that is intended to preserve the fidelity of documents created on all major computer platforms.

Adobe PhotoDeluxe® Business Edition

Adobe Systems Incorporated

Create amazing photo effects with PhotoDeluxe. Without learning complex software, you can

enhance, restore, and be creative with your photos. Includes built-in guided activities, stock photos, clip art, and templates to assist you.

Adobe Premiere® LE

Adobe Systems Incorporated

Adobe Premiere LE offers an interface and editing tool for producing movies for video, multimedia, or the web. View source clips and edited footage simultaneously in the monitor window. Create video clips up to three hours long with complete audio-video synchronization.

America Online®

America Online

America Online is the world's most popular Internet online service. Stay in touch with family and friends with Easy-to-Use E-mail, manage your personal finances, get the latest news and sports scores, and chat with thousands of others who share your interests.

AT&T WorldNet® Service

AT&T

Fast, reliable Internet access from AT&T WorldNet Service. AT&T WorldNet Service provides web-based e-mail, a personalized start page from Excite, easy access to the Excite search engine, free web pages, online and live agent technical support, instant messaging, and special shopping discounts at Market Square.

CompuServe®

CompuServe, Inc.

CompuServe is the most comprehensive source of organized business and educational information online today. CompuServe allows you to access the vastness of the Internet without wasting time wading through it. Maximize your time online with CompuServe.

Digital Media Park

Sony Electronics

An integrated suite of multimedia cataloging and playback programs including Media Bar, Media Library, Media Showcase, and MiniDisc Editor. Manage your music by cataloging your entire CD collection, and then create custom MiniDiscs of your favorite songs.

Dr. Solomon's® Anti-Virus

Dr Solomon's Software Inc.

Dr. Solomon's Anti-Virus provides the most comprehensive defense against the spread of viruses, including macro viruses. It can scan inside compressed files and automatically protects your system against viruses sent via e-mail or Internet download.

DVgate Motion

Sony Electronics

Connect a digital video camera recorder to the i.LINK connector and capture your own video clips. You can edit the clips from your video, add others, and combine clips into new movie segments.

DVgate Still

Sony Electronics

Connect a digital video camera recorder to the i.LINK connector and capture your own still images. You can save your images in a variety of popular file formats.

EarthLink Sprint TotalAccess

EarthLink Network, Inc.

An Internet Service Provider that supplies access, information, and assistance to its customers, introducing them to the Internet. Member benefits include e-mail, newsgroups, a Personal Start Page, a free 6 MB web site, a member magazine, and 24-hour technical support.

Microsoft® Encarta® 99 Encyclopedia

Microsoft Corporation

Microsoft Encarta Encyclopedia combines current, comprehensive content with up-to-date multimedia technology, providing users with unique, engaging learning experiences. With the 1999 edition, Encarta provides a wealth of information resources and unique interactive features

Microsoft® Internet Explorer for Windows® 98

Microsoft Corporation

Internet Explorer delivers the web the way you want it. It's safe, easy to use, and you can personalize how you access the web. Outlook Express and other tools in Internet Explorer also help you have a great experience when you are on the web!

Microsoft® Money 99

Microsoft Corporation

Microsoft Money 99 is personal finance software that lets you perform your financial tasks, everything from paying bills to planning for the future, in a smarter, faster way. With Money's online services, you can pay bills and bank from the comfort of home.

Microsoft® Outlook® 98

Microsoft Corporation

Outlook 98 is Microsoft's premier messaging and collaboration client. It combines the leading support for Internet standards-based messaging systems with integrated calendar, contact, and task-management features.

Microsoft® Works

Microsoft Corporation

Works provides users with the right set of core tools that allows them to write letters and reports, track family and friends with the address book, manage home finances, and create a home inventory.

MotorHead

Gremlin Interactive Ltd.

MotorHead is realistic arcade-racing; high-velocity entertainment that puts you behind the wheel for 3D pure racing action. Power across Europe and USA in the Transatlantic Speed League, where second place is simply not an option.

Netscape Communicator®

Netscape Communications

Netscape Communicator is the all-in-one Internet tool that makes it easy to browse the web, send Internet e-mail, chat, read newsgroups, and compose great web documents.

PictureGear

Sony Electronics

This image management software displays images from your hard drive, a Sony digital still camera, or a Sony Mavica® camera. The images appear in a convenient light-table format, so that you can easily view the contents of an entire folder.

Prodigy Internet

Prodigy Communications Corporation

An Internet service that helps you find what you need online faster and smarter. Prodigy delivers powerful online content, such as sports scores, stock quotes, news, and easy access to Excite , plus a personal e-mail account and quality customer service, all at a competitive price.

Quicken® Basic 99

Intuit, Inc

Quicken is the fastest, easiest way to organize your finances. Quicken works just like your checkbook, so it's easy to learn and use. Quicken manages all of your finances, bank accounts, credit cards, investments, and loans. You can even pay your bills online.

SurfMonkey

MediaLive, Inc

SurfMonkey is a web browser and online service for kids ages 6-12 that makes the Internet safe, fun, and easy. A talking monkey guides children through web sites and chat rooms, and can read their e-mail out loud. Children cannot go to inappropriate web sites, parents can screen e-mail messages, and chat messages are monitored.

VAIO Smart Keyboard

Sony Electronics

VAIO Smart Keyboard software operates your new easy to use programmable USB keyboard. Six programmable buttons enable you to launch your favorite applications, open frequently used files, access Explorer, or even open your web browser with just the click of a button.

WinFax® Basic Edition

Symantec Corporation

WinFax Basic Edition incorporates an easy-to-use interface that allows you to send and receive faxes easily. Upgrade to WinFax Pro to receive additional features.

About Your Recovery CDs

Application Recovery CD(s)

Sony Electronics

The Application Recovery CD program allows you to reinstall individual applications and device drivers. Use it to restore corrupted or accidentally erased files.

System Recovery CD(s)

Sony Electronics

The System Recovery CD program allows you to restore the software titles that shipped with your computer if they become corrupted or are erased accidentally. It can be used only to restore the hard disk of the Sony computer you purchased.

For Answers to Your Software Questions

Sony Service Center

For the Sony Service Center nearest you, call at 1-888-4SONYPC (1-888-476-6972).

Acrobat® Reader, Adobe PhotoDeluxe® Business Edition , Adobe Premiere® LE (Adobe Systems Incorporated)

Web site http://www.adobe.com/
phone 206-628-2746 (fee-based support)
fax 206-628-5737
e-mail techdocs@adobe.com
hours M-F, 6 AM-5 PM PT

America Online® (America Online)

Web site http://www.aol.com/
phone 800-827-3338
hours 7 days a week, 6 AM - 2 PM ET

AT&T WorldNet® Service (AT&T)

Web site http://www.att.net/*
phone 800-400-1447
e-mail worldnet@attmail.com
hours 7 days a week, 24 hours a day

* You must be a WorldNet Service customer to access online support.

CompuServe® Interactive (CompuServe Interactive, Inc.)

Web site http://www.compuserve.com/
phone 800-848-8990
hours M-F, 8 AM - 1 AM ET, S-S 10 AM - 10 PM ET

Dr. Solomon's® Anti-Virus (Dr. Solomon's Software Inc.)

Web site http://www.drsolomon.com/
phone 888-377-6566
e-mail support@us.drsolomon.com
hours 7 days a week, 24 hours a day

EarthLink Sprint TotalAccess (EarthLink Network, Inc.)

Web site http://help.earthlink.net/techsupport/
phone 800-395-8410
e-mail support@earthlink.net
hours 7 days a week, 24 hours a day

Easy Internet Access (Encompass, Inc.)

Web site http://www.encmpss.com/
phone 800-927-3000
hours 7 days a week, 24 hours a day

MotorHead (Gremlin Interactive Ltd.)

Web site http://www.gremlin.com/
phone 888-4SONYPC (888-476-6972)
hours 7 days a week, 24 hours a day

Windows® 98 Operating System, Works, Money, Encarta, Internet Explorer (Microsoft Corporation)

Web site http://www.microsoft.com/support/
phone 888-4SONYPC (888-476-6972)*
hours 7 days a week, 24 hours a day
* Support from 1-888-4SONYPC is free of charge for 90 days after the original date of purchase.

Netscape Communicator® (Netscape Communications Corporation)

Web site http://www.netscape.com/
phone 888-4SONYPC (888-476-6972)*
hours 7 days a week, 24 hours a day
* Support from 1-888-4SONYPC is free of charge for 90 days after the original date of purchase.

Prodigy Internet (Prodigy Communications Corporation.)

Web site http://www.prodigy.com/
phone 800-PRODIGY
hours 7 AM - 3 AM ET

Quicken® Basic (Intuit Inc.)

Web site http://www.intuit.com/support/
phone 900-555-4688
hours 7 days a week, 24 hours a day

SurfMonkey (MediaLive, Inc.)

Web site http://www.surfmonkey.com/support/Sub_support.html
phone 408-556-2060
e-mail support@surfmonkey.com
hours 9AM-10PM PT everyday

WinFax® Basic Edition (Symantec Corporation.)

Web site http://www.symantec.com/techsupp/
phone 800-798-0850
fax 800-554-4403 in North America
541-984-2490 outside North America

Specifications

Model **PCV-E518DS**
Processor 500 MHz Pentium® III
Hard Disk Drive 17.28 GB
Standard SDRAM 128 MB PC-100 SDRAM, expandable to 256 MB
Video RAM 8 MB SDRAM
MPEG "Sony Tuned" MPEG Digital Video supports full-screen video playback
Graphics 3D 2X AGP graphics acceleration (Matrox)
Sound Capabilities 3D Positional Audio (Aureal A3D)
Diskette Drive 3.5" 1.44 MB FDD
CD-RW Drive CD-RW Drive (4X max. CD-R writing, 2X max. CD-RW writing, 24X max. reading)
Modem K56flex technology/V.90 compatible data/fax modem[1]
Expansion Capabilities One PCI slot
One additional hard disk drive bay
Connection Capabilities (Front) USB port
i.LINK port (4-pin)
Connection Capabilities (Rear) Optional Keyboard (PS/2-style)
Mouse (PS/2-style)
USB port
Serial port
Parallel (printer)
Game/MIDI
Headphones
Line In
Microphone
VGA Monitor
S-Link (Control-A1)
Optical Digital Audio Out
Two i.LINK ports (6-pin)[2]
Modem line (RJ-11)
Phone line (RJ-11)
Supplied Accessories VAIO Smart keyboard
Sony two-button mouse
RJ-11 phone cable
Power cord
Service 90-day limited service. Extendible to one year from original date of purchase upon registration[3]
Limited Warranty 90-day parts/labor standard. Extendible to one year from original date of purchase upon registration[4]

Power Requirements 200 watts maximum
Dimensions 7" (w) x 12" (h) x 13 3/4" (d) (178mm x 304mm x 330mm)
Weight 17 lbs. (7.71 kg)
Operating Temperature 50º F to 95º F (+10º C to 35º C)

[1] Maximum speed for faxing is 14.4 kbytes/s. Your modem is capable of downloading at 56 kbytes/s using K56flex technology or V.90. Your phone service, online service, or Internet Service Provider however, may not support this technology or operate at this speed.

[2] Six-pin i-LINK connectors on the rear of the system each supply 10V to 12V. The combined total wattage that can be supplied by the two connectors is 6 watts.

[3] Certain restrictions apply

[4] Certain restrictions apply

Specifications are subject to change without notice.

This product meets the standards of the International Energy Star Program for energy efficiency.

© 1999 Sony Electronics Inc. Reproduction in w hole or in part w ithout w ritten permission is prohibited. All rights reserved.

Read Me First

Welcome

Congratulations on your purchase of the Sony VAIO Digital Studio Computer. Sony has combined leading-edge technology in audio, video, computing, and communications to provide you with state-of-the-art personal computing.

Features

 For a complete description of the specifications of your VAIO Digital Studio Computer, see Specifications.

- **Exceptional performance:** Your computer includes a brand new Intel® Pentium® III processor, a CD-RW drive, and a V.90 compatible data/fax modem.*

* Actual upload and download speeds may vary due to line conditions, ISP support, and government regulations.

- **CD-RW drive:** This drive is the ideal solution for making backups and data archiving, with the ability to store up to 650 MB* of removable, rewritable storage on a single rewritable CD. Save your movies to CD-R or CD-RW media and share videos and images with family and friends.

* 530 MB after formatting.

- **VAIO Smart Keyboard:** This USB keyboard has programmable shortcut buttons for launching your favorite programs or accessing the Internet.
- **Sony audio and video quality:** High-fidelity positional 3D audio system (A3D), high-powered 3D graphics (AGP), and "Sony-Tuned" MPEG digital video playback enable you to take advantage of today's advanced multimedia applications, games, and entertainment software.
- **S-Link (Control-A1):** This technology allows you to build a database of all your music and video CDs and then record your favorite audio selections on MiniDiscs. Use your computer with a 200 disc mega-storage CD changer and a MiniDisc recording deck.
- **i.LINK (IEEE 1394):** Three built-in i.LINK ports provide you with maximum digital connection capability. The i.LINK name and logo identify a digital interface (IEEE 1394) for high speed communication. By using your VAIO Digital Studio Computer, a Sony Digital Handycam® Camcorder, the DVgate software preinstalled on your computer, and the i.LINK (IEEE 1394) interface, you can easily create and edit your own home videos.
- **Optical Digital Audio Output:** This high-quality digital interface transmits digital audio data via light pulses. Transfer crystal clear digital audio to your MiniDisc recorder.
- **Digital Studio Software**: Enjoy all of your computer's audio and video capabilities with component-like applications that allow you to creatively manipulate digital still images, video clips, and audio tracks.
- **50 free hours of Internet access:** Use the Internet for up to 50 free hours when you sign up with GTE (no credit card required). Limit of two hours per day. Free access expires after 50 hours or 90 days after signing up--whichever occurs first.
- **Preinstalled software titles**: All the software on your computer is preinstalled, configured, and ready for you to use right out of the box.
- **Windows® 98**: Your system includes the latest operating system from Microsoft.
- **Communications:** Access popular online services, browse the Internet, send faxes, and more.

Unpacking Your Computer

Computer and Supplied Accessories

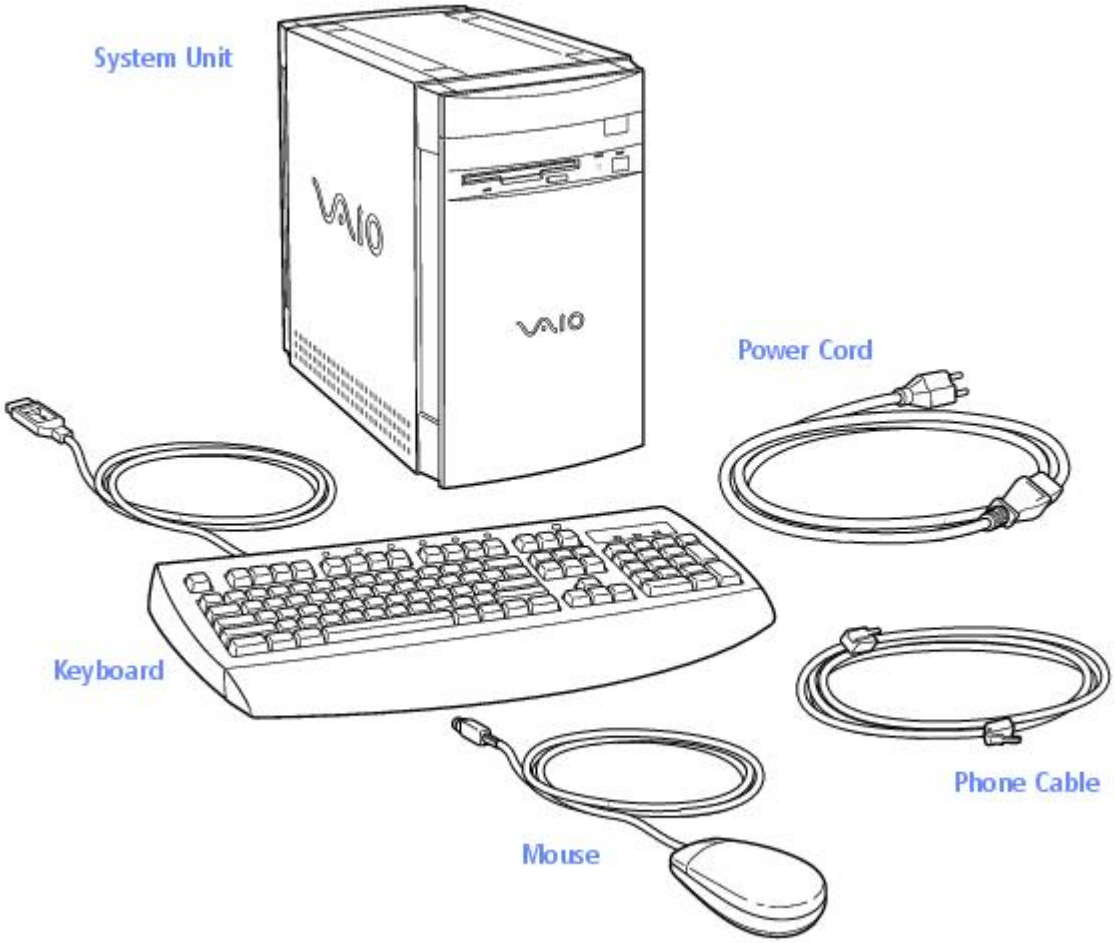

Manuals

- *Read Me First* (this manual) contains features and specifications of your computer. It also includes information on the applications included with your system, how to contact software vendors, and last minute troubleshooting tips.
- The *VAIO Digital Studio Computer User Guide* describes how to get started with your computer, find help, and solve common problems.
- The *Microsoft® Windows®98 Getting Started* manual explains how to use the basic features of the Windows operating system.

Recovery CDs

- System Recovery CD(s)
- Application Recovery CD(s)

Other

- Setting up your VAIO Digital Studio Computer (poster)
- Packet containing special product offers

Software Library

The Software Library contains the Microsoft software license agreement, Sony end-user license agreement, and the following CDs:

- Adobe PhotoDeluxe® Business Edition 3.0
- Gremlin Interactive Ltd. MotorHead
- Microsoft® Encarta® 99 Encyclopedia
- Microsoft® Money/Microsoft® Works

Back Panel Overview

The back panel of your computer contains the connectors where you plug in supplied and optional accessories. The icons on the back panel serve as a map to help you locate the connectors on your computer.

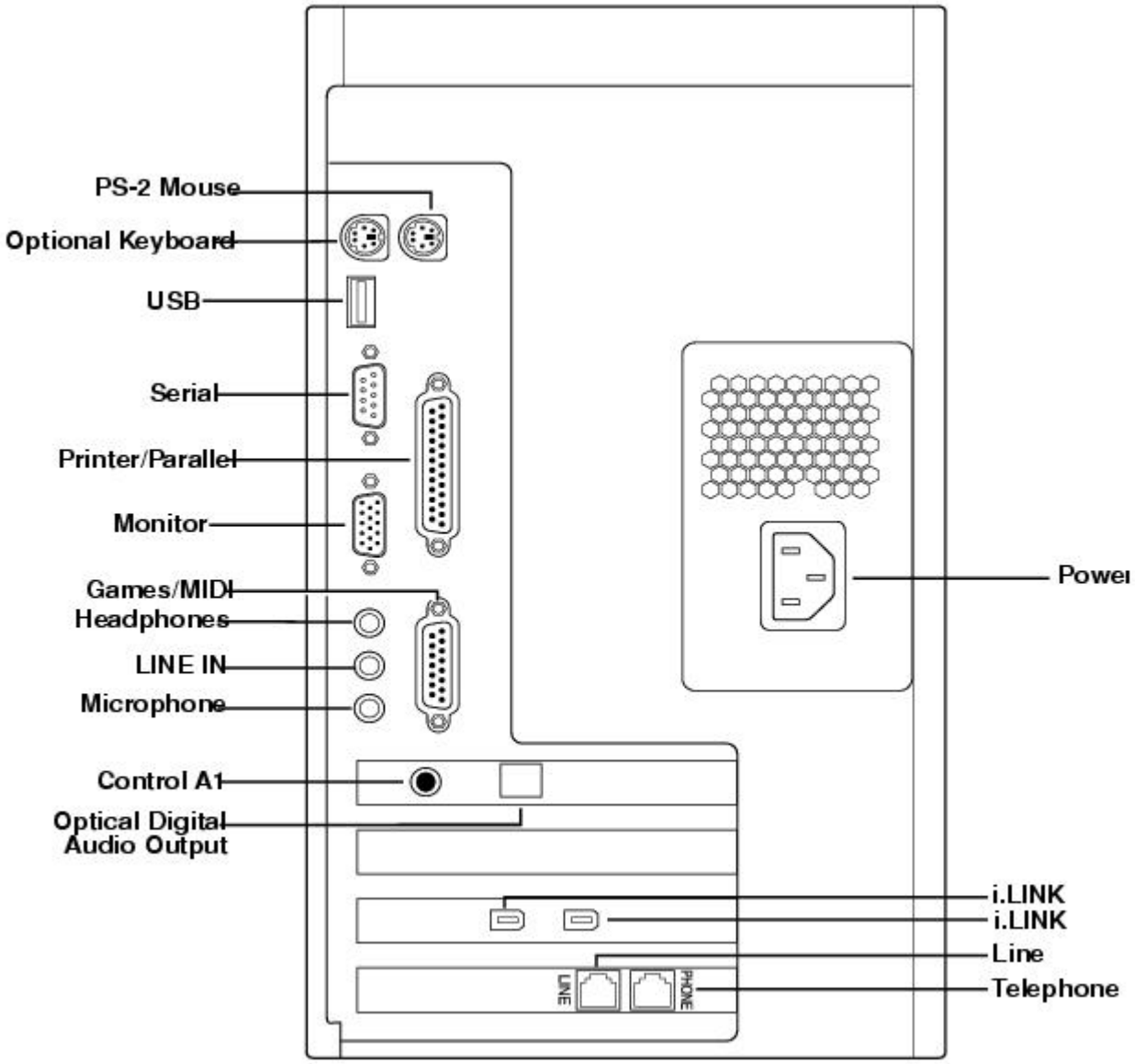

For your convenience, your computer includes USB and i.LINK connectors on both the front and back panels, allowing you to connect to either set of connectors. i.LINK connectors on the back of your system are 6-pin connectors.

Front Panel Overview

The front panel of your VAIO Digital Studio Computer allows for access to the diskette and CD-RW drives. It also includes USB and i.LINK ports to connect USB devices, CD changers, MiniDisc drives, or other components.

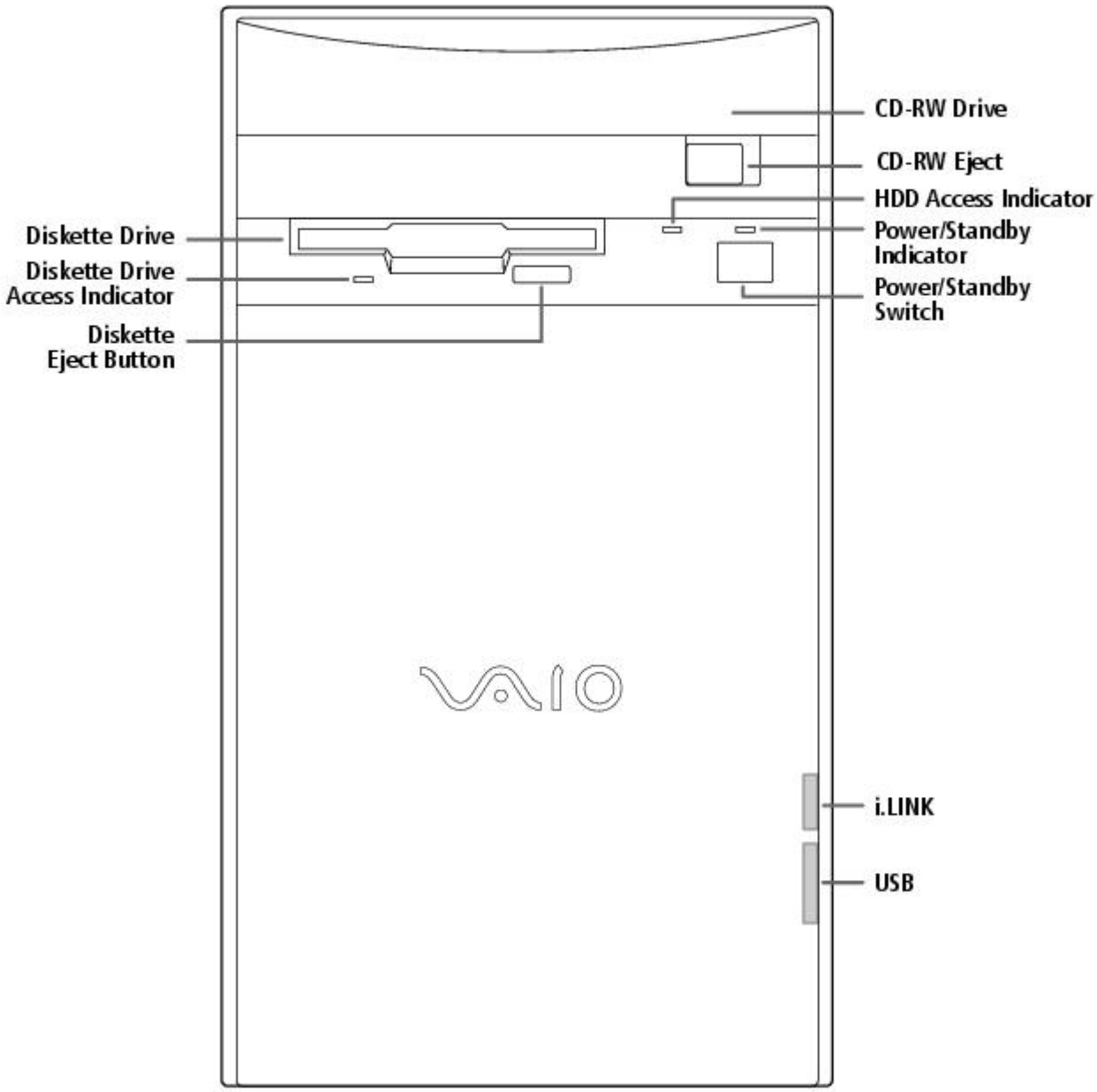

For your convenience, your computer includes USB and i.LINK connectors on both the front and back panels, allowing you to connect to either set of connectors. The i.LINK connector on the front of your system is a 4-pin connector.

Supplementary Information

For the most recent version of this manual, see the online version of Read Me First. You can access this document from the Windows Start Menu by selecting Programs/VAIO Documentation.

Hard Drive Partition

In order to improve the performance of your computer's DVgate Motion software, the hard disk drive on your computer has been formatted with two partitions, C and D. DVgate Motion saves files to the D partition. This prevents large video captures from consuming the available space on your C partition. To maintain optimum performance of DVgate Motion, you should defragment regularly.

VAIO Smart Keyboard Default Settings

The VAIO Smart Keyboard programmable buttons come with the following applications as their default settings:

S1 - Easy Internet Access Browser (Internet)

S2 - Outlook 98 (Mail)

S3 - MotorHead (Game)

S4 - Microsoft® Works (Work)

S5 - Quicken 99 Basic (Finance)

S6 - VAIO Documentation (Help)

All six buttons are reprogrammable.

Using The Standby Mode

To Put Your Computer into Standby Mode

When you are done using your computer, you can put it in Standby mode rather than turn it off completely. There are four ways to put your computer into Standby mode.

- Touch the power switch on the front panel.
- Click Shut Down at the bottom of the Start menu to display the Shut Down Windows dialog box. Select Stand by, and then click OK.
- Press the Standby button on the VAIO Smart Keyboard (the half moon icon).
- Change the timer settings for Standby mode in the Control Panel, as follows:

1. From the Start menu, point to Settings and click Control Panel.
2. Click the Power Management icon.
3. On the Power Schemes tab, change the Power scheme to Home/Office Desk.
4. In the list box for System standby, select an interval of time.
5. Click the OK button and close the Control Panel.

To Resume from Standby Mode

There are two ways to resume system functionality when your computer is in Standby mode. Use either of the following methods.

- Press any key on your keyboard, such as the Enter key.
- Touch the power switch on the front panel.

It may take up to 30 seconds for your system to recover stored information and resume functionality. The screen remains blank while the system is resuming functionality.

Applications That Use the TWAIN Driver

Digital imaging applications, such as Adobe PhotoDeluxe®, allow you to transfer images to your computer from external devices, including scanners or digital cameras. For some devices, a TWAIN driver window appears on the screen. Always close the TWAIN driver window before exiting or minimizing a digital imaging application.

Restoring Outlook 98

For the Add New Components functionality to be available with Microsoft Outlook, you must first run the installation program for Outlook from the Application Recovery CD. When prompted to install the program, select Exit. This decompresses the software, making the Add New Components functionality available.

Inserting Add-in Boards

Your VAIO Digital Studio Computer accommodates PCI add-in boards up to 7.7 inches in length.

Using Devices Connected to the i.LINK (IEEE 1394), S-Link (Control-A1), and Optical Digital Audio Output Connectors

For the latest information on devices known to be compatible with the state-of the-art audio, video, and graphics capabilities of your VAIO computer, check the Sony web site at http://www.sony.com/pcsupport.

Connecting to i.LINK Ports

Your VAIO computer includes a 4-pin i.LINK connector on the front of the system and two 6-pin i.LINK connectors on the back of the system. A 6-pin i.LINK connector can supply power from the computer to the connected device if the device is equipped with a 6-pin connector. Each 6-pin connector supplies 10V to 12V. The total power supplied by both 6-pin i.LINK connectors cannot exceed 6 watts. A 4-pin i.LINK connector cannot supply power to a connected device.

Capturing and Editing Digital Video Clips

- You can capture digital video clips using a digital video camera recorder and DVgate Motion software. Once the clips are saved as AVI files, they can be edited using DVgate Motion, DVgate Clip, or Adobe Premiere® LE. You cannot capture digital video clips directly using the Capture menu in Adobe Premiere LE. Adobe Premiere LE supports an analog capture board for capturing clips. Your VAIO computer is designed for digital video input.
- If there is no audio data associated with an AVI file, the message "Codec compression error" appears. If you do not wish to associate audio with your AVI file, you can add muted sound data by recording audio with the mute option enabled.
- For best performance, when editing AVI files in Adobe Premiere LE, you should use the default setup parameters that shipped with your system. If you change the default setup and want to reinitialize the parameters, follow these steps:

    1. In the Adobe Premiere LE application, select Compression from the Make menu. The Compression Settings dialog box appears.
    2. In the Method list box, select Sony DV software CODEC.
    3. Click OK to close the screen.
    4. From the Make menu, select Preset. The Preset dialog box appears.
    5. Select the parameters for Time Base, Compress, Output, and Preview Option settings as indicated below.

[Time base]

Time base - 29.97fps (required)

[Compress]

File type - AVI (required)
Compress Program Method - Sony DV software CODEC (required)
Compress Program Depth - Millions colors (No other options)
Quality (No control for this item)
Option: Frames per second - 30 (required)
Option: Basic Key Frames (No control for this item)
Option: Optimize Still Off (recommended)
Data rate - Recompress Off (recommended)

[Output options]

Video - On (required)
Video Size - 720x480
4:3 Aspect - Off (required)
VideoType - Field 2 (recommended)
Audio - On (required)
Audio Rate - 44kHz (required)
Audio Format - 16 Bit Stereo or 16 Bit Monaural (required)
Audio Type - Uncompress (required)
Audio Interleave - 1 frame (recommended)
- Less than 30 frames (required)

Audio Sync - 1.0 (required)
Audio Skew - 0.75 (recommended)
- Less than 1.0 (required)

[Preview Option]

Preview Window Size - 360x240

Note that Adobe Premiere LE does not save the Preview Window Size, but uses a default size of 320 x 213 each time the application launches. We recommend that you change this setting to 360 x 240 to improve the quality of preview clips when editing AVI files.

Using Alternate Browsers with America Online®

To use Internet Explorer or Netscape Navigator as your browser with America Online, follow these steps:

1. From the Start menu, point to Settings and then click Control Panel.
2. Click the Internet icon.
3. Click the Connection tab.
4. Click the "Connect to the Internet using local area network" radio button.
5. Click OK.

Using DVgate Motion

When capturing clips:

- Do not use DVgate Motion when the connected digital video peripheral is in Timer Recording mode, as this could produce a malfunction in the peripheral.
- Captures larger than 2 GB (9 minutes and 30 seconds) are automatically continued in a second file.
- You can record stereo audio (stereo 1) while capturing video. You cannot add audio on the stereo 2 track after capturing the video data.
- You cannot use different audio modes on the same tape. You should perform a separate capture for each audio mode you wish to use.
- DVgate Motion does not support hard disk compression. You should not use disk compression if you are planning to work with DVgate Motion.
- Title data is saved in the flash memory of a digital video camera and is not transferred to tape by DVgate Motion.
- To avoid interruption of capture sessions, you should disable the screen saver.
- The drop frame compensation feature does not provide accurate compensation adjustments for tapes recorded in LP mode.
- For tapes that include a mixture of both SP and LP mode, the information displayed by the capture progress indicator may not be accurate.
- Make sure the video head of your digital video device is properly cleaned. Anomalies that you see in captured data could be due to dust or other particles on the video head.
    - The last frame captured is one frame before your selected [OUT] point. The frame you see immediately after clicking the [OUT] button is not captured.

When recording AVI files to tape:

- Do not use DVgate Motion when the connected digital video peripheral is in Timer Recording mode, as this could produce a malfunction in the peripheral.

- You can record only AVI files. MPEG files cannot be recorded.
- To avoid recording problems, such as a single frame appearing in multiple frames, close other applications on your system while recording.
- You cannot use different audio modes on the same tape. If you have AVI files that use different audio modes, they cannot be recorded at the same time, but must be recorded separately.
- Do not attempt to work with AVI files that are smaller than 4 MB.
- DVgate Motion does not support hard disk compression. You should not use disk compression if you are planning to work with DVgate Motion.
- In order to maximize recording capabilities, video and audio data are not available while you are recording.

If DVgate Motion indicates that frames have been dropped, you should try closing all open applications, or you may need to defragment your hard drive.

Restoring Audio Drivers

When you restore the audio drivers from the Application Recovery CD, you need to restart your system to use these drivers. In the Add New Hardware wizard that appears when you restart, click the Next button until you are prompted for the location of the drivers. The audio drivers are located on the Application Recovery CD in G:\drivers\audio\AL98091701\English.

Using AC-3® to Optical Digital Audio Output

MiniDisc player/recorders, DAT player/recorders, and older digital receivers do not support Dolby® Digital (AC-3). You should not use the AC-3 to Optical Digital Audio Output option unless you are using a device that supports Dolby Digital. Please refer to the manual supplied with your equipment to determine if it supports Dolby Digital. If you are unsure and you have selected the AC-3 to Optical Digital Audio Output option, turn down the volume on your equipment before using the DVD player.

Using America Online or Sony Online Support with WinFax® Basic Edition

Once you have configured WinFax Basic Edition, it is automatically available for your use. You cannot use America Online or Sony Online Support when the automatic fax receive feature of WinFax Basic Edition is on. To disable this feature, right click the WinFax icon in the task tray at the bottom right corner of your screen, and then select Exit.

Memory Upgrade Specifications

When upgrading memory, use only 3.3V 64-bit PC-100 168 PIN SDRAM DIMM modules. For more information on Digital Studio Computer compatible memory, call Sony at 1-888-4SONYPC (1-888-476-6972).

About the Software On Your Computer

Your VAIO Digital Studio computer is ready to help you work, play, learn, and communicate as soon as you turn it on. This section gives you an overview of the activities you can perform with your software titles. For support information, see For Answers to Your Software Questions.

Adobe Acrobat® Reader

Adobe Systems Incorporated

Acrobat Reader software allows you to view, navigate, and print electronic documents in Adobe Portable Document Format (PDF), an open file format that is intended to preserve the fidelity of documents created on all major computer platforms.

Adobe PhotoDeluxe® Business Edition

Adobe Systems Incorporated

Create amazing photo effects with PhotoDeluxe. Without learning complex software, you can

enhance, restore, and be creative with your photos. Includes built-in guided activities, stock photos, clip art, and templates to assist you.

Adobe Premiere® LE

Adobe Systems Incorporated

Adobe Premiere LE offers an interface and editing tool for producing movies for video, multimedia, or the web. View source clips and edited footage simultaneously in the monitor window. Create video clips up to three hours long with complete audio-video synchronization.

America Online®

America Online

America Online is the world's most popular Internet online service. Stay in touch with family and friends with Easy-to-Use E-mail, manage your personal finances, get the latest news and sports scores, and chat with thousands of others who share your interests.

AT&T WorldNet® Service

AT&T

Fast, reliable Internet access from AT&T WorldNet Service. AT&T WorldNet Service provides web-based e-mail, a personalized start page from Excite, easy access to the Excite search engine, free web pages, online and live agent technical support, instant messaging, and special shopping discounts at Market Square.

CompuServe®

CompuServe, Inc.

CompuServe is the most comprehensive source of organized business and educational information online today. CompuServe allows you to access the vastness of the Internet without wasting time wading through it. Maximize your time online with CompuServe.

Digital Media Park

Sony Electronics

An integrated suite of multimedia cataloging and playback programs including Media Bar, Media Library, Media Showcase, and MiniDisc Editor. Manage your music by cataloging your entire CD collection, and then create custom MiniDiscs of your favorite songs.

Dr. Solomon's® Anti-Virus

Dr Solomon's Software Inc.

Dr. Solomon's Anti-Virus provides the most comprehensive defense against the spread of viruses, including macro viruses. It can scan inside compressed files and automatically protects your system against viruses sent via e-mail or Internet download.

DVgate Motion

Sony Electronics

Connect a digital video camera recorder to the i.LINK connector and capture your own video clips. You can edit the clips from your video, add others, and combine clips into new movie segments.

DVgate Still

Sony Electronics

Connect a digital video camera recorder to the i.LINK connector and capture your own still images. You can save your images in a variety of popular file formats.

EarthLink Sprint TotalAccess

EarthLink Network, Inc.

An Internet Service Provider that supplies access, information, and assistance to its customers, introducing them to the Internet. Member benefits include e-mail, newsgroups, a Personal Start Page, a free 6 MB web site, a member magazine, and 24-hour technical support.

Microsoft® Encarta® 99 Encyclopedia

Microsoft Corporation

Microsoft Encarta Encyclopedia combines current, comprehensive content with up-to-date multimedia technology, providing users with unique, engaging learning experiences. With the 1999 edition, Encarta provides a wealth of information resources and unique interactive features

Microsoft® Internet Explorer for Windows® 98

Microsoft Corporation

Internet Explorer delivers the web the way you want it. It's safe, easy to use, and you can personalize how you access the web. Outlook Express and other tools in Internet Explorer also help you have a great experience when you are on the web!

Microsoft® Money 99

Microsoft Corporation

Microsoft Money 99 is personal finance software that lets you perform your financial tasks, everything from paying bills to planning for the future, in a smarter, faster way. With Money's online services, you can pay bills and bank from the comfort of home.

Microsoft® Outlook® 98

Microsoft Corporation

Outlook 98 is Microsoft's premier messaging and collaboration client. It combines the leading support for Internet standards-based messaging systems with integrated calendar, contact, and task-management features.

Microsoft® Works

Microsoft Corporation

Works provides users with the right set of core tools that allows them to write letters and reports, track family and friends with the address book, manage home finances, and create a home inventory.

MotorHead

Gremlin Interactive Ltd.

MotorHead is realistic arcade-racing; high-velocity entertainment that puts you behind the wheel for 3D pure racing action. Power across Europe and USA in the Transatlantic Speed League, where second place is simply not an option.

Netscape Communicator®

Netscape Communications

Netscape Communicator is the all-in-one Internet tool that makes it easy to browse the web, send Internet e-mail, chat, read newsgroups, and compose great web documents.

PictureGear

Sony Electronics

This image management software displays images from your hard drive, a Sony digital still camera, or a Sony Mavica® camera. The images appear in a convenient light-table format, so that you can easily view the contents of an entire folder.

Prodigy Internet

Prodigy Communications Corporation

An Internet service that helps you find what you need online faster and smarter. Prodigy delivers powerful online content, such as sports scores, stock quotes, news, and easy access to Excite , plus a personal e-mail account and quality customer service, all at a competitive price.

Quicken® Basic 99

Intuit, Inc

Quicken is the fastest, easiest way to organize your finances. Quicken works just like your checkbook, so it's easy to learn and use. Quicken manages all of your finances, bank accounts, credit cards, investments, and loans. You can even pay your bills online.

SurfMonkey

MediaLive, Inc

SurfMonkey is a web browser and online service for kids ages 6-12 that makes the Internet safe, fun, and easy. A talking monkey guides children through web sites and chat rooms, and can read their e-mail out loud. Children cannot go to inappropriate web sites, parents can screen e-mail messages, and chat messages are monitored.

VAIO Smart Keyboard

Sony Electronics

VAIO Smart Keyboard software operates your new easy to use programmable USB keyboard. Six programmable buttons enable you to launch your favorite applications, open frequently used files, access Explorer, or even open your web browser with just the click of a button.

WinFax® Basic Edition

Symantec Corporation

WinFax Basic Edition incorporates an easy-to-use interface that allows you to send and receive faxes easily. Upgrade to WinFax Pro to receive additional features.

About Your Recovery CDs

Application Recovery CD(s)

Sony Electronics

The Application Recovery CD program allows you to reinstall individual applications and device drivers. Use it to restore corrupted or accidentally erased files.

System Recovery CD(s)

Sony Electronics

The System Recovery CD program allows you to restore the software titles that shipped with your computer if they become corrupted or are erased accidentally. It can be used only to restore the hard disk of the Sony computer you purchased.

For Answers to Your Software Questions

Sony Service Center

For the Sony Service Center nearest you, call at 1-888-4SONYPC (1-888-476-6972).

Acrobat® Reader, Adobe PhotoDeluxe® Business Edition , Adobe Premiere® LE (Adobe Systems Incorporated)

Web site http://www.adobe.com/
phone 206-628-2746 (fee-based support)
fax 206-628-5737
e-mail techdocs@adobe.com
hours M-F, 6 AM-5 PM PT

America Online® (America Online)

Web site http://www.aol.com/
phone 800-827-3338
hours 7 days a week, 6 AM - 2 PM ET

AT&T WorldNet® Service (AT&T)

Web site http://www.att.net/*
phone 800-400-1447
e-mail worldnet@attmail.com
hours 7 days a week, 24 hours a day

* You must be a WorldNet Service customer to access online support.

CompuServe® Interactive (CompuServe Interactive, Inc.)

Web site http://www.compuserve.com/
phone 800-848-8990
hours M-F, 8 AM - 1 AM ET, S-S 10 AM - 10 PM ET

Dr. Solomon's® Anti-Virus (Dr. Solomon's Software Inc.)

Web site http://www.drsolomon.com/
phone 888-377-6566
e-mail support@us.drsolomon.com
hours 7 days a week, 24 hours a day

EarthLink Sprint TotalAccess (EarthLink Network, Inc.)

Web site http://help.earthlink.net/techsupport/
phone 800-395-8410
e-mail support@earthlink.net
hours 7 days a week, 24 hours a day

Easy Internet Access (Encompass, Inc.)

Web site http://www.encmpss.com/
phone 800-927-3000
hours 7 days a week, 24 hours a day

MotorHead (Gremlin Interactive Ltd.)

Web site http://www.gremlin.com/
phone 888-4SONYPC (888-476-6972)
hours 7 days a week, 24 hours a day

Windows® 98 Operating System, Works, Money, Encarta, Internet Explorer (Microsoft Corporation)

Web site http://www.microsoft.com/support/
phone 888-4SONYPC (888-476-6972)*
hours 7 days a week, 24 hours a day
* Support from 1-888-4SONYPC is free of charge for 90 days after the original date of purchase.

Netscape Communicator® (Netscape Communications Corporation)

Web site http://www.netscape.com/
phone 888-4SONYPC (888-476-6972)*
hours 7 days a week, 24 hours a day
* Support from 1-888-4SONYPC is free of charge for 90 days after the original date of purchase.

Prodigy Internet (Prodigy Communications Corporation.)

Web site http://www.prodigy.com/
phone 800-PRODIGY
hours 7 AM - 3 AM ET

Quicken® Basic (Intuit Inc.)

Web site http://www.intuit.com/support/
phone 900-555-4688
hours 7 days a week, 24 hours a day

SurfMonkey (MediaLive, Inc.)

Web site http://www.surfmonkey.com/support/Sub_support.html
phone 408-556-2060
e-mail support@surfmonkey.com
hours 9AM-10PM PT everyday

WinFax® Basic Edition (Symantec Corporation.)

Web site http://www.symantec.com/techsupp/
phone 800-798-0850
fax 800-554-4403 in North America
541-984-2490 outside North America

Specifications

Model **PCV-E518DS**
Processor 500 MHz Pentium® III
Hard Disk Drive 17.28 GB
Standard SDRAM 128 MB PC-100 SDRAM, expandable to 256 MB
Video RAM 8 MB SDRAM
MPEG "Sony Tuned" MPEG Digital Video supports full-screen video playback
Graphics 3D 2X AGP graphics acceleration (Matrox)
Sound Capabilities 3D Positional Audio (Aureal A3D)
Diskette Drive 3.5" 1.44 MB FDD
CD-RW Drive CD-RW Drive (4X max. CD-R writing, 2X max. CD-RW writing, 24X max. reading)
Modem K56flex technology/V.90 compatible data/fax modem[1]
Expansion Capabilities One PCI slot
One additional hard disk drive bay
Connection Capabilities (Front) USB port
i.LINK port (4-pin)
Connection Capabilities (Rear) Optional Keyboard (PS/2-style)
Mouse (PS/2-style)
USB port
Serial port
Parallel (printer)
Game/MIDI
Headphones
Line In
Microphone
VGA Monitor
S-Link (Control-A1)
Optical Digital Audio Out
Two i.LINK ports (6-pin)[2]
Modem line (RJ-11)
Phone line (RJ-11)
Supplied Accessories VAIO Smart keyboard
Sony two-button mouse
RJ-11 phone cable
Power cord
Service 90-day limited service. Extendible to one year from original date of purchase upon registration[3]
Limited Warranty 90-day parts/labor standard. Extendible to one year from original date of purchase upon registration[4]

Power Requirements 200 watts maximum
Dimensions 7" (w) x 12" (h) x 13 3/4" (d) (178mm x 304mm x 330mm)
Weight 17 lbs. (7.71 kg)
Operating Temperature 50º F to 95º F (+10º C to 35º C)

[1] Maximum speed for faxing is 14.4 kbytes/s. Your modem is capable of downloading at 56 kbytes/s using K56flex technology or V.90. Your phone service, online service, or Internet Service Provider however, may not support this technology or operate at this speed.

[2] Six-pin i-LINK connectors on the rear of the system each supply 10V to 12V. The combined total wattage that can be supplied by the two connectors is 6 watts.

[3] Certain restrictions apply

[4] Certain restrictions apply

Specifications are subject to change without notice.

This product meets the standards of the International Energy Star Program for energy efficiency.

© 1999 Sony Electronics Inc. Reproduction in w hole or in part w ithout w ritten permission is prohibited. All rights reserved.

Read Me First

Welcome

Congratulations on your purchase of the Sony VAIO Digital Studio Computer. Sony has combined leading-edge technology in audio, video, computing, and communications to provide you with state-of-the-art personal computing.

Features

 For a complete description of the specifications of your VAIO Digital Studio Computer, see Specifications.

- **Exceptional performance:** Your computer includes a brand new Intel® Pentium® III processor, a CD-RW drive, and a V.90 compatible data/fax modem.*

* Actual upload and download speeds may vary due to line conditions, ISP support, and government regulations.

- **CD-RW drive:** This drive is the ideal solution for making backups and data archiving, with the ability to store up to 650 MB* of removable, rewritable storage on a single rewritable CD. Save your movies to CD-R or CD-RW media and share videos and images with family and friends.

***** 530 MB after formatting.

- **VAIO Smart Keyboard:** This USB keyboard has programmable shortcut buttons for launching your favorite programs or accessing the Internet.
- **Sony audio and video quality:** High-fidelity positional 3D audio system (A3D), high-powered 3D graphics (AGP), and "Sony-Tuned" MPEG digital video playback enable you to take advantage of today's advanced multimedia applications, games, and entertainment software.
- **S-Link (Control-A1):** This technology allows you to build a database of all your music and video CDs and then record your favorite audio selections on MiniDiscs. Use your computer with a 200 disc mega-storage CD changer and a MiniDisc recording deck.
- **i.LINK (IEEE 1394):** Three built-in i.LINK ports provide you with maximum digital connection capability. The i.LINK name and logo identify a digital interface (IEEE 1394) for high speed communication. By using your VAIO Digital Studio Computer, a Sony Digital Handycam® Camcorder, the DVgate software preinstalled on your computer, and the i.LINK (IEEE 1394) interface, you can easily create and edit your own home videos.
- **Optical Digital Audio Output:** This high-quality digital interface transmits digital audio data via light pulses. Transfer crystal clear digital audio to your MiniDisc recorder.
- **Digital Studio Software**: Enjoy all of your computer's audio and video capabilities with component-like applications that allow you to creatively manipulate digital still images, video clips, and audio tracks.
- **50 free hours of Internet access:** Use the Internet for up to 50 free hours when you sign up with GTE (no credit card required). Limit of two hours per day. Free access expires after 50 hours or 90 days after signing up--whichever occurs first.
- **Preinstalled software titles**: All the software on your computer is preinstalled, configured, and ready for you to use right out of the box.
- **Windows® 98**: Your system includes the latest operating system from Microsoft.
- **Communications:** Access popular online services, browse the Internet, send faxes, and more.

Unpacking Your Computer

Computer and Supplied Accessories

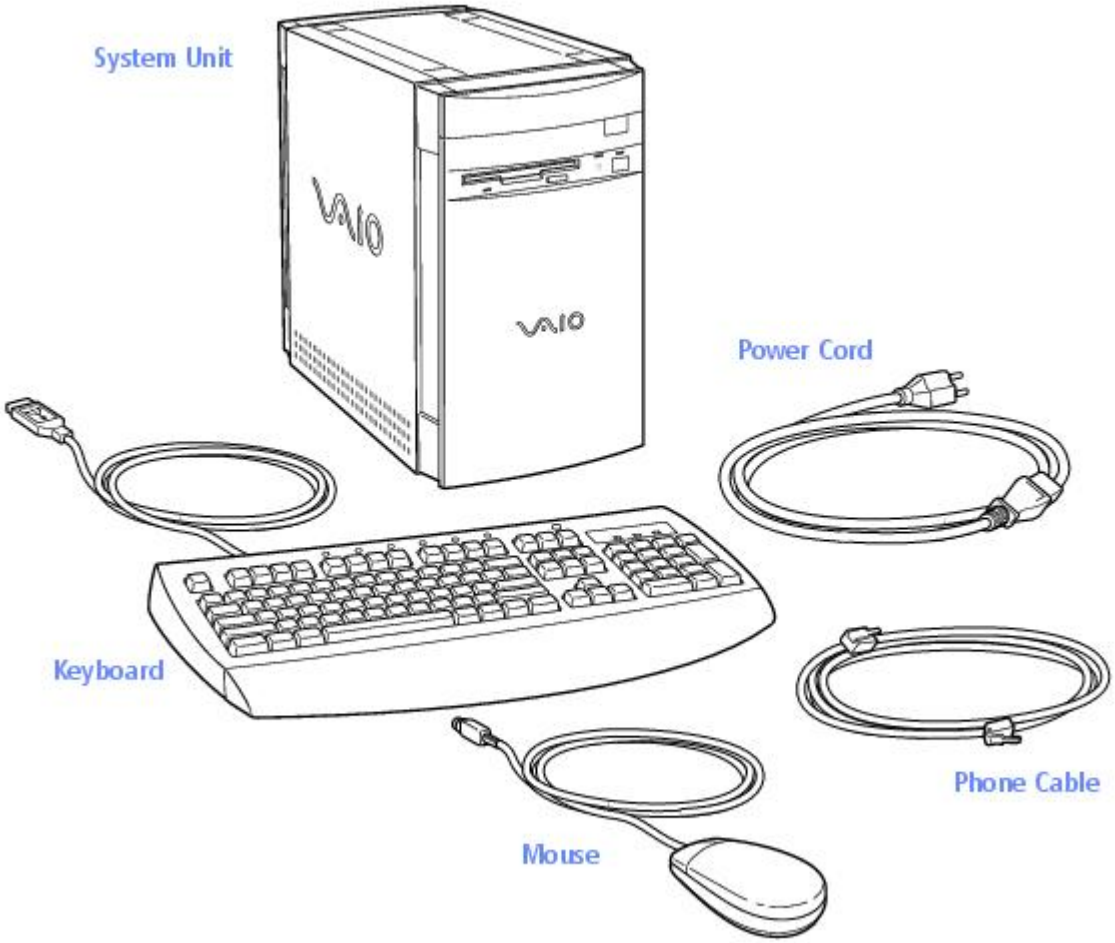

Manuals

- *Read Me First* (this manual) contains features and specifications of your computer. It also includes information on the applications included with your system, how to contact software vendors, and last minute troubleshooting tips.
- The *VAIO Digital Studio Computer User Guide* describes how to get started with your computer, find help, and solve common problems.
- The *Microsoft® Windows®98 Getting Started* manual explains how to use the basic features of the Windows operating system.

Recovery CDs

- System Recovery CD(s)
- Application Recovery CD(s)

Other

- Setting up your VAIO Digital Studio Computer (poster)
- Packet containing special product offers

Software Library

The Software Library contains the Microsoft software license agreement, Sony end-user license agreement, and the following CDs:

- Adobe PhotoDeluxe® Business Edition 3.0
- Gremlin Interactive Ltd. MotorHead
- Microsoft® Encarta® 99 Encyclopedia
- Microsoft® Money/Microsoft® Works

Back Panel Overview

The back panel of your computer contains the connectors where you plug in supplied and optional accessories. The icons on the back panel serve as a map to help you locate the connectors on your computer.

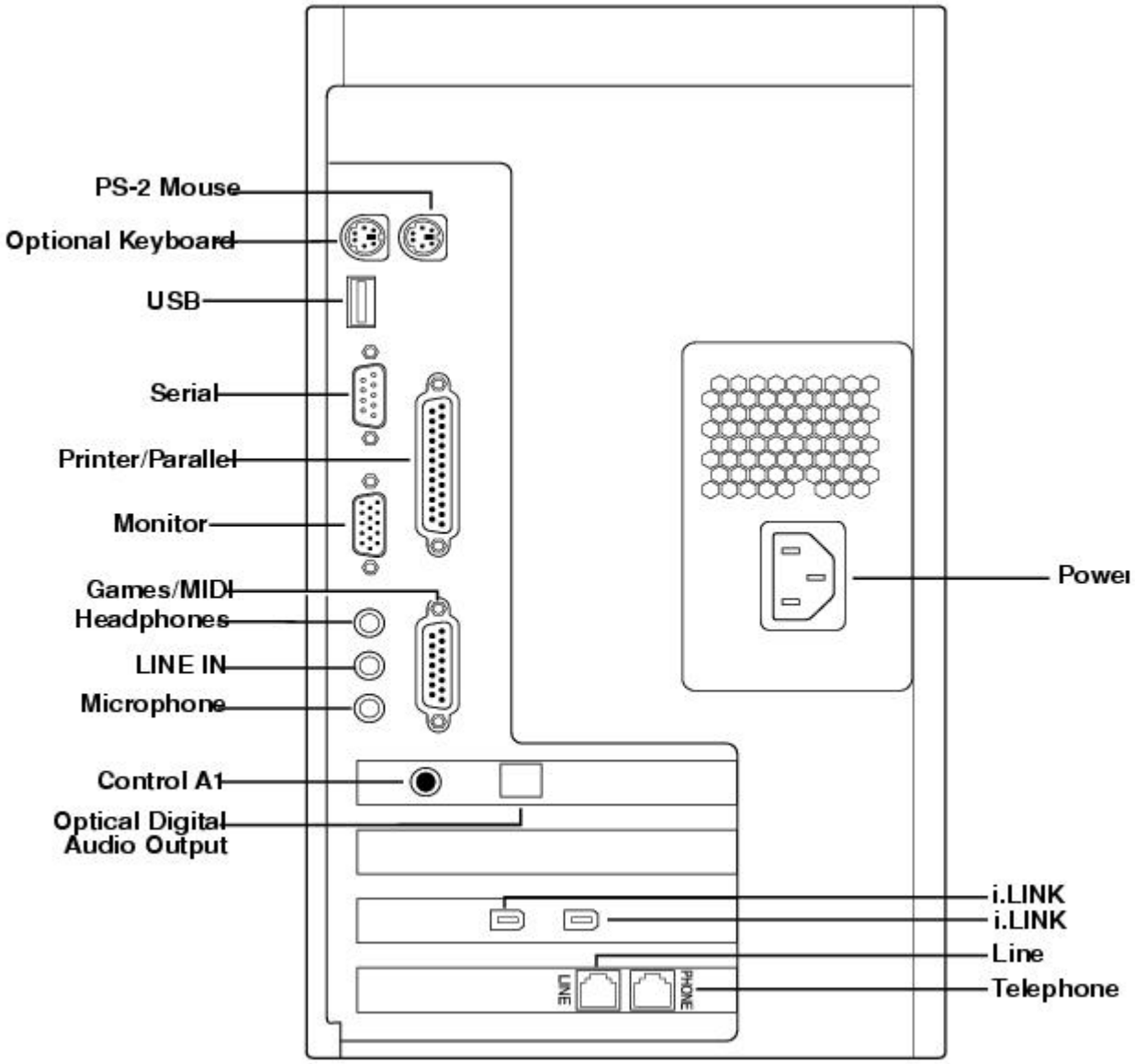

For your convenience, your computer includes USB and i.LINK connectors on both the front and back panels, allowing you to connect to either set of connectors. i.LINK connectors on the back of your system are 6-pin connectors.

Front Panel Overview

The front panel of your VAIO Digital Studio Computer allows for access to the diskette and CD-RW drives. It also includes USB and i.LINK ports to connect USB devices, CD changers, MiniDisc drives, or other components.

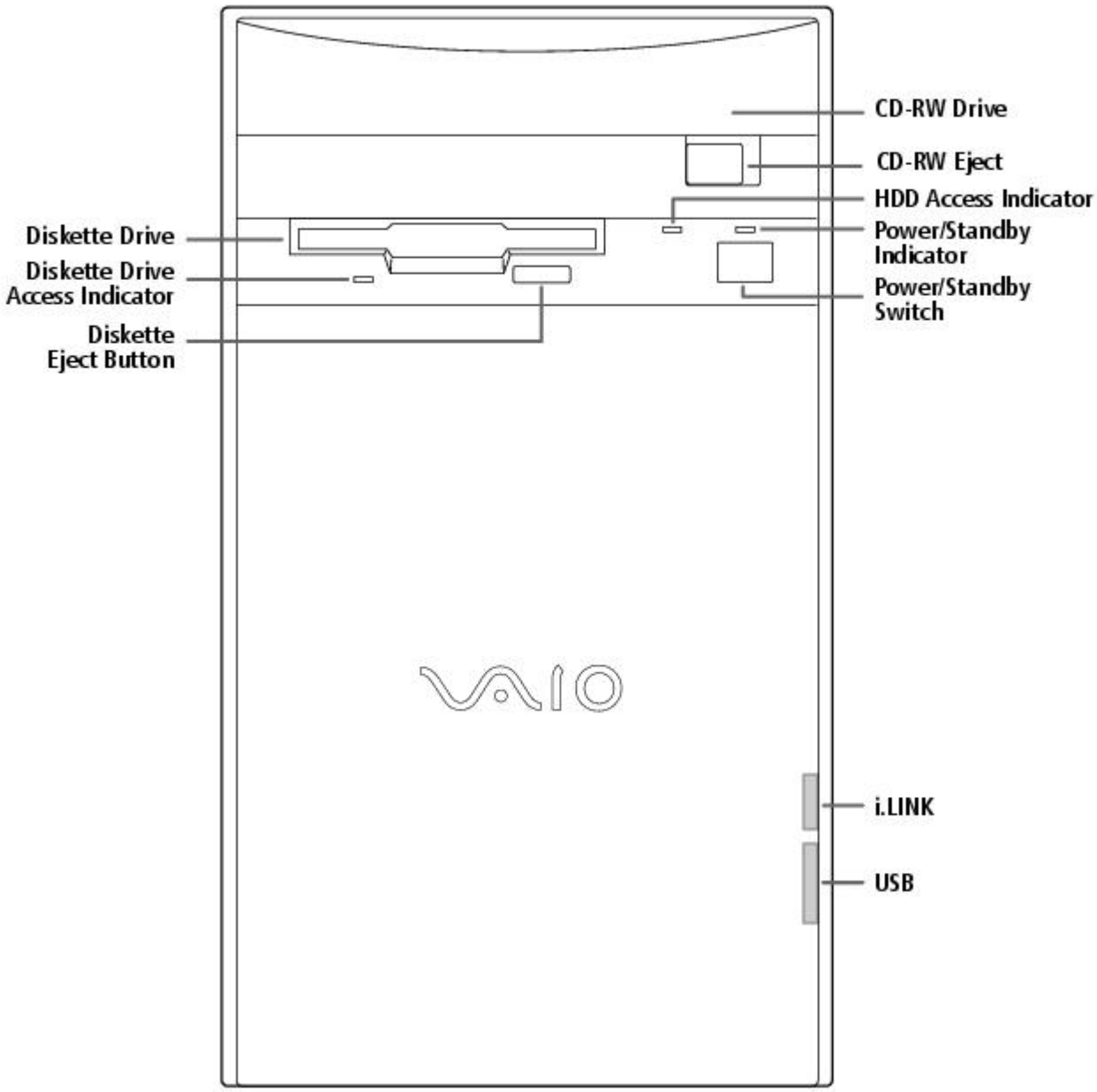

For your convenience, your computer includes USB and i.LINK connectors on both the front and back panels, allowing you to connect to either set of connectors. The i.LINK connector on the front of your system is a 4-pin connector.

Supplementary Information

For the most recent version of this manual, see the online version of Read Me First. You can access this document from the Windows Start Menu by selecting Programs/VAIO Documentation.

Hard Drive Partition

In order to improve the performance of your computer's DVgate Motion software, the hard disk drive on your computer has been formatted with two partitions, C and D. DVgate Motion saves files to the D partition. This prevents large video captures from consuming the available space on your C partition. To maintain optimum performance of DVgate Motion, you should defragment regularly.

VAIO Smart Keyboard Default Settings

The VAIO Smart Keyboard programmable buttons come with the following applications as their default settings:

S1 - Easy Internet Access Browser (Internet)

S2 - Outlook 98 (Mail)

S3 - MotorHead (Game)

S4 - Microsoft® Works (Work)

S5 - Quicken 99 Basic (Finance)

S6 - VAIO Documentation (Help)

All six buttons are reprogrammable.

Using The Standby Mode

To Put Your Computer into Standby Mode

When you are done using your computer, you can put it in Standby mode rather than turn it off completely. There are four ways to put your computer into Standby mode.

- Touch the power switch on the front panel.
- Click Shut Down at the bottom of the Start menu to display the Shut Down Windows dialog box. Select Stand by, and then click OK.
- Press the Standby button on the VAIO Smart Keyboard (the half moon icon).
- Change the timer settings for Standby mode in the Control Panel, as follows:

1. From the Start menu, point to Settings and click Control Panel.
2. Click the Power Management icon.
3. On the Power Schemes tab, change the Power scheme to Home/Office Desk.
4. In the list box for System standby, select an interval of time.
5. Click the OK button and close the Control Panel.

To Resume from Standby Mode

There are two ways to resume system functionality when your computer is in Standby mode. Use either of the following methods.

- Press any key on your keyboard, such as the Enter key.
- Touch the power switch on the front panel.

It may take up to 30 seconds for your system to recover stored information and resume functionality. The screen remains blank while the system is resuming functionality.

Applications That Use the TWAIN Driver

Digital imaging applications, such as Adobe PhotoDeluxe®, allow you to transfer images to your computer from external devices, including scanners or digital cameras. For some devices, a TWAIN driver window appears on the screen. Always close the TWAIN driver window before exiting or minimizing a digital imaging application.

Restoring Outlook 98

For the Add New Components functionality to be available with Microsoft Outlook, you must first run the installation program for Outlook from the Application Recovery CD. When prompted to install the program, select Exit. This decompresses the software, making the Add New Components functionality available.

Inserting Add-in Boards

Your VAIO Digital Studio Computer accommodates PCI add-in boards up to 7.7 inches in length.

Using Devices Connected to the i.LINK (IEEE 1394), S-Link (Control-A1), and Optical Digital Audio Output Connectors

For the latest information on devices known to be compatible with the state-of the-art audio, video, and graphics capabilities of your VAIO computer, check the Sony web site at http://www.sony.com/pcsupport.

Connecting to i.LINK Ports

Your VAIO computer includes a 4-pin i.LINK connector on the front of the system and two 6-pin i.LINK connectors on the back of the system. A 6-pin i.LINK connector can supply power from the computer to the connected device if the device is equipped with a 6-pin connector. Each 6-pin connector supplies 10V to 12V. The total power supplied by both 6-pin i.LINK connectors cannot exceed 6 watts. A 4-pin i.LINK connector cannot supply power to a connected device.

Capturing and Editing Digital Video Clips

- You can capture digital video clips using a digital video camera recorder and DVgate Motion software. Once the clips are saved as AVI files, they can be edited using DVgate Motion, DVgate Clip, or Adobe Premiere® LE. You cannot capture digital video clips directly using the Capture menu in Adobe Premiere LE. Adobe Premiere LE supports an analog capture board for capturing clips. Your VAIO computer is designed for digital video input.
- If there is no audio data associated with an AVI file, the message "Codec compression error" appears. If you do not wish to associate audio with your AVI file, you can add muted sound data by recording audio with the mute option enabled.
- For best performance, when editing AVI files in Adobe Premiere LE, you should use the default setup parameters that shipped with your system. If you change the default setup and want to reinitialize the parameters, follow these steps:

    1. In the Adobe Premiere LE application, select Compression from the Make menu. The Compression Settings dialog box appears.
    2. In the Method list box, select Sony DV software CODEC.
    3. Click OK to close the screen.
    4. From the Make menu, select Preset. The Preset dialog box appears.
    5. Select the parameters for Time Base, Compress, Output, and Preview Option settings as indicated below.

[Time base]

Time base - 29.97fps (required)

[Compress]

File type - AVI (required)
Compress Program Method - Sony DV software CODEC (required)
Compress Program Depth - Millions colors (No other options)
Quality (No control for this item)
Option: Frames per second - 30 (required)
Option: Basic Key Frames (No control for this item)
Option: Optimize Still Off (recommended)
Data rate - Recompress Off (recommended)

[Output options]

Video - On (required)
Video Size - 720x480
4:3 Aspect - Off (required)
VideoType - Field 2 (recommended)
Audio - On (required)
Audio Rate - 44kHz (required)
Audio Format - 16 Bit Stereo or 16 Bit Monaural (required)
Audio Type - Uncompress (required)
Audio Interleave - 1 frame (recommended)
- Less than 30 frames (required)

Audio Sync - 1.0 (required)
Audio Skew - 0.75 (recommended)
- Less than 1.0 (required)

[Preview Option]

Preview Window Size - 360x240

Note that Adobe Premiere LE does not save the Preview Window Size, but uses a default size of 320 x 213 each time the application launches. We recommend that you change this setting to 360 x 240 to improve the quality of preview clips when editing AVI files.

Using Alternate Browsers with America Online®

To use Internet Explorer or Netscape Navigator as your browser with America Online, follow these steps:

1. From the Start menu, point to Settings and then click Control Panel.
2. Click the Internet icon.
3. Click the Connection tab.
4. Click the "Connect to the Internet using local area network" radio button.
5. Click OK.

Using DVgate Motion

When capturing clips:

- Do not use DVgate Motion when the connected digital video peripheral is in Timer Recording mode, as this could produce a malfunction in the peripheral.
- Captures larger than 2 GB (9 minutes and 30 seconds) are automatically continued in a second file.
- You can record stereo audio (stereo 1) while capturing video. You cannot add audio on the stereo 2 track after capturing the video data.
- You cannot use different audio modes on the same tape. You should perform a separate capture for each audio mode you wish to use.
- DVgate Motion does not support hard disk compression. You should not use disk compression if you are planning to work with DVgate Motion.
- Title data is saved in the flash memory of a digital video camera and is not transferred to tape by DVgate Motion.
- To avoid interruption of capture sessions, you should disable the screen saver.
- The drop frame compensation feature does not provide accurate compensation adjustments for tapes recorded in LP mode.
- For tapes that include a mixture of both SP and LP mode, the information displayed by the capture progress indicator may not be accurate.
- Make sure the video head of your digital video device is properly cleaned. Anomalies that you see in captured data could be due to dust or other particles on the video head.
    - The last frame captured is one frame before your selected [OUT] point. The frame you see immediately after clicking the [OUT] button is not captured.

When recording AVI files to tape:

- Do not use DVgate Motion when the connected digital video peripheral is in Timer Recording mode, as this could produce a malfunction in the peripheral.

- You can record only AVI files. MPEG files cannot be recorded.
- To avoid recording problems, such as a single frame appearing in multiple frames, close other applications on your system while recording.
- You cannot use different audio modes on the same tape. If you have AVI files that use different audio modes, they cannot be recorded at the same time, but must be recorded separately.
- Do not attempt to work with AVI files that are smaller than 4 MB.
- DVgate Motion does not support hard disk compression. You should not use disk compression if you are planning to work with DVgate Motion.
- In order to maximize recording capabilities, video and audio data are not available while you are recording.

If DVgate Motion indicates that frames have been dropped, you should try closing all open applications, or you may need to defragment your hard drive.

Restoring Audio Drivers

When you restore the audio drivers from the Application Recovery CD, you need to restart your system to use these drivers. In the Add New Hardware wizard that appears when you restart, click the Next button until you are prompted for the location of the drivers. The audio drivers are located on the Application Recovery CD in G:\drivers\audio\AL98091701\English.

Using AC-3® to Optical Digital Audio Output

MiniDisc player/recorders, DAT player/recorders, and older digital receivers do not support Dolby® Digital (AC-3). You should not use the AC-3 to Optical Digital Audio Output option unless you are using a device that supports Dolby Digital. Please refer to the manual supplied with your equipment to determine if it supports Dolby Digital. If you are unsure and you have selected the AC-3 to Optical Digital Audio Output option, turn down the volume on your equipment before using the DVD player.

Using America Online or Sony Online Support with WinFax® Basic Edition

Once you have configured WinFax Basic Edition, it is automatically available for your use. You cannot use America Online or Sony Online Support when the automatic fax receive feature of WinFax Basic Edition is on. To disable this feature, right click the WinFax icon in the task tray at the bottom right corner of your screen, and then select Exit.

Memory Upgrade Specifications

When upgrading memory, use only 3.3V 64-bit PC-100 168 PIN SDRAM DIMM modules. For more information on Digital Studio Computer compatible memory, call Sony at 1-888-4SONYPC (1-888-476-6972).

About the Software On Your Computer

Your VAIO Digital Studio computer is ready to help you work, play, learn, and communicate as soon as you turn it on. This section gives you an overview of the activities you can perform with your software titles. For support information, see For Answers to Your Software Questions.

Adobe Acrobat® Reader

Adobe Systems Incorporated

Acrobat Reader software allows you to view, navigate, and print electronic documents in Adobe Portable Document Format (PDF), an open file format that is intended to preserve the fidelity of documents created on all major computer platforms.

Adobe PhotoDeluxe® Business Edition

Adobe Systems Incorporated

Create amazing photo effects with PhotoDeluxe. Without learning complex software, you can

enhance, restore, and be creative with your photos. Includes built-in guided activities, stock photos, clip art, and templates to assist you.

Adobe Premiere® LE

Adobe Systems Incorporated

Adobe Premiere LE offers an interface and editing tool for producing movies for video, multimedia, or the web. View source clips and edited footage simultaneously in the monitor window. Create video clips up to three hours long with complete audio-video synchronization.

America Online®

America Online

America Online is the world's most popular Internet online service. Stay in touch with family and friends with Easy-to-Use E-mail, manage your personal finances, get the latest news and sports scores, and chat with thousands of others who share your interests.

AT&T WorldNet® Service

AT&T

Fast, reliable Internet access from AT&T WorldNet Service. AT&T WorldNet Service provides web-based e-mail, a personalized start page from Excite, easy access to the Excite search engine, free web pages, online and live agent technical support, instant messaging, and special shopping discounts at Market Square.

CompuServe®

CompuServe, Inc.

CompuServe is the most comprehensive source of organized business and educational information online today. CompuServe allows you to access the vastness of the Internet without wasting time wading through it. Maximize your time online with CompuServe.

Digital Media Park

Sony Electronics

An integrated suite of multimedia cataloging and playback programs including Media Bar, Media Library, Media Showcase, and MiniDisc Editor. Manage your music by cataloging your entire CD collection, and then create custom MiniDiscs of your favorite songs.

Dr. Solomon's® Anti-Virus

Dr Solomon's Software Inc.

Dr. Solomon's Anti-Virus provides the most comprehensive defense against the spread of viruses, including macro viruses. It can scan inside compressed files and automatically protects your system against viruses sent via e-mail or Internet download.

DVgate Motion

Sony Electronics

Connect a digital video camera recorder to the i.LINK connector and capture your own video clips. You can edit the clips from your video, add others, and combine clips into new movie segments.

DVgate Still

Sony Electronics

Connect a digital video camera recorder to the i.LINK connector and capture your own still images. You can save your images in a variety of popular file formats.

EarthLink Sprint TotalAccess

EarthLink Network, Inc.

An Internet Service Provider that supplies access, information, and assistance to its customers, introducing them to the Internet. Member benefits include e-mail, newsgroups, a Personal Start Page, a free 6 MB web site, a member magazine, and 24-hour technical support.

Microsoft® Encarta® 99 Encyclopedia

Microsoft Corporation

Microsoft Encarta Encyclopedia combines current, comprehensive content with up-to-date multimedia technology, providing users with unique, engaging learning experiences. With the 1999 edition, Encarta provides a wealth of information resources and unique interactive features

Microsoft® Internet Explorer for Windows® 98

Microsoft Corporation

Internet Explorer delivers the web the way you want it. It's safe, easy to use, and you can personalize how you access the web. Outlook Express and other tools in Internet Explorer also help you have a great experience when you are on the web!

Microsoft® Money 99

Microsoft Corporation

Microsoft Money 99 is personal finance software that lets you perform your financial tasks, everything from paying bills to planning for the future, in a smarter, faster way. With Money's online services, you can pay bills and bank from the comfort of home.

Microsoft® Outlook® 98

Microsoft Corporation

Outlook 98 is Microsoft's premier messaging and collaboration client. It combines the leading support for Internet standards-based messaging systems with integrated calendar, contact, and task-management features.

Microsoft® Works

Microsoft Corporation

Works provides users with the right set of core tools that allows them to write letters and reports, track family and friends with the address book, manage home finances, and create a home inventory.

MotorHead

Gremlin Interactive Ltd.

MotorHead is realistic arcade-racing; high-velocity entertainment that puts you behind the wheel for 3D pure racing action. Power across Europe and USA in the Transatlantic Speed League, where second place is simply not an option.

Netscape Communicator®

Netscape Communications

Netscape Communicator is the all-in-one Internet tool that makes it easy to browse the web, send Internet e-mail, chat, read newsgroups, and compose great web documents.

PictureGear

Sony Electronics

This image management software displays images from your hard drive, a Sony digital still camera, or a Sony Mavica® camera. The images appear in a convenient light-table format, so that you can easily view the contents of an entire folder.

Prodigy Internet

Prodigy Communications Corporation

An Internet service that helps you find what you need online faster and smarter. Prodigy delivers powerful online content, such as sports scores, stock quotes, news, and easy access to Excite , plus a personal e-mail account and quality customer service, all at a competitive price.

Quicken® Basic 99

Intuit, Inc

Quicken is the fastest, easiest way to organize your finances. Quicken works just like your checkbook, so it's easy to learn and use. Quicken manages all of your finances, bank accounts, credit cards, investments, and loans. You can even pay your bills online.

SurfMonkey

MediaLive, Inc

SurfMonkey is a web browser and online service for kids ages 6-12 that makes the Internet safe, fun, and easy. A talking monkey guides children through web sites and chat rooms, and can read their e-mail out loud. Children cannot go to inappropriate web sites, parents can screen e-mail messages, and chat messages are monitored.

VAIO Smart Keyboard

Sony Electronics

VAIO Smart Keyboard software operates your new easy to use programmable USB keyboard. Six programmable buttons enable you to launch your favorite applications, open frequently used files, access Explorer, or even open your web browser with just the click of a button.

WinFax® Basic Edition

Symantec Corporation

WinFax Basic Edition incorporates an easy-to-use interface that allows you to send and receive faxes easily. Upgrade to WinFax Pro to receive additional features.

About Your Recovery CDs

Application Recovery CD(s)

Sony Electronics

The Application Recovery CD program allows you to reinstall individual applications and device drivers. Use it to restore corrupted or accidentally erased files.

System Recovery CD(s)

Sony Electronics

The System Recovery CD program allows you to restore the software titles that shipped with your computer if they become corrupted or are erased accidentally. It can be used only to restore the hard disk of the Sony computer you purchased.

For Answers to Your Software Questions

Sony Service Center

For the Sony Service Center nearest you, call at 1-888-4SONYPC (1-888-476-6972).

Acrobat® Reader, Adobe PhotoDeluxe® Business Edition , Adobe Premiere® LE (Adobe Systems Incorporated)

Web site http://www.adobe.com/
phone 206-628-2746 (fee-based support)
fax 206-628-5737
e-mail techdocs@adobe.com
hours M-F, 6 AM-5 PM PT

America Online® (America Online)

Web site http://www.aol.com/
phone 800-827-3338
hours 7 days a week, 6 AM - 2 PM ET

AT&T WorldNet® Service (AT&T)

Web site http://www.att.net/*
phone 800-400-1447
e-mail worldnet@attmail.com
hours 7 days a week, 24 hours a day

* You must be a WorldNet Service customer to access online support.

CompuServe® Interactive (CompuServe Interactive, Inc.)

Web site http://www.compuserve.com/
phone 800-848-8990
hours M-F, 8 AM - 1 AM ET, S-S 10 AM - 10 PM ET

Dr. Solomon's® Anti-Virus (Dr. Solomon's Software Inc.)

Web site http://www.drsolomon.com/
phone 888-377-6566
e-mail support@us.drsolomon.com
hours 7 days a week, 24 hours a day

EarthLink Sprint TotalAccess (EarthLink Network, Inc.)

Web site http://help.earthlink.net/techsupport/
phone 800-395-8410
e-mail support@earthlink.net
hours 7 days a week, 24 hours a day

Easy Internet Access (Encompass, Inc.)

Web site http://www.encmpss.com/
phone 800-927-3000
hours 7 days a week, 24 hours a day

MotorHead (Gremlin Interactive Ltd.)

Web site http://www.gremlin.com/
phone 888-4SONYPC (888-476-6972)
hours 7 days a week, 24 hours a day

Windows® 98 Operating System, Works, Money, Encarta, Internet Explorer (Microsoft Corporation)

Web site http://www.microsoft.com/support/
phone 888-4SONYPC (888-476-6972)*
hours 7 days a week, 24 hours a day
* Support from 1-888-4SONYPC is free of charge for 90 days after the original date of purchase.

Netscape Communicator® (Netscape Communications Corporation)

Web site http://www.netscape.com/
phone 888-4SONYPC (888-476-6972)*
hours 7 days a week, 24 hours a day
* Support from 1-888-4SONYPC is free of charge for 90 days after the original date of purchase.

Prodigy Internet (Prodigy Communications Corporation.)

Web site http://www.prodigy.com/
phone 800-PRODIGY
hours 7 AM - 3 AM ET

Quicken® Basic (Intuit Inc.)

Web site http://www.intuit.com/support/
phone 900-555-4688
hours 7 days a week, 24 hours a day

SurfMonkey (MediaLive, Inc.)

Web site http://www.surfmonkey.com/support/Sub_support.html
phone 408-556-2060
e-mail support@surfmonkey.com
hours 9AM-10PM PT everyday

WinFax® Basic Edition (Symantec Corporation.)

Web site http://www.symantec.com/techsupp/
phone 800-798-0850
fax 800-554-4403 in North America
541-984-2490 outside North America

Specifications

Model **PCV-E518DS**
Processor 500 MHz Pentium® III
Hard Disk Drive 17.28 GB
Standard SDRAM 128 MB PC-100 SDRAM, expandable to 256 MB
Video RAM 8 MB SDRAM
MPEG "Sony Tuned" MPEG Digital Video supports full-screen video playback
Graphics 3D 2X AGP graphics acceleration (Matrox)
Sound Capabilities 3D Positional Audio (Aureal A3D)
Diskette Drive 3.5" 1.44 MB FDD
CD-RW Drive CD-RW Drive (4X max. CD-R writing, 2X max. CD-RW writing, 24X max. reading)
Modem K56flex technology/V.90 compatible data/fax modem[1]
Expansion Capabilities One PCI slot
One additional hard disk drive bay
Connection Capabilities (Front) USB port
i.LINK port (4-pin)
Connection Capabilities (Rear) Optional Keyboard (PS/2-style)
Mouse (PS/2-style)
USB port
Serial port
Parallel (printer)
Game/MIDI
Headphones
Line In
Microphone
VGA Monitor
S-Link (Control-A1)
Optical Digital Audio Out
Two i.LINK ports (6-pin)[2]
Modem line (RJ-11)
Phone line (RJ-11)
Supplied Accessories VAIO Smart keyboard
Sony two-button mouse
RJ-11 phone cable
Power cord
Service 90-day limited service. Extendible to one year from original date of purchase upon registration[3]
Limited Warranty 90-day parts/labor standard. Extendible to one year from original date of purchase upon registration[4]

Power Requirements 200 watts maximum
Dimensions 7" (w) x 12" (h) x 13 3/4" (d) (178mm x 304mm x 330mm)
Weight 17 lbs. (7.71 kg)
Operating Temperature 50º F to 95º F (+10º C to 35º C)

[1] Maximum speed for faxing is 14.4 kbytes/s. Your modem is capable of downloading at 56 kbytes/s using K56flex technology or V.90. Your phone service, online service, or Internet Service Provider however, may not support this technology or operate at this speed.

[2] Six-pin i-LINK connectors on the rear of the system each supply 10V to 12V. The combined total wattage that can be supplied by the two connectors is 6 watts.

[3] Certain restrictions apply

[4] Certain restrictions apply

Specifications are subject to change without notice.

This product meets the standards of the International Energy Star Program for energy efficiency.

© 1999 Sony Electronics Inc. Reproduction in w hole or in part w ithout w ritten permission is prohibited. All rights reserved.

Read Me First

Welcome

Congratulations on your purchase of the Sony VAIO Digital Studio Computer. Sony has combined leading-edge technology in audio, video, computing, and communications to provide you with state-of-the-art personal computing.

Features

 For a complete description of the specifications of your VAIO Digital Studio Computer, see Specifications.

- **Exceptional performance:** Your computer includes a brand new Intel® Pentium® III processor, a CD-RW drive, and a V.90 compatible data/fax modem.*

* Actual upload and download speeds may vary due to line conditions, ISP support, and government regulations.

- **CD-RW drive:** This drive is the ideal solution for making backups and data archiving, with the ability to store up to 650 MB* of removable, rewritable storage on a single rewritable CD. Save your movies to CD-R or CD-RW media and share videos and images with family and friends.

***** 530 MB after formatting.

- **VAIO Smart Keyboard:** This USB keyboard has programmable shortcut buttons for launching your favorite programs or accessing the Internet.
- **Sony audio and video quality:** High-fidelity positional 3D audio system (A3D), high-powered 3D graphics (AGP), and "Sony-Tuned" MPEG digital video playback enable you to take advantage of today's advanced multimedia applications, games, and entertainment software.
- **S-Link (Control-A1):** This technology allows you to build a database of all your music and video CDs and then record your favorite audio selections on MiniDiscs. Use your computer with a 200 disc mega-storage CD changer and a MiniDisc recording deck.
- **i.LINK (IEEE 1394):** Three built-in i.LINK ports provide you with maximum digital connection capability. The i.LINK name and logo identify a digital interface (IEEE 1394) for high speed communication. By using your VAIO Digital Studio Computer, a Sony Digital Handycam® Camcorder, the DVgate software preinstalled on your computer, and the i.LINK (IEEE 1394) interface, you can easily create and edit your own home videos.
- **Optical Digital Audio Output:** This high-quality digital interface transmits digital audio data via light pulses. Transfer crystal clear digital audio to your MiniDisc recorder.
- **Digital Studio Software**: Enjoy all of your computer's audio and video capabilities with component-like applications that allow you to creatively manipulate digital still images, video clips, and audio tracks.
- **50 free hours of Internet access:** Use the Internet for up to 50 free hours when you sign up with GTE (no credit card required). Limit of two hours per day. Free access expires after 50 hours or 90 days after signing up--whichever occurs first.
- **Preinstalled software titles**: All the software on your computer is preinstalled, configured, and ready for you to use right out of the box.
- **Windows® 98**: Your system includes the latest operating system from Microsoft.
- **Communications:** Access popular online services, browse the Internet, send faxes, and more.

Unpacking Your Computer

Computer and Supplied Accessories

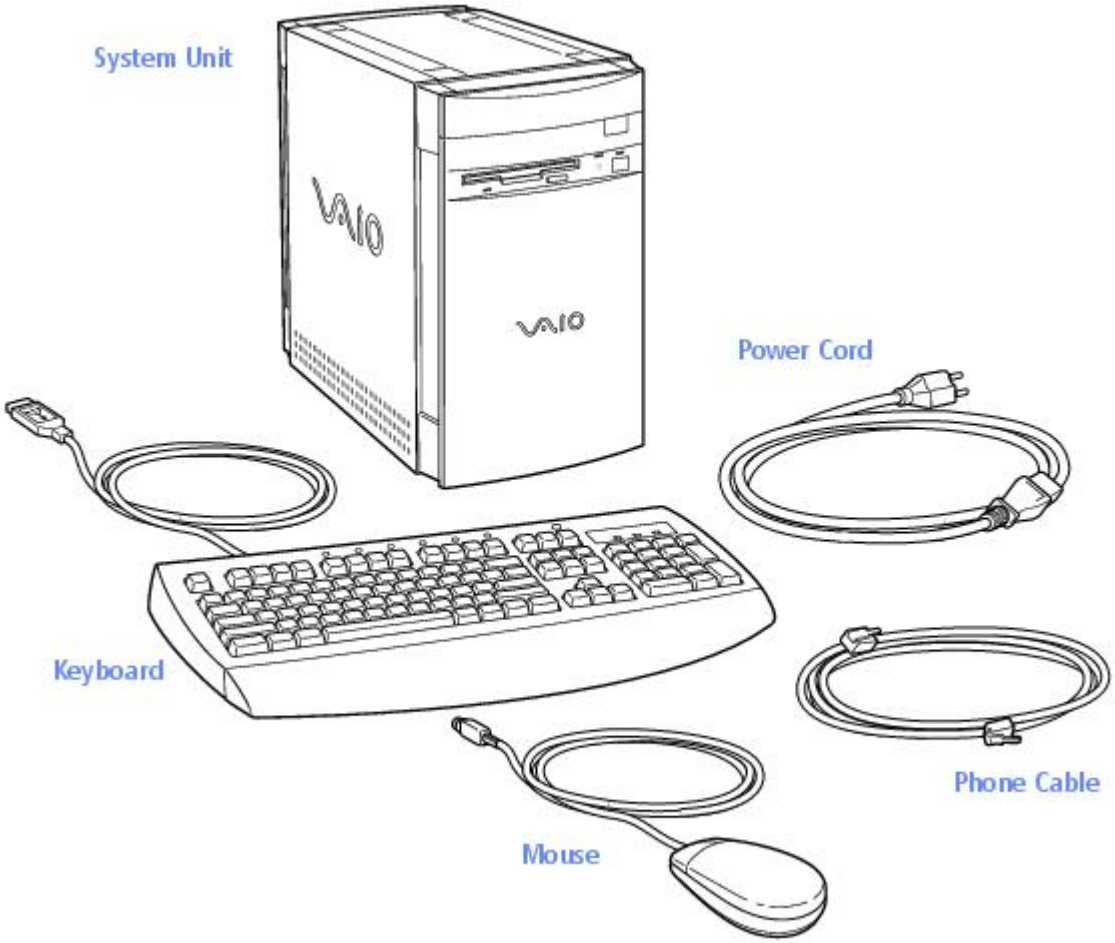

Manuals

- *Read Me First* (this manual) contains features and specifications of your computer. It also includes information on the applications included with your system, how to contact software vendors, and last minute troubleshooting tips.
- The *VAIO Digital Studio Computer User Guide* describes how to get started with your computer, find help, and solve common problems.
- The *Microsoft® Windows®98 Getting Started* manual explains how to use the basic features of the Windows operating system.

Recovery CDs

- System Recovery CD(s)
- Application Recovery CD(s)

Other

- Setting up your VAIO Digital Studio Computer (poster)
- Packet containing special product offers

Software Library

The Software Library contains the Microsoft software license agreement, Sony end-user license agreement, and the following CDs:

- Adobe PhotoDeluxe® Business Edition 3.0
- Gremlin Interactive Ltd. MotorHead
- Microsoft® Encarta® 99 Encyclopedia
- Microsoft® Money/Microsoft® Works

Back Panel Overview

The back panel of your computer contains the connectors where you plug in supplied and optional accessories. The icons on the back panel serve as a map to help you locate the connectors on your computer.

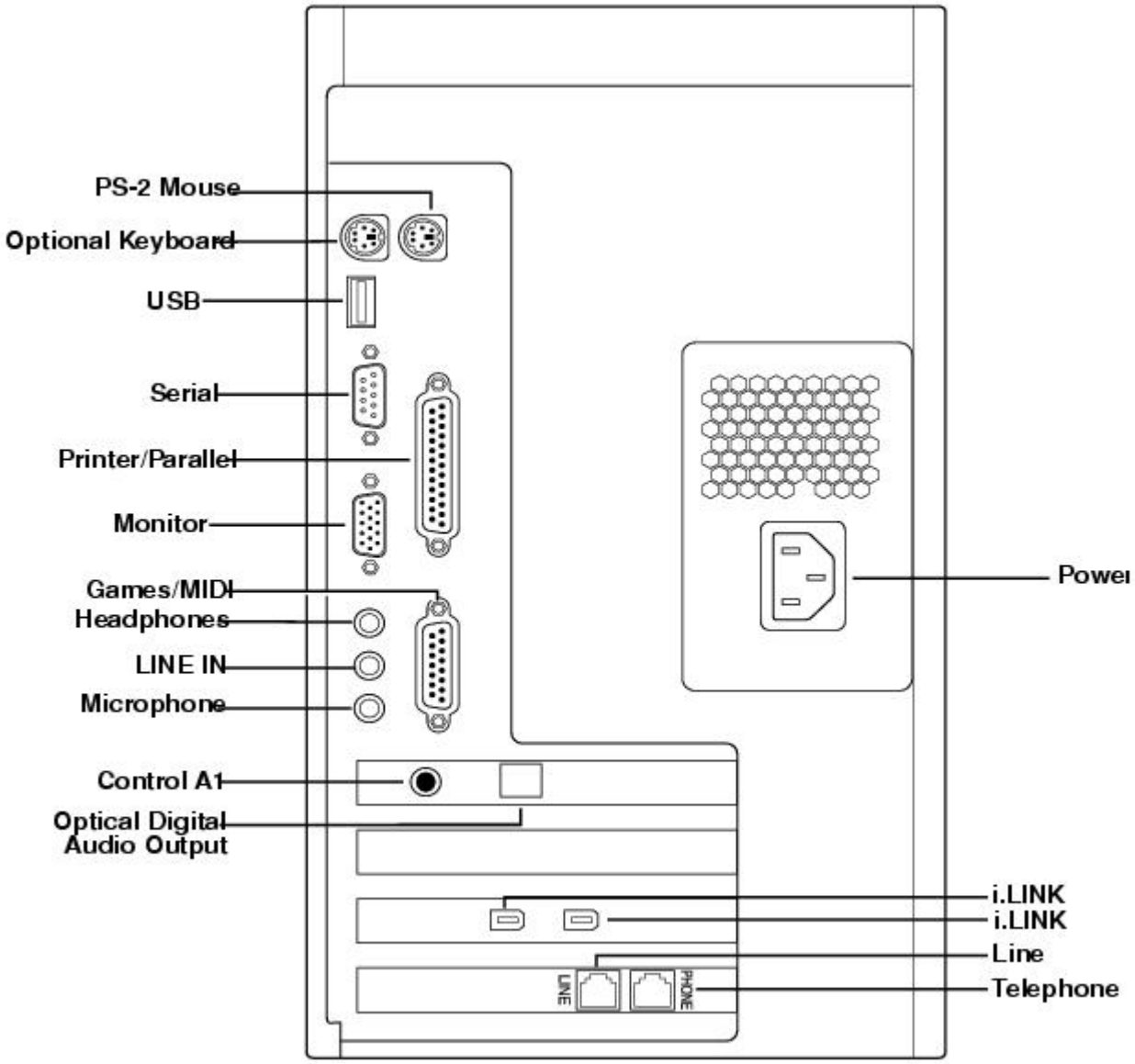

For your convenience, your computer includes USB and i.LINK connectors on both the front and back panels, allowing you to connect to either set of connectors. i.LINK connectors on the back of your system are 6-pin connectors.

Front Panel Overview

The front panel of your VAIO Digital Studio Computer allows for access to the diskette and CD-RW drives. It also includes USB and i.LINK ports to connect USB devices, CD changers, MiniDisc drives, or other components.

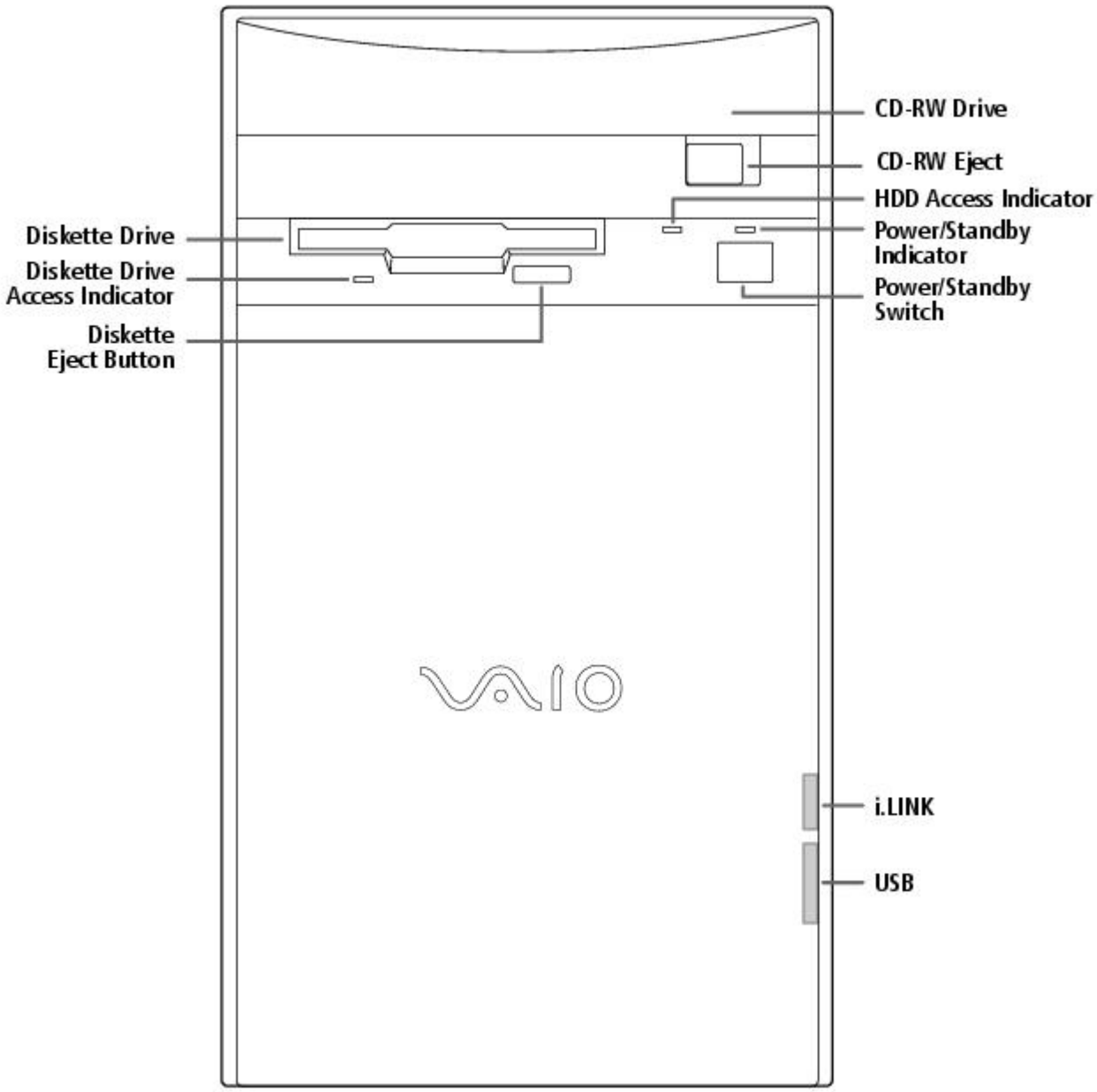

For your convenience, your computer includes USB and i.LINK connectors on both the front and back panels, allowing you to connect to either set of connectors. The i.LINK connector on the front of your system is a 4-pin connector.

Supplementary Information

For the most recent version of this manual, see the online version of Read Me First. You can access this document from the Windows Start Menu by selecting Programs/VAIO Documentation.

Hard Drive Partition

In order to improve the performance of your computer's DVgate Motion software, the hard disk drive on your computer has been formatted with two partitions, C and D. DVgate Motion saves files to the D partition. This prevents large video captures from consuming the available space on your C partition. To maintain optimum performance of DVgate Motion, you should defragment regularly.

VAIO Smart Keyboard Default Settings

The VAIO Smart Keyboard programmable buttons come with the following applications as their default settings:

S1 - Easy Internet Access Browser (Internet)

S2 - Outlook 98 (Mail)

S3 - MotorHead (Game)

S4 - Microsoft® Works (Work)

S5 - Quicken 99 Basic (Finance)

S6 - VAIO Documentation (Help)

All six buttons are reprogrammable.

Using The Standby Mode

To Put Your Computer into Standby Mode

When you are done using your computer, you can put it in Standby mode rather than turn it off completely. There are four ways to put your computer into Standby mode.

- Touch the power switch on the front panel.
- Click Shut Down at the bottom of the Start menu to display the Shut Down Windows dialog box. Select Stand by, and then click OK.
- Press the Standby button on the VAIO Smart Keyboard (the half moon icon).
- Change the timer settings for Standby mode in the Control Panel, as follows:

1. From the Start menu, point to Settings and click Control Panel.
2. Click the Power Management icon.
3. On the Power Schemes tab, change the Power scheme to Home/Office Desk.
4. In the list box for System standby, select an interval of time.
5. Click the OK button and close the Control Panel.

To Resume from Standby Mode

There are two ways to resume system functionality when your computer is in Standby mode. Use either of the following methods.

- Press any key on your keyboard, such as the Enter key.
- Touch the power switch on the front panel.

It may take up to 30 seconds for your system to recover stored information and resume functionality. The screen remains blank while the system is resuming functionality.

Applications That Use the TWAIN Driver

Digital imaging applications, such as Adobe PhotoDeluxe®, allow you to transfer images to your computer from external devices, including scanners or digital cameras. For some devices, a TWAIN driver window appears on the screen. Always close the TWAIN driver window before exiting or minimizing a digital imaging application.

Restoring Outlook 98

For the Add New Components functionality to be available with Microsoft Outlook, you must first run the installation program for Outlook from the Application Recovery CD. When prompted to install the program, select Exit. This decompresses the software, making the Add New Components functionality available.

Inserting Add-in Boards

Your VAIO Digital Studio Computer accommodates PCI add-in boards up to 7.7 inches in length.

Using Devices Connected to the i.LINK (IEEE 1394), S-Link (Control-A1), and Optical Digital Audio Output Connectors

For the latest information on devices known to be compatible with the state-of the-art audio, video, and graphics capabilities of your VAIO computer, check the Sony web site at http://www.sony.com/pcsupport.

Connecting to i.LINK Ports

Your VAIO computer includes a 4-pin i.LINK connector on the front of the system and two 6-pin i.LINK connectors on the back of the system. A 6-pin i.LINK connector can supply power from the computer to the connected device if the device is equipped with a 6-pin connector. Each 6-pin connector supplies 10V to 12V. The total power supplied by both 6-pin i.LINK connectors cannot exceed 6 watts. A 4-pin i.LINK connector cannot supply power to a connected device.

Capturing and Editing Digital Video Clips

- You can capture digital video clips using a digital video camera recorder and DVgate Motion software. Once the clips are saved as AVI files, they can be edited using DVgate Motion, DVgate Clip, or Adobe Premiere® LE. You cannot capture digital video clips directly using the Capture menu in Adobe Premiere LE. Adobe Premiere LE supports an analog capture board for capturing clips. Your VAIO computer is designed for digital video input.
- If there is no audio data associated with an AVI file, the message "Codec compression error" appears. If you do not wish to associate audio with your AVI file, you can add muted sound data by recording audio with the mute option enabled.
- For best performance, when editing AVI files in Adobe Premiere LE, you should use the default setup parameters that shipped with your system. If you change the default setup and want to reinitialize the parameters, follow these steps:

    1. In the Adobe Premiere LE application, select Compression from the Make menu. The Compression Settings dialog box appears.
    2. In the Method list box, select Sony DV software CODEC.
    3. Click OK to close the screen.
    4. From the Make menu, select Preset. The Preset dialog box appears.
    5. Select the parameters for Time Base, Compress, Output, and Preview Option settings as indicated below.

[Time base]

Time base - 29.97fps (required)

[Compress]

File type - AVI (required)
Compress Program Method - Sony DV software CODEC (required)
Compress Program Depth - Millions colors (No other options)
Quality (No control for this item)
Option: Frames per second - 30 (required)
Option: Basic Key Frames (No control for this item)
Option: Optimize Still Off (recommended)
Data rate - Recompress Off (recommended)

[Output options]

Video - On (required)
Video Size - 720x480
4:3 Aspect - Off (required)
VideoType - Field 2 (recommended)
Audio - On (required)
Audio Rate - 44kHz (required)
Audio Format - 16 Bit Stereo or 16 Bit Monaural (required)
Audio Type - Uncompress (required)
Audio Interleave - 1 frame (recommended)
- Less than 30 frames (required)

Audio Sync - 1.0 (required)
Audio Skew - 0.75 (recommended)
- Less than 1.0 (required)

[Preview Option]

Preview Window Size - 360x240

Note that Adobe Premiere LE does not save the Preview Window Size, but uses a default size of 320 x 213 each time the application launches. We recommend that you change this setting to 360 x 240 to improve the quality of preview clips when editing AVI files.

Using Alternate Browsers with America Online®

To use Internet Explorer or Netscape Navigator as your browser with America Online, follow these steps:

1. From the Start menu, point to Settings and then click Control Panel.
2. Click the Internet icon.
3. Click the Connection tab.
4. Click the "Connect to the Internet using local area network" radio button.
5. Click OK.

Using DVgate Motion

When capturing clips:

- Do not use DVgate Motion when the connected digital video peripheral is in Timer Recording mode, as this could produce a malfunction in the peripheral.
- Captures larger than 2 GB (9 minutes and 30 seconds) are automatically continued in a second file.
- You can record stereo audio (stereo 1) while capturing video. You cannot add audio on the stereo 2 track after capturing the video data.
- You cannot use different audio modes on the same tape. You should perform a separate capture for each audio mode you wish to use.
- DVgate Motion does not support hard disk compression. You should not use disk compression if you are planning to work with DVgate Motion.
- Title data is saved in the flash memory of a digital video camera and is not transferred to tape by DVgate Motion.
- To avoid interruption of capture sessions, you should disable the screen saver.
- The drop frame compensation feature does not provide accurate compensation adjustments for tapes recorded in LP mode.
- For tapes that include a mixture of both SP and LP mode, the information displayed by the capture progress indicator may not be accurate.
- Make sure the video head of your digital video device is properly cleaned. Anomalies that you see in captured data could be due to dust or other particles on the video head.
    - The last frame captured is one frame before your selected [OUT] point. The frame you see immediately after clicking the [OUT] button is not captured.

When recording AVI files to tape:

- Do not use DVgate Motion when the connected digital video peripheral is in Timer Recording mode, as this could produce a malfunction in the peripheral.

- You can record only AVI files. MPEG files cannot be recorded.
- To avoid recording problems, such as a single frame appearing in multiple frames, close other applications on your system while recording.
- You cannot use different audio modes on the same tape. If you have AVI files that use different audio modes, they cannot be recorded at the same time, but must be recorded separately.
- Do not attempt to work with AVI files that are smaller than 4 MB.
- DVgate Motion does not support hard disk compression. You should not use disk compression if you are planning to work with DVgate Motion.
- In order to maximize recording capabilities, video and audio data are not available while you are recording.

If DVgate Motion indicates that frames have been dropped, you should try closing all open applications, or you may need to defragment your hard drive.

Restoring Audio Drivers

When you restore the audio drivers from the Application Recovery CD, you need to restart your system to use these drivers. In the Add New Hardware wizard that appears when you restart, click the Next button until you are prompted for the location of the drivers. The audio drivers are located on the Application Recovery CD in G:\drivers\audio\AL98091701\English.

Using AC-3® to Optical Digital Audio Output

MiniDisc player/recorders, DAT player/recorders, and older digital receivers do not support Dolby® Digital (AC-3). You should not use the AC-3 to Optical Digital Audio Output option unless you are using a device that supports Dolby Digital. Please refer to the manual supplied with your equipment to determine if it supports Dolby Digital. If you are unsure and you have selected the AC-3 to Optical Digital Audio Output option, turn down the volume on your equipment before using the DVD player.

Using America Online or Sony Online Support with WinFax® Basic Edition

Once you have configured WinFax Basic Edition, it is automatically available for your use. You cannot use America Online or Sony Online Support when the automatic fax receive feature of WinFax Basic Edition is on. To disable this feature, right click the WinFax icon in the task tray at the bottom right corner of your screen, and then select Exit.

Memory Upgrade Specifications

When upgrading memory, use only 3.3V 64-bit PC-100 168 PIN SDRAM DIMM modules. For more information on Digital Studio Computer compatible memory, call Sony at 1-888-4SONYPC (1-888-476-6972).

About the Software On Your Computer

Your VAIO Digital Studio computer is ready to help you work, play, learn, and communicate as soon as you turn it on. This section gives you an overview of the activities you can perform with your software titles. For support information, see For Answers to Your Software Questions.

Adobe Acrobat® Reader

Adobe Systems Incorporated

Acrobat Reader software allows you to view, navigate, and print electronic documents in Adobe Portable Document Format (PDF), an open file format that is intended to preserve the fidelity of documents created on all major computer platforms.

Adobe PhotoDeluxe® Business Edition

Adobe Systems Incorporated

Create amazing photo effects with PhotoDeluxe. Without learning complex software, you can

enhance, restore, and be creative with your photos. Includes built-in guided activities, stock photos, clip art, and templates to assist you.

Adobe Premiere® LE

Adobe Systems Incorporated

Adobe Premiere LE offers an interface and editing tool for producing movies for video, multimedia, or the web. View source clips and edited footage simultaneously in the monitor window. Create video clips up to three hours long with complete audio-video synchronization.

America Online®

America Online

America Online is the world's most popular Internet online service. Stay in touch with family and friends with Easy-to-Use E-mail, manage your personal finances, get the latest news and sports scores, and chat with thousands of others who share your interests.

AT&T WorldNet® Service

AT&T

Fast, reliable Internet access from AT&T WorldNet Service. AT&T WorldNet Service provides web-based e-mail, a personalized start page from Excite, easy access to the Excite search engine, free web pages, online and live agent technical support, instant messaging, and special shopping discounts at Market Square.

CompuServe®

CompuServe, Inc.

CompuServe is the most comprehensive source of organized business and educational information online today. CompuServe allows you to access the vastness of the Internet without wasting time wading through it. Maximize your time online with CompuServe.

Digital Media Park

Sony Electronics

An integrated suite of multimedia cataloging and playback programs including Media Bar, Media Library, Media Showcase, and MiniDisc Editor. Manage your music by cataloging your entire CD collection, and then create custom MiniDiscs of your favorite songs.

Dr. Solomon's® Anti-Virus

Dr Solomon's Software Inc.

Dr. Solomon's Anti-Virus provides the most comprehensive defense against the spread of viruses, including macro viruses. It can scan inside compressed files and automatically protects your system against viruses sent via e-mail or Internet download.

DVgate Motion

Sony Electronics

Connect a digital video camera recorder to the i.LINK connector and capture your own video clips. You can edit the clips from your video, add others, and combine clips into new movie segments.

DVgate Still

Sony Electronics

Connect a digital video camera recorder to the i.LINK connector and capture your own still images. You can save your images in a variety of popular file formats.

EarthLink Sprint TotalAccess

EarthLink Network, Inc.

An Internet Service Provider that supplies access, information, and assistance to its customers, introducing them to the Internet. Member benefits include e-mail, newsgroups, a Personal Start Page, a free 6 MB web site, a member magazine, and 24-hour technical support.

Microsoft® Encarta® 99 Encyclopedia

Microsoft Corporation

Microsoft Encarta Encyclopedia combines current, comprehensive content with up-to-date multimedia technology, providing users with unique, engaging learning experiences. With the 1999 edition, Encarta provides a wealth of information resources and unique interactive features

Microsoft® Internet Explorer for Windows® 98

Microsoft Corporation

Internet Explorer delivers the web the way you want it. It's safe, easy to use, and you can personalize how you access the web. Outlook Express and other tools in Internet Explorer also help you have a great experience when you are on the web!

Microsoft® Money 99

Microsoft Corporation

Microsoft Money 99 is personal finance software that lets you perform your financial tasks, everything from paying bills to planning for the future, in a smarter, faster way. With Money's online services, you can pay bills and bank from the comfort of home.

Microsoft® Outlook® 98

Microsoft Corporation

Outlook 98 is Microsoft's premier messaging and collaboration client. It combines the leading support for Internet standards-based messaging systems with integrated calendar, contact, and task-management features.

Microsoft® Works

Microsoft Corporation

Works provides users with the right set of core tools that allows them to write letters and reports, track family and friends with the address book, manage home finances, and create a home inventory.

MotorHead

Gremlin Interactive Ltd.

MotorHead is realistic arcade-racing; high-velocity entertainment that puts you behind the wheel for 3D pure racing action. Power across Europe and USA in the Transatlantic Speed League, where second place is simply not an option.

Netscape Communicator®

Netscape Communications

Netscape Communicator is the all-in-one Internet tool that makes it easy to browse the web, send Internet e-mail, chat, read newsgroups, and compose great web documents.

PictureGear

Sony Electronics

This image management software displays images from your hard drive, a Sony digital still camera, or a Sony Mavica® camera. The images appear in a convenient light-table format, so that you can easily view the contents of an entire folder.

Prodigy Internet

Prodigy Communications Corporation

An Internet service that helps you find what you need online faster and smarter. Prodigy delivers powerful online content, such as sports scores, stock quotes, news, and easy access to Excite , plus a personal e-mail account and quality customer service, all at a competitive price.

Quicken® Basic 99

Intuit, Inc

Quicken is the fastest, easiest way to organize your finances. Quicken works just like your checkbook, so it's easy to learn and use. Quicken manages all of your finances, bank accounts, credit cards, investments, and loans. You can even pay your bills online.

SurfMonkey

MediaLive, Inc

SurfMonkey is a web browser and online service for kids ages 6-12 that makes the Internet safe, fun, and easy. A talking monkey guides children through web sites and chat rooms, and can read their e-mail out loud. Children cannot go to inappropriate web sites, parents can screen e-mail messages, and chat messages are monitored.

VAIO Smart Keyboard

Sony Electronics

VAIO Smart Keyboard software operates your new easy to use programmable USB keyboard. Six programmable buttons enable you to launch your favorite applications, open frequently used files, access Explorer, or even open your web browser with just the click of a button.

WinFax® Basic Edition

Symantec Corporation

WinFax Basic Edition incorporates an easy-to-use interface that allows you to send and receive faxes easily. Upgrade to WinFax Pro to receive additional features.

About Your Recovery CDs

Application Recovery CD(s)

Sony Electronics

The Application Recovery CD program allows you to reinstall individual applications and device drivers. Use it to restore corrupted or accidentally erased files.

System Recovery CD(s)

Sony Electronics

The System Recovery CD program allows you to restore the software titles that shipped with your computer if they become corrupted or are erased accidentally. It can be used only to restore the hard disk of the Sony computer you purchased.

For Answers to Your Software Questions

Sony Service Center

For the Sony Service Center nearest you, call at 1-888-4SONYPC (1-888-476-6972).

Acrobat® Reader, Adobe PhotoDeluxe® Business Edition , Adobe Premiere® LE (Adobe Systems Incorporated)

Web site http://www.adobe.com/
phone 206-628-2746 (fee-based support)
fax 206-628-5737
e-mail techdocs@adobe.com
hours M-F, 6 AM-5 PM PT

America Online® (America Online)

Web site http://www.aol.com/
phone 800-827-3338
hours 7 days a week, 6 AM - 2 PM ET

AT&T WorldNet® Service (AT&T)

Web site http://www.att.net/*
phone 800-400-1447
e-mail worldnet@attmail.com
hours 7 days a week, 24 hours a day

* You must be a WorldNet Service customer to access online support.

CompuServe® Interactive (CompuServe Interactive, Inc.)

Web site http://www.compuserve.com/
phone 800-848-8990
hours M-F, 8 AM - 1 AM ET, S-S 10 AM - 10 PM ET

Dr. Solomon's® Anti-Virus (Dr. Solomon's Software Inc.)

Web site http://www.drsolomon.com/
phone 888-377-6566
e-mail support@us.drsolomon.com
hours 7 days a week, 24 hours a day

EarthLink Sprint TotalAccess (EarthLink Network, Inc.)

Web site http://help.earthlink.net/techsupport/
phone 800-395-8410
e-mail support@earthlink.net
hours 7 days a week, 24 hours a day

Easy Internet Access (Encompass, Inc.)

Web site http://www.encmpss.com/
phone 800-927-3000
hours 7 days a week, 24 hours a day

MotorHead (Gremlin Interactive Ltd.)

Web site http://www.gremlin.com/
phone 888-4SONYPC (888-476-6972)
hours 7 days a week, 24 hours a day

Windows® 98 Operating System, Works, Money, Encarta, Internet Explorer (Microsoft Corporation)

Web site http://www.microsoft.com/support/
phone 888-4SONYPC (888-476-6972)*
hours 7 days a week, 24 hours a day
* Support from 1-888-4SONYPC is free of charge for 90 days after the original date of purchase.

Netscape Communicator® (Netscape Communications Corporation)

Web site http://www.netscape.com/
phone 888-4SONYPC (888-476-6972)*
hours 7 days a week, 24 hours a day
* Support from 1-888-4SONYPC is free of charge for 90 days after the original date of purchase.

Prodigy Internet (Prodigy Communications Corporation.)

Web site http://www.prodigy.com/
phone 800-PRODIGY
hours 7 AM - 3 AM ET

Quicken® Basic (Intuit Inc.)

Web site http://www.intuit.com/support/
phone 900-555-4688
hours 7 days a week, 24 hours a day

SurfMonkey (MediaLive, Inc.)

Web site http://www.surfmonkey.com/support/Sub_support.html
phone 408-556-2060
e-mail support@surfmonkey.com
hours 9AM-10PM PT everyday

WinFax® Basic Edition (Symantec Corporation.)

Web site http://www.symantec.com/techsupp/
phone 800-798-0850
fax 800-554-4403 in North America
541-984-2490 outside North America

Specifications

Model **PCV-E518DS**
Processor 500 MHz Pentium® III
Hard Disk Drive 17.28 GB
Standard SDRAM 128 MB PC-100 SDRAM, expandable to 256 MB
Video RAM 8 MB SDRAM
MPEG "Sony Tuned" MPEG Digital Video supports full-screen video playback
Graphics 3D 2X AGP graphics acceleration (Matrox)
Sound Capabilities 3D Positional Audio (Aureal A3D)
Diskette Drive 3.5" 1.44 MB FDD
CD-RW Drive CD-RW Drive (4X max. CD-R writing, 2X max. CD-RW writing, 24X max. reading)
Modem K56flex technology/V.90 compatible data/fax modem[1]
Expansion Capabilities One PCI slot
One additional hard disk drive bay
Connection Capabilities (Front) USB port
i.LINK port (4-pin)
Connection Capabilities (Rear) Optional Keyboard (PS/2-style)
Mouse (PS/2-style)
USB port
Serial port
Parallel (printer)
Game/MIDI
Headphones
Line In
Microphone
VGA Monitor
S-Link (Control-A1)
Optical Digital Audio Out
Two i.LINK ports (6-pin)[2]
Modem line (RJ-11)
Phone line (RJ-11)
Supplied Accessories VAIO Smart keyboard
Sony two-button mouse
RJ-11 phone cable
Power cord
Service 90-day limited service. Extendible to one year from original date of purchase upon registration[3]
Limited Warranty 90-day parts/labor standard. Extendible to one year from original date of purchase upon registration[4]

Power Requirements 200 watts maximum
Dimensions 7" (w) x 12" (h) x 13 3/4" (d) (178mm x 304mm x 330mm)
Weight 17 lbs. (7.71 kg)
Operating Temperature 50º F to 95º F (+10º C to 35º C)

[1] Maximum speed for faxing is 14.4 kbytes/s. Your modem is capable of downloading at 56 kbytes/s using K56flex technology or V.90. Your phone service, online service, or Internet Service Provider however, may not support this technology or operate at this speed.

[2] Six-pin i-LINK connectors on the rear of the system each supply 10V to 12V. The combined total wattage that can be supplied by the two connectors is 6 watts.

[3] Certain restrictions apply

[4] Certain restrictions apply

Specifications are subject to change without notice.

This product meets the standards of the International Energy Star Program for energy efficiency.

© 1999 Sony Electronics Inc. Reproduction in w hole or in part w ithout w ritten permission is prohibited. All rights reserved.

Read Me First

Welcome

Congratulations on your purchase of the Sony VAIO Digital Studio Computer. Sony has combined leading-edge technology in audio, video, computing, and communications to provide you with state-of-the-art personal computing.

Features

 For a complete description of the specifications of your VAIO Digital Studio Computer, see Specifications.

- **Exceptional performance:** Your computer includes a brand new Intel® Pentium® III processor, a CD-RW drive, and a V.90 compatible data/fax modem.*

* Actual upload and download speeds may vary due to line conditions, ISP support, and government regulations.

- **CD-RW drive:** This drive is the ideal solution for making backups and data archiving, with the ability to store up to 650 MB* of removable, rewritable storage on a single rewritable CD. Save your movies to CD-R or CD-RW media and share videos and images with family and friends.

***** 530 MB after formatting.

- **VAIO Smart Keyboard:** This USB keyboard has programmable shortcut buttons for launching your favorite programs or accessing the Internet.
- **Sony audio and video quality:** High-fidelity positional 3D audio system (A3D), high-powered 3D graphics (AGP), and "Sony-Tuned" MPEG digital video playback enable you to take advantage of today's advanced multimedia applications, games, and entertainment software.
- **S-Link (Control-A1):** This technology allows you to build a database of all your music and video CDs and then record your favorite audio selections on MiniDiscs. Use your computer with a 200 disc mega-storage CD changer and a MiniDisc recording deck.
- **i.LINK (IEEE 1394):** Three built-in i.LINK ports provide you with maximum digital connection capability. The i.LINK name and logo identify a digital interface (IEEE 1394) for high speed communication. By using your VAIO Digital Studio Computer, a Sony Digital Handycam® Camcorder, the DVgate software preinstalled on your computer, and the i.LINK (IEEE 1394) interface, you can easily create and edit your own home videos.
- **Optical Digital Audio Output:** This high-quality digital interface transmits digital audio data via light pulses. Transfer crystal clear digital audio to your MiniDisc recorder.
- **Digital Studio Software**: Enjoy all of your computer's audio and video capabilities with component-like applications that allow you to creatively manipulate digital still images, video clips, and audio tracks.
- **50 free hours of Internet access:** Use the Internet for up to 50 free hours when you sign up with GTE (no credit card required). Limit of two hours per day. Free access expires after 50 hours or 90 days after signing up--whichever occurs first.
- **Preinstalled software titles**: All the software on your computer is preinstalled, configured, and ready for you to use right out of the box.
- **Windows® 98**: Your system includes the latest operating system from Microsoft.
- **Communications:** Access popular online services, browse the Internet, send faxes, and more.

Unpacking Your Computer

Computer and Supplied Accessories

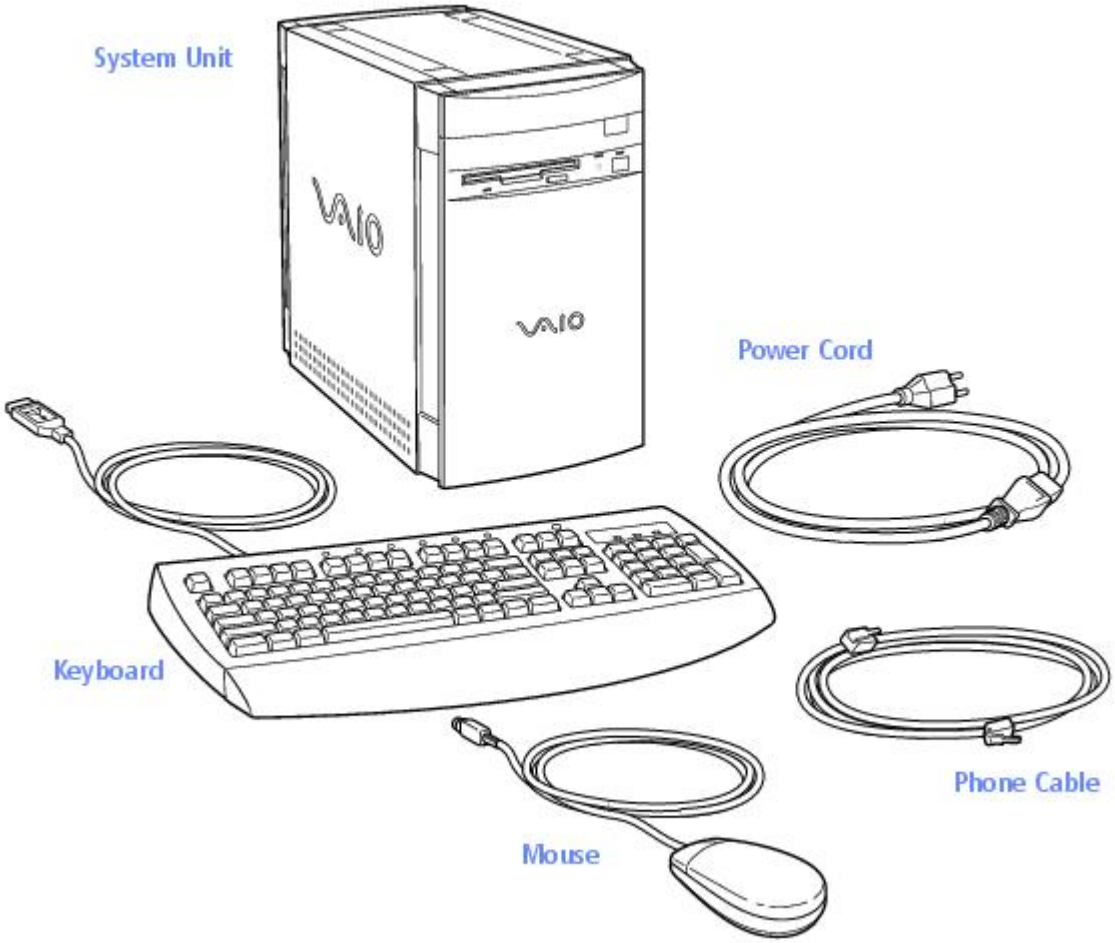

Manuals

- *Read Me First* (this manual) contains features and specifications of your computer. It also includes information on the applications included with your system, how to contact software vendors, and last minute troubleshooting tips.
- The *VAIO Digital Studio Computer User Guide* describes how to get started with your computer, find help, and solve common problems.
- The *Microsoft® Windows®98 Getting Started* manual explains how to use the basic features of the Windows operating system.

Recovery CDs

- System Recovery CD(s)
- Application Recovery CD(s)

Other

- Setting up your VAIO Digital Studio Computer (poster)
- Packet containing special product offers

Software Library

The Software Library contains the Microsoft software license agreement, Sony end-user license agreement, and the following CDs:

- Adobe PhotoDeluxe® Business Edition 3.0
- Gremlin Interactive Ltd. MotorHead
- Microsoft® Encarta® 99 Encyclopedia
- Microsoft® Money/Microsoft® Works

Back Panel Overview

The back panel of your computer contains the connectors where you plug in supplied and optional accessories. The icons on the back panel serve as a map to help you locate the connectors on your computer.

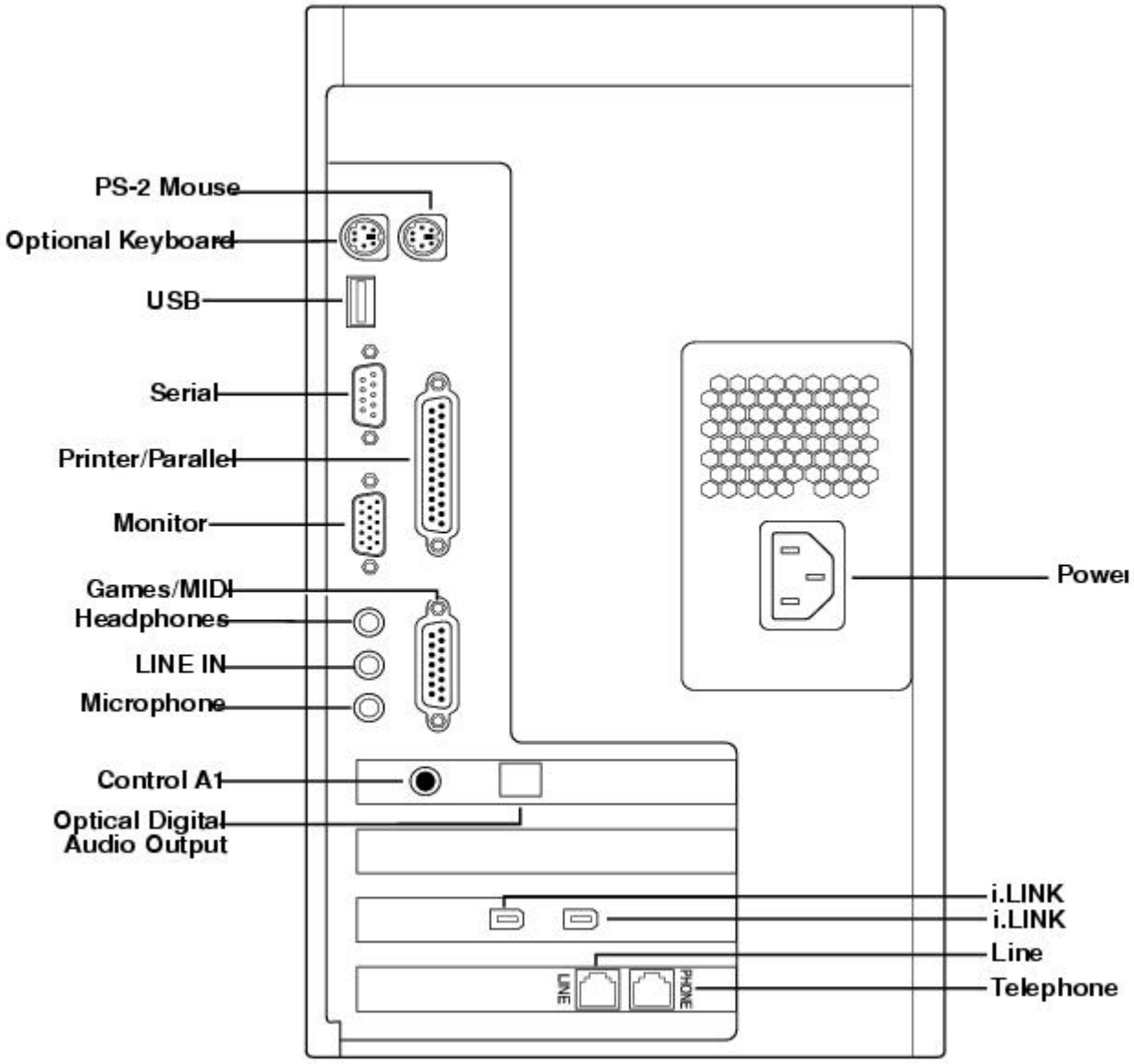

For your convenience, your computer includes USB and i.LINK connectors on both the front and back panels, allowing you to connect to either set of connectors. i.LINK connectors on the back of your system are 6-pin connectors.

Front Panel Overview

The front panel of your VAIO Digital Studio Computer allows for access to the diskette and CD-RW drives. It also includes USB and i.LINK ports to connect USB devices, CD changers, MiniDisc drives, or other components.

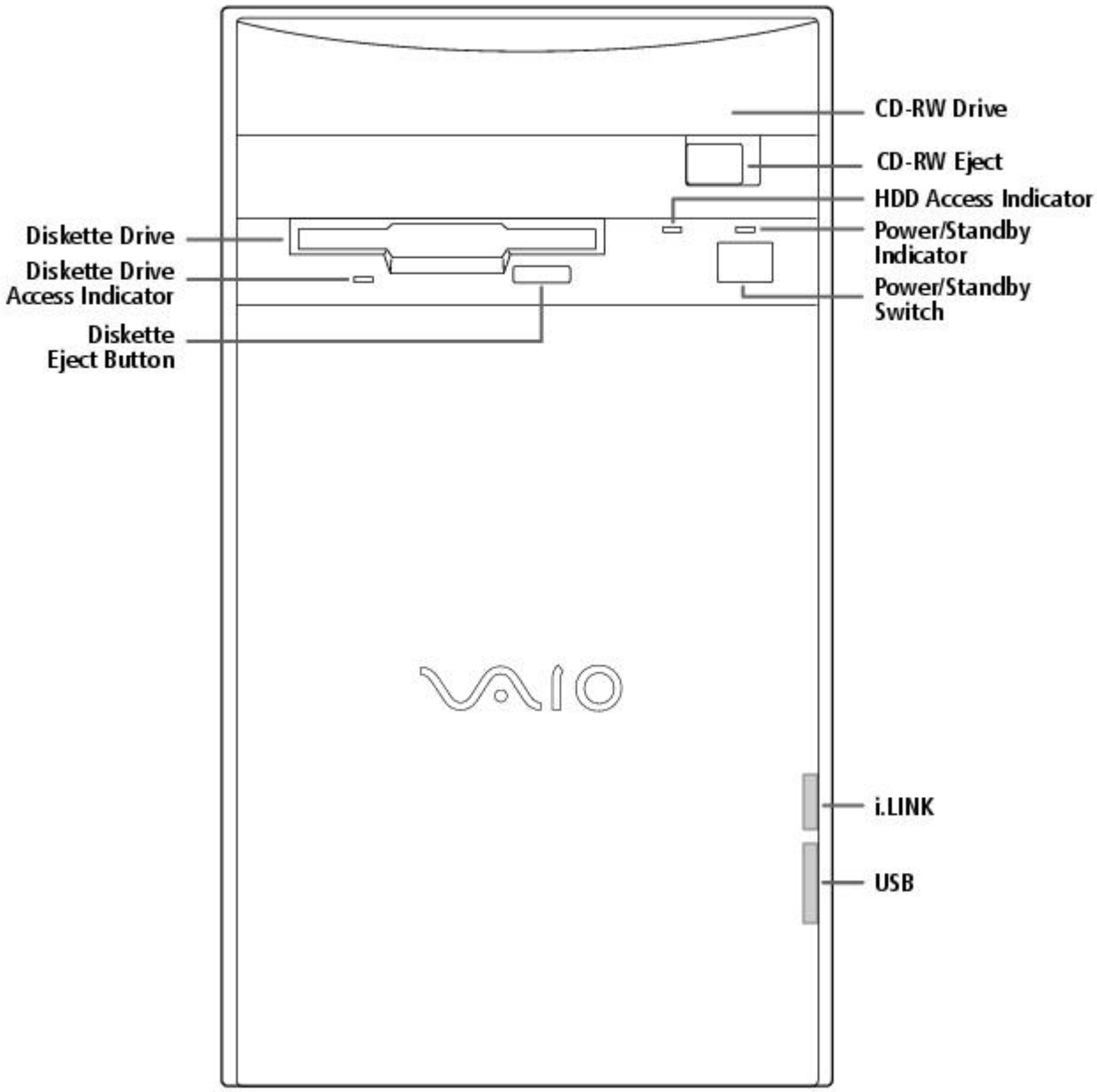

For your convenience, your computer includes USB and i.LINK connectors on both the front and back panels, allowing you to connect to either set of connectors. The i.LINK connector on the front of your system is a 4-pin connector.

Supplementary Information

For the most recent version of this manual, see the online version of Read Me First. You can access this document from the Windows Start Menu by selecting Programs/VAIO Documentation.

Hard Drive Partition

In order to improve the performance of your computer's DVgate Motion software, the hard disk drive on your computer has been formatted with two partitions, C and D. DVgate Motion saves files to the D partition. This prevents large video captures from consuming the available space on your C partition. To maintain optimum performance of DVgate Motion, you should defragment regularly.

VAIO Smart Keyboard Default Settings

The VAIO Smart Keyboard programmable buttons come with the following applications as their default settings:

S1 - Easy Internet Access Browser (Internet)

S2 - Outlook 98 (Mail)

S3 - MotorHead (Game)

S4 - Microsoft® Works (Work)

S5 - Quicken 99 Basic (Finance)

S6 - VAIO Documentation (Help)

All six buttons are reprogrammable.

Using The Standby Mode

To Put Your Computer into Standby Mode

When you are done using your computer, you can put it in Standby mode rather than turn it off completely. There are four ways to put your computer into Standby mode.

- Touch the power switch on the front panel.
- Click Shut Down at the bottom of the Start menu to display the Shut Down Windows dialog box. Select Stand by, and then click OK.
- Press the Standby button on the VAIO Smart Keyboard (the half moon icon).
- Change the timer settings for Standby mode in the Control Panel, as follows:

1. From the Start menu, point to Settings and click Control Panel.
2. Click the Power Management icon.
3. On the Power Schemes tab, change the Power scheme to Home/Office Desk.
4. In the list box for System standby, select an interval of time.
5. Click the OK button and close the Control Panel.

To Resume from Standby Mode

There are two ways to resume system functionality when your computer is in Standby mode. Use either of the following methods.

- Press any key on your keyboard, such as the Enter key.
- Touch the power switch on the front panel.

It may take up to 30 seconds for your system to recover stored information and resume functionality. The screen remains blank while the system is resuming functionality.

Applications That Use the TWAIN Driver

Digital imaging applications, such as Adobe PhotoDeluxe®, allow you to transfer images to your computer from external devices, including scanners or digital cameras. For some devices, a TWAIN driver window appears on the screen. Always close the TWAIN driver window before exiting or minimizing a digital imaging application.

Restoring Outlook 98

For the Add New Components functionality to be available with Microsoft Outlook, you must first run the installation program for Outlook from the Application Recovery CD. When prompted to install the program, select Exit. This decompresses the software, making the Add New Components functionality available.

Inserting Add-in Boards

Your VAIO Digital Studio Computer accommodates PCI add-in boards up to 7.7 inches in length.

Using Devices Connected to the i.LINK (IEEE 1394), S-Link (Control-A1), and Optical Digital Audio Output Connectors

For the latest information on devices known to be compatible with the state-of the-art audio, video, and graphics capabilities of your VAIO computer, check the Sony web site at http://www.sony.com/pcsupport.

Connecting to i.LINK Ports

Your VAIO computer includes a 4-pin i.LINK connector on the front of the system and two 6-pin i.LINK connectors on the back of the system. A 6-pin i.LINK connector can supply power from the computer to the connected device if the device is equipped with a 6-pin connector. Each 6-pin connector supplies 10V to 12V. The total power supplied by both 6-pin i.LINK connectors cannot exceed 6 watts. A 4-pin i.LINK connector cannot supply power to a connected device.

Capturing and Editing Digital Video Clips

- You can capture digital video clips using a digital video camera recorder and DVgate Motion software. Once the clips are saved as AVI files, they can be edited using DVgate Motion, DVgate Clip, or Adobe Premiere® LE. You cannot capture digital video clips directly using the Capture menu in Adobe Premiere LE. Adobe Premiere LE supports an analog capture board for capturing clips. Your VAIO computer is designed for digital video input.
- If there is no audio data associated with an AVI file, the message "Codec compression error" appears. If you do not wish to associate audio with your AVI file, you can add muted sound data by recording audio with the mute option enabled.
- For best performance, when editing AVI files in Adobe Premiere LE, you should use the default setup parameters that shipped with your system. If you change the default setup and want to reinitialize the parameters, follow these steps:

    1. In the Adobe Premiere LE application, select Compression from the Make menu. The Compression Settings dialog box appears.
    2. In the Method list box, select Sony DV software CODEC.
    3. Click OK to close the screen.
    4. From the Make menu, select Preset. The Preset dialog box appears.
    5. Select the parameters for Time Base, Compress, Output, and Preview Option settings as indicated below.

[Time base]

Time base - 29.97fps (required)

[Compress]

File type - AVI (required)
Compress Program Method - Sony DV software CODEC (required)
Compress Program Depth - Millions colors (No other options)
Quality (No control for this item)
Option: Frames per second - 30 (required)
Option: Basic Key Frames (No control for this item)
Option: Optimize Still Off (recommended)
Data rate - Recompress Off (recommended)

[Output options]

Video - On (required)
Video Size - 720x480
4:3 Aspect - Off (required)
VideoType - Field 2 (recommended)
Audio - On (required)
Audio Rate - 44kHz (required)
Audio Format - 16 Bit Stereo or 16 Bit Monaural (required)
Audio Type - Uncompress (required)
Audio Interleave - 1 frame (recommended)
- Less than 30 frames (required)

Audio Sync - 1.0 (required)
Audio Skew - 0.75 (recommended)
- Less than 1.0 (required)

[Preview Option]

Preview Window Size - 360x240

Note that Adobe Premiere LE does not save the Preview Window Size, but uses a default size of 320 x 213 each time the application launches. We recommend that you change this setting to 360 x 240 to improve the quality of preview clips when editing AVI files.

Using Alternate Browsers with America Online®

To use Internet Explorer or Netscape Navigator as your browser with America Online, follow these steps:

1. From the Start menu, point to Settings and then click Control Panel.
2. Click the Internet icon.
3. Click the Connection tab.
4. Click the "Connect to the Internet using local area network" radio button.
5. Click OK.

Using DVgate Motion

When capturing clips:

- Do not use DVgate Motion when the connected digital video peripheral is in Timer Recording mode, as this could produce a malfunction in the peripheral.
- Captures larger than 2 GB (9 minutes and 30 seconds) are automatically continued in a second file.
- You can record stereo audio (stereo 1) while capturing video. You cannot add audio on the stereo 2 track after capturing the video data.
- You cannot use different audio modes on the same tape. You should perform a separate capture for each audio mode you wish to use.
- DVgate Motion does not support hard disk compression. You should not use disk compression if you are planning to work with DVgate Motion.
- Title data is saved in the flash memory of a digital video camera and is not transferred to tape by DVgate Motion.
- To avoid interruption of capture sessions, you should disable the screen saver.
- The drop frame compensation feature does not provide accurate compensation adjustments for tapes recorded in LP mode.
- For tapes that include a mixture of both SP and LP mode, the information displayed by the capture progress indicator may not be accurate.
- Make sure the video head of your digital video device is properly cleaned. Anomalies that you see in captured data could be due to dust or other particles on the video head.
    - The last frame captured is one frame before your selected [OUT] point. The frame you see immediately after clicking the [OUT] button is not captured.

When recording AVI files to tape:

- Do not use DVgate Motion when the connected digital video peripheral is in Timer Recording mode, as this could produce a malfunction in the peripheral.

- You can record only AVI files. MPEG files cannot be recorded.
- To avoid recording problems, such as a single frame appearing in multiple frames, close other applications on your system while recording.
- You cannot use different audio modes on the same tape. If you have AVI files that use different audio modes, they cannot be recorded at the same time, but must be recorded separately.
- Do not attempt to work with AVI files that are smaller than 4 MB.
- DVgate Motion does not support hard disk compression. You should not use disk compression if you are planning to work with DVgate Motion.
- In order to maximize recording capabilities, video and audio data are not available while you are recording.

If DVgate Motion indicates that frames have been dropped, you should try closing all open applications, or you may need to defragment your hard drive.

Restoring Audio Drivers

When you restore the audio drivers from the Application Recovery CD, you need to restart your system to use these drivers. In the Add New Hardware wizard that appears when you restart, click the Next button until you are prompted for the location of the drivers. The audio drivers are located on the Application Recovery CD in G:\drivers\audio\AL98091701\English.

Using AC-3® to Optical Digital Audio Output

MiniDisc player/recorders, DAT player/recorders, and older digital receivers do not support Dolby® Digital (AC-3). You should not use the AC-3 to Optical Digital Audio Output option unless you are using a device that supports Dolby Digital. Please refer to the manual supplied with your equipment to determine if it supports Dolby Digital. If you are unsure and you have selected the AC-3 to Optical Digital Audio Output option, turn down the volume on your equipment before using the DVD player.

Using America Online or Sony Online Support with WinFax® Basic Edition

Once you have configured WinFax Basic Edition, it is automatically available for your use. You cannot use America Online or Sony Online Support when the automatic fax receive feature of WinFax Basic Edition is on. To disable this feature, right click the WinFax icon in the task tray at the bottom right corner of your screen, and then select Exit.

Memory Upgrade Specifications

When upgrading memory, use only 3.3V 64-bit PC-100 168 PIN SDRAM DIMM modules. For more information on Digital Studio Computer compatible memory, call Sony at 1-888-4SONYPC (1-888-476-6972).

About the Software On Your Computer

Your VAIO Digital Studio computer is ready to help you work, play, learn, and communicate as soon as you turn it on. This section gives you an overview of the activities you can perform with your software titles. For support information, see For Answers to Your Software Questions.

Adobe Acrobat® Reader

Adobe Systems Incorporated

Acrobat Reader software allows you to view, navigate, and print electronic documents in Adobe Portable Document Format (PDF), an open file format that is intended to preserve the fidelity of documents created on all major computer platforms.

Adobe PhotoDeluxe® Business Edition

Adobe Systems Incorporated

Create amazing photo effects with PhotoDeluxe. Without learning complex software, you can

enhance, restore, and be creative with your photos. Includes built-in guided activities, stock photos, clip art, and templates to assist you.

Adobe Premiere® LE

Adobe Systems Incorporated

Adobe Premiere LE offers an interface and editing tool for producing movies for video, multimedia, or the web. View source clips and edited footage simultaneously in the monitor window. Create video clips up to three hours long with complete audio-video synchronization.

America Online®

America Online

America Online is the world's most popular Internet online service. Stay in touch with family and friends with Easy-to-Use E-mail, manage your personal finances, get the latest news and sports scores, and chat with thousands of others who share your interests.

AT&T WorldNet® Service

AT&T

Fast, reliable Internet access from AT&T WorldNet Service. AT&T WorldNet Service provides web-based e-mail, a personalized start page from Excite, easy access to the Excite search engine, free web pages, online and live agent technical support, instant messaging, and special shopping discounts at Market Square.

CompuServe®

CompuServe, Inc.

CompuServe is the most comprehensive source of organized business and educational information online today. CompuServe allows you to access the vastness of the Internet without wasting time wading through it. Maximize your time online with CompuServe.

Digital Media Park

Sony Electronics

An integrated suite of multimedia cataloging and playback programs including Media Bar, Media Library, Media Showcase, and MiniDisc Editor. Manage your music by cataloging your entire CD collection, and then create custom MiniDiscs of your favorite songs.

Dr. Solomon's® Anti-Virus

Dr Solomon's Software Inc.

Dr. Solomon's Anti-Virus provides the most comprehensive defense against the spread of viruses, including macro viruses. It can scan inside compressed files and automatically protects your system against viruses sent via e-mail or Internet download.

DVgate Motion

Sony Electronics

Connect a digital video camera recorder to the i.LINK connector and capture your own video clips. You can edit the clips from your video, add others, and combine clips into new movie segments.

DVgate Still

Sony Electronics

Connect a digital video camera recorder to the i.LINK connector and capture your own still images. You can save your images in a variety of popular file formats.

EarthLink Sprint TotalAccess

EarthLink Network, Inc.

An Internet Service Provider that supplies access, information, and assistance to its customers, introducing them to the Internet. Member benefits include e-mail, newsgroups, a Personal Start Page, a free 6 MB web site, a member magazine, and 24-hour technical support.

Microsoft® Encarta® 99 Encyclopedia

Microsoft Corporation

Microsoft Encarta Encyclopedia combines current, comprehensive content with up-to-date multimedia technology, providing users with unique, engaging learning experiences. With the 1999 edition, Encarta provides a wealth of information resources and unique interactive features

Microsoft® Internet Explorer for Windows® 98

Microsoft Corporation

Internet Explorer delivers the web the way you want it. It's safe, easy to use, and you can personalize how you access the web. Outlook Express and other tools in Internet Explorer also help you have a great experience when you are on the web!

Microsoft® Money 99

Microsoft Corporation

Microsoft Money 99 is personal finance software that lets you perform your financial tasks, everything from paying bills to planning for the future, in a smarter, faster way. With Money's online services, you can pay bills and bank from the comfort of home.

Microsoft® Outlook® 98

Microsoft Corporation

Outlook 98 is Microsoft's premier messaging and collaboration client. It combines the leading support for Internet standards-based messaging systems with integrated calendar, contact, and task-management features.

Microsoft® Works

Microsoft Corporation

Works provides users with the right set of core tools that allows them to write letters and reports, track family and friends with the address book, manage home finances, and create a home inventory.

MotorHead

Gremlin Interactive Ltd.

MotorHead is realistic arcade-racing; high-velocity entertainment that puts you behind the wheel for 3D pure racing action. Power across Europe and USA in the Transatlantic Speed League, where second place is simply not an option.

Netscape Communicator®

Netscape Communications

Netscape Communicator is the all-in-one Internet tool that makes it easy to browse the web, send Internet e-mail, chat, read newsgroups, and compose great web documents.

PictureGear

Sony Electronics

This image management software displays images from your hard drive, a Sony digital still camera, or a Sony Mavica® camera. The images appear in a convenient light-table format, so that you can easily view the contents of an entire folder.

Prodigy Internet

Prodigy Communications Corporation

An Internet service that helps you find what you need online faster and smarter. Prodigy delivers powerful online content, such as sports scores, stock quotes, news, and easy access to Excite , plus a personal e-mail account and quality customer service, all at a competitive price.

Quicken® Basic 99

Intuit, Inc

Quicken is the fastest, easiest way to organize your finances. Quicken works just like your checkbook, so it's easy to learn and use. Quicken manages all of your finances, bank accounts, credit cards, investments, and loans. You can even pay your bills online.

SurfMonkey

MediaLive, Inc

SurfMonkey is a web browser and online service for kids ages 6-12 that makes the Internet safe, fun, and easy. A talking monkey guides children through web sites and chat rooms, and can read their e-mail out loud. Children cannot go to inappropriate web sites, parents can screen e-mail messages, and chat messages are monitored.

VAIO Smart Keyboard

Sony Electronics

VAIO Smart Keyboard software operates your new easy to use programmable USB keyboard. Six programmable buttons enable you to launch your favorite applications, open frequently used files, access Explorer, or even open your web browser with just the click of a button.

WinFax® Basic Edition

Symantec Corporation

WinFax Basic Edition incorporates an easy-to-use interface that allows you to send and receive faxes easily. Upgrade to WinFax Pro to receive additional features.

About Your Recovery CDs

Application Recovery CD(s)

Sony Electronics

The Application Recovery CD program allows you to reinstall individual applications and device drivers. Use it to restore corrupted or accidentally erased files.

System Recovery CD(s)

Sony Electronics

The System Recovery CD program allows you to restore the software titles that shipped with your computer if they become corrupted or are erased accidentally. It can be used only to restore the hard disk of the Sony computer you purchased.

For Answers to Your Software Questions

Sony Service Center

For the Sony Service Center nearest you, call at 1-888-4SONYPC (1-888-476-6972).

Acrobat® Reader, Adobe PhotoDeluxe® Business Edition , Adobe Premiere® LE (Adobe Systems Incorporated)

Web site http://www.adobe.com/
phone 206-628-2746 (fee-based support)
fax 206-628-5737
e-mail techdocs@adobe.com
hours M-F, 6 AM-5 PM PT

America Online® (America Online)

Web site http://www.aol.com/
phone 800-827-3338
hours 7 days a week, 6 AM - 2 PM ET

AT&T WorldNet® Service (AT&T)

Web site http://www.att.net/*
phone 800-400-1447
e-mail worldnet@attmail.com
hours 7 days a week, 24 hours a day

* You must be a WorldNet Service customer to access online support.

CompuServe® Interactive (CompuServe Interactive, Inc.)

Web site http://www.compuserve.com/
phone 800-848-8990
hours M-F, 8 AM - 1 AM ET, S-S 10 AM - 10 PM ET

Dr. Solomon's® Anti-Virus (Dr. Solomon's Software Inc.)

Web site http://www.drsolomon.com/
phone 888-377-6566
e-mail support@us.drsolomon.com
hours 7 days a week, 24 hours a day

EarthLink Sprint TotalAccess (EarthLink Network, Inc.)

Web site http://help.earthlink.net/techsupport/
phone 800-395-8410
e-mail support@earthlink.net
hours 7 days a week, 24 hours a day

Easy Internet Access (Encompass, Inc.)

Web site http://www.encmpss.com/
phone 800-927-3000
hours 7 days a week, 24 hours a day

MotorHead (Gremlin Interactive Ltd.)

Web site http://www.gremlin.com/
phone 888-4SONYPC (888-476-6972)
hours 7 days a week, 24 hours a day

Windows® 98 Operating System, Works, Money, Encarta, Internet Explorer (Microsoft Corporation)

Web site http://www.microsoft.com/support/
phone 888-4SONYPC (888-476-6972)*
hours 7 days a week, 24 hours a day
* Support from 1-888-4SONYPC is free of charge for 90 days after the original date of purchase.

Netscape Communicator® (Netscape Communications Corporation)

Web site http://www.netscape.com/
phone 888-4SONYPC (888-476-6972)*
hours 7 days a week, 24 hours a day
* Support from 1-888-4SONYPC is free of charge for 90 days after the original date of purchase.

Prodigy Internet (Prodigy Communications Corporation.)

Web site http://www.prodigy.com/
phone 800-PRODIGY
hours 7 AM - 3 AM ET

Quicken® Basic (Intuit Inc.)

Web site http://www.intuit.com/support/
phone 900-555-4688
hours 7 days a week, 24 hours a day

SurfMonkey (MediaLive, Inc.)

Web site http://www.surfmonkey.com/support/Sub_support.html
phone 408-556-2060
e-mail support@surfmonkey.com
hours 9AM-10PM PT everyday

WinFax® Basic Edition (Symantec Corporation.)

Web site http://www.symantec.com/techsupp/
phone 800-798-0850
fax 800-554-4403 in North America
541-984-2490 outside North America

Specifications

Model **PCV-E518DS**
Processor 500 MHz Pentium® III
Hard Disk Drive 17.28 GB
Standard SDRAM 128 MB PC-100 SDRAM, expandable to 256 MB
Video RAM 8 MB SDRAM
MPEG "Sony Tuned" MPEG Digital Video supports full-screen video playback
Graphics 3D 2X AGP graphics acceleration (Matrox)
Sound Capabilities 3D Positional Audio (Aureal A3D)
Diskette Drive 3.5" 1.44 MB FDD
CD-RW Drive CD-RW Drive (4X max. CD-R writing, 2X max. CD-RW writing, 24X max. reading)
Modem K56flex technology/V.90 compatible data/fax modem[1]
Expansion Capabilities One PCI slot
One additional hard disk drive bay
Connection Capabilities (Front) USB port
i.LINK port (4-pin)
Connection Capabilities (Rear) Optional Keyboard (PS/2-style)
Mouse (PS/2-style)
USB port
Serial port
Parallel (printer)
Game/MIDI
Headphones
Line In
Microphone
VGA Monitor
S-Link (Control-A1)
Optical Digital Audio Out
Two i.LINK ports (6-pin)[2]
Modem line (RJ-11)
Phone line (RJ-11)
Supplied Accessories VAIO Smart keyboard
Sony two-button mouse
RJ-11 phone cable
Power cord
Service 90-day limited service. Extendible to one year from original date of purchase upon registration[3]
Limited Warranty 90-day parts/labor standard. Extendible to one year from original date of purchase upon registration[4]

Power Requirements 200 watts maximum
Dimensions 7" (w) x 12" (h) x 13 3/4" (d) (178mm x 304mm x 330mm)
Weight 17 lbs. (7.71 kg)
Operating Temperature 50º F to 95º F (+10º C to 35º C)

[1] Maximum speed for faxing is 14.4 kbytes/s. Your modem is capable of downloading at 56 kbytes/s using K56flex technology or V.90. Your phone service, online service, or Internet Service Provider however, may not support this technology or operate at this speed.

[2] Six-pin i-LINK connectors on the rear of the system each supply 10V to 12V. The combined total wattage that can be supplied by the two connectors is 6 watts.

[3] Certain restrictions apply

[4] Certain restrictions apply

Specifications are subject to change without notice.

This product meets the standards of the International Energy Star Program for energy efficiency.

© 1999 Sony Electronics Inc. Reproduction in w hole or in part w ithout w ritten permission is prohibited. All rights reserved.

Read Me First

Welcome

Congratulations on your purchase of the Sony VAIO Digital Studio Computer. Sony has combined leading-edge technology in audio, video, computing, and communications to provide you with state-of-the-art personal computing.

Features

 For a complete description of the specifications of your VAIO Digital Studio Computer, see Specifications.

- **Exceptional performance:** Your computer includes a brand new Intel® Pentium® III processor, a CD-RW drive, and a V.90 compatible data/fax modem.*

* Actual upload and download speeds may vary due to line conditions, ISP support, and government regulations.

- **CD-RW drive:** This drive is the ideal solution for making backups and data archiving, with the ability to store up to 650 MB* of removable, rewritable storage on a single rewritable CD. Save your movies to CD-R or CD-RW media and share videos and images with family and friends.

***** 530 MB after formatting.

- **VAIO Smart Keyboard:** This USB keyboard has programmable shortcut buttons for launching your favorite programs or accessing the Internet.
- **Sony audio and video quality:** High-fidelity positional 3D audio system (A3D), high-powered 3D graphics (AGP), and "Sony-Tuned" MPEG digital video playback enable you to take advantage of today's advanced multimedia applications, games, and entertainment software.
- **S-Link (Control-A1):** This technology allows you to build a database of all your music and video CDs and then record your favorite audio selections on MiniDiscs. Use your computer with a 200 disc mega-storage CD changer and a MiniDisc recording deck.
- **i.LINK (IEEE 1394):** Three built-in i.LINK ports provide you with maximum digital connection capability. The i.LINK name and logo identify a digital interface (IEEE 1394) for high speed communication. By using your VAIO Digital Studio Computer, a Sony Digital Handycam® Camcorder, the DVgate software preinstalled on your computer, and the i.LINK (IEEE 1394) interface, you can easily create and edit your own home videos.
- **Optical Digital Audio Output:** This high-quality digital interface transmits digital audio data via light pulses. Transfer crystal clear digital audio to your MiniDisc recorder.
- **Digital Studio Software**: Enjoy all of your computer's audio and video capabilities with component-like applications that allow you to creatively manipulate digital still images, video clips, and audio tracks.
- **50 free hours of Internet access:** Use the Internet for up to 50 free hours when you sign up with GTE (no credit card required). Limit of two hours per day. Free access expires after 50 hours or 90 days after signing up--whichever occurs first.
- **Preinstalled software titles**: All the software on your computer is preinstalled, configured, and ready for you to use right out of the box.
- **Windows® 98**: Your system includes the latest operating system from Microsoft.
- **Communications:** Access popular online services, browse the Internet, send faxes, and more.

Unpacking Your Computer

Computer and Supplied Accessories

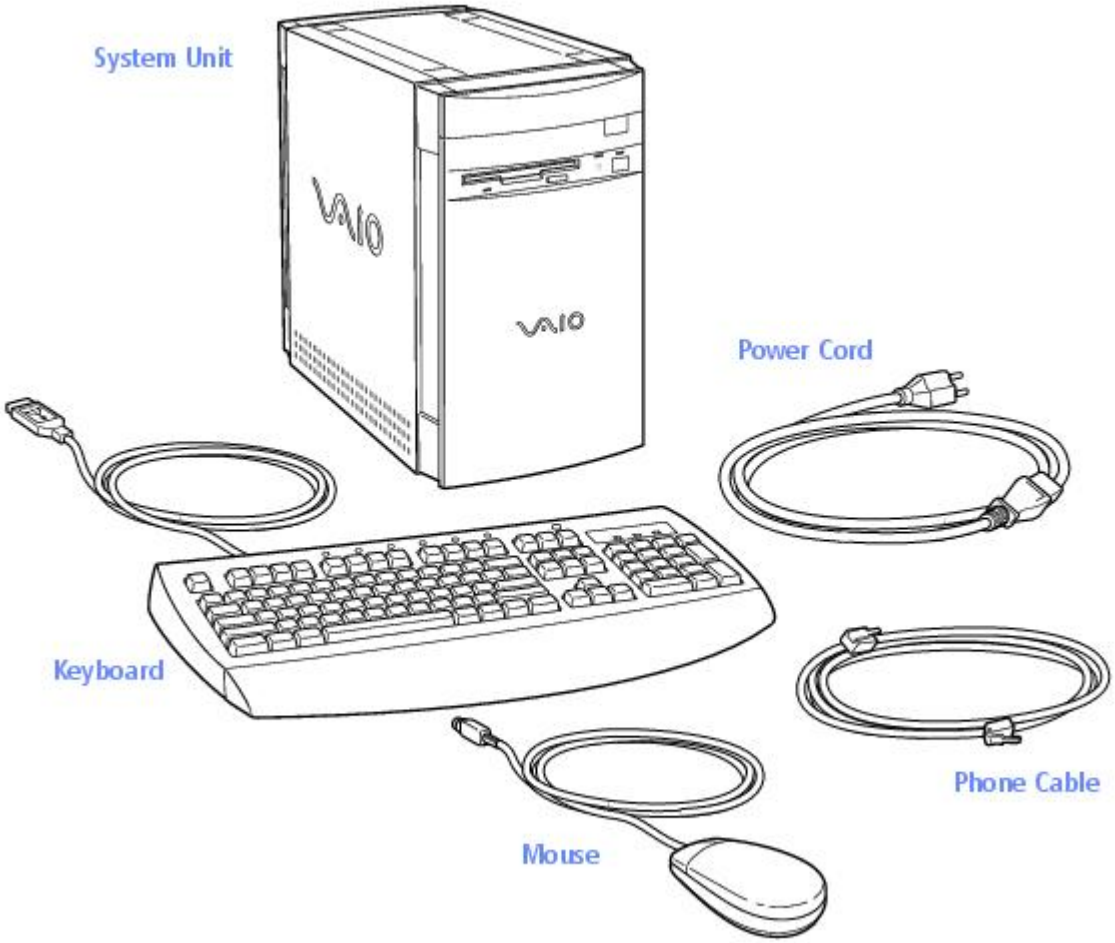

Manuals

- *Read Me First* (this manual) contains features and specifications of your computer. It also includes information on the applications included with your system, how to contact software vendors, and last minute troubleshooting tips.
- The *VAIO Digital Studio Computer User Guide* describes how to get started with your computer, find help, and solve common problems.
- The *Microsoft® Windows®98 Getting Started* manual explains how to use the basic features of the Windows operating system.

Recovery CDs

- System Recovery CD(s)
- Application Recovery CD(s)

Other

- Setting up your VAIO Digital Studio Computer (poster)
- Packet containing special product offers

Software Library

The Software Library contains the Microsoft software license agreement, Sony end-user license agreement, and the following CDs:

- Adobe PhotoDeluxe® Business Edition 3.0
- Gremlin Interactive Ltd. MotorHead
- Microsoft® Encarta® 99 Encyclopedia
- Microsoft® Money/Microsoft® Works

Back Panel Overview

The back panel of your computer contains the connectors where you plug in supplied and optional accessories. The icons on the back panel serve as a map to help you locate the connectors on your computer.

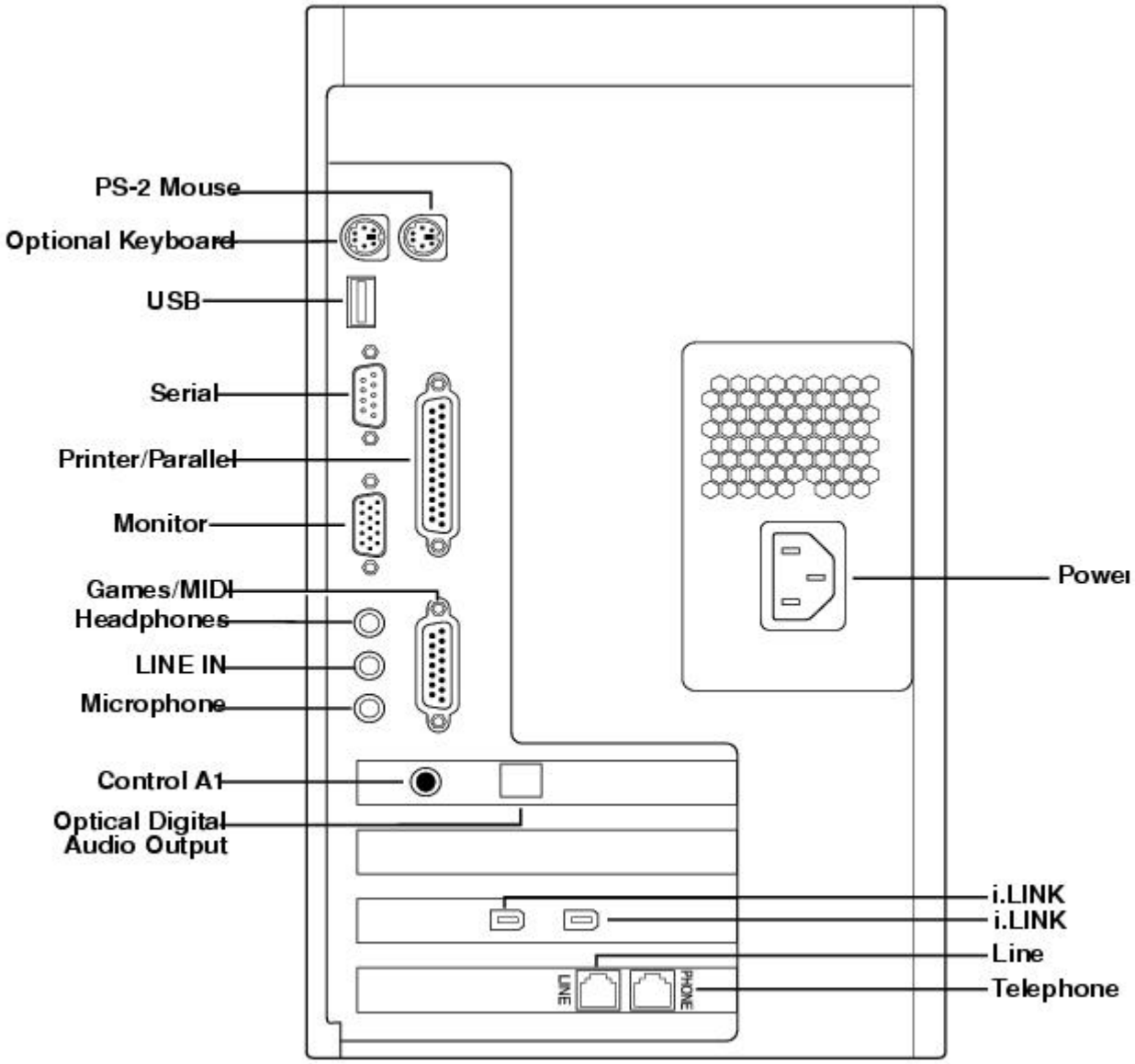

For your convenience, your computer includes USB and i.LINK connectors on both the front and back panels, allowing you to connect to either set of connectors. i.LINK connectors on the back of your system are 6-pin connectors.

Front Panel Overview

The front panel of your VAIO Digital Studio Computer allows for access to the diskette and CD-RW drives. It also includes USB and i.LINK ports to connect USB devices, CD changers, MiniDisc drives, or other components.

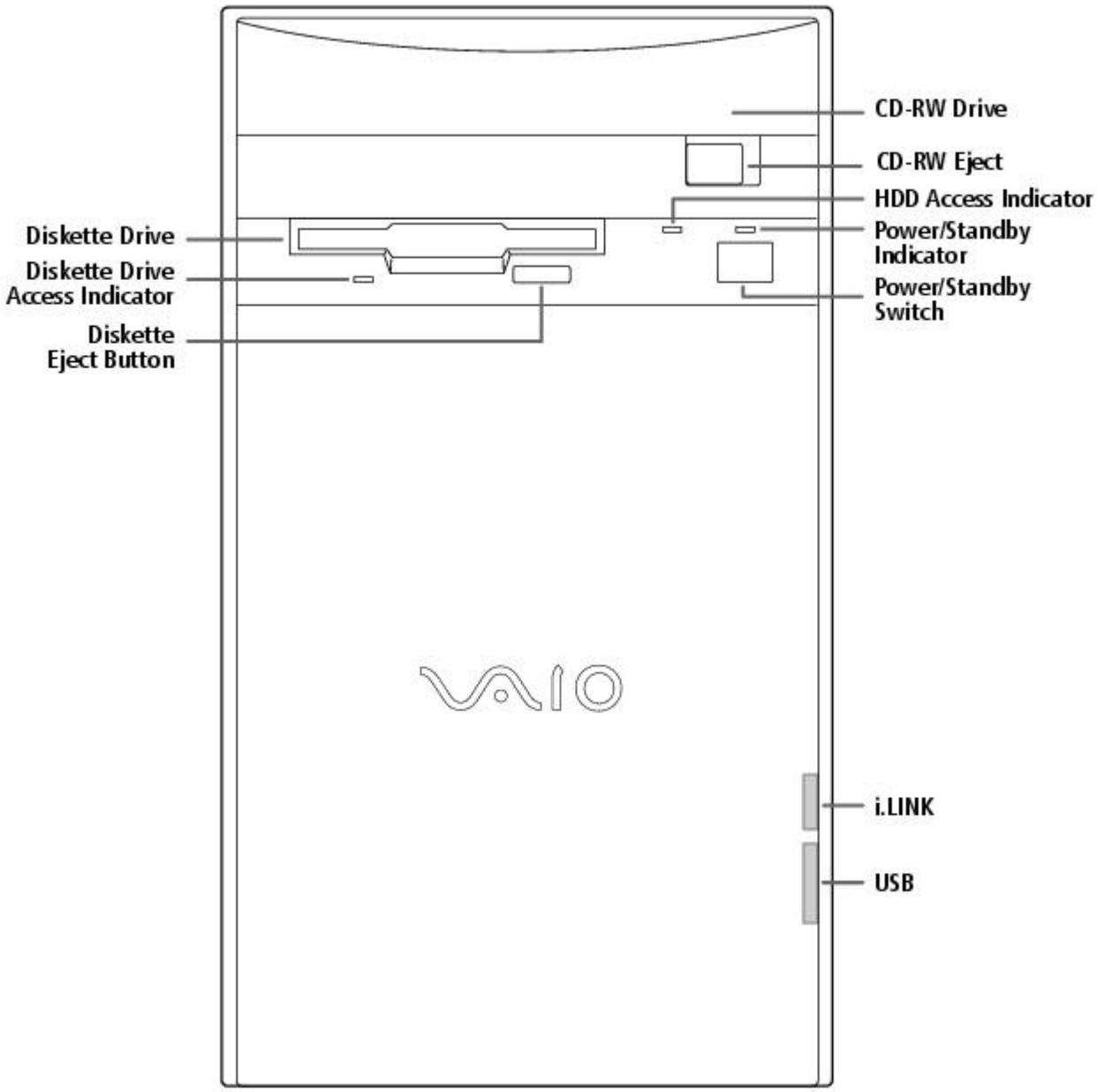

For your convenience, your computer includes USB and i.LINK connectors on both the front and back panels, allowing you to connect to either set of connectors. The i.LINK connector on the front of your system is a 4-pin connector.

Supplementary Information

For the most recent version of this manual, see the online version of Read Me First. You can access this document from the Windows Start Menu by selecting Programs/VAIO Documentation.

Hard Drive Partition

In order to improve the performance of your computer's DVgate Motion software, the hard disk drive on your computer has been formatted with two partitions, C and D. DVgate Motion saves files to the D partition. This prevents large video captures from consuming the available space on your C partition. To maintain optimum performance of DVgate Motion, you should defragment regularly.

VAIO Smart Keyboard Default Settings

The VAIO Smart Keyboard programmable buttons come with the following applications as their default settings:

S1 - Easy Internet Access Browser (Internet)

S2 - Outlook 98 (Mail)

S3 - MotorHead (Game)

S4 - Microsoft® Works (Work)

S5 - Quicken 99 Basic (Finance)

S6 - VAIO Documentation (Help)

All six buttons are reprogrammable.

Using The Standby Mode

To Put Your Computer into Standby Mode

When you are done using your computer, you can put it in Standby mode rather than turn it off completely. There are four ways to put your computer into Standby mode.

- Touch the power switch on the front panel.
- Click Shut Down at the bottom of the Start menu to display the Shut Down Windows dialog box. Select Stand by, and then click OK.
- Press the Standby button on the VAIO Smart Keyboard (the half moon icon).
- Change the timer settings for Standby mode in the Control Panel, as follows:

1. From the Start menu, point to Settings and click Control Panel.
2. Click the Power Management icon.
3. On the Power Schemes tab, change the Power scheme to Home/Office Desk.
4. In the list box for System standby, select an interval of time.
5. Click the OK button and close the Control Panel.

To Resume from Standby Mode

There are two ways to resume system functionality when your computer is in Standby mode. Use either of the following methods.

- Press any key on your keyboard, such as the Enter key.
- Touch the power switch on the front panel.

It may take up to 30 seconds for your system to recover stored information and resume functionality. The screen remains blank while the system is resuming functionality.

Applications That Use the TWAIN Driver

Digital imaging applications, such as Adobe PhotoDeluxe®, allow you to transfer images to your computer from external devices, including scanners or digital cameras. For some devices, a TWAIN driver window appears on the screen. Always close the TWAIN driver window before exiting or minimizing a digital imaging application.

Restoring Outlook 98

For the Add New Components functionality to be available with Microsoft Outlook, you must first run the installation program for Outlook from the Application Recovery CD. When prompted to install the program, select Exit. This decompresses the software, making the Add New Components functionality available.

Inserting Add-in Boards

Your VAIO Digital Studio Computer accommodates PCI add-in boards up to 7.7 inches in length.

Using Devices Connected to the i.LINK (IEEE 1394), S-Link (Control-A1), and Optical Digital Audio Output Connectors

For the latest information on devices known to be compatible with the state-of the-art audio, video, and graphics capabilities of your VAIO computer, check the Sony web site at http://www.sony.com/pcsupport.

Connecting to i.LINK Ports

Your VAIO computer includes a 4-pin i.LINK connector on the front of the system and two 6-pin i.LINK connectors on the back of the system. A 6-pin i.LINK connector can supply power from the computer to the connected device if the device is equipped with a 6-pin connector. Each 6-pin connector supplies 10V to 12V. The total power supplied by both 6-pin i.LINK connectors cannot exceed 6 watts. A 4-pin i.LINK connector cannot supply power to a connected device.

Capturing and Editing Digital Video Clips

- You can capture digital video clips using a digital video camera recorder and DVgate Motion software. Once the clips are saved as AVI files, they can be edited using DVgate Motion, DVgate Clip, or Adobe Premiere® LE. You cannot capture digital video clips directly using the Capture menu in Adobe Premiere LE. Adobe Premiere LE supports an analog capture board for capturing clips. Your VAIO computer is designed for digital video input.
- If there is no audio data associated with an AVI file, the message "Codec compression error" appears. If you do not wish to associate audio with your AVI file, you can add muted sound data by recording audio with the mute option enabled.
- For best performance, when editing AVI files in Adobe Premiere LE, you should use the default setup parameters that shipped with your system. If you change the default setup and want to reinitialize the parameters, follow these steps:

    1. In the Adobe Premiere LE application, select Compression from the Make menu. The Compression Settings dialog box appears.
    2. In the Method list box, select Sony DV software CODEC.
    3. Click OK to close the screen.
    4. From the Make menu, select Preset. The Preset dialog box appears.
    5. Select the parameters for Time Base, Compress, Output, and Preview Option settings as indicated below.

[Time base]

Time base - 29.97fps (required)

[Compress]

File type - AVI (required)
Compress Program Method - Sony DV software CODEC (required)
Compress Program Depth - Millions colors (No other options)
Quality (No control for this item)
Option: Frames per second - 30 (required)
Option: Basic Key Frames (No control for this item)
Option: Optimize Still Off (recommended)
Data rate - Recompress Off (recommended)

[Output options]

Video - On (required)
Video Size - 720x480
4:3 Aspect - Off (required)
VideoType - Field 2 (recommended)
Audio - On (required)
Audio Rate - 44kHz (required)
Audio Format - 16 Bit Stereo or 16 Bit Monaural (required)
Audio Type - Uncompress (required)
Audio Interleave - 1 frame (recommended)
- Less than 30 frames (required)

Audio Sync - 1.0 (required)
Audio Skew - 0.75 (recommended)
- Less than 1.0 (required)

[Preview Option]

Preview Window Size - 360x240

Note that Adobe Premiere LE does not save the Preview Window Size, but uses a default size of 320 x 213 each time the application launches. We recommend that you change this setting to 360 x 240 to improve the quality of preview clips when editing AVI files.

Using Alternate Browsers with America Online®

To use Internet Explorer or Netscape Navigator as your browser with America Online, follow these steps:

1. From the Start menu, point to Settings and then click Control Panel.
2. Click the Internet icon.
3. Click the Connection tab.
4. Click the "Connect to the Internet using local area network" radio button.
5. Click OK.

Using DVgate Motion

When capturing clips:

- Do not use DVgate Motion when the connected digital video peripheral is in Timer Recording mode, as this could produce a malfunction in the peripheral.
- Captures larger than 2 GB (9 minutes and 30 seconds) are automatically continued in a second file.
- You can record stereo audio (stereo 1) while capturing video. You cannot add audio on the stereo 2 track after capturing the video data.
- You cannot use different audio modes on the same tape. You should perform a separate capture for each audio mode you wish to use.
- DVgate Motion does not support hard disk compression. You should not use disk compression if you are planning to work with DVgate Motion.
- Title data is saved in the flash memory of a digital video camera and is not transferred to tape by DVgate Motion.
- To avoid interruption of capture sessions, you should disable the screen saver.
- The drop frame compensation feature does not provide accurate compensation adjustments for tapes recorded in LP mode.
- For tapes that include a mixture of both SP and LP mode, the information displayed by the capture progress indicator may not be accurate.
- Make sure the video head of your digital video device is properly cleaned. Anomalies that you see in captured data could be due to dust or other particles on the video head.
    - The last frame captured is one frame before your selected [OUT] point. The frame you see immediately after clicking the [OUT] button is not captured.

When recording AVI files to tape:

- Do not use DVgate Motion when the connected digital video peripheral is in Timer Recording mode, as this could produce a malfunction in the peripheral.

- You can record only AVI files. MPEG files cannot be recorded.
- To avoid recording problems, such as a single frame appearing in multiple frames, close other applications on your system while recording.
- You cannot use different audio modes on the same tape. If you have AVI files that use different audio modes, they cannot be recorded at the same time, but must be recorded separately.
- Do not attempt to work with AVI files that are smaller than 4 MB.
- DVgate Motion does not support hard disk compression. You should not use disk compression if you are planning to work with DVgate Motion.
- In order to maximize recording capabilities, video and audio data are not available while you are recording.

If DVgate Motion indicates that frames have been dropped, you should try closing all open applications, or you may need to defragment your hard drive.

Restoring Audio Drivers

When you restore the audio drivers from the Application Recovery CD, you need to restart your system to use these drivers. In the Add New Hardware wizard that appears when you restart, click the Next button until you are prompted for the location of the drivers. The audio drivers are located on the Application Recovery CD in G:\drivers\audio\AL98091701\English.

Using AC-3® to Optical Digital Audio Output

MiniDisc player/recorders, DAT player/recorders, and older digital receivers do not support Dolby® Digital (AC-3). You should not use the AC-3 to Optical Digital Audio Output option unless you are using a device that supports Dolby Digital. Please refer to the manual supplied with your equipment to determine if it supports Dolby Digital. If you are unsure and you have selected the AC-3 to Optical Digital Audio Output option, turn down the volume on your equipment before using the DVD player.

Using America Online or Sony Online Support with WinFax® Basic Edition

Once you have configured WinFax Basic Edition, it is automatically available for your use. You cannot use America Online or Sony Online Support when the automatic fax receive feature of WinFax Basic Edition is on. To disable this feature, right click the WinFax icon in the task tray at the bottom right corner of your screen, and then select Exit.

Memory Upgrade Specifications

When upgrading memory, use only 3.3V 64-bit PC-100 168 PIN SDRAM DIMM modules. For more information on Digital Studio Computer compatible memory, call Sony at 1-888-4SONYPC (1-888-476-6972).

About the Software On Your Computer

Your VAIO Digital Studio computer is ready to help you work, play, learn, and communicate as soon as you turn it on. This section gives you an overview of the activities you can perform with your software titles. For support information, see For Answers to Your Software Questions.

Adobe Acrobat® Reader

Adobe Systems Incorporated

Acrobat Reader software allows you to view, navigate, and print electronic documents in Adobe Portable Document Format (PDF), an open file format that is intended to preserve the fidelity of documents created on all major computer platforms.

Adobe PhotoDeluxe® Business Edition

Adobe Systems Incorporated

Create amazing photo effects with PhotoDeluxe. Without learning complex software, you can

enhance, restore, and be creative with your photos. Includes built-in guided activities, stock photos, clip art, and templates to assist you.

Adobe Premiere® LE

Adobe Systems Incorporated

Adobe Premiere LE offers an interface and editing tool for producing movies for video, multimedia, or the web. View source clips and edited footage simultaneously in the monitor window. Create video clips up to three hours long with complete audio-video synchronization.

America Online®

America Online

America Online is the world's most popular Internet online service. Stay in touch with family and friends with Easy-to-Use E-mail, manage your personal finances, get the latest news and sports scores, and chat with thousands of others who share your interests.

AT&T WorldNet® Service

AT&T

Fast, reliable Internet access from AT&T WorldNet Service. AT&T WorldNet Service provides web-based e-mail, a personalized start page from Excite, easy access to the Excite search engine, free web pages, online and live agent technical support, instant messaging, and special shopping discounts at Market Square.

CompuServe®

CompuServe, Inc.

CompuServe is the most comprehensive source of organized business and educational information online today. CompuServe allows you to access the vastness of the Internet without wasting time wading through it. Maximize your time online with CompuServe.

Digital Media Park

Sony Electronics

An integrated suite of multimedia cataloging and playback programs including Media Bar, Media Library, Media Showcase, and MiniDisc Editor. Manage your music by cataloging your entire CD collection, and then create custom MiniDiscs of your favorite songs.

Dr. Solomon's® Anti-Virus

Dr Solomon's Software Inc.

Dr. Solomon's Anti-Virus provides the most comprehensive defense against the spread of viruses, including macro viruses. It can scan inside compressed files and automatically protects your system against viruses sent via e-mail or Internet download.

DVgate Motion

Sony Electronics

Connect a digital video camera recorder to the i.LINK connector and capture your own video clips. You can edit the clips from your video, add others, and combine clips into new movie segments.

DVgate Still

Sony Electronics

Connect a digital video camera recorder to the i.LINK connector and capture your own still images. You can save your images in a variety of popular file formats.

EarthLink Sprint TotalAccess

EarthLink Network, Inc.

An Internet Service Provider that supplies access, information, and assistance to its customers, introducing them to the Internet. Member benefits include e-mail, newsgroups, a Personal Start Page, a free 6 MB web site, a member magazine, and 24-hour technical support.

Microsoft® Encarta® 99 Encyclopedia

Microsoft Corporation

Microsoft Encarta Encyclopedia combines current, comprehensive content with up-to-date multimedia technology, providing users with unique, engaging learning experiences. With the 1999 edition, Encarta provides a wealth of information resources and unique interactive features

Microsoft® Internet Explorer for Windows® 98

Microsoft Corporation

Internet Explorer delivers the web the way you want it. It's safe, easy to use, and you can personalize how you access the web. Outlook Express and other tools in Internet Explorer also help you have a great experience when you are on the web!

Microsoft® Money 99

Microsoft Corporation

Microsoft Money 99 is personal finance software that lets you perform your financial tasks, everything from paying bills to planning for the future, in a smarter, faster way. With Money's online services, you can pay bills and bank from the comfort of home.

Microsoft® Outlook® 98

Microsoft Corporation

Outlook 98 is Microsoft's premier messaging and collaboration client. It combines the leading support for Internet standards-based messaging systems with integrated calendar, contact, and task-management features.

Microsoft® Works

Microsoft Corporation

Works provides users with the right set of core tools that allows them to write letters and reports, track family and friends with the address book, manage home finances, and create a home inventory.

MotorHead

Gremlin Interactive Ltd.

MotorHead is realistic arcade-racing; high-velocity entertainment that puts you behind the wheel for 3D pure racing action. Power across Europe and USA in the Transatlantic Speed League, where second place is simply not an option.

Netscape Communicator®

Netscape Communications

Netscape Communicator is the all-in-one Internet tool that makes it easy to browse the web, send Internet e-mail, chat, read newsgroups, and compose great web documents.

PictureGear

Sony Electronics

This image management software displays images from your hard drive, a Sony digital still camera, or a Sony Mavica® camera. The images appear in a convenient light-table format, so that you can easily view the contents of an entire folder.

Prodigy Internet

Prodigy Communications Corporation

An Internet service that helps you find what you need online faster and smarter. Prodigy delivers powerful online content, such as sports scores, stock quotes, news, and easy access to Excite , plus a personal e-mail account and quality customer service, all at a competitive price.

Quicken® Basic 99

Intuit, Inc

Quicken is the fastest, easiest way to organize your finances. Quicken works just like your checkbook, so it's easy to learn and use. Quicken manages all of your finances, bank accounts, credit cards, investments, and loans. You can even pay your bills online.

SurfMonkey

MediaLive, Inc

SurfMonkey is a web browser and online service for kids ages 6-12 that makes the Internet safe, fun, and easy. A talking monkey guides children through web sites and chat rooms, and can read their e-mail out loud. Children cannot go to inappropriate web sites, parents can screen e-mail messages, and chat messages are monitored.

VAIO Smart Keyboard

Sony Electronics

VAIO Smart Keyboard software operates your new easy to use programmable USB keyboard. Six programmable buttons enable you to launch your favorite applications, open frequently used files, access Explorer, or even open your web browser with just the click of a button.

WinFax® Basic Edition

Symantec Corporation

WinFax Basic Edition incorporates an easy-to-use interface that allows you to send and receive faxes easily. Upgrade to WinFax Pro to receive additional features.

About Your Recovery CDs

Application Recovery CD(s)

Sony Electronics

The Application Recovery CD program allows you to reinstall individual applications and device drivers. Use it to restore corrupted or accidentally erased files.

System Recovery CD(s)

Sony Electronics

The System Recovery CD program allows you to restore the software titles that shipped with your computer if they become corrupted or are erased accidentally. It can be used only to restore the hard disk of the Sony computer you purchased.

For Answers to Your Software Questions

Sony Service Center

For the Sony Service Center nearest you, call at 1-888-4SONYPC (1-888-476-6972).

Acrobat® Reader, Adobe PhotoDeluxe® Business Edition , Adobe Premiere® LE (Adobe Systems Incorporated)

Web site http://www.adobe.com/
phone 206-628-2746 (fee-based support)
fax 206-628-5737
e-mail techdocs@adobe.com
hours M-F, 6 AM-5 PM PT

America Online® (America Online)

Web site http://www.aol.com/
phone 800-827-3338
hours 7 days a week, 6 AM - 2 PM ET

AT&T WorldNet® Service (AT&T)

Web site http://www.att.net/*
phone 800-400-1447
e-mail worldnet@attmail.com
hours 7 days a week, 24 hours a day

* You must be a WorldNet Service customer to access online support.

CompuServe® Interactive (CompuServe Interactive, Inc.)

Web site http://www.compuserve.com/
phone 800-848-8990
hours M-F, 8 AM - 1 AM ET, S-S 10 AM - 10 PM ET

Dr. Solomon's® Anti-Virus (Dr. Solomon's Software Inc.)

Web site http://www.drsolomon.com/
phone 888-377-6566
e-mail support@us.drsolomon.com
hours 7 days a week, 24 hours a day

EarthLink Sprint TotalAccess (EarthLink Network, Inc.)

Web site http://help.earthlink.net/techsupport/
phone 800-395-8410
e-mail support@earthlink.net
hours 7 days a week, 24 hours a day

Easy Internet Access (Encompass, Inc.)

Web site http://www.encmpss.com/
phone 800-927-3000
hours 7 days a week, 24 hours a day

MotorHead (Gremlin Interactive Ltd.)

Web site http://www.gremlin.com/
phone 888-4SONYPC (888-476-6972)
hours 7 days a week, 24 hours a day

Windows® 98 Operating System, Works, Money, Encarta, Internet Explorer (Microsoft Corporation)

Web site http://www.microsoft.com/support/
phone 888-4SONYPC (888-476-6972)*
hours 7 days a week, 24 hours a day
* Support from 1-888-4SONYPC is free of charge for 90 days after the original date of purchase.

Netscape Communicator® (Netscape Communications Corporation)

Web site http://www.netscape.com/
phone 888-4SONYPC (888-476-6972)*
hours 7 days a week, 24 hours a day
* Support from 1-888-4SONYPC is free of charge for 90 days after the original date of purchase.

Prodigy Internet (Prodigy Communications Corporation.)

Web site http://www.prodigy.com/
phone 800-PRODIGY
hours 7 AM - 3 AM ET

Quicken® Basic (Intuit Inc.)

Web site http://www.intuit.com/support/
phone 900-555-4688
hours 7 days a week, 24 hours a day

SurfMonkey (MediaLive, Inc.)

Web site http://www.surfmonkey.com/support/Sub_support.html
phone 408-556-2060
e-mail support@surfmonkey.com
hours 9AM-10PM PT everyday

WinFax® Basic Edition (Symantec Corporation.)

Web site http://www.symantec.com/techsupp/
phone 800-798-0850
fax 800-554-4403 in North America
541-984-2490 outside North America

Specifications

Model **PCV-E518DS**
Processor 500 MHz Pentium® III
Hard Disk Drive 17.28 GB
Standard SDRAM 128 MB PC-100 SDRAM, expandable to 256 MB
Video RAM 8 MB SDRAM
MPEG "Sony Tuned" MPEG Digital Video supports full-screen video playback
Graphics 3D 2X AGP graphics acceleration (Matrox)
Sound Capabilities 3D Positional Audio (Aureal A3D)
Diskette Drive 3.5" 1.44 MB FDD
CD-RW Drive CD-RW Drive (4X max. CD-R writing, 2X max. CD-RW writing, 24X max. reading)
Modem K56flex technology/V.90 compatible data/fax modem[1]
Expansion Capabilities One PCI slot
One additional hard disk drive bay
Connection Capabilities (Front) USB port
i.LINK port (4-pin)
Connection Capabilities (Rear) Optional Keyboard (PS/2-style)
Mouse (PS/2-style)
USB port
Serial port
Parallel (printer)
Game/MIDI
Headphones
Line In
Microphone
VGA Monitor
S-Link (Control-A1)
Optical Digital Audio Out
Two i.LINK ports (6-pin)[2]
Modem line (RJ-11)
Phone line (RJ-11)
Supplied Accessories VAIO Smart keyboard
Sony two-button mouse
RJ-11 phone cable
Power cord
Service 90-day limited service. Extendible to one year from original date of purchase upon registration[3]
Limited Warranty 90-day parts/labor standard. Extendible to one year from original date of purchase upon registration[4]

Power Requirements 200 watts maximum
Dimensions 7" (w) x 12" (h) x 13 3/4" (d) (178mm x 304mm x 330mm)
Weight 17 lbs. (7.71 kg)
Operating Temperature 50º F to 95º F (+10º C to 35º C)

[1] Maximum speed for faxing is 14.4 kbytes/s. Your modem is capable of downloading at 56 kbytes/s using K56flex technology or V.90. Your phone service, online service, or Internet Service Provider however, may not support this technology or operate at this speed.

[2] Six-pin i-LINK connectors on the rear of the system each supply 10V to 12V. The combined total wattage that can be supplied by the two connectors is 6 watts.

[3] Certain restrictions apply

[4] Certain restrictions apply

Specifications are subject to change without notice.

This product meets the standards of the International Energy Star Program for energy efficiency.

© 1999 Sony Electronics Inc. Reproduction in w hole or in part w ithout w ritten permission is prohibited. All rights reserved.

Read Me First

Welcome

Congratulations on your purchase of the Sony VAIO Digital Studio Computer. Sony has combined leading-edge technology in audio, video, computing, and communications to provide you with state-of-the-art personal computing.

Features

 For a complete description of the specifications of your VAIO Digital Studio Computer, see Specifications.

- **Exceptional performance:** Your computer includes a brand new Intel® Pentium® III processor, a CD-RW drive, and a V.90 compatible data/fax modem.*

* Actual upload and download speeds may vary due to line conditions, ISP support, and government regulations.

- **CD-RW drive:** This drive is the ideal solution for making backups and data archiving, with the ability to store up to 650 MB* of removable, rewritable storage on a single rewritable CD. Save your movies to CD-R or CD-RW media and share videos and images with family and friends.

* 530 MB after formatting.

- **VAIO Smart Keyboard:** This USB keyboard has programmable shortcut buttons for launching your favorite programs or accessing the Internet.
- **Sony audio and video quality:** High-fidelity positional 3D audio system (A3D), high-powered 3D graphics (AGP), and "Sony-Tuned" MPEG digital video playback enable you to take advantage of today's advanced multimedia applications, games, and entertainment software.
- **S-Link (Control-A1):** This technology allows you to build a database of all your music and video CDs and then record your favorite audio selections on MiniDiscs. Use your computer with a 200 disc mega-storage CD changer and a MiniDisc recording deck.
- **i.LINK (IEEE 1394):** Three built-in i.LINK ports provide you with maximum digital connection capability. The i.LINK name and logo identify a digital interface (IEEE 1394) for high speed communication. By using your VAIO Digital Studio Computer, a Sony Digital Handycam® Camcorder, the DVgate software preinstalled on your computer, and the i.LINK (IEEE 1394) interface, you can easily create and edit your own home videos.
- **Optical Digital Audio Output:** This high-quality digital interface transmits digital audio data via light pulses. Transfer crystal clear digital audio to your MiniDisc recorder.
- **Digital Studio Software**: Enjoy all of your computer's audio and video capabilities with component-like applications that allow you to creatively manipulate digital still images, video clips, and audio tracks.
- **50 free hours of Internet access:** Use the Internet for up to 50 free hours when you sign up with GTE (no credit card required). Limit of two hours per day. Free access expires after 50 hours or 90 days after signing up--whichever occurs first.
- **Preinstalled software titles**: All the software on your computer is preinstalled, configured, and ready for you to use right out of the box.
- **Windows® 98**: Your system includes the latest operating system from Microsoft.
- **Communications:** Access popular online services, browse the Internet, send faxes, and more.

Unpacking Your Computer

Computer and Supplied Accessories

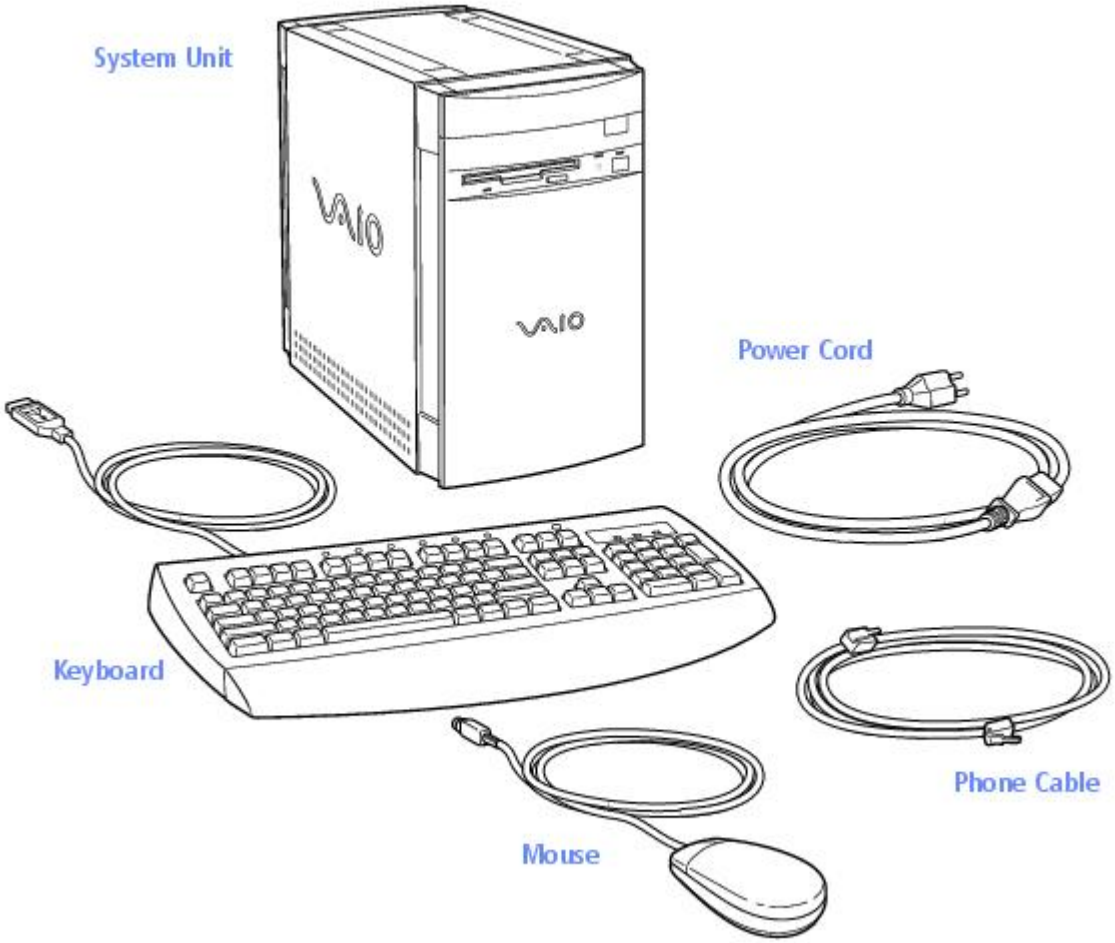

Manuals

- *Read Me First* (this manual) contains features and specifications of your computer. It also includes information on the applications included with your system, how to contact software vendors, and last minute troubleshooting tips.
- The *VAIO Digital Studio Computer User Guide* describes how to get started with your computer, find help, and solve common problems.
- The *Microsoft® Windows®98 Getting Started* manual explains how to use the basic features of the Windows operating system.

Recovery CDs

- System Recovery CD(s)
- Application Recovery CD(s)

Other

- Setting up your VAIO Digital Studio Computer (poster)
- Packet containing special product offers

Software Library

The Software Library contains the Microsoft software license agreement, Sony end-user license agreement, and the following CDs:

- Adobe PhotoDeluxe® Business Edition 3.0
- Gremlin Interactive Ltd. MotorHead
- Microsoft® Encarta® 99 Encyclopedia
- Microsoft® Money/Microsoft® Works

Back Panel Overview

The back panel of your computer contains the connectors where you plug in supplied and optional accessories. The icons on the back panel serve as a map to help you locate the connectors on your computer.

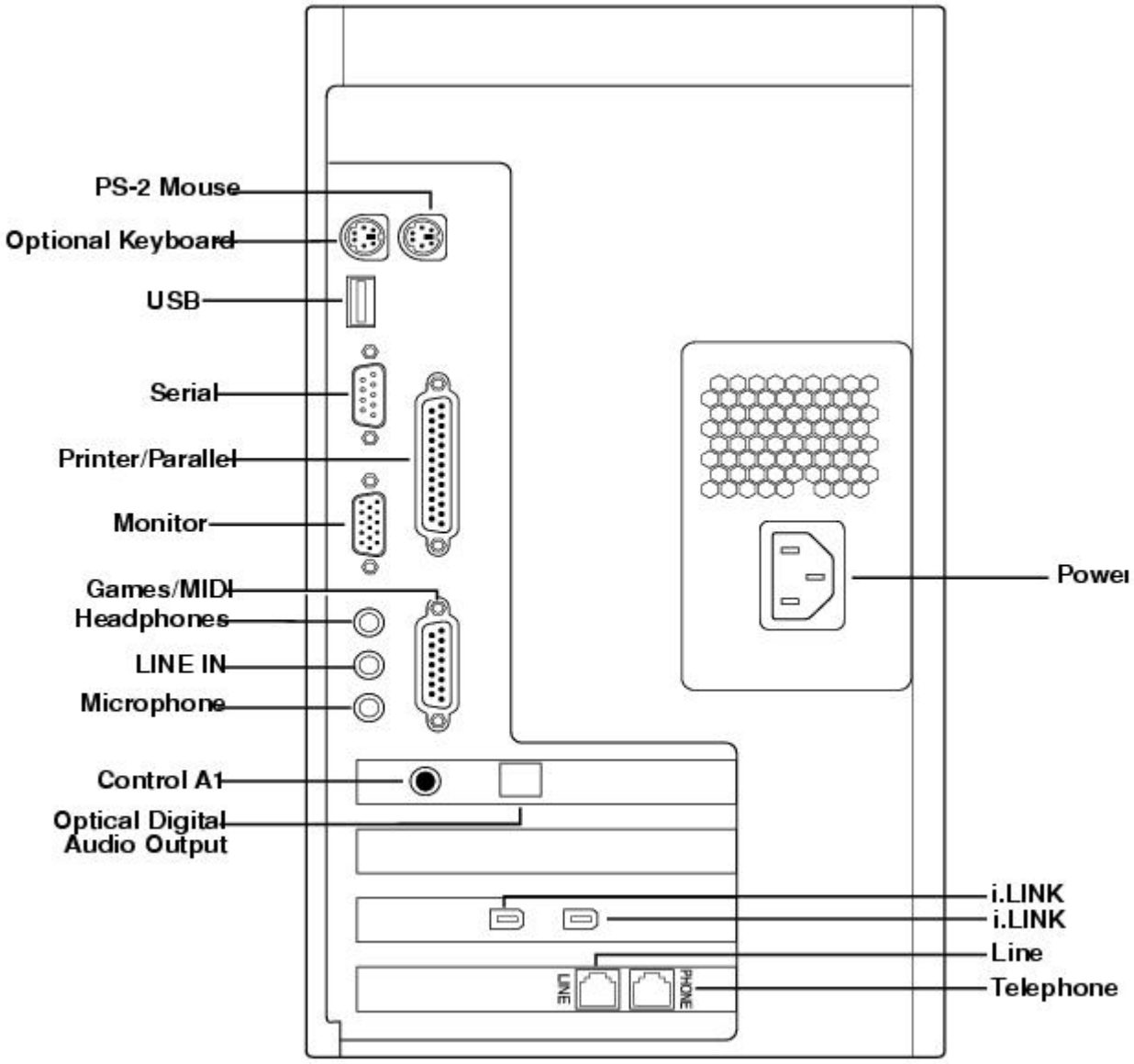

For your convenience, your computer includes USB and i.LINK connectors on both the front and back panels, allowing you to connect to either set of connectors. i.LINK connectors on the back of your system are 6-pin connectors.

Front Panel Overview

The front panel of your VAIO Digital Studio Computer allows for access to the diskette and CD-RW drives. It also includes USB and i.LINK ports to connect USB devices, CD changers, MiniDisc drives, or other components.

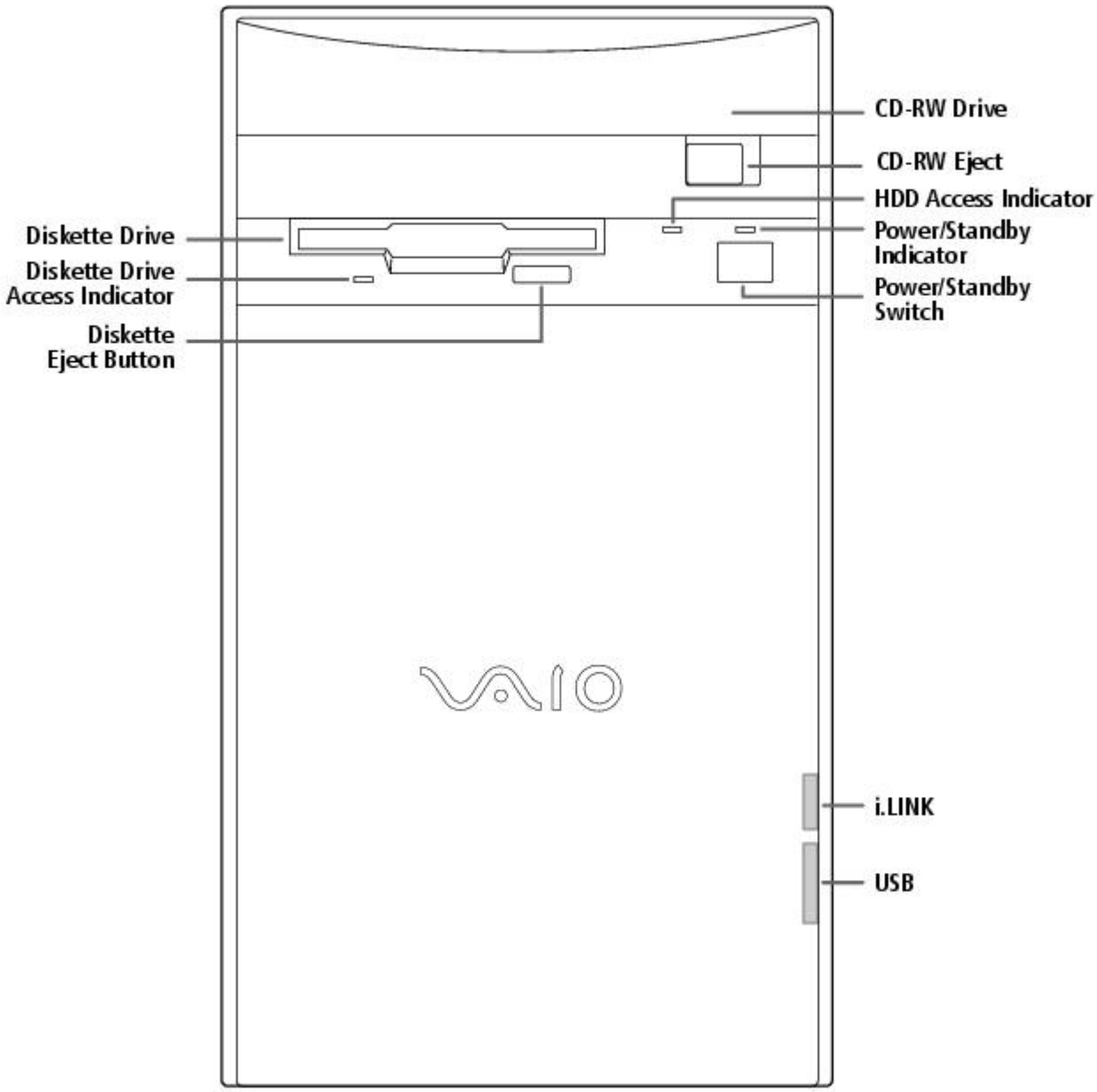

For your convenience, your computer includes USB and i.LINK connectors on both the front and back panels, allowing you to connect to either set of connectors. The i.LINK connector on the front of your system is a 4-pin connector.

Supplementary Information

For the most recent version of this manual, see the online version of Read Me First. You can access this document from the Windows Start Menu by selecting Programs/VAIO Documentation.

Hard Drive Partition

In order to improve the performance of your computer's DVgate Motion software, the hard disk drive on your computer has been formatted with two partitions, C and D. DVgate Motion saves files to the D partition. This prevents large video captures from consuming the available space on your C partition. To maintain optimum performance of DVgate Motion, you should defragment regularly.

VAIO Smart Keyboard Default Settings

The VAIO Smart Keyboard programmable buttons come with the following applications as their default settings:

S1 - Easy Internet Access Browser (Internet)

S2 - Outlook 98 (Mail)

S3 - MotorHead (Game)

S4 - Microsoft® Works (Work)

S5 - Quicken 99 Basic (Finance)

S6 - VAIO Documentation (Help)

All six buttons are reprogrammable.

Using The Standby Mode

To Put Your Computer into Standby Mode

When you are done using your computer, you can put it in Standby mode rather than turn it off completely. There are four ways to put your computer into Standby mode.

- Touch the power switch on the front panel.
- Click Shut Down at the bottom of the Start menu to display the Shut Down Windows dialog box. Select Stand by, and then click OK.
- Press the Standby button on the VAIO Smart Keyboard (the half moon icon).
- Change the timer settings for Standby mode in the Control Panel, as follows:

1. From the Start menu, point to Settings and click Control Panel.
2. Click the Power Management icon.
3. On the Power Schemes tab, change the Power scheme to Home/Office Desk.
4. In the list box for System standby, select an interval of time.
5. Click the OK button and close the Control Panel.

To Resume from Standby Mode

There are two ways to resume system functionality when your computer is in Standby mode. Use either of the following methods.

- Press any key on your keyboard, such as the Enter key.
- Touch the power switch on the front panel.

It may take up to 30 seconds for your system to recover stored information and resume functionality. The screen remains blank while the system is resuming functionality.

Applications That Use the TWAIN Driver

Digital imaging applications, such as Adobe PhotoDeluxe®, allow you to transfer images to your computer from external devices, including scanners or digital cameras. For some devices, a TWAIN driver window appears on the screen. Always close the TWAIN driver window before exiting or minimizing a digital imaging application.

Restoring Outlook 98

For the Add New Components functionality to be available with Microsoft Outlook, you must first run the installation program for Outlook from the Application Recovery CD. When prompted to install the program, select Exit. This decompresses the software, making the Add New Components functionality available.

Inserting Add-in Boards

Your VAIO Digital Studio Computer accommodates PCI add-in boards up to 7.7 inches in length.

Using Devices Connected to the i.LINK (IEEE 1394), S-Link (Control-A1), and Optical Digital Audio Output Connectors

For the latest information on devices known to be compatible with the state-of the-art audio, video, and graphics capabilities of your VAIO computer, check the Sony web site at http://www.sony.com/pcsupport.

Connecting to i.LINK Ports

Your VAIO computer includes a 4-pin i.LINK connector on the front of the system and two 6-pin i.LINK connectors on the back of the system. A 6-pin i.LINK connector can supply power from the computer to the connected device if the device is equipped with a 6-pin connector. Each 6-pin connector supplies 10V to 12V. The total power supplied by both 6-pin i.LINK connectors cannot exceed 6 watts. A 4-pin i.LINK connector cannot supply power to a connected device.

Capturing and Editing Digital Video Clips

- You can capture digital video clips using a digital video camera recorder and DVgate Motion software. Once the clips are saved as AVI files, they can be edited using DVgate Motion, DVgate Clip, or Adobe Premiere® LE. You cannot capture digital video clips directly using the Capture menu in Adobe Premiere LE. Adobe Premiere LE supports an analog capture board for capturing clips. Your VAIO computer is designed for digital video input.
- If there is no audio data associated with an AVI file, the message "Codec compression error" appears. If you do not wish to associate audio with your AVI file, you can add muted sound data by recording audio with the mute option enabled.
- For best performance, when editing AVI files in Adobe Premiere LE, you should use the default setup parameters that shipped with your system. If you change the default setup and want to reinitialize the parameters, follow these steps:

1. In the Adobe Premiere LE application, select Compression from the Make menu. The Compression Settings dialog box appears.
2. In the Method list box, select Sony DV software CODEC.
3. Click OK to close the screen.
4. From the Make menu, select Preset. The Preset dialog box appears.
5. Select the parameters for Time Base, Compress, Output, and Preview Option settings as indicated below.

[Time base]

Time base - 29.97fps (required)

[Compress]

File type - AVI (required)
Compress Program Method - Sony DV software CODEC (required)
Compress Program Depth - Millions colors (No other options)
Quality (No control for this item)
Option: Frames per second - 30 (required)
Option: Basic Key Frames (No control for this item)
Option: Optimize Still Off (recommended)
Data rate - Recompress Off (recommended)

[Output options]

Video - On (required)
Video Size - 720x480
4:3 Aspect - Off (required)
VideoType - Field 2 (recommended)
Audio - On (required)
Audio Rate - 44kHz (required)
Audio Format - 16 Bit Stereo or 16 Bit Monaural (required)
Audio Type - Uncompress (required)
Audio Interleave - 1 frame (recommended)
- Less than 30 frames (required)

Audio Sync - 1.0 (required)
Audio Skew - 0.75 (recommended)
- Less than 1.0 (required)

[Preview Option]

Preview Window Size - 360x240

Note that Adobe Premiere LE does not save the Preview Window Size, but uses a default size of 320 x 213 each time the application launches. We recommend that you change this setting to 360 x 240 to improve the quality of preview clips when editing AVI files.

Using Alternate Browsers with America Online®

To use Internet Explorer or Netscape Navigator as your browser with America Online, follow these steps:

1. From the Start menu, point to Settings and then click Control Panel.
2. Click the Internet icon.
3. Click the Connection tab.
4. Click the "Connect to the Internet using local area network" radio button.
5. Click OK.

Using DVgate Motion

When capturing clips:

- Do not use DVgate Motion when the connected digital video peripheral is in Timer Recording mode, as this could produce a malfunction in the peripheral.
- Captures larger than 2 GB (9 minutes and 30 seconds) are automatically continued in a second file.
- You can record stereo audio (stereo 1) while capturing video. You cannot add audio on the stereo 2 track after capturing the video data.
- You cannot use different audio modes on the same tape. You should perform a separate capture for each audio mode you wish to use.
- DVgate Motion does not support hard disk compression. You should not use disk compression if you are planning to work with DVgate Motion.
- Title data is saved in the flash memory of a digital video camera and is not transferred to tape by DVgate Motion.
- To avoid interruption of capture sessions, you should disable the screen saver.
- The drop frame compensation feature does not provide accurate compensation adjustments for tapes recorded in LP mode.
- For tapes that include a mixture of both SP and LP mode, the information displayed by the capture progress indicator may not be accurate.
- Make sure the video head of your digital video device is properly cleaned. Anomalies that you see in captured data could be due to dust or other particles on the video head.
    - The last frame captured is one frame before your selected [OUT] point. The frame you see immediately after clicking the [OUT] button is not captured.

When recording AVI files to tape:

- Do not use DVgate Motion when the connected digital video peripheral is in Timer Recording mode, as this could produce a malfunction in the peripheral.

- You can record only AVI files. MPEG files cannot be recorded.
- To avoid recording problems, such as a single frame appearing in multiple frames, close other applications on your system while recording.
- You cannot use different audio modes on the same tape. If you have AVI files that use different audio modes, they cannot be recorded at the same time, but must be recorded separately.
- Do not attempt to work with AVI files that are smaller than 4 MB.
- DVgate Motion does not support hard disk compression. You should not use disk compression if you are planning to work with DVgate Motion.
- In order to maximize recording capabilities, video and audio data are not available while you are recording.

If DVgate Motion indicates that frames have been dropped, you should try closing all open applications, or you may need to defragment your hard drive.

Restoring Audio Drivers

When you restore the audio drivers from the Application Recovery CD, you need to restart your system to use these drivers. In the Add New Hardware wizard that appears when you restart, click the Next button until you are prompted for the location of the drivers. The audio drivers are located on the Application Recovery CD in G:\drivers\audio\AL98091701\English.

Using AC-3® to Optical Digital Audio Output

MiniDisc player/recorders, DAT player/recorders, and older digital receivers do not support Dolby® Digital (AC-3). You should not use the AC-3 to Optical Digital Audio Output option unless you are using a device that supports Dolby Digital. Please refer to the manual supplied with your equipment to determine if it supports Dolby Digital. If you are unsure and you have selected the AC-3 to Optical Digital Audio Output option, turn down the volume on your equipment before using the DVD player.

Using America Online or Sony Online Support with WinFax® Basic Edition

Once you have configured WinFax Basic Edition, it is automatically available for your use. You cannot use America Online or Sony Online Support when the automatic fax receive feature of WinFax Basic Edition is on. To disable this feature, right click the WinFax icon in the task tray at the bottom right corner of your screen, and then select Exit.

Memory Upgrade Specifications

When upgrading memory, use only 3.3V 64-bit PC-100 168 PIN SDRAM DIMM modules. For more information on Digital Studio Computer compatible memory, call Sony at 1-888-4SONYPC (1-888-476-6972).

About the Software On Your Computer

Your VAIO Digital Studio computer is ready to help you work, play, learn, and communicate as soon as you turn it on. This section gives you an overview of the activities you can perform with your software titles. For support information, see For Answers to Your Software Questions.

Adobe Acrobat® Reader

Adobe Systems Incorporated

Acrobat Reader software allows you to view, navigate, and print electronic documents in Adobe Portable Document Format (PDF), an open file format that is intended to preserve the fidelity of documents created on all major computer platforms.

Adobe PhotoDeluxe® Business Edition

Adobe Systems Incorporated

Create amazing photo effects with PhotoDeluxe. Without learning complex software, you can

enhance, restore, and be creative with your photos. Includes built-in guided activities, stock photos, clip art, and templates to assist you.

Adobe Premiere® LE

Adobe Systems Incorporated

Adobe Premiere LE offers an interface and editing tool for producing movies for video, multimedia, or the web. View source clips and edited footage simultaneously in the monitor window. Create video clips up to three hours long with complete audio-video synchronization.

America Online®

America Online

America Online is the world's most popular Internet online service. Stay in touch with family and friends with Easy-to-Use E-mail, manage your personal finances, get the latest news and sports scores, and chat with thousands of others who share your interests.

AT&T WorldNet® Service

AT&T

Fast, reliable Internet access from AT&T WorldNet Service. AT&T WorldNet Service provides web-based e-mail, a personalized start page from Excite, easy access to the Excite search engine, free web pages, online and live agent technical support, instant messaging, and special shopping discounts at Market Square.

CompuServe®

CompuServe, Inc.

CompuServe is the most comprehensive source of organized business and educational information online today. CompuServe allows you to access the vastness of the Internet without wasting time wading through it. Maximize your time online with CompuServe.

Digital Media Park

Sony Electronics

An integrated suite of multimedia cataloging and playback programs including Media Bar, Media Library, Media Showcase, and MiniDisc Editor. Manage your music by cataloging your entire CD collection, and then create custom MiniDiscs of your favorite songs.

Dr. Solomon's® Anti-Virus

Dr Solomon's Software Inc.

Dr. Solomon's Anti-Virus provides the most comprehensive defense against the spread of viruses, including macro viruses. It can scan inside compressed files and automatically protects your system against viruses sent via e-mail or Internet download.

DVgate Motion

Sony Electronics

Connect a digital video camera recorder to the i.LINK connector and capture your own video clips. You can edit the clips from your video, add others, and combine clips into new movie segments.

DVgate Still

Sony Electronics

Connect a digital video camera recorder to the i.LINK connector and capture your own still images. You can save your images in a variety of popular file formats.

EarthLink Sprint TotalAccess

EarthLink Network, Inc.

An Internet Service Provider that supplies access, information, and assistance to its customers, introducing them to the Internet. Member benefits include e-mail, newsgroups, a Personal Start Page, a free 6 MB web site, a member magazine, and 24-hour technical support.

Microsoft® Encarta® 99 Encyclopedia

Microsoft Corporation

Microsoft Encarta Encyclopedia combines current, comprehensive content with up-to-date multimedia technology, providing users with unique, engaging learning experiences. With the 1999 edition, Encarta provides a wealth of information resources and unique interactive features

Microsoft® Internet Explorer for Windows® 98

Microsoft Corporation

Internet Explorer delivers the web the way you want it. It's safe, easy to use, and you can personalize how you access the web. Outlook Express and other tools in Internet Explorer also help you have a great experience when you are on the web!

Microsoft® Money 99

Microsoft Corporation

Microsoft Money 99 is personal finance software that lets you perform your financial tasks, everything from paying bills to planning for the future, in a smarter, faster way. With Money's online services, you can pay bills and bank from the comfort of home.

Microsoft® Outlook® 98

Microsoft Corporation

Outlook 98 is Microsoft's premier messaging and collaboration client. It combines the leading support for Internet standards-based messaging systems with integrated calendar, contact, and task-management features.

Microsoft® Works

Microsoft Corporation

Works provides users with the right set of core tools that allows them to write letters and reports, track family and friends with the address book, manage home finances, and create a home inventory.

MotorHead

Gremlin Interactive Ltd.

MotorHead is realistic arcade-racing; high-velocity entertainment that puts you behind the wheel for 3D pure racing action. Power across Europe and USA in the Transatlantic Speed League, where second place is simply not an option.

Netscape Communicator®

Netscape Communications

Netscape Communicator is the all-in-one Internet tool that makes it easy to browse the web, send Internet e-mail, chat, read newsgroups, and compose great web documents.

PictureGear

Sony Electronics

This image management software displays images from your hard drive, a Sony digital still camera, or a Sony Mavica® camera. The images appear in a convenient light-table format, so that you can easily view the contents of an entire folder.

Prodigy Internet

Prodigy Communications Corporation

An Internet service that helps you find what you need online faster and smarter. Prodigy delivers powerful online content, such as sports scores, stock quotes, news, and easy access to Excite , plus a personal e-mail account and quality customer service, all at a competitive price.

Quicken® Basic 99

Intuit, Inc

Quicken is the fastest, easiest way to organize your finances. Quicken works just like your checkbook, so it's easy to learn and use. Quicken manages all of your finances, bank accounts, credit cards, investments, and loans. You can even pay your bills online.

SurfMonkey

MediaLive, Inc

SurfMonkey is a web browser and online service for kids ages 6-12 that makes the Internet safe, fun, and easy. A talking monkey guides children through web sites and chat rooms, and can read their e-mail out loud. Children cannot go to inappropriate web sites, parents can screen e-mail messages, and chat messages are monitored.

VAIO Smart Keyboard

Sony Electronics

VAIO Smart Keyboard software operates your new easy to use programmable USB keyboard. Six programmable buttons enable you to launch your favorite applications, open frequently used files, access Explorer, or even open your web browser with just the click of a button.

WinFax® Basic Edition

Symantec Corporation

WinFax Basic Edition incorporates an easy-to-use interface that allows you to send and receive faxes easily. Upgrade to WinFax Pro to receive additional features.

About Your Recovery CDs

Application Recovery CD(s)

Sony Electronics

The Application Recovery CD program allows you to reinstall individual applications and device drivers. Use it to restore corrupted or accidentally erased files.

System Recovery CD(s)

Sony Electronics

The System Recovery CD program allows you to restore the software titles that shipped with your computer if they become corrupted or are erased accidentally. It can be used only to restore the hard disk of the Sony computer you purchased.

For Answers to Your Software Questions

Sony Service Center

For the Sony Service Center nearest you, call at 1-888-4SONYPC (1-888-476-6972).

Acrobat® Reader, Adobe PhotoDeluxe® Business Edition , Adobe Premiere® LE (Adobe Systems Incorporated)

Web site http://www.adobe.com/
phone 206-628-2746 (fee-based support)
fax 206-628-5737
e-mail techdocs@adobe.com
hours M-F, 6 AM-5 PM PT

America Online® (America Online)

Web site http://www.aol.com/
phone 800-827-3338
hours 7 days a week, 6 AM - 2 PM ET

AT&T WorldNet® Service (AT&T)

Web site http://www.att.net/*
phone 800-400-1447
e-mail worldnet@attmail.com
hours 7 days a week, 24 hours a day

* You must be a WorldNet Service customer to access online support.

CompuServe® Interactive (CompuServe Interactive, Inc.)

Web site http://www.compuserve.com/
phone 800-848-8990
hours M-F, 8 AM - 1 AM ET, S-S 10 AM - 10 PM ET

Dr. Solomon's® Anti-Virus (Dr. Solomon's Software Inc.)

Web site http://www.drsolomon.com/
phone 888-377-6566
e-mail support@us.drsolomon.com
hours 7 days a week, 24 hours a day

EarthLink Sprint TotalAccess (EarthLink Network, Inc.)

Web site http://help.earthlink.net/techsupport/
phone 800-395-8410
e-mail support@earthlink.net
hours 7 days a week, 24 hours a day

Easy Internet Access (Encompass, Inc.)

Web site http://www.encmpss.com/
phone 800-927-3000
hours 7 days a week, 24 hours a day

MotorHead (Gremlin Interactive Ltd.)

Web site http://www.gremlin.com/
phone 888-4SONYPC (888-476-6972)
hours 7 days a week, 24 hours a day

Windows® 98 Operating System, Works, Money, Encarta, Internet Explorer (Microsoft Corporation)

Web site http://www.microsoft.com/support/
phone 888-4SONYPC (888-476-6972)*
hours 7 days a week, 24 hours a day
* Support from 1-888-4SONYPC is free of charge for 90 days after the original date of purchase.

Netscape Communicator® (Netscape Communications Corporation)

Web site http://www.netscape.com/
phone 888-4SONYPC (888-476-6972)*
hours 7 days a week, 24 hours a day
* Support from 1-888-4SONYPC is free of charge for 90 days after the original date of purchase.

Prodigy Internet (Prodigy Communications Corporation.)

Web site http://www.prodigy.com/
phone 800-PRODIGY
hours 7 AM - 3 AM ET

Quicken® Basic (Intuit Inc.)

Web site http://www.intuit.com/support/
phone 900-555-4688
hours 7 days a week, 24 hours a day

SurfMonkey (MediaLive, Inc.)

Web site http://www.surfmonkey.com/support/Sub_support.html
phone 408-556-2060
e-mail support@surfmonkey.com
hours 9AM-10PM PT everyday

WinFax® Basic Edition (Symantec Corporation.)

Web site http://www.symantec.com/techsupp/
phone 800-798-0850
fax 800-554-4403 in North America
541-984-2490 outside North America

Specifications

Model **PCV-E518DS**
Processor 500 MHz Pentium® III
Hard Disk Drive 17.28 GB
Standard SDRAM 128 MB PC-100 SDRAM, expandable to 256 MB
Video RAM 8 MB SDRAM
MPEG "Sony Tuned" MPEG Digital Video supports full-screen video playback
Graphics 3D 2X AGP graphics acceleration (Matrox)
Sound Capabilities 3D Positional Audio (Aureal A3D)
Diskette Drive 3.5" 1.44 MB FDD
CD-RW Drive CD-RW Drive (4X max. CD-R writing, 2X max. CD-RW writing, 24X max. reading)
Modem K56flex technology/V.90 compatible data/fax modem[1]
Expansion Capabilities One PCI slot
One additional hard disk drive bay
Connection Capabilities (Front) USB port
i.LINK port (4-pin)
Connection Capabilities (Rear) Optional Keyboard (PS/2-style)
Mouse (PS/2-style)
USB port
Serial port
Parallel (printer)
Game/MIDI
Headphones
Line In
Microphone
VGA Monitor
S-Link (Control-A1)
Optical Digital Audio Out
Two i.LINK ports (6-pin)[2]
Modem line (RJ-11)
Phone line (RJ-11)
Supplied Accessories VAIO Smart keyboard
Sony two-button mouse
RJ-11 phone cable
Power cord
Service 90-day limited service. Extendible to one year from original date of purchase upon registration[3]
Limited Warranty 90-day parts/labor standard. Extendible to one year from original date of purchase upon registration[4]

Power Requirements 200 watts maximum
Dimensions 7" (w) x 12" (h) x 13 3/4" (d) (178mm x 304mm x 330mm)
Weight 17 lbs. (7.71 kg)
Operating Temperature 50º F to 95º F (+10º C to 35º C)

[1] Maximum speed for faxing is 14.4 kbytes/s. Your modem is capable of downloading at 56 kbytes/s using K56flex technology or V.90. Your phone service, online service, or Internet Service Provider however, may not support this technology or operate at this speed.

[2] Six-pin i-LINK connectors on the rear of the system each supply 10V to 12V. The combined total wattage that can be supplied by the two connectors is 6 watts.

[3] Certain restrictions apply

[4] Certain restrictions apply

Specifications are subject to change without notice.

This product meets the standards of the International Energy Star Program for energy efficiency.

© 1999 Sony Electronics Inc. Reproduction in w hole or in part w ithout w ritten permission is prohibited. All rights reserved.

Read Me First

Welcome

Congratulations on your purchase of the Sony VAIO Digital Studio Computer. Sony has combined leading-edge technology in audio, video, computing, and communications to provide you with state-of-the-art personal computing.

Features

 For a complete description of the specifications of your VAIO Digital Studio Computer, see Specifications.

- **Exceptional performance:** Your computer includes a brand new Intel® Pentium® III processor, a CD-RW drive, and a V.90 compatible data/fax modem.*

* Actual upload and download speeds may vary due to line conditions, ISP support, and government regulations.

- **CD-RW drive:** This drive is the ideal solution for making backups and data archiving, with the ability to store up to 650 MB* of removable, rewritable storage on a single rewritable CD. Save your movies to CD-R or CD-RW media and share videos and images with family and friends.

***** 530 MB after formatting.

- **VAIO Smart Keyboard:** This USB keyboard has programmable shortcut buttons for launching your favorite programs or accessing the Internet.
- **Sony audio and video quality:** High-fidelity positional 3D audio system (A3D), high-powered 3D graphics (AGP), and "Sony-Tuned" MPEG digital video playback enable you to take advantage of today's advanced multimedia applications, games, and entertainment software.
- **S-Link (Control-A1):** This technology allows you to build a database of all your music and video CDs and then record your favorite audio selections on MiniDiscs. Use your computer with a 200 disc mega-storage CD changer and a MiniDisc recording deck.
- **i.LINK (IEEE 1394):** Three built-in i.LINK ports provide you with maximum digital connection capability. The i.LINK name and logo identify a digital interface (IEEE 1394) for high speed communication. By using your VAIO Digital Studio Computer, a Sony Digital Handycam® Camcorder, the DVgate software preinstalled on your computer, and the i.LINK (IEEE 1394) interface, you can easily create and edit your own home videos.
- **Optical Digital Audio Output:** This high-quality digital interface transmits digital audio data via light pulses. Transfer crystal clear digital audio to your MiniDisc recorder.
- **Digital Studio Software**: Enjoy all of your computer's audio and video capabilities with component-like applications that allow you to creatively manipulate digital still images, video clips, and audio tracks.
- **50 free hours of Internet access:** Use the Internet for up to 50 free hours when you sign up with GTE (no credit card required). Limit of two hours per day. Free access expires after 50 hours or 90 days after signing up--whichever occurs first.
- **Preinstalled software titles**: All the software on your computer is preinstalled, configured, and ready for you to use right out of the box.
- **Windows® 98**: Your system includes the latest operating system from Microsoft.
- **Communications:** Access popular online services, browse the Internet, send faxes, and more.

Unpacking Your Computer

Computer and Supplied Accessories

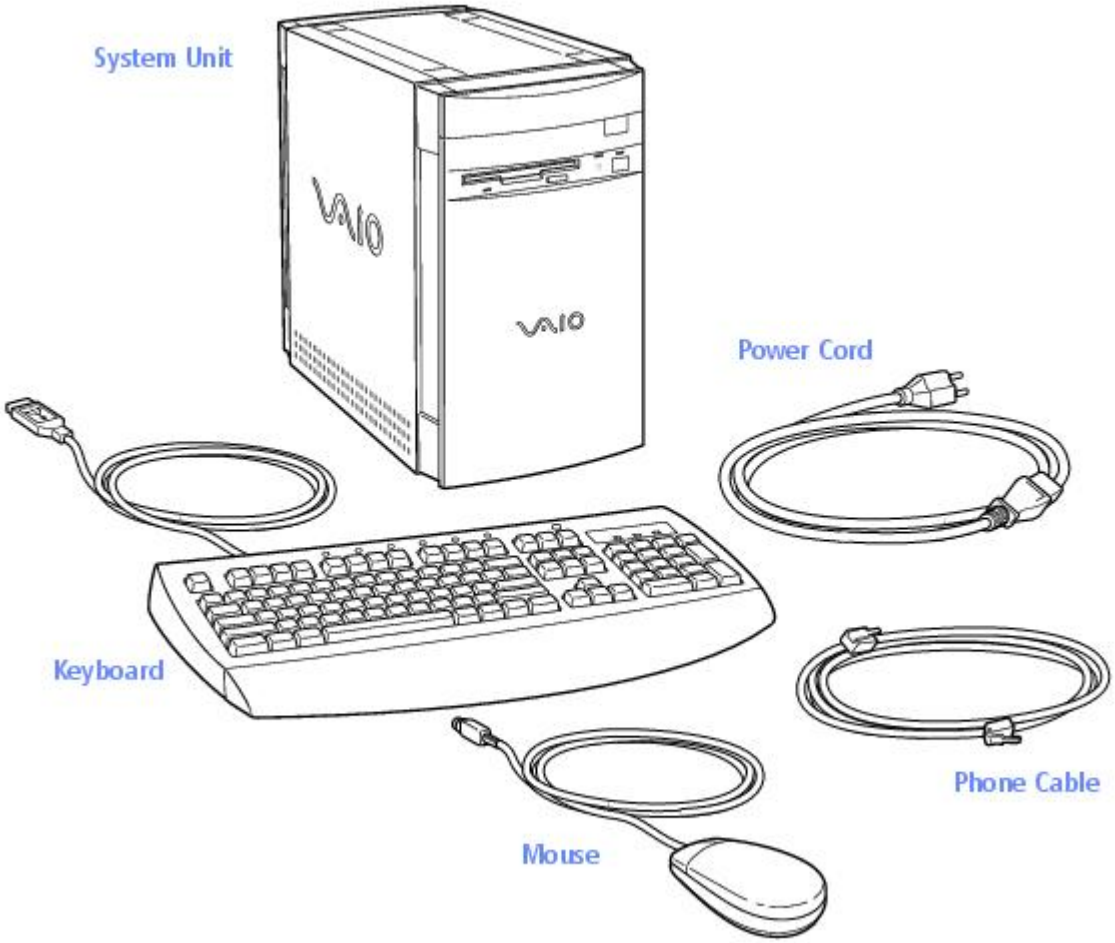

Manuals

- *Read Me First* (this manual) contains features and specifications of your computer. It also includes information on the applications included with your system, how to contact software vendors, and last minute troubleshooting tips.
- The *VAIO Digital Studio Computer User Guide* describes how to get started with your computer, find help, and solve common problems.
- The *Microsoft® Windows®98 Getting Started* manual explains how to use the basic features of the Windows operating system.

Recovery CDs

- System Recovery CD(s)
- Application Recovery CD(s)

Other

- Setting up your VAIO Digital Studio Computer (poster)
- Packet containing special product offers

Software Library

The Software Library contains the Microsoft software license agreement, Sony end-user license agreement, and the following CDs:

- Adobe PhotoDeluxe® Business Edition 3.0
- Gremlin Interactive Ltd. MotorHead
- Microsoft® Encarta® 99 Encyclopedia
- Microsoft® Money/Microsoft® Works

Back Panel Overview

The back panel of your computer contains the connectors where you plug in supplied and optional accessories. The icons on the back panel serve as a map to help you locate the connectors on your computer.

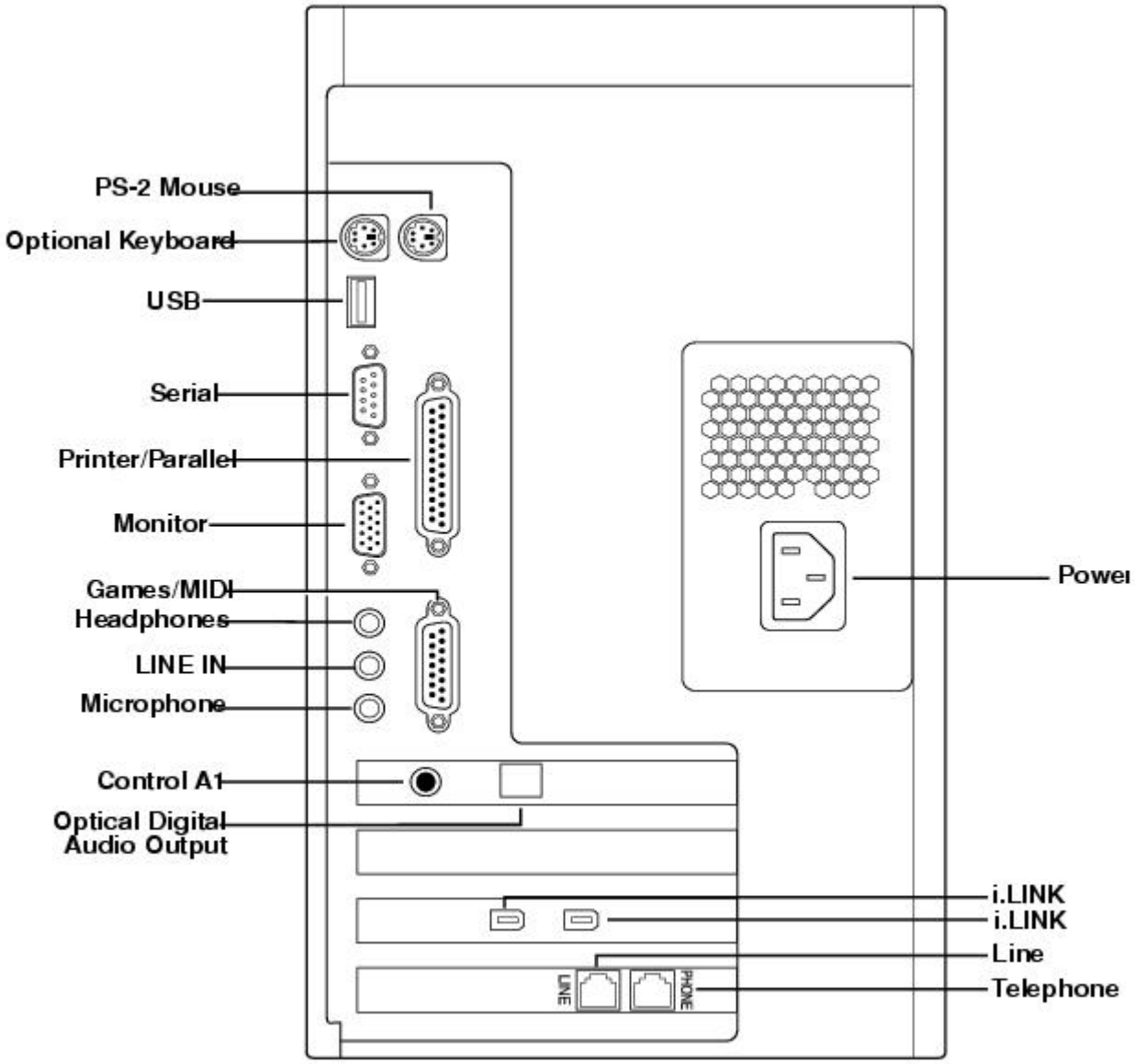

For your convenience, your computer includes USB and i.LINK connectors on both the front and back panels, allowing you to connect to either set of connectors. i.LINK connectors on the back of your system are 6-pin connectors.

Front Panel Overview

The front panel of your VAIO Digital Studio Computer allows for access to the diskette and CD-RW drives. It also includes USB and i.LINK ports to connect USB devices, CD changers, MiniDisc drives, or other components.

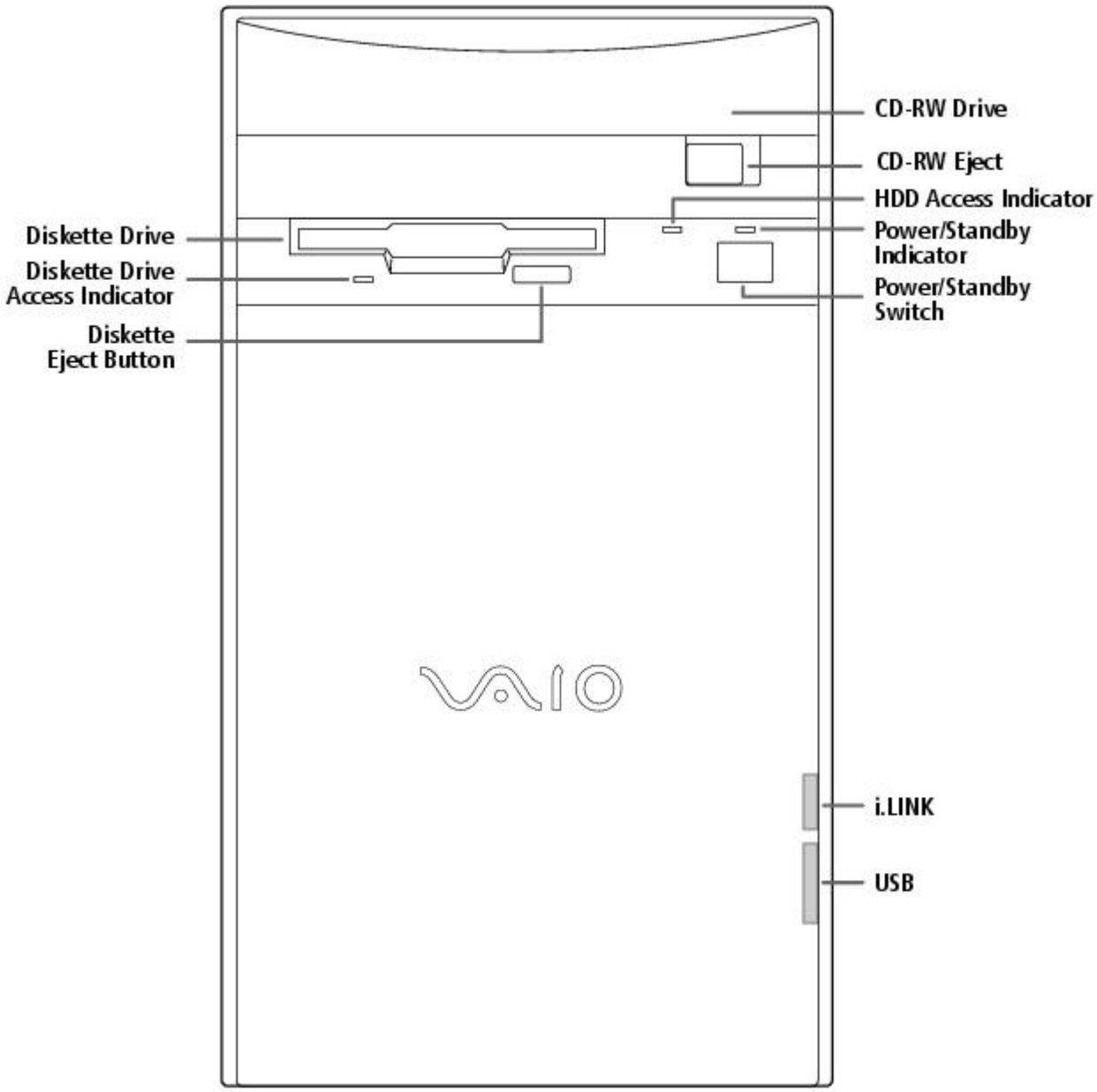

For your convenience, your computer includes USB and i.LINK connectors on both the front and back panels, allowing you to connect to either set of connectors. The i.LINK connector on the front of your system is a 4-pin connector.

Supplementary Information

For the most recent version of this manual, see the online version of Read Me First. You can access this document from the Windows Start Menu by selecting Programs/VAIO Documentation.

Hard Drive Partition

In order to improve the performance of your computer's DVgate Motion software, the hard disk drive on your computer has been formatted with two partitions, C and D. DVgate Motion saves files to the D partition. This prevents large video captures from consuming the available space on your C partition. To maintain optimum performance of DVgate Motion, you should defragment regularly.

VAIO Smart Keyboard Default Settings

The VAIO Smart Keyboard programmable buttons come with the following applications as their default settings:

S1 - Easy Internet Access Browser (Internet)

S2 - Outlook 98 (Mail)

S3 - MotorHead (Game)

S4 - Microsoft® Works (Work)

S5 - Quicken 99 Basic (Finance)

S6 - VAIO Documentation (Help)

All six buttons are reprogrammable.

Using The Standby Mode

To Put Your Computer into Standby Mode

When you are done using your computer, you can put it in Standby mode rather than turn it off completely. There are four ways to put your computer into Standby mode.

- Touch the power switch on the front panel.
- Click Shut Down at the bottom of the Start menu to display the Shut Down Windows dialog box. Select Stand by, and then click OK.
- Press the Standby button on the VAIO Smart Keyboard (the half moon icon).
- Change the timer settings for Standby mode in the Control Panel, as follows:

1. From the Start menu, point to Settings and click Control Panel.
2. Click the Power Management icon.
3. On the Power Schemes tab, change the Power scheme to Home/Office Desk.
4. In the list box for System standby, select an interval of time.
5. Click the OK button and close the Control Panel.

To Resume from Standby Mode

There are two ways to resume system functionality when your computer is in Standby mode. Use either of the following methods.

- Press any key on your keyboard, such as the Enter key.
- Touch the power switch on the front panel.

It may take up to 30 seconds for your system to recover stored information and resume functionality. The screen remains blank while the system is resuming functionality.

Applications That Use the TWAIN Driver

Digital imaging applications, such as Adobe PhotoDeluxe®, allow you to transfer images to your computer from external devices, including scanners or digital cameras. For some devices, a TWAIN driver window appears on the screen. Always close the TWAIN driver window before exiting or minimizing a digital imaging application.

Restoring Outlook 98

For the Add New Components functionality to be available with Microsoft Outlook, you must first run the installation program for Outlook from the Application Recovery CD. When prompted to install the program, select Exit. This decompresses the software, making the Add New Components functionality available.

Inserting Add-in Boards

Your VAIO Digital Studio Computer accommodates PCI add-in boards up to 7.7 inches in length.

Using Devices Connected to the i.LINK (IEEE 1394), S-Link (Control-A1), and Optical Digital Audio Output Connectors

For the latest information on devices known to be compatible with the state-of the-art audio, video, and graphics capabilities of your VAIO computer, check the Sony web site at http://www.sony.com/pcsupport.

Connecting to i.LINK Ports

Your VAIO computer includes a 4-pin i.LINK connector on the front of the system and two 6-pin i.LINK connectors on the back of the system. A 6-pin i.LINK connector can supply power from the computer to the connected device if the device is equipped with a 6-pin connector. Each 6-pin connector supplies 10V to 12V. The total power supplied by both 6-pin i.LINK connectors cannot exceed 6 watts. A 4-pin i.LINK connector cannot supply power to a connected device.

Capturing and Editing Digital Video Clips

- You can capture digital video clips using a digital video camera recorder and DVgate Motion software. Once the clips are saved as AVI files, they can be edited using DVgate Motion, DVgate Clip, or Adobe Premiere® LE. You cannot capture digital video clips directly using the Capture menu in Adobe Premiere LE. Adobe Premiere LE supports an analog capture board for capturing clips. Your VAIO computer is designed for digital video input.
- If there is no audio data associated with an AVI file, the message "Codec compression error" appears. If you do not wish to associate audio with your AVI file, you can add muted sound data by recording audio with the mute option enabled.
- For best performance, when editing AVI files in Adobe Premiere LE, you should use the default setup parameters that shipped with your system. If you change the default setup and want to reinitialize the parameters, follow these steps:

    1. In the Adobe Premiere LE application, select Compression from the Make menu. The Compression Settings dialog box appears.
    2. In the Method list box, select Sony DV software CODEC.
    3. Click OK to close the screen.
    4. From the Make menu, select Preset. The Preset dialog box appears.
    5. Select the parameters for Time Base, Compress, Output, and Preview Option settings as indicated below.

[Time base]

Time base - 29.97fps (required)

[Compress]

File type - AVI (required)
Compress Program Method - Sony DV software CODEC (required)
Compress Program Depth - Millions colors (No other options)
Quality (No control for this item)
Option: Frames per second - 30 (required)
Option: Basic Key Frames (No control for this item)
Option: Optimize Still Off (recommended)
Data rate - Recompress Off (recommended)

[Output options]

Video - On (required)
Video Size - 720x480
4:3 Aspect - Off (required)
VideoType - Field 2 (recommended)
Audio - On (required)
Audio Rate - 44kHz (required)
Audio Format - 16 Bit Stereo or 16 Bit Monaural (required)
Audio Type - Uncompress (required)
Audio Interleave - 1 frame (recommended)
- Less than 30 frames (required)

Audio Sync - 1.0 (required)
Audio Skew - 0.75 (recommended)
- Less than 1.0 (required)

[Preview Option]

Preview Window Size - 360x240

Note that Adobe Premiere LE does not save the Preview Window Size, but uses a default size of 320 x 213 each time the application launches. We recommend that you change this setting to 360 x 240 to improve the quality of preview clips when editing AVI files.

Using Alternate Browsers with America Online®

To use Internet Explorer or Netscape Navigator as your browser with America Online, follow these steps:

1. From the Start menu, point to Settings and then click Control Panel.
2. Click the Internet icon.
3. Click the Connection tab.
4. Click the "Connect to the Internet using local area network" radio button.
5. Click OK.

Using DVgate Motion

When capturing clips:

- Do not use DVgate Motion when the connected digital video peripheral is in Timer Recording mode, as this could produce a malfunction in the peripheral.
- Captures larger than 2 GB (9 minutes and 30 seconds) are automatically continued in a second file.
- You can record stereo audio (stereo 1) while capturing video. You cannot add audio on the stereo 2 track after capturing the video data.
- You cannot use different audio modes on the same tape. You should perform a separate capture for each audio mode you wish to use.
- DVgate Motion does not support hard disk compression. You should not use disk compression if you are planning to work with DVgate Motion.
- Title data is saved in the flash memory of a digital video camera and is not transferred to tape by DVgate Motion.
- To avoid interruption of capture sessions, you should disable the screen saver.
- The drop frame compensation feature does not provide accurate compensation adjustments for tapes recorded in LP mode.
- For tapes that include a mixture of both SP and LP mode, the information displayed by the capture progress indicator may not be accurate.
- Make sure the video head of your digital video device is properly cleaned. Anomalies that you see in captured data could be due to dust or other particles on the video head.
    - The last frame captured is one frame before your selected [OUT] point. The frame you see immediately after clicking the [OUT] button is not captured.

When recording AVI files to tape:

- Do not use DVgate Motion when the connected digital video peripheral is in Timer Recording mode, as this could produce a malfunction in the peripheral.

- You can record only AVI files. MPEG files cannot be recorded.
- To avoid recording problems, such as a single frame appearing in multiple frames, close other applications on your system while recording.
- You cannot use different audio modes on the same tape. If you have AVI files that use different audio modes, they cannot be recorded at the same time, but must be recorded separately.
- Do not attempt to work with AVI files that are smaller than 4 MB.
- DVgate Motion does not support hard disk compression. You should not use disk compression if you are planning to work with DVgate Motion.
- In order to maximize recording capabilities, video and audio data are not available while you are recording.

If DVgate Motion indicates that frames have been dropped, you should try closing all open applications, or you may need to defragment your hard drive.

Restoring Audio Drivers

When you restore the audio drivers from the Application Recovery CD, you need to restart your system to use these drivers. In the Add New Hardware wizard that appears when you restart, click the Next button until you are prompted for the location of the drivers. The audio drivers are located on the Application Recovery CD in G:\drivers\audio\AL98091701\English.

Using AC-3® to Optical Digital Audio Output

MiniDisc player/recorders, DAT player/recorders, and older digital receivers do not support Dolby® Digital (AC-3). You should not use the AC-3 to Optical Digital Audio Output option unless you are using a device that supports Dolby Digital. Please refer to the manual supplied with your equipment to determine if it supports Dolby Digital. If you are unsure and you have selected the AC-3 to Optical Digital Audio Output option, turn down the volume on your equipment before using the DVD player.

Using America Online or Sony Online Support with WinFax® Basic Edition

Once you have configured WinFax Basic Edition, it is automatically available for your use. You cannot use America Online or Sony Online Support when the automatic fax receive feature of WinFax Basic Edition is on. To disable this feature, right click the WinFax icon in the task tray at the bottom right corner of your screen, and then select Exit.

Memory Upgrade Specifications

When upgrading memory, use only 3.3V 64-bit PC-100 168 PIN SDRAM DIMM modules. For more information on Digital Studio Computer compatible memory, call Sony at 1-888-4SONYPC (1-888-476-6972).

About the Software On Your Computer

Your VAIO Digital Studio computer is ready to help you work, play, learn, and communicate as soon as you turn it on. This section gives you an overview of the activities you can perform with your software titles. For support information, see For Answers to Your Software Questions.

Adobe Acrobat® Reader

Adobe Systems Incorporated

Acrobat Reader software allows you to view, navigate, and print electronic documents in Adobe Portable Document Format (PDF), an open file format that is intended to preserve the fidelity of documents created on all major computer platforms.

Adobe PhotoDeluxe® Business Edition

Adobe Systems Incorporated

Create amazing photo effects with PhotoDeluxe. Without learning complex software, you can

enhance, restore, and be creative with your photos. Includes built-in guided activities, stock photos, clip art, and templates to assist you.

Adobe Premiere® LE

Adobe Systems Incorporated

Adobe Premiere LE offers an interface and editing tool for producing movies for video, multimedia, or the web. View source clips and edited footage simultaneously in the monitor window. Create video clips up to three hours long with complete audio-video synchronization.

America Online®

America Online

America Online is the world's most popular Internet online service. Stay in touch with family and friends with Easy-to-Use E-mail, manage your personal finances, get the latest news and sports scores, and chat with thousands of others who share your interests.

AT&T WorldNet® Service

AT&T

Fast, reliable Internet access from AT&T WorldNet Service. AT&T WorldNet Service provides web-based e-mail, a personalized start page from Excite, easy access to the Excite search engine, free web pages, online and live agent technical support, instant messaging, and special shopping discounts at Market Square.

CompuServe®

CompuServe, Inc.

CompuServe is the most comprehensive source of organized business and educational information online today. CompuServe allows you to access the vastness of the Internet without wasting time wading through it. Maximize your time online with CompuServe.

Digital Media Park

Sony Electronics

An integrated suite of multimedia cataloging and playback programs including Media Bar, Media Library, Media Showcase, and MiniDisc Editor. Manage your music by cataloging your entire CD collection, and then create custom MiniDiscs of your favorite songs.

Dr. Solomon's® Anti-Virus

Dr Solomon's Software Inc.

Dr. Solomon's Anti-Virus provides the most comprehensive defense against the spread of viruses, including macro viruses. It can scan inside compressed files and automatically protects your system against viruses sent via e-mail or Internet download.

DVgate Motion

Sony Electronics

Connect a digital video camera recorder to the i.LINK connector and capture your own video clips. You can edit the clips from your video, add others, and combine clips into new movie segments.

DVgate Still

Sony Electronics

Connect a digital video camera recorder to the i.LINK connector and capture your own still images. You can save your images in a variety of popular file formats.

EarthLink Sprint TotalAccess

EarthLink Network, Inc.

An Internet Service Provider that supplies access, information, and assistance to its customers, introducing them to the Internet. Member benefits include e-mail, newsgroups, a Personal Start Page, a free 6 MB web site, a member magazine, and 24-hour technical support.

Microsoft® Encarta® 99 Encyclopedia

Microsoft Corporation

Microsoft Encarta Encyclopedia combines current, comprehensive content with up-to-date multimedia technology, providing users with unique, engaging learning experiences. With the 1999 edition, Encarta provides a wealth of information resources and unique interactive features

Microsoft® Internet Explorer for Windows® 98

Microsoft Corporation

Internet Explorer delivers the web the way you want it. It's safe, easy to use, and you can personalize how you access the web. Outlook Express and other tools in Internet Explorer also help you have a great experience when you are on the web!

Microsoft® Money 99

Microsoft Corporation

Microsoft Money 99 is personal finance software that lets you perform your financial tasks, everything from paying bills to planning for the future, in a smarter, faster way. With Money's online services, you can pay bills and bank from the comfort of home.

Microsoft® Outlook® 98

Microsoft Corporation

Outlook 98 is Microsoft's premier messaging and collaboration client. It combines the leading support for Internet standards-based messaging systems with integrated calendar, contact, and task-management features.

Microsoft® Works

Microsoft Corporation

Works provides users with the right set of core tools that allows them to write letters and reports, track family and friends with the address book, manage home finances, and create a home inventory.

MotorHead

Gremlin Interactive Ltd.

MotorHead is realistic arcade-racing; high-velocity entertainment that puts you behind the wheel for 3D pure racing action. Power across Europe and USA in the Transatlantic Speed League, where second place is simply not an option.

Netscape Communicator®

Netscape Communications

Netscape Communicator is the all-in-one Internet tool that makes it easy to browse the web, send Internet e-mail, chat, read newsgroups, and compose great web documents.

PictureGear

Sony Electronics

This image management software displays images from your hard drive, a Sony digital still camera, or a Sony Mavica® camera. The images appear in a convenient light-table format, so that you can easily view the contents of an entire folder.

Prodigy Internet

Prodigy Communications Corporation

An Internet service that helps you find what you need online faster and smarter. Prodigy delivers powerful online content, such as sports scores, stock quotes, news, and easy access to Excite , plus a personal e-mail account and quality customer service, all at a competitive price.

Quicken® Basic 99

Intuit, Inc

Quicken is the fastest, easiest way to organize your finances. Quicken works just like your checkbook, so it's easy to learn and use. Quicken manages all of your finances, bank accounts, credit cards, investments, and loans. You can even pay your bills online.

SurfMonkey

MediaLive, Inc

SurfMonkey is a web browser and online service for kids ages 6-12 that makes the Internet safe, fun, and easy. A talking monkey guides children through web sites and chat rooms, and can read their e-mail out loud. Children cannot go to inappropriate web sites, parents can screen e-mail messages, and chat messages are monitored.

VAIO Smart Keyboard

Sony Electronics

VAIO Smart Keyboard software operates your new easy to use programmable USB keyboard. Six programmable buttons enable you to launch your favorite applications, open frequently used files, access Explorer, or even open your web browser with just the click of a button.

WinFax® Basic Edition

Symantec Corporation

WinFax Basic Edition incorporates an easy-to-use interface that allows you to send and receive faxes easily. Upgrade to WinFax Pro to receive additional features.

About Your Recovery CDs

Application Recovery CD(s)

Sony Electronics

The Application Recovery CD program allows you to reinstall individual applications and device drivers. Use it to restore corrupted or accidentally erased files.

System Recovery CD(s)

Sony Electronics

The System Recovery CD program allows you to restore the software titles that shipped with your computer if they become corrupted or are erased accidentally. It can be used only to restore the hard disk of the Sony computer you purchased.

For Answers to Your Software Questions

Sony Service Center

For the Sony Service Center nearest you, call at 1-888-4SONYPC (1-888-476-6972).

Acrobat® Reader, Adobe PhotoDeluxe® Business Edition , Adobe Premiere® LE (Adobe Systems Incorporated)

Web site http://www.adobe.com/
phone 206-628-2746 (fee-based support)
fax 206-628-5737
e-mail techdocs@adobe.com
hours M-F, 6 AM-5 PM PT

America Online® (America Online)

Web site http://www.aol.com/
phone 800-827-3338
hours 7 days a week, 6 AM - 2 PM ET

AT&T WorldNet® Service (AT&T)

Web site http://www.att.net/*
phone 800-400-1447
e-mail worldnet@attmail.com
hours 7 days a week, 24 hours a day

* You must be a WorldNet Service customer to access online support.

CompuServe® Interactive (CompuServe Interactive, Inc.)

Web site http://www.compuserve.com/
phone 800-848-8990
hours M-F, 8 AM - 1 AM ET, S-S 10 AM - 10 PM ET

Dr. Solomon's® Anti-Virus (Dr. Solomon's Software Inc.)

Web site http://www.drsolomon.com/
phone 888-377-6566
e-mail support@us.drsolomon.com
hours 7 days a week, 24 hours a day

EarthLink Sprint TotalAccess (EarthLink Network, Inc.)

Web site http://help.earthlink.net/techsupport/
phone 800-395-8410
e-mail support@earthlink.net
hours 7 days a week, 24 hours a day

Easy Internet Access (Encompass, Inc.)

Web site http://www.encmpss.com/
phone 800-927-3000
hours 7 days a week, 24 hours a day

MotorHead (Gremlin Interactive Ltd.)

Web site http://www.gremlin.com/
phone 888-4SONYPC (888-476-6972)
hours 7 days a week, 24 hours a day

Windows® 98 Operating System, Works, Money, Encarta, Internet Explorer (Microsoft Corporation)

Web site http://www.microsoft.com/support/
phone 888-4SONYPC (888-476-6972)*
hours 7 days a week, 24 hours a day
* Support from 1-888-4SONYPC is free of charge for 90 days after the original date of purchase.

Netscape Communicator® (Netscape Communications Corporation)

Web site http://www.netscape.com/
phone 888-4SONYPC (888-476-6972)*
hours 7 days a week, 24 hours a day
* Support from 1-888-4SONYPC is free of charge for 90 days after the original date of purchase.

Prodigy Internet (Prodigy Communications Corporation.)

Web site http://www.prodigy.com/
phone 800-PRODIGY
hours 7 AM - 3 AM ET

Quicken® Basic (Intuit Inc.)

Web site http://www.intuit.com/support/
phone 900-555-4688
hours 7 days a week, 24 hours a day

SurfMonkey (MediaLive, Inc.)

Web site http://www.surfmonkey.com/support/Sub_support.html
phone 408-556-2060
e-mail support@surfmonkey.com
hours 9AM-10PM PT everyday

WinFax® Basic Edition (Symantec Corporation.)

Web site http://www.symantec.com/techsupp/
phone 800-798-0850
fax 800-554-4403 in North America
541-984-2490 outside North America

Specifications

Model **PCV-E518DS**
Processor 500 MHz Pentium® III
Hard Disk Drive 17.28 GB
Standard SDRAM 128 MB PC-100 SDRAM, expandable to 256 MB
Video RAM 8 MB SDRAM
MPEG "Sony Tuned" MPEG Digital Video supports full-screen video playback
Graphics 3D 2X AGP graphics acceleration (Matrox)
Sound Capabilities 3D Positional Audio (Aureal A3D)
Diskette Drive 3.5" 1.44 MB FDD
CD-RW Drive CD-RW Drive (4X max. CD-R writing, 2X max. CD-RW writing, 24X max. reading)
Modem K56flex technology/V.90 compatible data/fax modem[1]
Expansion Capabilities One PCI slot
One additional hard disk drive bay
Connection Capabilities (Front) USB port
i.LINK port (4-pin)
Connection Capabilities (Rear) Optional Keyboard (PS/2-style)
Mouse (PS/2-style)
USB port
Serial port
Parallel (printer)
Game/MIDI
Headphones
Line In
Microphone
VGA Monitor
S-Link (Control-A1)
Optical Digital Audio Out
Two i.LINK ports (6-pin)[2]
Modem line (RJ-11)
Phone line (RJ-11)
Supplied Accessories VAIO Smart keyboard
Sony two-button mouse
RJ-11 phone cable
Power cord
Service 90-day limited service. Extendible to one year from original date of purchase upon registration[3]
Limited Warranty 90-day parts/labor standard. Extendible to one year from original date of purchase upon registration[4]

Power Requirements 200 watts maximum
Dimensions 7" (w) x 12" (h) x 13 3/4" (d) (178mm x 304mm x 330mm)
Weight 17 lbs. (7.71 kg)
Operating Temperature 50º F to 95º F (+10º C to 35º C)

[1] Maximum speed for faxing is 14.4 kbytes/s. Your modem is capable of downloading at 56 kbytes/s using K56flex technology or V.90. Your phone service, online service, or Internet Service Provider however, may not support this technology or operate at this speed.

[2] Six-pin i-LINK connectors on the rear of the system each supply 10V to 12V. The combined total wattage that can be supplied by the two connectors is 6 watts.

[3] Certain restrictions apply

[4] Certain restrictions apply

Specifications are subject to change without notice.

This product meets the standards of the International Energy Star Program for energy efficiency.

© 1999 Sony Electronics Inc. Reproduction in w hole or in part w ithout w ritten permission is prohibited. All rights reserved.

Read Me First

Welcome

Congratulations on your purchase of the Sony VAIO Digital Studio Computer. Sony has combined leading-edge technology in audio, video, computing, and communications to provide you with state-of-the-art personal computing.

Features

 For a complete description of the specifications of your VAIO Digital Studio Computer, see Specifications.

- **Exceptional performance:** Your computer includes a brand new Intel® Pentium® III processor, a CD-RW drive, and a V.90 compatible data/fax modem.*

* Actual upload and download speeds may vary due to line conditions, ISP support, and government regulations.

- **CD-RW drive:** This drive is the ideal solution for making backups and data archiving, with the ability to store up to 650 MB* of removable, rewritable storage on a single rewritable CD. Save your movies to CD-R or CD-RW media and share videos and images with family and friends.

***** 530 MB after formatting.

- **VAIO Smart Keyboard:** This USB keyboard has programmable shortcut buttons for launching your favorite programs or accessing the Internet.
- **Sony audio and video quality:** High-fidelity positional 3D audio system (A3D), high-powered 3D graphics (AGP), and "Sony-Tuned" MPEG digital video playback enable you to take advantage of today's advanced multimedia applications, games, and entertainment software.
- **S-Link (Control-A1):** This technology allows you to build a database of all your music and video CDs and then record your favorite audio selections on MiniDiscs. Use your computer with a 200 disc mega-storage CD changer and a MiniDisc recording deck.
- **i.LINK (IEEE 1394):** Three built-in i.LINK ports provide you with maximum digital connection capability. The i.LINK name and logo identify a digital interface (IEEE 1394) for high speed communication. By using your VAIO Digital Studio Computer, a Sony Digital Handycam® Camcorder, the DVgate software preinstalled on your computer, and the i.LINK (IEEE 1394) interface, you can easily create and edit your own home videos.
- **Optical Digital Audio Output:** This high-quality digital interface transmits digital audio data via light pulses. Transfer crystal clear digital audio to your MiniDisc recorder.
- **Digital Studio Software**: Enjoy all of your computer's audio and video capabilities with component-like applications that allow you to creatively manipulate digital still images, video clips, and audio tracks.
- **50 free hours of Internet access:** Use the Internet for up to 50 free hours when you sign up with GTE (no credit card required). Limit of two hours per day. Free access expires after 50 hours or 90 days after signing up--whichever occurs first.
- **Preinstalled software titles**: All the software on your computer is preinstalled, configured, and ready for you to use right out of the box.
- **Windows® 98**: Your system includes the latest operating system from Microsoft.
- **Communications:** Access popular online services, browse the Internet, send faxes, and more.

Unpacking Your Computer

Computer and Supplied Accessories

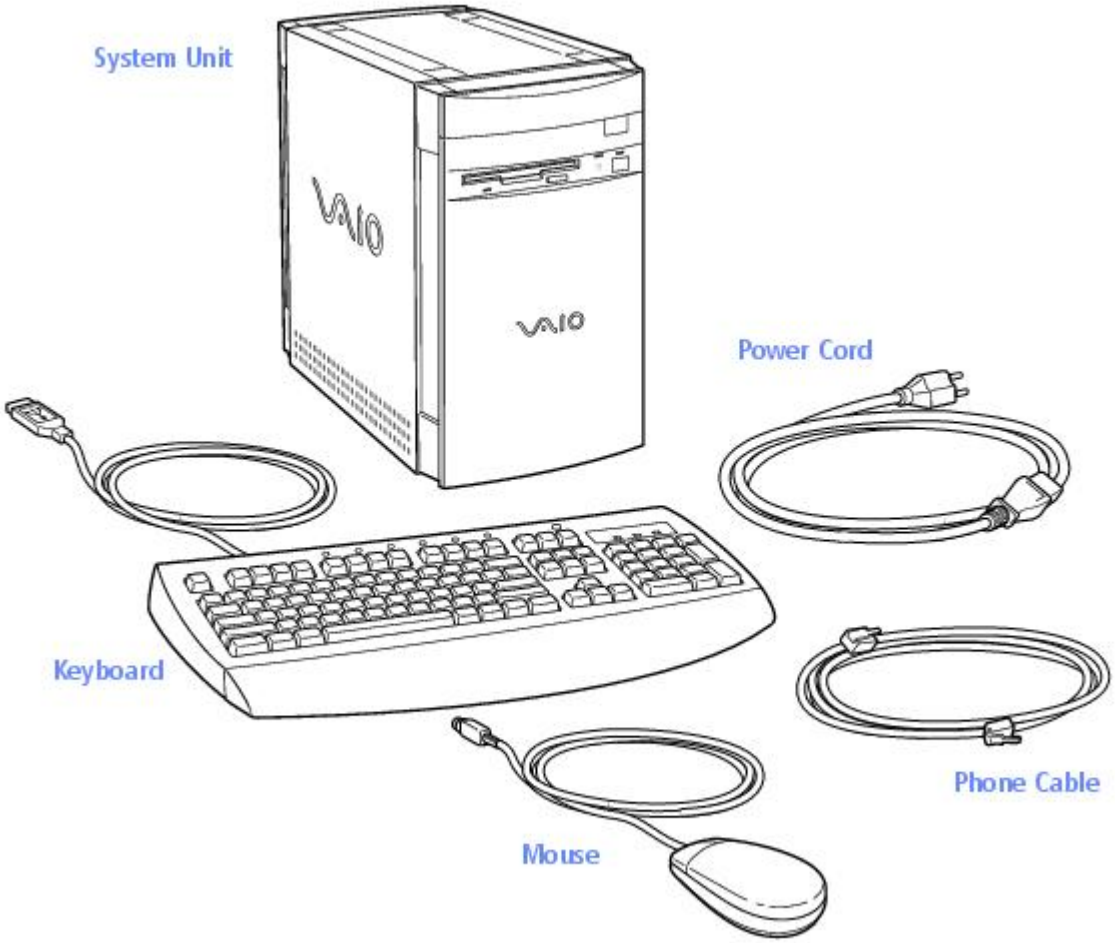

Manuals

- *Read Me First* (this manual) contains features and specifications of your computer. It also includes information on the applications included with your system, how to contact software vendors, and last minute troubleshooting tips.
- The *VAIO Digital Studio Computer User Guide* describes how to get started with your computer, find help, and solve common problems.
- The *Microsoft® Windows®98 Getting Started* manual explains how to use the basic features of the Windows operating system.

Recovery CDs

- System Recovery CD(s)
- Application Recovery CD(s)

Other

- Setting up your VAIO Digital Studio Computer (poster)
- Packet containing special product offers

Software Library

The Software Library contains the Microsoft software license agreement, Sony end-user license agreement, and the following CDs:

- Adobe PhotoDeluxe® Business Edition 3.0
- Gremlin Interactive Ltd. MotorHead
- Microsoft® Encarta® 99 Encyclopedia
- Microsoft® Money/Microsoft® Works

Back Panel Overview

The back panel of your computer contains the connectors where you plug in supplied and optional accessories. The icons on the back panel serve as a map to help you locate the connectors on your computer.

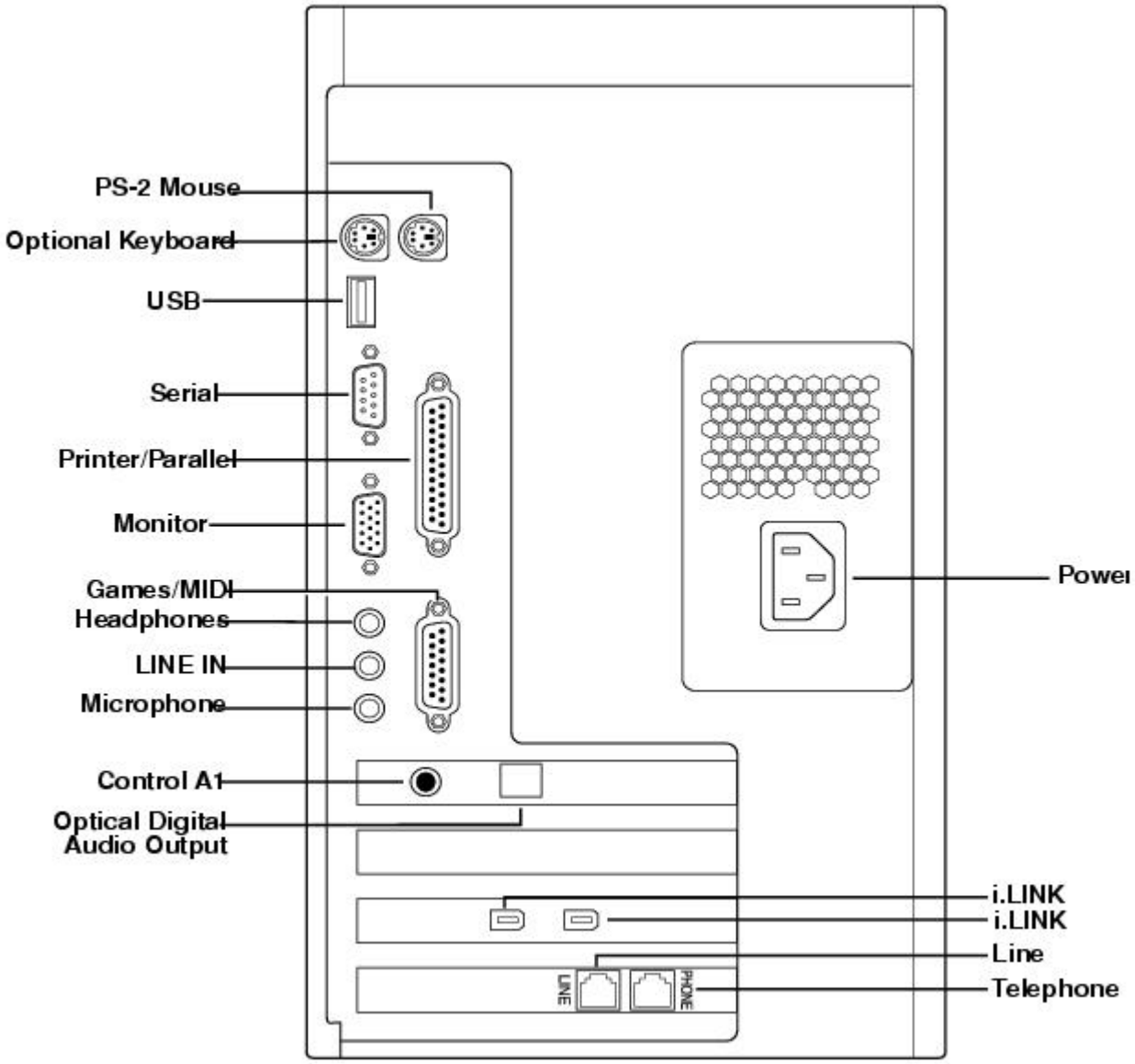

For your convenience, your computer includes USB and i.LINK connectors on both the front and back panels, allowing you to connect to either set of connectors. i.LINK connectors on the back of your system are 6-pin connectors.

Front Panel Overview

The front panel of your VAIO Digital Studio Computer allows for access to the diskette and CD-RW drives. It also includes USB and i.LINK ports to connect USB devices, CD changers, MiniDisc drives, or other components.

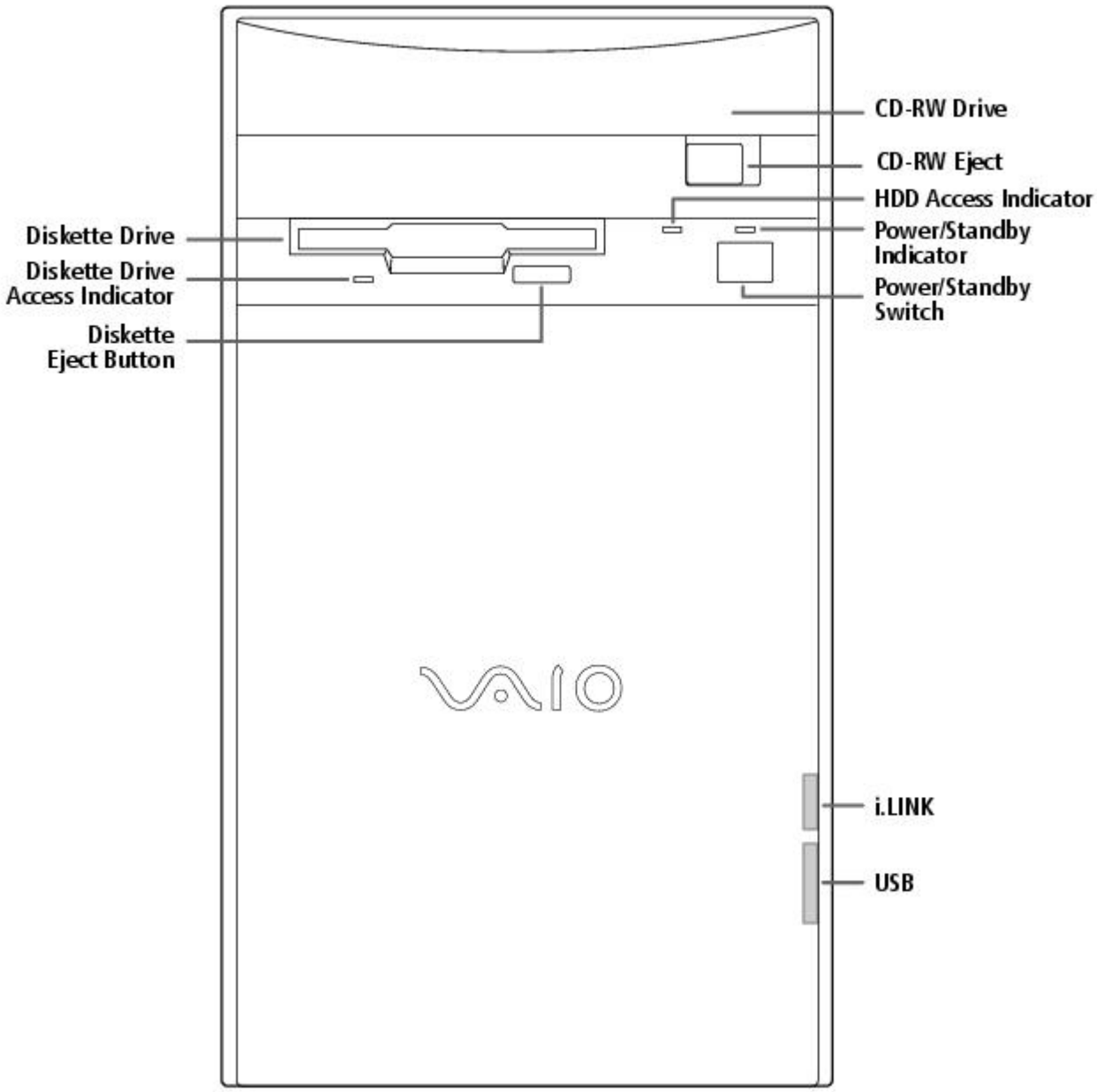

For your convenience, your computer includes USB and i.LINK connectors on both the front and back panels, allowing you to connect to either set of connectors. The i.LINK connector on the front of your system is a 4-pin connector.

Supplementary Information

For the most recent version of this manual, see the online version of Read Me First. You can access this document from the Windows Start Menu by selecting Programs/VAIO Documentation.

Hard Drive Partition

In order to improve the performance of your computer's DVgate Motion software, the hard disk drive on your computer has been formatted with two partitions, C and D. DVgate Motion saves files to the D partition. This prevents large video captures from consuming the available space on your C partition. To maintain optimum performance of DVgate Motion, you should defragment regularly.

VAIO Smart Keyboard Default Settings

The VAIO Smart Keyboard programmable buttons come with the following applications as their default settings:

S1 - Easy Internet Access Browser (Internet)

S2 - Outlook 98 (Mail)

S3 - MotorHead (Game)

S4 - Microsoft® Works (Work)

S5 - Quicken 99 Basic (Finance)

S6 - VAIO Documentation (Help)

All six buttons are reprogrammable.

Using The Standby Mode

To Put Your Computer into Standby Mode

When you are done using your computer, you can put it in Standby mode rather than turn it off completely. There are four ways to put your computer into Standby mode.

- Touch the power switch on the front panel.
- Click Shut Down at the bottom of the Start menu to display the Shut Down Windows dialog box. Select Stand by, and then click OK.
- Press the Standby button on the VAIO Smart Keyboard (the half moon icon).
- Change the timer settings for Standby mode in the Control Panel, as follows:

1. From the Start menu, point to Settings and click Control Panel.
2. Click the Power Management icon.
3. On the Power Schemes tab, change the Power scheme to Home/Office Desk.
4. In the list box for System standby, select an interval of time.
5. Click the OK button and close the Control Panel.

To Resume from Standby Mode

There are two ways to resume system functionality when your computer is in Standby mode. Use either of the following methods.

- Press any key on your keyboard, such as the Enter key.
- Touch the power switch on the front panel.

It may take up to 30 seconds for your system to recover stored information and resume functionality. The screen remains blank while the system is resuming functionality.

Applications That Use the TWAIN Driver

Digital imaging applications, such as Adobe PhotoDeluxe®, allow you to transfer images to your computer from external devices, including scanners or digital cameras. For some devices, a TWAIN driver window appears on the screen. Always close the TWAIN driver window before exiting or minimizing a digital imaging application.

Restoring Outlook 98

For the Add New Components functionality to be available with Microsoft Outlook, you must first run the installation program for Outlook from the Application Recovery CD. When prompted to install the program, select Exit. This decompresses the software, making the Add New Components functionality available.

Inserting Add-in Boards

Your VAIO Digital Studio Computer accommodates PCI add-in boards up to 7.7 inches in length.

Using Devices Connected to the i.LINK (IEEE 1394), S-Link (Control-A1), and Optical Digital Audio Output Connectors

For the latest information on devices known to be compatible with the state-of the-art audio, video, and graphics capabilities of your VAIO computer, check the Sony web site at http://www.sony.com/pcsupport.

Connecting to i.LINK Ports

Your VAIO computer includes a 4-pin i.LINK connector on the front of the system and two 6-pin i.LINK connectors on the back of the system. A 6-pin i.LINK connector can supply power from the computer to the connected device if the device is equipped with a 6-pin connector. Each 6-pin connector supplies 10V to 12V. The total power supplied by both 6-pin i.LINK connectors cannot exceed 6 watts. A 4-pin i.LINK connector cannot supply power to a connected device.

Capturing and Editing Digital Video Clips

- You can capture digital video clips using a digital video camera recorder and DVgate Motion software. Once the clips are saved as AVI files, they can be edited using DVgate Motion, DVgate Clip, or Adobe Premiere® LE. You cannot capture digital video clips directly using the Capture menu in Adobe Premiere LE. Adobe Premiere LE supports an analog capture board for capturing clips. Your VAIO computer is designed for digital video input.
- If there is no audio data associated with an AVI file, the message "Codec compression error" appears. If you do not wish to associate audio with your AVI file, you can add muted sound data by recording audio with the mute option enabled.
- For best performance, when editing AVI files in Adobe Premiere LE, you should use the default setup parameters that shipped with your system. If you change the default setup and want to reinitialize the parameters, follow these steps:

    1. In the Adobe Premiere LE application, select Compression from the Make menu. The Compression Settings dialog box appears.
    2. In the Method list box, select Sony DV software CODEC.
    3. Click OK to close the screen.
    4. From the Make menu, select Preset. The Preset dialog box appears.
    5. Select the parameters for Time Base, Compress, Output, and Preview Option settings as indicated below.

[Time base]

Time base - 29.97fps (required)

[Compress]

File type - AVI (required)
Compress Program Method - Sony DV software CODEC (required)
Compress Program Depth - Millions colors (No other options)
Quality (No control for this item)
Option: Frames per second - 30 (required)
Option: Basic Key Frames (No control for this item)
Option: Optimize Still Off (recommended)
Data rate - Recompress Off (recommended)

[Output options]

Video - On (required)
Video Size - 720x480
4:3 Aspect - Off (required)
VideoType - Field 2 (recommended)
Audio - On (required)
Audio Rate - 44kHz (required)
Audio Format - 16 Bit Stereo or 16 Bit Monaural (required)
Audio Type - Uncompress (required)
Audio Interleave - 1 frame (recommended)
- Less than 30 frames (required)

Audio Sync - 1.0 (required)
Audio Skew - 0.75 (recommended)
- Less than 1.0 (required)

[Preview Option]

Preview Window Size - 360x240

Note that Adobe Premiere LE does not save the Preview Window Size, but uses a default size of 320 x 213 each time the application launches. We recommend that you change this setting to 360 x 240 to improve the quality of preview clips when editing AVI files.

Using Alternate Browsers with America Online®

To use Internet Explorer or Netscape Navigator as your browser with America Online, follow these steps:

1. From the Start menu, point to Settings and then click Control Panel.
2. Click the Internet icon.
3. Click the Connection tab.
4. Click the "Connect to the Internet using local area network" radio button.
5. Click OK.

Using DVgate Motion

When capturing clips:

- Do not use DVgate Motion when the connected digital video peripheral is in Timer Recording mode, as this could produce a malfunction in the peripheral.
- Captures larger than 2 GB (9 minutes and 30 seconds) are automatically continued in a second file.
- You can record stereo audio (stereo 1) while capturing video. You cannot add audio on the stereo 2 track after capturing the video data.
- You cannot use different audio modes on the same tape. You should perform a separate capture for each audio mode you wish to use.
- DVgate Motion does not support hard disk compression. You should not use disk compression if you are planning to work with DVgate Motion.
- Title data is saved in the flash memory of a digital video camera and is not transferred to tape by DVgate Motion.
- To avoid interruption of capture sessions, you should disable the screen saver.
- The drop frame compensation feature does not provide accurate compensation adjustments for tapes recorded in LP mode.
- For tapes that include a mixture of both SP and LP mode, the information displayed by the capture progress indicator may not be accurate.
- Make sure the video head of your digital video device is properly cleaned. Anomalies that you see in captured data could be due to dust or other particles on the video head.
    - The last frame captured is one frame before your selected [OUT] point. The frame you see immediately after clicking the [OUT] button is not captured.

When recording AVI files to tape:

- Do not use DVgate Motion when the connected digital video peripheral is in Timer Recording mode, as this could produce a malfunction in the peripheral.

- You can record only AVI files. MPEG files cannot be recorded.
- To avoid recording problems, such as a single frame appearing in multiple frames, close other applications on your system while recording.
- You cannot use different audio modes on the same tape. If you have AVI files that use different audio modes, they cannot be recorded at the same time, but must be recorded separately.
- Do not attempt to work with AVI files that are smaller than 4 MB.
- DVgate Motion does not support hard disk compression. You should not use disk compression if you are planning to work with DVgate Motion.
- In order to maximize recording capabilities, video and audio data are not available while you are recording.

If DVgate Motion indicates that frames have been dropped, you should try closing all open applications, or you may need to defragment your hard drive.

Restoring Audio Drivers

When you restore the audio drivers from the Application Recovery CD, you need to restart your system to use these drivers. In the Add New Hardware wizard that appears when you restart, click the Next button until you are prompted for the location of the drivers. The audio drivers are located on the Application Recovery CD in G:\drivers\audio\AL98091701\English.

Using AC-3® to Optical Digital Audio Output

MiniDisc player/recorders, DAT player/recorders, and older digital receivers do not support Dolby® Digital (AC-3). You should not use the AC-3 to Optical Digital Audio Output option unless you are using a device that supports Dolby Digital. Please refer to the manual supplied with your equipment to determine if it supports Dolby Digital. If you are unsure and you have selected the AC-3 to Optical Digital Audio Output option, turn down the volume on your equipment before using the DVD player.

Using America Online or Sony Online Support with WinFax® Basic Edition

Once you have configured WinFax Basic Edition, it is automatically available for your use. You cannot use America Online or Sony Online Support when the automatic fax receive feature of WinFax Basic Edition is on. To disable this feature, right click the WinFax icon in the task tray at the bottom right corner of your screen, and then select Exit.

Memory Upgrade Specifications

When upgrading memory, use only 3.3V 64-bit PC-100 168 PIN SDRAM DIMM modules. For more information on Digital Studio Computer compatible memory, call Sony at 1-888-4SONYPC (1-888-476-6972).

About the Software On Your Computer

Your VAIO Digital Studio computer is ready to help you work, play, learn, and communicate as soon as you turn it on. This section gives you an overview of the activities you can perform with your software titles. For support information, see For Answers to Your Software Questions.

Adobe Acrobat® Reader

Adobe Systems Incorporated

Acrobat Reader software allows you to view, navigate, and print electronic documents in Adobe Portable Document Format (PDF), an open file format that is intended to preserve the fidelity of documents created on all major computer platforms.

Adobe PhotoDeluxe® Business Edition

Adobe Systems Incorporated

Create amazing photo effects with PhotoDeluxe. Without learning complex software, you can

enhance, restore, and be creative with your photos. Includes built-in guided activities, stock photos, clip art, and templates to assist you.

Adobe Premiere® LE

Adobe Systems Incorporated

Adobe Premiere LE offers an interface and editing tool for producing movies for video, multimedia, or the web. View source clips and edited footage simultaneously in the monitor window. Create video clips up to three hours long with complete audio-video synchronization.

America Online®

America Online

America Online is the world's most popular Internet online service. Stay in touch with family and friends with Easy-to-Use E-mail, manage your personal finances, get the latest news and sports scores, and chat with thousands of others who share your interests.

AT&T WorldNet® Service

AT&T

Fast, reliable Internet access from AT&T WorldNet Service. AT&T WorldNet Service provides web-based e-mail, a personalized start page from Excite, easy access to the Excite search engine, free web pages, online and live agent technical support, instant messaging, and special shopping discounts at Market Square.

CompuServe®

CompuServe, Inc.

CompuServe is the most comprehensive source of organized business and educational information online today. CompuServe allows you to access the vastness of the Internet without wasting time wading through it. Maximize your time online with CompuServe.

Digital Media Park

Sony Electronics

An integrated suite of multimedia cataloging and playback programs including Media Bar, Media Library, Media Showcase, and MiniDisc Editor. Manage your music by cataloging your entire CD collection, and then create custom MiniDiscs of your favorite songs.

Dr. Solomon's® Anti-Virus

Dr Solomon's Software Inc.

Dr. Solomon's Anti-Virus provides the most comprehensive defense against the spread of viruses, including macro viruses. It can scan inside compressed files and automatically protects your system against viruses sent via e-mail or Internet download.

DVgate Motion

Sony Electronics

Connect a digital video camera recorder to the i.LINK connector and capture your own video clips. You can edit the clips from your video, add others, and combine clips into new movie segments.

DVgate Still

Sony Electronics

Connect a digital video camera recorder to the i.LINK connector and capture your own still images. You can save your images in a variety of popular file formats.

EarthLink Sprint TotalAccess

EarthLink Network, Inc.

An Internet Service Provider that supplies access, information, and assistance to its customers, introducing them to the Internet. Member benefits include e-mail, newsgroups, a Personal Start Page, a free 6 MB web site, a member magazine, and 24-hour technical support.

Microsoft® Encarta® 99 Encyclopedia

Microsoft Corporation

Microsoft Encarta Encyclopedia combines current, comprehensive content with up-to-date multimedia technology, providing users with unique, engaging learning experiences. With the 1999 edition, Encarta provides a wealth of information resources and unique interactive features

Microsoft® Internet Explorer for Windows® 98

Microsoft Corporation

Internet Explorer delivers the web the way you want it. It's safe, easy to use, and you can personalize how you access the web. Outlook Express and other tools in Internet Explorer also help you have a great experience when you are on the web!

Microsoft® Money 99

Microsoft Corporation

Microsoft Money 99 is personal finance software that lets you perform your financial tasks, everything from paying bills to planning for the future, in a smarter, faster way. With Money's online services, you can pay bills and bank from the comfort of home.

Microsoft® Outlook® 98

Microsoft Corporation

Outlook 98 is Microsoft's premier messaging and collaboration client. It combines the leading support for Internet standards-based messaging systems with integrated calendar, contact, and task-management features.

Microsoft® Works

Microsoft Corporation

Works provides users with the right set of core tools that allows them to write letters and reports, track family and friends with the address book, manage home finances, and create a home inventory.

MotorHead

Gremlin Interactive Ltd.

MotorHead is realistic arcade-racing; high-velocity entertainment that puts you behind the wheel for 3D pure racing action. Power across Europe and USA in the Transatlantic Speed League, where second place is simply not an option.

Netscape Communicator®

Netscape Communications

Netscape Communicator is the all-in-one Internet tool that makes it easy to browse the web, send Internet e-mail, chat, read newsgroups, and compose great web documents.

PictureGear

Sony Electronics

This image management software displays images from your hard drive, a Sony digital still camera, or a Sony Mavica® camera. The images appear in a convenient light-table format, so that you can easily view the contents of an entire folder.

Prodigy Internet

Prodigy Communications Corporation

An Internet service that helps you find what you need online faster and smarter. Prodigy delivers powerful online content, such as sports scores, stock quotes, news, and easy access to Excite , plus a personal e-mail account and quality customer service, all at a competitive price.

Quicken® Basic 99

Intuit, Inc

Quicken is the fastest, easiest way to organize your finances. Quicken works just like your checkbook, so it's easy to learn and use. Quicken manages all of your finances, bank accounts, credit cards, investments, and loans. You can even pay your bills online.

SurfMonkey

MediaLive, Inc

SurfMonkey is a web browser and online service for kids ages 6-12 that makes the Internet safe, fun, and easy. A talking monkey guides children through web sites and chat rooms, and can read their e-mail out loud. Children cannot go to inappropriate web sites, parents can screen e-mail messages, and chat messages are monitored.

VAIO Smart Keyboard

Sony Electronics

VAIO Smart Keyboard software operates your new easy to use programmable USB keyboard. Six programmable buttons enable you to launch your favorite applications, open frequently used files, access Explorer, or even open your web browser with just the click of a button.

WinFax® Basic Edition

Symantec Corporation

WinFax Basic Edition incorporates an easy-to-use interface that allows you to send and receive faxes easily. Upgrade to WinFax Pro to receive additional features.

About Your Recovery CDs

Application Recovery CD(s)

Sony Electronics

The Application Recovery CD program allows you to reinstall individual applications and device drivers. Use it to restore corrupted or accidentally erased files.

System Recovery CD(s)

Sony Electronics

The System Recovery CD program allows you to restore the software titles that shipped with your computer if they become corrupted or are erased accidentally. It can be used only to restore the hard disk of the Sony computer you purchased.

For Answers to Your Software Questions

Sony Service Center

For the Sony Service Center nearest you, call at 1-888-4SONYPC (1-888-476-6972).

Acrobat® Reader, Adobe PhotoDeluxe® Business Edition , Adobe Premiere® LE (Adobe Systems Incorporated)

Web site http://www.adobe.com/
phone 206-628-2746 (fee-based support)
fax 206-628-5737
e-mail techdocs@adobe.com
hours M-F, 6 AM-5 PM PT

America Online® (America Online)

Web site http://www.aol.com/
phone 800-827-3338
hours 7 days a week, 6 AM - 2 PM ET

AT&T WorldNet® Service (AT&T)

Web site http://www.att.net/*
phone 800-400-1447
e-mail worldnet@attmail.com
hours 7 days a week, 24 hours a day

* You must be a WorldNet Service customer to access online support.

CompuServe® Interactive (CompuServe Interactive, Inc.)

Web site http://www.compuserve.com/
phone 800-848-8990
hours M-F, 8 AM - 1 AM ET, S-S 10 AM - 10 PM ET

Dr. Solomon's® Anti-Virus (Dr. Solomon's Software Inc.)

Web site http://www.drsolomon.com/
phone 888-377-6566
e-mail support@us.drsolomon.com
hours 7 days a week, 24 hours a day

EarthLink Sprint TotalAccess (EarthLink Network, Inc.)

Web site http://help.earthlink.net/techsupport/
phone 800-395-8410
e-mail support@earthlink.net
hours 7 days a week, 24 hours a day

Easy Internet Access (Encompass, Inc.)

Web site http://www.encmpss.com/
phone 800-927-3000
hours 7 days a week, 24 hours a day

MotorHead (Gremlin Interactive Ltd.)

Web site http://www.gremlin.com/
phone 888-4SONYPC (888-476-6972)
hours 7 days a week, 24 hours a day

Windows® 98 Operating System, Works, Money, Encarta, Internet Explorer (Microsoft Corporation)

Web site http://www.microsoft.com/support/
phone 888-4SONYPC (888-476-6972)*
hours 7 days a week, 24 hours a day
* Support from 1-888-4SONYPC is free of charge for 90 days after the original date of purchase.

Netscape Communicator® (Netscape Communications Corporation)

Web site http://www.netscape.com/
phone 888-4SONYPC (888-476-6972)*
hours 7 days a week, 24 hours a day
* Support from 1-888-4SONYPC is free of charge for 90 days after the original date of purchase.

Prodigy Internet (Prodigy Communications Corporation.)

Web site http://www.prodigy.com/
phone 800-PRODIGY
hours 7 AM - 3 AM ET

Quicken® Basic (Intuit Inc.)

Web site http://www.intuit.com/support/
phone 900-555-4688
hours 7 days a week, 24 hours a day

SurfMonkey (MediaLive, Inc.)

Web site http://www.surfmonkey.com/support/Sub_support.html
phone 408-556-2060
e-mail support@surfmonkey.com
hours 9AM-10PM PT everyday

WinFax® Basic Edition (Symantec Corporation.)

Web site http://www.symantec.com/techsupp/
phone 800-798-0850
fax 800-554-4403 in North America
541-984-2490 outside North America

Specifications

Model **PCV-E518DS**
Processor 500 MHz Pentium® III
Hard Disk Drive 17.28 GB
Standard SDRAM 128 MB PC-100 SDRAM, expandable to 256 MB
Video RAM 8 MB SDRAM
MPEG "Sony Tuned" MPEG Digital Video supports full-screen video playback
Graphics 3D 2X AGP graphics acceleration (Matrox)
Sound Capabilities 3D Positional Audio (Aureal A3D)
Diskette Drive 3.5" 1.44 MB FDD
CD-RW Drive CD-RW Drive (4X max. CD-R writing, 2X max. CD-RW writing, 24X max. reading)
Modem K56flex technology/V.90 compatible data/fax modem[1]
Expansion Capabilities One PCI slot
One additional hard disk drive bay
Connection Capabilities (Front) USB port
i.LINK port (4-pin)
Connection Capabilities (Rear) Optional Keyboard (PS/2-style)
Mouse (PS/2-style)
USB port
Serial port
Parallel (printer)
Game/MIDI
Headphones
Line In
Microphone
VGA Monitor
S-Link (Control-A1)
Optical Digital Audio Out
Two i.LINK ports (6-pin)[2]
Modem line (RJ-11)
Phone line (RJ-11)
Supplied Accessories VAIO Smart keyboard
Sony two-button mouse
RJ-11 phone cable
Power cord
Service 90-day limited service. Extendible to one year from original date of purchase upon registration[3]
Limited Warranty 90-day parts/labor standard. Extendible to one year from original date of purchase upon registration[4]

Power Requirements 200 watts maximum
Dimensions 7" (w) x 12" (h) x 13 3/4" (d) (178mm x 304mm x 330mm)
Weight 17 lbs. (7.71 kg)
Operating Temperature 50º F to 95º F (+10º C to 35º C)

[1] Maximum speed for faxing is 14.4 kbytes/s. Your modem is capable of downloading at 56 kbytes/s using K56flex technology or V.90. Your phone service, online service, or Internet Service Provider however, may not support this technology or operate at this speed.

[2] Six-pin i-LINK connectors on the rear of the system each supply 10V to 12V. The combined total wattage that can be supplied by the two connectors is 6 watts.

[3] Certain restrictions apply

[4] Certain restrictions apply

Specifications are subject to change without notice.

This product meets the standards of the International Energy Star Program for energy efficiency.

© 1999 Sony Electronics Inc. Reproduction in w hole or in part w ithout w ritten permission is prohibited. All rights reserved.

Read Me First

Welcome

Congratulations on your purchase of the Sony VAIO Digital Studio Computer. Sony has combined leading-edge technology in audio, video, computing, and communications to provide you with state-of-the-art personal computing.

Features

 For a complete description of the specifications of your VAIO Digital Studio Computer, see Specifications.

- **Exceptional performance:** Your computer includes a brand new Intel® Pentium® III processor, a CD-RW drive, and a V.90 compatible data/fax modem.*

* Actual upload and download speeds may vary due to line conditions, ISP support, and government regulations.

- **CD-RW drive:** This drive is the ideal solution for making backups and data archiving, with the ability to store up to 650 MB* of removable, rewritable storage on a single rewritable CD. Save your movies to CD-R or CD-RW media and share videos and images with family and friends.

***** 530 MB after formatting.

- **VAIO Smart Keyboard:** This USB keyboard has programmable shortcut buttons for launching your favorite programs or accessing the Internet.
- **Sony audio and video quality:** High-fidelity positional 3D audio system (A3D), high-powered 3D graphics (AGP), and "Sony-Tuned" MPEG digital video playback enable you to take advantage of today's advanced multimedia applications, games, and entertainment software.
- **S-Link (Control-A1):** This technology allows you to build a database of all your music and video CDs and then record your favorite audio selections on MiniDiscs. Use your computer with a 200 disc mega-storage CD changer and a MiniDisc recording deck.
- **i.LINK (IEEE 1394):** Three built-in i.LINK ports provide you with maximum digital connection capability. The i.LINK name and logo identify a digital interface (IEEE 1394) for high speed communication. By using your VAIO Digital Studio Computer, a Sony Digital Handycam® Camcorder, the DVgate software preinstalled on your computer, and the i.LINK (IEEE 1394) interface, you can easily create and edit your own home videos.
- **Optical Digital Audio Output:** This high-quality digital interface transmits digital audio data via light pulses. Transfer crystal clear digital audio to your MiniDisc recorder.
- **Digital Studio Software**: Enjoy all of your computer's audio and video capabilities with component-like applications that allow you to creatively manipulate digital still images, video clips, and audio tracks.
- **50 free hours of Internet access:** Use the Internet for up to 50 free hours when you sign up with GTE (no credit card required). Limit of two hours per day. Free access expires after 50 hours or 90 days after signing up--whichever occurs first.
- **Preinstalled software titles**: All the software on your computer is preinstalled, configured, and ready for you to use right out of the box.
- **Windows® 98**: Your system includes the latest operating system from Microsoft.
- **Communications:** Access popular online services, browse the Internet, send faxes, and more.

Unpacking Your Computer

Computer and Supplied Accessories

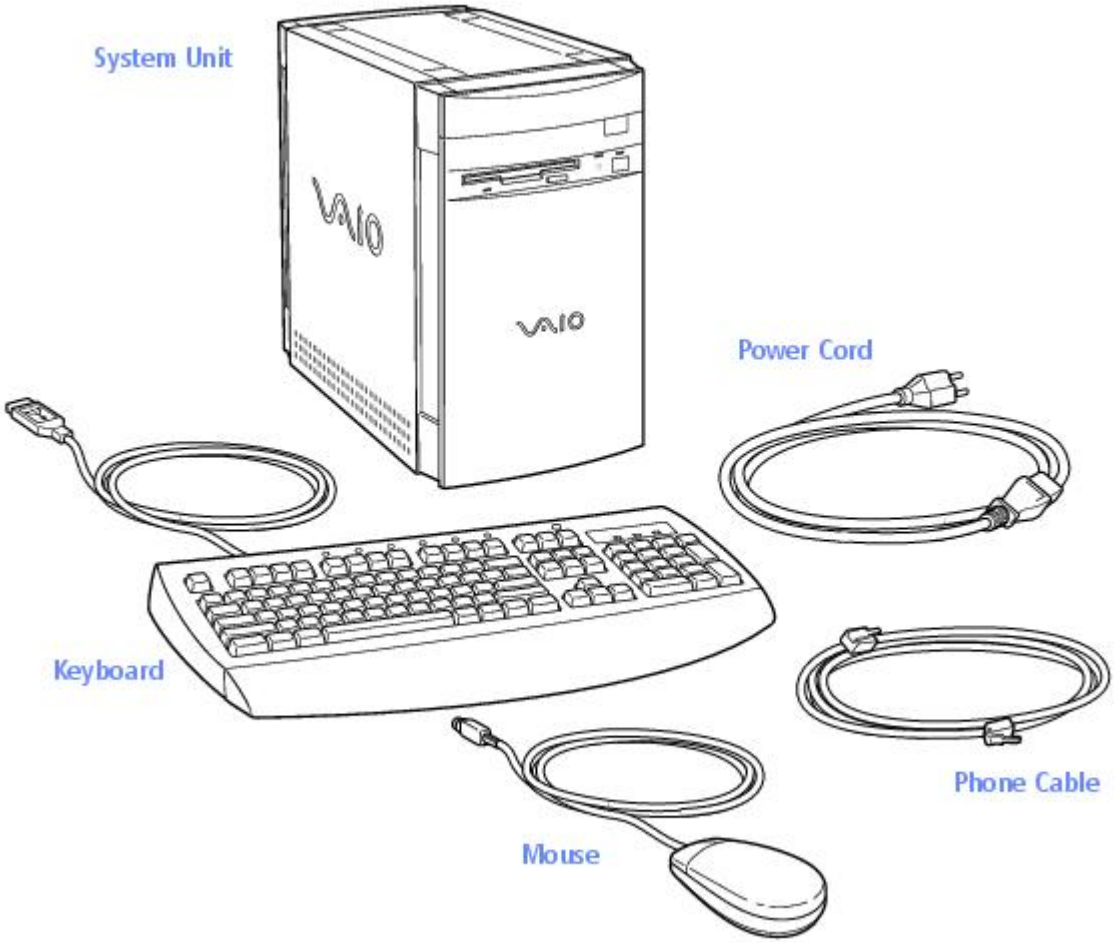

Manuals

- *Read Me First* (this manual) contains features and specifications of your computer. It also includes information on the applications included with your system, how to contact software vendors, and last minute troubleshooting tips.
- The *VAIO Digital Studio Computer User Guide* describes how to get started with your computer, find help, and solve common problems.
- The *Microsoft® Windows®98 Getting Started* manual explains how to use the basic features of the Windows operating system.

Recovery CDs

- System Recovery CD(s)
- Application Recovery CD(s)

Other

- Setting up your VAIO Digital Studio Computer (poster)
- Packet containing special product offers

Software Library

The Software Library contains the Microsoft software license agreement, Sony end-user license agreement, and the following CDs:

- Adobe PhotoDeluxe® Business Edition 3.0
- Gremlin Interactive Ltd. MotorHead
- Microsoft® Encarta® 99 Encyclopedia
- Microsoft® Money/Microsoft® Works

Back Panel Overview

The back panel of your computer contains the connectors where you plug in supplied and optional accessories. The icons on the back panel serve as a map to help you locate the connectors on your computer.

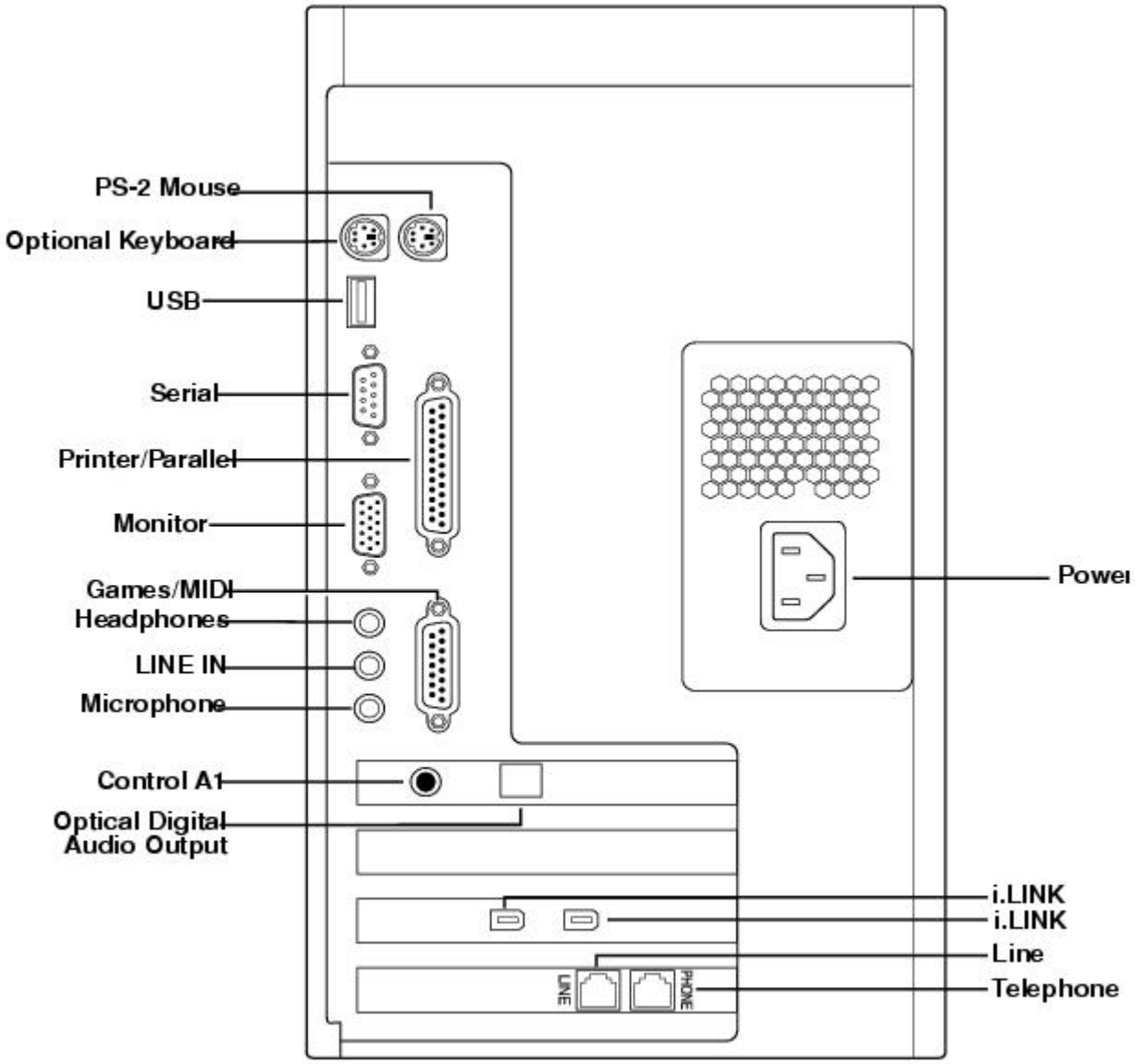

For your convenience, your computer includes USB and i.LINK connectors on both the front and back panels, allowing you to connect to either set of connectors. i.LINK connectors on the back of your system are 6-pin connectors.

Front Panel Overview

The front panel of your VAIO Digital Studio Computer allows for access to the diskette and CD-RW drives. It also includes USB and i.LINK ports to connect USB devices, CD changers, MiniDisc drives, or other components.

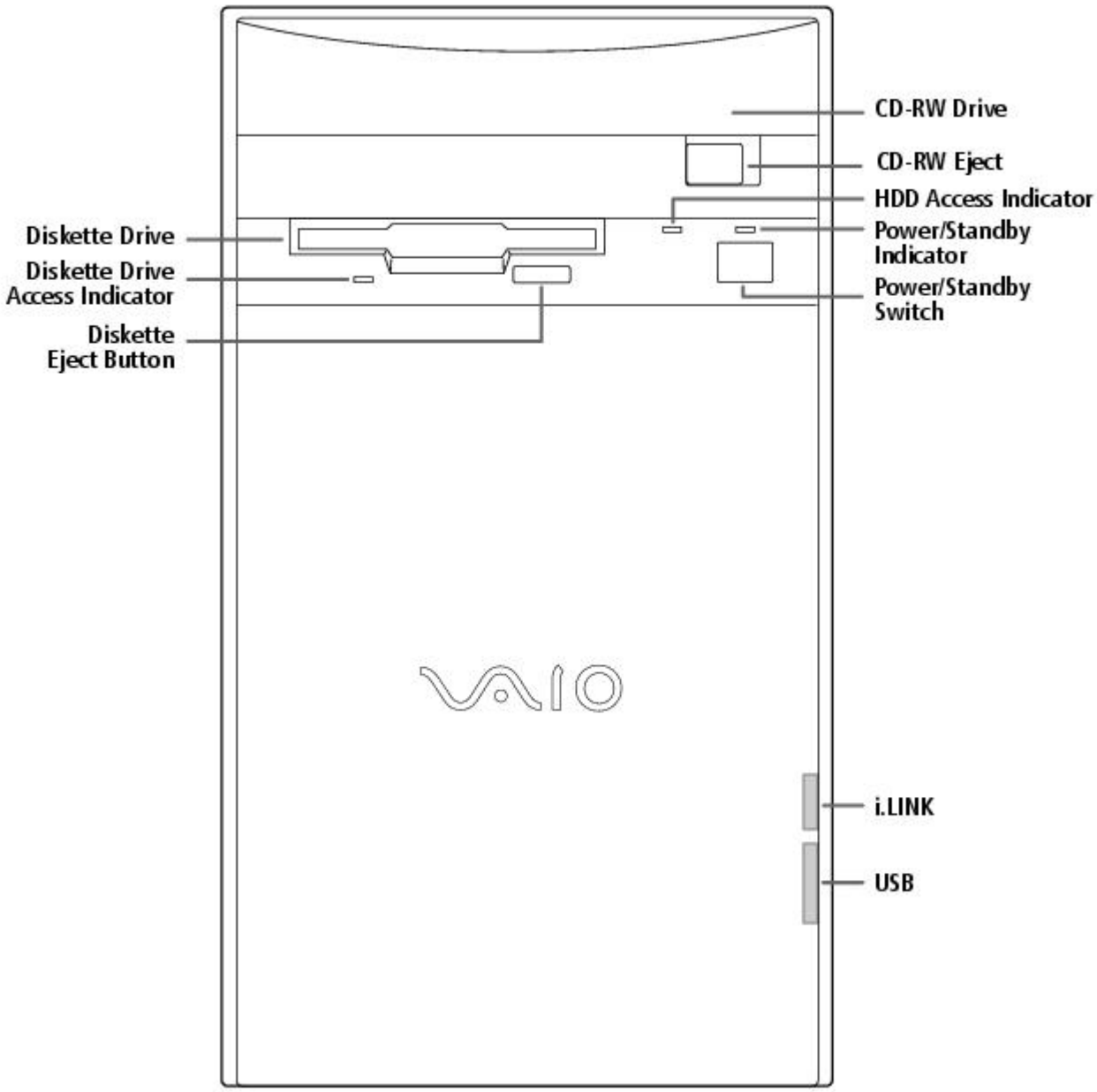

For your convenience, your computer includes USB and i.LINK connectors on both the front and back panels, allowing you to connect to either set of connectors. The i.LINK connector on the front of your system is a 4-pin connector.

Supplementary Information

For the most recent version of this manual, see the online version of Read Me First. You can access this document from the Windows Start Menu by selecting Programs/VAIO Documentation.

Hard Drive Partition

In order to improve the performance of your computer's DVgate Motion software, the hard disk drive on your computer has been formatted with two partitions, C and D. DVgate Motion saves files to the D partition. This prevents large video captures from consuming the available space on your C partition. To maintain optimum performance of DVgate Motion, you should defragment regularly.

VAIO Smart Keyboard Default Settings

The VAIO Smart Keyboard programmable buttons come with the following applications as their default settings:

S1 - Easy Internet Access Browser (Internet)

S2 - Outlook 98 (Mail)

S3 - MotorHead (Game)

S4 - Microsoft® Works (Work)

S5 - Quicken 99 Basic (Finance)

S6 - VAIO Documentation (Help)

All six buttons are reprogrammable.

Using The Standby Mode

To Put Your Computer into Standby Mode

When you are done using your computer, you can put it in Standby mode rather than turn it off completely. There are four ways to put your computer into Standby mode.

- Touch the power switch on the front panel.
- Click Shut Down at the bottom of the Start menu to display the Shut Down Windows dialog box. Select Stand by, and then click OK.
- Press the Standby button on the VAIO Smart Keyboard (the half moon icon).
- Change the timer settings for Standby mode in the Control Panel, as follows:

1. From the Start menu, point to Settings and click Control Panel.
2. Click the Power Management icon.
3. On the Power Schemes tab, change the Power scheme to Home/Office Desk.
4. In the list box for System standby, select an interval of time.
5. Click the OK button and close the Control Panel.

To Resume from Standby Mode

There are two ways to resume system functionality when your computer is in Standby mode. Use either of the following methods.

- Press any key on your keyboard, such as the Enter key.
- Touch the power switch on the front panel.

It may take up to 30 seconds for your system to recover stored information and resume functionality. The screen remains blank while the system is resuming functionality.

Applications That Use the TWAIN Driver

Digital imaging applications, such as Adobe PhotoDeluxe®, allow you to transfer images to your computer from external devices, including scanners or digital cameras. For some devices, a TWAIN driver window appears on the screen. Always close the TWAIN driver window before exiting or minimizing a digital imaging application.

Restoring Outlook 98

For the Add New Components functionality to be available with Microsoft Outlook, you must first run the installation program for Outlook from the Application Recovery CD. When prompted to install the program, select Exit. This decompresses the software, making the Add New Components functionality available.

Inserting Add-in Boards

Your VAIO Digital Studio Computer accommodates PCI add-in boards up to 7.7 inches in length.

Using Devices Connected to the i.LINK (IEEE 1394), S-Link (Control-A1), and Optical Digital Audio Output Connectors

For the latest information on devices known to be compatible with the state-of the-art audio, video, and graphics capabilities of your VAIO computer, check the Sony web site at http://www.sony.com/pcsupport.

Connecting to i.LINK Ports

Your VAIO computer includes a 4-pin i.LINK connector on the front of the system and two 6-pin i.LINK connectors on the back of the system. A 6-pin i.LINK connector can supply power from the computer to the connected device if the device is equipped with a 6-pin connector. Each 6-pin connector supplies 10V to 12V. The total power supplied by both 6-pin i.LINK connectors cannot exceed 6 watts. A 4-pin i.LINK connector cannot supply power to a connected device.

Capturing and Editing Digital Video Clips

- You can capture digital video clips using a digital video camera recorder and DVgate Motion software. Once the clips are saved as AVI files, they can be edited using DVgate Motion, DVgate Clip, or Adobe Premiere® LE. You cannot capture digital video clips directly using the Capture menu in Adobe Premiere LE. Adobe Premiere LE supports an analog capture board for capturing clips. Your VAIO computer is designed for digital video input.
- If there is no audio data associated with an AVI file, the message "Codec compression error" appears. If you do not wish to associate audio with your AVI file, you can add muted sound data by recording audio with the mute option enabled.
- For best performance, when editing AVI files in Adobe Premiere LE, you should use the default setup parameters that shipped with your system. If you change the default setup and want to reinitialize the parameters, follow these steps:

    1. In the Adobe Premiere LE application, select Compression from the Make menu. The Compression Settings dialog box appears.
    2. In the Method list box, select Sony DV software CODEC.
    3. Click OK to close the screen.
    4. From the Make menu, select Preset. The Preset dialog box appears.
    5. Select the parameters for Time Base, Compress, Output, and Preview Option settings as indicated below.

[Time base]

Time base - 29.97fps (required)

[Compress]

File type - AVI (required)
Compress Program Method - Sony DV software CODEC (required)
Compress Program Depth - Millions colors (No other options)
Quality (No control for this item)
Option: Frames per second - 30 (required)
Option: Basic Key Frames (No control for this item)
Option: Optimize Still Off (recommended)
Data rate - Recompress Off (recommended)

[Output options]

Video - On (required)
Video Size - 720x480
4:3 Aspect - Off (required)
VideoType - Field 2 (recommended)
Audio - On (required)
Audio Rate - 44kHz (required)
Audio Format - 16 Bit Stereo or 16 Bit Monaural (required)
Audio Type - Uncompress (required)
Audio Interleave - 1 frame (recommended)
- Less than 30 frames (required)

Audio Sync - 1.0 (required)
Audio Skew - 0.75 (recommended)
- Less than 1.0 (required)

[Preview Option]

Preview Window Size - 360x240

Note that Adobe Premiere LE does not save the Preview Window Size, but uses a default size of 320 x 213 each time the application launches. We recommend that you change this setting to 360 x 240 to improve the quality of preview clips when editing AVI files.

Using Alternate Browsers with America Online®

To use Internet Explorer or Netscape Navigator as your browser with America Online, follow these steps:

1. From the Start menu, point to Settings and then click Control Panel.
2. Click the Internet icon.
3. Click the Connection tab.
4. Click the "Connect to the Internet using local area network" radio button.
5. Click OK.

Using DVgate Motion

When capturing clips:

- Do not use DVgate Motion when the connected digital video peripheral is in Timer Recording mode, as this could produce a malfunction in the peripheral.
- Captures larger than 2 GB (9 minutes and 30 seconds) are automatically continued in a second file.
- You can record stereo audio (stereo 1) while capturing video. You cannot add audio on the stereo 2 track after capturing the video data.
- You cannot use different audio modes on the same tape. You should perform a separate capture for each audio mode you wish to use.
- DVgate Motion does not support hard disk compression. You should not use disk compression if you are planning to work with DVgate Motion.
- Title data is saved in the flash memory of a digital video camera and is not transferred to tape by DVgate Motion.
- To avoid interruption of capture sessions, you should disable the screen saver.
- The drop frame compensation feature does not provide accurate compensation adjustments for tapes recorded in LP mode.
- For tapes that include a mixture of both SP and LP mode, the information displayed by the capture progress indicator may not be accurate.
- Make sure the video head of your digital video device is properly cleaned. Anomalies that you see in captured data could be due to dust or other particles on the video head.
    - The last frame captured is one frame before your selected [OUT] point. The frame you see immediately after clicking the [OUT] button is not captured.

When recording AVI files to tape:

- Do not use DVgate Motion when the connected digital video peripheral is in Timer Recording mode, as this could produce a malfunction in the peripheral.

- You can record only AVI files. MPEG files cannot be recorded.
- To avoid recording problems, such as a single frame appearing in multiple frames, close other applications on your system while recording.
- You cannot use different audio modes on the same tape. If you have AVI files that use different audio modes, they cannot be recorded at the same time, but must be recorded separately.
- Do not attempt to work with AVI files that are smaller than 4 MB.
- DVgate Motion does not support hard disk compression. You should not use disk compression if you are planning to work with DVgate Motion.
- In order to maximize recording capabilities, video and audio data are not available while you are recording.

If DVgate Motion indicates that frames have been dropped, you should try closing all open applications, or you may need to defragment your hard drive.

Restoring Audio Drivers

When you restore the audio drivers from the Application Recovery CD, you need to restart your system to use these drivers. In the Add New Hardware wizard that appears when you restart, click the Next button until you are prompted for the location of the drivers. The audio drivers are located on the Application Recovery CD in G:\drivers\audio\AL98091701\English.

Using AC-3® to Optical Digital Audio Output

MiniDisc player/recorders, DAT player/recorders, and older digital receivers do not support Dolby® Digital (AC-3). You should not use the AC-3 to Optical Digital Audio Output option unless you are using a device that supports Dolby Digital. Please refer to the manual supplied with your equipment to determine if it supports Dolby Digital. If you are unsure and you have selected the AC-3 to Optical Digital Audio Output option, turn down the volume on your equipment before using the DVD player.

Using America Online or Sony Online Support with WinFax® Basic Edition

Once you have configured WinFax Basic Edition, it is automatically available for your use. You cannot use America Online or Sony Online Support when the automatic fax receive feature of WinFax Basic Edition is on. To disable this feature, right click the WinFax icon in the task tray at the bottom right corner of your screen, and then select Exit.

Memory Upgrade Specifications

When upgrading memory, use only 3.3V 64-bit PC-100 168 PIN SDRAM DIMM modules. For more information on Digital Studio Computer compatible memory, call Sony at 1-888-4SONYPC (1-888-476-6972).

About the Software On Your Computer

Your VAIO Digital Studio computer is ready to help you work, play, learn, and communicate as soon as you turn it on. This section gives you an overview of the activities you can perform with your software titles. For support information, see For Answers to Your Software Questions.

Adobe Acrobat® Reader

Adobe Systems Incorporated

Acrobat Reader software allows you to view, navigate, and print electronic documents in Adobe Portable Document Format (PDF), an open file format that is intended to preserve the fidelity of documents created on all major computer platforms.

Adobe PhotoDeluxe® Business Edition

Adobe Systems Incorporated

Create amazing photo effects with PhotoDeluxe. Without learning complex software, you can

enhance, restore, and be creative with your photos. Includes built-in guided activities, stock photos, clip art, and templates to assist you.

Adobe Premiere® LE

Adobe Systems Incorporated

Adobe Premiere LE offers an interface and editing tool for producing movies for video, multimedia, or the web. View source clips and edited footage simultaneously in the monitor window. Create video clips up to three hours long with complete audio-video synchronization.

America Online®

America Online

America Online is the world's most popular Internet online service. Stay in touch with family and friends with Easy-to-Use E-mail, manage your personal finances, get the latest news and sports scores, and chat with thousands of others who share your interests.

AT&T WorldNet® Service

AT&T

Fast, reliable Internet access from AT&T WorldNet Service. AT&T WorldNet Service provides web-based e-mail, a personalized start page from Excite, easy access to the Excite search engine, free web pages, online and live agent technical support, instant messaging, and special shopping discounts at Market Square.

CompuServe®

CompuServe, Inc.

CompuServe is the most comprehensive source of organized business and educational information online today. CompuServe allows you to access the vastness of the Internet without wasting time wading through it. Maximize your time online with CompuServe.

Digital Media Park

Sony Electronics

An integrated suite of multimedia cataloging and playback programs including Media Bar, Media Library, Media Showcase, and MiniDisc Editor. Manage your music by cataloging your entire CD collection, and then create custom MiniDiscs of your favorite songs.

Dr. Solomon's® Anti-Virus

Dr Solomon's Software Inc.

Dr. Solomon's Anti-Virus provides the most comprehensive defense against the spread of viruses, including macro viruses. It can scan inside compressed files and automatically protects your system against viruses sent via e-mail or Internet download.

DVgate Motion

Sony Electronics

Connect a digital video camera recorder to the i.LINK connector and capture your own video clips. You can edit the clips from your video, add others, and combine clips into new movie segments.

DVgate Still

Sony Electronics

Connect a digital video camera recorder to the i.LINK connector and capture your own still images. You can save your images in a variety of popular file formats.

EarthLink Sprint TotalAccess

EarthLink Network, Inc.

An Internet Service Provider that supplies access, information, and assistance to its customers, introducing them to the Internet. Member benefits include e-mail, newsgroups, a Personal Start Page, a free 6 MB web site, a member magazine, and 24-hour technical support.

Microsoft® Encarta® 99 Encyclopedia

Microsoft Corporation

Microsoft Encarta Encyclopedia combines current, comprehensive content with up-to-date multimedia technology, providing users with unique, engaging learning experiences. With the 1999 edition, Encarta provides a wealth of information resources and unique interactive features

Microsoft® Internet Explorer for Windows® 98

Microsoft Corporation

Internet Explorer delivers the web the way you want it. It's safe, easy to use, and you can personalize how you access the web. Outlook Express and other tools in Internet Explorer also help you have a great experience when you are on the web!

Microsoft® Money 99

Microsoft Corporation

Microsoft Money 99 is personal finance software that lets you perform your financial tasks, everything from paying bills to planning for the future, in a smarter, faster way. With Money's online services, you can pay bills and bank from the comfort of home.

Microsoft® Outlook® 98

Microsoft Corporation

Outlook 98 is Microsoft's premier messaging and collaboration client. It combines the leading support for Internet standards-based messaging systems with integrated calendar, contact, and task-management features.

Microsoft® Works

Microsoft Corporation

Works provides users with the right set of core tools that allows them to write letters and reports, track family and friends with the address book, manage home finances, and create a home inventory.

MotorHead

Gremlin Interactive Ltd.

MotorHead is realistic arcade-racing; high-velocity entertainment that puts you behind the wheel for 3D pure racing action. Power across Europe and USA in the Transatlantic Speed League, where second place is simply not an option.

Netscape Communicator®

Netscape Communications

Netscape Communicator is the all-in-one Internet tool that makes it easy to browse the web, send Internet e-mail, chat, read newsgroups, and compose great web documents.

PictureGear

Sony Electronics

This image management software displays images from your hard drive, a Sony digital still camera, or a Sony Mavica® camera. The images appear in a convenient light-table format, so that you can easily view the contents of an entire folder.

Prodigy Internet

Prodigy Communications Corporation

An Internet service that helps you find what you need online faster and smarter. Prodigy delivers powerful online content, such as sports scores, stock quotes, news, and easy access to Excite , plus a personal e-mail account and quality customer service, all at a competitive price.

Quicken® Basic 99

Intuit, Inc

Quicken is the fastest, easiest way to organize your finances. Quicken works just like your checkbook, so it's easy to learn and use. Quicken manages all of your finances, bank accounts, credit cards, investments, and loans. You can even pay your bills online.

SurfMonkey

MediaLive, Inc

SurfMonkey is a web browser and online service for kids ages 6-12 that makes the Internet safe, fun, and easy. A talking monkey guides children through web sites and chat rooms, and can read their e-mail out loud. Children cannot go to inappropriate web sites, parents can screen e-mail messages, and chat messages are monitored.

VAIO Smart Keyboard

Sony Electronics

VAIO Smart Keyboard software operates your new easy to use programmable USB keyboard. Six programmable buttons enable you to launch your favorite applications, open frequently used files, access Explorer, or even open your web browser with just the click of a button.

WinFax® Basic Edition

Symantec Corporation

WinFax Basic Edition incorporates an easy-to-use interface that allows you to send and receive faxes easily. Upgrade to WinFax Pro to receive additional features.

About Your Recovery CDs

Application Recovery CD(s)

Sony Electronics

The Application Recovery CD program allows you to reinstall individual applications and device drivers. Use it to restore corrupted or accidentally erased files.

System Recovery CD(s)

Sony Electronics

The System Recovery CD program allows you to restore the software titles that shipped with your computer if they become corrupted or are erased accidentally. It can be used only to restore the hard disk of the Sony computer you purchased.

For Answers to Your Software Questions

Sony Service Center

For the Sony Service Center nearest you, call at 1-888-4SONYPC (1-888-476-6972).

Acrobat® Reader, Adobe PhotoDeluxe® Business Edition , Adobe Premiere® LE (Adobe Systems Incorporated)

Web site http://www.adobe.com/
phone 206-628-2746 (fee-based support)
fax 206-628-5737
e-mail techdocs@adobe.com
hours M-F, 6 AM-5 PM PT

America Online® (America Online)

Web site http://www.aol.com/
phone 800-827-3338
hours 7 days a week, 6 AM - 2 PM ET

AT&T WorldNet® Service (AT&T)

Web site http://www.att.net/*
phone 800-400-1447
e-mail worldnet@attmail.com
hours 7 days a week, 24 hours a day

* You must be a WorldNet Service customer to access online support.

CompuServe® Interactive (CompuServe Interactive, Inc.)

Web site http://www.compuserve.com/
phone 800-848-8990
hours M-F, 8 AM - 1 AM ET, S-S 10 AM - 10 PM ET

Dr. Solomon's® Anti-Virus (Dr. Solomon's Software Inc.)

Web site http://www.drsolomon.com/
phone 888-377-6566
e-mail support@us.drsolomon.com
hours 7 days a week, 24 hours a day

EarthLink Sprint TotalAccess (EarthLink Network, Inc.)

Web site http://help.earthlink.net/techsupport/
phone 800-395-8410
e-mail support@earthlink.net
hours 7 days a week, 24 hours a day

Easy Internet Access (Encompass, Inc.)

Web site http://www.encmpss.com/
phone 800-927-3000
hours 7 days a week, 24 hours a day

MotorHead (Gremlin Interactive Ltd.)

Web site http://www.gremlin.com/
phone 888-4SONYPC (888-476-6972)
hours 7 days a week, 24 hours a day

Windows® 98 Operating System, Works, Money, Encarta, Internet Explorer (Microsoft Corporation)

Web site http://www.microsoft.com/support/
phone 888-4SONYPC (888-476-6972)*
hours 7 days a week, 24 hours a day
* Support from 1-888-4SONYPC is free of charge for 90 days after the original date of purchase.

Netscape Communicator® (Netscape Communications Corporation)

Web site http://www.netscape.com/
phone 888-4SONYPC (888-476-6972)*
hours 7 days a week, 24 hours a day
* Support from 1-888-4SONYPC is free of charge for 90 days after the original date of purchase.

Prodigy Internet (Prodigy Communications Corporation.)

Web site http://www.prodigy.com/
phone 800-PRODIGY
hours 7 AM - 3 AM ET

Quicken® Basic (Intuit Inc.)

Web site http://www.intuit.com/support/
phone 900-555-4688
hours 7 days a week, 24 hours a day

SurfMonkey (MediaLive, Inc.)

Web site http://www.surfmonkey.com/support/Sub_support.html
phone 408-556-2060
e-mail support@surfmonkey.com
hours 9AM-10PM PT everyday

WinFax® Basic Edition (Symantec Corporation.)

Web site http://www.symantec.com/techsupp/
phone 800-798-0850
fax 800-554-4403 in North America
541-984-2490 outside North America

Specifications

Model **PCV-E518DS**
Processor 500 MHz Pentium® III
Hard Disk Drive 17.28 GB
Standard SDRAM 128 MB PC-100 SDRAM, expandable to 256 MB
Video RAM 8 MB SDRAM
MPEG "Sony Tuned" MPEG Digital Video supports full-screen video playback
Graphics 3D 2X AGP graphics acceleration (Matrox)
Sound Capabilities 3D Positional Audio (Aureal A3D)
Diskette Drive 3.5" 1.44 MB FDD
CD-RW Drive CD-RW Drive (4X max. CD-R writing, 2X max. CD-RW writing, 24X max. reading)
Modem K56flex technology/V.90 compatible data/fax modem[1]
Expansion Capabilities One PCI slot
One additional hard disk drive bay
Connection Capabilities (Front) USB port
i.LINK port (4-pin)
Connection Capabilities (Rear) Optional Keyboard (PS/2-style)
Mouse (PS/2-style)
USB port
Serial port
Parallel (printer)
Game/MIDI
Headphones
Line In
Microphone
VGA Monitor
S-Link (Control-A1)
Optical Digital Audio Out
Two i.LINK ports (6-pin)[2]
Modem line (RJ-11)
Phone line (RJ-11)
Supplied Accessories VAIO Smart keyboard
Sony two-button mouse
RJ-11 phone cable
Power cord
Service 90-day limited service. Extendible to one year from original date of purchase upon registration[3]
Limited Warranty 90-day parts/labor standard. Extendible to one year from original date of purchase upon registration[4]

Power Requirements 200 watts maximum
Dimensions 7" (w) x 12" (h) x 13 3/4" (d) (178mm x 304mm x 330mm)
Weight 17 lbs. (7.71 kg)
Operating Temperature 50º F to 95º F (+10º C to 35º C)

[1] Maximum speed for faxing is 14.4 kbytes/s. Your modem is capable of downloading at 56 kbytes/s using K56flex technology or V.90. Your phone service, online service, or Internet Service Provider however, may not support this technology or operate at this speed.

[2] Six-pin i-LINK connectors on the rear of the system each supply 10V to 12V. The combined total wattage that can be supplied by the two connectors is 6 watts.

[3] Certain restrictions apply

[4] Certain restrictions apply

Specifications are subject to change without notice.

This product meets the standards of the International Energy Star Program for energy efficiency.

© 1999 Sony Electronics Inc. Reproduction in w hole or in part w ithout w ritten permission is prohibited. All rights reserved.

Read Me First

Welcome

Congratulations on your purchase of the Sony VAIO Digital Studio Computer. Sony has combined leading-edge technology in audio, video, computing, and communications to provide you with state-of-the-art personal computing.

Features

 For a complete description of the specifications of your VAIO Digital Studio Computer, see Specifications.

- **Exceptional performance:** Your computer includes a brand new Intel® Pentium® III processor, a CD-RW drive, and a V.90 compatible data/fax modem.*

* Actual upload and download speeds may vary due to line conditions, ISP support, and government regulations.

- **CD-RW drive:** This drive is the ideal solution for making backups and data archiving, with the ability to store up to 650 MB* of removable, rewritable storage on a single rewritable CD. Save your movies to CD-R or CD-RW media and share videos and images with family and friends.

***** 530 MB after formatting.

- **VAIO Smart Keyboard:** This USB keyboard has programmable shortcut buttons for launching your favorite programs or accessing the Internet.
- **Sony audio and video quality:** High-fidelity positional 3D audio system (A3D), high-powered 3D graphics (AGP), and "Sony-Tuned" MPEG digital video playback enable you to take advantage of today's advanced multimedia applications, games, and entertainment software.
- **S-Link (Control-A1):** This technology allows you to build a database of all your music and video CDs and then record your favorite audio selections on MiniDiscs. Use your computer with a 200 disc mega-storage CD changer and a MiniDisc recording deck.
- **i.LINK (IEEE 1394):** Three built-in i.LINK ports provide you with maximum digital connection capability. The i.LINK name and logo identify a digital interface (IEEE 1394) for high speed communication. By using your VAIO Digital Studio Computer, a Sony Digital Handycam® Camcorder, the DVgate software preinstalled on your computer, and the i.LINK (IEEE 1394) interface, you can easily create and edit your own home videos.
- **Optical Digital Audio Output:** This high-quality digital interface transmits digital audio data via light pulses. Transfer crystal clear digital audio to your MiniDisc recorder.
- **Digital Studio Software**: Enjoy all of your computer's audio and video capabilities with component-like applications that allow you to creatively manipulate digital still images, video clips, and audio tracks.
- **50 free hours of Internet access:** Use the Internet for up to 50 free hours when you sign up with GTE (no credit card required). Limit of two hours per day. Free access expires after 50 hours or 90 days after signing up--whichever occurs first.
- **Preinstalled software titles**: All the software on your computer is preinstalled, configured, and ready for you to use right out of the box.
- **Windows® 98**: Your system includes the latest operating system from Microsoft.
- **Communications:** Access popular online services, browse the Internet, send faxes, and more.

Unpacking Your Computer

Computer and Supplied Accessories

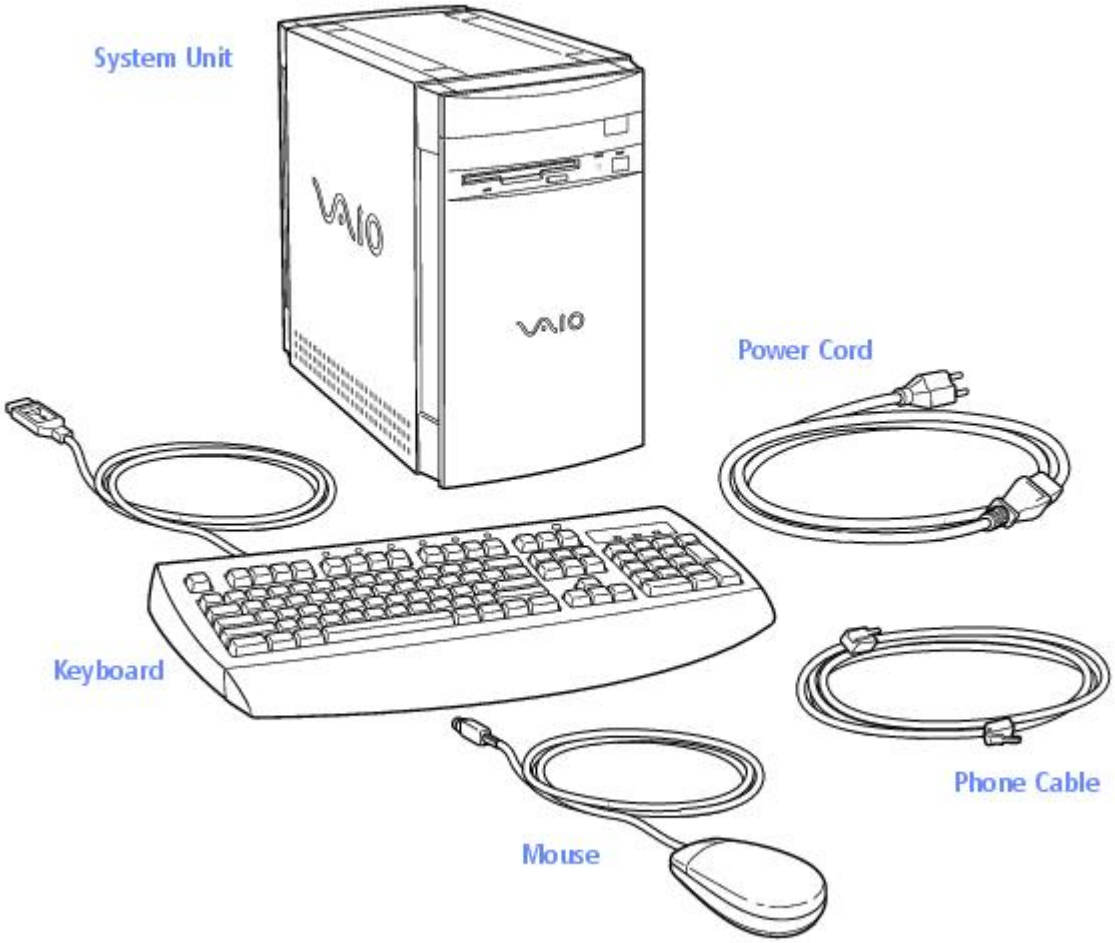

Manuals

- *Read Me First* (this manual) contains features and specifications of your computer. It also includes information on the applications included with your system, how to contact software vendors, and last minute troubleshooting tips.
- The *VAIO Digital Studio Computer User Guide* describes how to get started with your computer, find help, and solve common problems.
- The *Microsoft® Windows®98 Getting Started* manual explains how to use the basic features of the Windows operating system.

Recovery CDs

- System Recovery CD(s)
- Application Recovery CD(s)

Other

- Setting up your VAIO Digital Studio Computer (poster)
- Packet containing special product offers

Software Library

The Software Library contains the Microsoft software license agreement, Sony end-user license agreement, and the following CDs:

- Adobe PhotoDeluxe® Business Edition 3.0
- Gremlin Interactive Ltd. MotorHead
- Microsoft® Encarta® 99 Encyclopedia
- Microsoft® Money/Microsoft® Works

Back Panel Overview

The back panel of your computer contains the connectors where you plug in supplied and optional accessories. The icons on the back panel serve as a map to help you locate the connectors on your computer.

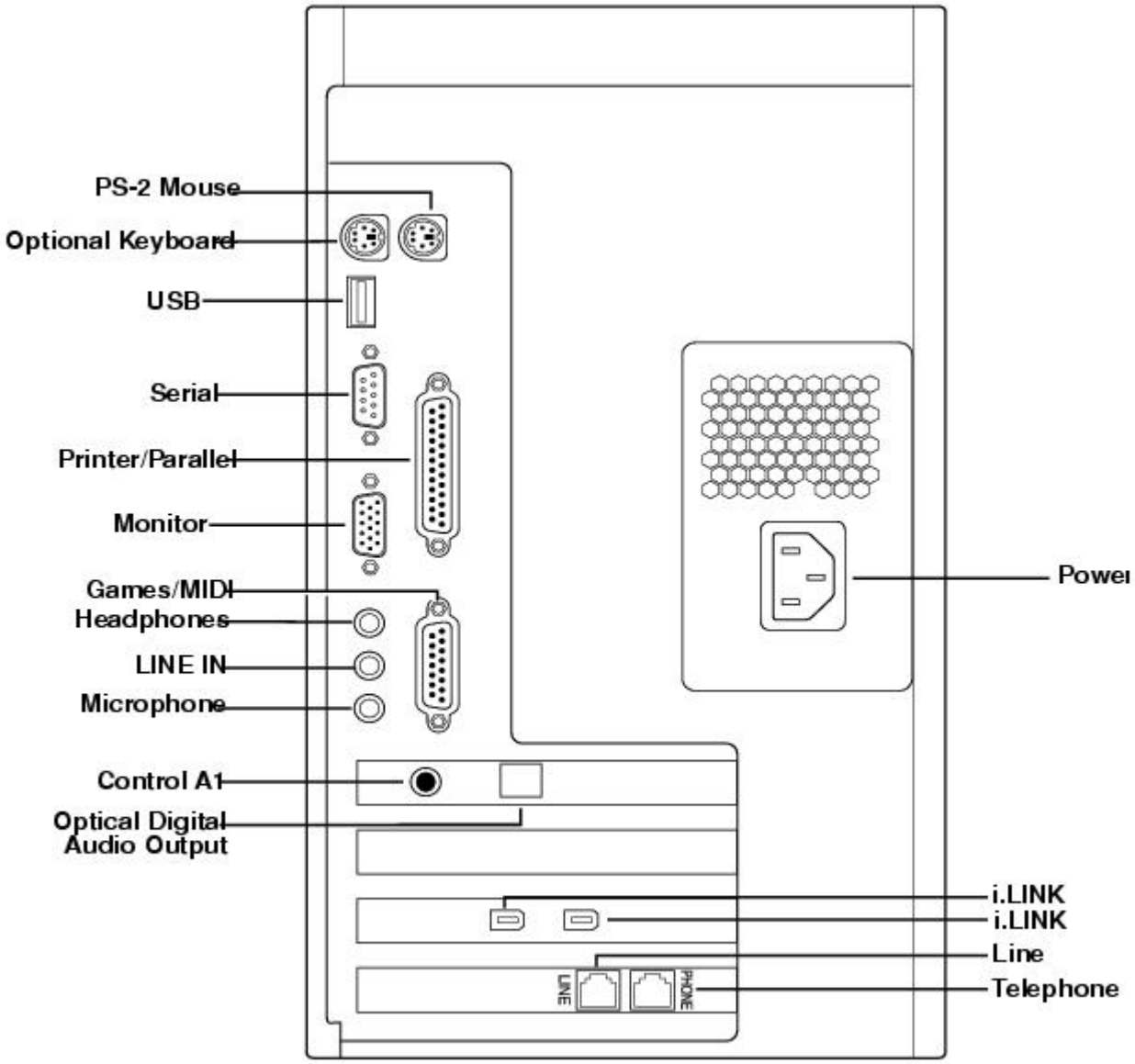

For your convenience, your computer includes USB and i.LINK connectors on both the front and back panels, allowing you to connect to either set of connectors. i.LINK connectors on the back of your system are 6-pin connectors.

Front Panel Overview

The front panel of your VAIO Digital Studio Computer allows for access to the diskette and CD-RW drives. It also includes USB and i.LINK ports to connect USB devices, CD changers, MiniDisc drives, or other components.

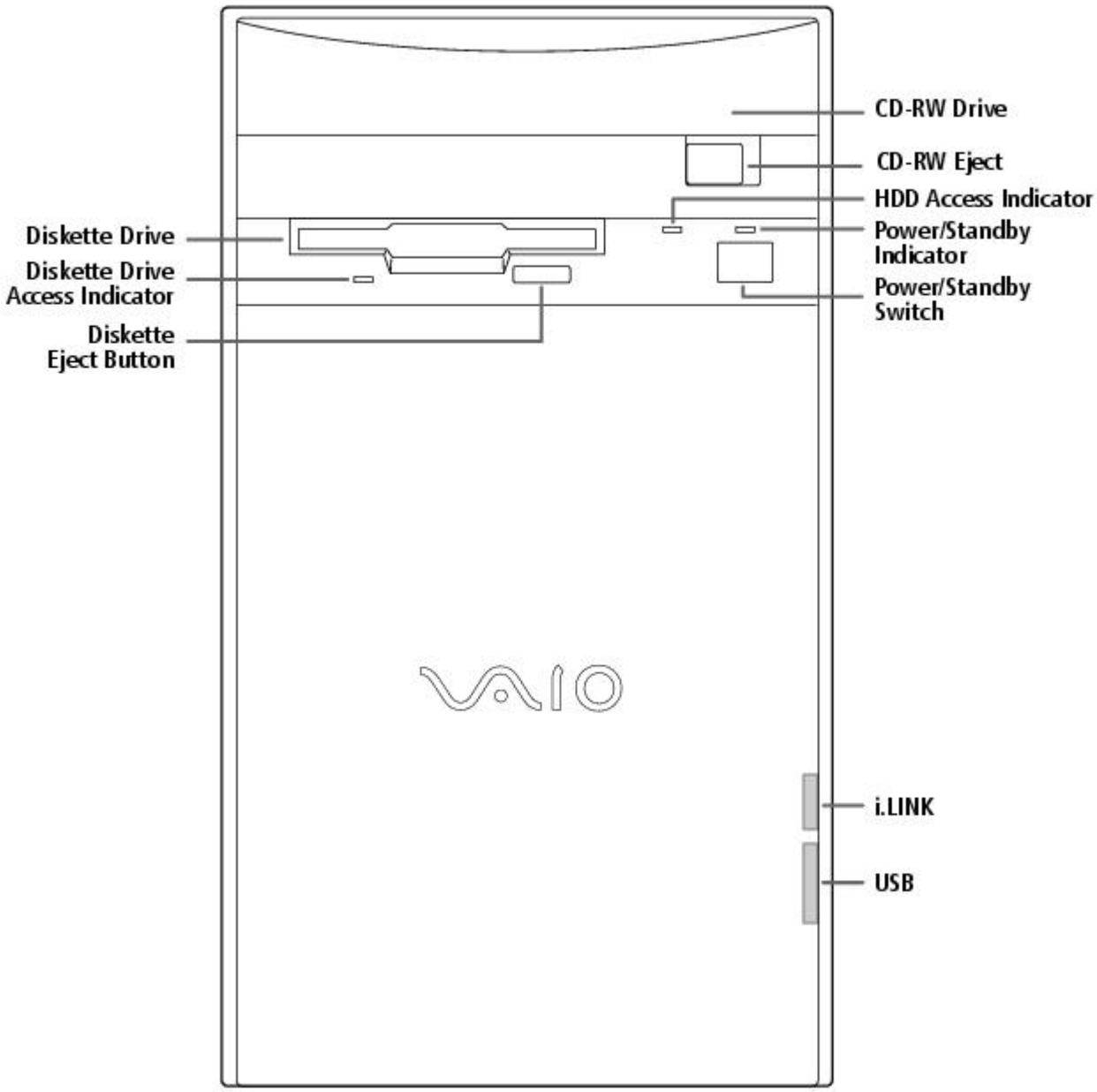

For your convenience, your computer includes USB and i.LINK connectors on both the front and back panels, allowing you to connect to either set of connectors. The i.LINK connector on the front of your system is a 4-pin connector.

Supplementary Information

For the most recent version of this manual, see the online version of Read Me First. You can access this document from the Windows Start Menu by selecting Programs/VAIO Documentation.

Hard Drive Partition

In order to improve the performance of your computer's DVgate Motion software, the hard disk drive on your computer has been formatted with two partitions, C and D. DVgate Motion saves files to the D partition. This prevents large video captures from consuming the available space on your C partition. To maintain optimum performance of DVgate Motion, you should defragment regularly.

VAIO Smart Keyboard Default Settings

The VAIO Smart Keyboard programmable buttons come with the following applications as their default settings:

S1 - Easy Internet Access Browser (Internet)

S2 - Outlook 98 (Mail)

S3 - MotorHead (Game)

S4 - Microsoft® Works (Work)

S5 - Quicken 99 Basic (Finance)

S6 - VAIO Documentation (Help)

All six buttons are reprogrammable.

Using The Standby Mode

To Put Your Computer into Standby Mode

When you are done using your computer, you can put it in Standby mode rather than turn it off completely. There are four ways to put your computer into Standby mode.

- Touch the power switch on the front panel.
- Click Shut Down at the bottom of the Start menu to display the Shut Down Windows dialog box. Select Stand by, and then click OK.
- Press the Standby button on the VAIO Smart Keyboard (the half moon icon).
- Change the timer settings for Standby mode in the Control Panel, as follows:

1. From the Start menu, point to Settings and click Control Panel.
2. Click the Power Management icon.
3. On the Power Schemes tab, change the Power scheme to Home/Office Desk.
4. In the list box for System standby, select an interval of time.
5. Click the OK button and close the Control Panel.

To Resume from Standby Mode

There are two ways to resume system functionality when your computer is in Standby mode. Use either of the following methods.

- Press any key on your keyboard, such as the Enter key.
- Touch the power switch on the front panel.

It may take up to 30 seconds for your system to recover stored information and resume functionality. The screen remains blank while the system is resuming functionality.

Applications That Use the TWAIN Driver

Digital imaging applications, such as Adobe PhotoDeluxe®, allow you to transfer images to your computer from external devices, including scanners or digital cameras. For some devices, a TWAIN driver window appears on the screen. Always close the TWAIN driver window before exiting or minimizing a digital imaging application.

Restoring Outlook 98

For the Add New Components functionality to be available with Microsoft Outlook, you must first run the installation program for Outlook from the Application Recovery CD. When prompted to install the program, select Exit. This decompresses the software, making the Add New Components functionality available.

Inserting Add-in Boards

Your VAIO Digital Studio Computer accommodates PCI add-in boards up to 7.7 inches in length.

Using Devices Connected to the i.LINK (IEEE 1394), S-Link (Control-A1), and Optical Digital Audio Output Connectors

For the latest information on devices known to be compatible with the state-of the-art audio, video, and graphics capabilities of your VAIO computer, check the Sony web site at http://www.sony.com/pcsupport.

Connecting to i.LINK Ports

Your VAIO computer includes a 4-pin i.LINK connector on the front of the system and two 6-pin i.LINK connectors on the back of the system. A 6-pin i.LINK connector can supply power from the computer to the connected device if the device is equipped with a 6-pin connector. Each 6-pin connector supplies 10V to 12V. The total power supplied by both 6-pin i.LINK connectors cannot exceed 6 watts. A 4-pin i.LINK connector cannot supply power to a connected device.

Capturing and Editing Digital Video Clips

- You can capture digital video clips using a digital video camera recorder and DVgate Motion software. Once the clips are saved as AVI files, they can be edited using DVgate Motion, DVgate Clip, or Adobe Premiere® LE. You cannot capture digital video clips directly using the Capture menu in Adobe Premiere LE. Adobe Premiere LE supports an analog capture board for capturing clips. Your VAIO computer is designed for digital video input.
- If there is no audio data associated with an AVI file, the message "Codec compression error" appears. If you do not wish to associate audio with your AVI file, you can add muted sound data by recording audio with the mute option enabled.
- For best performance, when editing AVI files in Adobe Premiere LE, you should use the default setup parameters that shipped with your system. If you change the default setup and want to reinitialize the parameters, follow these steps:

    1. In the Adobe Premiere LE application, select Compression from the Make menu. The Compression Settings dialog box appears.
    2. In the Method list box, select Sony DV software CODEC.
    3. Click OK to close the screen.
    4. From the Make menu, select Preset. The Preset dialog box appears.
    5. Select the parameters for Time Base, Compress, Output, and Preview Option settings as indicated below.

[Time base]

Time base - 29.97fps (required)

[Compress]

File type - AVI (required)
Compress Program Method - Sony DV software CODEC (required)
Compress Program Depth - Millions colors (No other options)
Quality (No control for this item)
Option: Frames per second - 30 (required)
Option: Basic Key Frames (No control for this item)
Option: Optimize Still Off (recommended)
Data rate - Recompress Off (recommended)

[Output options]

Video - On (required)
Video Size - 720x480
4:3 Aspect - Off (required)
VideoType - Field 2 (recommended)
Audio - On (required)
Audio Rate - 44kHz (required)
Audio Format - 16 Bit Stereo or 16 Bit Monaural (required)
Audio Type - Uncompress (required)
Audio Interleave - 1 frame (recommended)
- Less than 30 frames (required)

Audio Sync - 1.0 (required)
Audio Skew - 0.75 (recommended)
- Less than 1.0 (required)

[Preview Option]

Preview Window Size - 360x240

Note that Adobe Premiere LE does not save the Preview Window Size, but uses a default size of 320 x 213 each time the application launches. We recommend that you change this setting to 360 x 240 to improve the quality of preview clips when editing AVI files.

Using Alternate Browsers with America Online®

To use Internet Explorer or Netscape Navigator as your browser with America Online, follow these steps:

1. From the Start menu, point to Settings and then click Control Panel.
2. Click the Internet icon.
3. Click the Connection tab.
4. Click the "Connect to the Internet using local area network" radio button.
5. Click OK.

Using DVgate Motion

When capturing clips:

- Do not use DVgate Motion when the connected digital video peripheral is in Timer Recording mode, as this could produce a malfunction in the peripheral.
- Captures larger than 2 GB (9 minutes and 30 seconds) are automatically continued in a second file.
- You can record stereo audio (stereo 1) while capturing video. You cannot add audio on the stereo 2 track after capturing the video data.
- You cannot use different audio modes on the same tape. You should perform a separate capture for each audio mode you wish to use.
- DVgate Motion does not support hard disk compression. You should not use disk compression if you are planning to work with DVgate Motion.
- Title data is saved in the flash memory of a digital video camera and is not transferred to tape by DVgate Motion.
- To avoid interruption of capture sessions, you should disable the screen saver.
- The drop frame compensation feature does not provide accurate compensation adjustments for tapes recorded in LP mode.
- For tapes that include a mixture of both SP and LP mode, the information displayed by the capture progress indicator may not be accurate.
- Make sure the video head of your digital video device is properly cleaned. Anomalies that you see in captured data could be due to dust or other particles on the video head.
    - The last frame captured is one frame before your selected [OUT] point. The frame you see immediately after clicking the [OUT] button is not captured.

When recording AVI files to tape:

- Do not use DVgate Motion when the connected digital video peripheral is in Timer Recording mode, as this could produce a malfunction in the peripheral.

- You can record only AVI files. MPEG files cannot be recorded.
- To avoid recording problems, such as a single frame appearing in multiple frames, close other applications on your system while recording.
- You cannot use different audio modes on the same tape. If you have AVI files that use different audio modes, they cannot be recorded at the same time, but must be recorded separately.
- Do not attempt to work with AVI files that are smaller than 4 MB.
- DVgate Motion does not support hard disk compression. You should not use disk compression if you are planning to work with DVgate Motion.
- In order to maximize recording capabilities, video and audio data are not available while you are recording.

If DVgate Motion indicates that frames have been dropped, you should try closing all open applications, or you may need to defragment your hard drive.

Restoring Audio Drivers

When you restore the audio drivers from the Application Recovery CD, you need to restart your system to use these drivers. In the Add New Hardware wizard that appears when you restart, click the Next button until you are prompted for the location of the drivers. The audio drivers are located on the Application Recovery CD in G:\drivers\audio\AL98091701\English.

Using AC-3® to Optical Digital Audio Output

MiniDisc player/recorders, DAT player/recorders, and older digital receivers do not support Dolby® Digital (AC-3). You should not use the AC-3 to Optical Digital Audio Output option unless you are using a device that supports Dolby Digital. Please refer to the manual supplied with your equipment to determine if it supports Dolby Digital. If you are unsure and you have selected the AC-3 to Optical Digital Audio Output option, turn down the volume on your equipment before using the DVD player.

Using America Online or Sony Online Support with WinFax® Basic Edition

Once you have configured WinFax Basic Edition, it is automatically available for your use. You cannot use America Online or Sony Online Support when the automatic fax receive feature of WinFax Basic Edition is on. To disable this feature, right click the WinFax icon in the task tray at the bottom right corner of your screen, and then select Exit.

Memory Upgrade Specifications

When upgrading memory, use only 3.3V 64-bit PC-100 168 PIN SDRAM DIMM modules. For more information on Digital Studio Computer compatible memory, call Sony at 1-888-4SONYPC (1-888-476-6972).

About the Software On Your Computer

Your VAIO Digital Studio computer is ready to help you work, play, learn, and communicate as soon as you turn it on. This section gives you an overview of the activities you can perform with your software titles. For support information, see For Answers to Your Software Questions.

Adobe Acrobat® Reader

Adobe Systems Incorporated

Acrobat Reader software allows you to view, navigate, and print electronic documents in Adobe Portable Document Format (PDF), an open file format that is intended to preserve the fidelity of documents created on all major computer platforms.

Adobe PhotoDeluxe® Business Edition

Adobe Systems Incorporated

Create amazing photo effects with PhotoDeluxe. Without learning complex software, you can

enhance, restore, and be creative with your photos. Includes built-in guided activities, stock photos, clip art, and templates to assist you.

Adobe Premiere® LE

Adobe Systems Incorporated

Adobe Premiere LE offers an interface and editing tool for producing movies for video, multimedia, or the web. View source clips and edited footage simultaneously in the monitor window. Create video clips up to three hours long with complete audio-video synchronization.

America Online®

America Online

America Online is the world's most popular Internet online service. Stay in touch with family and friends with Easy-to-Use E-mail, manage your personal finances, get the latest news and sports scores, and chat with thousands of others who share your interests.

AT&T WorldNet® Service

AT&T

Fast, reliable Internet access from AT&T WorldNet Service. AT&T WorldNet Service provides web-based e-mail, a personalized start page from Excite, easy access to the Excite search engine, free web pages, online and live agent technical support, instant messaging, and special shopping discounts at Market Square.

CompuServe®

CompuServe, Inc.

CompuServe is the most comprehensive source of organized business and educational information online today. CompuServe allows you to access the vastness of the Internet without wasting time wading through it. Maximize your time online with CompuServe.

Digital Media Park

Sony Electronics

An integrated suite of multimedia cataloging and playback programs including Media Bar, Media Library, Media Showcase, and MiniDisc Editor. Manage your music by cataloging your entire CD collection, and then create custom MiniDiscs of your favorite songs.

Dr. Solomon's® Anti-Virus

Dr Solomon's Software Inc.

Dr. Solomon's Anti-Virus provides the most comprehensive defense against the spread of viruses, including macro viruses. It can scan inside compressed files and automatically protects your system against viruses sent via e-mail or Internet download.

DVgate Motion

Sony Electronics

Connect a digital video camera recorder to the i.LINK connector and capture your own video clips. You can edit the clips from your video, add others, and combine clips into new movie segments.

DVgate Still

Sony Electronics

Connect a digital video camera recorder to the i.LINK connector and capture your own still images. You can save your images in a variety of popular file formats.

EarthLink Sprint TotalAccess

EarthLink Network, Inc.

An Internet Service Provider that supplies access, information, and assistance to its customers, introducing them to the Internet. Member benefits include e-mail, newsgroups, a Personal Start Page, a free 6 MB web site, a member magazine, and 24-hour technical support.

Microsoft® Encarta® 99 Encyclopedia

Microsoft Corporation

Microsoft Encarta Encyclopedia combines current, comprehensive content with up-to-date multimedia technology, providing users with unique, engaging learning experiences. With the 1999 edition, Encarta provides a wealth of information resources and unique interactive features

Microsoft® Internet Explorer for Windows® 98

Microsoft Corporation

Internet Explorer delivers the web the way you want it. It's safe, easy to use, and you can personalize how you access the web. Outlook Express and other tools in Internet Explorer also help you have a great experience when you are on the web!

Microsoft® Money 99

Microsoft Corporation

Microsoft Money 99 is personal finance software that lets you perform your financial tasks, everything from paying bills to planning for the future, in a smarter, faster way. With Money's online services, you can pay bills and bank from the comfort of home.

Microsoft® Outlook® 98

Microsoft Corporation

Outlook 98 is Microsoft's premier messaging and collaboration client. It combines the leading support for Internet standards-based messaging systems with integrated calendar, contact, and task-management features.

Microsoft® Works

Microsoft Corporation

Works provides users with the right set of core tools that allows them to write letters and reports, track family and friends with the address book, manage home finances, and create a home inventory.

MotorHead

Gremlin Interactive Ltd.

MotorHead is realistic arcade-racing; high-velocity entertainment that puts you behind the wheel for 3D pure racing action. Power across Europe and USA in the Transatlantic Speed League, where second place is simply not an option.

Netscape Communicator®

Netscape Communications

Netscape Communicator is the all-in-one Internet tool that makes it easy to browse the web, send Internet e-mail, chat, read newsgroups, and compose great web documents.

PictureGear

Sony Electronics

This image management software displays images from your hard drive, a Sony digital still camera, or a Sony Mavica® camera. The images appear in a convenient light-table format, so that you can easily view the contents of an entire folder.

Prodigy Internet

Prodigy Communications Corporation

An Internet service that helps you find what you need online faster and smarter. Prodigy delivers powerful online content, such as sports scores, stock quotes, news, and easy access to Excite , plus a personal e-mail account and quality customer service, all at a competitive price.

Quicken® Basic 99

Intuit, Inc

Quicken is the fastest, easiest way to organize your finances. Quicken works just like your checkbook, so it's easy to learn and use. Quicken manages all of your finances, bank accounts, credit cards, investments, and loans. You can even pay your bills online.

SurfMonkey

MediaLive, Inc

SurfMonkey is a web browser and online service for kids ages 6-12 that makes the Internet safe, fun, and easy. A talking monkey guides children through web sites and chat rooms, and can read their e-mail out loud. Children cannot go to inappropriate web sites, parents can screen e-mail messages, and chat messages are monitored.

VAIO Smart Keyboard

Sony Electronics

VAIO Smart Keyboard software operates your new easy to use programmable USB keyboard. Six programmable buttons enable you to launch your favorite applications, open frequently used files, access Explorer, or even open your web browser with just the click of a button.

WinFax® Basic Edition

Symantec Corporation

WinFax Basic Edition incorporates an easy-to-use interface that allows you to send and receive faxes easily. Upgrade to WinFax Pro to receive additional features.

About Your Recovery CDs

Application Recovery CD(s)

Sony Electronics

The Application Recovery CD program allows you to reinstall individual applications and device drivers. Use it to restore corrupted or accidentally erased files.

System Recovery CD(s)

Sony Electronics

The System Recovery CD program allows you to restore the software titles that shipped with your computer if they become corrupted or are erased accidentally. It can be used only to restore the hard disk of the Sony computer you purchased.

For Answers to Your Software Questions

Sony Service Center

For the Sony Service Center nearest you, call at 1-888-4SONYPC (1-888-476-6972).

Acrobat® Reader, Adobe PhotoDeluxe® Business Edition , Adobe Premiere® LE (Adobe Systems Incorporated)

Web site http://www.adobe.com/
phone 206-628-2746 (fee-based support)
fax 206-628-5737
e-mail techdocs@adobe.com
hours M-F, 6 AM-5 PM PT

America Online® (America Online)

Web site http://www.aol.com/
phone 800-827-3338
hours 7 days a week, 6 AM - 2 PM ET

AT&T WorldNet® Service (AT&T)

Web site http://www.att.net/*
phone 800-400-1447
e-mail worldnet@attmail.com
hours 7 days a week, 24 hours a day

* You must be a WorldNet Service customer to access online support.

CompuServe® Interactive (CompuServe Interactive, Inc.)

Web site http://www.compuserve.com/
phone 800-848-8990
hours M-F, 8 AM - 1 AM ET, S-S 10 AM - 10 PM ET

Dr. Solomon's® Anti-Virus (Dr. Solomon's Software Inc.)

Web site http://www.drsolomon.com/
phone 888-377-6566
e-mail support@us.drsolomon.com
hours 7 days a week, 24 hours a day

EarthLink Sprint TotalAccess (EarthLink Network, Inc.)

Web site http://help.earthlink.net/techsupport/
phone 800-395-8410
e-mail support@earthlink.net
hours 7 days a week, 24 hours a day

Easy Internet Access (Encompass, Inc.)

Web site http://www.encmpss.com/
phone 800-927-3000
hours 7 days a week, 24 hours a day

MotorHead (Gremlin Interactive Ltd.)

Web site http://www.gremlin.com/
phone 888-4SONYPC (888-476-6972)
hours 7 days a week, 24 hours a day

Windows® 98 Operating System, Works, Money, Encarta, Internet Explorer (Microsoft Corporation)

Web site http://www.microsoft.com/support/
phone 888-4SONYPC (888-476-6972)*
hours 7 days a week, 24 hours a day
* Support from 1-888-4SONYPC is free of charge for 90 days after the original date of purchase.

Netscape Communicator® (Netscape Communications Corporation)

Web site http://www.netscape.com/
phone 888-4SONYPC (888-476-6972)*
hours 7 days a week, 24 hours a day
* Support from 1-888-4SONYPC is free of charge for 90 days after the original date of purchase.

Prodigy Internet (Prodigy Communications Corporation.)

Web site http://www.prodigy.com/
phone 800-PRODIGY
hours 7 AM - 3 AM ET

Quicken® Basic (Intuit Inc.)

Web site http://www.intuit.com/support/
phone 900-555-4688
hours 7 days a week, 24 hours a day

SurfMonkey (MediaLive, Inc.)

Web site http://www.surfmonkey.com/support/Sub_support.html
phone 408-556-2060
e-mail support@surfmonkey.com
hours 9AM-10PM PT everyday

WinFax® Basic Edition (Symantec Corporation.)

Web site http://www.symantec.com/techsupp/
phone 800-798-0850
fax 800-554-4403 in North America
541-984-2490 outside North America

Specifications

Model **PCV-E518DS**
Processor 500 MHz Pentium® III
Hard Disk Drive 17.28 GB
Standard SDRAM 128 MB PC-100 SDRAM, expandable to 256 MB
Video RAM 8 MB SDRAM
MPEG "Sony Tuned" MPEG Digital Video supports full-screen video playback
Graphics 3D 2X AGP graphics acceleration (Matrox)
Sound Capabilities 3D Positional Audio (Aureal A3D)
Diskette Drive 3.5" 1.44 MB FDD
CD-RW Drive CD-RW Drive (4X max. CD-R writing, 2X max. CD-RW writing, 24X max. reading)
Modem K56flex technology/V.90 compatible data/fax modem[1]
Expansion Capabilities One PCI slot
One additional hard disk drive bay
Connection Capabilities (Front) USB port
i.LINK port (4-pin)
Connection Capabilities (Rear) Optional Keyboard (PS/2-style)
Mouse (PS/2-style)
USB port
Serial port
Parallel (printer)
Game/MIDI
Headphones
Line In
Microphone
VGA Monitor
S-Link (Control-A1)
Optical Digital Audio Out
Two i.LINK ports (6-pin)[2]
Modem line (RJ-11)
Phone line (RJ-11)
Supplied Accessories VAIO Smart keyboard
Sony two-button mouse
RJ-11 phone cable
Power cord
Service 90-day limited service. Extendible to one year from original date of purchase upon registration[3]
Limited Warranty 90-day parts/labor standard. Extendible to one year from original date of purchase upon registration[4]

Power Requirements 200 watts maximum
Dimensions 7" (w) x 12" (h) x 13 3/4" (d) (178mm x 304mm x 330mm)
Weight 17 lbs. (7.71 kg)
Operating Temperature 50º F to 95º F (+10º C to 35º C)

[1] Maximum speed for faxing is 14.4 kbytes/s. Your modem is capable of downloading at 56 kbytes/s using K56flex technology or V.90. Your phone service, online service, or Internet Service Provider however, may not support this technology or operate at this speed.

[2] Six-pin i-LINK connectors on the rear of the system each supply 10V to 12V. The combined total wattage that can be supplied by the two connectors is 6 watts.

[3] Certain restrictions apply

[4] Certain restrictions apply

Specifications are subject to change without notice.

This product meets the standards of the International Energy Star Program for energy efficiency.

© 1999 Sony Electronics Inc. Reproduction in w hole or in part w ithout w ritten permission is prohibited. All rights reserved.

Read Me First

Welcome

Congratulations on your purchase of the Sony VAIO Digital Studio Computer. Sony has combined leading-edge technology in audio, video, computing, and communications to provide you with state-of-the-art personal computing.

Features

 For a complete description of the specifications of your VAIO Digital Studio Computer, see Specifications.

- **Exceptional performance:** Your computer includes a brand new Intel® Pentium® III processor, a CD-RW drive, and a V.90 compatible data/fax modem.*

* Actual upload and download speeds may vary due to line conditions, ISP support, and government regulations.

- **CD-RW drive:** This drive is the ideal solution for making backups and data archiving, with the ability to store up to 650 MB* of removable, rewritable storage on a single rewritable CD. Save your movies to CD-R or CD-RW media and share videos and images with family and friends.

***** 530 MB after formatting.

- **VAIO Smart Keyboard:** This USB keyboard has programmable shortcut buttons for launching your favorite programs or accessing the Internet.
- **Sony audio and video quality:** High-fidelity positional 3D audio system (A3D), high-powered 3D graphics (AGP), and "Sony-Tuned" MPEG digital video playback enable you to take advantage of today's advanced multimedia applications, games, and entertainment software.
- **S-Link (Control-A1):** This technology allows you to build a database of all your music and video CDs and then record your favorite audio selections on MiniDiscs. Use your computer with a 200 disc mega-storage CD changer and a MiniDisc recording deck.
- **i.LINK (IEEE 1394):** Three built-in i.LINK ports provide you with maximum digital connection capability. The i.LINK name and logo identify a digital interface (IEEE 1394) for high speed communication. By using your VAIO Digital Studio Computer, a Sony Digital Handycam® Camcorder, the DVgate software preinstalled on your computer, and the i.LINK (IEEE 1394) interface, you can easily create and edit your own home videos.
- **Optical Digital Audio Output:** This high-quality digital interface transmits digital audio data via light pulses. Transfer crystal clear digital audio to your MiniDisc recorder.
- **Digital Studio Software**: Enjoy all of your computer's audio and video capabilities with component-like applications that allow you to creatively manipulate digital still images, video clips, and audio tracks.
- **50 free hours of Internet access:** Use the Internet for up to 50 free hours when you sign up with GTE (no credit card required). Limit of two hours per day. Free access expires after 50 hours or 90 days after signing up--whichever occurs first.
- **Preinstalled software titles**: All the software on your computer is preinstalled, configured, and ready for you to use right out of the box.
- **Windows® 98**: Your system includes the latest operating system from Microsoft.
- **Communications:** Access popular online services, browse the Internet, send faxes, and more.

Unpacking Your Computer

Computer and Supplied Accessories

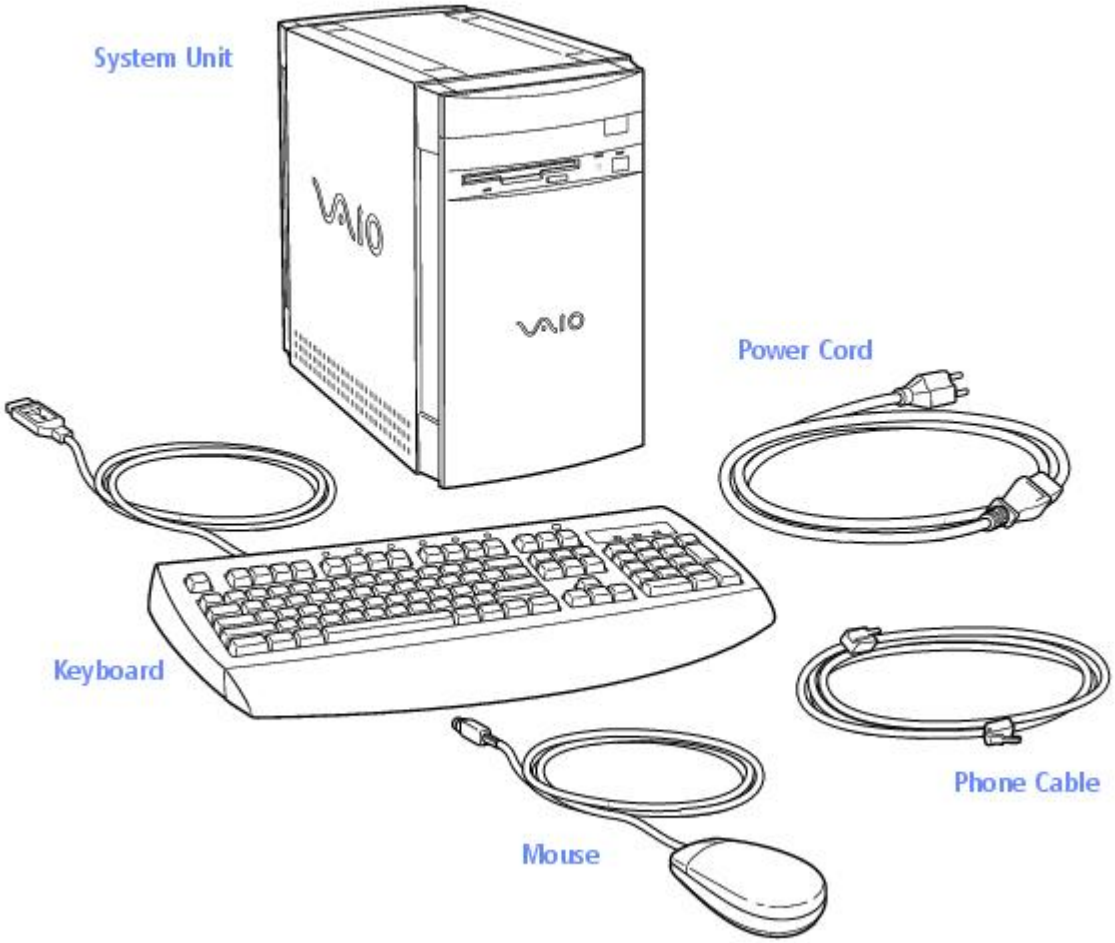

Manuals

- *Read Me First* (this manual) contains features and specifications of your computer. It also includes information on the applications included with your system, how to contact software vendors, and last minute troubleshooting tips.
- The *VAIO Digital Studio Computer User Guide* describes how to get started with your computer, find help, and solve common problems.
- The *Microsoft® Windows®98 Getting Started* manual explains how to use the basic features of the Windows operating system.

Recovery CDs

- System Recovery CD(s)
- Application Recovery CD(s)

Other

- Setting up your VAIO Digital Studio Computer (poster)
- Packet containing special product offers

Software Library

The Software Library contains the Microsoft software license agreement, Sony end-user license agreement, and the following CDs:

- Adobe PhotoDeluxe® Business Edition 3.0
- Gremlin Interactive Ltd. MotorHead
- Microsoft® Encarta® 99 Encyclopedia
- Microsoft® Money/Microsoft® Works

Back Panel Overview

The back panel of your computer contains the connectors where you plug in supplied and optional accessories. The icons on the back panel serve as a map to help you locate the connectors on your computer.

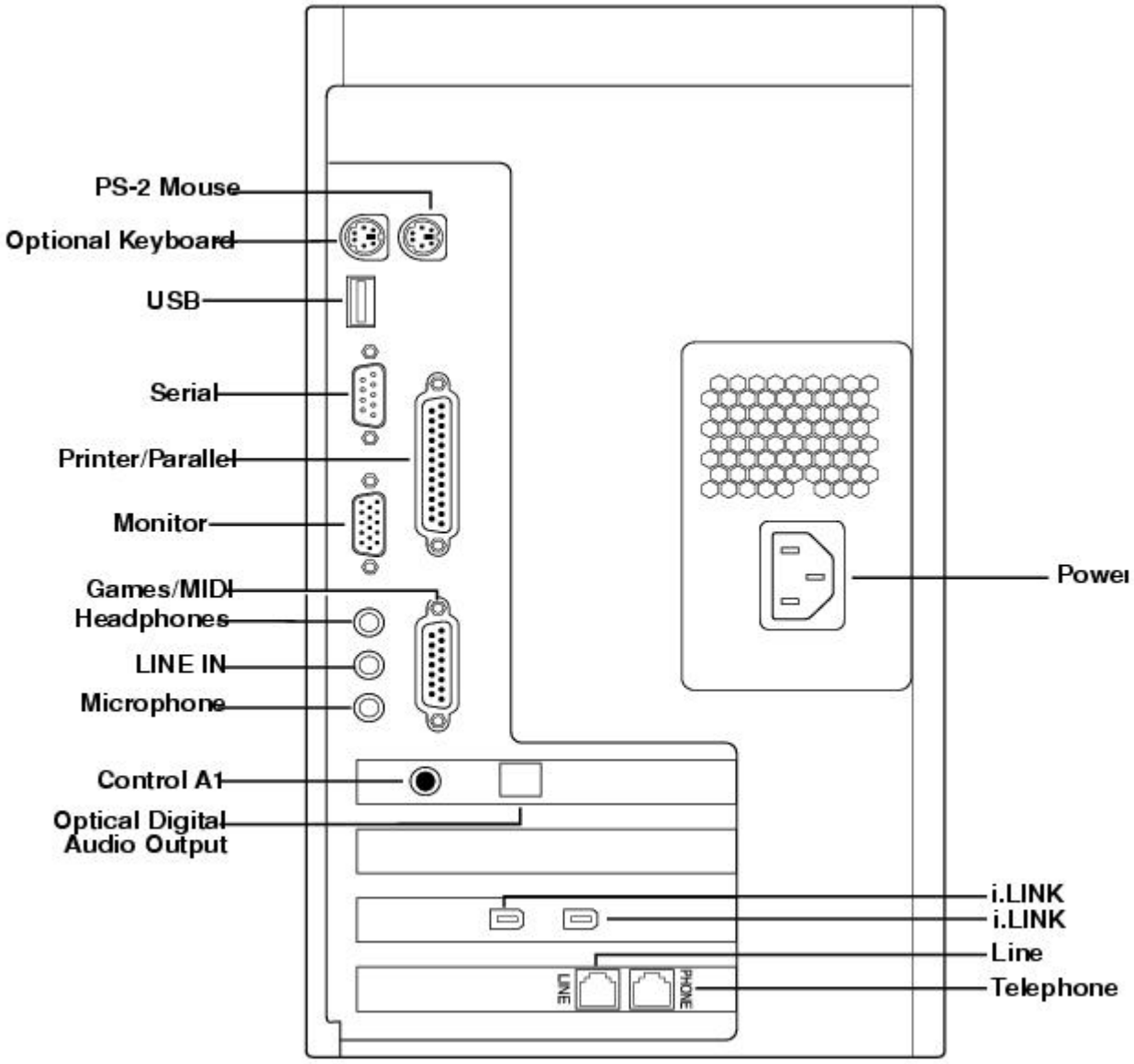

For your convenience, your computer includes USB and i.LINK connectors on both the front and back panels, allowing you to connect to either set of connectors. i.LINK connectors on the back of your system are 6-pin connectors.

Front Panel Overview

The front panel of your VAIO Digital Studio Computer allows for access to the diskette and CD-RW drives. It also includes USB and i.LINK ports to connect USB devices, CD changers, MiniDisc drives, or other components.

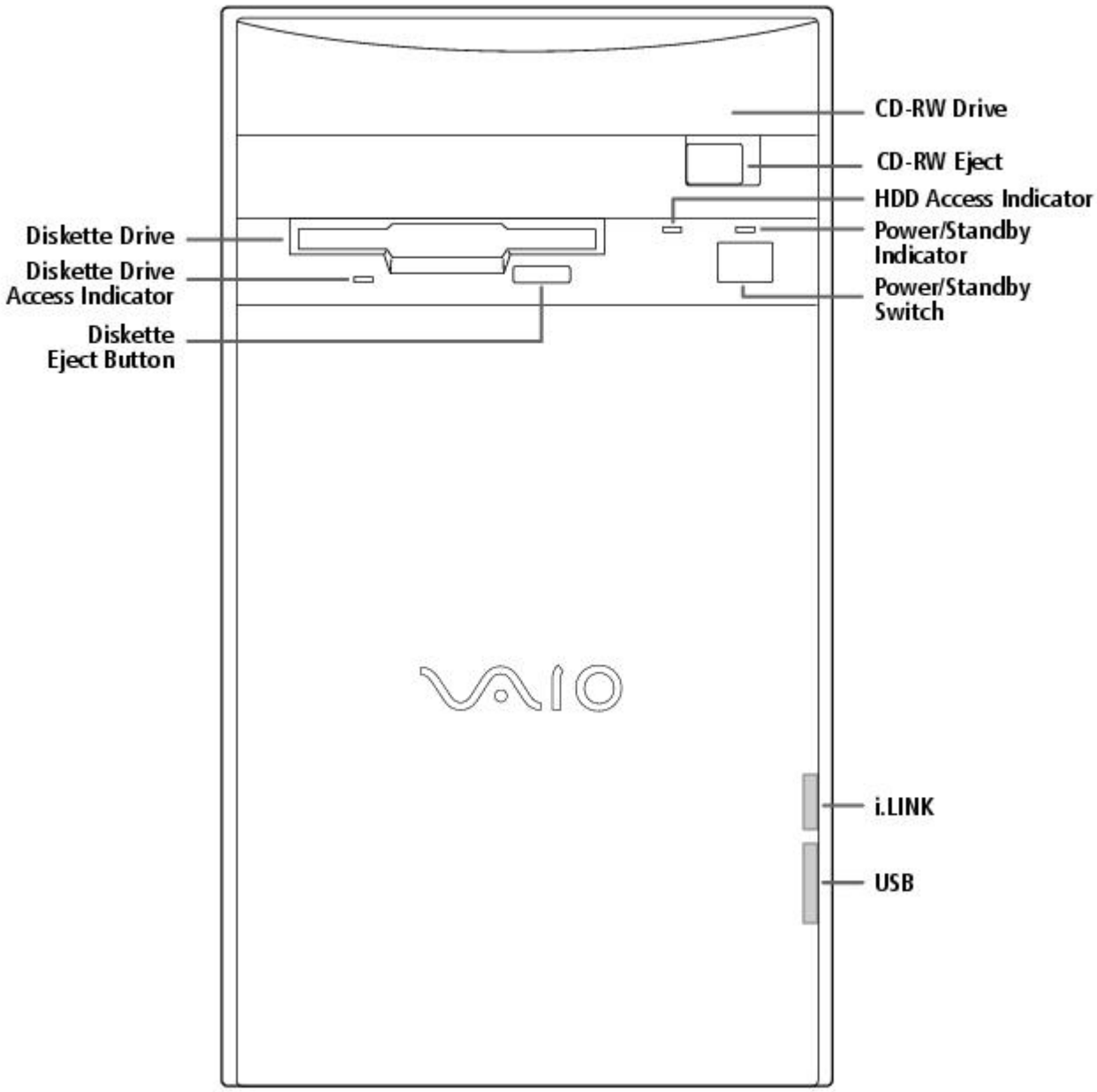

For your convenience, your computer includes USB and i.LINK connectors on both the front and back panels, allowing you to connect to either set of connectors. The i.LINK connector on the front of your system is a 4-pin connector.

Supplementary Information

For the most recent version of this manual, see the online version of Read Me First. You can access this document from the Windows Start Menu by selecting Programs/VAIO Documentation.

Hard Drive Partition

In order to improve the performance of your computer's DVgate Motion software, the hard disk drive on your computer has been formatted with two partitions, C and D. DVgate Motion saves files to the D partition. This prevents large video captures from consuming the available space on your C partition. To maintain optimum performance of DVgate Motion, you should defragment regularly.

VAIO Smart Keyboard Default Settings

The VAIO Smart Keyboard programmable buttons come with the following applications as their default settings:

S1 - Easy Internet Access Browser (Internet)

S2 - Outlook 98 (Mail)

S3 - MotorHead (Game)

S4 - Microsoft® Works (Work)

S5 - Quicken 99 Basic (Finance)

S6 - VAIO Documentation (Help)

All six buttons are reprogrammable.

Using The Standby Mode

To Put Your Computer into Standby Mode

When you are done using your computer, you can put it in Standby mode rather than turn it off completely. There are four ways to put your computer into Standby mode.

- Touch the power switch on the front panel.
- Click Shut Down at the bottom of the Start menu to display the Shut Down Windows dialog box. Select Stand by, and then click OK.
- Press the Standby button on the VAIO Smart Keyboard (the half moon icon).
- Change the timer settings for Standby mode in the Control Panel, as follows:

1. From the Start menu, point to Settings and click Control Panel.
2. Click the Power Management icon.
3. On the Power Schemes tab, change the Power scheme to Home/Office Desk.
4. In the list box for System standby, select an interval of time.
5. Click the OK button and close the Control Panel.

To Resume from Standby Mode

There are two ways to resume system functionality when your computer is in Standby mode. Use either of the following methods.

- Press any key on your keyboard, such as the Enter key.
- Touch the power switch on the front panel.

It may take up to 30 seconds for your system to recover stored information and resume functionality. The screen remains blank while the system is resuming functionality.

Applications That Use the TWAIN Driver

Digital imaging applications, such as Adobe PhotoDeluxe®, allow you to transfer images to your computer from external devices, including scanners or digital cameras. For some devices, a TWAIN driver window appears on the screen. Always close the TWAIN driver window before exiting or minimizing a digital imaging application.

Restoring Outlook 98

For the Add New Components functionality to be available with Microsoft Outlook, you must first run the installation program for Outlook from the Application Recovery CD. When prompted to install the program, select Exit. This decompresses the software, making the Add New Components functionality available.

Inserting Add-in Boards

Your VAIO Digital Studio Computer accommodates PCI add-in boards up to 7.7 inches in length.

Using Devices Connected to the i.LINK (IEEE 1394), S-Link (Control-A1), and Optical Digital Audio Output Connectors

For the latest information on devices known to be compatible with the state-of the-art audio, video, and graphics capabilities of your VAIO computer, check the Sony web site at http://www.sony.com/pcsupport.

Connecting to i.LINK Ports

Your VAIO computer includes a 4-pin i.LINK connector on the front of the system and two 6-pin i.LINK connectors on the back of the system. A 6-pin i.LINK connector can supply power from the computer to the connected device if the device is equipped with a 6-pin connector. Each 6-pin connector supplies 10V to 12V. The total power supplied by both 6-pin i.LINK connectors cannot exceed 6 watts. A 4-pin i.LINK connector cannot supply power to a connected device.

Capturing and Editing Digital Video Clips

- You can capture digital video clips using a digital video camera recorder and DVgate Motion software. Once the clips are saved as AVI files, they can be edited using DVgate Motion, DVgate Clip, or Adobe Premiere® LE. You cannot capture digital video clips directly using the Capture menu in Adobe Premiere LE. Adobe Premiere LE supports an analog capture board for capturing clips. Your VAIO computer is designed for digital video input.
- If there is no audio data associated with an AVI file, the message "Codec compression error" appears. If you do not wish to associate audio with your AVI file, you can add muted sound data by recording audio with the mute option enabled.
- For best performance, when editing AVI files in Adobe Premiere LE, you should use the default setup parameters that shipped with your system. If you change the default setup and want to reinitialize the parameters, follow these steps:

    1. In the Adobe Premiere LE application, select Compression from the Make menu. The Compression Settings dialog box appears.
    2. In the Method list box, select Sony DV software CODEC.
    3. Click OK to close the screen.
    4. From the Make menu, select Preset. The Preset dialog box appears.
    5. Select the parameters for Time Base, Compress, Output, and Preview Option settings as indicated below.

[Time base]

Time base - 29.97fps (required)

[Compress]

File type - AVI (required)
Compress Program Method - Sony DV software CODEC (required)
Compress Program Depth - Millions colors (No other options)
Quality (No control for this item)
Option: Frames per second - 30 (required)
Option: Basic Key Frames (No control for this item)
Option: Optimize Still Off (recommended)
Data rate - Recompress Off (recommended)

[Output options]

Video - On (required)
Video Size - 720x480
4:3 Aspect - Off (required)
VideoType - Field 2 (recommended)
Audio - On (required)
Audio Rate - 44kHz (required)
Audio Format - 16 Bit Stereo or 16 Bit Monaural (required)
Audio Type - Uncompress (required)
Audio Interleave - 1 frame (recommended)
- Less than 30 frames (required)

Audio Sync - 1.0 (required)
Audio Skew - 0.75 (recommended)
- Less than 1.0 (required)

[Preview Option]

Preview Window Size - 360x240

Note that Adobe Premiere LE does not save the Preview Window Size, but uses a default size of 320 x 213 each time the application launches. We recommend that you change this setting to 360 x 240 to improve the quality of preview clips when editing AVI files.

Using Alternate Browsers with America Online®

To use Internet Explorer or Netscape Navigator as your browser with America Online, follow these steps:

1. From the Start menu, point to Settings and then click Control Panel.
2. Click the Internet icon.
3. Click the Connection tab.
4. Click the "Connect to the Internet using local area network" radio button.
5. Click OK.

Using DVgate Motion

When capturing clips:

- Do not use DVgate Motion when the connected digital video peripheral is in Timer Recording mode, as this could produce a malfunction in the peripheral.
- Captures larger than 2 GB (9 minutes and 30 seconds) are automatically continued in a second file.
- You can record stereo audio (stereo 1) while capturing video. You cannot add audio on the stereo 2 track after capturing the video data.
- You cannot use different audio modes on the same tape. You should perform a separate capture for each audio mode you wish to use.
- DVgate Motion does not support hard disk compression. You should not use disk compression if you are planning to work with DVgate Motion.
- Title data is saved in the flash memory of a digital video camera and is not transferred to tape by DVgate Motion.
- To avoid interruption of capture sessions, you should disable the screen saver.
- The drop frame compensation feature does not provide accurate compensation adjustments for tapes recorded in LP mode.
- For tapes that include a mixture of both SP and LP mode, the information displayed by the capture progress indicator may not be accurate.
- Make sure the video head of your digital video device is properly cleaned. Anomalies that you see in captured data could be due to dust or other particles on the video head.
    - The last frame captured is one frame before your selected [OUT] point. The frame you see immediately after clicking the [OUT] button is not captured.

When recording AVI files to tape:

- Do not use DVgate Motion when the connected digital video peripheral is in Timer Recording mode, as this could produce a malfunction in the peripheral.

- You can record only AVI files. MPEG files cannot be recorded.
- To avoid recording problems, such as a single frame appearing in multiple frames, close other applications on your system while recording.
- You cannot use different audio modes on the same tape. If you have AVI files that use different audio modes, they cannot be recorded at the same time, but must be recorded separately.
- Do not attempt to work with AVI files that are smaller than 4 MB.
- DVgate Motion does not support hard disk compression. You should not use disk compression if you are planning to work with DVgate Motion.
- In order to maximize recording capabilities, video and audio data are not available while you are recording.

If DVgate Motion indicates that frames have been dropped, you should try closing all open applications, or you may need to defragment your hard drive.

Restoring Audio Drivers

When you restore the audio drivers from the Application Recovery CD, you need to restart your system to use these drivers. In the Add New Hardware wizard that appears when you restart, click the Next button until you are prompted for the location of the drivers. The audio drivers are located on the Application Recovery CD in G:\drivers\audio\AL98091701\English.

Using AC-3® to Optical Digital Audio Output

MiniDisc player/recorders, DAT player/recorders, and older digital receivers do not support Dolby® Digital (AC-3). You should not use the AC-3 to Optical Digital Audio Output option unless you are using a device that supports Dolby Digital. Please refer to the manual supplied with your equipment to determine if it supports Dolby Digital. If you are unsure and you have selected the AC-3 to Optical Digital Audio Output option, turn down the volume on your equipment before using the DVD player.

Using America Online or Sony Online Support with WinFax® Basic Edition

Once you have configured WinFax Basic Edition, it is automatically available for your use. You cannot use America Online or Sony Online Support when the automatic fax receive feature of WinFax Basic Edition is on. To disable this feature, right click the WinFax icon in the task tray at the bottom right corner of your screen, and then select Exit.

Memory Upgrade Specifications

When upgrading memory, use only 3.3V 64-bit PC-100 168 PIN SDRAM DIMM modules. For more information on Digital Studio Computer compatible memory, call Sony at 1-888-4SONYPC (1-888-476-6972).

About the Software On Your Computer

Your VAIO Digital Studio computer is ready to help you work, play, learn, and communicate as soon as you turn it on. This section gives you an overview of the activities you can perform with your software titles. For support information, see For Answers to Your Software Questions.

Adobe Acrobat® Reader

Adobe Systems Incorporated

Acrobat Reader software allows you to view, navigate, and print electronic documents in Adobe Portable Document Format (PDF), an open file format that is intended to preserve the fidelity of documents created on all major computer platforms.

Adobe PhotoDeluxe® Business Edition

Adobe Systems Incorporated

Create amazing photo effects with PhotoDeluxe. Without learning complex software, you can

enhance, restore, and be creative with your photos. Includes built-in guided activities, stock photos, clip art, and templates to assist you.

Adobe Premiere® LE

Adobe Systems Incorporated

Adobe Premiere LE offers an interface and editing tool for producing movies for video, multimedia, or the web. View source clips and edited footage simultaneously in the monitor window. Create video clips up to three hours long with complete audio-video synchronization.

America Online®

America Online

America Online is the world's most popular Internet online service. Stay in touch with family and friends with Easy-to-Use E-mail, manage your personal finances, get the latest news and sports scores, and chat with thousands of others who share your interests.

AT&T WorldNet® Service

AT&T

Fast, reliable Internet access from AT&T WorldNet Service. AT&T WorldNet Service provides web-based e-mail, a personalized start page from Excite, easy access to the Excite search engine, free web pages, online and live agent technical support, instant messaging, and special shopping discounts at Market Square.

CompuServe®

CompuServe, Inc.

CompuServe is the most comprehensive source of organized business and educational information online today. CompuServe allows you to access the vastness of the Internet without wasting time wading through it. Maximize your time online with CompuServe.

Digital Media Park

Sony Electronics

An integrated suite of multimedia cataloging and playback programs including Media Bar, Media Library, Media Showcase, and MiniDisc Editor. Manage your music by cataloging your entire CD collection, and then create custom MiniDiscs of your favorite songs.

Dr. Solomon's® Anti-Virus

Dr Solomon's Software Inc.

Dr. Solomon's Anti-Virus provides the most comprehensive defense against the spread of viruses, including macro viruses. It can scan inside compressed files and automatically protects your system against viruses sent via e-mail or Internet download.

DVgate Motion

Sony Electronics

Connect a digital video camera recorder to the i.LINK connector and capture your own video clips. You can edit the clips from your video, add others, and combine clips into new movie segments.

DVgate Still

Sony Electronics

Connect a digital video camera recorder to the i.LINK connector and capture your own still images. You can save your images in a variety of popular file formats.

EarthLink Sprint TotalAccess

EarthLink Network, Inc.

An Internet Service Provider that supplies access, information, and assistance to its customers, introducing them to the Internet. Member benefits include e-mail, newsgroups, a Personal Start Page, a free 6 MB web site, a member magazine, and 24-hour technical support.

Microsoft® Encarta® 99 Encyclopedia

Microsoft Corporation

Microsoft Encarta Encyclopedia combines current, comprehensive content with up-to-date multimedia technology, providing users with unique, engaging learning experiences. With the 1999 edition, Encarta provides a wealth of information resources and unique interactive features

Microsoft® Internet Explorer for Windows® 98

Microsoft Corporation

Internet Explorer delivers the web the way you want it. It's safe, easy to use, and you can personalize how you access the web. Outlook Express and other tools in Internet Explorer also help you have a great experience when you are on the web!

Microsoft® Money 99

Microsoft Corporation

Microsoft Money 99 is personal finance software that lets you perform your financial tasks, everything from paying bills to planning for the future, in a smarter, faster way. With Money's online services, you can pay bills and bank from the comfort of home.

Microsoft® Outlook® 98

Microsoft Corporation

Outlook 98 is Microsoft's premier messaging and collaboration client. It combines the leading support for Internet standards-based messaging systems with integrated calendar, contact, and task-management features.

Microsoft® Works

Microsoft Corporation

Works provides users with the right set of core tools that allows them to write letters and reports, track family and friends with the address book, manage home finances, and create a home inventory.

MotorHead

Gremlin Interactive Ltd.

MotorHead is realistic arcade-racing; high-velocity entertainment that puts you behind the wheel for 3D pure racing action. Power across Europe and USA in the Transatlantic Speed League, where second place is simply not an option.

Netscape Communicator®

Netscape Communications

Netscape Communicator is the all-in-one Internet tool that makes it easy to browse the web, send Internet e-mail, chat, read newsgroups, and compose great web documents.

PictureGear

Sony Electronics

This image management software displays images from your hard drive, a Sony digital still camera, or a Sony Mavica® camera. The images appear in a convenient light-table format, so that you can easily view the contents of an entire folder.

Prodigy Internet

Prodigy Communications Corporation

An Internet service that helps you find what you need online faster and smarter. Prodigy delivers powerful online content, such as sports scores, stock quotes, news, and easy access to Excite , plus a personal e-mail account and quality customer service, all at a competitive price.

Quicken® Basic 99

Intuit, Inc

Quicken is the fastest, easiest way to organize your finances. Quicken works just like your checkbook, so it's easy to learn and use. Quicken manages all of your finances, bank accounts, credit cards, investments, and loans. You can even pay your bills online.

SurfMonkey

MediaLive, Inc

SurfMonkey is a web browser and online service for kids ages 6-12 that makes the Internet safe, fun, and easy. A talking monkey guides children through web sites and chat rooms, and can read their e-mail out loud. Children cannot go to inappropriate web sites, parents can screen e-mail messages, and chat messages are monitored.

VAIO Smart Keyboard

Sony Electronics

VAIO Smart Keyboard software operates your new easy to use programmable USB keyboard. Six programmable buttons enable you to launch your favorite applications, open frequently used files, access Explorer, or even open your web browser with just the click of a button.

WinFax® Basic Edition

Symantec Corporation

WinFax Basic Edition incorporates an easy-to-use interface that allows you to send and receive faxes easily. Upgrade to WinFax Pro to receive additional features.

About Your Recovery CDs

Application Recovery CD(s)

Sony Electronics

The Application Recovery CD program allows you to reinstall individual applications and device drivers. Use it to restore corrupted or accidentally erased files.

System Recovery CD(s)

Sony Electronics

The System Recovery CD program allows you to restore the software titles that shipped with your computer if they become corrupted or are erased accidentally. It can be used only to restore the hard disk of the Sony computer you purchased.

For Answers to Your Software Questions

Sony Service Center

For the Sony Service Center nearest you, call at 1-888-4SONYPC (1-888-476-6972).

Acrobat® Reader, Adobe PhotoDeluxe® Business Edition , Adobe Premiere® LE (Adobe Systems Incorporated)

Web site http://www.adobe.com/
phone 206-628-2746 (fee-based support)
fax 206-628-5737
e-mail techdocs@adobe.com
hours M-F, 6 AM-5 PM PT

America Online® (America Online)

Web site http://www.aol.com/
phone 800-827-3338
hours 7 days a week, 6 AM - 2 PM ET

AT&T WorldNet® Service (AT&T)

Web site http://www.att.net/*
phone 800-400-1447
e-mail worldnet@attmail.com
hours 7 days a week, 24 hours a day

* You must be a WorldNet Service customer to access online support.

CompuServe® Interactive (CompuServe Interactive, Inc.)

Web site http://www.compuserve.com/
phone 800-848-8990
hours M-F, 8 AM - 1 AM ET, S-S 10 AM - 10 PM ET

Dr. Solomon's® Anti-Virus (Dr. Solomon's Software Inc.)

Web site http://www.drsolomon.com/
phone 888-377-6566
e-mail support@us.drsolomon.com
hours 7 days a week, 24 hours a day

EarthLink Sprint TotalAccess (EarthLink Network, Inc.)

Web site http://help.earthlink.net/techsupport/
phone 800-395-8410
e-mail support@earthlink.net
hours 7 days a week, 24 hours a day

Easy Internet Access (Encompass, Inc.)

Web site http://www.encmpss.com/
phone 800-927-3000
hours 7 days a week, 24 hours a day

MotorHead (Gremlin Interactive Ltd.)

Web site http://www.gremlin.com/
phone 888-4SONYPC (888-476-6972)
hours 7 days a week, 24 hours a day

Windows® 98 Operating System, Works, Money, Encarta, Internet Explorer (Microsoft Corporation)

Web site http://www.microsoft.com/support/
phone 888-4SONYPC (888-476-6972)*
hours 7 days a week, 24 hours a day
* Support from 1-888-4SONYPC is free of charge for 90 days after the original date of purchase.

Netscape Communicator® (Netscape Communications Corporation)

Web site http://www.netscape.com/
phone 888-4SONYPC (888-476-6972)*
hours 7 days a week, 24 hours a day
* Support from 1-888-4SONYPC is free of charge for 90 days after the original date of purchase.

Prodigy Internet (Prodigy Communications Corporation.)

Web site http://www.prodigy.com/
phone 800-PRODIGY
hours 7 AM - 3 AM ET

Quicken® Basic (Intuit Inc.)

Web site http://www.intuit.com/support/
phone 900-555-4688
hours 7 days a week, 24 hours a day

SurfMonkey (MediaLive, Inc.)

Web site http://www.surfmonkey.com/support/Sub_support.html
phone 408-556-2060
e-mail support@surfmonkey.com
hours 9AM-10PM PT everyday

WinFax® Basic Edition (Symantec Corporation.)

Web site http://www.symantec.com/techsupp/
phone 800-798-0850
fax 800-554-4403 in North America
541-984-2490 outside North America

Specifications

Model **PCV-E518DS**
Processor 500 MHz Pentium® III
Hard Disk Drive 17.28 GB
Standard SDRAM 128 MB PC-100 SDRAM, expandable to 256 MB
Video RAM 8 MB SDRAM
MPEG "Sony Tuned" MPEG Digital Video supports full-screen video playback
Graphics 3D 2X AGP graphics acceleration (Matrox)
Sound Capabilities 3D Positional Audio (Aureal A3D)
Diskette Drive 3.5" 1.44 MB FDD
CD-RW Drive CD-RW Drive (4X max. CD-R writing, 2X max. CD-RW writing, 24X max. reading)
Modem K56flex technology/V.90 compatible data/fax modem[1]
Expansion Capabilities One PCI slot
One additional hard disk drive bay
Connection Capabilities (Front) USB port
i.LINK port (4-pin)
Connection Capabilities (Rear) Optional Keyboard (PS/2-style)
Mouse (PS/2-style)
USB port
Serial port
Parallel (printer)
Game/MIDI
Headphones
Line In
Microphone
VGA Monitor
S-Link (Control-A1)
Optical Digital Audio Out
Two i.LINK ports (6-pin)[2]
Modem line (RJ-11)
Phone line (RJ-11)
Supplied Accessories VAIO Smart keyboard
Sony two-button mouse
RJ-11 phone cable
Power cord
Service 90-day limited service. Extendible to one year from original date of purchase upon registration[3]
Limited Warranty 90-day parts/labor standard. Extendible to one year from original date of purchase upon registration[4]

Power Requirements 200 watts maximum
Dimensions 7" (w) x 12" (h) x 13 3/4" (d) (178mm x 304mm x 330mm)
Weight 17 lbs. (7.71 kg)
Operating Temperature 50º F to 95º F (+10º C to 35º C)

[1] Maximum speed for faxing is 14.4 kbytes/s. Your modem is capable of downloading at 56 kbytes/s using K56flex technology or V.90. Your phone service, online service, or Internet Service Provider however, may not support this technology or operate at this speed.

[2] Six-pin i-LINK connectors on the rear of the system each supply 10V to 12V. The combined total wattage that can be supplied by the two connectors is 6 watts.

[3] Certain restrictions apply

[4] Certain restrictions apply

Specifications are subject to change without notice.

This product meets the standards of the International Energy Star Program for energy efficiency.

© 1999 Sony Electronics Inc. Reproduction in w hole or in part w ithout w ritten permission is prohibited. All rights reserved.

Read Me First

Welcome

Congratulations on your purchase of the Sony VAIO Digital Studio Computer. Sony has combined leading-edge technology in audio, video, computing, and communications to provide you with state-of-the-art personal computing.

Features

 For a complete description of the specifications of your VAIO Digital Studio Computer, see Specifications.

- **Exceptional performance:** Your computer includes a brand new Intel® Pentium® III processor, a CD-RW drive, and a V.90 compatible data/fax modem.*

* Actual upload and download speeds may vary due to line conditions, ISP support, and government regulations.

- **CD-RW drive:** This drive is the ideal solution for making backups and data archiving, with the ability to store up to 650 MB* of removable, rewritable storage on a single rewritable CD. Save your movies to CD-R or CD-RW media and share videos and images with family and friends.

***** 530 MB after formatting.

- **VAIO Smart Keyboard:** This USB keyboard has programmable shortcut buttons for launching your favorite programs or accessing the Internet.
- **Sony audio and video quality:** High-fidelity positional 3D audio system (A3D), high-powered 3D graphics (AGP), and "Sony-Tuned" MPEG digital video playback enable you to take advantage of today's advanced multimedia applications, games, and entertainment software.
- **S-Link (Control-A1):** This technology allows you to build a database of all your music and video CDs and then record your favorite audio selections on MiniDiscs. Use your computer with a 200 disc mega-storage CD changer and a MiniDisc recording deck.
- **i.LINK (IEEE 1394):** Three built-in i.LINK ports provide you with maximum digital connection capability. The i.LINK name and logo identify a digital interface (IEEE 1394) for high speed communication. By using your VAIO Digital Studio Computer, a Sony Digital Handycam® Camcorder, the DVgate software preinstalled on your computer, and the i.LINK (IEEE 1394) interface, you can easily create and edit your own home videos.
- **Optical Digital Audio Output:** This high-quality digital interface transmits digital audio data via light pulses. Transfer crystal clear digital audio to your MiniDisc recorder.
- **Digital Studio Software**: Enjoy all of your computer's audio and video capabilities with component-like applications that allow you to creatively manipulate digital still images, video clips, and audio tracks.
- **50 free hours of Internet access:** Use the Internet for up to 50 free hours when you sign up with GTE (no credit card required). Limit of two hours per day. Free access expires after 50 hours or 90 days after signing up--whichever occurs first.
- **Preinstalled software titles**: All the software on your computer is preinstalled, configured, and ready for you to use right out of the box.
- **Windows® 98**: Your system includes the latest operating system from Microsoft.
- **Communications:** Access popular online services, browse the Internet, send faxes, and more.

Unpacking Your Computer

Computer and Supplied Accessories

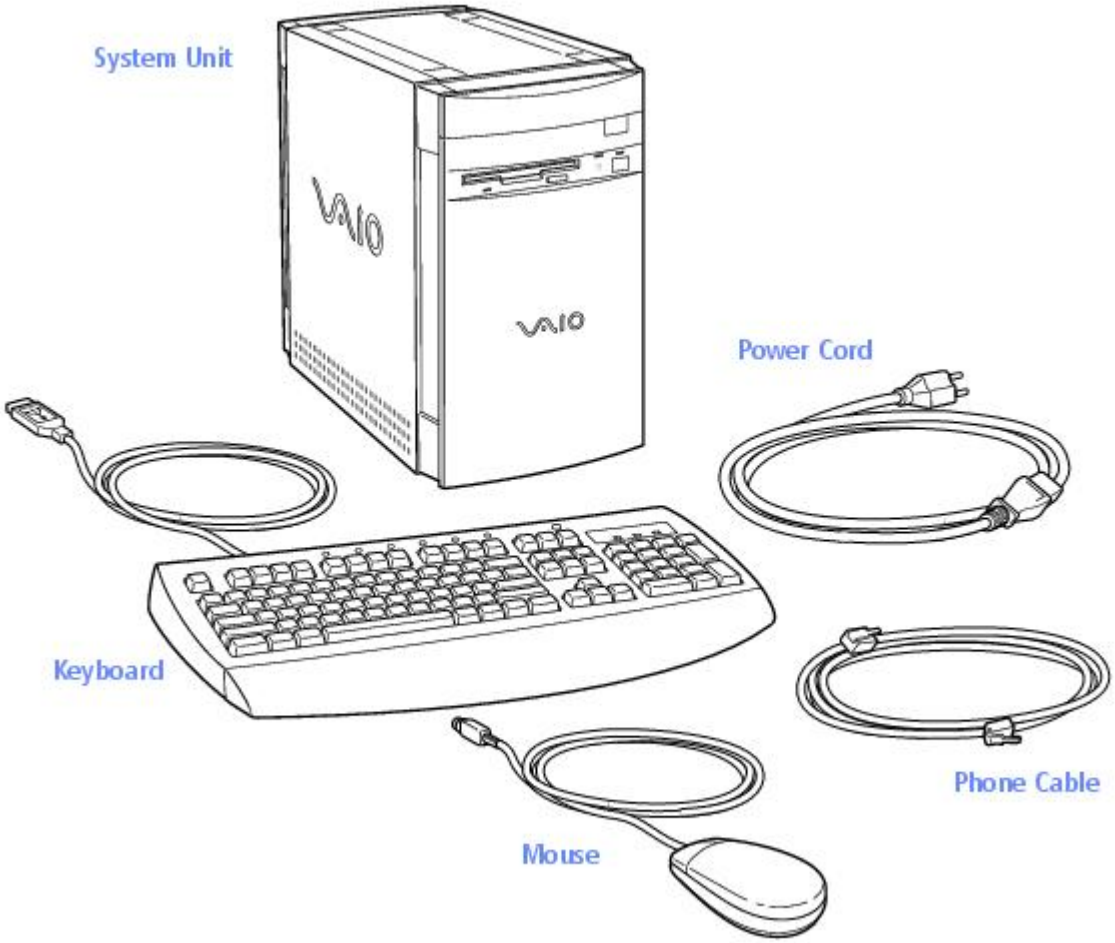

Manuals

- *Read Me First* (this manual) contains features and specifications of your computer. It also includes information on the applications included with your system, how to contact software vendors, and last minute troubleshooting tips.
- The *VAIO Digital Studio Computer User Guide* describes how to get started with your computer, find help, and solve common problems.
- The *Microsoft® Windows®98 Getting Started* manual explains how to use the basic features of the Windows operating system.

Recovery CDs

- System Recovery CD(s)
- Application Recovery CD(s)

Other

- Setting up your VAIO Digital Studio Computer (poster)
- Packet containing special product offers

Software Library

The Software Library contains the Microsoft software license agreement, Sony end-user license agreement, and the following CDs:

- Adobe PhotoDeluxe® Business Edition 3.0
- Gremlin Interactive Ltd. MotorHead
- Microsoft® Encarta® 99 Encyclopedia
- Microsoft® Money/Microsoft® Works

Back Panel Overview

The back panel of your computer contains the connectors where you plug in supplied and optional accessories. The icons on the back panel serve as a map to help you locate the connectors on your computer.

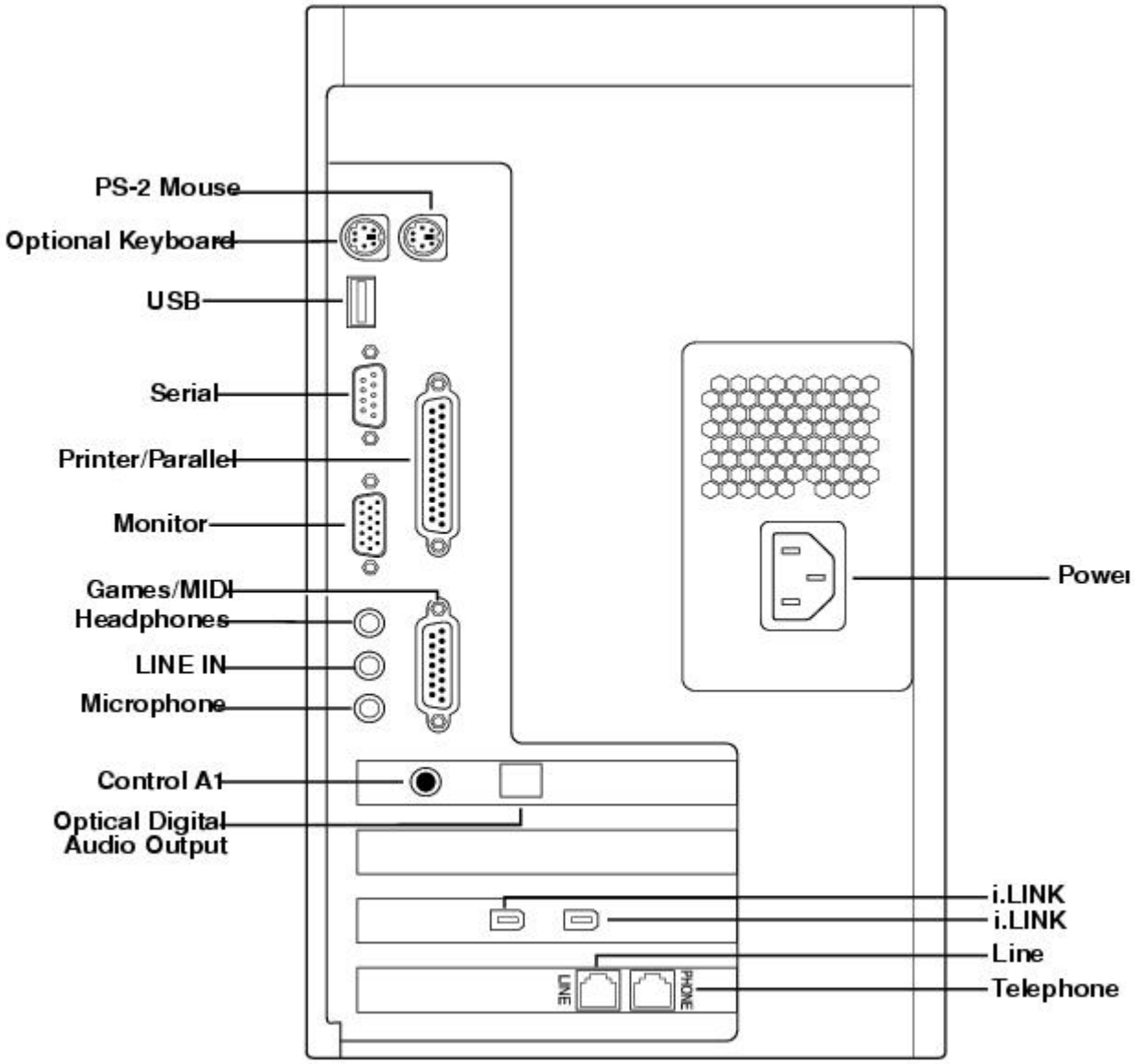

For your convenience, your computer includes USB and i.LINK connectors on both the front and back panels, allowing you to connect to either set of connectors. i.LINK connectors on the back of your system are 6-pin connectors.

Front Panel Overview

The front panel of your VAIO Digital Studio Computer allows for access to the diskette and CD-RW drives. It also includes USB and i.LINK ports to connect USB devices, CD changers, MiniDisc drives, or other components.

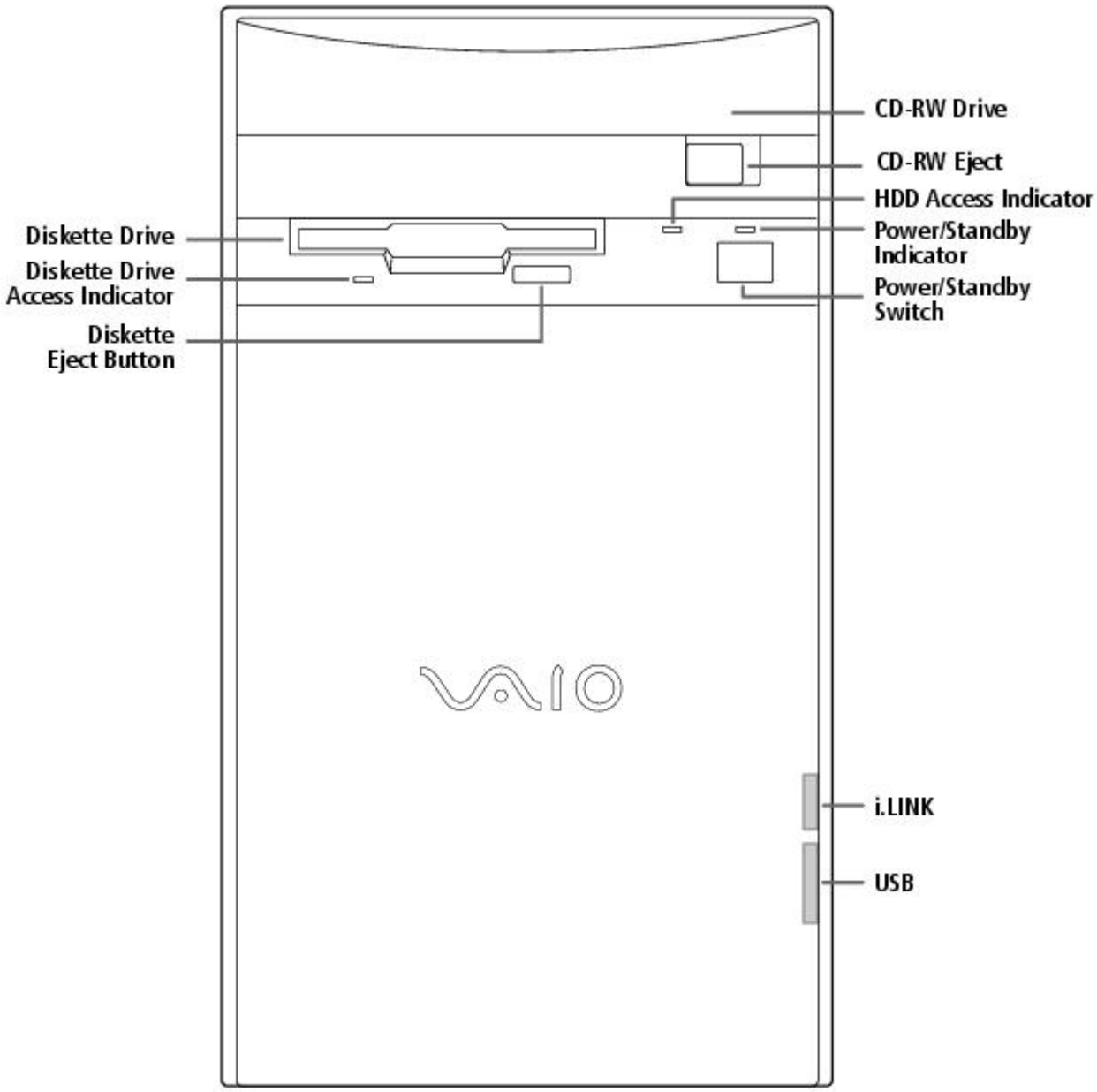

For your convenience, your computer includes USB and i.LINK connectors on both the front and back panels, allowing you to connect to either set of connectors. The i.LINK connector on the front of your system is a 4-pin connector.

Supplementary Information

For the most recent version of this manual, see the online version of Read Me First. You can access this document from the Windows Start Menu by selecting Programs/VAIO Documentation.

Hard Drive Partition

In order to improve the performance of your computer's DVgate Motion software, the hard disk drive on your computer has been formatted with two partitions, C and D. DVgate Motion saves files to the D partition. This prevents large video captures from consuming the available space on your C partition. To maintain optimum performance of DVgate Motion, you should defragment regularly.

VAIO Smart Keyboard Default Settings

The VAIO Smart Keyboard programmable buttons come with the following applications as their default settings:

S1 - Easy Internet Access Browser (Internet)

S2 - Outlook 98 (Mail)

S3 - MotorHead (Game)

S4 - Microsoft® Works (Work)

S5 - Quicken 99 Basic (Finance)

S6 - VAIO Documentation (Help)

All six buttons are reprogrammable.

Using The Standby Mode

To Put Your Computer into Standby Mode

When you are done using your computer, you can put it in Standby mode rather than turn it off completely. There are four ways to put your computer into Standby mode.

- Touch the power switch on the front panel.
- Click Shut Down at the bottom of the Start menu to display the Shut Down Windows dialog box. Select Stand by, and then click OK.
- Press the Standby button on the VAIO Smart Keyboard (the half moon icon).
- Change the timer settings for Standby mode in the Control Panel, as follows:

1. From the Start menu, point to Settings and click Control Panel.
2. Click the Power Management icon.
3. On the Power Schemes tab, change the Power scheme to Home/Office Desk.
4. In the list box for System standby, select an interval of time.
5. Click the OK button and close the Control Panel.

To Resume from Standby Mode

There are two ways to resume system functionality when your computer is in Standby mode. Use either of the following methods.

- Press any key on your keyboard, such as the Enter key.
- Touch the power switch on the front panel.

It may take up to 30 seconds for your system to recover stored information and resume functionality. The screen remains blank while the system is resuming functionality.

Applications That Use the TWAIN Driver

Digital imaging applications, such as Adobe PhotoDeluxe®, allow you to transfer images to your computer from external devices, including scanners or digital cameras. For some devices, a TWAIN driver window appears on the screen. Always close the TWAIN driver window before exiting or minimizing a digital imaging application.

Restoring Outlook 98

For the Add New Components functionality to be available with Microsoft Outlook, you must first run the installation program for Outlook from the Application Recovery CD. When prompted to install the program, select Exit. This decompresses the software, making the Add New Components functionality available.

Inserting Add-in Boards

Your VAIO Digital Studio Computer accommodates PCI add-in boards up to 7.7 inches in length.

Using Devices Connected to the i.LINK (IEEE 1394), S-Link (Control-A1), and Optical Digital Audio Output Connectors

For the latest information on devices known to be compatible with the state-of the-art audio, video, and graphics capabilities of your VAIO computer, check the Sony web site at http://www.sony.com/pcsupport.

Connecting to i.LINK Ports

Your VAIO computer includes a 4-pin i.LINK connector on the front of the system and two 6-pin i.LINK connectors on the back of the system. A 6-pin i.LINK connector can supply power from the computer to the connected device if the device is equipped with a 6-pin connector. Each 6-pin connector supplies 10V to 12V. The total power supplied by both 6-pin i.LINK connectors cannot exceed 6 watts. A 4-pin i.LINK connector cannot supply power to a connected device.

Capturing and Editing Digital Video Clips

- You can capture digital video clips using a digital video camera recorder and DVgate Motion software. Once the clips are saved as AVI files, they can be edited using DVgate Motion, DVgate Clip, or Adobe Premiere® LE. You cannot capture digital video clips directly using the Capture menu in Adobe Premiere LE. Adobe Premiere LE supports an analog capture board for capturing clips. Your VAIO computer is designed for digital video input.
- If there is no audio data associated with an AVI file, the message "Codec compression error" appears. If you do not wish to associate audio with your AVI file, you can add muted sound data by recording audio with the mute option enabled.
- For best performance, when editing AVI files in Adobe Premiere LE, you should use the default setup parameters that shipped with your system. If you change the default setup and want to reinitialize the parameters, follow these steps:

    1. In the Adobe Premiere LE application, select Compression from the Make menu. The Compression Settings dialog box appears.
    2. In the Method list box, select Sony DV software CODEC.
    3. Click OK to close the screen.
    4. From the Make menu, select Preset. The Preset dialog box appears.
    5. Select the parameters for Time Base, Compress, Output, and Preview Option settings as indicated below.

[Time base]

Time base - 29.97fps (required)

[Compress]

File type - AVI (required)
Compress Program Method - Sony DV software CODEC (required)
Compress Program Depth - Millions colors (No other options)
Quality (No control for this item)
Option: Frames per second - 30 (required)
Option: Basic Key Frames (No control for this item)
Option: Optimize Still Off (recommended)
Data rate - Recompress Off (recommended)

[Output options]

Video - On (required)
Video Size - 720x480
4:3 Aspect - Off (required)
VideoType - Field 2 (recommended)
Audio - On (required)
Audio Rate - 44kHz (required)
Audio Format - 16 Bit Stereo or 16 Bit Monaural (required)
Audio Type - Uncompress (required)
Audio Interleave - 1 frame (recommended)
- Less than 30 frames (required)

Audio Sync - 1.0 (required)
Audio Skew - 0.75 (recommended)
- Less than 1.0 (required)

[Preview Option]

Preview Window Size - 360x240

Note that Adobe Premiere LE does not save the Preview Window Size, but uses a default size of 320 x 213 each time the application launches. We recommend that you change this setting to 360 x 240 to improve the quality of preview clips when editing AVI files.

Using Alternate Browsers with America Online®

To use Internet Explorer or Netscape Navigator as your browser with America Online, follow these steps:

1. From the Start menu, point to Settings and then click Control Panel.
2. Click the Internet icon.
3. Click the Connection tab.
4. Click the "Connect to the Internet using local area network" radio button.
5. Click OK.

Using DVgate Motion

When capturing clips:

- Do not use DVgate Motion when the connected digital video peripheral is in Timer Recording mode, as this could produce a malfunction in the peripheral.
- Captures larger than 2 GB (9 minutes and 30 seconds) are automatically continued in a second file.
- You can record stereo audio (stereo 1) while capturing video. You cannot add audio on the stereo 2 track after capturing the video data.
- You cannot use different audio modes on the same tape. You should perform a separate capture for each audio mode you wish to use.
- DVgate Motion does not support hard disk compression. You should not use disk compression if you are planning to work with DVgate Motion.
- Title data is saved in the flash memory of a digital video camera and is not transferred to tape by DVgate Motion.
- To avoid interruption of capture sessions, you should disable the screen saver.
- The drop frame compensation feature does not provide accurate compensation adjustments for tapes recorded in LP mode.
- For tapes that include a mixture of both SP and LP mode, the information displayed by the capture progress indicator may not be accurate.
- Make sure the video head of your digital video device is properly cleaned. Anomalies that you see in captured data could be due to dust or other particles on the video head.
    - The last frame captured is one frame before your selected [OUT] point. The frame you see immediately after clicking the [OUT] button is not captured.

When recording AVI files to tape:

- Do not use DVgate Motion when the connected digital video peripheral is in Timer Recording mode, as this could produce a malfunction in the peripheral.

- You can record only AVI files. MPEG files cannot be recorded.
- To avoid recording problems, such as a single frame appearing in multiple frames, close other applications on your system while recording.
- You cannot use different audio modes on the same tape. If you have AVI files that use different audio modes, they cannot be recorded at the same time, but must be recorded separately.
- Do not attempt to work with AVI files that are smaller than 4 MB.
- DVgate Motion does not support hard disk compression. You should not use disk compression if you are planning to work with DVgate Motion.
- In order to maximize recording capabilities, video and audio data are not available while you are recording.

If DVgate Motion indicates that frames have been dropped, you should try closing all open applications, or you may need to defragment your hard drive.

Restoring Audio Drivers

When you restore the audio drivers from the Application Recovery CD, you need to restart your system to use these drivers. In the Add New Hardware wizard that appears when you restart, click the Next button until you are prompted for the location of the drivers. The audio drivers are located on the Application Recovery CD in G:\drivers\audio\AL98091701\English.

Using AC-3® to Optical Digital Audio Output

MiniDisc player/recorders, DAT player/recorders, and older digital receivers do not support Dolby® Digital (AC-3). You should not use the AC-3 to Optical Digital Audio Output option unless you are using a device that supports Dolby Digital. Please refer to the manual supplied with your equipment to determine if it supports Dolby Digital. If you are unsure and you have selected the AC-3 to Optical Digital Audio Output option, turn down the volume on your equipment before using the DVD player.

Using America Online or Sony Online Support with WinFax® Basic Edition

Once you have configured WinFax Basic Edition, it is automatically available for your use. You cannot use America Online or Sony Online Support when the automatic fax receive feature of WinFax Basic Edition is on. To disable this feature, right click the WinFax icon in the task tray at the bottom right corner of your screen, and then select Exit.

Memory Upgrade Specifications

When upgrading memory, use only 3.3V 64-bit PC-100 168 PIN SDRAM DIMM modules. For more information on Digital Studio Computer compatible memory, call Sony at 1-888-4SONYPC (1-888-476-6972).

About the Software On Your Computer

Your VAIO Digital Studio computer is ready to help you work, play, learn, and communicate as soon as you turn it on. This section gives you an overview of the activities you can perform with your software titles. For support information, see For Answers to Your Software Questions.

Adobe Acrobat® Reader

Adobe Systems Incorporated

Acrobat Reader software allows you to view, navigate, and print electronic documents in Adobe Portable Document Format (PDF), an open file format that is intended to preserve the fidelity of documents created on all major computer platforms.

Adobe PhotoDeluxe® Business Edition

Adobe Systems Incorporated

Create amazing photo effects with PhotoDeluxe. Without learning complex software, you can

enhance, restore, and be creative with your photos. Includes built-in guided activities, stock photos, clip art, and templates to assist you.

Adobe Premiere® LE

Adobe Systems Incorporated

Adobe Premiere LE offers an interface and editing tool for producing movies for video, multimedia, or the web. View source clips and edited footage simultaneously in the monitor window. Create video clips up to three hours long with complete audio-video synchronization.

America Online®

America Online

America Online is the world's most popular Internet online service. Stay in touch with family and friends with Easy-to-Use E-mail, manage your personal finances, get the latest news and sports scores, and chat with thousands of others who share your interests.

AT&T WorldNet® Service

AT&T

Fast, reliable Internet access from AT&T WorldNet Service. AT&T WorldNet Service provides web-based e-mail, a personalized start page from Excite, easy access to the Excite search engine, free web pages, online and live agent technical support, instant messaging, and special shopping discounts at Market Square.

CompuServe®

CompuServe, Inc.

CompuServe is the most comprehensive source of organized business and educational information online today. CompuServe allows you to access the vastness of the Internet without wasting time wading through it. Maximize your time online with CompuServe.

Digital Media Park

Sony Electronics

An integrated suite of multimedia cataloging and playback programs including Media Bar, Media Library, Media Showcase, and MiniDisc Editor. Manage your music by cataloging your entire CD collection, and then create custom MiniDiscs of your favorite songs.

Dr. Solomon's® Anti-Virus

Dr Solomon's Software Inc.

Dr. Solomon's Anti-Virus provides the most comprehensive defense against the spread of viruses, including macro viruses. It can scan inside compressed files and automatically protects your system against viruses sent via e-mail or Internet download.

DVgate Motion

Sony Electronics

Connect a digital video camera recorder to the i.LINK connector and capture your own video clips. You can edit the clips from your video, add others, and combine clips into new movie segments.

DVgate Still

Sony Electronics

Connect a digital video camera recorder to the i.LINK connector and capture your own still images. You can save your images in a variety of popular file formats.

EarthLink Sprint TotalAccess

EarthLink Network, Inc.

An Internet Service Provider that supplies access, information, and assistance to its customers, introducing them to the Internet. Member benefits include e-mail, newsgroups, a Personal Start Page, a free 6 MB web site, a member magazine, and 24-hour technical support.

Microsoft® Encarta® 99 Encyclopedia

Microsoft Corporation

Microsoft Encarta Encyclopedia combines current, comprehensive content with up-to-date multimedia technology, providing users with unique, engaging learning experiences. With the 1999 edition, Encarta provides a wealth of information resources and unique interactive features

Microsoft® Internet Explorer for Windows® 98

Microsoft Corporation

Internet Explorer delivers the web the way you want it. It's safe, easy to use, and you can personalize how you access the web. Outlook Express and other tools in Internet Explorer also help you have a great experience when you are on the web!

Microsoft® Money 99

Microsoft Corporation

Microsoft Money 99 is personal finance software that lets you perform your financial tasks, everything from paying bills to planning for the future, in a smarter, faster way. With Money's online services, you can pay bills and bank from the comfort of home.

Microsoft® Outlook® 98

Microsoft Corporation

Outlook 98 is Microsoft's premier messaging and collaboration client. It combines the leading support for Internet standards-based messaging systems with integrated calendar, contact, and task-management features.

Microsoft® Works

Microsoft Corporation

Works provides users with the right set of core tools that allows them to write letters and reports, track family and friends with the address book, manage home finances, and create a home inventory.

MotorHead

Gremlin Interactive Ltd.

MotorHead is realistic arcade-racing; high-velocity entertainment that puts you behind the wheel for 3D pure racing action. Power across Europe and USA in the Transatlantic Speed League, where second place is simply not an option.

Netscape Communicator®

Netscape Communications

Netscape Communicator is the all-in-one Internet tool that makes it easy to browse the web, send Internet e-mail, chat, read newsgroups, and compose great web documents.

PictureGear

Sony Electronics

This image management software displays images from your hard drive, a Sony digital still camera, or a Sony Mavica® camera. The images appear in a convenient light-table format, so that you can easily view the contents of an entire folder.

Prodigy Internet

Prodigy Communications Corporation

An Internet service that helps you find what you need online faster and smarter. Prodigy delivers powerful online content, such as sports scores, stock quotes, news, and easy access to Excite , plus a personal e-mail account and quality customer service, all at a competitive price.

Quicken® Basic 99

Intuit, Inc

Quicken is the fastest, easiest way to organize your finances. Quicken works just like your checkbook, so it's easy to learn and use. Quicken manages all of your finances, bank accounts, credit cards, investments, and loans. You can even pay your bills online.

SurfMonkey

MediaLive, Inc

SurfMonkey is a web browser and online service for kids ages 6-12 that makes the Internet safe, fun, and easy. A talking monkey guides children through web sites and chat rooms, and can read their e-mail out loud. Children cannot go to inappropriate web sites, parents can screen e-mail messages, and chat messages are monitored.

VAIO Smart Keyboard

Sony Electronics

VAIO Smart Keyboard software operates your new easy to use programmable USB keyboard. Six programmable buttons enable you to launch your favorite applications, open frequently used files, access Explorer, or even open your web browser with just the click of a button.

WinFax® Basic Edition

Symantec Corporation

WinFax Basic Edition incorporates an easy-to-use interface that allows you to send and receive faxes easily. Upgrade to WinFax Pro to receive additional features.

About Your Recovery CDs

Application Recovery CD(s)

Sony Electronics

The Application Recovery CD program allows you to reinstall individual applications and device drivers. Use it to restore corrupted or accidentally erased files.

System Recovery CD(s)

Sony Electronics

The System Recovery CD program allows you to restore the software titles that shipped with your computer if they become corrupted or are erased accidentally. It can be used only to restore the hard disk of the Sony computer you purchased.

For Answers to Your Software Questions

Sony Service Center

For the Sony Service Center nearest you, call at 1-888-4SONYPC (1-888-476-6972).

Acrobat® Reader, Adobe PhotoDeluxe® Business Edition , Adobe Premiere® LE (Adobe Systems Incorporated)

Web site http://www.adobe.com/
phone 206-628-2746 (fee-based support)
fax 206-628-5737
e-mail techdocs@adobe.com
hours M-F, 6 AM-5 PM PT

America Online® (America Online)

Web site http://www.aol.com/
phone 800-827-3338
hours 7 days a week, 6 AM - 2 PM ET

AT&T WorldNet® Service (AT&T)

Web site http://www.att.net/*
phone 800-400-1447
e-mail worldnet@attmail.com
hours 7 days a week, 24 hours a day

* You must be a WorldNet Service customer to access online support.

CompuServe® Interactive (CompuServe Interactive, Inc.)

Web site http://www.compuserve.com/
phone 800-848-8990
hours M-F, 8 AM - 1 AM ET, S-S 10 AM - 10 PM ET

Dr. Solomon's® Anti-Virus (Dr. Solomon's Software Inc.)

Web site http://www.drsolomon.com/
phone 888-377-6566
e-mail support@us.drsolomon.com
hours 7 days a week, 24 hours a day

EarthLink Sprint TotalAccess (EarthLink Network, Inc.)

Web site http://help.earthlink.net/techsupport/
phone 800-395-8410
e-mail support@earthlink.net
hours 7 days a week, 24 hours a day

Easy Internet Access (Encompass, Inc.)

Web site http://www.encmpss.com/
phone 800-927-3000
hours 7 days a week, 24 hours a day

MotorHead (Gremlin Interactive Ltd.)

Web site http://www.gremlin.com/
phone 888-4SONYPC (888-476-6972)
hours 7 days a week, 24 hours a day

Windows® 98 Operating System, Works, Money, Encarta, Internet Explorer (Microsoft Corporation)

Web site http://www.microsoft.com/support/
phone 888-4SONYPC (888-476-6972)*
hours 7 days a week, 24 hours a day
* Support from 1-888-4SONYPC is free of charge for 90 days after the original date of purchase.

Netscape Communicator® (Netscape Communications Corporation)

Web site http://www.netscape.com/
phone 888-4SONYPC (888-476-6972)*
hours 7 days a week, 24 hours a day
* Support from 1-888-4SONYPC is free of charge for 90 days after the original date of purchase.

Prodigy Internet (Prodigy Communications Corporation.)

Web site http://www.prodigy.com/
phone 800-PRODIGY
hours 7 AM - 3 AM ET

Quicken® Basic (Intuit Inc.)

Web site http://www.intuit.com/support/
phone 900-555-4688
hours 7 days a week, 24 hours a day

SurfMonkey (MediaLive, Inc.)

Web site http://www.surfmonkey.com/support/Sub_support.html
phone 408-556-2060
e-mail support@surfmonkey.com
hours 9AM-10PM PT everyday

WinFax® Basic Edition (Symantec Corporation.)

Web site http://www.symantec.com/techsupp/
phone 800-798-0850
fax 800-554-4403 in North America
541-984-2490 outside North America

Specifications

Model **PCV-E518DS**
Processor 500 MHz Pentium® III
Hard Disk Drive 17.28 GB
Standard SDRAM 128 MB PC-100 SDRAM, expandable to 256 MB
Video RAM 8 MB SDRAM
MPEG "Sony Tuned" MPEG Digital Video supports full-screen video playback
Graphics 3D 2X AGP graphics acceleration (Matrox)
Sound Capabilities 3D Positional Audio (Aureal A3D)
Diskette Drive 3.5" 1.44 MB FDD
CD-RW Drive CD-RW Drive (4X max. CD-R writing, 2X max. CD-RW writing, 24X max. reading)
Modem K56flex technology/V.90 compatible data/fax modem[1]
Expansion Capabilities One PCI slot
One additional hard disk drive bay
Connection Capabilities (Front) USB port
i.LINK port (4-pin)
Connection Capabilities (Rear) Optional Keyboard (PS/2-style)
Mouse (PS/2-style)
USB port
Serial port
Parallel (printer)
Game/MIDI
Headphones
Line In
Microphone
VGA Monitor
S-Link (Control-A1)
Optical Digital Audio Out
Two i.LINK ports (6-pin)[2]
Modem line (RJ-11)
Phone line (RJ-11)
Supplied Accessories VAIO Smart keyboard
Sony two-button mouse
RJ-11 phone cable
Power cord
Service 90-day limited service. Extendible to one year from original date of purchase upon registration[3]
Limited Warranty 90-day parts/labor standard. Extendible to one year from original date of purchase upon registration[4]

Power Requirements 200 watts maximum
Dimensions 7" (w) x 12" (h) x 13 3/4" (d) (178mm x 304mm x 330mm)
Weight 17 lbs. (7.71 kg)
Operating Temperature 50º F to 95º F (+10º C to 35º C)

[1] Maximum speed for faxing is 14.4 kbytes/s. Your modem is capable of downloading at 56 kbytes/s using K56flex technology or V.90. Your phone service, online service, or Internet Service Provider however, may not support this technology or operate at this speed.

[2] Six-pin i-LINK connectors on the rear of the system each supply 10V to 12V. The combined total wattage that can be supplied by the two connectors is 6 watts.

[3] Certain restrictions apply

[4] Certain restrictions apply

Specifications are subject to change without notice.

This product meets the standards of the International Energy Star Program for energy efficiency.

© 1999 Sony Electronics Inc. Reproduction in w hole or in part w ithout w ritten permission is prohibited. All rights reserved.

Read Me First

Welcome

Congratulations on your purchase of the Sony VAIO Digital Studio Computer. Sony has combined leading-edge technology in audio, video, computing, and communications to provide you with state-of-the-art personal computing.

Features

 For a complete description of the specifications of your VAIO Digital Studio Computer, see Specifications.

- **Exceptional performance:** Your computer includes a brand new Intel® Pentium® III processor, a CD-RW drive, and a V.90 compatible data/fax modem.*

* Actual upload and download speeds may vary due to line conditions, ISP support, and government regulations.

- **CD-RW drive:** This drive is the ideal solution for making backups and data archiving, with the ability to store up to 650 MB* of removable, rewritable storage on a single rewritable CD. Save your movies to CD-R or CD-RW media and share videos and images with family and friends.

***** 530 MB after formatting.

- **VAIO Smart Keyboard:** This USB keyboard has programmable shortcut buttons for launching your favorite programs or accessing the Internet.
- **Sony audio and video quality:** High-fidelity positional 3D audio system (A3D), high-powered 3D graphics (AGP), and "Sony-Tuned" MPEG digital video playback enable you to take advantage of today's advanced multimedia applications, games, and entertainment software.
- **S-Link (Control-A1):** This technology allows you to build a database of all your music and video CDs and then record your favorite audio selections on MiniDiscs. Use your computer with a 200 disc mega-storage CD changer and a MiniDisc recording deck.
- **i.LINK (IEEE 1394):** Three built-in i.LINK ports provide you with maximum digital connection capability. The i.LINK name and logo identify a digital interface (IEEE 1394) for high speed communication. By using your VAIO Digital Studio Computer, a Sony Digital Handycam® Camcorder, the DVgate software preinstalled on your computer, and the i.LINK (IEEE 1394) interface, you can easily create and edit your own home videos.
- **Optical Digital Audio Output:** This high-quality digital interface transmits digital audio data via light pulses. Transfer crystal clear digital audio to your MiniDisc recorder.
- **Digital Studio Software**: Enjoy all of your computer's audio and video capabilities with component-like applications that allow you to creatively manipulate digital still images, video clips, and audio tracks.
- **50 free hours of Internet access:** Use the Internet for up to 50 free hours when you sign up with GTE (no credit card required). Limit of two hours per day. Free access expires after 50 hours or 90 days after signing up--whichever occurs first.
- **Preinstalled software titles**: All the software on your computer is preinstalled, configured, and ready for you to use right out of the box.
- **Windows® 98**: Your system includes the latest operating system from Microsoft.
- **Communications:** Access popular online services, browse the Internet, send faxes, and more.

Unpacking Your Computer

Computer and Supplied Accessories

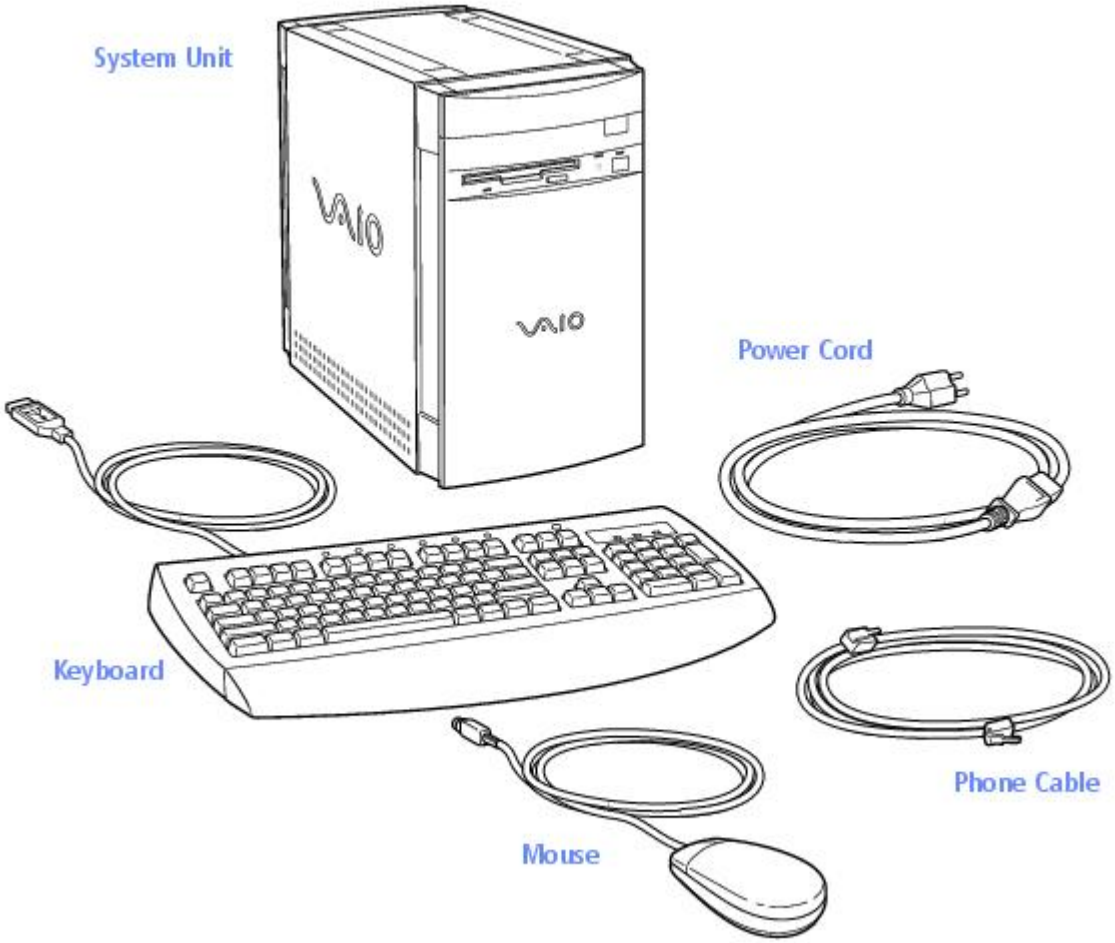

Manuals

- *Read Me First* (this manual) contains features and specifications of your computer. It also includes information on the applications included with your system, how to contact software vendors, and last minute troubleshooting tips.
- The *VAIO Digital Studio Computer User Guide* describes how to get started with your computer, find help, and solve common problems.
- The *Microsoft® Windows®98 Getting Started* manual explains how to use the basic features of the Windows operating system.

Recovery CDs

- System Recovery CD(s)
- Application Recovery CD(s)

Other

- Setting up your VAIO Digital Studio Computer (poster)
- Packet containing special product offers

Software Library

The Software Library contains the Microsoft software license agreement, Sony end-user license agreement, and the following CDs:

- Adobe PhotoDeluxe® Business Edition 3.0
- Gremlin Interactive Ltd. MotorHead
- Microsoft® Encarta® 99 Encyclopedia
- Microsoft® Money/Microsoft® Works

Back Panel Overview

The back panel of your computer contains the connectors where you plug in supplied and optional accessories. The icons on the back panel serve as a map to help you locate the connectors on your computer.

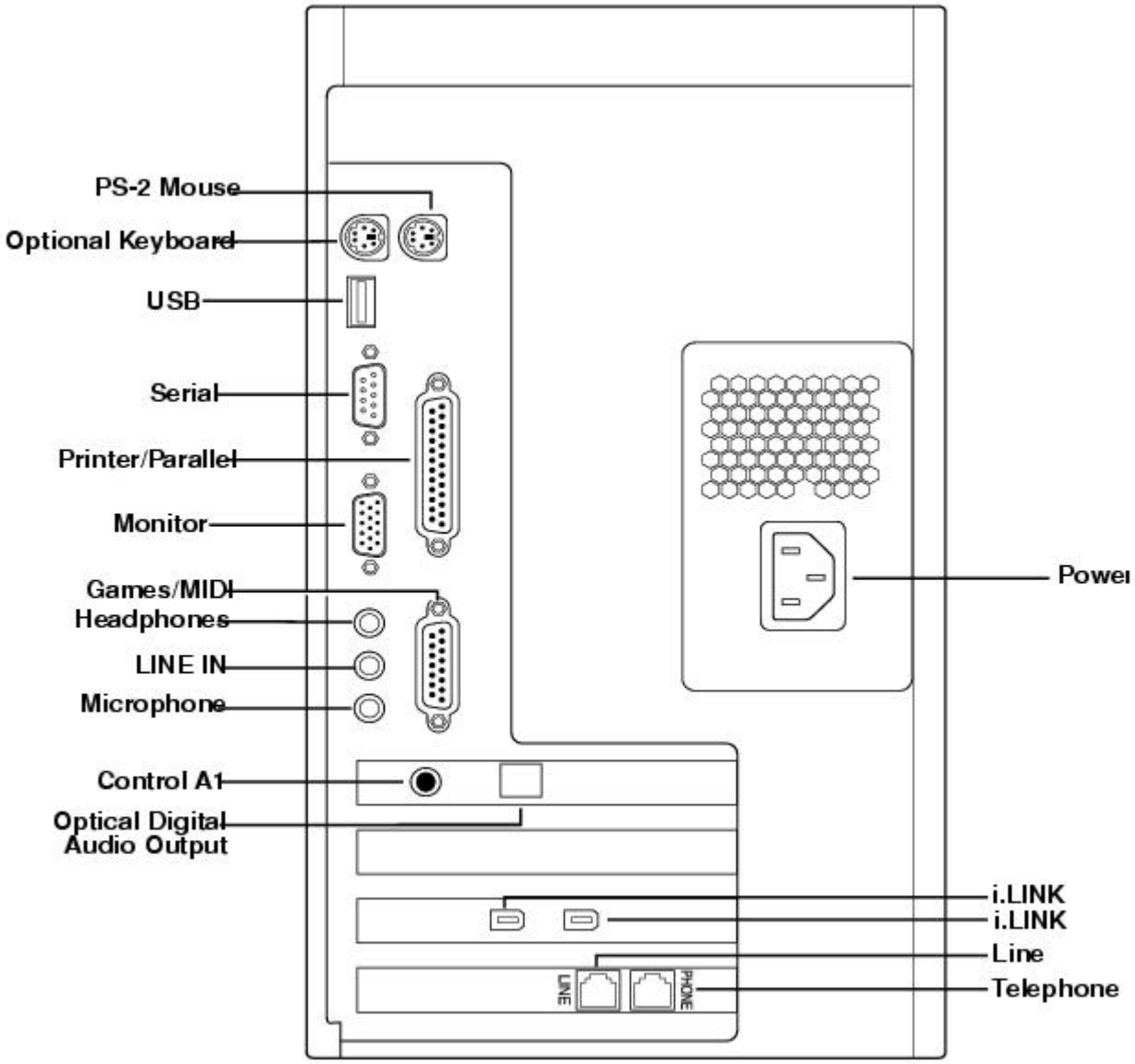

For your convenience, your computer includes USB and i.LINK connectors on both the front and back panels, allowing you to connect to either set of connectors. i.LINK connectors on the back of your system are 6-pin connectors.

Front Panel Overview

The front panel of your VAIO Digital Studio Computer allows for access to the diskette and CD-RW drives. It also includes USB and i.LINK ports to connect USB devices, CD changers, MiniDisc drives, or other components.

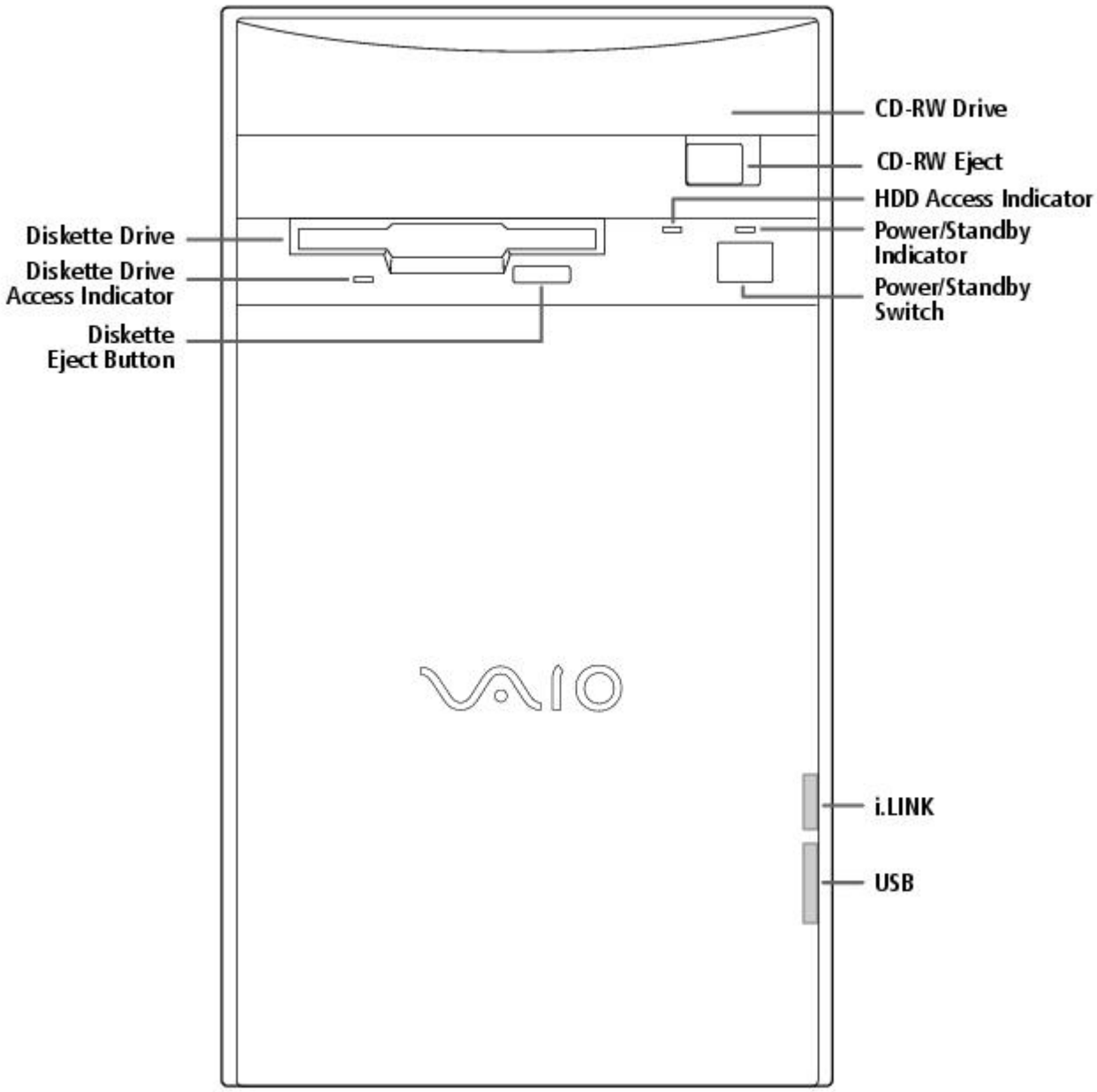

For your convenience, your computer includes USB and i.LINK connectors on both the front and back panels, allowing you to connect to either set of connectors. The i.LINK connector on the front of your system is a 4-pin connector.

Supplementary Information

For the most recent version of this manual, see the online version of Read Me First. You can access this document from the Windows Start Menu by selecting Programs/VAIO Documentation.

Hard Drive Partition

In order to improve the performance of your computer's DVgate Motion software, the hard disk drive on your computer has been formatted with two partitions, C and D. DVgate Motion saves files to the D partition. This prevents large video captures from consuming the available space on your C partition. To maintain optimum performance of DVgate Motion, you should defragment regularly.

VAIO Smart Keyboard Default Settings

The VAIO Smart Keyboard programmable buttons come with the following applications as their default settings:

S1 - Easy Internet Access Browser (Internet)

S2 - Outlook 98 (Mail)

S3 - MotorHead (Game)

S4 - Microsoft® Works (Work)

S5 - Quicken 99 Basic (Finance)

S6 - VAIO Documentation (Help)

All six buttons are reprogrammable.

Using The Standby Mode

To Put Your Computer into Standby Mode

When you are done using your computer, you can put it in Standby mode rather than turn it off completely. There are four ways to put your computer into Standby mode.

- Touch the power switch on the front panel.
- Click Shut Down at the bottom of the Start menu to display the Shut Down Windows dialog box. Select Stand by, and then click OK.
- Press the Standby button on the VAIO Smart Keyboard (the half moon icon).
- Change the timer settings for Standby mode in the Control Panel, as follows:

1. From the Start menu, point to Settings and click Control Panel.
2. Click the Power Management icon.
3. On the Power Schemes tab, change the Power scheme to Home/Office Desk.
4. In the list box for System standby, select an interval of time.
5. Click the OK button and close the Control Panel.

To Resume from Standby Mode

There are two ways to resume system functionality when your computer is in Standby mode. Use either of the following methods.

- Press any key on your keyboard, such as the Enter key.
- Touch the power switch on the front panel.

It may take up to 30 seconds for your system to recover stored information and resume functionality. The screen remains blank while the system is resuming functionality.

Applications That Use the TWAIN Driver

Digital imaging applications, such as Adobe PhotoDeluxe®, allow you to transfer images to your computer from external devices, including scanners or digital cameras. For some devices, a TWAIN driver window appears on the screen. Always close the TWAIN driver window before exiting or minimizing a digital imaging application.

Restoring Outlook 98

For the Add New Components functionality to be available with Microsoft Outlook, you must first run the installation program for Outlook from the Application Recovery CD. When prompted to install the program, select Exit. This decompresses the software, making the Add New Components functionality available.

Inserting Add-in Boards

Your VAIO Digital Studio Computer accommodates PCI add-in boards up to 7.7 inches in length.

Using Devices Connected to the i.LINK (IEEE 1394), S-Link (Control-A1), and Optical Digital Audio Output Connectors

For the latest information on devices known to be compatible with the state-of the-art audio, video, and graphics capabilities of your VAIO computer, check the Sony web site at http://www.sony.com/pcsupport.

Connecting to i.LINK Ports

Your VAIO computer includes a 4-pin i.LINK connector on the front of the system and two 6-pin i.LINK connectors on the back of the system. A 6-pin i.LINK connector can supply power from the computer to the connected device if the device is equipped with a 6-pin connector. Each 6-pin connector supplies 10V to 12V. The total power supplied by both 6-pin i.LINK connectors cannot exceed 6 watts. A 4-pin i.LINK connector cannot supply power to a connected device.

Capturing and Editing Digital Video Clips

- You can capture digital video clips using a digital video camera recorder and DVgate Motion software. Once the clips are saved as AVI files, they can be edited using DVgate Motion, DVgate Clip, or Adobe Premiere® LE. You cannot capture digital video clips directly using the Capture menu in Adobe Premiere LE. Adobe Premiere LE supports an analog capture board for capturing clips. Your VAIO computer is designed for digital video input.
- If there is no audio data associated with an AVI file, the message "Codec compression error" appears. If you do not wish to associate audio with your AVI file, you can add muted sound data by recording audio with the mute option enabled.
- For best performance, when editing AVI files in Adobe Premiere LE, you should use the default setup parameters that shipped with your system. If you change the default setup and want to reinitialize the parameters, follow these steps:

    1. In the Adobe Premiere LE application, select Compression from the Make menu. The Compression Settings dialog box appears.
    2. In the Method list box, select Sony DV software CODEC.
    3. Click OK to close the screen.
    4. From the Make menu, select Preset. The Preset dialog box appears.
    5. Select the parameters for Time Base, Compress, Output, and Preview Option settings as indicated below.

[Time base]

Time base - 29.97fps (required)

[Compress]

File type - AVI (required)
Compress Program Method - Sony DV software CODEC (required)
Compress Program Depth - Millions colors (No other options)
Quality (No control for this item)
Option: Frames per second - 30 (required)
Option: Basic Key Frames (No control for this item)
Option: Optimize Still Off (recommended)
Data rate - Recompress Off (recommended)

[Output options]

Video - On (required)
Video Size - 720x480
4:3 Aspect - Off (required)
VideoType - Field 2 (recommended)
Audio - On (required)
Audio Rate - 44kHz (required)
Audio Format - 16 Bit Stereo or 16 Bit Monaural (required)
Audio Type - Uncompress (required)
Audio Interleave - 1 frame (recommended)
- Less than 30 frames (required)

Audio Sync - 1.0 (required)
Audio Skew - 0.75 (recommended)
- Less than 1.0 (required)

[Preview Option]

Preview Window Size - 360x240

Note that Adobe Premiere LE does not save the Preview Window Size, but uses a default size of 320 x 213 each time the application launches. We recommend that you change this setting to 360 x 240 to improve the quality of preview clips when editing AVI files.

Using Alternate Browsers with America Online®

To use Internet Explorer or Netscape Navigator as your browser with America Online, follow these steps:

1. From the Start menu, point to Settings and then click Control Panel.
2. Click the Internet icon.
3. Click the Connection tab.
4. Click the "Connect to the Internet using local area network" radio button.
5. Click OK.

Using DVgate Motion

When capturing clips:

- Do not use DVgate Motion when the connected digital video peripheral is in Timer Recording mode, as this could produce a malfunction in the peripheral.
- Captures larger than 2 GB (9 minutes and 30 seconds) are automatically continued in a second file.
- You can record stereo audio (stereo 1) while capturing video. You cannot add audio on the stereo 2 track after capturing the video data.
- You cannot use different audio modes on the same tape. You should perform a separate capture for each audio mode you wish to use.
- DVgate Motion does not support hard disk compression. You should not use disk compression if you are planning to work with DVgate Motion.
- Title data is saved in the flash memory of a digital video camera and is not transferred to tape by DVgate Motion.
- To avoid interruption of capture sessions, you should disable the screen saver.
- The drop frame compensation feature does not provide accurate compensation adjustments for tapes recorded in LP mode.
- For tapes that include a mixture of both SP and LP mode, the information displayed by the capture progress indicator may not be accurate.
- Make sure the video head of your digital video device is properly cleaned. Anomalies that you see in captured data could be due to dust or other particles on the video head.
    - The last frame captured is one frame before your selected [OUT] point. The frame you see immediately after clicking the [OUT] button is not captured.

When recording AVI files to tape:

- Do not use DVgate Motion when the connected digital video peripheral is in Timer Recording mode, as this could produce a malfunction in the peripheral.

- You can record only AVI files. MPEG files cannot be recorded.
- To avoid recording problems, such as a single frame appearing in multiple frames, close other applications on your system while recording.
- You cannot use different audio modes on the same tape. If you have AVI files that use different audio modes, they cannot be recorded at the same time, but must be recorded separately.
- Do not attempt to work with AVI files that are smaller than 4 MB.
- DVgate Motion does not support hard disk compression. You should not use disk compression if you are planning to work with DVgate Motion.
- In order to maximize recording capabilities, video and audio data are not available while you are recording.

If DVgate Motion indicates that frames have been dropped, you should try closing all open applications, or you may need to defragment your hard drive.

Restoring Audio Drivers

When you restore the audio drivers from the Application Recovery CD, you need to restart your system to use these drivers. In the Add New Hardware wizard that appears when you restart, click the Next button until you are prompted for the location of the drivers. The audio drivers are located on the Application Recovery CD in G:\drivers\audio\AL98091701\English.

Using AC-3® to Optical Digital Audio Output

MiniDisc player/recorders, DAT player/recorders, and older digital receivers do not support Dolby® Digital (AC-3). You should not use the AC-3 to Optical Digital Audio Output option unless you are using a device that supports Dolby Digital. Please refer to the manual supplied with your equipment to determine if it supports Dolby Digital. If you are unsure and you have selected the AC-3 to Optical Digital Audio Output option, turn down the volume on your equipment before using the DVD player.

Using America Online or Sony Online Support with WinFax® Basic Edition

Once you have configured WinFax Basic Edition, it is automatically available for your use. You cannot use America Online or Sony Online Support when the automatic fax receive feature of WinFax Basic Edition is on. To disable this feature, right click the WinFax icon in the task tray at the bottom right corner of your screen, and then select Exit.

Memory Upgrade Specifications

When upgrading memory, use only 3.3V 64-bit PC-100 168 PIN SDRAM DIMM modules. For more information on Digital Studio Computer compatible memory, call Sony at 1-888-4SONYPC (1-888-476-6972).

About the Software On Your Computer

Your VAIO Digital Studio computer is ready to help you work, play, learn, and communicate as soon as you turn it on. This section gives you an overview of the activities you can perform with your software titles. For support information, see For Answers to Your Software Questions.

Adobe Acrobat® Reader

Adobe Systems Incorporated

Acrobat Reader software allows you to view, navigate, and print electronic documents in Adobe Portable Document Format (PDF), an open file format that is intended to preserve the fidelity of documents created on all major computer platforms.

Adobe PhotoDeluxe® Business Edition

Adobe Systems Incorporated

Create amazing photo effects with PhotoDeluxe. Without learning complex software, you can

enhance, restore, and be creative with your photos. Includes built-in guided activities, stock photos, clip art, and templates to assist you.

Adobe Premiere® LE

Adobe Systems Incorporated

Adobe Premiere LE offers an interface and editing tool for producing movies for video, multimedia, or the web. View source clips and edited footage simultaneously in the monitor window. Create video clips up to three hours long with complete audio-video synchronization.

America Online®

America Online

America Online is the world's most popular Internet online service. Stay in touch with family and friends with Easy-to-Use E-mail, manage your personal finances, get the latest news and sports scores, and chat with thousands of others who share your interests.

AT&T WorldNet® Service

AT&T

Fast, reliable Internet access from AT&T WorldNet Service. AT&T WorldNet Service provides web-based e-mail, a personalized start page from Excite, easy access to the Excite search engine, free web pages, online and live agent technical support, instant messaging, and special shopping discounts at Market Square.

CompuServe®

CompuServe, Inc.

CompuServe is the most comprehensive source of organized business and educational information online today. CompuServe allows you to access the vastness of the Internet without wasting time wading through it. Maximize your time online with CompuServe.

Digital Media Park

Sony Electronics

An integrated suite of multimedia cataloging and playback programs including Media Bar, Media Library, Media Showcase, and MiniDisc Editor. Manage your music by cataloging your entire CD collection, and then create custom MiniDiscs of your favorite songs.

Dr. Solomon's® Anti-Virus

Dr Solomon's Software Inc.

Dr. Solomon's Anti-Virus provides the most comprehensive defense against the spread of viruses, including macro viruses. It can scan inside compressed files and automatically protects your system against viruses sent via e-mail or Internet download.

DVgate Motion

Sony Electronics

Connect a digital video camera recorder to the i.LINK connector and capture your own video clips. You can edit the clips from your video, add others, and combine clips into new movie segments.

DVgate Still

Sony Electronics

Connect a digital video camera recorder to the i.LINK connector and capture your own still images. You can save your images in a variety of popular file formats.

EarthLink Sprint TotalAccess

EarthLink Network, Inc.

An Internet Service Provider that supplies access, information, and assistance to its customers, introducing them to the Internet. Member benefits include e-mail, newsgroups, a Personal Start Page, a free 6 MB web site, a member magazine, and 24-hour technical support.

Microsoft® Encarta® 99 Encyclopedia

Microsoft Corporation

Microsoft Encarta Encyclopedia combines current, comprehensive content with up-to-date multimedia technology, providing users with unique, engaging learning experiences. With the 1999 edition, Encarta provides a wealth of information resources and unique interactive features

Microsoft® Internet Explorer for Windows® 98

Microsoft Corporation

Internet Explorer delivers the web the way you want it. It's safe, easy to use, and you can personalize how you access the web. Outlook Express and other tools in Internet Explorer also help you have a great experience when you are on the web!

Microsoft® Money 99

Microsoft Corporation

Microsoft Money 99 is personal finance software that lets you perform your financial tasks, everything from paying bills to planning for the future, in a smarter, faster way. With Money's online services, you can pay bills and bank from the comfort of home.

Microsoft® Outlook® 98

Microsoft Corporation

Outlook 98 is Microsoft's premier messaging and collaboration client. It combines the leading support for Internet standards-based messaging systems with integrated calendar, contact, and task-management features.

Microsoft® Works

Microsoft Corporation

Works provides users with the right set of core tools that allows them to write letters and reports, track family and friends with the address book, manage home finances, and create a home inventory.

MotorHead

Gremlin Interactive Ltd.

MotorHead is realistic arcade-racing; high-velocity entertainment that puts you behind the wheel for 3D pure racing action. Power across Europe and USA in the Transatlantic Speed League, where second place is simply not an option.

Netscape Communicator®

Netscape Communications

Netscape Communicator is the all-in-one Internet tool that makes it easy to browse the web, send Internet e-mail, chat, read newsgroups, and compose great web documents.

PictureGear

Sony Electronics

This image management software displays images from your hard drive, a Sony digital still camera, or a Sony Mavica® camera. The images appear in a convenient light-table format, so that you can easily view the contents of an entire folder.

Prodigy Internet

Prodigy Communications Corporation

An Internet service that helps you find what you need online faster and smarter. Prodigy delivers powerful online content, such as sports scores, stock quotes, news, and easy access to Excite , plus a personal e-mail account and quality customer service, all at a competitive price.

Quicken® Basic 99

Intuit, Inc

Quicken is the fastest, easiest way to organize your finances. Quicken works just like your checkbook, so it's easy to learn and use. Quicken manages all of your finances, bank accounts, credit cards, investments, and loans. You can even pay your bills online.

SurfMonkey

MediaLive, Inc

SurfMonkey is a web browser and online service for kids ages 6-12 that makes the Internet safe, fun, and easy. A talking monkey guides children through web sites and chat rooms, and can read their e-mail out loud. Children cannot go to inappropriate web sites, parents can screen e-mail messages, and chat messages are monitored.

VAIO Smart Keyboard

Sony Electronics

VAIO Smart Keyboard software operates your new easy to use programmable USB keyboard. Six programmable buttons enable you to launch your favorite applications, open frequently used files, access Explorer, or even open your web browser with just the click of a button.

WinFax® Basic Edition

Symantec Corporation

WinFax Basic Edition incorporates an easy-to-use interface that allows you to send and receive faxes easily. Upgrade to WinFax Pro to receive additional features.

About Your Recovery CDs

Application Recovery CD(s)

Sony Electronics

The Application Recovery CD program allows you to reinstall individual applications and device drivers. Use it to restore corrupted or accidentally erased files.

System Recovery CD(s)

Sony Electronics

The System Recovery CD program allows you to restore the software titles that shipped with your computer if they become corrupted or are erased accidentally. It can be used only to restore the hard disk of the Sony computer you purchased.

For Answers to Your Software Questions

Sony Service Center

For the Sony Service Center nearest you, call at 1-888-4SONYPC (1-888-476-6972).

Acrobat® Reader, Adobe PhotoDeluxe® Business Edition , Adobe Premiere® LE (Adobe Systems Incorporated)

Web site http://www.adobe.com/
phone 206-628-2746 (fee-based support)
fax 206-628-5737
e-mail techdocs@adobe.com
hours M-F, 6 AM-5 PM PT

America Online® (America Online)

Web site http://www.aol.com/
phone 800-827-3338
hours 7 days a week, 6 AM - 2 PM ET

AT&T WorldNet® Service (AT&T)

Web site http://www.att.net/*
phone 800-400-1447
e-mail worldnet@attmail.com
hours 7 days a week, 24 hours a day

* You must be a WorldNet Service customer to access online support.

CompuServe® Interactive (CompuServe Interactive, Inc.)

Web site http://www.compuserve.com/
phone 800-848-8990
hours M-F, 8 AM - 1 AM ET, S-S 10 AM - 10 PM ET

Dr. Solomon's® Anti-Virus (Dr. Solomon's Software Inc.)

Web site http://www.drsolomon.com/
phone 888-377-6566
e-mail support@us.drsolomon.com
hours 7 days a week, 24 hours a day

EarthLink Sprint TotalAccess (EarthLink Network, Inc.)

Web site http://help.earthlink.net/techsupport/
phone 800-395-8410
e-mail support@earthlink.net
hours 7 days a week, 24 hours a day

Easy Internet Access (Encompass, Inc.)

Web site http://www.encmpss.com/
phone 800-927-3000
hours 7 days a week, 24 hours a day

MotorHead (Gremlin Interactive Ltd.)

Web site http://www.gremlin.com/
phone 888-4SONYPC (888-476-6972)
hours 7 days a week, 24 hours a day

Windows® 98 Operating System, Works, Money, Encarta, Internet Explorer (Microsoft Corporation)

Web site http://www.microsoft.com/support/
phone 888-4SONYPC (888-476-6972)*
hours 7 days a week, 24 hours a day
* Support from 1-888-4SONYPC is free of charge for 90 days after the original date of purchase.

Netscape Communicator® (Netscape Communications Corporation)

Web site http://www.netscape.com/
phone 888-4SONYPC (888-476-6972)*
hours 7 days a week, 24 hours a day
* Support from 1-888-4SONYPC is free of charge for 90 days after the original date of purchase.

Prodigy Internet (Prodigy Communications Corporation.)

Web site http://www.prodigy.com/
phone 800-PRODIGY
hours 7 AM - 3 AM ET

Quicken® Basic (Intuit Inc.)

Web site http://www.intuit.com/support/
phone 900-555-4688
hours 7 days a week, 24 hours a day

SurfMonkey (MediaLive, Inc.)

Web site http://www.surfmonkey.com/support/Sub_support.html
phone 408-556-2060
e-mail support@surfmonkey.com
hours 9AM-10PM PT everyday

WinFax® Basic Edition (Symantec Corporation.)

Web site http://www.symantec.com/techsupp/
phone 800-798-0850
fax 800-554-4403 in North America
541-984-2490 outside North America

Specifications

Model **PCV-E518DS**
Processor 500 MHz Pentium® III
Hard Disk Drive 17.28 GB
Standard SDRAM 128 MB PC-100 SDRAM, expandable to 256 MB
Video RAM 8 MB SDRAM
MPEG "Sony Tuned" MPEG Digital Video supports full-screen video playback
Graphics 3D 2X AGP graphics acceleration (Matrox)
Sound Capabilities 3D Positional Audio (Aureal A3D)
Diskette Drive 3.5" 1.44 MB FDD
CD-RW Drive CD-RW Drive (4X max. CD-R writing, 2X max. CD-RW writing, 24X max. reading)
Modem K56flex technology/V.90 compatible data/fax modem[1]
Expansion Capabilities One PCI slot
One additional hard disk drive bay
Connection Capabilities (Front) USB port
i.LINK port (4-pin)
Connection Capabilities (Rear) Optional Keyboard (PS/2-style)
Mouse (PS/2-style)
USB port
Serial port
Parallel (printer)
Game/MIDI
Headphones
Line In
Microphone
VGA Monitor
S-Link (Control-A1)
Optical Digital Audio Out
Two i.LINK ports (6-pin)[2]
Modem line (RJ-11)
Phone line (RJ-11)
Supplied Accessories VAIO Smart keyboard
Sony two-button mouse
RJ-11 phone cable
Power cord
Service 90-day limited service. Extendible to one year from original date of purchase upon registration[3]
Limited Warranty 90-day parts/labor standard. Extendible to one year from original date of purchase upon registration[4]

Power Requirements 200 watts maximum
Dimensions 7" (w) x 12" (h) x 13 3/4" (d) (178mm x 304mm x 330mm)
Weight 17 lbs. (7.71 kg)
Operating Temperature 50º F to 95º F (+10º C to 35º C)

[1] Maximum speed for faxing is 14.4 kbytes/s. Your modem is capable of downloading at 56 kbytes/s using K56flex technology or V.90. Your phone service, online service, or Internet Service Provider however, may not support this technology or operate at this speed.

[2] Six-pin i-LINK connectors on the rear of the system each supply 10V to 12V. The combined total wattage that can be supplied by the two connectors is 6 watts.

[3] Certain restrictions apply

[4] Certain restrictions apply

Specifications are subject to change without notice.

This product meets the standards of the International Energy Star Program for energy efficiency.

© 1999 Sony Electronics Inc. Reproduction in w hole or in part w ithout w ritten permission is prohibited. All rights reserved.

Read Me First

Welcome

Congratulations on your purchase of the Sony VAIO Digital Studio Computer. Sony has combined leading-edge technology in audio, video, computing, and communications to provide you with state-of-the-art personal computing.

Features

 For a complete description of the specifications of your VAIO Digital Studio Computer, see Specifications.

- **Exceptional performance:** Your computer includes a brand new Intel® Pentium® III processor, a CD-RW drive, and a V.90 compatible data/fax modem.*

* Actual upload and download speeds may vary due to line conditions, ISP support, and government regulations.

- **CD-RW drive:** This drive is the ideal solution for making backups and data archiving, with the ability to store up to 650 MB* of removable, rewritable storage on a single rewritable CD. Save your movies to CD-R or CD-RW media and share videos and images with family and friends.

***** 530 MB after formatting.

- **VAIO Smart Keyboard:** This USB keyboard has programmable shortcut buttons for launching your favorite programs or accessing the Internet.
- **Sony audio and video quality:** High-fidelity positional 3D audio system (A3D), high-powered 3D graphics (AGP), and "Sony-Tuned" MPEG digital video playback enable you to take advantage of today's advanced multimedia applications, games, and entertainment software.
- **S-Link (Control-A1):** This technology allows you to build a database of all your music and video CDs and then record your favorite audio selections on MiniDiscs. Use your computer with a 200 disc mega-storage CD changer and a MiniDisc recording deck.
- **i.LINK (IEEE 1394):** Three built-in i.LINK ports provide you with maximum digital connection capability. The i.LINK name and logo identify a digital interface (IEEE 1394) for high speed communication. By using your VAIO Digital Studio Computer, a Sony Digital Handycam® Camcorder, the DVgate software preinstalled on your computer, and the i.LINK (IEEE 1394) interface, you can easily create and edit your own home videos.
- **Optical Digital Audio Output:** This high-quality digital interface transmits digital audio data via light pulses. Transfer crystal clear digital audio to your MiniDisc recorder.
- **Digital Studio Software**: Enjoy all of your computer's audio and video capabilities with component-like applications that allow you to creatively manipulate digital still images, video clips, and audio tracks.
- **50 free hours of Internet access:** Use the Internet for up to 50 free hours when you sign up with GTE (no credit card required). Limit of two hours per day. Free access expires after 50 hours or 90 days after signing up--whichever occurs first.
- **Preinstalled software titles**: All the software on your computer is preinstalled, configured, and ready for you to use right out of the box.
- **Windows® 98**: Your system includes the latest operating system from Microsoft.
- **Communications:** Access popular online services, browse the Internet, send faxes, and more.

Unpacking Your Computer

Computer and Supplied Accessories

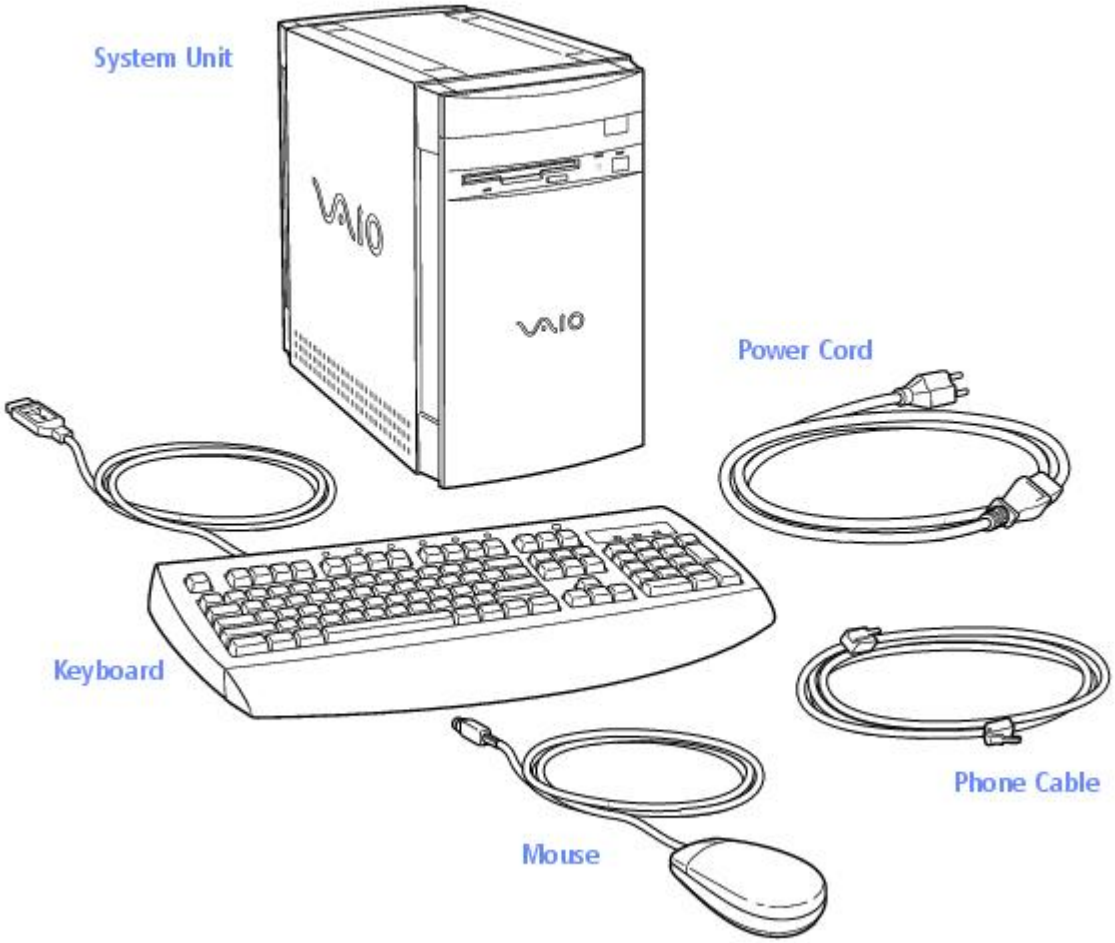

Manuals

- *Read Me First* (this manual) contains features and specifications of your computer. It also includes information on the applications included with your system, how to contact software vendors, and last minute troubleshooting tips.
- The *VAIO Digital Studio Computer User Guide* describes how to get started with your computer, find help, and solve common problems.
- The *Microsoft® Windows®98 Getting Started* manual explains how to use the basic features of the Windows operating system.

Recovery CDs

- System Recovery CD(s)
- Application Recovery CD(s)

Other

- Setting up your VAIO Digital Studio Computer (poster)
- Packet containing special product offers

Software Library

The Software Library contains the Microsoft software license agreement, Sony end-user license agreement, and the following CDs:

- Adobe PhotoDeluxe® Business Edition 3.0
- Gremlin Interactive Ltd. MotorHead
- Microsoft® Encarta® 99 Encyclopedia
- Microsoft® Money/Microsoft® Works

Back Panel Overview

The back panel of your computer contains the connectors where you plug in supplied and optional accessories. The icons on the back panel serve as a map to help you locate the connectors on your computer.

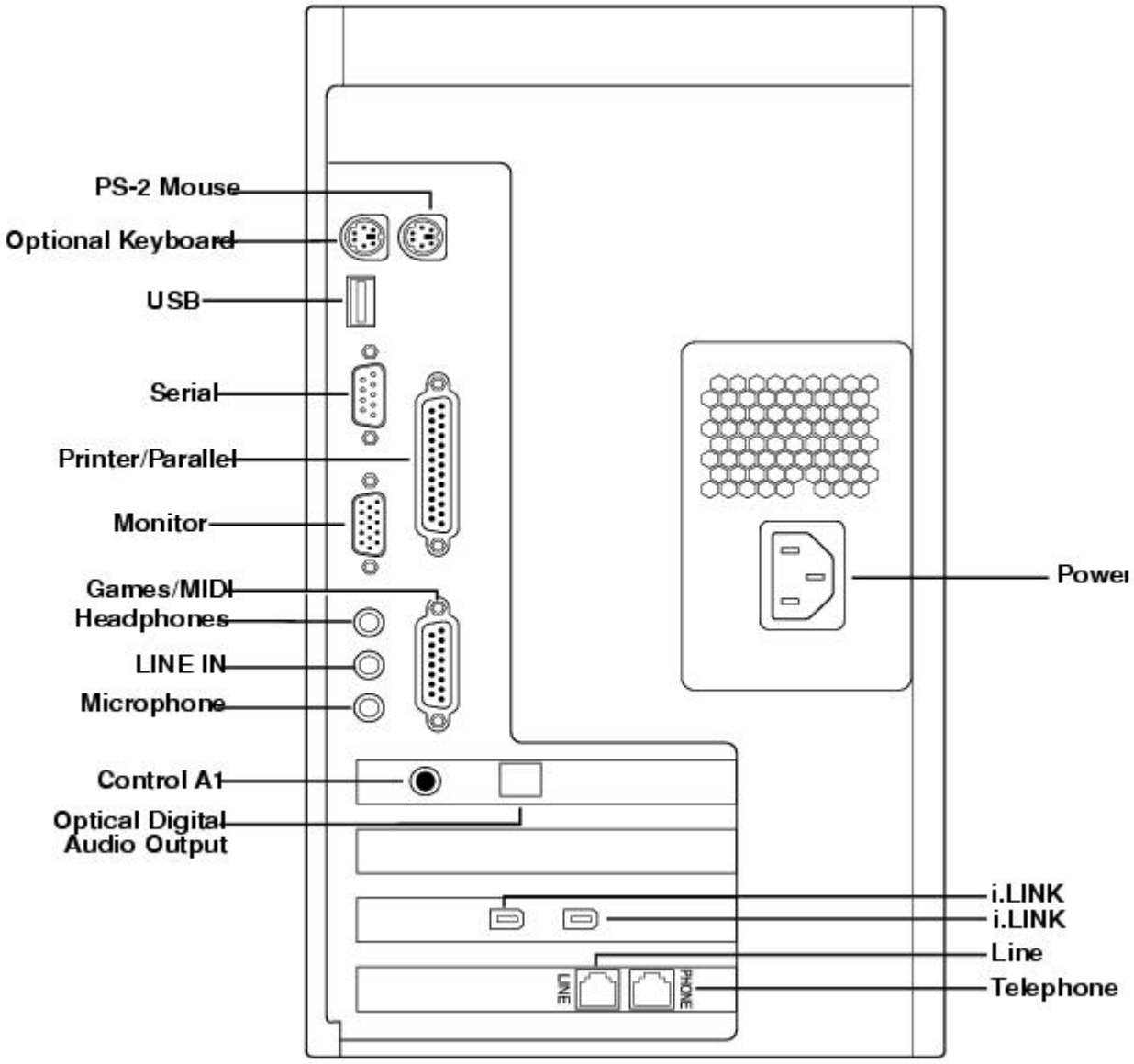

For your convenience, your computer includes USB and i.LINK connectors on both the front and back panels, allowing you to connect to either set of connectors. i.LINK connectors on the back of your system are 6-pin connectors.

Front Panel Overview

The front panel of your VAIO Digital Studio Computer allows for access to the diskette and CD-RW drives. It also includes USB and i.LINK ports to connect USB devices, CD changers, MiniDisc drives, or other components.

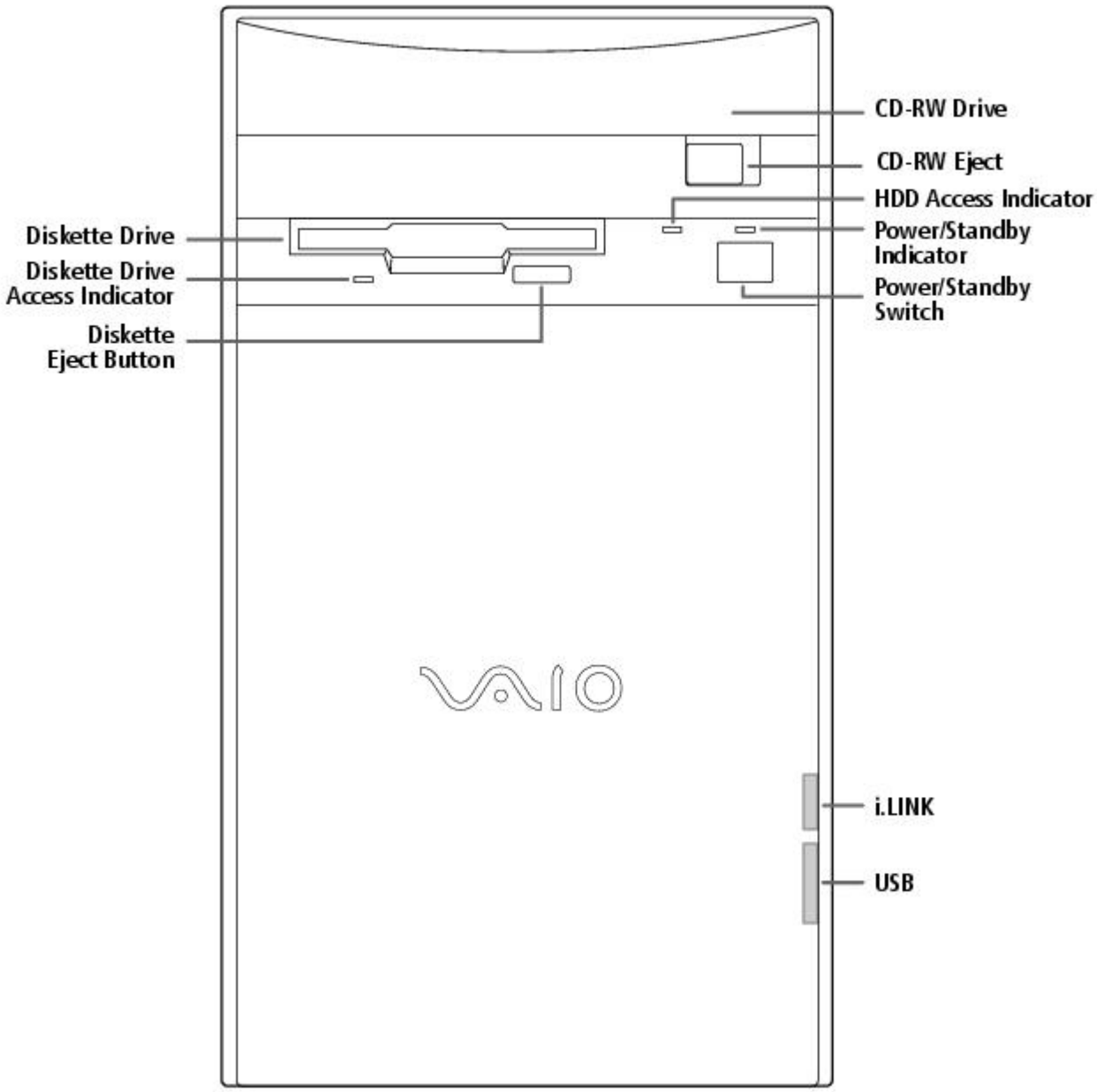

For your convenience, your computer includes USB and i.LINK connectors on both the front and back panels, allowing you to connect to either set of connectors. The i.LINK connector on the front of your system is a 4-pin connector.

Supplementary Information

For the most recent version of this manual, see the online version of Read Me First. You can access this document from the Windows Start Menu by selecting Programs/VAIO Documentation.

Hard Drive Partition

In order to improve the performance of your computer's DVgate Motion software, the hard disk drive on your computer has been formatted with two partitions, C and D. DVgate Motion saves files to the D partition. This prevents large video captures from consuming the available space on your C partition. To maintain optimum performance of DVgate Motion, you should defragment regularly.

VAIO Smart Keyboard Default Settings

The VAIO Smart Keyboard programmable buttons come with the following applications as their default settings:

S1 - Easy Internet Access Browser (Internet)

S2 - Outlook 98 (Mail)

S3 - MotorHead (Game)

S4 - Microsoft® Works (Work)

S5 - Quicken 99 Basic (Finance)

S6 - VAIO Documentation (Help)

All six buttons are reprogrammable.

Using The Standby Mode

To Put Your Computer into Standby Mode

When you are done using your computer, you can put it in Standby mode rather than turn it off completely. There are four ways to put your computer into Standby mode.

- Touch the power switch on the front panel.
- Click Shut Down at the bottom of the Start menu to display the Shut Down Windows dialog box. Select Stand by, and then click OK.
- Press the Standby button on the VAIO Smart Keyboard (the half moon icon).
- Change the timer settings for Standby mode in the Control Panel, as follows:

1. From the Start menu, point to Settings and click Control Panel.
2. Click the Power Management icon.
3. On the Power Schemes tab, change the Power scheme to Home/Office Desk.
4. In the list box for System standby, select an interval of time.
5. Click the OK button and close the Control Panel.

To Resume from Standby Mode

There are two ways to resume system functionality when your computer is in Standby mode. Use either of the following methods.

- Press any key on your keyboard, such as the Enter key.
- Touch the power switch on the front panel.

It may take up to 30 seconds for your system to recover stored information and resume functionality. The screen remains blank while the system is resuming functionality.

Applications That Use the TWAIN Driver

Digital imaging applications, such as Adobe PhotoDeluxe®, allow you to transfer images to your computer from external devices, including scanners or digital cameras. For some devices, a TWAIN driver window appears on the screen. Always close the TWAIN driver window before exiting or minimizing a digital imaging application.

Restoring Outlook 98

For the Add New Components functionality to be available with Microsoft Outlook, you must first run the installation program for Outlook from the Application Recovery CD. When prompted to install the program, select Exit. This decompresses the software, making the Add New Components functionality available.

Inserting Add-in Boards

Your VAIO Digital Studio Computer accommodates PCI add-in boards up to 7.7 inches in length.

Using Devices Connected to the i.LINK (IEEE 1394), S-Link (Control-A1), and Optical Digital Audio Output Connectors

For the latest information on devices known to be compatible with the state-of the-art audio, video, and graphics capabilities of your VAIO computer, check the Sony web site at http://www.sony.com/pcsupport.

Connecting to i.LINK Ports

Your VAIO computer includes a 4-pin i.LINK connector on the front of the system and two 6-pin i.LINK connectors on the back of the system. A 6-pin i.LINK connector can supply power from the computer to the connected device if the device is equipped with a 6-pin connector. Each 6-pin connector supplies 10V to 12V. The total power supplied by both 6-pin i.LINK connectors cannot exceed 6 watts. A 4-pin i.LINK connector cannot supply power to a connected device.

Capturing and Editing Digital Video Clips

- You can capture digital video clips using a digital video camera recorder and DVgate Motion software. Once the clips are saved as AVI files, they can be edited using DVgate Motion, DVgate Clip, or Adobe Premiere® LE. You cannot capture digital video clips directly using the Capture menu in Adobe Premiere LE. Adobe Premiere LE supports an analog capture board for capturing clips. Your VAIO computer is designed for digital video input.
- If there is no audio data associated with an AVI file, the message "Codec compression error" appears. If you do not wish to associate audio with your AVI file, you can add muted sound data by recording audio with the mute option enabled.
- For best performance, when editing AVI files in Adobe Premiere LE, you should use the default setup parameters that shipped with your system. If you change the default setup and want to reinitialize the parameters, follow these steps:

1. In the Adobe Premiere LE application, select Compression from the Make menu. The Compression Settings dialog box appears.
2. In the Method list box, select Sony DV software CODEC.
3. Click OK to close the screen.
4. From the Make menu, select Preset. The Preset dialog box appears.
5. Select the parameters for Time Base, Compress, Output, and Preview Option settings as indicated below.

[Time base]

Time base - 29.97fps (required)

[Compress]

File type - AVI (required)
Compress Program Method - Sony DV software CODEC (required)
Compress Program Depth - Millions colors (No other options)
Quality (No control for this item)
Option: Frames per second - 30 (required)
Option: Basic Key Frames (No control for this item)
Option: Optimize Still Off (recommended)
Data rate - Recompress Off (recommended)

[Output options]

Video - On (required)
Video Size - 720x480
4:3 Aspect - Off (required)
VideoType - Field 2 (recommended)
Audio - On (required)
Audio Rate - 44kHz (required)
Audio Format - 16 Bit Stereo or 16 Bit Monaural (required)
Audio Type - Uncompress (required)
Audio Interleave - 1 frame (recommended)
- Less than 30 frames (required)

Audio Sync - 1.0 (required)
Audio Skew - 0.75 (recommended)
- Less than 1.0 (required)

[Preview Option]

Preview Window Size - 360x240

Note that Adobe Premiere LE does not save the Preview Window Size, but uses a default size of 320 x 213 each time the application launches. We recommend that you change this setting to 360 x 240 to improve the quality of preview clips when editing AVI files.

Using Alternate Browsers with America Online®

To use Internet Explorer or Netscape Navigator as your browser with America Online, follow these steps:

1. From the Start menu, point to Settings and then click Control Panel.
2. Click the Internet icon.
3. Click the Connection tab.
4. Click the "Connect to the Internet using local area network" radio button.
5. Click OK.

Using DVgate Motion

When capturing clips:

- Do not use DVgate Motion when the connected digital video peripheral is in Timer Recording mode, as this could produce a malfunction in the peripheral.
- Captures larger than 2 GB (9 minutes and 30 seconds) are automatically continued in a second file.
- You can record stereo audio (stereo 1) while capturing video. You cannot add audio on the stereo 2 track after capturing the video data.
- You cannot use different audio modes on the same tape. You should perform a separate capture for each audio mode you wish to use.
- DVgate Motion does not support hard disk compression. You should not use disk compression if you are planning to work with DVgate Motion.
- Title data is saved in the flash memory of a digital video camera and is not transferred to tape by DVgate Motion.
- To avoid interruption of capture sessions, you should disable the screen saver.
- The drop frame compensation feature does not provide accurate compensation adjustments for tapes recorded in LP mode.
- For tapes that include a mixture of both SP and LP mode, the information displayed by the capture progress indicator may not be accurate.
- Make sure the video head of your digital video device is properly cleaned. Anomalies that you see in captured data could be due to dust or other particles on the video head.
    - The last frame captured is one frame before your selected [OUT] point. The frame you see immediately after clicking the [OUT] button is not captured.

When recording AVI files to tape:

- Do not use DVgate Motion when the connected digital video peripheral is in Timer Recording mode, as this could produce a malfunction in the peripheral.

- You can record only AVI files. MPEG files cannot be recorded.
- To avoid recording problems, such as a single frame appearing in multiple frames, close other applications on your system while recording.
- You cannot use different audio modes on the same tape. If you have AVI files that use different audio modes, they cannot be recorded at the same time, but must be recorded separately.
- Do not attempt to work with AVI files that are smaller than 4 MB.
- DVgate Motion does not support hard disk compression. You should not use disk compression if you are planning to work with DVgate Motion.
- In order to maximize recording capabilities, video and audio data are not available while you are recording.

If DVgate Motion indicates that frames have been dropped, you should try closing all open applications, or you may need to defragment your hard drive.

Restoring Audio Drivers

When you restore the audio drivers from the Application Recovery CD, you need to restart your system to use these drivers. In the Add New Hardware wizard that appears when you restart, click the Next button until you are prompted for the location of the drivers. The audio drivers are located on the Application Recovery CD in G:\drivers\audio\AL98091701\English.

Using AC-3® to Optical Digital Audio Output

MiniDisc player/recorders, DAT player/recorders, and older digital receivers do not support Dolby® Digital (AC-3). You should not use the AC-3 to Optical Digital Audio Output option unless you are using a device that supports Dolby Digital. Please refer to the manual supplied with your equipment to determine if it supports Dolby Digital. If you are unsure and you have selected the AC-3 to Optical Digital Audio Output option, turn down the volume on your equipment before using the DVD player.

Using America Online or Sony Online Support with WinFax® Basic Edition

Once you have configured WinFax Basic Edition, it is automatically available for your use. You cannot use America Online or Sony Online Support when the automatic fax receive feature of WinFax Basic Edition is on. To disable this feature, right click the WinFax icon in the task tray at the bottom right corner of your screen, and then select Exit.

Memory Upgrade Specifications

When upgrading memory, use only 3.3V 64-bit PC-100 168 PIN SDRAM DIMM modules. For more information on Digital Studio Computer compatible memory, call Sony at 1-888-4SONYPC (1-888-476-6972).

About the Software On Your Computer

Your VAIO Digital Studio computer is ready to help you work, play, learn, and communicate as soon as you turn it on. This section gives you an overview of the activities you can perform with your software titles. For support information, see For Answers to Your Software Questions.

Adobe Acrobat® Reader

Adobe Systems Incorporated

Acrobat Reader software allows you to view, navigate, and print electronic documents in Adobe Portable Document Format (PDF), an open file format that is intended to preserve the fidelity of documents created on all major computer platforms.

Adobe PhotoDeluxe® Business Edition

Adobe Systems Incorporated

Create amazing photo effects with PhotoDeluxe. Without learning complex software, you can

enhance, restore, and be creative with your photos. Includes built-in guided activities, stock photos, clip art, and templates to assist you.

Adobe Premiere® LE

Adobe Systems Incorporated

Adobe Premiere LE offers an interface and editing tool for producing movies for video, multimedia, or the web. View source clips and edited footage simultaneously in the monitor window. Create video clips up to three hours long with complete audio-video synchronization.

America Online®

America Online

America Online is the world's most popular Internet online service. Stay in touch with family and friends with Easy-to-Use E-mail, manage your personal finances, get the latest news and sports scores, and chat with thousands of others who share your interests.

AT&T WorldNet® Service

AT&T

Fast, reliable Internet access from AT&T WorldNet Service. AT&T WorldNet Service provides web-based e-mail, a personalized start page from Excite, easy access to the Excite search engine, free web pages, online and live agent technical support, instant messaging, and special shopping discounts at Market Square.

CompuServe®

CompuServe, Inc.

CompuServe is the most comprehensive source of organized business and educational information online today. CompuServe allows you to access the vastness of the Internet without wasting time wading through it. Maximize your time online with CompuServe.

Digital Media Park

Sony Electronics

An integrated suite of multimedia cataloging and playback programs including Media Bar, Media Library, Media Showcase, and MiniDisc Editor. Manage your music by cataloging your entire CD collection, and then create custom MiniDiscs of your favorite songs.

Dr. Solomon's® Anti-Virus

Dr Solomon's Software Inc.

Dr. Solomon's Anti-Virus provides the most comprehensive defense against the spread of viruses, including macro viruses. It can scan inside compressed files and automatically protects your system against viruses sent via e-mail or Internet download.

DVgate Motion

Sony Electronics

Connect a digital video camera recorder to the i.LINK connector and capture your own video clips. You can edit the clips from your video, add others, and combine clips into new movie segments.

DVgate Still

Sony Electronics

Connect a digital video camera recorder to the i.LINK connector and capture your own still images. You can save your images in a variety of popular file formats.

EarthLink Sprint TotalAccess

EarthLink Network, Inc.

An Internet Service Provider that supplies access, information, and assistance to its customers, introducing them to the Internet. Member benefits include e-mail, newsgroups, a Personal Start Page, a free 6 MB web site, a member magazine, and 24-hour technical support.

Microsoft® Encarta® 99 Encyclopedia

Microsoft Corporation

Microsoft Encarta Encyclopedia combines current, comprehensive content with up-to-date multimedia technology, providing users with unique, engaging learning experiences. With the 1999 edition, Encarta provides a wealth of information resources and unique interactive features

Microsoft® Internet Explorer for Windows® 98

Microsoft Corporation

Internet Explorer delivers the web the way you want it. It's safe, easy to use, and you can personalize how you access the web. Outlook Express and other tools in Internet Explorer also help you have a great experience when you are on the web!

Microsoft® Money 99

Microsoft Corporation

Microsoft Money 99 is personal finance software that lets you perform your financial tasks, everything from paying bills to planning for the future, in a smarter, faster way. With Money's online services, you can pay bills and bank from the comfort of home.

Microsoft® Outlook® 98

Microsoft Corporation

Outlook 98 is Microsoft's premier messaging and collaboration client. It combines the leading support for Internet standards-based messaging systems with integrated calendar, contact, and task-management features.

Microsoft® Works

Microsoft Corporation

Works provides users with the right set of core tools that allows them to write letters and reports, track family and friends with the address book, manage home finances, and create a home inventory.

MotorHead

Gremlin Interactive Ltd.

MotorHead is realistic arcade-racing; high-velocity entertainment that puts you behind the wheel for 3D pure racing action. Power across Europe and USA in the Transatlantic Speed League, where second place is simply not an option.

Netscape Communicator®

Netscape Communications

Netscape Communicator is the all-in-one Internet tool that makes it easy to browse the web, send Internet e-mail, chat, read newsgroups, and compose great web documents.

PictureGear

Sony Electronics

This image management software displays images from your hard drive, a Sony digital still camera, or a Sony Mavica® camera. The images appear in a convenient light-table format, so that you can easily view the contents of an entire folder.

Prodigy Internet

Prodigy Communications Corporation

An Internet service that helps you find what you need online faster and smarter. Prodigy delivers powerful online content, such as sports scores, stock quotes, news, and easy access to Excite , plus a personal e-mail account and quality customer service, all at a competitive price.

Quicken® Basic 99

Intuit, Inc

Quicken is the fastest, easiest way to organize your finances. Quicken works just like your checkbook, so it's easy to learn and use. Quicken manages all of your finances, bank accounts, credit cards, investments, and loans. You can even pay your bills online.

SurfMonkey

MediaLive, Inc

SurfMonkey is a web browser and online service for kids ages 6-12 that makes the Internet safe, fun, and easy. A talking monkey guides children through web sites and chat rooms, and can read their e-mail out loud. Children cannot go to inappropriate web sites, parents can screen e-mail messages, and chat messages are monitored.

VAIO Smart Keyboard

Sony Electronics

VAIO Smart Keyboard software operates your new easy to use programmable USB keyboard. Six programmable buttons enable you to launch your favorite applications, open frequently used files, access Explorer, or even open your web browser with just the click of a button.

WinFax® Basic Edition

Symantec Corporation

WinFax Basic Edition incorporates an easy-to-use interface that allows you to send and receive faxes easily. Upgrade to WinFax Pro to receive additional features.

About Your Recovery CDs

Application Recovery CD(s)

Sony Electronics

The Application Recovery CD program allows you to reinstall individual applications and device drivers. Use it to restore corrupted or accidentally erased files.

System Recovery CD(s)

Sony Electronics

The System Recovery CD program allows you to restore the software titles that shipped with your computer if they become corrupted or are erased accidentally. It can be used only to restore the hard disk of the Sony computer you purchased.

For Answers to Your Software Questions

Sony Service Center

For the Sony Service Center nearest you, call at 1-888-4SONYPC (1-888-476-6972).

Acrobat® Reader, Adobe PhotoDeluxe® Business Edition , Adobe Premiere® LE (Adobe Systems Incorporated)

Web site http://www.adobe.com/
phone 206-628-2746 (fee-based support)
fax 206-628-5737
e-mail techdocs@adobe.com
hours M-F, 6 AM-5 PM PT

America Online® (America Online)

Web site http://www.aol.com/
phone 800-827-3338
hours 7 days a week, 6 AM - 2 PM ET

AT&T WorldNet® Service (AT&T)

Web site http://www.att.net/*
phone 800-400-1447
e-mail worldnet@attmail.com
hours 7 days a week, 24 hours a day

* You must be a WorldNet Service customer to access online support.

CompuServe® Interactive (CompuServe Interactive, Inc.)

Web site http://www.compuserve.com/
phone 800-848-8990
hours M-F, 8 AM - 1 AM ET, S-S 10 AM - 10 PM ET

Dr. Solomon's® Anti-Virus (Dr. Solomon's Software Inc.)

Web site http://www.drsolomon.com/
phone 888-377-6566
e-mail support@us.drsolomon.com
hours 7 days a week, 24 hours a day

EarthLink Sprint TotalAccess (EarthLink Network, Inc.)

Web site http://help.earthlink.net/techsupport/
phone 800-395-8410
e-mail support@earthlink.net
hours 7 days a week, 24 hours a day

Easy Internet Access (Encompass, Inc.)

Web site http://www.encmpss.com/
phone 800-927-3000
hours 7 days a week, 24 hours a day

MotorHead (Gremlin Interactive Ltd.)

Web site http://www.gremlin.com/
phone 888-4SONYPC (888-476-6972)
hours 7 days a week, 24 hours a day

Windows® 98 Operating System, Works, Money, Encarta, Internet Explorer (Microsoft Corporation)

Web site http://www.microsoft.com/support/
phone 888-4SONYPC (888-476-6972)*
hours 7 days a week, 24 hours a day
* Support from 1-888-4SONYPC is free of charge for 90 days after the original date of purchase.

Netscape Communicator® (Netscape Communications Corporation)

Web site http://www.netscape.com/
phone 888-4SONYPC (888-476-6972)*
hours 7 days a week, 24 hours a day
* Support from 1-888-4SONYPC is free of charge for 90 days after the original date of purchase.

Prodigy Internet (Prodigy Communications Corporation.)

Web site http://www.prodigy.com/
phone 800-PRODIGY
hours 7 AM - 3 AM ET

Quicken® Basic (Intuit Inc.)

Web site http://www.intuit.com/support/
phone 900-555-4688
hours 7 days a week, 24 hours a day

SurfMonkey (MediaLive, Inc.)

Web site http://www.surfmonkey.com/support/Sub_support.html
phone 408-556-2060
e-mail support@surfmonkey.com
hours 9AM-10PM PT everyday

WinFax® Basic Edition (Symantec Corporation.)

Web site http://www.symantec.com/techsupp/
phone 800-798-0850
fax 800-554-4403 in North America
541-984-2490 outside North America

Specifications

Model **PCV-E518DS**
Processor 500 MHz Pentium® III
Hard Disk Drive 17.28 GB
Standard SDRAM 128 MB PC-100 SDRAM, expandable to 256 MB
Video RAM 8 MB SDRAM
MPEG "Sony Tuned" MPEG Digital Video supports full-screen video playback
Graphics 3D 2X AGP graphics acceleration (Matrox)
Sound Capabilities 3D Positional Audio (Aureal A3D)
Diskette Drive 3.5" 1.44 MB FDD
CD-RW Drive CD-RW Drive (4X max. CD-R writing, 2X max. CD-RW writing, 24X max. reading)
Modem K56flex technology/V.90 compatible data/fax modem[1]
Expansion Capabilities One PCI slot
One additional hard disk drive bay
Connection Capabilities (Front) USB port
i.LINK port (4-pin)
Connection Capabilities (Rear) Optional Keyboard (PS/2-style)
Mouse (PS/2-style)
USB port
Serial port
Parallel (printer)
Game/MIDI
Headphones
Line In
Microphone
VGA Monitor
S-Link (Control-A1)
Optical Digital Audio Out
Two i.LINK ports (6-pin)[2]
Modem line (RJ-11)
Phone line (RJ-11)
Supplied Accessories VAIO Smart keyboard
Sony two-button mouse
RJ-11 phone cable
Power cord
Service 90-day limited service. Extendible to one year from original date of purchase upon registration[3]
Limited Warranty 90-day parts/labor standard. Extendible to one year from original date of purchase upon registration[4]

Power Requirements 200 watts maximum
Dimensions 7" (w) x 12" (h) x 13 3/4" (d) (178mm x 304mm x 330mm)
Weight 17 lbs. (7.71 kg)
Operating Temperature 50º F to 95º F (+10º C to 35º C)

[1] Maximum speed for faxing is 14.4 kbytes/s. Your modem is capable of downloading at 56 kbytes/s using K56flex technology or V.90. Your phone service, online service, or Internet Service Provider however, may not support this technology or operate at this speed.

[2] Six-pin i-LINK connectors on the rear of the system each supply 10V to 12V. The combined total wattage that can be supplied by the two connectors is 6 watts.

[3] Certain restrictions apply

[4] Certain restrictions apply

Specifications are subject to change without notice.

This product meets the standards of the International Energy Star Program for energy efficiency.

© 1999 Sony Electronics Inc. Reproduction in w hole or in part w ithout w ritten permission is prohibited. All rights reserved.

Read Me First

Welcome

Congratulations on your purchase of the Sony VAIO Digital Studio™ Computer. Sony has combined leading-edge technology in audio, video, computing, and communications to provide you with state-of-the-art personal computing.

Features

 For a complete description of the specifications of your VAIO Digital Studio™ Computer, see Specifications.

- **Exceptional performance:** Your computer includes a brand new Intel® Pentium® III processor, a CD-RW drive, and a V.90 compatible data/fax modem.*

* Actual upload and download speeds may vary due to line conditions, ISP support, and government regulations.

- **CD-RW drive:** This drive is the ideal solution for making backups and data archiving, with the ability to store up to 650 MB* of removable, rewritable storage on a single rewritable CD. Save your movies to CD-R or CD-RW media and share videos and images with family and friends.

* 530 MB after formatting.

- **VAIO Smart™ Keyboard:** This USB keyboard has programmable shortcut buttons for launching your favorite programs or accessing the Internet.
- **Sony audio and video quality:** High-fidelity positional 3D audio system (A3D™), high-powered 3D graphics (AGP), and "Sony-Tuned" MPEG digital video playback enable you to take advantage of today's advanced multimedia applications, games, and entertainment software.
- **S-Link™ (Control-A1):** This technology allows you to build a database of all your music and video CDs and then record your favorite audio selections on MiniDiscs. Use your computer with a 200 disc mega-storage CD changer and a MiniDisc recording deck.
- **i.LINK™ (IEEE 1394):** Three built-in i.LINK ports provide you with maximum digital connection capability. The i.LINK name and logo identify a digital interface (IEEE 1394) for high speed communication. By using your VAIO Digital Studio Computer, a Sony Digital Handycam® Camcorder, the DVgate™ software preinstalled on your computer, and the i.LINK (IEEE 1394) interface, you can easily create and edit your own home videos.
- **Optical Digital Audio Output:** This high-quality digital interface transmits digital audio data via light pulses. Transfer crystal clear digital audio to your MiniDisc recorder.
- **Digital Studio Software**: Enjoy all of your computer's audio and video capabilities with component-like applications that allow you to creatively manipulate digital still images, video clips, and audio tracks.
- **50 free hours of Internet access:** Use the Internet for up to 50 free hours when you sign up with GTE (no credit card required). Limit of two hours per day. Free access expires after 50 hours or 90 days after signing up--whichever occurs first.
- **Preinstalled software titles**: All the software on your computer is preinstalled, configured, and ready for you to use right out of the box.
- **Windows® 98**: Your system includes the latest operating system from Microsoft.
- **Communications:** Access popular online services, browse the Internet, send faxes, and more.

Unpacking Your Computer

Computer and Supplied Accessories

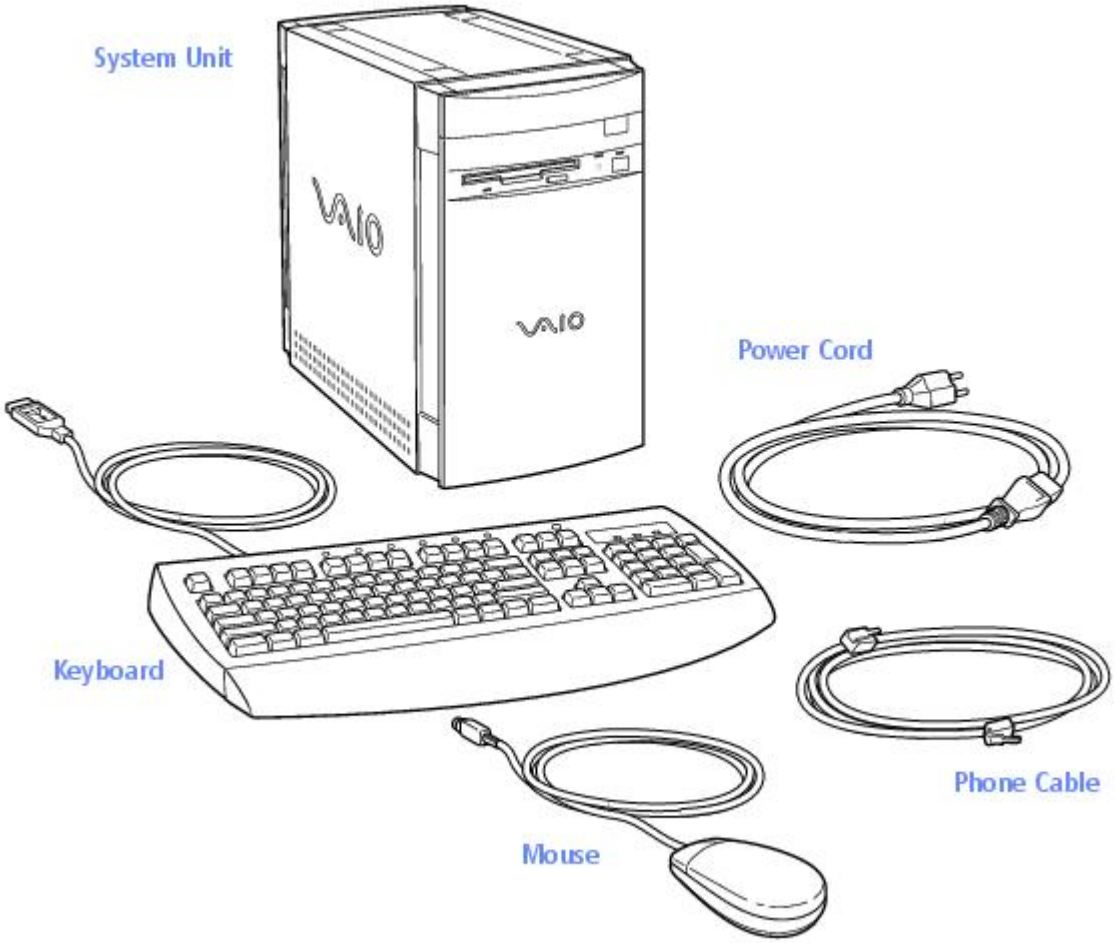

Manuals

- *Read Me First* (this manual) contains features and specifications of your computer. It also includes information on the applications included with your system, how to contact software vendors, and last minute troubleshooting tips.
- The *VAIO Digital Studio™ Computer User Guide* describes how to get started with your computer, find help, and solve common problems.
- The *Microsoft® Windows®98 Getting Started* manual explains how to use the basic features of the Windows operating system.

Recovery CDs

- System Recovery CD(s)
- Application Recovery CD(s)

Other

- Setting up your VAIO Digital Studio Computer (poster)
- Packet containing special product offers

Software Library

The Software Library contains the Microsoft software license agreement, Sony end-user license agreement, and the following CDs:

- Adobe PhotoDeluxe® Business Edition 3.0
- Gremlin Interactive Ltd. MotorHead™
- Microsoft® Encarta® 99 Encyclopedia
- Microsoft® Money/Microsoft® Works

Back Panel Overview

The back panel of your computer contains the connectors where you plug in supplied and optional accessories. The icons on the back panel serve as a map to help you locate the connectors on your computer.

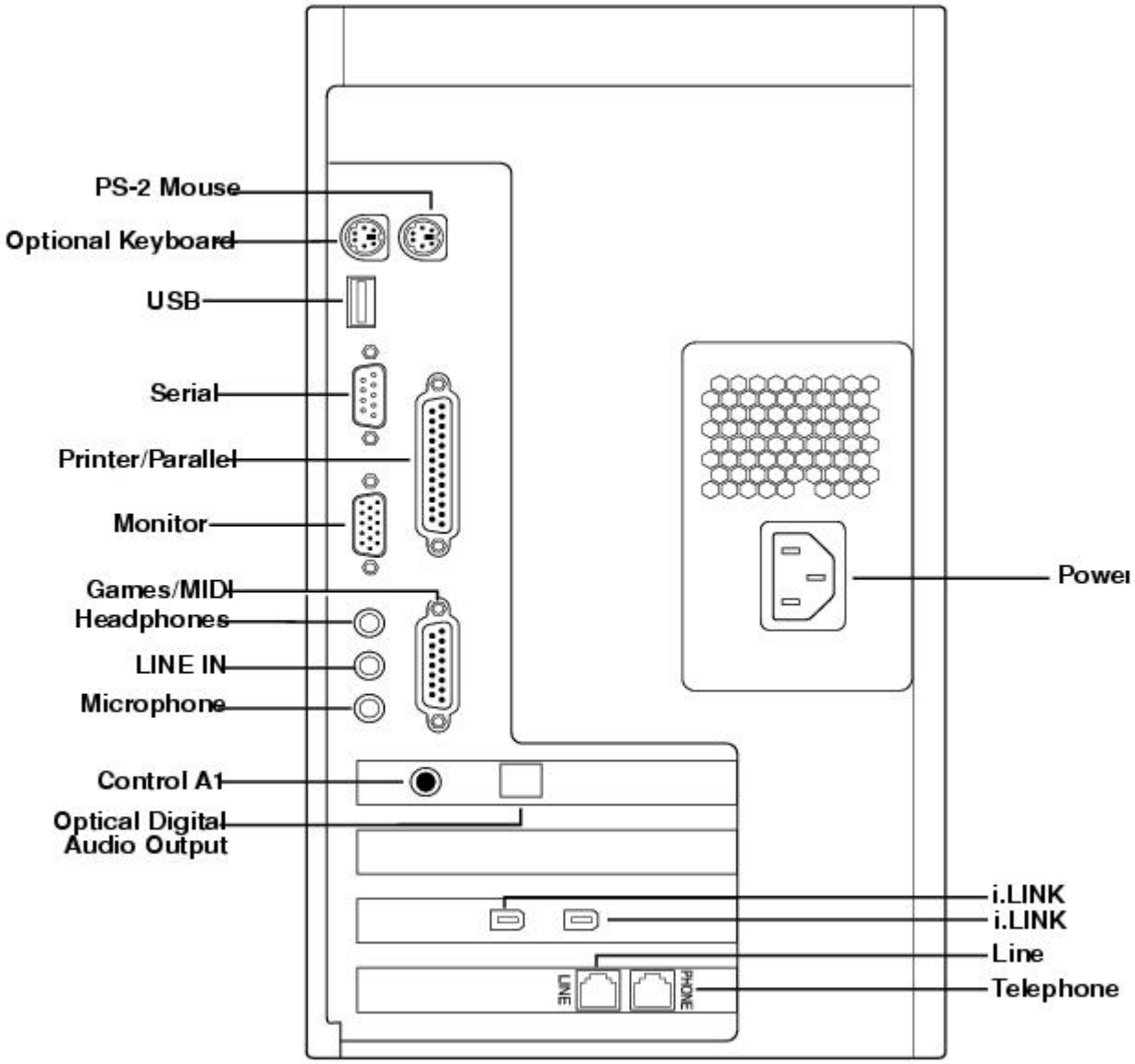

For your convenience, your computer includes USB and i.LINK connectors on both the front and back panels, allowing you to connect to either set of connectors. i.LINK connectors on the back of your system are 6-pin connectors.

Front Panel Overview

The front panel of your VAIO Digital Studio Computer allows for access to the diskette and CD-RW drives. It also includes USB and i.LINK™ ports to connect USB devices, CD changers, MiniDisc drives, or other components.

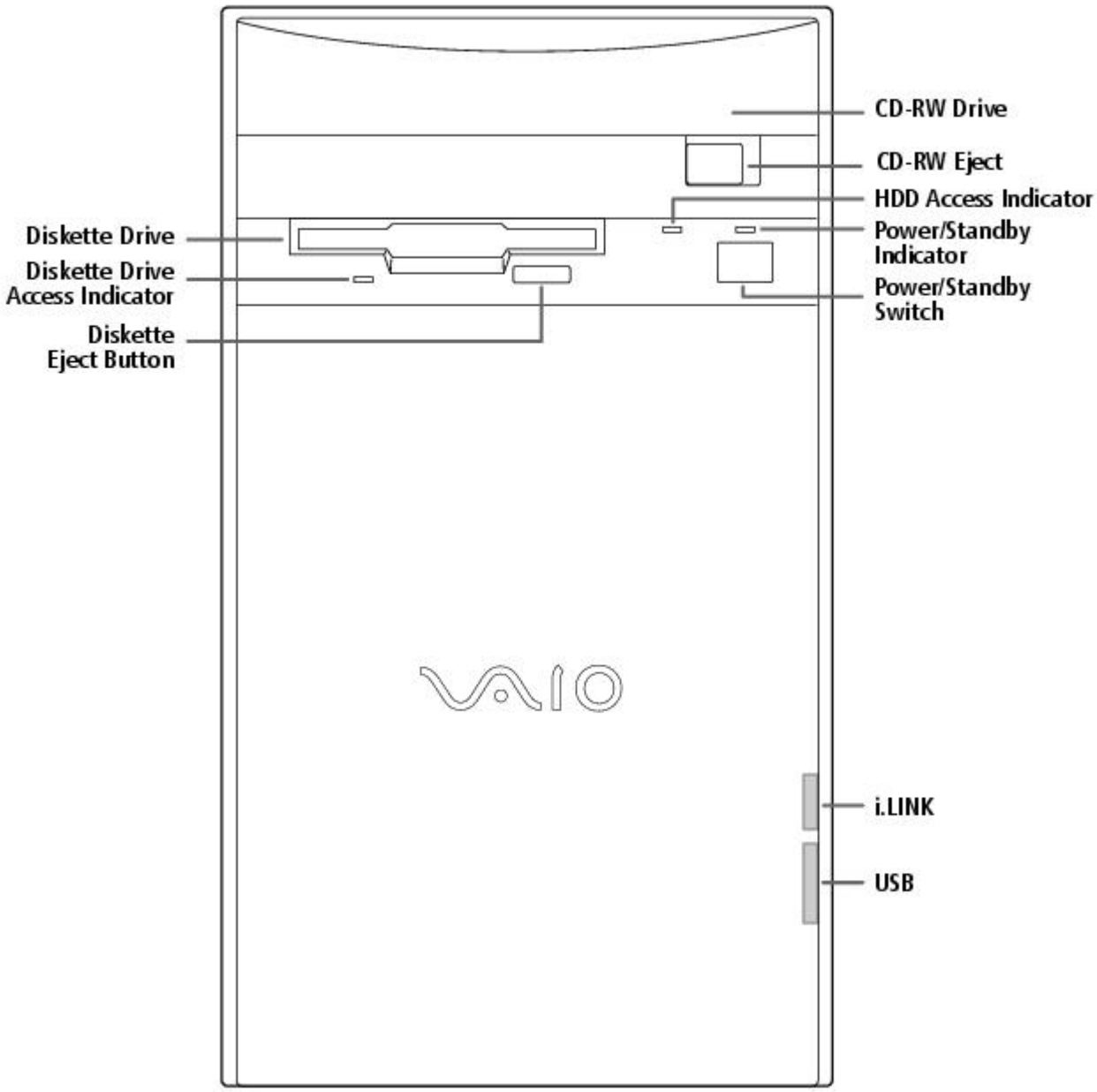

For your convenience, your computer includes USB and i.LINK connectors on both the front and back panels, allowing you to connect to either set of connectors. The i.LINK connector on the front of your system is a 4-pin connector.

Supplementary Information

For the most recent version of this manual, see the online version of Read Me First. You can access this document from the Windows Start Menu by selecting Programs/VAIO Documentation.

Hard Drive Partition

In order to improve the performance of your computer's DVgate™ Motion software, the hard disk drive on your computer has been formatted with two partitions, C and D. DVgate Motion saves files to the D partition. This prevents large video captures from consuming the available space on your C partition. To maintain optimum performance of DVgate Motion, you should defragment regularly.

VAIO Smart™ Keyboard Default Settings

The VAIO Smart Keyboard programmable buttons come with the following applications as their default settings:

S1 - Easy Internet Access Browser (Internet)

S2 - Outlook™ 98 (Mail)

S3 - MotorHead (Game)

S4 - Microsoft® Works (Work)

S5 - Quicken 99 Basic (Finance)

S6 - VAIO Documentation (Help)

All six buttons are reprogrammable.

Using The Standby Mode

To Put Your Computer into Standby Mode

When you are done using your computer, you can put it in Standby mode rather than turn it off completely. There are four ways to put your computer into Standby mode.

- Touch the power switch on the front panel.
- Click Shut Down at the bottom of the Start menu to display the Shut Down Windows dialog box. Select Stand by, and then click OK.
- Press the Standby button on the VAIO Smart Keyboard (the half moon icon).
- Change the timer settings for Standby mode in the Control Panel, as follows:

1. From the Start menu, point to Settings and click Control Panel.
2. Click the Power Management icon.
3. On the Power Schemes tab, change the Power scheme to Home/Office Desk.
4. In the list box for System standby, select an interval of time.
5. Click the OK button and close the Control Panel.

To Resume from Standby Mode

There are two ways to resume system functionality when your computer is in Standby mode. Use either of the following methods.

- Press any key on your keyboard, such as the Enter key.
- Touch the power switch on the front panel.

It may take up to 30 seconds for your system to recover stored information and resume functionality. The screen remains blank while the system is resuming functionality.

Applications That Use the TWAIN Driver

Digital imaging applications, such as Adobe PhotoDeluxe®, allow you to transfer images to your computer from external devices, including scanners or digital cameras. For some devices, a TWAIN driver window appears on the screen. Always close the TWAIN driver window before exiting or minimizing a digital imaging application.

Restoring Outlook 98

For the Add New Components functionality to be available with Microsoft Outlook, you must first run the installation program for Outlook from the Application Recovery CD. When prompted to install the program, select Exit. This decompresses the software, making the Add New Components functionality available.

Inserting Add-in Boards

Your VAIO Digital Studio™ Computer accommodates PCI add-in boards up to 7.7 inches in length.

Using Devices Connected to the i.LINK (IEEE 1394), S-Link™ (Control-A1), and Optical Digital Audio Output Connectors

For the latest information on devices known to be compatible with the state-of the-art audio, video, and graphics capabilities of your VAIO computer, check the Sony web site at http://www.sony.com/pcsupport.

Connecting to i.LINK Ports

Your VAIO computer includes a 4-pin i.LINK connector on the front of the system and two 6-pin i.LINK connectors on the back of the system. A 6-pin i.LINK connector can supply power from the computer to the connected device if the device is equipped with a 6-pin connector. Each 6-pin connector supplies 10V to 12V. The total power supplied by both 6-pin i.LINK connectors cannot exceed 6 watts. A 4-pin i.LINK connector cannot supply power to a connected device.

Capturing and Editing Digital Video Clips

- You can capture digital video clips using a digital video camera recorder and DVgate Motion software. Once the clips are saved as AVI files, they can be edited using DVgate Motion, DVgate Clip, or Adobe Premiere® LE. You cannot capture digital video clips directly using the Capture menu in Adobe Premiere LE. Adobe Premiere LE supports an analog capture board for capturing clips. Your VAIO computer is designed for digital video input.
- If there is no audio data associated with an AVI file, the message "Codec compression error" appears. If you do not wish to associate audio with your AVI file, you can add muted sound data by recording audio with the mute option enabled.
- For best performance, when editing AVI files in Adobe Premiere LE, you should use the default setup parameters that shipped with your system. If you change the default setup and want to reinitialize the parameters, follow these steps:

    1. In the Adobe Premiere LE application, select Compression from the Make menu. The Compression Settings dialog box appears.
    2. In the Method list box, select Sony DV software CODEC.
    3. Click OK to close the screen.
    4. From the Make menu, select Preset. The Preset dialog box appears.
    5. Select the parameters for Time Base, Compress, Output, and Preview Option settings as indicated below.

[Time base]

Time base - 29.97fps (required)

[Compress]

File type - AVI (required)
Compress Program Method - Sony DV software CODEC (required)
Compress Program Depth - Millions colors (No other options)
Quality (No control for this item)
Option: Frames per second - 30 (required)
Option: Basic Key Frames (No control for this item)
Option: Optimize Still Off (recommended)
Data rate - Recompress Off (recommended)

[Output options]

Video - On (required)
Video Size - 720x480
4:3 Aspect - Off (required)
VideoType - Field 2 (recommended)
Audio - On (required)
Audio Rate - 44kHz (required)
Audio Format - 16 Bit Stereo or 16 Bit Monaural (required)
Audio Type - Uncompress (required)
Audio Interleave - 1 frame (recommended)
- Less than 30 frames (required)

Audio Sync - 1.0 (required)
Audio Skew - 0.75 (recommended)
- Less than 1.0 (required)

[Preview Option]

Preview Window Size - 360x240

Note that Adobe Premiere LE does not save the Preview Window Size, but uses a default size of 320 x 213 each time the application launches. We recommend that you change this setting to 360 x 240 to improve the quality of preview clips when editing AVI files.

Using Alternate Browsers with America Online®

To use Internet Explorer or Netscape Navigator as your browser with America Online, follow these steps:

1. From the Start menu, point to Settings and then click Control Panel.
2. Click the Internet icon.
3. Click the Connection tab.
4. Click the "Connect to the Internet using local area network" radio button.
5. Click OK.

Using DVgate Motion

When capturing clips:

- Do not use DVgate Motion when the connected digital video peripheral is in Timer Recording mode, as this could produce a malfunction in the peripheral.
- Captures larger than 2 GB (9 minutes and 30 seconds) are automatically continued in a second file.
- You can record stereo audio (stereo 1) while capturing video. You cannot add audio on the stereo 2 track after capturing the video data.
- You cannot use different audio modes on the same tape. You should perform a separate capture for each audio mode you wish to use.
- DVgate Motion does not support hard disk compression. You should not use disk compression if you are planning to work with DVgate Motion.
- Title data is saved in the flash memory of a digital video camera and is not transferred to tape by DVgate Motion.
- To avoid interruption of capture sessions, you should disable the screen saver.
- The drop frame compensation feature does not provide accurate compensation adjustments for tapes recorded in LP mode.
- For tapes that include a mixture of both SP and LP mode, the information displayed by the capture progress indicator may not be accurate.
- Make sure the video head of your digital video device is properly cleaned. Anomalies that you see in captured data could be due to dust or other particles on the video head.
    - The last frame captured is one frame before your selected [OUT] point. The frame you see immediately after clicking the [OUT] button is not captured.

When recording AVI files to tape:

- Do not use DVgate Motion when the connected digital video peripheral is in Timer Recording mode, as this could produce a malfunction in the peripheral.

- You can record only AVI files. MPEG files cannot be recorded.
- To avoid recording problems, such as a single frame appearing in multiple frames, close other applications on your system while recording.
- You cannot use different audio modes on the same tape. If you have AVI files that use different audio modes, they cannot be recorded at the same time, but must be recorded separately.
- Do not attempt to work with AVI files that are smaller than 4 MB.
- DVgate Motion does not support hard disk compression. You should not use disk compression if you are planning to work with DVgate Motion.
- In order to maximize recording capabilities, video and audio data are not available while you are recording.

If DVgate Motion indicates that frames have been dropped, you should try closing all open applications, or you may need to defragment your hard drive.

Restoring Audio Drivers

When you restore the audio drivers from the Application Recovery CD, you need to restart your system to use these drivers. In the Add New Hardware wizard that appears when you restart, click the Next button until you are prompted for the location of the drivers. The audio drivers are located on the Application Recovery CD in G:\drivers\audio\AL98091701\English.

Using AC-3® to Optical Digital Audio Output

MiniDisc player/recorders, DAT player/recorders, and older digital receivers do not support Dolby® Digital (AC-3). You should not use the AC-3 to Optical Digital Audio Output option unless you are using a device that supports Dolby Digital. Please refer to the manual supplied with your equipment to determine if it supports Dolby Digital. If you are unsure and you have selected the AC-3 to Optical Digital Audio Output option, turn down the volume on your equipment before using the DVD player.

Using America Online or Sony Online Support with WinFax® Basic Edition

Once you have configured WinFax Basic Edition, it is automatically available for your use. You cannot use America Online or Sony Online Support when the automatic fax receive feature of WinFax Basic Edition is on. To disable this feature, right click the WinFax icon in the task tray at the bottom right corner of your screen, and then select Exit.

Memory Upgrade Specifications

When upgrading memory, use only 3.3V 64-bit PC-100 168 PIN SDRAM DIMM modules. For more information on Digital Studio Computer compatible memory, call Sony at 1-888-4SONYPC (1-888-476-6972).

About the Software On Your Computer

Your VAIO Digital Studio computer is ready to help you work, play, learn, and communicate as soon as you turn it on. This section gives you an overview of the activities you can perform with your software titles. For support information, see For Answers to Your Software Questions.

Adobe Acrobat® Reader

Adobe Systems Incorporated

Acrobat Reader software allows you to view, navigate, and print electronic documents in Adobe Portable Document Format (PDF), an open file format that is intended to preserve the fidelity of documents created on all major computer platforms.

Adobe PhotoDeluxe® Business Edition

Adobe Systems Incorporated

Create amazing photo effects with PhotoDeluxe. Without learning complex software, you can

enhance, restore, and be creative with your photos. Includes built-in guided activities, stock photos, clip art, and templates to assist you.

Adobe Premiere® LE

Adobe Systems Incorporated

Adobe Premiere LE offers an interface and editing tool for producing movies for video, multimedia, or the web. View source clips and edited footage simultaneously in the monitor window. Create video clips up to three hours long with complete audio-video synchronization.

America Online®

America Online

America Online is the world's most popular Internet online service. Stay in touch with family and friends with Easy-to-Use E-mail, manage your personal finances, get the latest news and sports scores, and chat with thousands of others who share your interests.

AT&T WorldNet® Service

AT&T

Fast, reliable Internet access from AT&T WorldNet Service. AT&T WorldNet Service provides web-based e-mail, a personalized start page from Excite, easy access to the Excite search engine, free web pages, online and live agent technical support, instant messaging, and special shopping discounts at Market Square.

CompuServe®

CompuServe, Inc.

CompuServe is the most comprehensive source of organized business and educational information online today. CompuServe allows you to access the vastness of the Internet without wasting time wading through it. Maximize your time online with CompuServe.

Digital Media Park™

Sony Electronics

An integrated suite of multimedia cataloging and playback programs including Media Bar, Media Library, Media Showcase, and MiniDisc Editor. Manage your music by cataloging your entire CD collection, and then create custom MiniDiscs of your favorite songs.

Dr. Solomon's® Anti-Virus

Dr Solomon's Software Inc.

Dr. Solomon's Anti-Virus provides the most comprehensive defense against the spread of viruses, including macro viruses. It can scan inside compressed files and automatically protects your system against viruses sent via e-mail or Internet download.

DVgate™ Motion

Sony Electronics

Connect a digital video camera recorder to the i.LINK connector and capture your own video clips. You can edit the clips from your video, add others, and combine clips into new movie segments.

DVgate™ Still

Sony Electronics

Connect a digital video camera recorder to the i.LINK connector and capture your own still images. You can save your images in a variety of popular file formats.

EarthLink Sprint TotalAccess™

EarthLink Network, Inc.

An Internet Service Provider that supplies access, information, and assistance to its customers, introducing them to the Internet. Member benefits include e-mail, newsgroups, a Personal Start Page, a free 6 MB web site, a member magazine, and 24-hour technical support.

Microsoft® Encarta® 99 Encyclopedia

Microsoft Corporation

Microsoft Encarta Encyclopedia combines current, comprehensive content with up-to-date multimedia technology, providing users with unique, engaging learning experiences. With the 1999 edition, Encarta provides a wealth of information resources and unique interactive features

Microsoft® Internet Explorer for Windows® 98

Microsoft Corporation

Internet Explorer delivers the web the way you want it. It's safe, easy to use, and you can personalize how you access the web. Outlook Express and other tools in Internet Explorer also help you have a great experience when you are on the web!

Microsoft® Money 99

Microsoft Corporation

Microsoft Money 99 is personal finance software that lets you perform your financial tasks, everything from paying bills to planning for the future, in a smarter, faster way. With Money's online services, you can pay bills and bank from the comfort of home.

Microsoft® Outlook® 98

Microsoft Corporation

Outlook 98 is Microsoft's premier messaging and collaboration client. It combines the leading support for Internet standards-based messaging systems with integrated calendar, contact, and task-management features.

Microsoft® Works

Microsoft Corporation

Works provides users with the right set of core tools that allows them to write letters and reports, track family and friends with the address book, manage home finances, and create a home inventory.

MotorHead™

Gremlin Interactive Ltd.

MotorHead is realistic arcade-racing; high-velocity entertainment that puts you behind the wheel for 3D pure racing action. Power across Europe and USA in the Transatlantic Speed League, where second place is simply not an option.

Netscape Communicator®

Netscape Communications

Netscape Communicator is the all-in-one Internet tool that makes it easy to browse the web, send Internet e-mail, chat, read newsgroups, and compose great web documents.

PictureGear™

Sony Electronics

This image management software displays images from your hard drive, a Sony digital still camera, or a Sony Mavica® camera. The images appear in a convenient light-table format, so that you can easily view the contents of an entire folder.

Prodigy Internet™

Prodigy Communications Corporation

An Internet service that helps you find what you need online faster and smarter. Prodigy delivers powerful online content, such as sports scores, stock quotes, news, and easy access to Excite™ , plus a personal e-mail account and quality customer service, all at a competitive price.

Quicken® Basic 99

Intuit, Inc

Quicken is the fastest, easiest way to organize your finances. Quicken works just like your checkbook, so it's easy to learn and use. Quicken manages all of your finances, bank accounts, credit cards, investments, and loans. You can even pay your bills online.

SurfMonkey™

MediaLive, Inc

SurfMonkey is a web browser and online service for kids ages 6-12 that makes the Internet safe, fun, and easy. A talking monkey guides children through web sites and chat rooms, and can read their e-mail out loud. Children cannot go to inappropriate web sites, parents can screen e-mail messages, and chat messages are monitored.

VAIO Smart Keyboard

Sony Electronics

VAIO Smart Keyboard software operates your new easy to use programmable USB keyboard. Six programmable buttons enable you to launch your favorite applications, open frequently used files, access Explorer, or even open your web browser with just the click of a button.

WinFax® Basic Edition

Symantec Corporation

WinFax Basic Edition incorporates an easy-to-use interface that allows you to send and receive faxes easily. Upgrade to WinFax Pro to receive additional features.

About Your Recovery CDs

Application Recovery CD(s)

Sony Electronics

The Application Recovery CD program allows you to reinstall individual applications and device drivers. Use it to restore corrupted or accidentally erased files.

System Recovery CD(s)

Sony Electronics

The System Recovery CD program allows you to restore the software titles that shipped with your computer if they become corrupted or are erased accidentally. It can be used only to restore the hard disk of the Sony computer you purchased.

For Answers to Your Software Questions

Sony Service Center

For the Sony Service Center nearest you, call at 1-888-4SONYPC (1-888-476-6972).

Acrobat® Reader, Adobe PhotoDeluxe® Business Edition , Adobe Premiere® LE (Adobe Systems Incorporated)

Web site http://www.adobe.com/
phone 206-628-2746 (fee-based support)
fax 206-628-5737
e-mail techdocs@adobe.com
hours M-F, 6 AM-5 PM PT

America Online® (America Online)

Web site http://www.aol.com/
phone 800-827-3338
hours 7 days a week, 6 AM - 2 PM ET

AT&T WorldNet® Service (AT&T)

Web site http://www.att.net/*
phone 800-400-1447
e-mail worldnet@attmail.com
hours 7 days a week, 24 hours a day

* You must be a WorldNet Service customer to access online support.

CompuServe® Interactive (CompuServe Interactive, Inc.)

Web site http://www.compuserve.com/
phone 800-848-8990
hours M-F, 8 AM - 1 AM ET, S-S 10 AM - 10 PM ET

Dr. Solomon's® Anti-Virus (Dr. Solomon's Software Inc.)

Web site http://www.drsolomon.com/
phone 888-377-6566
e-mail support@us.drsolomon.com
hours 7 days a week, 24 hours a day

EarthLink Sprint TotalAccess™(EarthLink Network, Inc.)

Web site http://help.earthlink.net/techsupport/
phone 800-395-8410
e-mail support@earthlink.net
hours 7 days a week, 24 hours a day

Easy Internet Access (Encompass, Inc.)

Web site http://www.encmpss.com/
phone 800-927-3000
hours 7 days a week, 24 hours a day

MotorHead ™(Gremlin Interactive Ltd.)

Web site http://www.gremlin.com/
phone 888-4SONYPC (888-476-6972)
hours 7 days a week, 24 hours a day

Windows® 98 Operating System, Works, Money, Encarta, Internet Explorer (Microsoft Corporation)

Web site http://www.microsoft.com/support/
phone 888-4SONYPC (888-476-6972)*
hours 7 days a week, 24 hours a day
* Support from 1-888-4SONYPC is free of charge for 90 days after the original date of purchase.

Netscape Communicator® (Netscape Communications Corporation)

Web site http://www.netscape.com/
phone 888-4SONYPC (888-476-6972)*
hours 7 days a week, 24 hours a day
* Support from 1-888-4SONYPC is free of charge for 90 days after the original date of purchase.

Prodigy Internet™ (Prodigy Communications Corporation.)

Web site http://www.prodigy.com/
phone 800-PRODIGY
hours 7 AM - 3 AM ET

Quicken® Basic (Intuit Inc.)

Web site http://www.intuit.com/support/
phone 900-555-4688
hours 7 days a week, 24 hours a day

SurfMonkey™ (MediaLive, Inc.)

Web site http://www.surfmonkey.com/support/Sub_support.html
phone 408-556-2060
e-mail support@surfmonkey.com
hours 9AM-10PM PT everyday

WinFax® Basic Edition (Symantec Corporation.)

Web site http://www.symantec.com/techsupp/
phone 800-798-0850
fax 800-554-4403 in North America
541-984-2490 outside North America

Specifications

Model	**PCV-E518DS**
Processor	500 MHz Pentium® III
Hard Disk Drive	17.28 GB
Standard SDRAM	128 MB PC-100 SDRAM, expandable to 256 MB
Video RAM	8 MB SDRAM
MPEG	"Sony Tuned" MPEG Digital Video supports full-screen video playback
Graphics	3D 2X AGP graphics acceleration (Matrox)
Sound Capabilities	3D Positional Audio (Aureal A3D)
Diskette Drive	3.5" 1.44 MB FDD
CD-RW Drive	CD-RW Drive (4X max. CD-R writing, 2X max. CD-RW writing, 24X max. reading)
Modem	K56flex technology/V.90 compatible data/fax modem[1]
Expansion Capabilities	One PCI slot One additional hard disk drive bay
Connection Capabilities (Front)	USB port i.LINK™ port (4-pin)
Connection Capabilities (Rear)	Optional Keyboard (PS/2-style) Mouse (PS/2-style) USB port Serial port Parallel (printer) Game/MIDI Headphones Line In Microphone VGA Monitor S-Link (Control-A1) Optical Digital Audio Out Two i.LINK ports (6-pin)[2] Modem line (RJ-11) Phone line (RJ-11)
Supplied Accessories	VAIO Smart keyboard Sony two-button mouse RJ-11 phone cable Power cord
Service	90-day limited service. Extendible to one year from original date of purchase upon registration[3]
Limited Warranty	90-day parts/labor standard. Extendible to one year from original date of purchase upon registration[4]

Power Requirements	200 watts maximum
Dimensions	7" (w) x 12" (h) x 13 3/4" (d) (178mm x 304mm x 330mm)
Weight	17 lbs. (7.71 kg)
Operating Temperature	50º F to 95º F (+10º C to 35º C)

[1] Maximum speed for faxing is 14.4 kbytes/s. Your modem is capable of downloading at 56 kbytes/s using K56flex technology or V.90. Your phone service, online service, or Internet Service Provider however, may not support this technology or operate at this speed.

[2] Six-pin i-LINK connectors on the rear of the system each supply 10V to 12V. The combined total wattage that can be supplied by the two connectors is 6 watts.

[3] Certain restrictions apply

[4] Certain restrictions apply

Specifications are subject to change without notice.

This product meets the standards of the International Energy Star Program for energy efficiency.

© 1999 Sony Electronics Inc. Reproduction in w hole or in part w ithout w ritten permission is prohibited. All rights reserved.

Read Me First

Welcome

Congratulations on your purchase of the Sony VAIO Digital Studio Computer. Sony has combined leading-edge technology in audio, video, computing, and communications to provide you with state-of-the-art personal computing.

Features

 For a complete description of the specifications of your VAIO Digital Studio Computer, see Specifications.

- **Exceptional performance:** Your computer includes a brand new Intel® Pentium® III processor, a CD-RW drive, and a V.90 compatible data/fax modem.*

* Actual upload and download speeds may vary due to line conditions, ISP support, and government regulations.

- **CD-RW drive:** This drive is the ideal solution for making backups and data archiving, with the ability to store up to 650 MB* of removable, rewritable storage on a single rewritable CD. Save your movies to CD-R or CD-RW media and share videos and images with family and friends.

***** 530 MB after formatting.

- **VAIO Smart Keyboard:** This USB keyboard has programmable shortcut buttons for launching your favorite programs or accessing the Internet.
- **Sony audio and video quality:** High-fidelity positional 3D audio system (A3D), high-powered 3D graphics (AGP), and "Sony-Tuned" MPEG digital video playback enable you to take advantage of today's advanced multimedia applications, games, and entertainment software.
- **S-Link (Control-A1):** This technology allows you to build a database of all your music and video CDs and then record your favorite audio selections on MiniDiscs. Use your computer with a 200 disc mega-storage CD changer and a MiniDisc recording deck.
- **i.LINK (IEEE 1394):** Three built-in i.LINK ports provide you with maximum digital connection capability. The i.LINK name and logo identify a digital interface (IEEE 1394) for high speed communication. By using your VAIO Digital Studio Computer, a Sony Digital Handycam® Camcorder, the DVgate software preinstalled on your computer, and the i.LINK (IEEE 1394) interface, you can easily create and edit your own home videos.
- **Optical Digital Audio Output:** This high-quality digital interface transmits digital audio data via light pulses. Transfer crystal clear digital audio to your MiniDisc recorder.
- **Digital Studio Software**: Enjoy all of your computer's audio and video capabilities with component-like applications that allow you to creatively manipulate digital still images, video clips, and audio tracks.
- **50 free hours of Internet access:** Use the Internet for up to 50 free hours when you sign up with GTE (no credit card required). Limit of two hours per day. Free access expires after 50 hours or 90 days after signing up--whichever occurs first.
- **Preinstalled software titles**: All the software on your computer is preinstalled, configured, and ready for you to use right out of the box.
- **Windows® 98**: Your system includes the latest operating system from Microsoft.
- **Communications:** Access popular online services, browse the Internet, send faxes, and more.

Unpacking Your Computer

Computer and Supplied Accessories

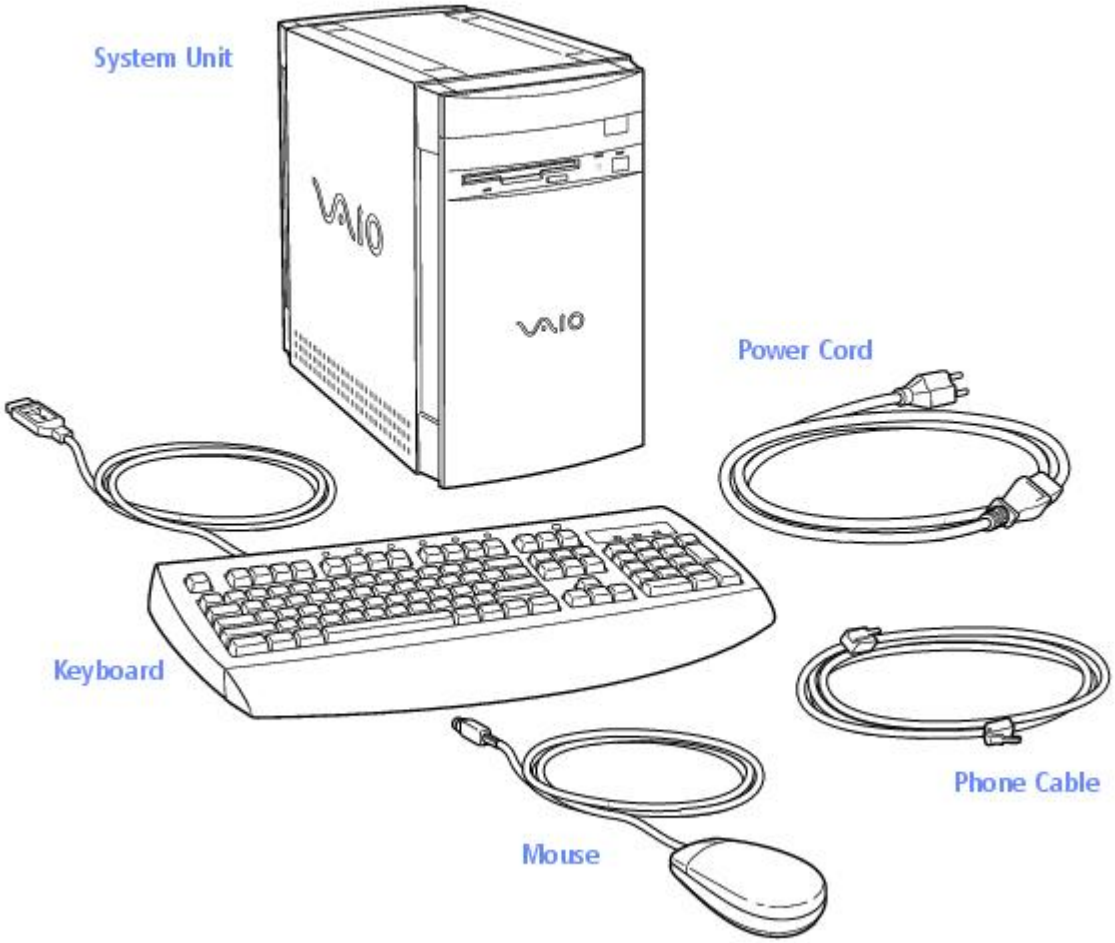

Manuals

- *Read Me First* (this manual) contains features and specifications of your computer. It also includes information on the applications included with your system, how to contact software vendors, and last minute troubleshooting tips.
- The *VAIO Digital Studio Computer User Guide* describes how to get started with your computer, find help, and solve common problems.
- The *Microsoft® Windows®98 Getting Started* manual explains how to use the basic features of the Windows operating system.

Recovery CDs

- System Recovery CD(s)
- Application Recovery CD(s)

Other

- Setting up your VAIO Digital Studio Computer (poster)
- Packet containing special product offers

Software Library

The Software Library contains the Microsoft software license agreement, Sony end-user license agreement, and the following CDs:

- Adobe PhotoDeluxe® Business Edition 3.0
- Gremlin Interactive Ltd. MotorHead
- Microsoft® Encarta® 99 Encyclopedia
- Microsoft® Money/Microsoft® Works

Back Panel Overview

The back panel of your computer contains the connectors where you plug in supplied and optional accessories. The icons on the back panel serve as a map to help you locate the connectors on your computer.

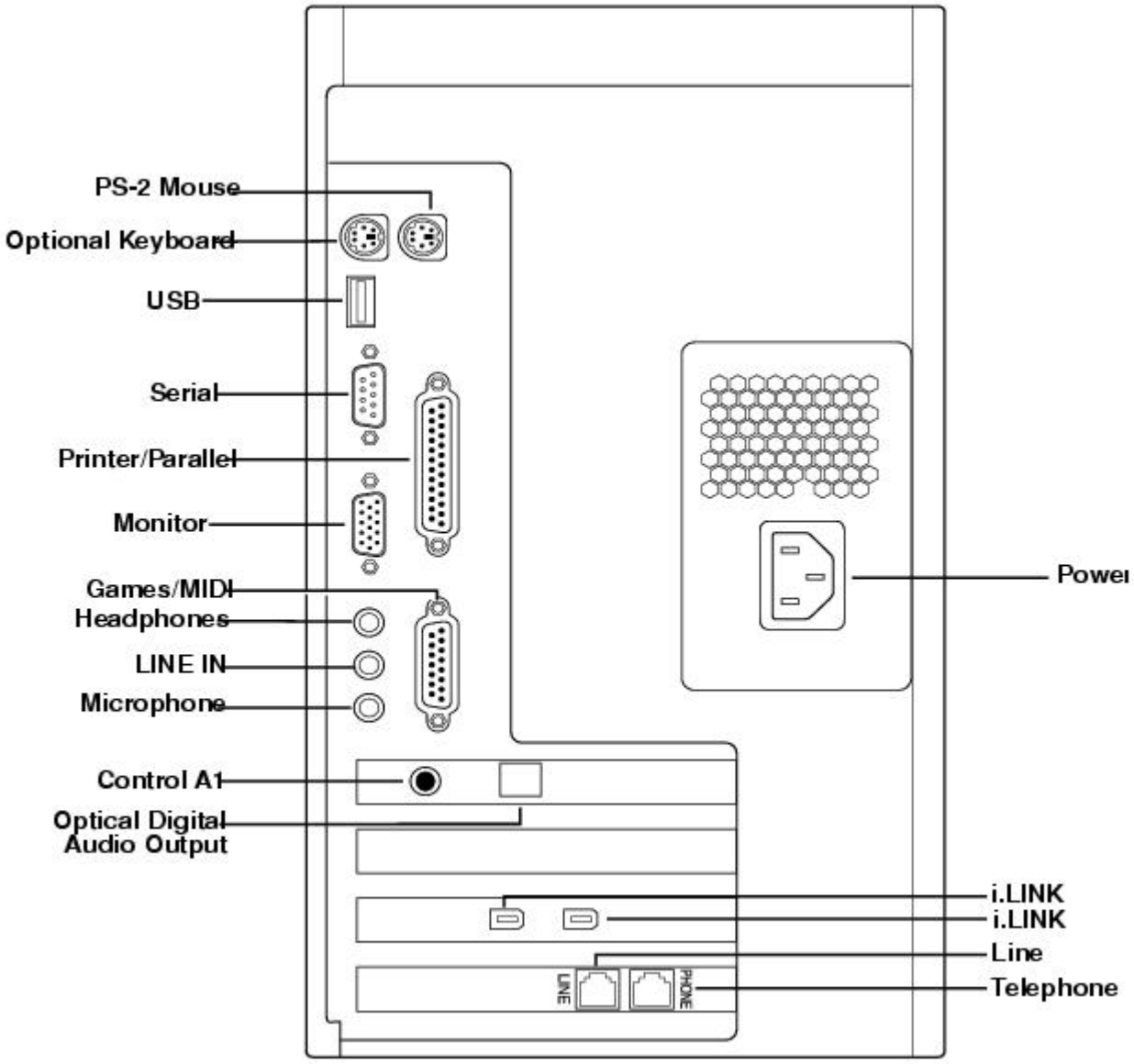

For your convenience, your computer includes USB and i.LINK connectors on both the front and back panels, allowing you to connect to either set of connectors. i.LINK connectors on the back of your system are 6-pin connectors.

Front Panel Overview

The front panel of your VAIO Digital Studio Computer allows for access to the diskette and CD-RW drives. It also includes USB and i.LINK ports to connect USB devices, CD changers, MiniDisc drives, or other components.

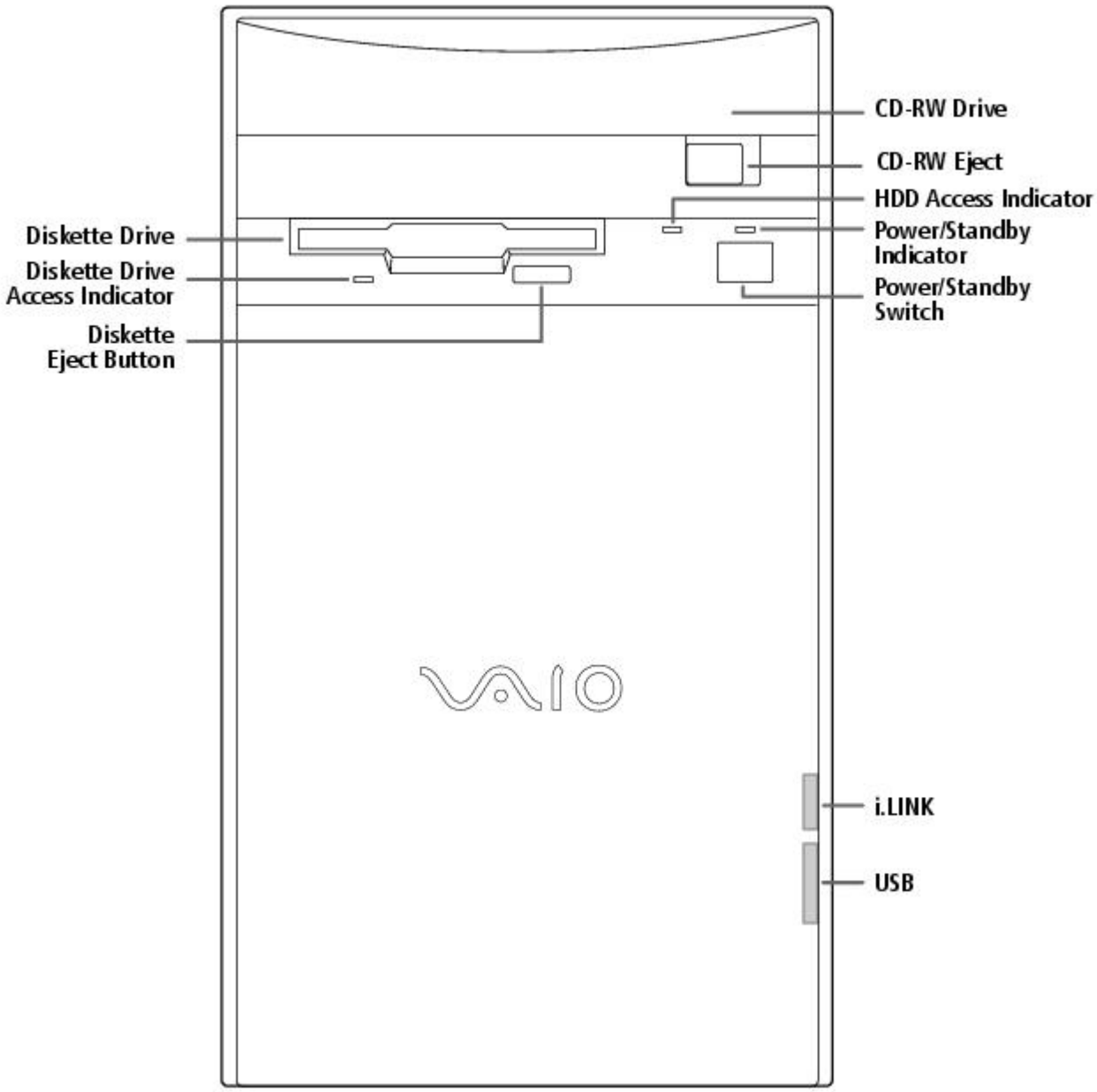

For your convenience, your computer includes USB and i.LINK connectors on both the front and back panels, allowing you to connect to either set of connectors. The i.LINK connector on the front of your system is a 4-pin connector.

Supplementary Information

For the most recent version of this manual, see the online version of Read Me First. You can access this document from the Windows Start Menu by selecting Programs/VAIO Documentation.

Hard Drive Partition

In order to improve the performance of your computer's DVgate Motion software, the hard disk drive on your computer has been formatted with two partitions, C and D. DVgate Motion saves files to the D partition. This prevents large video captures from consuming the available space on your C partition. To maintain optimum performance of DVgate Motion, you should defragment regularly.

VAIO Smart Keyboard Default Settings

The VAIO Smart Keyboard programmable buttons come with the following applications as their default settings:

S1 - Easy Internet Access Browser (Internet)

S2 - Outlook 98 (Mail)

S3 - MotorHead (Game)

S4 - Microsoft® Works (Work)

S5 - Quicken 99 Basic (Finance)

S6 - VAIO Documentation (Help)

All six buttons are reprogrammable.

Using The Standby Mode

To Put Your Computer into Standby Mode

When you are done using your computer, you can put it in Standby mode rather than turn it off completely. There are four ways to put your computer into Standby mode.

- Touch the power switch on the front panel.
- Click Shut Down at the bottom of the Start menu to display the Shut Down Windows dialog box. Select Stand by, and then click OK.
- Press the Standby button on the VAIO Smart Keyboard (the half moon icon).
- Change the timer settings for Standby mode in the Control Panel, as follows:

1. From the Start menu, point to Settings and click Control Panel.
2. Click the Power Management icon.
3. On the Power Schemes tab, change the Power scheme to Home/Office Desk.
4. In the list box for System standby, select an interval of time.
5. Click the OK button and close the Control Panel.

To Resume from Standby Mode

There are two ways to resume system functionality when your computer is in Standby mode. Use either of the following methods.

- Press any key on your keyboard, such as the Enter key.
- Touch the power switch on the front panel.

It may take up to 30 seconds for your system to recover stored information and resume functionality. The screen remains blank while the system is resuming functionality.

Applications That Use the TWAIN Driver

Digital imaging applications, such as Adobe PhotoDeluxe®, allow you to transfer images to your computer from external devices, including scanners or digital cameras. For some devices, a TWAIN driver window appears on the screen. Always close the TWAIN driver window before exiting or minimizing a digital imaging application.

Restoring Outlook 98

For the Add New Components functionality to be available with Microsoft Outlook, you must first run the installation program for Outlook from the Application Recovery CD. When prompted to install the program, select Exit. This decompresses the software, making the Add New Components functionality available.

Inserting Add-in Boards

Your VAIO Digital Studio Computer accommodates PCI add-in boards up to 7.7 inches in length.

Using Devices Connected to the i.LINK (IEEE 1394), S-Link (Control-A1), and Optical Digital Audio Output Connectors

For the latest information on devices known to be compatible with the state-of the-art audio, video, and graphics capabilities of your VAIO computer, check the Sony web site at http://www.sony.com/pcsupport.

Connecting to i.LINK Ports

Your VAIO computer includes a 4-pin i.LINK connector on the front of the system and two 6-pin i.LINK connectors on the back of the system. A 6-pin i.LINK connector can supply power from the computer to the connected device if the device is equipped with a 6-pin connector. Each 6-pin connector supplies 10V to 12V. The total power supplied by both 6-pin i.LINK connectors cannot exceed 6 watts. A 4-pin i.LINK connector cannot supply power to a connected device.

Capturing and Editing Digital Video Clips

- You can capture digital video clips using a digital video camera recorder and DVgate Motion software. Once the clips are saved as AVI files, they can be edited using DVgate Motion, DVgate Clip, or Adobe Premiere® LE. You cannot capture digital video clips directly using the Capture menu in Adobe Premiere LE. Adobe Premiere LE supports an analog capture board for capturing clips. Your VAIO computer is designed for digital video input.
- If there is no audio data associated with an AVI file, the message "Codec compression error" appears. If you do not wish to associate audio with your AVI file, you can add muted sound data by recording audio with the mute option enabled.
- For best performance, when editing AVI files in Adobe Premiere LE, you should use the default setup parameters that shipped with your system. If you change the default setup and want to reinitialize the parameters, follow these steps:

    1. In the Adobe Premiere LE application, select Compression from the Make menu. The Compression Settings dialog box appears.
    2. In the Method list box, select Sony DV software CODEC.
    3. Click OK to close the screen.
    4. From the Make menu, select Preset. The Preset dialog box appears.
    5. Select the parameters for Time Base, Compress, Output, and Preview Option settings as indicated below.

[Time base]

Time base - 29.97fps (required)

[Compress]

File type - AVI (required)
Compress Program Method - Sony DV software CODEC (required)
Compress Program Depth - Millions colors (No other options)
Quality (No control for this item)
Option: Frames per second - 30 (required)
Option: Basic Key Frames (No control for this item)
Option: Optimize Still Off (recommended)
Data rate - Recompress Off (recommended)

[Output options]

Video - On (required)
Video Size - 720x480
4:3 Aspect - Off (required)
VideoType - Field 2 (recommended)
Audio - On (required)
Audio Rate - 44kHz (required)
Audio Format - 16 Bit Stereo or 16 Bit Monaural (required)
Audio Type - Uncompress (required)
Audio Interleave - 1 frame (recommended)
- Less than 30 frames (required)

Audio Sync - 1.0 (required)
Audio Skew - 0.75 (recommended)
- Less than 1.0 (required)

[Preview Option]

Preview Window Size - 360x240

Note that Adobe Premiere LE does not save the Preview Window Size, but uses a default size of 320 x 213 each time the application launches. We recommend that you change this setting to 360 x 240 to improve the quality of preview clips when editing AVI files.

Using Alternate Browsers with America Online®

To use Internet Explorer or Netscape Navigator as your browser with America Online, follow these steps:

1. From the Start menu, point to Settings and then click Control Panel.
2. Click the Internet icon.
3. Click the Connection tab.
4. Click the "Connect to the Internet using local area network" radio button.
5. Click OK.

Using DVgate Motion

When capturing clips:

- Do not use DVgate Motion when the connected digital video peripheral is in Timer Recording mode, as this could produce a malfunction in the peripheral.
- Captures larger than 2 GB (9 minutes and 30 seconds) are automatically continued in a second file.
- You can record stereo audio (stereo 1) while capturing video. You cannot add audio on the stereo 2 track after capturing the video data.
- You cannot use different audio modes on the same tape. You should perform a separate capture for each audio mode you wish to use.
- DVgate Motion does not support hard disk compression. You should not use disk compression if you are planning to work with DVgate Motion.
- Title data is saved in the flash memory of a digital video camera and is not transferred to tape by DVgate Motion.
- To avoid interruption of capture sessions, you should disable the screen saver.
- The drop frame compensation feature does not provide accurate compensation adjustments for tapes recorded in LP mode.
- For tapes that include a mixture of both SP and LP mode, the information displayed by the capture progress indicator may not be accurate.
- Make sure the video head of your digital video device is properly cleaned. Anomalies that you see in captured data could be due to dust or other particles on the video head.
    - The last frame captured is one frame before your selected [OUT] point. The frame you see immediately after clicking the [OUT] button is not captured.

When recording AVI files to tape:

- Do not use DVgate Motion when the connected digital video peripheral is in Timer Recording mode, as this could produce a malfunction in the peripheral.

- You can record only AVI files. MPEG files cannot be recorded.
- To avoid recording problems, such as a single frame appearing in multiple frames, close other applications on your system while recording.
- You cannot use different audio modes on the same tape. If you have AVI files that use different audio modes, they cannot be recorded at the same time, but must be recorded separately.
- Do not attempt to work with AVI files that are smaller than 4 MB.
- DVgate Motion does not support hard disk compression. You should not use disk compression if you are planning to work with DVgate Motion.
- In order to maximize recording capabilities, video and audio data are not available while you are recording.

If DVgate Motion indicates that frames have been dropped, you should try closing all open applications, or you may need to defragment your hard drive.

Restoring Audio Drivers

When you restore the audio drivers from the Application Recovery CD, you need to restart your system to use these drivers. In the Add New Hardware wizard that appears when you restart, click the Next button until you are prompted for the location of the drivers. The audio drivers are located on the Application Recovery CD in G:\drivers\audio\AL98091701\English.

Using AC-3® to Optical Digital Audio Output

MiniDisc player/recorders, DAT player/recorders, and older digital receivers do not support Dolby® Digital (AC-3). You should not use the AC-3 to Optical Digital Audio Output option unless you are using a device that supports Dolby Digital. Please refer to the manual supplied with your equipment to determine if it supports Dolby Digital. If you are unsure and you have selected the AC-3 to Optical Digital Audio Output option, turn down the volume on your equipment before using the DVD player.

Using America Online or Sony Online Support with WinFax® Basic Edition

Once you have configured WinFax Basic Edition, it is automatically available for your use. You cannot use America Online or Sony Online Support when the automatic fax receive feature of WinFax Basic Edition is on. To disable this feature, right click the WinFax icon in the task tray at the bottom right corner of your screen, and then select Exit.

Memory Upgrade Specifications

When upgrading memory, use only 3.3V 64-bit PC-100 168 PIN SDRAM DIMM modules. For more information on Digital Studio Computer compatible memory, call Sony at 1-888-4SONYPC (1-888-476-6972).

About the Software On Your Computer

Your VAIO Digital Studio computer is ready to help you work, play, learn, and communicate as soon as you turn it on. This section gives you an overview of the activities you can perform with your software titles. For support information, see For Answers to Your Software Questions.

Adobe Acrobat® Reader

Adobe Systems Incorporated

Acrobat Reader software allows you to view, navigate, and print electronic documents in Adobe Portable Document Format (PDF), an open file format that is intended to preserve the fidelity of documents created on all major computer platforms.

Adobe PhotoDeluxe® Business Edition

Adobe Systems Incorporated

Create amazing photo effects with PhotoDeluxe. Without learning complex software, you can

enhance, restore, and be creative with your photos. Includes built-in guided activities, stock photos, clip art, and templates to assist you.

Adobe Premiere® LE

Adobe Systems Incorporated

Adobe Premiere LE offers an interface and editing tool for producing movies for video, multimedia, or the web. View source clips and edited footage simultaneously in the monitor window. Create video clips up to three hours long with complete audio-video synchronization.

America Online®

America Online

America Online is the world's most popular Internet online service. Stay in touch with family and friends with Easy-to-Use E-mail, manage your personal finances, get the latest news and sports scores, and chat with thousands of others who share your interests.

AT&T WorldNet® Service

AT&T

Fast, reliable Internet access from AT&T WorldNet Service. AT&T WorldNet Service provides web-based e-mail, a personalized start page from Excite, easy access to the Excite search engine, free web pages, online and live agent technical support, instant messaging, and special shopping discounts at Market Square.

CompuServe®

CompuServe, Inc.

CompuServe is the most comprehensive source of organized business and educational information online today. CompuServe allows you to access the vastness of the Internet without wasting time wading through it. Maximize your time online with CompuServe.

Digital Media Park

Sony Electronics

An integrated suite of multimedia cataloging and playback programs including Media Bar, Media Library, Media Showcase, and MiniDisc Editor. Manage your music by cataloging your entire CD collection, and then create custom MiniDiscs of your favorite songs.

Dr. Solomon's® Anti-Virus

Dr Solomon's Software Inc.

Dr. Solomon's Anti-Virus provides the most comprehensive defense against the spread of viruses, including macro viruses. It can scan inside compressed files and automatically protects your system against viruses sent via e-mail or Internet download.

DVgate Motion

Sony Electronics

Connect a digital video camera recorder to the i.LINK connector and capture your own video clips. You can edit the clips from your video, add others, and combine clips into new movie segments.

DVgate Still

Sony Electronics

Connect a digital video camera recorder to the i.LINK connector and capture your own still images. You can save your images in a variety of popular file formats.

EarthLink Sprint TotalAccess

EarthLink Network, Inc.

An Internet Service Provider that supplies access, information, and assistance to its customers, introducing them to the Internet. Member benefits include e-mail, newsgroups, a Personal Start Page, a free 6 MB web site, a member magazine, and 24-hour technical support.

Microsoft® Encarta® 99 Encyclopedia

Microsoft Corporation

Microsoft Encarta Encyclopedia combines current, comprehensive content with up-to-date multimedia technology, providing users with unique, engaging learning experiences. With the 1999 edition, Encarta provides a wealth of information resources and unique interactive features

Microsoft® Internet Explorer for Windows® 98

Microsoft Corporation

Internet Explorer delivers the web the way you want it. It's safe, easy to use, and you can personalize how you access the web. Outlook Express and other tools in Internet Explorer also help you have a great experience when you are on the web!

Microsoft® Money 99

Microsoft Corporation

Microsoft Money 99 is personal finance software that lets you perform your financial tasks, everything from paying bills to planning for the future, in a smarter, faster way. With Money's online services, you can pay bills and bank from the comfort of home.

Microsoft® Outlook® 98

Microsoft Corporation

Outlook 98 is Microsoft's premier messaging and collaboration client. It combines the leading support for Internet standards-based messaging systems with integrated calendar, contact, and task-management features.

Microsoft® Works

Microsoft Corporation

Works provides users with the right set of core tools that allows them to write letters and reports, track family and friends with the address book, manage home finances, and create a home inventory.

MotorHead

Gremlin Interactive Ltd.

MotorHead is realistic arcade-racing; high-velocity entertainment that puts you behind the wheel for 3D pure racing action. Power across Europe and USA in the Transatlantic Speed League, where second place is simply not an option.

Netscape Communicator®

Netscape Communications

Netscape Communicator is the all-in-one Internet tool that makes it easy to browse the web, send Internet e-mail, chat, read newsgroups, and compose great web documents.

PictureGear

Sony Electronics

This image management software displays images from your hard drive, a Sony digital still camera, or a Sony Mavica® camera. The images appear in a convenient light-table format, so that you can easily view the contents of an entire folder.

Prodigy Internet

Prodigy Communications Corporation

An Internet service that helps you find what you need online faster and smarter. Prodigy delivers powerful online content, such as sports scores, stock quotes, news, and easy access to Excite , plus a personal e-mail account and quality customer service, all at a competitive price.

Quicken® Basic 99

Intuit, Inc

Quicken is the fastest, easiest way to organize your finances. Quicken works just like your checkbook, so it's easy to learn and use. Quicken manages all of your finances, bank accounts, credit cards, investments, and loans. You can even pay your bills online.

SurfMonkey

MediaLive, Inc

SurfMonkey is a web browser and online service for kids ages 6-12 that makes the Internet safe, fun, and easy. A talking monkey guides children through web sites and chat rooms, and can read their e-mail out loud. Children cannot go to inappropriate web sites, parents can screen e-mail messages, and chat messages are monitored.

VAIO Smart Keyboard

Sony Electronics

VAIO Smart Keyboard software operates your new easy to use programmable USB keyboard. Six programmable buttons enable you to launch your favorite applications, open frequently used files, access Explorer, or even open your web browser with just the click of a button.

WinFax® Basic Edition

Symantec Corporation

WinFax Basic Edition incorporates an easy-to-use interface that allows you to send and receive faxes easily. Upgrade to WinFax Pro to receive additional features.

About Your Recovery CDs

Application Recovery CD(s)

Sony Electronics

The Application Recovery CD program allows you to reinstall individual applications and device drivers. Use it to restore corrupted or accidentally erased files.

System Recovery CD(s)

Sony Electronics

The System Recovery CD program allows you to restore the software titles that shipped with your computer if they become corrupted or are erased accidentally. It can be used only to restore the hard disk of the Sony computer you purchased.

For Answers to Your Software Questions

Sony Service Center

For the Sony Service Center nearest you, call at 1-888-4SONYPC (1-888-476-6972).

Acrobat® Reader, Adobe PhotoDeluxe® Business Edition , Adobe Premiere® LE (Adobe Systems Incorporated)

Web site http://www.adobe.com/
phone 206-628-2746 (fee-based support)
fax 206-628-5737
e-mail techdocs@adobe.com
hours M-F, 6 AM-5 PM PT

America Online® (America Online)

Web site http://www.aol.com/
phone 800-827-3338
hours 7 days a week, 6 AM - 2 PM ET

AT&T WorldNet® Service (AT&T)

Web site http://www.att.net/*
phone 800-400-1447
e-mail worldnet@attmail.com
hours 7 days a week, 24 hours a day

* You must be a WorldNet Service customer to access online support.

CompuServe® Interactive (CompuServe Interactive, Inc.)

Web site http://www.compuserve.com/
phone 800-848-8990
hours M-F, 8 AM - 1 AM ET, S-S 10 AM - 10 PM ET

Dr. Solomon's® Anti-Virus (Dr. Solomon's Software Inc.)

Web site http://www.drsolomon.com/
phone 888-377-6566
e-mail support@us.drsolomon.com
hours 7 days a week, 24 hours a day

EarthLink Sprint TotalAccess (EarthLink Network, Inc.)

Web site http://help.earthlink.net/techsupport/
phone 800-395-8410
e-mail support@earthlink.net
hours 7 days a week, 24 hours a day

Easy Internet Access (Encompass, Inc.)

Web site http://www.encmpss.com/
phone 800-927-3000
hours 7 days a week, 24 hours a day

MotorHead (Gremlin Interactive Ltd.)

Web site http://www.gremlin.com/
phone 888-4SONYPC (888-476-6972)
hours 7 days a week, 24 hours a day

Windows® 98 Operating System, Works, Money, Encarta, Internet Explorer (Microsoft Corporation)

Web site http://www.microsoft.com/support/
phone 888-4SONYPC (888-476-6972)*
hours 7 days a week, 24 hours a day
* Support from 1-888-4SONYPC is free of charge for 90 days after the original date of purchase.

Netscape Communicator® (Netscape Communications Corporation)

Web site http://www.netscape.com/
phone 888-4SONYPC (888-476-6972)*
hours 7 days a week, 24 hours a day
* Support from 1-888-4SONYPC is free of charge for 90 days after the original date of purchase.

Prodigy Internet (Prodigy Communications Corporation.)

Web site http://www.prodigy.com/
phone 800-PRODIGY
hours 7 AM - 3 AM ET

Quicken® Basic (Intuit Inc.)

Web site http://www.intuit.com/support/
phone 900-555-4688
hours 7 days a week, 24 hours a day

SurfMonkey (MediaLive, Inc.)

Web site http://www.surfmonkey.com/support/Sub_support.html
phone 408-556-2060
e-mail support@surfmonkey.com
hours 9AM-10PM PT everyday

WinFax® Basic Edition (Symantec Corporation.)

Web site http://www.symantec.com/techsupp/
phone 800-798-0850
fax 800-554-4403 in North America
541-984-2490 outside North America

Specifications

Model **PCV-E518DS**
Processor 500 MHz Pentium® III
Hard Disk Drive 17.28 GB
Standard SDRAM 128 MB PC-100 SDRAM, expandable to 256 MB
Video RAM 8 MB SDRAM
MPEG "Sony Tuned" MPEG Digital Video supports full-screen video playback
Graphics 3D 2X AGP graphics acceleration (Matrox)
Sound Capabilities 3D Positional Audio (Aureal A3D)
Diskette Drive 3.5" 1.44 MB FDD
CD-RW Drive CD-RW Drive (4X max. CD-R writing, 2X max. CD-RW writing, 24X max. reading)
Modem K56flex technology/V.90 compatible data/fax modem[1]
Expansion Capabilities One PCI slot
One additional hard disk drive bay
Connection Capabilities (Front) USB port
i.LINK port (4-pin)
Connection Capabilities (Rear) Optional Keyboard (PS/2-style)
Mouse (PS/2-style)
USB port
Serial port
Parallel (printer)
Game/MIDI
Headphones
Line In
Microphone
VGA Monitor
S-Link (Control-A1)
Optical Digital Audio Out
Two i.LINK ports (6-pin)[2]
Modem line (RJ-11)
Phone line (RJ-11)
Supplied Accessories VAIO Smart keyboard
Sony two-button mouse
RJ-11 phone cable
Power cord
Service 90-day limited service. Extendible to one year from original date of purchase upon registration[3]
Limited Warranty 90-day parts/labor standard. Extendible to one year from original date of purchase upon registration[4]

Power Requirements 200 watts maximum
Dimensions 7" (w) x 12" (h) x 13 3/4" (d) (178mm x 304mm x 330mm)
Weight 17 lbs. (7.71 kg)
Operating Temperature 50º F to 95º F (+10º C to 35º C)

[1] Maximum speed for faxing is 14.4 kbytes/s. Your modem is capable of downloading at 56 kbytes/s using K56flex technology or V.90. Your phone service, online service, or Internet Service Provider however, may not support this technology or operate at this speed.

[2] Six-pin i-LINK connectors on the rear of the system each supply 10V to 12V. The combined total wattage that can be supplied by the two connectors is 6 watts.

[3] Certain restrictions apply

[4] Certain restrictions apply

Specifications are subject to change without notice.

This product meets the standards of the International Energy Star Program for energy efficiency.

© 1999 Sony Electronics Inc. Reproduction in w hole or in part w ithout w ritten permission is prohibited. All rights reserved.

Read Me First

Welcome

Congratulations on your purchase of the Sony VAIO Digital Studio Computer. Sony has combined leading-edge technology in audio, video, computing, and communications to provide you with state-of-the-art personal computing.

Features

 For a complete description of the specifications of your VAIO Digital Studio Computer, see Specifications.

- **Exceptional performance:** Your computer includes a brand new Intel® Pentium® III processor, a CD-RW drive, and a V.90 compatible data/fax modem.*

* Actual upload and download speeds may vary due to line conditions, ISP support, and government regulations.

- **CD-RW drive:** This drive is the ideal solution for making backups and data archiving, with the ability to store up to 650 MB* of removable, rewritable storage on a single rewritable CD. Save your movies to CD-R or CD-RW media and share videos and images with family and friends.

* 530 MB after formatting.

- **VAIO Smart Keyboard:** This USB keyboard has programmable shortcut buttons for launching your favorite programs or accessing the Internet.
- **Sony audio and video quality:** High-fidelity positional 3D audio system (A3D), high-powered 3D graphics (AGP), and "Sony-Tuned" MPEG digital video playback enable you to take advantage of today's advanced multimedia applications, games, and entertainment software.
- **S-Link (Control-A1):** This technology allows you to build a database of all your music and video CDs and then record your favorite audio selections on MiniDiscs. Use your computer with a 200 disc mega-storage CD changer and a MiniDisc recording deck.
- **i.LINK (IEEE 1394):** Three built-in i.LINK ports provide you with maximum digital connection capability. The i.LINK name and logo identify a digital interface (IEEE 1394) for high speed communication. By using your VAIO Digital Studio Computer, a Sony Digital Handycam® Camcorder, the DVgate software preinstalled on your computer, and the i.LINK (IEEE 1394) interface, you can easily create and edit your own home videos.
- **Optical Digital Audio Output:** This high-quality digital interface transmits digital audio data via light pulses. Transfer crystal clear digital audio to your MiniDisc recorder.
- **Digital Studio Software**: Enjoy all of your computer's audio and video capabilities with component-like applications that allow you to creatively manipulate digital still images, video clips, and audio tracks.
- **50 free hours of Internet access:** Use the Internet for up to 50 free hours when you sign up with GTE (no credit card required). Limit of two hours per day. Free access expires after 50 hours or 90 days after signing up--whichever occurs first.
- **Preinstalled software titles**: All the software on your computer is preinstalled, configured, and ready for you to use right out of the box.
- **Windows® 98**: Your system includes the latest operating system from Microsoft.
- **Communications:** Access popular online services, browse the Internet, send faxes, and more.

Unpacking Your Computer

Computer and Supplied Accessories

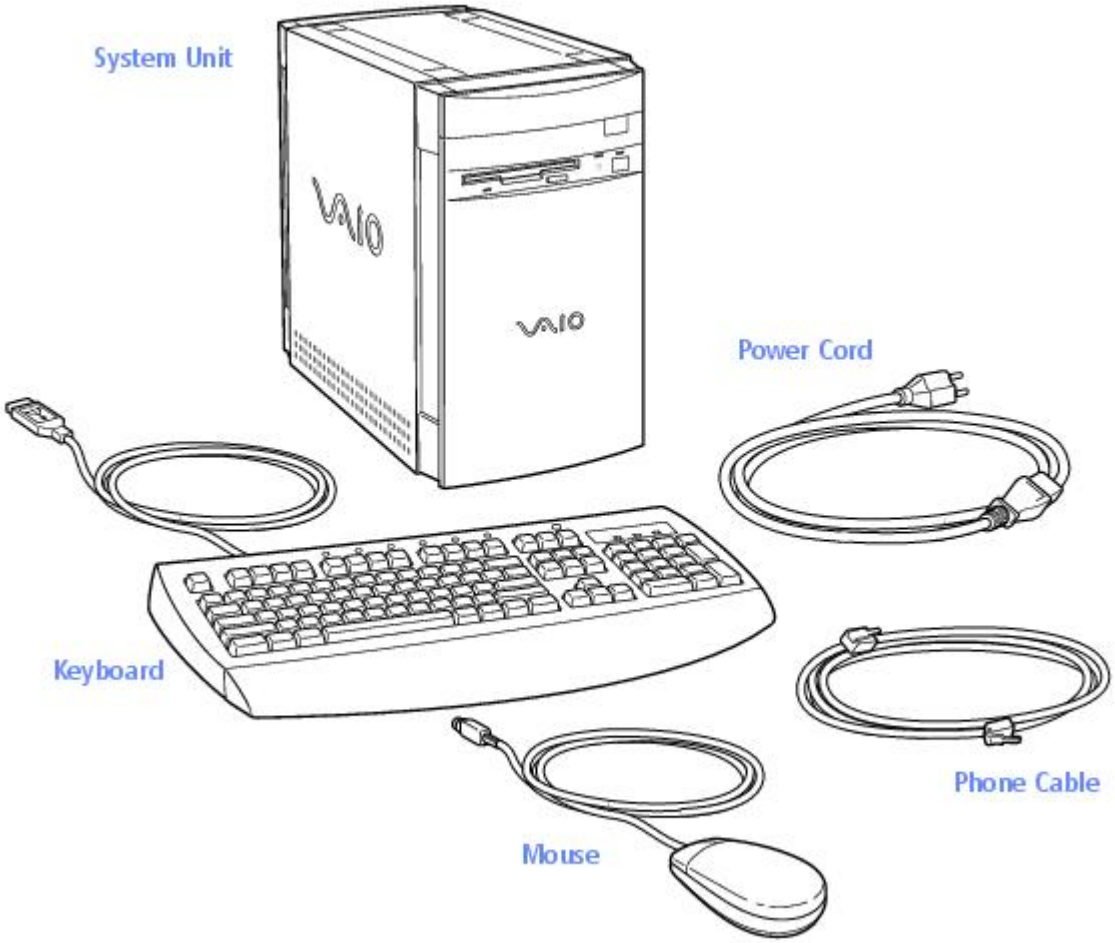

Manuals

- *Read Me First* (this manual) contains features and specifications of your computer. It also includes information on the applications included with your system, how to contact software vendors, and last minute troubleshooting tips.
- The *VAIO Digital Studio Computer User Guide* describes how to get started with your computer, find help, and solve common problems.
- The *Microsoft® Windows®98 Getting Started* manual explains how to use the basic features of the Windows operating system.

Recovery CDs

- System Recovery CD(s)
- Application Recovery CD(s)

Other

- Setting up your VAIO Digital Studio Computer (poster)
- Packet containing special product offers

Software Library

The Software Library contains the Microsoft software license agreement, Sony end-user license agreement, and the following CDs:

- Adobe PhotoDeluxe® Business Edition 3.0
- Gremlin Interactive Ltd. MotorHead
- Microsoft® Encarta® 99 Encyclopedia
- Microsoft® Money/Microsoft® Works

Back Panel Overview

The back panel of your computer contains the connectors where you plug in supplied and optional accessories. The icons on the back panel serve as a map to help you locate the connectors on your computer.

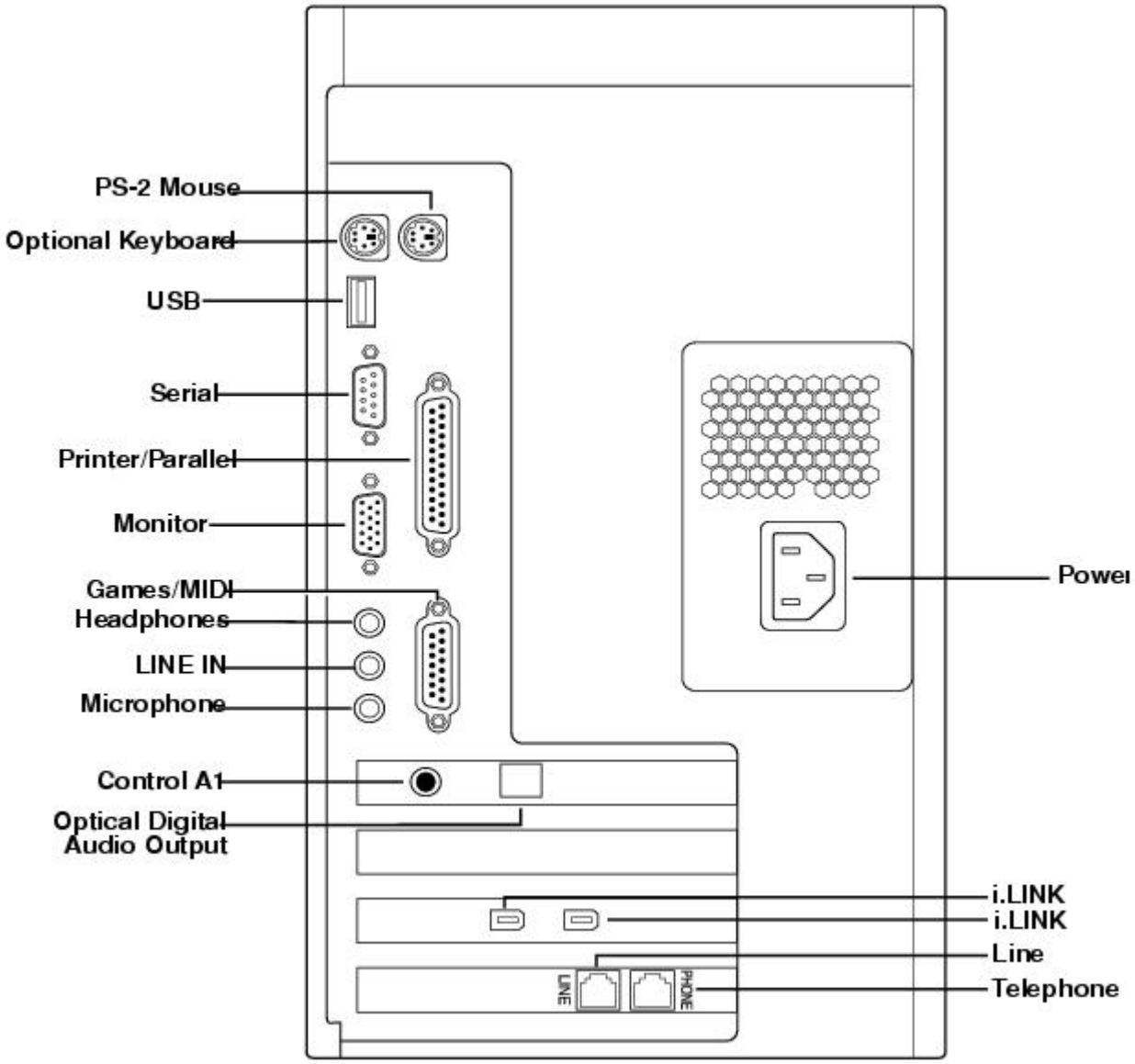

For your convenience, your computer includes USB and i.LINK connectors on both the front and back panels, allowing you to connect to either set of connectors. i.LINK connectors on the back of your system are 6-pin connectors.

Front Panel Overview

The front panel of your VAIO Digital Studio Computer allows for access to the diskette and CD-RW drives. It also includes USB and i.LINK ports to connect USB devices, CD changers, MiniDisc drives, or other components.

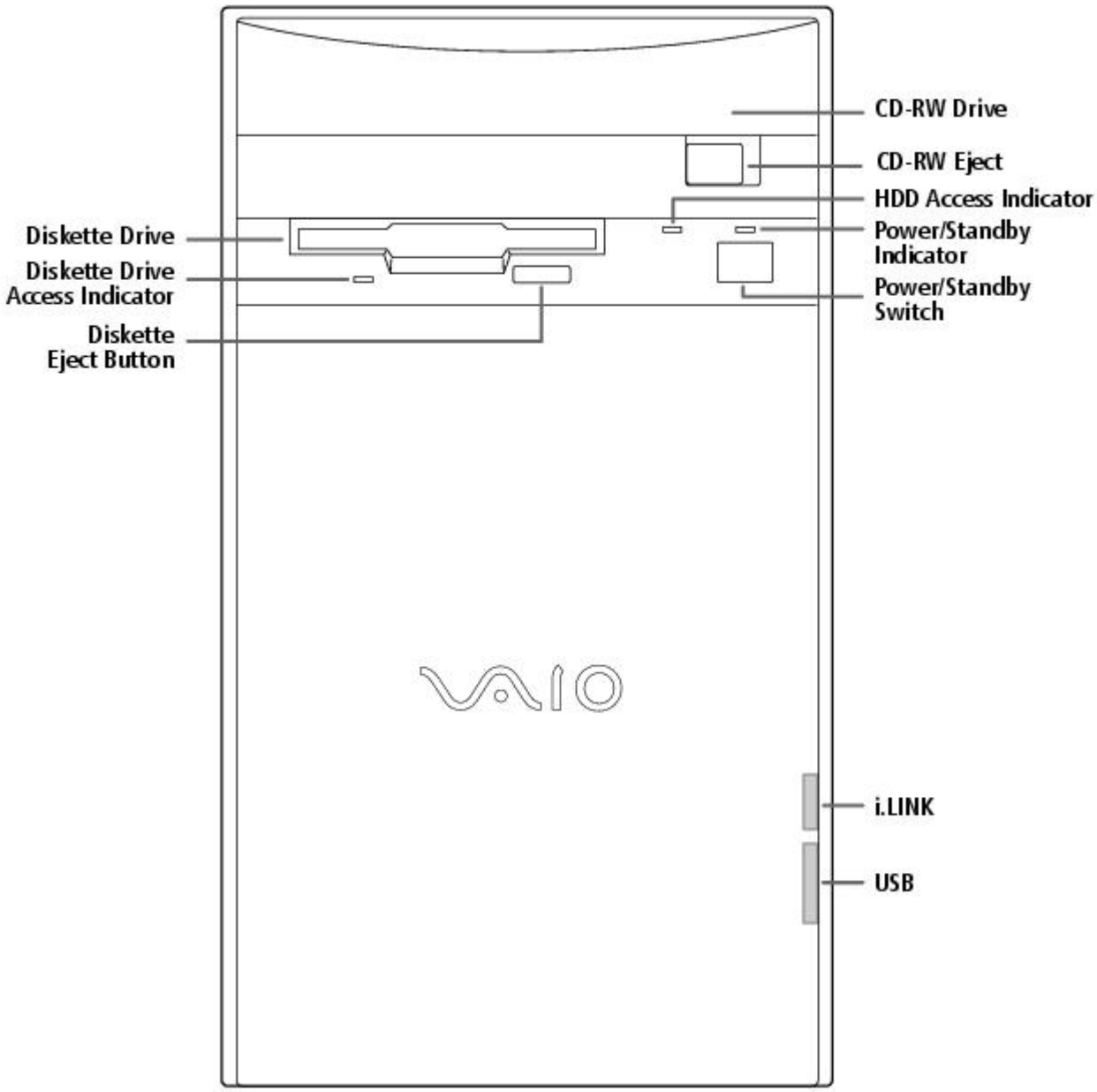

For your convenience, your computer includes USB and i.LINK connectors on both the front and back panels, allowing you to connect to either set of connectors. The i.LINK connector on the front of your system is a 4-pin connector.

Supplementary Information

For the most recent version of this manual, see the online version of Read Me First. You can access this document from the Windows Start Menu by selecting Programs/VAIO Documentation.

Hard Drive Partition

In order to improve the performance of your computer's DVgate Motion software, the hard disk drive on your computer has been formatted with two partitions, C and D. DVgate Motion saves files to the D partition. This prevents large video captures from consuming the available space on your C partition. To maintain optimum performance of DVgate Motion, you should defragment regularly.

VAIO Smart Keyboard Default Settings

The VAIO Smart Keyboard programmable buttons come with the following applications as their default settings:

S1 - Easy Internet Access Browser (Internet)

S2 - Outlook 98 (Mail)

S3 - MotorHead (Game)

S4 - Microsoft® Works (Work)

S5 - Quicken 99 Basic (Finance)

S6 - VAIO Documentation (Help)

All six buttons are reprogrammable.

Using The Standby Mode

To Put Your Computer into Standby Mode

When you are done using your computer, you can put it in Standby mode rather than turn it off completely. There are four ways to put your computer into Standby mode.

- Touch the power switch on the front panel.
- Click Shut Down at the bottom of the Start menu to display the Shut Down Windows dialog box. Select Stand by, and then click OK.
- Press the Standby button on the VAIO Smart Keyboard (the half moon icon).
- Change the timer settings for Standby mode in the Control Panel, as follows:

1. From the Start menu, point to Settings and click Control Panel.
2. Click the Power Management icon.
3. On the Power Schemes tab, change the Power scheme to Home/Office Desk.
4. In the list box for System standby, select an interval of time.
5. Click the OK button and close the Control Panel.

To Resume from Standby Mode

There are two ways to resume system functionality when your computer is in Standby mode. Use either of the following methods.

- Press any key on your keyboard, such as the Enter key.
- Touch the power switch on the front panel.

It may take up to 30 seconds for your system to recover stored information and resume functionality. The screen remains blank while the system is resuming functionality.

Applications That Use the TWAIN Driver

Digital imaging applications, such as Adobe PhotoDeluxe®, allow you to transfer images to your computer from external devices, including scanners or digital cameras. For some devices, a TWAIN driver window appears on the screen. Always close the TWAIN driver window before exiting or minimizing a digital imaging application.

Restoring Outlook 98

For the Add New Components functionality to be available with Microsoft Outlook, you must first run the installation program for Outlook from the Application Recovery CD. When prompted to install the program, select Exit. This decompresses the software, making the Add New Components functionality available.

Inserting Add-in Boards

Your VAIO Digital Studio Computer accommodates PCI add-in boards up to 7.7 inches in length.

Using Devices Connected to the i.LINK (IEEE 1394), S-Link (Control-A1), and Optical Digital Audio Output Connectors

For the latest information on devices known to be compatible with the state-of the-art audio, video, and graphics capabilities of your VAIO computer, check the Sony web site at http://www.sony.com/pcsupport.

Connecting to i.LINK Ports

Your VAIO computer includes a 4-pin i.LINK connector on the front of the system and two 6-pin i.LINK connectors on the back of the system. A 6-pin i.LINK connector can supply power from the computer to the connected device if the device is equipped with a 6-pin connector. Each 6-pin connector supplies 10V to 12V. The total power supplied by both 6-pin i.LINK connectors cannot exceed 6 watts. A 4-pin i.LINK connector cannot supply power to a connected device.

Capturing and Editing Digital Video Clips

- You can capture digital video clips using a digital video camera recorder and DVgate Motion software. Once the clips are saved as AVI files, they can be edited using DVgate Motion, DVgate Clip, or Adobe Premiere® LE. You cannot capture digital video clips directly using the Capture menu in Adobe Premiere LE. Adobe Premiere LE supports an analog capture board for capturing clips. Your VAIO computer is designed for digital video input.
- If there is no audio data associated with an AVI file, the message "Codec compression error" appears. If you do not wish to associate audio with your AVI file, you can add muted sound data by recording audio with the mute option enabled.
- For best performance, when editing AVI files in Adobe Premiere LE, you should use the default setup parameters that shipped with your system. If you change the default setup and want to reinitialize the parameters, follow these steps:

    1. In the Adobe Premiere LE application, select Compression from the Make menu. The Compression Settings dialog box appears.
    2. In the Method list box, select Sony DV software CODEC.
    3. Click OK to close the screen.
    4. From the Make menu, select Preset. The Preset dialog box appears.
    5. Select the parameters for Time Base, Compress, Output, and Preview Option settings as indicated below.

[Time base]

Time base - 29.97fps (required)

[Compress]

File type - AVI (required)
Compress Program Method - Sony DV software CODEC (required)
Compress Program Depth - Millions colors (No other options)
Quality (No control for this item)
Option: Frames per second - 30 (required)
Option: Basic Key Frames (No control for this item)
Option: Optimize Still Off (recommended)
Data rate - Recompress Off (recommended)

[Output options]

Video - On (required)
Video Size - 720x480
4:3 Aspect - Off (required)
VideoType - Field 2 (recommended)
Audio - On (required)
Audio Rate - 44kHz (required)
Audio Format - 16 Bit Stereo or 16 Bit Monaural (required)
Audio Type - Uncompress (required)
Audio Interleave - 1 frame (recommended)
- Less than 30 frames (required)

Audio Sync - 1.0 (required)
Audio Skew - 0.75 (recommended)
- Less than 1.0 (required)

[Preview Option]

Preview Window Size - 360x240

Note that Adobe Premiere LE does not save the Preview Window Size, but uses a default size of 320 x 213 each time the application launches. We recommend that you change this setting to 360 x 240 to improve the quality of preview clips when editing AVI files.

Using Alternate Browsers with America Online®

To use Internet Explorer or Netscape Navigator as your browser with America Online, follow these steps:

1. From the Start menu, point to Settings and then click Control Panel.
2. Click the Internet icon.
3. Click the Connection tab.
4. Click the "Connect to the Internet using local area network" radio button.
5. Click OK.

Using DVgate Motion

When capturing clips:

- Do not use DVgate Motion when the connected digital video peripheral is in Timer Recording mode, as this could produce a malfunction in the peripheral.
- Captures larger than 2 GB (9 minutes and 30 seconds) are automatically continued in a second file.
- You can record stereo audio (stereo 1) while capturing video. You cannot add audio on the stereo 2 track after capturing the video data.
- You cannot use different audio modes on the same tape. You should perform a separate capture for each audio mode you wish to use.
- DVgate Motion does not support hard disk compression. You should not use disk compression if you are planning to work with DVgate Motion.
- Title data is saved in the flash memory of a digital video camera and is not transferred to tape by DVgate Motion.
- To avoid interruption of capture sessions, you should disable the screen saver.
- The drop frame compensation feature does not provide accurate compensation adjustments for tapes recorded in LP mode.
- For tapes that include a mixture of both SP and LP mode, the information displayed by the capture progress indicator may not be accurate.
- Make sure the video head of your digital video device is properly cleaned. Anomalies that you see in captured data could be due to dust or other particles on the video head.
    - The last frame captured is one frame before your selected [OUT] point. The frame you see immediately after clicking the [OUT] button is not captured.

When recording AVI files to tape:

- Do not use DVgate Motion when the connected digital video peripheral is in Timer Recording mode, as this could produce a malfunction in the peripheral.

- You can record only AVI files. MPEG files cannot be recorded.
- To avoid recording problems, such as a single frame appearing in multiple frames, close other applications on your system while recording.
- You cannot use different audio modes on the same tape. If you have AVI files that use different audio modes, they cannot be recorded at the same time, but must be recorded separately.
- Do not attempt to work with AVI files that are smaller than 4 MB.
- DVgate Motion does not support hard disk compression. You should not use disk compression if you are planning to work with DVgate Motion.
- In order to maximize recording capabilities, video and audio data are not available while you are recording.

If DVgate Motion indicates that frames have been dropped, you should try closing all open applications, or you may need to defragment your hard drive.

Restoring Audio Drivers

When you restore the audio drivers from the Application Recovery CD, you need to restart your system to use these drivers. In the Add New Hardware wizard that appears when you restart, click the Next button until you are prompted for the location of the drivers. The audio drivers are located on the Application Recovery CD in G:\drivers\audio\AL98091701\English.

Using AC-3® to Optical Digital Audio Output

MiniDisc player/recorders, DAT player/recorders, and older digital receivers do not support Dolby® Digital (AC-3). You should not use the AC-3 to Optical Digital Audio Output option unless you are using a device that supports Dolby Digital. Please refer to the manual supplied with your equipment to determine if it supports Dolby Digital. If you are unsure and you have selected the AC-3 to Optical Digital Audio Output option, turn down the volume on your equipment before using the DVD player.

Using America Online or Sony Online Support with WinFax® Basic Edition

Once you have configured WinFax Basic Edition, it is automatically available for your use. You cannot use America Online or Sony Online Support when the automatic fax receive feature of WinFax Basic Edition is on. To disable this feature, right click the WinFax icon in the task tray at the bottom right corner of your screen, and then select Exit.

Memory Upgrade Specifications

When upgrading memory, use only 3.3V 64-bit PC-100 168 PIN SDRAM DIMM modules. For more information on Digital Studio Computer compatible memory, call Sony at 1-888-4SONYPC (1-888-476-6972).

About the Software On Your Computer

Your VAIO Digital Studio computer is ready to help you work, play, learn, and communicate as soon as you turn it on. This section gives you an overview of the activities you can perform with your software titles. For support information, see For Answers to Your Software Questions.

Adobe Acrobat® Reader

Adobe Systems Incorporated

Acrobat Reader software allows you to view, navigate, and print electronic documents in Adobe Portable Document Format (PDF), an open file format that is intended to preserve the fidelity of documents created on all major computer platforms.

Adobe PhotoDeluxe® Business Edition

Adobe Systems Incorporated

Create amazing photo effects with PhotoDeluxe. Without learning complex software, you can

enhance, restore, and be creative with your photos. Includes built-in guided activities, stock photos, clip art, and templates to assist you.

Adobe Premiere® LE

Adobe Systems Incorporated

Adobe Premiere LE offers an interface and editing tool for producing movies for video, multimedia, or the web. View source clips and edited footage simultaneously in the monitor window. Create video clips up to three hours long with complete audio-video synchronization.

America Online®

America Online

America Online is the world's most popular Internet online service. Stay in touch with family and friends with Easy-to-Use E-mail, manage your personal finances, get the latest news and sports scores, and chat with thousands of others who share your interests.

AT&T WorldNet® Service

AT&T

Fast, reliable Internet access from AT&T WorldNet Service. AT&T WorldNet Service provides web-based e-mail, a personalized start page from Excite, easy access to the Excite search engine, free web pages, online and live agent technical support, instant messaging, and special shopping discounts at Market Square.

CompuServe®

CompuServe, Inc.

CompuServe is the most comprehensive source of organized business and educational information online today. CompuServe allows you to access the vastness of the Internet without wasting time wading through it. Maximize your time online with CompuServe.

Digital Media Park

Sony Electronics

An integrated suite of multimedia cataloging and playback programs including Media Bar, Media Library, Media Showcase, and MiniDisc Editor. Manage your music by cataloging your entire CD collection, and then create custom MiniDiscs of your favorite songs.

Dr. Solomon's® Anti-Virus

Dr Solomon's Software Inc.

Dr. Solomon's Anti-Virus provides the most comprehensive defense against the spread of viruses, including macro viruses. It can scan inside compressed files and automatically protects your system against viruses sent via e-mail or Internet download.

DVgate Motion

Sony Electronics

Connect a digital video camera recorder to the i.LINK connector and capture your own video clips. You can edit the clips from your video, add others, and combine clips into new movie segments.

DVgate Still

Sony Electronics

Connect a digital video camera recorder to the i.LINK connector and capture your own still images. You can save your images in a variety of popular file formats.

EarthLink Sprint TotalAccess

EarthLink Network, Inc.

An Internet Service Provider that supplies access, information, and assistance to its customers, introducing them to the Internet. Member benefits include e-mail, newsgroups, a Personal Start Page, a free 6 MB web site, a member magazine, and 24-hour technical support.

Microsoft® Encarta® 99 Encyclopedia

Microsoft Corporation

Microsoft Encarta Encyclopedia combines current, comprehensive content with up-to-date multimedia technology, providing users with unique, engaging learning experiences. With the 1999 edition, Encarta provides a wealth of information resources and unique interactive features

Microsoft® Internet Explorer for Windows® 98

Microsoft Corporation

Internet Explorer delivers the web the way you want it. It's safe, easy to use, and you can personalize how you access the web. Outlook Express and other tools in Internet Explorer also help you have a great experience when you are on the web!

Microsoft® Money 99

Microsoft Corporation

Microsoft Money 99 is personal finance software that lets you perform your financial tasks, everything from paying bills to planning for the future, in a smarter, faster way. With Money's online services, you can pay bills and bank from the comfort of home.

Microsoft® Outlook® 98

Microsoft Corporation

Outlook 98 is Microsoft's premier messaging and collaboration client. It combines the leading support for Internet standards-based messaging systems with integrated calendar, contact, and task-management features.

Microsoft® Works

Microsoft Corporation

Works provides users with the right set of core tools that allows them to write letters and reports, track family and friends with the address book, manage home finances, and create a home inventory.

MotorHead

Gremlin Interactive Ltd.

MotorHead is realistic arcade-racing; high-velocity entertainment that puts you behind the wheel for 3D pure racing action. Power across Europe and USA in the Transatlantic Speed League, where second place is simply not an option.

Netscape Communicator®

Netscape Communications

Netscape Communicator is the all-in-one Internet tool that makes it easy to browse the web, send Internet e-mail, chat, read newsgroups, and compose great web documents.

PictureGear

Sony Electronics

This image management software displays images from your hard drive, a Sony digital still camera, or a Sony Mavica® camera. The images appear in a convenient light-table format, so that you can easily view the contents of an entire folder.

Prodigy Internet

Prodigy Communications Corporation

An Internet service that helps you find what you need online faster and smarter. Prodigy delivers powerful online content, such as sports scores, stock quotes, news, and easy access to Excite , plus a personal e-mail account and quality customer service, all at a competitive price.

Quicken® Basic 99

Intuit, Inc

Quicken is the fastest, easiest way to organize your finances. Quicken works just like your checkbook, so it's easy to learn and use. Quicken manages all of your finances, bank accounts, credit cards, investments, and loans. You can even pay your bills online.

SurfMonkey

MediaLive, Inc

SurfMonkey is a web browser and online service for kids ages 6-12 that makes the Internet safe, fun, and easy. A talking monkey guides children through web sites and chat rooms, and can read their e-mail out loud. Children cannot go to inappropriate web sites, parents can screen e-mail messages, and chat messages are monitored.

VAIO Smart Keyboard

Sony Electronics

VAIO Smart Keyboard software operates your new easy to use programmable USB keyboard. Six programmable buttons enable you to launch your favorite applications, open frequently used files, access Explorer, or even open your web browser with just the click of a button.

WinFax® Basic Edition

Symantec Corporation

WinFax Basic Edition incorporates an easy-to-use interface that allows you to send and receive faxes easily. Upgrade to WinFax Pro to receive additional features.

About Your Recovery CDs

Application Recovery CD(s)

Sony Electronics

The Application Recovery CD program allows you to reinstall individual applications and device drivers. Use it to restore corrupted or accidentally erased files.

System Recovery CD(s)

Sony Electronics

The System Recovery CD program allows you to restore the software titles that shipped with your computer if they become corrupted or are erased accidentally. It can be used only to restore the hard disk of the Sony computer you purchased.

For Answers to Your Software Questions

Sony Service Center

For the Sony Service Center nearest you, call at 1-888-4SONYPC (1-888-476-6972).

Acrobat® Reader, Adobe PhotoDeluxe® Business Edition , Adobe Premiere® LE (Adobe Systems Incorporated)

Web site http://www.adobe.com/
phone 206-628-2746 (fee-based support)
fax 206-628-5737
e-mail techdocs@adobe.com
hours M-F, 6 AM-5 PM PT

America Online® (America Online)

Web site http://www.aol.com/
phone 800-827-3338
hours 7 days a week, 6 AM - 2 PM ET

AT&T WorldNet® Service (AT&T)

Web site http://www.att.net/*
phone 800-400-1447
e-mail worldnet@attmail.com
hours 7 days a week, 24 hours a day

* You must be a WorldNet Service customer to access online support.

CompuServe® Interactive (CompuServe Interactive, Inc.)

Web site http://www.compuserve.com/
phone 800-848-8990
hours M-F, 8 AM - 1 AM ET, S-S 10 AM - 10 PM ET

Dr. Solomon's® Anti-Virus (Dr. Solomon's Software Inc.)

Web site http://www.drsolomon.com/
phone 888-377-6566
e-mail support@us.drsolomon.com
hours 7 days a week, 24 hours a day

EarthLink Sprint TotalAccess (EarthLink Network, Inc.)

Web site http://help.earthlink.net/techsupport/
phone 800-395-8410
e-mail support@earthlink.net
hours 7 days a week, 24 hours a day

Easy Internet Access (Encompass, Inc.)

Web site http://www.encmpss.com/
phone 800-927-3000
hours 7 days a week, 24 hours a day

MotorHead (Gremlin Interactive Ltd.)

Web site http://www.gremlin.com/
phone 888-4SONYPC (888-476-6972)
hours 7 days a week, 24 hours a day

Windows® 98 Operating System, Works, Money, Encarta, Internet Explorer (Microsoft Corporation)

Web site http://www.microsoft.com/support/
phone 888-4SONYPC (888-476-6972)*
hours 7 days a week, 24 hours a day
* Support from 1-888-4SONYPC is free of charge for 90 days after the original date of purchase.

Netscape Communicator® (Netscape Communications Corporation)

Web site http://www.netscape.com/
phone 888-4SONYPC (888-476-6972)*
hours 7 days a week, 24 hours a day
* Support from 1-888-4SONYPC is free of charge for 90 days after the original date of purchase.

Prodigy Internet (Prodigy Communications Corporation.)

Web site http://www.prodigy.com/
phone 800-PRODIGY
hours 7 AM - 3 AM ET

Quicken® Basic (Intuit Inc.)

Web site http://www.intuit.com/support/
phone 900-555-4688
hours 7 days a week, 24 hours a day

SurfMonkey (MediaLive, Inc.)

Web site http://www.surfmonkey.com/support/Sub_support.html
phone 408-556-2060
e-mail support@surfmonkey.com
hours 9AM-10PM PT everyday

WinFax® Basic Edition (Symantec Corporation.)

Web site http://www.symantec.com/techsupp/
phone 800-798-0850
fax 800-554-4403 in North America
541-984-2490 outside North America

Specifications

Model **PCV-E518DS**
Processor 500 MHz Pentium® III
Hard Disk Drive 17.28 GB
Standard SDRAM 128 MB PC-100 SDRAM, expandable to 256 MB
Video RAM 8 MB SDRAM
MPEG "Sony Tuned" MPEG Digital Video supports full-screen video playback
Graphics 3D 2X AGP graphics acceleration (Matrox)
Sound Capabilities 3D Positional Audio (Aureal A3D)
Diskette Drive 3.5" 1.44 MB FDD
CD-RW Drive CD-RW Drive (4X max. CD-R writing, 2X max. CD-RW writing, 24X max. reading)
Modem K56flex technology/V.90 compatible data/fax modem[1]
Expansion Capabilities One PCI slot
One additional hard disk drive bay
Connection Capabilities (Front) USB port
i.LINK port (4-pin)
Connection Capabilities (Rear) Optional Keyboard (PS/2-style)
Mouse (PS/2-style)
USB port
Serial port
Parallel (printer)
Game/MIDI
Headphones
Line In
Microphone
VGA Monitor
S-Link (Control-A1)
Optical Digital Audio Out
Two i.LINK ports (6-pin)[2]
Modem line (RJ-11)
Phone line (RJ-11)
Supplied Accessories VAIO Smart keyboard
Sony two-button mouse
RJ-11 phone cable
Power cord
Service 90-day limited service. Extendible to one year from original date of purchase upon registration[3]
Limited Warranty 90-day parts/labor standard. Extendible to one year from original date of purchase upon registration[4]

Power Requirements 200 watts maximum
Dimensions 7" (w) x 12" (h) x 13 3/4" (d) (178mm x 304mm x 330mm)
Weight 17 lbs. (7.71 kg)
Operating Temperature 50º F to 95º F (+10º C to 35º C)

[1] Maximum speed for faxing is 14.4 kbytes/s. Your modem is capable of downloading at 56 kbytes/s using K56flex technology or V.90. Your phone service, online service, or Internet Service Provider however, may not support this technology or operate at this speed.

[2] Six-pin i-LINK connectors on the rear of the system each supply 10V to 12V. The combined total wattage that can be supplied by the two connectors is 6 watts.

[3] Certain restrictions apply

[4] Certain restrictions apply

Specifications are subject to change without notice.

This product meets the standards of the International Energy Star Program for energy efficiency.

© 1999 Sony Electronics Inc. Reproduction in w hole or in part w ithout w ritten permission is prohibited. All rights reserved.

Read Me First

Welcome

Congratulations on your purchase of the Sony VAIO Digital Studio Computer. Sony has combined leading-edge technology in audio, video, computing, and communications to provide you with state-of-the-art personal computing.

Features

 For a complete description of the specifications of your VAIO Digital Studio Computer, see Specifications.

- **Exceptional performance:** Your computer includes a brand new Intel® Pentium® III processor, a CD-RW drive, and a V.90 compatible data/fax modem.*

* Actual upload and download speeds may vary due to line conditions, ISP support, and government regulations.

- **CD-RW drive:** This drive is the ideal solution for making backups and data archiving, with the ability to store up to 650 MB* of removable, rewritable storage on a single rewritable CD. Save your movies to CD-R or CD-RW media and share videos and images with family and friends.

* 530 MB after formatting.

- **VAIO Smart Keyboard:** This USB keyboard has programmable shortcut buttons for launching your favorite programs or accessing the Internet.
- **Sony audio and video quality:** High-fidelity positional 3D audio system (A3D), high-powered 3D graphics (AGP), and "Sony-Tuned" MPEG digital video playback enable you to take advantage of today's advanced multimedia applications, games, and entertainment software.
- **S-Link (Control-A1):** This technology allows you to build a database of all your music and video CDs and then record your favorite audio selections on MiniDiscs. Use your computer with a 200 disc mega-storage CD changer and a MiniDisc recording deck.
- **i.LINK (IEEE 1394):** Three built-in i.LINK ports provide you with maximum digital connection capability. The i.LINK name and logo identify a digital interface (IEEE 1394) for high speed communication. By using your VAIO Digital Studio Computer, a Sony Digital Handycam® Camcorder, the DVgate software preinstalled on your computer, and the i.LINK (IEEE 1394) interface, you can easily create and edit your own home videos.
- **Optical Digital Audio Output:** This high-quality digital interface transmits digital audio data via light pulses. Transfer crystal clear digital audio to your MiniDisc recorder.
- **Digital Studio Software**: Enjoy all of your computer's audio and video capabilities with component-like applications that allow you to creatively manipulate digital still images, video clips, and audio tracks.
- **50 free hours of Internet access:** Use the Internet for up to 50 free hours when you sign up with GTE (no credit card required). Limit of two hours per day. Free access expires after 50 hours or 90 days after signing up--whichever occurs first.
- **Preinstalled software titles**: All the software on your computer is preinstalled, configured, and ready for you to use right out of the box.
- **Windows® 98**: Your system includes the latest operating system from Microsoft.
- **Communications:** Access popular online services, browse the Internet, send faxes, and more.

Unpacking Your Computer

Computer and Supplied Accessories

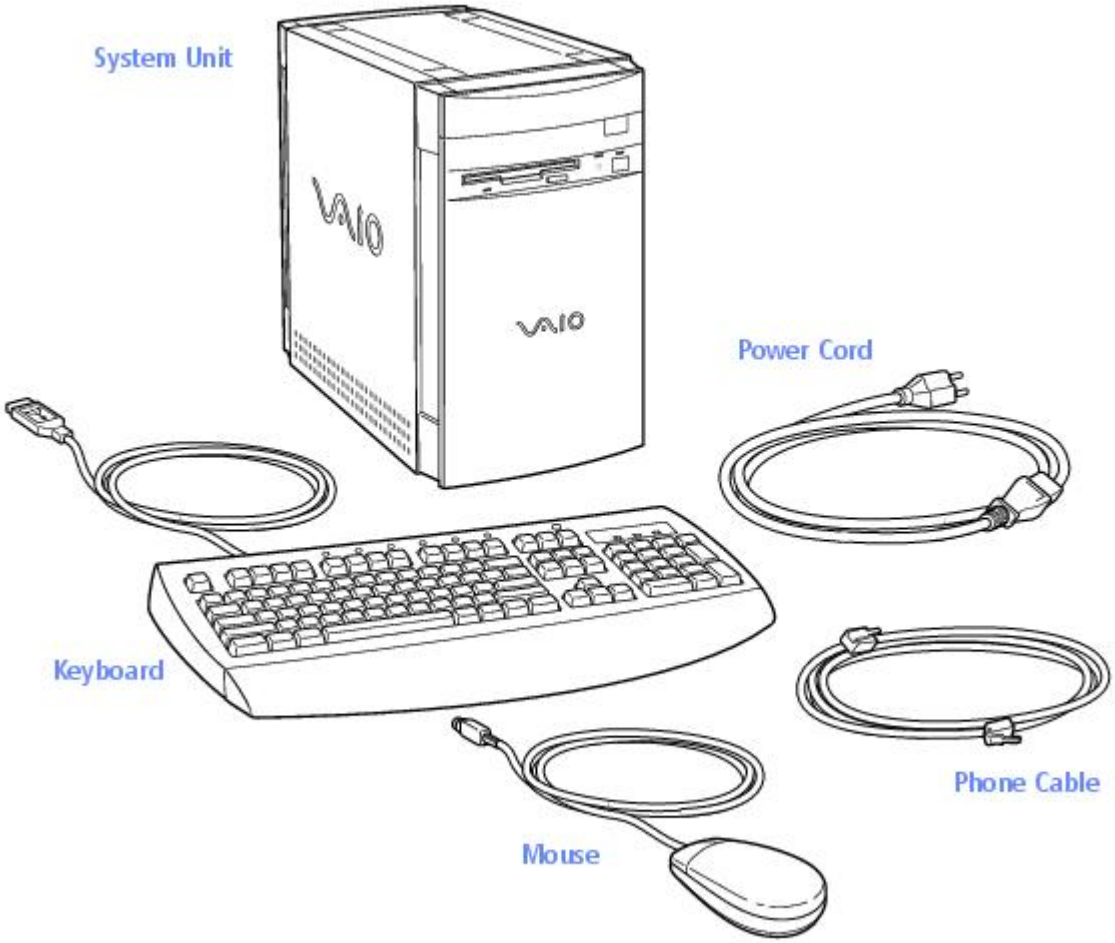

Manuals

- *Read Me First* (this manual) contains features and specifications of your computer. It also includes information on the applications included with your system, how to contact software vendors, and last minute troubleshooting tips.
- The *VAIO Digital Studio Computer User Guide* describes how to get started with your computer, find help, and solve common problems.
- The *Microsoft® Windows®98 Getting Started* manual explains how to use the basic features of the Windows operating system.

Recovery CDs

- System Recovery CD(s)
- Application Recovery CD(s)

Other

- Setting up your VAIO Digital Studio Computer (poster)
- Packet containing special product offers

Software Library

The Software Library contains the Microsoft software license agreement, Sony end-user license agreement, and the following CDs:

- Adobe PhotoDeluxe® Business Edition 3.0
- Gremlin Interactive Ltd. MotorHead
- Microsoft® Encarta® 99 Encyclopedia
- Microsoft® Money/Microsoft® Works

Back Panel Overview

The back panel of your computer contains the connectors where you plug in supplied and optional accessories. The icons on the back panel serve as a map to help you locate the connectors on your computer.

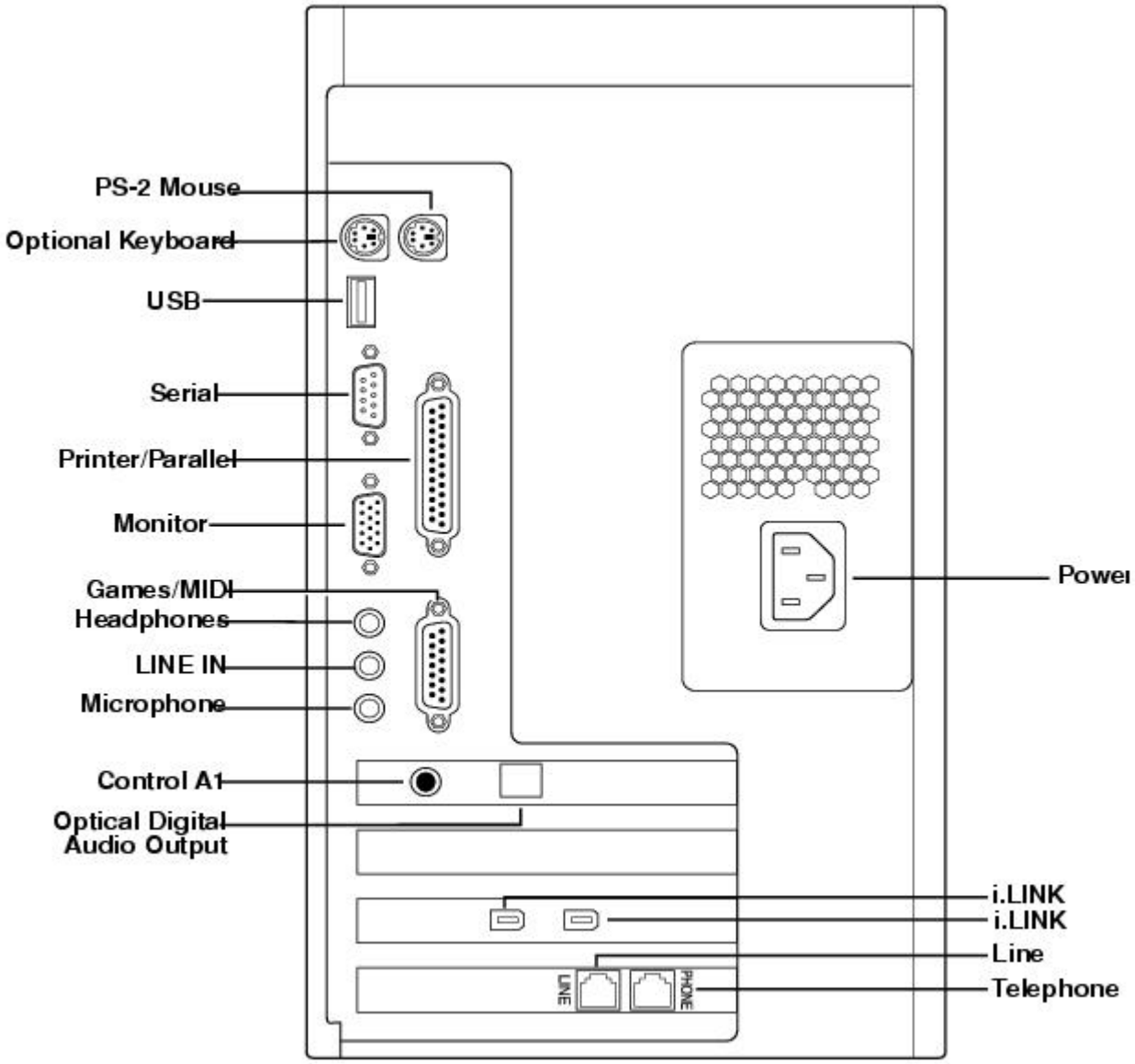

For your convenience, your computer includes USB and i.LINK connectors on both the front and back panels, allowing you to connect to either set of connectors. i.LINK connectors on the back of your system are 6-pin connectors.

Front Panel Overview

The front panel of your VAIO Digital Studio Computer allows for access to the diskette and CD-RW drives. It also includes USB and i.LINK ports to connect USB devices, CD changers, MiniDisc drives, or other components.

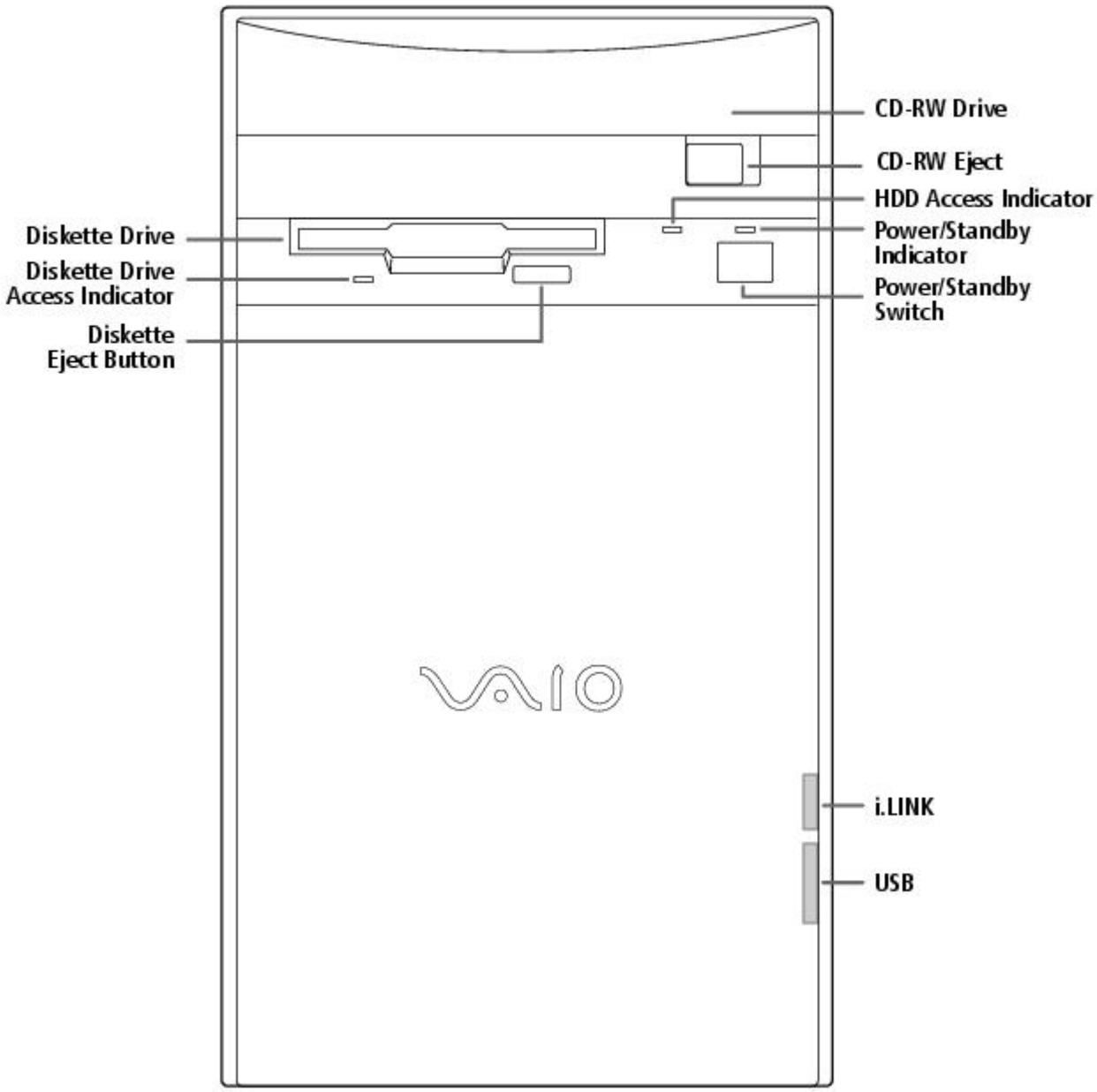

For your convenience, your computer includes USB and i.LINK connectors on both the front and back panels, allowing you to connect to either set of connectors. The i.LINK connector on the front of your system is a 4-pin connector.

Supplementary Information

For the most recent version of this manual, see the online version of Read Me First. You can access this document from the Windows Start Menu by selecting Programs/VAIO Documentation.

Hard Drive Partition

In order to improve the performance of your computer's DVgate Motion software, the hard disk drive on your computer has been formatted with two partitions, C and D. DVgate Motion saves files to the D partition. This prevents large video captures from consuming the available space on your C partition. To maintain optimum performance of DVgate Motion, you should defragment regularly.

VAIO Smart Keyboard Default Settings

The VAIO Smart Keyboard programmable buttons come with the following applications as their default settings:

S1 - Easy Internet Access Browser (Internet)

S2 - Outlook 98 (Mail)

S3 - MotorHead (Game)

S4 - Microsoft® Works (Work)

S5 - Quicken 99 Basic (Finance)

S6 - VAIO Documentation (Help)

All six buttons are reprogrammable.

Using The Standby Mode

To Put Your Computer into Standby Mode

When you are done using your computer, you can put it in Standby mode rather than turn it off completely. There are four ways to put your computer into Standby mode.

- Touch the power switch on the front panel.
- Click Shut Down at the bottom of the Start menu to display the Shut Down Windows dialog box. Select Stand by, and then click OK.
- Press the Standby button on the VAIO Smart Keyboard (the half moon icon).
- Change the timer settings for Standby mode in the Control Panel, as follows:

1. From the Start menu, point to Settings and click Control Panel.
2. Click the Power Management icon.
3. On the Power Schemes tab, change the Power scheme to Home/Office Desk.
4. In the list box for System standby, select an interval of time.
5. Click the OK button and close the Control Panel.

To Resume from Standby Mode

There are two ways to resume system functionality when your computer is in Standby mode. Use either of the following methods.

- Press any key on your keyboard, such as the Enter key.
- Touch the power switch on the front panel.

It may take up to 30 seconds for your system to recover stored information and resume functionality. The screen remains blank while the system is resuming functionality.

Applications That Use the TWAIN Driver

Digital imaging applications, such as Adobe PhotoDeluxe®, allow you to transfer images to your computer from external devices, including scanners or digital cameras. For some devices, a TWAIN driver window appears on the screen. Always close the TWAIN driver window before exiting or minimizing a digital imaging application.

Restoring Outlook 98

For the Add New Components functionality to be available with Microsoft Outlook, you must first run the installation program for Outlook from the Application Recovery CD. When prompted to install the program, select Exit. This decompresses the software, making the Add New Components functionality available.

Inserting Add-in Boards

Your VAIO Digital Studio Computer accommodates PCI add-in boards up to 7.7 inches in length.

Using Devices Connected to the i.LINK (IEEE 1394), S-Link (Control-A1), and Optical Digital Audio Output Connectors

For the latest information on devices known to be compatible with the state-of the-art audio, video, and graphics capabilities of your VAIO computer, check the Sony web site at http://www.sony.com/pcsupport.

Connecting to i.LINK Ports

Your VAIO computer includes a 4-pin i.LINK connector on the front of the system and two 6-pin i.LINK connectors on the back of the system. A 6-pin i.LINK connector can supply power from the computer to the connected device if the device is equipped with a 6-pin connector. Each 6-pin connector supplies 10V to 12V. The total power supplied by both 6-pin i.LINK connectors cannot exceed 6 watts. A 4-pin i.LINK connector cannot supply power to a connected device.

Capturing and Editing Digital Video Clips

- You can capture digital video clips using a digital video camera recorder and DVgate Motion software. Once the clips are saved as AVI files, they can be edited using DVgate Motion, DVgate Clip, or Adobe Premiere® LE. You cannot capture digital video clips directly using the Capture menu in Adobe Premiere LE. Adobe Premiere LE supports an analog capture board for capturing clips. Your VAIO computer is designed for digital video input.
- If there is no audio data associated with an AVI file, the message "Codec compression error" appears. If you do not wish to associate audio with your AVI file, you can add muted sound data by recording audio with the mute option enabled.
- For best performance, when editing AVI files in Adobe Premiere LE, you should use the default setup parameters that shipped with your system. If you change the default setup and want to reinitialize the parameters, follow these steps:

    1. In the Adobe Premiere LE application, select Compression from the Make menu. The Compression Settings dialog box appears.
    2. In the Method list box, select Sony DV software CODEC.
    3. Click OK to close the screen.
    4. From the Make menu, select Preset. The Preset dialog box appears.
    5. Select the parameters for Time Base, Compress, Output, and Preview Option settings as indicated below.

[Time base]

Time base - 29.97fps (required)

[Compress]

File type - AVI (required)
Compress Program Method - Sony DV software CODEC (required)
Compress Program Depth - Millions colors (No other options)
Quality (No control for this item)
Option: Frames per second - 30 (required)
Option: Basic Key Frames (No control for this item)
Option: Optimize Still Off (recommended)
Data rate - Recompress Off (recommended)

[Output options]

Video - On (required)
Video Size - 720x480
4:3 Aspect - Off (required)
VideoType - Field 2 (recommended)
Audio - On (required)
Audio Rate - 44kHz (required)
Audio Format - 16 Bit Stereo or 16 Bit Monaural (required)
Audio Type - Uncompress (required)
Audio Interleave - 1 frame (recommended)
- Less than 30 frames (required)

Audio Sync - 1.0 (required)
Audio Skew - 0.75 (recommended)
- Less than 1.0 (required)

[Preview Option]

Preview Window Size - 360x240

Note that Adobe Premiere LE does not save the Preview Window Size, but uses a default size of 320 x 213 each time the application launches. We recommend that you change this setting to 360 x 240 to improve the quality of preview clips when editing AVI files.

Using Alternate Browsers with America Online®

To use Internet Explorer or Netscape Navigator as your browser with America Online, follow these steps:

1. From the Start menu, point to Settings and then click Control Panel.
2. Click the Internet icon.
3. Click the Connection tab.
4. Click the "Connect to the Internet using local area network" radio button.
5. Click OK.

Using DVgate Motion

When capturing clips:

- Do not use DVgate Motion when the connected digital video peripheral is in Timer Recording mode, as this could produce a malfunction in the peripheral.
- Captures larger than 2 GB (9 minutes and 30 seconds) are automatically continued in a second file.
- You can record stereo audio (stereo 1) while capturing video. You cannot add audio on the stereo 2 track after capturing the video data.
- You cannot use different audio modes on the same tape. You should perform a separate capture for each audio mode you wish to use.
- DVgate Motion does not support hard disk compression. You should not use disk compression if you are planning to work with DVgate Motion.
- Title data is saved in the flash memory of a digital video camera and is not transferred to tape by DVgate Motion.
- To avoid interruption of capture sessions, you should disable the screen saver.
- The drop frame compensation feature does not provide accurate compensation adjustments for tapes recorded in LP mode.
- For tapes that include a mixture of both SP and LP mode, the information displayed by the capture progress indicator may not be accurate.
- Make sure the video head of your digital video device is properly cleaned. Anomalies that you see in captured data could be due to dust or other particles on the video head.
    - The last frame captured is one frame before your selected [OUT] point. The frame you see immediately after clicking the [OUT] button is not captured.

When recording AVI files to tape:

- Do not use DVgate Motion when the connected digital video peripheral is in Timer Recording mode, as this could produce a malfunction in the peripheral.

- You can record only AVI files. MPEG files cannot be recorded.
- To avoid recording problems, such as a single frame appearing in multiple frames, close other applications on your system while recording.
- You cannot use different audio modes on the same tape. If you have AVI files that use different audio modes, they cannot be recorded at the same time, but must be recorded separately.
- Do not attempt to work with AVI files that are smaller than 4 MB.
- DVgate Motion does not support hard disk compression. You should not use disk compression if you are planning to work with DVgate Motion.
- In order to maximize recording capabilities, video and audio data are not available while you are recording.

If DVgate Motion indicates that frames have been dropped, you should try closing all open applications, or you may need to defragment your hard drive.

Restoring Audio Drivers

When you restore the audio drivers from the Application Recovery CD, you need to restart your system to use these drivers. In the Add New Hardware wizard that appears when you restart, click the Next button until you are prompted for the location of the drivers. The audio drivers are located on the Application Recovery CD in G:\drivers\audio\AL98091701\English.

Using AC-3® to Optical Digital Audio Output

MiniDisc player/recorders, DAT player/recorders, and older digital receivers do not support Dolby® Digital (AC-3). You should not use the AC-3 to Optical Digital Audio Output option unless you are using a device that supports Dolby Digital. Please refer to the manual supplied with your equipment to determine if it supports Dolby Digital. If you are unsure and you have selected the AC-3 to Optical Digital Audio Output option, turn down the volume on your equipment before using the DVD player.

Using America Online or Sony Online Support with WinFax® Basic Edition

Once you have configured WinFax Basic Edition, it is automatically available for your use. You cannot use America Online or Sony Online Support when the automatic fax receive feature of WinFax Basic Edition is on. To disable this feature, right click the WinFax icon in the task tray at the bottom right corner of your screen, and then select Exit.

Memory Upgrade Specifications

When upgrading memory, use only 3.3V 64-bit PC-100 168 PIN SDRAM DIMM modules. For more information on Digital Studio Computer compatible memory, call Sony at 1-888-4SONYPC (1-888-476-6972).

About the Software On Your Computer

Your VAIO Digital Studio computer is ready to help you work, play, learn, and communicate as soon as you turn it on. This section gives you an overview of the activities you can perform with your software titles. For support information, see For Answers to Your Software Questions.

Adobe Acrobat® Reader

Adobe Systems Incorporated

Acrobat Reader software allows you to view, navigate, and print electronic documents in Adobe Portable Document Format (PDF), an open file format that is intended to preserve the fidelity of documents created on all major computer platforms.

Adobe PhotoDeluxe® Business Edition

Adobe Systems Incorporated

Create amazing photo effects with PhotoDeluxe. Without learning complex software, you can

enhance, restore, and be creative with your photos. Includes built-in guided activities, stock photos, clip art, and templates to assist you.

Adobe Premiere® LE

Adobe Systems Incorporated

Adobe Premiere LE offers an interface and editing tool for producing movies for video, multimedia, or the web. View source clips and edited footage simultaneously in the monitor window. Create video clips up to three hours long with complete audio-video synchronization.

America Online®

America Online

America Online is the world's most popular Internet online service. Stay in touch with family and friends with Easy-to-Use E-mail, manage your personal finances, get the latest news and sports scores, and chat with thousands of others who share your interests.

AT&T WorldNet® Service

AT&T

Fast, reliable Internet access from AT&T WorldNet Service. AT&T WorldNet Service provides web-based e-mail, a personalized start page from Excite, easy access to the Excite search engine, free web pages, online and live agent technical support, instant messaging, and special shopping discounts at Market Square.

CompuServe®

CompuServe, Inc.

CompuServe is the most comprehensive source of organized business and educational information online today. CompuServe allows you to access the vastness of the Internet without wasting time wading through it. Maximize your time online with CompuServe.

Digital Media Park

Sony Electronics

An integrated suite of multimedia cataloging and playback programs including Media Bar, Media Library, Media Showcase, and MiniDisc Editor. Manage your music by cataloging your entire CD collection, and then create custom MiniDiscs of your favorite songs.

Dr. Solomon's® Anti-Virus

Dr Solomon's Software Inc.

Dr. Solomon's Anti-Virus provides the most comprehensive defense against the spread of viruses, including macro viruses. It can scan inside compressed files and automatically protects your system against viruses sent via e-mail or Internet download.

DVgate Motion

Sony Electronics

Connect a digital video camera recorder to the i.LINK connector and capture your own video clips. You can edit the clips from your video, add others, and combine clips into new movie segments.

DVgate Still

Sony Electronics

Connect a digital video camera recorder to the i.LINK connector and capture your own still images. You can save your images in a variety of popular file formats.

EarthLink Sprint TotalAccess

EarthLink Network, Inc.

An Internet Service Provider that supplies access, information, and assistance to its customers, introducing them to the Internet. Member benefits include e-mail, newsgroups, a Personal Start Page, a free 6 MB web site, a member magazine, and 24-hour technical support.

Microsoft® Encarta® 99 Encyclopedia

Microsoft Corporation

Microsoft Encarta Encyclopedia combines current, comprehensive content with up-to-date multimedia technology, providing users with unique, engaging learning experiences. With the 1999 edition, Encarta provides a wealth of information resources and unique interactive features

Microsoft® Internet Explorer for Windows® 98

Microsoft Corporation

Internet Explorer delivers the web the way you want it. It's safe, easy to use, and you can personalize how you access the web. Outlook Express and other tools in Internet Explorer also help you have a great experience when you are on the web!

Microsoft® Money 99

Microsoft Corporation

Microsoft Money 99 is personal finance software that lets you perform your financial tasks, everything from paying bills to planning for the future, in a smarter, faster way. With Money's online services, you can pay bills and bank from the comfort of home.

Microsoft® Outlook® 98

Microsoft Corporation

Outlook 98 is Microsoft's premier messaging and collaboration client. It combines the leading support for Internet standards-based messaging systems with integrated calendar, contact, and task-management features.

Microsoft® Works

Microsoft Corporation

Works provides users with the right set of core tools that allows them to write letters and reports, track family and friends with the address book, manage home finances, and create a home inventory.

MotorHead

Gremlin Interactive Ltd.

MotorHead is realistic arcade-racing; high-velocity entertainment that puts you behind the wheel for 3D pure racing action. Power across Europe and USA in the Transatlantic Speed League, where second place is simply not an option.

Netscape Communicator®

Netscape Communications

Netscape Communicator is the all-in-one Internet tool that makes it easy to browse the web, send Internet e-mail, chat, read newsgroups, and compose great web documents.

PictureGear

Sony Electronics

This image management software displays images from your hard drive, a Sony digital still camera, or a Sony Mavica® camera. The images appear in a convenient light-table format, so that you can easily view the contents of an entire folder.

Prodigy Internet

Prodigy Communications Corporation

An Internet service that helps you find what you need online faster and smarter. Prodigy delivers powerful online content, such as sports scores, stock quotes, news, and easy access to Excite , plus a personal e-mail account and quality customer service, all at a competitive price.

Quicken® Basic 99

Intuit, Inc

Quicken is the fastest, easiest way to organize your finances. Quicken works just like your checkbook, so it's easy to learn and use. Quicken manages all of your finances, bank accounts, credit cards, investments, and loans. You can even pay your bills online.

SurfMonkey

MediaLive, Inc

SurfMonkey is a web browser and online service for kids ages 6-12 that makes the Internet safe, fun, and easy. A talking monkey guides children through web sites and chat rooms, and can read their e-mail out loud. Children cannot go to inappropriate web sites, parents can screen e-mail messages, and chat messages are monitored.

VAIO Smart Keyboard

Sony Electronics

VAIO Smart Keyboard software operates your new easy to use programmable USB keyboard. Six programmable buttons enable you to launch your favorite applications, open frequently used files, access Explorer, or even open your web browser with just the click of a button.

WinFax® Basic Edition

Symantec Corporation

WinFax Basic Edition incorporates an easy-to-use interface that allows you to send and receive faxes easily. Upgrade to WinFax Pro to receive additional features.

About Your Recovery CDs

Application Recovery CD(s)

Sony Electronics

The Application Recovery CD program allows you to reinstall individual applications and device drivers. Use it to restore corrupted or accidentally erased files.

System Recovery CD(s)

Sony Electronics

The System Recovery CD program allows you to restore the software titles that shipped with your computer if they become corrupted or are erased accidentally. It can be used only to restore the hard disk of the Sony computer you purchased.

For Answers to Your Software Questions

Sony Service Center

For the Sony Service Center nearest you, call at 1-888-4SONYPC (1-888-476-6972).

Acrobat® Reader, Adobe PhotoDeluxe® Business Edition , Adobe Premiere® LE (Adobe Systems Incorporated)

Web site http://www.adobe.com/
phone 206-628-2746 (fee-based support)
fax 206-628-5737
e-mail techdocs@adobe.com
hours M-F, 6 AM-5 PM PT

America Online® (America Online)

Web site http://www.aol.com/
phone 800-827-3338
hours 7 days a week, 6 AM - 2 PM ET

AT&T WorldNet® Service (AT&T)

Web site http://www.att.net/*
phone 800-400-1447
e-mail worldnet@attmail.com
hours 7 days a week, 24 hours a day

* You must be a WorldNet Service customer to access online support.

CompuServe® Interactive (CompuServe Interactive, Inc.)

Web site http://www.compuserve.com/
phone 800-848-8990
hours M-F, 8 AM - 1 AM ET, S-S 10 AM - 10 PM ET

Dr. Solomon's® Anti-Virus (Dr. Solomon's Software Inc.)

Web site http://www.drsolomon.com/
phone 888-377-6566
e-mail support@us.drsolomon.com
hours 7 days a week, 24 hours a day

EarthLink Sprint TotalAccess (EarthLink Network, Inc.)

Web site http://help.earthlink.net/techsupport/
phone 800-395-8410
e-mail support@earthlink.net
hours 7 days a week, 24 hours a day

Easy Internet Access (Encompass, Inc.)

Web site http://www.encmpss.com/
phone 800-927-3000
hours 7 days a week, 24 hours a day

MotorHead (Gremlin Interactive Ltd.)

Web site http://www.gremlin.com/
phone 888-4SONYPC (888-476-6972)
hours 7 days a week, 24 hours a day

Windows® 98 Operating System, Works, Money, Encarta, Internet Explorer (Microsoft Corporation)

Web site http://www.microsoft.com/support/
phone 888-4SONYPC (888-476-6972)*
hours 7 days a week, 24 hours a day
* Support from 1-888-4SONYPC is free of charge for 90 days after the original date of purchase.

Netscape Communicator® (Netscape Communications Corporation)

Web site http://www.netscape.com/
phone 888-4SONYPC (888-476-6972)*
hours 7 days a week, 24 hours a day
* Support from 1-888-4SONYPC is free of charge for 90 days after the original date of purchase.

Prodigy Internet (Prodigy Communications Corporation.)

Web site http://www.prodigy.com/
phone 800-PRODIGY
hours 7 AM - 3 AM ET

Quicken® Basic (Intuit Inc.)

Web site http://www.intuit.com/support/
phone 900-555-4688
hours 7 days a week, 24 hours a day

SurfMonkey (MediaLive, Inc.)

Web site http://www.surfmonkey.com/support/Sub_support.html
phone 408-556-2060
e-mail support@surfmonkey.com
hours 9AM-10PM PT everyday

WinFax® Basic Edition (Symantec Corporation.)

Web site http://www.symantec.com/techsupp/
phone 800-798-0850
fax 800-554-4403 in North America
541-984-2490 outside North America

Specifications

Model **PCV-E518DS**
Processor 500 MHz Pentium® III
Hard Disk Drive 17.28 GB
Standard SDRAM 128 MB PC-100 SDRAM, expandable to 256 MB
Video RAM 8 MB SDRAM
MPEG "Sony Tuned" MPEG Digital Video supports full-screen video playback
Graphics 3D 2X AGP graphics acceleration (Matrox)
Sound Capabilities 3D Positional Audio (Aureal A3D)
Diskette Drive 3.5" 1.44 MB FDD
CD-RW Drive CD-RW Drive (4X max. CD-R writing, 2X max. CD-RW writing, 24X max. reading)
Modem K56flex technology/V.90 compatible data/fax modem[1]
Expansion Capabilities One PCI slot
One additional hard disk drive bay
Connection Capabilities (Front) USB port
i.LINK port (4-pin)
Connection Capabilities (Rear) Optional Keyboard (PS/2-style)
Mouse (PS/2-style)
USB port
Serial port
Parallel (printer)
Game/MIDI
Headphones
Line In
Microphone
VGA Monitor
S-Link (Control-A1)
Optical Digital Audio Out
Two i.LINK ports (6-pin)[2]
Modem line (RJ-11)
Phone line (RJ-11)
Supplied Accessories VAIO Smart keyboard
Sony two-button mouse
RJ-11 phone cable
Power cord
Service 90-day limited service. Extendible to one year from original date of purchase upon registration[3]
Limited Warranty 90-day parts/labor standard. Extendible to one year from original date of purchase upon registration[4]

Power Requirements 200 watts maximum
Dimensions 7" (w) x 12" (h) x 13 3/4" (d) (178mm x 304mm x 330mm)
Weight 17 lbs. (7.71 kg)
Operating Temperature 50º F to 95º F (+10º C to 35º C)

[1] Maximum speed for faxing is 14.4 kbytes/s. Your modem is capable of downloading at 56 kbytes/s using K56flex technology or V.90. Your phone service, online service, or Internet Service Provider however, may not support this technology or operate at this speed.

[2] Six-pin i-LINK connectors on the rear of the system each supply 10V to 12V. The combined total wattage that can be supplied by the two connectors is 6 watts.

[3] Certain restrictions apply

[4] Certain restrictions apply

Specifications are subject to change without notice.

This product meets the standards of the International Energy Star Program for energy efficiency.

© 1999 Sony Electronics Inc. Reproduction in w hole or in part w ithout w ritten permission is prohibited. All rights reserved.

Read Me First

Welcome

Congratulations on your purchase of the Sony VAIO Digital Studio Computer. Sony has combined leading-edge technology in audio, video, computing, and communications to provide you with state-of-the-art personal computing.

Features

 For a complete description of the specifications of your VAIO Digital Studio Computer, see Specifications.

- **Exceptional performance:** Your computer includes a brand new Intel® Pentium® III processor, a CD-RW drive, and a V.90 compatible data/fax modem.*

* Actual upload and download speeds may vary due to line conditions, ISP support, and government regulations.

- **CD-RW drive:** This drive is the ideal solution for making backups and data archiving, with the ability to store up to 650 MB* of removable, rewritable storage on a single rewritable CD. Save your movies to CD-R or CD-RW media and share videos and images with family and friends.

***** 530 MB after formatting.

- **VAIO Smart Keyboard:** This USB keyboard has programmable shortcut buttons for launching your favorite programs or accessing the Internet.
- **Sony audio and video quality:** High-fidelity positional 3D audio system (A3D), high-powered 3D graphics (AGP), and "Sony-Tuned" MPEG digital video playback enable you to take advantage of today's advanced multimedia applications, games, and entertainment software.
- **S-Link (Control-A1):** This technology allows you to build a database of all your music and video CDs and then record your favorite audio selections on MiniDiscs. Use your computer with a 200 disc mega-storage CD changer and a MiniDisc recording deck.
- **i.LINK (IEEE 1394):** Three built-in i.LINK ports provide you with maximum digital connection capability. The i.LINK name and logo identify a digital interface (IEEE 1394) for high speed communication. By using your VAIO Digital Studio Computer, a Sony Digital Handycam® Camcorder, the DVgate software preinstalled on your computer, and the i.LINK (IEEE 1394) interface, you can easily create and edit your own home videos.
- **Optical Digital Audio Output:** This high-quality digital interface transmits digital audio data via light pulses. Transfer crystal clear digital audio to your MiniDisc recorder.
- **Digital Studio Software**: Enjoy all of your computer's audio and video capabilities with component-like applications that allow you to creatively manipulate digital still images, video clips, and audio tracks.
- **50 free hours of Internet access:** Use the Internet for up to 50 free hours when you sign up with GTE (no credit card required). Limit of two hours per day. Free access expires after 50 hours or 90 days after signing up--whichever occurs first.
- **Preinstalled software titles**: All the software on your computer is preinstalled, configured, and ready for you to use right out of the box.
- **Windows® 98**: Your system includes the latest operating system from Microsoft.
- **Communications:** Access popular online services, browse the Internet, send faxes, and more.

Unpacking Your Computer

Computer and Supplied Accessories

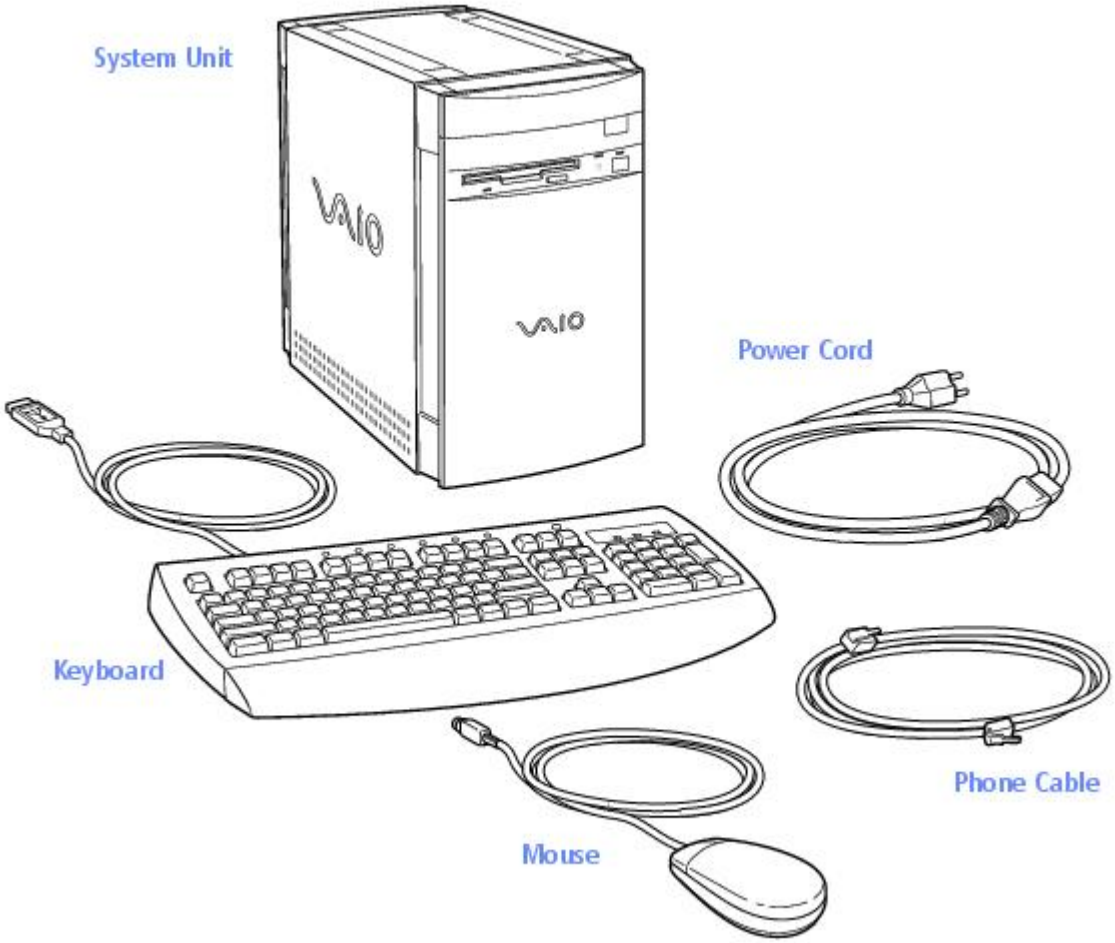

Manuals

- *Read Me First* (this manual) contains features and specifications of your computer. It also includes information on the applications included with your system, how to contact software vendors, and last minute troubleshooting tips.
- The *VAIO Digital Studio Computer User Guide* describes how to get started with your computer, find help, and solve common problems.
- The *Microsoft® Windows®98 Getting Started* manual explains how to use the basic features of the Windows operating system.

Recovery CDs

- System Recovery CD(s)
- Application Recovery CD(s)

Other

- Setting up your VAIO Digital Studio Computer (poster)
- Packet containing special product offers

Software Library

The Software Library contains the Microsoft software license agreement, Sony end-user license agreement, and the following CDs:

- Adobe PhotoDeluxe® Business Edition 3.0
- Gremlin Interactive Ltd. MotorHead
- Microsoft® Encarta® 99 Encyclopedia
- Microsoft® Money/Microsoft® Works

Back Panel Overview

The back panel of your computer contains the connectors where you plug in supplied and optional accessories. The icons on the back panel serve as a map to help you locate the connectors on your computer.

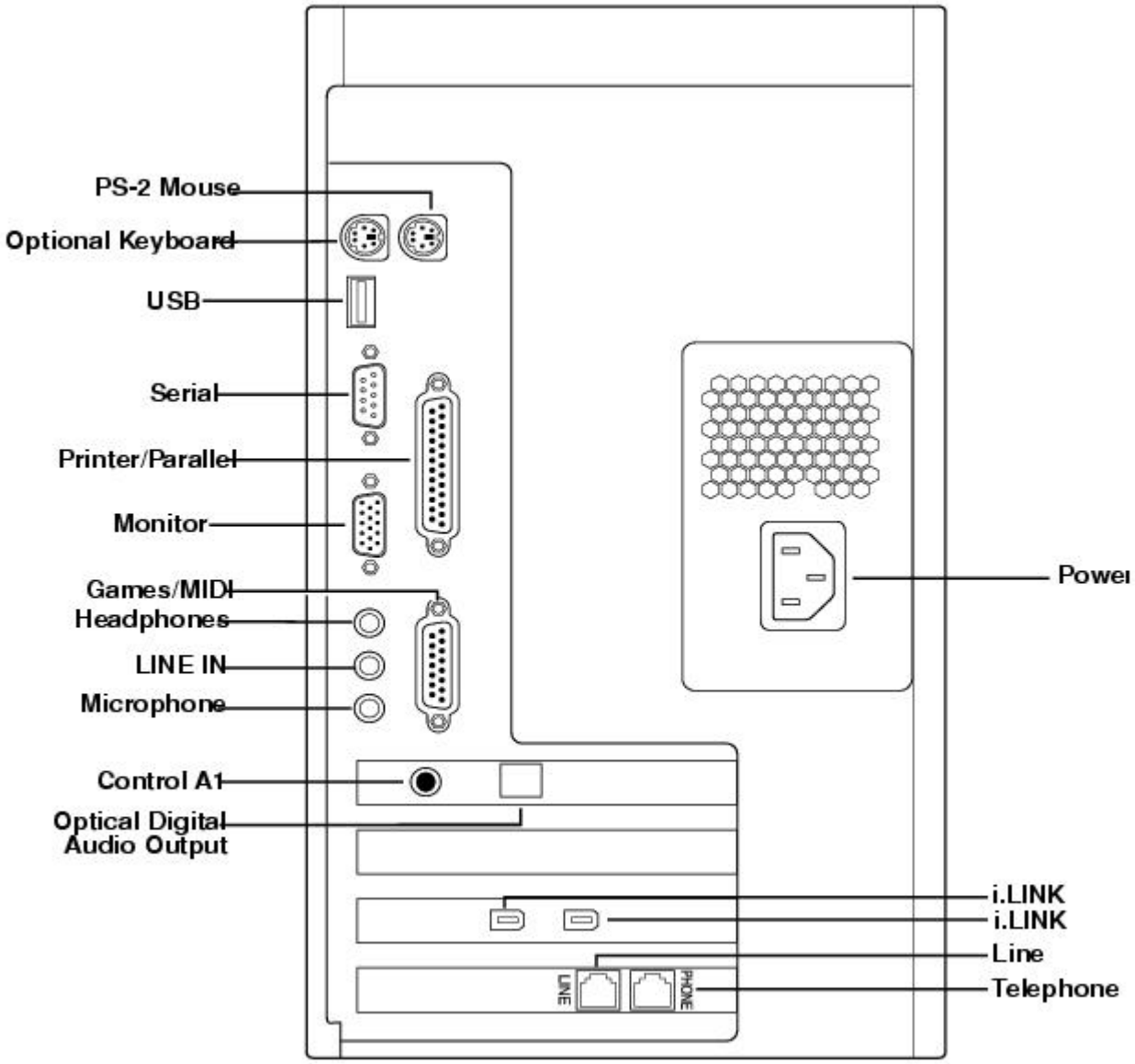

For your convenience, your computer includes USB and i.LINK connectors on both the front and back panels, allowing you to connect to either set of connectors. i.LINK connectors on the back of your system are 6-pin connectors.

Front Panel Overview

The front panel of your VAIO Digital Studio Computer allows for access to the diskette and CD-RW drives. It also includes USB and i.LINK ports to connect USB devices, CD changers, MiniDisc drives, or other components.

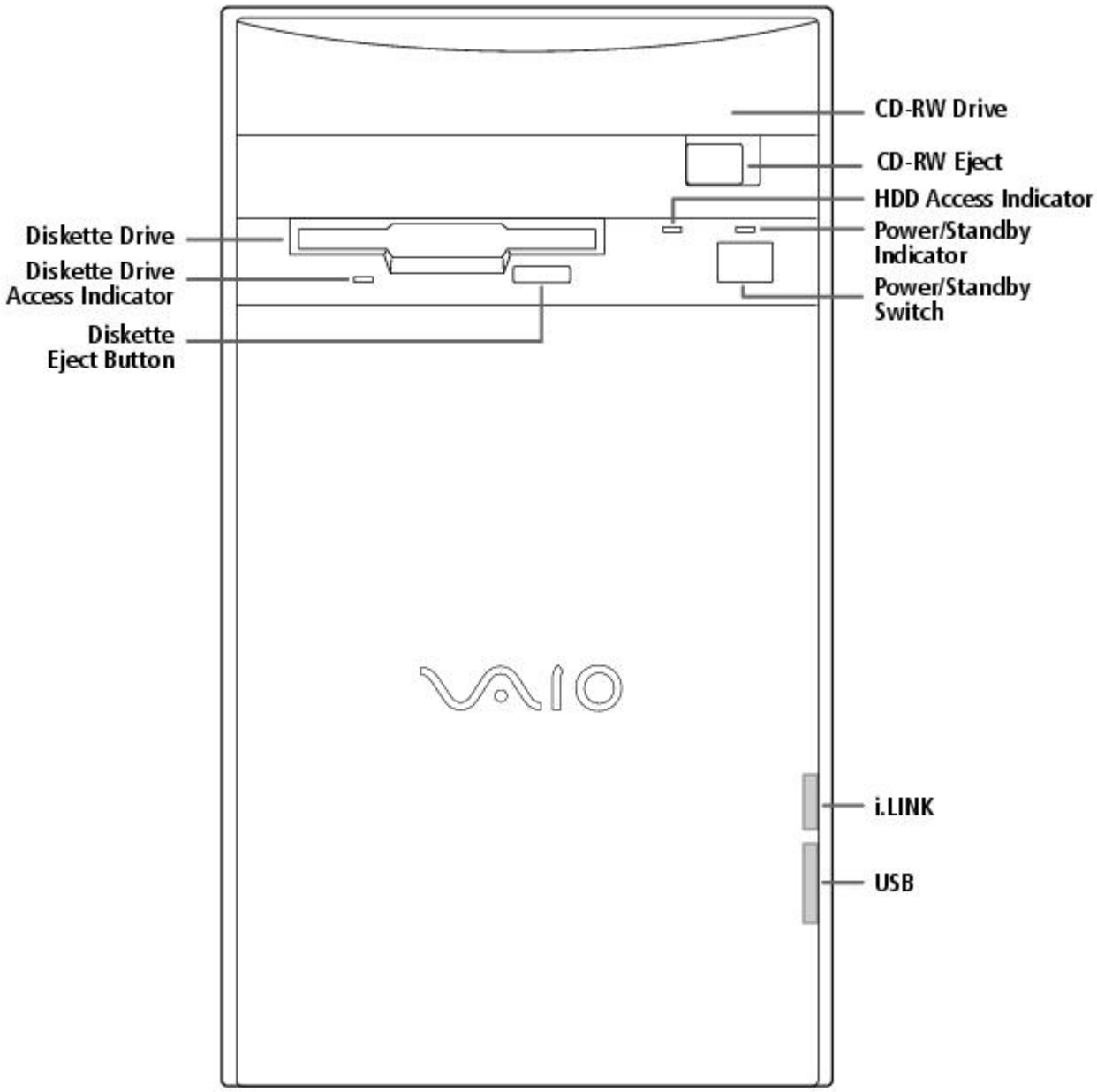

For your convenience, your computer includes USB and i.LINK connectors on both the front and back panels, allowing you to connect to either set of connectors. The i.LINK connector on the front of your system is a 4-pin connector.

Supplementary Information

For the most recent version of this manual, see the online version of Read Me First. You can access this document from the Windows Start Menu by selecting Programs/VAIO Documentation.

Hard Drive Partition

In order to improve the performance of your computer's DVgate Motion software, the hard disk drive on your computer has been formatted with two partitions, C and D. DVgate Motion saves files to the D partition. This prevents large video captures from consuming the available space on your C partition. To maintain optimum performance of DVgate Motion, you should defragment regularly.

VAIO Smart Keyboard Default Settings

The VAIO Smart Keyboard programmable buttons come with the following applications as their default settings:

S1 - Easy Internet Access Browser (Internet)

S2 - Outlook 98 (Mail)

S3 - MotorHead (Game)

S4 - Microsoft® Works (Work)

S5 - Quicken 99 Basic (Finance)

S6 - VAIO Documentation (Help)

All six buttons are reprogrammable.

Using The Standby Mode

To Put Your Computer into Standby Mode

When you are done using your computer, you can put it in Standby mode rather than turn it off completely. There are four ways to put your computer into Standby mode.

- Touch the power switch on the front panel.
- Click Shut Down at the bottom of the Start menu to display the Shut Down Windows dialog box. Select Stand by, and then click OK.
- Press the Standby button on the VAIO Smart Keyboard (the half moon icon).
- Change the timer settings for Standby mode in the Control Panel, as follows:

1. From the Start menu, point to Settings and click Control Panel.
2. Click the Power Management icon.
3. On the Power Schemes tab, change the Power scheme to Home/Office Desk.
4. In the list box for System standby, select an interval of time.
5. Click the OK button and close the Control Panel.

To Resume from Standby Mode

There are two ways to resume system functionality when your computer is in Standby mode. Use either of the following methods.

- Press any key on your keyboard, such as the Enter key.
- Touch the power switch on the front panel.

It may take up to 30 seconds for your system to recover stored information and resume functionality. The screen remains blank while the system is resuming functionality.

Applications That Use the TWAIN Driver

Digital imaging applications, such as Adobe PhotoDeluxe®, allow you to transfer images to your computer from external devices, including scanners or digital cameras. For some devices, a TWAIN driver window appears on the screen. Always close the TWAIN driver window before exiting or minimizing a digital imaging application.

Restoring Outlook 98

For the Add New Components functionality to be available with Microsoft Outlook, you must first run the installation program for Outlook from the Application Recovery CD. When prompted to install the program, select Exit. This decompresses the software, making the Add New Components functionality available.

Inserting Add-in Boards

Your VAIO Digital Studio Computer accommodates PCI add-in boards up to 7.7 inches in length.

Using Devices Connected to the i.LINK (IEEE 1394), S-Link (Control-A1), and Optical Digital Audio Output Connectors

For the latest information on devices known to be compatible with the state-of the-art audio, video, and graphics capabilities of your VAIO computer, check the Sony web site at http://www.sony.com/pcsupport.

Connecting to i.LINK Ports

Your VAIO computer includes a 4-pin i.LINK connector on the front of the system and two 6-pin i.LINK connectors on the back of the system. A 6-pin i.LINK connector can supply power from the computer to the connected device if the device is equipped with a 6-pin connector. Each 6-pin connector supplies 10V to 12V. The total power supplied by both 6-pin i.LINK connectors cannot exceed 6 watts. A 4-pin i.LINK connector cannot supply power to a connected device.

Capturing and Editing Digital Video Clips

- You can capture digital video clips using a digital video camera recorder and DVgate Motion software. Once the clips are saved as AVI files, they can be edited using DVgate Motion, DVgate Clip, or Adobe Premiere® LE. You cannot capture digital video clips directly using the Capture menu in Adobe Premiere LE. Adobe Premiere LE supports an analog capture board for capturing clips. Your VAIO computer is designed for digital video input.
- If there is no audio data associated with an AVI file, the message "Codec compression error" appears. If you do not wish to associate audio with your AVI file, you can add muted sound data by recording audio with the mute option enabled.
- For best performance, when editing AVI files in Adobe Premiere LE, you should use the default setup parameters that shipped with your system. If you change the default setup and want to reinitialize the parameters, follow these steps:

    1. In the Adobe Premiere LE application, select Compression from the Make menu. The Compression Settings dialog box appears.
    2. In the Method list box, select Sony DV software CODEC.
    3. Click OK to close the screen.
    4. From the Make menu, select Preset. The Preset dialog box appears.
    5. Select the parameters for Time Base, Compress, Output, and Preview Option settings as indicated below.

[Time base]

Time base - 29.97fps (required)

[Compress]

File type - AVI (required)
Compress Program Method - Sony DV software CODEC (required)
Compress Program Depth - Millions colors (No other options)
Quality (No control for this item)
Option: Frames per second - 30 (required)
Option: Basic Key Frames (No control for this item)
Option: Optimize Still Off (recommended)
Data rate - Recompress Off (recommended)

[Output options]

Video - On (required)
Video Size - 720x480
4:3 Aspect - Off (required)
VideoType - Field 2 (recommended)
Audio - On (required)
Audio Rate - 44kHz (required)
Audio Format - 16 Bit Stereo or 16 Bit Monaural (required)
Audio Type - Uncompress (required)
Audio Interleave - 1 frame (recommended)
- Less than 30 frames (required)

Audio Sync - 1.0 (required)
Audio Skew - 0.75 (recommended)
- Less than 1.0 (required)

[Preview Option]

Preview Window Size - 360x240

Note that Adobe Premiere LE does not save the Preview Window Size, but uses a default size of 320 x 213 each time the application launches. We recommend that you change this setting to 360 x 240 to improve the quality of preview clips when editing AVI files.

Using Alternate Browsers with America Online®

To use Internet Explorer or Netscape Navigator as your browser with America Online, follow these steps:

1. From the Start menu, point to Settings and then click Control Panel.
2. Click the Internet icon.
3. Click the Connection tab.
4. Click the "Connect to the Internet using local area network" radio button.
5. Click OK.

Using DVgate Motion

When capturing clips:

- Do not use DVgate Motion when the connected digital video peripheral is in Timer Recording mode, as this could produce a malfunction in the peripheral.
- Captures larger than 2 GB (9 minutes and 30 seconds) are automatically continued in a second file.
- You can record stereo audio (stereo 1) while capturing video. You cannot add audio on the stereo 2 track after capturing the video data.
- You cannot use different audio modes on the same tape. You should perform a separate capture for each audio mode you wish to use.
- DVgate Motion does not support hard disk compression. You should not use disk compression if you are planning to work with DVgate Motion.
- Title data is saved in the flash memory of a digital video camera and is not transferred to tape by DVgate Motion.
- To avoid interruption of capture sessions, you should disable the screen saver.
- The drop frame compensation feature does not provide accurate compensation adjustments for tapes recorded in LP mode.
- For tapes that include a mixture of both SP and LP mode, the information displayed by the capture progress indicator may not be accurate.
- Make sure the video head of your digital video device is properly cleaned. Anomalies that you see in captured data could be due to dust or other particles on the video head.
    - The last frame captured is one frame before your selected [OUT] point. The frame you see immediately after clicking the [OUT] button is not captured.

When recording AVI files to tape:

- Do not use DVgate Motion when the connected digital video peripheral is in Timer Recording mode, as this could produce a malfunction in the peripheral.

- You can record only AVI files. MPEG files cannot be recorded.
- To avoid recording problems, such as a single frame appearing in multiple frames, close other applications on your system while recording.
- You cannot use different audio modes on the same tape. If you have AVI files that use different audio modes, they cannot be recorded at the same time, but must be recorded separately.
- Do not attempt to work with AVI files that are smaller than 4 MB.
- DVgate Motion does not support hard disk compression. You should not use disk compression if you are planning to work with DVgate Motion.
- In order to maximize recording capabilities, video and audio data are not available while you are recording.

If DVgate Motion indicates that frames have been dropped, you should try closing all open applications, or you may need to defragment your hard drive.

Restoring Audio Drivers

When you restore the audio drivers from the Application Recovery CD, you need to restart your system to use these drivers. In the Add New Hardware wizard that appears when you restart, click the Next button until you are prompted for the location of the drivers. The audio drivers are located on the Application Recovery CD in G:\drivers\audio\AL98091701\English.

Using AC-3® to Optical Digital Audio Output

MiniDisc player/recorders, DAT player/recorders, and older digital receivers do not support Dolby® Digital (AC-3). You should not use the AC-3 to Optical Digital Audio Output option unless you are using a device that supports Dolby Digital. Please refer to the manual supplied with your equipment to determine if it supports Dolby Digital. If you are unsure and you have selected the AC-3 to Optical Digital Audio Output option, turn down the volume on your equipment before using the DVD player.

Using America Online or Sony Online Support with WinFax® Basic Edition

Once you have configured WinFax Basic Edition, it is automatically available for your use. You cannot use America Online or Sony Online Support when the automatic fax receive feature of WinFax Basic Edition is on. To disable this feature, right click the WinFax icon in the task tray at the bottom right corner of your screen, and then select Exit.

Memory Upgrade Specifications

When upgrading memory, use only 3.3V 64-bit PC-100 168 PIN SDRAM DIMM modules. For more information on Digital Studio Computer compatible memory, call Sony at 1-888-4SONYPC (1-888-476-6972).

About the Software On Your Computer

Your VAIO Digital Studio computer is ready to help you work, play, learn, and communicate as soon as you turn it on. This section gives you an overview of the activities you can perform with your software titles. For support information, see For Answers to Your Software Questions.

Adobe Acrobat® Reader

Adobe Systems Incorporated

Acrobat Reader software allows you to view, navigate, and print electronic documents in Adobe Portable Document Format (PDF), an open file format that is intended to preserve the fidelity of documents created on all major computer platforms.

Adobe PhotoDeluxe® Business Edition

Adobe Systems Incorporated

Create amazing photo effects with PhotoDeluxe. Without learning complex software, you can

enhance, restore, and be creative with your photos. Includes built-in guided activities, stock photos, clip art, and templates to assist you.

Adobe Premiere® LE

Adobe Systems Incorporated

Adobe Premiere LE offers an interface and editing tool for producing movies for video, multimedia, or the web. View source clips and edited footage simultaneously in the monitor window. Create video clips up to three hours long with complete audio-video synchronization.

America Online®

America Online

America Online is the world's most popular Internet online service. Stay in touch with family and friends with Easy-to-Use E-mail, manage your personal finances, get the latest news and sports scores, and chat with thousands of others who share your interests.

AT&T WorldNet® Service

AT&T

Fast, reliable Internet access from AT&T WorldNet Service. AT&T WorldNet Service provides web-based e-mail, a personalized start page from Excite, easy access to the Excite search engine, free web pages, online and live agent technical support, instant messaging, and special shopping discounts at Market Square.

CompuServe®

CompuServe, Inc.

CompuServe is the most comprehensive source of organized business and educational information online today. CompuServe allows you to access the vastness of the Internet without wasting time wading through it. Maximize your time online with CompuServe.

Digital Media Park

Sony Electronics

An integrated suite of multimedia cataloging and playback programs including Media Bar, Media Library, Media Showcase, and MiniDisc Editor. Manage your music by cataloging your entire CD collection, and then create custom MiniDiscs of your favorite songs.

Dr. Solomon's® Anti-Virus

Dr Solomon's Software Inc.

Dr. Solomon's Anti-Virus provides the most comprehensive defense against the spread of viruses, including macro viruses. It can scan inside compressed files and automatically protects your system against viruses sent via e-mail or Internet download.

DVgate Motion

Sony Electronics

Connect a digital video camera recorder to the i.LINK connector and capture your own video clips. You can edit the clips from your video, add others, and combine clips into new movie segments.

DVgate Still

Sony Electronics

Connect a digital video camera recorder to the i.LINK connector and capture your own still images. You can save your images in a variety of popular file formats.

EarthLink Sprint TotalAccess

EarthLink Network, Inc.

An Internet Service Provider that supplies access, information, and assistance to its customers, introducing them to the Internet. Member benefits include e-mail, newsgroups, a Personal Start Page, a free 6 MB web site, a member magazine, and 24-hour technical support.

Microsoft® Encarta® 99 Encyclopedia

Microsoft Corporation

Microsoft Encarta Encyclopedia combines current, comprehensive content with up-to-date multimedia technology, providing users with unique, engaging learning experiences. With the 1999 edition, Encarta provides a wealth of information resources and unique interactive features

Microsoft® Internet Explorer for Windows® 98

Microsoft Corporation

Internet Explorer delivers the web the way you want it. It's safe, easy to use, and you can personalize how you access the web. Outlook Express and other tools in Internet Explorer also help you have a great experience when you are on the web!

Microsoft® Money 99

Microsoft Corporation

Microsoft Money 99 is personal finance software that lets you perform your financial tasks, everything from paying bills to planning for the future, in a smarter, faster way. With Money's online services, you can pay bills and bank from the comfort of home.

Microsoft® Outlook® 98

Microsoft Corporation

Outlook 98 is Microsoft's premier messaging and collaboration client. It combines the leading support for Internet standards-based messaging systems with integrated calendar, contact, and task-management features.

Microsoft® Works

Microsoft Corporation

Works provides users with the right set of core tools that allows them to write letters and reports, track family and friends with the address book, manage home finances, and create a home inventory.

MotorHead

Gremlin Interactive Ltd.

MotorHead is realistic arcade-racing; high-velocity entertainment that puts you behind the wheel for 3D pure racing action. Power across Europe and USA in the Transatlantic Speed League, where second place is simply not an option.

Netscape Communicator®

Netscape Communications

Netscape Communicator is the all-in-one Internet tool that makes it easy to browse the web, send Internet e-mail, chat, read newsgroups, and compose great web documents.

PictureGear

Sony Electronics

This image management software displays images from your hard drive, a Sony digital still camera, or a Sony Mavica® camera. The images appear in a convenient light-table format, so that you can easily view the contents of an entire folder.

Prodigy Internet

Prodigy Communications Corporation

An Internet service that helps you find what you need online faster and smarter. Prodigy delivers powerful online content, such as sports scores, stock quotes, news, and easy access to Excite , plus a personal e-mail account and quality customer service, all at a competitive price.

Quicken® Basic 99

Intuit, Inc

Quicken is the fastest, easiest way to organize your finances. Quicken works just like your checkbook, so it's easy to learn and use. Quicken manages all of your finances, bank accounts, credit cards, investments, and loans. You can even pay your bills online.

SurfMonkey

MediaLive, Inc

SurfMonkey is a web browser and online service for kids ages 6-12 that makes the Internet safe, fun, and easy. A talking monkey guides children through web sites and chat rooms, and can read their e-mail out loud. Children cannot go to inappropriate web sites, parents can screen e-mail messages, and chat messages are monitored.

VAIO Smart Keyboard

Sony Electronics

VAIO Smart Keyboard software operates your new easy to use programmable USB keyboard. Six programmable buttons enable you to launch your favorite applications, open frequently used files, access Explorer, or even open your web browser with just the click of a button.

WinFax® Basic Edition

Symantec Corporation

WinFax Basic Edition incorporates an easy-to-use interface that allows you to send and receive faxes easily. Upgrade to WinFax Pro to receive additional features.

About Your Recovery CDs

Application Recovery CD(s)

Sony Electronics

The Application Recovery CD program allows you to reinstall individual applications and device drivers. Use it to restore corrupted or accidentally erased files.

System Recovery CD(s)

Sony Electronics

The System Recovery CD program allows you to restore the software titles that shipped with your computer if they become corrupted or are erased accidentally. It can be used only to restore the hard disk of the Sony computer you purchased.

For Answers to Your Software Questions

Sony Service Center

For the Sony Service Center nearest you, call at 1-888-4SONYPC (1-888-476-6972).

Acrobat® Reader, Adobe PhotoDeluxe® Business Edition , Adobe Premiere® LE (Adobe Systems Incorporated)

Web site http://www.adobe.com/
phone 206-628-2746 (fee-based support)
fax 206-628-5737
e-mail techdocs@adobe.com
hours M-F, 6 AM-5 PM PT

America Online® (America Online)

Web site http://www.aol.com/
phone 800-827-3338
hours 7 days a week, 6 AM - 2 PM ET

AT&T WorldNet® Service (AT&T)

Web site http://www.att.net/*
phone 800-400-1447
e-mail worldnet@attmail.com
hours 7 days a week, 24 hours a day

* You must be a WorldNet Service customer to access online support.

CompuServe® Interactive (CompuServe Interactive, Inc.)

Web site http://www.compuserve.com/
phone 800-848-8990
hours M-F, 8 AM - 1 AM ET, S-S 10 AM - 10 PM ET

Dr. Solomon's® Anti-Virus (Dr. Solomon's Software Inc.)

Web site http://www.drsolomon.com/
phone 888-377-6566
e-mail support@us.drsolomon.com
hours 7 days a week, 24 hours a day

EarthLink Sprint TotalAccess (EarthLink Network, Inc.)

Web site http://help.earthlink.net/techsupport/
phone 800-395-8410
e-mail support@earthlink.net
hours 7 days a week, 24 hours a day

Easy Internet Access (Encompass, Inc.)

Web site http://www.encmpss.com/
phone 800-927-3000
hours 7 days a week, 24 hours a day

MotorHead (Gremlin Interactive Ltd.)

Web site http://www.gremlin.com/
phone 888-4SONYPC (888-476-6972)
hours 7 days a week, 24 hours a day

Windows® 98 Operating System, Works, Money, Encarta, Internet Explorer (Microsoft Corporation)

Web site http://www.microsoft.com/support/
phone 888-4SONYPC (888-476-6972)*
hours 7 days a week, 24 hours a day
* Support from 1-888-4SONYPC is free of charge for 90 days after the original date of purchase.

Netscape Communicator® (Netscape Communications Corporation)

Web site http://www.netscape.com/
phone 888-4SONYPC (888-476-6972)*
hours 7 days a week, 24 hours a day
* Support from 1-888-4SONYPC is free of charge for 90 days after the original date of purchase.

Prodigy Internet (Prodigy Communications Corporation.)

Web site http://www.prodigy.com/
phone 800-PRODIGY
hours 7 AM - 3 AM ET

Quicken® Basic (Intuit Inc.)

Web site http://www.intuit.com/support/
phone 900-555-4688
hours 7 days a week, 24 hours a day

SurfMonkey (MediaLive, Inc.)

Web site http://www.surfmonkey.com/support/Sub_support.html
phone 408-556-2060
e-mail support@surfmonkey.com
hours 9AM-10PM PT everyday

WinFax® Basic Edition (Symantec Corporation.)

Web site http://www.symantec.com/techsupp/
phone 800-798-0850
fax 800-554-4403 in North America
541-984-2490 outside North America

Specifications

Model **PCV-E518DS**
Processor 500 MHz Pentium® III
Hard Disk Drive 17.28 GB
Standard SDRAM 128 MB PC-100 SDRAM, expandable to 256 MB
Video RAM 8 MB SDRAM
MPEG "Sony Tuned" MPEG Digital Video supports full-screen video playback
Graphics 3D 2X AGP graphics acceleration (Matrox)
Sound Capabilities 3D Positional Audio (Aureal A3D)
Diskette Drive 3.5" 1.44 MB FDD
CD-RW Drive CD-RW Drive (4X max. CD-R writing, 2X max. CD-RW writing, 24X max. reading)
Modem K56flex technology/V.90 compatible data/fax modem[1]
Expansion Capabilities One PCI slot
One additional hard disk drive bay
Connection Capabilities (Front) USB port
i.LINK port (4-pin)
Connection Capabilities (Rear) Optional Keyboard (PS/2-style)
Mouse (PS/2-style)
USB port
Serial port
Parallel (printer)
Game/MIDI
Headphones
Line In
Microphone
VGA Monitor
S-Link (Control-A1)
Optical Digital Audio Out
Two i.LINK ports (6-pin)[2]
Modem line (RJ-11)
Phone line (RJ-11)
Supplied Accessories VAIO Smart keyboard
Sony two-button mouse
RJ-11 phone cable
Power cord
Service 90-day limited service. Extendible to one year from original date of purchase upon registration[3]
Limited Warranty 90-day parts/labor standard. Extendible to one year from original date of purchase upon registration[4]

Power Requirements 200 watts maximum
Dimensions 7" (w) x 12" (h) x 13 3/4" (d) (178mm x 304mm x 330mm)
Weight 17 lbs. (7.71 kg)
Operating Temperature 50º F to 95º F (+10º C to 35º C)

[1] Maximum speed for faxing is 14.4 kbytes/s. Your modem is capable of downloading at 56 kbytes/s using K56flex technology or V.90. Your phone service, online service, or Internet Service Provider however, may not support this technology or operate at this speed.

[2] Six-pin i-LINK connectors on the rear of the system each supply 10V to 12V. The combined total wattage that can be supplied by the two connectors is 6 watts.

[3] Certain restrictions apply

[4] Certain restrictions apply

Specifications are subject to change without notice.

This product meets the standards of the International Energy Star Program for energy efficiency.

© 1999 Sony Electronics Inc. Reproduction in whole or in part without written permission is prohibited. All rights reserved.

Read Me First

Welcome

Congratulations on your purchase of the Sony VAIO Digital Studio Computer. Sony has combined leading-edge technology in audio, video, computing, and communications to provide you with state-of-the-art personal computing.

Features

 For a complete description of the specifications of your VAIO Digital Studio Computer, see Specifications.

- **Exceptional performance:** Your computer includes a brand new Intel® Pentium® III processor, a CD-RW drive, and a V.90 compatible data/fax modem.*

* Actual upload and download speeds may vary due to line conditions, ISP support, and government regulations.

- **CD-RW drive:** This drive is the ideal solution for making backups and data archiving, with the ability to store up to 650 MB* of removable, rewritable storage on a single rewritable CD. Save your movies to CD-R or CD-RW media and share videos and images with family and friends.

***** 530 MB after formatting.

- **VAIO Smart Keyboard:** This USB keyboard has programmable shortcut buttons for launching your favorite programs or accessing the Internet.
- **Sony audio and video quality:** High-fidelity positional 3D audio system (A3D), high-powered 3D graphics (AGP), and "Sony-Tuned" MPEG digital video playback enable you to take advantage of today's advanced multimedia applications, games, and entertainment software.
- **S-Link (Control-A1):** This technology allows you to build a database of all your music and video CDs and then record your favorite audio selections on MiniDiscs. Use your computer with a 200 disc mega-storage CD changer and a MiniDisc recording deck.
- **i.LINK (IEEE 1394):** Three built-in i.LINK ports provide you with maximum digital connection capability. The i.LINK name and logo identify a digital interface (IEEE 1394) for high speed communication. By using your VAIO Digital Studio Computer, a Sony Digital Handycam® Camcorder, the DVgate software preinstalled on your computer, and the i.LINK (IEEE 1394) interface, you can easily create and edit your own home videos.
- **Optical Digital Audio Output:** This high-quality digital interface transmits digital audio data via light pulses. Transfer crystal clear digital audio to your MiniDisc recorder.
- **Digital Studio Software**: Enjoy all of your computer's audio and video capabilities with component-like applications that allow you to creatively manipulate digital still images, video clips, and audio tracks.
- **50 free hours of Internet access:** Use the Internet for up to 50 free hours when you sign up with GTE (no credit card required). Limit of two hours per day. Free access expires after 50 hours or 90 days after signing up--whichever occurs first.
- **Preinstalled software titles**: All the software on your computer is preinstalled, configured, and ready for you to use right out of the box.
- **Windows® 98**: Your system includes the latest operating system from Microsoft.
- **Communications:** Access popular online services, browse the Internet, send faxes, and more.

Unpacking Your Computer

Computer and Supplied Accessories

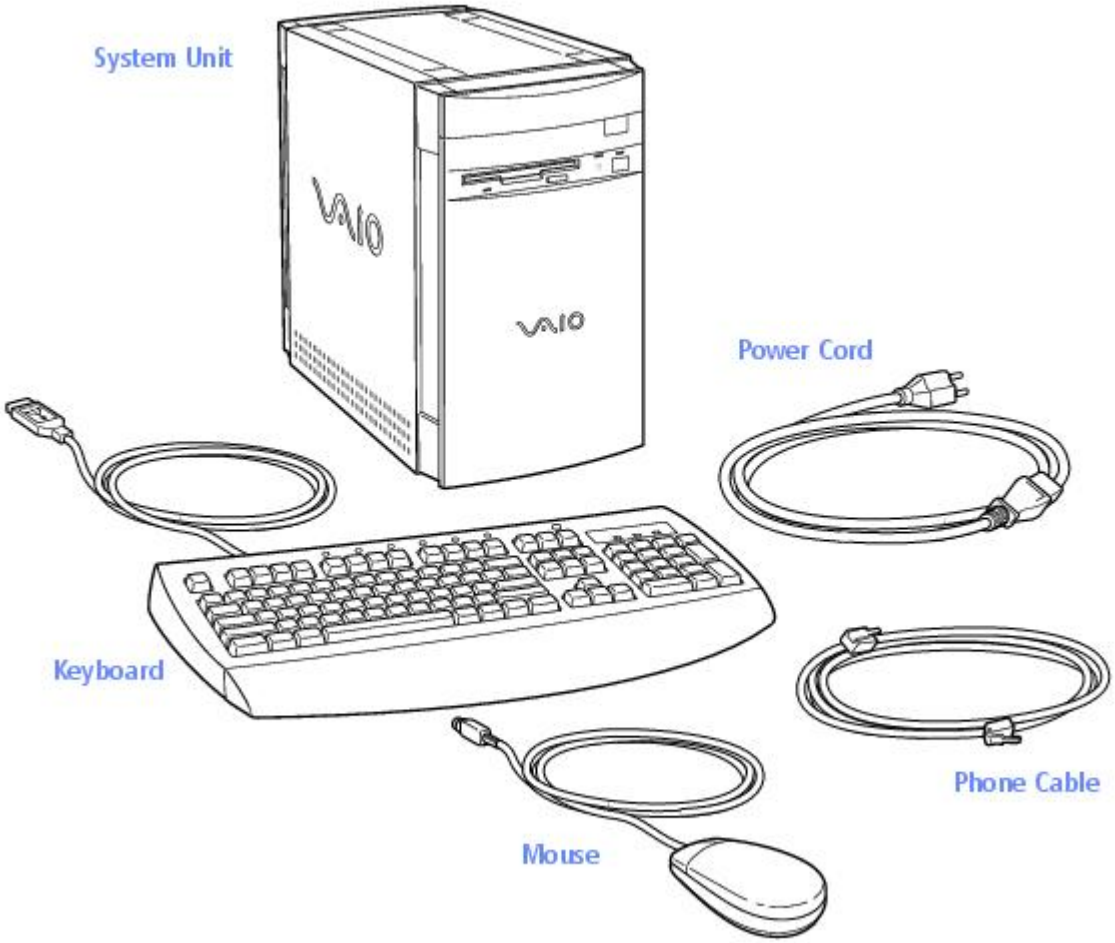

Manuals

- *Read Me First* (this manual) contains features and specifications of your computer. It also includes information on the applications included with your system, how to contact software vendors, and last minute troubleshooting tips.
- The *VAIO Digital Studio Computer User Guide* describes how to get started with your computer, find help, and solve common problems.
- The *Microsoft® Windows®98 Getting Started* manual explains how to use the basic features of the Windows operating system.

Recovery CDs

- System Recovery CD(s)
- Application Recovery CD(s)

Other

- Setting up your VAIO Digital Studio Computer (poster)
- Packet containing special product offers

Software Library

The Software Library contains the Microsoft software license agreement, Sony end-user license agreement, and the following CDs:

- Adobe PhotoDeluxe® Business Edition 3.0
- Gremlin Interactive Ltd. MotorHead
- Microsoft® Encarta® 99 Encyclopedia
- Microsoft® Money/Microsoft® Works

Back Panel Overview

The back panel of your computer contains the connectors where you plug in supplied and optional accessories. The icons on the back panel serve as a map to help you locate the connectors on your computer.

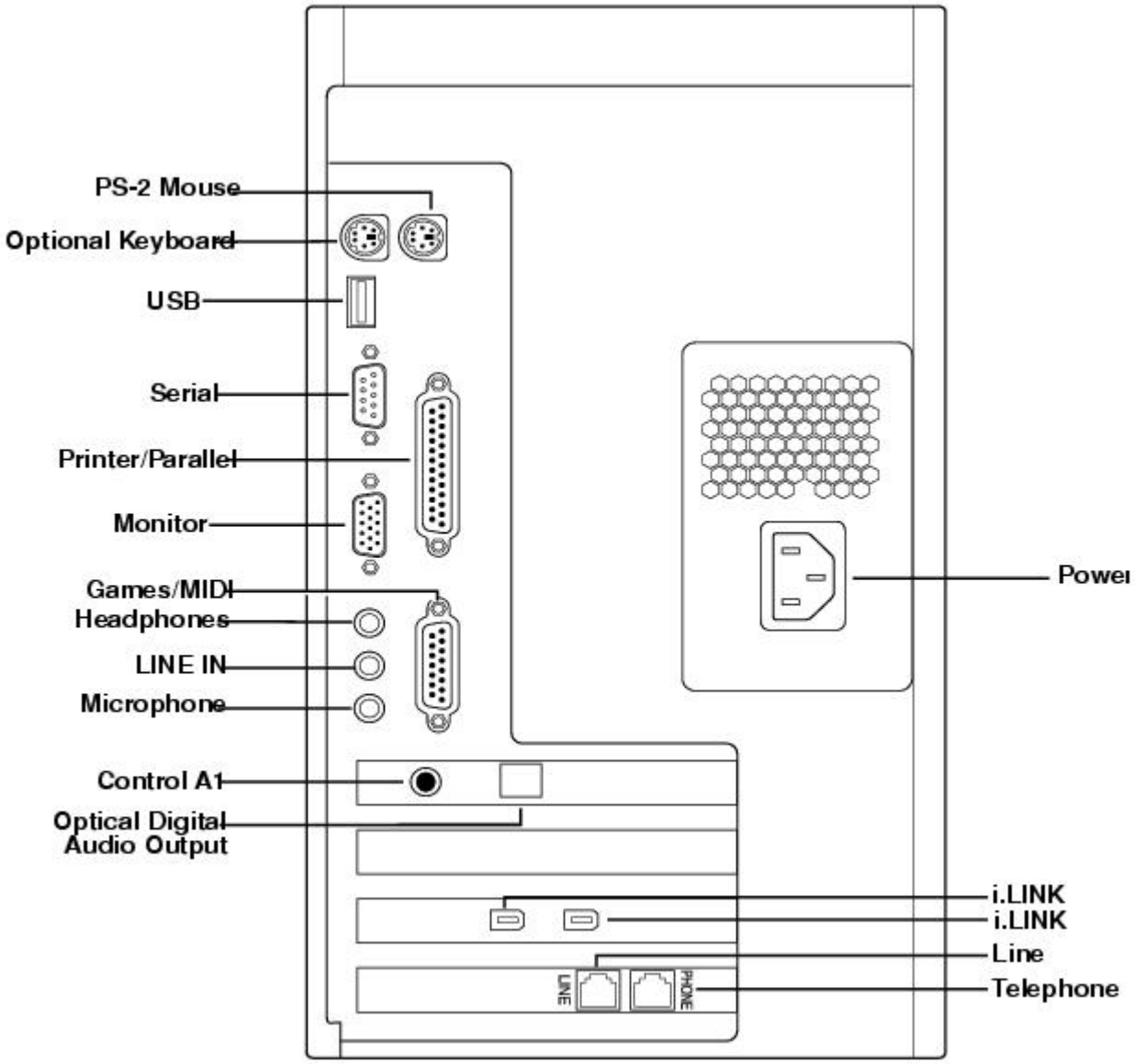

For your convenience, your computer includes USB and i.LINK connectors on both the front and back panels, allowing you to connect to either set of connectors. i.LINK connectors on the back of your system are 6-pin connectors.

Front Panel Overview

The front panel of your VAIO Digital Studio Computer allows for access to the diskette and CD-RW drives. It also includes USB and i.LINK ports to connect USB devices, CD changers, MiniDisc drives, or other components.

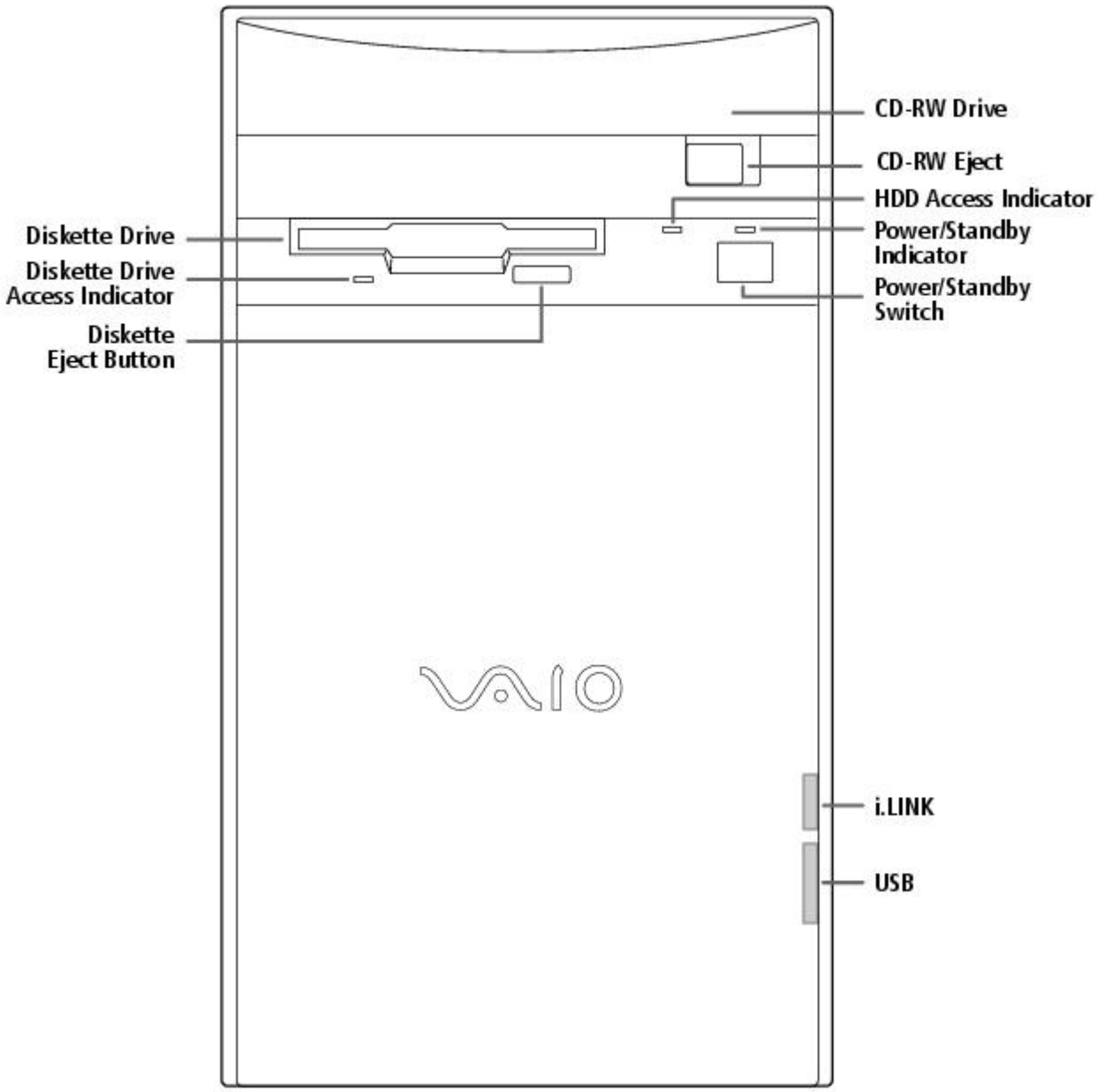

For your convenience, your computer includes USB and i.LINK connectors on both the front and back panels, allowing you to connect to either set of connectors. The i.LINK connector on the front of your system is a 4-pin connector.

Supplementary Information

For the most recent version of this manual, see the online version of Read Me First. You can access this document from the Windows Start Menu by selecting Programs/VAIO Documentation.

Hard Drive Partition

In order to improve the performance of your computer's DVgate Motion software, the hard disk drive on your computer has been formatted with two partitions, C and D. DVgate Motion saves files to the D partition. This prevents large video captures from consuming the available space on your C partition. To maintain optimum performance of DVgate Motion, you should defragment regularly.

VAIO Smart Keyboard Default Settings

The VAIO Smart Keyboard programmable buttons come with the following applications as their default settings:

S1 - Easy Internet Access Browser (Internet)

S2 - Outlook 98 (Mail)

S3 - MotorHead (Game)

S4 - Microsoft® Works (Work)

S5 - Quicken 99 Basic (Finance)

S6 - VAIO Documentation (Help)

All six buttons are reprogrammable.

Using The Standby Mode

To Put Your Computer into Standby Mode

When you are done using your computer, you can put it in Standby mode rather than turn it off completely. There are four ways to put your computer into Standby mode.

- Touch the power switch on the front panel.
- Click Shut Down at the bottom of the Start menu to display the Shut Down Windows dialog box. Select Stand by, and then click OK.
- Press the Standby button on the VAIO Smart Keyboard (the half moon icon).
- Change the timer settings for Standby mode in the Control Panel, as follows:

1. From the Start menu, point to Settings and click Control Panel.
2. Click the Power Management icon.
3. On the Power Schemes tab, change the Power scheme to Home/Office Desk.
4. In the list box for System standby, select an interval of time.
5. Click the OK button and close the Control Panel.

To Resume from Standby Mode

There are two ways to resume system functionality when your computer is in Standby mode. Use either of the following methods.

- Press any key on your keyboard, such as the Enter key.
- Touch the power switch on the front panel.

It may take up to 30 seconds for your system to recover stored information and resume functionality. The screen remains blank while the system is resuming functionality.

Applications That Use the TWAIN Driver

Digital imaging applications, such as Adobe PhotoDeluxe®, allow you to transfer images to your computer from external devices, including scanners or digital cameras. For some devices, a TWAIN driver window appears on the screen. Always close the TWAIN driver window before exiting or minimizing a digital imaging application.

Restoring Outlook 98

For the Add New Components functionality to be available with Microsoft Outlook, you must first run the installation program for Outlook from the Application Recovery CD. When prompted to install the program, select Exit. This decompresses the software, making the Add New Components functionality available.

Inserting Add-in Boards

Your VAIO Digital Studio Computer accommodates PCI add-in boards up to 7.7 inches in length.

Using Devices Connected to the i.LINK (IEEE 1394), S-Link (Control-A1), and Optical Digital Audio Output Connectors

For the latest information on devices known to be compatible with the state-of the-art audio, video, and graphics capabilities of your VAIO computer, check the Sony web site at http://www.sony.com/pcsupport.

Connecting to i.LINK Ports

Your VAIO computer includes a 4-pin i.LINK connector on the front of the system and two 6-pin i.LINK connectors on the back of the system. A 6-pin i.LINK connector can supply power from the computer to the connected device if the device is equipped with a 6-pin connector. Each 6-pin connector supplies 10V to 12V. The total power supplied by both 6-pin i.LINK connectors cannot exceed 6 watts. A 4-pin i.LINK connector cannot supply power to a connected device.

Capturing and Editing Digital Video Clips

- You can capture digital video clips using a digital video camera recorder and DVgate Motion software. Once the clips are saved as AVI files, they can be edited using DVgate Motion, DVgate Clip, or Adobe Premiere® LE. You cannot capture digital video clips directly using the Capture menu in Adobe Premiere LE. Adobe Premiere LE supports an analog capture board for capturing clips. Your VAIO computer is designed for digital video input.
- If there is no audio data associated with an AVI file, the message "Codec compression error" appears. If you do not wish to associate audio with your AVI file, you can add muted sound data by recording audio with the mute option enabled.
- For best performance, when editing AVI files in Adobe Premiere LE, you should use the default setup parameters that shipped with your system. If you change the default setup and want to reinitialize the parameters, follow these steps:

    1. In the Adobe Premiere LE application, select Compression from the Make menu. The Compression Settings dialog box appears.
    2. In the Method list box, select Sony DV software CODEC.
    3. Click OK to close the screen.
    4. From the Make menu, select Preset. The Preset dialog box appears.
    5. Select the parameters for Time Base, Compress, Output, and Preview Option settings as indicated below.

[Time base]

Time base - 29.97fps (required)

[Compress]

File type - AVI (required)
Compress Program Method - Sony DV software CODEC (required)
Compress Program Depth - Millions colors (No other options)
Quality (No control for this item)
Option: Frames per second - 30 (required)
Option: Basic Key Frames (No control for this item)
Option: Optimize Still Off (recommended)
Data rate - Recompress Off (recommended)

[Output options]

Video - On (required)
Video Size - 720x480
4:3 Aspect - Off (required)
VideoType - Field 2 (recommended)
Audio - On (required)
Audio Rate - 44kHz (required)
Audio Format - 16 Bit Stereo or 16 Bit Monaural (required)
Audio Type - Uncompress (required)
Audio Interleave - 1 frame (recommended)
- Less than 30 frames (required)

Audio Sync - 1.0 (required)
Audio Skew - 0.75 (recommended)
- Less than 1.0 (required)

[Preview Option]

Preview Window Size - 360x240

Note that Adobe Premiere LE does not save the Preview Window Size, but uses a default size of 320 x 213 each time the application launches. We recommend that you change this setting to 360 x 240 to improve the quality of preview clips when editing AVI files.

Using Alternate Browsers with America Online®

To use Internet Explorer or Netscape Navigator as your browser with America Online, follow these steps:

1. From the Start menu, point to Settings and then click Control Panel.
2. Click the Internet icon.
3. Click the Connection tab.
4. Click the "Connect to the Internet using local area network" radio button.
5. Click OK.

Using DVgate Motion

When capturing clips:

- Do not use DVgate Motion when the connected digital video peripheral is in Timer Recording mode, as this could produce a malfunction in the peripheral.
- Captures larger than 2 GB (9 minutes and 30 seconds) are automatically continued in a second file.
- You can record stereo audio (stereo 1) while capturing video. You cannot add audio on the stereo 2 track after capturing the video data.
- You cannot use different audio modes on the same tape. You should perform a separate capture for each audio mode you wish to use.
- DVgate Motion does not support hard disk compression. You should not use disk compression if you are planning to work with DVgate Motion.
- Title data is saved in the flash memory of a digital video camera and is not transferred to tape by DVgate Motion.
- To avoid interruption of capture sessions, you should disable the screen saver.
- The drop frame compensation feature does not provide accurate compensation adjustments for tapes recorded in LP mode.
- For tapes that include a mixture of both SP and LP mode, the information displayed by the capture progress indicator may not be accurate.
- Make sure the video head of your digital video device is properly cleaned. Anomalies that you see in captured data could be due to dust or other particles on the video head.
    - The last frame captured is one frame before your selected [OUT] point. The frame you see immediately after clicking the [OUT] button is not captured.

When recording AVI files to tape:

- Do not use DVgate Motion when the connected digital video peripheral is in Timer Recording mode, as this could produce a malfunction in the peripheral.

- You can record only AVI files. MPEG files cannot be recorded.
- To avoid recording problems, such as a single frame appearing in multiple frames, close other applications on your system while recording.
- You cannot use different audio modes on the same tape. If you have AVI files that use different audio modes, they cannot be recorded at the same time, but must be recorded separately.
- Do not attempt to work with AVI files that are smaller than 4 MB.
- DVgate Motion does not support hard disk compression. You should not use disk compression if you are planning to work with DVgate Motion.
- In order to maximize recording capabilities, video and audio data are not available while you are recording.

If DVgate Motion indicates that frames have been dropped, you should try closing all open applications, or you may need to defragment your hard drive.

Restoring Audio Drivers

When you restore the audio drivers from the Application Recovery CD, you need to restart your system to use these drivers. In the Add New Hardware wizard that appears when you restart, click the Next button until you are prompted for the location of the drivers. The audio drivers are located on the Application Recovery CD in G:\drivers\audio\AL98091701\English.

Using AC-3® to Optical Digital Audio Output

MiniDisc player/recorders, DAT player/recorders, and older digital receivers do not support Dolby® Digital (AC-3). You should not use the AC-3 to Optical Digital Audio Output option unless you are using a device that supports Dolby Digital. Please refer to the manual supplied with your equipment to determine if it supports Dolby Digital. If you are unsure and you have selected the AC-3 to Optical Digital Audio Output option, turn down the volume on your equipment before using the DVD player.

Using America Online or Sony Online Support with WinFax® Basic Edition

Once you have configured WinFax Basic Edition, it is automatically available for your use. You cannot use America Online or Sony Online Support when the automatic fax receive feature of WinFax Basic Edition is on. To disable this feature, right click the WinFax icon in the task tray at the bottom right corner of your screen, and then select Exit.

Memory Upgrade Specifications

When upgrading memory, use only 3.3V 64-bit PC-100 168 PIN SDRAM DIMM modules. For more information on Digital Studio Computer compatible memory, call Sony at 1-888-4SONYPC (1-888-476-6972).

About the Software On Your Computer

Your VAIO Digital Studio computer is ready to help you work, play, learn, and communicate as soon as you turn it on. This section gives you an overview of the activities you can perform with your software titles. For support information, see For Answers to Your Software Questions.

Adobe Acrobat® Reader

Adobe Systems Incorporated

Acrobat Reader software allows you to view, navigate, and print electronic documents in Adobe Portable Document Format (PDF), an open file format that is intended to preserve the fidelity of documents created on all major computer platforms.

Adobe PhotoDeluxe® Business Edition

Adobe Systems Incorporated

Create amazing photo effects with PhotoDeluxe. Without learning complex software, you can

enhance, restore, and be creative with your photos. Includes built-in guided activities, stock photos, clip art, and templates to assist you.

Adobe Premiere® LE

Adobe Systems Incorporated

Adobe Premiere LE offers an interface and editing tool for producing movies for video, multimedia, or the web. View source clips and edited footage simultaneously in the monitor window. Create video clips up to three hours long with complete audio-video synchronization.

America Online®

America Online

America Online is the world's most popular Internet online service. Stay in touch with family and friends with Easy-to-Use E-mail, manage your personal finances, get the latest news and sports scores, and chat with thousands of others who share your interests.

AT&T WorldNet® Service

AT&T

Fast, reliable Internet access from AT&T WorldNet Service. AT&T WorldNet Service provides web-based e-mail, a personalized start page from Excite, easy access to the Excite search engine, free web pages, online and live agent technical support, instant messaging, and special shopping discounts at Market Square.

CompuServe®

CompuServe, Inc.

CompuServe is the most comprehensive source of organized business and educational information online today. CompuServe allows you to access the vastness of the Internet without wasting time wading through it. Maximize your time online with CompuServe.

Digital Media Park

Sony Electronics

An integrated suite of multimedia cataloging and playback programs including Media Bar, Media Library, Media Showcase, and MiniDisc Editor. Manage your music by cataloging your entire CD collection, and then create custom MiniDiscs of your favorite songs.

Dr. Solomon's® Anti-Virus

Dr Solomon's Software Inc.

Dr. Solomon's Anti-Virus provides the most comprehensive defense against the spread of viruses, including macro viruses. It can scan inside compressed files and automatically protects your system against viruses sent via e-mail or Internet download.

DVgate Motion

Sony Electronics

Connect a digital video camera recorder to the i.LINK connector and capture your own video clips. You can edit the clips from your video, add others, and combine clips into new movie segments.

DVgate Still

Sony Electronics

Connect a digital video camera recorder to the i.LINK connector and capture your own still images. You can save your images in a variety of popular file formats.

EarthLink Sprint TotalAccess

EarthLink Network, Inc.

An Internet Service Provider that supplies access, information, and assistance to its customers, introducing them to the Internet. Member benefits include e-mail, newsgroups, a Personal Start Page, a free 6 MB web site, a member magazine, and 24-hour technical support.

Microsoft® Encarta® 99 Encyclopedia

Microsoft Corporation

Microsoft Encarta Encyclopedia combines current, comprehensive content with up-to-date multimedia technology, providing users with unique, engaging learning experiences. With the 1999 edition, Encarta provides a wealth of information resources and unique interactive features

Microsoft® Internet Explorer for Windows® 98

Microsoft Corporation

Internet Explorer delivers the web the way you want it. It's safe, easy to use, and you can personalize how you access the web. Outlook Express and other tools in Internet Explorer also help you have a great experience when you are on the web!

Microsoft® Money 99

Microsoft Corporation

Microsoft Money 99 is personal finance software that lets you perform your financial tasks, everything from paying bills to planning for the future, in a smarter, faster way. With Money's online services, you can pay bills and bank from the comfort of home.

Microsoft® Outlook® 98

Microsoft Corporation

Outlook 98 is Microsoft's premier messaging and collaboration client. It combines the leading support for Internet standards-based messaging systems with integrated calendar, contact, and task-management features.

Microsoft® Works

Microsoft Corporation

Works provides users with the right set of core tools that allows them to write letters and reports, track family and friends with the address book, manage home finances, and create a home inventory.

MotorHead

Gremlin Interactive Ltd.

MotorHead is realistic arcade-racing; high-velocity entertainment that puts you behind the wheel for 3D pure racing action. Power across Europe and USA in the Transatlantic Speed League, where second place is simply not an option.

Netscape Communicator®

Netscape Communications

Netscape Communicator is the all-in-one Internet tool that makes it easy to browse the web, send Internet e-mail, chat, read newsgroups, and compose great web documents.

PictureGear

Sony Electronics

This image management software displays images from your hard drive, a Sony digital still camera, or a Sony Mavica® camera. The images appear in a convenient light-table format, so that you can easily view the contents of an entire folder.

Prodigy Internet

Prodigy Communications Corporation

An Internet service that helps you find what you need online faster and smarter. Prodigy delivers powerful online content, such as sports scores, stock quotes, news, and easy access to Excite , plus a personal e-mail account and quality customer service, all at a competitive price.

Quicken® Basic 99

Intuit, Inc

Quicken is the fastest, easiest way to organize your finances. Quicken works just like your checkbook, so it's easy to learn and use. Quicken manages all of your finances, bank accounts, credit cards, investments, and loans. You can even pay your bills online.

SurfMonkey

MediaLive, Inc

SurfMonkey is a web browser and online service for kids ages 6-12 that makes the Internet safe, fun, and easy. A talking monkey guides children through web sites and chat rooms, and can read their e-mail out loud. Children cannot go to inappropriate web sites, parents can screen e-mail messages, and chat messages are monitored.

VAIO Smart Keyboard

Sony Electronics

VAIO Smart Keyboard software operates your new easy to use programmable USB keyboard. Six programmable buttons enable you to launch your favorite applications, open frequently used files, access Explorer, or even open your web browser with just the click of a button.

WinFax® Basic Edition

Symantec Corporation

WinFax Basic Edition incorporates an easy-to-use interface that allows you to send and receive faxes easily. Upgrade to WinFax Pro to receive additional features.

About Your Recovery CDs

Application Recovery CD(s)

Sony Electronics

The Application Recovery CD program allows you to reinstall individual applications and device drivers. Use it to restore corrupted or accidentally erased files.

System Recovery CD(s)

Sony Electronics

The System Recovery CD program allows you to restore the software titles that shipped with your computer if they become corrupted or are erased accidentally. It can be used only to restore the hard disk of the Sony computer you purchased.

For Answers to Your Software Questions

Sony Service Center

For the Sony Service Center nearest you, call at 1-888-4SONYPC (1-888-476-6972).

Acrobat® Reader, Adobe PhotoDeluxe® Business Edition , Adobe Premiere® LE (Adobe Systems Incorporated)

Web site http://www.adobe.com/
phone 206-628-2746 (fee-based support)
fax 206-628-5737
e-mail techdocs@adobe.com
hours M-F, 6 AM-5 PM PT

America Online® (America Online)

Web site http://www.aol.com/
phone 800-827-3338
hours 7 days a week, 6 AM - 2 PM ET

AT&T WorldNet® Service (AT&T)

Web site http://www.att.net/*
phone 800-400-1447
e-mail worldnet@attmail.com
hours 7 days a week, 24 hours a day

* You must be a WorldNet Service customer to access online support.

CompuServe® Interactive (CompuServe Interactive, Inc.)

Web site http://www.compuserve.com/
phone 800-848-8990
hours M-F, 8 AM - 1 AM ET, S-S 10 AM - 10 PM ET

Dr. Solomon's® Anti-Virus (Dr. Solomon's Software Inc.)

Web site http://www.drsolomon.com/
phone 888-377-6566
e-mail support@us.drsolomon.com
hours 7 days a week, 24 hours a day

EarthLink Sprint TotalAccess (EarthLink Network, Inc.)

Web site http://help.earthlink.net/techsupport/
phone 800-395-8410
e-mail support@earthlink.net
hours 7 days a week, 24 hours a day

Easy Internet Access (Encompass, Inc.)

Web site http://www.encmpss.com/
phone 800-927-3000
hours 7 days a week, 24 hours a day

MotorHead (Gremlin Interactive Ltd.)

Web site http://www.gremlin.com/
phone 888-4SONYPC (888-476-6972)
hours 7 days a week, 24 hours a day

Windows® 98 Operating System, Works, Money, Encarta, Internet Explorer (Microsoft Corporation)

Web site http://www.microsoft.com/support/
phone 888-4SONYPC (888-476-6972)*
hours 7 days a week, 24 hours a day
* Support from 1-888-4SONYPC is free of charge for 90 days after the original date of purchase.

Netscape Communicator® (Netscape Communications Corporation)

Web site http://www.netscape.com/
phone 888-4SONYPC (888-476-6972)*
hours 7 days a week, 24 hours a day
* Support from 1-888-4SONYPC is free of charge for 90 days after the original date of purchase.

Prodigy Internet (Prodigy Communications Corporation.)

Web site http://www.prodigy.com/
phone 800-PRODIGY
hours 7 AM - 3 AM ET

Quicken® Basic (Intuit Inc.)

Web site http://www.intuit.com/support/
phone 900-555-4688
hours 7 days a week, 24 hours a day

SurfMonkey (MediaLive, Inc.)

Web site http://www.surfmonkey.com/support/Sub_support.html
phone 408-556-2060
e-mail support@surfmonkey.com
hours 9AM-10PM PT everyday

WinFax® Basic Edition (Symantec Corporation.)

Web site http://www.symantec.com/techsupp/
phone 800-798-0850
fax 800-554-4403 in North America
541-984-2490 outside North America

Specifications

Model **PCV-E518DS**
Processor 500 MHz Pentium® III
Hard Disk Drive 17.28 GB
Standard SDRAM 128 MB PC-100 SDRAM, expandable to 256 MB
Video RAM 8 MB SDRAM
MPEG "Sony Tuned" MPEG Digital Video supports full-screen video playback
Graphics 3D 2X AGP graphics acceleration (Matrox)
Sound Capabilities 3D Positional Audio (Aureal A3D)
Diskette Drive 3.5" 1.44 MB FDD
CD-RW Drive CD-RW Drive (4X max. CD-R writing, 2X max. CD-RW writing, 24X max. reading)
Modem K56flex technology/V.90 compatible data/fax modem[1]
Expansion Capabilities One PCI slot
One additional hard disk drive bay
Connection Capabilities (Front) USB port
i.LINK port (4-pin)
Connection Capabilities (Rear) Optional Keyboard (PS/2-style)
Mouse (PS/2-style)
USB port
Serial port
Parallel (printer)
Game/MIDI
Headphones
Line In
Microphone
VGA Monitor
S-Link (Control-A1)
Optical Digital Audio Out
Two i.LINK ports (6-pin)[2]
Modem line (RJ-11)
Phone line (RJ-11)
Supplied Accessories VAIO Smart keyboard
Sony two-button mouse
RJ-11 phone cable
Power cord
Service 90-day limited service. Extendible to one year from original date of purchase upon registration[3]
Limited Warranty 90-day parts/labor standard. Extendible to one year from original date of purchase upon registration[4]

Power Requirements 200 watts maximum
Dimensions 7" (w) x 12" (h) x 13 3/4" (d) (178mm x 304mm x 330mm)
Weight 17 lbs. (7.71 kg)
Operating Temperature 50º F to 95º F (+10º C to 35º C)

[1] Maximum speed for faxing is 14.4 kbytes/s. Your modem is capable of downloading at 56 kbytes/s using K56flex technology or V.90. Your phone service, online service, or Internet Service Provider however, may not support this technology or operate at this speed.

[2] Six-pin i-LINK connectors on the rear of the system each supply 10V to 12V. The combined total wattage that can be supplied by the two connectors is 6 watts.

[3] Certain restrictions apply

[4] Certain restrictions apply

Specifications are subject to change without notice.

This product meets the standards of the International Energy Star Program for energy efficiency.

© 1999 Sony Electronics Inc. Reproduction in w hole or in part w ithout w ritten permission is prohibited. All rights reserved.

Getting Started With Your VAIO Digital Studio Computer

Congratulations on your purchase of the Sony VAIO Digital Studio Computer. It is a high-performance multimedia computer that combines state-of-the-art computer functionality with the latest audio/video and information technology convergence features.

The computer comes with the software titles preinstalled on your hard disk drive. To get started, just follow the simple steps described on the color poster to connect the cables and turn on the computer, and your VAIO Digital Studio Computer is ready to use.

Choosing a Location for Your Computer

Before you get started, find the best location for your new computer. Here are some things to consider when planning your workspace:

- **Stable work surface**--Use a stable work surface large enough to support the computer, the display, and other equipment.
- **Ventilation--**Leave at least eight inches of space on the left and back sides of your computer to enable proper ventilation.
- **Placement of the keyboard, mouse, and other input devices--**Place your keyboard, mouse, and other input devices so that your arms and hands are in a relaxed, comfortable position. The keyboard should be directly in front of you. Adjust the level of the keyboard so that your lower arms are parallel to the floor. Keep your wrists in a relaxed position when you're using the keyboard--not angled up or down. Use the palmrest only briefly, for resting. While typing, never use the palmrest or rest your hands on the table. Position the mouse at the same level as the keyboard. Hold the mouse with a relaxed hand, and use your whole arm to move it. Take breaks during sessions with your computer. Excessive use of the mouse or a joystick may strain muscles or tendons.
- **Furniture and posture--**Sit in a chair with good back support and armrests. Adjust the level of the chair so your feet are flat on the floor. A footrest may make you more comfortable. Sit in a relaxed, upright posture--avoid slouching forward or leaning far backward.

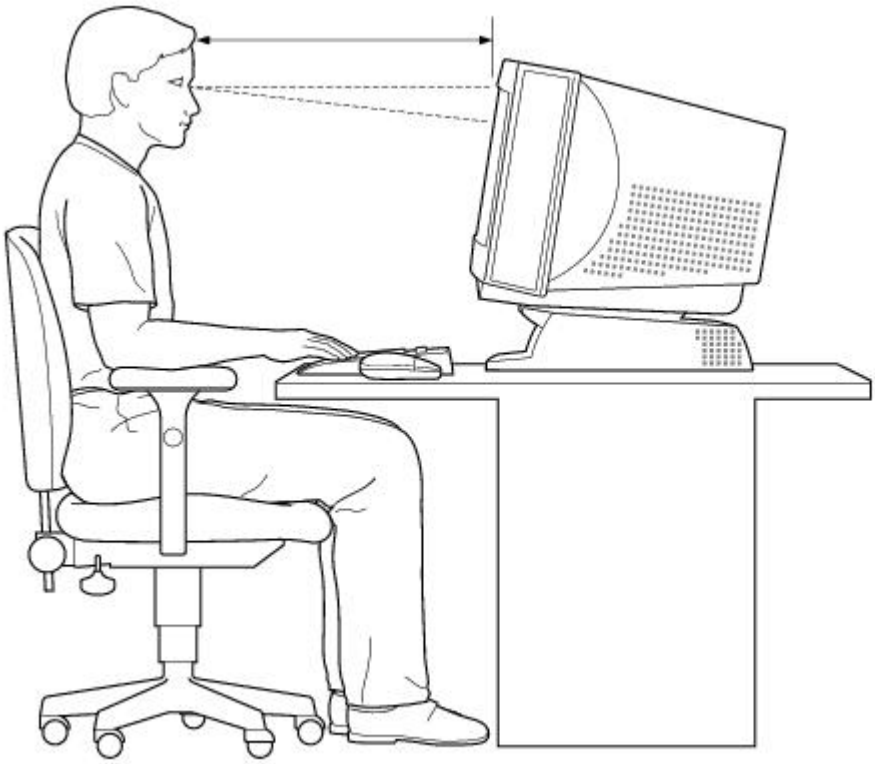

- **Viewing angle of the display--**Position the display 18 to 26 inches directly in front of you, with

the top of the screen at or a little below eye level. Use the display's tilting feature to find the best position. You can reduce eye strain and muscle fatigue by placing the display in the proper position.

- **Lighting--**Choose a location where windows and lights do not create glare and reflection on the display. Use indirect lighting to avoid bright spots on the display. You can also purchase accessories for your display that help reduce glare. Proper lighting adds to your comfort and work effectiveness.

Registering Windows® 98

The first time you turn on your computer, you need to complete a few steps to register and configure the Windows 98 software that is already installed on your computer. You do not need to repeat these steps each time you turn on your computer.


You must register Windows 98 before you can use your computer.

The on-screen instructions guide you through the registration and configuration process. The following is an overview of the process.

1. Gathering information:
    - Enter your name.
    - Read and accept the License Agreement.
    - Enter your Certificate of Authenticity number located on the cover of the Microsoft Windows 98 *Getting Started* manual.
2. Windows 98 setup: click the Finish button on the Windows 98 Setup Wizard screen.
3. Selecting your computer settings: if necessary, change the Time Zone, Date, and Time on the Date/Time Properties screen.
4. Registering your computer: for details on registering your computer, see Registering Your Computer . You can also sign up for 50 free hours of Internet service at this time.
5. Learning about Windows: if you want, take the tour of Windows.

Registering Your Computer

Take advantage of Sony's commitment to quality customer support and receive these benefits by registering your computer:

- **Sony Online Support**--Talk to a Support Representative to troubleshoot problems you may be having with your computer.
- **Limited warranty**--Protect your investment. See Limited Warranty Statement for details.


You must register your VAIO Digital Studio Computer to extend the warranty for an additional nine months beyond the initial 90-day warranty period.

- **On-site service**--Provides convenient resolution of problems.

If you have not already registered, follow these steps to use the computer online registration service.

1. Click the Sony VAIO Registration icon on the VAIO desktop.
2. Enter the information requested on the first online registration form. Press the tab key to move from box to box.
3. Click the Next button to advance to the next form.

4. Complete the remaining forms by clicking the Next button each time you complete a form.

   The computer automatically transfers your registration information using your built-in modem and a toll-free telephone number.

Using the VAIO Smart Keyboard

Connecting the Optional Palmrest

The keyboard that comes with your computer is equipped with an optional palmrest that you can attach to your keyboard. Follow these steps to connect the palmrest.

1. Place the keyboard and palmrest upside down on a flat surface.
2. Insert the latching posts on the palmrest into the openings on the keyboard.
3. Move the palmrest to the right until you feel it snap into place.

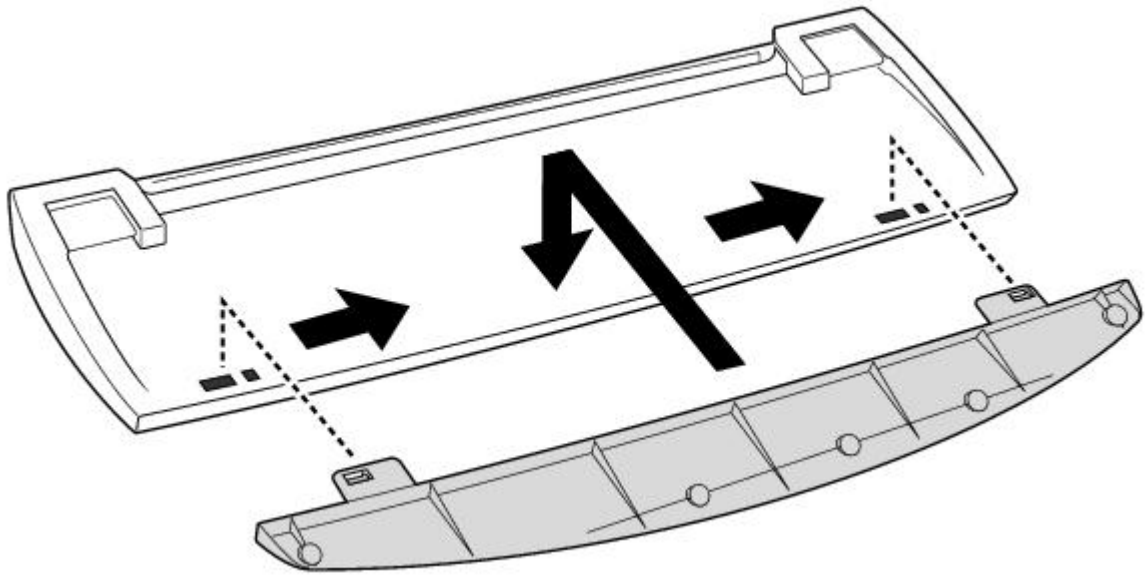

Do not keep your wrists on the palmrest while typing; use the palmrest briefly only when resting.

To remove the palmrest

1. Turn the keyboard and palmrest upside down.
2. Push down on the palmrest, and then move it to the left.
3. Lift the palmrest away from the keyboard.

Changing the Function of the Programmable Buttons

The six programmable buttons along the top of the keyboard are preprogrammed to perform specific functions. You can change the function of the programmable buttons as follows:

1. Click the Start button on the Windows taskbar to open the Start menu.
2. Point to Programs and click VAIO Smart Keyboard.

Alternatively, you can click the VAIO Smart Keyboard icon in the Windows task tray.

3. Click the on-screen button that represents the button on the keyboard (S1 to S6) that you want to program.
4. Complete the Customization dialog box to specify the function and label you want to assign to the button. Then click OK.

Alternatively, you can drag and drop any Windows icon that represents the function you want to assign onto the on-screen button. However, you cannot drag and drop icons that are specific to the Windows operating system, such as My Computer.

5. Close the Customization dialog box.

Using the Standby Function

When you are done using your computer, you can put it in standby mode rather than turn it off completely. Putting the computer in standby mode allows you to return quickly to normal computer use.

To put the computer in standby mode

1. Save your work and close any applications that are running. (You can leave Microsoft Windows running.)
2. Press the  (Standby) button on the top of the keyboard (or press the power switch momentarily on the front panel of the computer).

   The computer goes into standby mode.

Alternatively, you can click the Start button on the Windows taskbar, click Shutdown, select Standby, and then click OK.

To let the computer go into standby mode automatically

Set the computer to automatically go into standby mode after there has been no activity on it for a specified time. You can set this length of time on the Windows Control Panel. To set the timer on the Windows Control Panel, click the Start button on the Windows taskbar. Select Settings, and then click Control Panel. When the panel displays, double-click the Power icon, and then select the Disk Drives tab. On the Disk Drives tab, select the When powered by AC power check box. A check mark appears in the check box and you can then type in the timer setting or click the arrows to select a new time.

To resume from standby mode

Press any key on the keyboard, move the mouse, or press the power switch on the front panel again.

Standby Mode Indicators

You can tell which mode the computer is in by the color of the power indicator light.

Color	Mode
Amber	Computer is in standby mode.
Green	Computer is out of standby mode, ready to use.
No color	Computer is turned off.

In standby mode you may periodically hear the computer's fan turn on and off, depending on the room's temperature. This is normal functioning in standby mode.

Shutting Down Your Computer

When you are ready to turn off your computer for an extended period of time, use the following procedure to shut down the computer.

To avoid the potential loss of data, do not use the power switch to shut down the computer.

To shut down your computer

If you plan to shut down your computer for a short period of time, you may want to use standby mode instead. See Using the Standby Function.

1. Click the Start button on the Windows taskbar to open the Start menu.
2. Click Shut Down to display the Shut Down Windows dialog box.
3. Select the Shut down option.
4. Click OK to complete the shutdown process.



Respond to any prompts about saving documents.

5. Wait for your computer to turn off automatically -- the power indicator light turns off.
6. Turn off the display and any other peripherals connected to your computer.

Getting Started With Your VAIO Digital Studio Computer

Congratulations on your purchase of the Sony VAIO Digital Studio Computer. It is a high-performance multimedia computer that combines state-of-the-art computer functionality with the latest audio/video and information technology convergence features.

The computer comes with the software titles preinstalled on your hard disk drive. To get started, just follow the simple steps described on the color poster to connect the cables and turn on the computer, and your VAIO Digital Studio Computer is ready to use.

Choosing a Location for Your Computer

Before you get started, find the best location for your new computer. Here are some things to consider when planning your workspace:

- **Stable work surface**--Use a stable work surface large enough to support the computer, the display, and other equipment.
- **Ventilation--**Leave at least eight inches of space on the left and back sides of your computer to enable proper ventilation.
- **Placement of the keyboard, mouse, and other input devices--**Place your keyboard, mouse, and other input devices so that your arms and hands are in a relaxed, comfortable position. The keyboard should be directly in front of you. Adjust the level of the keyboard so that your lower arms are parallel to the floor. Keep your wrists in a relaxed position when you're using the keyboard--not angled up or down. Use the palmrest only briefly, for resting. While typing, never use the palmrest or rest your hands on the table. Position the mouse at the same level as the keyboard. Hold the mouse with a relaxed hand, and use your whole arm to move it. Take breaks during sessions with your computer. Excessive use of the mouse or a joystick may strain muscles or tendons.
- **Furniture and posture--**Sit in a chair with good back support and armrests. Adjust the level of the chair so your feet are flat on the floor. A footrest may make you more comfortable. Sit in a relaxed, upright posture--avoid slouching forward or leaning far backward.

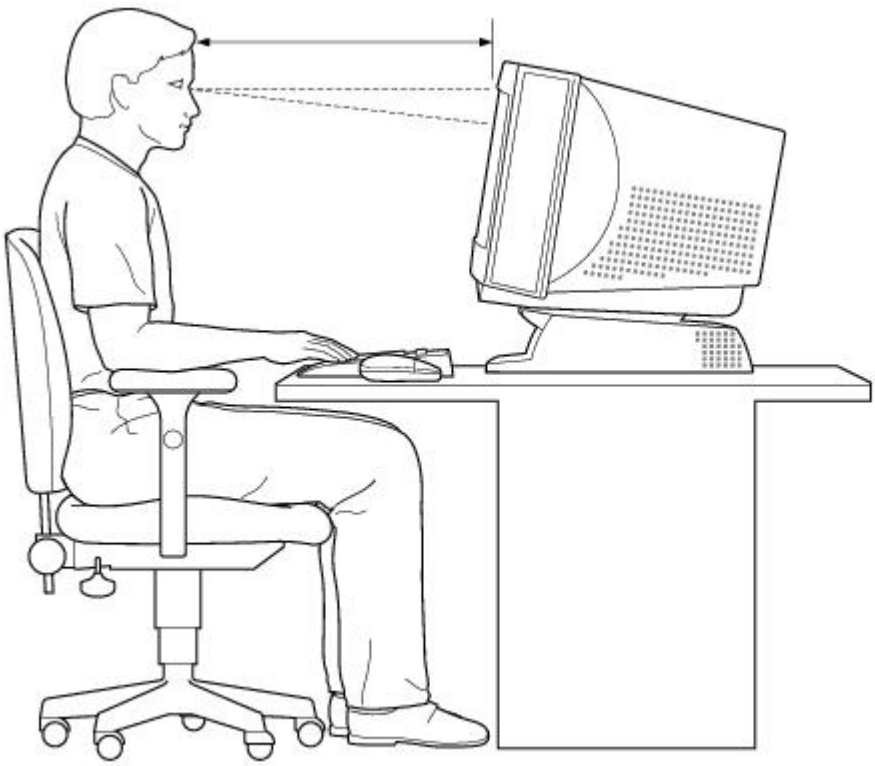

- **Viewing angle of the display--**Position the display 18 to 26 inches directly in front of you, with

the top of the screen at or a little below eye level. Use the display's tilting feature to find the best position. You can reduce eye strain and muscle fatigue by placing the display in the proper position.

- **Lighting--**Choose a location where windows and lights do not create glare and reflection on the display. Use indirect lighting to avoid bright spots on the display. You can also purchase accessories for your display that help reduce glare. Proper lighting adds to your comfort and work effectiveness.

Registering Windows® 98

The first time you turn on your computer, you need to complete a few steps to register and configure the Windows 98 software that is already installed on your computer. You do not need to repeat these steps each time you turn on your computer.


You must register Windows 98 before you can use your computer.

The on-screen instructions guide you through the registration and configuration process. The following is an overview of the process.

1. Gathering information:
    - Enter your name.
    - Read and accept the License Agreement.
    - Enter your Certificate of Authenticity number located on the cover of the Microsoft Windows 98 *Getting Started* manual.
2. Windows 98 setup: click the Finish button on the Windows 98 Setup Wizard screen.
3. Selecting your computer settings: if necessary, change the Time Zone, Date, and Time on the Date/Time Properties screen.
4. Registering your computer: for details on registering your computer, see Registering Your Computer . You can also sign up for 50 free hours of Internet service at this time.
5. Learning about Windows: if you want, take the tour of Windows.

Registering Your Computer

Take advantage of Sony's commitment to quality customer support and receive these benefits by registering your computer:

- **Sony Online Support**--Talk to a Support Representative to troubleshoot problems you may be having with your computer.
- **Limited warranty**--Protect your investment. See Limited Warranty Statement for details.


You must register your VAIO Digital Studio Computer to extend the warranty for an additional nine months beyond the initial 90-day warranty period.

- **On-site service**--Provides convenient resolution of problems.

If you have not already registered, follow these steps to use the computer online registration service.

1. Click the Sony VAIO Registration icon on the VAIO desktop.
2. Enter the information requested on the first online registration form. Press the tab key to move from box to box.
3. Click the Next button to advance to the next form.

4. Complete the remaining forms by clicking the Next button each time you complete a form.

   The computer automatically transfers your registration information using your built-in modem and a toll-free telephone number.

Using the VAIO Smart Keyboard

Connecting the Optional Palmrest

The keyboard that comes with your computer is equipped with an optional palmrest that you can attach to your keyboard. Follow these steps to connect the palmrest.

1. Place the keyboard and palmrest upside down on a flat surface.
2. Insert the latching posts on the palmrest into the openings on the keyboard.
3. Move the palmrest to the right until you feel it snap into place.

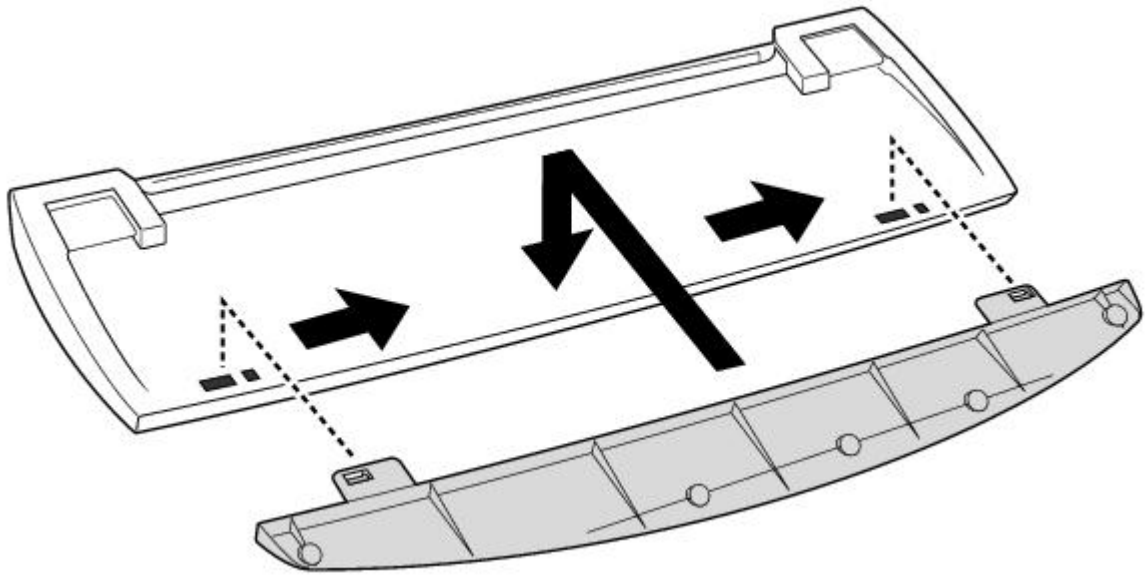

Do not keep your wrists on the palmrest while typing; use the palmrest briefly only when resting.

To remove the palmrest

1. Turn the keyboard and palmrest upside down.
2. Push down on the palmrest, and then move it to the left.
3. Lift the palmrest away from the keyboard.

Changing the Function of the Programmable Buttons

The six programmable buttons along the top of the keyboard are preprogrammed to perform specific functions. You can change the function of the programmable buttons as follows:

1. Click the Start button on the Windows taskbar to open the Start menu.
2. Point to Programs and click VAIO Smart Keyboard.

Alternatively, you can click the VAIO Smart Keyboard icon in the Windows task tray.

3. Click the on-screen button that represents the button on the keyboard (S1 to S6) that you want to program.
4. Complete the Customization dialog box to specify the function and label you want to assign to the button. Then click OK.

Alternatively, you can drag and drop any Windows icon that represents the function you want to assign onto the on-screen button. However, you cannot drag and drop icons that are specific to the Windows operating system, such as My Computer.

5. Close the Customization dialog box.

Using the Standby Function

When you are done using your computer, you can put it in standby mode rather than turn it off completely. Putting the computer in standby mode allows you to return quickly to normal computer use.

To put the computer in standby mode

1. Save your work and close any applications that are running. (You can leave Microsoft Windows running.)
2. Press the (Standby) button on the top of the keyboard (or press the power switch momentarily on the front panel of the computer).

   The computer goes into standby mode.

Alternatively, you can click the Start button on the Windows taskbar, click Shutdown, select Standby, and then click OK.

To let the computer go into standby mode automatically

Set the computer to automatically go into standby mode after there has been no activity on it for a specified time. You can set this length of time on the Windows Control Panel. To set the timer on the Windows Control Panel, click the Start button on the Windows taskbar. Select Settings, and then click Control Panel. When the panel displays, double-click the Power icon, and then select the Disk Drives tab. On the Disk Drives tab, select the When powered by AC power check box. A check mark appears in the check box and you can then type in the timer setting or click the arrows to select a new time.

To resume from standby mode

Press any key on the keyboard, move the mouse, or press the power switch on the front panel again.

Standby Mode Indicators

You can tell which mode the computer is in by the color of the power indicator light.

Color	Mode
Amber	Computer is in standby mode.
Green	Computer is out of standby mode, ready to use.
No color	Computer is turned off.

In standby mode you may periodically hear the computer's fan turn on and off, depending on the room's temperature. This is normal functioning in standby mode.

Shutting Down Your Computer

When you are ready to turn off your computer for an extended period of time, use the following procedure to shut down the computer.

To avoid the potential loss of data, do not use the power switch to shut down the computer.

To shut down your computer

If you plan to shut down your computer for a short period of time, you may want to use standby mode instead. See Using the Standby Function.

1. Click the Start button on the Windows taskbar to open the Start menu.
2. Click Shut Down to display the Shut Down Windows dialog box.
3. Select the Shut down option.
4. Click OK to complete the shutdown process.



Respond to any prompts about saving documents.

5. Wait for your computer to turn off automatically -- the power indicator light turns off.
6. Turn off the display and any other peripherals connected to your computer.

Getting Started With Your VAIO Digital Studio Computer

Congratulations on your purchase of the Sony VAIO Digital Studio Computer. It is a high-performance multimedia computer that combines state-of-the-art computer functionality with the latest audio/video and information technology convergence features.

The computer comes with the software titles preinstalled on your hard disk drive. To get started, just follow the simple steps described on the color poster to connect the cables and turn on the computer, and your VAIO Digital Studio Computer is ready to use.

Choosing a Location for Your Computer

Before you get started, find the best location for your new computer. Here are some things to consider when planning your workspace:

- **Stable work surface**--Use a stable work surface large enough to support the computer, the display, and other equipment.
- **Ventilation--**Leave at least eight inches of space on the left and back sides of your computer to enable proper ventilation.
- **Placement of the keyboard, mouse, and other input devices--**Place your keyboard, mouse, and other input devices so that your arms and hands are in a relaxed, comfortable position. The keyboard should be directly in front of you. Adjust the level of the keyboard so that your lower arms are parallel to the floor. Keep your wrists in a relaxed position when you're using the keyboard--not angled up or down. Use the palmrest only briefly, for resting. While typing, never use the palmrest or rest your hands on the table. Position the mouse at the same level as the keyboard. Hold the mouse with a relaxed hand, and use your whole arm to move it. Take breaks during sessions with your computer. Excessive use of the mouse or a joystick may strain muscles or tendons.
- **Furniture and posture--**Sit in a chair with good back support and armrests. Adjust the level of the chair so your feet are flat on the floor. A footrest may make you more comfortable. Sit in a relaxed, upright posture--avoid slouching forward or leaning far backward.

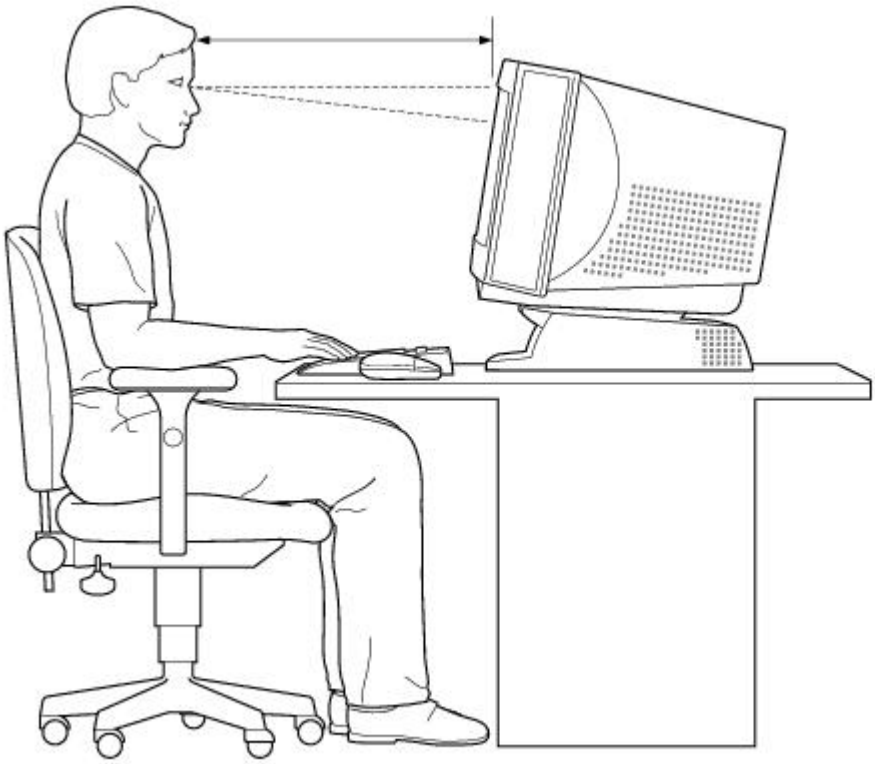

- **Viewing angle of the display--**Position the display 18 to 26 inches directly in front of you, with

the top of the screen at or a little below eye level. Use the display's tilting feature to find the best position. You can reduce eye strain and muscle fatigue by placing the display in the proper position.

- **Lighting--**Choose a location where windows and lights do not create glare and reflection on the display. Use indirect lighting to avoid bright spots on the display. You can also purchase accessories for your display that help reduce glare. Proper lighting adds to your comfort and work effectiveness.

Registering Windows® 98

The first time you turn on your computer, you need to complete a few steps to register and configure the Windows 98 software that is already installed on your computer. You do not need to repeat these steps each time you turn on your computer.


You must register Windows 98 before you can use your computer.

The on-screen instructions guide you through the registration and configuration process. The following is an overview of the process.

1. Gathering information:
    - Enter your name.
    - Read and accept the License Agreement.
    - Enter your Certificate of Authenticity number located on the cover of the Microsoft Windows 98 *Getting Started* manual.
2. Windows 98 setup: click the Finish button on the Windows 98 Setup Wizard screen.
3. Selecting your computer settings: if necessary, change the Time Zone, Date, and Time on the Date/Time Properties screen.
4. Registering your computer: for details on registering your computer, see Registering Your Computer . You can also sign up for 50 free hours of Internet service at this time.
5. Learning about Windows: if you want, take the tour of Windows.

Registering Your Computer

Take advantage of Sony's commitment to quality customer support and receive these benefits by registering your computer:

- **Sony Online Support**--Talk to a Support Representative to troubleshoot problems you may be having with your computer.
- **Limited warranty**--Protect your investment. See Limited Warranty Statement for details.


You must register your VAIO Digital Studio Computer to extend the warranty for an additional nine months beyond the initial 90-day warranty period.

- **On-site service**--Provides convenient resolution of problems.

If you have not already registered, follow these steps to use the computer online registration service.

1. Click the Sony VAIO Registration icon on the VAIO desktop.
2. Enter the information requested on the first online registration form. Press the tab key to move from box to box.
3. Click the Next button to advance to the next form.

4. Complete the remaining forms by clicking the Next button each time you complete a form.

   The computer automatically transfers your registration information using your built-in modem and a toll-free telephone number.

Using the VAIO Smart Keyboard

Connecting the Optional Palmrest

The keyboard that comes with your computer is equipped with an optional palmrest that you can attach to your keyboard. Follow these steps to connect the palmrest.

1. Place the keyboard and palmrest upside down on a flat surface.
2. Insert the latching posts on the palmrest into the openings on the keyboard.
3. Move the palmrest to the right until you feel it snap into place.

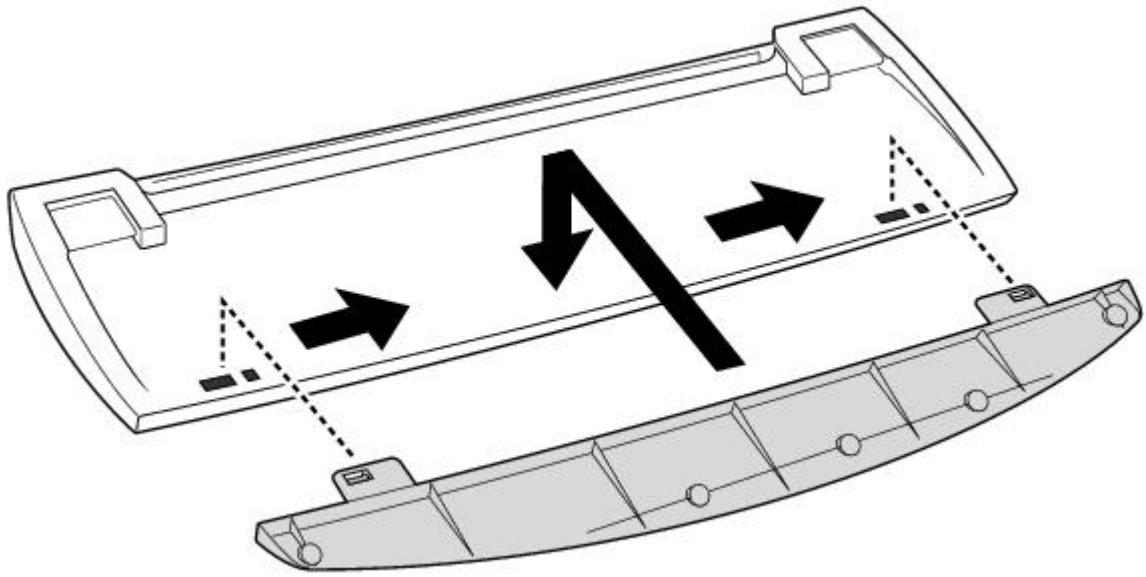

Do not keep your wrists on the palmrest while typing; use the palmrest briefly only when resting.

To remove the palmrest

1. Turn the keyboard and palmrest upside down.
2. Push down on the palmrest, and then move it to the left.
3. Lift the palmrest away from the keyboard.

Changing the Function of the Programmable Buttons

The six programmable buttons along the top of the keyboard are preprogrammed to perform specific functions. You can change the function of the programmable buttons as follows:

1. Click the Start button on the Windows taskbar to open the Start menu.
2. Point to Programs and click VAIO Smart Keyboard.

Alternatively, you can click the VAIO Smart Keyboard icon in the Windows task tray.

3. Click the on-screen button that represents the button on the keyboard (S1 to S6) that you want to program.
4. Complete the Customization dialog box to specify the function and label you want to assign to the button. Then click OK.

Alternatively, you can drag and drop any Windows icon that represents the function you want to assign onto the on-screen button. However, you cannot drag and drop icons that are specific to the Windows operating system, such as My Computer.

5. Close the Customization dialog box.

Using the Standby Function

When you are done using your computer, you can put it in standby mode rather than turn it off completely. Putting the computer in standby mode allows you to return quickly to normal computer use.

To put the computer in standby mode

1. Save your work and close any applications that are running. (You can leave Microsoft Windows running.)
2. Press the (Standby) button on the top of the keyboard (or press the power switch momentarily on the front panel of the computer).

   The computer goes into standby mode.

Alternatively, you can click the Start button on the Windows taskbar, click Shutdown, select Standby, and then click OK.

To let the computer go into standby mode automatically

Set the computer to automatically go into standby mode after there has been no activity on it for a specified time. You can set this length of time on the Windows Control Panel. To set the timer on the Windows Control Panel, click the Start button on the Windows taskbar. Select Settings, and then click Control Panel. When the panel displays, double-click the Power icon, and then select the Disk Drives tab. On the Disk Drives tab, select the When powered by AC power check box. A check mark appears in the check box and you can then type in the timer setting or click the arrows to select a new time.

To resume from standby mode

Press any key on the keyboard, move the mouse, or press the power switch on the front panel again.

Standby Mode Indicators

You can tell which mode the computer is in by the color of the power indicator light.

Color	Mode
Amber	Computer is in standby mode.
Green	Computer is out of standby mode, ready to use.
No color	Computer is turned off.

In standby mode you may periodically hear the computer's fan turn on and off, depending on the room's temperature. This is normal functioning in standby mode.

Shutting Down Your Computer

When you are ready to turn off your computer for an extended period of time, use the following procedure to shut down the computer.

To avoid the potential loss of data, do not use the power switch to shut down the computer.

To shut down your computer

If you plan to shut down your computer for a short period of time, you may want to use standby mode instead. See Using the Standby Function.

1. Click the Start button on the Windows taskbar to open the Start menu.
2. Click Shut Down to display the Shut Down Windows dialog box.
3. Select the Shut down option.
4. Click OK to complete the shutdown process.



Respond to any prompts about saving documents.

5. Wait for your computer to turn off automatically -- the power indicator light turns off.
6. Turn off the display and any other peripherals connected to your computer.

Getting Started With Your VAIO Digital Studio Computer

Congratulations on your purchase of the Sony VAIO Digital Studio Computer. It is a high-performance multimedia computer that combines state-of-the-art computer functionality with the latest audio/video and information technology convergence features.

The computer comes with the software titles preinstalled on your hard disk drive. To get started, just follow the simple steps described on the color poster to connect the cables and turn on the computer, and your VAIO Digital Studio Computer is ready to use.

Choosing a Location for Your Computer

Before you get started, find the best location for your new computer. Here are some things to consider when planning your workspace:

- **Stable work surface**--Use a stable work surface large enough to support the computer, the display, and other equipment.
- **Ventilation--**Leave at least eight inches of space on the left and back sides of your computer to enable proper ventilation.
- **Placement of the keyboard, mouse, and other input devices--**Place your keyboard, mouse, and other input devices so that your arms and hands are in a relaxed, comfortable position. The keyboard should be directly in front of you. Adjust the level of the keyboard so that your lower arms are parallel to the floor. Keep your wrists in a relaxed position when you're using the keyboard--not angled up or down. Use the palmrest only briefly, for resting. While typing, never use the palmrest or rest your hands on the table. Position the mouse at the same level as the keyboard. Hold the mouse with a relaxed hand, and use your whole arm to move it. Take breaks during sessions with your computer. Excessive use of the mouse or a joystick may strain muscles or tendons.
- **Furniture and posture--**Sit in a chair with good back support and armrests. Adjust the level of the chair so your feet are flat on the floor. A footrest may make you more comfortable. Sit in a relaxed, upright posture--avoid slouching forward or leaning far backward.

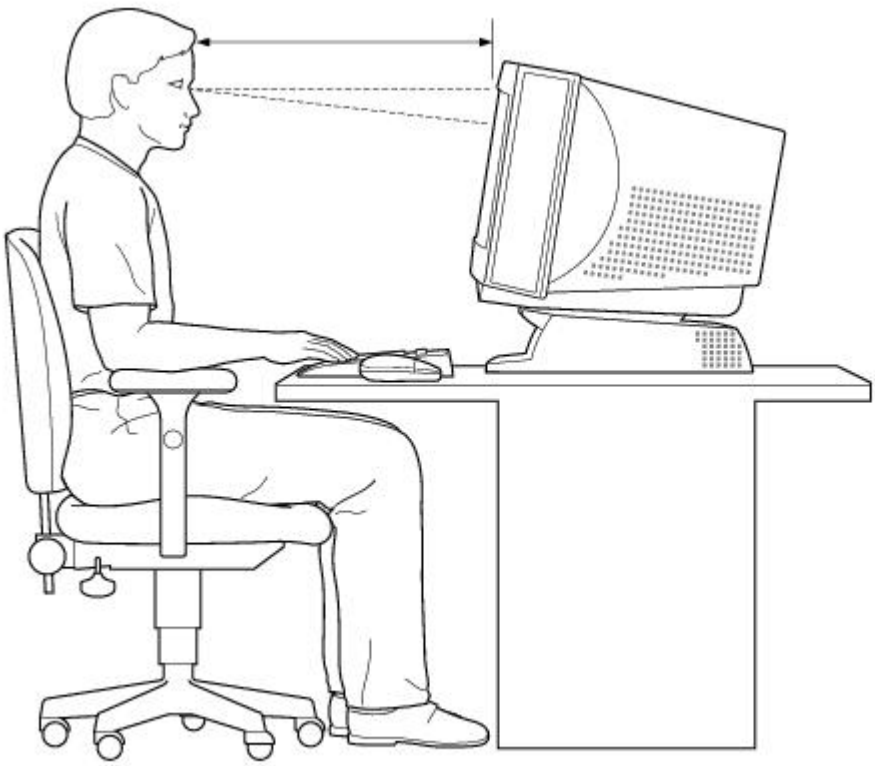

- **Viewing angle of the display--**Position the display 18 to 26 inches directly in front of you, with

the top of the screen at or a little below eye level. Use the display's tilting feature to find the best position. You can reduce eye strain and muscle fatigue by placing the display in the proper position.

- **Lighting--**Choose a location where windows and lights do not create glare and reflection on the display. Use indirect lighting to avoid bright spots on the display. You can also purchase accessories for your display that help reduce glare. Proper lighting adds to your comfort and work effectiveness.

Registering Windows® 98

The first time you turn on your computer, you need to complete a few steps to register and configure the Windows 98 software that is already installed on your computer. You do not need to repeat these steps each time you turn on your computer.


You must register Windows 98 before you can use your computer.

The on-screen instructions guide you through the registration and configuration process. The following is an overview of the process.

1. Gathering information:
    - Enter your name.
    - Read and accept the License Agreement.
    - Enter your Certificate of Authenticity number located on the cover of the Microsoft Windows 98 *Getting Started* manual.
2. Windows 98 setup: click the Finish button on the Windows 98 Setup Wizard screen.
3. Selecting your computer settings: if necessary, change the Time Zone, Date, and Time on the Date/Time Properties screen.
4. Registering your computer: for details on registering your computer, see Registering Your Computer . You can also sign up for 50 free hours of Internet service at this time.
5. Learning about Windows: if you want, take the tour of Windows.

Registering Your Computer

Take advantage of Sony's commitment to quality customer support and receive these benefits by registering your computer:

- **Sony Online Support**--Talk to a Support Representative to troubleshoot problems you may be having with your computer.
- **Limited warranty**--Protect your investment. See Limited Warranty Statement for details.


You must register your VAIO Digital Studio Computer to extend the warranty for an additional nine months beyond the initial 90-day warranty period.

- **On-site service**--Provides convenient resolution of problems.

If you have not already registered, follow these steps to use the computer online registration service.

1. Click the Sony VAIO Registration icon on the VAIO desktop.
2. Enter the information requested on the first online registration form. Press the tab key to move from box to box.
3. Click the Next button to advance to the next form.

4. Complete the remaining forms by clicking the Next button each time you complete a form.

   The computer automatically transfers your registration information using your built-in modem and a toll-free telephone number.

Using the VAIO Smart Keyboard

Connecting the Optional Palmrest

The keyboard that comes with your computer is equipped with an optional palmrest that you can attach to your keyboard. Follow these steps to connect the palmrest.

1. Place the keyboard and palmrest upside down on a flat surface.
2. Insert the latching posts on the palmrest into the openings on the keyboard.
3. Move the palmrest to the right until you feel it snap into place.

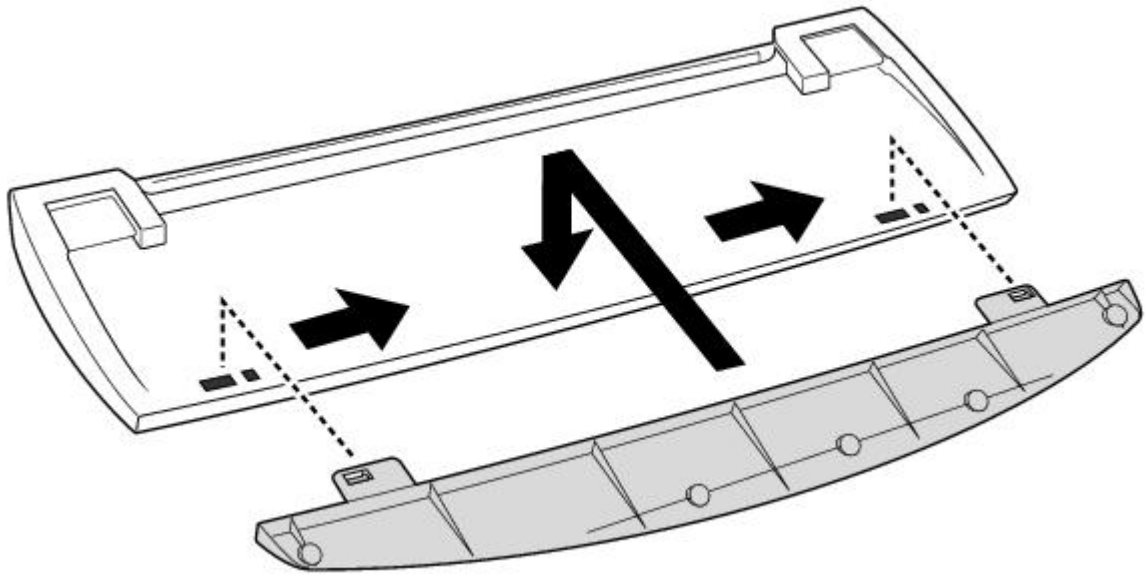

Do not keep your wrists on the palmrest while typing; use the palmrest briefly only when resting.

To remove the palmrest

1. Turn the keyboard and palmrest upside down.
2. Push down on the palmrest, and then move it to the left.
3. Lift the palmrest away from the keyboard.

Changing the Function of the Programmable Buttons

The six programmable buttons along the top of the keyboard are preprogrammed to perform specific functions. You can change the function of the programmable buttons as follows:

1. Click the Start button on the Windows taskbar to open the Start menu.
2. Point to Programs and click VAIO Smart Keyboard.

Alternatively, you can click the VAIO Smart Keyboard icon in the Windows task tray.

3. Click the on-screen button that represents the button on the keyboard (S1 to S6) that you want to program.
4. Complete the Customization dialog box to specify the function and label you want to assign to the button. Then click OK.

Alternatively, you can drag and drop any Windows icon that represents the function you want to assign onto the on-screen button. However, you cannot drag and drop icons that are specific to the Windows operating system, such as My Computer.

5. Close the Customization dialog box.

Using the Standby Function

When you are done using your computer, you can put it in standby mode rather than turn it off completely. Putting the computer in standby mode allows you to return quickly to normal computer use.

To put the computer in standby mode

1. Save your work and close any applications that are running. (You can leave Microsoft Windows running.)
2. Press the  (Standby) button on the top of the keyboard (or press the power switch momentarily on the front panel of the computer).

   The computer goes into standby mode.

Alternatively, you can click the Start button on the Windows taskbar, click Shutdown, select Standby, and then click OK.

To let the computer go into standby mode automatically

Set the computer to automatically go into standby mode after there has been no activity on it for a specified time. You can set this length of time on the Windows Control Panel. To set the timer on the Windows Control Panel, click the Start button on the Windows taskbar. Select Settings, and then click Control Panel. When the panel displays, double-click the Power icon, and then select the Disk Drives tab. On the Disk Drives tab, select the When powered by AC power check box. A check mark appears in the check box and you can then type in the timer setting or click the arrows to select a new time.

To resume from standby mode

Press any key on the keyboard, move the mouse, or press the power switch on the front panel again.

Standby Mode Indicators

You can tell which mode the computer is in by the color of the power indicator light.

Color	Mode
Amber	Computer is in standby mode.
Green	Computer is out of standby mode, ready to use.
No color	Computer is turned off.

In standby mode you may periodically hear the computer's fan turn on and off, depending on the room's temperature. This is normal functioning in standby mode.

Shutting Down Your Computer

When you are ready to turn off your computer for an extended period of time, use the following procedure to shut down the computer.

To avoid the potential loss of data, do not use the power switch to shut down the computer.

To shut down your computer

If you plan to shut down your computer for a short period of time, you may want to use standby mode instead. See Using the Standby Function.

1. Click the Start button on the Windows taskbar to open the Start menu.
2. Click Shut Down to display the Shut Down Windows dialog box.
3. Select the Shut down option.
4. Click OK to complete the shutdown process.



Respond to any prompts about saving documents.

5. Wait for your computer to turn off automatically -- the power indicator light turns off.
6. Turn off the display and any other peripherals connected to your computer.

Getting Started With Your VAIO Digital Studio Computer

Congratulations on your purchase of the Sony VAIO Digital Studio Computer. It is a high-performance multimedia computer that combines state-of-the-art computer functionality with the latest audio/video and information technology convergence features.

The computer comes with the software titles preinstalled on your hard disk drive. To get started, just follow the simple steps described on the color poster to connect the cables and turn on the computer, and your VAIO Digital Studio Computer is ready to use.

Choosing a Location for Your Computer

Before you get started, find the best location for your new computer. Here are some things to consider when planning your workspace:

- **Stable work surface**--Use a stable work surface large enough to support the computer, the display, and other equipment.
- **Ventilation--**Leave at least eight inches of space on the left and back sides of your computer to enable proper ventilation.
- **Placement of the keyboard, mouse, and other input devices--**Place your keyboard, mouse, and other input devices so that your arms and hands are in a relaxed, comfortable position. The keyboard should be directly in front of you. Adjust the level of the keyboard so that your lower arms are parallel to the floor. Keep your wrists in a relaxed position when you're using the keyboard--not angled up or down. Use the palmrest only briefly, for resting. While typing, never use the palmrest or rest your hands on the table. Position the mouse at the same level as the keyboard. Hold the mouse with a relaxed hand, and use your whole arm to move it. Take breaks during sessions with your computer. Excessive use of the mouse or a joystick may strain muscles or tendons.
- **Furniture and posture--**Sit in a chair with good back support and armrests. Adjust the level of the chair so your feet are flat on the floor. A footrest may make you more comfortable. Sit in a relaxed, upright posture--avoid slouching forward or leaning far backward.

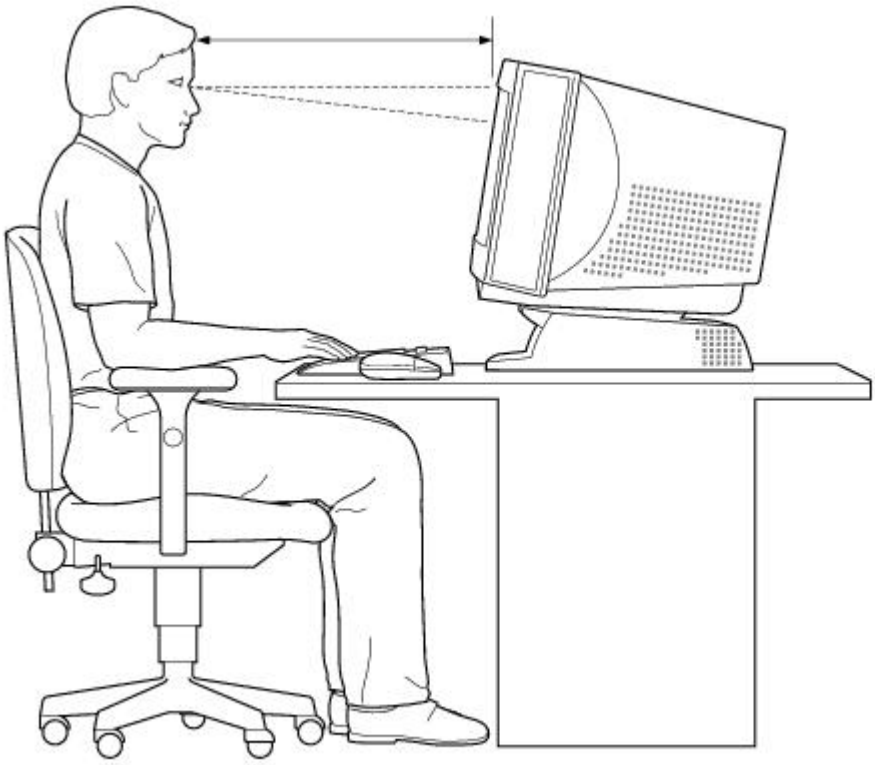

- **Viewing angle of the display--**Position the display 18 to 26 inches directly in front of you, with

the top of the screen at or a little below eye level. Use the display's tilting feature to find the best position. You can reduce eye strain and muscle fatigue by placing the display in the proper position.

- **Lighting--**Choose a location where windows and lights do not create glare and reflection on the display. Use indirect lighting to avoid bright spots on the display. You can also purchase accessories for your display that help reduce glare. Proper lighting adds to your comfort and work effectiveness.

Registering Windows® 98

The first time you turn on your computer, you need to complete a few steps to register and configure the Windows 98 software that is already installed on your computer. You do not need to repeat these steps each time you turn on your computer.


You must register Windows 98 before you can use your computer.

The on-screen instructions guide you through the registration and configuration process. The following is an overview of the process.

1. Gathering information:
    - Enter your name.
    - Read and accept the License Agreement.
    - Enter your Certificate of Authenticity number located on the cover of the Microsoft Windows 98 *Getting Started* manual.
2. Windows 98 setup: click the Finish button on the Windows 98 Setup Wizard screen.
3. Selecting your computer settings: if necessary, change the Time Zone, Date, and Time on the Date/Time Properties screen.
4. Registering your computer: for details on registering your computer, see Registering Your Computer . You can also sign up for 50 free hours of Internet service at this time.
5. Learning about Windows: if you want, take the tour of Windows.

Registering Your Computer

Take advantage of Sony's commitment to quality customer support and receive these benefits by registering your computer:

- **Sony Online Support**--Talk to a Support Representative to troubleshoot problems you may be having with your computer.
- **Limited warranty**--Protect your investment. See Limited Warranty Statement for details.


You must register your VAIO Digital Studio Computer to extend the warranty for an additional nine months beyond the initial 90-day warranty period.

- **On-site service**--Provides convenient resolution of problems.

If you have not already registered, follow these steps to use the computer online registration service.

1. Click the Sony VAIO Registration icon on the VAIO desktop.
2. Enter the information requested on the first online registration form. Press the tab key to move from box to box.
3. Click the Next button to advance to the next form.

4. Complete the remaining forms by clicking the Next button each time you complete a form.

   The computer automatically transfers your registration information using your built-in modem and a toll-free telephone number.

Using the VAIO Smart Keyboard

Connecting the Optional Palmrest

The keyboard that comes with your computer is equipped with an optional palmrest that you can attach to your keyboard. Follow these steps to connect the palmrest.

1. Place the keyboard and palmrest upside down on a flat surface.
2. Insert the latching posts on the palmrest into the openings on the keyboard.
3. Move the palmrest to the right until you feel it snap into place.

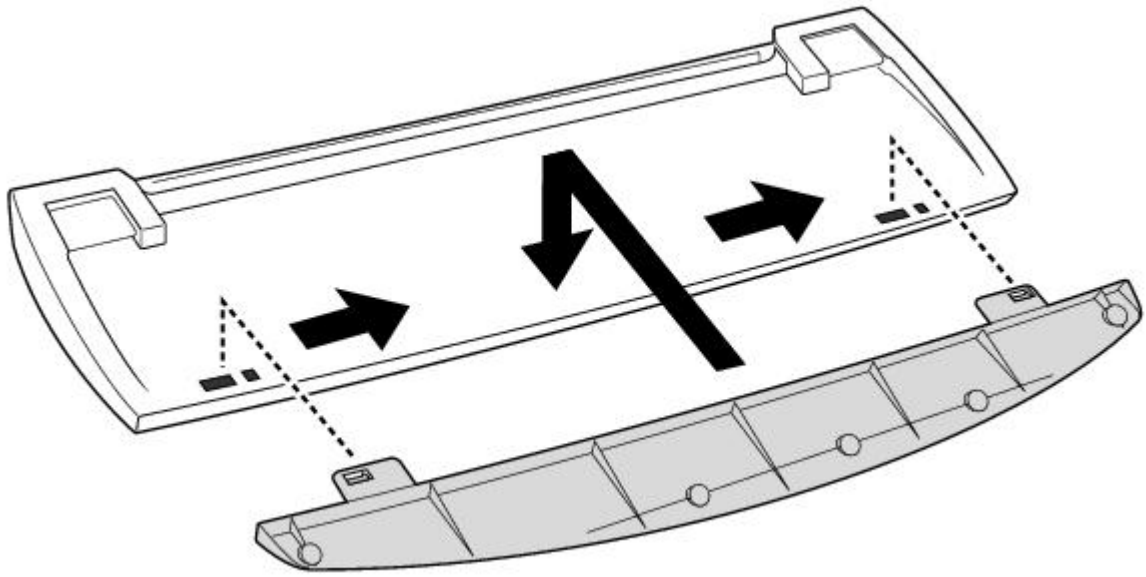

Do not keep your wrists on the palmrest while typing; use the palmrest briefly only when resting.

To remove the palmrest

1. Turn the keyboard and palmrest upside down.
2. Push down on the palmrest, and then move it to the left.
3. Lift the palmrest away from the keyboard.

Changing the Function of the Programmable Buttons

The six programmable buttons along the top of the keyboard are preprogrammed to perform specific functions. You can change the function of the programmable buttons as follows:

1. Click the Start button on the Windows taskbar to open the Start menu.
2. Point to Programs and click VAIO Smart Keyboard.

Alternatively, you can click the VAIO Smart Keyboard icon in the Windows task tray.

3. Click the on-screen button that represents the button on the keyboard (S1 to S6) that you want to program.
4. Complete the Customization dialog box to specify the function and label you want to assign to the button. Then click OK.

Alternatively, you can drag and drop any Windows icon that represents the function you want to assign onto the on-screen button. However, you cannot drag and drop icons that are specific to the Windows operating system, such as My Computer.

5. Close the Customization dialog box.

Using the Standby Function

When you are done using your computer, you can put it in standby mode rather than turn it off completely. Putting the computer in standby mode allows you to return quickly to normal computer use.

To put the computer in standby mode

1. Save your work and close any applications that are running. (You can leave Microsoft Windows running.)
2. Press the  (Standby) button on the top of the keyboard (or press the power switch momentarily on the front panel of the computer).

   The computer goes into standby mode.

Alternatively, you can click the Start button on the Windows taskbar, click Shutdown, select Standby, and then click OK.

To let the computer go into standby mode automatically

Set the computer to automatically go into standby mode after there has been no activity on it for a specified time. You can set this length of time on the Windows Control Panel. To set the timer on the Windows Control Panel, click the Start button on the Windows taskbar. Select Settings, and then click Control Panel. When the panel displays, double-click the Power icon, and then select the Disk Drives tab. On the Disk Drives tab, select the When powered by AC power check box. A check mark appears in the check box and you can then type in the timer setting or click the arrows to select a new time.

To resume from standby mode

Press any key on the keyboard, move the mouse, or press the power switch on the front panel again.

Standby Mode Indicators

You can tell which mode the computer is in by the color of the power indicator light.

Color	Mode
Amber	Computer is in standby mode.
Green	Computer is out of standby mode, ready to use.
No color	Computer is turned off.

In standby mode you may periodically hear the computer's fan turn on and off, depending on the room's temperature. This is normal functioning in standby mode.

Shutting Down Your Computer

When you are ready to turn off your computer for an extended period of time, use the following procedure to shut down the computer.

To avoid the potential loss of data, do not use the power switch to shut down the computer.

To shut down your computer

If you plan to shut down your computer for a short period of time, you may want to use standby mode instead. See Using the Standby Function.

1. Click the Start button on the Windows taskbar to open the Start menu.
2. Click Shut Down to display the Shut Down Windows dialog box.
3. Select the Shut down option.
4. Click OK to complete the shutdown process.



Respond to any prompts about saving documents.

5. Wait for your computer to turn off automatically -- the power indicator light turns off.
6. Turn off the display and any other peripherals connected to your computer.

Getting Started With Your VAIO Digital Studio Computer

Congratulations on your purchase of the Sony VAIO Digital Studio Computer. It is a high-performance multimedia computer that combines state-of-the-art computer functionality with the latest audio/video and information technology convergence features.

The computer comes with the software titles preinstalled on your hard disk drive. To get started, just follow the simple steps described on the color poster to connect the cables and turn on the computer, and your VAIO Digital Studio Computer is ready to use.

Choosing a Location for Your Computer

Before you get started, find the best location for your new computer. Here are some things to consider when planning your workspace:

- **Stable work surface**--Use a stable work surface large enough to support the computer, the display, and other equipment.
- **Ventilation--**Leave at least eight inches of space on the left and back sides of your computer to enable proper ventilation.
- **Placement of the keyboard, mouse, and other input devices--**Place your keyboard, mouse, and other input devices so that your arms and hands are in a relaxed, comfortable position. The keyboard should be directly in front of you. Adjust the level of the keyboard so that your lower arms are parallel to the floor. Keep your wrists in a relaxed position when you're using the keyboard--not angled up or down. Use the palmrest only briefly, for resting. While typing, never use the palmrest or rest your hands on the table. Position the mouse at the same level as the keyboard. Hold the mouse with a relaxed hand, and use your whole arm to move it. Take breaks during sessions with your computer. Excessive use of the mouse or a joystick may strain muscles or tendons.
- **Furniture and posture--**Sit in a chair with good back support and armrests. Adjust the level of the chair so your feet are flat on the floor. A footrest may make you more comfortable. Sit in a relaxed, upright posture--avoid slouching forward or leaning far backward.

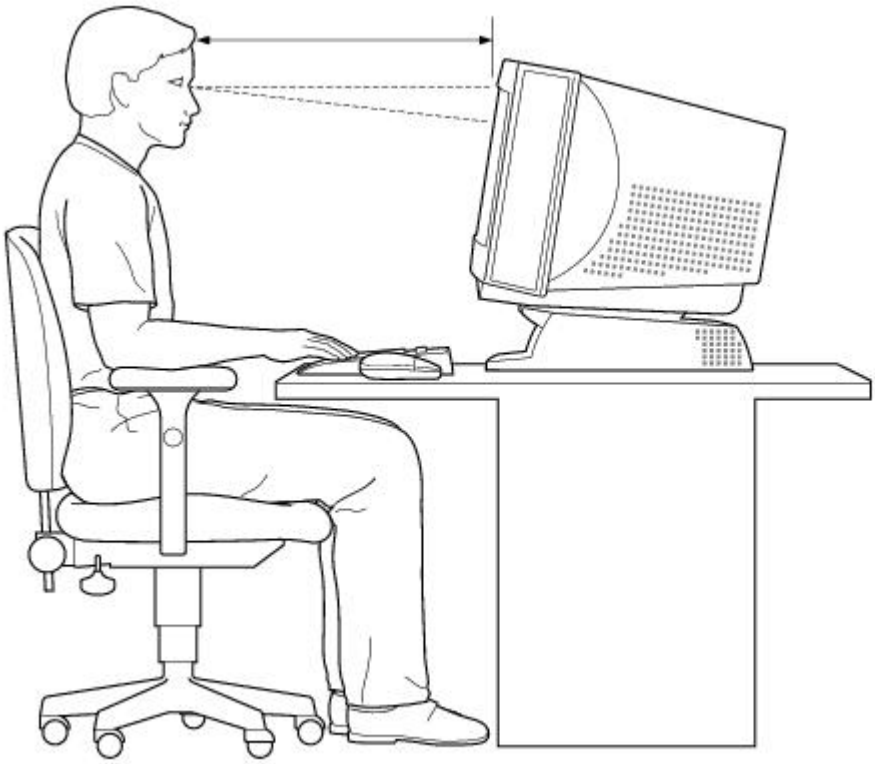

- **Viewing angle of the display--**Position the display 18 to 26 inches directly in front of you, with

the top of the screen at or a little below eye level. Use the display's tilting feature to find the best position. You can reduce eye strain and muscle fatigue by placing the display in the proper position.

- **Lighting--**Choose a location where windows and lights do not create glare and reflection on the display. Use indirect lighting to avoid bright spots on the display. You can also purchase accessories for your display that help reduce glare. Proper lighting adds to your comfort and work effectiveness.

Registering Windows® 98

The first time you turn on your computer, you need to complete a few steps to register and configure the Windows 98 software that is already installed on your computer. You do not need to repeat these steps each time you turn on your computer.


You must register Windows 98 before you can use your computer.

The on-screen instructions guide you through the registration and configuration process. The following is an overview of the process.

1. Gathering information:
    - Enter your name.
    - Read and accept the License Agreement.
    - Enter your Certificate of Authenticity number located on the cover of the Microsoft Windows 98 *Getting Started* manual.
2. Windows 98 setup: click the Finish button on the Windows 98 Setup Wizard screen.
3. Selecting your computer settings: if necessary, change the Time Zone, Date, and Time on the Date/Time Properties screen.
4. Registering your computer: for details on registering your computer, see Registering Your Computer . You can also sign up for 50 free hours of Internet service at this time.
5. Learning about Windows: if you want, take the tour of Windows.

Registering Your Computer

Take advantage of Sony's commitment to quality customer support and receive these benefits by registering your computer:

- **Sony Online Support**--Talk to a Support Representative to troubleshoot problems you may be having with your computer.
- **Limited warranty**--Protect your investment. See Limited Warranty Statement for details.


You must register your VAIO Digital Studio Computer to extend the warranty for an additional nine months beyond the initial 90-day warranty period.

- **On-site service**--Provides convenient resolution of problems.

If you have not already registered, follow these steps to use the computer online registration service.

1. Click the Sony VAIO Registration icon on the VAIO desktop.
2. Enter the information requested on the first online registration form. Press the tab key to move from box to box.
3. Click the Next button to advance to the next form.

4. Complete the remaining forms by clicking the Next button each time you complete a form.

   The computer automatically transfers your registration information using your built-in modem and a toll-free telephone number.

Using the VAIO Smart Keyboard

Connecting the Optional Palmrest

The keyboard that comes with your computer is equipped with an optional palmrest that you can attach to your keyboard. Follow these steps to connect the palmrest.

1. Place the keyboard and palmrest upside down on a flat surface.
2. Insert the latching posts on the palmrest into the openings on the keyboard.
3. Move the palmrest to the right until you feel it snap into place.

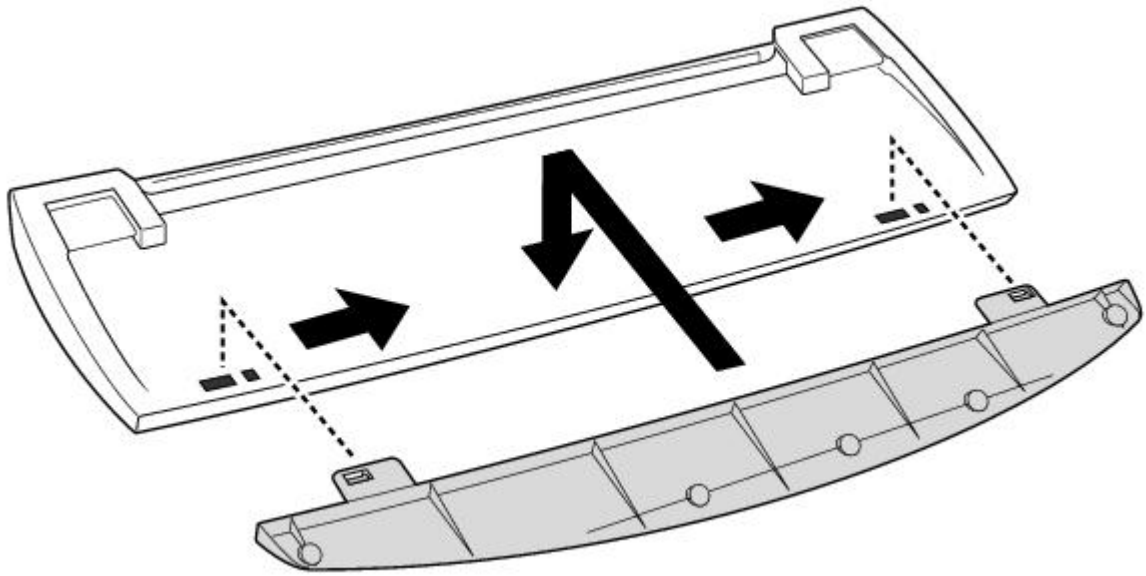

Do not keep your wrists on the palmrest while typing; use the palmrest briefly only when resting.

To remove the palmrest

1. Turn the keyboard and palmrest upside down.
2. Push down on the palmrest, and then move it to the left.
3. Lift the palmrest away from the keyboard.

Changing the Function of the Programmable Buttons

The six programmable buttons along the top of the keyboard are preprogrammed to perform specific functions. You can change the function of the programmable buttons as follows:

1. Click the Start button on the Windows taskbar to open the Start menu.
2. Point to Programs and click VAIO Smart Keyboard.

Alternatively, you can click the VAIO Smart Keyboard icon in the Windows task tray.

3. Click the on-screen button that represents the button on the keyboard (S1 to S6) that you want to program.
4. Complete the Customization dialog box to specify the function and label you want to assign to the button. Then click OK.

Alternatively, you can drag and drop any Windows icon that represents the function you want to assign onto the on-screen button. However, you cannot drag and drop icons that are specific to the Windows operating system, such as My Computer.

5. Close the Customization dialog box.

Using the Standby Function

When you are done using your computer, you can put it in standby mode rather than turn it off completely. Putting the computer in standby mode allows you to return quickly to normal computer use.

To put the computer in standby mode

1. Save your work and close any applications that are running. (You can leave Microsoft Windows running.)
2. Press the  (Standby) button on the top of the keyboard (or press the power switch momentarily on the front panel of the computer).

   The computer goes into standby mode.

Alternatively, you can click the Start button on the Windows taskbar, click Shutdown, select Standby, and then click OK.

To let the computer go into standby mode automatically

Set the computer to automatically go into standby mode after there has been no activity on it for a specified time. You can set this length of time on the Windows Control Panel. To set the timer on the Windows Control Panel, click the Start button on the Windows taskbar. Select Settings, and then click Control Panel. When the panel displays, double-click the Power icon, and then select the Disk Drives tab. On the Disk Drives tab, select the When powered by AC power check box. A check mark appears in the check box and you can then type in the timer setting or click the arrows to select a new time.

To resume from standby mode

Press any key on the keyboard, move the mouse, or press the power switch on the front panel again.

Standby Mode Indicators

You can tell which mode the computer is in by the color of the power indicator light.

Color	Mode
Amber	Computer is in standby mode.
Green	Computer is out of standby mode, ready to use.
No color	Computer is turned off.

In standby mode you may periodically hear the computer's fan turn on and off, depending on the room's temperature. This is normal functioning in standby mode.

Shutting Down Your Computer

When you are ready to turn off your computer for an extended period of time, use the following procedure to shut down the computer.

To avoid the potential loss of data, do not use the power switch to shut down the computer.

To shut down your computer

If you plan to shut down your computer for a short period of time, you may want to use standby mode instead. See Using the Standby Function.

1. Click the Start button on the Windows taskbar to open the Start menu.
2. Click Shut Down to display the Shut Down Windows dialog box.
3. Select the Shut down option.
4. Click OK to complete the shutdown process.



Respond to any prompts about saving documents.

5. Wait for your computer to turn off automatically -- the power indicator light turns off.
6. Turn off the display and any other peripherals connected to your computer.

Getting Started With Your VAIO Digital Studio Computer

Congratulations on your purchase of the Sony VAIO Digital Studio Computer. It is a high-performance multimedia computer that combines state-of-the-art computer functionality with the latest audio/video and information technology convergence features.

The computer comes with the software titles preinstalled on your hard disk drive. To get started, just follow the simple steps described on the color poster to connect the cables and turn on the computer, and your VAIO Digital Studio Computer is ready to use.

Choosing a Location for Your Computer

Before you get started, find the best location for your new computer. Here are some things to consider when planning your workspace:

- **Stable work surface**--Use a stable work surface large enough to support the computer, the display, and other equipment.
- **Ventilation--**Leave at least eight inches of space on the left and back sides of your computer to enable proper ventilation.
- **Placement of the keyboard, mouse, and other input devices--**Place your keyboard, mouse, and other input devices so that your arms and hands are in a relaxed, comfortable position. The keyboard should be directly in front of you. Adjust the level of the keyboard so that your lower arms are parallel to the floor. Keep your wrists in a relaxed position when you're using the keyboard--not angled up or down. Use the palmrest only briefly, for resting. While typing, never use the palmrest or rest your hands on the table. Position the mouse at the same level as the keyboard. Hold the mouse with a relaxed hand, and use your whole arm to move it. Take breaks during sessions with your computer. Excessive use of the mouse or a joystick may strain muscles or tendons.
- **Furniture and posture--**Sit in a chair with good back support and armrests. Adjust the level of the chair so your feet are flat on the floor. A footrest may make you more comfortable. Sit in a relaxed, upright posture--avoid slouching forward or leaning far backward.

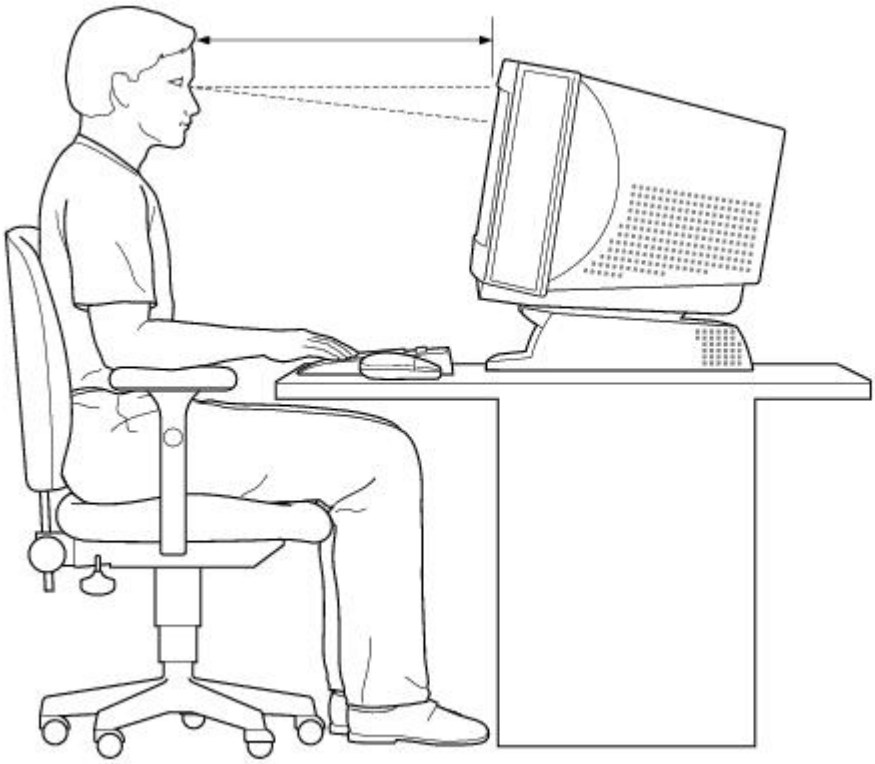

- **Viewing angle of the display--**Position the display 18 to 26 inches directly in front of you, with

the top of the screen at or a little below eye level. Use the display's tilting feature to find the best position. You can reduce eye strain and muscle fatigue by placing the display in the proper position.

- **Lighting--**Choose a location where windows and lights do not create glare and reflection on the display. Use indirect lighting to avoid bright spots on the display. You can also purchase accessories for your display that help reduce glare. Proper lighting adds to your comfort and work effectiveness.

Registering Windows® 98

The first time you turn on your computer, you need to complete a few steps to register and configure the Windows 98 software that is already installed on your computer. You do not need to repeat these steps each time you turn on your computer.


You must register Windows 98 before you can use your computer.

The on-screen instructions guide you through the registration and configuration process. The following is an overview of the process.

1. Gathering information:
    - Enter your name.
    - Read and accept the License Agreement.
    - Enter your Certificate of Authenticity number located on the cover of the Microsoft Windows 98 *Getting Started* manual.
2. Windows 98 setup: click the Finish button on the Windows 98 Setup Wizard screen.
3. Selecting your computer settings: if necessary, change the Time Zone, Date, and Time on the Date/Time Properties screen.
4. Registering your computer: for details on registering your computer, see Registering Your Computer . You can also sign up for 50 free hours of Internet service at this time.
5. Learning about Windows: if you want, take the tour of Windows.

Registering Your Computer

Take advantage of Sony's commitment to quality customer support and receive these benefits by registering your computer:

- **Sony Online Support**--Talk to a Support Representative to troubleshoot problems you may be having with your computer.
- **Limited warranty**--Protect your investment. See Limited Warranty Statement for details.


You must register your VAIO Digital Studio Computer to extend the warranty for an additional nine months beyond the initial 90-day warranty period.

- **On-site service**--Provides convenient resolution of problems.

If you have not already registered, follow these steps to use the computer online registration service.

1. Click the Sony VAIO Registration icon on the VAIO desktop.
2. Enter the information requested on the first online registration form. Press the tab key to move from box to box.
3. Click the Next button to advance to the next form.

4. Complete the remaining forms by clicking the Next button each time you complete a form.

   The computer automatically transfers your registration information using your built-in modem and a toll-free telephone number.

Using the VAIO Smart Keyboard

Connecting the Optional Palmrest

The keyboard that comes with your computer is equipped with an optional palmrest that you can attach to your keyboard. Follow these steps to connect the palmrest.

1. Place the keyboard and palmrest upside down on a flat surface.
2. Insert the latching posts on the palmrest into the openings on the keyboard.
3. Move the palmrest to the right until you feel it snap into place.

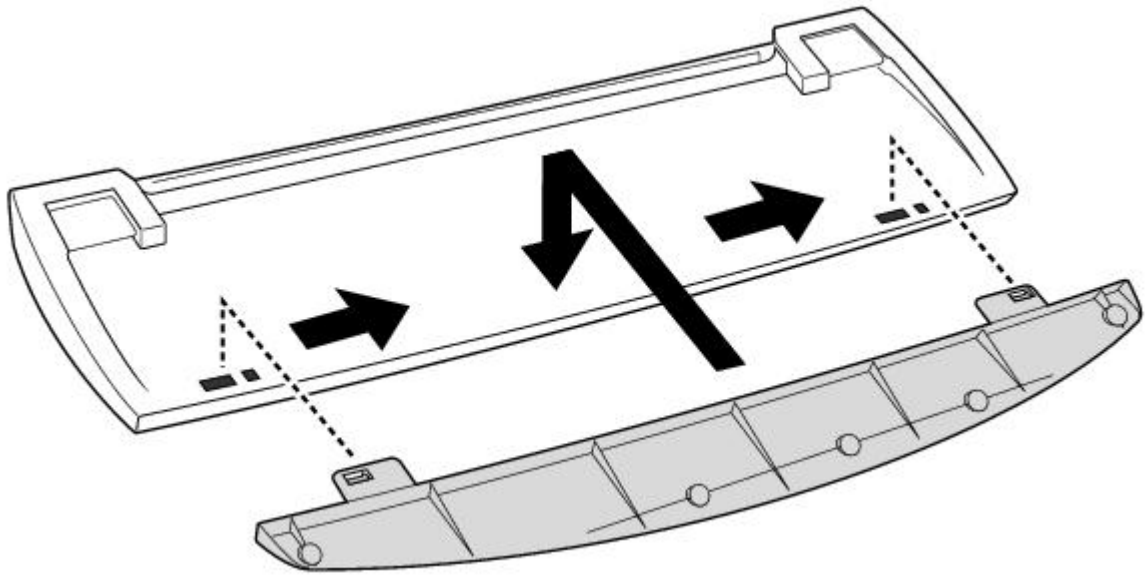

Do not keep your wrists on the palmrest while typing; use the palmrest briefly only when resting.

To remove the palmrest

1. Turn the keyboard and palmrest upside down.
2. Push down on the palmrest, and then move it to the left.
3. Lift the palmrest away from the keyboard.

Changing the Function of the Programmable Buttons

The six programmable buttons along the top of the keyboard are preprogrammed to perform specific functions. You can change the function of the programmable buttons as follows:

1. Click the Start button on the Windows taskbar to open the Start menu.
2. Point to Programs and click VAIO Smart Keyboard.

Alternatively, you can click the VAIO Smart Keyboard icon in the Windows task tray.

3. Click the on-screen button that represents the button on the keyboard (S1 to S6) that you want to program.
4. Complete the Customization dialog box to specify the function and label you want to assign to the button. Then click OK.

Alternatively, you can drag and drop any Windows icon that represents the function you want to assign onto the on-screen button. However, you cannot drag and drop icons that are specific to the Windows operating system, such as My Computer.

5. Close the Customization dialog box.

Using the Standby Function

When you are done using your computer, you can put it in standby mode rather than turn it off completely. Putting the computer in standby mode allows you to return quickly to normal computer use.

To put the computer in standby mode

1. Save your work and close any applications that are running. (You can leave Microsoft Windows running.)
2. Press the  (Standby) button on the top of the keyboard (or press the power switch momentarily on the front panel of the computer).

   The computer goes into standby mode.

Alternatively, you can click the Start button on the Windows taskbar, click Shutdown, select Standby, and then click OK.

To let the computer go into standby mode automatically

Set the computer to automatically go into standby mode after there has been no activity on it for a specified time. You can set this length of time on the Windows Control Panel. To set the timer on the Windows Control Panel, click the Start button on the Windows taskbar. Select Settings, and then click Control Panel. When the panel displays, double-click the Power icon, and then select the Disk Drives tab. On the Disk Drives tab, select the When powered by AC power check box. A check mark appears in the check box and you can then type in the timer setting or click the arrows to select a new time.

To resume from standby mode

Press any key on the keyboard, move the mouse, or press the power switch on the front panel again.

Standby Mode Indicators

You can tell which mode the computer is in by the color of the power indicator light.

Color	Mode
Amber	Computer is in standby mode.
Green	Computer is out of standby mode, ready to use.
No color	Computer is turned off.

In standby mode you may periodically hear the computer's fan turn on and off, depending on the room's temperature. This is normal functioning in standby mode.

Shutting Down Your Computer

When you are ready to turn off your computer for an extended period of time, use the following procedure to shut down the computer.

To avoid the potential loss of data, do not use the power switch to shut down the computer.

To shut down your computer

If you plan to shut down your computer for a short period of time, you may want to use standby mode instead. See Using the Standby Function.

1. Click the Start button on the Windows taskbar to open the Start menu.
2. Click Shut Down to display the Shut Down Windows dialog box.
3. Select the Shut down option.
4. Click OK to complete the shutdown process.



Respond to any prompts about saving documents.

5. Wait for your computer to turn off automatically -- the power indicator light turns off.
6. Turn off the display and any other peripherals connected to your computer.

Getting Started With Your VAIO Digital Studio Computer

Congratulations on your purchase of the Sony VAIO Digital Studio Computer. It is a high-performance multimedia computer that combines state-of-the-art computer functionality with the latest audio/video and information technology convergence features.

The computer comes with the software titles preinstalled on your hard disk drive. To get started, just follow the simple steps described on the color poster to connect the cables and turn on the computer, and your VAIO Digital Studio Computer is ready to use.

Choosing a Location for Your Computer

Before you get started, find the best location for your new computer. Here are some things to consider when planning your workspace:

- **Stable work surface**--Use a stable work surface large enough to support the computer, the display, and other equipment.
- **Ventilation--**Leave at least eight inches of space on the left and back sides of your computer to enable proper ventilation.
- **Placement of the keyboard, mouse, and other input devices--**Place your keyboard, mouse, and other input devices so that your arms and hands are in a relaxed, comfortable position. The keyboard should be directly in front of you. Adjust the level of the keyboard so that your lower arms are parallel to the floor. Keep your wrists in a relaxed position when you're using the keyboard--not angled up or down. Use the palmrest only briefly, for resting. While typing, never use the palmrest or rest your hands on the table. Position the mouse at the same level as the keyboard. Hold the mouse with a relaxed hand, and use your whole arm to move it. Take breaks during sessions with your computer. Excessive use of the mouse or a joystick may strain muscles or tendons.
- **Furniture and posture--**Sit in a chair with good back support and armrests. Adjust the level of the chair so your feet are flat on the floor. A footrest may make you more comfortable. Sit in a relaxed, upright posture--avoid slouching forward or leaning far backward.

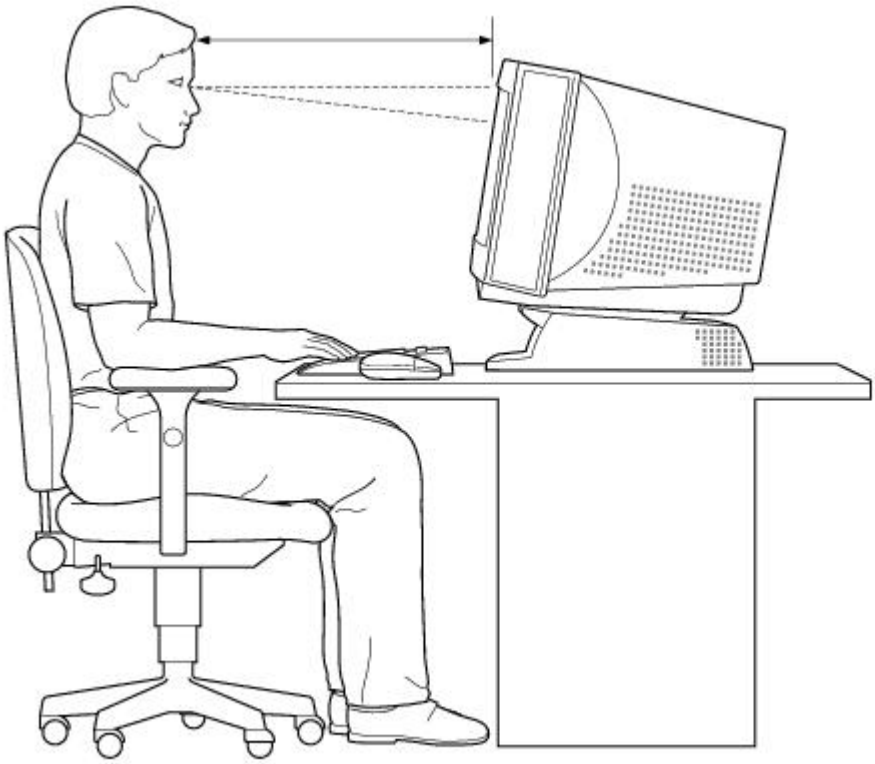

- **Viewing angle of the display--**Position the display 18 to 26 inches directly in front of you, with

the top of the screen at or a little below eye level. Use the display's tilting feature to find the best position. You can reduce eye strain and muscle fatigue by placing the display in the proper position.

- **Lighting--**Choose a location where windows and lights do not create glare and reflection on the display. Use indirect lighting to avoid bright spots on the display. You can also purchase accessories for your display that help reduce glare. Proper lighting adds to your comfort and work effectiveness.

Registering Windows® 98

The first time you turn on your computer, you need to complete a few steps to register and configure the Windows 98 software that is already installed on your computer. You do not need to repeat these steps each time you turn on your computer.


You must register Windows 98 before you can use your computer.

The on-screen instructions guide you through the registration and configuration process. The following is an overview of the process.

1. Gathering information:
    - Enter your name.
    - Read and accept the License Agreement.
    - Enter your Certificate of Authenticity number located on the cover of the Microsoft Windows 98 *Getting Started* manual.
2. Windows 98 setup: click the Finish button on the Windows 98 Setup Wizard screen.
3. Selecting your computer settings: if necessary, change the Time Zone, Date, and Time on the Date/Time Properties screen.
4. Registering your computer: for details on registering your computer, see Registering Your Computer . You can also sign up for 50 free hours of Internet service at this time.
5. Learning about Windows: if you want, take the tour of Windows.

Registering Your Computer

Take advantage of Sony's commitment to quality customer support and receive these benefits by registering your computer:

- **Sony Online Support**--Talk to a Support Representative to troubleshoot problems you may be having with your computer.
- **Limited warranty**--Protect your investment. See Limited Warranty Statement for details.


You must register your VAIO Digital Studio Computer to extend the warranty for an additional nine months beyond the initial 90-day warranty period.

- **On-site service**--Provides convenient resolution of problems.

If you have not already registered, follow these steps to use the computer online registration service.

1. Click the Sony VAIO Registration icon on the VAIO desktop.
2. Enter the information requested on the first online registration form. Press the tab key to move from box to box.
3. Click the Next button to advance to the next form.

4. Complete the remaining forms by clicking the Next button each time you complete a form.

   The computer automatically transfers your registration information using your built-in modem and a toll-free telephone number.

Using the VAIO Smart Keyboard

Connecting the Optional Palmrest

The keyboard that comes with your computer is equipped with an optional palmrest that you can attach to your keyboard. Follow these steps to connect the palmrest.

1. Place the keyboard and palmrest upside down on a flat surface.
2. Insert the latching posts on the palmrest into the openings on the keyboard.
3. Move the palmrest to the right until you feel it snap into place.

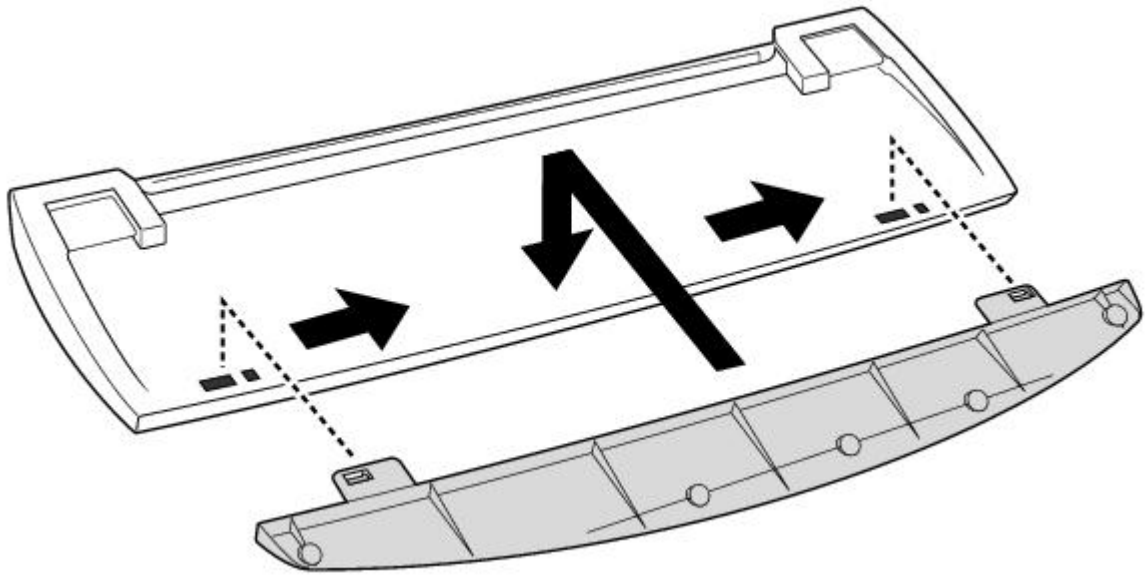

Do not keep your wrists on the palmrest while typing; use the palmrest briefly only when resting.

To remove the palmrest

1. Turn the keyboard and palmrest upside down.
2. Push down on the palmrest, and then move it to the left.
3. Lift the palmrest away from the keyboard.

Changing the Function of the Programmable Buttons

The six programmable buttons along the top of the keyboard are preprogrammed to perform specific functions. You can change the function of the programmable buttons as follows:

1. Click the Start button on the Windows taskbar to open the Start menu.
2. Point to Programs and click VAIO Smart Keyboard.

Alternatively, you can click the VAIO Smart Keyboard icon in the Windows task tray.

3. Click the on-screen button that represents the button on the keyboard (S1 to S6) that you want to program.
4. Complete the Customization dialog box to specify the function and label you want to assign to the button. Then click OK.

Alternatively, you can drag and drop any Windows icon that represents the function you want to assign onto the on-screen button. However, you cannot drag and drop icons that are specific to the Windows operating system, such as My Computer.

5. Close the Customization dialog box.

Using the Standby Function

When you are done using your computer, you can put it in standby mode rather than turn it off completely. Putting the computer in standby mode allows you to return quickly to normal computer use.

To put the computer in standby mode

1. Save your work and close any applications that are running. (You can leave Microsoft Windows running.)
2. Press the (Standby) button on the top of the keyboard (or press the power switch momentarily on the front panel of the computer).

   The computer goes into standby mode.

Alternatively, you can click the Start button on the Windows taskbar, click Shutdown, select Standby, and then click OK.

To let the computer go into standby mode automatically

Set the computer to automatically go into standby mode after there has been no activity on it for a specified time. You can set this length of time on the Windows Control Panel. To set the timer on the Windows Control Panel, click the Start button on the Windows taskbar. Select Settings, and then click Control Panel. When the panel displays, double-click the Power icon, and then select the Disk Drives tab. On the Disk Drives tab, select the When powered by AC power check box. A check mark appears in the check box and you can then type in the timer setting or click the arrows to select a new time.

To resume from standby mode

Press any key on the keyboard, move the mouse, or press the power switch on the front panel again.

Standby Mode Indicators

You can tell which mode the computer is in by the color of the power indicator light.

Color	Mode
Amber	Computer is in standby mode.
Green	Computer is out of standby mode, ready to use.
No color	Computer is turned off.

In standby mode you may periodically hear the computer's fan turn on and off, depending on the room's temperature. This is normal functioning in standby mode.

Shutting Down Your Computer

When you are ready to turn off your computer for an extended period of time, use the following procedure to shut down the computer.

To avoid the potential loss of data, do not use the power switch to shut down the computer.

To shut down your computer

If you plan to shut down your computer for a short period of time, you may want to use standby mode instead. See Using the Standby Function.

1. Click the Start button on the Windows taskbar to open the Start menu.
2. Click Shut Down to display the Shut Down Windows dialog box.
3. Select the Shut down option.
4. Click OK to complete the shutdown process.



Respond to any prompts about saving documents.

5. Wait for your computer to turn off automatically -- the power indicator light turns off.
6. Turn off the display and any other peripherals connected to your computer.

Getting Started With Your VAIO Digital Studio Computer

Congratulations on your purchase of the Sony VAIO Digital Studio Computer. It is a high-performance multimedia computer that combines state-of-the-art computer functionality with the latest audio/video and information technology convergence features.

The computer comes with the software titles preinstalled on your hard disk drive. To get started, just follow the simple steps described on the color poster to connect the cables and turn on the computer, and your VAIO Digital Studio Computer is ready to use.

Choosing a Location for Your Computer

Before you get started, find the best location for your new computer. Here are some things to consider when planning your workspace:

- **Stable work surface**--Use a stable work surface large enough to support the computer, the display, and other equipment.
- **Ventilation--**Leave at least eight inches of space on the left and back sides of your computer to enable proper ventilation.
- **Placement of the keyboard, mouse, and other input devices--**Place your keyboard, mouse, and other input devices so that your arms and hands are in a relaxed, comfortable position. The keyboard should be directly in front of you. Adjust the level of the keyboard so that your lower arms are parallel to the floor. Keep your wrists in a relaxed position when you're using the keyboard--not angled up or down. Use the palmrest only briefly, for resting. While typing, never use the palmrest or rest your hands on the table. Position the mouse at the same level as the keyboard. Hold the mouse with a relaxed hand, and use your whole arm to move it. Take breaks during sessions with your computer. Excessive use of the mouse or a joystick may strain muscles or tendons.
- **Furniture and posture--**Sit in a chair with good back support and armrests. Adjust the level of the chair so your feet are flat on the floor. A footrest may make you more comfortable. Sit in a relaxed, upright posture--avoid slouching forward or leaning far backward.

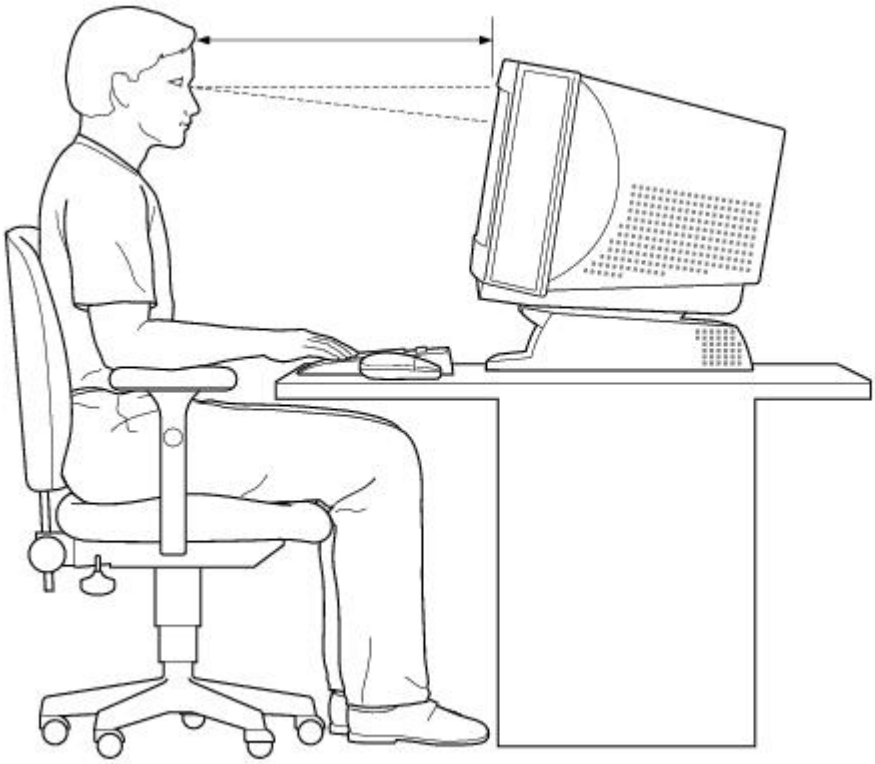

- **Viewing angle of the display--**Position the display 18 to 26 inches directly in front of you, with

the top of the screen at or a little below eye level. Use the display's tilting feature to find the best position. You can reduce eye strain and muscle fatigue by placing the display in the proper position.

- **Lighting--**Choose a location where windows and lights do not create glare and reflection on the display. Use indirect lighting to avoid bright spots on the display. You can also purchase accessories for your display that help reduce glare. Proper lighting adds to your comfort and work effectiveness.

Registering Windows® 98

The first time you turn on your computer, you need to complete a few steps to register and configure the Windows 98 software that is already installed on your computer. You do not need to repeat these steps each time you turn on your computer.

 You must register Windows 98 before you can use your computer.

The on-screen instructions guide you through the registration and configuration process. The following is an overview of the process.

1. Gathering information:
    - Enter your name.
    - Read and accept the License Agreement.
    - Enter your Certificate of Authenticity number located on the cover of the Microsoft Windows 98 *Getting Started* manual.
2. Windows 98 setup: click the Finish button on the Windows 98 Setup Wizard screen.
3. Selecting your computer settings: if necessary, change the Time Zone, Date, and Time on the Date/Time Properties screen.
4. Registering your computer: for details on registering your computer, see Registering Your Computer . You can also sign up for 50 free hours of Internet service at this time.
5. Learning about Windows: if you want, take the tour of Windows.

Registering Your Computer

Take advantage of Sony's commitment to quality customer support and receive these benefits by registering your computer:

- **Sony Online Support**--Talk to a Support Representative to troubleshoot problems you may be having with your computer.
- **Limited warranty**--Protect your investment. See Limited Warranty Statement for details.

 You must register your VAIO Digital Studio Computer to extend the warranty for an additional nine months beyond the initial 90-day warranty period.

- **On-site service**--Provides convenient resolution of problems.

If you have not already registered, follow these steps to use the computer online registration service.

1. Click the Sony VAIO Registration icon on the VAIO desktop.
2. Enter the information requested on the first online registration form. Press the tab key to move from box to box.
3. Click the Next button to advance to the next form.

4. Complete the remaining forms by clicking the Next button each time you complete a form.

   The computer automatically transfers your registration information using your built-in modem and a toll-free telephone number.

Using the VAIO Smart Keyboard

Connecting the Optional Palmrest

The keyboard that comes with your computer is equipped with an optional palmrest that you can attach to your keyboard. Follow these steps to connect the palmrest.

1. Place the keyboard and palmrest upside down on a flat surface.
2. Insert the latching posts on the palmrest into the openings on the keyboard.
3. Move the palmrest to the right until you feel it snap into place.

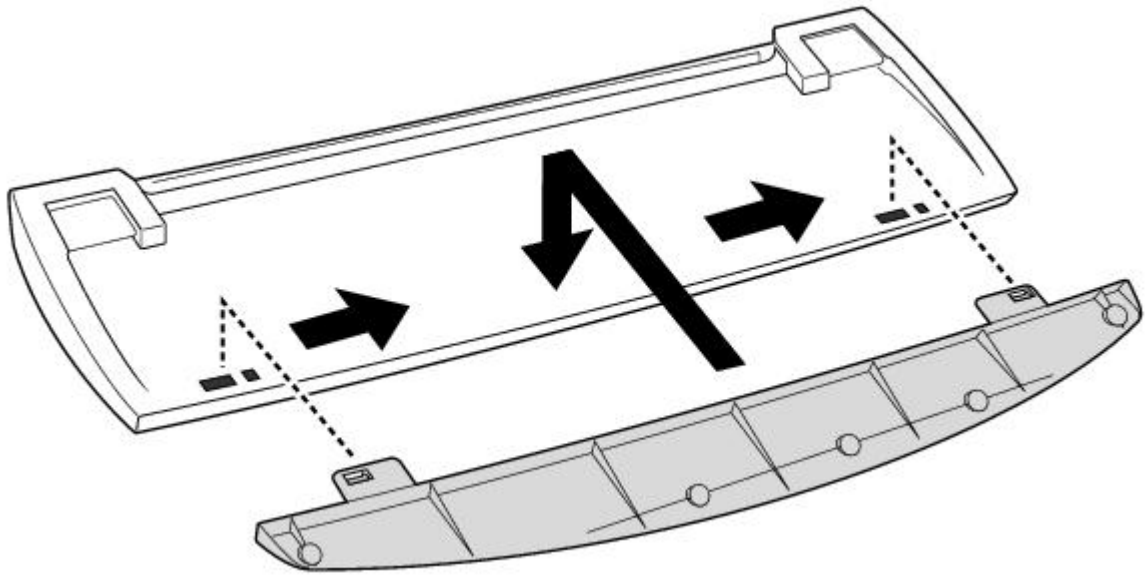

Do not keep your wrists on the palmrest while typing; use the palmrest briefly only when resting.

To remove the palmrest

1. Turn the keyboard and palmrest upside down.
2. Push down on the palmrest, and then move it to the left.
3. Lift the palmrest away from the keyboard.

Changing the Function of the Programmable Buttons

The six programmable buttons along the top of the keyboard are preprogrammed to perform specific functions. You can change the function of the programmable buttons as follows:

1. Click the Start button on the Windows taskbar to open the Start menu.
2. Point to Programs and click VAIO Smart Keyboard.

Alternatively, you can click the VAIO Smart Keyboard icon in the Windows task tray.

3. Click the on-screen button that represents the button on the keyboard (S1 to S6) that you want to program.
4. Complete the Customization dialog box to specify the function and label you want to assign to the button. Then click OK.

Alternatively, you can drag and drop any Windows icon that represents the function you want to assign onto the on-screen button. However, you cannot drag and drop icons that are specific to the Windows operating system, such as My Computer.

5. Close the Customization dialog box.

Using the Standby Function

When you are done using your computer, you can put it in standby mode rather than turn it off completely. Putting the computer in standby mode allows you to return quickly to normal computer use.

To put the computer in standby mode

1. Save your work and close any applications that are running. (You can leave Microsoft Windows running.)
2. Press the  (Standby) button on the top of the keyboard (or press the power switch momentarily on the front panel of the computer).

   The computer goes into standby mode.

Alternatively, you can click the Start button on the Windows taskbar, click Shutdown, select Standby, and then click OK.

To let the computer go into standby mode automatically

Set the computer to automatically go into standby mode after there has been no activity on it for a specified time. You can set this length of time on the Windows Control Panel. To set the timer on the Windows Control Panel, click the Start button on the Windows taskbar. Select Settings, and then click Control Panel. When the panel displays, double-click the Power icon, and then select the Disk Drives tab. On the Disk Drives tab, select the When powered by AC power check box. A check mark appears in the check box and you can then type in the timer setting or click the arrows to select a new time.

To resume from standby mode

Press any key on the keyboard, move the mouse, or press the power switch on the front panel again.

Standby Mode Indicators

You can tell which mode the computer is in by the color of the power indicator light.

Color	Mode
Amber	Computer is in standby mode.
Green	Computer is out of standby mode, ready to use.
No color	Computer is turned off.

In standby mode you may periodically hear the computer's fan turn on and off, depending on the room's temperature. This is normal functioning in standby mode.

Shutting Down Your Computer

When you are ready to turn off your computer for an extended period of time, use the following procedure to shut down the computer.

To avoid the potential loss of data, do not use the power switch to shut down the computer.

To shut down your computer

If you plan to shut down your computer for a short period of time, you may want to use standby mode instead. See Using the Standby Function.

1. Click the Start button on the Windows taskbar to open the Start menu.
2. Click Shut Down to display the Shut Down Windows dialog box.
3. Select the Shut down option.
4. Click OK to complete the shutdown process.



Respond to any prompts about saving documents.

5. Wait for your computer to turn off automatically -- the power indicator light turns off.
6. Turn off the display and any other peripherals connected to your computer.

Getting Started With Your VAIO Digital Studio Computer

Congratulations on your purchase of the Sony VAIO Digital Studio Computer. It is a high-performance multimedia computer that combines state-of-the-art computer functionality with the latest audio/video and information technology convergence features.

The computer comes with the software titles preinstalled on your hard disk drive. To get started, just follow the simple steps described on the color poster to connect the cables and turn on the computer, and your VAIO Digital Studio Computer is ready to use.

Choosing a Location for Your Computer

Before you get started, find the best location for your new computer. Here are some things to consider when planning your workspace:

- **Stable work surface**--Use a stable work surface large enough to support the computer, the display, and other equipment.
- **Ventilation--**Leave at least eight inches of space on the left and back sides of your computer to enable proper ventilation.
- **Placement of the keyboard, mouse, and other input devices--**Place your keyboard, mouse, and other input devices so that your arms and hands are in a relaxed, comfortable position. The keyboard should be directly in front of you. Adjust the level of the keyboard so that your lower arms are parallel to the floor. Keep your wrists in a relaxed position when you're using the keyboard--not angled up or down. Use the palmrest only briefly, for resting. While typing, never use the palmrest or rest your hands on the table. Position the mouse at the same level as the keyboard. Hold the mouse with a relaxed hand, and use your whole arm to move it. Take breaks during sessions with your computer. Excessive use of the mouse or a joystick may strain muscles or tendons.
- **Furniture and posture--**Sit in a chair with good back support and armrests. Adjust the level of the chair so your feet are flat on the floor. A footrest may make you more comfortable. Sit in a relaxed, upright posture--avoid slouching forward or leaning far backward.

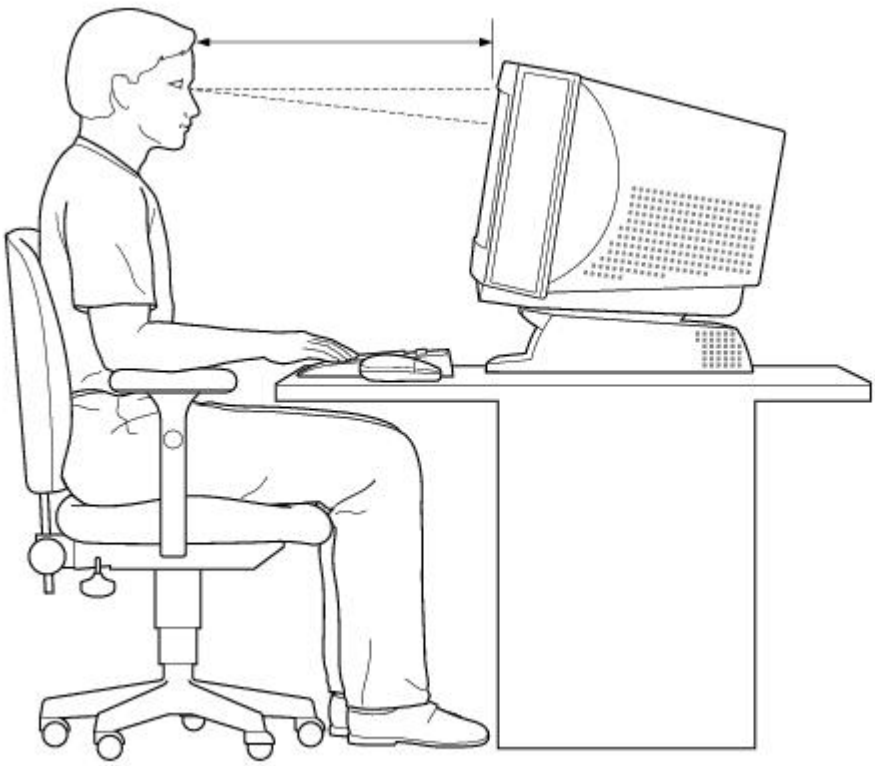

- **Viewing angle of the display--**Position the display 18 to 26 inches directly in front of you, with

the top of the screen at or a little below eye level. Use the display's tilting feature to find the best position. You can reduce eye strain and muscle fatigue by placing the display in the proper position.

- **Lighting--**Choose a location where windows and lights do not create glare and reflection on the display. Use indirect lighting to avoid bright spots on the display. You can also purchase accessories for your display that help reduce glare. Proper lighting adds to your comfort and work effectiveness.

Registering Windows® 98

The first time you turn on your computer, you need to complete a few steps to register and configure the Windows 98 software that is already installed on your computer. You do not need to repeat these steps each time you turn on your computer.


You must register Windows 98 before you can use your computer.

The on-screen instructions guide you through the registration and configuration process. The following is an overview of the process.

1. Gathering information:
    - Enter your name.
    - Read and accept the License Agreement.
    - Enter your Certificate of Authenticity number located on the cover of the Microsoft Windows 98 *Getting Started* manual.
2. Windows 98 setup: click the Finish button on the Windows 98 Setup Wizard screen.
3. Selecting your computer settings: if necessary, change the Time Zone, Date, and Time on the Date/Time Properties screen.
4. Registering your computer: for details on registering your computer, see Registering Your Computer . You can also sign up for 50 free hours of Internet service at this time.
5. Learning about Windows: if you want, take the tour of Windows.

Registering Your Computer

Take advantage of Sony's commitment to quality customer support and receive these benefits by registering your computer:

- **Sony Online Support**--Talk to a Support Representative to troubleshoot problems you may be having with your computer.
- **Limited warranty**--Protect your investment. See Limited Warranty Statement for details.


You must register your VAIO Digital Studio Computer to extend the warranty for an additional nine months beyond the initial 90-day warranty period.

- **On-site service**--Provides convenient resolution of problems.

If you have not already registered, follow these steps to use the computer online registration service.

1. Click the Sony VAIO Registration icon on the VAIO desktop.
2. Enter the information requested on the first online registration form. Press the tab key to move from box to box.
3. Click the Next button to advance to the next form.

4. Complete the remaining forms by clicking the Next button each time you complete a form.

   The computer automatically transfers your registration information using your built-in modem and a toll-free telephone number.

Using the VAIO Smart Keyboard

Connecting the Optional Palmrest

The keyboard that comes with your computer is equipped with an optional palmrest that you can attach to your keyboard. Follow these steps to connect the palmrest.

1. Place the keyboard and palmrest upside down on a flat surface.
2. Insert the latching posts on the palmrest into the openings on the keyboard.
3. Move the palmrest to the right until you feel it snap into place.

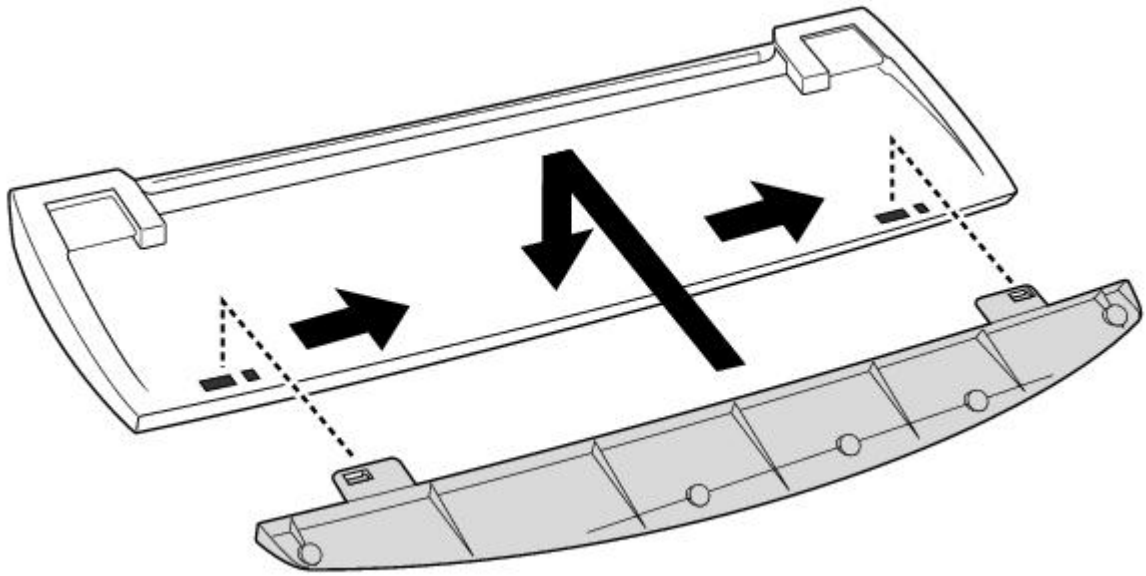

Do not keep your wrists on the palmrest while typing; use the palmrest briefly only when resting.

To remove the palmrest

1. Turn the keyboard and palmrest upside down.
2. Push down on the palmrest, and then move it to the left.
3. Lift the palmrest away from the keyboard.

Changing the Function of the Programmable Buttons

The six programmable buttons along the top of the keyboard are preprogrammed to perform specific functions. You can change the function of the programmable buttons as follows:

1. Click the Start button on the Windows taskbar to open the Start menu.
2. Point to Programs and click VAIO Smart Keyboard.

Alternatively, you can click the VAIO Smart Keyboard icon in the Windows task tray.

3. Click the on-screen button that represents the button on the keyboard (S1 to S6) that you want to program.
4. Complete the Customization dialog box to specify the function and label you want to assign to the button. Then click OK.

Alternatively, you can drag and drop any Windows icon that represents the function you want to assign onto the on-screen button. However, you cannot drag and drop icons that are specific to the Windows operating system, such as My Computer.

5. Close the Customization dialog box.

Using the Standby Function

When you are done using your computer, you can put it in standby mode rather than turn it off completely. Putting the computer in standby mode allows you to return quickly to normal computer use.

To put the computer in standby mode

1. Save your work and close any applications that are running. (You can leave Microsoft Windows running.)
2. Press the  (Standby) button on the top of the keyboard (or press the power switch momentarily on the front panel of the computer).

   The computer goes into standby mode.

Alternatively, you can click the Start button on the Windows taskbar, click Shutdown, select Standby, and then click OK.

To let the computer go into standby mode automatically

Set the computer to automatically go into standby mode after there has been no activity on it for a specified time. You can set this length of time on the Windows Control Panel. To set the timer on the Windows Control Panel, click the Start button on the Windows taskbar. Select Settings, and then click Control Panel. When the panel displays, double-click the Power icon, and then select the Disk Drives tab. On the Disk Drives tab, select the When powered by AC power check box. A check mark appears in the check box and you can then type in the timer setting or click the arrows to select a new time.

To resume from standby mode

Press any key on the keyboard, move the mouse, or press the power switch on the front panel again.

Standby Mode Indicators

You can tell which mode the computer is in by the color of the power indicator light.

Color	Mode
Amber	Computer is in standby mode.
Green	Computer is out of standby mode, ready to use.
No color	Computer is turned off.

In standby mode you may periodically hear the computer's fan turn on and off, depending on the room's temperature. This is normal functioning in standby mode.

Shutting Down Your Computer

When you are ready to turn off your computer for an extended period of time, use the following procedure to shut down the computer.

To avoid the potential loss of data, do not use the power switch to shut down the computer.

To shut down your computer

If you plan to shut down your computer for a short period of time, you may want to use standby mode instead. See Using the Standby Function.

1. Click the Start button on the Windows taskbar to open the Start menu.
2. Click Shut Down to display the Shut Down Windows dialog box.
3. Select the Shut down option.
4. Click OK to complete the shutdown process.



Respond to any prompts about saving documents.

5. Wait for your computer to turn off automatically -- the power indicator light turns off.
6. Turn off the display and any other peripherals connected to your computer.

VAIO Digital Studio Computer Features

This chapter describes the Sony digital audio/video applications that are preinstalled on your VAIO Digital Studio Computer:

- Digital Media Park , see Digital Media Park and MD Editor
- DVgate Applications, see DVgate Applications
- PictureGear , see PictureGear

It also describes the VAIO Digital Studio Computer connectivity features, including:

- i.LINK (IEEE-1394), see i.LINK (IEEE-1394) Compatibility
- Optical Digital Audio Output, see Optical Digital Audio Output Compatibility
- S-Link (Control-A1), see S-Link (Control-A1) Compatibility

Sony Digital Audio/Video Applications

Digital Media Park and MD Editor

Digital Media Park is an integrated suite of multimedia cataloging and playback programs, including Media Bar, Media Library, and Media Showcase. Manage your music by cataloging your entire CD and other AV collections. You can then create custom MiniDiscs of your favorite songs using MD Editor in conjunction with Digital Media Park.

DVgate Applications

DVgate applications include DVgate Motion and DVgate Still. DVgate Motion makes it easy to edit digital videos. You can capture, edit, and grab digital video clips, and then assemble them into a polished home video everyone will enjoy. Use DVgate Still to capture individual frames from digital video clips, and then save them as graphic files. Enhance your web page, send family and friends your favorite stills, create your own wallpaper. The possibilities are endless.

PictureGear

PictureGear is a digital image management application that allows you to see all the images stored in any directory on your computer. Thumbnail views provide quick reminders of your pictures. Brighten, contrast, enhance, resize, crop, and color-correct your pictures. Create panoramic views, animations, screen savers, wallpaper, and even HTML photo albums.

i.LINK (IEEE-1394) Compatibility

Some models of the VAIO Digital Studio Computer include i.LINK (IEEE-1394) connectors. For the latest information on your specific model and on the i.LINK devices known to be compatible with your system, check the Sony web site at http://www.sony.com/pcsupport. iLINK connectors may be located on the front, back, or both the front and back of your system.

To connect an i.LINK (IEEE-1394) device

- Use the symbol to locate the **i.link** connector. Plug the i.LINK device into this connector.

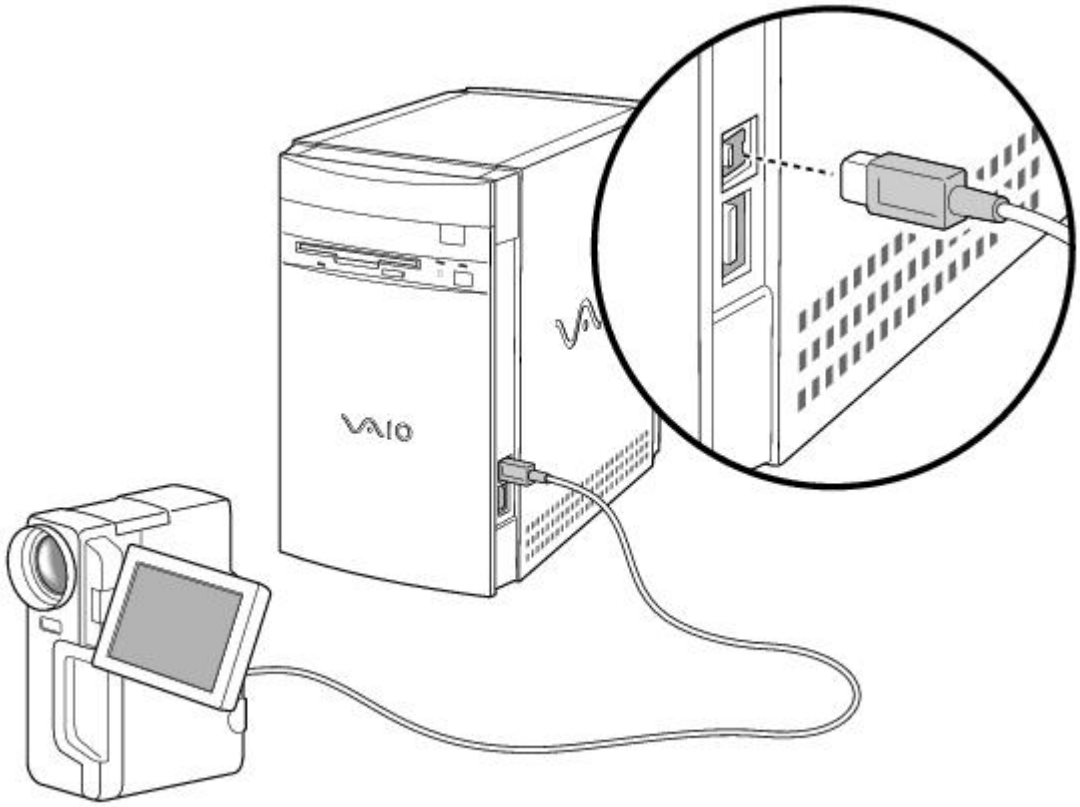

See the manual that came with your i.LINK (IEEE-1394) equipped device for more information on setting it up and using it.

Optical Digital Audio Output Compatibility

Some models of the VAIO Digital Studio Computer include an Optical Digital Audio Output connector. For the latest information on your specific model and on devices known to be compatible with your system, check the Sony web site at http://www.sony.com/pcsupport.

To connect an Optical Digital Audio Output device

- Locate the Optical Digital Audio Output connector. Plug the digital audio device into this connector.

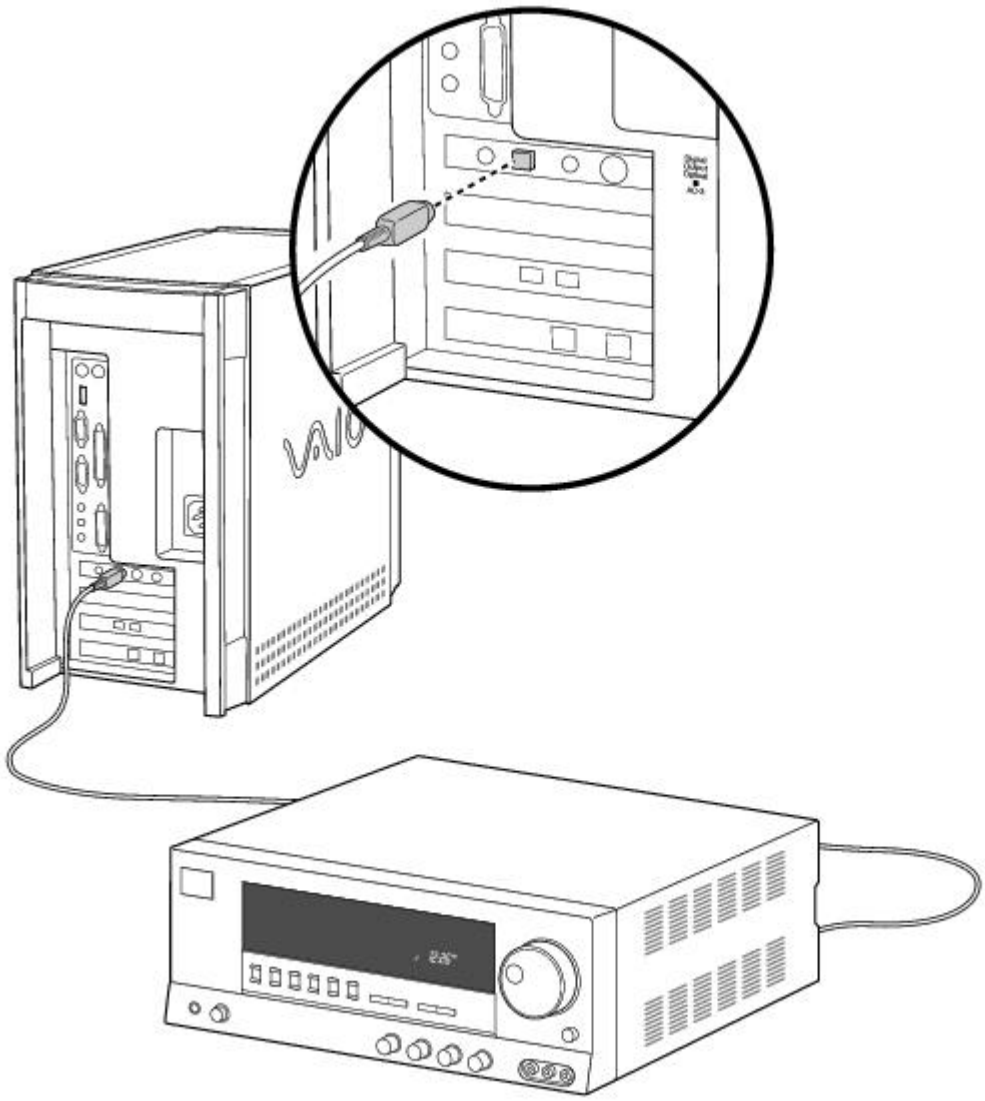

See the manual that came with your digital audio device for more information on setting it up and using it.

When transferring digital data, you may only make copies as permitted by law or by the owner of the material that is copied.

S-Link (Control-A1) Compatibility

Some models of the VAIO Digital Studio Computer include an S-Link (Control-A1) connector. For the latest information on devices known to be compatible with the state-of-the-art audio, video, and graphics capabilities of your VAIO computer, check the Sony web site at http://www.sony.com/pcsupport.

To connect an S-Link (Control-A1) device

- Locate the S-Link (Control-A1) connector. Plug the S-Link (Control-A1) device into this connector.

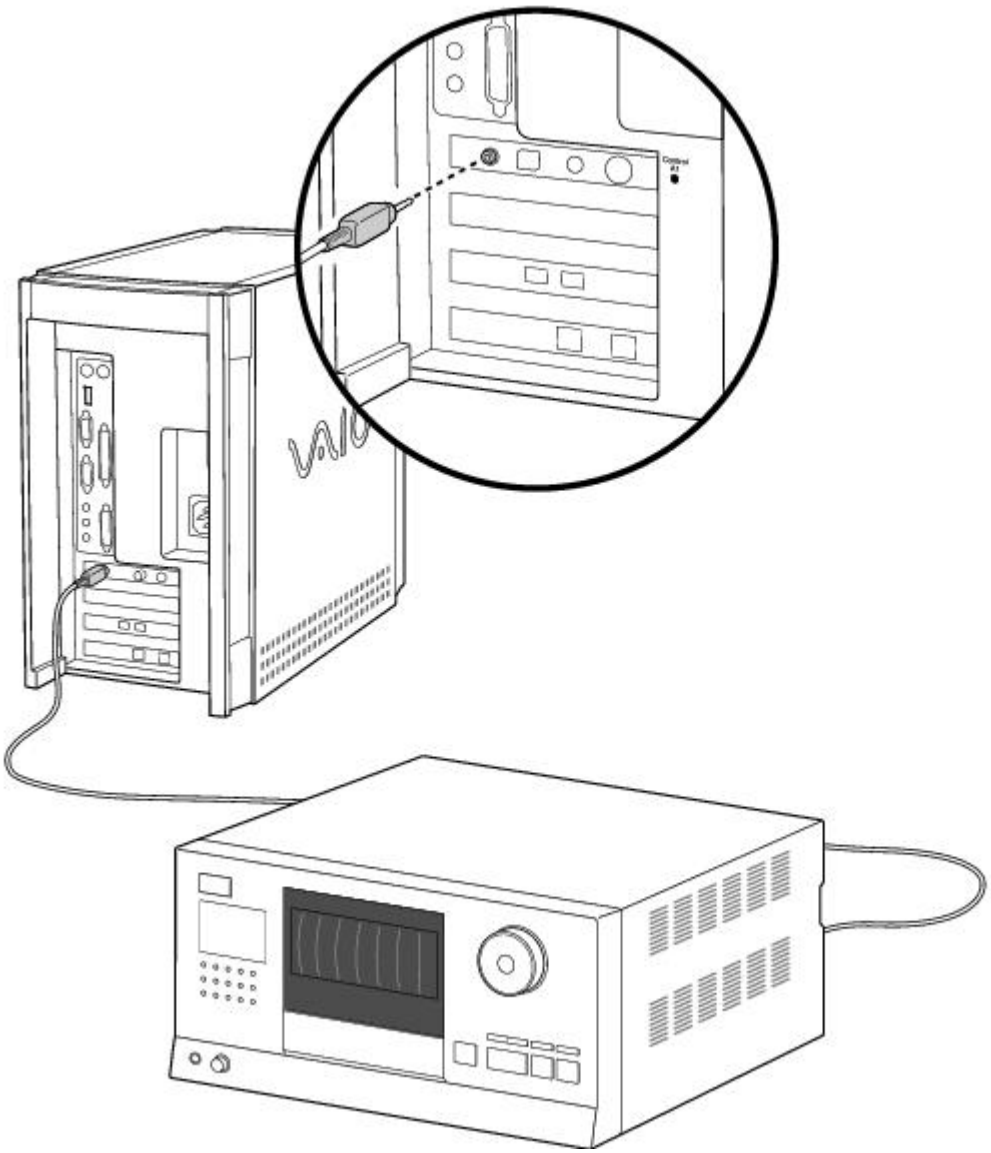

See the manual that came with your S-Link equipped device for more information on setting it up and using it.

VAIO Digital Studio Computer Features

This chapter describes the Sony digital audio/video applications that are preinstalled on your VAIO Digital Studio Computer:

- Digital Media Park , see Digital Media Park and MD Editor
- DVgate Applications, see DVgate Applications
- PictureGear , see PictureGear

It also describes the VAIO Digital Studio Computer connectivity features, including:

- i.LINK (IEEE-1394), see i.LINK (IEEE-1394) Compatibility
- Optical Digital Audio Output, see Optical Digital Audio Output Compatibility
- S-Link (Control-A1), see S-Link (Control-A1) Compatibility

Sony Digital Audio/Video Applications

Digital Media Park and MD Editor

Digital Media Park is an integrated suite of multimedia cataloging and playback programs, including Media Bar, Media Library, and Media Showcase. Manage your music by cataloging your entire CD and other AV collections. You can then create custom MiniDiscs of your favorite songs using MD Editor in conjunction with Digital Media Park.

DVgate Applications

DVgate applications include DVgate Motion and DVgate Still. DVgate Motion makes it easy to edit digital videos. You can capture, edit, and grab digital video clips, and then assemble them into a polished home video everyone will enjoy. Use DVgate Still to capture individual frames from digital video clips, and then save them as graphic files. Enhance your web page, send family and friends your favorite stills, create your own wallpaper. The possibilities are endless.

PictureGear

PictureGear is a digital image management application that allows you to see all the images stored in any directory on your computer. Thumbnail views provide quick reminders of your pictures. Brighten, contrast, enhance, resize, crop, and color-correct your pictures. Create panoramic views, animations, screen savers, wallpaper, and even HTML photo albums.

i.LINK (IEEE-1394) Compatibility

Some models of the VAIO Digital Studio Computer include i.LINK (IEEE-1394) connectors. For the latest information on your specific model and on the i.LINK devices known to be compatible with your system, check the Sony web site at http://www.sony.com/pcsupport. iLINK connectors may be located on the front, back, or both the front and back of your system.

To connect an i.LINK (IEEE-1394) device

- Use the symbol to locate the **i.link** connector. Plug the i.LINK device into this connector.

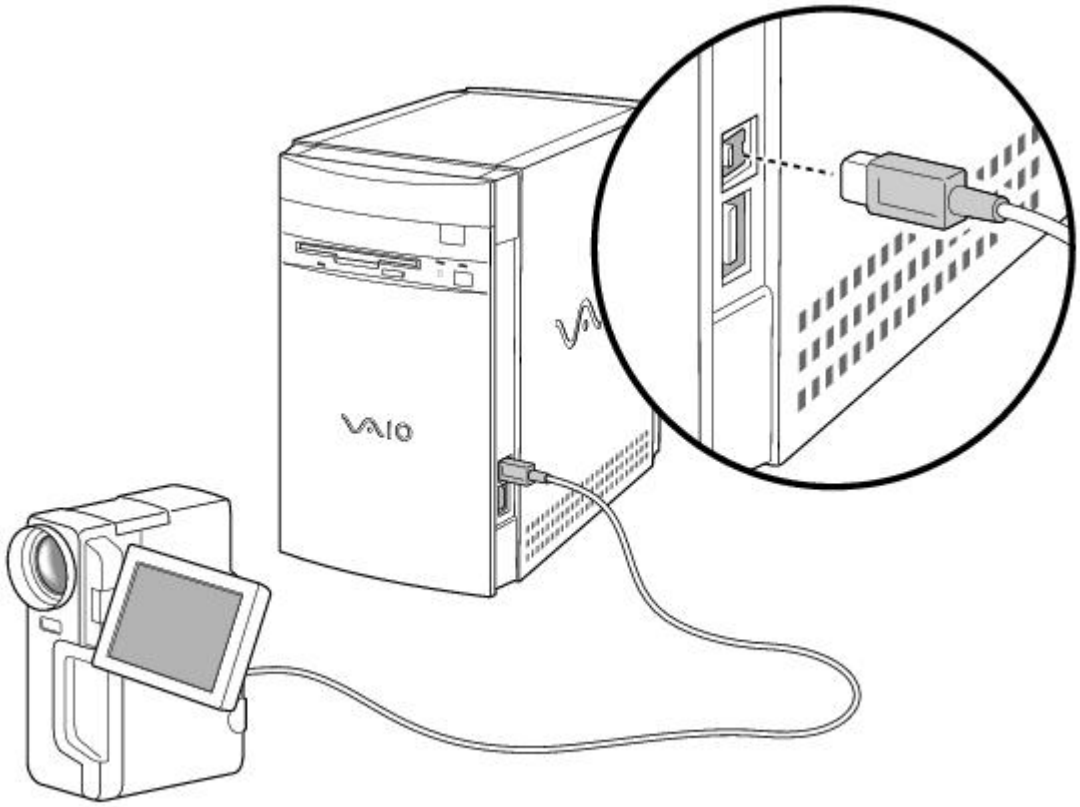

See the manual that came with your i.LINK (IEEE-1394) equipped device for more information on setting it up and using it.

Optical Digital Audio Output Compatibility

Some models of the VAIO Digital Studio Computer include an Optical Digital Audio Output connector. For the latest information on your specific model and on devices known to be compatible with your system, check the Sony web site at http://www.sony.com/pcsupport.

To connect an Optical Digital Audio Output device

- Locate the Optical Digital Audio Output connector. Plug the digital audio device into this connector.

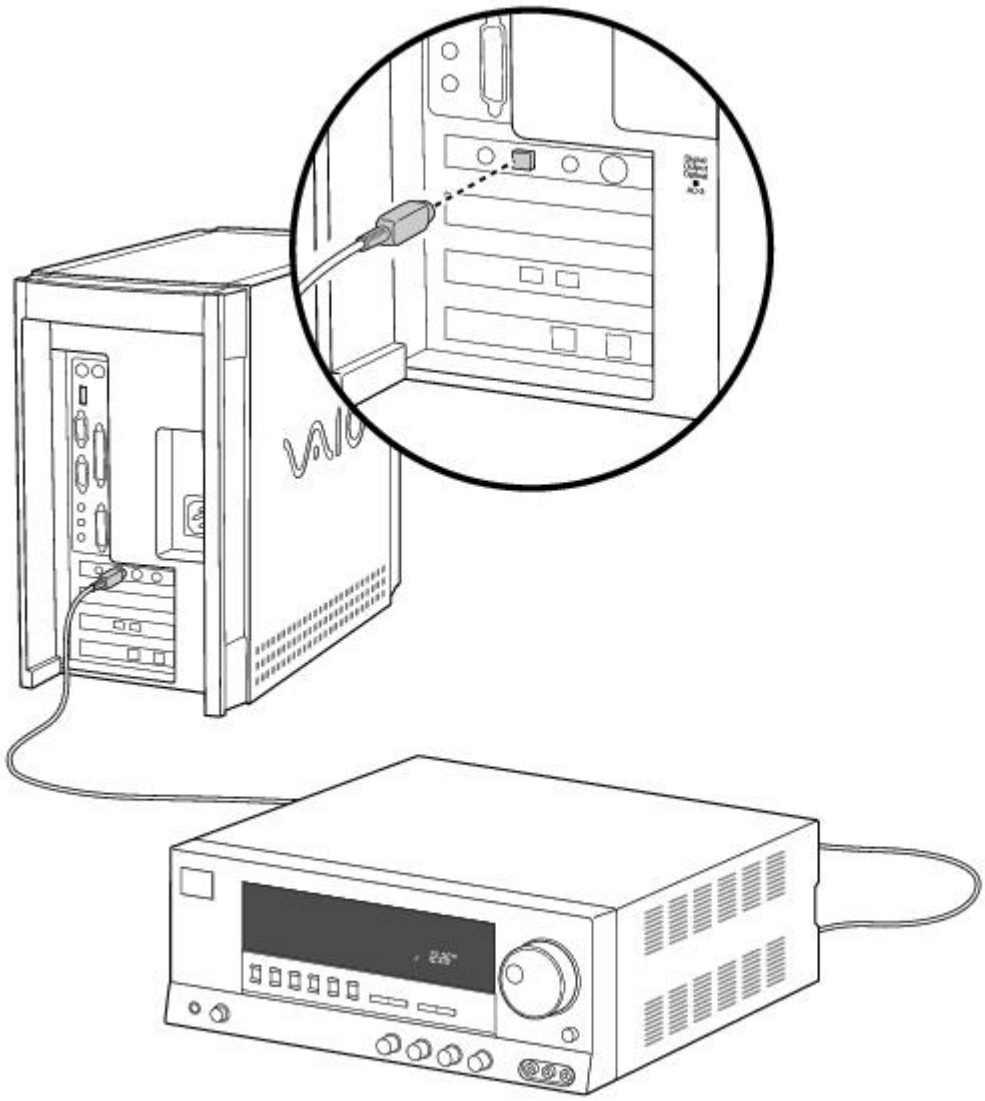

See the manual that came with your digital audio device for more information on setting it up and using it.

When transferring digital data, you may only make copies as permitted by law or by the owner of the material that is copied.

S-Link (Control-A1) Compatibility

Some models of the VAIO Digital Studio Computer include an S-Link (Control-A1) connector. For the latest information on devices known to be compatible with the state-of-the-art audio, video, and graphics capabilities of your VAIO computer, check the Sony web site at http://www.sony.com/pcsupport.

To connect an S-Link (Control-A1) device

- Locate the S-Link (Control-A1) connector. Plug the S-Link (Control-A1) device into this connector.

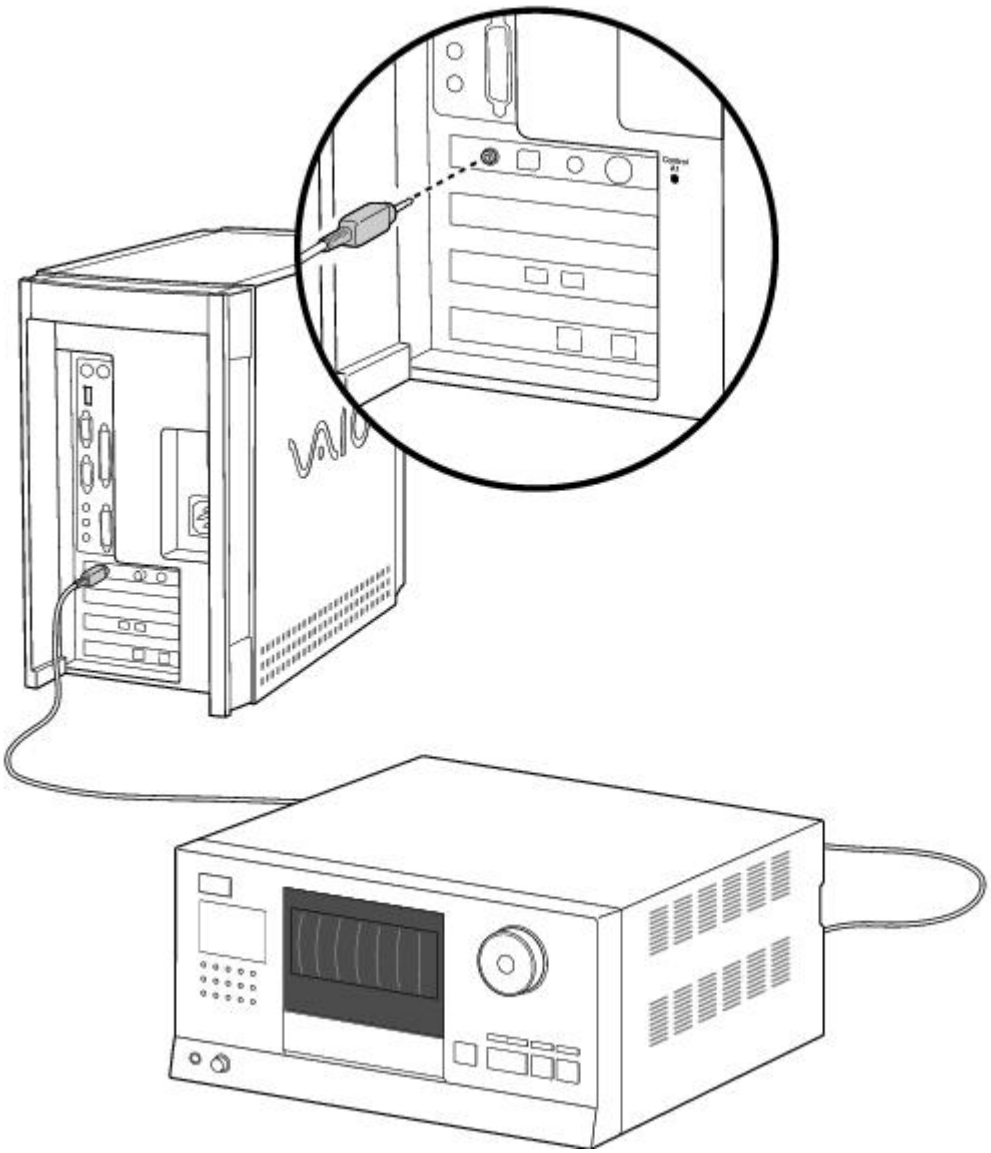

See the manual that came with your S-Link equipped device for more information on setting it up and using it.

VAIO Digital Studio Computer Features

This chapter describes the Sony digital audio/video applications that are preinstalled on your VAIO Digital Studio Computer:

- Digital Media Park , see Digital Media Park and MD Editor
- DVgate Applications, see DVgate Applications
- PictureGear , see PictureGear

It also describes the VAIO Digital Studio Computer connectivity features, including:

- i.LINK (IEEE-1394), see i.LINK (IEEE-1394) Compatibility
- Optical Digital Audio Output, see Optical Digital Audio Output Compatibility
- S-Link (Control-A1), see S-Link (Control-A1) Compatibility

Sony Digital Audio/Video Applications

Digital Media Park and MD Editor

Digital Media Park is an integrated suite of multimedia cataloging and playback programs, including Media Bar, Media Library, and Media Showcase. Manage your music by cataloging your entire CD and other AV collections. You can then create custom MiniDiscs of your favorite songs using MD Editor in conjunction with Digital Media Park.

DVgate Applications

DVgate applications include DVgate Motion and DVgate Still. DVgate Motion makes it easy to edit digital videos. You can capture, edit, and grab digital video clips, and then assemble them into a polished home video everyone will enjoy. Use DVgate Still to capture individual frames from digital video clips, and then save them as graphic files. Enhance your web page, send family and friends your favorite stills, create your own wallpaper. The possibilities are endless.

PictureGear

PictureGear is a digital image management application that allows you to see all the images stored in any directory on your computer. Thumbnail views provide quick reminders of your pictures. Brighten, contrast, enhance, resize, crop, and color-correct your pictures. Create panoramic views, animations, screen savers, wallpaper, and even HTML photo albums.

i.LINK (IEEE-1394) Compatibility

Some models of the VAIO Digital Studio Computer include i.LINK (IEEE-1394) connectors. For the latest information on your specific model and on the i.LINK devices known to be compatible with your system, check the Sony web site at http://www.sony.com/pcsupport. iLINK connectors may be located on the front, back, or both the front and back of your system.

To connect an i.LINK (IEEE-1394) device

- Use the symbol to locate the **i.link** connector. Plug the i.LINK device into this connector.

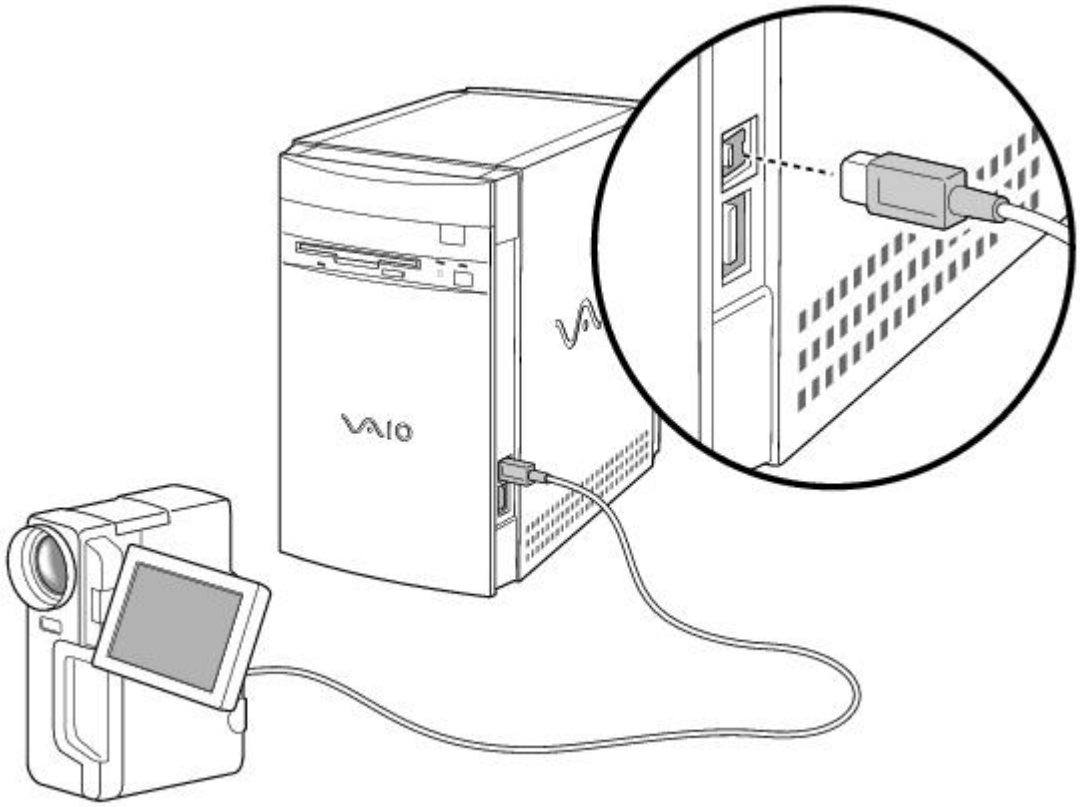

See the manual that came with your i.LINK (IEEE-1394) equipped device for more information on setting it up and using it.

Optical Digital Audio Output Compatibility

Some models of the VAIO Digital Studio Computer include an Optical Digital Audio Output connector. For the latest information on your specific model and on devices known to be compatible with your system, check the Sony web site at http://www.sony.com/pcsupport.

To connect an Optical Digital Audio Output device

- Locate the Optical Digital Audio Output connector. Plug the digital audio device into this connector.

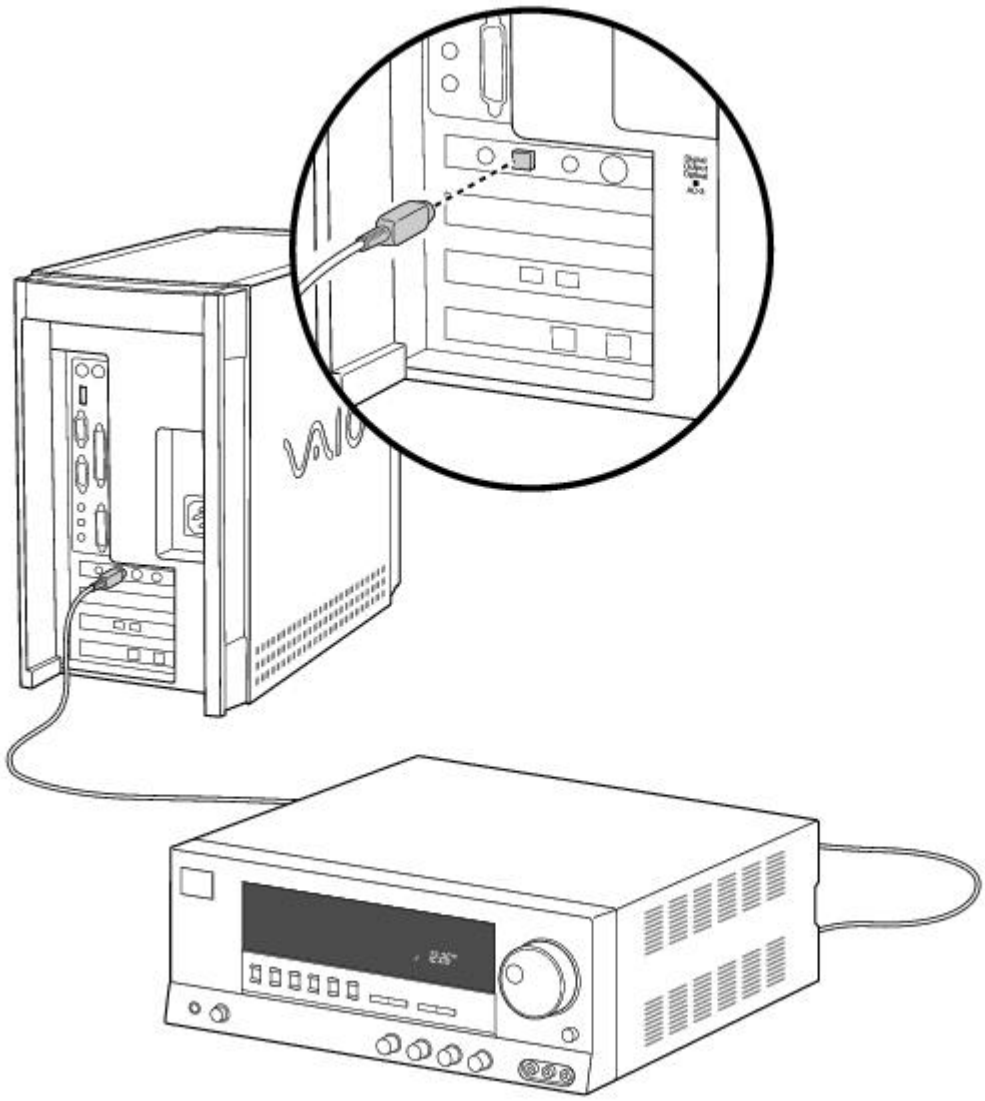

See the manual that came with your digital audio device for more information on setting it up and using it.

When transferring digital data, you may only make copies as permitted by law or by the owner of the material that is copied.

S-Link (Control-A1) Compatibility

Some models of the VAIO Digital Studio Computer include an S-Link (Control-A1) connector. For the latest information on devices known to be compatible with the state-of-the-art audio, video, and graphics capabilities of your VAIO computer, check the Sony web site at http://www.sony.com/pcsupport.

To connect an S-Link (Control-A1) device

- Locate the S-Link (Control-A1) connector. Plug the S-Link (Control-A1) device into this connector.

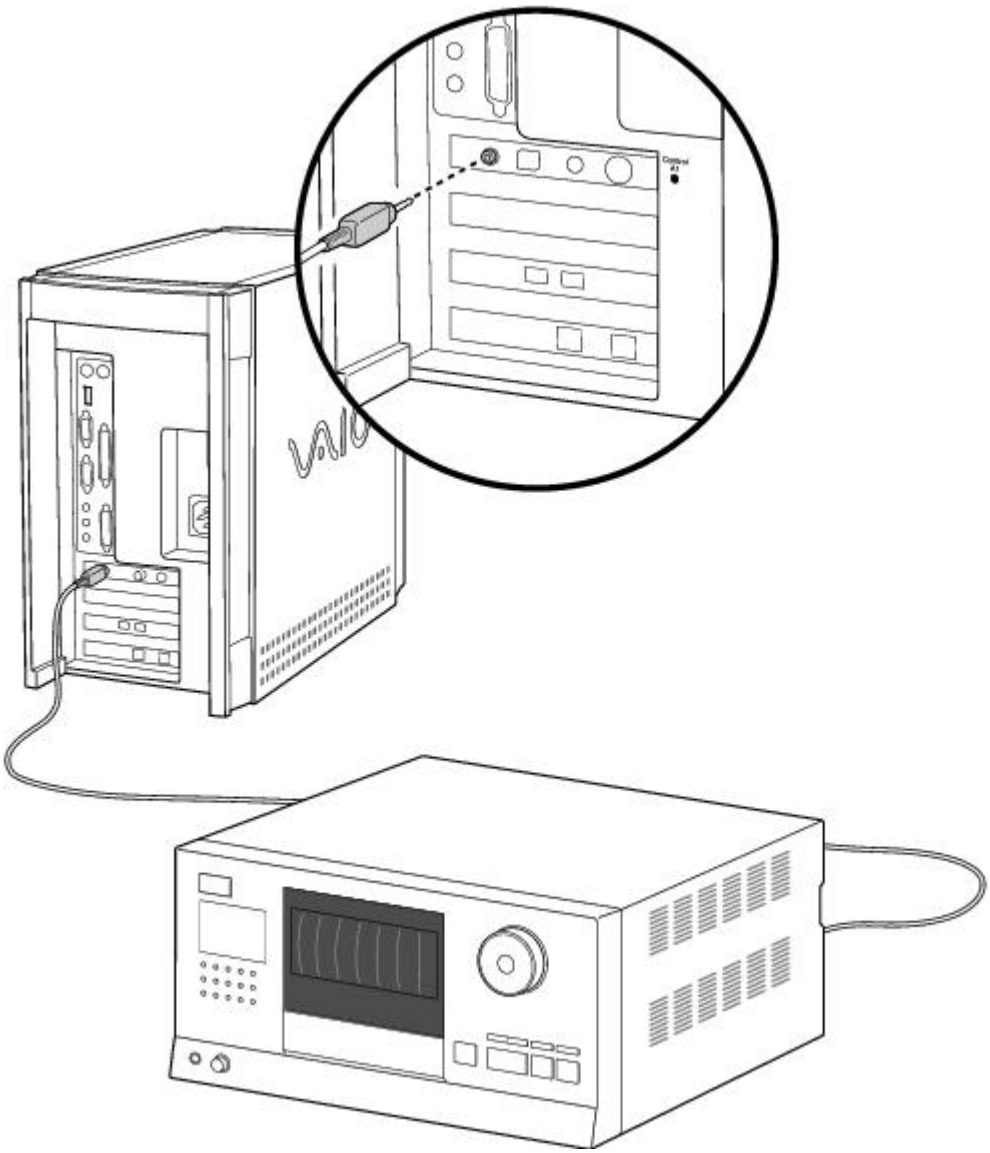

See the manual that came with your S-Link equipped device for more information on setting it up and using it.

VAIO Digital Studio Computer Features

This chapter describes the Sony digital audio/video applications that are preinstalled on your VAIO Digital Studio Computer:

- Digital Media Park , see Digital Media Park and MD Editor
- DVgate Applications, see DVgate Applications
- PictureGear , see PictureGear

It also describes the VAIO Digital Studio Computer connectivity features, including:

- i.LINK (IEEE-1394), see i.LINK (IEEE-1394) Compatibility
- Optical Digital Audio Output, see Optical Digital Audio Output Compatibility
- S-Link (Control-A1), see S-Link (Control-A1) Compatibility

Sony Digital Audio/Video Applications

Digital Media Park and MD Editor

Digital Media Park is an integrated suite of multimedia cataloging and playback programs, including Media Bar, Media Library, and Media Showcase. Manage your music by cataloging your entire CD and other AV collections. You can then create custom MiniDiscs of your favorite songs using MD Editor in conjunction with Digital Media Park.

DVgate Applications

DVgate applications include DVgate Motion and DVgate Still. DVgate Motion makes it easy to edit digital videos. You can capture, edit, and grab digital video clips, and then assemble them into a polished home video everyone will enjoy. Use DVgate Still to capture individual frames from digital video clips, and then save them as graphic files. Enhance your web page, send family and friends your favorite stills, create your own wallpaper. The possibilities are endless.

PictureGear

PictureGear is a digital image management application that allows you to see all the images stored in any directory on your computer. Thumbnail views provide quick reminders of your pictures. Brighten, contrast, enhance, resize, crop, and color-correct your pictures. Create panoramic views, animations, screen savers, wallpaper, and even HTML photo albums.

i.LINK (IEEE-1394) Compatibility

Some models of the VAIO Digital Studio Computer include i.LINK (IEEE-1394) connectors. For the latest information on your specific model and on the i.LINK devices known to be compatible with your system, check the Sony web site at http://www.sony.com/pcsupport. iLINK connectors may be located on the front, back, or both the front and back of your system.

To connect an i.LINK (IEEE-1394) device

- Use the symbol to locate the **i.link** connector. Plug the i.LINK device into this connector.

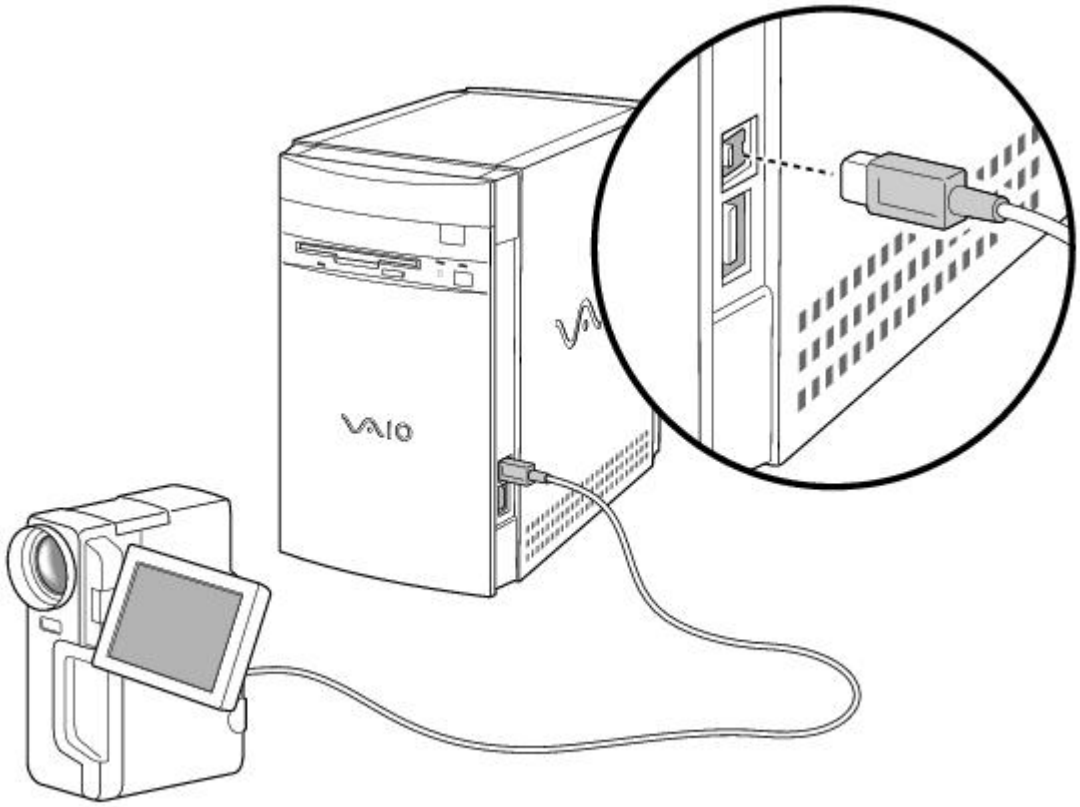

See the manual that came with your i.LINK (IEEE-1394) equipped device for more information on setting it up and using it.

Optical Digital Audio Output Compatibility

Some models of the VAIO Digital Studio Computer include an Optical Digital Audio Output connector. For the latest information on your specific model and on devices known to be compatible with your system, check the Sony web site at http://www.sony.com/pcsupport.

To connect an Optical Digital Audio Output device

- Locate the Optical Digital Audio Output connector. Plug the digital audio device into this connector.

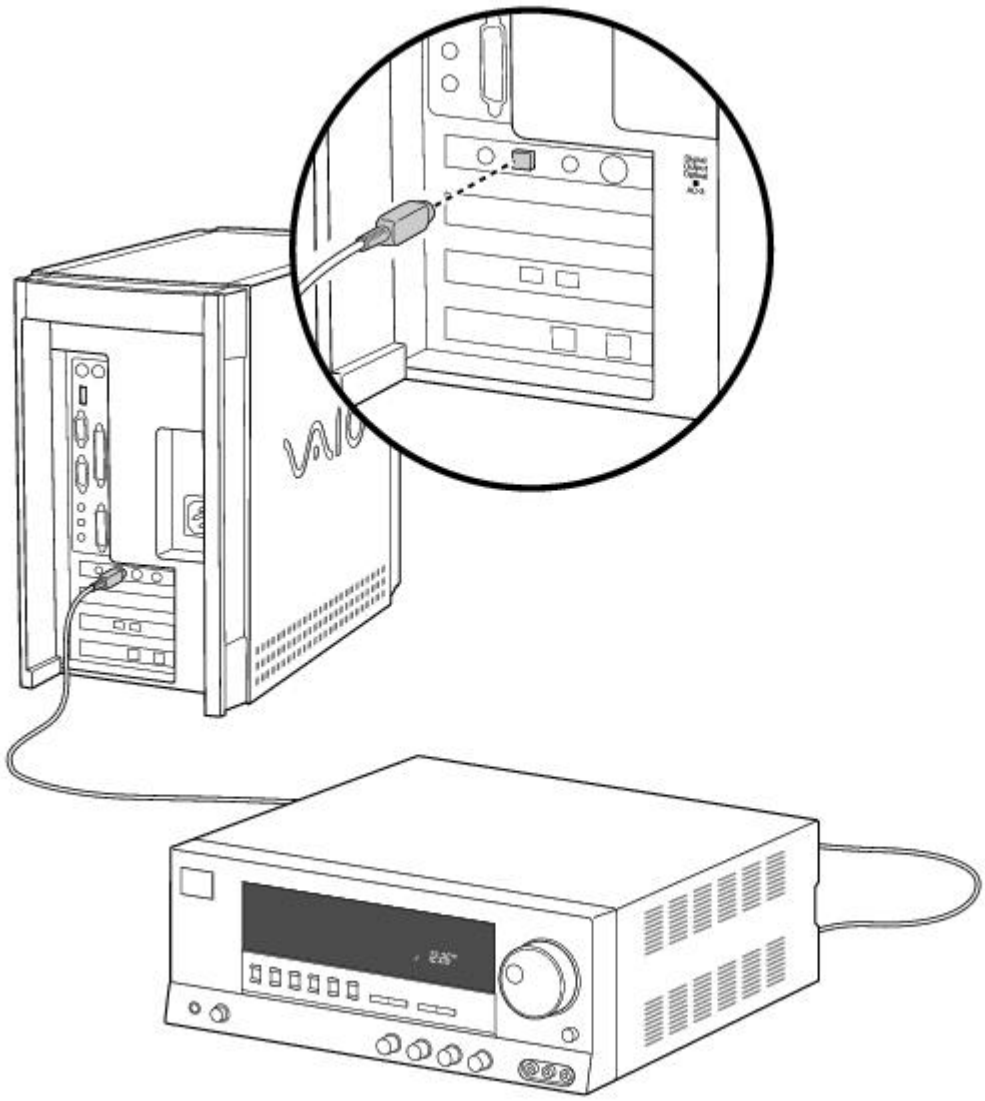

See the manual that came with your digital audio device for more information on setting it up and using it.

When transferring digital data, you may only make copies as permitted by law or by the owner of the material that is copied.

S-Link (Control-A1) Compatibility

Some models of the VAIO Digital Studio Computer include an S-Link (Control-A1) connector. For the latest information on devices known to be compatible with the state-of-the-art audio, video, and graphics capabilities of your VAIO computer, check the Sony web site at http://www.sony.com/pcsupport.

To connect an S-Link (Control-A1) device

- Locate the S-Link (Control-A1) connector. Plug the S-Link (Control-A1) device into this connector.

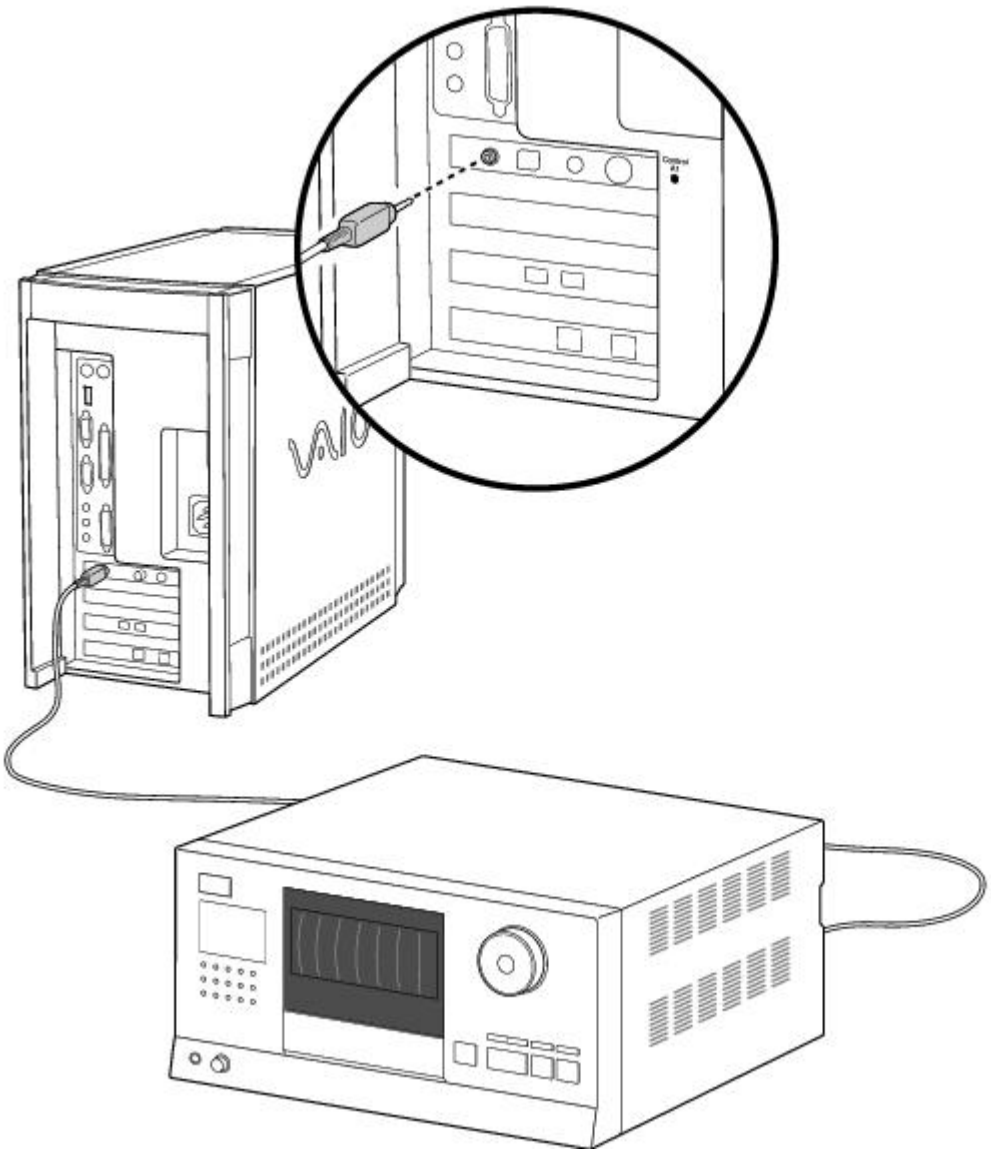

See the manual that came with your S-Link equipped device for more information on setting it up and using it.

VAIO Digital Studio Computer Features

This chapter describes the Sony digital audio/video applications that are preinstalled on your VAIO Digital Studio Computer:

- Digital Media Park , see Digital Media Park and MD Editor
- DVgate Applications, see DVgate Applications
- PictureGear , see PictureGear

It also describes the VAIO Digital Studio Computer connectivity features, including:

- i.LINK (IEEE-1394), see i.LINK (IEEE-1394) Compatibility
- Optical Digital Audio Output, see Optical Digital Audio Output Compatibility
- S-Link (Control-A1), see S-Link (Control-A1) Compatibility

Sony Digital Audio/Video Applications

Digital Media Park and MD Editor

Digital Media Park is an integrated suite of multimedia cataloging and playback programs, including Media Bar, Media Library, and Media Showcase. Manage your music by cataloging your entire CD and other AV collections. You can then create custom MiniDiscs of your favorite songs using MD Editor in conjunction with Digital Media Park.

DVgate Applications

DVgate applications include DVgate Motion and DVgate Still. DVgate Motion makes it easy to edit digital videos. You can capture, edit, and grab digital video clips, and then assemble them into a polished home video everyone will enjoy. Use DVgate Still to capture individual frames from digital video clips, and then save them as graphic files. Enhance your web page, send family and friends your favorite stills, create your own wallpaper. The possibilities are endless.

PictureGear

PictureGear is a digital image management application that allows you to see all the images stored in any directory on your computer. Thumbnail views provide quick reminders of your pictures. Brighten, contrast, enhance, resize, crop, and color-correct your pictures. Create panoramic views, animations, screen savers, wallpaper, and even HTML photo albums.

i.LINK (IEEE-1394) Compatibility

Some models of the VAIO Digital Studio Computer include i.LINK (IEEE-1394) connectors. For the latest information on your specific model and on the i.LINK devices known to be compatible with your system, check the Sony web site at http://www.sony.com/pcsupport. iLINK connectors may be located on the front, back, or both the front and back of your system.

To connect an i.LINK (IEEE-1394) device

- Use the symbol to locate the **i.link** connector. Plug the i.LINK device into this connector.

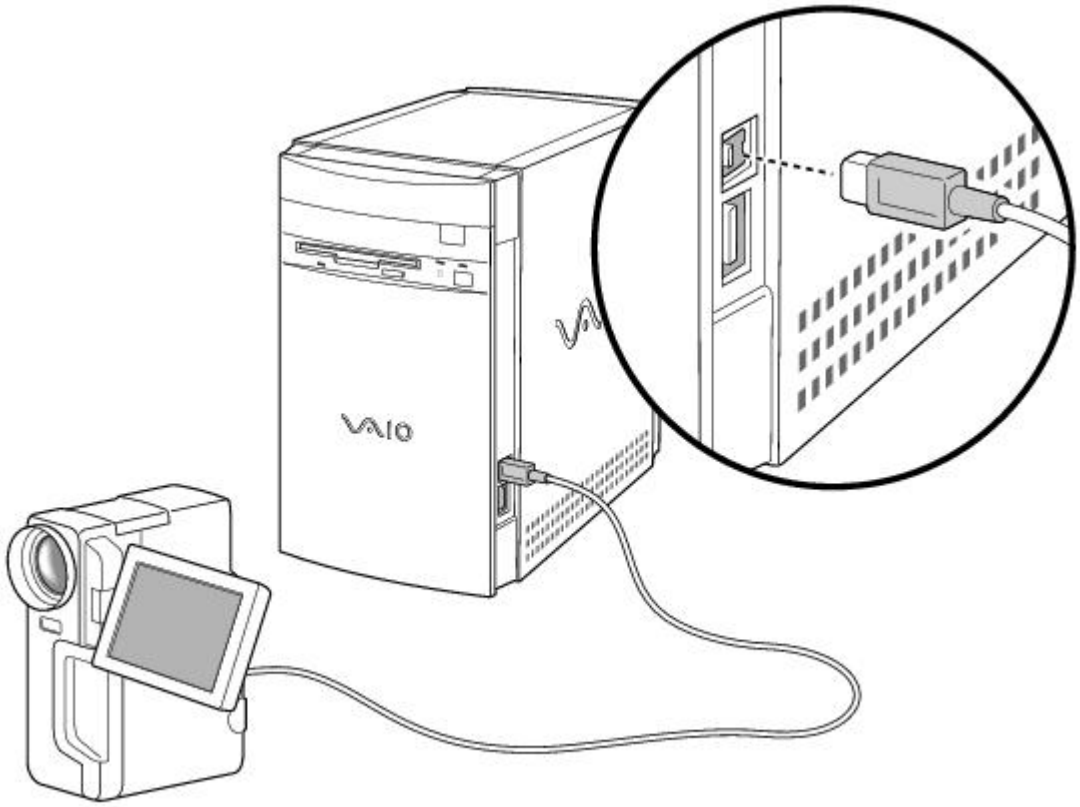

See the manual that came with your i.LINK (IEEE-1394) equipped device for more information on setting it up and using it.

Optical Digital Audio Output Compatibility

Some models of the VAIO Digital Studio Computer include an Optical Digital Audio Output connector. For the latest information on your specific model and on devices known to be compatible with your system, check the Sony web site at http://www.sony.com/pcsupport.

To connect an Optical Digital Audio Output device

- Locate the Optical Digital Audio Output connector. Plug the digital audio device into this connector.

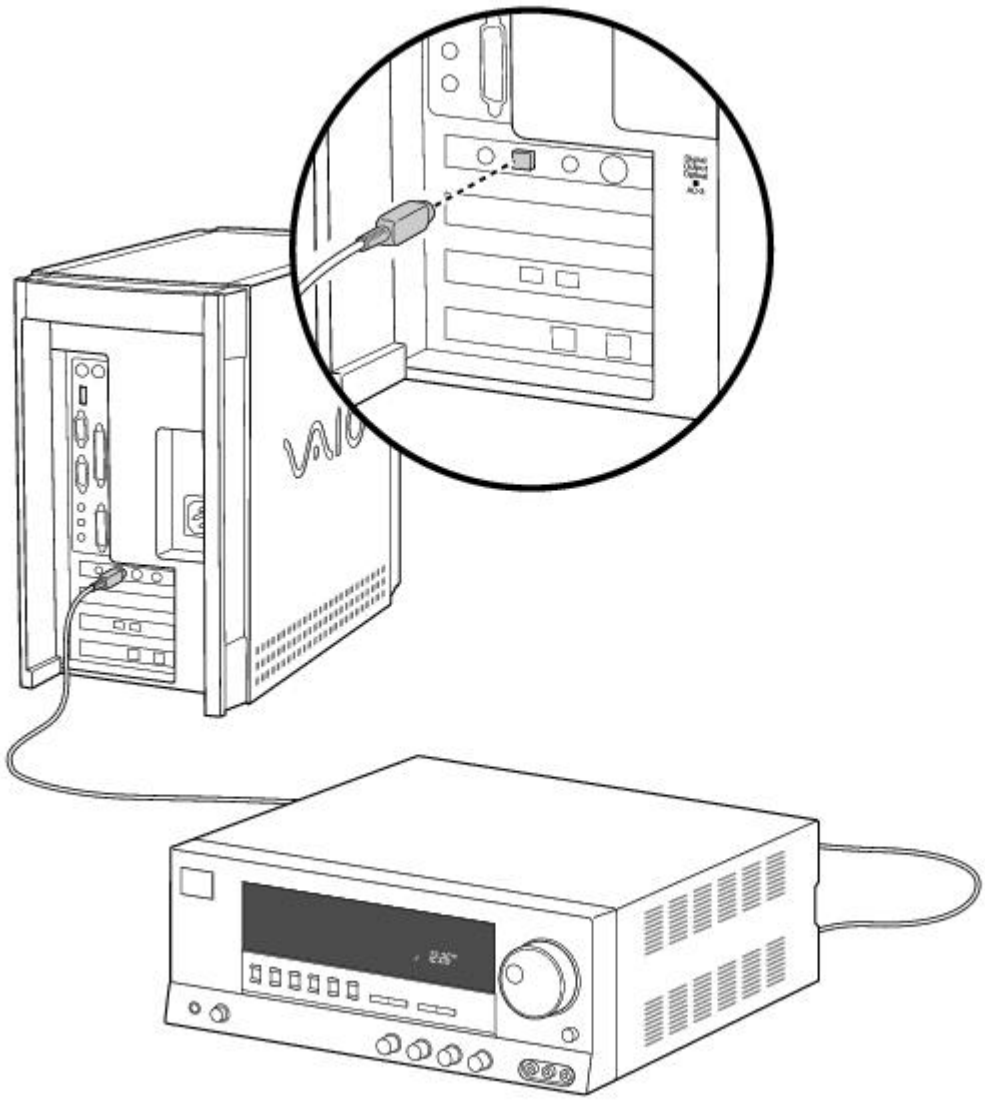

See the manual that came with your digital audio device for more information on setting it up and using it.

When transferring digital data, you may only make copies as permitted by law or by the owner of the material that is copied.

S-Link (Control-A1) Compatibility

Some models of the VAIO Digital Studio Computer include an S-Link (Control-A1) connector. For the latest information on devices known to be compatible with the state-of-the-art audio, video, and graphics capabilities of your VAIO computer, check the Sony web site at http://www.sony.com/pcsupport.

To connect an S-Link (Control-A1) device

- Locate the S-Link (Control-A1) connector. Plug the S-Link (Control-A1) device into this connector.

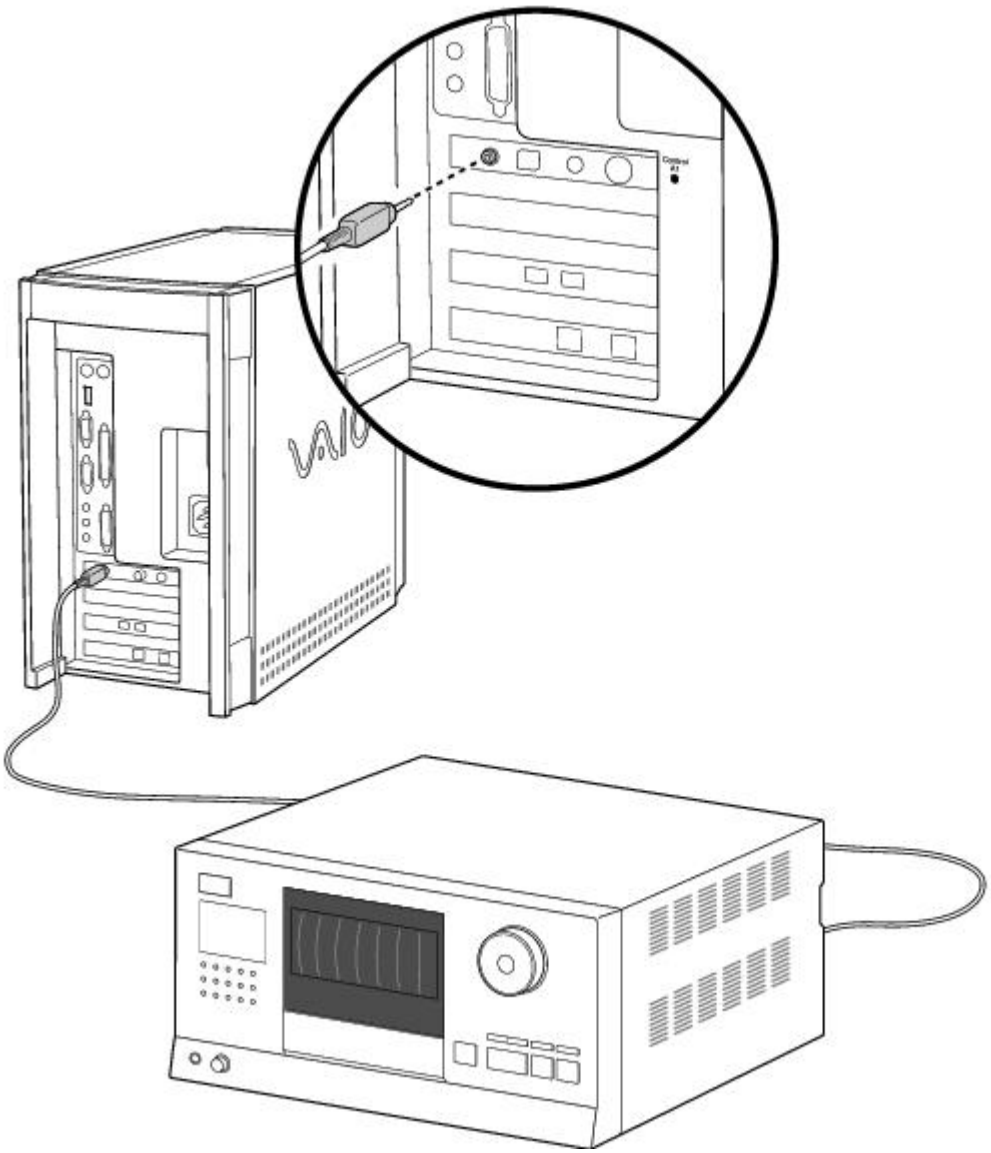

See the manual that came with your S-Link equipped device for more information on setting it up and using it.

VAIO Digital Studio Computer Features

This chapter describes the Sony digital audio/video applications that are preinstalled on your VAIO Digital Studio Computer:

- Digital Media Park , see Digital Media Park and MD Editor
- DVgate Applications, see DVgate Applications
- PictureGear , see PictureGear

It also describes the VAIO Digital Studio Computer connectivity features, including:

- i.LINK (IEEE-1394), see i.LINK (IEEE-1394) Compatibility
- Optical Digital Audio Output, see Optical Digital Audio Output Compatibility
- S-Link (Control-A1), see S-Link (Control-A1) Compatibility

Sony Digital Audio/Video Applications

Digital Media Park and MD Editor

Digital Media Park is an integrated suite of multimedia cataloging and playback programs, including Media Bar, Media Library, and Media Showcase. Manage your music by cataloging your entire CD and other AV collections. You can then create custom MiniDiscs of your favorite songs using MD Editor in conjunction with Digital Media Park.

DVgate Applications

DVgate applications include DVgate Motion and DVgate Still. DVgate Motion makes it easy to edit digital videos. You can capture, edit, and grab digital video clips, and then assemble them into a polished home video everyone will enjoy. Use DVgate Still to capture individual frames from digital video clips, and then save them as graphic files. Enhance your web page, send family and friends your favorite stills, create your own wallpaper. The possibilities are endless.

PictureGear

PictureGear is a digital image management application that allows you to see all the images stored in any directory on your computer. Thumbnail views provide quick reminders of your pictures. Brighten, contrast, enhance, resize, crop, and color-correct your pictures. Create panoramic views, animations, screen savers, wallpaper, and even HTML photo albums.

i.LINK (IEEE-1394) Compatibility

Some models of the VAIO Digital Studio Computer include i.LINK (IEEE-1394) connectors. For the latest information on your specific model and on the i.LINK devices known to be compatible with your system, check the Sony web site at http://www.sony.com/pcsupport. iLINK connectors may be located on the front, back, or both the front and back of your system.

To connect an i.LINK (IEEE-1394) device

- Use the symbol to locate the **i.link** connector. Plug the i.LINK device into this connector.

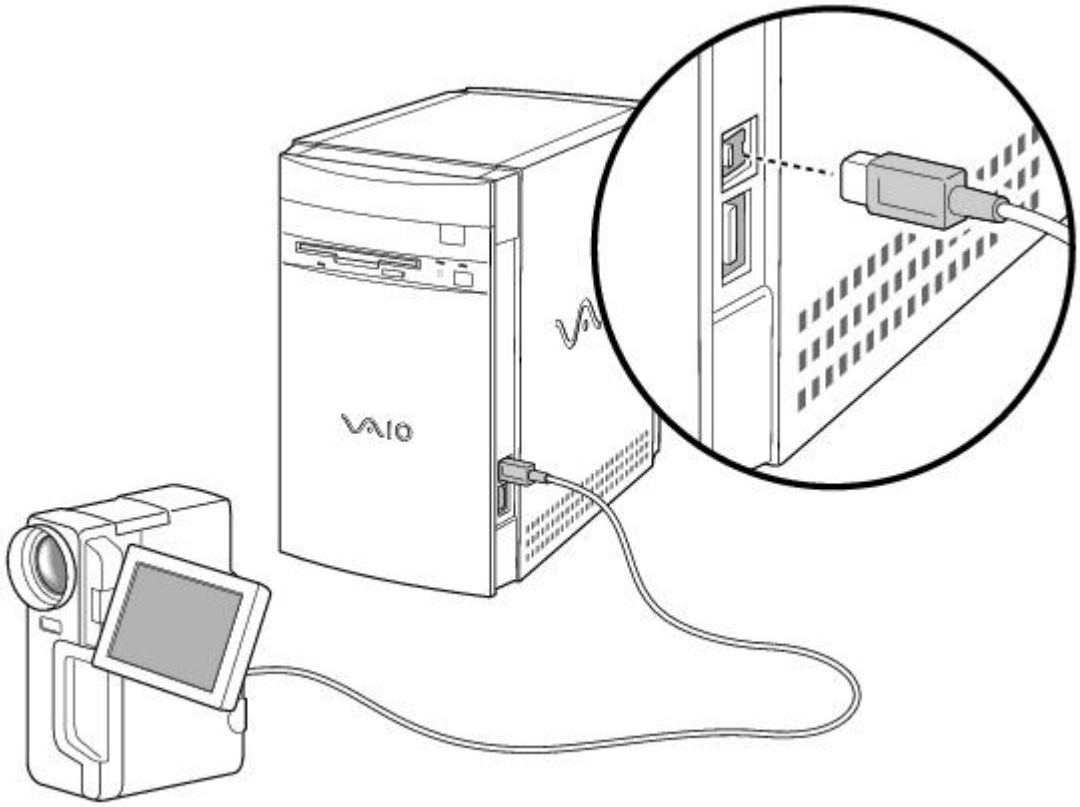

See the manual that came with your i.LINK (IEEE-1394) equipped device for more information on setting it up and using it.

Optical Digital Audio Output Compatibility

Some models of the VAIO Digital Studio Computer include an Optical Digital Audio Output connector. For the latest information on your specific model and on devices known to be compatible with your system, check the Sony web site at http://www.sony.com/pcsupport.

To connect an Optical Digital Audio Output device

- Locate the Optical Digital Audio Output connector. Plug the digital audio device into this connector.

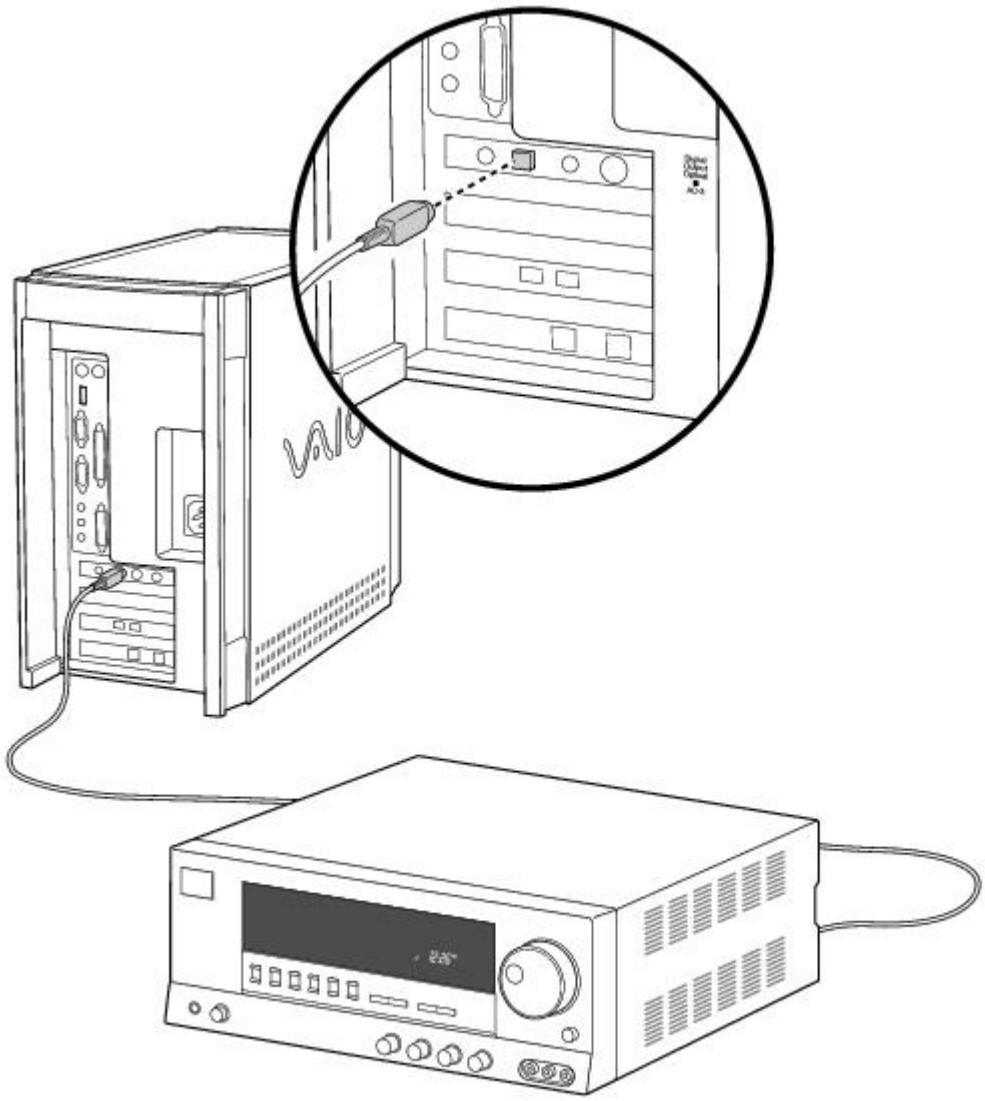

See the manual that came with your digital audio device for more information on setting it up and using it.

When transferring digital data, you may only make copies as permitted by law or by the owner of the material that is copied.

S-Link (Control-A1) Compatibility

Some models of the VAIO Digital Studio Computer include an S-Link (Control-A1) connector. For the latest information on devices known to be compatible with the state-of-the-art audio, video, and graphics capabilities of your VAIO computer, check the Sony web site at http://www.sony.com/pcsupport.

To connect an S-Link (Control-A1) device

- Locate the S-Link (Control-A1) connector. Plug the S-Link (Control-A1) device into this connector.

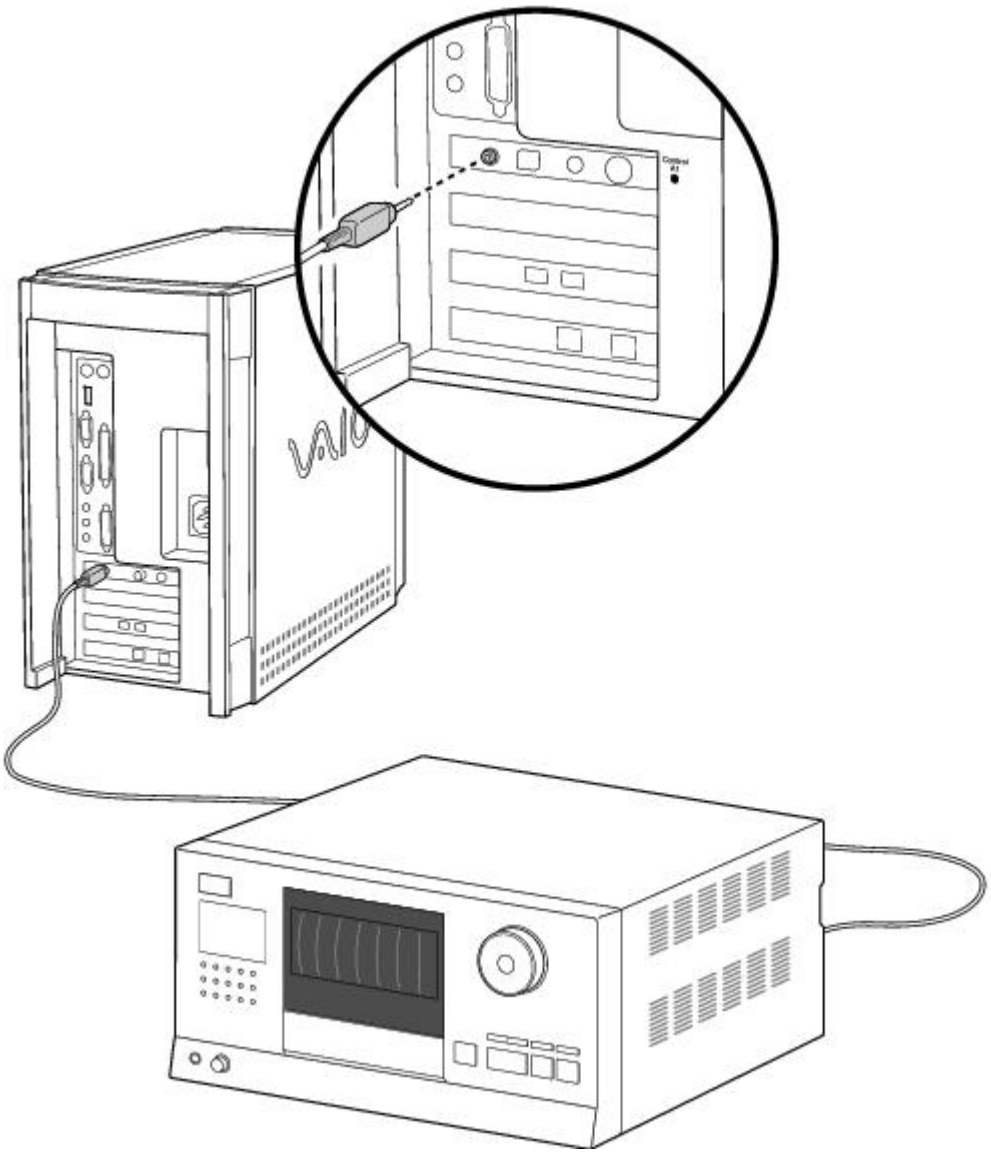

See the manual that came with your S-Link equipped device for more information on setting it up and using it.

VAIO Digital Studio Computer Features

This chapter describes the Sony digital audio/video applications that are preinstalled on your VAIO Digital Studio Computer:

- Digital Media Park , see Digital Media Park and MD Editor
- DVgate Applications, see DVgate Applications
- PictureGear , see PictureGear

It also describes the VAIO Digital Studio Computer connectivity features, including:

- i.LINK (IEEE-1394), see i.LINK (IEEE-1394) Compatibility
- Optical Digital Audio Output, see Optical Digital Audio Output Compatibility
- S-Link (Control-A1), see S-Link (Control-A1) Compatibility

Sony Digital Audio/Video Applications

Digital Media Park and MD Editor

Digital Media Park is an integrated suite of multimedia cataloging and playback programs, including Media Bar, Media Library, and Media Showcase. Manage your music by cataloging your entire CD and other AV collections. You can then create custom MiniDiscs of your favorite songs using MD Editor in conjunction with Digital Media Park.

DVgate Applications

DVgate applications include DVgate Motion and DVgate Still. DVgate Motion makes it easy to edit digital videos. You can capture, edit, and grab digital video clips, and then assemble them into a polished home video everyone will enjoy. Use DVgate Still to capture individual frames from digital video clips, and then save them as graphic files. Enhance your web page, send family and friends your favorite stills, create your own wallpaper. The possibilities are endless.

PictureGear

PictureGear is a digital image management application that allows you to see all the images stored in any directory on your computer. Thumbnail views provide quick reminders of your pictures. Brighten, contrast, enhance, resize, crop, and color-correct your pictures. Create panoramic views, animations, screen savers, wallpaper, and even HTML photo albums.

i.LINK (IEEE-1394) Compatibility

Some models of the VAIO Digital Studio Computer include i.LINK (IEEE-1394) connectors. For the latest information on your specific model and on the i.LINK devices known to be compatible with your system, check the Sony web site at http://www.sony.com/pcsupport. iLINK connectors may be located on the front, back, or both the front and back of your system.

To connect an i.LINK (IEEE-1394) device

- Use the symbol to locate the **i.link** connector. Plug the i.LINK device into this connector.

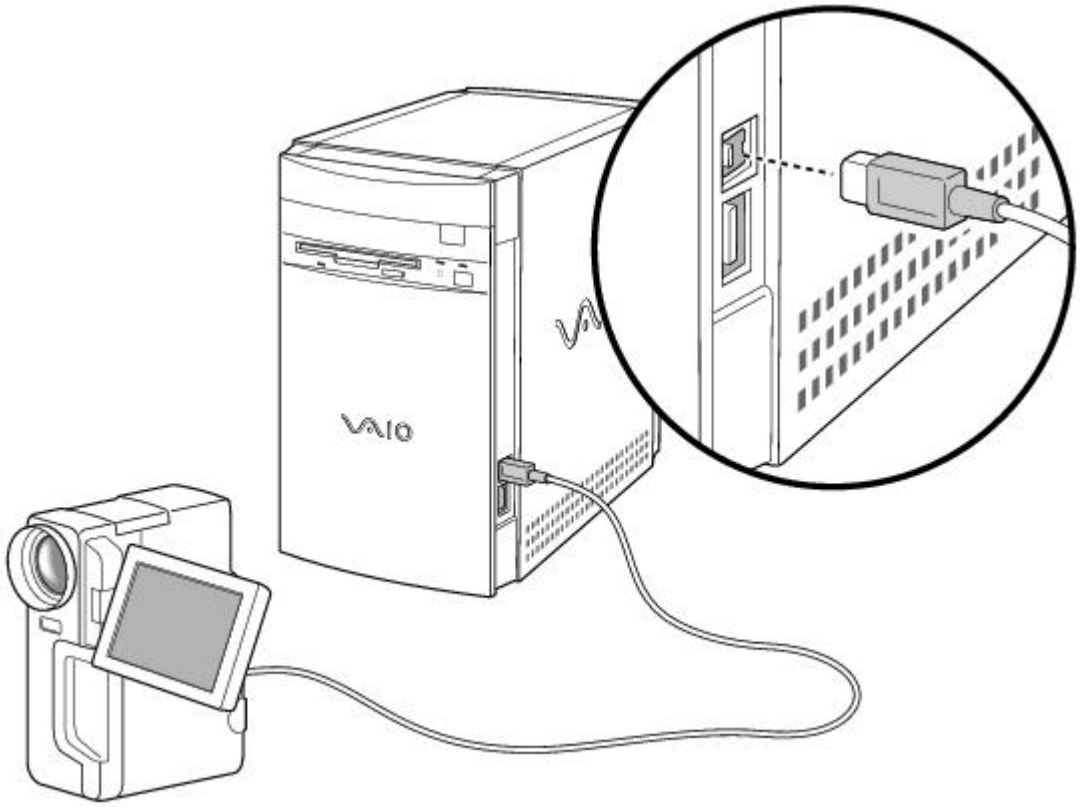

See the manual that came with your i.LINK (IEEE-1394) equipped device for more information on setting it up and using it.

Optical Digital Audio Output Compatibility

Some models of the VAIO Digital Studio Computer include an Optical Digital Audio Output connector. For the latest information on your specific model and on devices known to be compatible with your system, check the Sony web site at http://www.sony.com/pcsupport.

To connect an Optical Digital Audio Output device

- Locate the Optical Digital Audio Output connector. Plug the digital audio device into this connector.

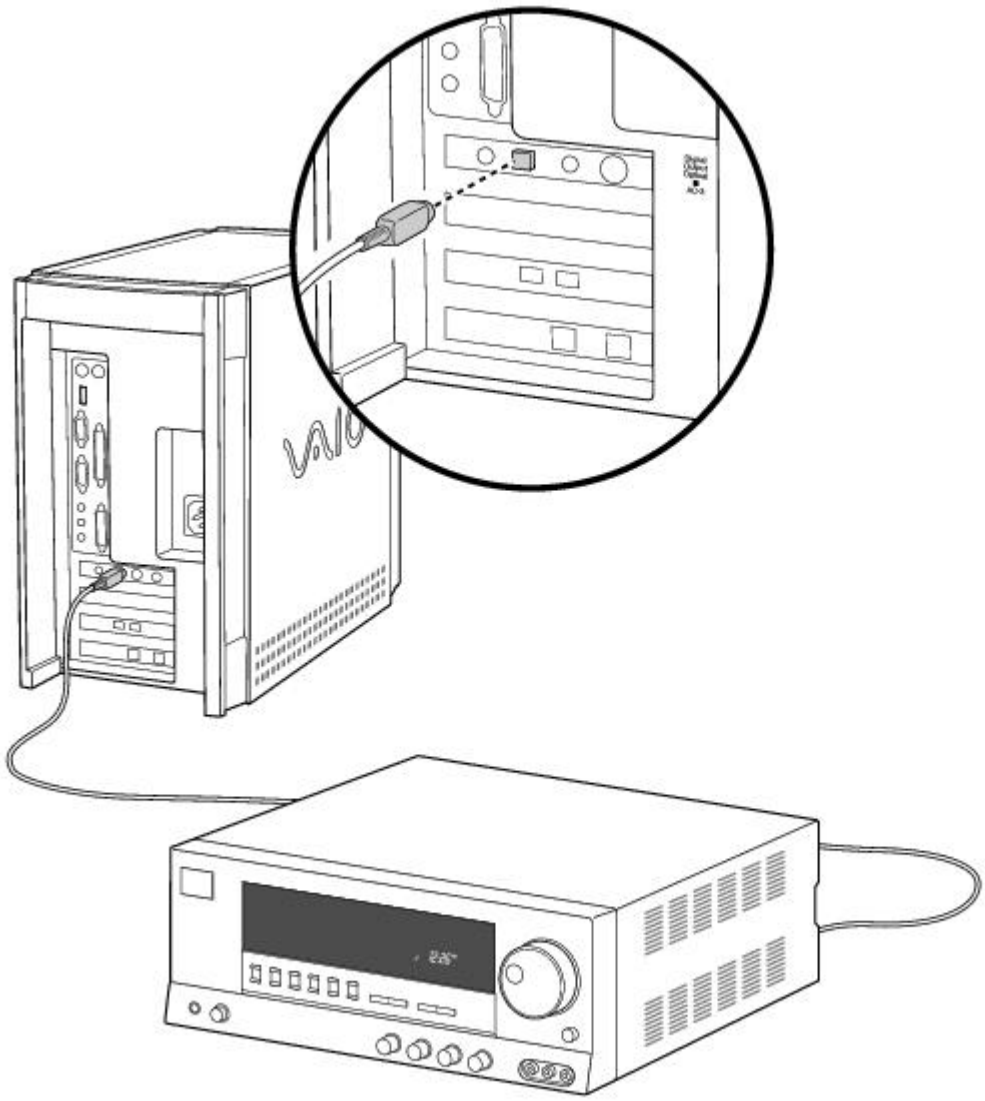

See the manual that came with your digital audio device for more information on setting it up and using it.

When transferring digital data, you may only make copies as permitted by law or by the owner of the material that is copied.

S-Link (Control-A1) Compatibility

Some models of the VAIO Digital Studio Computer include an S-Link (Control-A1) connector. For the latest information on devices known to be compatible with the state-of-the-art audio, video, and graphics capabilities of your VAIO computer, check the Sony web site at http://www.sony.com/pcsupport.

To connect an S-Link (Control-A1) device

- Locate the S-Link (Control-A1) connector. Plug the S-Link (Control-A1) device into this connector.

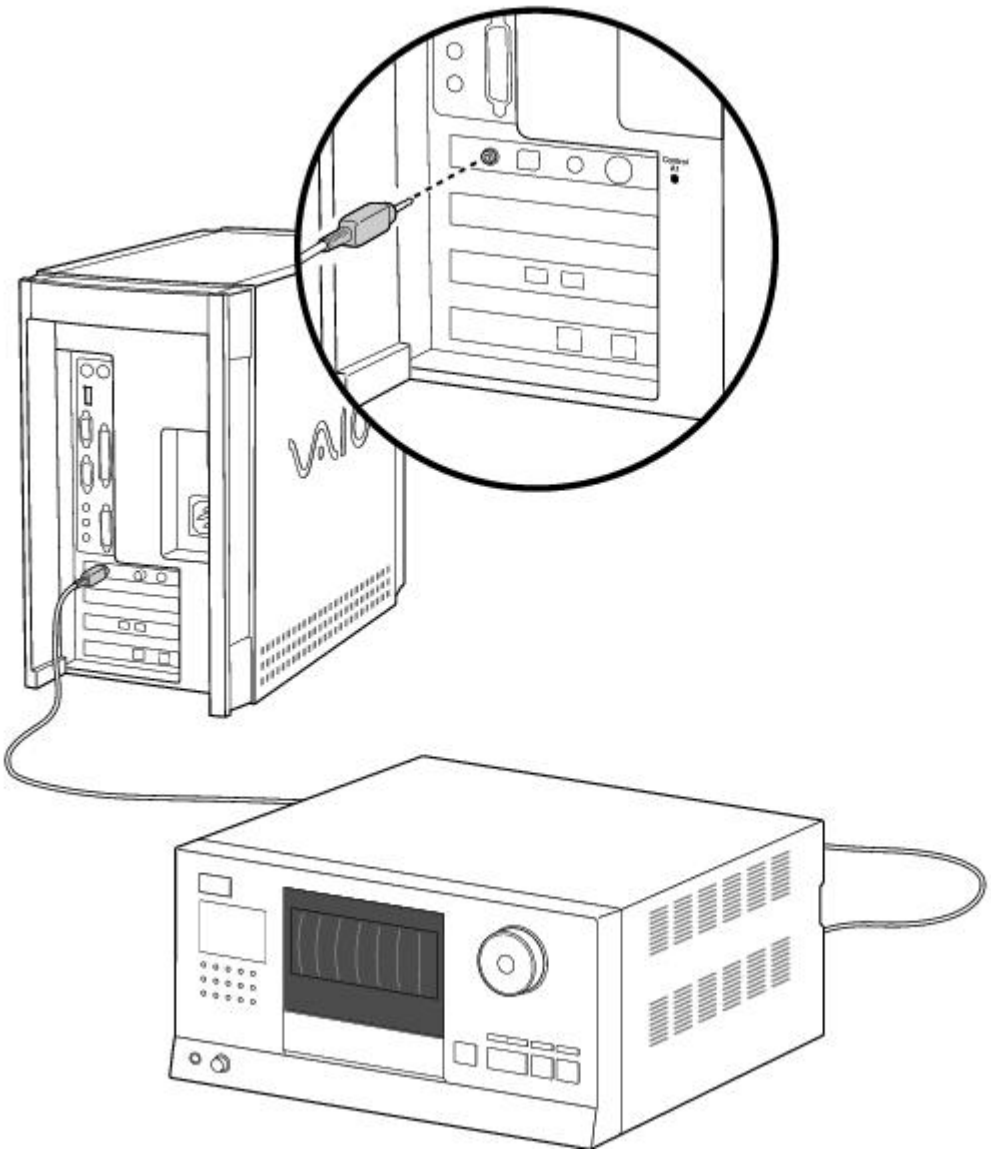

See the manual that came with your S-Link equipped device for more information on setting it up and using it.

VAIO Digital Studio Computer Features

This chapter describes the Sony digital audio/video applications that are preinstalled on your VAIO Digital Studio Computer:

- Digital Media Park , see Digital Media Park and MD Editor
- DVgate Applications, see DVgate Applications
- PictureGear , see PictureGear

It also describes the VAIO Digital Studio Computer connectivity features, including:

- i.LINK (IEEE-1394), see i.LINK (IEEE-1394) Compatibility
- Optical Digital Audio Output, see Optical Digital Audio Output Compatibility
- S-Link (Control-A1), see S-Link (Control-A1) Compatibility

Sony Digital Audio/Video Applications

Digital Media Park and MD Editor

Digital Media Park is an integrated suite of multimedia cataloging and playback programs, including Media Bar, Media Library, and Media Showcase. Manage your music by cataloging your entire CD and other AV collections. You can then create custom MiniDiscs of your favorite songs using MD Editor in conjunction with Digital Media Park.

DVgate Applications

DVgate applications include DVgate Motion and DVgate Still. DVgate Motion makes it easy to edit digital videos. You can capture, edit, and grab digital video clips, and then assemble them into a polished home video everyone will enjoy. Use DVgate Still to capture individual frames from digital video clips, and then save them as graphic files. Enhance your web page, send family and friends your favorite stills, create your own wallpaper. The possibilities are endless.

PictureGear

PictureGear is a digital image management application that allows you to see all the images stored in any directory on your computer. Thumbnail views provide quick reminders of your pictures. Brighten, contrast, enhance, resize, crop, and color-correct your pictures. Create panoramic views, animations, screen savers, wallpaper, and even HTML photo albums.

i.LINK (IEEE-1394) Compatibility

Some models of the VAIO Digital Studio Computer include i.LINK (IEEE-1394) connectors. For the latest information on your specific model and on the i.LINK devices known to be compatible with your system, check the Sony web site at http://www.sony.com/pcsupport. iLINK connectors may be located on the front, back, or both the front and back of your system.

To connect an i.LINK (IEEE-1394) device

- Use the symbol to locate the **i.link** connector. Plug the i.LINK device into this connector.

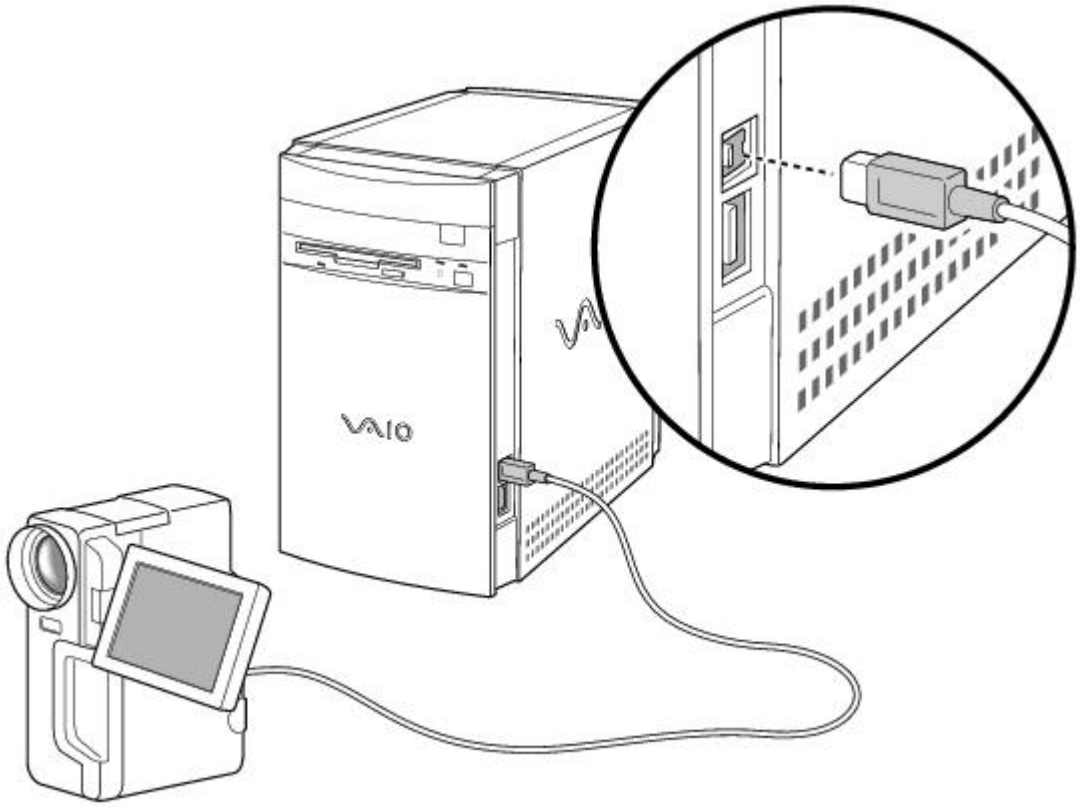

See the manual that came with your i.LINK (IEEE-1394) equipped device for more information on setting it up and using it.

Optical Digital Audio Output Compatibility

Some models of the VAIO Digital Studio Computer include an Optical Digital Audio Output connector. For the latest information on your specific model and on devices known to be compatible with your system, check the Sony web site at http://www.sony.com/pcsupport.

To connect an Optical Digital Audio Output device

- Locate the Optical Digital Audio Output connector. Plug the digital audio device into this connector.

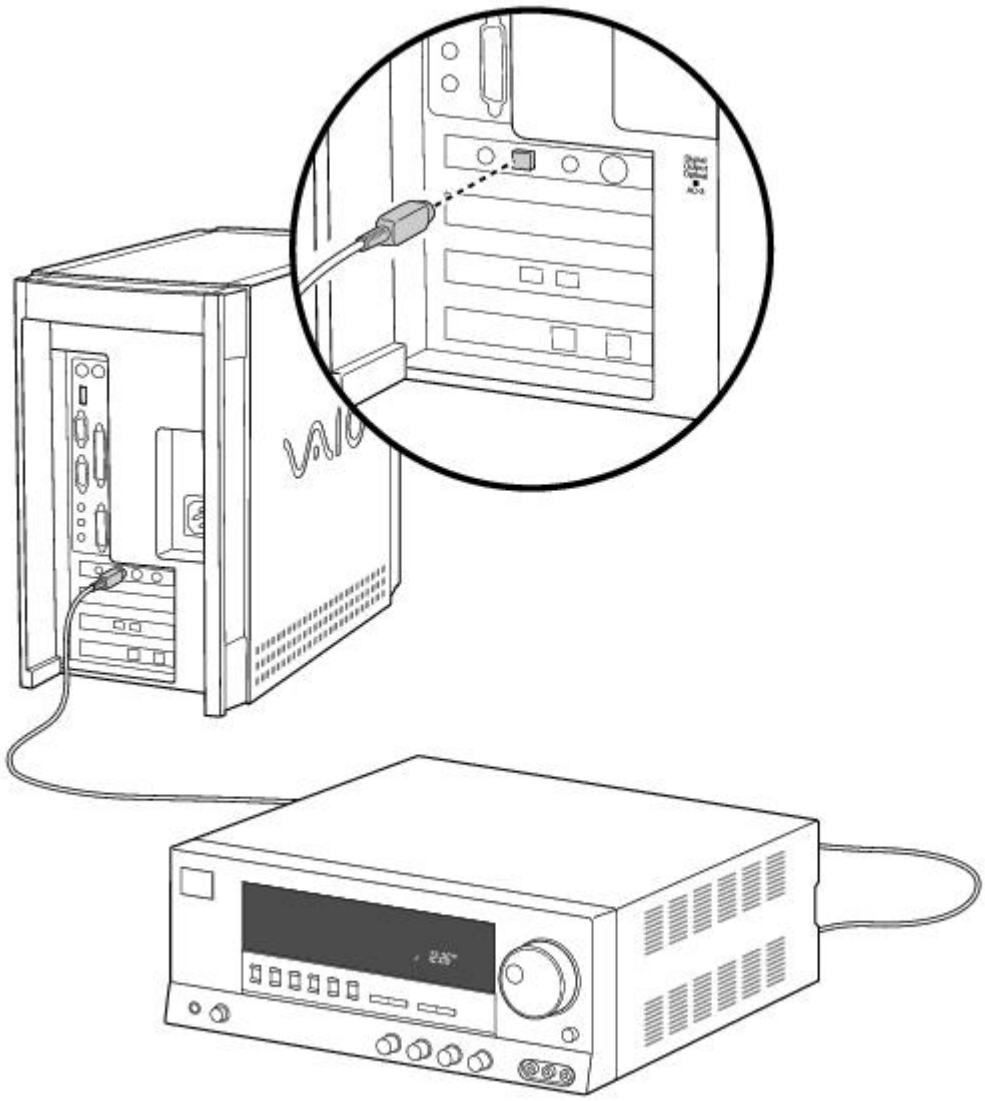

See the manual that came with your digital audio device for more information on setting it up and using it.

When transferring digital data, you may only make copies as permitted by law or by the owner of the material that is copied.

S-Link (Control-A1) Compatibility

Some models of the VAIO Digital Studio Computer include an S-Link (Control-A1) connector. For the latest information on devices known to be compatible with the state-of-the-art audio, video, and graphics capabilities of your VAIO computer, check the Sony web site at http://www.sony.com/pcsupport.

To connect an S-Link (Control-A1) device

- Locate the S-Link (Control-A1) connector. Plug the S-Link (Control-A1) device into this connector.

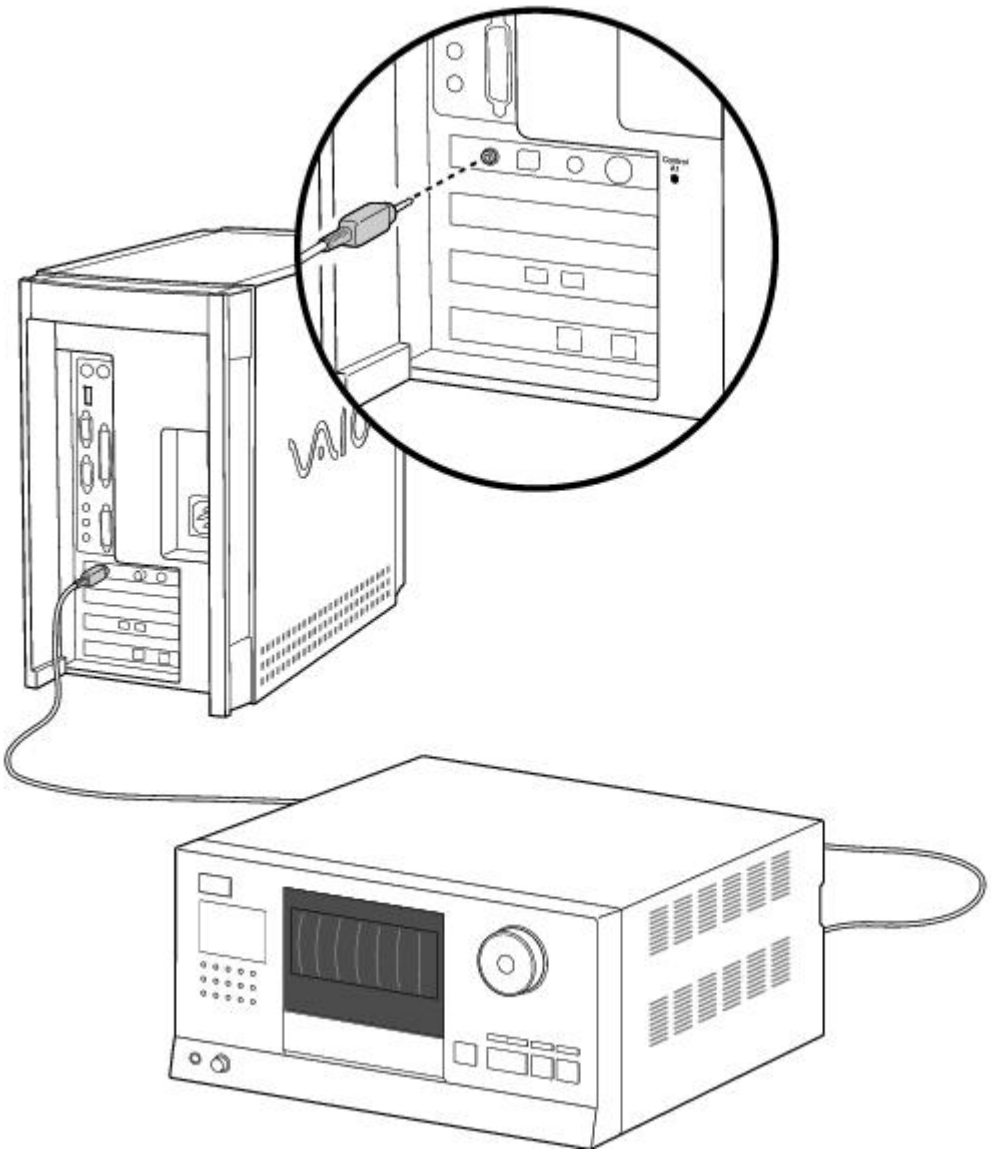

See the manual that came with your S-Link equipped device for more information on setting it up and using it.

Getting Help

Help Resources

Sony provides several support options for your Sony computer. When you have questions about your computer and the preinstalled software, check these sources for answers, in the following sequence:

VAIO Digital Studio Computer Read Me First Contains a complete list of the items that ship with your computer, product specifications, software support information, and the most up-to-date information on using your computer.
VAIO Digital Studio Computer User Guide Describes getting started with your computer, finding help, and solving common problems.
Online User Guide This electronic version of the User Guide contains additional information on upgrading and maintaining your computer. You can access this guide by clicking the Start button, pointing to Programs, and then pointing to VAIO Documentation.
VAIO Digital Studio Computer Reference Manual Provides detailed technical information about the hardware in your VAIO Digital Studio Computer. This electronic document is available from Sony's website at http://www.sony.com/pcsupport
Manuals and online help files that may accompany your preinstalled software Most of the manuals for preinstalled software are located on your hard disk drive as online help files. You can access the online help files from the Help menu in the specific application. A printed manual is available for some applications.
Knowledge Database Provides instant access to information on commonly encountered problems. Enter a description of your problem and the Knowledge Database searches for the corresponding solutions online. You can access the Sony Knowledge Database at http://www.sony.com/pcsupport
Sony Fax-on-Demand This service provides you with answers to commonly asked questions. You can use this automated service to request a list of available topics and then select the topics that you want to receive. To contact the Sony fax-on-demand service, call 1-888-4SONYPC (1-888-476-6972). (Requires a fax machine or your fax software. Fax software is included on your system as part of Microsoft Outlook.)
Sony SOS software This preinstalled program connects you to a Customer Support Representative. Support through SOS is available free of charge for 90 days after the original date of purchase. Connect a phone line and phone before you call, so the representative can access your system if necessary. Calling SOS describes how to use the SOS software.
Calling SOS You can call and speak with a Sony Customer Support Representative without using your computer by calling 1-888-4SONYPC (1-888-476-6972). Software support is available free of charge for 90 days after the original date of purchase.

Calling SOS

The SOS application enables you to exchange information with a Sony Customer Support Representative (CSR). Here's how it works:

- Type your name, phone number, and the problem details in the SOS window.
- Dial the SOS hotline with a single click of the mouse.
- Specify the access level for the CSR.
- The CSR resolves the problem.

Before using SOS, make sure the computer is connected to a phone line and telephone. If you do not have a phone line connected to your computer, you can place a voice call to SOS by dialing 1-888-4SONYPC (1-888-476-6972). SOS support is available for 90 days from the original date of purchase.

To place a call to SOS

1. Click the Start button on the Windows 98 taskbar.
2. Point to Programs, point to VoiceView, and then click VoiceView. The SOS window appears.

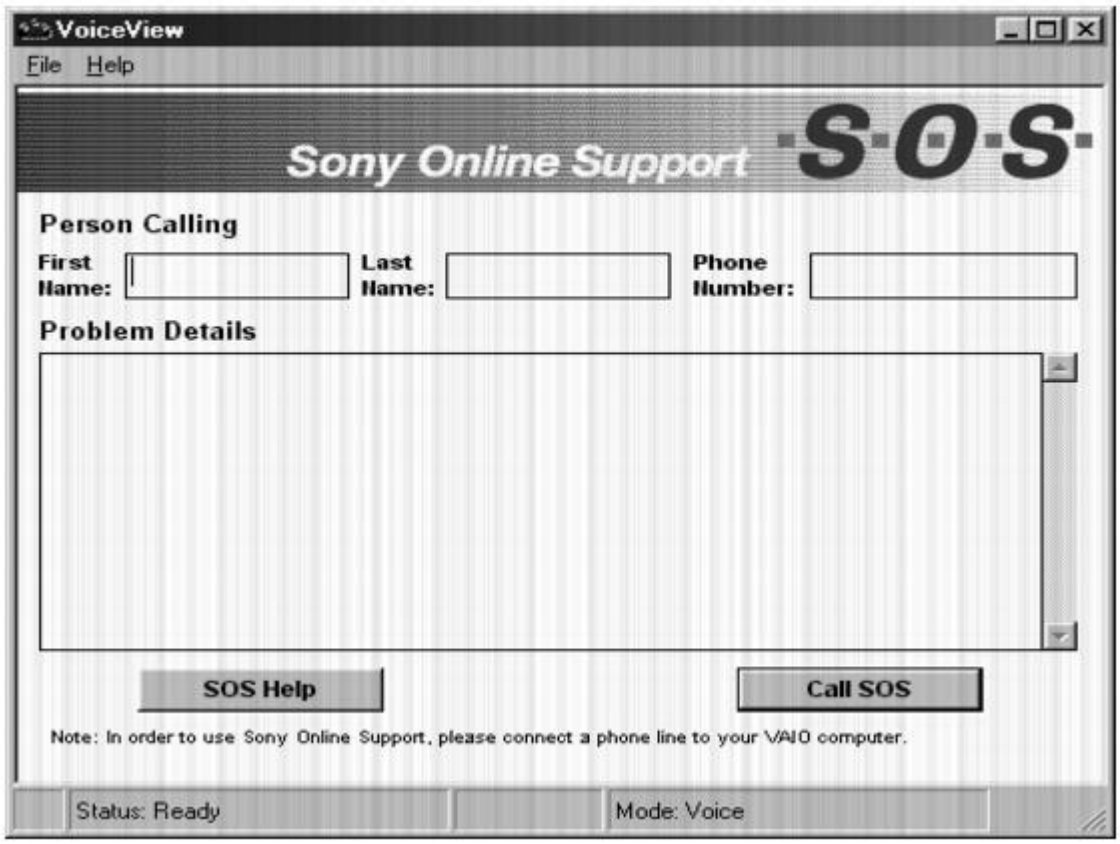

3. In the SOS window, type your name, phone number, and a description of the problem. This information cannot be seen by the customer support representative until you give the CSR access to your computer.
4. Click the Call SOS button. The confirmation screen appears.
5. Click the OK button. The Dialer screen appears.
6. Pick up the handset and click the Dial button as instructed. Your modem dials the toll-free number and connects you to the Sony support center.
7. You are asked whether you wish to test your system or talk to a support representative. You are then prompted to indicate the type of computer you are using.
8. Discuss the problem with the CSR and follow the CSR's instructions to resolve the problem. Only if the CSR needs to access your computer are you prompted to select a security option, as described in the next step.
9. Select an access level in the Remote Command Security dialog box by clicking one of these options:

Options	Descriptions
Full access	Allows the CSR to fully interact with your computer. The CSR can access all the files on your hard disk drive and can copy files to and from your computer to solve your problem.
Limited access	Lets the CSR view your system, but you must approve every action the CSR takes. If the CSR wants to copy a file, for example, the Remote Command Permission dialog box prompts you to approve this action.
No access	Prevents the CSR from accessing your system. You must perform all the operations as described to you by the CSR.

You can change the access level during your call to SOS.

If you experience difficulty hearing the CSR, adjust the speaker volume.

When a file is transferred between your computer and SOS, a status box displays the progress of the file transfer.

10. To end a call, click the Hang Up button.

11. Click the Close box at the top right corner of the SOS window or select Exit from the File menu to close the SOS window.

Troubleshooting

This section describes how to solve common problems you may encounter when using your computer. Many problems have simple solutions, so try these suggestions before you call Sony Online Support. For more advanced troubleshooting information, see the *VAIO Digital Studio Computer Reference Manual*. You can download this electronic document from Sony's website at http://www.sony.com/pcsupport.

My computer does not start

- Check that the computer is plugged into a power source and that it is turned on. Check that the power light is lit on the front panel of the computer.
- Confirm that a diskette is not in the diskette drive (unless you are using a bootable diskette).
- Confirm that the power cord and all cables are connected firmly, as described on the color poster.
- If you plugged the computer into a power strip or UPS, make sure the power strip or UPS is turned on and working.
- Check that the display is plugged into a power source and turned on. Check that the brightness and contrast controls are adjusted correctly. See the manual that came with your display for details.
- Check that the computer is not in standby mode (see Using the Standby Function).

My computer "locks up"

- Close the application that is currently locked up by pressing ALT+F4.
- Try restarting the computer. On the Windows taskbar, click the Start button, click Shut Down, click Restart, and then click OK.
- If you cannot restart as described in the preceding step, you can restart the computer by pressing CTRL+ALT+DELETE or press the power switch for more than six seconds.



Pressing CTRL+ALT+DELETE may result in losing changes made to files that are currently open.

My software program "locks up" or crashes

- Close the application that is currently locked up by pressing ALT+F4.
- Contact the software publisher or designated provider for technical support. See *Read Me First* for a complete list of phone numbers.

My CD-ROM/DVD-ROM drive tray does not open

- Make sure the computer is turned on.
- Press the Eject button on the drive.
- Double-click the My Computer icon on the Windows desktop. Right-click the CD-ROM icon. Select the Eject option from the pop-up menu.
- If the Eject button does not work, you can open the tray by inserting a straightened heavy-weight paper clip into the emergency eject hole.

I cannot play a CD-ROM

- Make sure you place the disc in the tray with the label side facing up.
- Make sure the software is installed according to the program's instructions.

I cannot play a DVD-ROM

- If a region code warning appears when you are using the DVD player, it could be that the DVD-ROM you are trying to play is incompatible with the DVD-ROM drive in your VAIO Digital Studio Computer. The region code is listed on the disc's packaging. Region code indicators such as "1" or "ALL" are labeled on some DVDs to indicate what type of player can play the disc. Unless a "1" or "ALL" appears on the DVD or on the packaging, you cannot play the disc on this computer.
- If you hear audio but cannot see video, your computer's video resolution may be set too high. For best results, change the Windows Control Panel/Display/Settings to 800 x 600 using 16-bit color.
- If you see video but cannot hear audio, check all of the following: Make sure the mute setting is off in your DVD player. Check the master volume setting in the audio Mixer. Check the volume settings in your computer speakers. Check the connections between your speakers and the computer. Check the Windows Control Panel/System/Device Manager to see that the drivers are installed properly.
- A dirty or damaged disc may cause the computer to "hang" while it tries to read the disc. If necessary, reboot the computer, remove the disc, and then check that it is not dirty or damaged. For cleaning instructions, see On Cleaning CD-ROMs and DVD-ROMs.

When I double-click an application icon, a message such as "You must insert the application CD into your CD-ROM drive" appears and the software does not start

- Some titles require specific files that are located on the application's CD-ROM. Insert the disc and try starting the program again.
- Check to make sure you inserted the CD-ROM with the label side facing up.

My speakers have no sound

- Check that the speakers are plugged into the **headphones** connector.
- If the speakers have a mute button, make sure it is off.
- If the speakers are powered by batteries, check that the batteries are inserted properly and that they are charged.
- If the speakers use an external power source, make sure that the power cord is plugged into a grounded wall outlet or power strip.
- If the speakers have their own volume control, check the volume level.
- If the program you are using has its own volume control, check that the volume is turned up.
- Check the volume controls in the application, in the audio Mixer, and in Windows.
- If you connected headphones to the computer, you will not hear sound from the speakers.

My modem connection is slow

The computer's modem uses K56flex technology/V.90. Many factors influence modem connection speed, including telephone line noise or compatibility with telephone equipment (such as fax machines or other modems). If you think your modem is not connecting properly to other PC-based modems, fax machines, or your Internet Service Provider, check the following:

- Have your phone company check that your phone line is free from any line noise.
- If your problem is fax-related, check that there are no problems with the fax machine you are calling and that it is compatible with fax modems.
- If you are having a problem connecting with your Internet Service Provider, check that the ISP is not experiencing technical problems.
- If you have a second phone line available, try connecting the modem to this line.

My modem does not work

- Check that the phone line is plugged into the **line** jack.
- Check that the phone line is working. You can check the line by plugging in an ordinary phone and listening for a dial tone.
- Check that the phone number the program is dialing is correct.
- Check that the software you are using is compatible with the Sony computer modem. (All preinstalled programs are compatible.) Call the software publisher or Sony Online Support.

My microphone does not work

Check that the microphone is plugged into the **mic** connector.

My microphone is too sensitive to background noise

If you find there is too much background noise when you record sound, you should adjust the microphone gain by following these steps:

1. Right-click the speaker icon (Volume) in the lower right Windows task tray.
2. Click Open Volume Controls. The Volume Control screen appears.
3. In the Options menu, select Properties. The Properties screen appears.
4. Change the setting for "Adjust volume for" from Playback to Recording, then click OK.
5. Click the Advanced button under Microphone Balance. The Advanced Controls for Microphone screen appears.
6. Deselect the check box for 1 Mic Gain (+20dB), then click the Close button.
7. Close the Recording Control window.

My mouse does not work

- Check that the mouse is plugged into the **mouse** connector.
- There may be dust or dirt inside the mouse mechanism. To clean the mouse, follow these steps:
    - Turn off your computer. See Shutting Down Your Computer for details.
    - Remove the mouse ball cover on the back side of the mouse.
    - Turn the mouse upright, and drop the mouse ball into your hand.
    - Using a piece of tape, remove any dust or dirt on the mouse ball and inside the mouse ball socket.
    - Return the mouse ball to the socket, and replace the mouse ball cover.

My mouse needs to be set up for left-hand use

To set up the mouse for left-hand use:

1. Click the Start button to display the Start menu.
2. Point to Settings.
3. Click Control Panel.
4. Double-click the Mouse icon.
5. Click the Buttons tab.

6. Under Buttons, select Left-handed.
7. Click the OK button to close the Mouse Properties dialog box.

My keyboard does not work

Check that the keyboard is plugged into the **usb** connector.

I cannot find the Windows taskbar

- Check that the taskbar is not hidden or shrunken.
- Use the mouse to point to the left, right, top, and bottom edges of the screen.

 See the VAIO Digital Studio Computer *Read Me First* for additional information on using your Sony computer.

Using the System Recovery CD(s)

You can reinstall software titles that shipped with your computer if they are corrupted or accidentally erased. You may not need to recover the entire contents of your hard drive. If you experience a problem with your computer, reinstalling an individual device driver or software title may correct the problem.

Use the Application Recovery CD(s) to reinstall individual applications or device drivers. See Using the Application Recovery CD(s).

The System Recovery CD(s) contains a backup copy of all the software originally installed on your hard disk drive. **It can be used only to recover the hard disk of the Sony computer you purchased.**

The System Recovery utility gives you three options:

- **Full Restore without Format** restores all the software titles that originally came with your computer without formatting the hard disk.
- **Full Restore with Format** formats the hard disk drive and then restores all the original software.
- **Operating System Only** formats the hard disk drive and restores the Windows operating system and the device drivers that shipped with your computer. This option is recommended for advanced users only.

 If you choose the Full Restore with Format or Operating System Only option, your hard disk will be formatted, which removes all the information on the hard disk drive. You will lose any software you have installed and any other files you have created since you started to use your computer. This means you will have to reinstall any applications that were not included with the computer when you purchased it. If you choose the Full Restore without Format option, you may need to reinstall applications that were not included with the computer when you purchased it. If you have any questions on using the System Recovery CD(s), contact Sony Online Support (SOS).

To use the System Recovery CD(s)

 You need to complete the Windows registration process when you use the System Recovery CD(s). Make sure you have the product ID number located on the cover of your Microsoft Windows manual. You will need this number to complete the recovery process.

1. Insert the Sony System Recovery CD in the CD-ROM/DVD-ROM drive.

 The System Recovery utility boots from the CD-ROM/DVD-ROM drive. It must be in the drive when you turn on the computer.

2. Shut down your computer as described on Shutting Down Your Computer.
3. Wait 30 seconds and turn on your computer.

4. Click OK to signify you have read and accept the Microsoft End-User License Agreement.
5. When the System Recovery menu appears, follow the on-screen instructions to complete the recovery process.

Your system may include one or two System Recovery CDs. If you have two System Recovery CDs, insert the first CD to run the System Recovery program. You are prompted to insert the second CD once the information from the first CD has been installed.

The recovery process takes 30 to 60 minutes to complete.

Using the Application Recovery CD(s)

The Application Recovery CD(s) allows you to reinstall individual applications and device drivers if they are corrupted or accidentally erased. Reinstalling an individual device driver or software title may correct a problem you are experiencing with your computer, and you may not need to recover the entire contents of your hard drive. If you do need to reinstall all the software titles that shipped with your computer, use the System Recovery CD(s). See Using the System Recovery CD(s).

You must be in Windows to run the Application Recovery CD(s). The application will not run from DOS. If you have any questions on using the Application Recovery CD(s), contact Sony Online Support (SOS).

To use the Application Recovery CD(s)

1. Turn on your computer. If your computer is already on, close all applications.
2. When the Windows desktop appears, insert the Sony Application Recovery CD in the CD-ROM/DVD-ROM drive. The Application Recovery utility loads automatically.
3. When the Application Recovery menu appears, follow the on-screen instructions to complete the recovery process.

Your system may include one or two Application Recovery CDs. If you have two Application Recovery CDs, insert the first CD to run the Application Recovery program. You may be prompted to insert the second CD, depending on the application you wish to restore.

For a list of the contents of the Application Recovery CD, see the online version of Read Me First.

Getting Help

Help Resources

Sony provides several support options for your Sony computer. When you have questions about your computer and the preinstalled software, check these sources for answers, in the following sequence:

VAIO Digital Studio Computer Read Me First Contains a complete list of the items that ship with your computer, product specifications, software support information, and the most up-to-date information on using your computer.
VAIO Digital Studio Computer User Guide Describes getting started with your computer, finding help, and solving common problems.
Online User Guide This electronic version of the User Guide contains additional information on upgrading and maintaining your computer. You can access this guide by clicking the Start button, pointing to Programs, and then pointing to VAIO Documentation.
VAIO Digital Studio Computer Reference Manual Provides detailed technical information about the hardware in your VAIO Digital Studio Computer. This electronic document is available from Sony's website at http://www.sony.com/pcsupport
Manuals and online help files that may accompany your preinstalled software Most of the manuals for preinstalled software are located on your hard disk drive as online help files. You can access the online help files from the Help menu in the specific application. A printed manual is available for some applications.
Knowledge Database Provides instant access to information on commonly encountered problems. Enter a description of your problem and the Knowledge Database searches for the corresponding solutions online. You can access the Sony Knowledge Database at http://www.sony.com/pcsupport
Sony Fax-on-Demand This service provides you with answers to commonly asked questions. You can use this automated service to request a list of available topics and then select the topics that you want to receive. To contact the Sony fax-on-demand service, call 1-888-4SONYPC (1-888-476-6972). (Requires a fax machine or your fax software. Fax software is included on your system as part of Microsoft Outlook.)
Sony SOS software This preinstalled program connects you to a Customer Support Representative. Support through SOS is available free of charge for 90 days after the original date of purchase. Connect a phone line and phone before you call, so the representative can access your system if necessary. Calling SOS describes how to use the SOS software.
Calling SOS You can call and speak with a Sony Customer Support Representative without using your computer by calling 1-888-4SONYPC (1-888-476-6972). Software support is available free of charge for 90 days after the original date of purchase.

Calling SOS

The SOS application enables you to exchange information with a Sony Customer Support Representative (CSR). Here's how it works:

- Type your name, phone number, and the problem details in the SOS window.
- Dial the SOS hotline with a single click of the mouse.
- Specify the access level for the CSR.
- The CSR resolves the problem.

Before using SOS, make sure the computer is connected to a phone line and telephone. If you do not have a phone line connected to your computer, you can place a voice call to SOS by dialing 1-888-4SONYPC (1-888-476-6972). SOS support is available for 90 days from the original date of purchase.

To place a call to SOS

1. Click the Start button on the Windows 98 taskbar.
2. Point to Programs, point to VoiceView, and then click VoiceView. The SOS window appears.

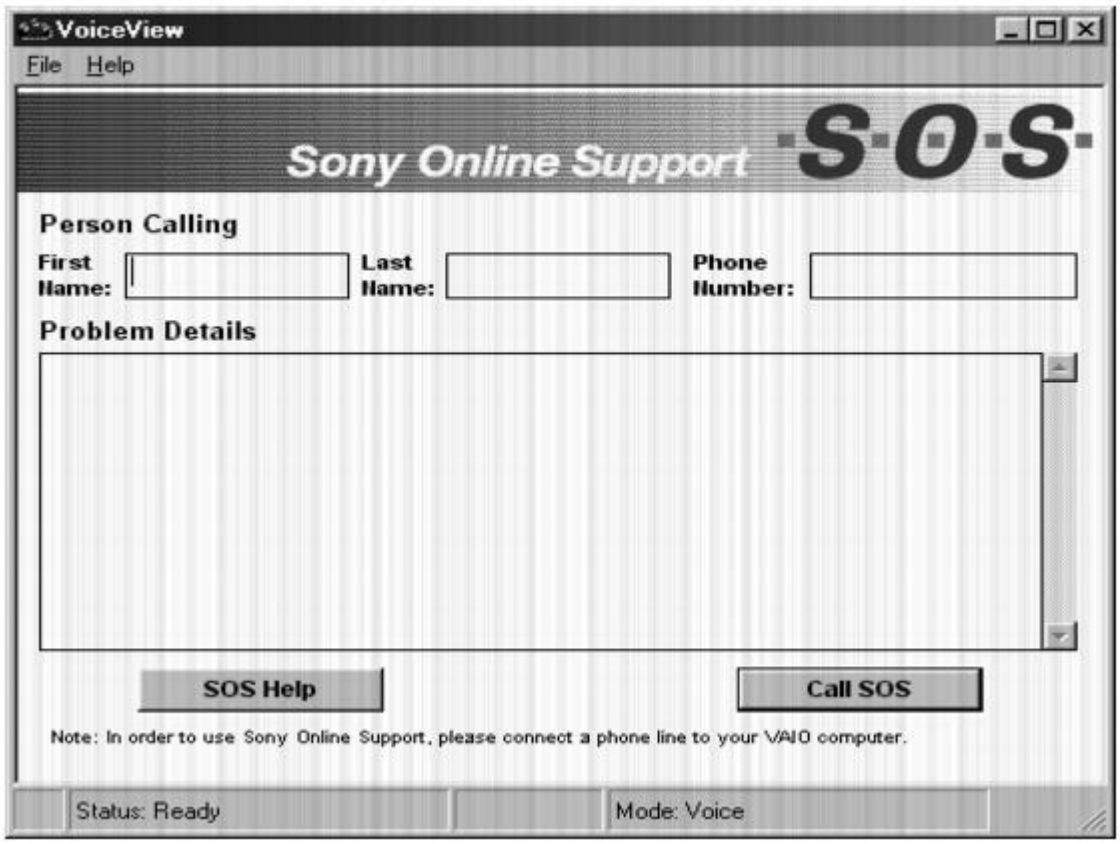

3. In the SOS window, type your name, phone number, and a description of the problem. This information cannot be seen by the customer support representative until you give the CSR access to your computer.
4. Click the Call SOS button. The confirmation screen appears.
5. Click the OK button. The Dialer screen appears.
6. Pick up the handset and click the Dial button as instructed. Your modem dials the toll-free number and connects you to the Sony support center.
7. You are asked whether you wish to test your system or talk to a support representative. You are then prompted to indicate the type of computer you are using.
8. Discuss the problem with the CSR and follow the CSR's instructions to resolve the problem. Only if the CSR needs to access your computer are you prompted to select a security option, as described in the next step.
9. Select an access level in the Remote Command Security dialog box by clicking one of these options:

Options	Descriptions
Full access	Allows the CSR to fully interact with your computer. The CSR can access all the files on your hard disk drive and can copy files to and from your computer to solve your problem.
Limited access	Lets the CSR view your system, but you must approve every action the CSR takes. If the CSR wants to copy a file, for example, the Remote Command Permission dialog box prompts you to approve this action.
No access	Prevents the CSR from accessing your system. You must perform all the operations as described to you by the CSR.

You can change the access level during your call to SOS.

If you experience difficulty hearing the CSR, adjust the speaker volume.

When a file is transferred between your computer and SOS, a status box displays the progress of the file transfer.

10. To end a call, click the Hang Up button.

11. Click the Close box at the top right corner of the SOS window or select Exit from the File menu to close the SOS window.

Troubleshooting

This section describes how to solve common problems you may encounter when using your computer. Many problems have simple solutions, so try these suggestions before you call Sony Online Support. For more advanced troubleshooting information, see the *VAIO Digital Studio Computer Reference Manual*. You can download this electronic document from Sony's website at http://www.sony.com/pcsupport.

My computer does not start

- Check that the computer is plugged into a power source and that it is turned on. Check that the power light is lit on the front panel of the computer.
- Confirm that a diskette is not in the diskette drive (unless you are using a bootable diskette).
- Confirm that the power cord and all cables are connected firmly, as described on the color poster.
- If you plugged the computer into a power strip or UPS, make sure the power strip or UPS is turned on and working.
- Check that the display is plugged into a power source and turned on. Check that the brightness and contrast controls are adjusted correctly. See the manual that came with your display for details.
- Check that the computer is not in standby mode (see Using the Standby Function).

My computer "locks up"

- Close the application that is currently locked up by pressing ALT+F4.
- Try restarting the computer. On the Windows taskbar, click the Start button, click Shut Down, click Restart, and then click OK.
- If you cannot restart as described in the preceding step, you can restart the computer by pressing CTRL+ALT+DELETE or press the power switch for more than six seconds.



Pressing CTRL+ALT+DELETE may result in losing changes made to files that are currently open.

My software program "locks up" or crashes

- Close the application that is currently locked up by pressing ALT+F4.
- Contact the software publisher or designated provider for technical support. See *Read Me First* for a complete list of phone numbers.

My CD-ROM/DVD-ROM drive tray does not open

- Make sure the computer is turned on.
- Press the Eject button on the drive.
- Double-click the My Computer icon on the Windows desktop. Right-click the CD-ROM icon. Select the Eject option from the pop-up menu.
- If the Eject button does not work, you can open the tray by inserting a straightened heavy-weight paper clip into the emergency eject hole.

I cannot play a CD-ROM

- Make sure you place the disc in the tray with the label side facing up.
- Make sure the software is installed according to the program's instructions.

I cannot play a DVD-ROM

- If a region code warning appears when you are using the DVD player, it could be that the DVD-ROM you are trying to play is incompatible with the DVD-ROM drive in your VAIO Digital Studio Computer. The region code is listed on the disc's packaging. Region code indicators such as "1" or "ALL" are labeled on some DVDs to indicate what type of player can play the disc. Unless a "1" or "ALL" appears on the DVD or on the packaging, you cannot play the disc on this computer.
- If you hear audio but cannot see video, your computer's video resolution may be set too high. For best results, change the Windows Control Panel/Display/Settings to 800 x 600 using 16-bit color.
- If you see video but cannot hear audio, check all of the following: Make sure the mute setting is off in your DVD player. Check the master volume setting in the audio Mixer. Check the volume settings in your computer speakers. Check the connections between your speakers and the computer. Check the Windows Control Panel/System/Device Manager to see that the drivers are installed properly.
- A dirty or damaged disc may cause the computer to "hang" while it tries to read the disc. If necessary, reboot the computer, remove the disc, and then check that it is not dirty or damaged. For cleaning instructions, see On Cleaning CD-ROMs and DVD-ROMs.

When I double-click an application icon, a message such as "You must insert the application CD into your CD-ROM drive" appears and the software does not start

- Some titles require specific files that are located on the application's CD-ROM. Insert the disc and try starting the program again.
- Check to make sure you inserted the CD-ROM with the label side facing up.

My speakers have no sound

- Check that the speakers are plugged into the **headphones** connector.
- If the speakers have a mute button, make sure it is off.
- If the speakers are powered by batteries, check that the batteries are inserted properly and that they are charged.
- If the speakers use an external power source, make sure that the power cord is plugged into a grounded wall outlet or power strip.
- If the speakers have their own volume control, check the volume level.
- If the program you are using has its own volume control, check that the volume is turned up.
- Check the volume controls in the application, in the audio Mixer, and in Windows.
- If you connected headphones to the computer, you will not hear sound from the speakers.

My modem connection is slow

The computer's modem uses K56flex technology/V.90. Many factors influence modem connection speed, including telephone line noise or compatibility with telephone equipment (such as fax machines or other modems). If you think your modem is not connecting properly to other PC-based modems, fax machines, or your Internet Service Provider, check the following:

- Have your phone company check that your phone line is free from any line noise.
- If your problem is fax-related, check that there are no problems with the fax machine you are calling and that it is compatible with fax modems.
- If you are having a problem connecting with your Internet Service Provider, check that the ISP is not experiencing technical problems.
- If you have a second phone line available, try connecting the modem to this line.

My modem does not work

- Check that the phone line is plugged into the **line** jack.
- Check that the phone line is working. You can check the line by plugging in an ordinary phone and listening for a dial tone.
- Check that the phone number the program is dialing is correct.
- Check that the software you are using is compatible with the Sony computer modem. (All preinstalled programs are compatible.) Call the software publisher or Sony Online Support.

My microphone does not work

Check that the microphone is plugged into the **mic** connector.

My microphone is too sensitive to background noise

If you find there is too much background noise when you record sound, you should adjust the microphone gain by following these steps:

1. Right-click the speaker icon (Volume) in the lower right Windows task tray.
2. Click Open Volume Controls. The Volume Control screen appears.
3. In the Options menu, select Properties. The Properties screen appears.
4. Change the setting for "Adjust volume for" from Playback to Recording, then click OK.
5. Click the Advanced button under Microphone Balance. The Advanced Controls for Microphone screen appears.
6. Deselect the check box for 1 Mic Gain (+20dB), then click the Close button.
7. Close the Recording Control window.

My mouse does not work

- Check that the mouse is plugged into the **mouse** connector.
- There may be dust or dirt inside the mouse mechanism. To clean the mouse, follow these steps:
    - Turn off your computer. See Shutting Down Your Computer for details.
    - Remove the mouse ball cover on the back side of the mouse.
    - Turn the mouse upright, and drop the mouse ball into your hand.
    - Using a piece of tape, remove any dust or dirt on the mouse ball and inside the mouse ball socket.
    - Return the mouse ball to the socket, and replace the mouse ball cover.

My mouse needs to be set up for left-hand use

To set up the mouse for left-hand use:

1. Click the Start button to display the Start menu.
2. Point to Settings.
3. Click Control Panel.
4. Double-click the Mouse icon.
5. Click the Buttons tab.

6. Under Buttons, select Left-handed.
7. Click the OK button to close the Mouse Properties dialog box.

My keyboard does not work

Check that the keyboard is plugged into the **usb** connector.

I cannot find the Windows taskbar

- Check that the taskbar is not hidden or shrunken.
- Use the mouse to point to the left, right, top, and bottom edges of the screen.

 See the VAIO Digital Studio Computer *Read Me First* for additional information on using your Sony computer.

Using the System Recovery CD(s)

You can reinstall software titles that shipped with your computer if they are corrupted or accidentally erased. You may not need to recover the entire contents of your hard drive. If you experience a problem with your computer, reinstalling an individual device driver or software title may correct the problem.

Use the Application Recovery CD(s) to reinstall individual applications or device drivers. See Using the Application Recovery CD(s).

The System Recovery CD(s) contains a backup copy of all the software originally installed on your hard disk drive. **It can be used only to recover the hard disk of the Sony computer you purchased.**

The System Recovery utility gives you three options:

- **Full Restore without Format** restores all the software titles that originally came with your computer without formatting the hard disk.
- **Full Restore with Format** formats the hard disk drive and then restores all the original software.
- **Operating System Only** formats the hard disk drive and restores the Windows operating system and the device drivers that shipped with your computer. This option is recommended for advanced users only.

 If you choose the Full Restore with Format or Operating System Only option, your hard disk will be formatted, which removes all the information on the hard disk drive. You will lose any software you have installed and any other files you have created since you started to use your computer. This means you will have to reinstall any applications that were not included with the computer when you purchased it. If you choose the Full Restore without Format option, you may need to reinstall applications that were not included with the computer when you purchased it. If you have any questions on using the System Recovery CD(s), contact Sony Online Support (SOS).

To use the System Recovery CD(s)

 You need to complete the Windows registration process when you use the System Recovery CD(s). Make sure you have the product ID number located on the cover of your Microsoft Windows manual. You will need this number to complete the recovery process.

1. Insert the Sony System Recovery CD in the CD-ROM/DVD-ROM drive.

 The System Recovery utility boots from the CD-ROM/DVD-ROM drive. It must be in the drive when you turn on the computer.

2. Shut down your computer as described on Shutting Down Your Computer.
3. Wait 30 seconds and turn on your computer.

4. Click OK to signify you have read and accept the Microsoft End-User License Agreement.
5. When the System Recovery menu appears, follow the on-screen instructions to complete the recovery process.

 Your system may include one or two System Recovery CDs. If you have two System Recovery CDs, insert the first CD to run the System Recovery program. You are prompted to insert the second CD once the information from the first CD has been installed.

The recovery process takes 30 to 60 minutes to complete.

Using the Application Recovery CD(s)

The Application Recovery CD(s) allows you to reinstall individual applications and device drivers if they are corrupted or accidentally erased. Reinstalling an individual device driver or software title may correct a problem you are experiencing with your computer, and you may not need to recover the entire contents of your hard drive. If you do need to reinstall all the software titles that shipped with your computer, use the System Recovery CD(s). See Using the System Recovery CD(s).

You must be in Windows to run the Application Recovery CD(s). The application will not run from DOS. If you have any questions on using the Application Recovery CD(s), contact Sony Online Support (SOS).

To use the Application Recovery CD(s)

1. Turn on your computer. If your computer is already on, close all applications.
2. When the Windows desktop appears, insert the Sony Application Recovery CD in the CD-ROM/DVD-ROM drive. The Application Recovery utility loads automatically.
3. When the Application Recovery menu appears, follow the on-screen instructions to complete the recovery process.

 Your system may include one or two Application Recovery CDs. If you have two Application Recovery CDs, insert the first CD to run the Application Recovery program. You may be prompted to insert the second CD, depending on the application you wish to restore.

 For a list of the contents of the Application Recovery CD, see the online version of Read Me First.

Getting Help

Help Resources

Sony provides several support options for your Sony computer. When you have questions about your computer and the preinstalled software, check these sources for answers, in the following sequence:

VAIO Digital Studio Computer Read Me First Contains a complete list of the items that ship with your computer, product specifications, software support information, and the most up-to-date information on using your computer.
VAIO Digital Studio Computer User Guide Describes getting started with your computer, finding help, and solving common problems.
Online User Guide This electronic version of the User Guide contains additional information on upgrading and maintaining your computer. You can access this guide by clicking the Start button, pointing to Programs, and then pointing to VAIO Documentation.
VAIO Digital Studio Computer Reference Manual Provides detailed technical information about the hardware in your VAIO Digital Studio Computer. This electronic document is available from Sony's website at http://www.sony.com/pcsupport
Manuals and online help files that may accompany your preinstalled software Most of the manuals for preinstalled software are located on your hard disk drive as online help files. You can access the online help files from the Help menu in the specific application. A printed manual is available for some applications.
Knowledge Database Provides instant access to information on commonly encountered problems. Enter a description of your problem and the Knowledge Database searches for the corresponding solutions online. You can access the Sony Knowledge Database at http://www.sony.com/pcsupport
Sony Fax-on-Demand This service provides you with answers to commonly asked questions. You can use this automated service to request a list of available topics and then select the topics that you want to receive. To contact the Sony fax-on-demand service, call 1-888-4SONYPC (1-888-476-6972). (Requires a fax machine or your fax software. Fax software is included on your system as part of Microsoft Outlook.)
Sony SOS software This preinstalled program connects you to a Customer Support Representative. Support through SOS is available free of charge for 90 days after the original date of purchase. Connect a phone line and phone before you call, so the representative can access your system if necessary. Calling SOS describes how to use the SOS software.
Calling SOS You can call and speak with a Sony Customer Support Representative without using your computer by calling 1-888-4SONYPC (1-888-476-6972). Software support is available free of charge for 90 days after the original date of purchase.

Calling SOS

The SOS application enables you to exchange information with a Sony Customer Support Representative (CSR). Here's how it works:

- Type your name, phone number, and the problem details in the SOS window.
- Dial the SOS hotline with a single click of the mouse.
- Specify the access level for the CSR.
- The CSR resolves the problem.

Before using SOS, make sure the computer is connected to a phone line and telephone. If you do not have a phone line connected to your computer, you can place a voice call to SOS by dialing 1-888-4SONYPC (1-888-476-6972). SOS support is available for 90 days from the original date of purchase.

To place a call to SOS

1. Click the Start button on the Windows 98 taskbar.
2. Point to Programs, point to VoiceView, and then click VoiceView. The SOS window appears.

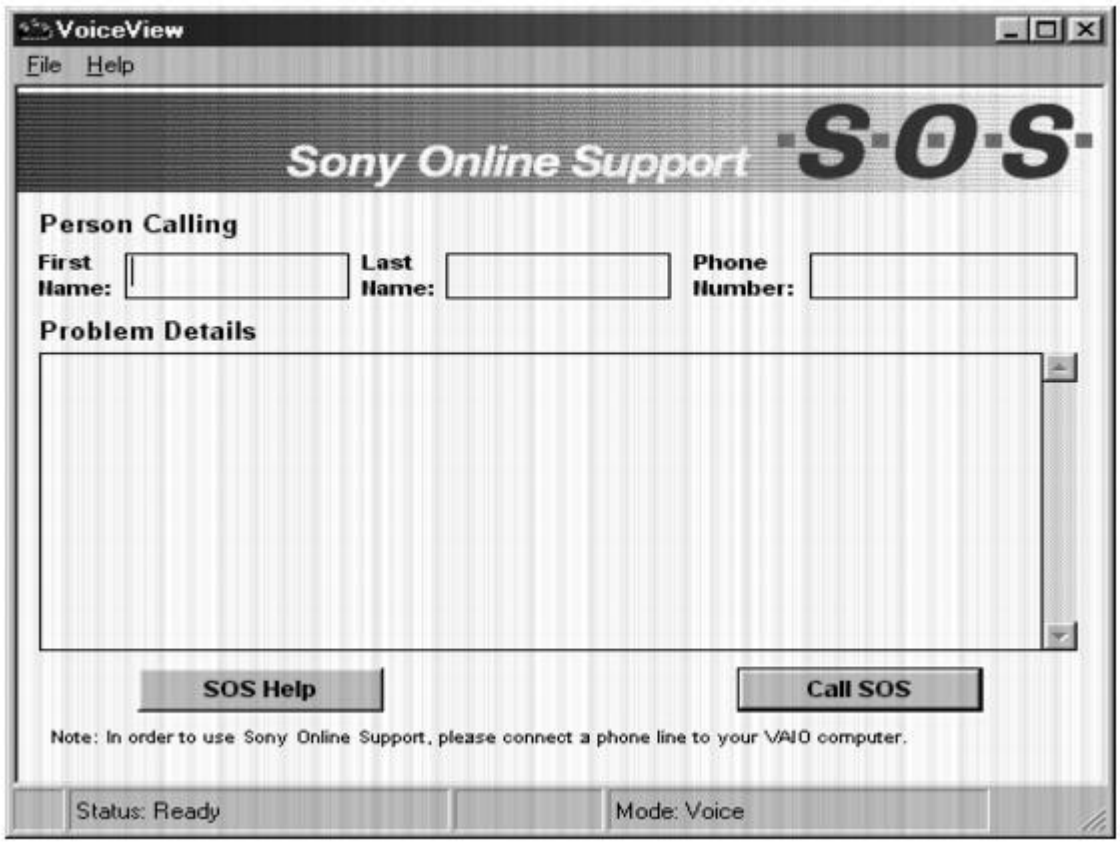

3. In the SOS window, type your name, phone number, and a description of the problem. This information cannot be seen by the customer support representative until you give the CSR access to your computer.
4. Click the Call SOS button. The confirmation screen appears.
5. Click the OK button. The Dialer screen appears.
6. Pick up the handset and click the Dial button as instructed. Your modem dials the toll-free number and connects you to the Sony support center.
7. You are asked whether you wish to test your system or talk to a support representative. You are then prompted to indicate the type of computer you are using.
8. Discuss the problem with the CSR and follow the CSR's instructions to resolve the problem. Only if the CSR needs to access your computer are you prompted to select a security option, as described in the next step.
9. Select an access level in the Remote Command Security dialog box by clicking one of these options:

Options	Descriptions
Full access	Allows the CSR to fully interact with your computer. The CSR can access all the files on your hard disk drive and can copy files to and from your computer to solve your problem.
Limited access	Lets the CSR view your system, but you must approve every action the CSR takes. If the CSR wants to copy a file, for example, the Remote Command Permission dialog box prompts you to approve this action.
No access	Prevents the CSR from accessing your system. You must perform all the operations as described to you by the CSR.

You can change the access level during your call to SOS.

If you experience difficulty hearing the CSR, adjust the speaker volume.

When a file is transferred between your computer and SOS, a status box displays the progress of the file transfer.

10. To end a call, click the Hang Up button.

11. Click the Close box at the top right corner of the SOS window or select Exit from the File menu to close the SOS window.

Troubleshooting

This section describes how to solve common problems you may encounter when using your computer. Many problems have simple solutions, so try these suggestions before you call Sony Online Support. For more advanced troubleshooting information, see the *VAIO Digital Studio Computer Reference Manual*. You can download this electronic document from Sony's website at http://www.sony.com/pcsupport.

My computer does not start

- Check that the computer is plugged into a power source and that it is turned on. Check that the power light is lit on the front panel of the computer.
- Confirm that a diskette is not in the diskette drive (unless you are using a bootable diskette).
- Confirm that the power cord and all cables are connected firmly, as described on the color poster.
- If you plugged the computer into a power strip or UPS, make sure the power strip or UPS is turned on and working.
- Check that the display is plugged into a power source and turned on. Check that the brightness and contrast controls are adjusted correctly. See the manual that came with your display for details.
- Check that the computer is not in standby mode (see Using the Standby Function).

My computer "locks up"

- Close the application that is currently locked up by pressing ALT+F4.
- Try restarting the computer. On the Windows taskbar, click the Start button, click Shut Down, click Restart, and then click OK.
- If you cannot restart as described in the preceding step, you can restart the computer by pressing CTRL+ALT+DELETE or press the power switch for more than six seconds.



Pressing CTRL+ALT+DELETE may result in losing changes made to files that are currently open.

My software program "locks up" or crashes

- Close the application that is currently locked up by pressing ALT+F4.
- Contact the software publisher or designated provider for technical support. See *Read Me First* for a complete list of phone numbers.

My CD-ROM/DVD-ROM drive tray does not open

- Make sure the computer is turned on.
- Press the Eject button on the drive.
- Double-click the My Computer icon on the Windows desktop. Right-click the CD-ROM icon. Select the Eject option from the pop-up menu.
- If the Eject button does not work, you can open the tray by inserting a straightened heavy-weight paper clip into the emergency eject hole.

I cannot play a CD-ROM

- Make sure you place the disc in the tray with the label side facing up.
- Make sure the software is installed according to the program's instructions.

I cannot play a DVD-ROM

- If a region code warning appears when you are using the DVD player, it could be that the DVD-ROM you are trying to play is incompatible with the DVD-ROM drive in your VAIO Digital Studio Computer. The region code is listed on the disc's packaging. Region code indicators such as "1" or "ALL" are labeled on some DVDs to indicate what type of player can play the disc. Unless a "1" or "ALL" appears on the DVD or on the packaging, you cannot play the disc on this computer.
- If you hear audio but cannot see video, your computer's video resolution may be set too high. For best results, change the Windows Control Panel/Display/Settings to 800 x 600 using 16-bit color.
- If you see video but cannot hear audio, check all of the following: Make sure the mute setting is off in your DVD player. Check the master volume setting in the audio Mixer. Check the volume settings in your computer speakers. Check the connections between your speakers and the computer. Check the Windows Control Panel/System/Device Manager to see that the drivers are installed properly.
- A dirty or damaged disc may cause the computer to "hang" while it tries to read the disc. If necessary, reboot the computer, remove the disc, and then check that it is not dirty or damaged. For cleaning instructions, see On Cleaning CD-ROMs and DVD-ROMs.

When I double-click an application icon, a message such as "You must insert the application CD into your CD-ROM drive" appears and the software does not start

- Some titles require specific files that are located on the application's CD-ROM. Insert the disc and try starting the program again.
- Check to make sure you inserted the CD-ROM with the label side facing up.

My speakers have no sound

- Check that the speakers are plugged into the **headphones** connector.
- If the speakers have a mute button, make sure it is off.
- If the speakers are powered by batteries, check that the batteries are inserted properly and that they are charged.
- If the speakers use an external power source, make sure that the power cord is plugged into a grounded wall outlet or power strip.
- If the speakers have their own volume control, check the volume level.
- If the program you are using has its own volume control, check that the volume is turned up.
- Check the volume controls in the application, in the audio Mixer, and in Windows.
- If you connected headphones to the computer, you will not hear sound from the speakers.

My modem connection is slow

The computer's modem uses K56flex technology/V.90. Many factors influence modem connection speed, including telephone line noise or compatibility with telephone equipment (such as fax machines or other modems). If you think your modem is not connecting properly to other PC-based modems, fax machines, or your Internet Service Provider, check the following:

- Have your phone company check that your phone line is free from any line noise.
- If your problem is fax-related, check that there are no problems with the fax machine you are calling and that it is compatible with fax modems.
- If you are having a problem connecting with your Internet Service Provider, check that the ISP is not experiencing technical problems.
- If you have a second phone line available, try connecting the modem to this line.

My modem does not work

- Check that the phone line is plugged into the **line** jack.
- Check that the phone line is working. You can check the line by plugging in an ordinary phone and listening for a dial tone.
- Check that the phone number the program is dialing is correct.
- Check that the software you are using is compatible with the Sony computer modem. (All preinstalled programs are compatible.) Call the software publisher or Sony Online Support.

My microphone does not work

Check that the microphone is plugged into the **mic** connector.

My microphone is too sensitive to background noise

If you find there is too much background noise when you record sound, you should adjust the microphone gain by following these steps:

1. Right-click the speaker icon (Volume) in the lower right Windows task tray.
2. Click Open Volume Controls. The Volume Control screen appears.
3. In the Options menu, select Properties. The Properties screen appears.
4. Change the setting for "Adjust volume for" from Playback to Recording, then click OK.
5. Click the Advanced button under Microphone Balance. The Advanced Controls for Microphone screen appears.
6. Deselect the check box for 1 Mic Gain (+20dB), then click the Close button.
7. Close the Recording Control window.

My mouse does not work

- Check that the mouse is plugged into the **mouse** connector.
- There may be dust or dirt inside the mouse mechanism. To clean the mouse, follow these steps:
    - Turn off your computer. See Shutting Down Your Computer for details.
    - Remove the mouse ball cover on the back side of the mouse.
    - Turn the mouse upright, and drop the mouse ball into your hand.
    - Using a piece of tape, remove any dust or dirt on the mouse ball and inside the mouse ball socket.
    - Return the mouse ball to the socket, and replace the mouse ball cover.

My mouse needs to be set up for left-hand use

To set up the mouse for left-hand use:

1. Click the Start button to display the Start menu.
2. Point to Settings.
3. Click Control Panel.
4. Double-click the Mouse icon.
5. Click the Buttons tab.

6. Under Buttons, select Left-handed.
7. Click the OK button to close the Mouse Properties dialog box.

My keyboard does not work

Check that the keyboard is plugged into the **usb** connector.

I cannot find the Windows taskbar

- Check that the taskbar is not hidden or shrunken.
- Use the mouse to point to the left, right, top, and bottom edges of the screen.

 See the VAIO Digital Studio Computer *Read Me First* for additional information on using your Sony computer.

Using the System Recovery CD(s)

You can reinstall software titles that shipped with your computer if they are corrupted or accidentally erased. You may not need to recover the entire contents of your hard drive. If you experience a problem with your computer, reinstalling an individual device driver or software title may correct the problem.

Use the Application Recovery CD(s) to reinstall individual applications or device drivers. See Using the Application Recovery CD(s).

The System Recovery CD(s) contains a backup copy of all the software originally installed on your hard disk drive. **It can be used only to recover the hard disk of the Sony computer you purchased.**

The System Recovery utility gives you three options:

- **Full Restore without Format** restores all the software titles that originally came with your computer without formatting the hard disk.
- **Full Restore with Format** formats the hard disk drive and then restores all the original software.
- **Operating System Only** formats the hard disk drive and restores the Windows operating system and the device drivers that shipped with your computer. This option is recommended for advanced users only.

 If you choose the Full Restore with Format or Operating System Only option, your hard disk will be formatted, which removes all the information on the hard disk drive. You will lose any software you have installed and any other files you have created since you started to use your computer. This means you will have to reinstall any applications that were not included with the computer when you purchased it. If you choose the Full Restore without Format option, you may need to reinstall applications that were not included with the computer when you purchased it. If you have any questions on using the System Recovery CD(s), contact Sony Online Support (SOS).

To use the System Recovery CD(s)

 You need to complete the Windows registration process when you use the System Recovery CD(s). Make sure you have the product ID number located on the cover of your Microsoft Windows manual. You will need this number to complete the recovery process.

1. Insert the Sony System Recovery CD in the CD-ROM/DVD-ROM drive.

 The System Recovery utility boots from the CD-ROM/DVD-ROM drive. It must be in the drive when you turn on the computer.

2. Shut down your computer as described on Shutting Down Your Computer.
3. Wait 30 seconds and turn on your computer.

4. Click OK to signify you have read and accept the Microsoft End-User License Agreement.
5. When the System Recovery menu appears, follow the on-screen instructions to complete the recovery process.

 Your system may include one or two System Recovery CDs. If you have two System Recovery CDs, insert the first CD to run the System Recovery program. You are prompted to insert the second CD once the information from the first CD has been installed.

The recovery process takes 30 to 60 minutes to complete.

Using the Application Recovery CD(s)

The Application Recovery CD(s) allows you to reinstall individual applications and device drivers if they are corrupted or accidentally erased. Reinstalling an individual device driver or software title may correct a problem you are experiencing with your computer, and you may not need to recover the entire contents of your hard drive. If you do need to reinstall all the software titles that shipped with your computer, use the System Recovery CD(s). See Using the System Recovery CD(s).

You must be in Windows to run the Application Recovery CD(s). The application will not run from DOS. If you have any questions on using the Application Recovery CD(s), contact Sony Online Support (SOS).

To use the Application Recovery CD(s)

1. Turn on your computer. If your computer is already on, close all applications.
2. When the Windows desktop appears, insert the Sony Application Recovery CD in the CD-ROM/DVD-ROM drive. The Application Recovery utility loads automatically.
3. When the Application Recovery menu appears, follow the on-screen instructions to complete the recovery process.

 Your system may include one or two Application Recovery CDs. If you have two Application Recovery CDs, insert the first CD to run the Application Recovery program. You may be prompted to insert the second CD, depending on the application you wish to restore.

 For a list of the contents of the Application Recovery CD, see the online version of Read Me First.

Getting Help

Help Resources

Sony provides several support options for your Sony computer. When you have questions about your computer and the preinstalled software, check these sources for answers, in the following sequence:

VAIO Digital Studio Computer Read Me First Contains a complete list of the items that ship with your computer, product specifications, software support information, and the most up-to-date information on using your computer.
VAIO Digital Studio Computer User Guide Describes getting started with your computer, finding help, and solving common problems.
Online User Guide This electronic version of the User Guide contains additional information on upgrading and maintaining your computer. You can access this guide by clicking the Start button, pointing to Programs, and then pointing to VAIO Documentation.
VAIO Digital Studio Computer Reference Manual Provides detailed technical information about the hardware in your VAIO Digital Studio Computer. This electronic document is available from Sony's website at http://www.sony.com/pcsupport
Manuals and online help files that may accompany your preinstalled software Most of the manuals for preinstalled software are located on your hard disk drive as online help files. You can access the online help files from the Help menu in the specific application. A printed manual is available for some applications.
Knowledge Database Provides instant access to information on commonly encountered problems. Enter a description of your problem and the Knowledge Database searches for the corresponding solutions online. You can access the Sony Knowledge Database at http://www.sony.com/pcsupport
Sony Fax-on-Demand This service provides you with answers to commonly asked questions. You can use this automated service to request a list of available topics and then select the topics that you want to receive. To contact the Sony fax-on-demand service, call 1-888-4SONYPC (1-888-476-6972). (Requires a fax machine or your fax software. Fax software is included on your system as part of Microsoft Outlook.)
Sony SOS software This preinstalled program connects you to a Customer Support Representative. Support through SOS is available free of charge for 90 days after the original date of purchase. Connect a phone line and phone before you call, so the representative can access your system if necessary. Calling SOS describes how to use the SOS software.
Calling SOS You can call and speak with a Sony Customer Support Representative without using your computer by calling 1-888-4SONYPC (1-888-476-6972). Software support is available free of charge for 90 days after the original date of purchase.

Calling SOS

The SOS application enables you to exchange information with a Sony Customer Support Representative (CSR). Here's how it works:

- Type your name, phone number, and the problem details in the SOS window.
- Dial the SOS hotline with a single click of the mouse.
- Specify the access level for the CSR.
- The CSR resolves the problem.

Before using SOS, make sure the computer is connected to a phone line and telephone. If you do not have a phone line connected to your computer, you can place a voice call to SOS by dialing 1-888-4SONYPC (1-888-476-6972). SOS support is available for 90 days from the original date of purchase.

To place a call to SOS

1. Click the Start button on the Windows 98 taskbar.
2. Point to Programs, point to VoiceView, and then click VoiceView. The SOS window appears.

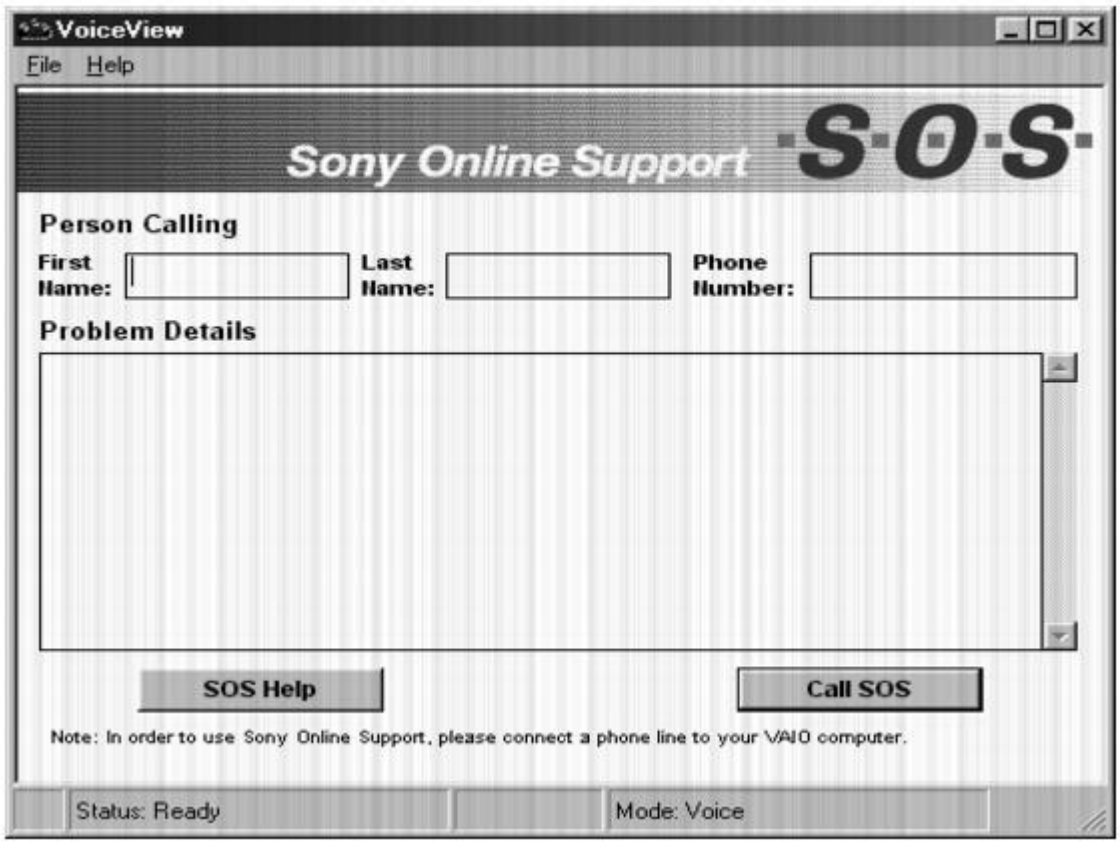

3. In the SOS window, type your name, phone number, and a description of the problem. This information cannot be seen by the customer support representative until you give the CSR access to your computer.
4. Click the Call SOS button. The confirmation screen appears.
5. Click the OK button. The Dialer screen appears.
6. Pick up the handset and click the Dial button as instructed. Your modem dials the toll-free number and connects you to the Sony support center.
7. You are asked whether you wish to test your system or talk to a support representative. You are then prompted to indicate the type of computer you are using.
8. Discuss the problem with the CSR and follow the CSR's instructions to resolve the problem. Only if the CSR needs to access your computer are you prompted to select a security option, as described in the next step.
9. Select an access level in the Remote Command Security dialog box by clicking one of these options:

Options	Descriptions
Full access	Allows the CSR to fully interact with your computer. The CSR can access all the files on your hard disk drive and can copy files to and from your computer to solve your problem.
Limited access	Lets the CSR view your system, but you must approve every action the CSR takes. If the CSR wants to copy a file, for example, the Remote Command Permission dialog box prompts you to approve this action.
No access	Prevents the CSR from accessing your system. You must perform all the operations as described to you by the CSR.

You can change the access level during your call to SOS.

If you experience difficulty hearing the CSR, adjust the speaker volume.

When a file is transferred between your computer and SOS, a status box displays the progress of the file transfer.

10. To end a call, click the Hang Up button.

11. Click the Close box at the top right corner of the SOS window or select Exit from the File menu to close the SOS window.

Troubleshooting

This section describes how to solve common problems you may encounter when using your computer. Many problems have simple solutions, so try these suggestions before you call Sony Online Support. For more advanced troubleshooting information, see the *VAIO Digital Studio Computer Reference Manual*. You can download this electronic document from Sony's website at http://www.sony.com/pcsupport.

My computer does not start

- Check that the computer is plugged into a power source and that it is turned on. Check that the power light is lit on the front panel of the computer.
- Confirm that a diskette is not in the diskette drive (unless you are using a bootable diskette).
- Confirm that the power cord and all cables are connected firmly, as described on the color poster.
- If you plugged the computer into a power strip or UPS, make sure the power strip or UPS is turned on and working.
- Check that the display is plugged into a power source and turned on. Check that the brightness and contrast controls are adjusted correctly. See the manual that came with your display for details.
- Check that the computer is not in standby mode (see Using the Standby Function).

My computer "locks up"

- Close the application that is currently locked up by pressing ALT+F4.
- Try restarting the computer. On the Windows taskbar, click the Start button, click Shut Down, click Restart, and then click OK.
- If you cannot restart as described in the preceding step, you can restart the computer by pressing CTRL+ALT+DELETE or press the power switch for more than six seconds.



Pressing CTRL+ALT+DELETE may result in losing changes made to files that are currently open.

My software program "locks up" or crashes

- Close the application that is currently locked up by pressing ALT+F4.
- Contact the software publisher or designated provider for technical support. See *Read Me First* for a complete list of phone numbers.

My CD-ROM/DVD-ROM drive tray does not open

- Make sure the computer is turned on.
- Press the Eject button on the drive.
- Double-click the My Computer icon on the Windows desktop. Right-click the CD-ROM icon. Select the Eject option from the pop-up menu.
- If the Eject button does not work, you can open the tray by inserting a straightened heavy-weight paper clip into the emergency eject hole.

I cannot play a CD-ROM

- Make sure you place the disc in the tray with the label side facing up.
- Make sure the software is installed according to the program's instructions.

I cannot play a DVD-ROM

- If a region code warning appears when you are using the DVD player, it could be that the DVD-ROM you are trying to play is incompatible with the DVD-ROM drive in your VAIO Digital Studio Computer. The region code is listed on the disc's packaging. Region code indicators such as "1" or "ALL" are labeled on some DVDs to indicate what type of player can play the disc. Unless a "1" or "ALL" appears on the DVD or on the packaging, you cannot play the disc on this computer.
- If you hear audio but cannot see video, your computer's video resolution may be set too high. For best results, change the Windows Control Panel/Display/Settings to 800 x 600 using 16-bit color.
- If you see video but cannot hear audio, check all of the following: Make sure the mute setting is off in your DVD player. Check the master volume setting in the audio Mixer. Check the volume settings in your computer speakers. Check the connections between your speakers and the computer. Check the Windows Control Panel/System/Device Manager to see that the drivers are installed properly.
- A dirty or damaged disc may cause the computer to "hang" while it tries to read the disc. If necessary, reboot the computer, remove the disc, and then check that it is not dirty or damaged. For cleaning instructions, see On Cleaning CD-ROMs and DVD-ROMs.

When I double-click an application icon, a message such as "You must insert the application CD into your CD-ROM drive" appears and the software does not start

- Some titles require specific files that are located on the application's CD-ROM. Insert the disc and try starting the program again.
- Check to make sure you inserted the CD-ROM with the label side facing up.

My speakers have no sound

- Check that the speakers are plugged into the **headphones** connector.
- If the speakers have a mute button, make sure it is off.
- If the speakers are powered by batteries, check that the batteries are inserted properly and that they are charged.
- If the speakers use an external power source, make sure that the power cord is plugged into a grounded wall outlet or power strip.
- If the speakers have their own volume control, check the volume level.
- If the program you are using has its own volume control, check that the volume is turned up.
- Check the volume controls in the application, in the audio Mixer, and in Windows.
- If you connected headphones to the computer, you will not hear sound from the speakers.

My modem connection is slow

The computer's modem uses K56flex technology/V.90. Many factors influence modem connection speed, including telephone line noise or compatibility with telephone equipment (such as fax machines or other modems). If you think your modem is not connecting properly to other PC-based modems, fax machines, or your Internet Service Provider, check the following:

- Have your phone company check that your phone line is free from any line noise.
- If your problem is fax-related, check that there are no problems with the fax machine you are calling and that it is compatible with fax modems.
- If you are having a problem connecting with your Internet Service Provider, check that the ISP is not experiencing technical problems.
- If you have a second phone line available, try connecting the modem to this line.

My modem does not work

- Check that the phone line is plugged into the **line** jack.
- Check that the phone line is working. You can check the line by plugging in an ordinary phone and listening for a dial tone.
- Check that the phone number the program is dialing is correct.
- Check that the software you are using is compatible with the Sony computer modem. (All preinstalled programs are compatible.) Call the software publisher or Sony Online Support.

My microphone does not work

Check that the microphone is plugged into the **mic** connector.

My microphone is too sensitive to background noise

If you find there is too much background noise when you record sound, you should adjust the microphone gain by following these steps:

1. Right-click the speaker icon (Volume) in the lower right Windows task tray.
2. Click Open Volume Controls. The Volume Control screen appears.
3. In the Options menu, select Properties. The Properties screen appears.
4. Change the setting for "Adjust volume for" from Playback to Recording, then click OK.
5. Click the Advanced button under Microphone Balance. The Advanced Controls for Microphone screen appears.
6. Deselect the check box for 1 Mic Gain (+20dB), then click the Close button.
7. Close the Recording Control window.

My mouse does not work

- Check that the mouse is plugged into the **mouse** connector.
- There may be dust or dirt inside the mouse mechanism. To clean the mouse, follow these steps:
    - Turn off your computer. See Shutting Down Your Computer for details.
    - Remove the mouse ball cover on the back side of the mouse.
    - Turn the mouse upright, and drop the mouse ball into your hand.
    - Using a piece of tape, remove any dust or dirt on the mouse ball and inside the mouse ball socket.
    - Return the mouse ball to the socket, and replace the mouse ball cover.

My mouse needs to be set up for left-hand use

To set up the mouse for left-hand use:

1. Click the Start button to display the Start menu.
2. Point to Settings.
3. Click Control Panel.
4. Double-click the Mouse icon.
5. Click the Buttons tab.

6. Under Buttons, select Left-handed.
7. Click the OK button to close the Mouse Properties dialog box.

My keyboard does not work

Check that the keyboard is plugged into the **usb** connector.

I cannot find the Windows taskbar

- Check that the taskbar is not hidden or shrunken.
- Use the mouse to point to the left, right, top, and bottom edges of the screen.

 See the VAIO Digital Studio Computer *Read Me First* for additional information on using your Sony computer.

Using the System Recovery CD(s)

You can reinstall software titles that shipped with your computer if they are corrupted or accidentally erased. You may not need to recover the entire contents of your hard drive. If you experience a problem with your computer, reinstalling an individual device driver or software title may correct the problem.

Use the Application Recovery CD(s) to reinstall individual applications or device drivers. See Using the Application Recovery CD(s).

The System Recovery CD(s) contains a backup copy of all the software originally installed on your hard disk drive. **It can be used only to recover the hard disk of the Sony computer you purchased.**

The System Recovery utility gives you three options:

- **Full Restore without Format** restores all the software titles that originally came with your computer without formatting the hard disk.
- **Full Restore with Format** formats the hard disk drive and then restores all the original software.
- **Operating System Only** formats the hard disk drive and restores the Windows operating system and the device drivers that shipped with your computer. This option is recommended for advanced users only.

 If you choose the Full Restore with Format or Operating System Only option, your hard disk will be formatted, which removes all the information on the hard disk drive. You will lose any software you have installed and any other files you have created since you started to use your computer. This means you will have to reinstall any applications that were not included with the computer when you purchased it. If you choose the Full Restore without Format option, you may need to reinstall applications that were not included with the computer when you purchased it. If you have any questions on using the System Recovery CD(s), contact Sony Online Support (SOS).

To use the System Recovery CD(s)

 You need to complete the Windows registration process when you use the System Recovery CD(s). Make sure you have the product ID number located on the cover of your Microsoft Windows manual. You will need this number to complete the recovery process.

1. Insert the Sony System Recovery CD in the CD-ROM/DVD-ROM drive.

 The System Recovery utility boots from the CD-ROM/DVD-ROM drive. It must be in the drive when you turn on the computer.

2. Shut down your computer as described on Shutting Down Your Computer.
3. Wait 30 seconds and turn on your computer.

4. Click OK to signify you have read and accept the Microsoft End-User License Agreement.
5. When the System Recovery menu appears, follow the on-screen instructions to complete the recovery process.

Your system may include one or two System Recovery CDs. If you have two System Recovery CDs, insert the first CD to run the System Recovery program. You are prompted to insert the second CD once the information from the first CD has been installed.

The recovery process takes 30 to 60 minutes to complete.

Using the Application Recovery CD(s)

The Application Recovery CD(s) allows you to reinstall individual applications and device drivers if they are corrupted or accidentally erased. Reinstalling an individual device driver or software title may correct a problem you are experiencing with your computer, and you may not need to recover the entire contents of your hard drive. If you do need to reinstall all the software titles that shipped with your computer, use the System Recovery CD(s). See Using the System Recovery CD(s).

You must be in Windows to run the Application Recovery CD(s). The application will not run from DOS. If you have any questions on using the Application Recovery CD(s), contact Sony Online Support (SOS).

To use the Application Recovery CD(s)

1. Turn on your computer. If your computer is already on, close all applications.
2. When the Windows desktop appears, insert the Sony Application Recovery CD in the CD-ROM/DVD-ROM drive. The Application Recovery utility loads automatically.
3. When the Application Recovery menu appears, follow the on-screen instructions to complete the recovery process.

Your system may include one or two Application Recovery CDs. If you have two Application Recovery CDs, insert the first CD to run the Application Recovery program. You may be prompted to insert the second CD, depending on the application you wish to restore.

For a list of the contents of the Application Recovery CD, see the online version of Read Me First.

Getting Help

Help Resources

Sony provides several support options for your Sony computer. When you have questions about your computer and the preinstalled software, check these sources for answers, in the following sequence:

VAIO Digital Studio Computer Read Me First Contains a complete list of the items that ship with your computer, product specifications, software support information, and the most up-to-date information on using your computer.
VAIO Digital Studio Computer User Guide Describes getting started with your computer, finding help, and solving common problems.
Online User Guide This electronic version of the User Guide contains additional information on upgrading and maintaining your computer. You can access this guide by clicking the Start button, pointing to Programs, and then pointing to VAIO Documentation.
VAIO Digital Studio Computer Reference Manual Provides detailed technical information about the hardware in your VAIO Digital Studio Computer. This electronic document is available from Sony's website at http://www.sony.com/pcsupport
Manuals and online help files that may accompany your preinstalled software Most of the manuals for preinstalled software are located on your hard disk drive as online help files. You can access the online help files from the Help menu in the specific application. A printed manual is available for some applications.
Knowledge Database Provides instant access to information on commonly encountered problems. Enter a description of your problem and the Knowledge Database searches for the corresponding solutions online. You can access the Sony Knowledge Database at http://www.sony.com/pcsupport
Sony Fax-on-Demand This service provides you with answers to commonly asked questions. You can use this automated service to request a list of available topics and then select the topics that you want to receive. To contact the Sony fax-on-demand service, call 1-888-4SONYPC (1-888-476-6972). (Requires a fax machine or your fax software. Fax software is included on your system as part of Microsoft Outlook.)
Sony SOS software This preinstalled program connects you to a Customer Support Representative. Support through SOS is available free of charge for 90 days after the original date of purchase. Connect a phone line and phone before you call, so the representative can access your system if necessary. Calling SOS describes how to use the SOS software.
Calling SOS You can call and speak with a Sony Customer Support Representative without using your computer by calling 1-888-4SONYPC (1-888-476-6972). Software support is available free of charge for 90 days after the original date of purchase.

Calling SOS

The SOS application enables you to exchange information with a Sony Customer Support Representative (CSR). Here's how it works:

- Type your name, phone number, and the problem details in the SOS window.
- Dial the SOS hotline with a single click of the mouse.
- Specify the access level for the CSR.
- The CSR resolves the problem.

Before using SOS, make sure the computer is connected to a phone line and telephone. If you do not have a phone line connected to your computer, you can place a voice call to SOS by dialing 1-888-4SONYPC (1-888-476-6972). SOS support is available for 90 days from the original date of purchase.

To place a call to SOS

1. Click the Start button on the Windows 98 taskbar.
2. Point to Programs, point to VoiceView, and then click VoiceView. The SOS window appears.

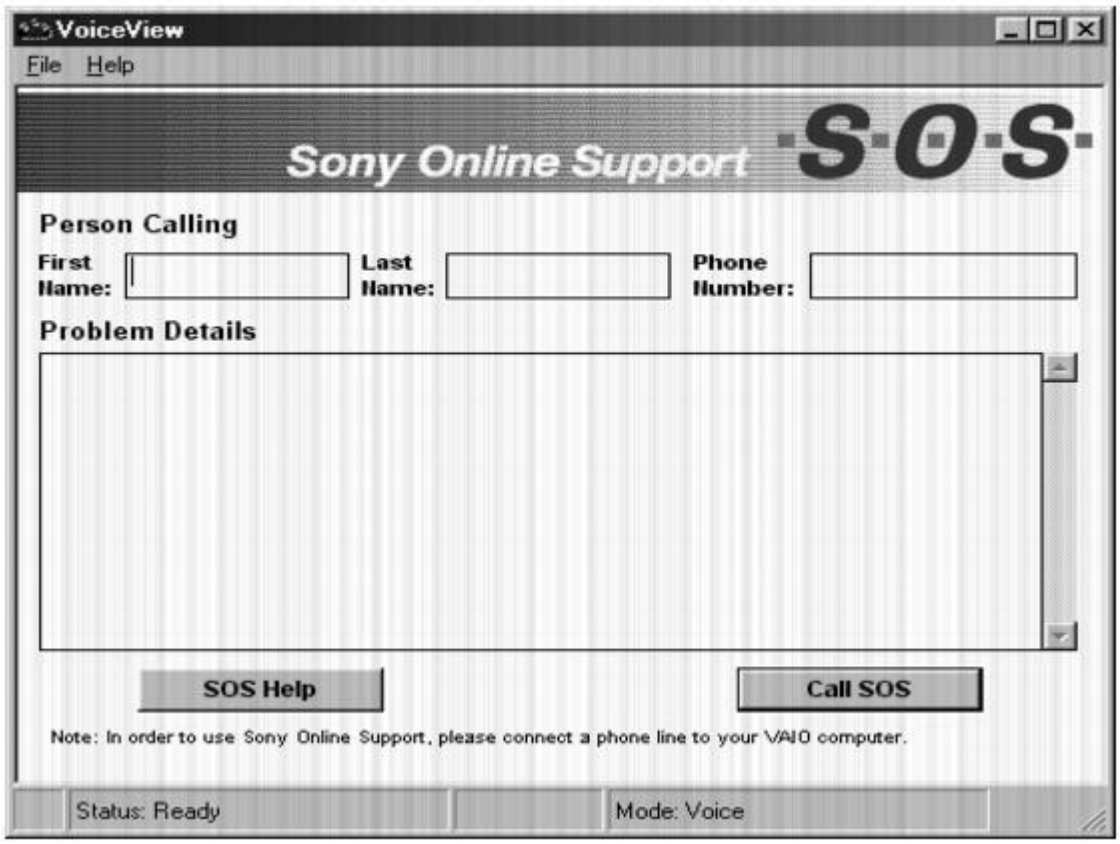

3. In the SOS window, type your name, phone number, and a description of the problem. This information cannot be seen by the customer support representative until you give the CSR access to your computer.
4. Click the Call SOS button. The confirmation screen appears.
5. Click the OK button. The Dialer screen appears.
6. Pick up the handset and click the Dial button as instructed. Your modem dials the toll-free number and connects you to the Sony support center.
7. You are asked whether you wish to test your system or talk to a support representative. You are then prompted to indicate the type of computer you are using.
8. Discuss the problem with the CSR and follow the CSR's instructions to resolve the problem. Only if the CSR needs to access your computer are you prompted to select a security option, as described in the next step.
9. Select an access level in the Remote Command Security dialog box by clicking one of these options:

Options	Descriptions
Full access	Allows the CSR to fully interact with your computer. The CSR can access all the files on your hard disk drive and can copy files to and from your computer to solve your problem.
Limited access	Lets the CSR view your system, but you must approve every action the CSR takes. If the CSR wants to copy a file, for example, the Remote Command Permission dialog box prompts you to approve this action.
No access	Prevents the CSR from accessing your system. You must perform all the operations as described to you by the CSR.

You can change the access level during your call to SOS.

If you experience difficulty hearing the CSR, adjust the speaker volume.

When a file is transferred between your computer and SOS, a status box displays the progress of the file transfer.

10. To end a call, click the Hang Up button.

11. Click the Close box at the top right corner of the SOS window or select Exit from the File menu to close the SOS window.

Troubleshooting

This section describes how to solve common problems you may encounter when using your computer. Many problems have simple solutions, so try these suggestions before you call Sony Online Support. For more advanced troubleshooting information, see the *VAIO Digital Studio Computer Reference Manual*. You can download this electronic document from Sony's website at http://www.sony.com/pcsupport.

My computer does not start

- Check that the computer is plugged into a power source and that it is turned on. Check that the power light is lit on the front panel of the computer.
- Confirm that a diskette is not in the diskette drive (unless you are using a bootable diskette).
- Confirm that the power cord and all cables are connected firmly, as described on the color poster.
- If you plugged the computer into a power strip or UPS, make sure the power strip or UPS is turned on and working.
- Check that the display is plugged into a power source and turned on. Check that the brightness and contrast controls are adjusted correctly. See the manual that came with your display for details.
- Check that the computer is not in standby mode (see Using the Standby Function).

My computer "locks up"

- Close the application that is currently locked up by pressing ALT+F4.
- Try restarting the computer. On the Windows taskbar, click the Start button, click Shut Down, click Restart, and then click OK.
- If you cannot restart as described in the preceding step, you can restart the computer by pressing CTRL+ALT+DELETE or press the power switch for more than six seconds.



Pressing CTRL+ALT+DELETE may result in losing changes made to files that are currently open.

My software program "locks up" or crashes

- Close the application that is currently locked up by pressing ALT+F4.
- Contact the software publisher or designated provider for technical support. See *Read Me First* for a complete list of phone numbers.

My CD-ROM/DVD-ROM drive tray does not open

- Make sure the computer is turned on.
- Press the Eject button on the drive.
- Double-click the My Computer icon on the Windows desktop. Right-click the CD-ROM icon. Select the Eject option from the pop-up menu.
- If the Eject button does not work, you can open the tray by inserting a straightened heavy-weight paper clip into the emergency eject hole.

I cannot play a CD-ROM

- Make sure you place the disc in the tray with the label side facing up.
- Make sure the software is installed according to the program's instructions.

I cannot play a DVD-ROM

- If a region code warning appears when you are using the DVD player, it could be that the DVD-ROM you are trying to play is incompatible with the DVD-ROM drive in your VAIO Digital Studio Computer. The region code is listed on the disc's packaging. Region code indicators such as "1" or "ALL" are labeled on some DVDs to indicate what type of player can play the disc. Unless a "1" or "ALL" appears on the DVD or on the packaging, you cannot play the disc on this computer.
- If you hear audio but cannot see video, your computer's video resolution may be set too high. For best results, change the Windows Control Panel/Display/Settings to 800 x 600 using 16-bit color.
- If you see video but cannot hear audio, check all of the following: Make sure the mute setting is off in your DVD player. Check the master volume setting in the audio Mixer. Check the volume settings in your computer speakers. Check the connections between your speakers and the computer. Check the Windows Control Panel/System/Device Manager to see that the drivers are installed properly.
- A dirty or damaged disc may cause the computer to "hang" while it tries to read the disc. If necessary, reboot the computer, remove the disc, and then check that it is not dirty or damaged. For cleaning instructions, see On Cleaning CD-ROMs and DVD-ROMs.

When I double-click an application icon, a message such as "You must insert the application CD into your CD-ROM drive" appears and the software does not start

- Some titles require specific files that are located on the application's CD-ROM. Insert the disc and try starting the program again.
- Check to make sure you inserted the CD-ROM with the label side facing up.

My speakers have no sound

- Check that the speakers are plugged into the **headphones** connector.
- If the speakers have a mute button, make sure it is off.
- If the speakers are powered by batteries, check that the batteries are inserted properly and that they are charged.
- If the speakers use an external power source, make sure that the power cord is plugged into a grounded wall outlet or power strip.
- If the speakers have their own volume control, check the volume level.
- If the program you are using has its own volume control, check that the volume is turned up.
- Check the volume controls in the application, in the audio Mixer, and in Windows.
- If you connected headphones to the computer, you will not hear sound from the speakers.

My modem connection is slow

The computer's modem uses K56flex technology/V.90. Many factors influence modem connection speed, including telephone line noise or compatibility with telephone equipment (such as fax machines or other modems). If you think your modem is not connecting properly to other PC-based modems, fax machines, or your Internet Service Provider, check the following:

- Have your phone company check that your phone line is free from any line noise.
- If your problem is fax-related, check that there are no problems with the fax machine you are calling and that it is compatible with fax modems.
- If you are having a problem connecting with your Internet Service Provider, check that the ISP is not experiencing technical problems.
- If you have a second phone line available, try connecting the modem to this line.

My modem does not work

- Check that the phone line is plugged into the **line** jack.
- Check that the phone line is working. You can check the line by plugging in an ordinary phone and listening for a dial tone.
- Check that the phone number the program is dialing is correct.
- Check that the software you are using is compatible with the Sony computer modem. (All preinstalled programs are compatible.) Call the software publisher or Sony Online Support.

My microphone does not work

Check that the microphone is plugged into the **mic** connector.

My microphone is too sensitive to background noise

If you find there is too much background noise when you record sound, you should adjust the microphone gain by following these steps:

1. Right-click the speaker icon (Volume) in the lower right Windows task tray.
2. Click Open Volume Controls. The Volume Control screen appears.
3. In the Options menu, select Properties. The Properties screen appears.
4. Change the setting for "Adjust volume for" from Playback to Recording, then click OK.
5. Click the Advanced button under Microphone Balance. The Advanced Controls for Microphone screen appears.
6. Deselect the check box for 1 Mic Gain (+20dB), then click the Close button.
7. Close the Recording Control window.

My mouse does not work

- Check that the mouse is plugged into the **mouse** connector.
- There may be dust or dirt inside the mouse mechanism. To clean the mouse, follow these steps:
    - Turn off your computer. See Shutting Down Your Computer for details.
    - Remove the mouse ball cover on the back side of the mouse.
    - Turn the mouse upright, and drop the mouse ball into your hand.
    - Using a piece of tape, remove any dust or dirt on the mouse ball and inside the mouse ball socket.
    - Return the mouse ball to the socket, and replace the mouse ball cover.

My mouse needs to be set up for left-hand use

To set up the mouse for left-hand use:

1. Click the Start button to display the Start menu.
2. Point to Settings.
3. Click Control Panel.
4. Double-click the Mouse icon.
5. Click the Buttons tab.

6. Under Buttons, select Left-handed.
7. Click the OK button to close the Mouse Properties dialog box.

My keyboard does not work

Check that the keyboard is plugged into the **usb** connector.

I cannot find the Windows taskbar

- Check that the taskbar is not hidden or shrunken.
- Use the mouse to point to the left, right, top, and bottom edges of the screen.

 See the VAIO Digital Studio Computer *Read Me First* for additional information on using your Sony computer.

Using the System Recovery CD(s)

You can reinstall software titles that shipped with your computer if they are corrupted or accidentally erased. You may not need to recover the entire contents of your hard drive. If you experience a problem with your computer, reinstalling an individual device driver or software title may correct the problem.

Use the Application Recovery CD(s) to reinstall individual applications or device drivers. See Using the Application Recovery CD(s).

The System Recovery CD(s) contains a backup copy of all the software originally installed on your hard disk drive. **It can be used only to recover the hard disk of the Sony computer you purchased.**

The System Recovery utility gives you three options:

- **Full Restore without Format** restores all the software titles that originally came with your computer without formatting the hard disk.
- **Full Restore with Format** formats the hard disk drive and then restores all the original software.
- **Operating System Only** formats the hard disk drive and restores the Windows operating system and the device drivers that shipped with your computer. This option is recommended for advanced users only.

 If you choose the Full Restore with Format or Operating System Only option, your hard disk will be formatted, which removes all the information on the hard disk drive. You will lose any software you have installed and any other files you have created since you started to use your computer. This means you will have to reinstall any applications that were not included with the computer when you purchased it. If you choose the Full Restore without Format option, you may need to reinstall applications that were not included with the computer when you purchased it. If you have any questions on using the System Recovery CD(s), contact Sony Online Support (SOS).

To use the System Recovery CD(s)

 You need to complete the Windows registration process when you use the System Recovery CD(s). Make sure you have the product ID number located on the cover of your Microsoft Windows manual. You will need this number to complete the recovery process.

1. Insert the Sony System Recovery CD in the CD-ROM/DVD-ROM drive.

 The System Recovery utility boots from the CD-ROM/DVD-ROM drive. It must be in the drive when you turn on the computer.

2. Shut down your computer as described on Shutting Down Your Computer.
3. Wait 30 seconds and turn on your computer.

4. Click OK to signify you have read and accept the Microsoft End-User License Agreement.

5. When the System Recovery menu appears, follow the on-screen instructions to complete the recovery process.

 Your system may include one or two System Recovery CDs. If you have two System Recovery CDs, insert the first CD to run the System Recovery program. You are prompted to insert the second CD once the information from the first CD has been installed.

The recovery process takes 30 to 60 minutes to complete.

Using the Application Recovery CD(s)

The Application Recovery CD(s) allows you to reinstall individual applications and device drivers if they are corrupted or accidentally erased. Reinstalling an individual device driver or software title may correct a problem you are experiencing with your computer, and you may not need to recover the entire contents of your hard drive. If you do need to reinstall all the software titles that shipped with your computer, use the System Recovery CD(s). See Using the System Recovery CD(s).

You must be in Windows to run the Application Recovery CD(s). The application will not run from DOS. If you have any questions on using the Application Recovery CD(s), contact Sony Online Support (SOS).

To use the Application Recovery CD(s)

1. Turn on your computer. If your computer is already on, close all applications.

2. When the Windows desktop appears, insert the Sony Application Recovery CD in the CD-ROM/DVD-ROM drive. The Application Recovery utility loads automatically.

3. When the Application Recovery menu appears, follow the on-screen instructions to complete the recovery process.

 Your system may include one or two Application Recovery CDs. If you have two Application Recovery CDs, insert the first CD to run the Application Recovery program. You may be prompted to insert the second CD, depending on the application you wish to restore.

 For a list of the contents of the Application Recovery CD, see the online version of Read Me First.

Getting Help

Help Resources

Sony provides several support options for your Sony computer. When you have questions about your computer and the preinstalled software, check these sources for answers, in the following sequence:

VAIO Digital Studio Computer Read Me First Contains a complete list of the items that ship with your computer, product specifications, software support information, and the most up-to-date information on using your computer.
VAIO Digital Studio Computer User Guide Describes getting started with your computer, finding help, and solving common problems.
Online User Guide This electronic version of the User Guide contains additional information on upgrading and maintaining your computer. You can access this guide by clicking the Start button, pointing to Programs, and then pointing to VAIO Documentation.
VAIO Digital Studio Computer Reference Manual Provides detailed technical information about the hardware in your VAIO Digital Studio Computer. This electronic document is available from Sony's website at http://www.sony.com/pcsupport
Manuals and online help files that may accompany your preinstalled software Most of the manuals for preinstalled software are located on your hard disk drive as online help files. You can access the online help files from the Help menu in the specific application. A printed manual is available for some applications.
Knowledge Database Provides instant access to information on commonly encountered problems. Enter a description of your problem and the Knowledge Database searches for the corresponding solutions online. You can access the Sony Knowledge Database at http://www.sony.com/pcsupport
Sony Fax-on-Demand This service provides you with answers to commonly asked questions. You can use this automated service to request a list of available topics and then select the topics that you want to receive. To contact the Sony fax-on-demand service, call 1-888-4SONYPC (1-888-476-6972). (Requires a fax machine or your fax software. Fax software is included on your system as part of Microsoft Outlook.)
Sony SOS software This preinstalled program connects you to a Customer Support Representative. Support through SOS is available free of charge for 90 days after the original date of purchase. Connect a phone line and phone before you call, so the representative can access your system if necessary. Calling SOS describes how to use the SOS software.
Calling SOS You can call and speak with a Sony Customer Support Representative without using your computer by calling 1-888-4SONYPC (1-888-476-6972). Software support is available free of charge for 90 days after the original date of purchase.

Calling SOS

The SOS application enables you to exchange information with a Sony Customer Support Representative (CSR). Here's how it works:

- Type your name, phone number, and the problem details in the SOS window.
- Dial the SOS hotline with a single click of the mouse.
- Specify the access level for the CSR.
- The CSR resolves the problem.

Before using SOS, make sure the computer is connected to a phone line and telephone. If you do not have a phone line connected to your computer, you can place a voice call to SOS by dialing 1-888-4SONYPC (1-888-476-6972). SOS support is available for 90 days from the original date of purchase.

To place a call to SOS

1. Click the Start button on the Windows 98 taskbar.
2. Point to Programs, point to VoiceView, and then click VoiceView. The SOS window appears.

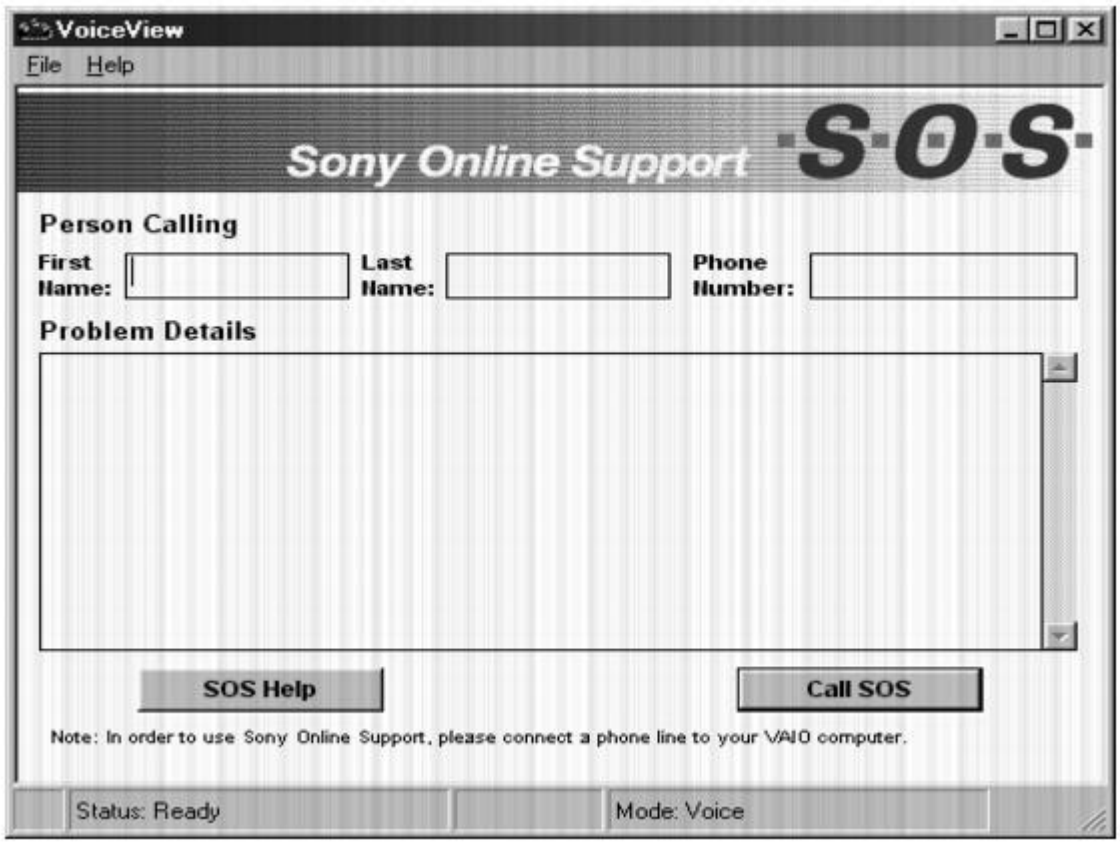

3. In the SOS window, type your name, phone number, and a description of the problem. This information cannot be seen by the customer support representative until you give the CSR access to your computer.
4. Click the Call SOS button. The confirmation screen appears.
5. Click the OK button. The Dialer screen appears.
6. Pick up the handset and click the Dial button as instructed. Your modem dials the toll-free number and connects you to the Sony support center.
7. You are asked whether you wish to test your system or talk to a support representative. You are then prompted to indicate the type of computer you are using.
8. Discuss the problem with the CSR and follow the CSR's instructions to resolve the problem. Only if the CSR needs to access your computer are you prompted to select a security option, as described in the next step.
9. Select an access level in the Remote Command Security dialog box by clicking one of these options:

Options	Descriptions
Full access	Allows the CSR to fully interact with your computer. The CSR can access all the files on your hard disk drive and can copy files to and from your computer to solve your problem.
Limited access	Lets the CSR view your system, but you must approve every action the CSR takes. If the CSR wants to copy a file, for example, the Remote Command Permission dialog box prompts you to approve this action.
No access	Prevents the CSR from accessing your system. You must perform all the operations as described to you by the CSR.

You can change the access level during your call to SOS.

If you experience difficulty hearing the CSR, adjust the speaker volume.

When a file is transferred between your computer and SOS, a status box displays the progress of the file transfer.

10. To end a call, click the Hang Up button.

11. Click the Close box at the top right corner of the SOS window or select Exit from the File menu to close the SOS window.

Troubleshooting

This section describes how to solve common problems you may encounter when using your computer. Many problems have simple solutions, so try these suggestions before you call Sony Online Support. For more advanced troubleshooting information, see the *VAIO Digital Studio Computer Reference Manual*. You can download this electronic document from Sony's website at http://www.sony.com/pcsupport.

My computer does not start

- Check that the computer is plugged into a power source and that it is turned on. Check that the power light is lit on the front panel of the computer.
- Confirm that a diskette is not in the diskette drive (unless you are using a bootable diskette).
- Confirm that the power cord and all cables are connected firmly, as described on the color poster.
- If you plugged the computer into a power strip or UPS, make sure the power strip or UPS is turned on and working.
- Check that the display is plugged into a power source and turned on. Check that the brightness and contrast controls are adjusted correctly. See the manual that came with your display for details.
- Check that the computer is not in standby mode (see Using the Standby Function).

My computer "locks up"

- Close the application that is currently locked up by pressing ALT+F4.
- Try restarting the computer. On the Windows taskbar, click the Start button, click Shut Down, click Restart, and then click OK.
- If you cannot restart as described in the preceding step, you can restart the computer by pressing CTRL+ALT+DELETE or press the power switch for more than six seconds.



Pressing CTRL+ALT+DELETE may result in losing changes made to files that are currently open.

My software program "locks up" or crashes

- Close the application that is currently locked up by pressing ALT+F4.
- Contact the software publisher or designated provider for technical support. See *Read Me First* for a complete list of phone numbers.

My CD-ROM/DVD-ROM drive tray does not open

- Make sure the computer is turned on.
- Press the Eject button on the drive.
- Double-click the My Computer icon on the Windows desktop. Right-click the CD-ROM icon. Select the Eject option from the pop-up menu.
- If the Eject button does not work, you can open the tray by inserting a straightened heavy-weight paper clip into the emergency eject hole.

I cannot play a CD-ROM

- Make sure you place the disc in the tray with the label side facing up.
- Make sure the software is installed according to the program's instructions.

I cannot play a DVD-ROM

- If a region code warning appears when you are using the DVD player, it could be that the DVD-ROM you are trying to play is incompatible with the DVD-ROM drive in your VAIO Digital Studio Computer. The region code is listed on the disc's packaging. Region code indicators such as "1" or "ALL" are labeled on some DVDs to indicate what type of player can play the disc. Unless a "1" or "ALL" appears on the DVD or on the packaging, you cannot play the disc on this computer.
- If you hear audio but cannot see video, your computer's video resolution may be set too high. For best results, change the Windows Control Panel/Display/Settings to 800 x 600 using 16-bit color.
- If you see video but cannot hear audio, check all of the following: Make sure the mute setting is off in your DVD player. Check the master volume setting in the audio Mixer. Check the volume settings in your computer speakers. Check the connections between your speakers and the computer. Check the Windows Control Panel/System/Device Manager to see that the drivers are installed properly.
- A dirty or damaged disc may cause the computer to "hang" while it tries to read the disc. If necessary, reboot the computer, remove the disc, and then check that it is not dirty or damaged. For cleaning instructions, see On Cleaning CD-ROMs and DVD-ROMs.

When I double-click an application icon, a message such as "You must insert the application CD into your CD-ROM drive" appears and the software does not start

- Some titles require specific files that are located on the application's CD-ROM. Insert the disc and try starting the program again.
- Check to make sure you inserted the CD-ROM with the label side facing up.

My speakers have no sound

- Check that the speakers are plugged into the **headphones** connector.
- If the speakers have a mute button, make sure it is off.
- If the speakers are powered by batteries, check that the batteries are inserted properly and that they are charged.
- If the speakers use an external power source, make sure that the power cord is plugged into a grounded wall outlet or power strip.
- If the speakers have their own volume control, check the volume level.
- If the program you are using has its own volume control, check that the volume is turned up.
- Check the volume controls in the application, in the audio Mixer, and in Windows.
- If you connected headphones to the computer, you will not hear sound from the speakers.

My modem connection is slow

The computer's modem uses K56flex technology/V.90. Many factors influence modem connection speed, including telephone line noise or compatibility with telephone equipment (such as fax machines or other modems). If you think your modem is not connecting properly to other PC-based modems, fax machines, or your Internet Service Provider, check the following:

- Have your phone company check that your phone line is free from any line noise.
- If your problem is fax-related, check that there are no problems with the fax machine you are calling and that it is compatible with fax modems.
- If you are having a problem connecting with your Internet Service Provider, check that the ISP is not experiencing technical problems.
- If you have a second phone line available, try connecting the modem to this line.

My modem does not work

- Check that the phone line is plugged into the **line** jack.
- Check that the phone line is working. You can check the line by plugging in an ordinary phone and listening for a dial tone.
- Check that the phone number the program is dialing is correct.
- Check that the software you are using is compatible with the Sony computer modem. (All preinstalled programs are compatible.) Call the software publisher or Sony Online Support.

My microphone does not work

Check that the microphone is plugged into the **mic** connector.

My microphone is too sensitive to background noise

If you find there is too much background noise when you record sound, you should adjust the microphone gain by following these steps:

1. Right-click the speaker icon (Volume) in the lower right Windows task tray.
2. Click Open Volume Controls. The Volume Control screen appears.
3. In the Options menu, select Properties. The Properties screen appears.
4. Change the setting for "Adjust volume for" from Playback to Recording, then click OK.
5. Click the Advanced button under Microphone Balance. The Advanced Controls for Microphone screen appears.
6. Deselect the check box for 1 Mic Gain (+20dB), then click the Close button.
7. Close the Recording Control window.

My mouse does not work

- Check that the mouse is plugged into the **mouse** connector.
- There may be dust or dirt inside the mouse mechanism. To clean the mouse, follow these steps:
    - Turn off your computer. See Shutting Down Your Computer for details.
    - Remove the mouse ball cover on the back side of the mouse.
    - Turn the mouse upright, and drop the mouse ball into your hand.
    - Using a piece of tape, remove any dust or dirt on the mouse ball and inside the mouse ball socket.
    - Return the mouse ball to the socket, and replace the mouse ball cover.

My mouse needs to be set up for left-hand use

To set up the mouse for left-hand use:

1. Click the Start button to display the Start menu.
2. Point to Settings.
3. Click Control Panel.
4. Double-click the Mouse icon.
5. Click the Buttons tab.

6. Under Buttons, select Left-handed.
7. Click the OK button to close the Mouse Properties dialog box.

My keyboard does not work

Check that the keyboard is plugged into the **usb** connector.

I cannot find the Windows taskbar

- Check that the taskbar is not hidden or shrunken.
- Use the mouse to point to the left, right, top, and bottom edges of the screen.

 See the VAIO Digital Studio Computer *Read Me First* for additional information on using your Sony computer.

Using the System Recovery CD(s)

You can reinstall software titles that shipped with your computer if they are corrupted or accidentally erased. You may not need to recover the entire contents of your hard drive. If you experience a problem with your computer, reinstalling an individual device driver or software title may correct the problem.

Use the Application Recovery CD(s) to reinstall individual applications or device drivers. See Using the Application Recovery CD(s).

The System Recovery CD(s) contains a backup copy of all the software originally installed on your hard disk drive. **It can be used only to recover the hard disk of the Sony computer you purchased.**

The System Recovery utility gives you three options:

- **Full Restore without Format** restores all the software titles that originally came with your computer without formatting the hard disk.
- **Full Restore with Format** formats the hard disk drive and then restores all the original software.
- **Operating System Only** formats the hard disk drive and restores the Windows operating system and the device drivers that shipped with your computer. This option is recommended for advanced users only.

 If you choose the Full Restore with Format or Operating System Only option, your hard disk will be formatted, which removes all the information on the hard disk drive. You will lose any software you have installed and any other files you have created since you started to use your computer. This means you will have to reinstall any applications that were not included with the computer when you purchased it. If you choose the Full Restore without Format option, you may need to reinstall applications that were not included with the computer when you purchased it. If you have any questions on using the System Recovery CD(s), contact Sony Online Support (SOS).

To use the System Recovery CD(s)

 You need to complete the Windows registration process when you use the System Recovery CD(s). Make sure you have the product ID number located on the cover of your Microsoft Windows manual. You will need this number to complete the recovery process.

1. Insert the Sony System Recovery CD in the CD-ROM/DVD-ROM drive.

 The System Recovery utility boots from the CD-ROM/DVD-ROM drive. It must be in the drive when you turn on the computer.

2. Shut down your computer as described on Shutting Down Your Computer.
3. Wait 30 seconds and turn on your computer.

4. Click OK to signify you have read and accept the Microsoft End-User License Agreement.
5. When the System Recovery menu appears, follow the on-screen instructions to complete the recovery process.

 Your system may include one or two System Recovery CDs. If you have two System Recovery CDs, insert the first CD to run the System Recovery program. You are prompted to insert the second CD once the information from the first CD has been installed.

The recovery process takes 30 to 60 minutes to complete.

Using the Application Recovery CD(s)

The Application Recovery CD(s) allows you to reinstall individual applications and device drivers if they are corrupted or accidentally erased. Reinstalling an individual device driver or software title may correct a problem you are experiencing with your computer, and you may not need to recover the entire contents of your hard drive. If you do need to reinstall all the software titles that shipped with your computer, use the System Recovery CD(s). See Using the System Recovery CD(s).

You must be in Windows to run the Application Recovery CD(s). The application will not run from DOS. If you have any questions on using the Application Recovery CD(s), contact Sony Online Support (SOS).

To use the Application Recovery CD(s)

1. Turn on your computer. If your computer is already on, close all applications.
2. When the Windows desktop appears, insert the Sony Application Recovery CD in the CD-ROM/DVD-ROM drive. The Application Recovery utility loads automatically.
3. When the Application Recovery menu appears, follow the on-screen instructions to complete the recovery process.

 Your system may include one or two Application Recovery CDs. If you have two Application Recovery CDs, insert the first CD to run the Application Recovery program. You may be prompted to insert the second CD, depending on the application you wish to restore.

 For a list of the contents of the Application Recovery CD, see the online version of Read Me First.

Upgrading and Maintaining Your VAIO Digital Studio Computer

In the future you may want to install additional boards to expand the functionality of your computer. This section describes how to open your computer and insert add-in boards, add memory, replace the lithium battery, and install an additional hard disk drive. For more information on upgrading your Sony computer, see the *VAIO Digital Studio Computer Reference Manual*. You can download this electronic document from the Sony Web site at http://www.sony.com/pcsupport.

The procedures in this section assume you are familiar with the general terminology associated with personal computers and with the safety practices and regulatory compliance required for using and modifying electronic equipment. Read Notes on Use before upgrading your Sony computer.

Always switch the power off before you open the system or connect your computer to peripheral equipment; otherwise, damage may occur to the integrated circuits in your computer.

Electrostatic discharge (ESD) can damage disk drives, add-in cards, and other components. Do the procedures described here only at an ESD workstation. If such a station is not available, do not work in a carpeted area and do not handle materials that produce or hold static electricity (cellophane wrappers, for example). Ground yourself by maintaining continuous contact with an unpainted metal portion of the chassis while performing the procedure.

Inserting an Add-in Board

You can add up to two additional PCI boards to the system.

Your VAIO Digital Studio Computer cannot accommodate PCI add-in boards exceeding 7.7" in length.

To insert an add-in board

Make sure you observe the proper safety precautions when you add boards to your Sony computer. See Notes on Use.

1. Shut down your computer and turn off all peripheral devices, such as your printer, display, and speakers.
2. Unplug your computer and any peripheral devices.
3. Remove the left-side panel as described in Removing the Left-Side Panel.
4. Identify the expansion slot where you want to insert the add-in board.
5. Remove the slot cover for the slot you have chosen.

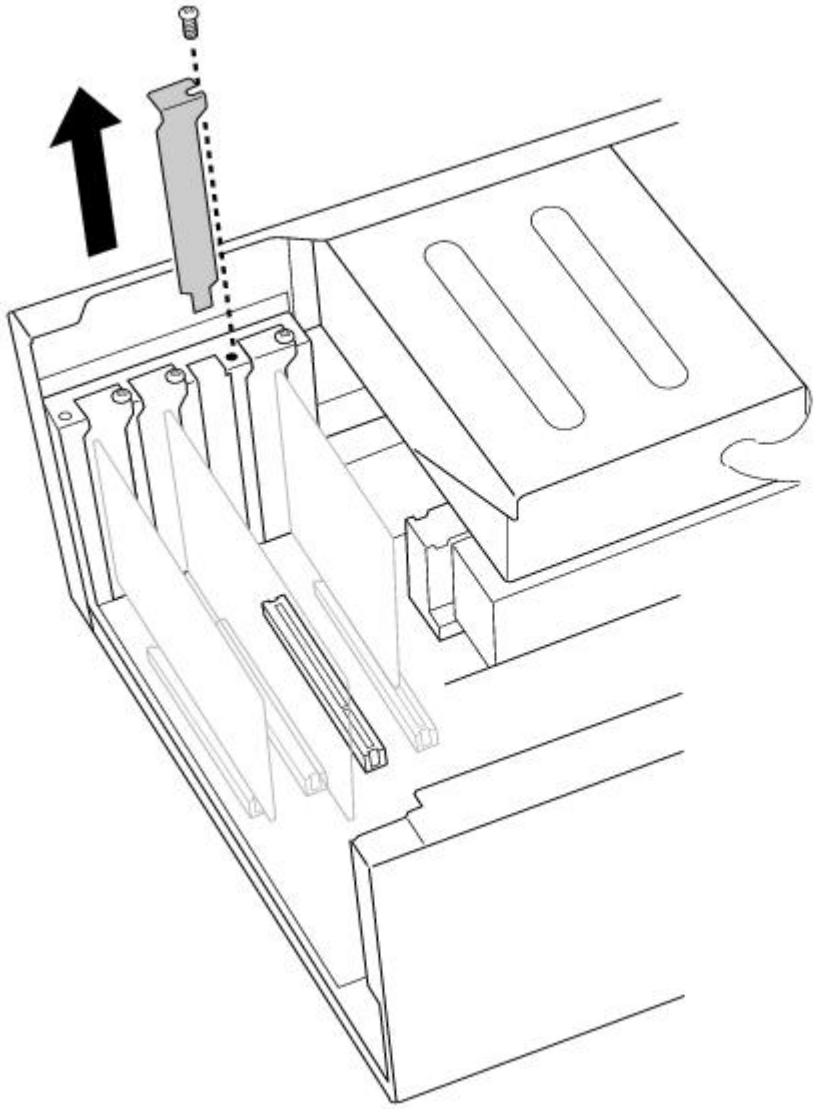

6. Install the add-in board by plugging it into the expansion slot on the system board. Attach any internal cables that the board requires (see the manual for the add-in board).

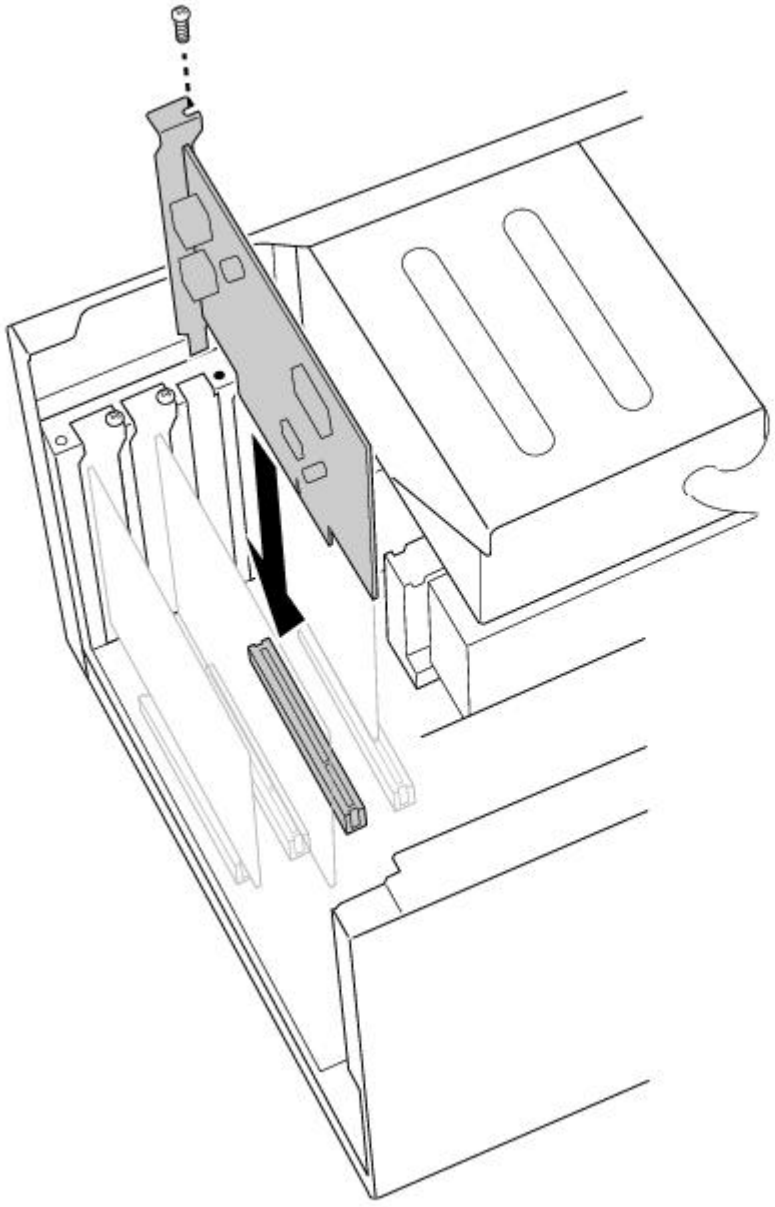

7. Replace the left-side panel as described in Replacing the Left-Side Panel.

Adding Memory

In order to increase your computer's memory, you may need to remove one of the factory-installed DIMMs and replace it with one of greater capacity. For details, see the *VAIO Digital Studio Computer Reference Manual*, which is available at Sony's Web site at http://www.sony.com/pcsupport.

For memory upgrades, use only 3.3V unbuffered 4-clock 64-bit 66 MHz SDRAM DIMM module Rev1.0 or 3.3V unbuffered 4-clock 72-bit 66 MHz SDRAM DIMM module Rev1.0. For more information on Digital Studio Computer compatible memory, call Sony at 1-888-4SONYPC (1-888-476-6972).

To install memory

Make sure you observe the proper safety precautions when you add DIMMs to your Sony computer. See Notes on Use .

1. Shut down your computer and turn off all peripheral devices, such as your printer, display, and speakers.
2. Unplug your computer and any peripheral devices.
3. Remove the left-side panel, bottom panel, and front panel, as described in Removing the Left-Side Panel. Then detach the diskette drive, as described in Detaching the Diskette Drive.

You do not need to completely remove the diskette drive in order to access the DIMM sockets.

4. If necessary, remove any cables, add-in cards, or other components to access the DIMM sockets.
5. Remove either (or both) of the factory-installed DIMMs.
6. Handle the DIMM only by the edges, and remove it from its anti-static package.
7. Locate the keys on the bottom edge of the DIMM .
8. Align the DIMM over the socket.

To avoid damaging the DIMM socket, move the DIMM socket tabs slightly outward to relieve pressure. The DIMM should then click easily into place.

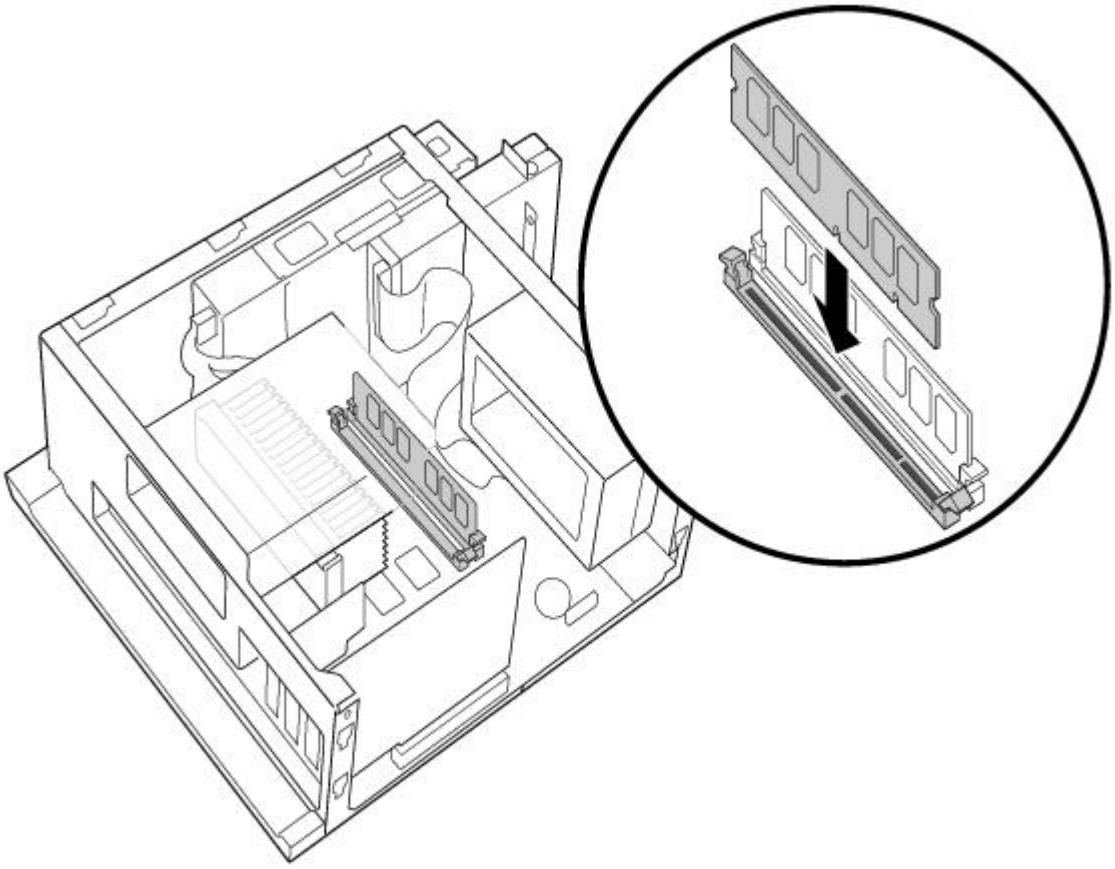

9. Firmly insert the bottom edge of the DIMM into the socket.
10. Press evenly against the DIMM's upper corners. The end latches snap into position automatically.
11. Reinstall any add-in cards or components you removed.
12. Replace the diskette drive and cover panels, as described in Replacing the Diskette Drive to Replacing the Left-Side Panel.

Replacing the Lithium Battery

After several years, when the lithium battery starts to weaken, the system settings stored in CMOS RAM, such as the date and time, may be wrong. When this occurs, you need to replace the lithium battery.

To replace the lithium battery

1. To run the Setup utility, press F3 when your computer is starting up. Then press F1 to run the BIOS setup utility.

2. Write down the current BIOS Setup options.
3. Shut down your computer and turn off all peripheral devices, such as your printer, display, and speakers. Unplug your computer.
4. Remove the left-side and bottom panels, as described in Removing the Left-Side Panel.
5. Install the new battery with the plus (+) side up.

There is danger of explosion if you replace the battery incorrectly. You must replace the battery only with a CR2032 type lithium battery. Discard used batteries according to the instructions on On Disposal of the Lithium Battery.

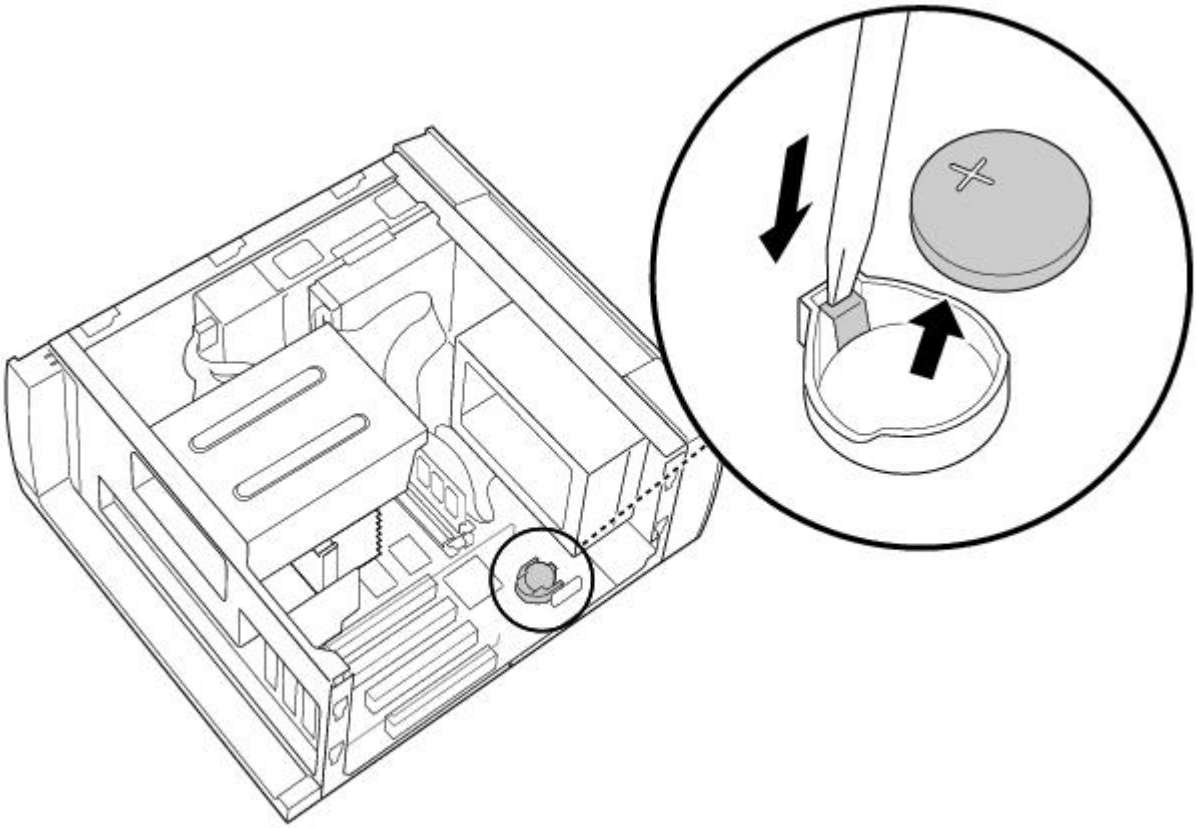

6. Replace the bottom and left-side panels, as described in Replacing the Bottom Panel.

The values stored in the CMOS memory are now reset to the factory default values. You must run the Setup utility to reset the date, time, passwords, and other options. See the VAIO Digital Studio Computer Reference Manual for details.

7. To run the Setup utility, press F3 when your computer is starting up. Then press F1 to run the BIOS setup utility.
8. Change the default values to the values you wrote down in step 2.
9. Save your Setup changes, and then exit the Setup utility.

Installing an Internal Hard Disk Drive

Your VAIO Digital Studio Computer comes with an available bay to hold an additional hard disk drive. The drive you install must not require front panel access. The hard disk drive access light blinks when either internal drive is active.

Before opening the system unit, save any open files, exit Windows, turn off the power of the computer and all attached peripherals, and then unplug the power cord.

1. Configure the jumpers on the new drive as a primary slave (see your drive's documentation for

configuration instructions).

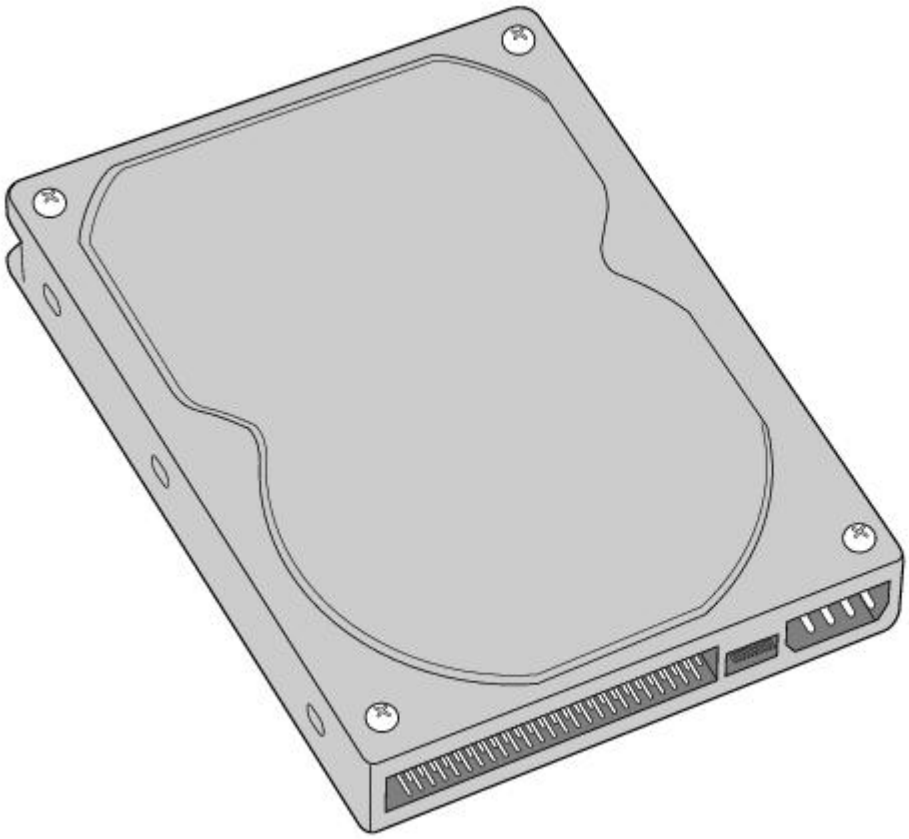

2. Remove the left-side panel, as described in Removing the Left-Side Panel.
3. Remove the front panel, as described in Removing the Front Panel.
4. Remove the bottom panel, as described in Removing the Bottom Panel.
5. Lay the system on its right side (left side faces up-see diagram that follows).
6. Remove the two screws that secure the drive holder.
7. Slide the drive holder forward and then out.

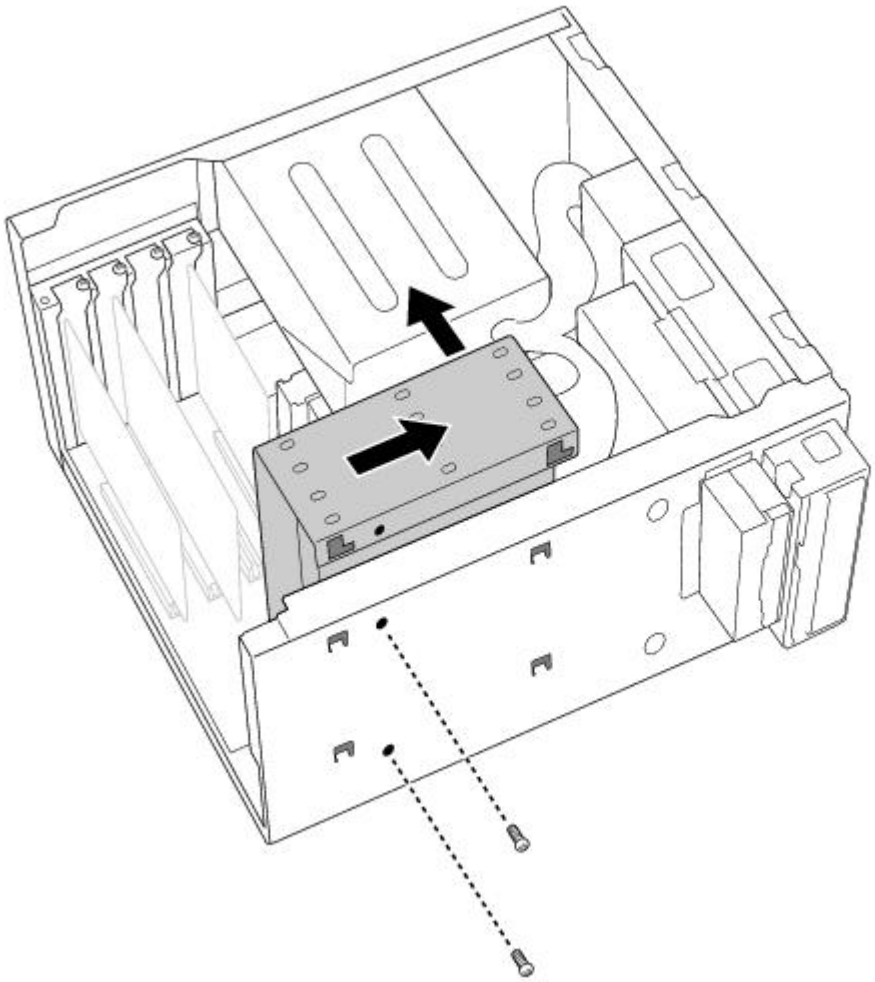

8. Place the drive holder upside down on top of the power supply.

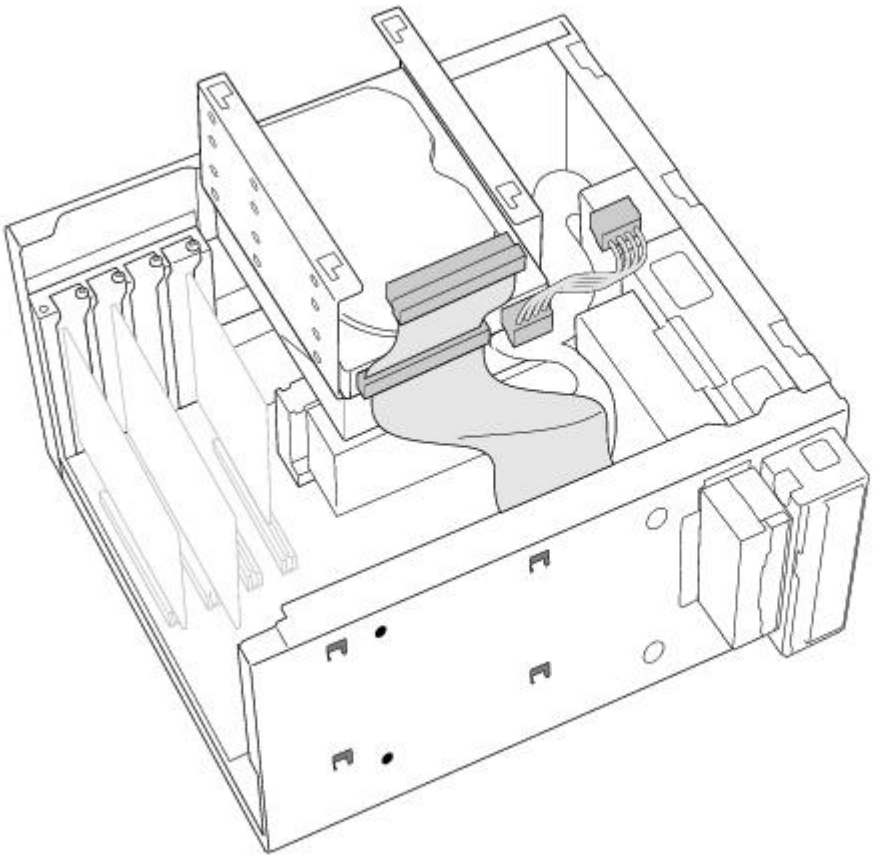

9. Slide the new drive into the drive holder and align the holes on each side of the drive bay.

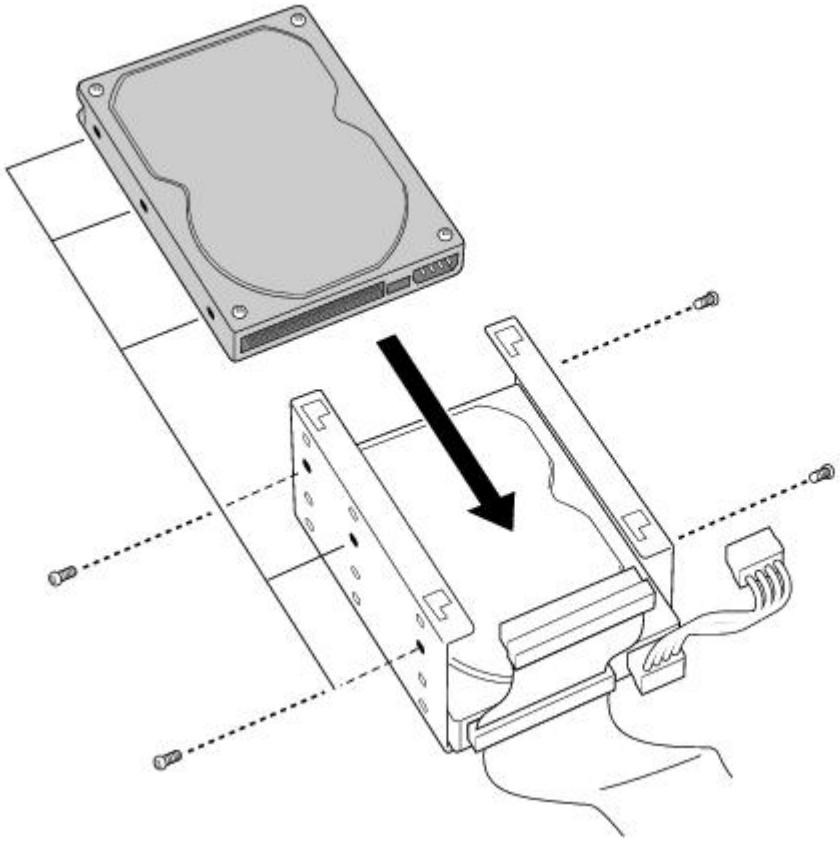

10. Secure the drive to the drive holder using any two of the three holes on each side of the drive holder (screws are provided with the new drive). Do not overtighten the screws.
11. Connect the second drive connector to the new drive.
12. Connect the second power connector to the new drive.

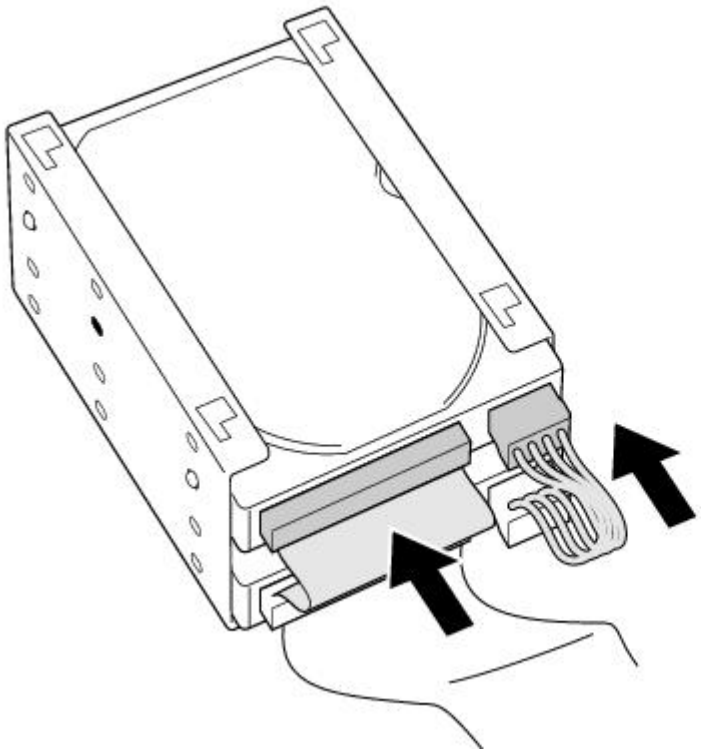

13. Place the drive holder against the inside of the front chassis and slide it back. Be sure to align the slots on the drive holder with the tabs on the inside of the chassis. Be sure to slide the drive holder back so that the tabs slip into the notch at the bottom of the slot.

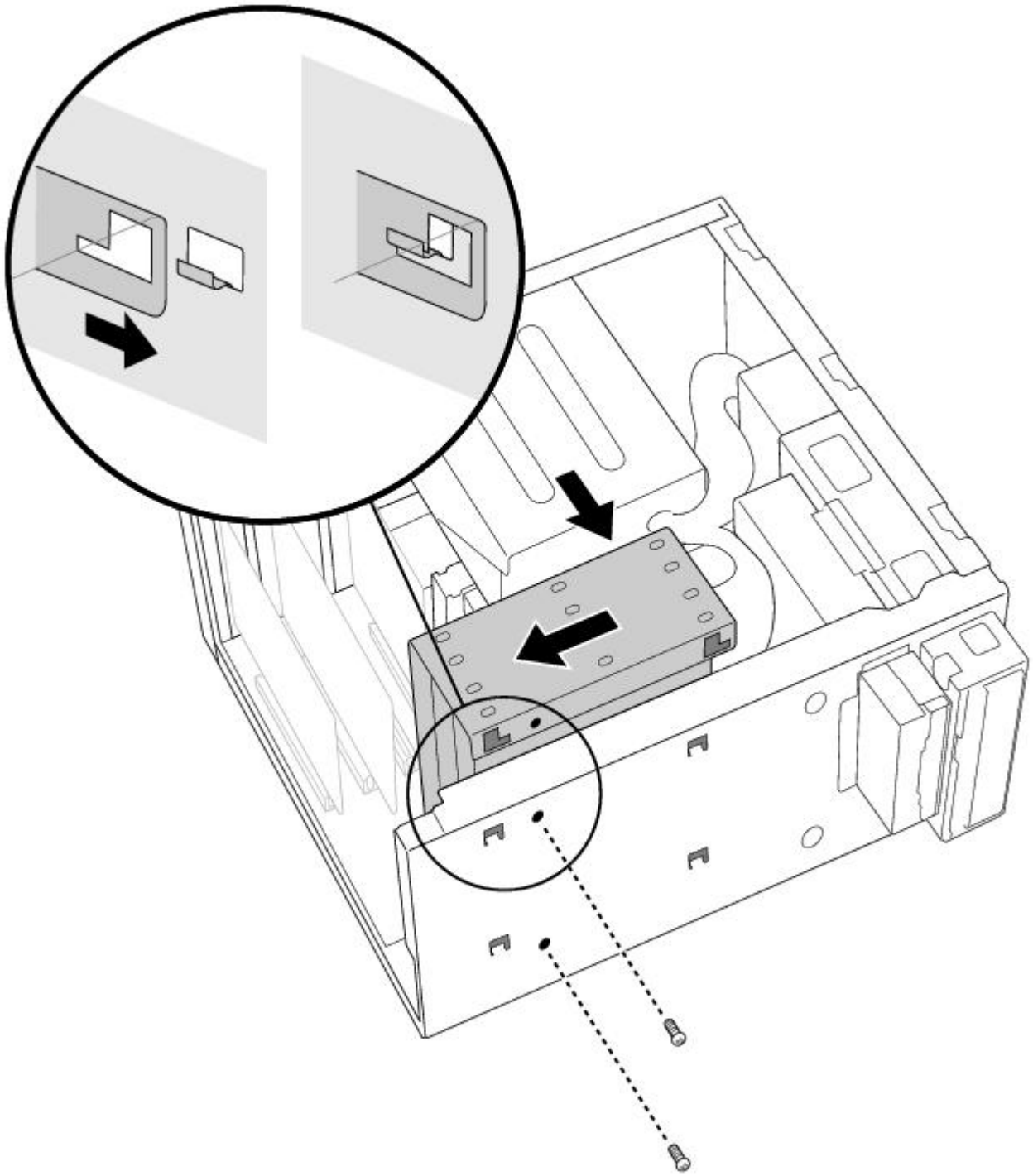

14. Replace the two screws that secure the holder to the chassis.
15. Replace the bottom panel, as described in Replacing the Bottom Panel.
16. Replace the front panel, as described in Replacing the Front Panel.
17. Replace the left-side panel, as described in Replacing the Left-Side Panel.
18. Reconnect the power cord and then turn on your computer.

Your computer automatically recognizes the new drive and configures itself accordingly when you turn it on. Format and partition the new drive following the instructions provided with the drive.

Removing the Left-Side Panel

To remove the left-side panel

1. Remove the two screws that secure the panel to the chassis.
2. Slide the panel back until it stops.
3. Pull the panel straight out to remove it.

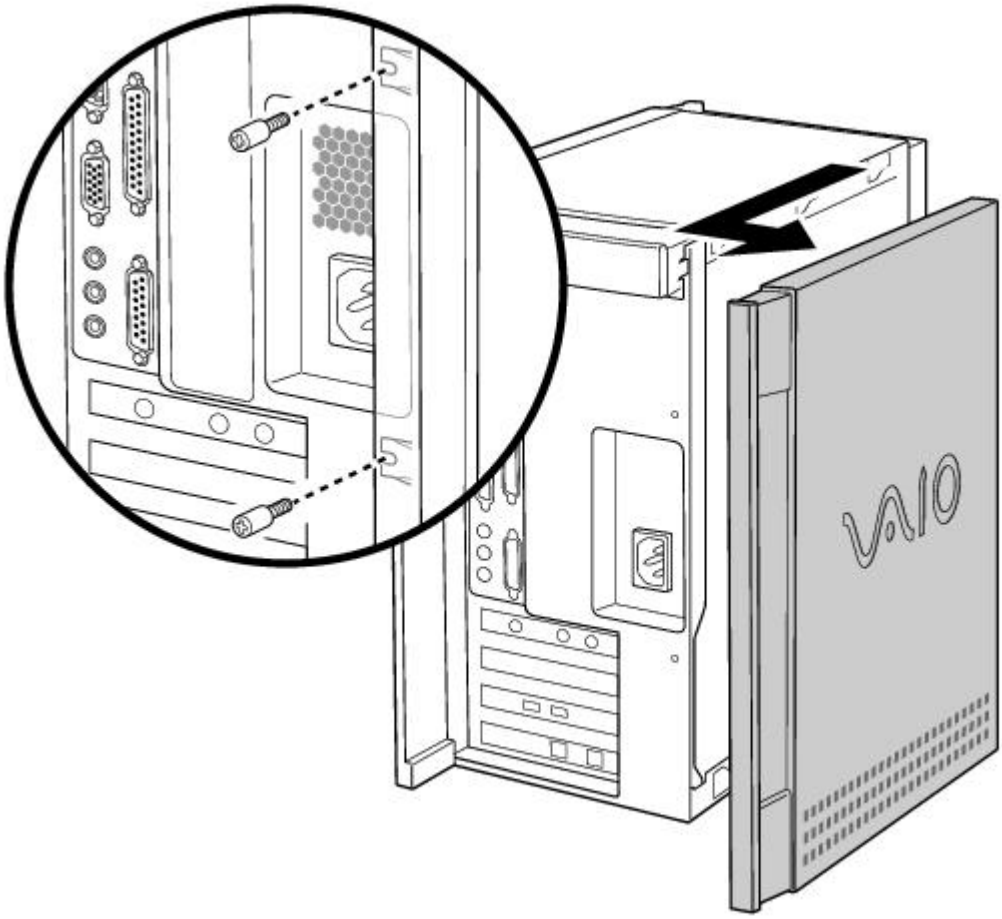

Removing the Bottom Panel

To remove the bottom panel

1. Remove the screw that secures the bottom panel to the chassis.
2. Pull the bottom panel straight out to remove it.

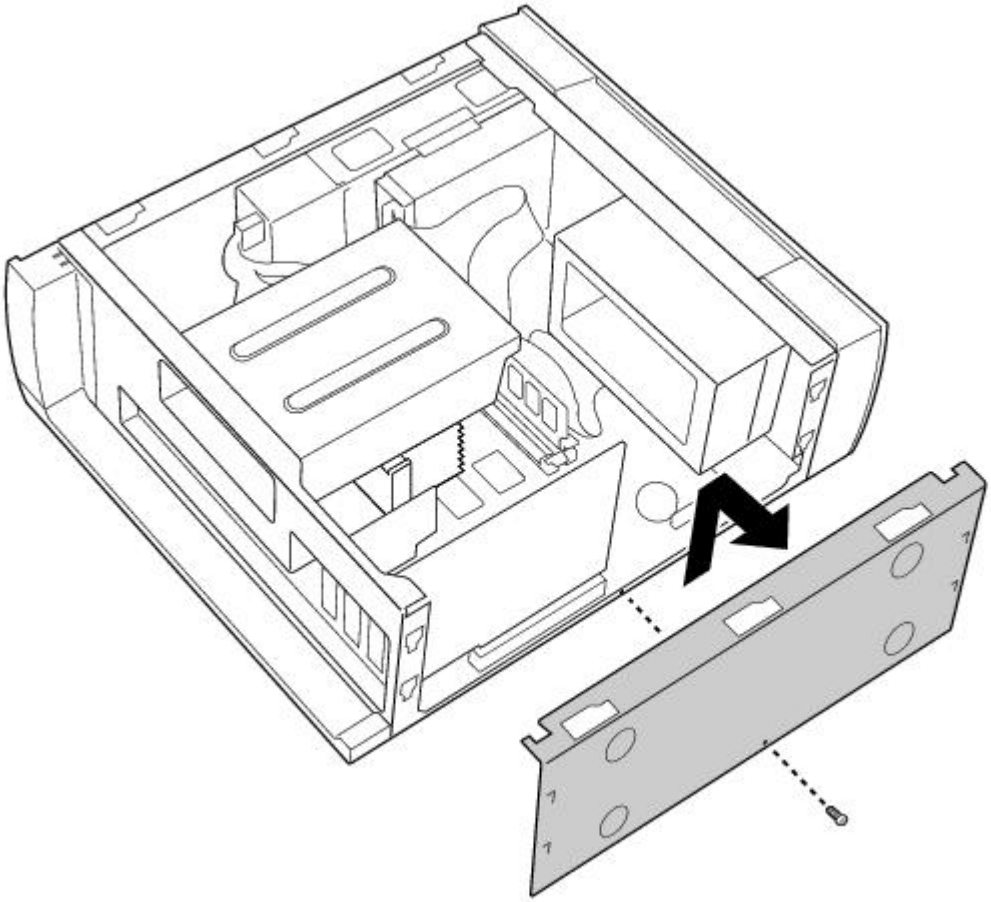

Removing the Front Panel

To remove the front panel

1. Open the CD tray by inserting a thin, pointed object into the emergency eject opening.
2. Slide the CD tray forward.
3. Remove the front cover of the CD tray by lifting it upwards.

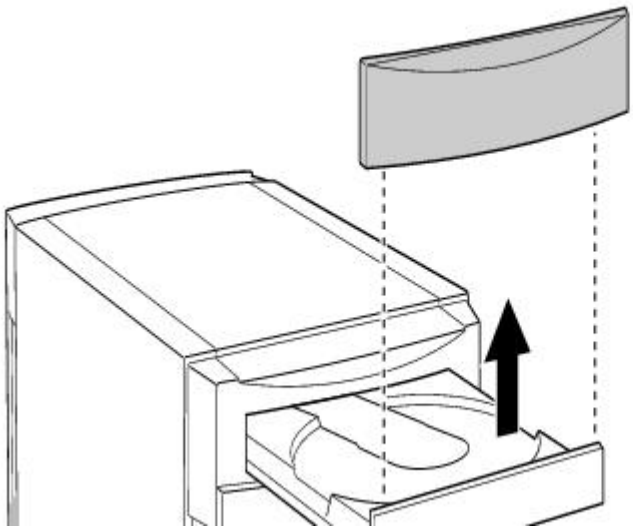

4. Press down on each of the two tabs on the bottom of the front panel to release the panel.
5. Pull the front panel forward to remove it.

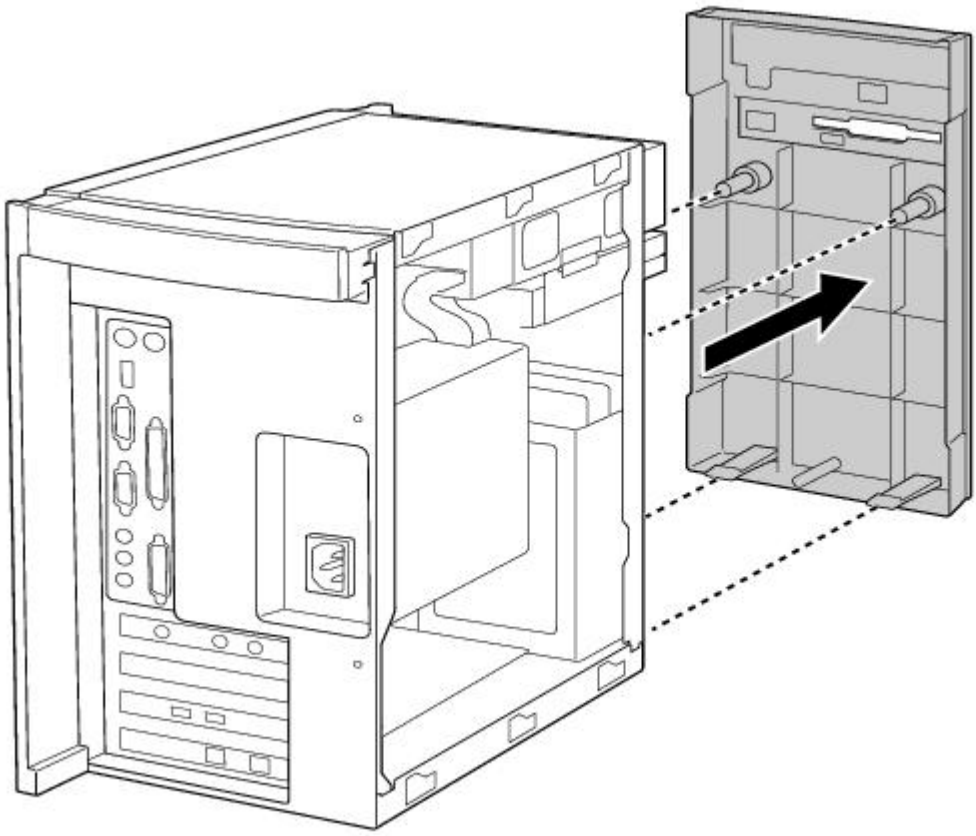

Detaching the Diskette Drive

To detach the diskette drive

1. Remove the front panel, as described in Removing the Front Panel.
2. Remove the two screws that secure the diskette drive to the front of the chassis.
3. Pull the diskette drive forward.

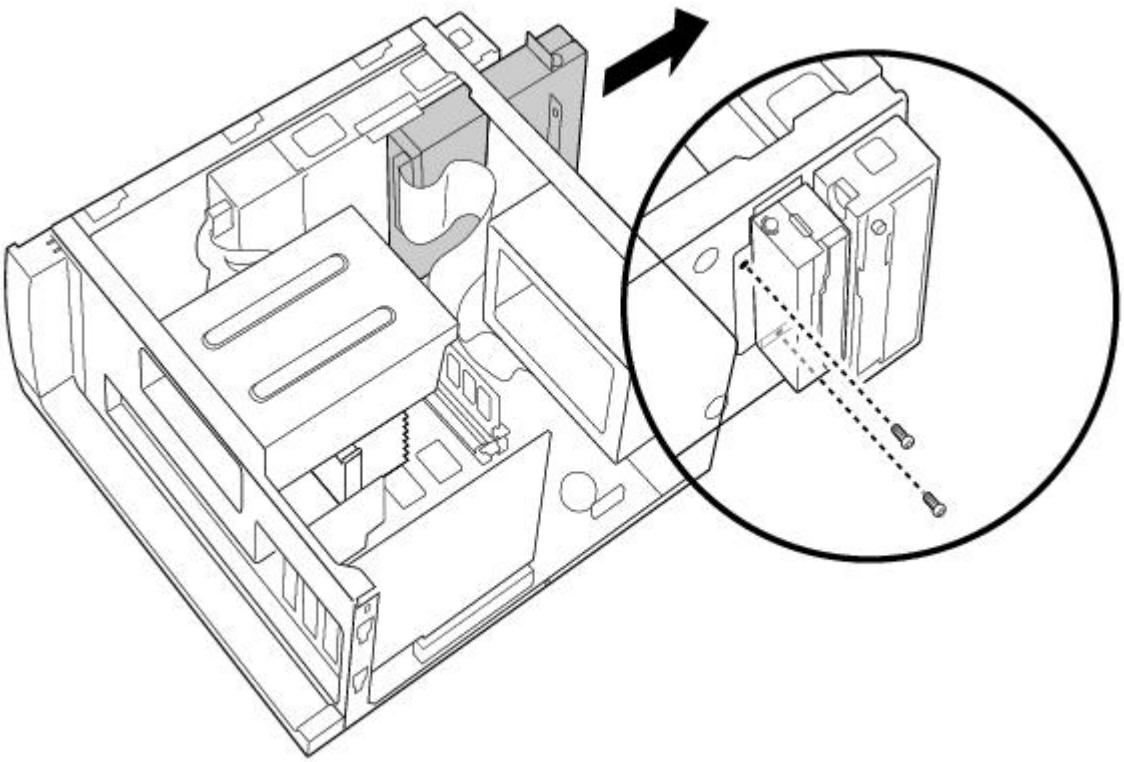

If you are adding memory, you do not need to completely remove the diskette drive or disconnect the cable.

Replacing the Diskette Drive

To replace the diskette drive

1. Push the diskette drive straight into the drive slot.
2. Replace the two screws that secure the diskette drive to the front of the chassis.
3. Replace the front panel, as described in Replacing the Front Panel.

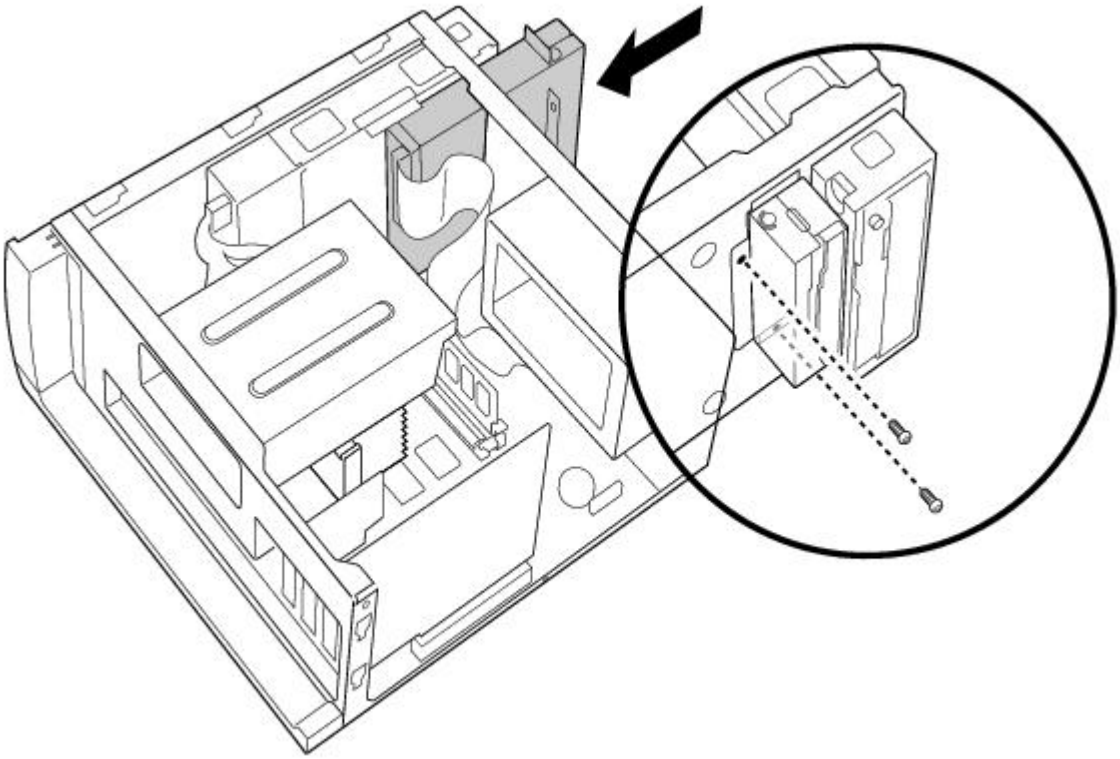

Replacing the Bottom Panel

To replace the bottom panel

1. Align the bottom panel with the screw hole on the bottom of the chassis.
2. Replace the screw that secures the bottom panel to the chassis.

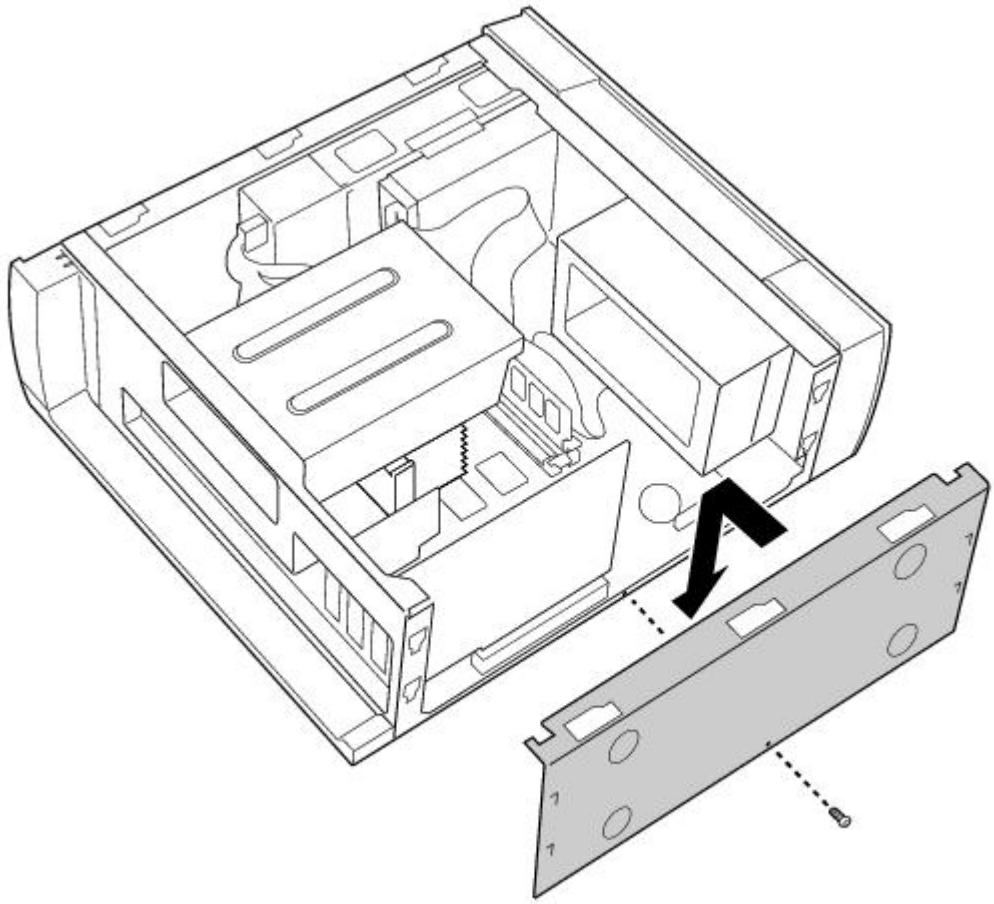

Replacing the Front Panel

To replace the front panel

1. Push the front panel straight onto the front of the chassis until it clicks into place.

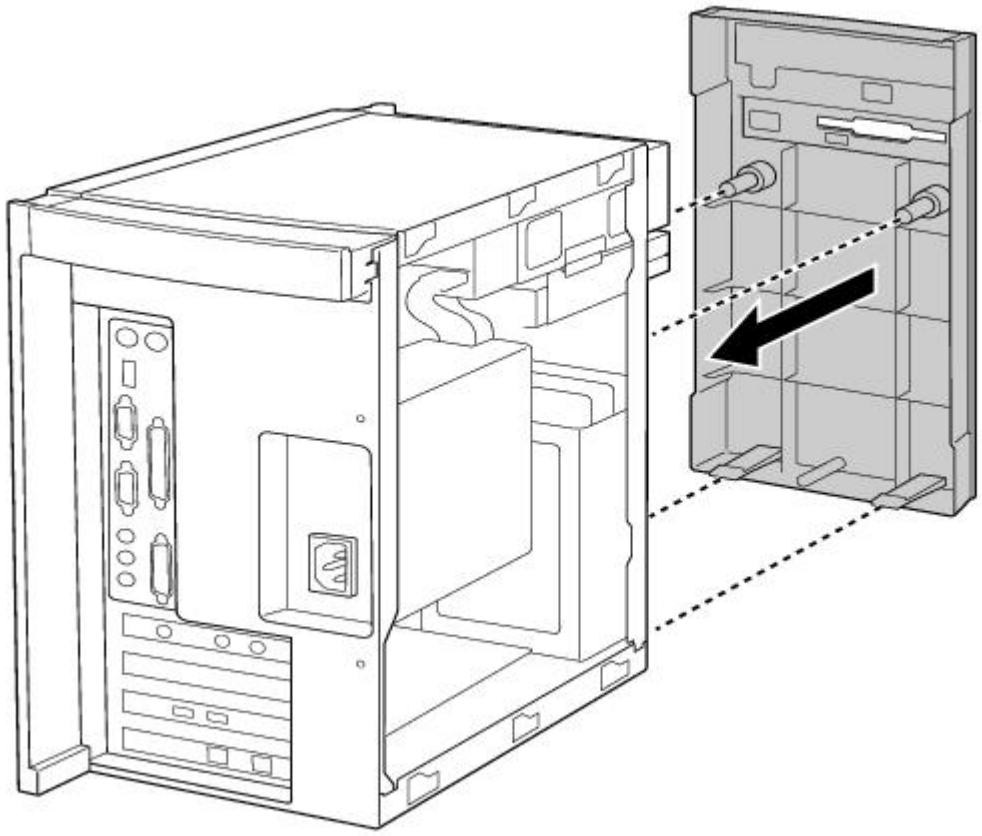

2. Replace the front cover of the CD tray by sliding it down onto the front of the open tray.
3. Close the CD tray.

Replacing the Left-Side Panel

To replace the left-side panel

1. Slide the panel forward until it stops.
2. Replace the two screws that secure the panel to the chassis.

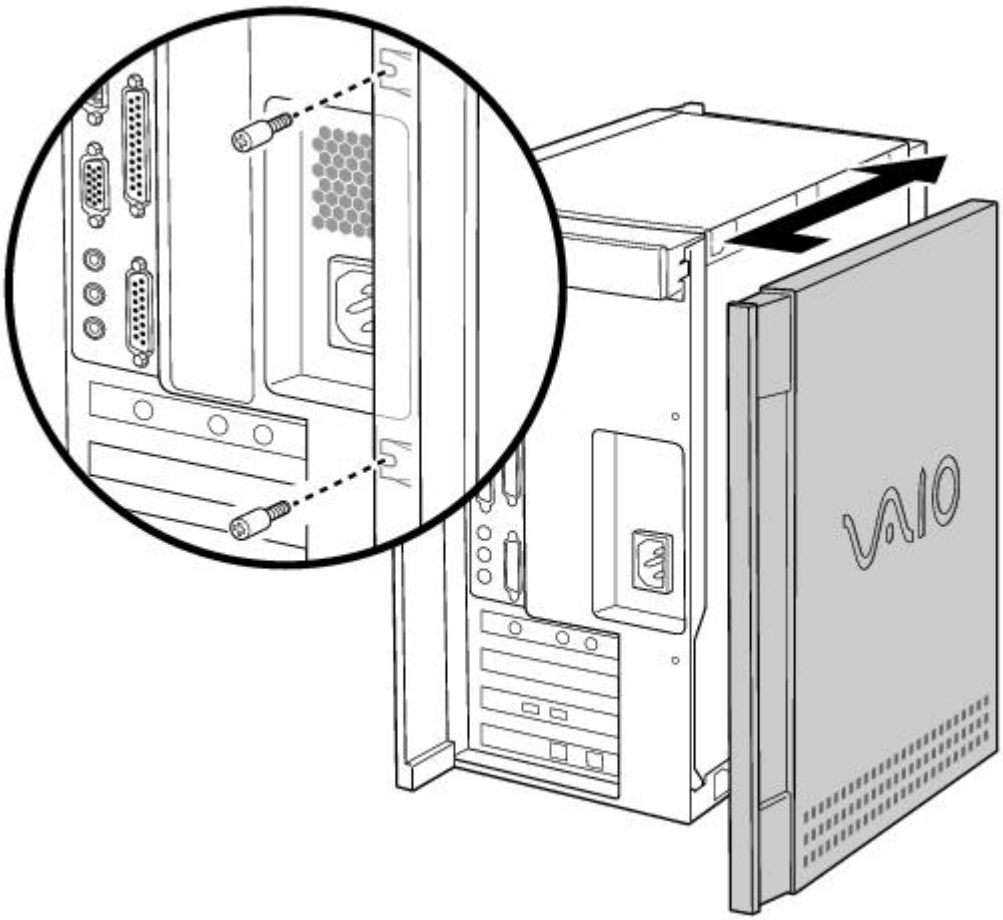

Upgrading and Maintaining Your VAIO Digital Studio Computer

In the future you may want to install additional boards to expand the functionality of your computer. This section describes how to open your computer and insert add-in boards, add memory, replace the lithium battery, and install an additional hard disk drive. For more information on upgrading your Sony computer, see the *VAIO Digital Studio Computer Reference Manual*. You can download this electronic document from the Sony Web site at http://www.sony.com/pcsupport.

The procedures in this section assume you are familiar with the general terminology associated with personal computers and with the safety practices and regulatory compliance required for using and modifying electronic equipment. Read Notes on Use before upgrading your Sony computer.

Always switch the power off before you open the system or connect your computer to peripheral equipment; otherwise, damage may occur to the integrated circuits in your computer.

Electrostatic discharge (ESD) can damage disk drives, add-in cards, and other components. Do the procedures described here only at an ESD workstation. If such a station is not available, do not work in a carpeted area and do not handle materials that produce or hold static electricity (cellophane wrappers, for example). Ground yourself by maintaining continuous contact with an unpainted metal portion of the chassis while performing the procedure.

Inserting an Add-in Board

You can add up to two additional PCI boards to the system.

Your VAIO Digital Studio Computer cannot accommodate PCI add-in boards exceeding 7.7" in length.

To insert an add-in board

Make sure you observe the proper safety precautions when you add boards to your Sony computer. See Notes on Use.

1. Shut down your computer and turn off all peripheral devices, such as your printer, display, and speakers.
2. Unplug your computer and any peripheral devices.
3. Remove the left-side panel as described in Removing the Left-Side Panel.
4. Identify the expansion slot where you want to insert the add-in board.
5. Remove the slot cover for the slot you have chosen.

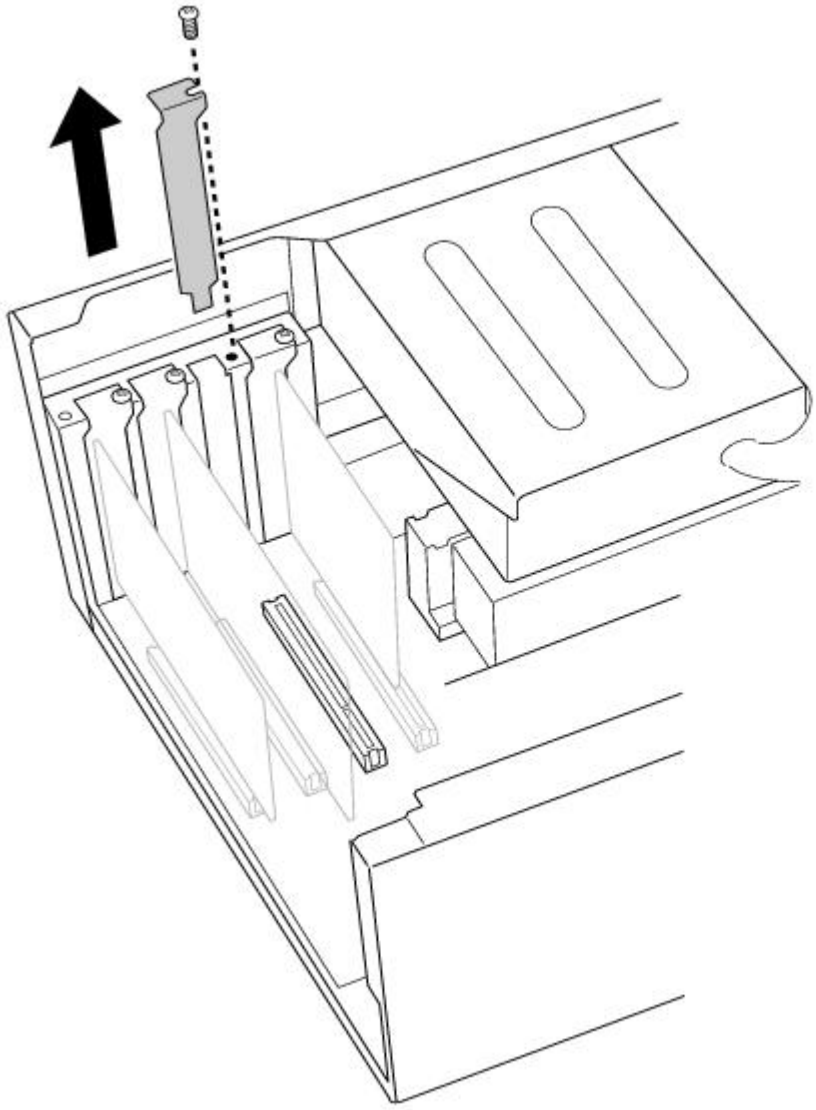

6. Install the add-in board by plugging it into the expansion slot on the system board. Attach any internal cables that the board requires (see the manual for the add-in board).

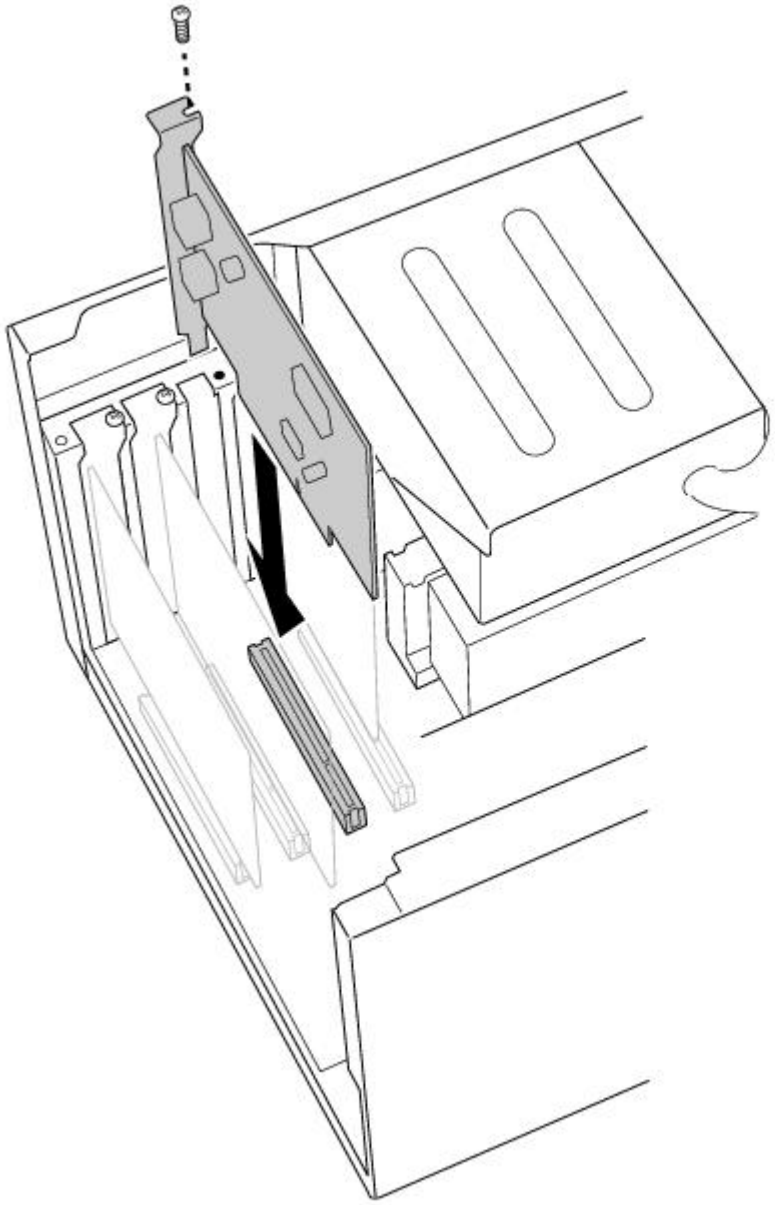

7. Replace the left-side panel as described in Replacing the Left-Side Panel.

Adding Memory

In order to increase your computer's memory, you may need to remove one of the factory-installed DIMMs and replace it with one of greater capacity. For details, see the *VAIO Digital Studio Computer Reference Manual*, which is available at Sony's Web site at http://www.sony.com/pcsupport.

For memory upgrades, use only 3.3V unbuffered 4-clock 64-bit 66 MHz SDRAM DIMM module Rev1.0 or 3.3V unbuffered 4-clock 72-bit 66 MHz SDRAM DIMM module Rev1.0. For more information on Digital Studio Computer compatible memory, call Sony at 1-888-4SONYPC (1-888-476-6972).

To install memory

Make sure you observe the proper safety precautions when you add DIMMs to your Sony computer. See Notes on Use .

1. Shut down your computer and turn off all peripheral devices, such as your printer, display, and speakers.
2. Unplug your computer and any peripheral devices.
3. Remove the left-side panel, bottom panel, and front panel, as described in Removing the Left-Side Panel. Then detach the diskette drive, as described in Detaching the Diskette Drive.

You do not need to completely remove the diskette drive in order to access the DIMM sockets.

4. If necessary, remove any cables, add-in cards, or other components to access the DIMM sockets.
5. Remove either (or both) of the factory-installed DIMMs.
6. Handle the DIMM only by the edges, and remove it from its anti-static package.
7. Locate the keys on the bottom edge of the DIMM .
8. Align the DIMM over the socket.

To avoid damaging the DIMM socket, move the DIMM socket tabs slightly outward to relieve pressure. The DIMM should then click easily into place.

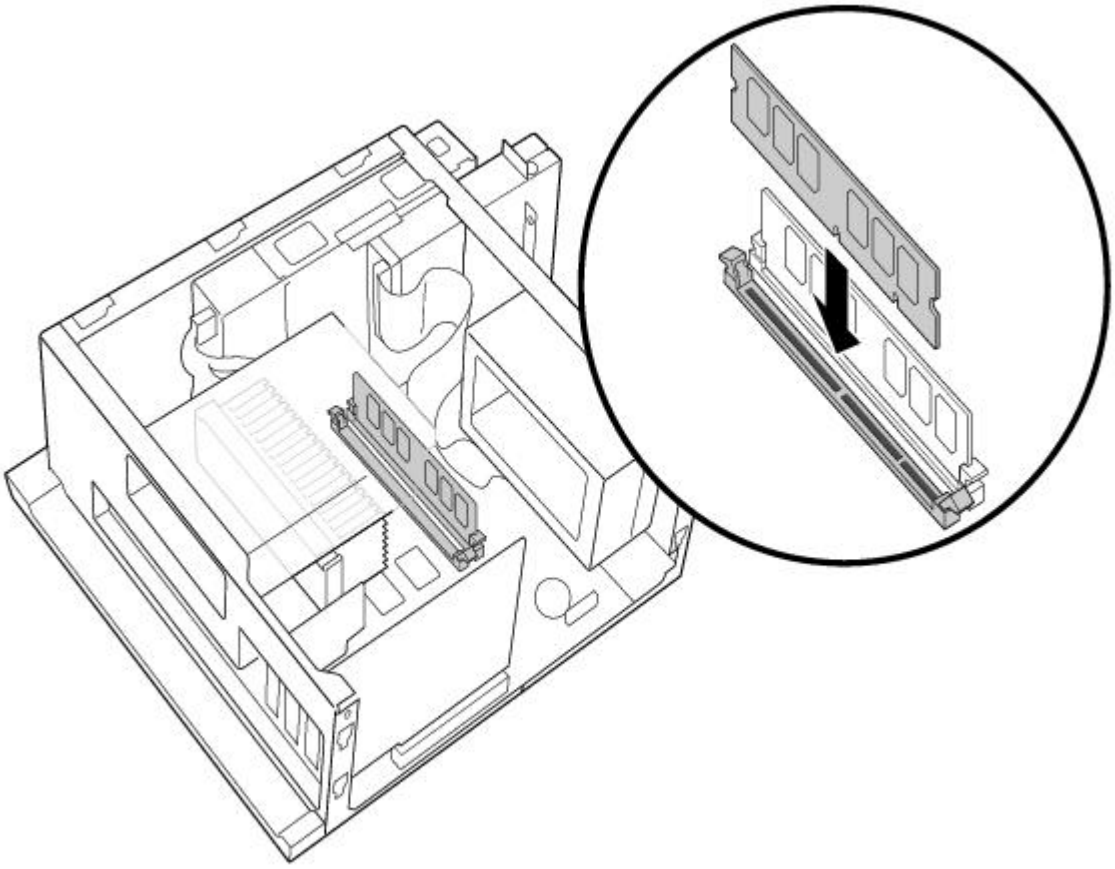

9. Firmly insert the bottom edge of the DIMM into the socket.
10. Press evenly against the DIMM's upper corners. The end latches snap into position automatically.
11. Reinstall any add-in cards or components you removed.
12. Replace the diskette drive and cover panels, as described in Replacing the Diskette Drive to Replacing the Left-Side Panel.

Replacing the Lithium Battery

After several years, when the lithium battery starts to weaken, the system settings stored in CMOS RAM, such as the date and time, may be wrong. When this occurs, you need to replace the lithium battery.

To replace the lithium battery

1. To run the Setup utility, press F3 when your computer is starting up. Then press F1 to run the BIOS setup utility.

2. Write down the current BIOS Setup options.
3. Shut down your computer and turn off all peripheral devices, such as your printer, display, and speakers. Unplug your computer.
4. Remove the left-side and bottom panels, as described in Removing the Left-Side Panel.
5. Install the new battery with the plus (+) side up.

There is danger of explosion if you replace the battery incorrectly. You must replace the battery only with a CR2032 type lithium battery. Discard used batteries according to the instructions on On Disposal of the Lithium Battery.

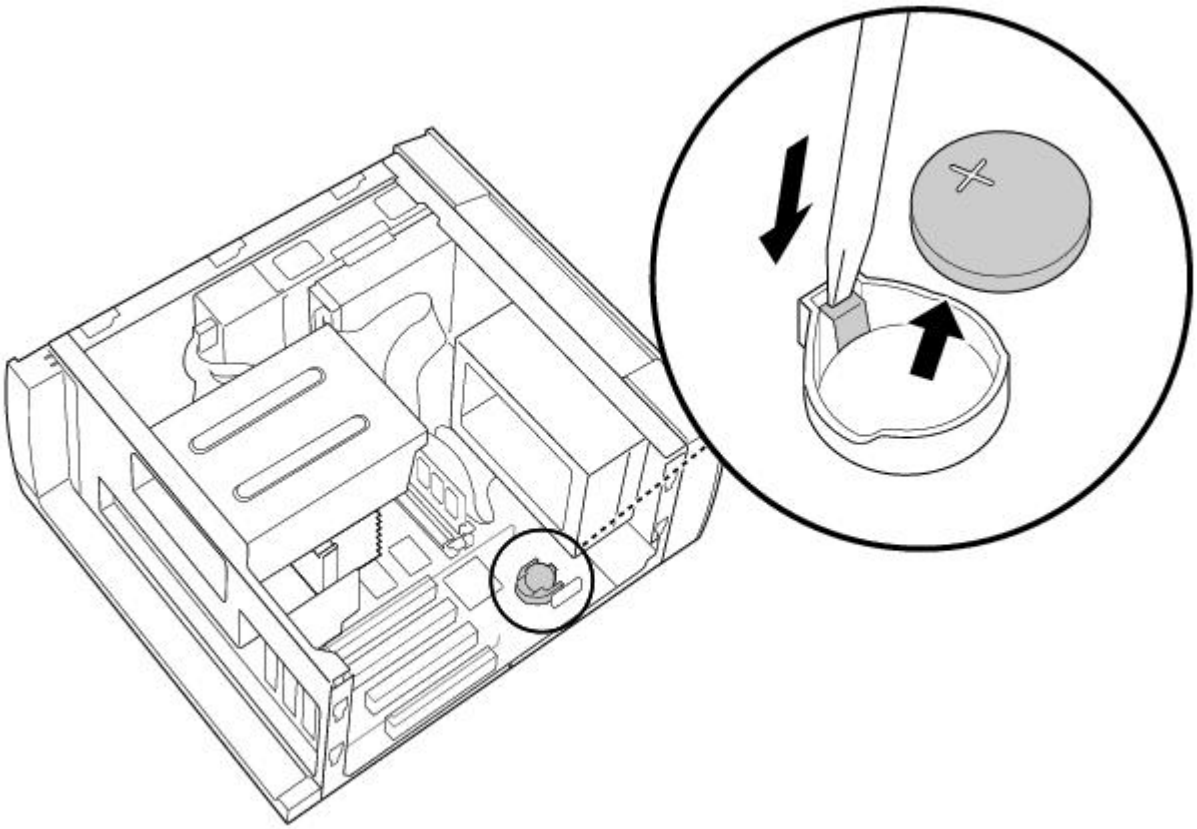

6. Replace the bottom and left-side panels, as described in Replacing the Bottom Panel.

The values stored in the CMOS memory are now reset to the factory default values. You must run the Setup utility to reset the date, time, passwords, and other options. See the VAIO Digital Studio Computer Reference Manual for details.

7. To run the Setup utility, press F3 when your computer is starting up. Then press F1 to run the BIOS setup utility.
8. Change the default values to the values you wrote down in step 2.
9. Save your Setup changes, and then exit the Setup utility.

Installing an Internal Hard Disk Drive

Your VAIO Digital Studio Computer comes with an available bay to hold an additional hard disk drive. The drive you install must not require front panel access. The hard disk drive access light blinks when either internal drive is active.

Before opening the system unit, save any open files, exit Windows, turn off the power of the computer and all attached peripherals, and then unplug the power cord.

1. Configure the jumpers on the new drive as a primary slave (see your drive's documentation for

configuration instructions).

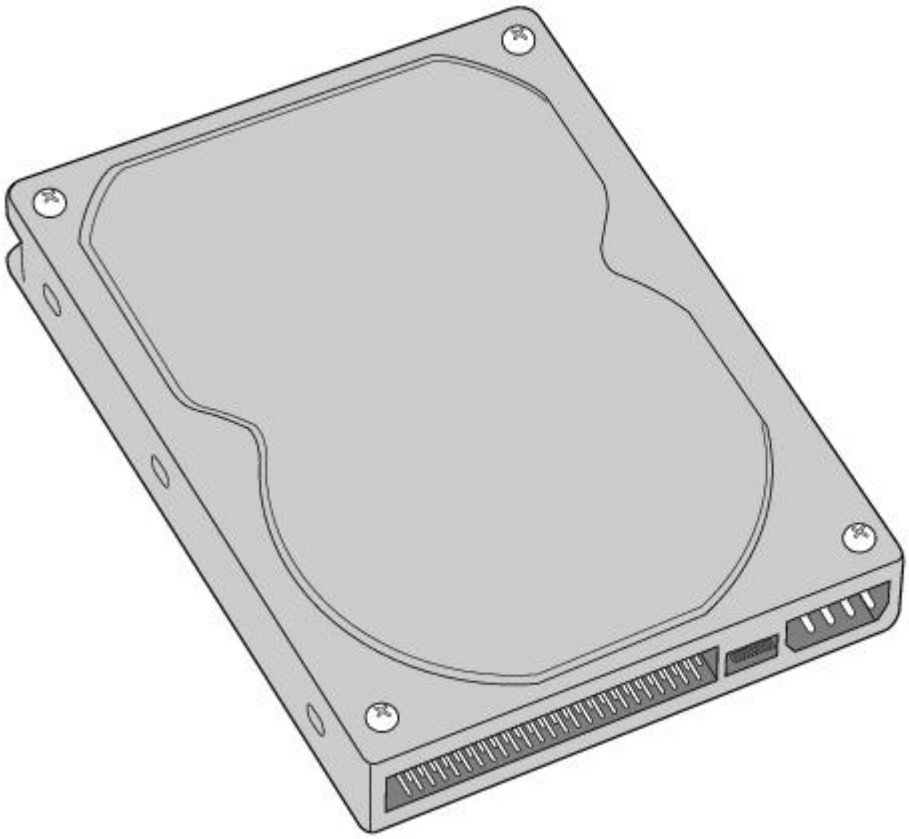

2. Remove the left-side panel, as described in Removing the Left-Side Panel.
3. Remove the front panel, as described in Removing the Front Panel.
4. Remove the bottom panel, as described in Removing the Bottom Panel.
5. Lay the system on its right side (left side faces up-see diagram that follows).
6. Remove the two screws that secure the drive holder.
7. Slide the drive holder forward and then out.

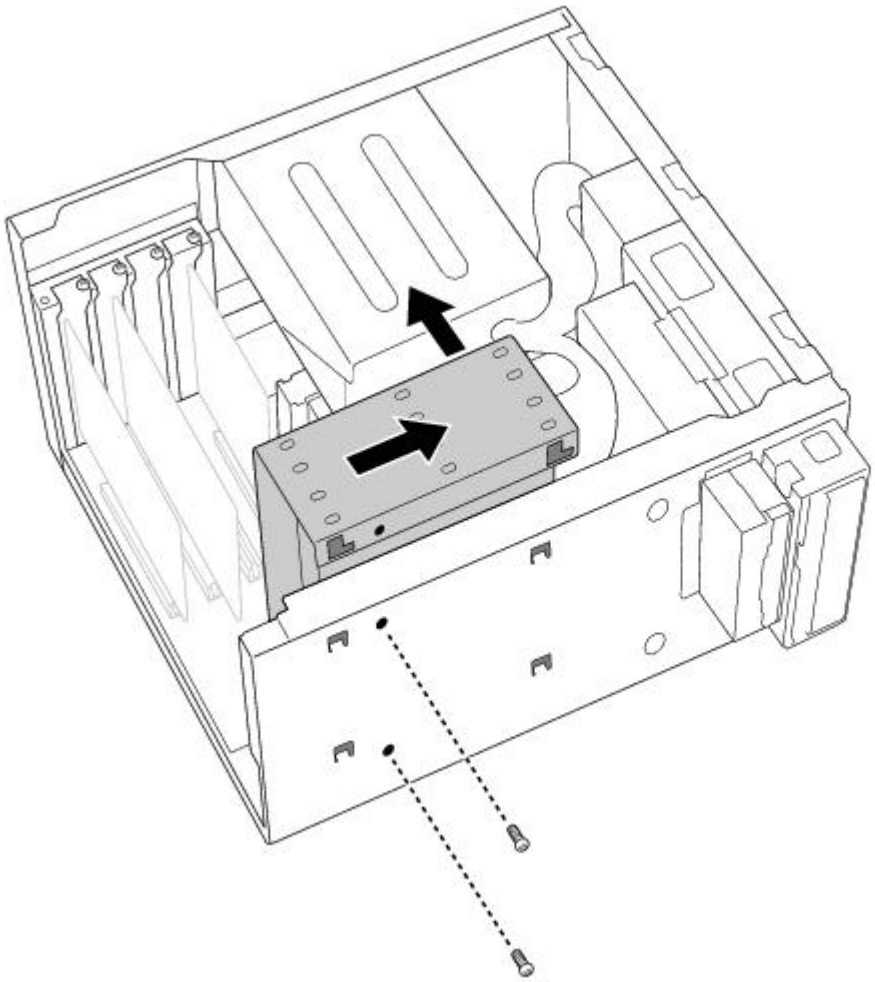

8. Place the drive holder upside down on top of the power supply.

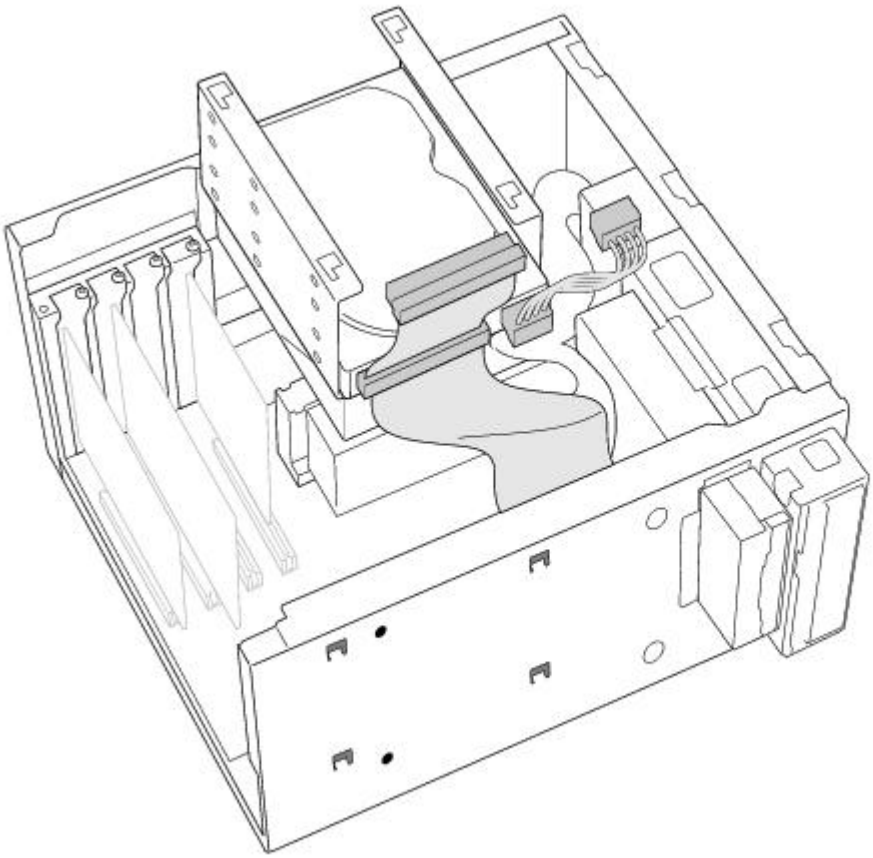

9. Slide the new drive into the drive holder and align the holes on each side of the drive bay.

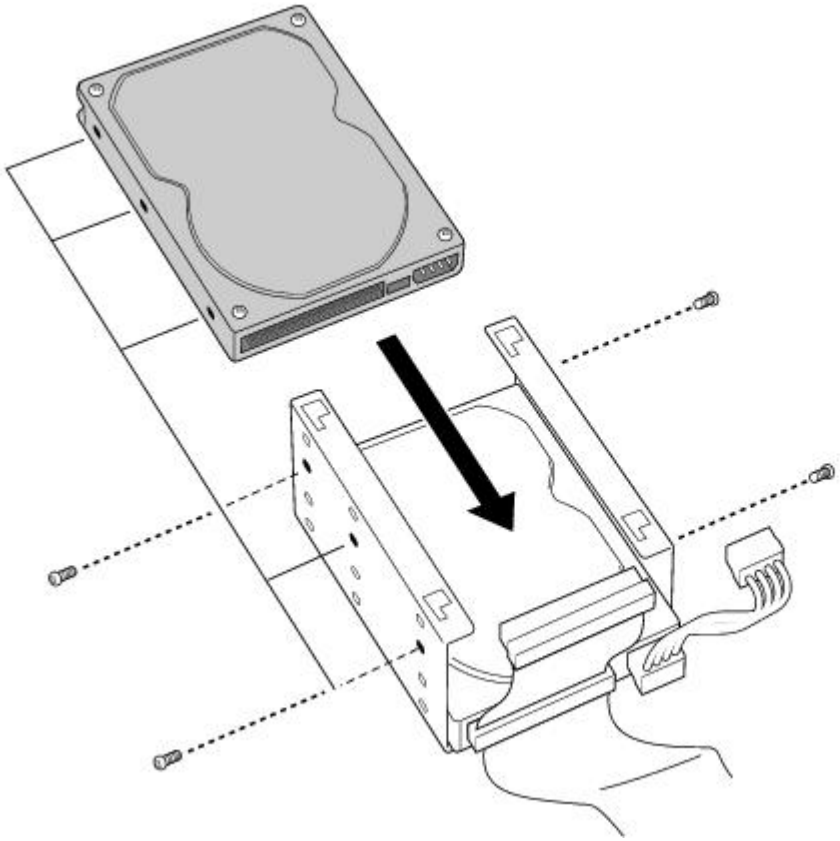

10. Secure the drive to the drive holder using any two of the three holes on each side of the drive holder (screws are provided with the new drive). Do not overtighten the screws.
11. Connect the second drive connector to the new drive.
12. Connect the second power connector to the new drive.

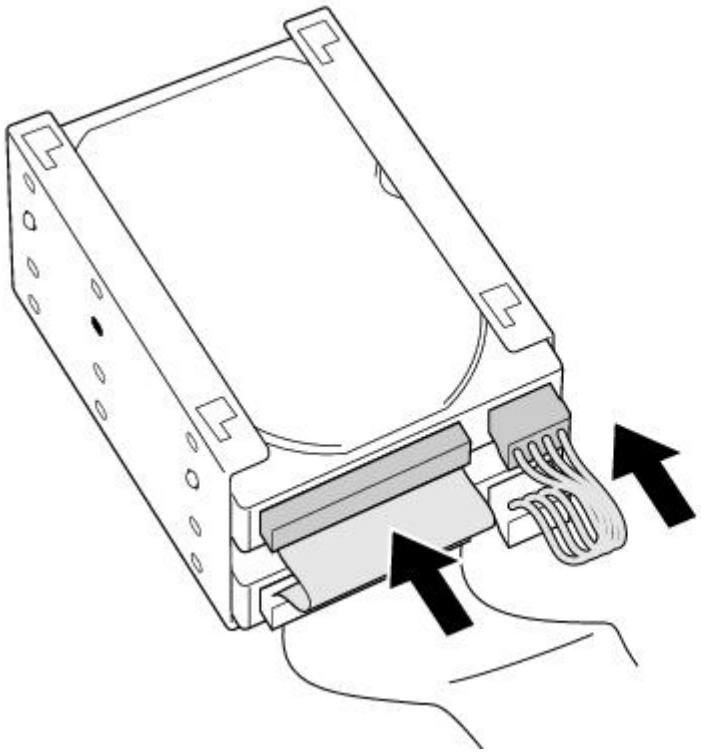

13. Place the drive holder against the inside of the front chassis and slide it back. Be sure to align the slots on the drive holder with the tabs on the inside of the chassis. Be sure to slide the drive holder back so that the tabs slip into the notch at the bottom of the slot.

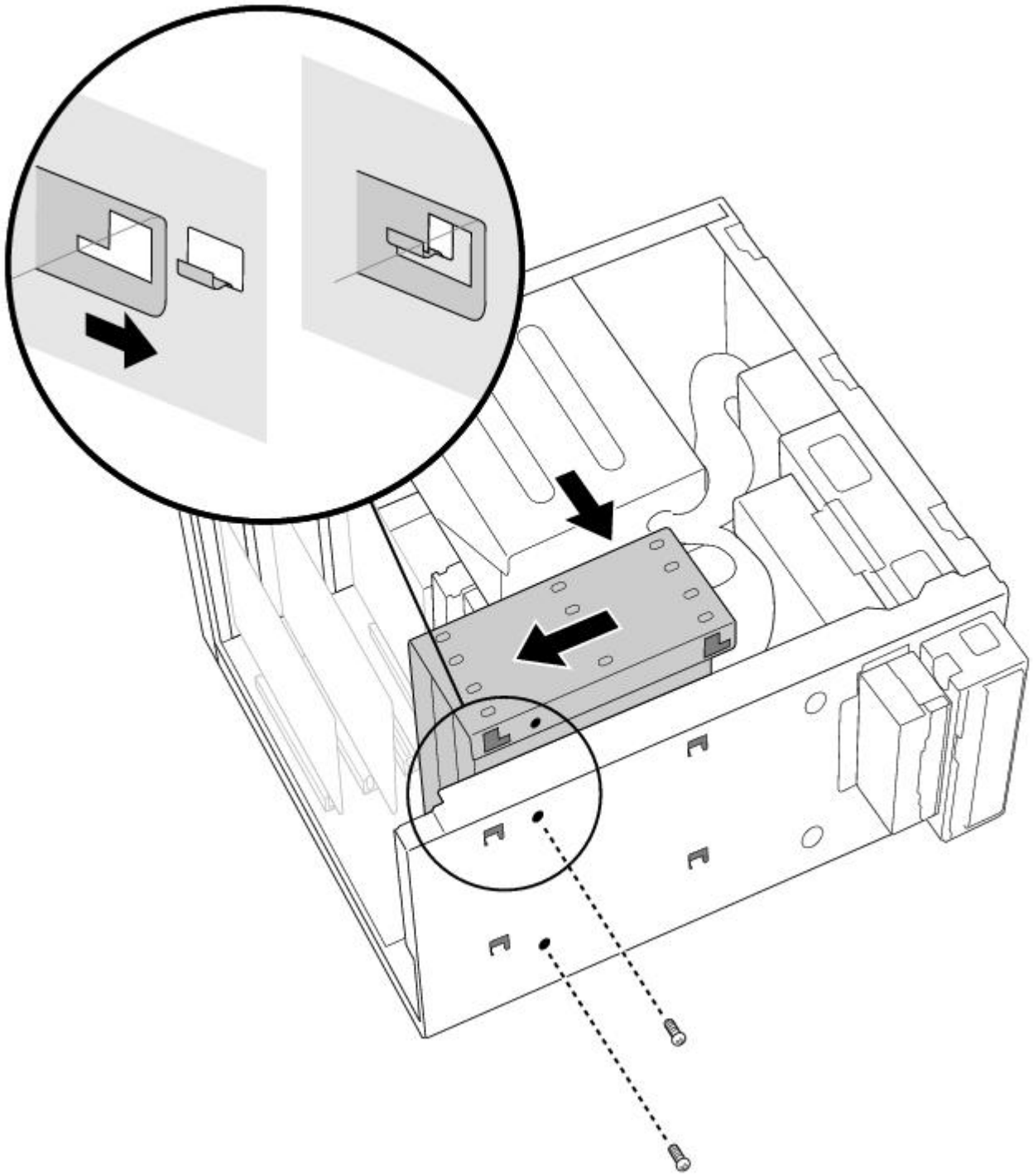

14. Replace the two screws that secure the holder to the chassis.
15. Replace the bottom panel, as described in Replacing the Bottom Panel.
16. Replace the front panel, as described in Replacing the Front Panel.
17. Replace the left-side panel, as described in Replacing the Left-Side Panel.
18. Reconnect the power cord and then turn on your computer.

Your computer automatically recognizes the new drive and configures itself accordingly when you turn it on. Format and partition the new drive following the instructions provided with the drive.

Removing the Left-Side Panel

To remove the left-side panel

1. Remove the two screws that secure the panel to the chassis.
2. Slide the panel back until it stops.
3. Pull the panel straight out to remove it.

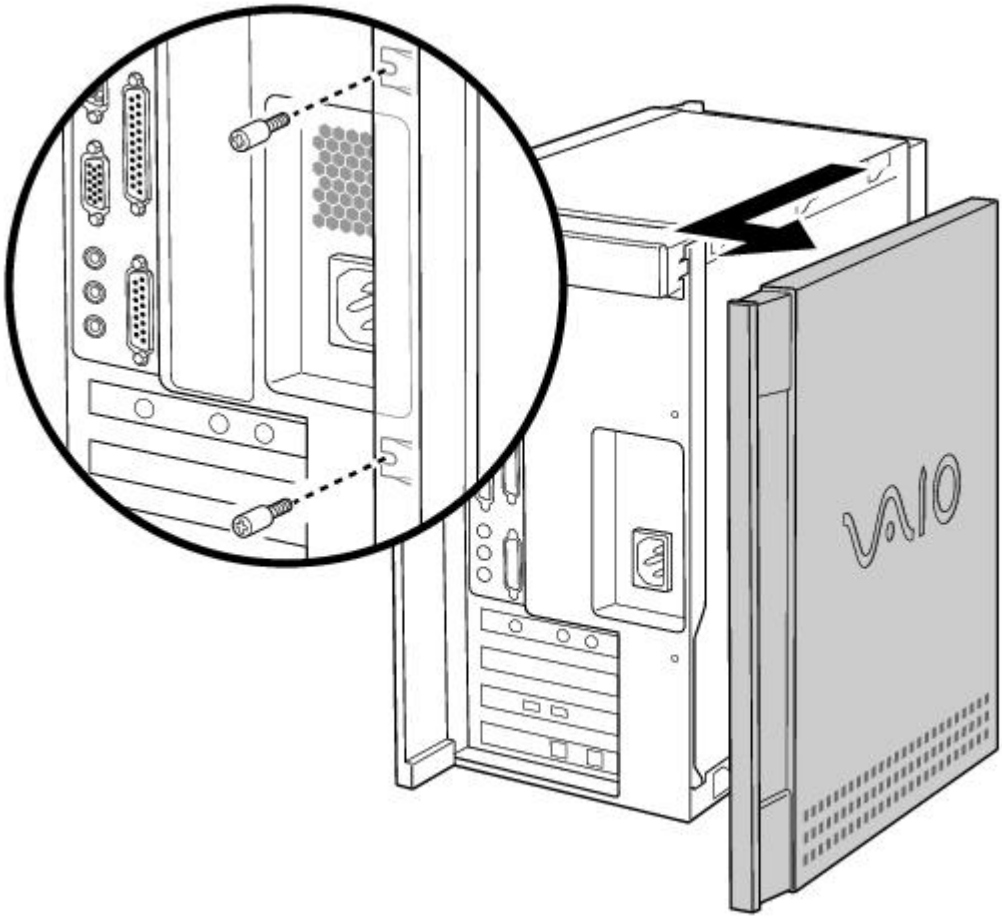

Removing the Bottom Panel

To remove the bottom panel

1. Remove the screw that secures the bottom panel to the chassis.
2. Pull the bottom panel straight out to remove it.

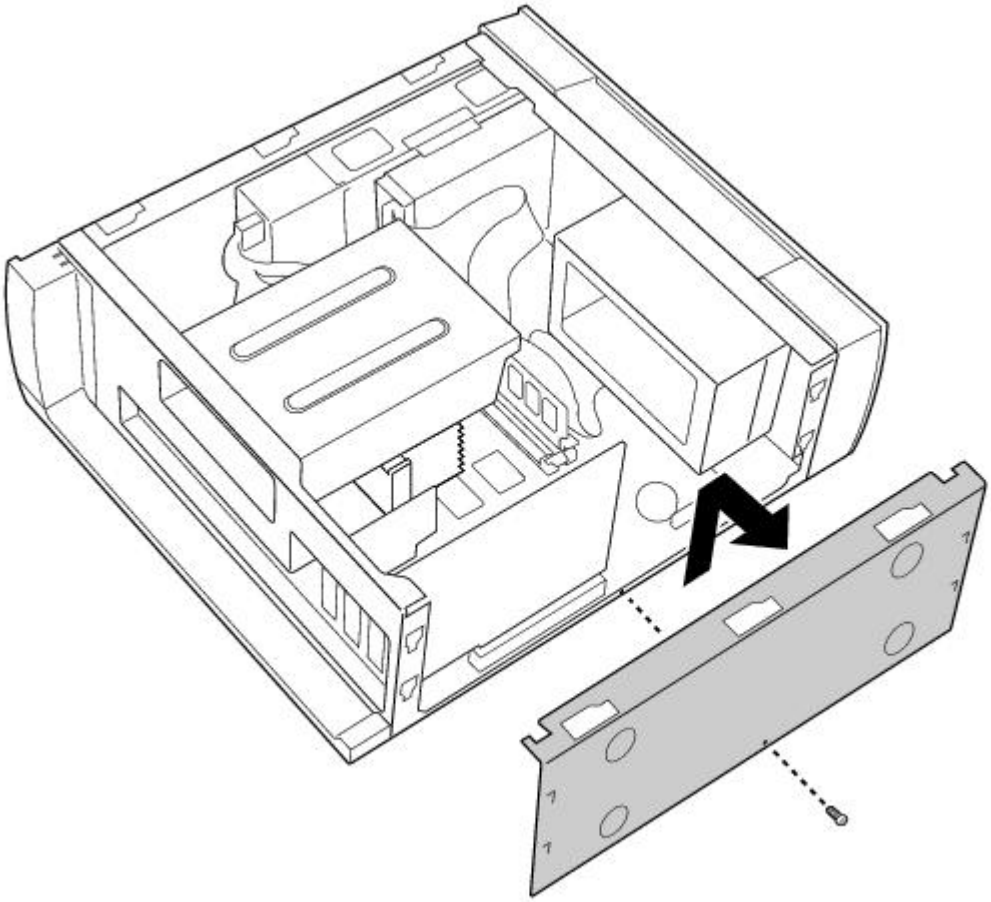

Removing the Front Panel

To remove the front panel

1. Open the CD tray by inserting a thin, pointed object into the emergency eject opening.
2. Slide the CD tray forward.
3. Remove the front cover of the CD tray by lifting it upwards.

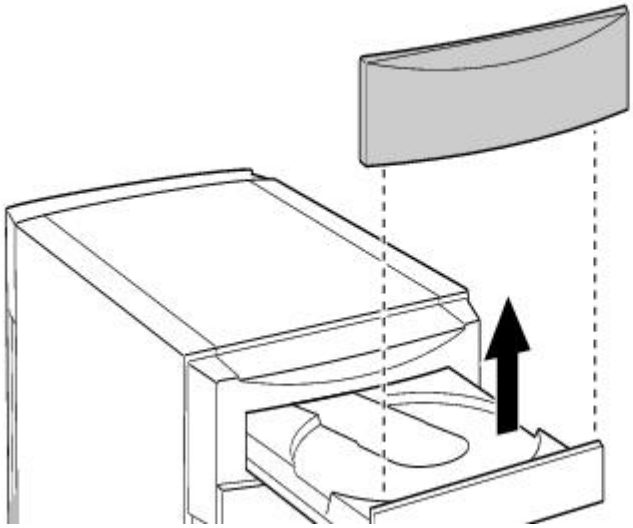

4. Press down on each of the two tabs on the bottom of the front panel to release the panel.
5. Pull the front panel forward to remove it.

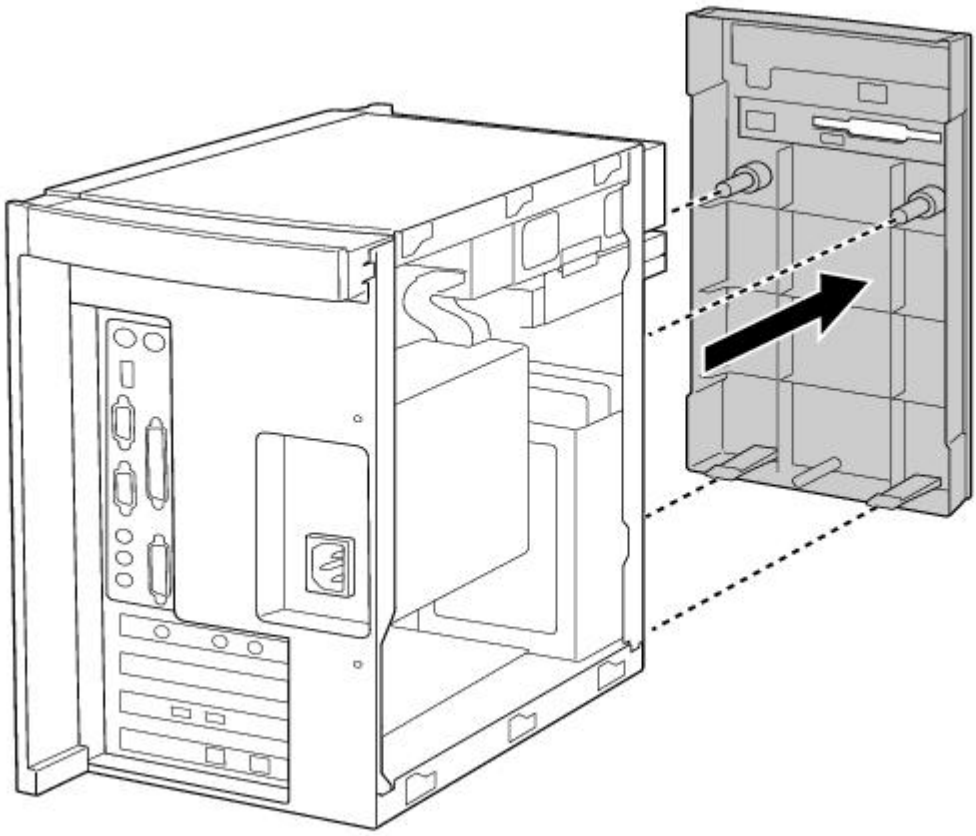

Detaching the Diskette Drive

To detach the diskette drive

1. Remove the front panel, as described in Removing the Front Panel.
2. Remove the two screws that secure the diskette drive to the front of the chassis.
3. Pull the diskette drive forward.

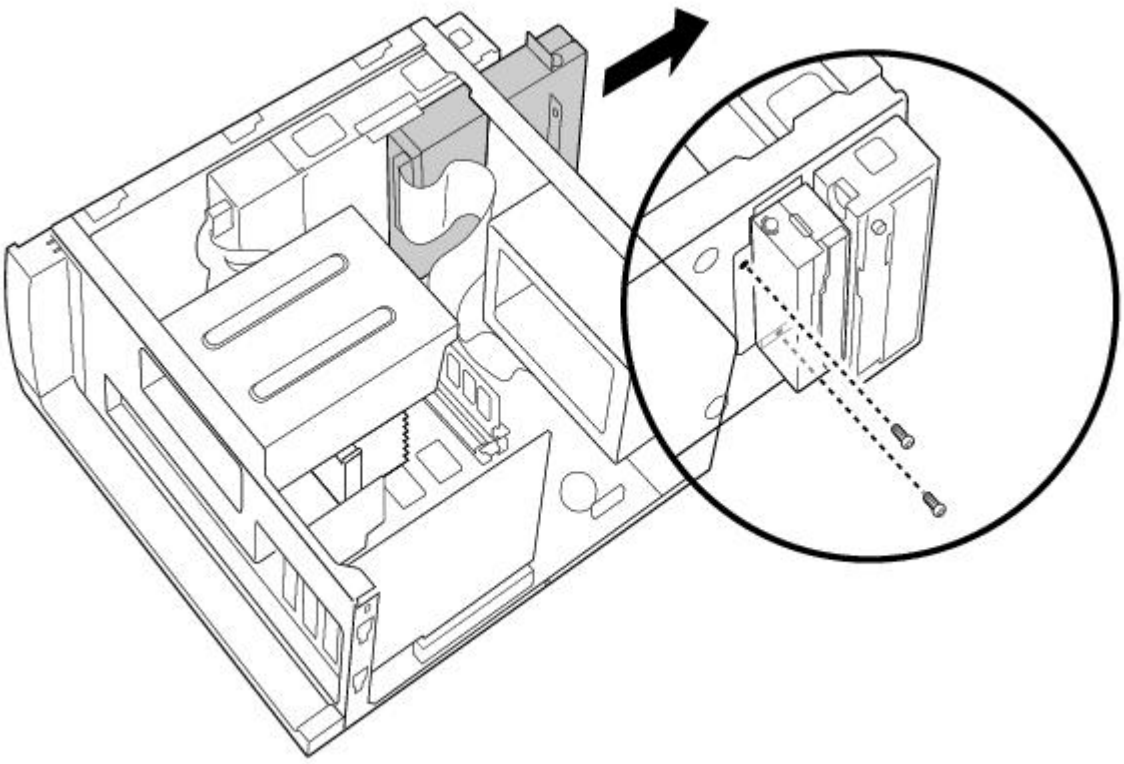

If you are adding memory, you do not need to completely remove the diskette drive or disconnect the cable.

Replacing the Diskette Drive

To replace the diskette drive

1. Push the diskette drive straight into the drive slot.
2. Replace the two screws that secure the diskette drive to the front of the chassis.
3. Replace the front panel, as described in Replacing the Front Panel.

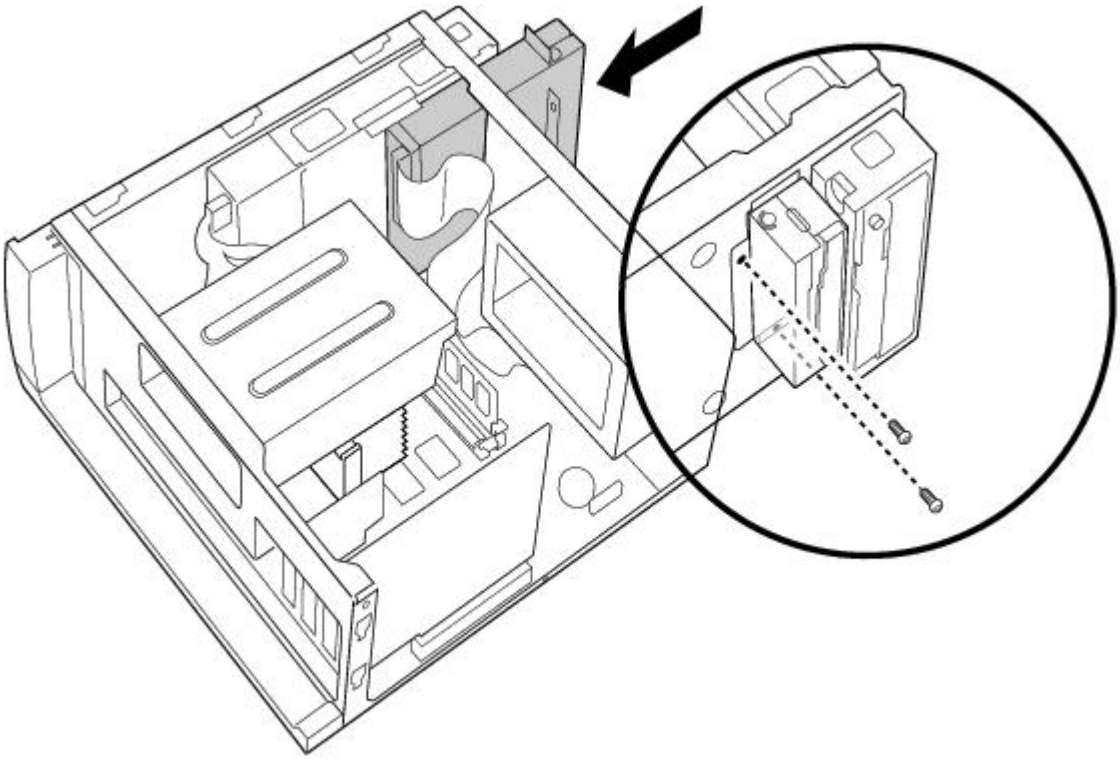

Replacing the Bottom Panel

To replace the bottom panel

1. Align the bottom panel with the screw hole on the bottom of the chassis.
2. Replace the screw that secures the bottom panel to the chassis.

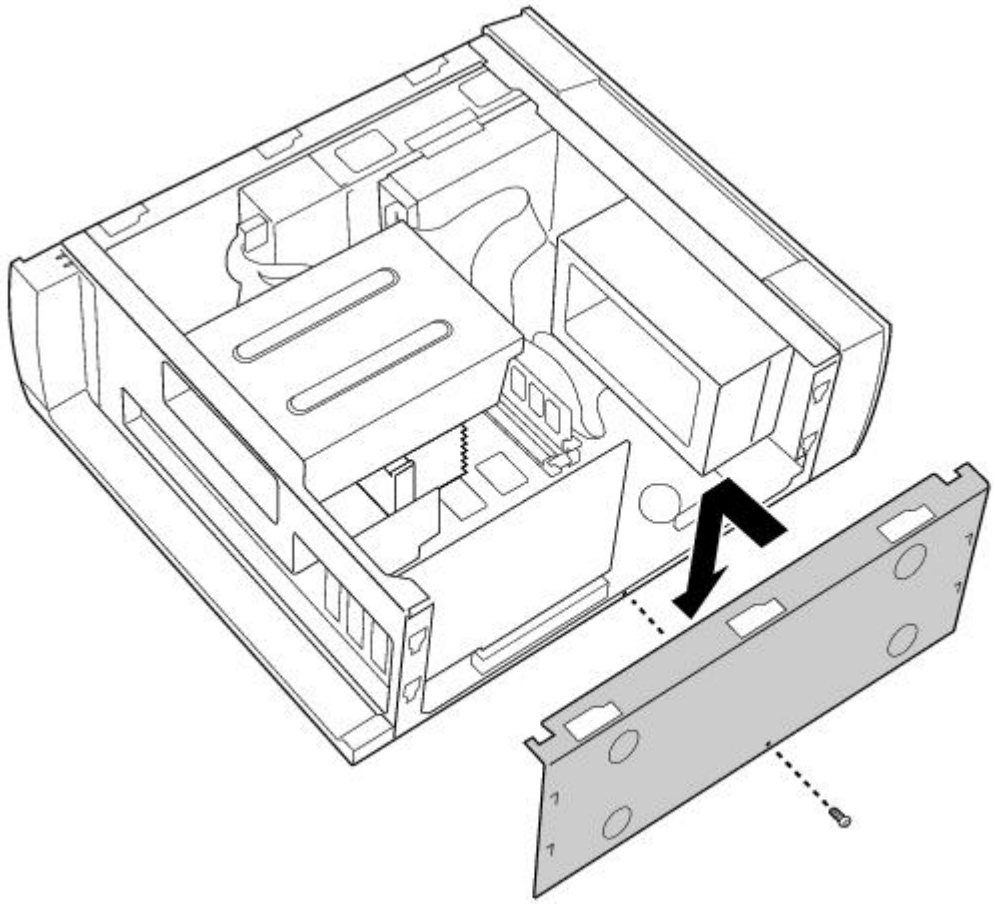

Replacing the Front Panel

To replace the front panel

1. Push the front panel straight onto the front of the chassis until it clicks into place.

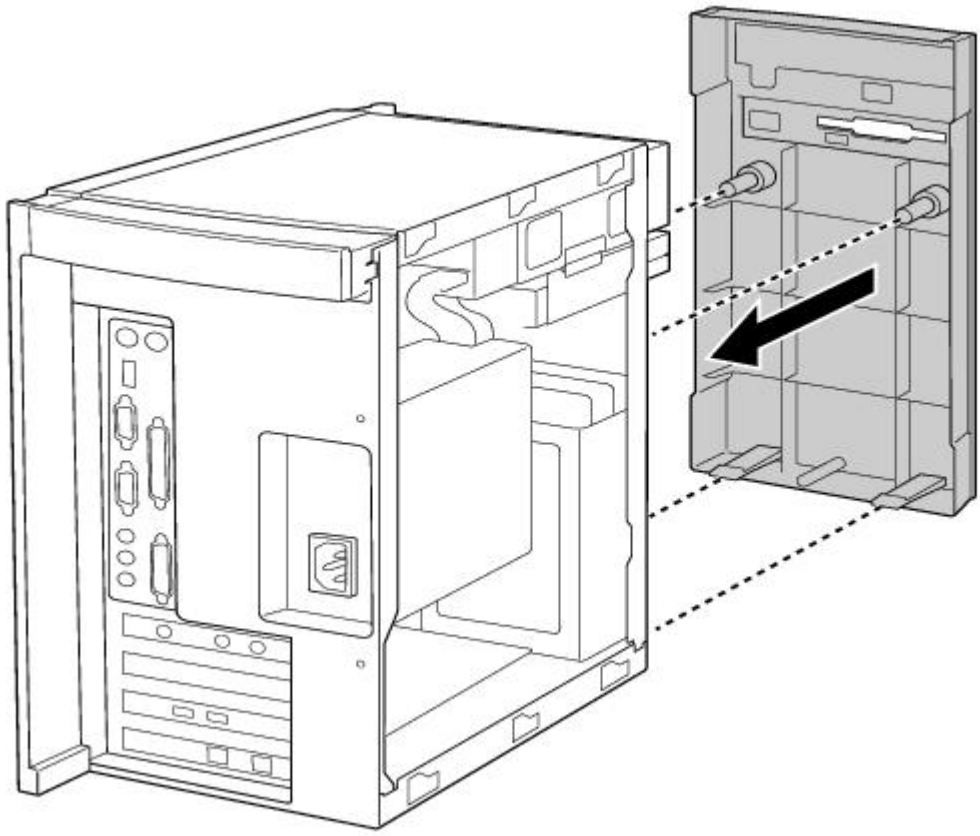

2. Replace the front cover of the CD tray by sliding it down onto the front of the open tray.
3. Close the CD tray.

Replacing the Left-Side Panel

To replace the left-side panel

1. Slide the panel forward until it stops.
2. Replace the two screws that secure the panel to the chassis.

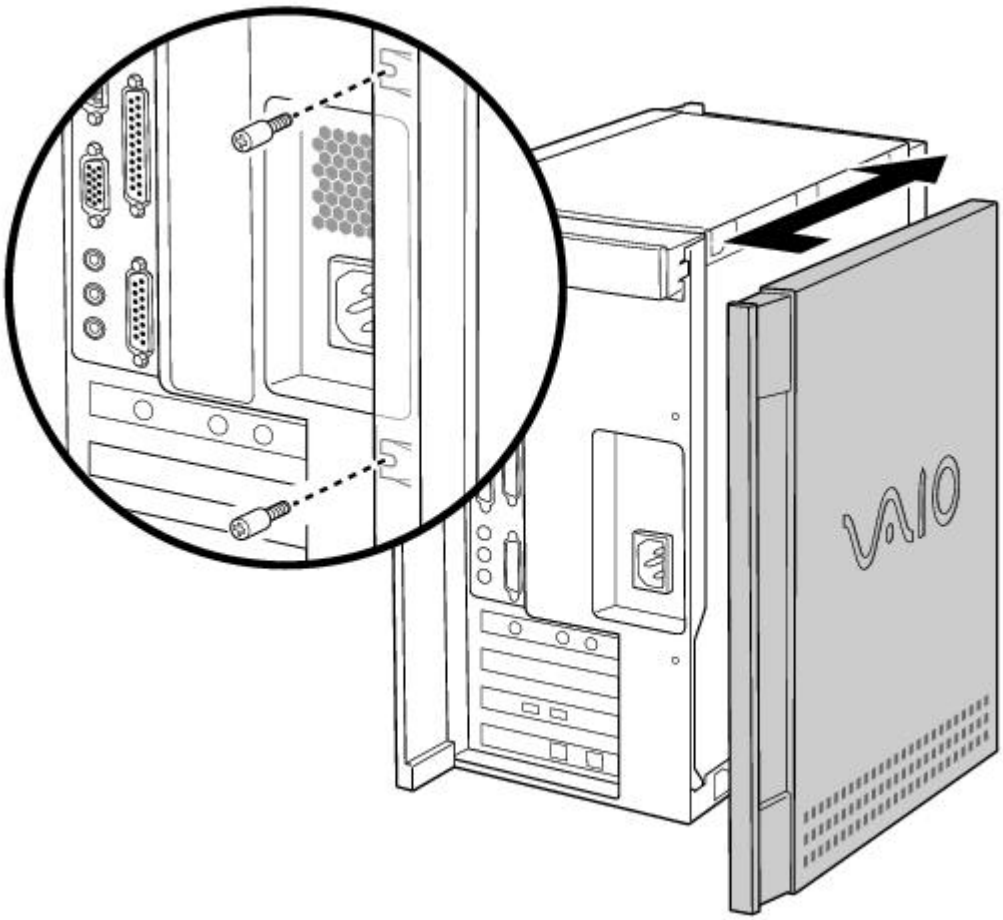

Upgrading and Maintaining Your VAIO Digital Studio Computer

In the future you may want to install additional boards to expand the functionality of your computer. This section describes how to open your computer and insert add-in boards, add memory, replace the lithium battery, and install an additional hard disk drive. For more information on upgrading your Sony computer, see the *VAIO Digital Studio Computer Reference Manual*. You can download this electronic document from the Sony Web site at http://www.sony.com/pcsupport.

The procedures in this section assume you are familiar with the general terminology associated with personal computers and with the safety practices and regulatory compliance required for using and modifying electronic equipment. Read Notes on Use before upgrading your Sony computer.

Always switch the power off before you open the system or connect your computer to peripheral equipment; otherwise, damage may occur to the integrated circuits in your computer.

Electrostatic discharge (ESD) can damage disk drives, add-in cards, and other components. Do the procedures described here only at an ESD workstation. If such a station is not available, do not work in a carpeted area and do not handle materials that produce or hold static electricity (cellophane wrappers, for example). Ground yourself by maintaining continuous contact with an unpainted metal portion of the chassis while performing the procedure.

Inserting an Add-in Board

You can add up to two additional PCI boards to the system.

Your VAIO Digital Studio Computer cannot accommodate PCI add-in boards exceeding 7.7" in length.

To insert an add-in board

Make sure you observe the proper safety precautions when you add boards to your Sony computer. See Notes on Use.

1. Shut down your computer and turn off all peripheral devices, such as your printer, display, and speakers.
2. Unplug your computer and any peripheral devices.
3. Remove the left-side panel as described in Removing the Left-Side Panel.
4. Identify the expansion slot where you want to insert the add-in board.
5. Remove the slot cover for the slot you have chosen.

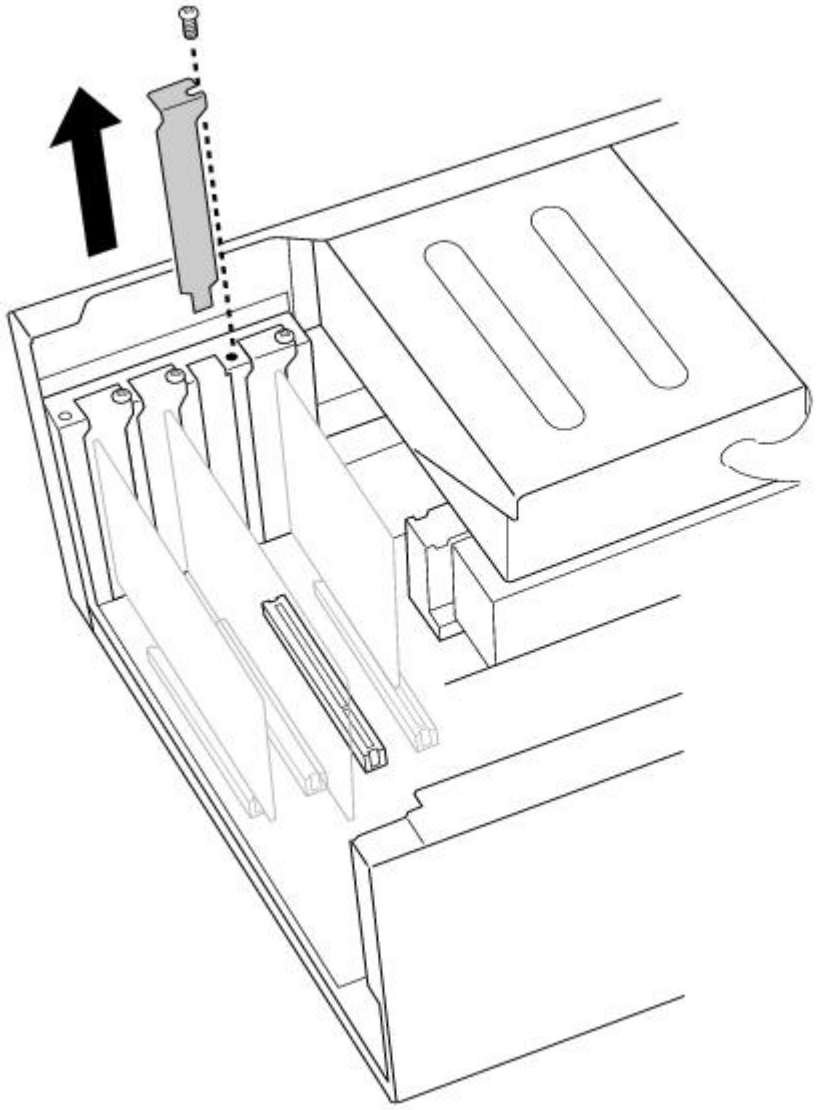

6. Install the add-in board by plugging it into the expansion slot on the system board. Attach any internal cables that the board requires (see the manual for the add-in board).

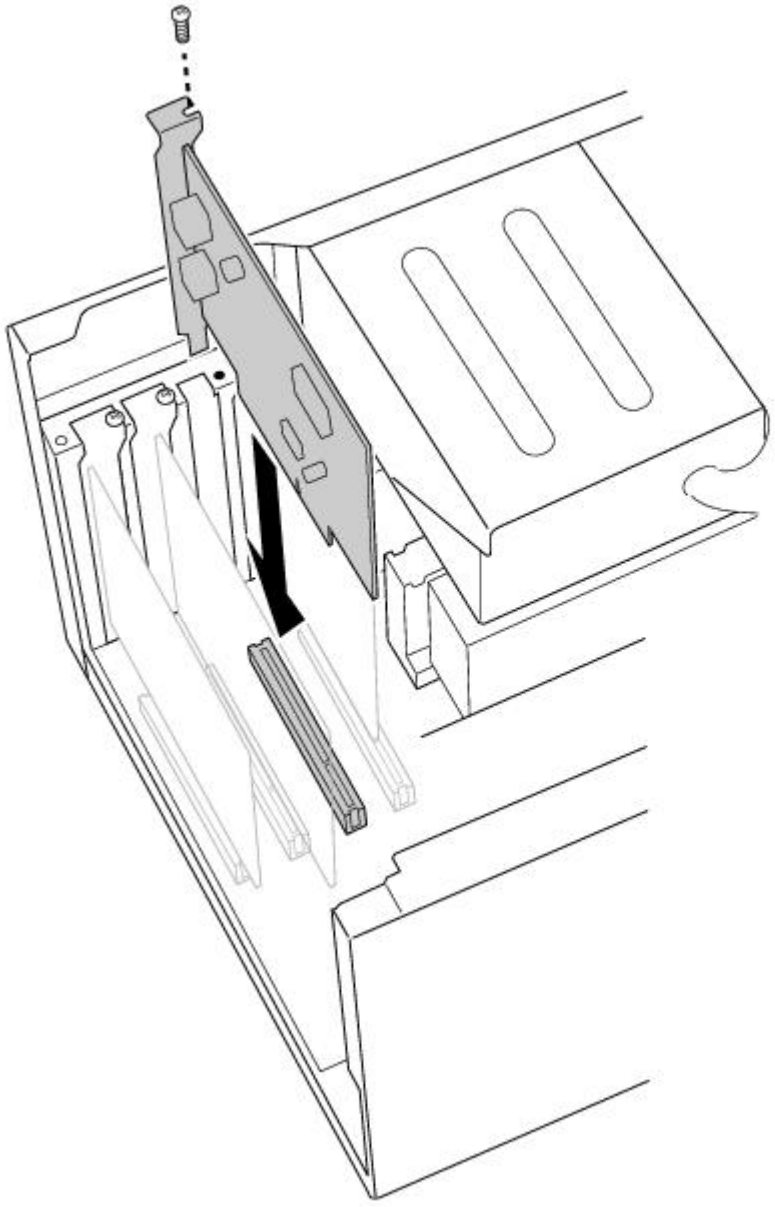

7. Replace the left-side panel as described in Replacing the Left-Side Panel.

Adding Memory

In order to increase your computer's memory, you may need to remove one of the factory-installed DIMMs and replace it with one of greater capacity. For details, see the *VAIO Digital Studio Computer Reference Manual*, which is available at Sony's Web site at http://www.sony.com/pcsupport.

For memory upgrades, use only 3.3V unbuffered 4-clock 64-bit 66 MHz SDRAM DIMM module Rev1.0 or 3.3V unbuffered 4-clock 72-bit 66 MHz SDRAM DIMM module Rev1.0. For more information on Digital Studio Computer compatible memory, call Sony at 1-888-4SONYPC (1-888-476-6972).

To install memory

Make sure you observe the proper safety precautions when you add DIMMs to your Sony computer. See Notes on Use .

1. Shut down your computer and turn off all peripheral devices, such as your printer, display, and speakers.
2. Unplug your computer and any peripheral devices.
3. Remove the left-side panel, bottom panel, and front panel, as described in Removing the Left-Side Panel. Then detach the diskette drive, as described in Detaching the Diskette Drive.

You do not need to completely remove the diskette drive in order to access the DIMM sockets.

4. If necessary, remove any cables, add-in cards, or other components to access the DIMM sockets.
5. Remove either (or both) of the factory-installed DIMMs.
6. Handle the DIMM only by the edges, and remove it from its anti-static package.
7. Locate the keys on the bottom edge of the DIMM .
8. Align the DIMM over the socket.

To avoid damaging the DIMM socket, move the DIMM socket tabs slightly outward to relieve pressure. The DIMM should then click easily into place.

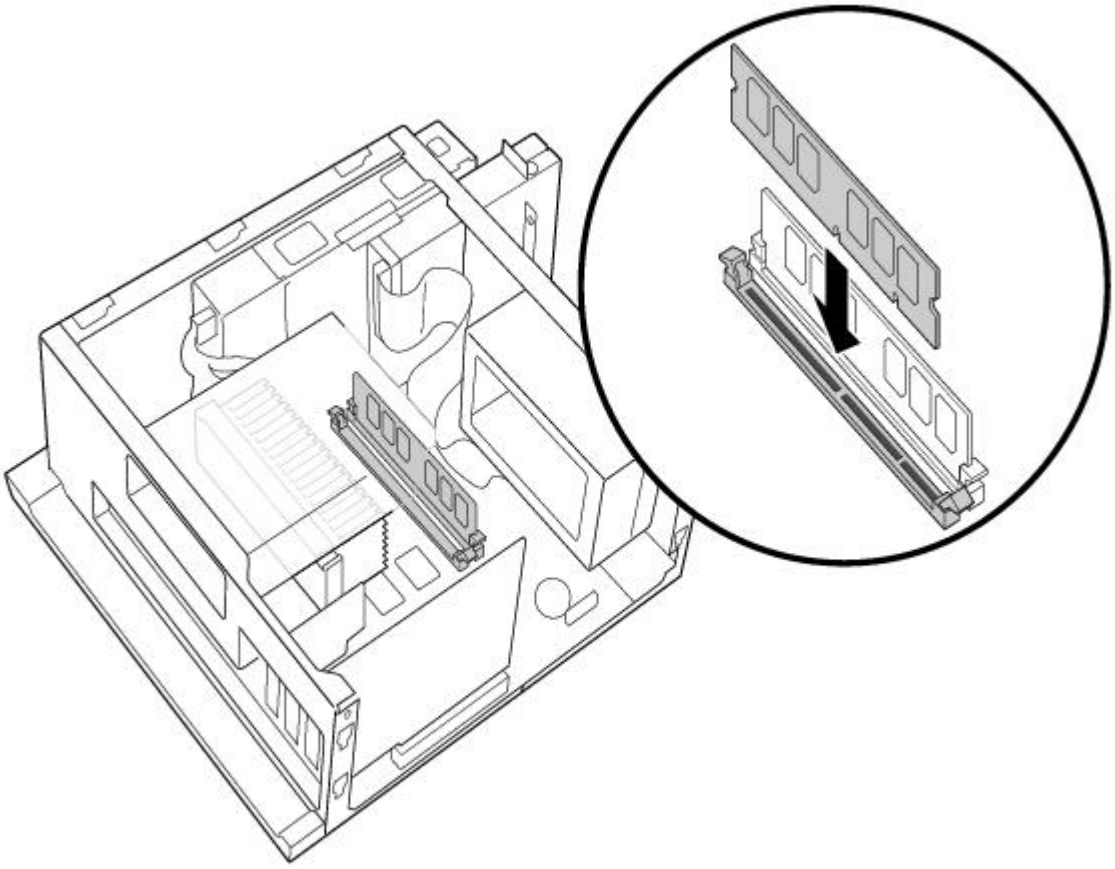

9. Firmly insert the bottom edge of the DIMM into the socket.
10. Press evenly against the DIMM's upper corners. The end latches snap into position automatically.
11. Reinstall any add-in cards or components you removed.
12. Replace the diskette drive and cover panels, as described in Replacing the Diskette Drive to Replacing the Left-Side Panel.

Replacing the Lithium Battery

After several years, when the lithium battery starts to weaken, the system settings stored in CMOS RAM, such as the date and time, may be wrong. When this occurs, you need to replace the lithium battery.

To replace the lithium battery

1. To run the Setup utility, press F3 when your computer is starting up. Then press F1 to run the BIOS setup utility.

2. Write down the current BIOS Setup options.
3. Shut down your computer and turn off all peripheral devices, such as your printer, display, and speakers. Unplug your computer.
4. Remove the left-side and bottom panels, as described in Removing the Left-Side Panel.
5. Install the new battery with the plus (+) side up.

There is danger of explosion if you replace the battery incorrectly. You must replace the battery only with a CR2032 type lithium battery. Discard used batteries according to the instructions on On Disposal of the Lithium Battery.

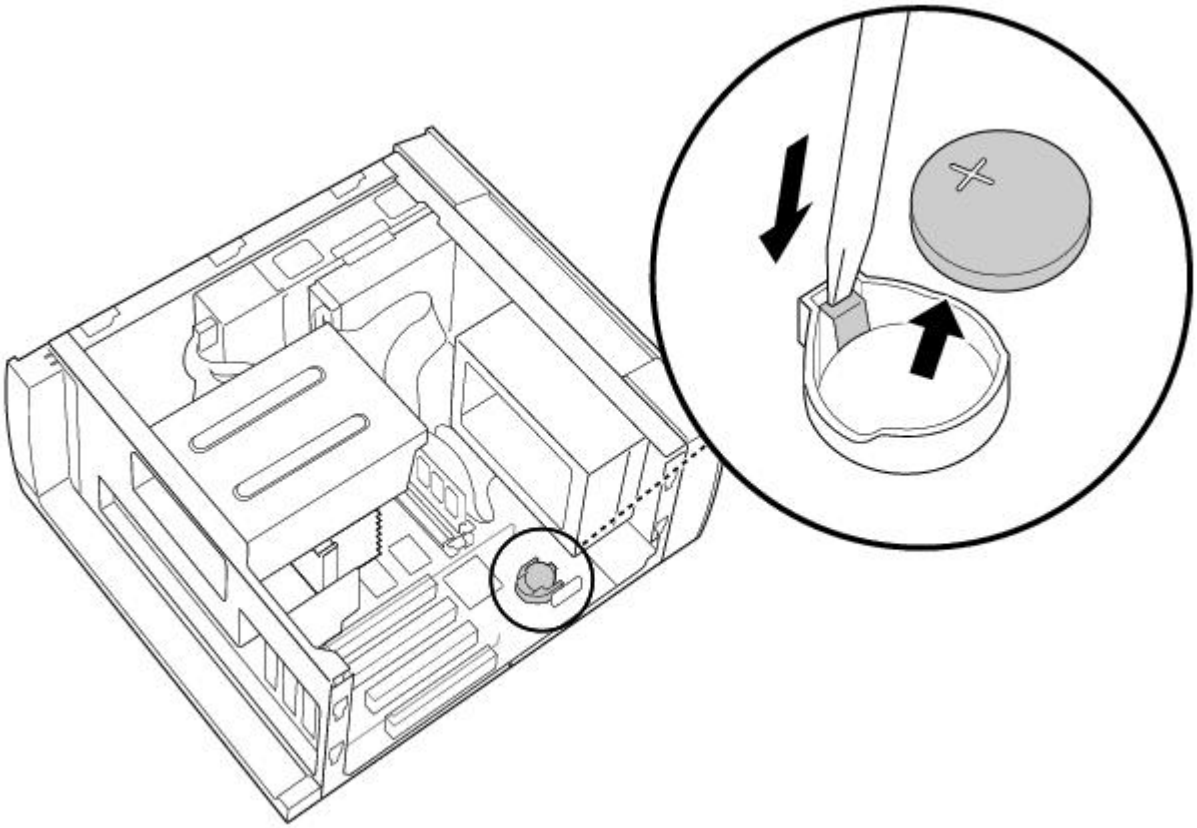

6. Replace the bottom and left-side panels, as described in Replacing the Bottom Panel.

The values stored in the CMOS memory are now reset to the factory default values. You must run the Setup utility to reset the date, time, passwords, and other options. See the VAIO Digital Studio Computer Reference Manual for details.

7. To run the Setup utility, press F3 when your computer is starting up. Then press F1 to run the BIOS setup utility.
8. Change the default values to the values you wrote down in step 2.
9. Save your Setup changes, and then exit the Setup utility.

Installing an Internal Hard Disk Drive

Your VAIO Digital Studio Computer comes with an available bay to hold an additional hard disk drive. The drive you install must not require front panel access. The hard disk drive access light blinks when either internal drive is active.

Before opening the system unit, save any open files, exit Windows, turn off the power of the computer and all attached peripherals, and then unplug the power cord.

1. Configure the jumpers on the new drive as a primary slave (see your drive's documentation for

configuration instructions).

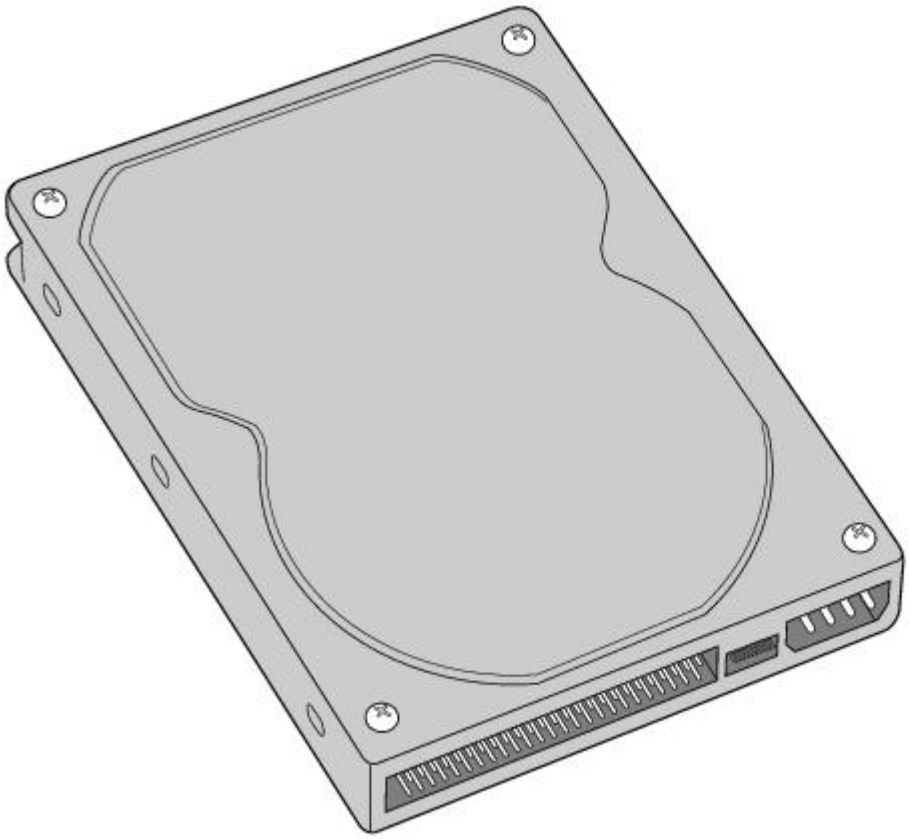

2. Remove the left-side panel, as described in Removing the Left-Side Panel.
3. Remove the front panel, as described in Removing the Front Panel.
4. Remove the bottom panel, as described in Removing the Bottom Panel.
5. Lay the system on its right side (left side faces up-see diagram that follows).
6. Remove the two screws that secure the drive holder.
7. Slide the drive holder forward and then out.

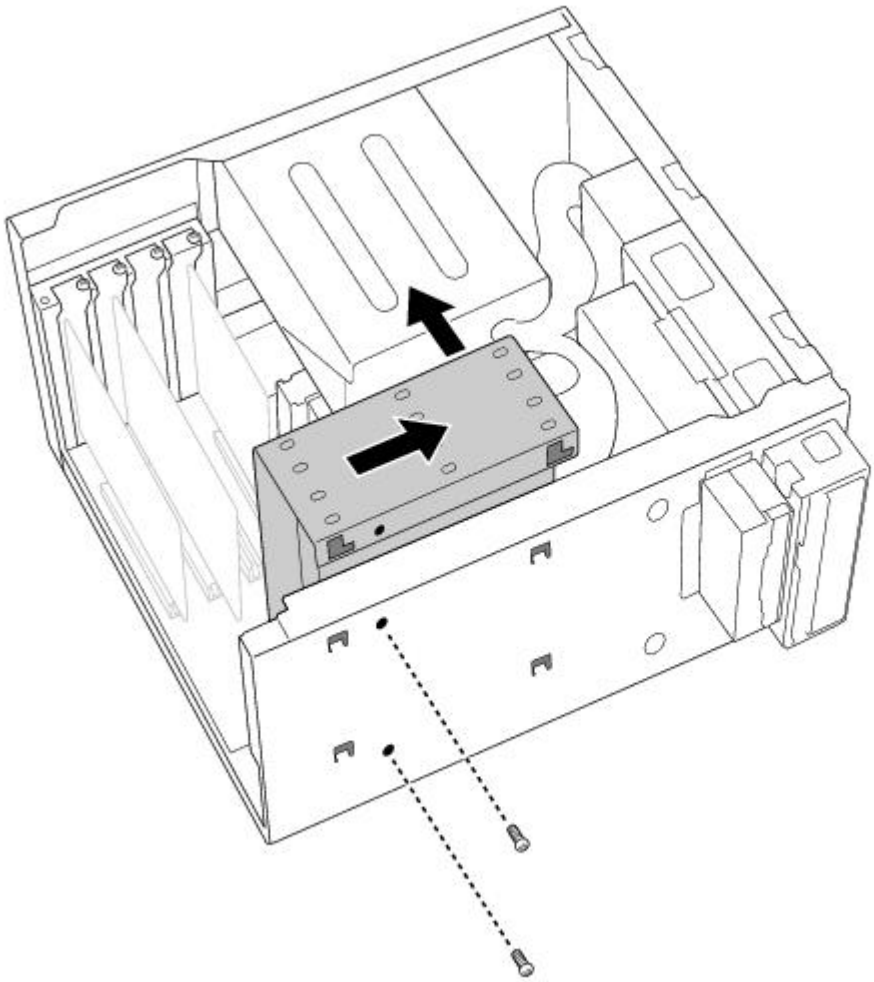

8. Place the drive holder upside down on top of the power supply.

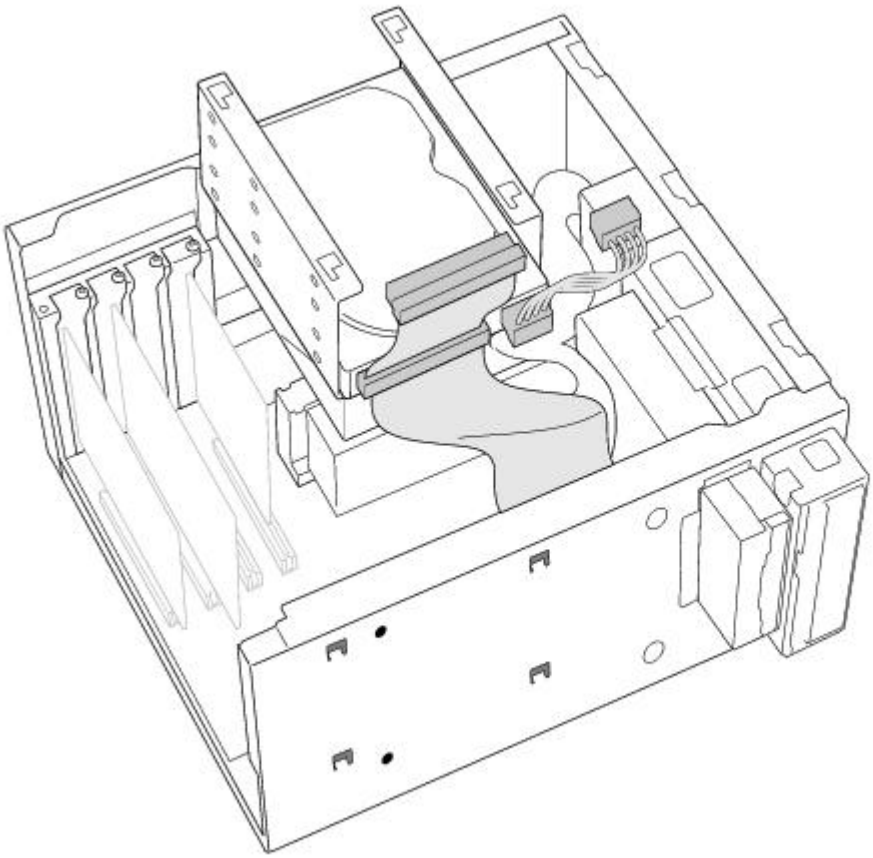

9. Slide the new drive into the drive holder and align the holes on each side of the drive bay.

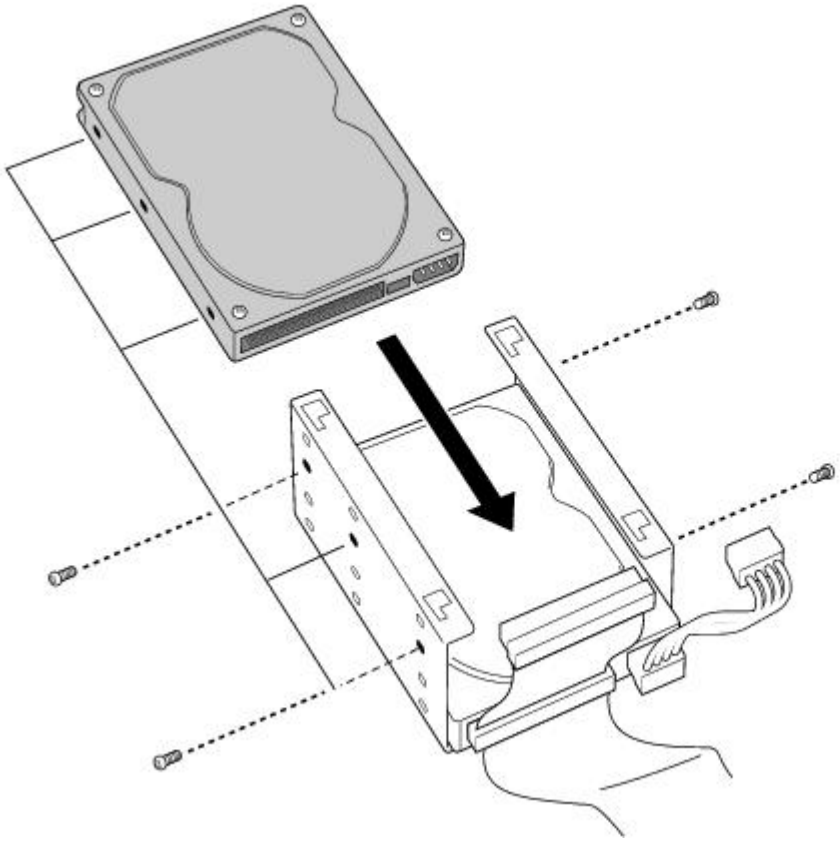

10. Secure the drive to the drive holder using any two of the three holes on each side of the drive holder (screws are provided with the new drive). Do not overtighten the screws.
11. Connect the second drive connector to the new drive.
12. Connect the second power connector to the new drive.

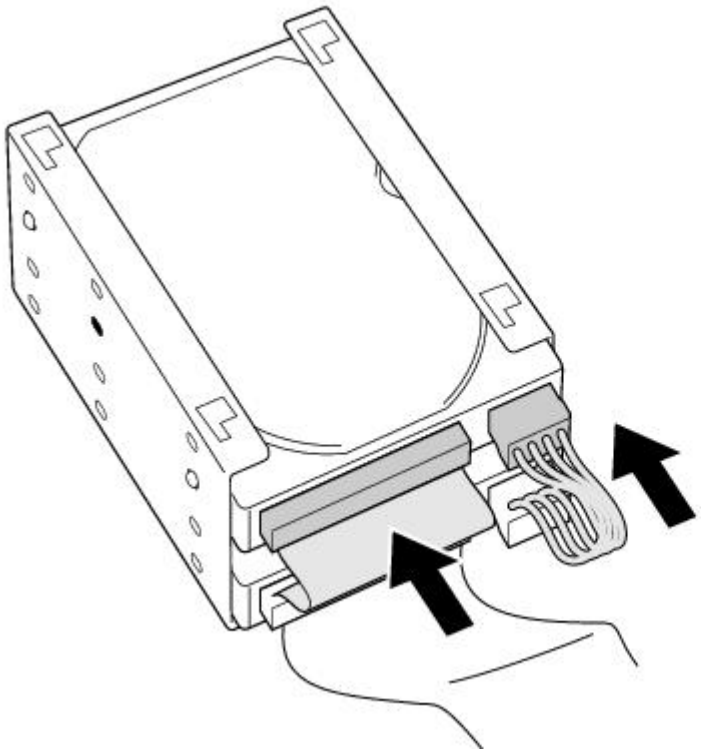

13. Place the drive holder against the inside of the front chassis and slide it back. Be sure to align the slots on the drive holder with the tabs on the inside of the chassis. Be sure to slide the drive holder back so that the tabs slip into the notch at the bottom of the slot.

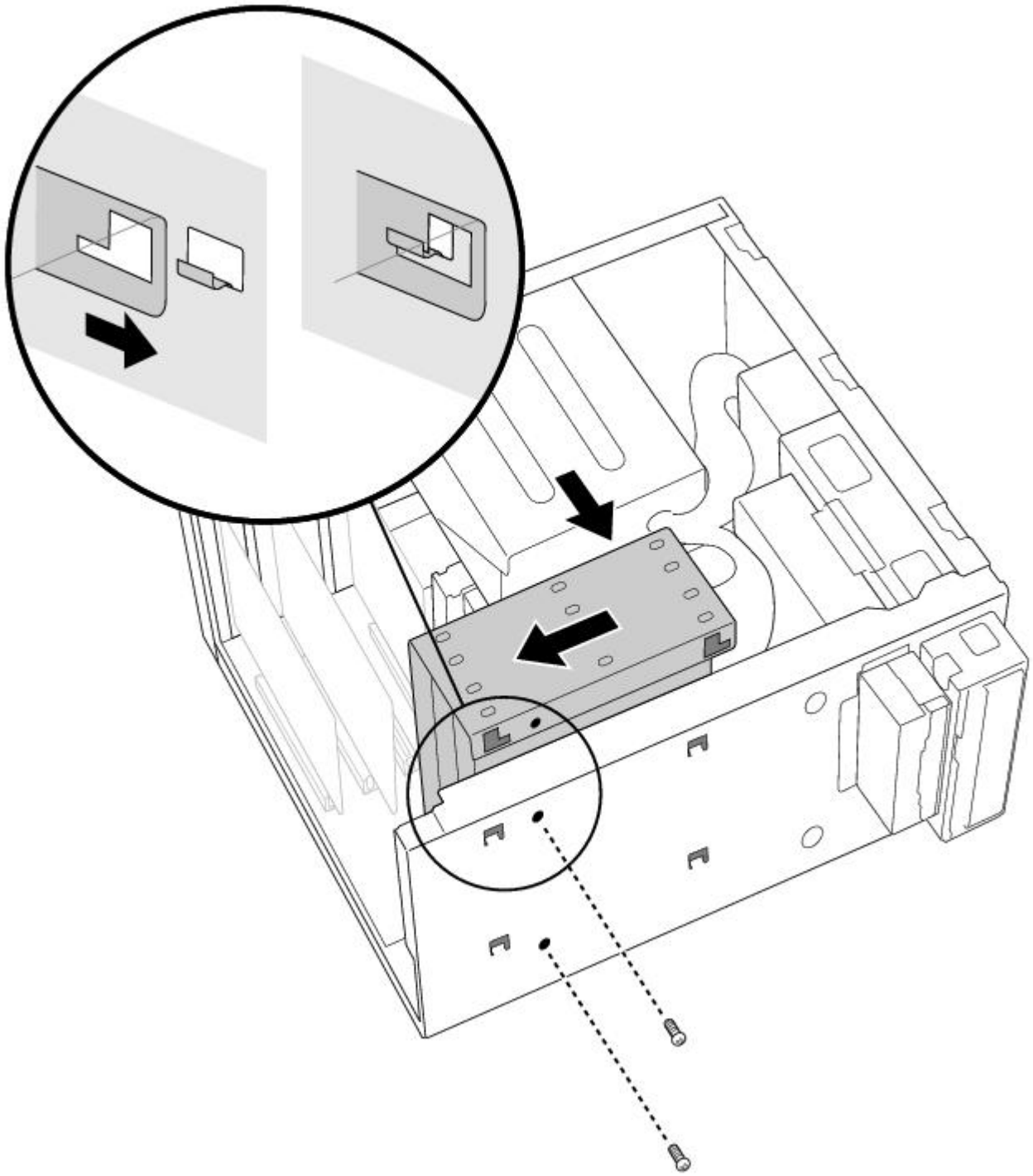

14. Replace the two screws that secure the holder to the chassis.
15. Replace the bottom panel, as described in Replacing the Bottom Panel.
16. Replace the front panel, as described in Replacing the Front Panel.
17. Replace the left-side panel, as described in Replacing the Left-Side Panel.
18. Reconnect the power cord and then turn on your computer.

Your computer automatically recognizes the new drive and configures itself accordingly when you turn it on. Format and partition the new drive following the instructions provided with the drive.

Removing the Left-Side Panel

To remove the left-side panel

1. Remove the two screws that secure the panel to the chassis.
2. Slide the panel back until it stops.
3. Pull the panel straight out to remove it.

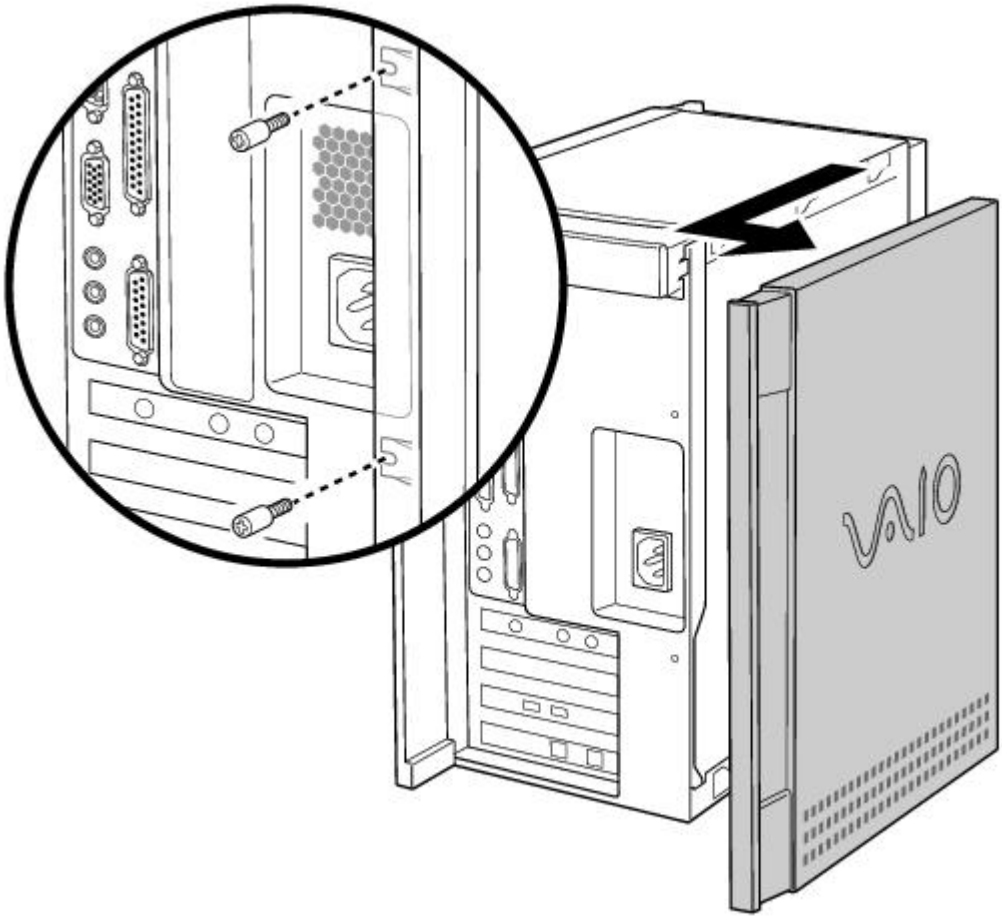

Removing the Bottom Panel

To remove the bottom panel

1. Remove the screw that secures the bottom panel to the chassis.
2. Pull the bottom panel straight out to remove it.

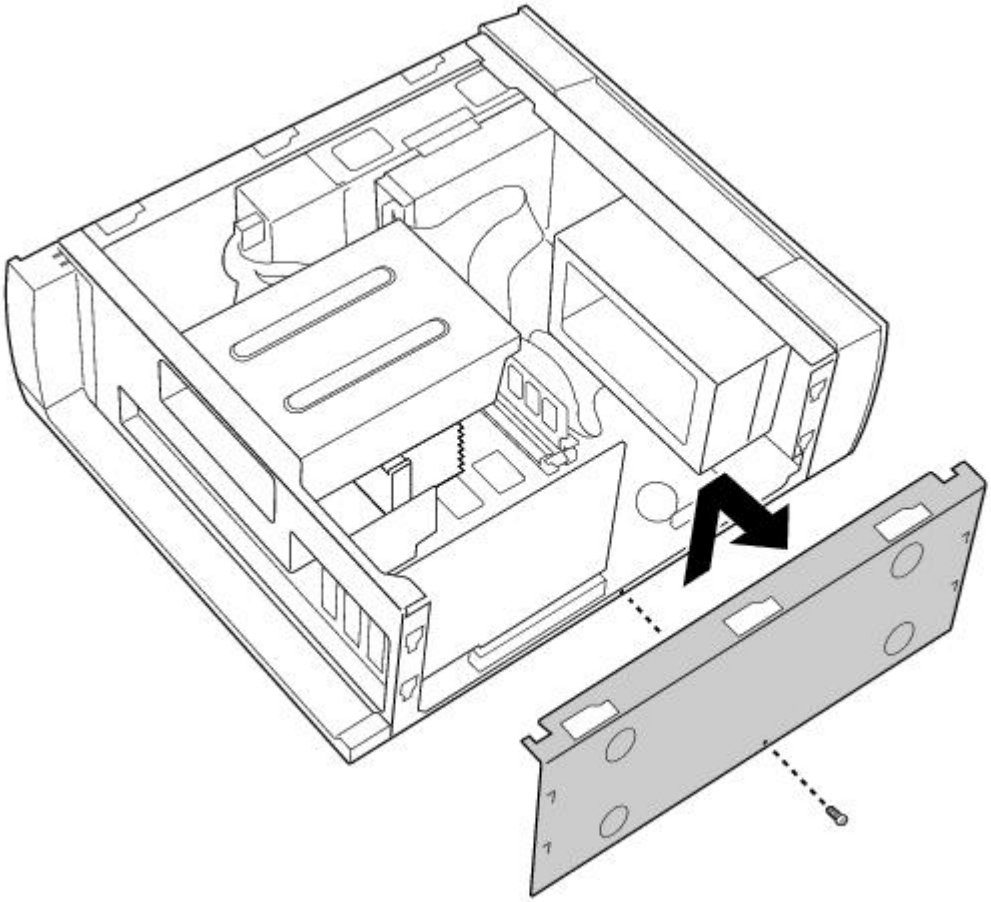

Removing the Front Panel

To remove the front panel

1. Open the CD tray by inserting a thin, pointed object into the emergency eject opening.
2. Slide the CD tray forward.
3. Remove the front cover of the CD tray by lifting it upwards.

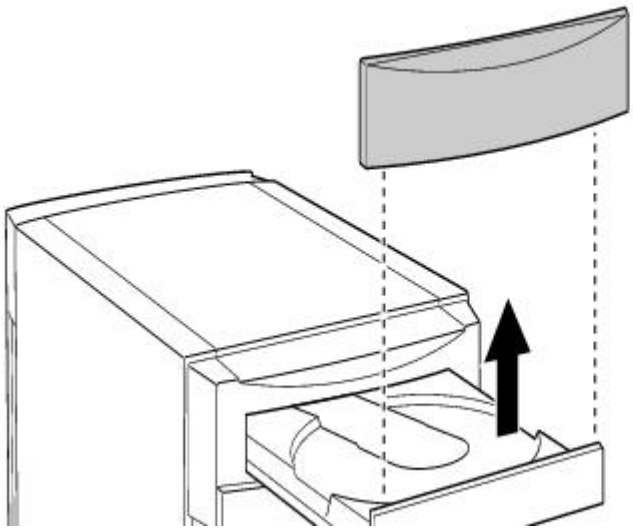

4. Press down on each of the two tabs on the bottom of the front panel to release the panel.
5. Pull the front panel forward to remove it.

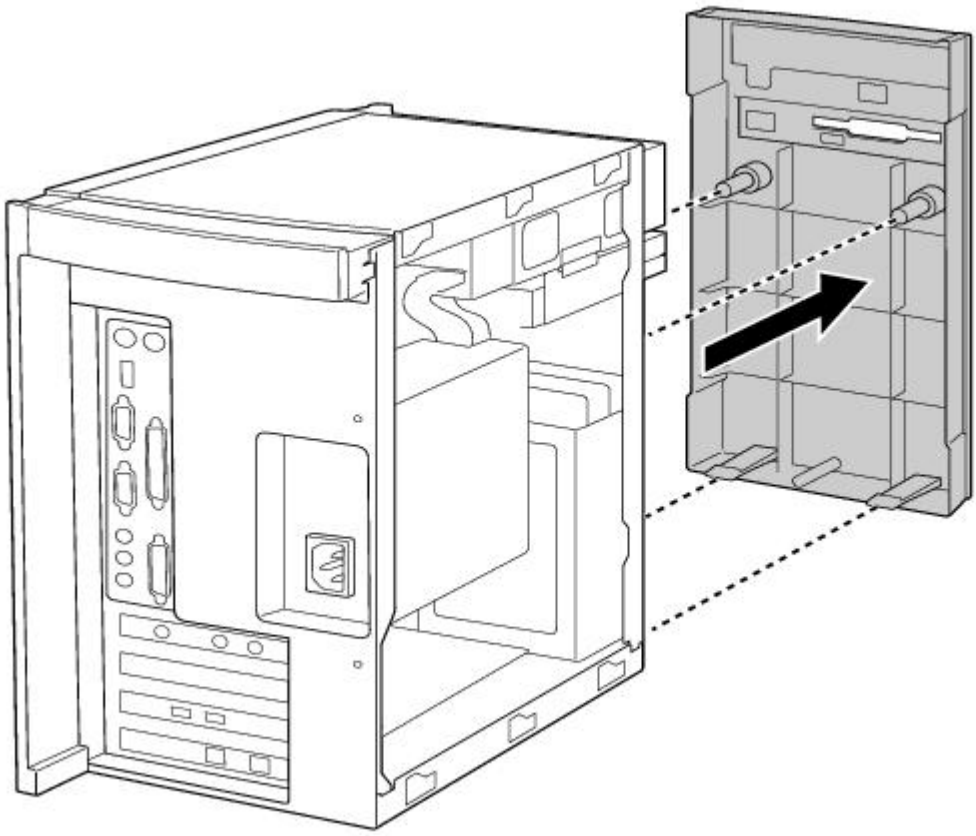

Detaching the Diskette Drive

To detach the diskette drive

1. Remove the front panel, as described in Removing the Front Panel.
2. Remove the two screws that secure the diskette drive to the front of the chassis.
3. Pull the diskette drive forward.

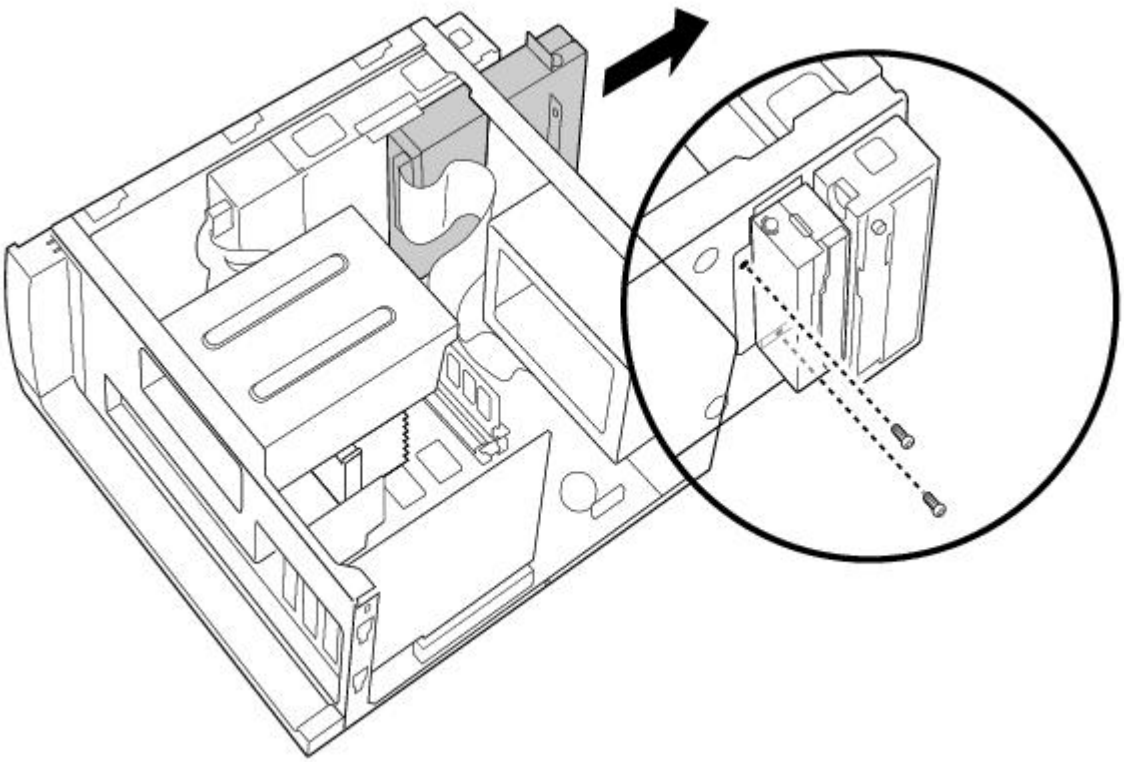

If you are adding memory, you do not need to completely remove the diskette drive or disconnect the cable.

Replacing the Diskette Drive

To replace the diskette drive

1. Push the diskette drive straight into the drive slot.
2. Replace the two screws that secure the diskette drive to the front of the chassis.
3. Replace the front panel, as described in Replacing the Front Panel.

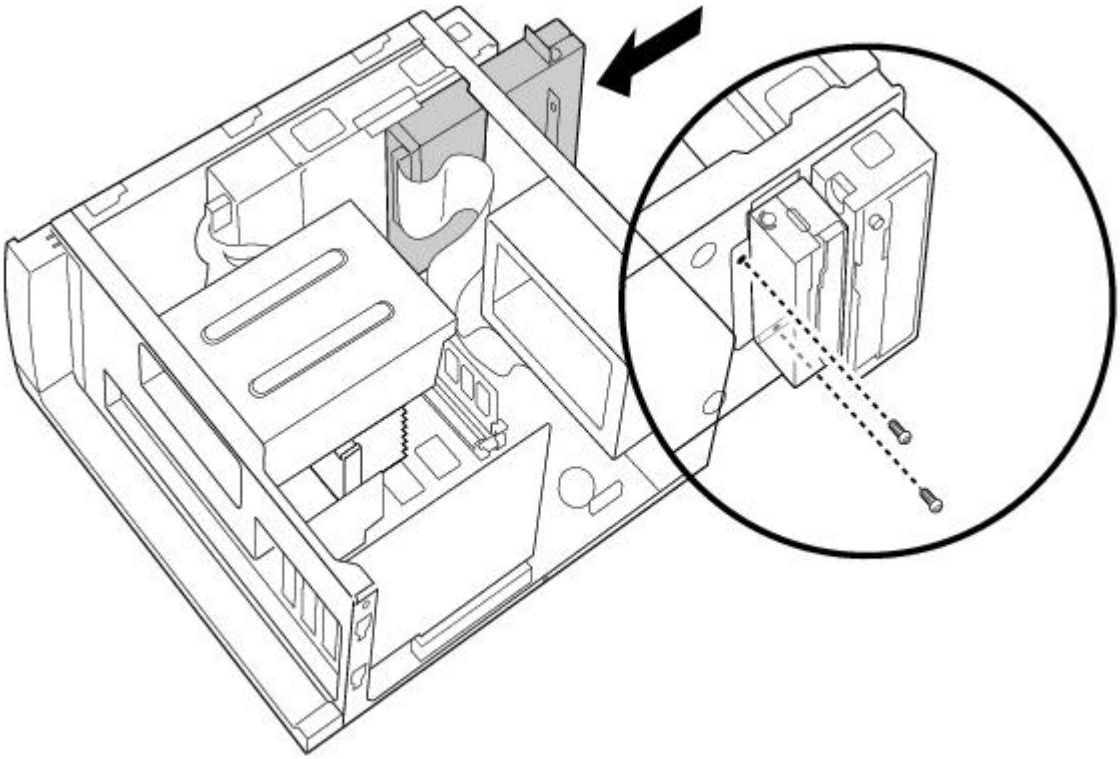

Replacing the Bottom Panel

To replace the bottom panel

1. Align the bottom panel with the screw hole on the bottom of the chassis.
2. Replace the screw that secures the bottom panel to the chassis.

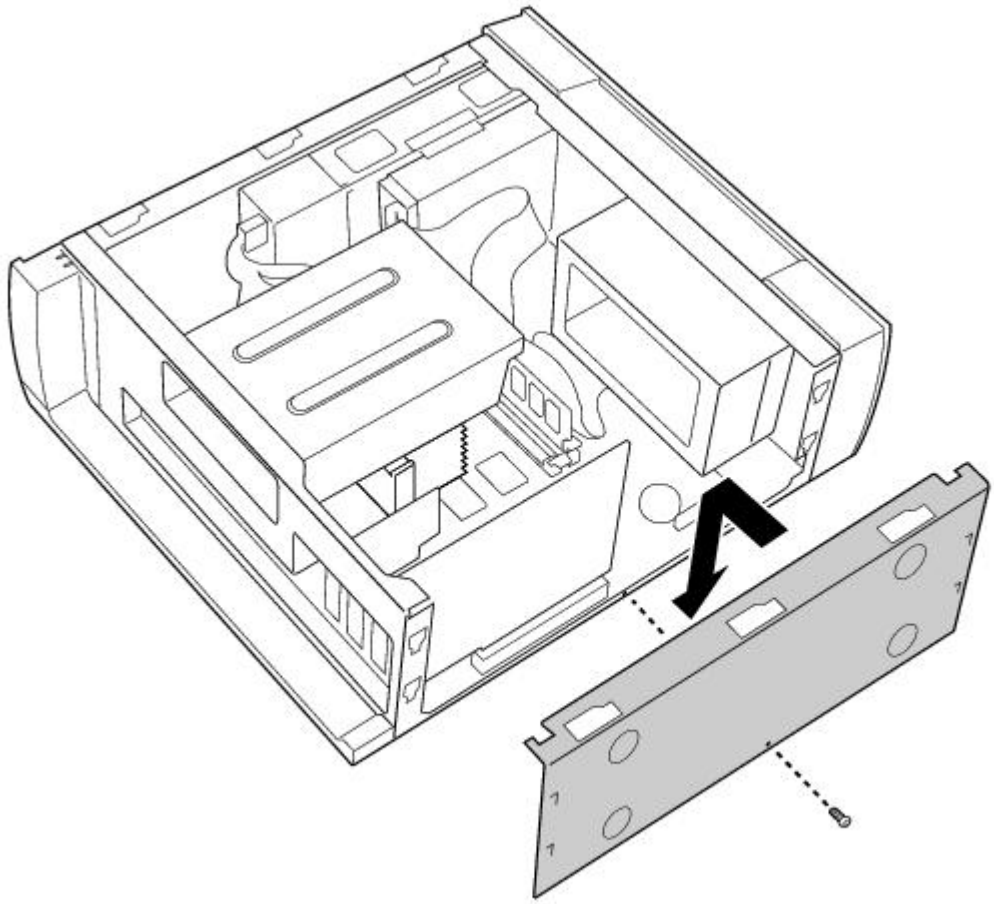

Replacing the Front Panel

To replace the front panel

1. Push the front panel straight onto the front of the chassis until it clicks into place.

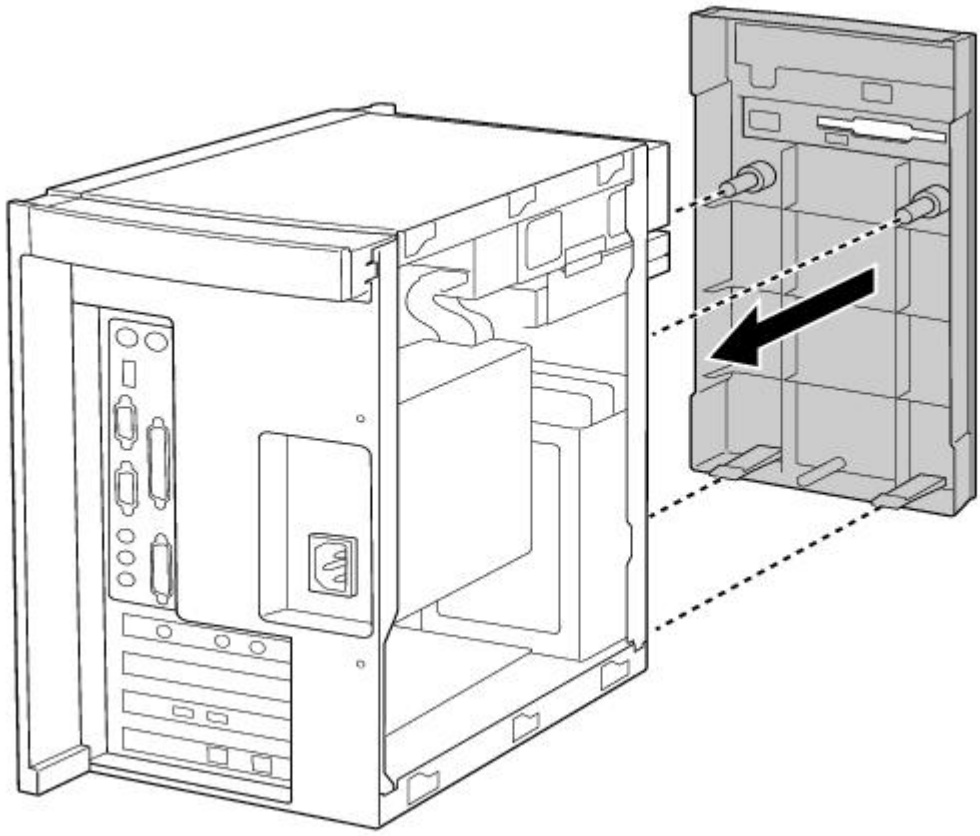

2. Replace the front cover of the CD tray by sliding it down onto the front of the open tray.
3. Close the CD tray.

Replacing the Left-Side Panel

To replace the left-side panel

1. Slide the panel forward until it stops.
2. Replace the two screws that secure the panel to the chassis.

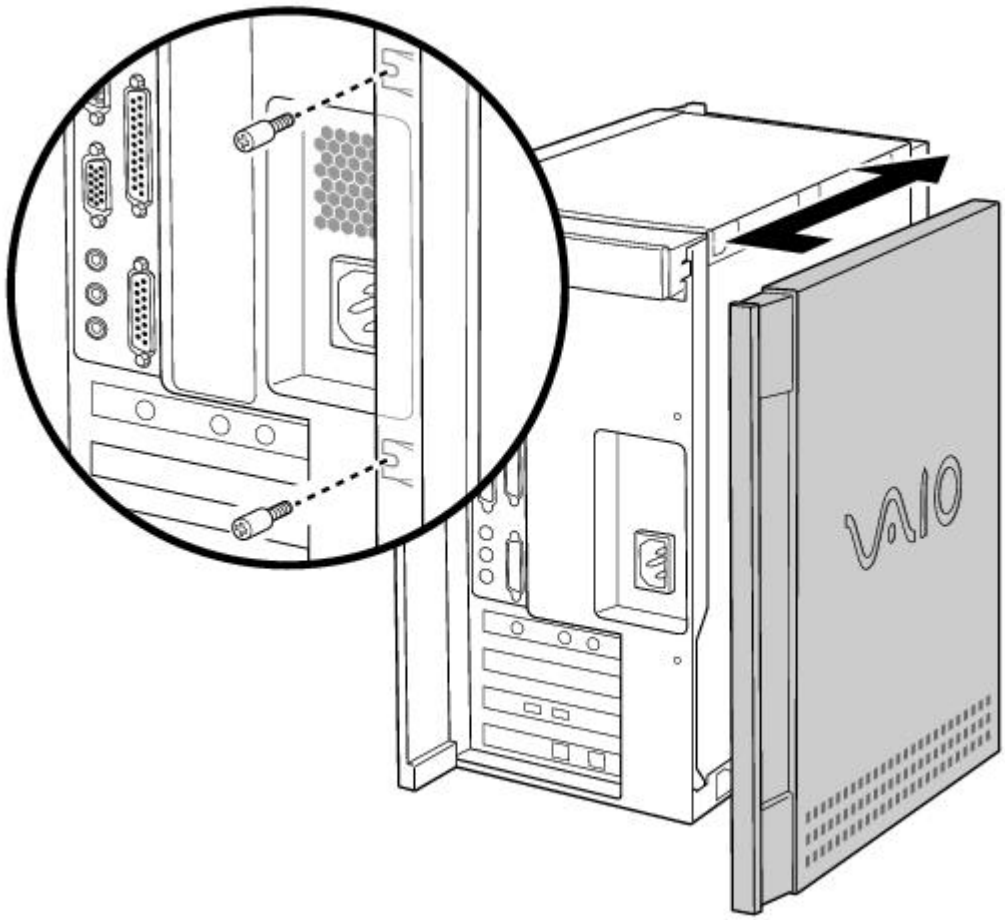

Upgrading and Maintaining Your VAIO Digital Studio Computer

In the future you may want to install additional boards to expand the functionality of your computer. This section describes how to open your computer and insert add-in boards, add memory, replace the lithium battery, and install an additional hard disk drive. For more information on upgrading your Sony computer, see the *VAIO Digital Studio Computer Reference Manual*. You can download this electronic document from the Sony Web site at http://www.sony.com/pcsupport.

The procedures in this section assume you are familiar with the general terminology associated with personal computers and with the safety practices and regulatory compliance required for using and modifying electronic equipment. Read Notes on Use before upgrading your Sony computer.

Always switch the power off before you open the system or connect your computer to peripheral equipment; otherwise, damage may occur to the integrated circuits in your computer.

Electrostatic discharge (ESD) can damage disk drives, add-in cards, and other components. Do the procedures described here only at an ESD workstation. If such a station is not available, do not work in a carpeted area and do not handle materials that produce or hold static electricity (cellophane wrappers, for example). Ground yourself by maintaining continuous contact with an unpainted metal portion of the chassis while performing the procedure.

Inserting an Add-in Board

You can add up to two additional PCI boards to the system.

Your VAIO Digital Studio Computer cannot accommodate PCI add-in boards exceeding 7.7" in length.

To insert an add-in board

Make sure you observe the proper safety precautions when you add boards to your Sony computer. See Notes on Use.

1. Shut down your computer and turn off all peripheral devices, such as your printer, display, and speakers.
2. Unplug your computer and any peripheral devices.
3. Remove the left-side panel as described in Removing the Left-Side Panel.
4. Identify the expansion slot where you want to insert the add-in board.
5. Remove the slot cover for the slot you have chosen.

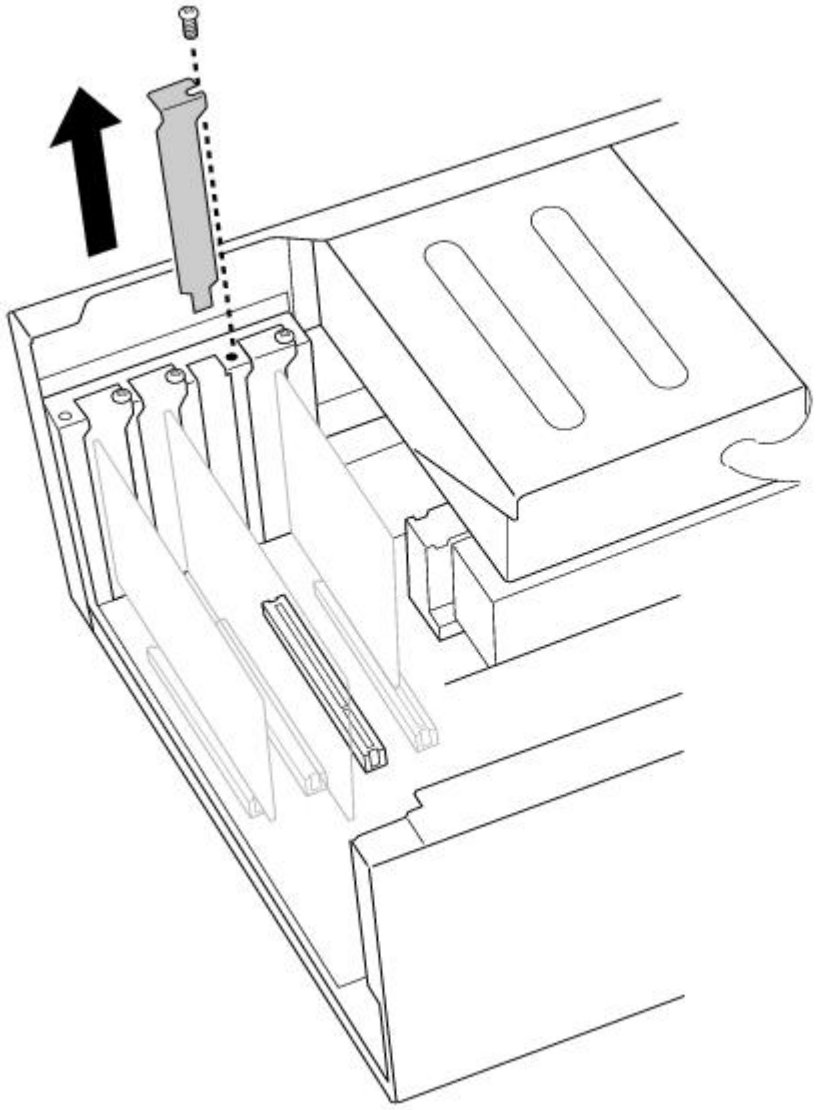

6. Install the add-in board by plugging it into the expansion slot on the system board. Attach any internal cables that the board requires (see the manual for the add-in board).

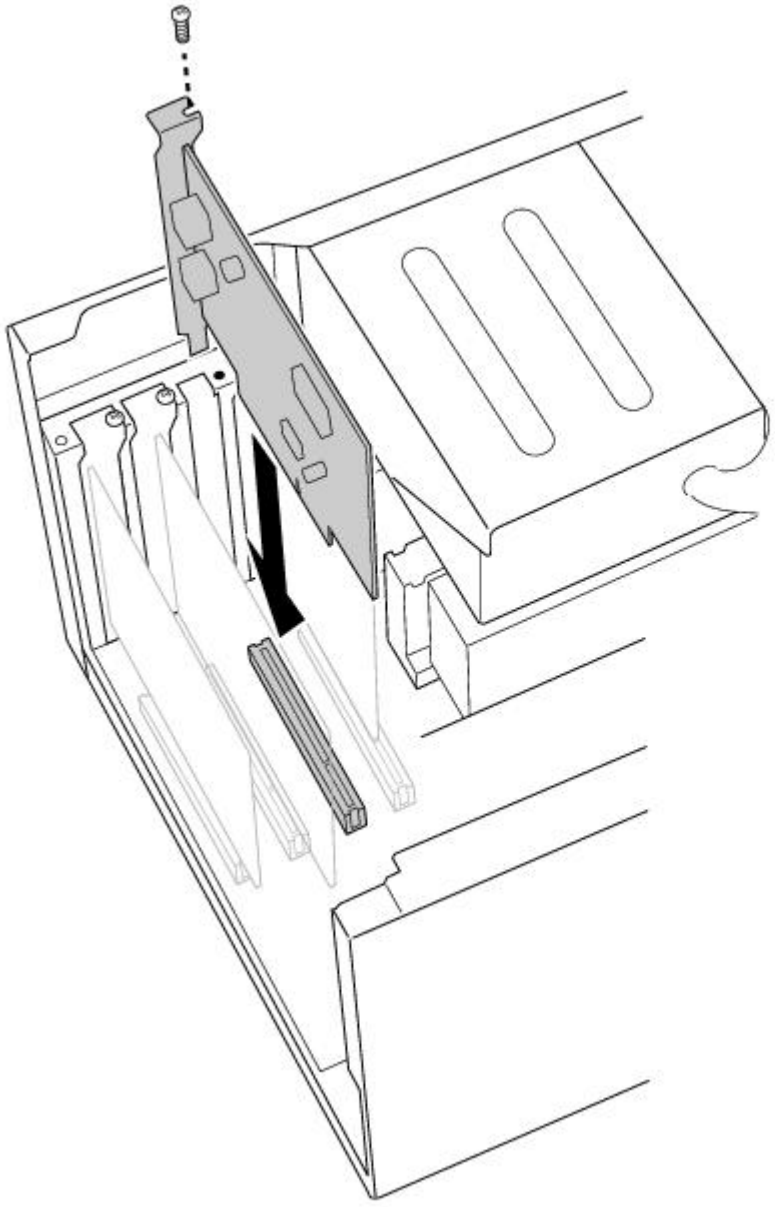

7. Replace the left-side panel as described in Replacing the Left-Side Panel.

Adding Memory

In order to increase your computer's memory, you may need to remove one of the factory-installed DIMMs and replace it with one of greater capacity. For details, see the *VAIO Digital Studio Computer Reference Manual*, which is available at Sony's Web site at http://www.sony.com/pcsupport.

For memory upgrades, use only 3.3V unbuffered 4-clock 64-bit 66 MHz SDRAM DIMM module Rev1.0 or 3.3V unbuffered 4-clock 72-bit 66 MHz SDRAM DIMM module Rev1.0. For more information on Digital Studio Computer compatible memory, call Sony at 1-888-4SONYPC (1-888-476-6972).

To install memory

Make sure you observe the proper safety precautions when you add DIMMs to your Sony computer. See Notes on Use .

1. Shut down your computer and turn off all peripheral devices, such as your printer, display, and speakers.
2. Unplug your computer and any peripheral devices.
3. Remove the left-side panel, bottom panel, and front panel, as described in Removing the Left-Side Panel. Then detach the diskette drive, as described in Detaching the Diskette Drive.

You do not need to completely remove the diskette drive in order to access the DIMM sockets.

4. If necessary, remove any cables, add-in cards, or other components to access the DIMM sockets.
5. Remove either (or both) of the factory-installed DIMMs.
6. Handle the DIMM only by the edges, and remove it from its anti-static package.
7. Locate the keys on the bottom edge of the DIMM .
8. Align the DIMM over the socket.

To avoid damaging the DIMM socket, move the DIMM socket tabs slightly outward to relieve pressure. The DIMM should then click easily into place.

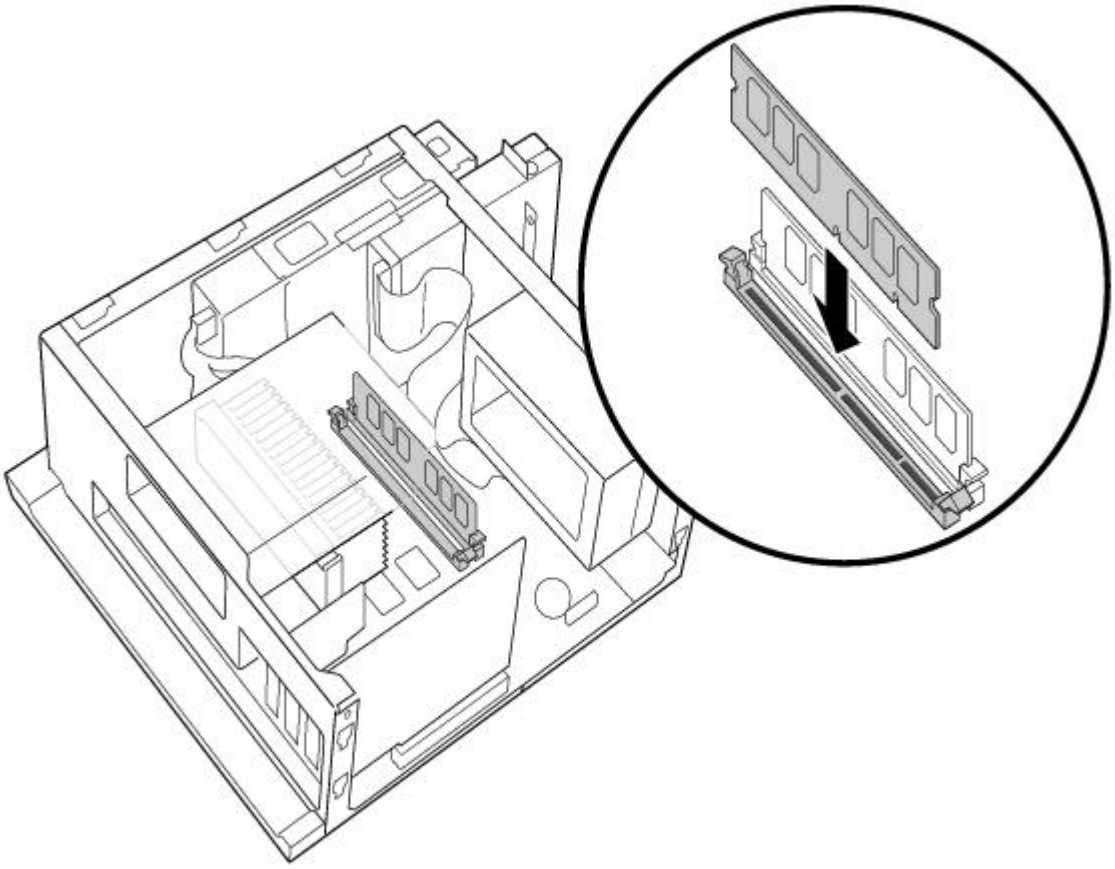

9. Firmly insert the bottom edge of the DIMM into the socket.
10. Press evenly against the DIMM's upper corners. The end latches snap into position automatically.
11. Reinstall any add-in cards or components you removed.
12. Replace the diskette drive and cover panels, as described in Replacing the Diskette Drive to Replacing the Left-Side Panel.

Replacing the Lithium Battery

After several years, when the lithium battery starts to weaken, the system settings stored in CMOS RAM, such as the date and time, may be wrong. When this occurs, you need to replace the lithium battery.

To replace the lithium battery

1. To run the Setup utility, press F3 when your computer is starting up. Then press F1 to run the BIOS setup utility.

2. Write down the current BIOS Setup options.
3. Shut down your computer and turn off all peripheral devices, such as your printer, display, and speakers. Unplug your computer.
4. Remove the left-side and bottom panels, as described in Removing the Left-Side Panel.
5. Install the new battery with the plus (+) side up.

There is danger of explosion if you replace the battery incorrectly. You must replace the battery only with a CR2032 type lithium battery. Discard used batteries according to the instructions on On Disposal of the Lithium Battery.

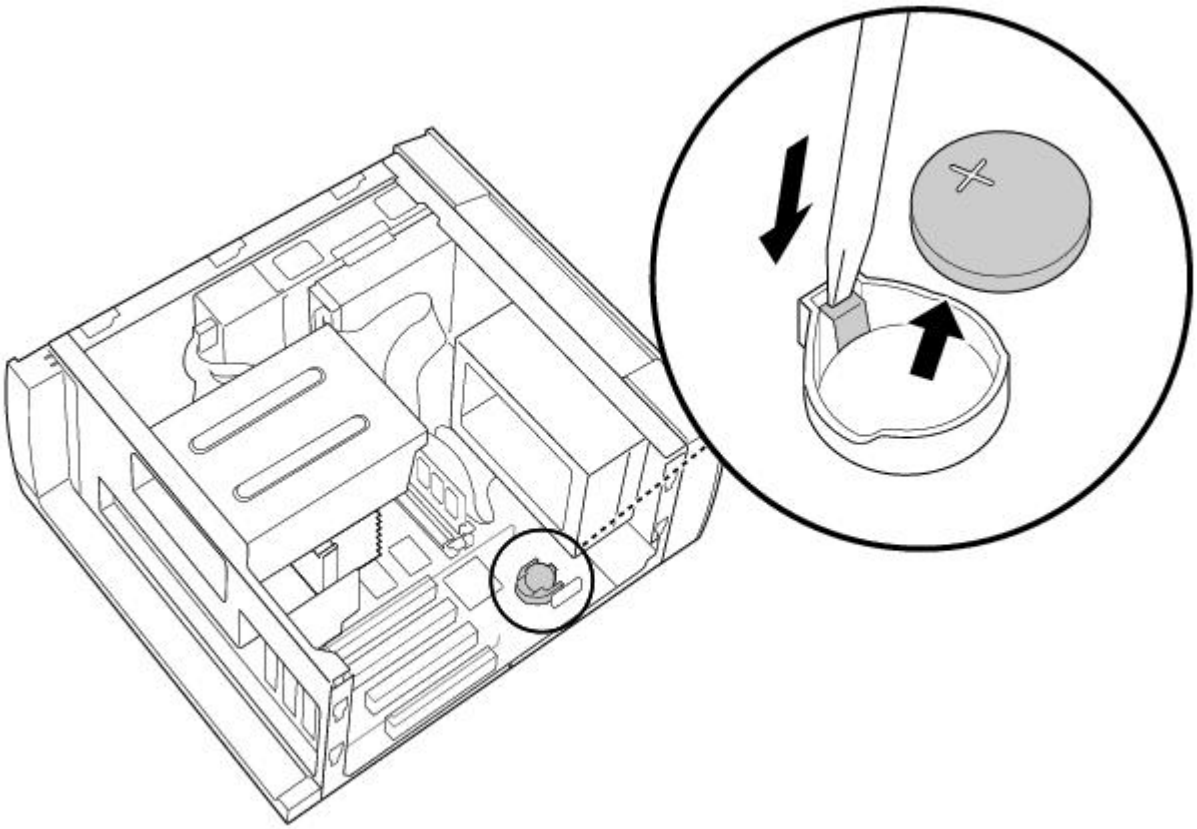

6. Replace the bottom and left-side panels, as described in Replacing the Bottom Panel.

The values stored in the CMOS memory are now reset to the factory default values. You must run the Setup utility to reset the date, time, passwords, and other options. See the VAIO Digital Studio Computer Reference Manual for details.

7. To run the Setup utility, press F3 when your computer is starting up. Then press F1 to run the BIOS setup utility.
8. Change the default values to the values you wrote down in step 2.
9. Save your Setup changes, and then exit the Setup utility.

Installing an Internal Hard Disk Drive

Your VAIO Digital Studio Computer comes with an available bay to hold an additional hard disk drive. The drive you install must not require front panel access. The hard disk drive access light blinks when either internal drive is active.

Before opening the system unit, save any open files, exit Windows, turn off the power of the computer and all attached peripherals, and then unplug the power cord.

1. Configure the jumpers on the new drive as a primary slave (see your drive's documentation for

configuration instructions).

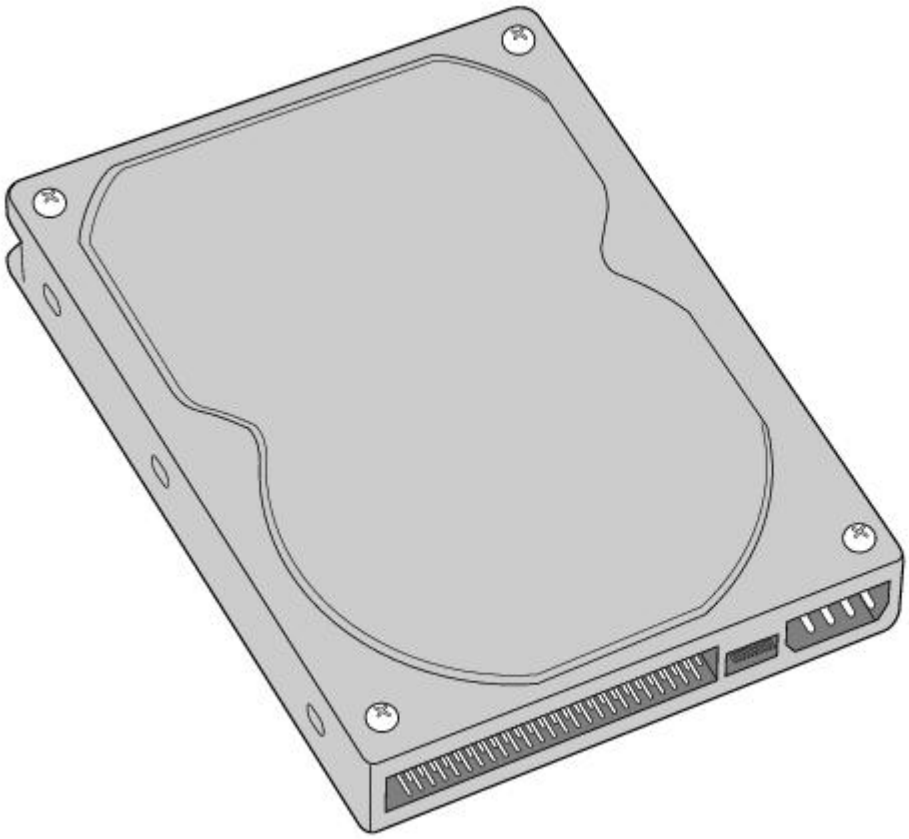

2. Remove the left-side panel, as described in Removing the Left-Side Panel.
3. Remove the front panel, as described in Removing the Front Panel.
4. Remove the bottom panel, as described in Removing the Bottom Panel.
5. Lay the system on its right side (left side faces up-see diagram that follows).
6. Remove the two screws that secure the drive holder.
7. Slide the drive holder forward and then out.

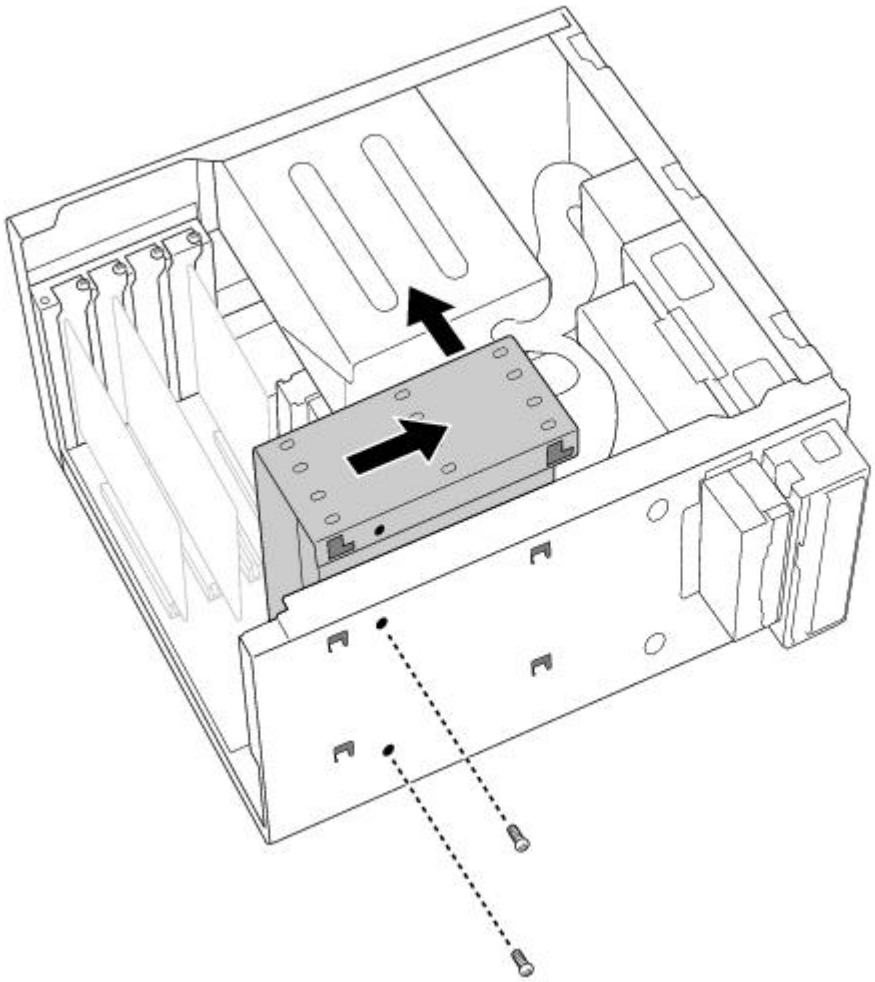

8. Place the drive holder upside down on top of the power supply.

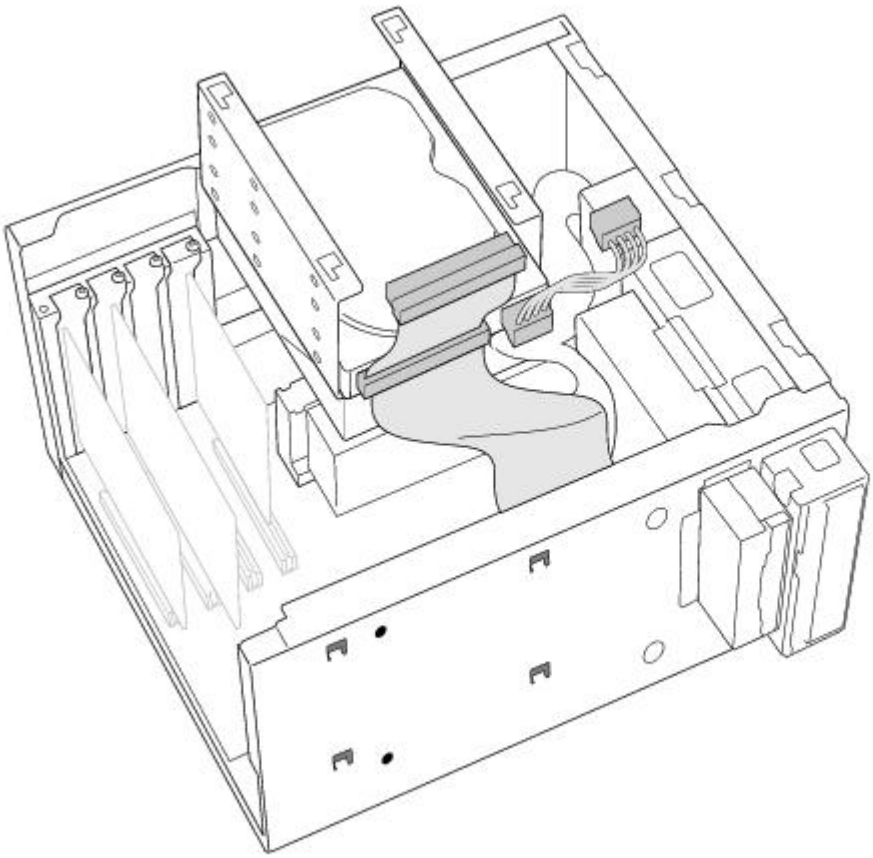

9. Slide the new drive into the drive holder and align the holes on each side of the drive bay.

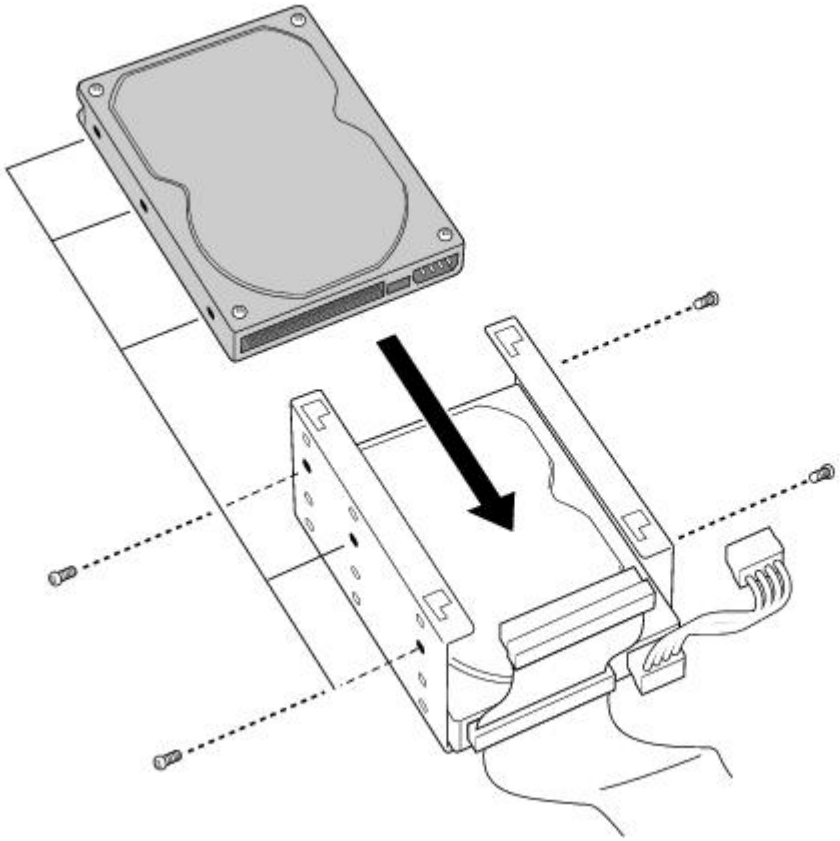

10. Secure the drive to the drive holder using any two of the three holes on each side of the drive holder (screws are provided with the new drive). Do not overtighten the screws.
11. Connect the second drive connector to the new drive.
12. Connect the second power connector to the new drive.

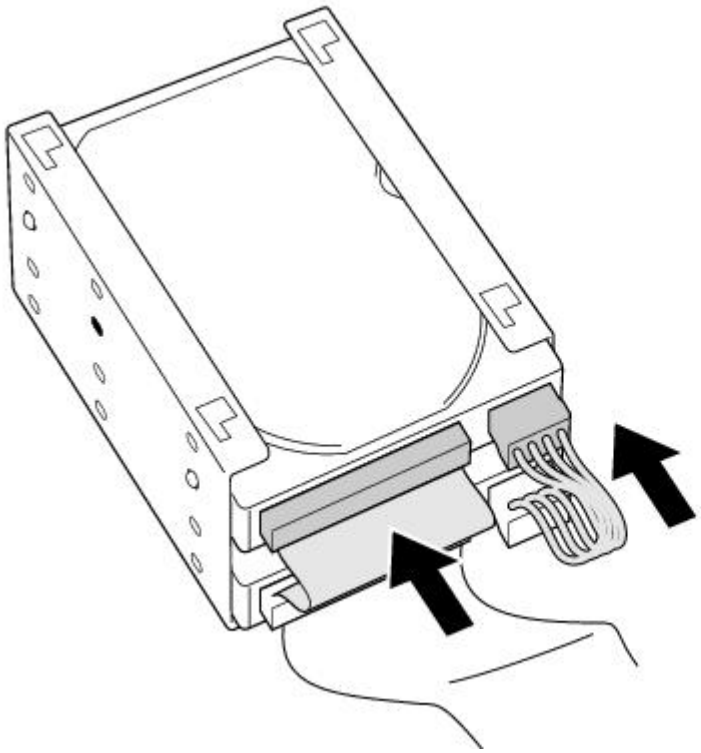

13. Place the drive holder against the inside of the front chassis and slide it back. Be sure to align the slots on the drive holder with the tabs on the inside of the chassis. Be sure to slide the drive holder back so that the tabs slip into the notch at the bottom of the slot.

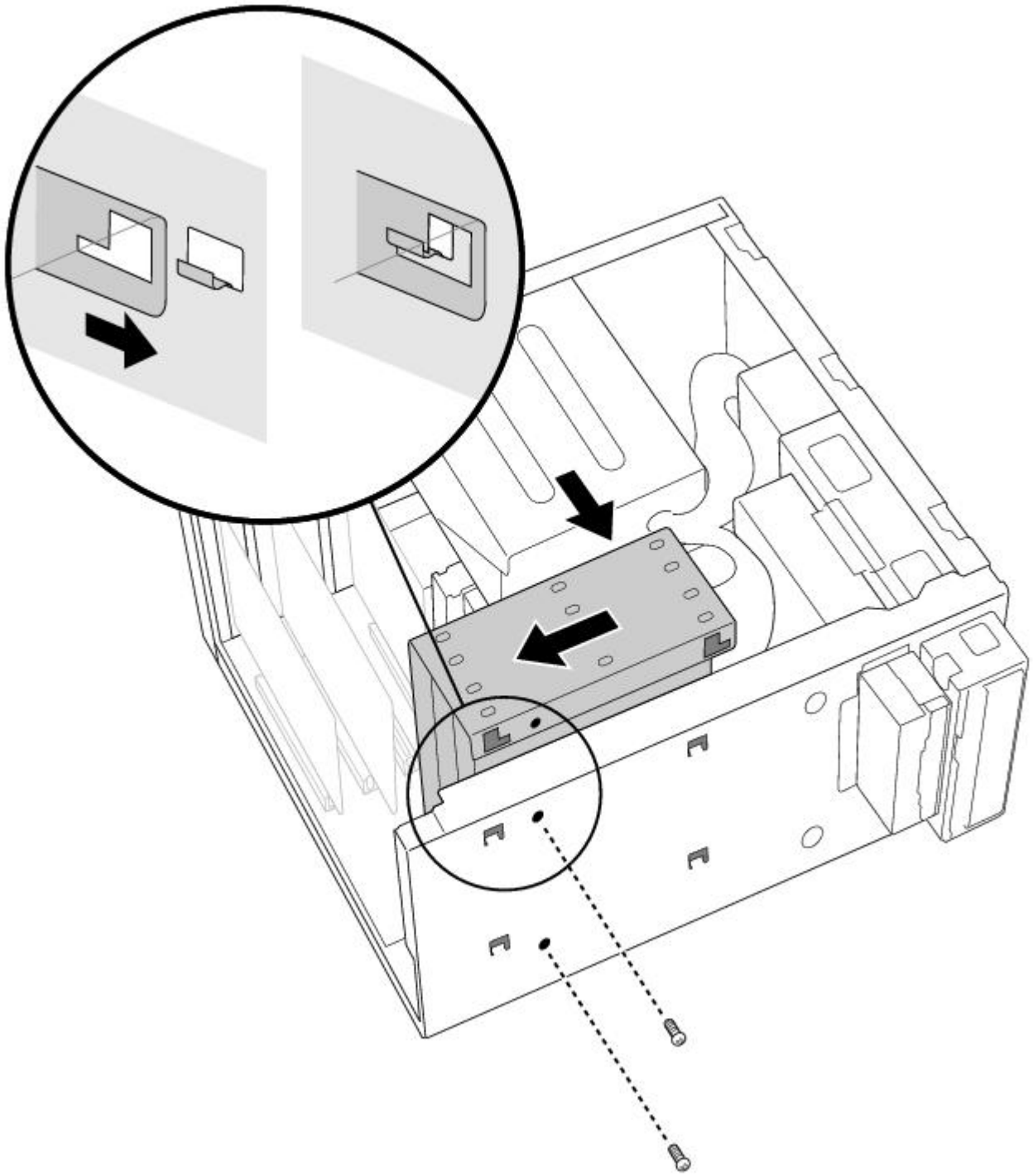

14. Replace the two screws that secure the holder to the chassis.
15. Replace the bottom panel, as described in Replacing the Bottom Panel.
16. Replace the front panel, as described in Replacing the Front Panel.
17. Replace the left-side panel, as described in Replacing the Left-Side Panel.
18. Reconnect the power cord and then turn on your computer.

Your computer automatically recognizes the new drive and configures itself accordingly when you turn it on. Format and partition the new drive following the instructions provided with the drive.

Removing the Left-Side Panel

To remove the left-side panel

1. Remove the two screws that secure the panel to the chassis.
2. Slide the panel back until it stops.
3. Pull the panel straight out to remove it.

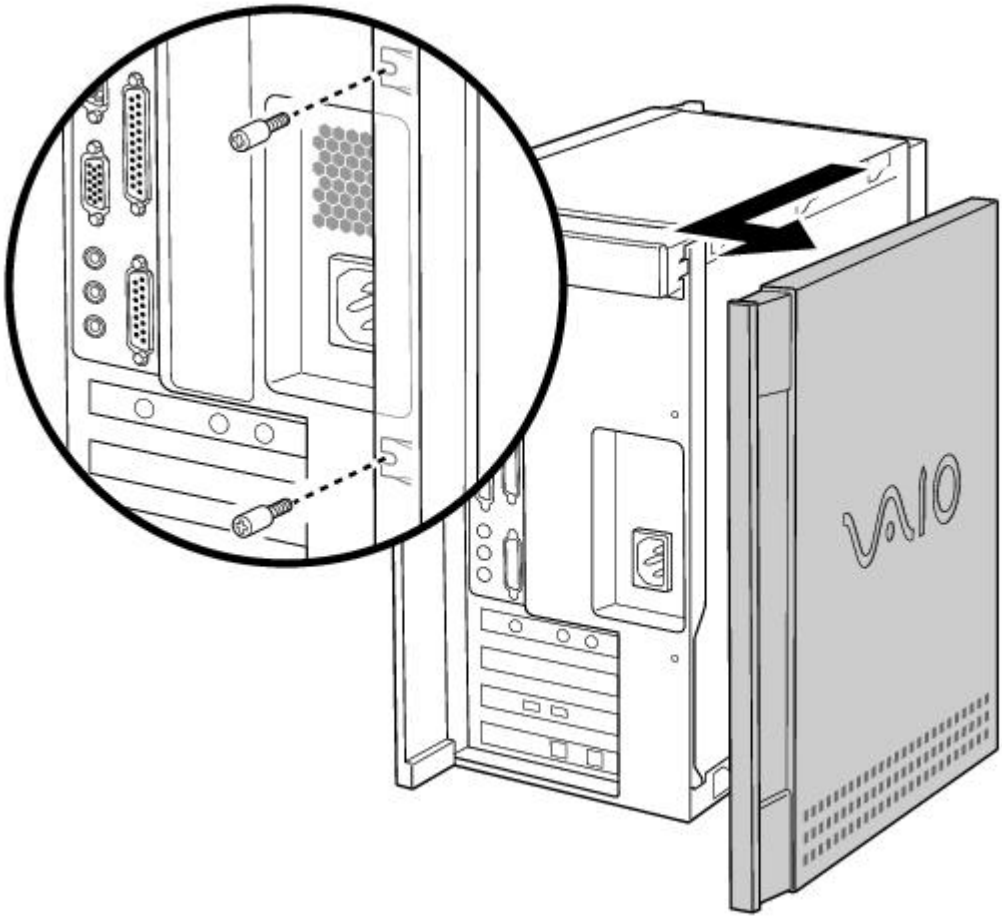

Removing the Bottom Panel

To remove the bottom panel

1. Remove the screw that secures the bottom panel to the chassis.
2. Pull the bottom panel straight out to remove it.

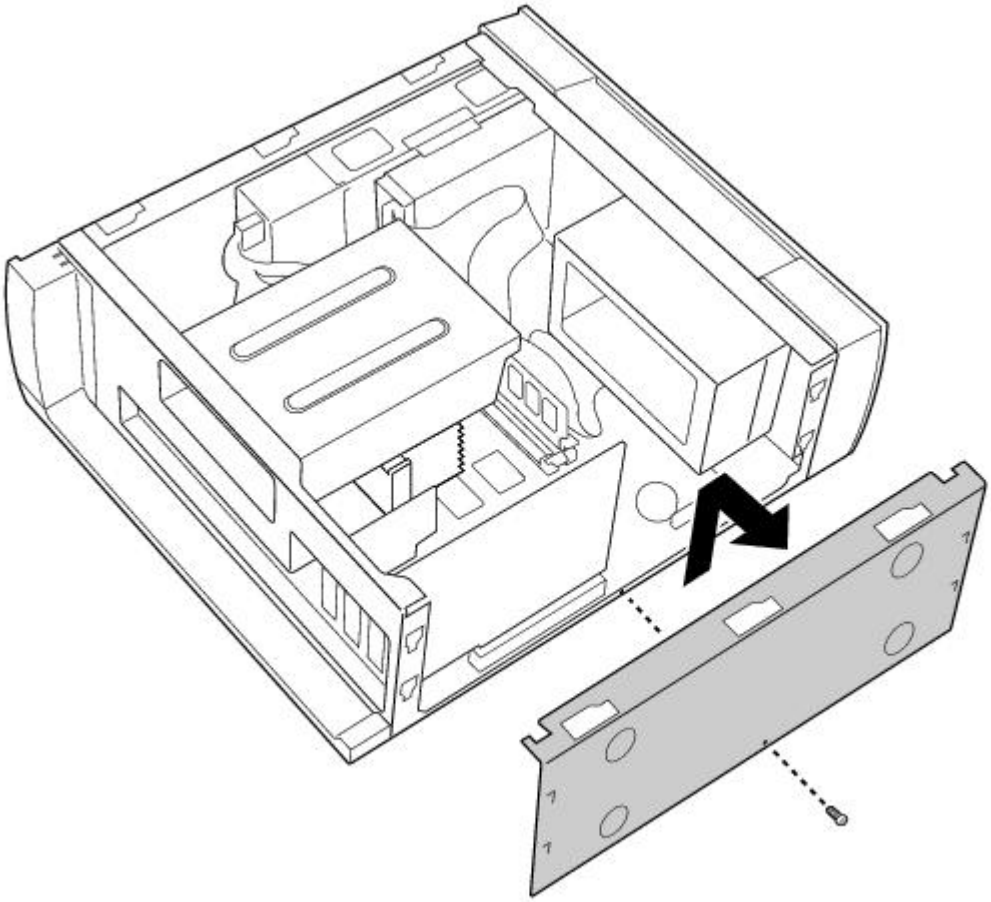

Removing the Front Panel

To remove the front panel

1. Open the CD tray by inserting a thin, pointed object into the emergency eject opening.
2. Slide the CD tray forward.
3. Remove the front cover of the CD tray by lifting it upwards.

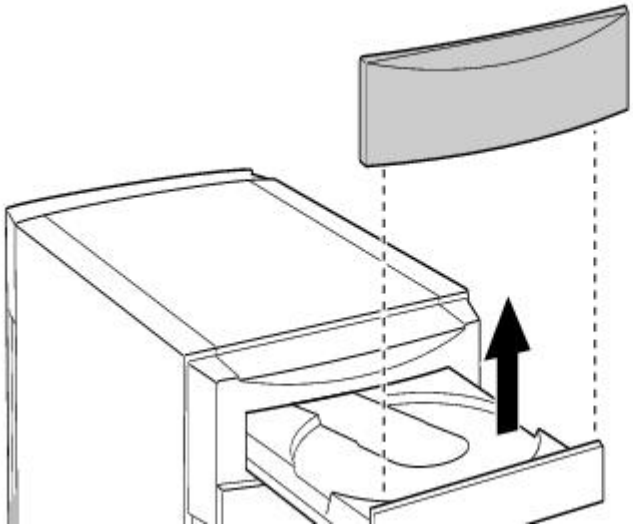

4. Press down on each of the two tabs on the bottom of the front panel to release the panel.
5. Pull the front panel forward to remove it.

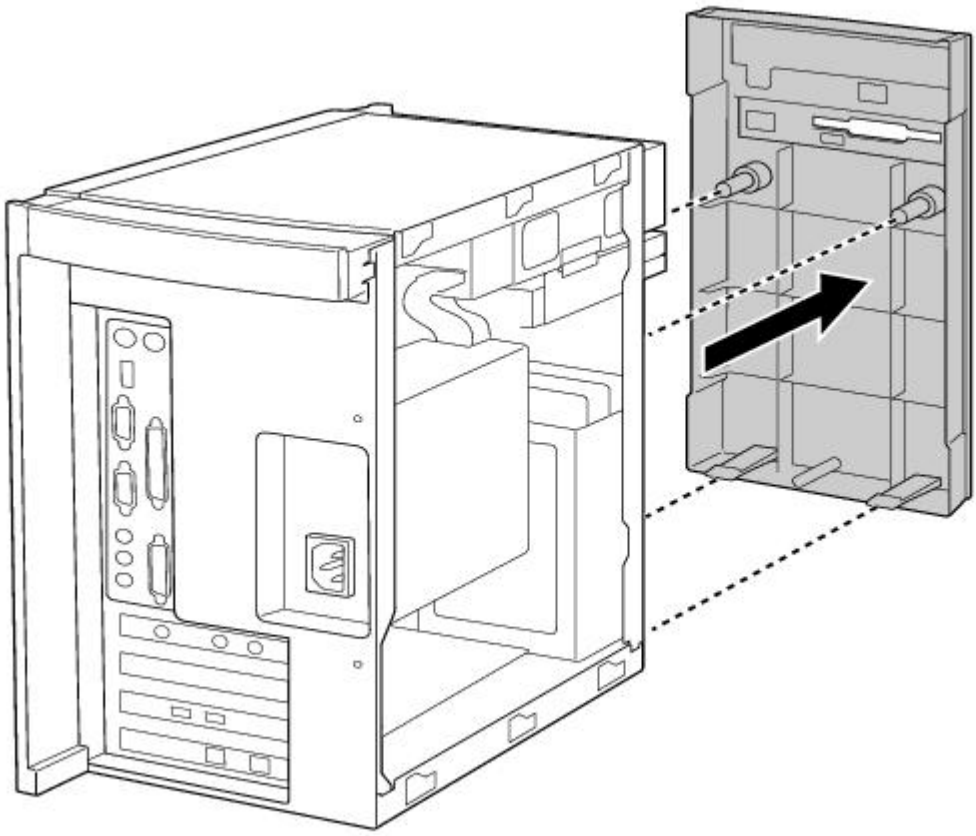

Detaching the Diskette Drive

To detach the diskette drive

1. Remove the front panel, as described in Removing the Front Panel.
2. Remove the two screws that secure the diskette drive to the front of the chassis.
3. Pull the diskette drive forward.

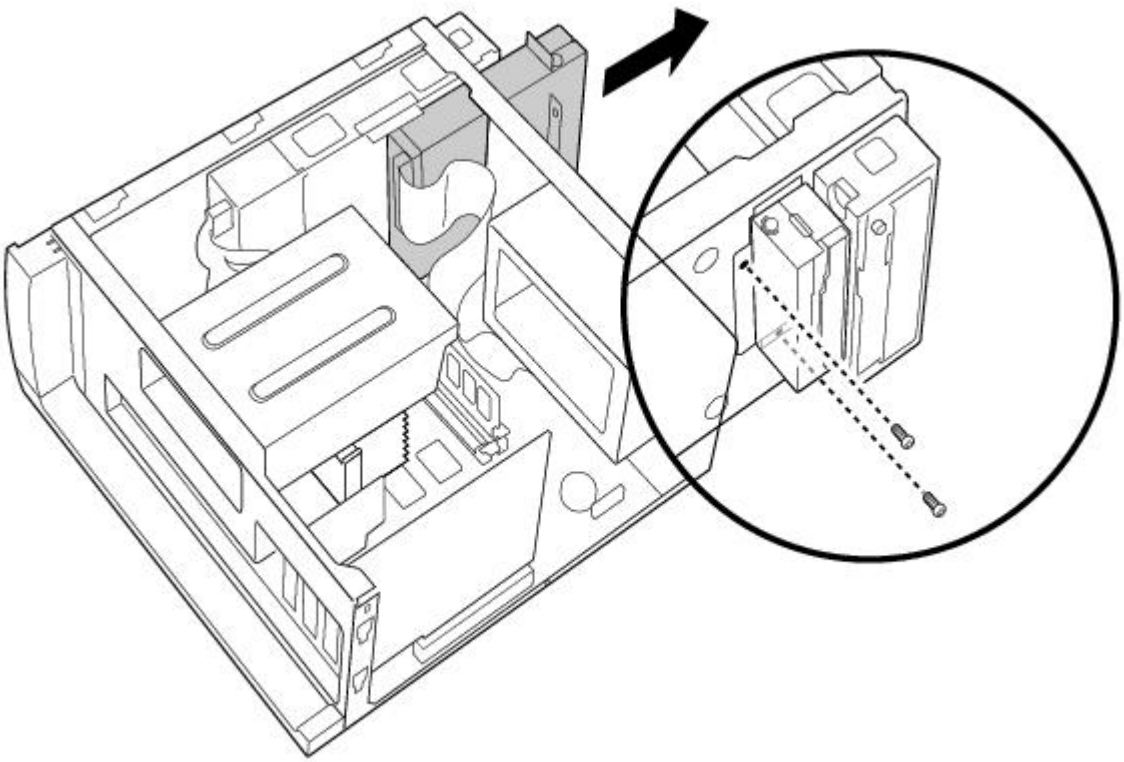

If you are adding memory, you do not need to completely remove the diskette drive or disconnect the cable.

Replacing the Diskette Drive

To replace the diskette drive

1. Push the diskette drive straight into the drive slot.
2. Replace the two screws that secure the diskette drive to the front of the chassis.
3. Replace the front panel, as described in Replacing the Front Panel.

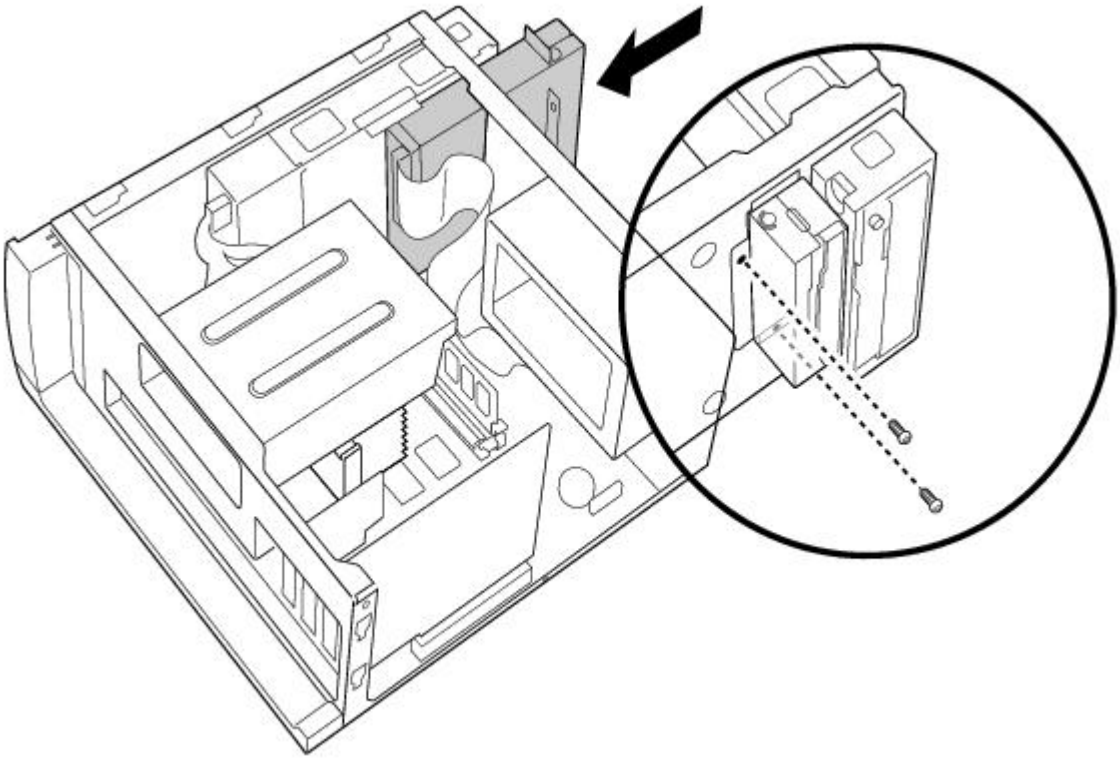

Replacing the Bottom Panel

To replace the bottom panel

1. Align the bottom panel with the screw hole on the bottom of the chassis.
2. Replace the screw that secures the bottom panel to the chassis.

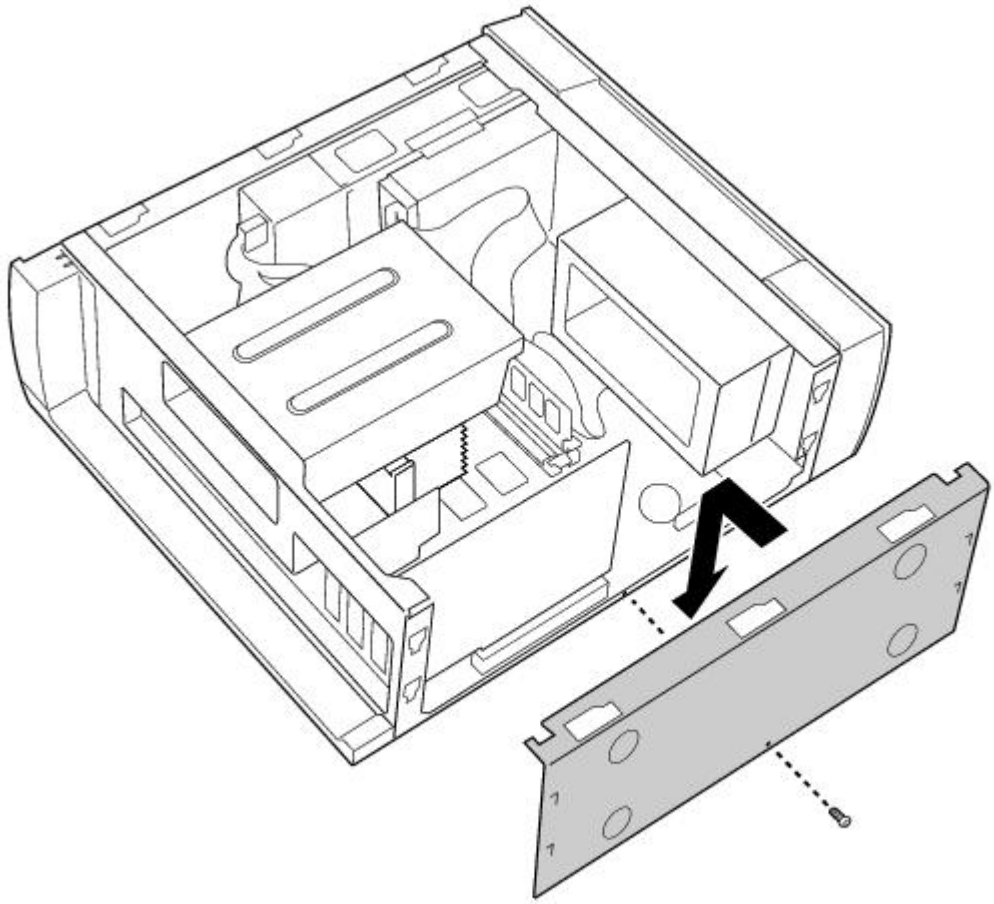

Replacing the Front Panel

To replace the front panel

1. Push the front panel straight onto the front of the chassis until it clicks into place.

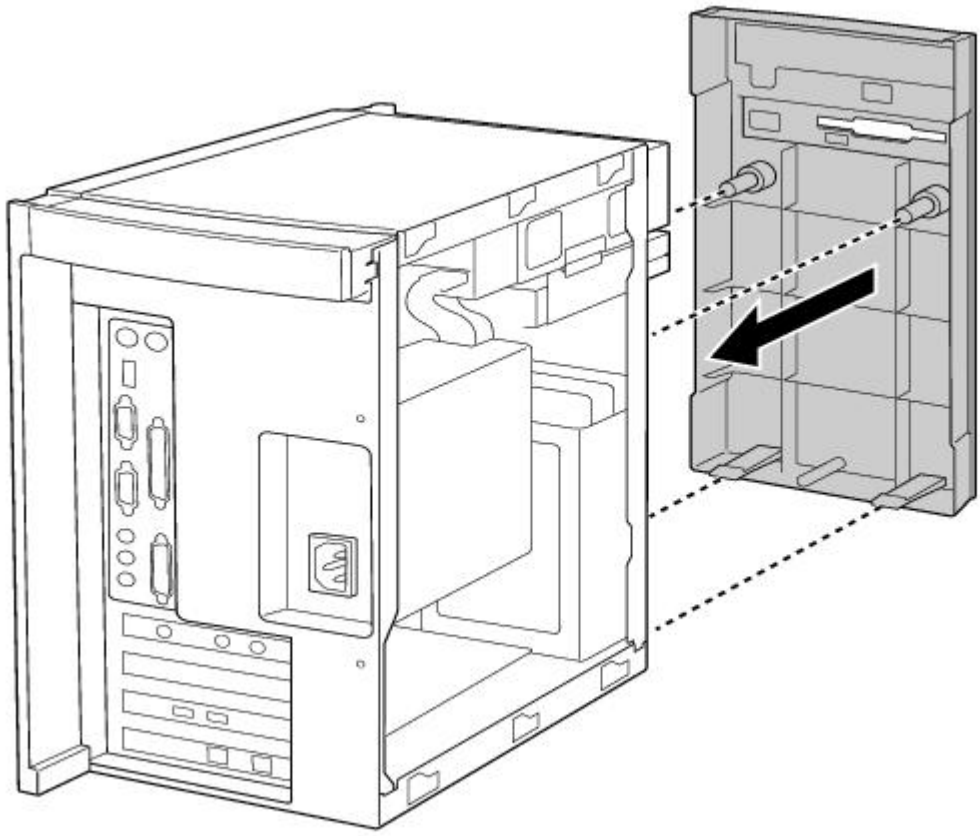

2. Replace the front cover of the CD tray by sliding it down onto the front of the open tray.
3. Close the CD tray.

Replacing the Left-Side Panel

To replace the left-side panel

1. Slide the panel forward until it stops.
2. Replace the two screws that secure the panel to the chassis.

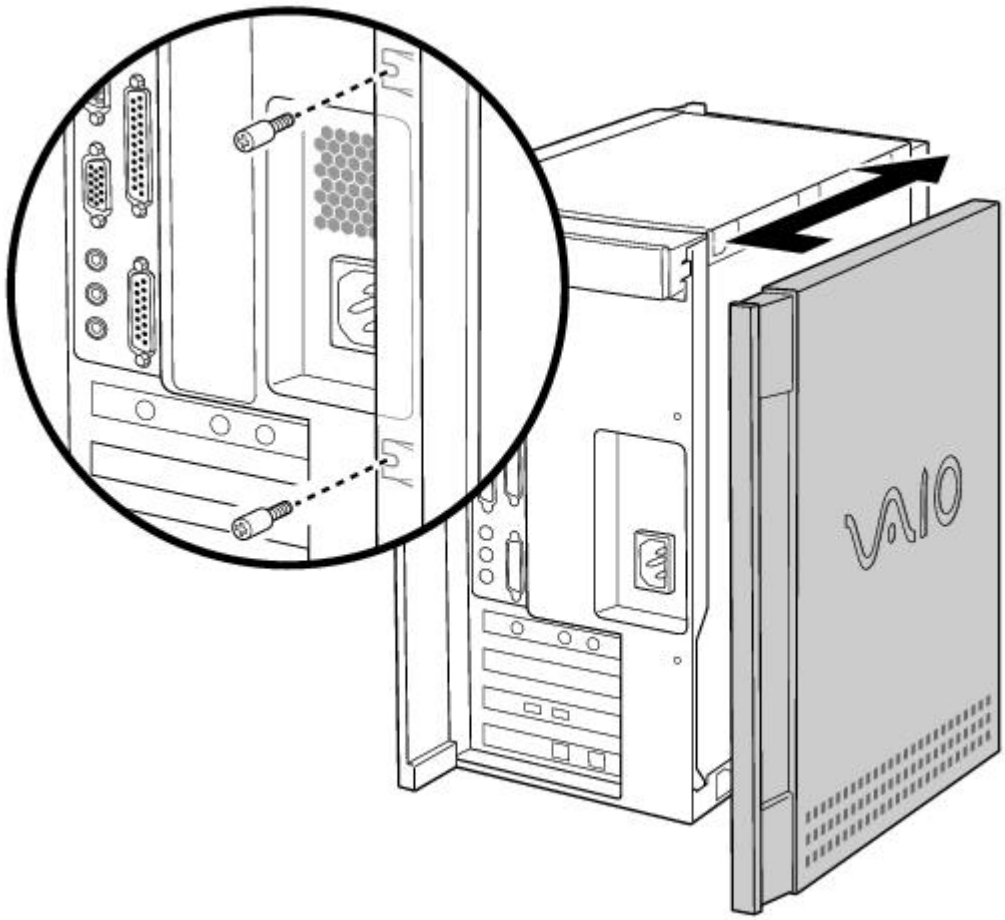

Upgrading and Maintaining Your VAIO Digital Studio Computer

In the future you may want to install additional boards to expand the functionality of your computer. This section describes how to open your computer and insert add-in boards, add memory, replace the lithium battery, and install an additional hard disk drive. For more information on upgrading your Sony computer, see the *VAIO Digital Studio Computer Reference Manual*. You can download this electronic document from the Sony Web site at http://www.sony.com/pcsupport.

The procedures in this section assume you are familiar with the general terminology associated with personal computers and with the safety practices and regulatory compliance required for using and modifying electronic equipment. Read Notes on Use before upgrading your Sony computer.

Always switch the power off before you open the system or connect your computer to peripheral equipment; otherwise, damage may occur to the integrated circuits in your computer.

Electrostatic discharge (ESD) can damage disk drives, add-in cards, and other components. Do the procedures described here only at an ESD workstation. If such a station is not available, do not work in a carpeted area and do not handle materials that produce or hold static electricity (cellophane wrappers, for example). Ground yourself by maintaining continuous contact with an unpainted metal portion of the chassis while performing the procedure.

Inserting an Add-in Board

You can add up to two additional PCI boards to the system.

Your VAIO Digital Studio Computer cannot accommodate PCI add-in boards exceeding 7.7" in length.

To insert an add-in board

Make sure you observe the proper safety precautions when you add boards to your Sony computer. See Notes on Use.

1. Shut down your computer and turn off all peripheral devices, such as your printer, display, and speakers.
2. Unplug your computer and any peripheral devices.
3. Remove the left-side panel as described in Removing the Left-Side Panel.
4. Identify the expansion slot where you want to insert the add-in board.
5. Remove the slot cover for the slot you have chosen.

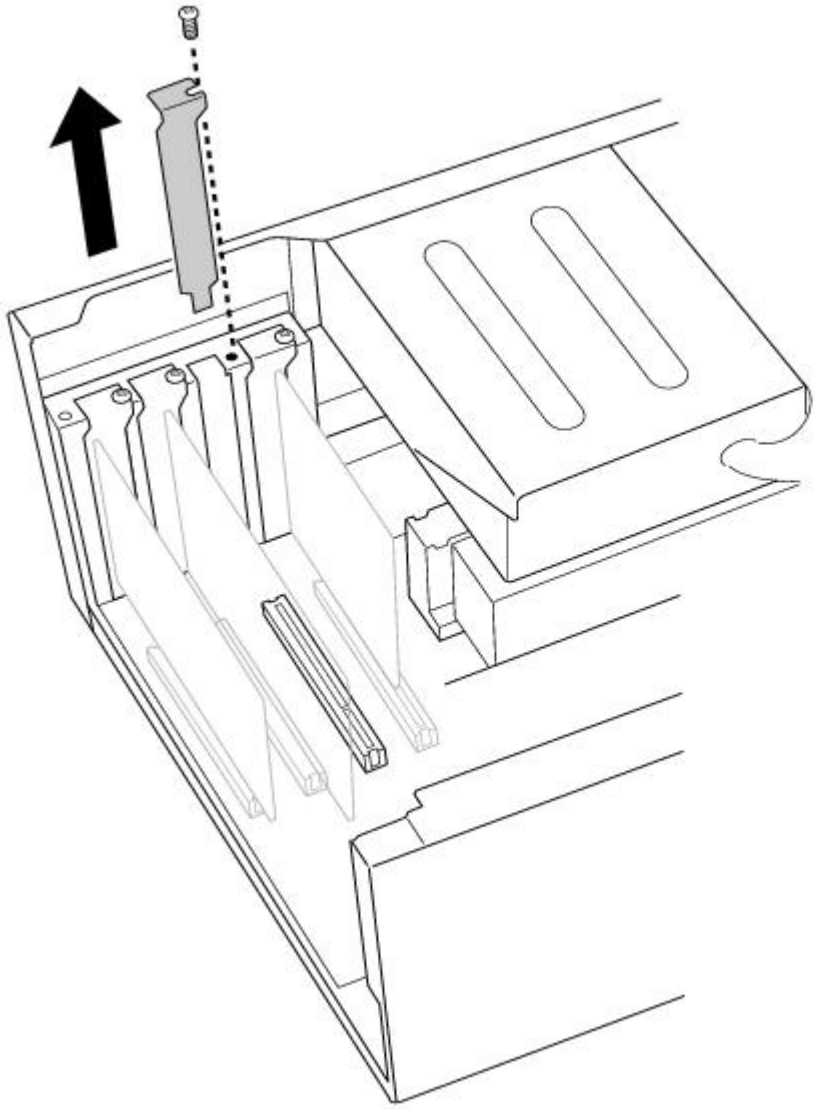

6. Install the add-in board by plugging it into the expansion slot on the system board. Attach any internal cables that the board requires (see the manual for the add-in board).

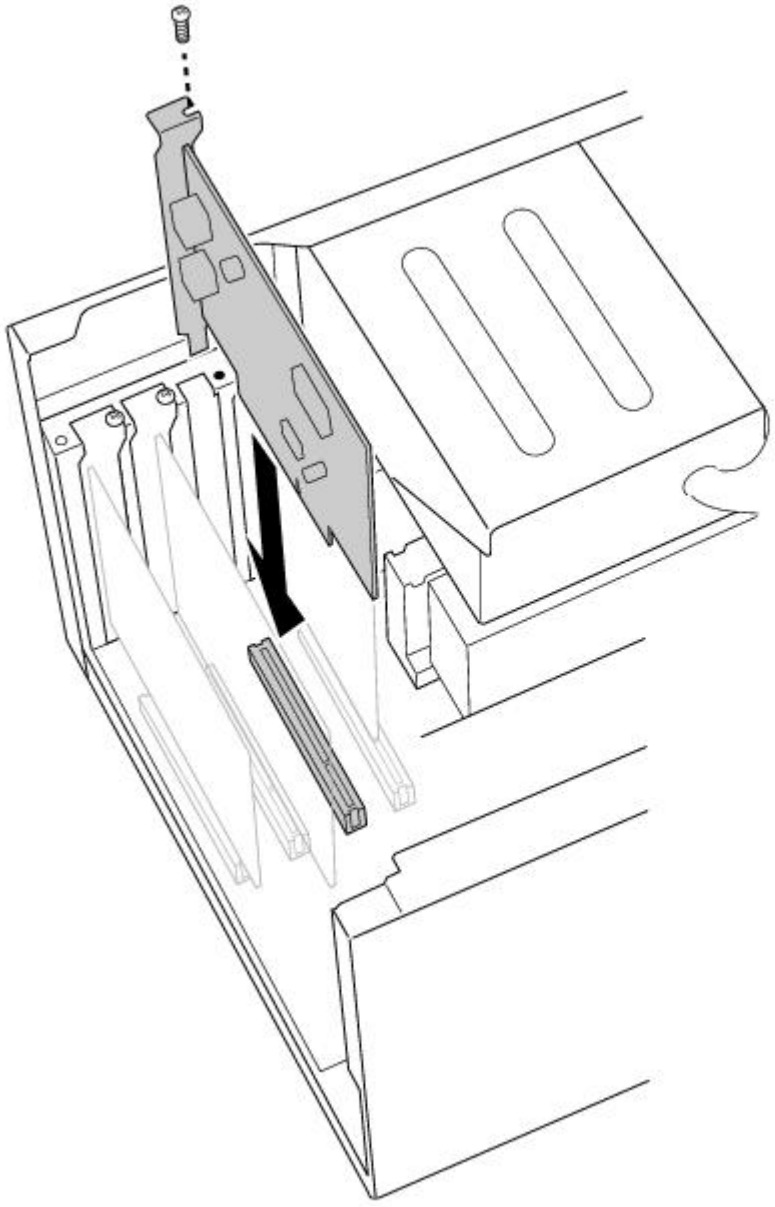

7. Replace the left-side panel as described in Replacing the Left-Side Panel.

Adding Memory

In order to increase your computer's memory, you may need to remove one of the factory-installed DIMMs and replace it with one of greater capacity. For details, see the *VAIO Digital Studio Computer Reference Manual*, which is available at Sony's Web site at http://www.sony.com/pcsupport.

For memory upgrades, use only 3.3V unbuffered 4-clock 64-bit 66 MHz SDRAM DIMM module Rev1.0 or 3.3V unbuffered 4-clock 72-bit 66 MHz SDRAM DIMM module Rev1.0. For more information on Digital Studio Computer compatible memory, call Sony at 1-888-4SONYPC (1-888-476-6972).

To install memory

Make sure you observe the proper safety precautions when you add DIMMs to your Sony computer. See Notes on Use .

1. Shut down your computer and turn off all peripheral devices, such as your printer, display, and speakers.
2. Unplug your computer and any peripheral devices.
3. Remove the left-side panel, bottom panel, and front panel, as described in Removing the Left-Side Panel. Then detach the diskette drive, as described in Detaching the Diskette Drive.

You do not need to completely remove the diskette drive in order to access the DIMM sockets.

4. If necessary, remove any cables, add-in cards, or other components to access the DIMM sockets.
5. Remove either (or both) of the factory-installed DIMMs.
6. Handle the DIMM only by the edges, and remove it from its anti-static package.
7. Locate the keys on the bottom edge of the DIMM .
8. Align the DIMM over the socket.

To avoid damaging the DIMM socket, move the DIMM socket tabs slightly outward to relieve pressure. The DIMM should then click easily into place.

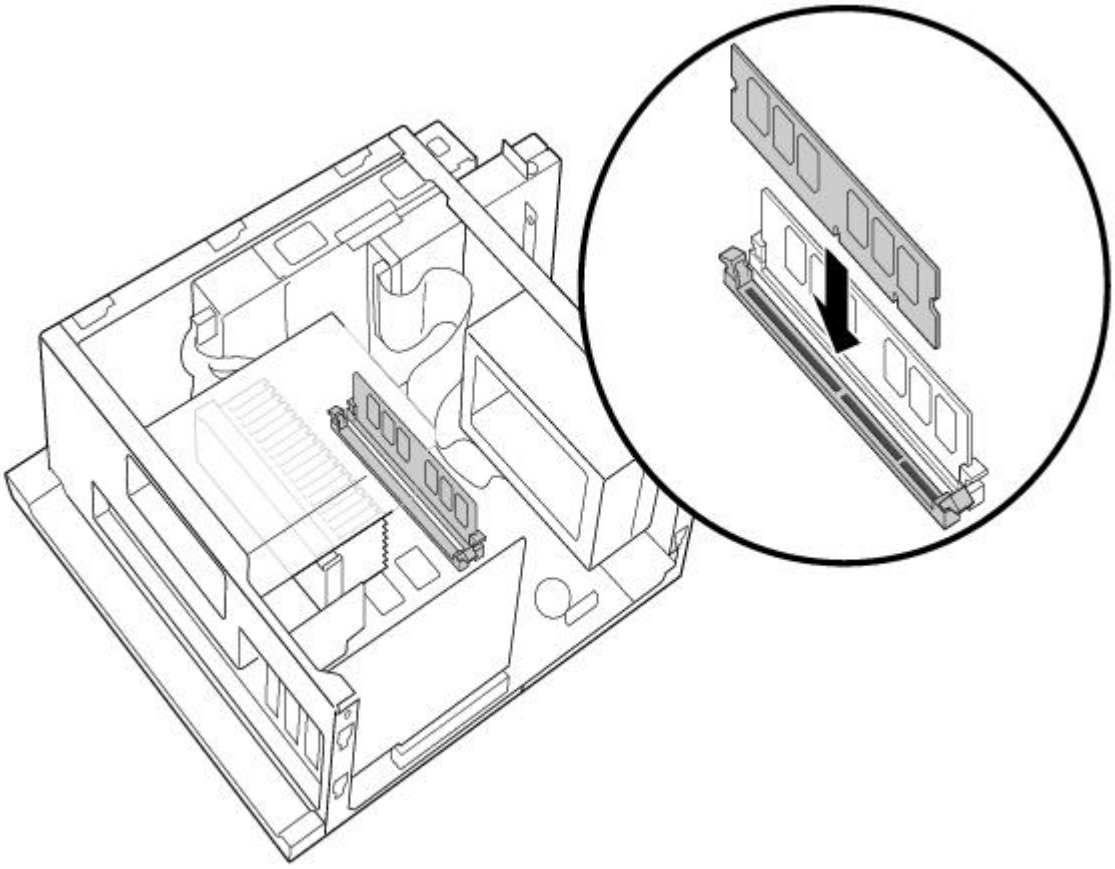

9. Firmly insert the bottom edge of the DIMM into the socket.
10. Press evenly against the DIMM's upper corners. The end latches snap into position automatically.
11. Reinstall any add-in cards or components you removed.
12. Replace the diskette drive and cover panels, as described in Replacing the Diskette Drive to Replacing the Left-Side Panel.

Replacing the Lithium Battery

After several years, when the lithium battery starts to weaken, the system settings stored in CMOS RAM, such as the date and time, may be wrong. When this occurs, you need to replace the lithium battery.

To replace the lithium battery

1. To run the Setup utility, press F3 when your computer is starting up. Then press F1 to run the BIOS setup utility.

2. Write down the current BIOS Setup options.
3. Shut down your computer and turn off all peripheral devices, such as your printer, display, and speakers. Unplug your computer.
4. Remove the left-side and bottom panels, as described in Removing the Left-Side Panel.
5. Install the new battery with the plus (+) side up.

There is danger of explosion if you replace the battery incorrectly. You must replace the battery only with a CR2032 type lithium battery. Discard used batteries according to the instructions on On Disposal of the Lithium Battery.

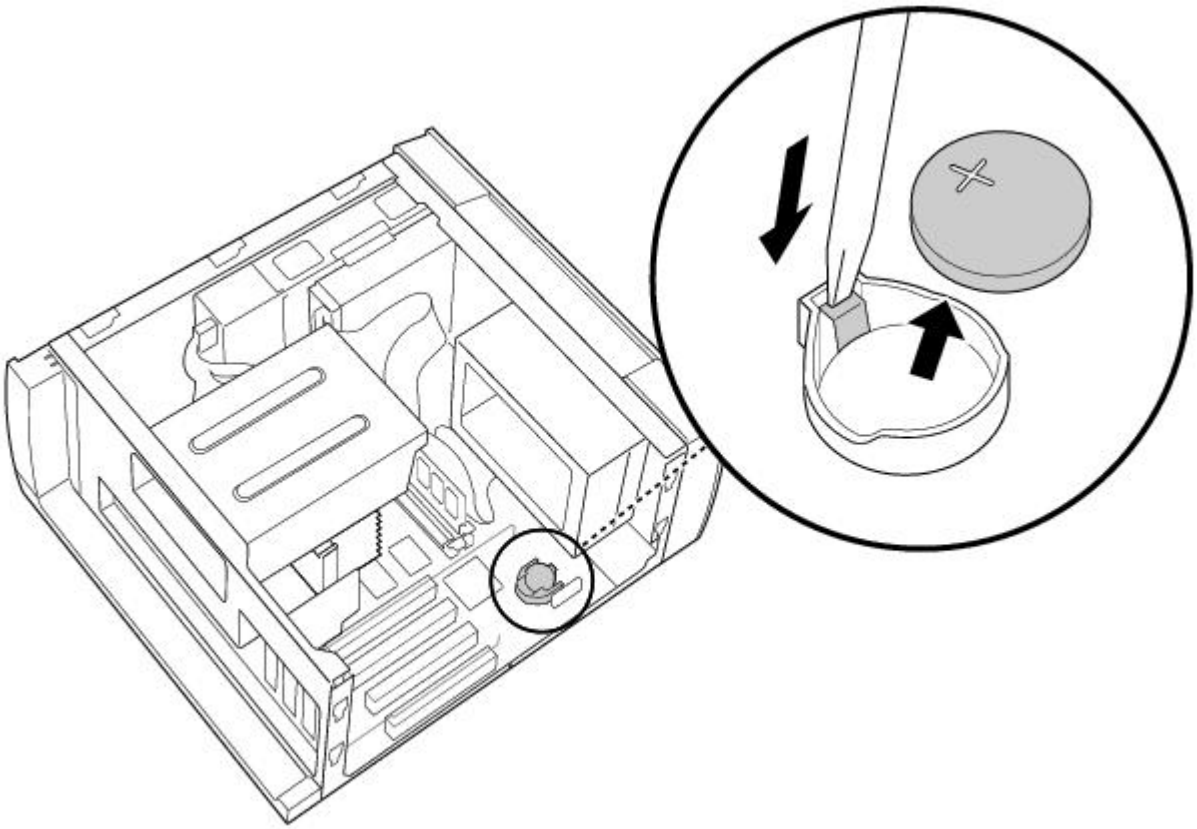

6. Replace the bottom and left-side panels, as described in Replacing the Bottom Panel.

The values stored in the CMOS memory are now reset to the factory default values. You must run the Setup utility to reset the date, time, passwords, and other options. See the VAIO Digital Studio Computer Reference Manual for details.

7. To run the Setup utility, press F3 when your computer is starting up. Then press F1 to run the BIOS setup utility.
8. Change the default values to the values you wrote down in step 2.
9. Save your Setup changes, and then exit the Setup utility.

Installing an Internal Hard Disk Drive

Your VAIO Digital Studio Computer comes with an available bay to hold an additional hard disk drive. The drive you install must not require front panel access. The hard disk drive access light blinks when either internal drive is active.

Before opening the system unit, save any open files, exit Windows, turn off the power of the computer and all attached peripherals, and then unplug the power cord.

1. Configure the jumpers on the new drive as a primary slave (see your drive's documentation for

configuration instructions).

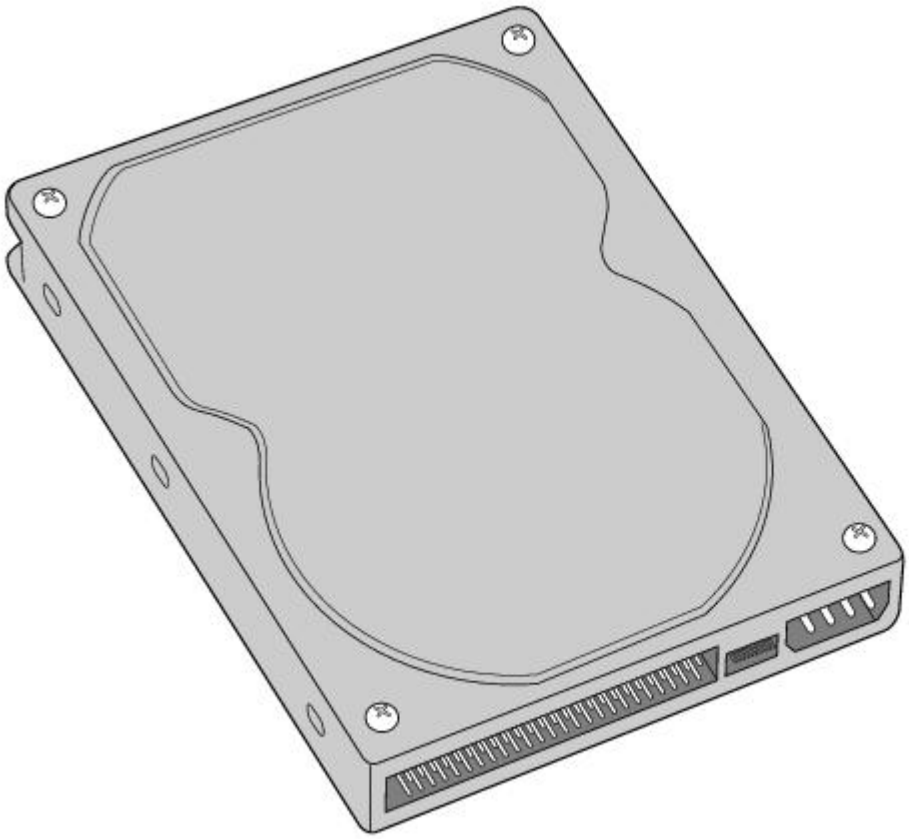

2. Remove the left-side panel, as described in Removing the Left-Side Panel.
3. Remove the front panel, as described in Removing the Front Panel.
4. Remove the bottom panel, as described in Removing the Bottom Panel.
5. Lay the system on its right side (left side faces up-see diagram that follows).
6. Remove the two screws that secure the drive holder.
7. Slide the drive holder forward and then out.

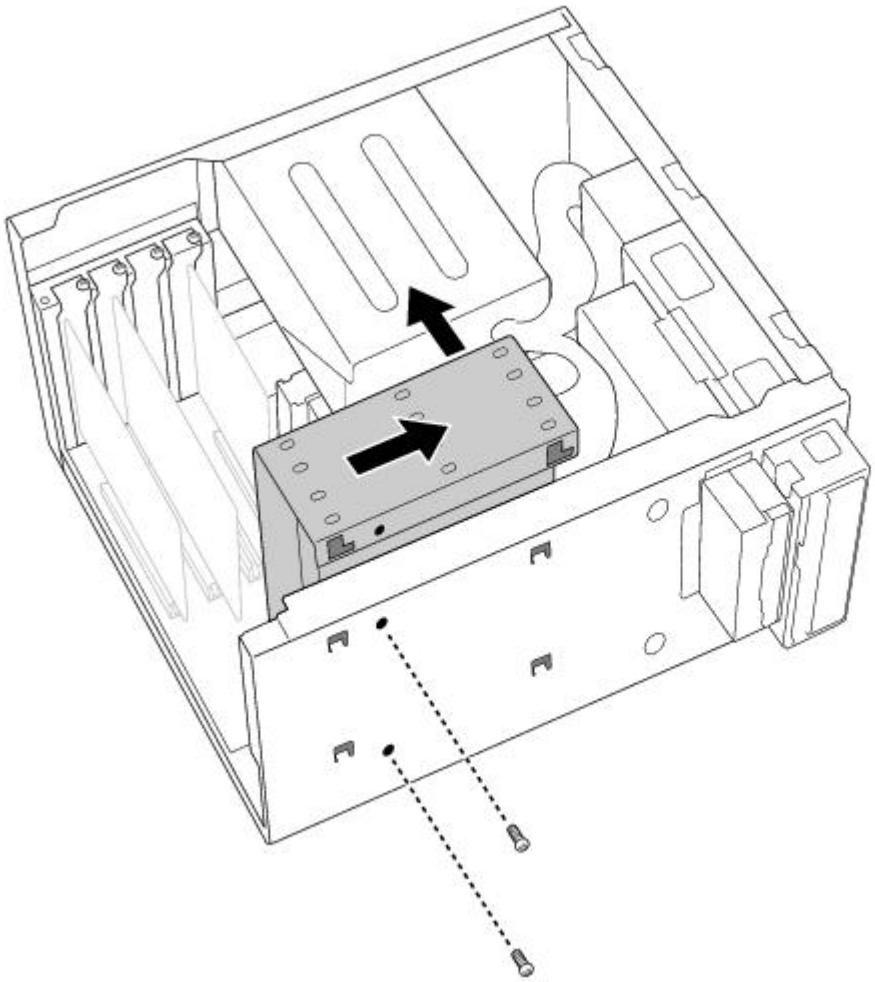

8. Place the drive holder upside down on top of the power supply.

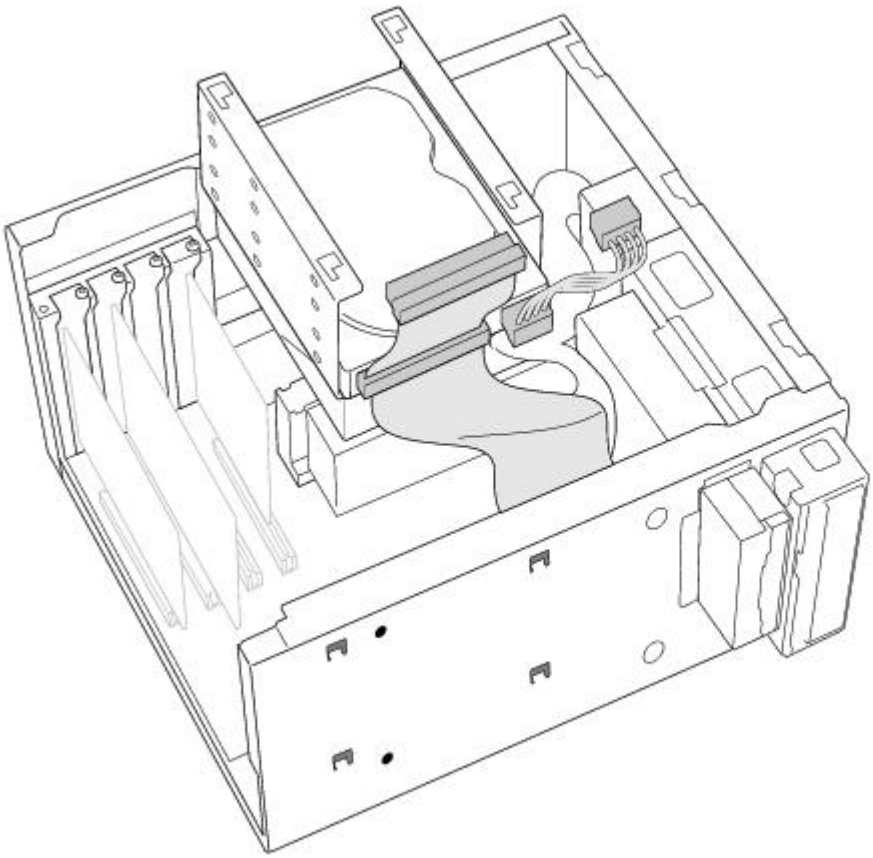

9. Slide the new drive into the drive holder and align the holes on each side of the drive bay.

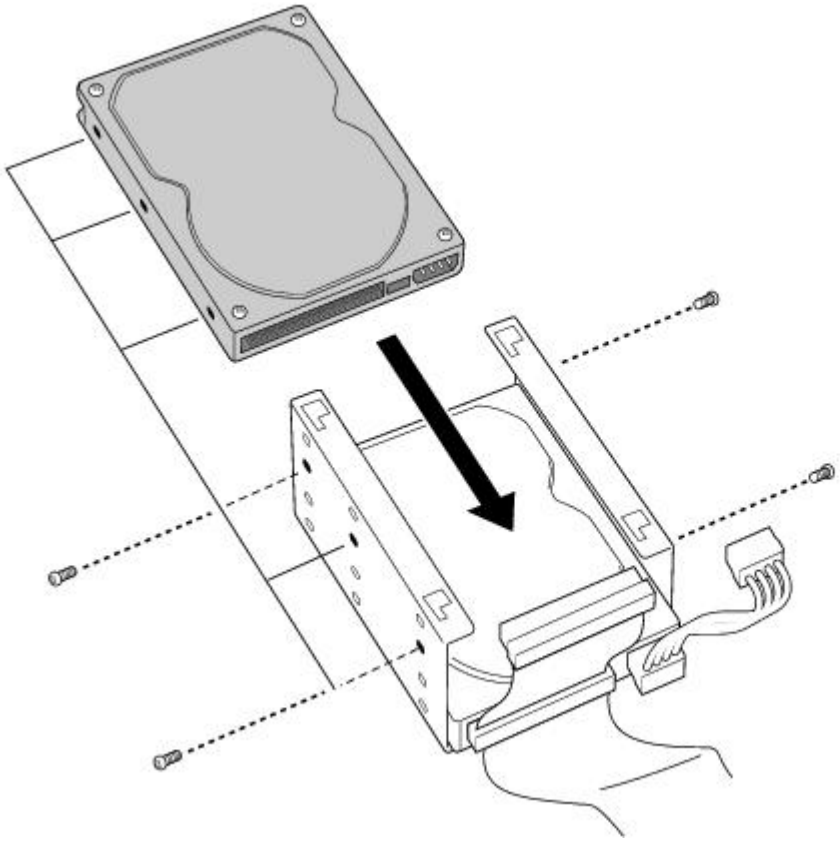

10. Secure the drive to the drive holder using any two of the three holes on each side of the drive holder (screws are provided with the new drive). Do not overtighten the screws.
11. Connect the second drive connector to the new drive.
12. Connect the second power connector to the new drive.

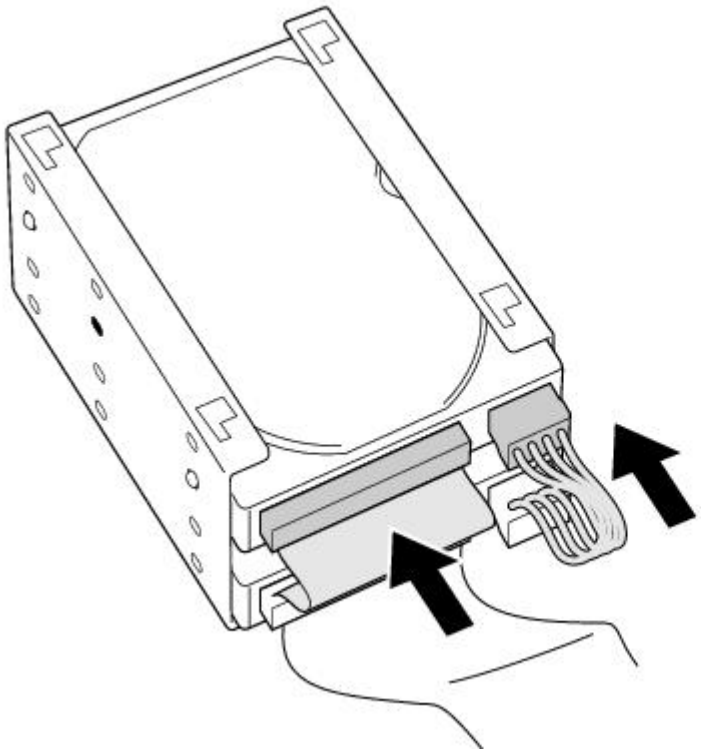

13. Place the drive holder against the inside of the front chassis and slide it back. Be sure to align the slots on the drive holder with the tabs on the inside of the chassis. Be sure to slide the drive holder back so that the tabs slip into the notch at the bottom of the slot.

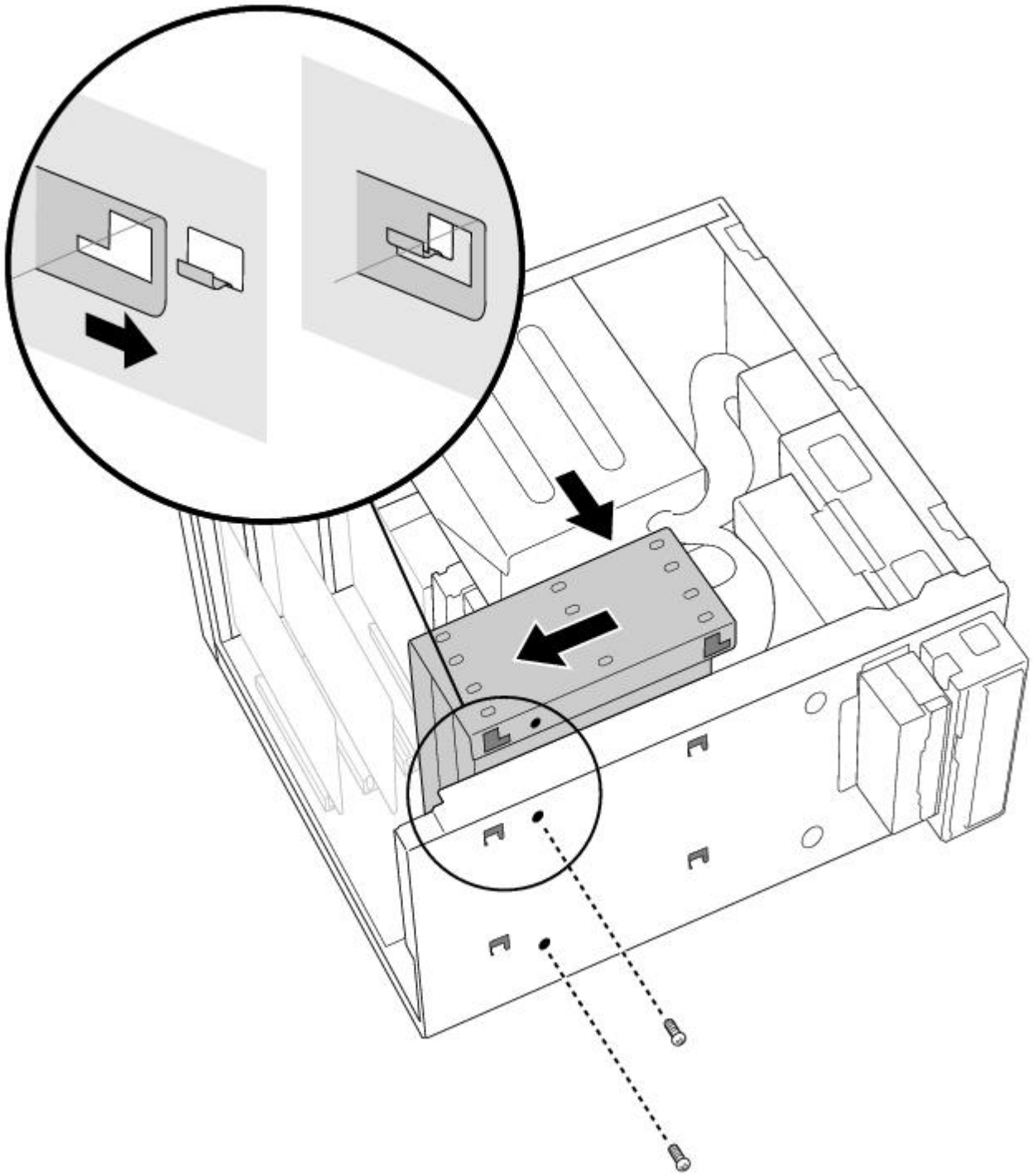

14. Replace the two screws that secure the holder to the chassis.
15. Replace the bottom panel, as described in Replacing the Bottom Panel.
16. Replace the front panel, as described in Replacing the Front Panel.
17. Replace the left-side panel, as described in Replacing the Left-Side Panel.
18. Reconnect the power cord and then turn on your computer.

Your computer automatically recognizes the new drive and configures itself accordingly when you turn it on. Format and partition the new drive following the instructions provided with the drive.

Removing the Left-Side Panel

To remove the left-side panel

1. Remove the two screws that secure the panel to the chassis.
2. Slide the panel back until it stops.
3. Pull the panel straight out to remove it.

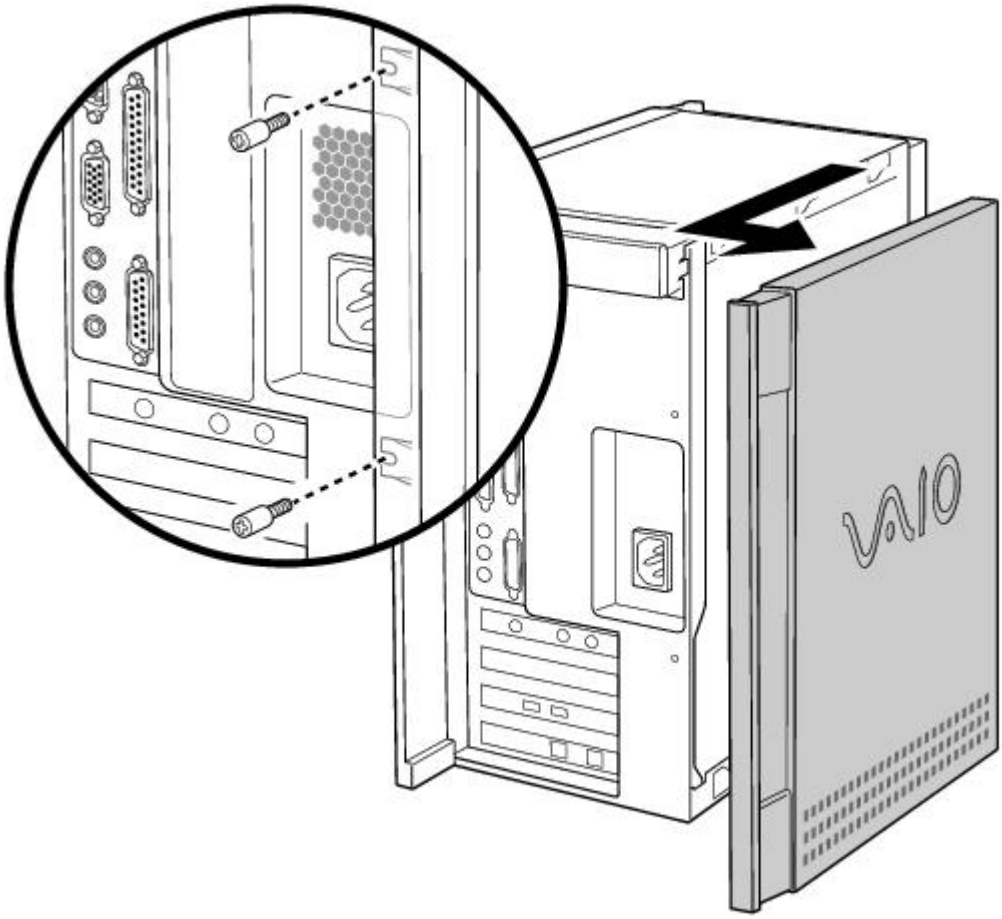

Removing the Bottom Panel

To remove the bottom panel

1. Remove the screw that secures the bottom panel to the chassis.
2. Pull the bottom panel straight out to remove it.

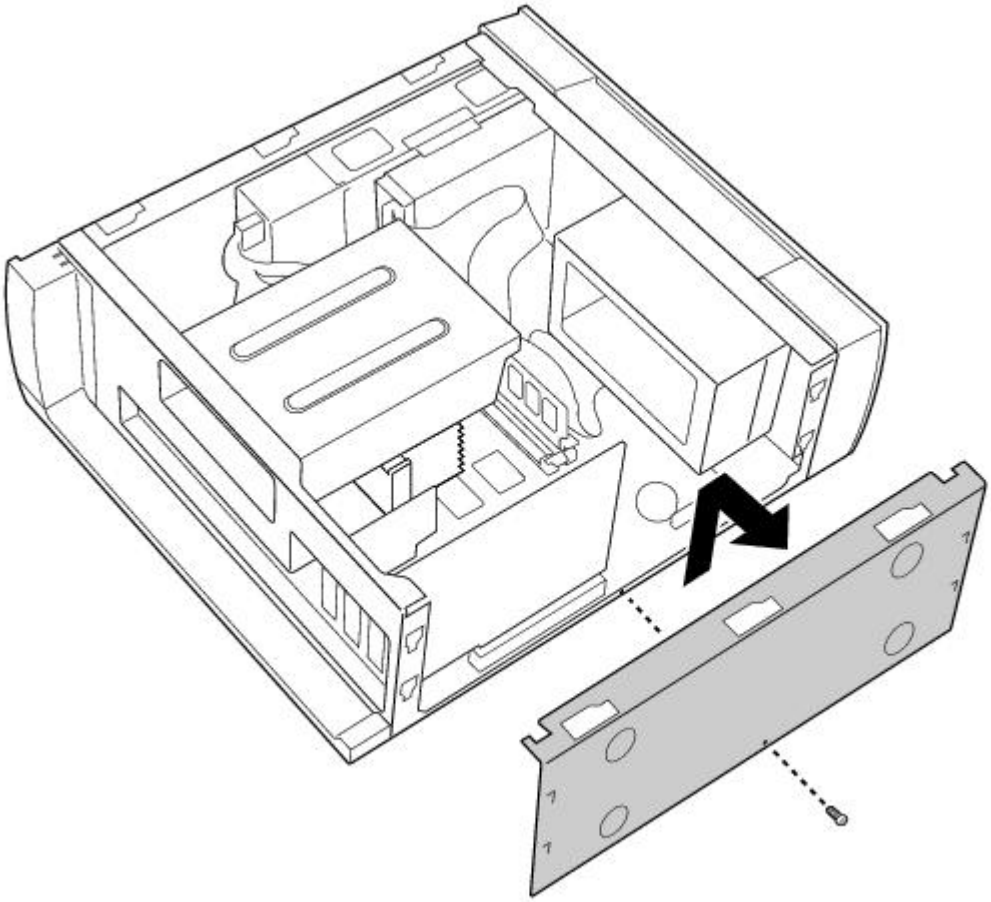

Removing the Front Panel

To remove the front panel

1. Open the CD tray by inserting a thin, pointed object into the emergency eject opening.
2. Slide the CD tray forward.
3. Remove the front cover of the CD tray by lifting it upwards.

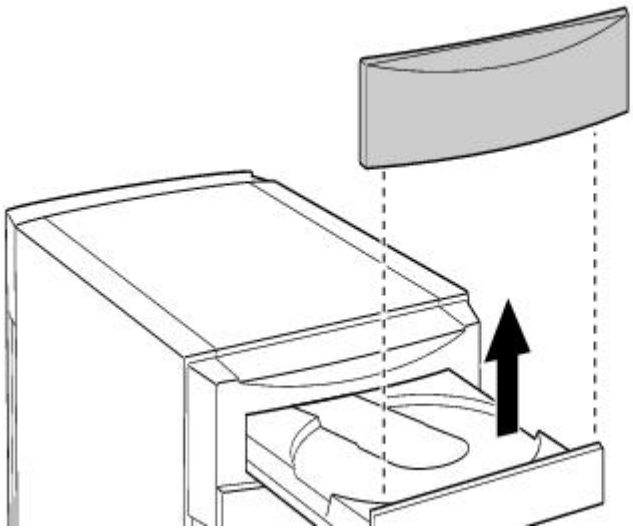

4. Press down on each of the two tabs on the bottom of the front panel to release the panel.
5. Pull the front panel forward to remove it.

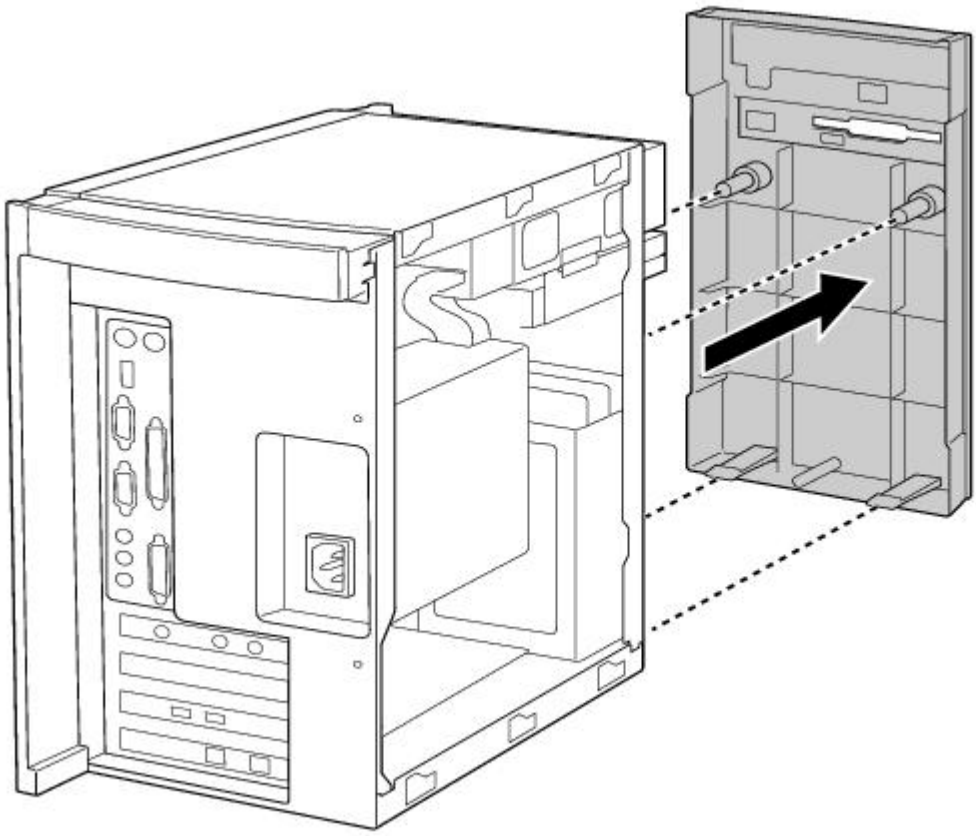

Detaching the Diskette Drive

To detach the diskette drive

1. Remove the front panel, as described in Removing the Front Panel.
2. Remove the two screws that secure the diskette drive to the front of the chassis.
3. Pull the diskette drive forward.

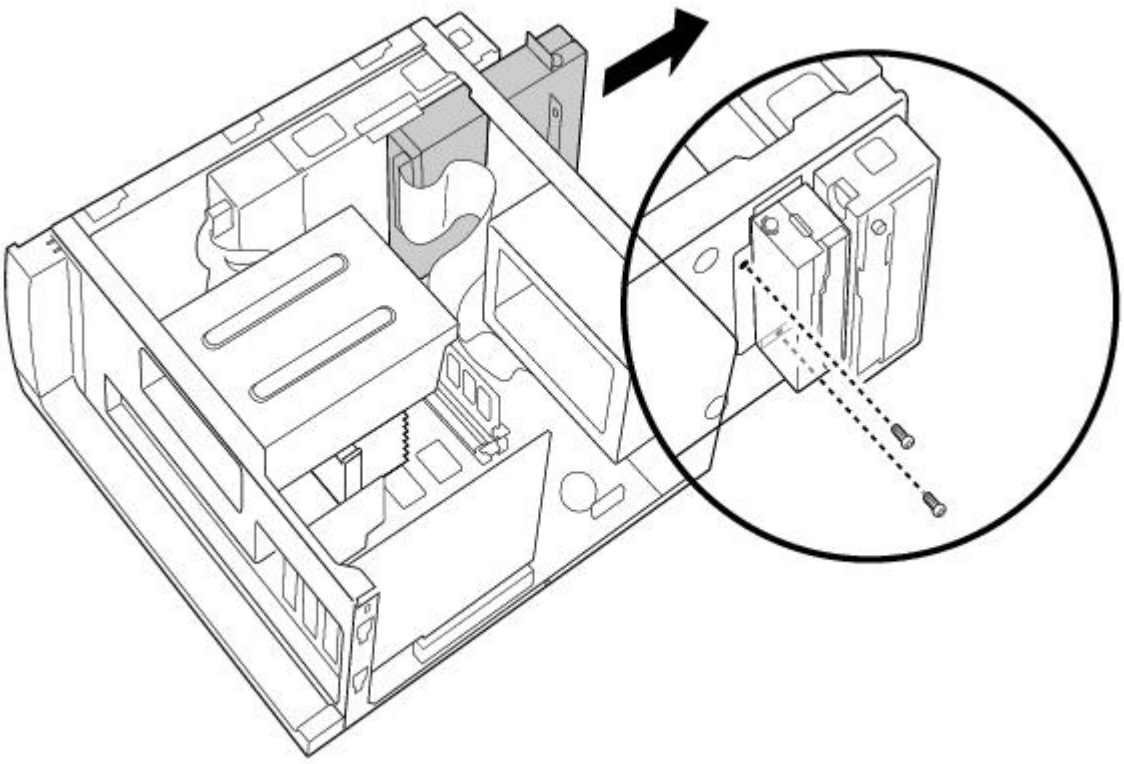

If you are adding memory, you do not need to completely remove the diskette drive or disconnect the cable.

Replacing the Diskette Drive

To replace the diskette drive

1. Push the diskette drive straight into the drive slot.
2. Replace the two screws that secure the diskette drive to the front of the chassis.
3. Replace the front panel, as described in Replacing the Front Panel.

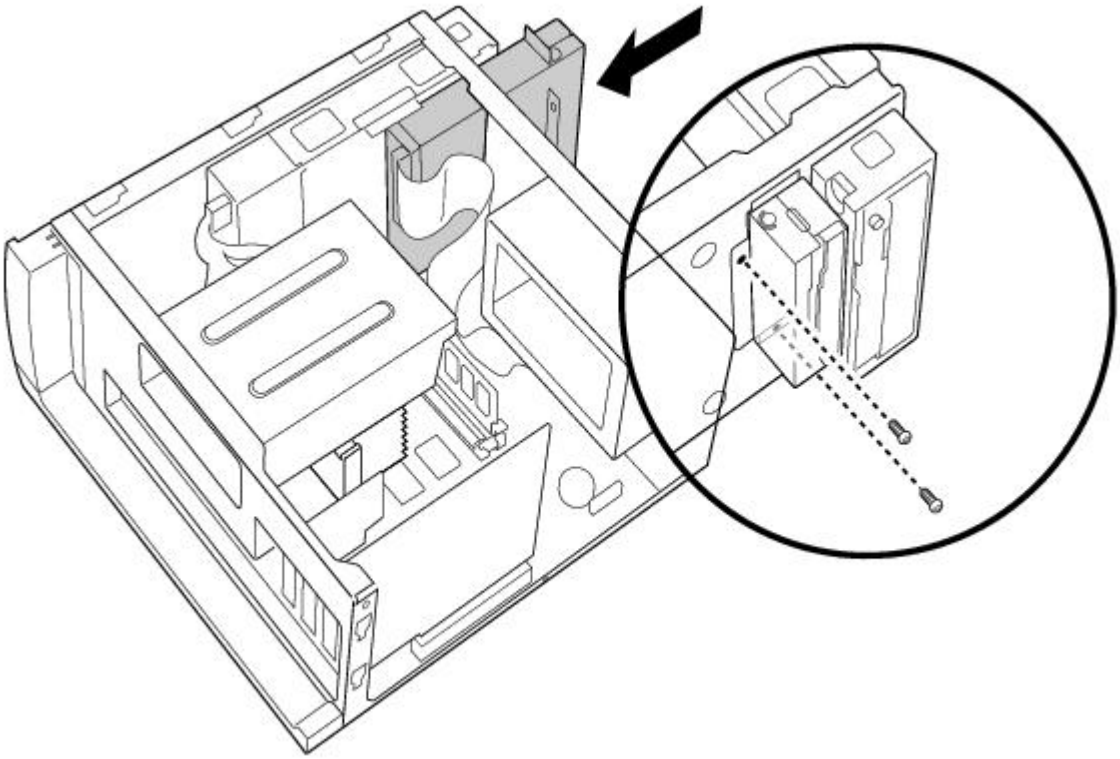

Replacing the Bottom Panel

To replace the bottom panel

1. Align the bottom panel with the screw hole on the bottom of the chassis.
2. Replace the screw that secures the bottom panel to the chassis.

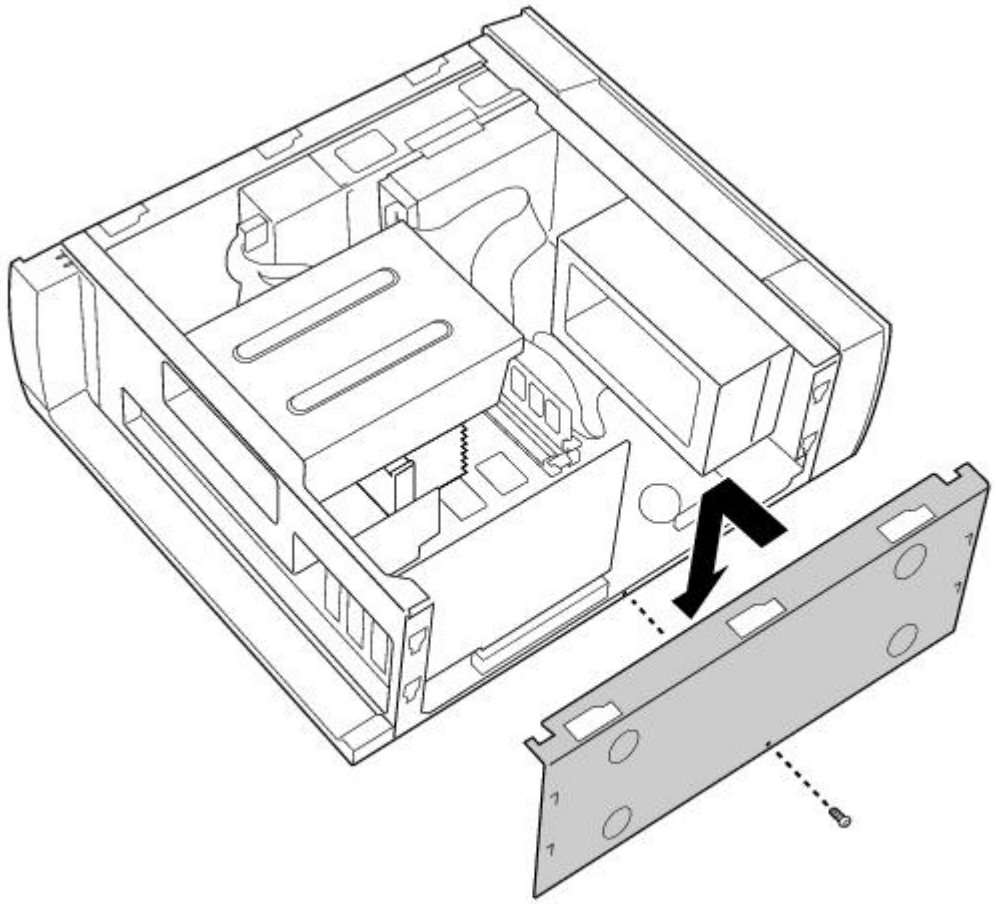

Replacing the Front Panel

To replace the front panel

1. Push the front panel straight onto the front of the chassis until it clicks into place.

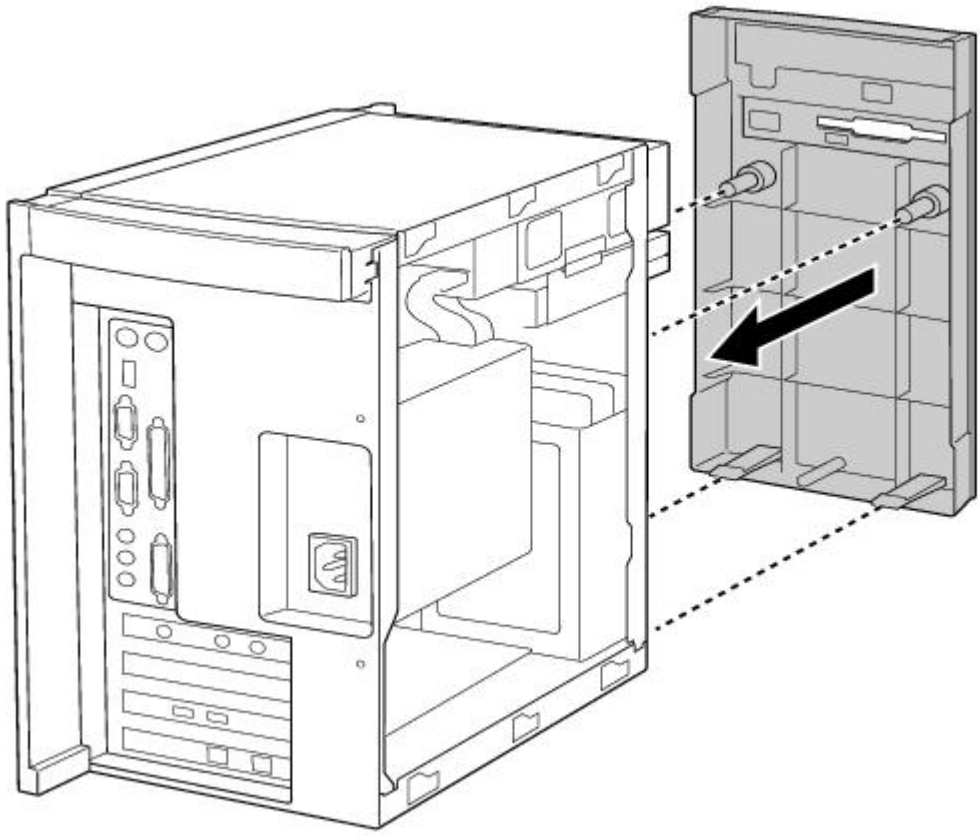

2. Replace the front cover of the CD tray by sliding it down onto the front of the open tray.
3. Close the CD tray.

Replacing the Left-Side Panel

To replace the left-side panel

1. Slide the panel forward until it stops.
2. Replace the two screws that secure the panel to the chassis.

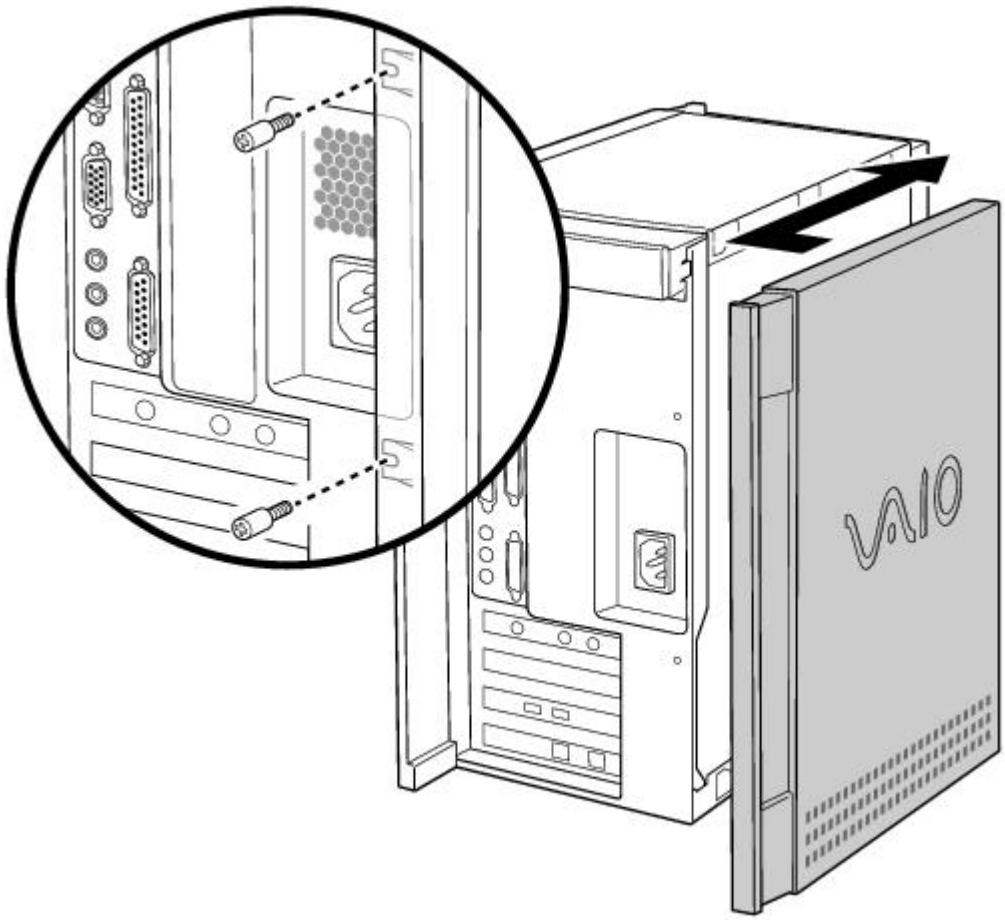

Upgrading and Maintaining Your VAIO Digital Studio Computer

In the future you may want to install additional boards to expand the functionality of your computer. This section describes how to open your computer and insert add-in boards, add memory, replace the lithium battery, and install an additional hard disk drive. For more information on upgrading your Sony computer, see the *VAIO Digital Studio Computer Reference Manual*. You can download this electronic document from the Sony Web site at http://www.sony.com/pcsupport.

The procedures in this section assume you are familiar with the general terminology associated with personal computers and with the safety practices and regulatory compliance required for using and modifying electronic equipment. Read Notes on Use before upgrading your Sony computer.

Always switch the power off before you open the system or connect your computer to peripheral equipment; otherwise, damage may occur to the integrated circuits in your computer.

Electrostatic discharge (ESD) can damage disk drives, add-in cards, and other components. Do the procedures described here only at an ESD workstation. If such a station is not available, do not work in a carpeted area and do not handle materials that produce or hold static electricity (cellophane wrappers, for example). Ground yourself by maintaining continuous contact with an unpainted metal portion of the chassis while performing the procedure.

Inserting an Add-in Board

You can add up to two additional PCI boards to the system.

Your VAIO Digital Studio Computer cannot accommodate PCI add-in boards exceeding 7.7" in length.

To insert an add-in board

Make sure you observe the proper safety precautions when you add boards to your Sony computer. See Notes on Use.

1. Shut down your computer and turn off all peripheral devices, such as your printer, display, and speakers.
2. Unplug your computer and any peripheral devices.
3. Remove the left-side panel as described in Removing the Left-Side Panel.
4. Identify the expansion slot where you want to insert the add-in board.
5. Remove the slot cover for the slot you have chosen.

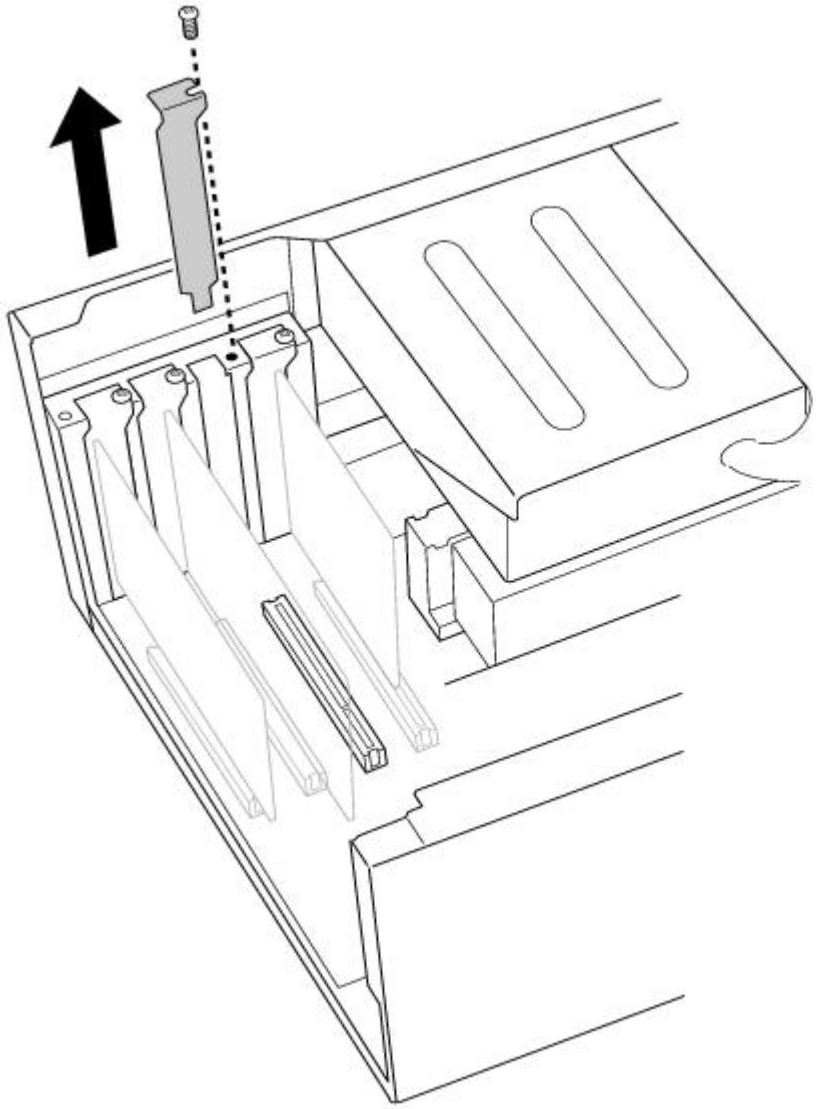

6. Install the add-in board by plugging it into the expansion slot on the system board. Attach any internal cables that the board requires (see the manual for the add-in board).

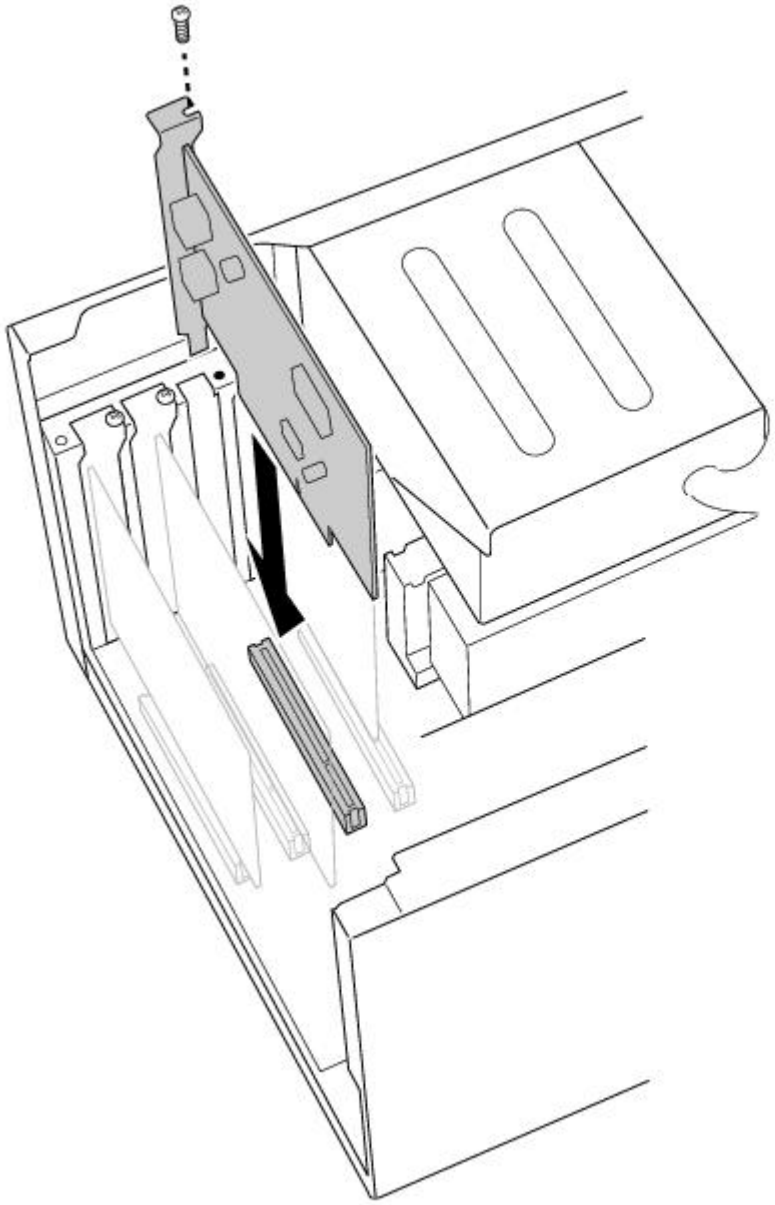

7. Replace the left-side panel as described in Replacing the Left-Side Panel.

Adding Memory

In order to increase your computer's memory, you may need to remove one of the factory-installed DIMMs and replace it with one of greater capacity. For details, see the *VAIO Digital Studio Computer Reference Manual*, which is available at Sony's Web site at http://www.sony.com/pcsupport.

For memory upgrades, use only 3.3V unbuffered 4-clock 64-bit 66 MHz SDRAM DIMM module Rev1.0 or 3.3V unbuffered 4-clock 72-bit 66 MHz SDRAM DIMM module Rev1.0. For more information on Digital Studio Computer compatible memory, call Sony at 1-888-4SONYPC (1-888-476-6972).

To install memory

Make sure you observe the proper safety precautions when you add DIMMs to your Sony computer. See Notes on Use .

1. Shut down your computer and turn off all peripheral devices, such as your printer, display, and speakers.
2. Unplug your computer and any peripheral devices.
3. Remove the left-side panel, bottom panel, and front panel, as described in Removing the Left-Side Panel. Then detach the diskette drive, as described in Detaching the Diskette Drive.

You do not need to completely remove the diskette drive in order to access the DIMM sockets.

4. If necessary, remove any cables, add-in cards, or other components to access the DIMM sockets.
5. Remove either (or both) of the factory-installed DIMMs.
6. Handle the DIMM only by the edges, and remove it from its anti-static package.
7. Locate the keys on the bottom edge of the DIMM .
8. Align the DIMM over the socket.

To avoid damaging the DIMM socket, move the DIMM socket tabs slightly outward to relieve pressure. The DIMM should then click easily into place.

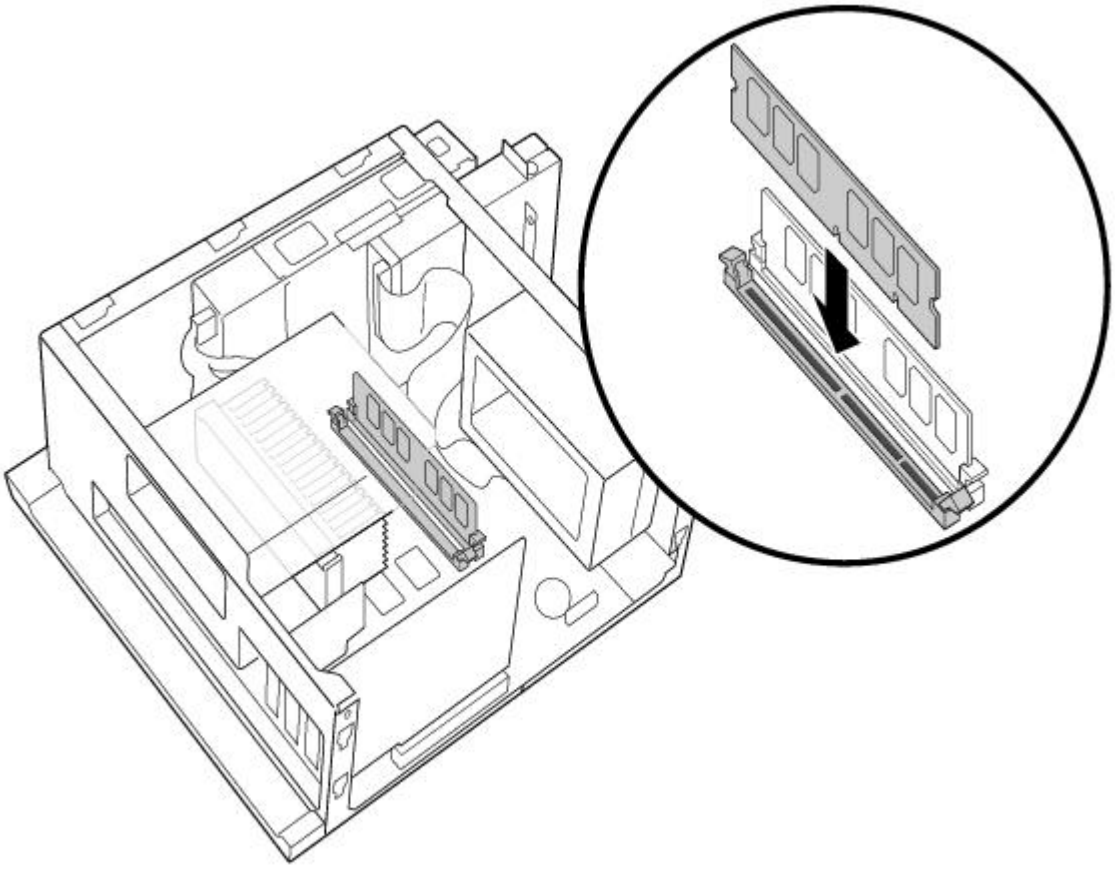

9. Firmly insert the bottom edge of the DIMM into the socket.
10. Press evenly against the DIMM's upper corners. The end latches snap into position automatically.
11. Reinstall any add-in cards or components you removed.
12. Replace the diskette drive and cover panels, as described in Replacing the Diskette Drive to Replacing the Left-Side Panel.

Replacing the Lithium Battery

After several years, when the lithium battery starts to weaken, the system settings stored in CMOS RAM, such as the date and time, may be wrong. When this occurs, you need to replace the lithium battery.

To replace the lithium battery

1. To run the Setup utility, press F3 when your computer is starting up. Then press F1 to run the BIOS setup utility.

2. Write down the current BIOS Setup options.
3. Shut down your computer and turn off all peripheral devices, such as your printer, display, and speakers. Unplug your computer.
4. Remove the left-side and bottom panels, as described in Removing the Left-Side Panel.
5. Install the new battery with the plus (+) side up.

There is danger of explosion if you replace the battery incorrectly. You must replace the battery only with a CR2032 type lithium battery. Discard used batteries according to the instructions on On Disposal of the Lithium Battery.

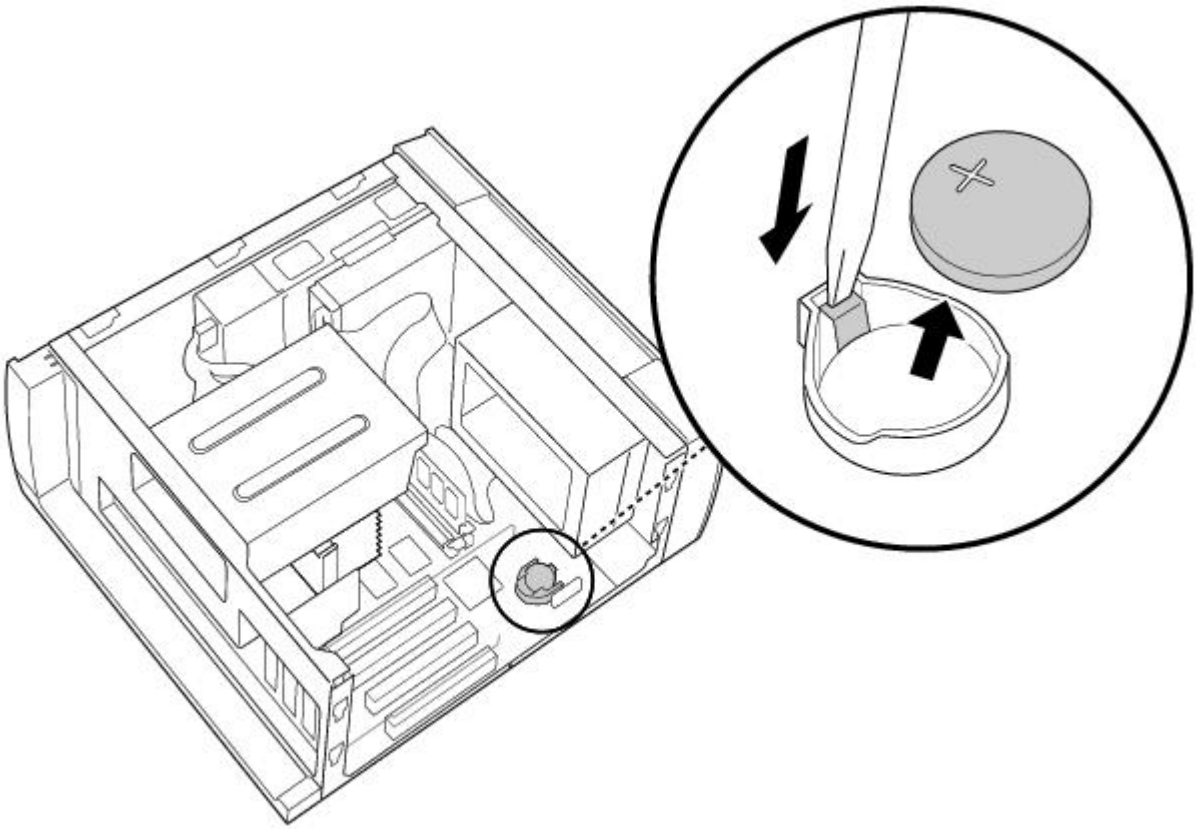

6. Replace the bottom and left-side panels, as described in Replacing the Bottom Panel.

The values stored in the CMOS memory are now reset to the factory default values. You must run the Setup utility to reset the date, time, passwords, and other options. See the VAIO Digital Studio Computer Reference Manual for details.

7. To run the Setup utility, press F3 when your computer is starting up. Then press F1 to run the BIOS setup utility.
8. Change the default values to the values you wrote down in step 2.
9. Save your Setup changes, and then exit the Setup utility.

Installing an Internal Hard Disk Drive

Your VAIO Digital Studio Computer comes with an available bay to hold an additional hard disk drive. The drive you install must not require front panel access. The hard disk drive access light blinks when either internal drive is active.

Before opening the system unit, save any open files, exit Windows, turn off the power of the computer and all attached peripherals, and then unplug the power cord.

1. Configure the jumpers on the new drive as a primary slave (see your drive's documentation for

configuration instructions).

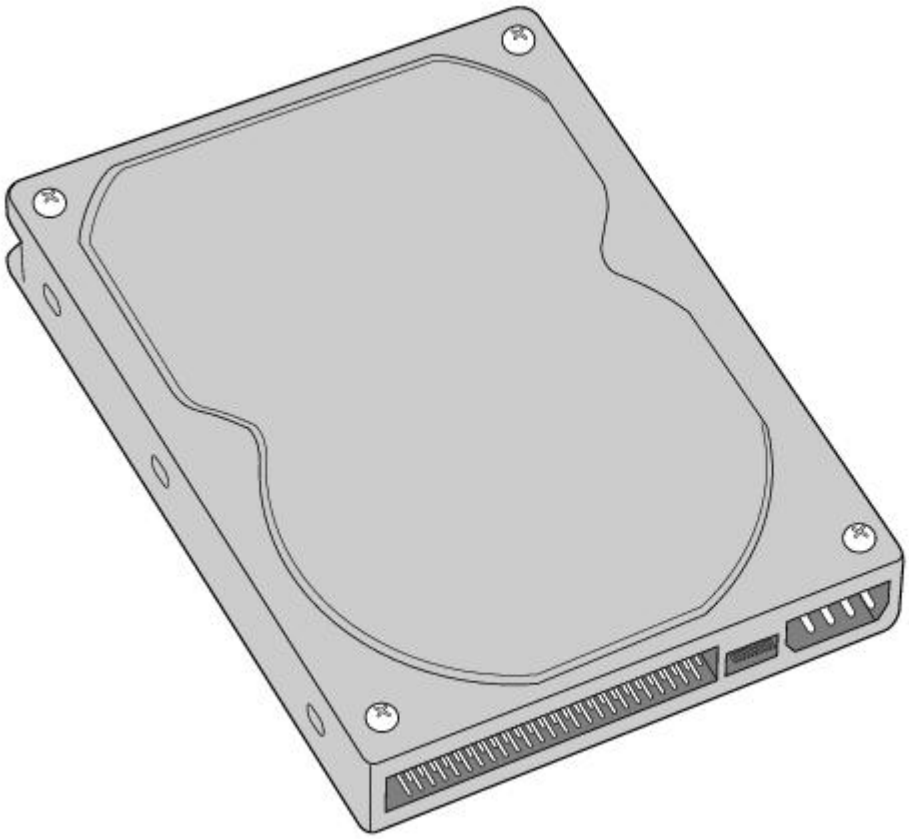

2. Remove the left-side panel, as described in Removing the Left-Side Panel.
3. Remove the front panel, as described in Removing the Front Panel.
4. Remove the bottom panel, as described in Removing the Bottom Panel.
5. Lay the system on its right side (left side faces up-see diagram that follows).
6. Remove the two screws that secure the drive holder.
7. Slide the drive holder forward and then out.

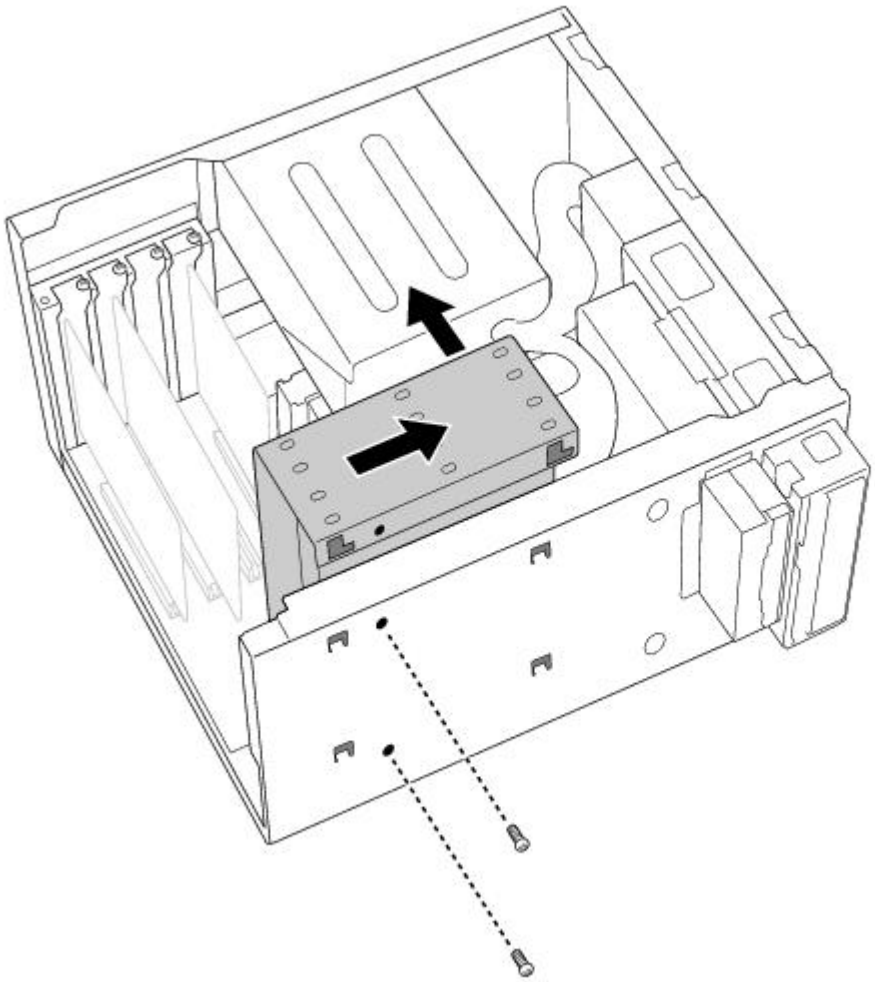

8. Place the drive holder upside down on top of the power supply.

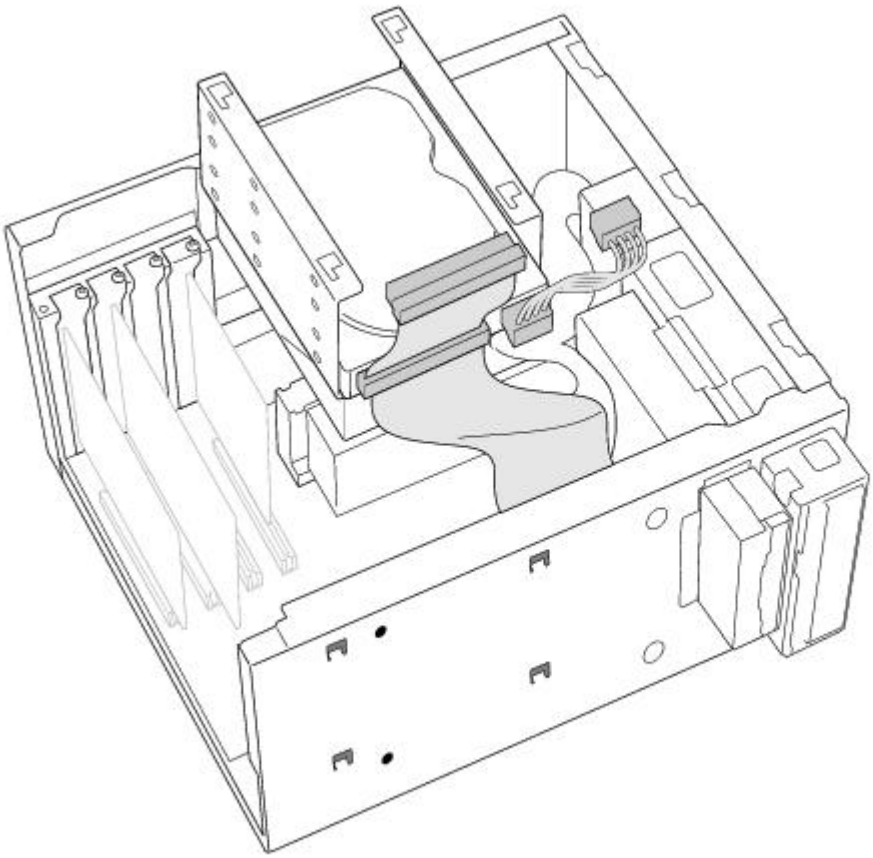

9. Slide the new drive into the drive holder and align the holes on each side of the drive bay.

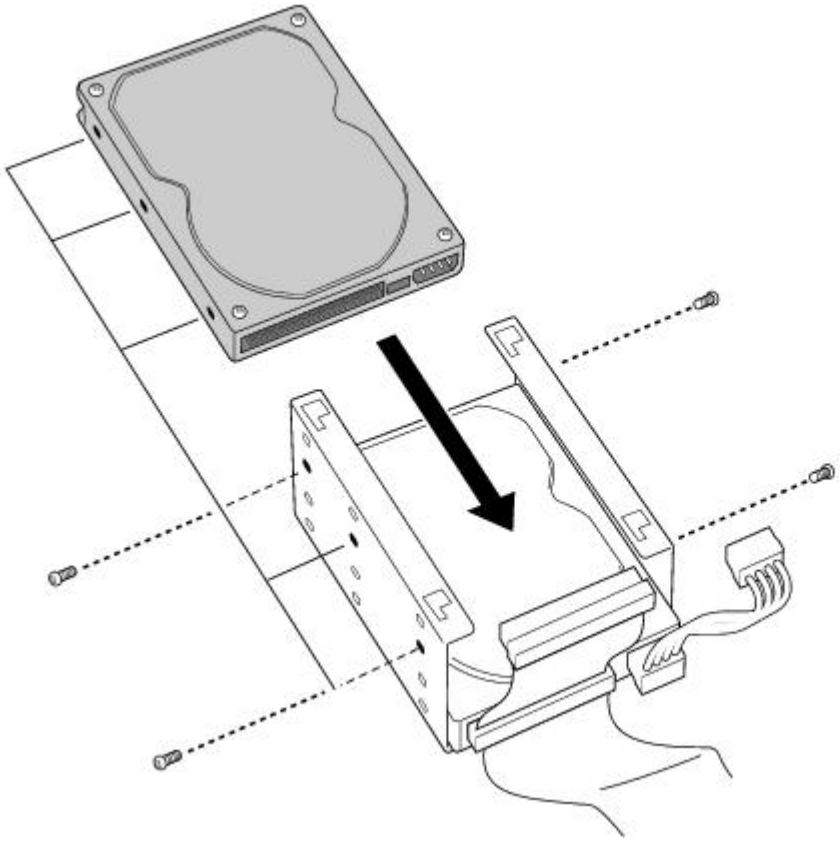

10. Secure the drive to the drive holder using any two of the three holes on each side of the drive holder (screws are provided with the new drive). Do not overtighten the screws.
11. Connect the second drive connector to the new drive.
12. Connect the second power connector to the new drive.

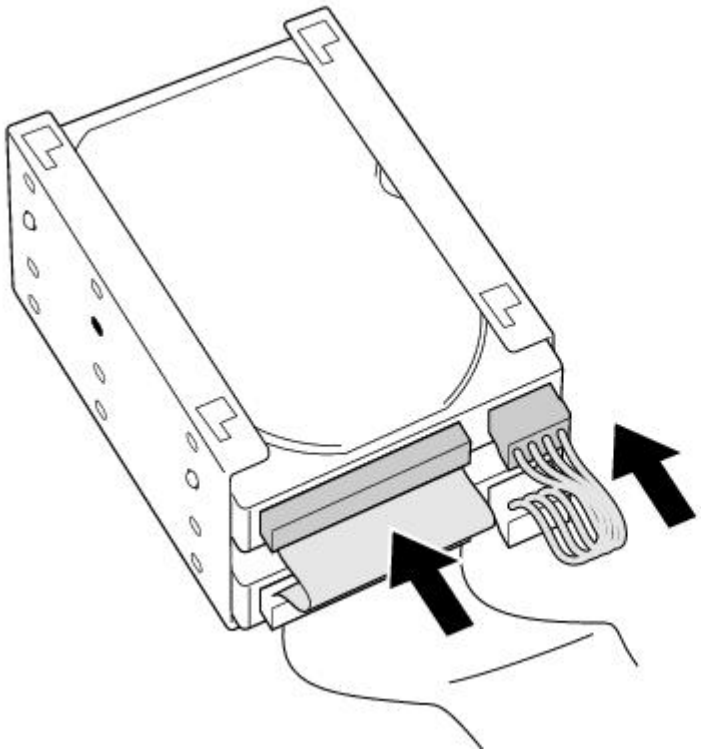

13. Place the drive holder against the inside of the front chassis and slide it back. Be sure to align the slots on the drive holder with the tabs on the inside of the chassis. Be sure to slide the drive holder back so that the tabs slip into the notch at the bottom of the slot.

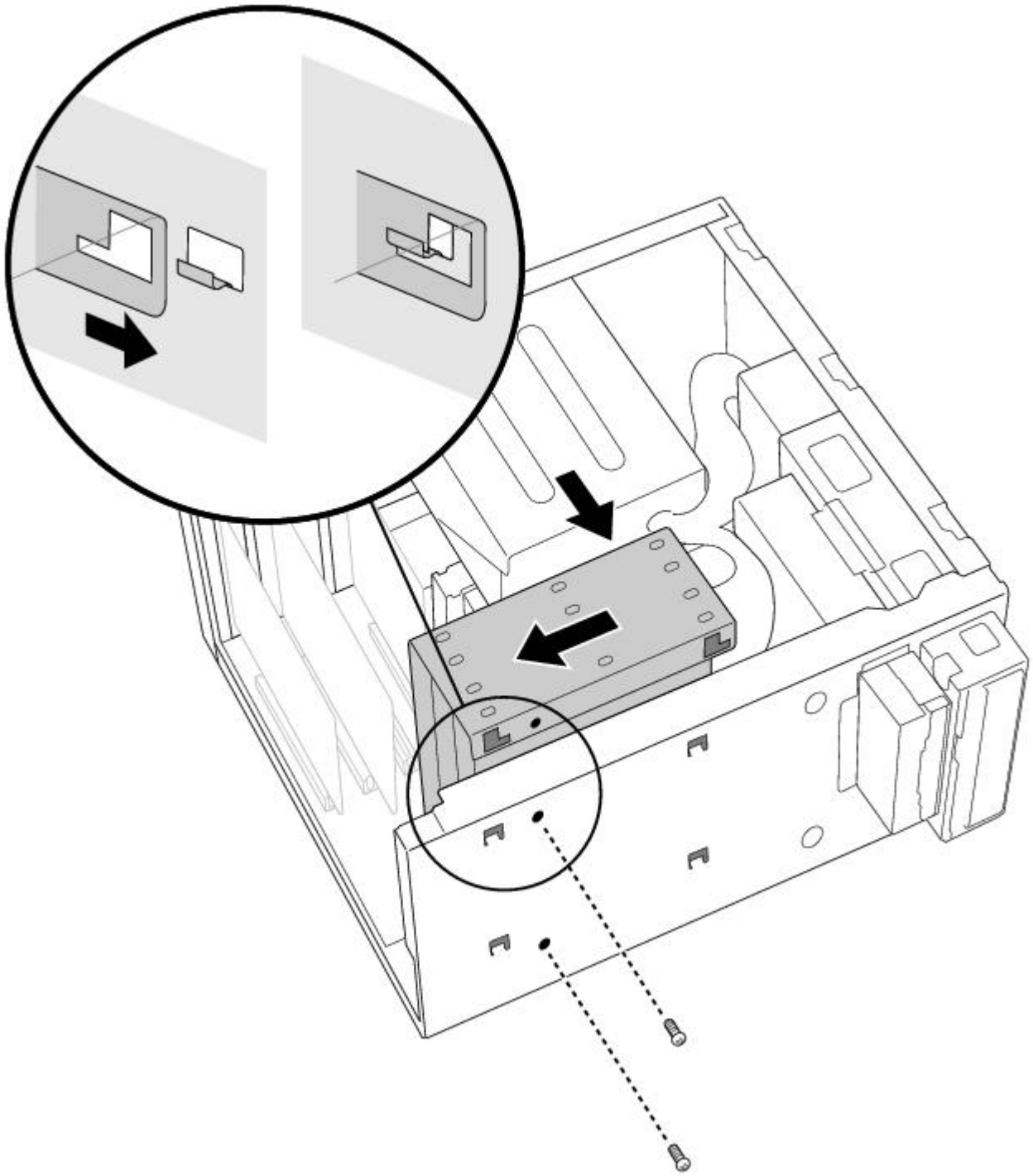

14. Replace the two screws that secure the holder to the chassis.
15. Replace the bottom panel, as described in Replacing the Bottom Panel.
16. Replace the front panel, as described in Replacing the Front Panel.
17. Replace the left-side panel, as described in Replacing the Left-Side Panel.
18. Reconnect the power cord and then turn on your computer.

Your computer automatically recognizes the new drive and configures itself accordingly when you turn it on. Format and partition the new drive following the instructions provided with the drive.

Removing the Left-Side Panel

To remove the left-side panel

1. Remove the two screws that secure the panel to the chassis.
2. Slide the panel back until it stops.
3. Pull the panel straight out to remove it.

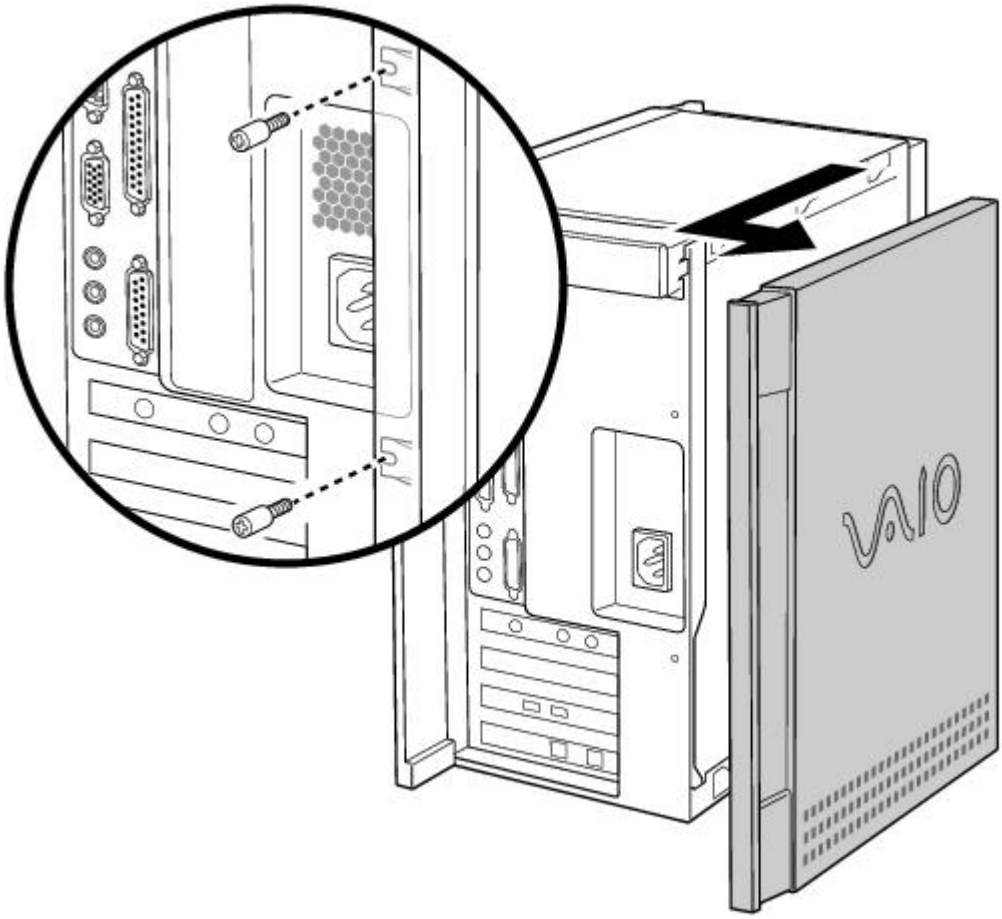

Removing the Bottom Panel

To remove the bottom panel

1. Remove the screw that secures the bottom panel to the chassis.
2. Pull the bottom panel straight out to remove it.

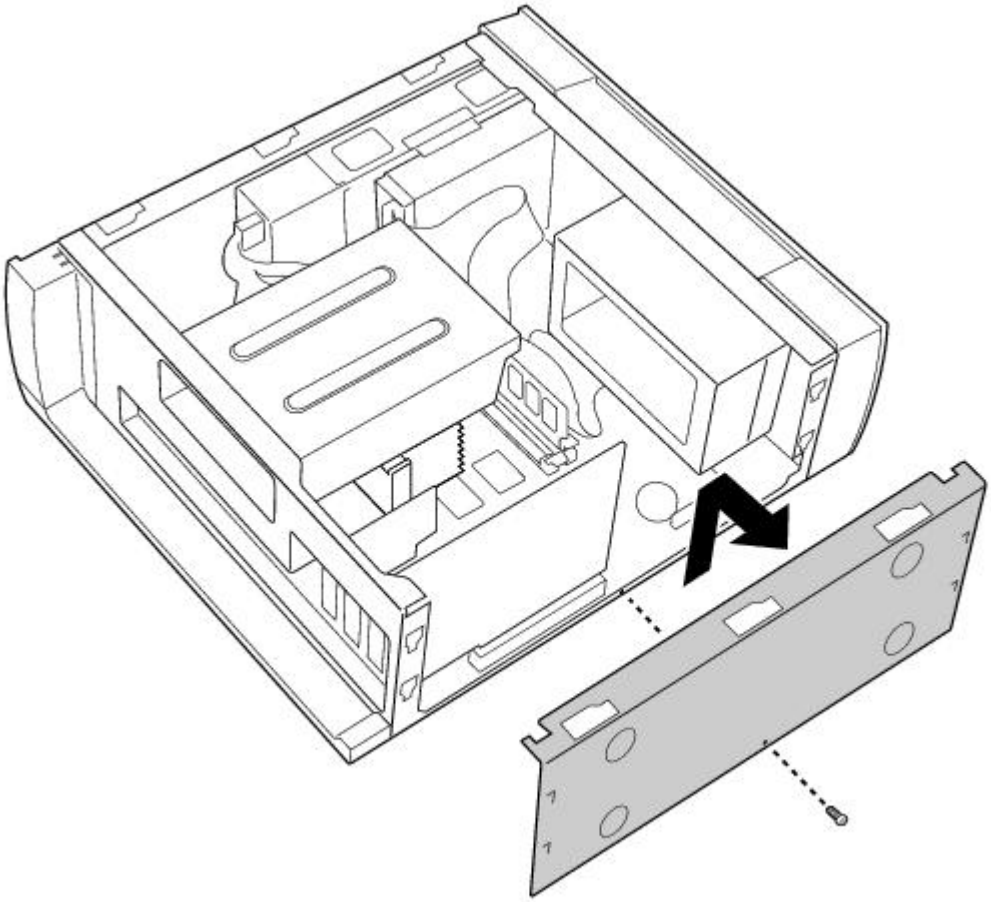

Removing the Front Panel

To remove the front panel

1. Open the CD tray by inserting a thin, pointed object into the emergency eject opening.
2. Slide the CD tray forward.
3. Remove the front cover of the CD tray by lifting it upwards.

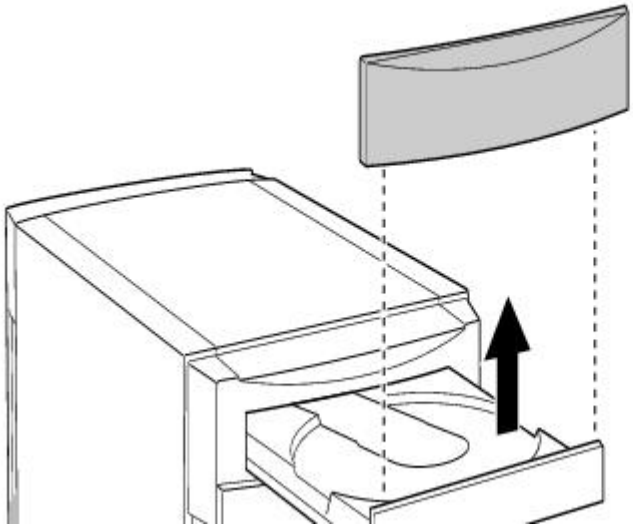

4. Press down on each of the two tabs on the bottom of the front panel to release the panel.
5. Pull the front panel forward to remove it.

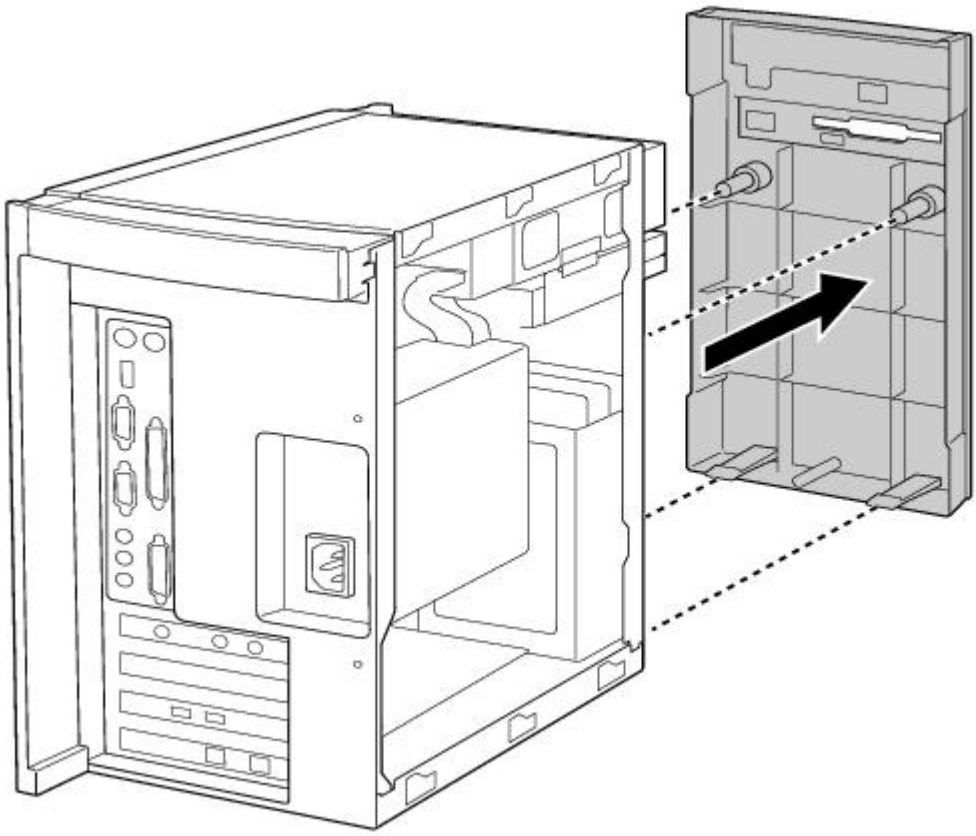

Detaching the Diskette Drive

To detach the diskette drive

1. Remove the front panel, as described in Removing the Front Panel.
2. Remove the two screws that secure the diskette drive to the front of the chassis.
3. Pull the diskette drive forward.

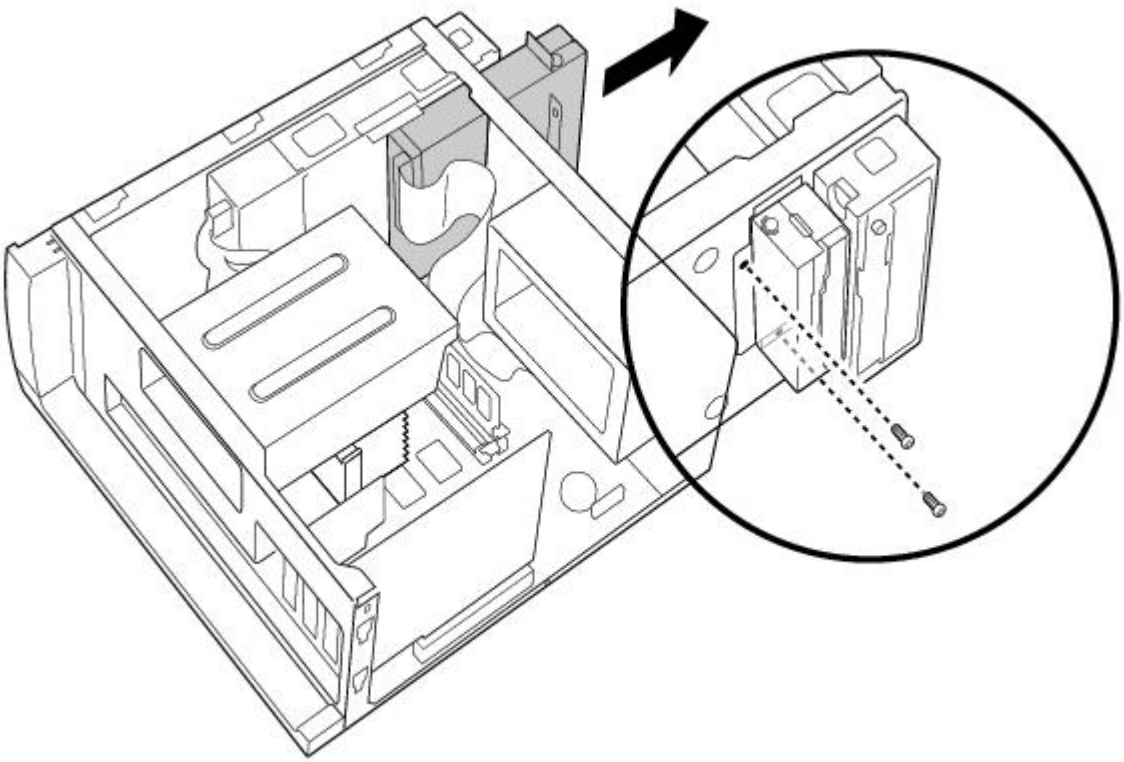

If you are adding memory, you do not need to completely remove the diskette drive or disconnect the cable.

Replacing the Diskette Drive

To replace the diskette drive

1. Push the diskette drive straight into the drive slot.
2. Replace the two screws that secure the diskette drive to the front of the chassis.
3. Replace the front panel, as described in Replacing the Front Panel.

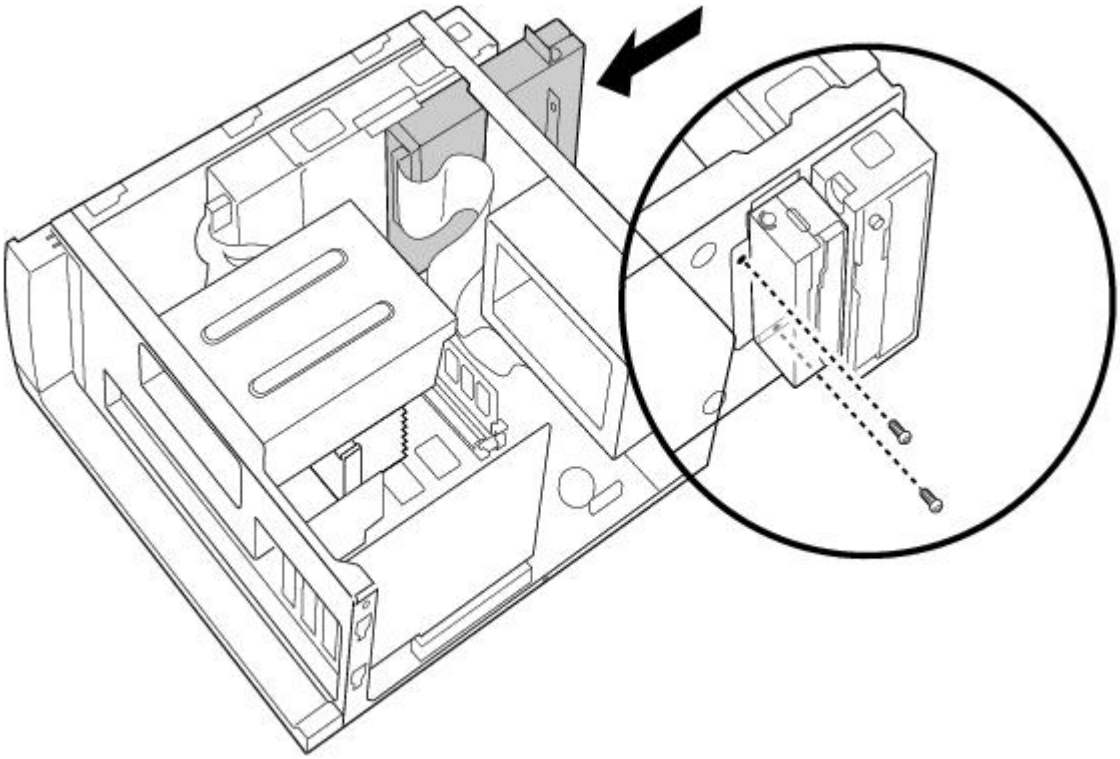

Replacing the Bottom Panel

To replace the bottom panel

1. Align the bottom panel with the screw hole on the bottom of the chassis.
2. Replace the screw that secures the bottom panel to the chassis.

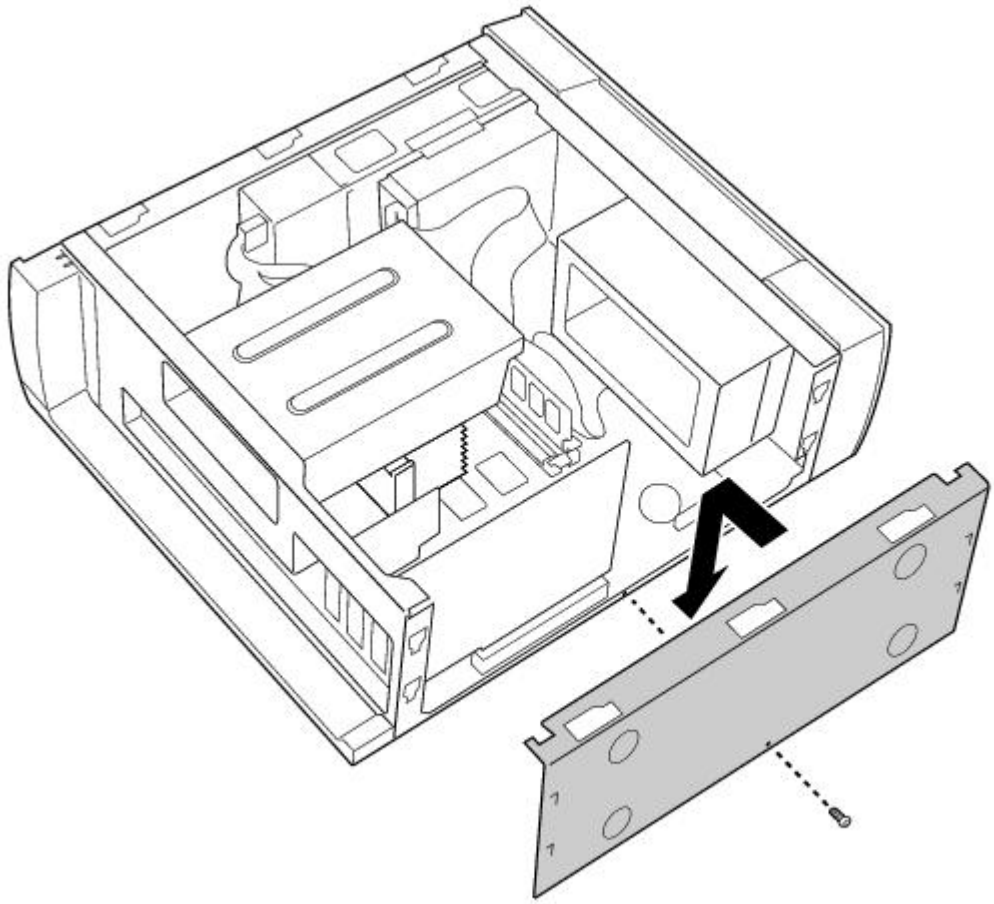

Replacing the Front Panel

To replace the front panel

1. Push the front panel straight onto the front of the chassis until it clicks into place.

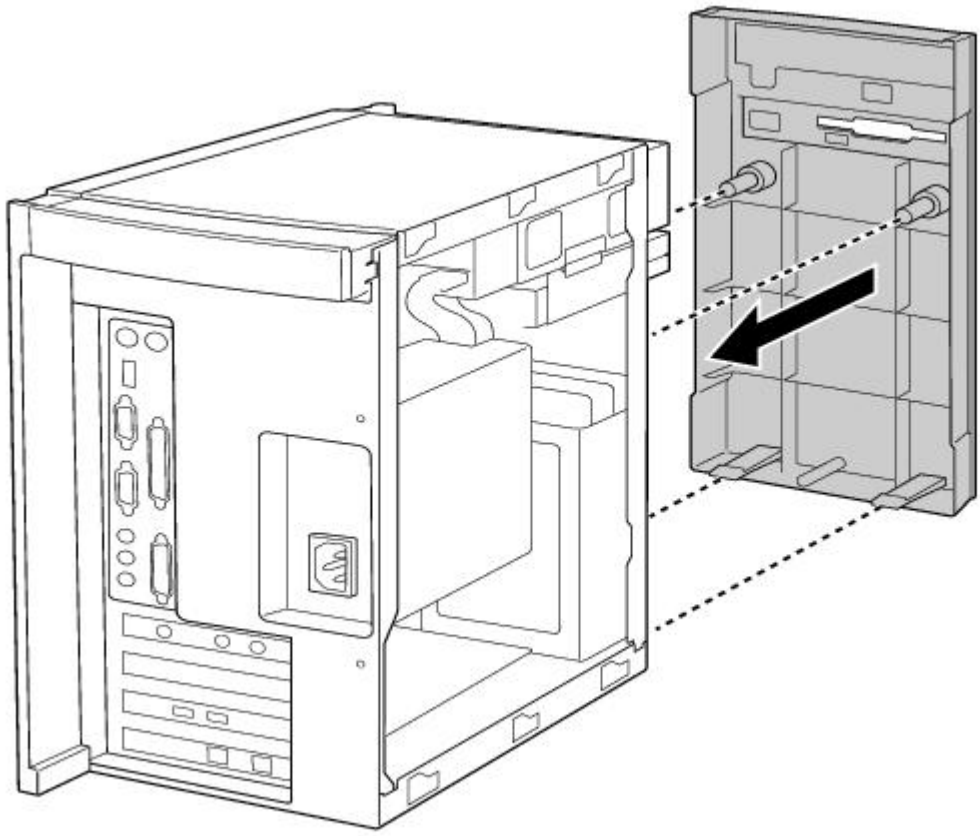

2. Replace the front cover of the CD tray by sliding it down onto the front of the open tray.
3. Close the CD tray.

Replacing the Left-Side Panel

To replace the left-side panel

1. Slide the panel forward until it stops.
2. Replace the two screws that secure the panel to the chassis.

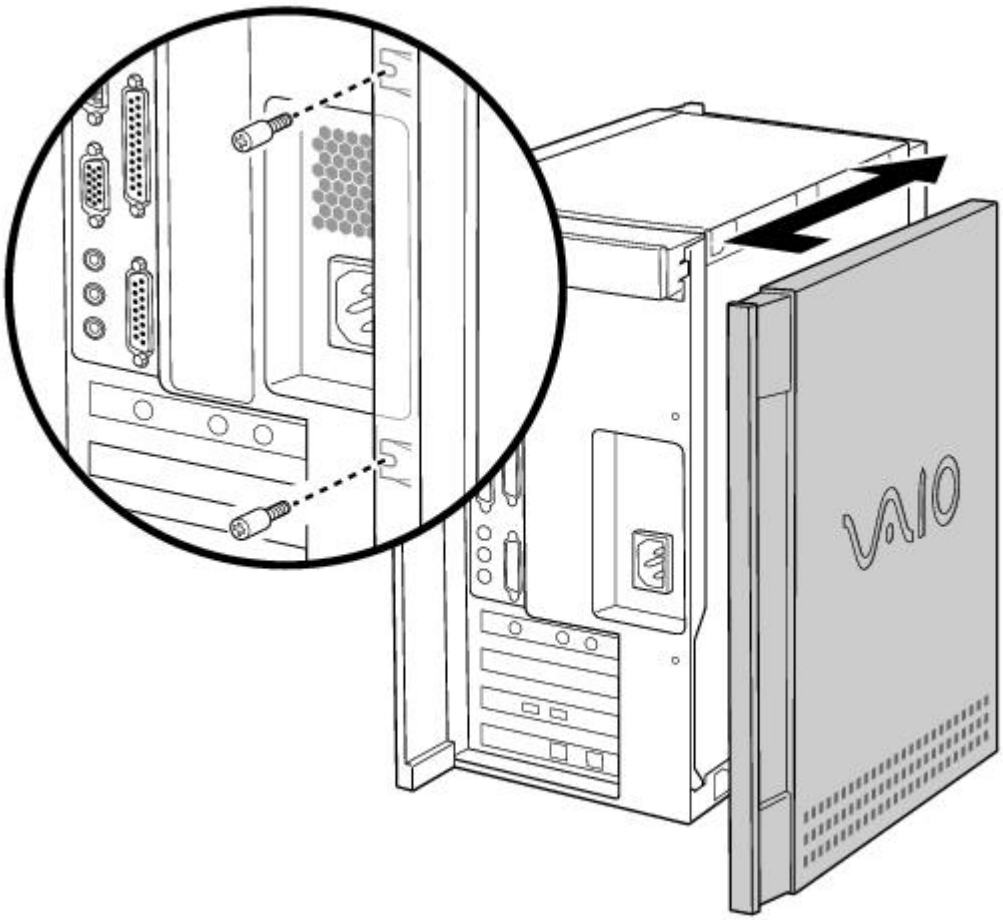

Upgrading and Maintaining Your VAIO Digital Studio Computer

In the future you may want to install additional boards to expand the functionality of your computer. This section describes how to open your computer and insert add-in boards, add memory, replace the lithium battery, and install an additional hard disk drive. For more information on upgrading your Sony computer, see the *VAIO Digital Studio Computer Reference Manual*. You can download this electronic document from the Sony Web site at http://www.sony.com/pcsupport.

The procedures in this section assume you are familiar with the general terminology associated with personal computers and with the safety practices and regulatory compliance required for using and modifying electronic equipment. Read Notes on Use before upgrading your Sony computer.

Always switch the power off before you open the system or connect your computer to peripheral equipment; otherwise, damage may occur to the integrated circuits in your computer.

Electrostatic discharge (ESD) can damage disk drives, add-in cards, and other components. Do the procedures described here only at an ESD workstation. If such a station is not available, do not work in a carpeted area and do not handle materials that produce or hold static electricity (cellophane wrappers, for example). Ground yourself by maintaining continuous contact with an unpainted metal portion of the chassis while performing the procedure.

Inserting an Add-in Board

You can add up to two additional PCI boards to the system.

Your VAIO Digital Studio Computer cannot accommodate PCI add-in boards exceeding 7.7" in length.

To insert an add-in board

Make sure you observe the proper safety precautions when you add boards to your Sony computer. See Notes on Use.

1. Shut down your computer and turn off all peripheral devices, such as your printer, display, and speakers.
2. Unplug your computer and any peripheral devices.
3. Remove the left-side panel as described in Removing the Left-Side Panel.
4. Identify the expansion slot where you want to insert the add-in board.
5. Remove the slot cover for the slot you have chosen.

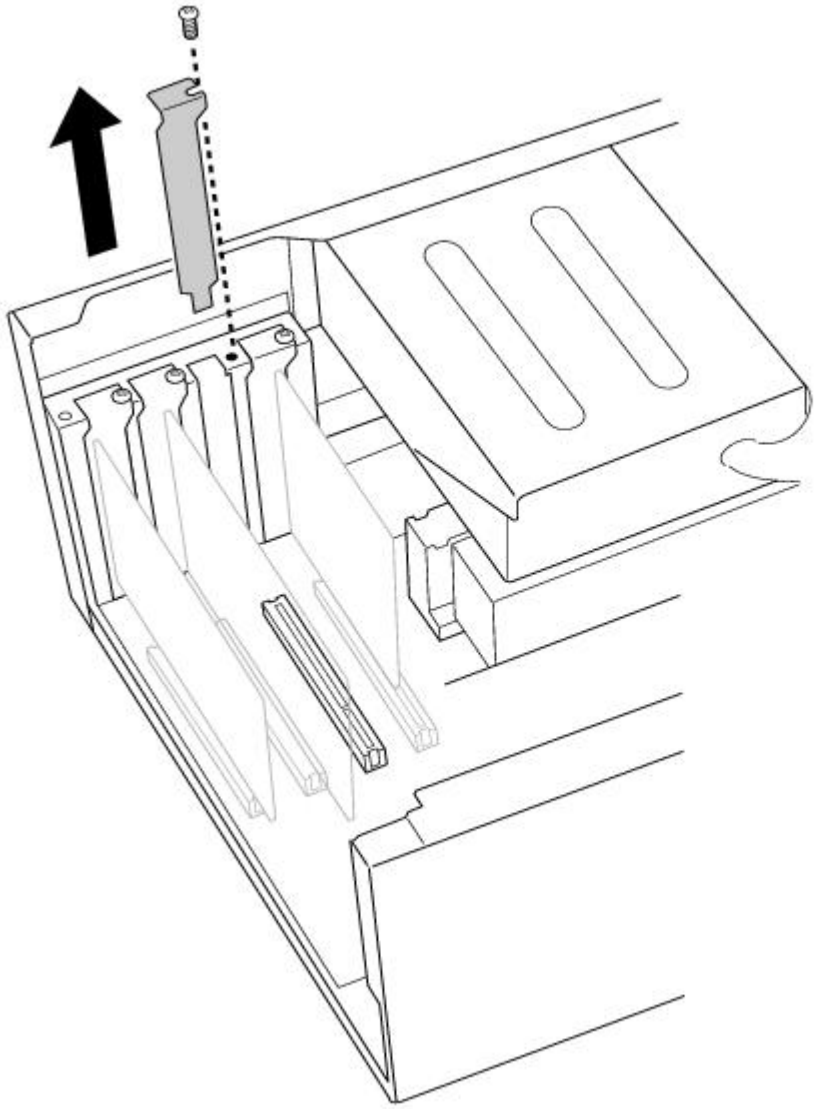

6. Install the add-in board by plugging it into the expansion slot on the system board. Attach any internal cables that the board requires (see the manual for the add-in board).

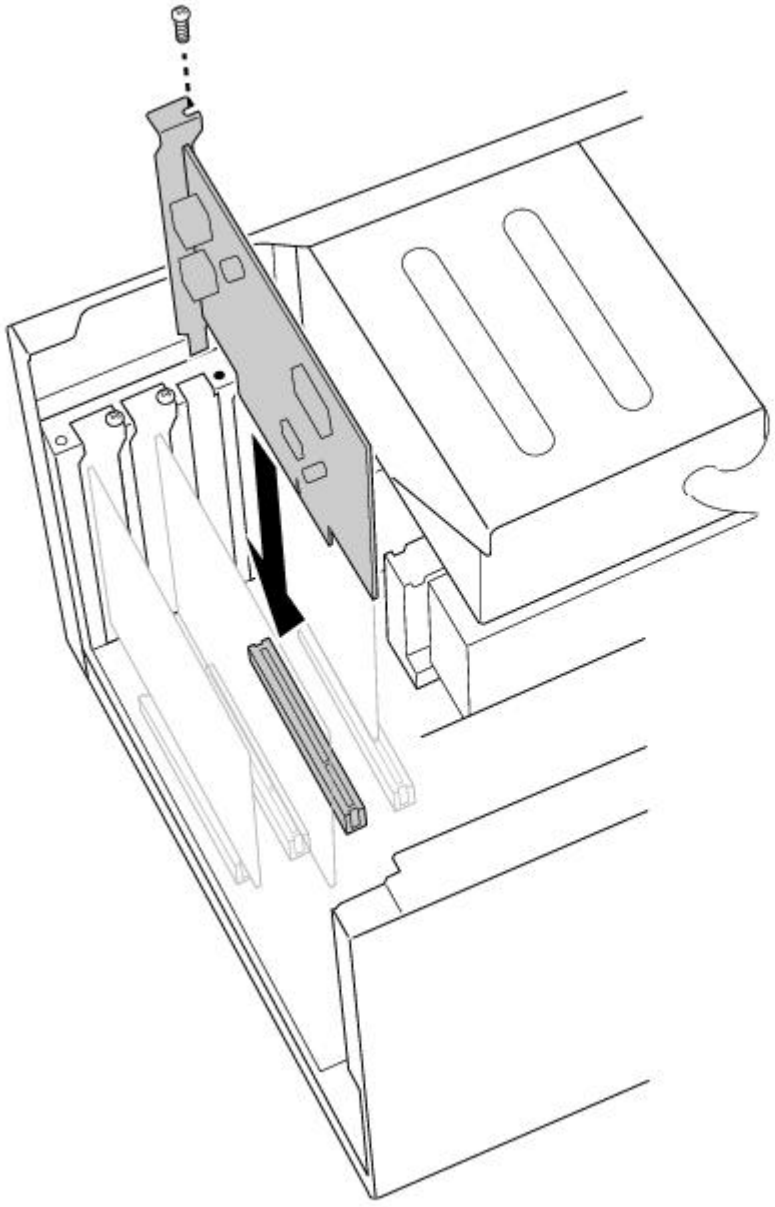

7. Replace the left-side panel as described in Replacing the Left-Side Panel.

Adding Memory

In order to increase your computer's memory, you may need to remove one of the factory-installed DIMMs and replace it with one of greater capacity. For details, see the *VAIO Digital Studio Computer Reference Manual*, which is available at Sony's Web site at http://www.sony.com/pcsupport.

For memory upgrades, use only 3.3V unbuffered 4-clock 64-bit 66 MHz SDRAM DIMM module Rev1.0 or 3.3V unbuffered 4-clock 72-bit 66 MHz SDRAM DIMM module Rev1.0. For more information on Digital Studio Computer compatible memory, call Sony at 1-888-4SONYPC (1-888-476-6972).

To install memory

Make sure you observe the proper safety precautions when you add DIMMs to your Sony computer. See Notes on Use .

1. Shut down your computer and turn off all peripheral devices, such as your printer, display, and speakers.
2. Unplug your computer and any peripheral devices.
3. Remove the left-side panel, bottom panel, and front panel, as described in Removing the Left-Side Panel. Then detach the diskette drive, as described in Detaching the Diskette Drive.

You do not need to completely remove the diskette drive in order to access the DIMM sockets.

4. If necessary, remove any cables, add-in cards, or other components to access the DIMM sockets.
5. Remove either (or both) of the factory-installed DIMMs.
6. Handle the DIMM only by the edges, and remove it from its anti-static package.
7. Locate the keys on the bottom edge of the DIMM .
8. Align the DIMM over the socket.

To avoid damaging the DIMM socket, move the DIMM socket tabs slightly outward to relieve pressure. The DIMM should then click easily into place.

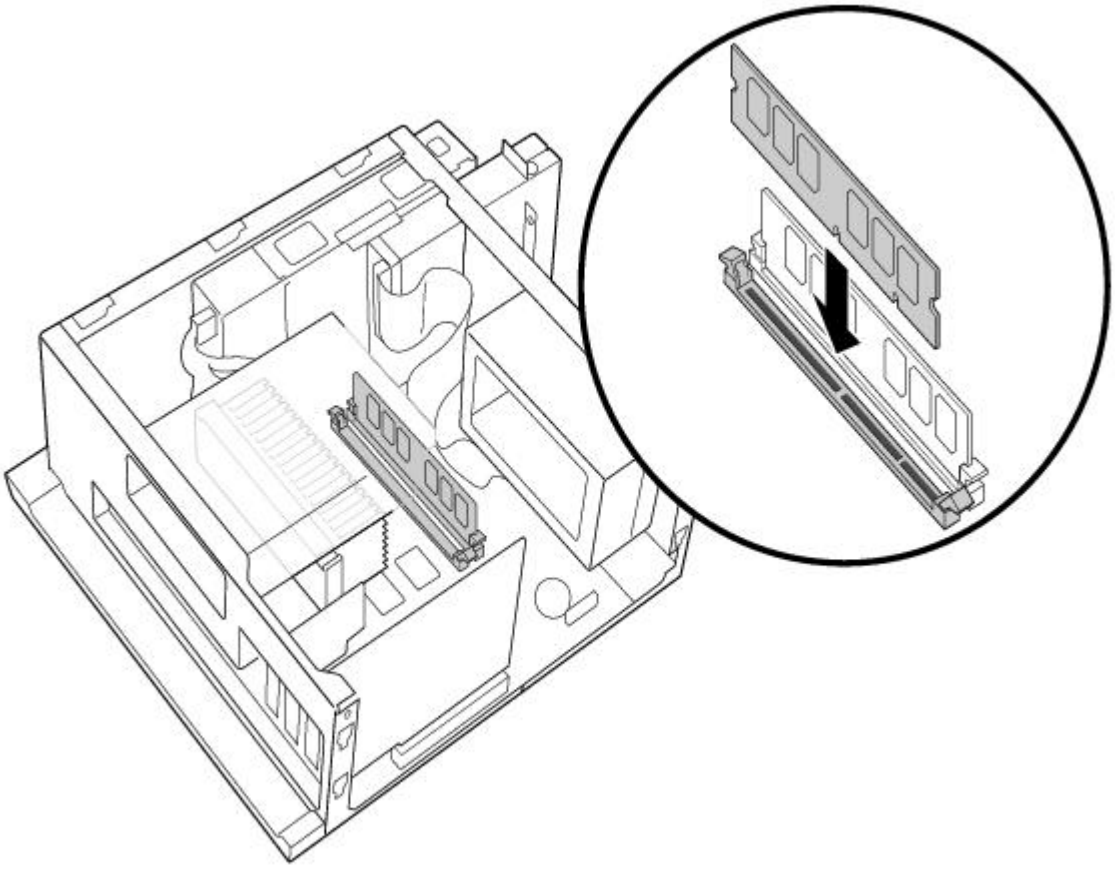

9. Firmly insert the bottom edge of the DIMM into the socket.
10. Press evenly against the DIMM's upper corners. The end latches snap into position automatically.
11. Reinstall any add-in cards or components you removed.
12. Replace the diskette drive and cover panels, as described in Replacing the Diskette Drive to Replacing the Left-Side Panel.

Replacing the Lithium Battery

After several years, when the lithium battery starts to weaken, the system settings stored in CMOS RAM, such as the date and time, may be wrong. When this occurs, you need to replace the lithium battery.

To replace the lithium battery

1. To run the Setup utility, press F3 when your computer is starting up. Then press F1 to run the BIOS setup utility.

2. Write down the current BIOS Setup options.
3. Shut down your computer and turn off all peripheral devices, such as your printer, display, and speakers. Unplug your computer.
4. Remove the left-side and bottom panels, as described in Removing the Left-Side Panel.
5. Install the new battery with the plus (+) side up.

There is danger of explosion if you replace the battery incorrectly. You must replace the battery only with a CR2032 type lithium battery. Discard used batteries according to the instructions on On Disposal of the Lithium Battery.

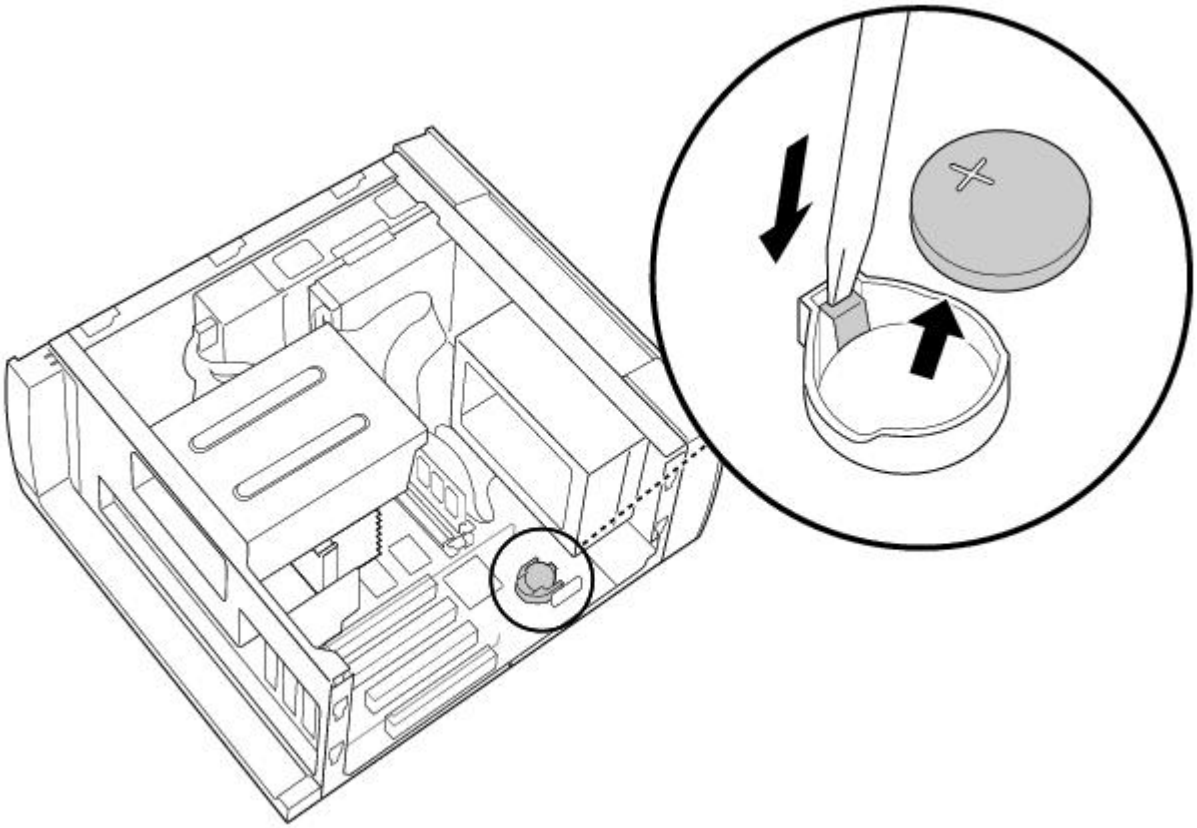

6. Replace the bottom and left-side panels, as described in Replacing the Bottom Panel.

The values stored in the CMOS memory are now reset to the factory default values. You must run the Setup utility to reset the date, time, passwords, and other options. See the VAIO Digital Studio Computer Reference Manual for details.

7. To run the Setup utility, press F3 when your computer is starting up. Then press F1 to run the BIOS setup utility.
8. Change the default values to the values you wrote down in step 2.
9. Save your Setup changes, and then exit the Setup utility.

Installing an Internal Hard Disk Drive

Your VAIO Digital Studio Computer comes with an available bay to hold an additional hard disk drive. The drive you install must not require front panel access. The hard disk drive access light blinks when either internal drive is active.

Before opening the system unit, save any open files, exit Windows, turn off the power of the computer and all attached peripherals, and then unplug the power cord.

1. Configure the jumpers on the new drive as a primary slave (see your drive's documentation for

configuration instructions).

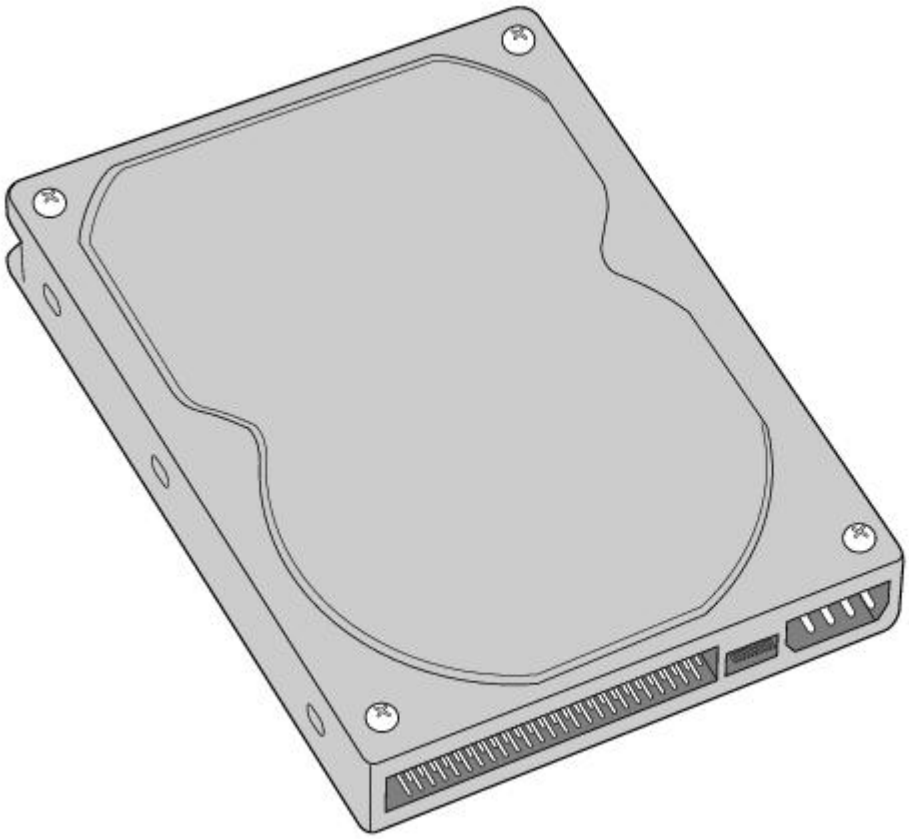

2. Remove the left-side panel, as described in Removing the Left-Side Panel.
3. Remove the front panel, as described in Removing the Front Panel.
4. Remove the bottom panel, as described in Removing the Bottom Panel.
5. Lay the system on its right side (left side faces up-see diagram that follows).
6. Remove the two screws that secure the drive holder.
7. Slide the drive holder forward and then out.

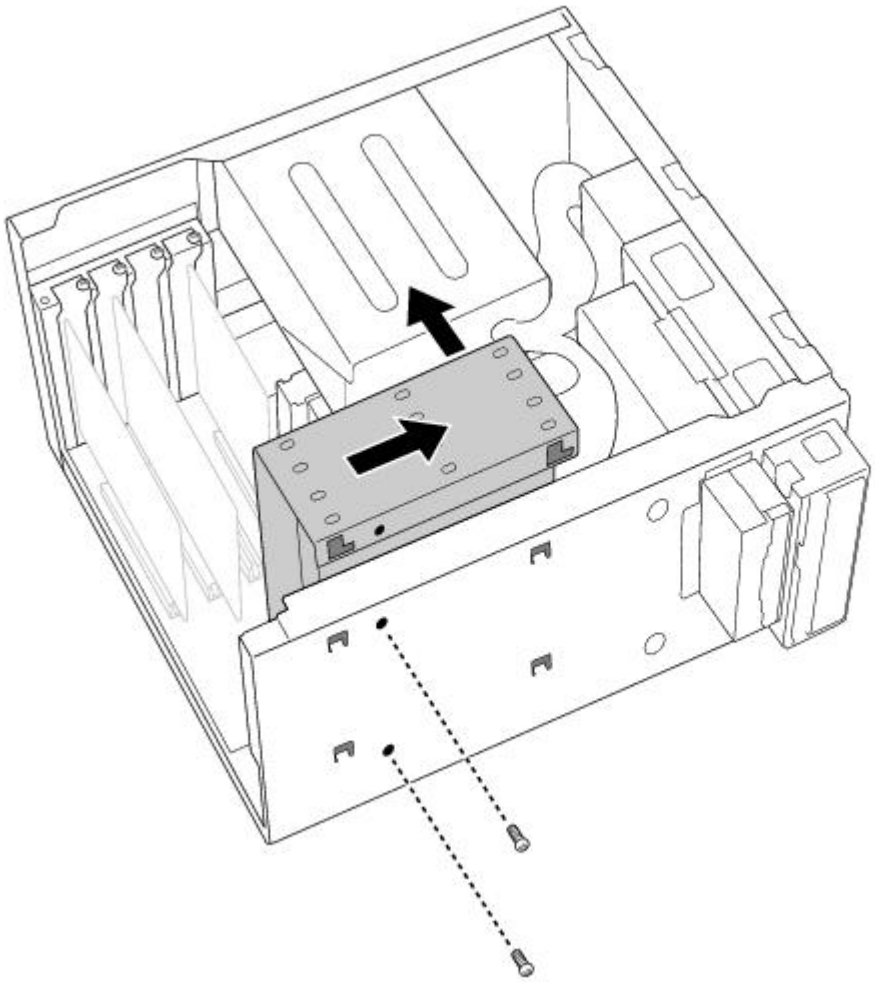

8. Place the drive holder upside down on top of the power supply.

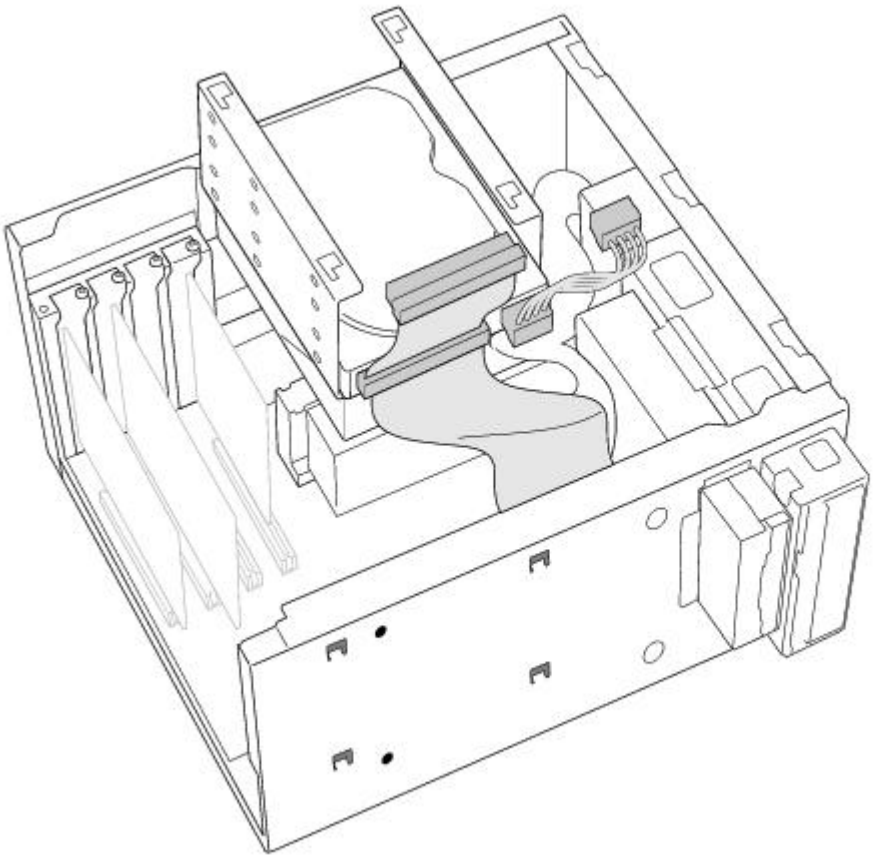

9. Slide the new drive into the drive holder and align the holes on each side of the drive bay.

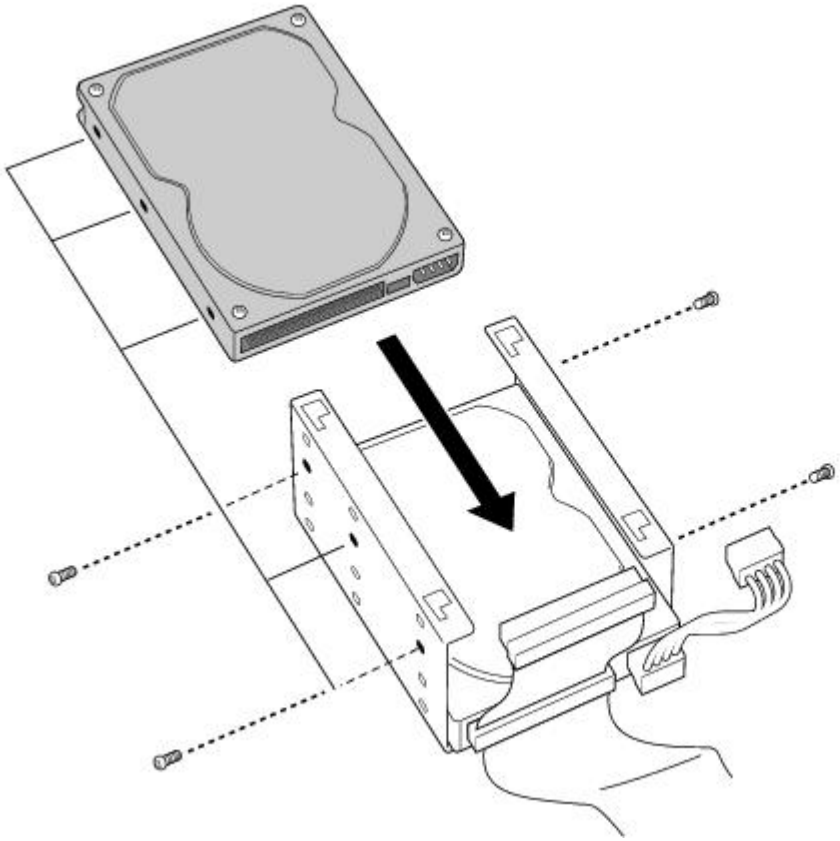

10. Secure the drive to the drive holder using any two of the three holes on each side of the drive holder (screws are provided with the new drive). Do not overtighten the screws.
11. Connect the second drive connector to the new drive.
12. Connect the second power connector to the new drive.

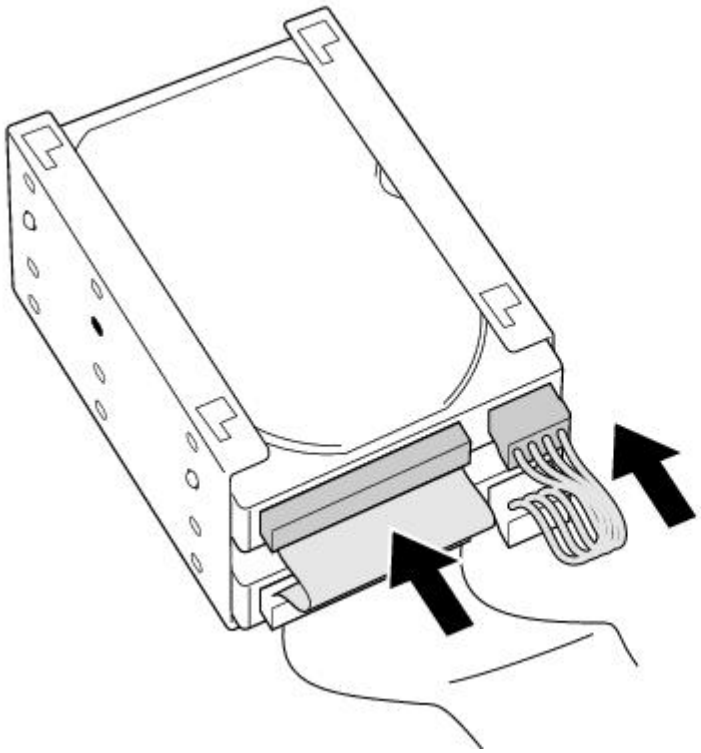

13. Place the drive holder against the inside of the front chassis and slide it back. Be sure to align the slots on the drive holder with the tabs on the inside of the chassis. Be sure to slide the drive holder back so that the tabs slip into the notch at the bottom of the slot.

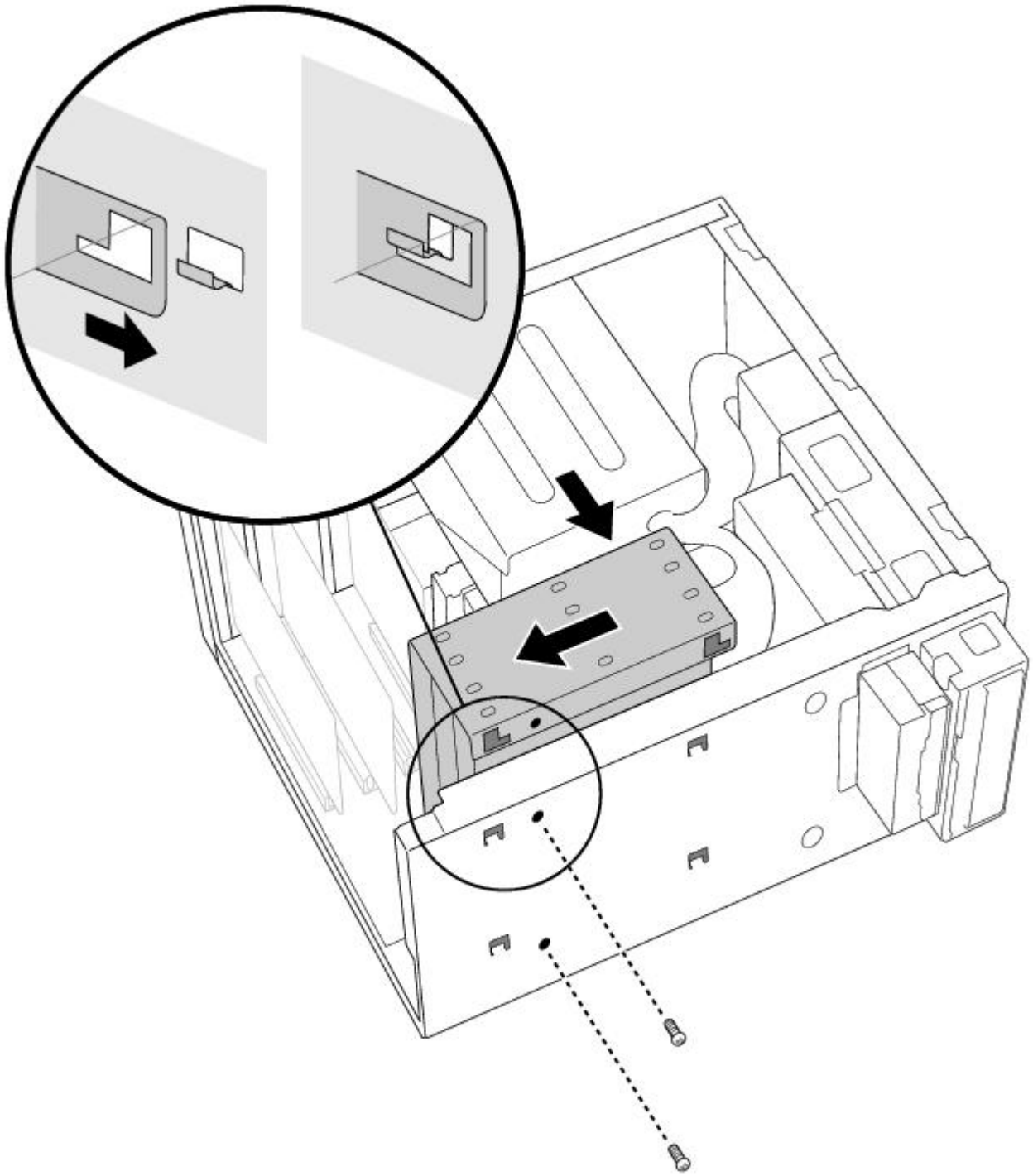

14. Replace the two screws that secure the holder to the chassis.
15. Replace the bottom panel, as described in Replacing the Bottom Panel.
16. Replace the front panel, as described in Replacing the Front Panel.
17. Replace the left-side panel, as described in Replacing the Left-Side Panel.
18. Reconnect the power cord and then turn on your computer.

Your computer automatically recognizes the new drive and configures itself accordingly when you turn it on. Format and partition the new drive following the instructions provided with the drive.

Removing the Left-Side Panel

To remove the left-side panel

1. Remove the two screws that secure the panel to the chassis.
2. Slide the panel back until it stops.
3. Pull the panel straight out to remove it.

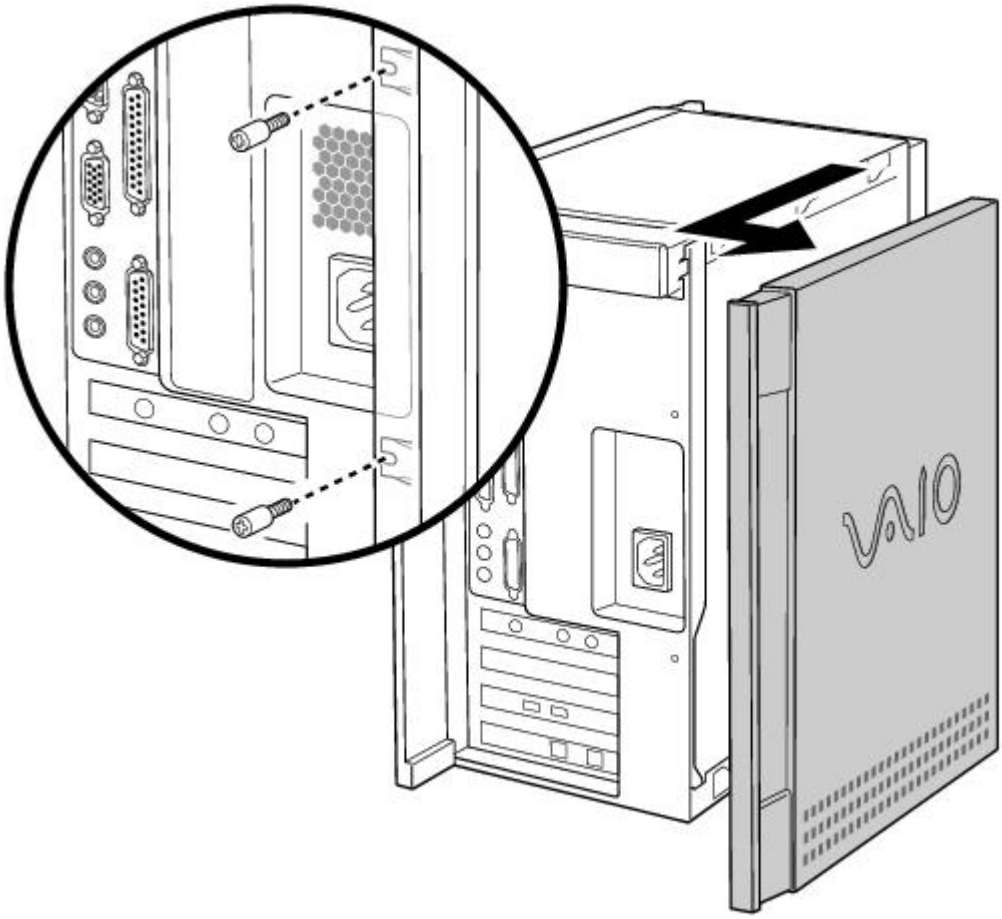

Removing the Bottom Panel

To remove the bottom panel

1. Remove the screw that secures the bottom panel to the chassis.
2. Pull the bottom panel straight out to remove it.

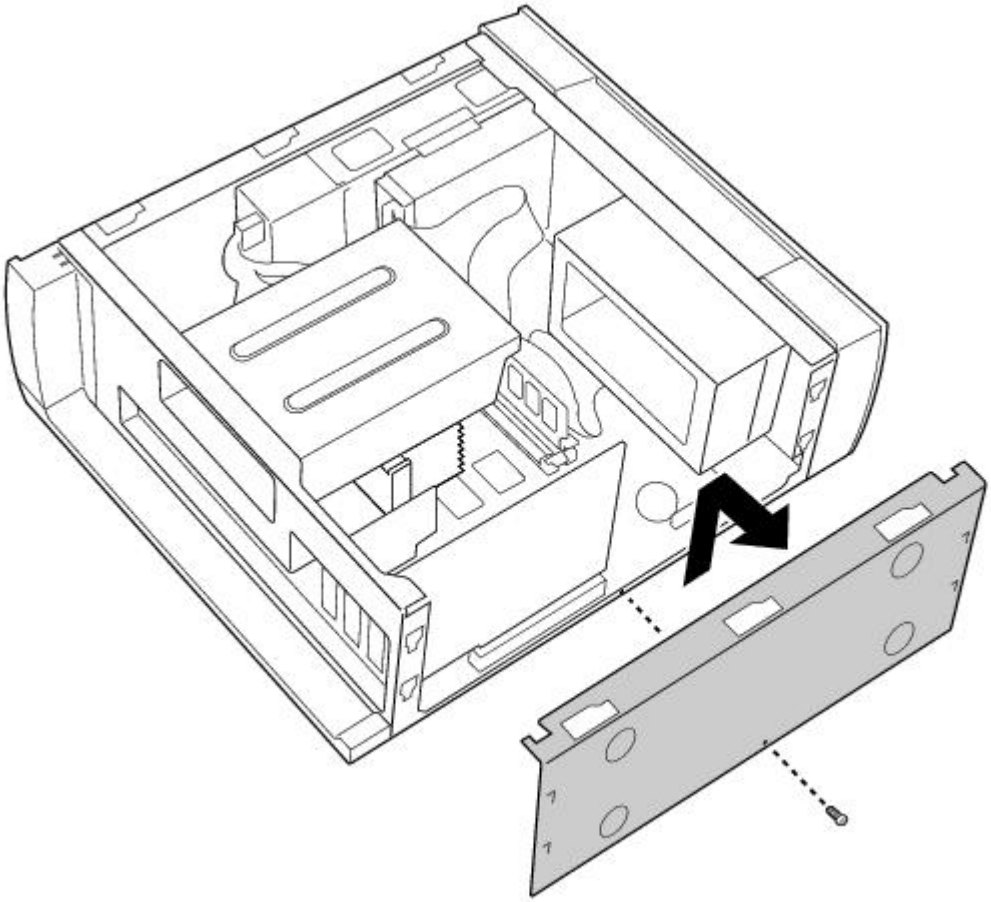

Removing the Front Panel

To remove the front panel

1. Open the CD tray by inserting a thin, pointed object into the emergency eject opening.
2. Slide the CD tray forward.
3. Remove the front cover of the CD tray by lifting it upwards.

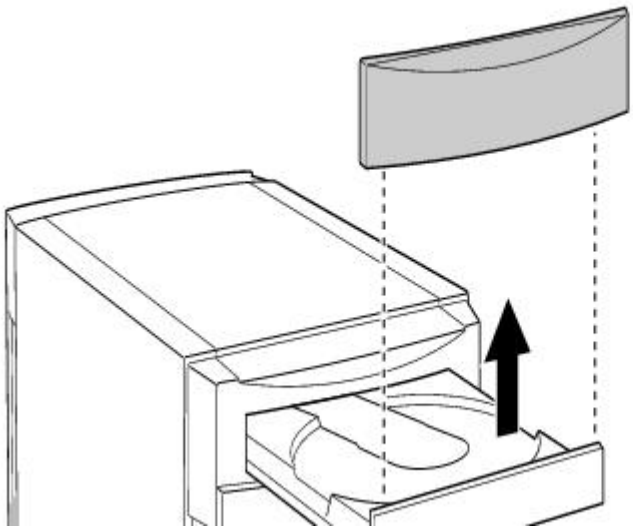

4. Press down on each of the two tabs on the bottom of the front panel to release the panel.
5. Pull the front panel forward to remove it.

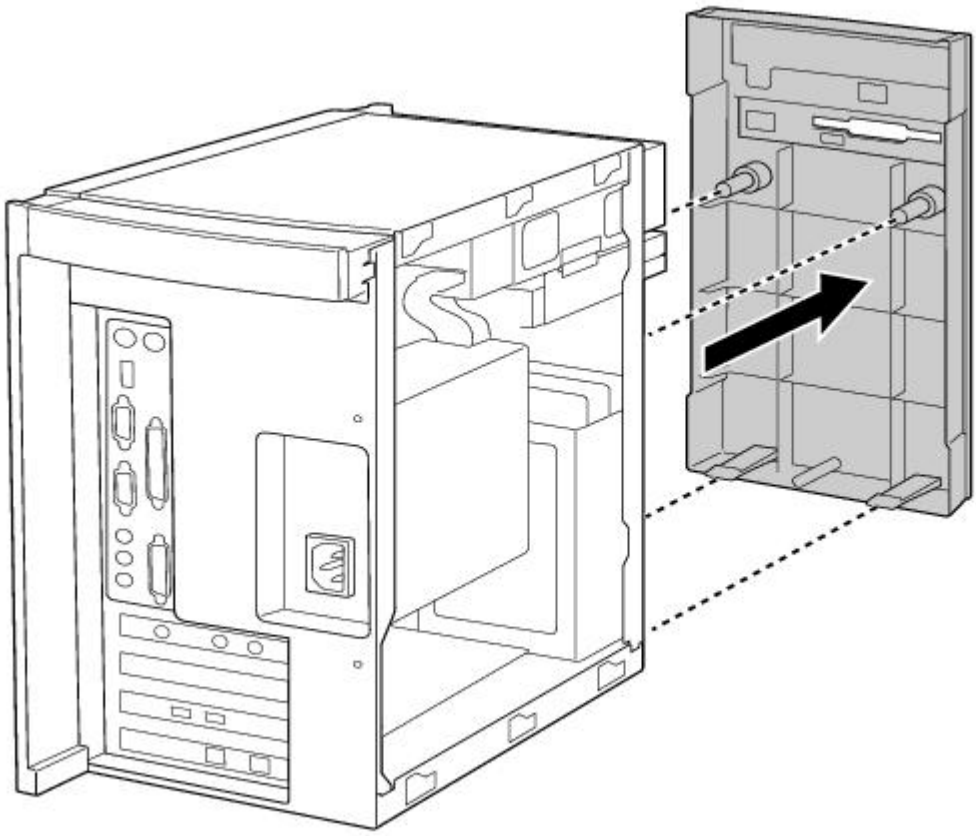

Detaching the Diskette Drive

To detach the diskette drive

1. Remove the front panel, as described in Removing the Front Panel.
2. Remove the two screws that secure the diskette drive to the front of the chassis.
3. Pull the diskette drive forward.

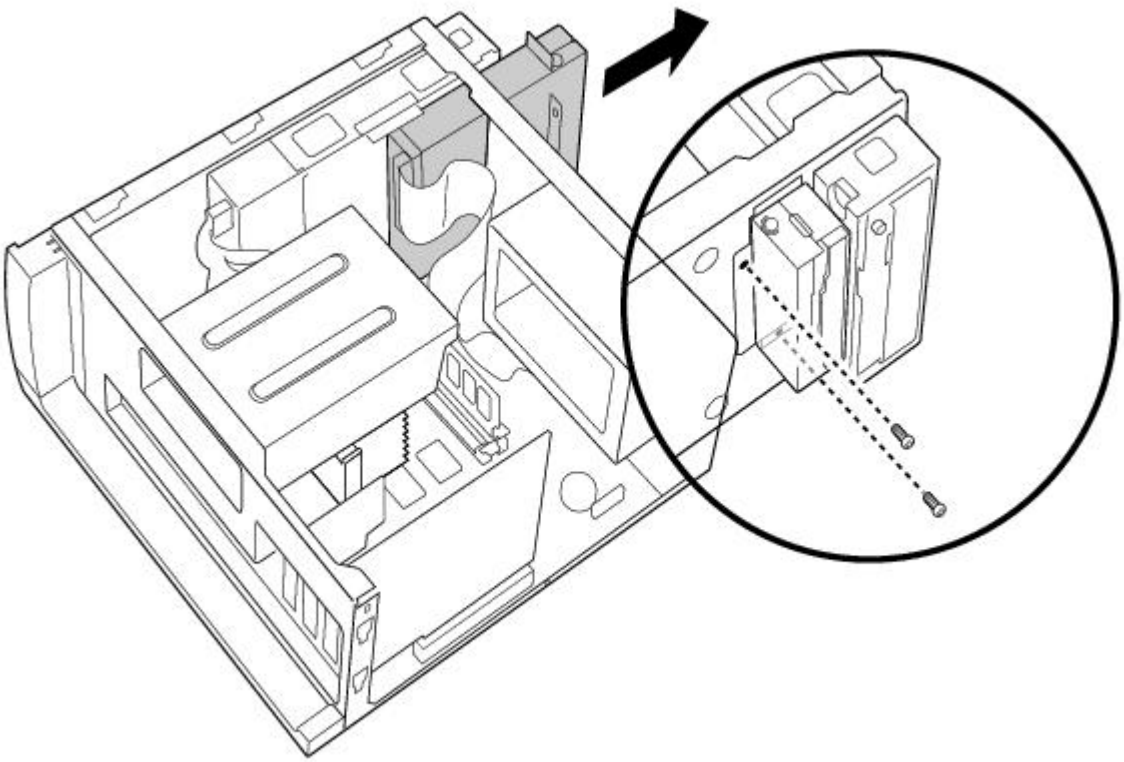

If you are adding memory, you do not need to completely remove the diskette drive or disconnect the cable.

Replacing the Diskette Drive

To replace the diskette drive

1. Push the diskette drive straight into the drive slot.
2. Replace the two screws that secure the diskette drive to the front of the chassis.
3. Replace the front panel, as described in Replacing the Front Panel.

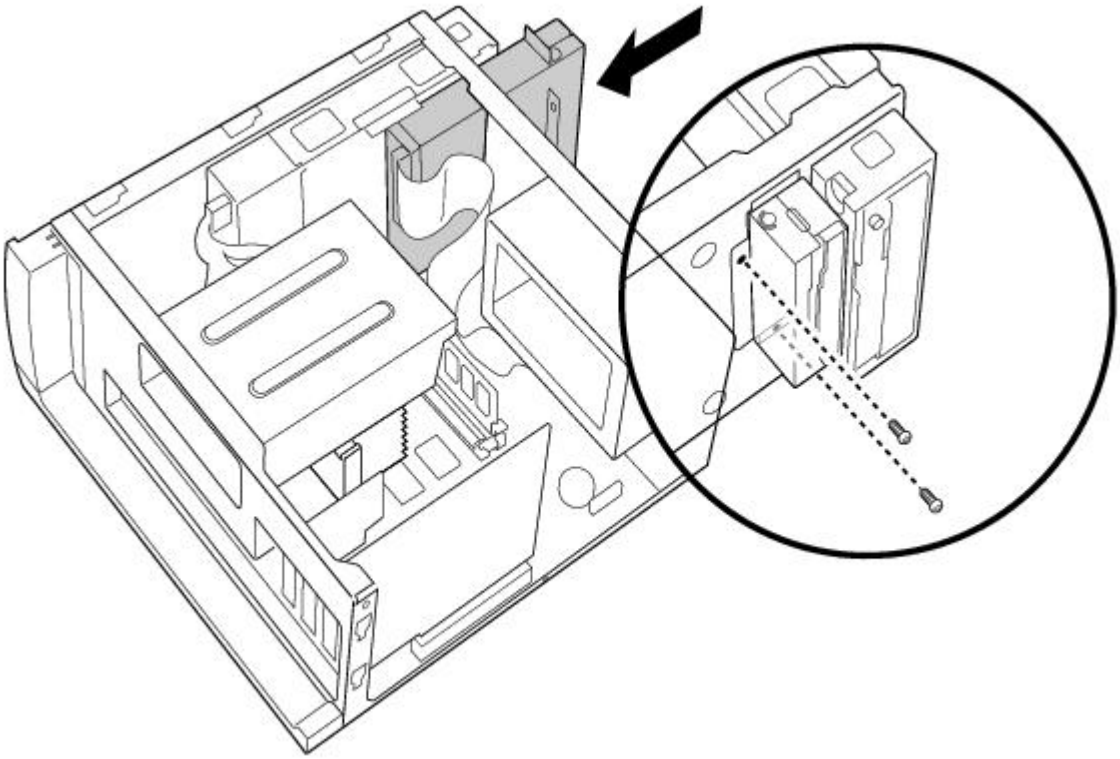

Replacing the Bottom Panel

To replace the bottom panel

1. Align the bottom panel with the screw hole on the bottom of the chassis.
2. Replace the screw that secures the bottom panel to the chassis.

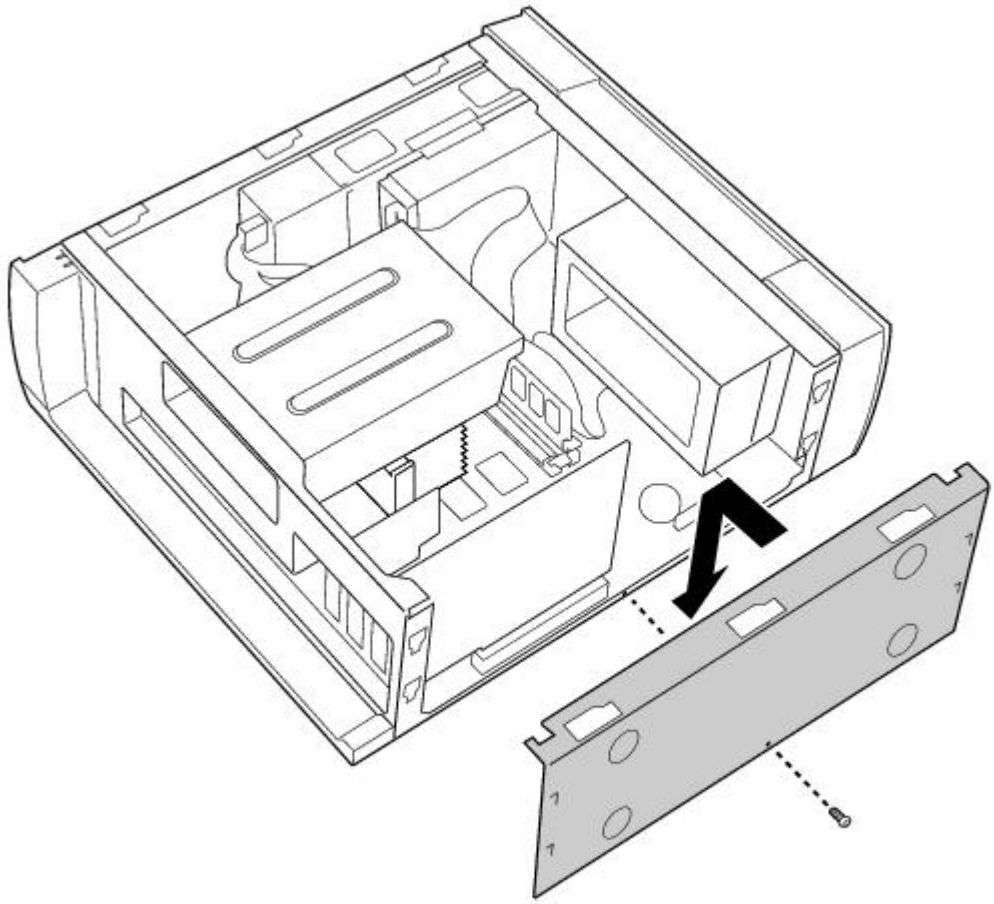

Replacing the Front Panel

To replace the front panel

1. Push the front panel straight onto the front of the chassis until it clicks into place.

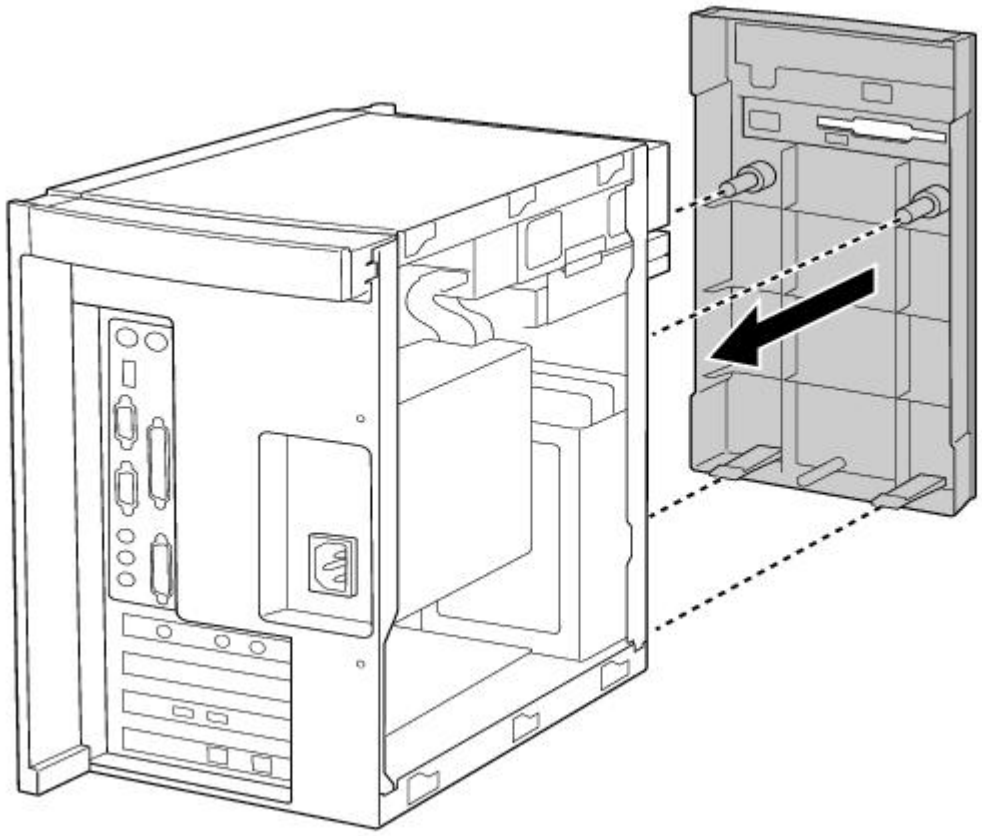

2. Replace the front cover of the CD tray by sliding it down onto the front of the open tray.
3. Close the CD tray.

Replacing the Left-Side Panel

To replace the left-side panel

1. Slide the panel forward until it stops.
2. Replace the two screws that secure the panel to the chassis.

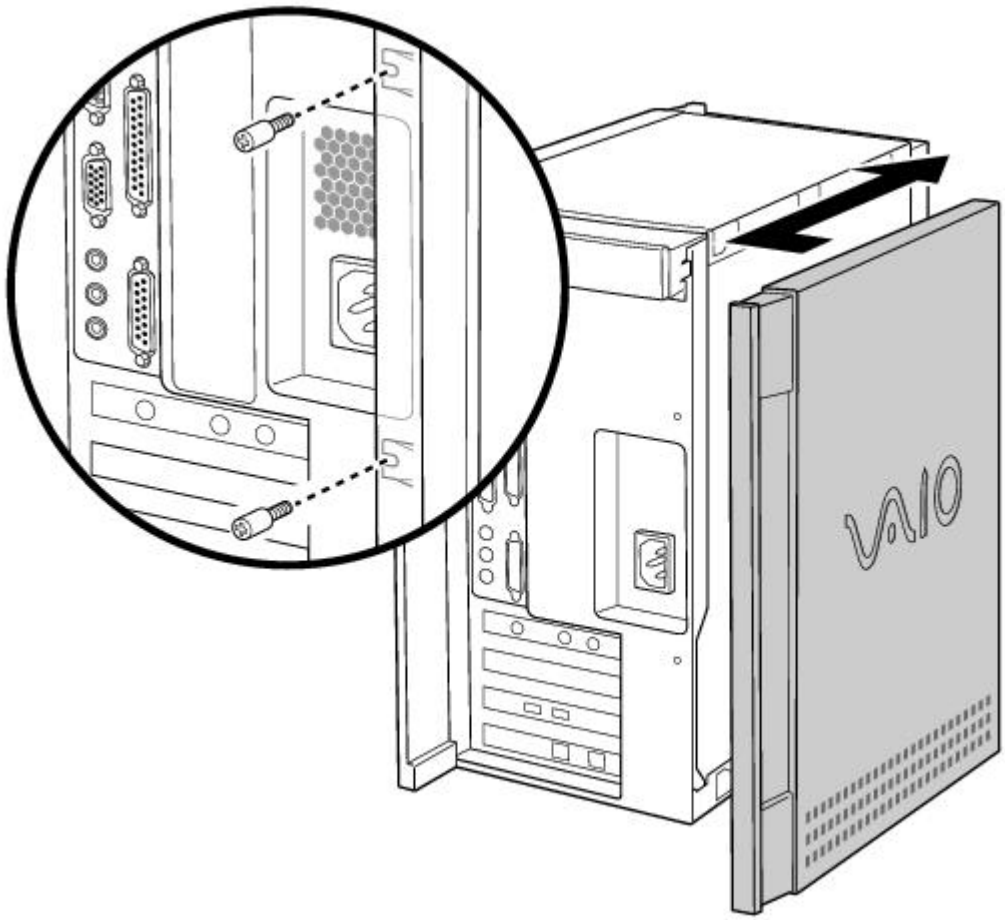

Upgrading and Maintaining Your VAIO Digital Studio Computer

In the future you may want to install additional boards to expand the functionality of your computer. This section describes how to open your computer and insert add-in boards, add memory, replace the lithium battery, and install an additional hard disk drive. For more information on upgrading your Sony computer, see the *VAIO Digital Studio Computer Reference Manual*. You can download this electronic document from the Sony Web site at http://www.sony.com/pcsupport.

The procedures in this section assume you are familiar with the general terminology associated with personal computers and with the safety practices and regulatory compliance required for using and modifying electronic equipment. Read Notes on Use before upgrading your Sony computer.

Always switch the power off before you open the system or connect your computer to peripheral equipment; otherwise, damage may occur to the integrated circuits in your computer.

Electrostatic discharge (ESD) can damage disk drives, add-in cards, and other components. Do the procedures described here only at an ESD workstation. If such a station is not available, do not work in a carpeted area and do not handle materials that produce or hold static electricity (cellophane wrappers, for example). Ground yourself by maintaining continuous contact with an unpainted metal portion of the chassis while performing the procedure.

Inserting an Add-in Board

You can add up to two additional PCI boards to the system.

Your VAIO Digital Studio Computer cannot accommodate PCI add-in boards exceeding 7.7" in length.

To insert an add-in board

Make sure you observe the proper safety precautions when you add boards to your Sony computer. See Notes on Use.

1. Shut down your computer and turn off all peripheral devices, such as your printer, display, and speakers.
2. Unplug your computer and any peripheral devices.
3. Remove the left-side panel as described in Removing the Left-Side Panel.
4. Identify the expansion slot where you want to insert the add-in board.
5. Remove the slot cover for the slot you have chosen.

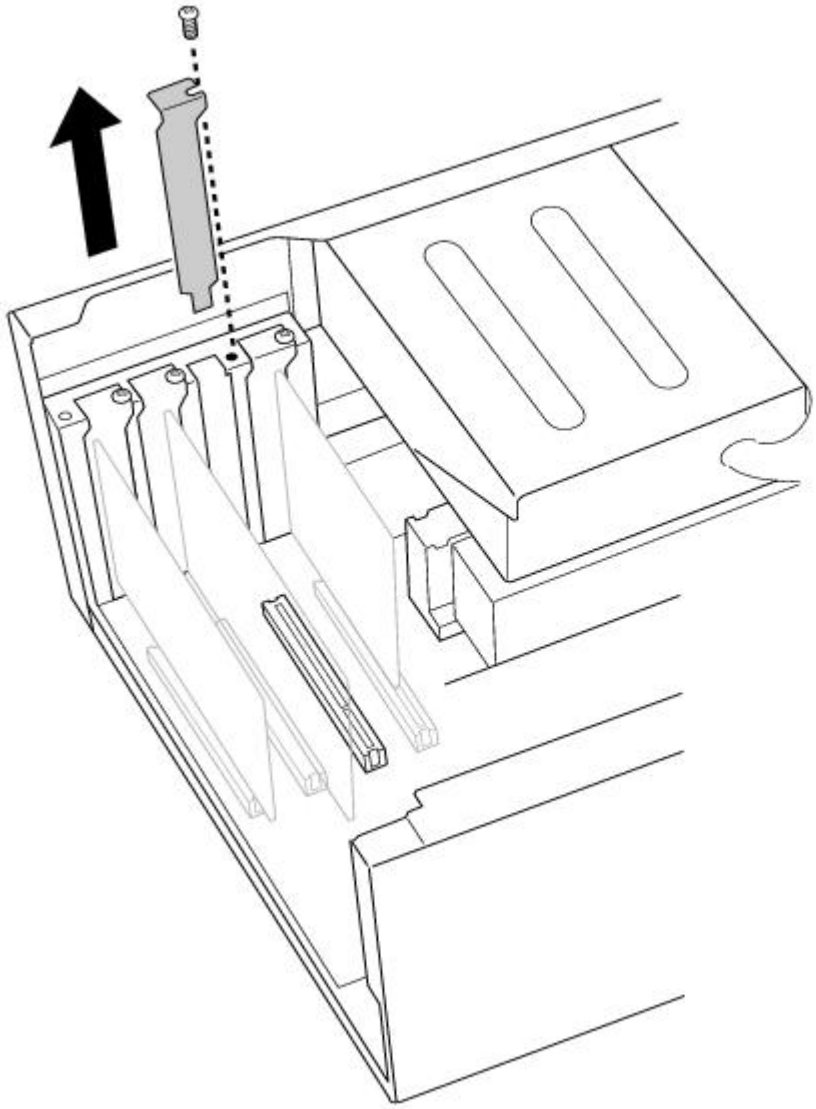

6. Install the add-in board by plugging it into the expansion slot on the system board. Attach any internal cables that the board requires (see the manual for the add-in board).

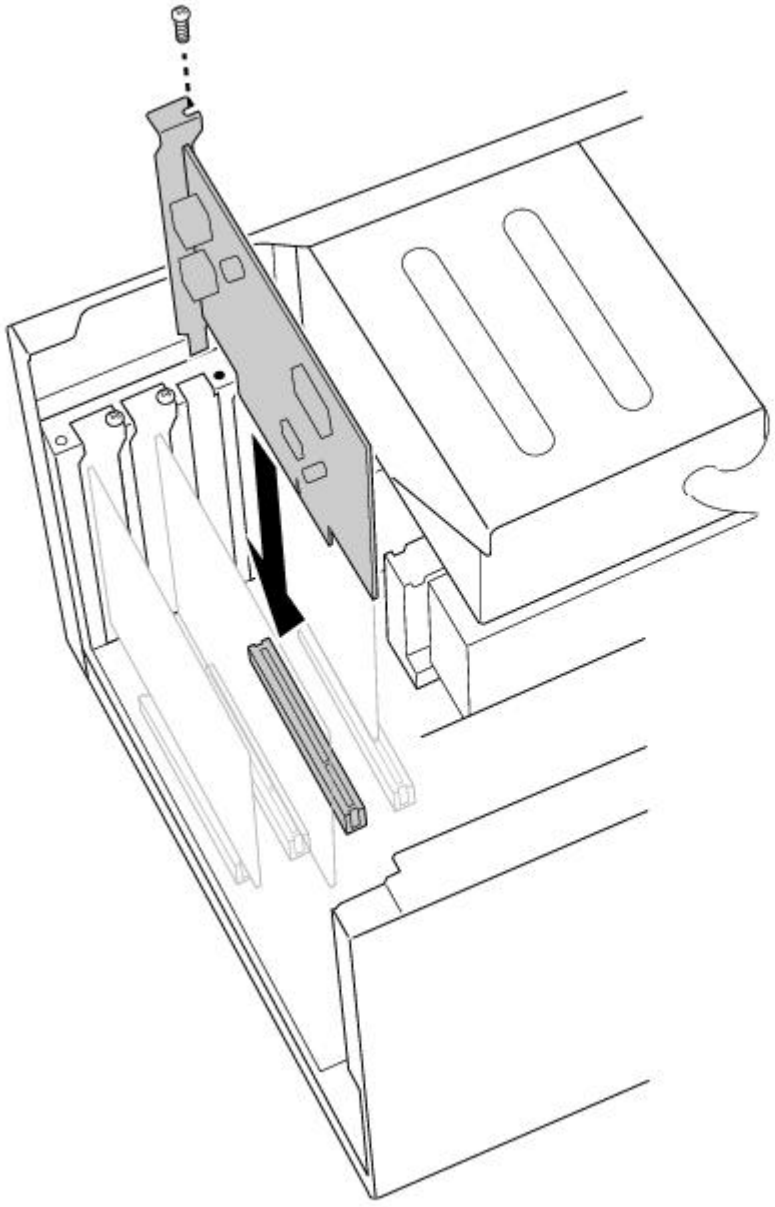

7. Replace the left-side panel as described in Replacing the Left-Side Panel.

Adding Memory

In order to increase your computer's memory, you may need to remove one of the factory-installed DIMMs and replace it with one of greater capacity. For details, see the *VAIO Digital Studio Computer Reference Manual*, which is available at Sony's Web site at http://www.sony.com/pcsupport.

For memory upgrades, use only 3.3V unbuffered 4-clock 64-bit 66 MHz SDRAM DIMM module Rev1.0 or 3.3V unbuffered 4-clock 72-bit 66 MHz SDRAM DIMM module Rev1.0. For more information on Digital Studio Computer compatible memory, call Sony at 1-888-4SONYPC (1-888-476-6972).

To install memory

Make sure you observe the proper safety precautions when you add DIMMs to your Sony computer. See Notes on Use .

1. Shut down your computer and turn off all peripheral devices, such as your printer, display, and speakers.
2. Unplug your computer and any peripheral devices.
3. Remove the left-side panel, bottom panel, and front panel, as described in Removing the Left-Side Panel. Then detach the diskette drive, as described in Detaching the Diskette Drive.

You do not need to completely remove the diskette drive in order to access the DIMM sockets.

4. If necessary, remove any cables, add-in cards, or other components to access the DIMM sockets.
5. Remove either (or both) of the factory-installed DIMMs.
6. Handle the DIMM only by the edges, and remove it from its anti-static package.
7. Locate the keys on the bottom edge of the DIMM .
8. Align the DIMM over the socket.

To avoid damaging the DIMM socket, move the DIMM socket tabs slightly outward to relieve pressure. The DIMM should then click easily into place.

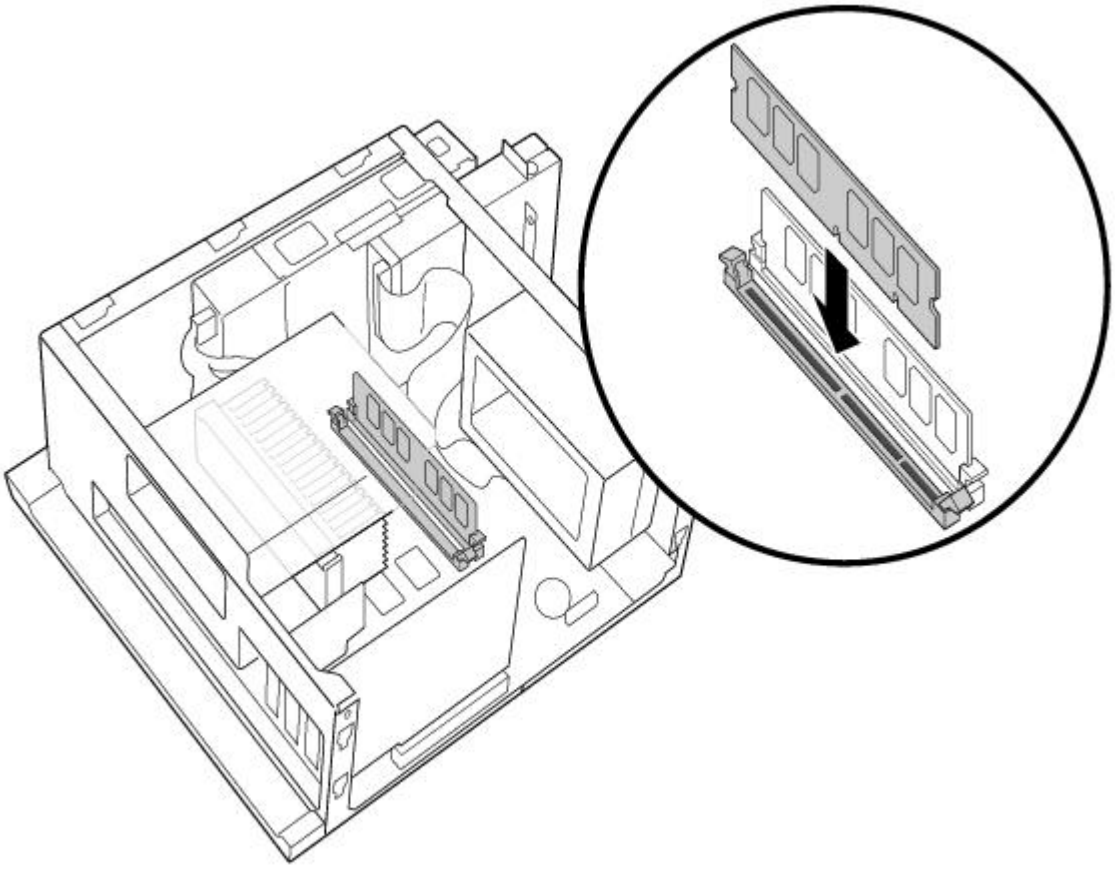

9. Firmly insert the bottom edge of the DIMM into the socket.
10. Press evenly against the DIMM's upper corners. The end latches snap into position automatically.
11. Reinstall any add-in cards or components you removed.
12. Replace the diskette drive and cover panels, as described in Replacing the Diskette Drive to Replacing the Left-Side Panel.

Replacing the Lithium Battery

After several years, when the lithium battery starts to weaken, the system settings stored in CMOS RAM, such as the date and time, may be wrong. When this occurs, you need to replace the lithium battery.

To replace the lithium battery

1. To run the Setup utility, press F3 when your computer is starting up. Then press F1 to run the BIOS setup utility.

2. Write down the current BIOS Setup options.
3. Shut down your computer and turn off all peripheral devices, such as your printer, display, and speakers. Unplug your computer.
4. Remove the left-side and bottom panels, as described in Removing the Left-Side Panel.
5. Install the new battery with the plus (+) side up.

There is danger of explosion if you replace the battery incorrectly. You must replace the battery only with a CR2032 type lithium battery. Discard used batteries according to the instructions on On Disposal of the Lithium Battery.

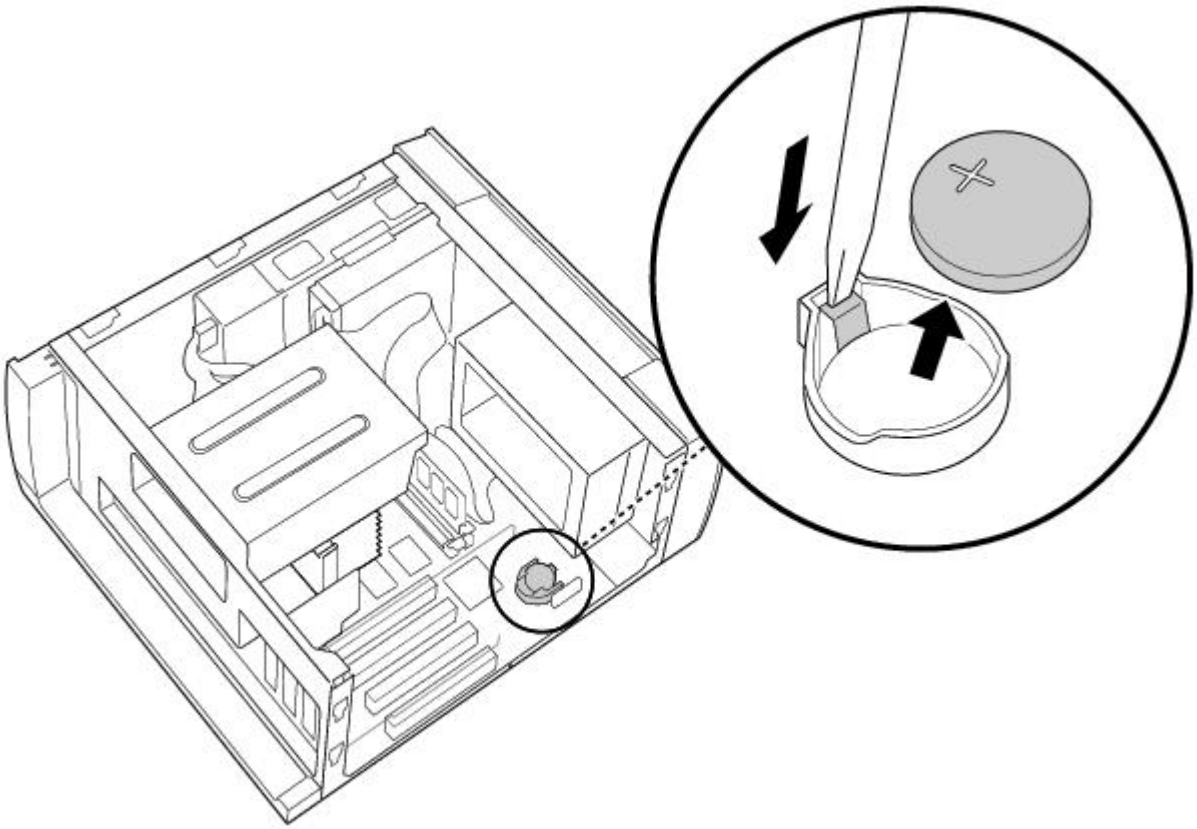

6. Replace the bottom and left-side panels, as described in Replacing the Bottom Panel.

The values stored in the CMOS memory are now reset to the factory default values. You must run the Setup utility to reset the date, time, passwords, and other options. See the VAIO Digital Studio Computer Reference Manual for details.

7. To run the Setup utility, press F3 when your computer is starting up. Then press F1 to run the BIOS setup utility.
8. Change the default values to the values you wrote down in step 2.
9. Save your Setup changes, and then exit the Setup utility.

Installing an Internal Hard Disk Drive

Your VAIO Digital Studio Computer comes with an available bay to hold an additional hard disk drive. The drive you install must not require front panel access. The hard disk drive access light blinks when either internal drive is active.

Before opening the system unit, save any open files, exit Windows, turn off the power of the computer and all attached peripherals, and then unplug the power cord.

1. Configure the jumpers on the new drive as a primary slave (see your drive's documentation for

configuration instructions).

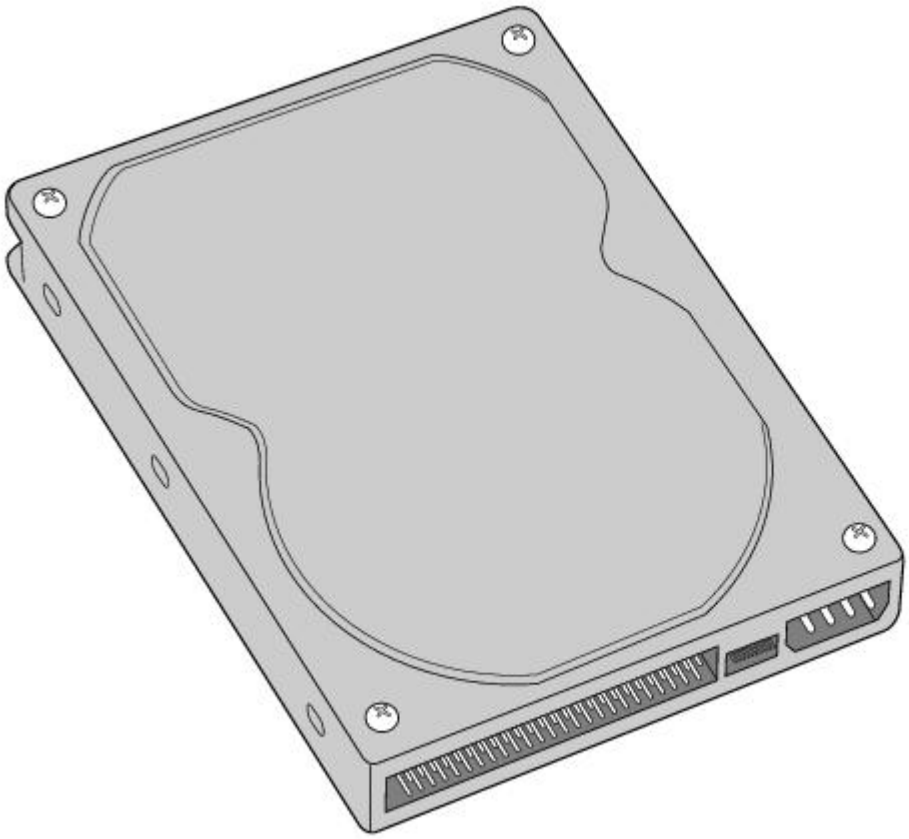

2. Remove the left-side panel, as described in Removing the Left-Side Panel.
3. Remove the front panel, as described in Removing the Front Panel.
4. Remove the bottom panel, as described in Removing the Bottom Panel.
5. Lay the system on its right side (left side faces up-see diagram that follows).
6. Remove the two screws that secure the drive holder.
7. Slide the drive holder forward and then out.

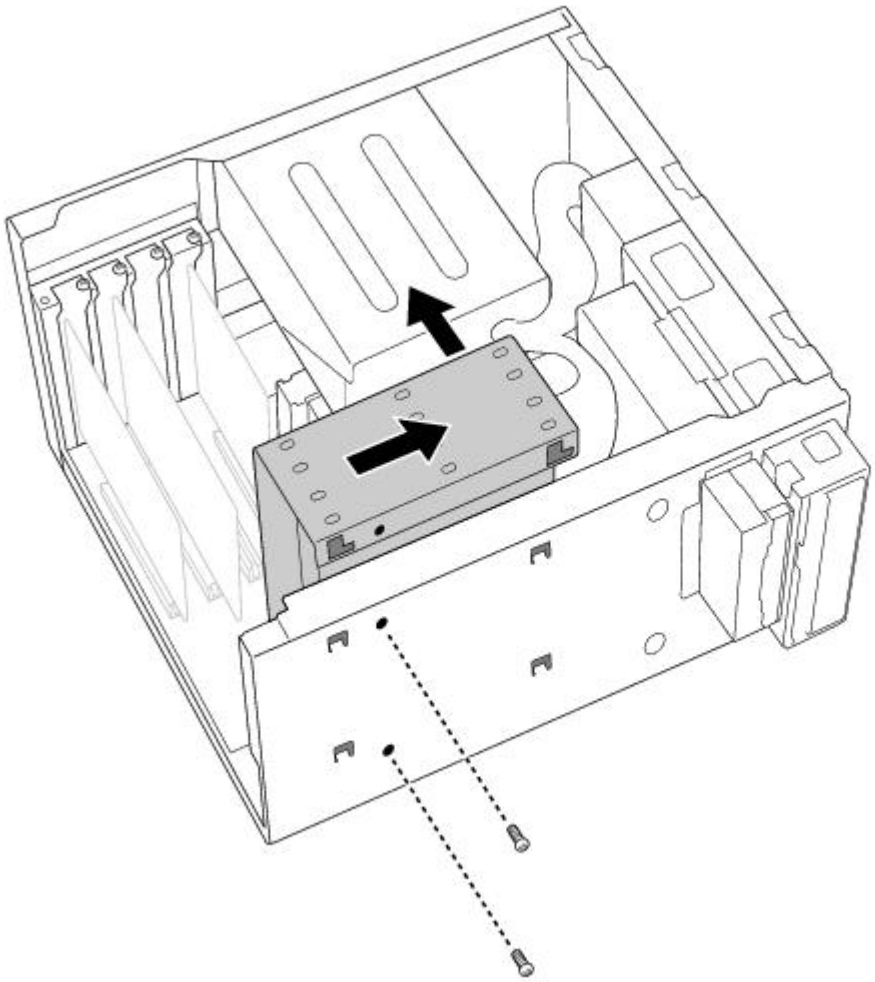

8. Place the drive holder upside down on top of the power supply.

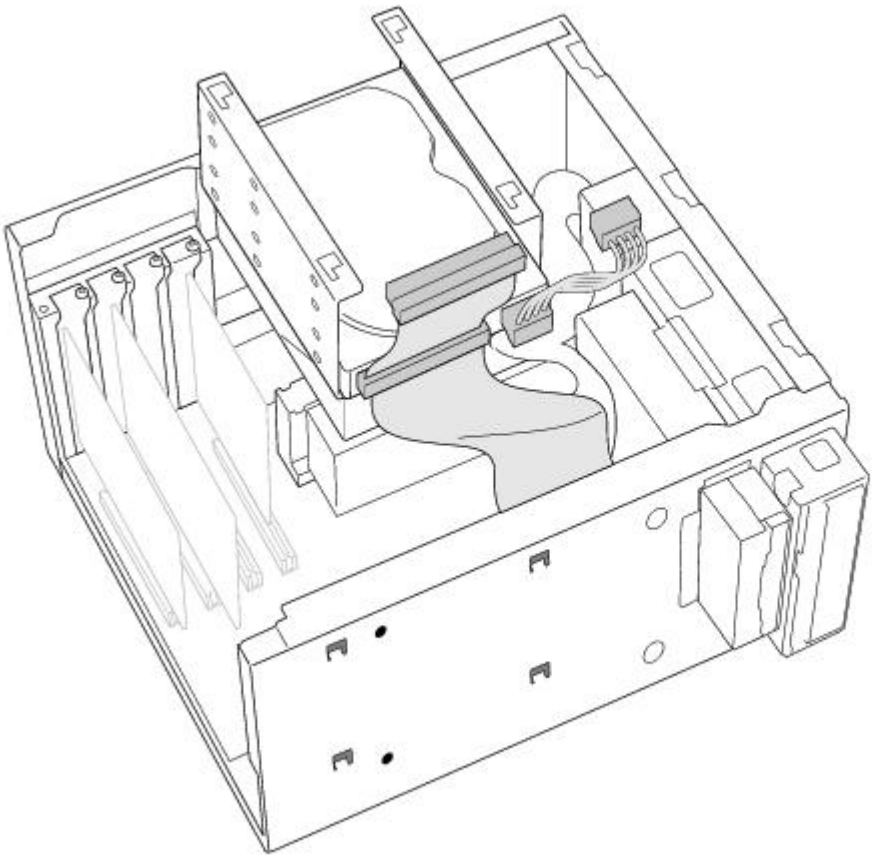

9. Slide the new drive into the drive holder and align the holes on each side of the drive bay.

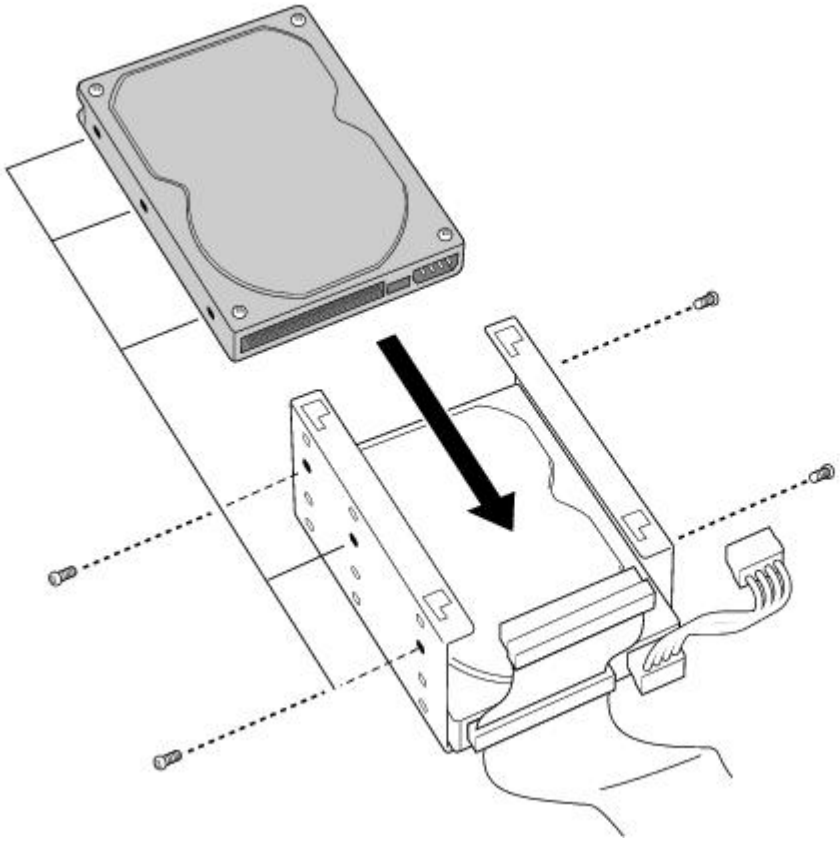

10. Secure the drive to the drive holder using any two of the three holes on each side of the drive holder (screws are provided with the new drive). Do not overtighten the screws.
11. Connect the second drive connector to the new drive.
12. Connect the second power connector to the new drive.

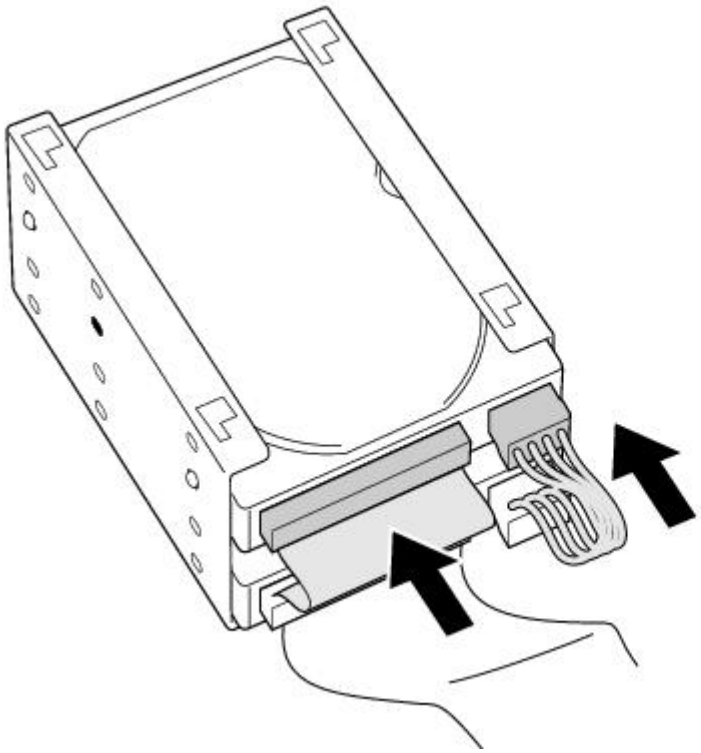

13. Place the drive holder against the inside of the front chassis and slide it back. Be sure to align the slots on the drive holder with the tabs on the inside of the chassis. Be sure to slide the drive holder back so that the tabs slip into the notch at the bottom of the slot.

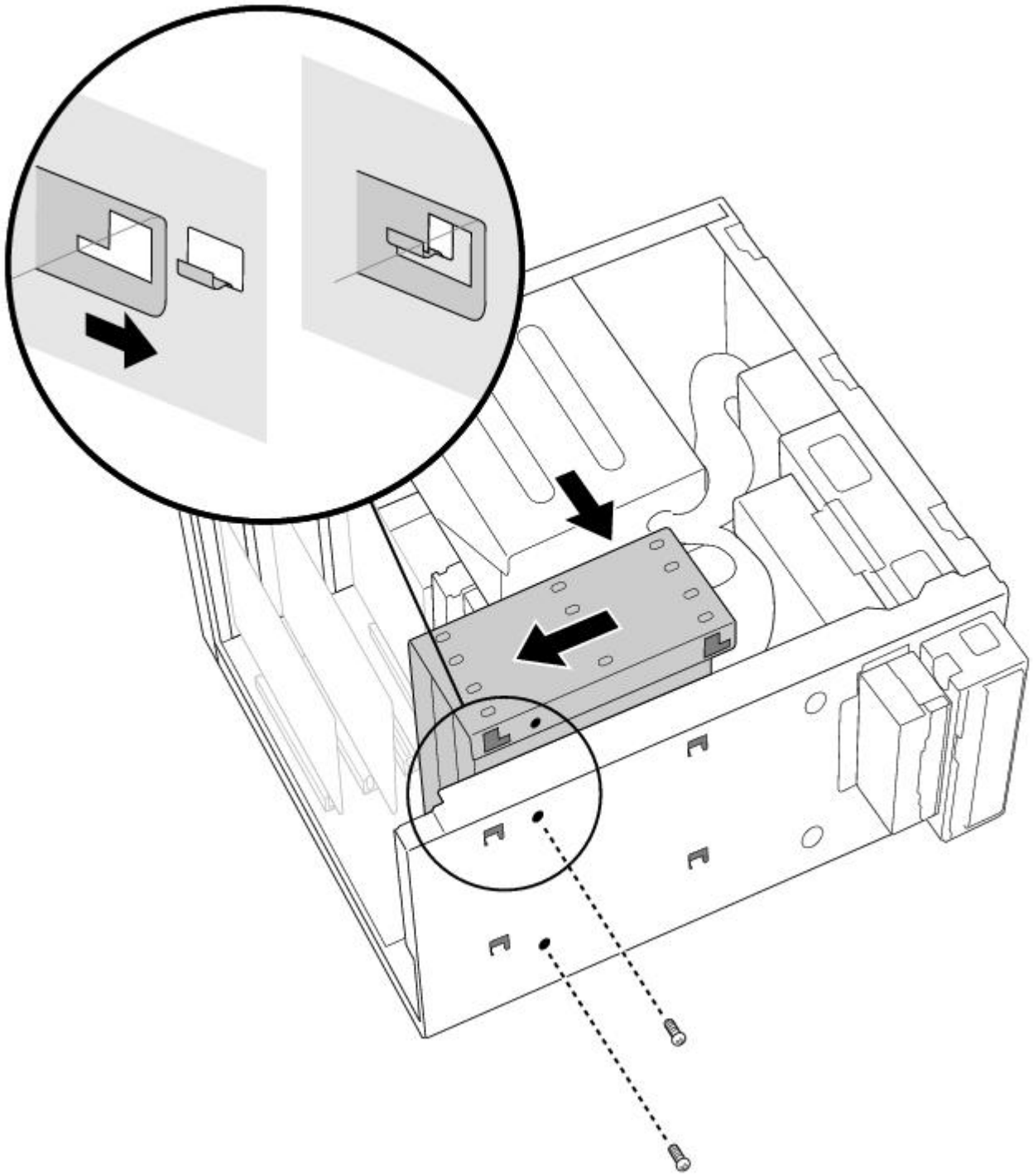

14. Replace the two screws that secure the holder to the chassis.
15. Replace the bottom panel, as described in Replacing the Bottom Panel.
16. Replace the front panel, as described in Replacing the Front Panel.
17. Replace the left-side panel, as described in Replacing the Left-Side Panel.
18. Reconnect the power cord and then turn on your computer.

Your computer automatically recognizes the new drive and configures itself accordingly when you turn it on. Format and partition the new drive following the instructions provided with the drive.

Removing the Left-Side Panel

To remove the left-side panel

1. Remove the two screws that secure the panel to the chassis.
2. Slide the panel back until it stops.
3. Pull the panel straight out to remove it.

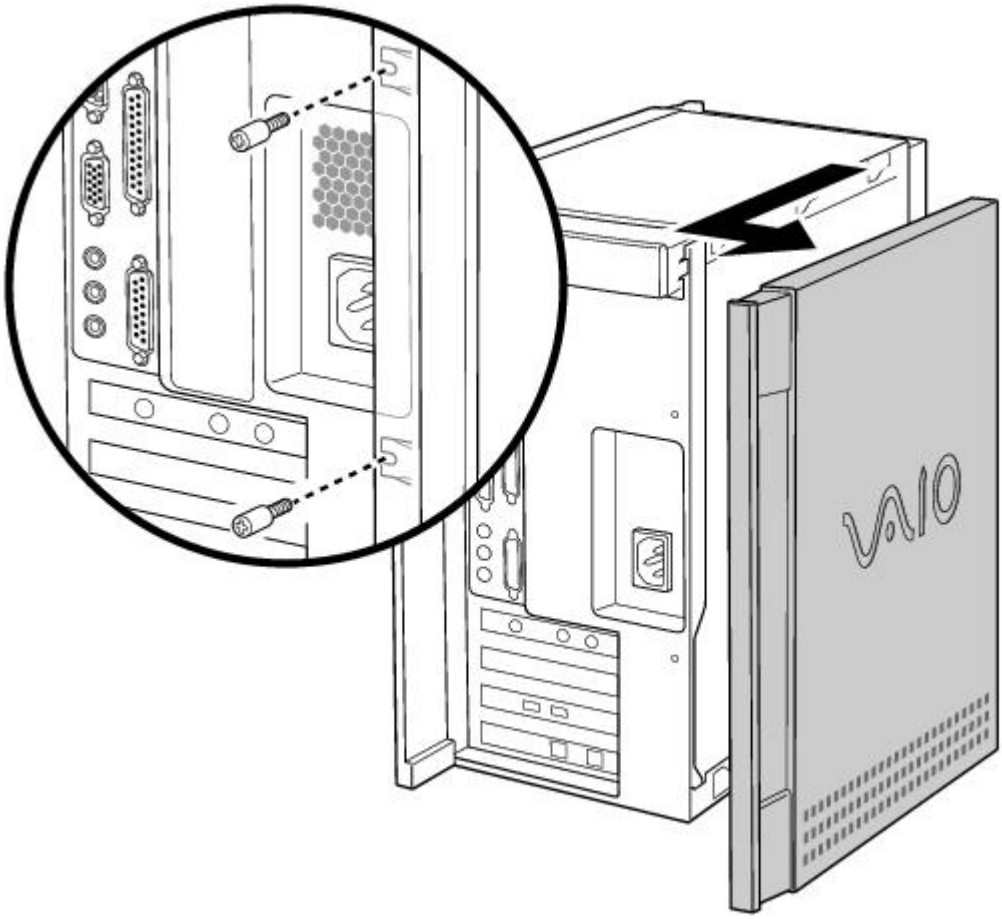

Removing the Bottom Panel

To remove the bottom panel

1. Remove the screw that secures the bottom panel to the chassis.
2. Pull the bottom panel straight out to remove it.

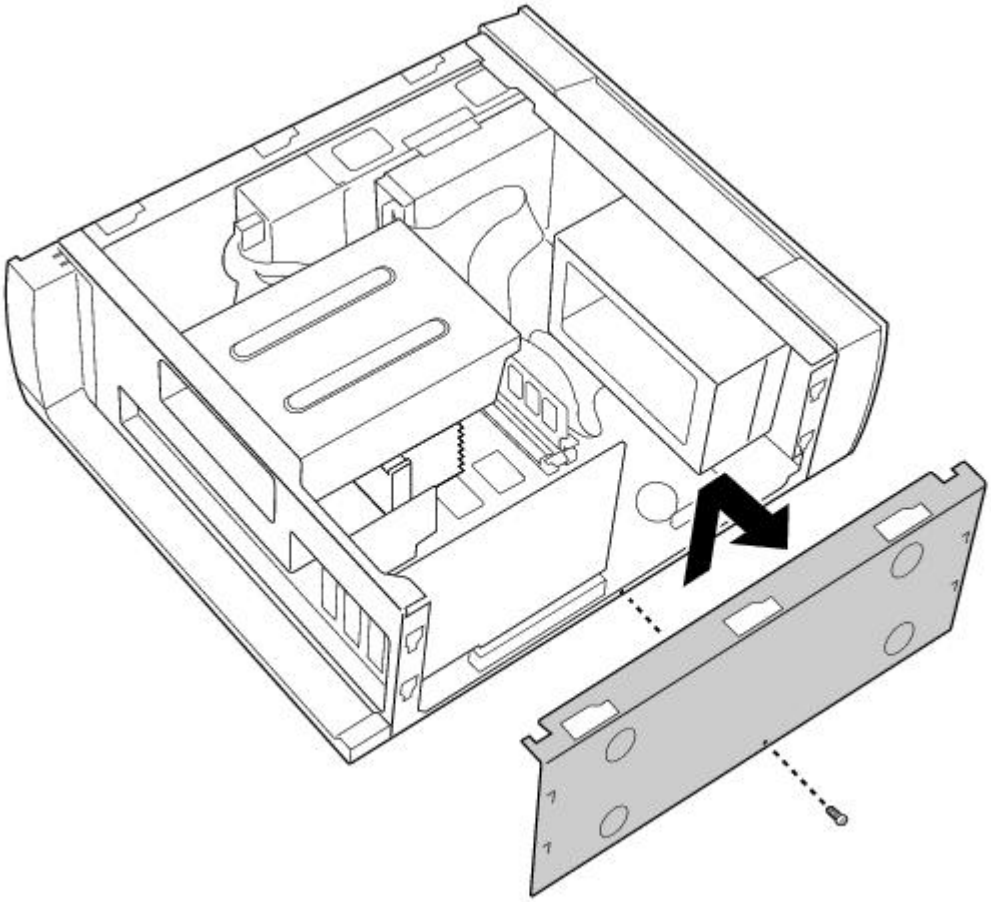

Removing the Front Panel

To remove the front panel

1. Open the CD tray by inserting a thin, pointed object into the emergency eject opening.
2. Slide the CD tray forward.
3. Remove the front cover of the CD tray by lifting it upwards.

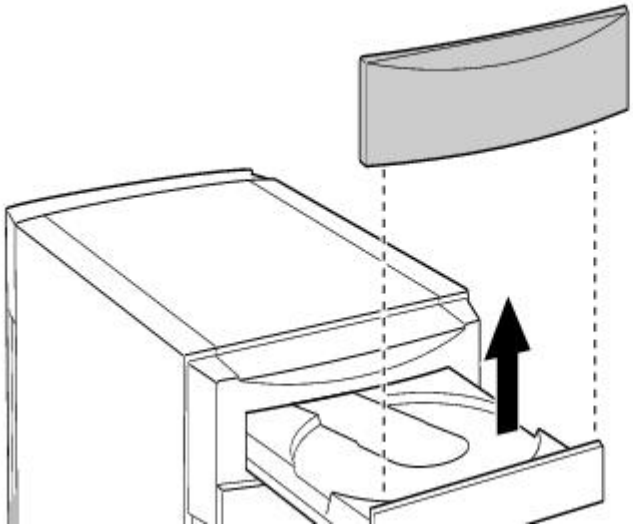

4. Press down on each of the two tabs on the bottom of the front panel to release the panel.
5. Pull the front panel forward to remove it.

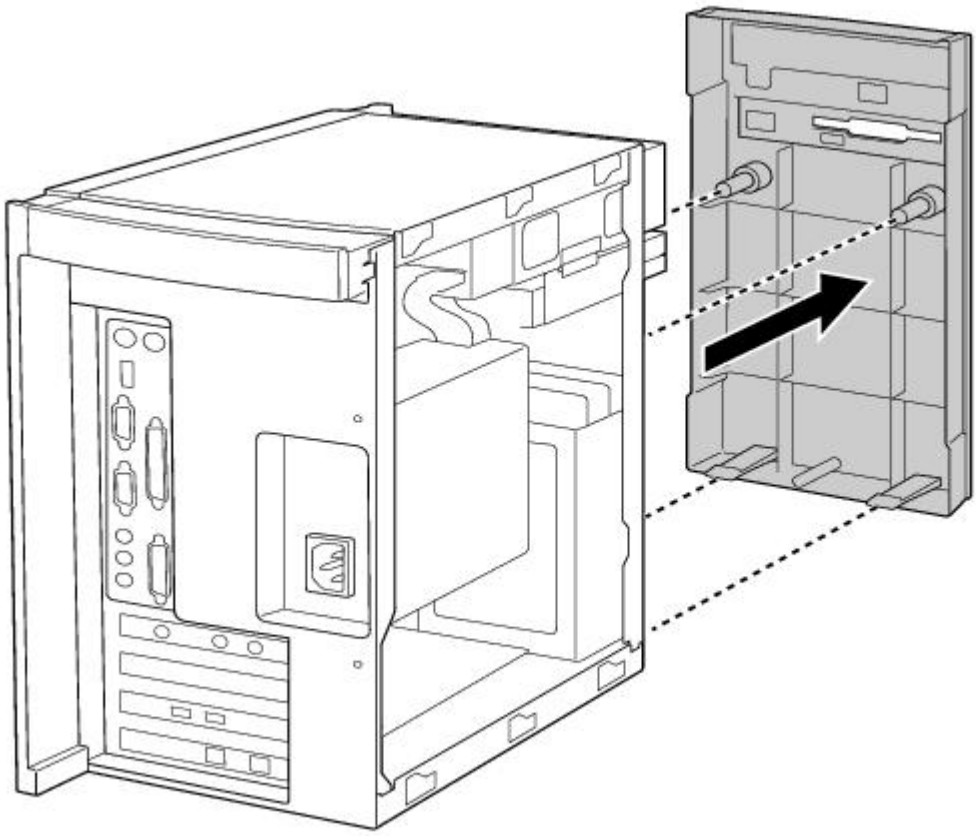

Detaching the Diskette Drive

To detach the diskette drive

1. Remove the front panel, as described in Removing the Front Panel.
2. Remove the two screws that secure the diskette drive to the front of the chassis.
3. Pull the diskette drive forward.

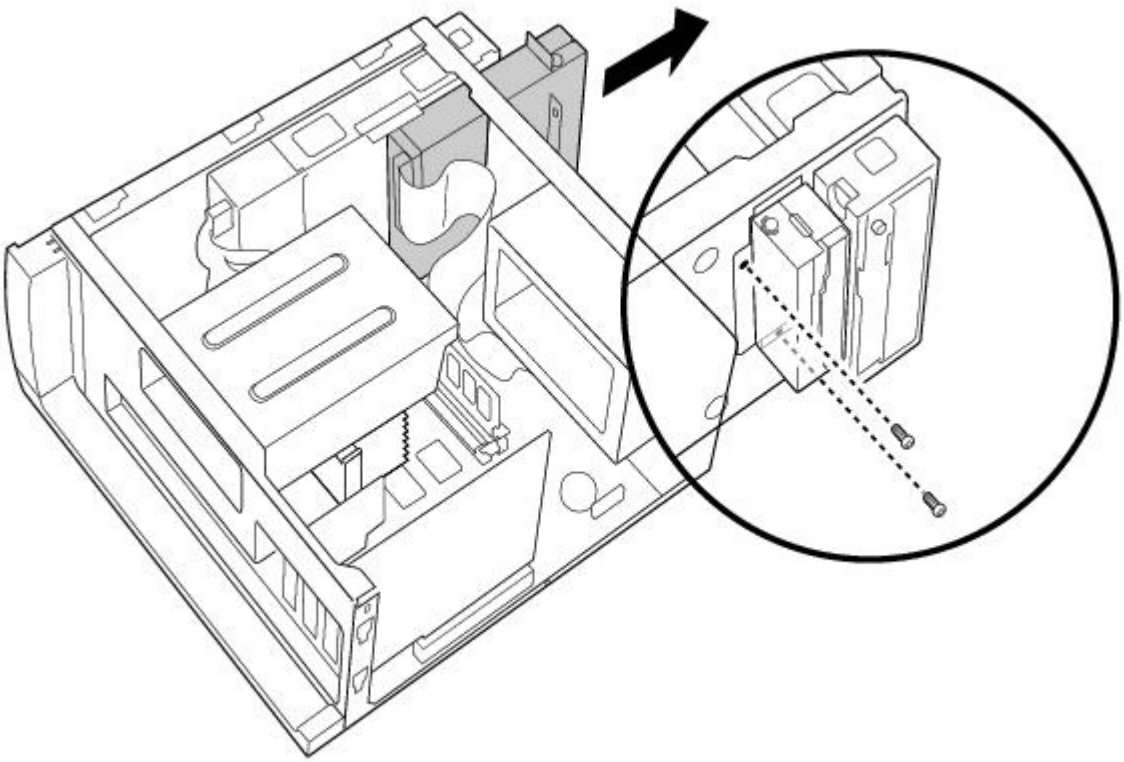

If you are adding memory, you do not need to completely remove the diskette drive or disconnect the cable.

Replacing the Diskette Drive

To replace the diskette drive

1. Push the diskette drive straight into the drive slot.
2. Replace the two screws that secure the diskette drive to the front of the chassis.
3. Replace the front panel, as described in Replacing the Front Panel.

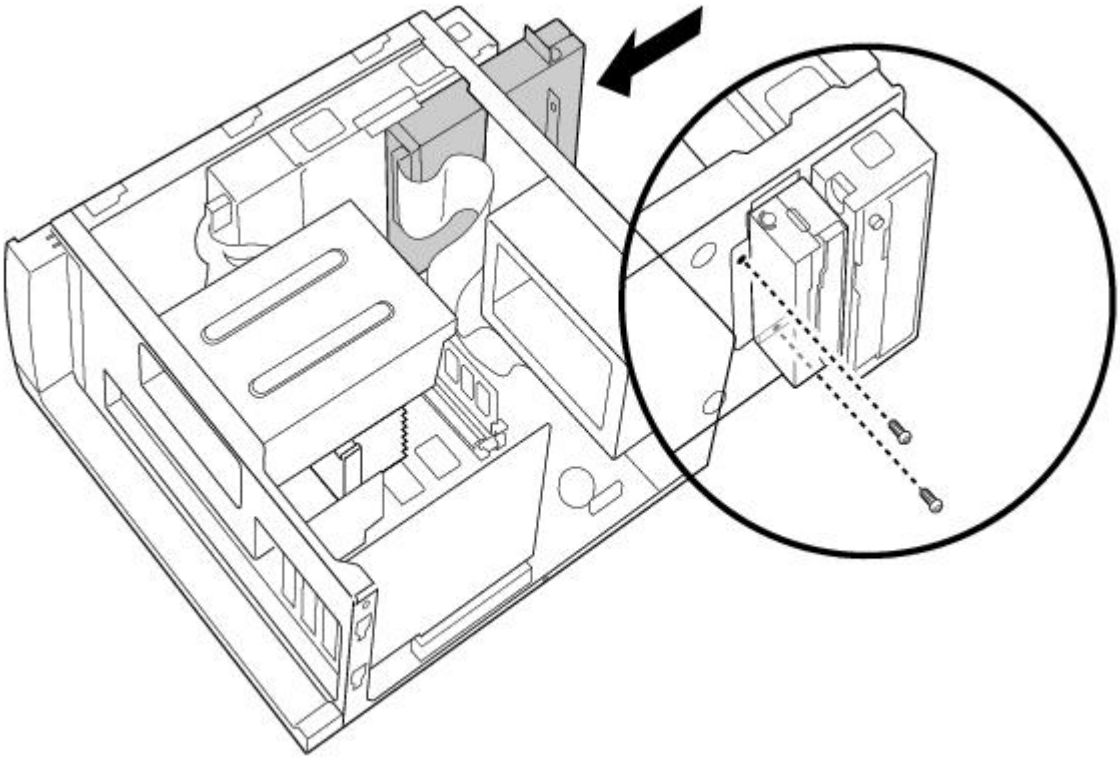

Replacing the Bottom Panel

To replace the bottom panel

1. Align the bottom panel with the screw hole on the bottom of the chassis.
2. Replace the screw that secures the bottom panel to the chassis.

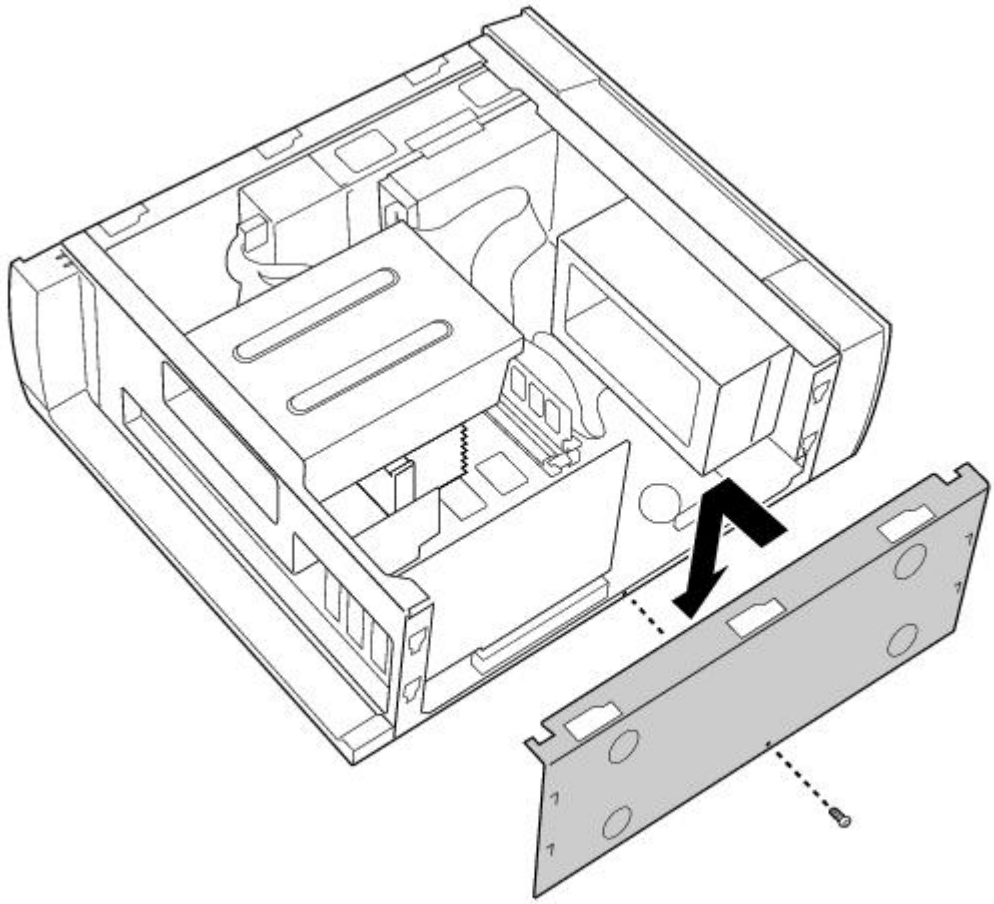

Replacing the Front Panel

To replace the front panel

1. Push the front panel straight onto the front of the chassis until it clicks into place.

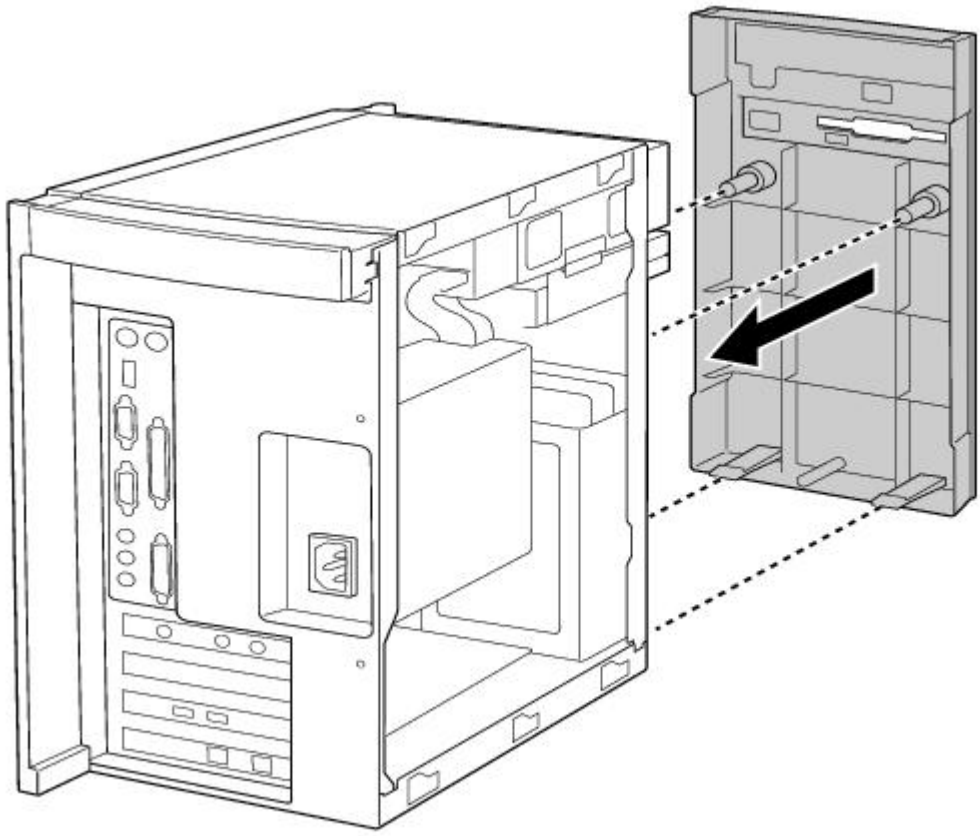

2. Replace the front cover of the CD tray by sliding it down onto the front of the open tray.
3. Close the CD tray.

Replacing the Left-Side Panel

To replace the left-side panel

1. Slide the panel forward until it stops.
2. Replace the two screws that secure the panel to the chassis.

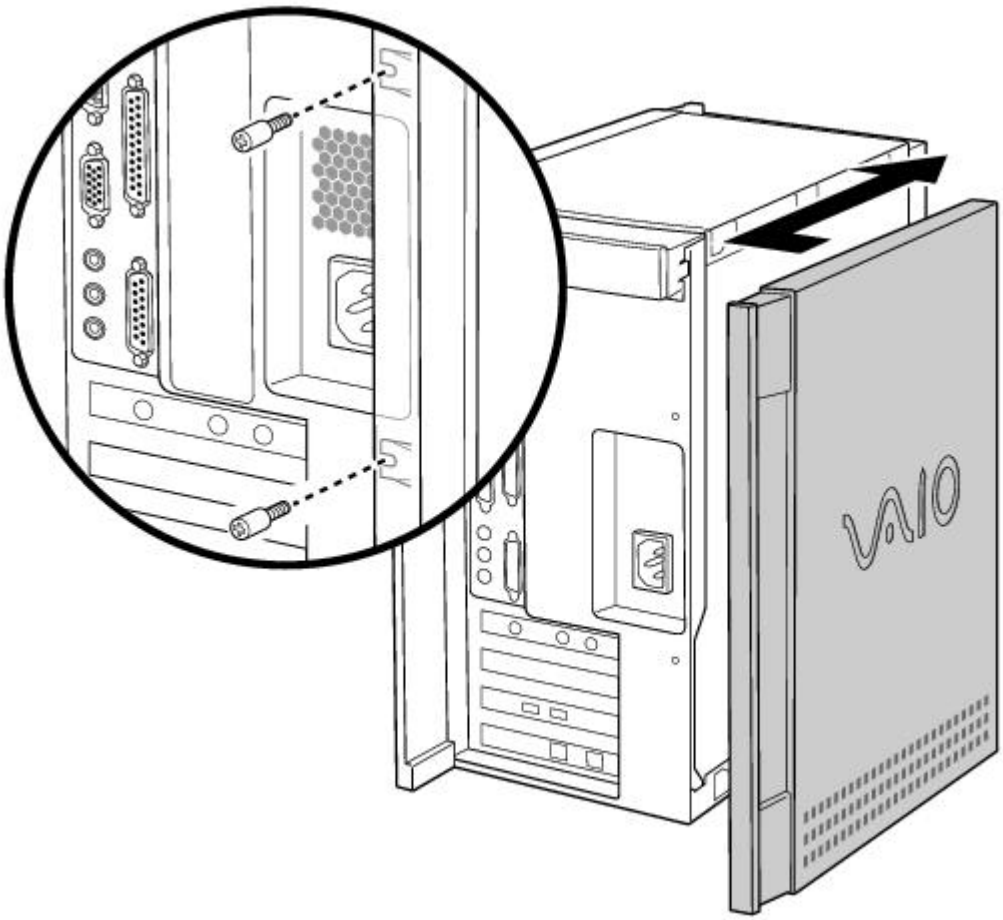

Upgrading and Maintaining Your VAIO Digital Studio Computer

In the future you may want to install additional boards to expand the functionality of your computer. This section describes how to open your computer and insert add-in boards, add memory, replace the lithium battery, and install an additional hard disk drive. For more information on upgrading your Sony computer, see the *VAIO Digital Studio Computer Reference Manual*. You can download this electronic document from the Sony Web site at http://www.sony.com/pcsupport.

The procedures in this section assume you are familiar with the general terminology associated with personal computers and with the safety practices and regulatory compliance required for using and modifying electronic equipment. Read Notes on Use before upgrading your Sony computer.

Always switch the power off before you open the system or connect your computer to peripheral equipment; otherwise, damage may occur to the integrated circuits in your computer.

Electrostatic discharge (ESD) can damage disk drives, add-in cards, and other components. Do the procedures described here only at an ESD workstation. If such a station is not available, do not work in a carpeted area and do not handle materials that produce or hold static electricity (cellophane wrappers, for example). Ground yourself by maintaining continuous contact with an unpainted metal portion of the chassis while performing the procedure.

Inserting an Add-in Board

You can add up to two additional PCI boards to the system.

Your VAIO Digital Studio Computer cannot accommodate PCI add-in boards exceeding 7.7" in length.

To insert an add-in board

Make sure you observe the proper safety precautions when you add boards to your Sony computer. See Notes on Use.

1. Shut down your computer and turn off all peripheral devices, such as your printer, display, and speakers.
2. Unplug your computer and any peripheral devices.
3. Remove the left-side panel as described in Removing the Left-Side Panel.
4. Identify the expansion slot where you want to insert the add-in board.
5. Remove the slot cover for the slot you have chosen.

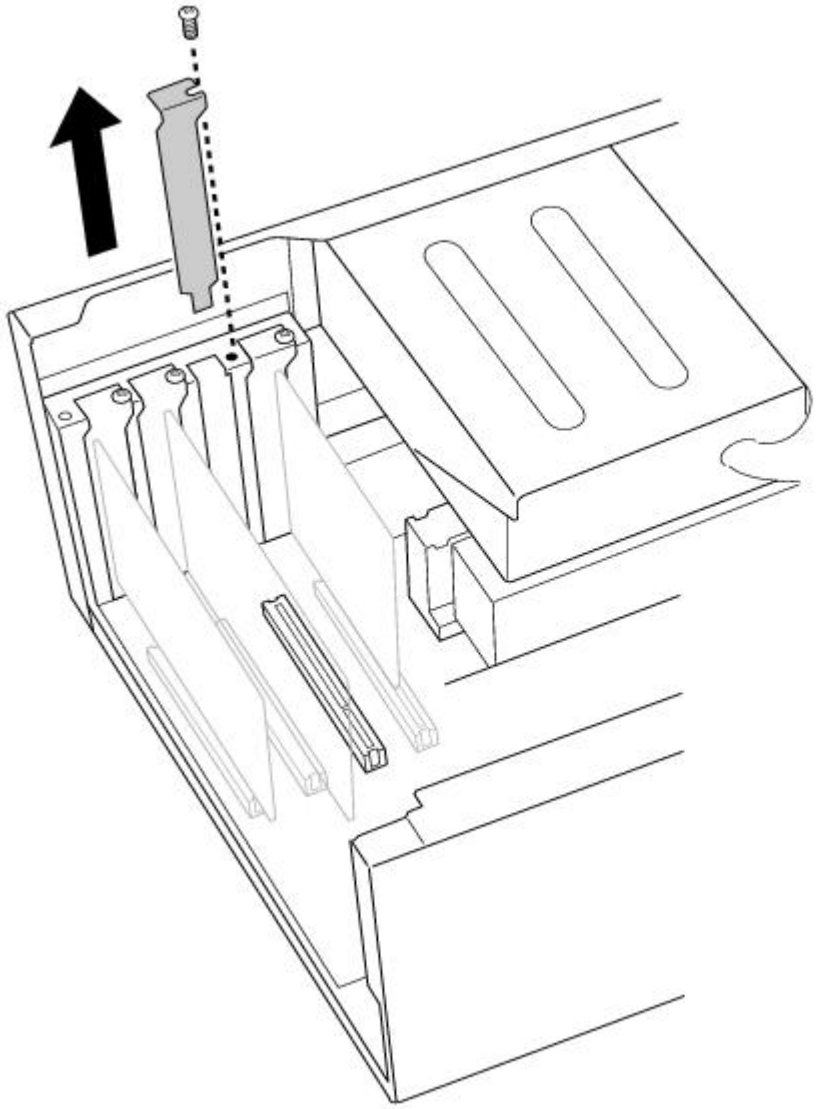

6. Install the add-in board by plugging it into the expansion slot on the system board. Attach any internal cables that the board requires (see the manual for the add-in board).

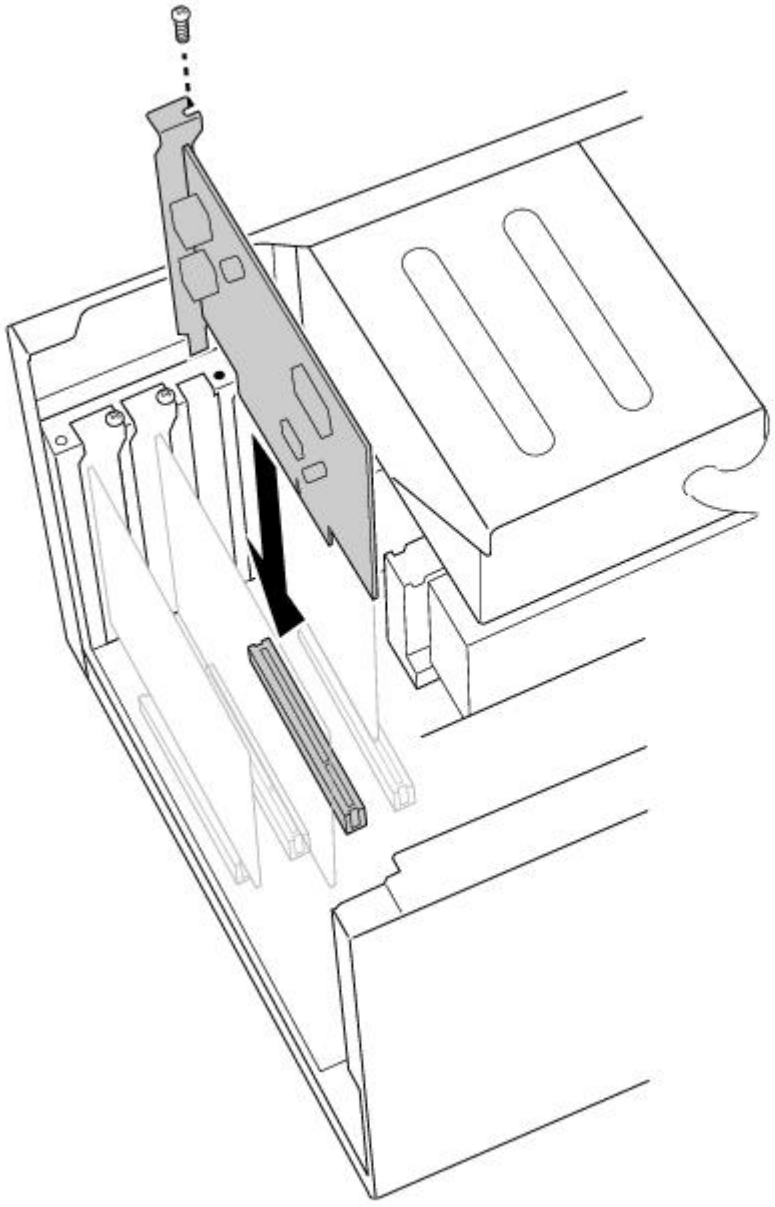

7. Replace the left-side panel as described in Replacing the Left-Side Panel.

Adding Memory

In order to increase your computer's memory, you may need to remove one of the factory-installed DIMMs and replace it with one of greater capacity. For details, see the *VAIO Digital Studio Computer Reference Manual*, which is available at Sony's Web site at http://www.sony.com/pcsupport.

For memory upgrades, use only 3.3V unbuffered 4-clock 64-bit 66 MHz SDRAM DIMM module Rev1.0 or 3.3V unbuffered 4-clock 72-bit 66 MHz SDRAM DIMM module Rev1.0. For more information on Digital Studio Computer compatible memory, call Sony at 1-888-4SONYPC (1-888-476-6972).

To install memory

Make sure you observe the proper safety precautions when you add DIMMs to your Sony computer. See Notes on Use .

1. Shut down your computer and turn off all peripheral devices, such as your printer, display, and speakers.
2. Unplug your computer and any peripheral devices.
3. Remove the left-side panel, bottom panel, and front panel, as described in Removing the Left-Side Panel. Then detach the diskette drive, as described in Detaching the Diskette Drive.

You do not need to completely remove the diskette drive in order to access the DIMM sockets.

4. If necessary, remove any cables, add-in cards, or other components to access the DIMM sockets.
5. Remove either (or both) of the factory-installed DIMMs.
6. Handle the DIMM only by the edges, and remove it from its anti-static package.
7. Locate the keys on the bottom edge of the DIMM .
8. Align the DIMM over the socket.

To avoid damaging the DIMM socket, move the DIMM socket tabs slightly outward to relieve pressure. The DIMM should then click easily into place.

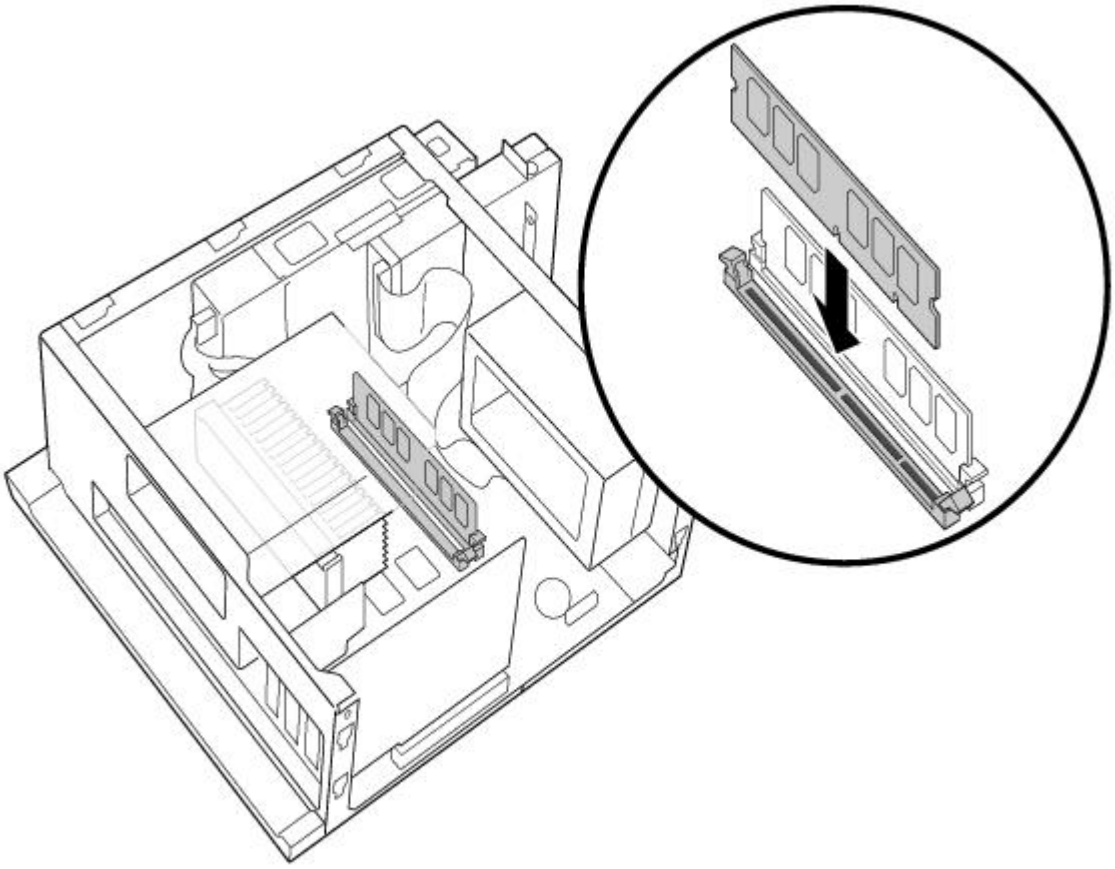

9. Firmly insert the bottom edge of the DIMM into the socket.
10. Press evenly against the DIMM's upper corners. The end latches snap into position automatically.
11. Reinstall any add-in cards or components you removed.
12. Replace the diskette drive and cover panels, as described in Replacing the Diskette Drive to Replacing the Left-Side Panel.

Replacing the Lithium Battery

After several years, when the lithium battery starts to weaken, the system settings stored in CMOS RAM, such as the date and time, may be wrong. When this occurs, you need to replace the lithium battery.

To replace the lithium battery

1. To run the Setup utility, press F3 when your computer is starting up. Then press F1 to run the BIOS setup utility.

2. Write down the current BIOS Setup options.
3. Shut down your computer and turn off all peripheral devices, such as your printer, display, and speakers. Unplug your computer.
4. Remove the left-side and bottom panels, as described in Removing the Left-Side Panel.
5. Install the new battery with the plus (+) side up.

There is danger of explosion if you replace the battery incorrectly. You must replace the battery only with a CR2032 type lithium battery. Discard used batteries according to the instructions on On Disposal of the Lithium Battery.

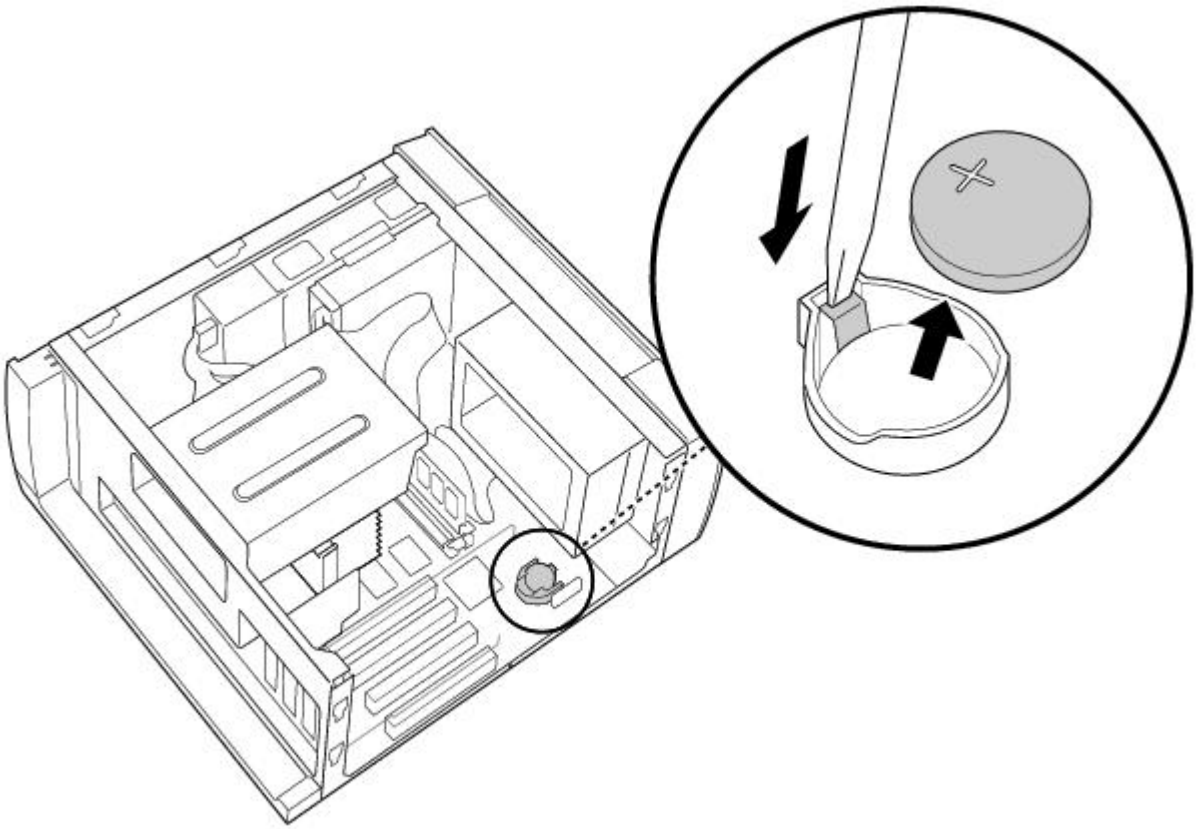

6. Replace the bottom and left-side panels, as described in Replacing the Bottom Panel.

The values stored in the CMOS memory are now reset to the factory default values. You must run the Setup utility to reset the date, time, passwords, and other options. See the VAIO Digital Studio Computer Reference Manual for details.

7. To run the Setup utility, press F3 when your computer is starting up. Then press F1 to run the BIOS setup utility.
8. Change the default values to the values you wrote down in step 2.
9. Save your Setup changes, and then exit the Setup utility.

Installing an Internal Hard Disk Drive

Your VAIO Digital Studio Computer comes with an available bay to hold an additional hard disk drive. The drive you install must not require front panel access. The hard disk drive access light blinks when either internal drive is active.

Before opening the system unit, save any open files, exit Windows, turn off the power of the computer and all attached peripherals, and then unplug the power cord.

1. Configure the jumpers on the new drive as a primary slave (see your drive's documentation for

configuration instructions).

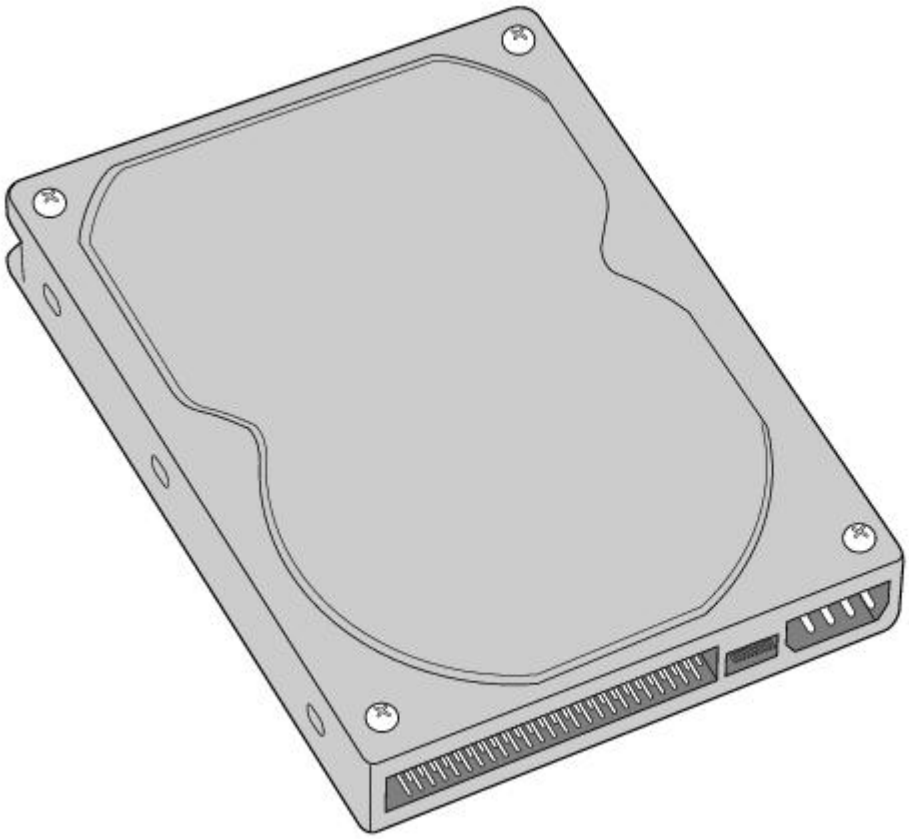

2. Remove the left-side panel, as described in Removing the Left-Side Panel.
3. Remove the front panel, as described in Removing the Front Panel.
4. Remove the bottom panel, as described in Removing the Bottom Panel.
5. Lay the system on its right side (left side faces up-see diagram that follows).
6. Remove the two screws that secure the drive holder.
7. Slide the drive holder forward and then out.

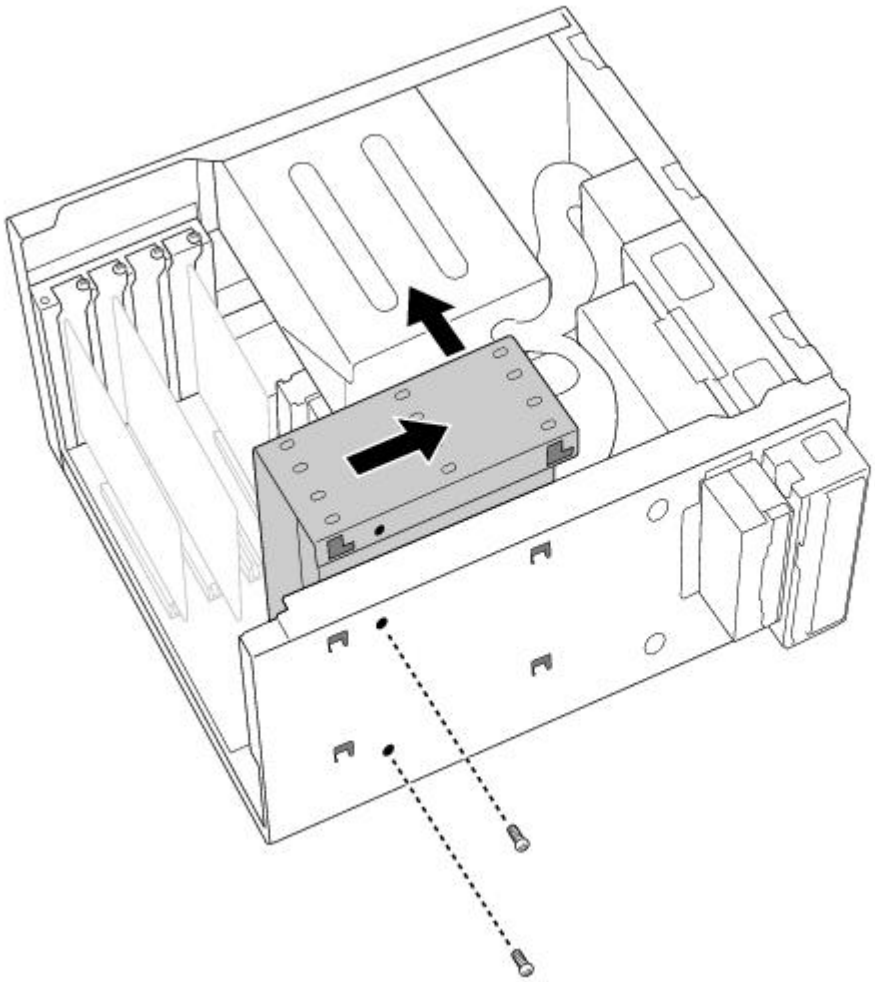

8. Place the drive holder upside down on top of the power supply.

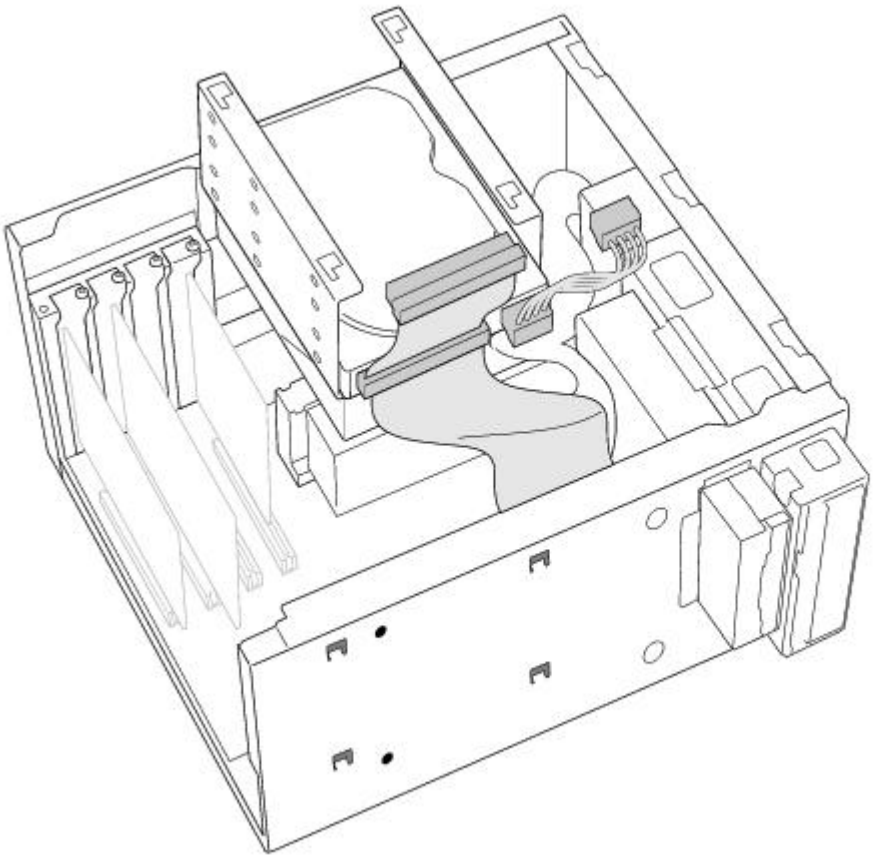

9. Slide the new drive into the drive holder and align the holes on each side of the drive bay.

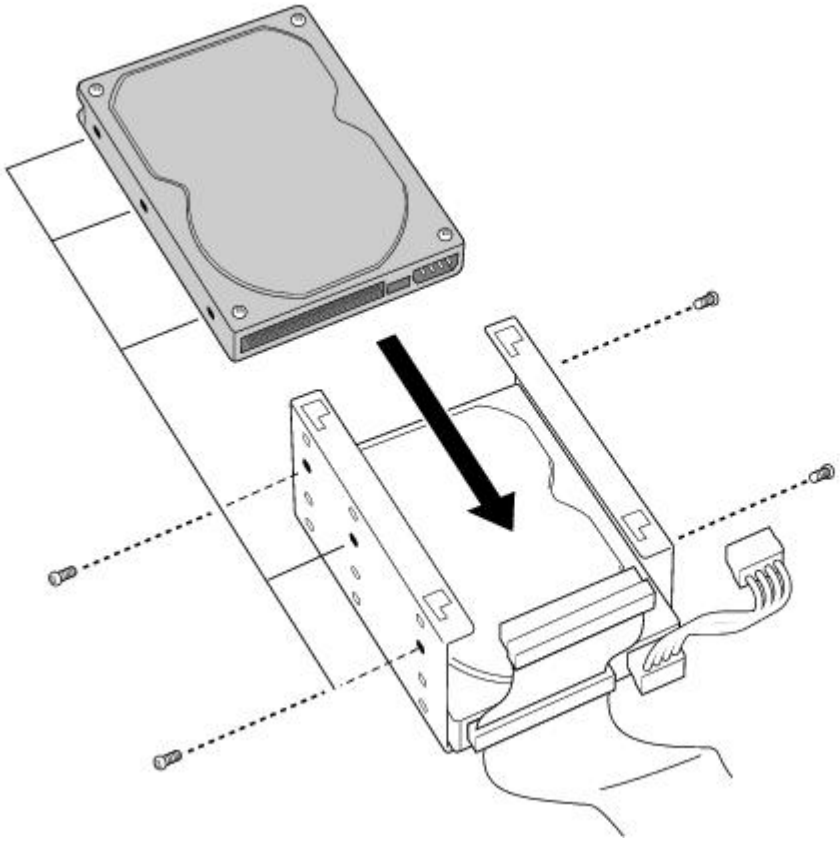

10. Secure the drive to the drive holder using any two of the three holes on each side of the drive holder (screws are provided with the new drive). Do not overtighten the screws.
11. Connect the second drive connector to the new drive.
12. Connect the second power connector to the new drive.

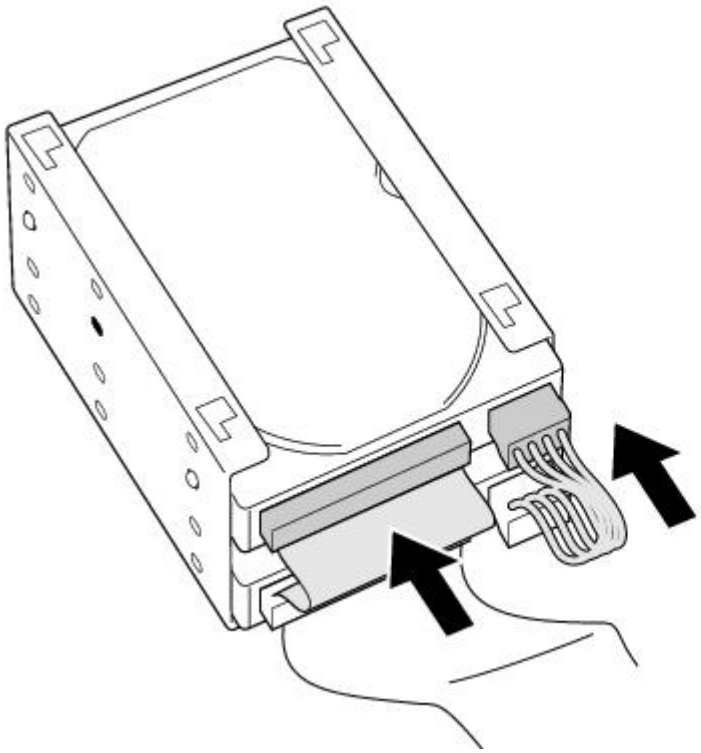

13. Place the drive holder against the inside of the front chassis and slide it back. Be sure to align the slots on the drive holder with the tabs on the inside of the chassis. Be sure to slide the drive holder back so that the tabs slip into the notch at the bottom of the slot.

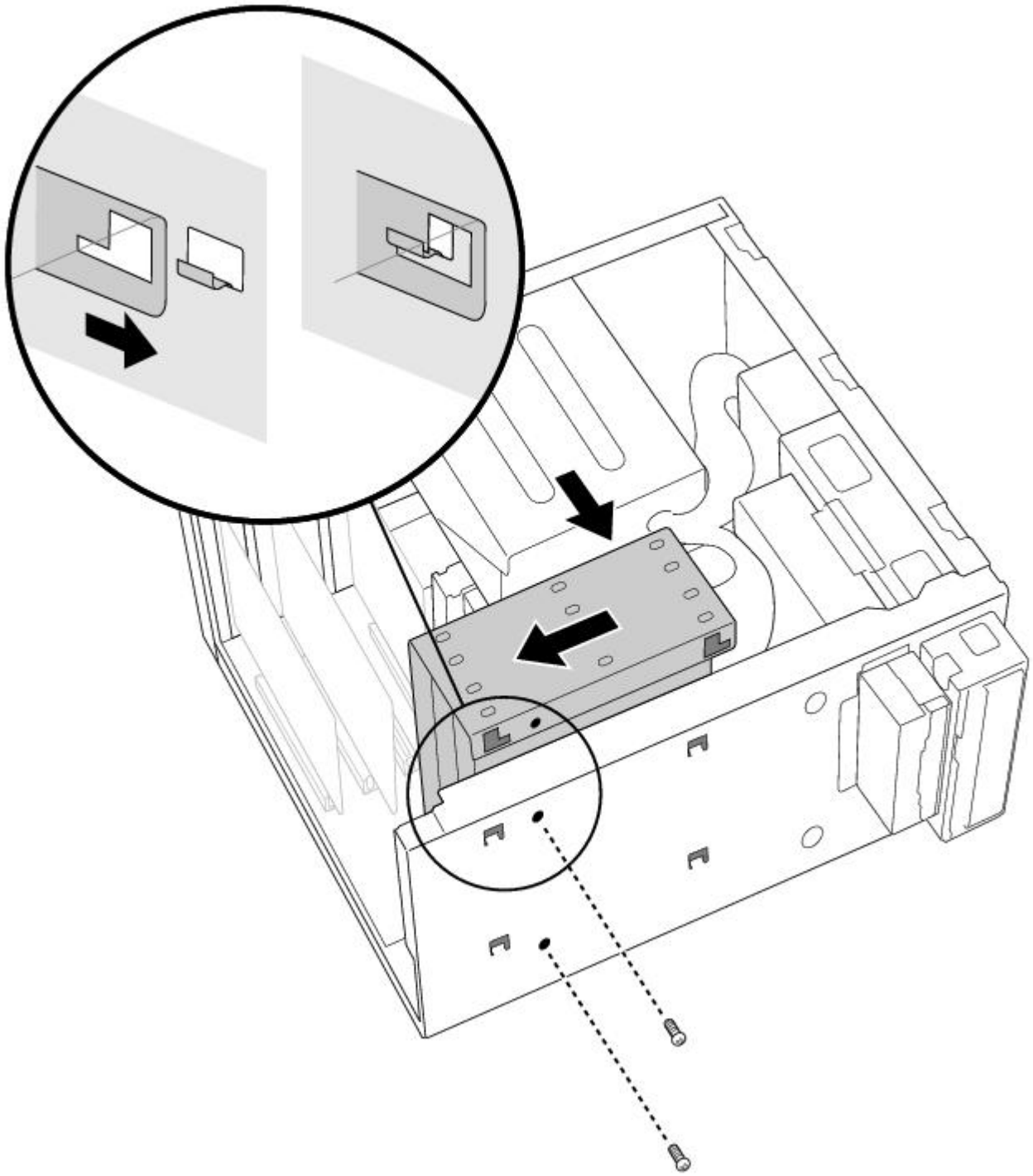

14. Replace the two screws that secure the holder to the chassis.
15. Replace the bottom panel, as described in Replacing the Bottom Panel.
16. Replace the front panel, as described in Replacing the Front Panel.
17. Replace the left-side panel, as described in Replacing the Left-Side Panel.
18. Reconnect the power cord and then turn on your computer.

Your computer automatically recognizes the new drive and configures itself accordingly when you turn it on. Format and partition the new drive following the instructions provided with the drive.

Removing the Left-Side Panel

To remove the left-side panel

1. Remove the two screws that secure the panel to the chassis.
2. Slide the panel back until it stops.
3. Pull the panel straight out to remove it.

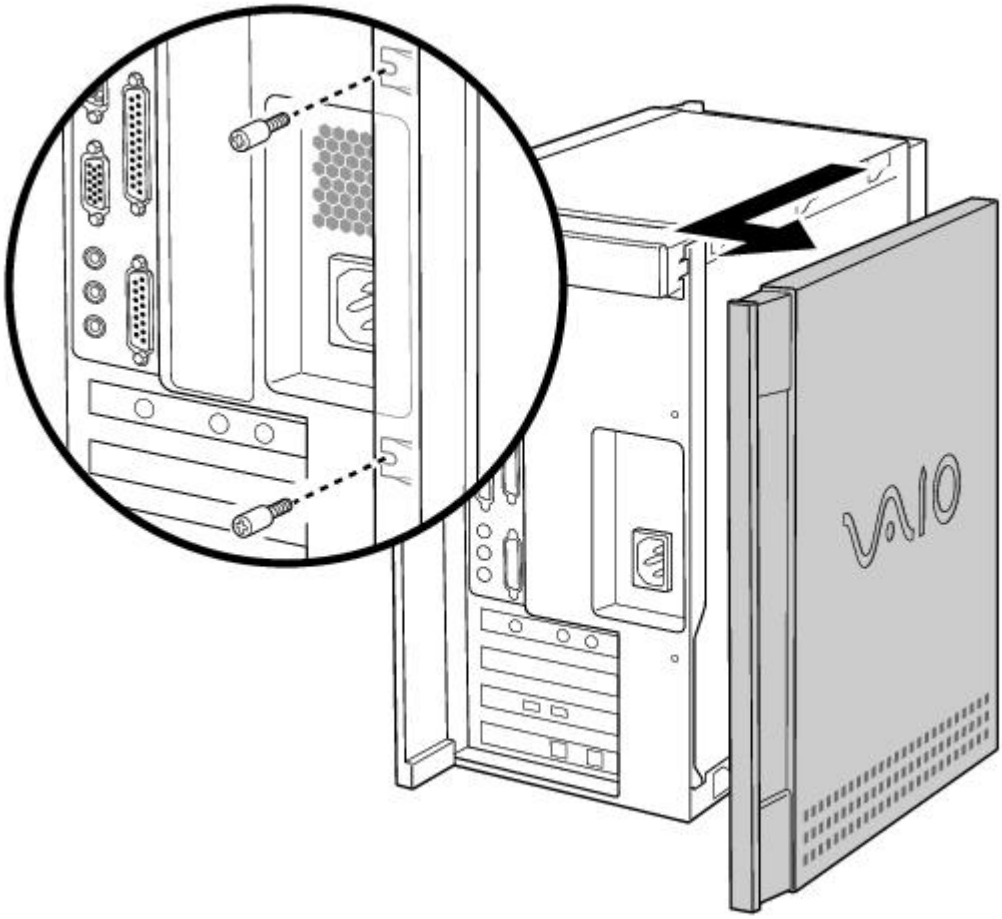

Removing the Bottom Panel

To remove the bottom panel

1. Remove the screw that secures the bottom panel to the chassis.
2. Pull the bottom panel straight out to remove it.

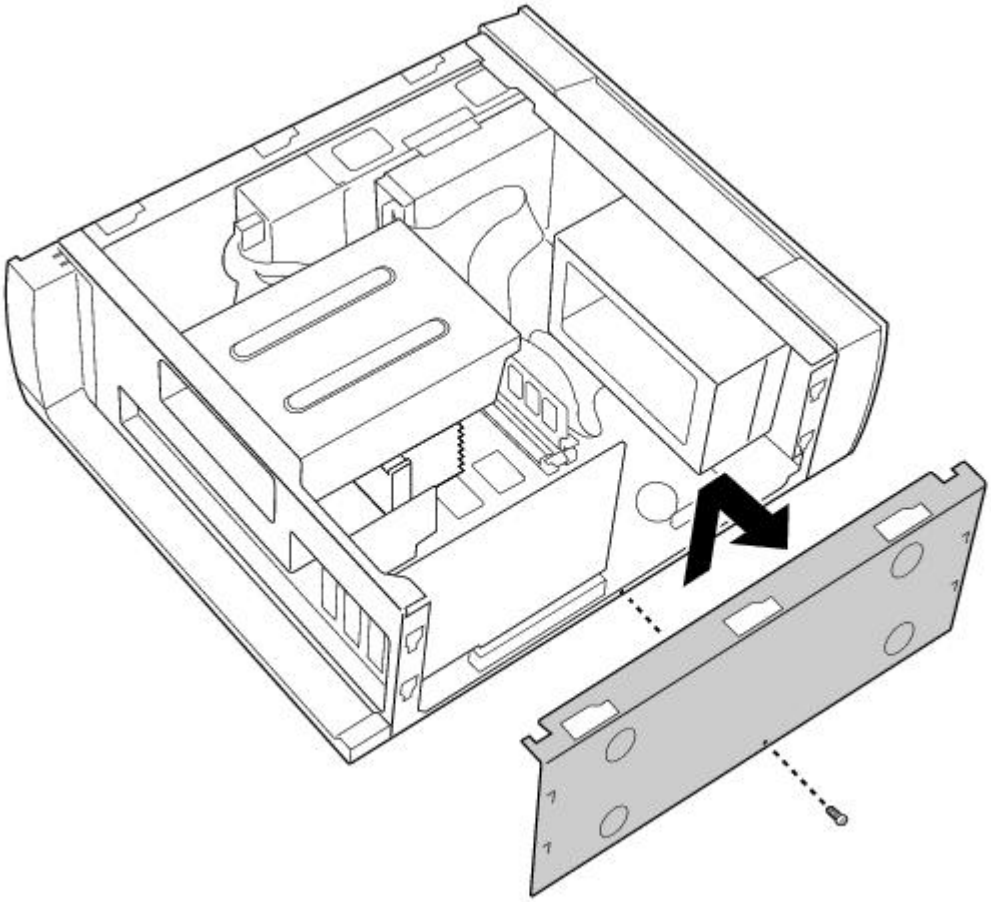

Removing the Front Panel

To remove the front panel

1. Open the CD tray by inserting a thin, pointed object into the emergency eject opening.
2. Slide the CD tray forward.
3. Remove the front cover of the CD tray by lifting it upwards.

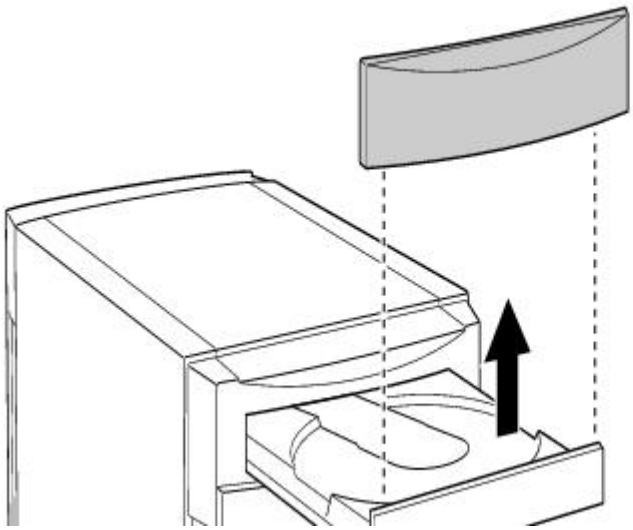

4. Press down on each of the two tabs on the bottom of the front panel to release the panel.
5. Pull the front panel forward to remove it.

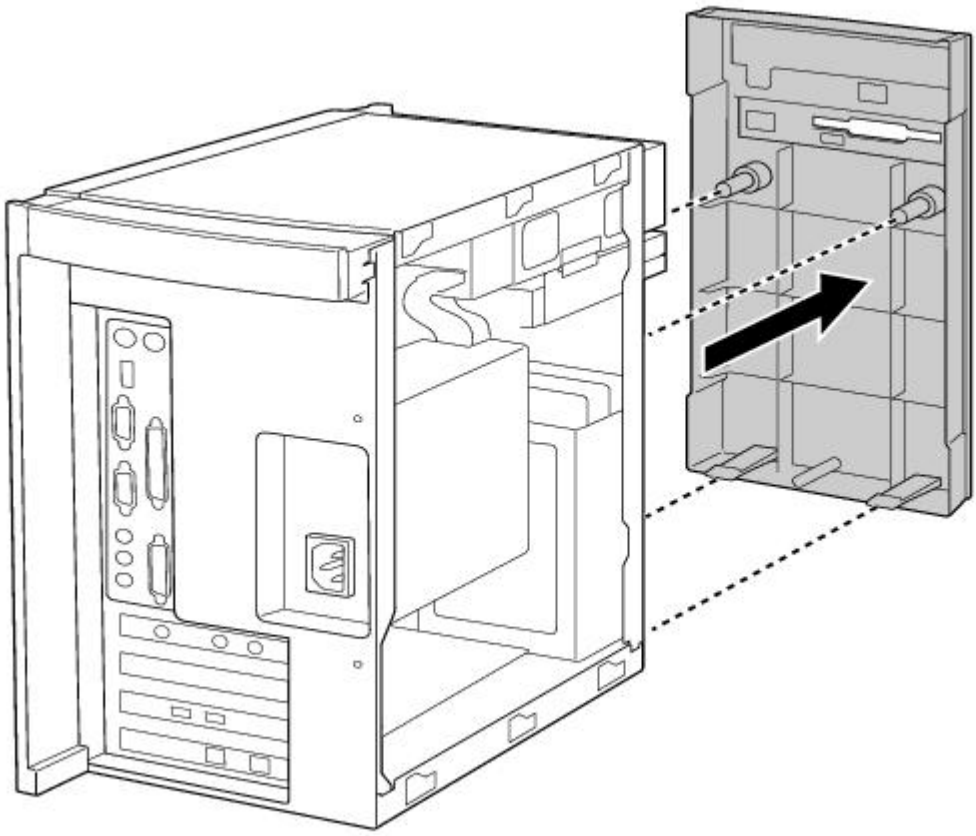

Detaching the Diskette Drive

To detach the diskette drive

1. Remove the front panel, as described in Removing the Front Panel.
2. Remove the two screws that secure the diskette drive to the front of the chassis.
3. Pull the diskette drive forward.

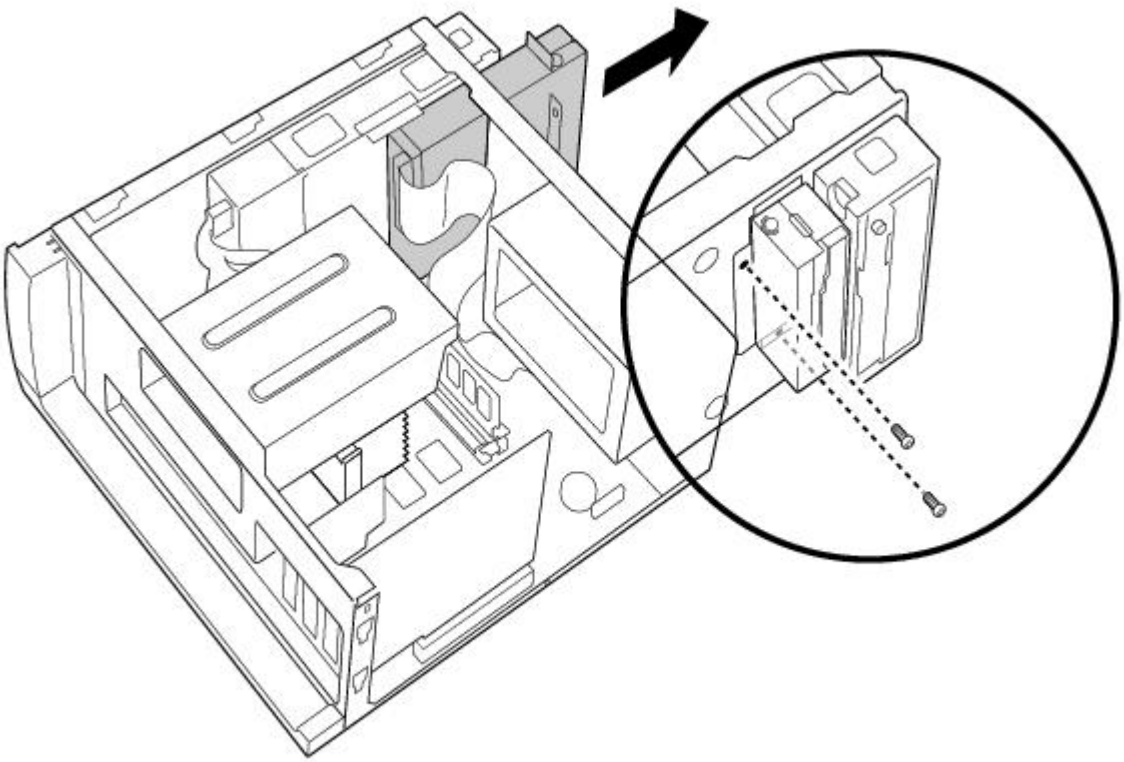

If you are adding memory, you do not need to completely remove the diskette drive or disconnect the cable.

Replacing the Diskette Drive

To replace the diskette drive

1. Push the diskette drive straight into the drive slot.
2. Replace the two screws that secure the diskette drive to the front of the chassis.
3. Replace the front panel, as described in Replacing the Front Panel.

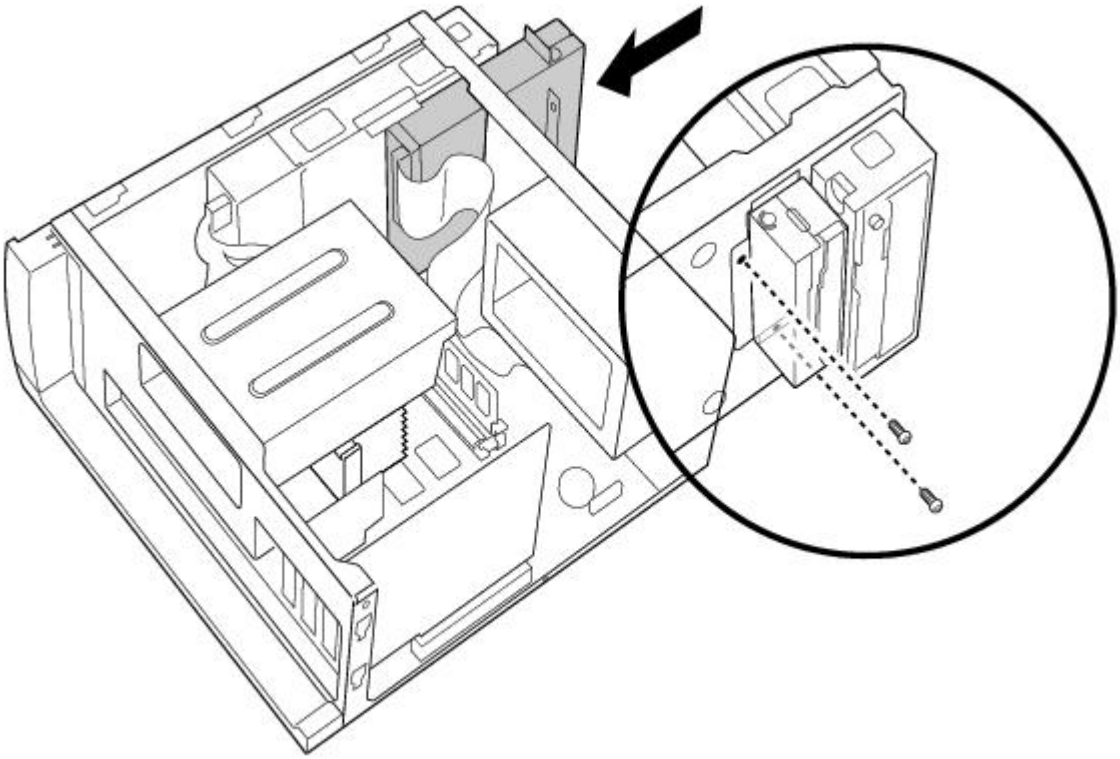

Replacing the Bottom Panel

To replace the bottom panel

1. Align the bottom panel with the screw hole on the bottom of the chassis.
2. Replace the screw that secures the bottom panel to the chassis.

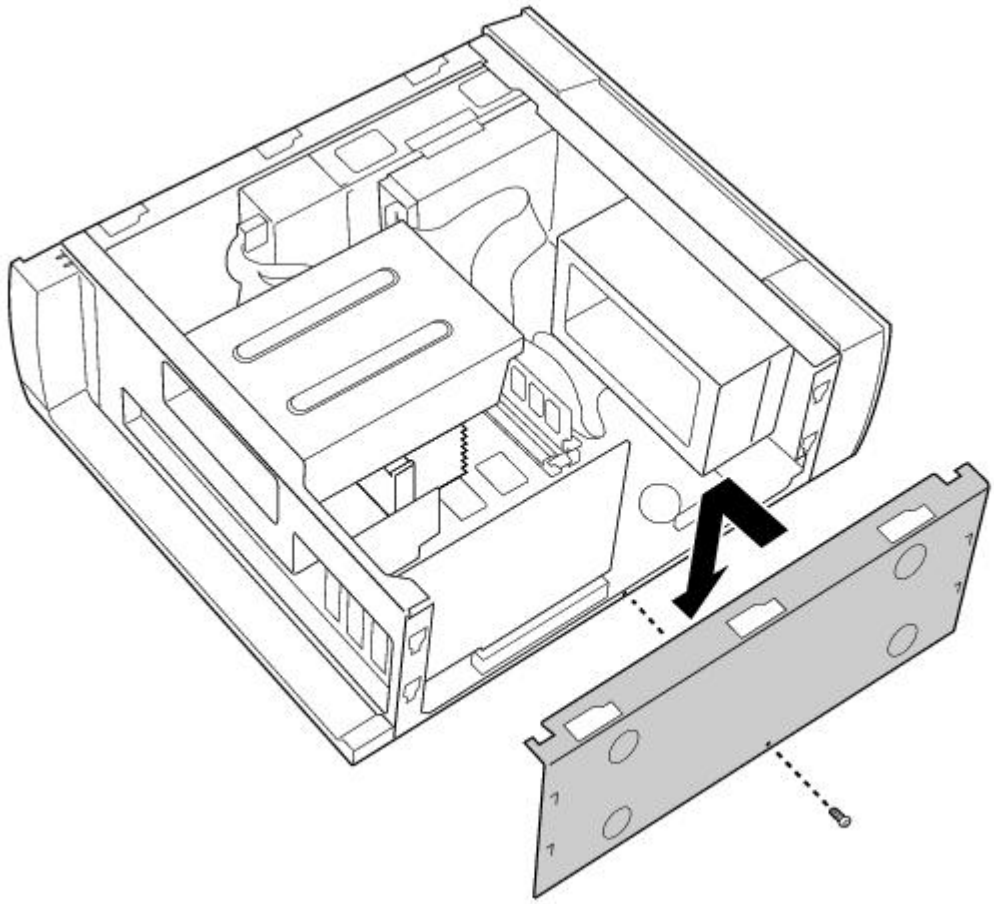

Replacing the Front Panel

To replace the front panel

1. Push the front panel straight onto the front of the chassis until it clicks into place.

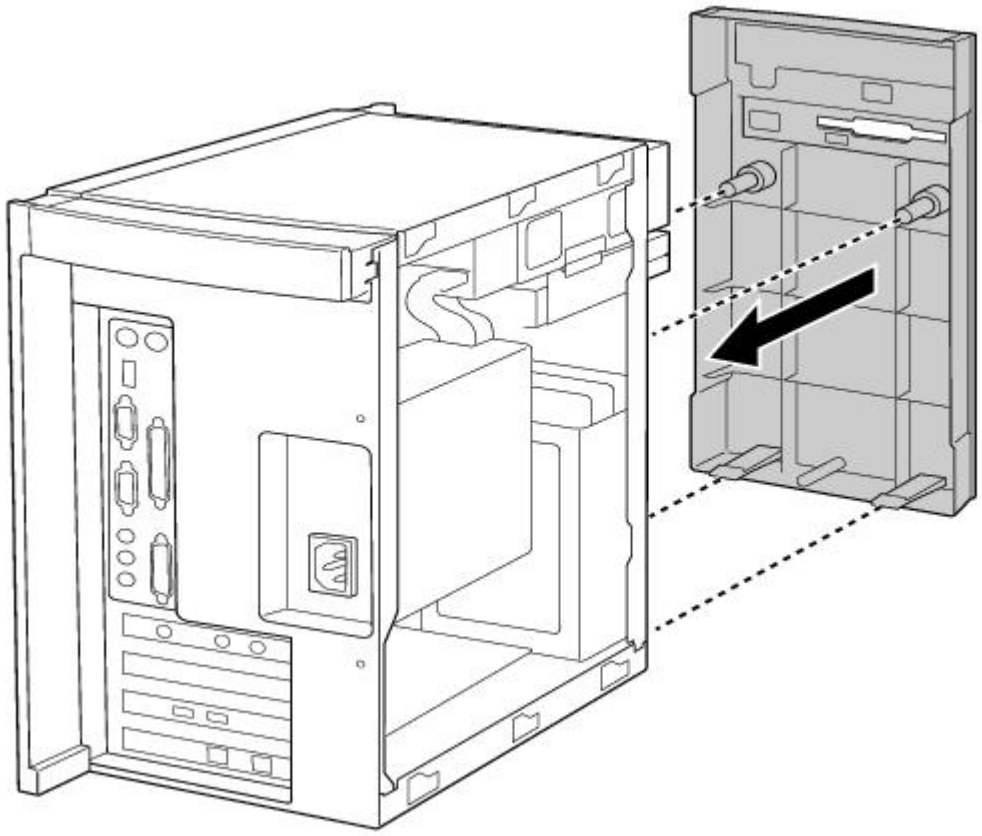

2. Replace the front cover of the CD tray by sliding it down onto the front of the open tray.
3. Close the CD tray.

Replacing the Left-Side Panel

To replace the left-side panel

1. Slide the panel forward until it stops.
2. Replace the two screws that secure the panel to the chassis.

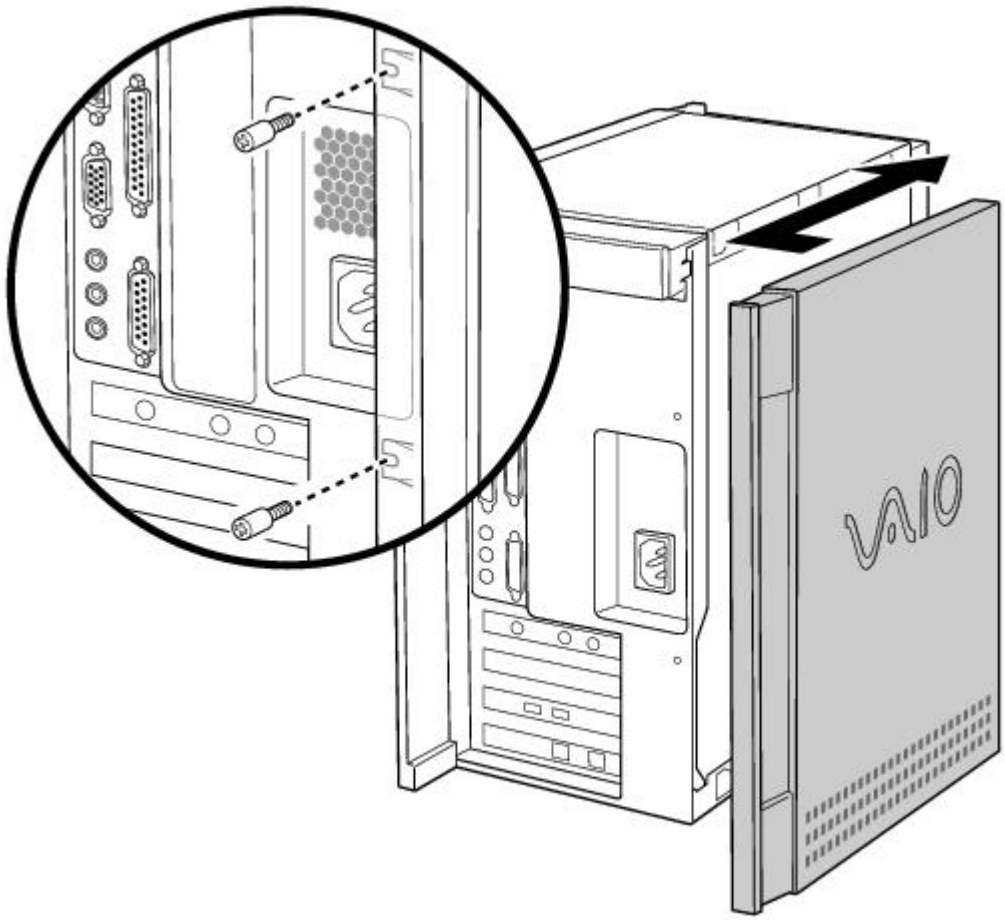

Upgrading and Maintaining Your VAIO Digital Studio Computer

In the future you may want to install additional boards to expand the functionality of your computer. This section describes how to open your computer and insert add-in boards, add memory, replace the lithium battery, and install an additional hard disk drive. For more information on upgrading your Sony computer, see the *VAIO Digital Studio Computer Reference Manual*. You can download this electronic document from the Sony Web site at http://www.sony.com/pcsupport.

The procedures in this section assume you are familiar with the general terminology associated with personal computers and with the safety practices and regulatory compliance required for using and modifying electronic equipment. Read Notes on Use before upgrading your Sony computer.

Always switch the power off before you open the system or connect your computer to peripheral equipment; otherwise, damage may occur to the integrated circuits in your computer.

Electrostatic discharge (ESD) can damage disk drives, add-in cards, and other components. Do the procedures described here only at an ESD workstation. If such a station is not available, do not work in a carpeted area and do not handle materials that produce or hold static electricity (cellophane wrappers, for example). Ground yourself by maintaining continuous contact with an unpainted metal portion of the chassis while performing the procedure.

Inserting an Add-in Board

You can add up to two additional PCI boards to the system.

Your VAIO Digital Studio Computer cannot accommodate PCI add-in boards exceeding 7.7" in length.

To insert an add-in board

Make sure you observe the proper safety precautions when you add boards to your Sony computer. See Notes on Use.

1. Shut down your computer and turn off all peripheral devices, such as your printer, display, and speakers.
2. Unplug your computer and any peripheral devices.
3. Remove the left-side panel as described in Removing the Left-Side Panel.
4. Identify the expansion slot where you want to insert the add-in board.
5. Remove the slot cover for the slot you have chosen.

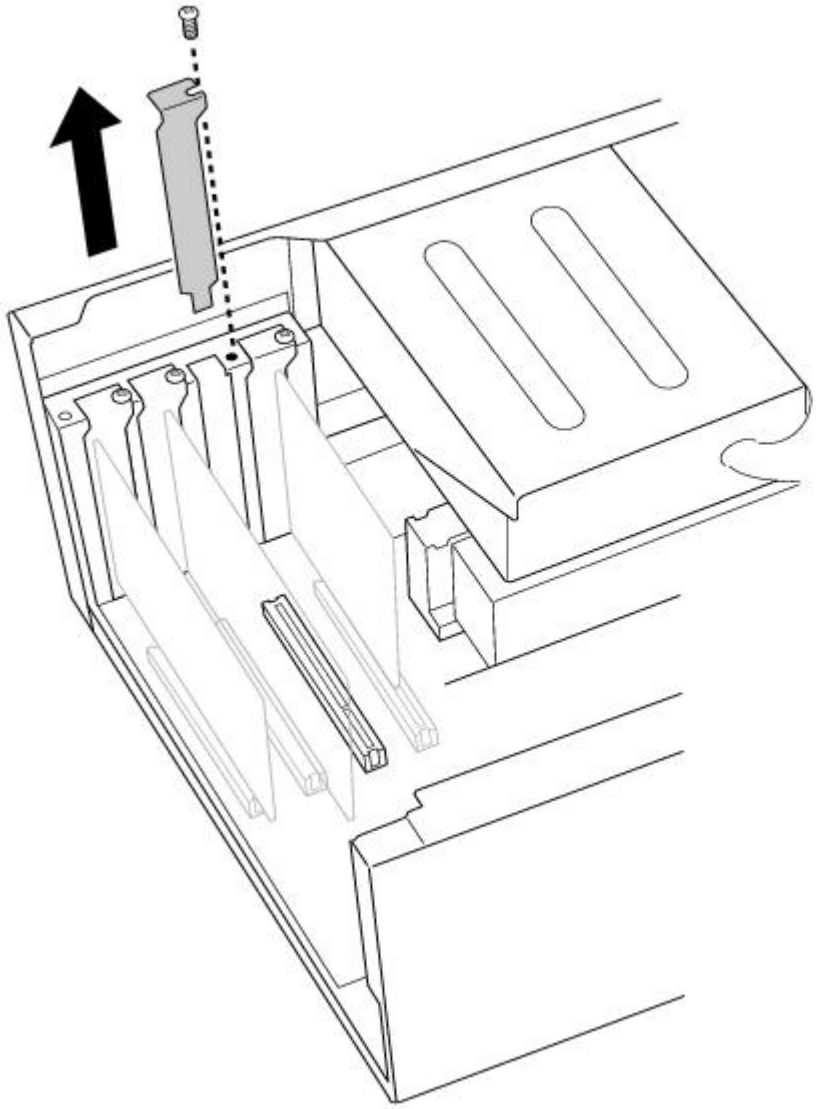

6. Install the add-in board by plugging it into the expansion slot on the system board. Attach any internal cables that the board requires (see the manual for the add-in board).

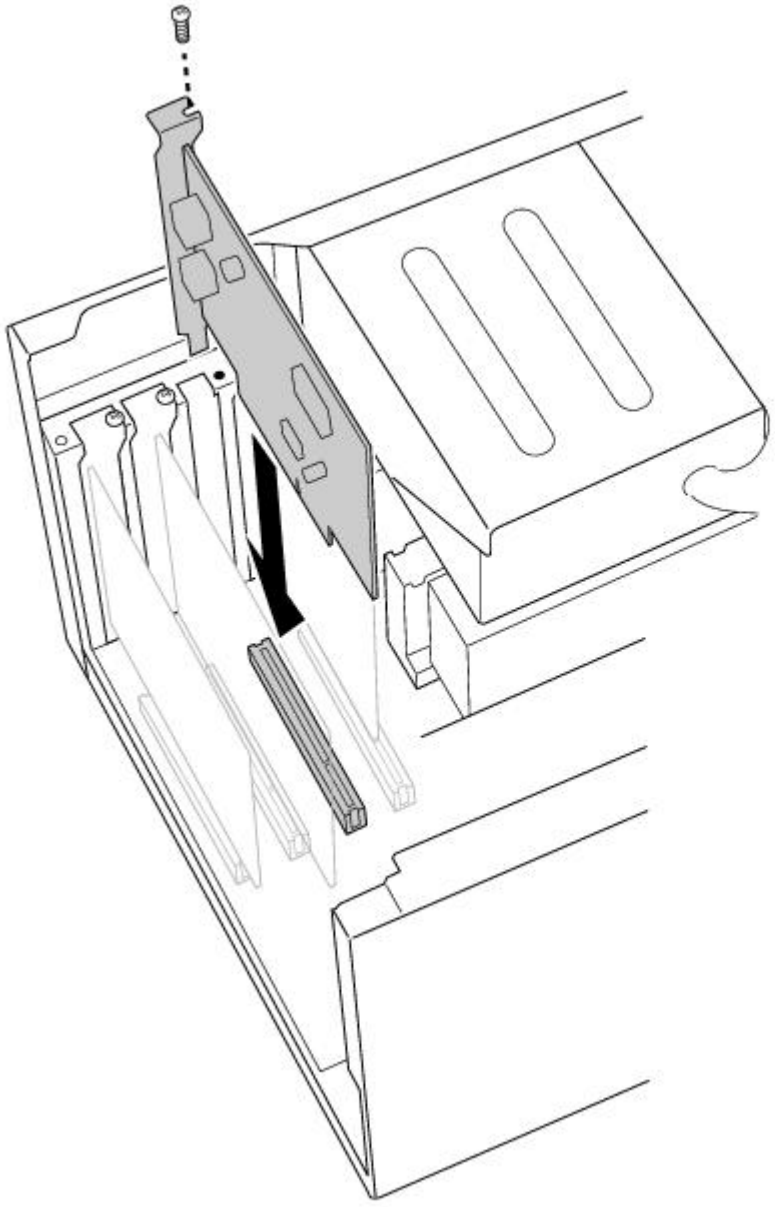

7. Replace the left-side panel as described in Replacing the Left-Side Panel.

Adding Memory

In order to increase your computer's memory, you may need to remove one of the factory-installed DIMMs and replace it with one of greater capacity. For details, see the *VAIO Digital Studio Computer Reference Manual*, which is available at Sony's Web site at http://www.sony.com/pcsupport.

For memory upgrades, use only 3.3V unbuffered 4-clock 64-bit 66 MHz SDRAM DIMM module Rev1.0 or 3.3V unbuffered 4-clock 72-bit 66 MHz SDRAM DIMM module Rev1.0. For more information on Digital Studio Computer compatible memory, call Sony at 1-888-4SONYPC (1-888-476-6972).

To install memory

Make sure you observe the proper safety precautions when you add DIMMs to your Sony computer. See Notes on Use .

1. Shut down your computer and turn off all peripheral devices, such as your printer, display, and speakers.
2. Unplug your computer and any peripheral devices.
3. Remove the left-side panel, bottom panel, and front panel, as described in Removing the Left-Side Panel. Then detach the diskette drive, as described in Detaching the Diskette Drive.

You do not need to completely remove the diskette drive in order to access the DIMM sockets.

4. If necessary, remove any cables, add-in cards, or other components to access the DIMM sockets.
5. Remove either (or both) of the factory-installed DIMMs.
6. Handle the DIMM only by the edges, and remove it from its anti-static package.
7. Locate the keys on the bottom edge of the DIMM .
8. Align the DIMM over the socket.

To avoid damaging the DIMM socket, move the DIMM socket tabs slightly outward to relieve pressure. The DIMM should then click easily into place.

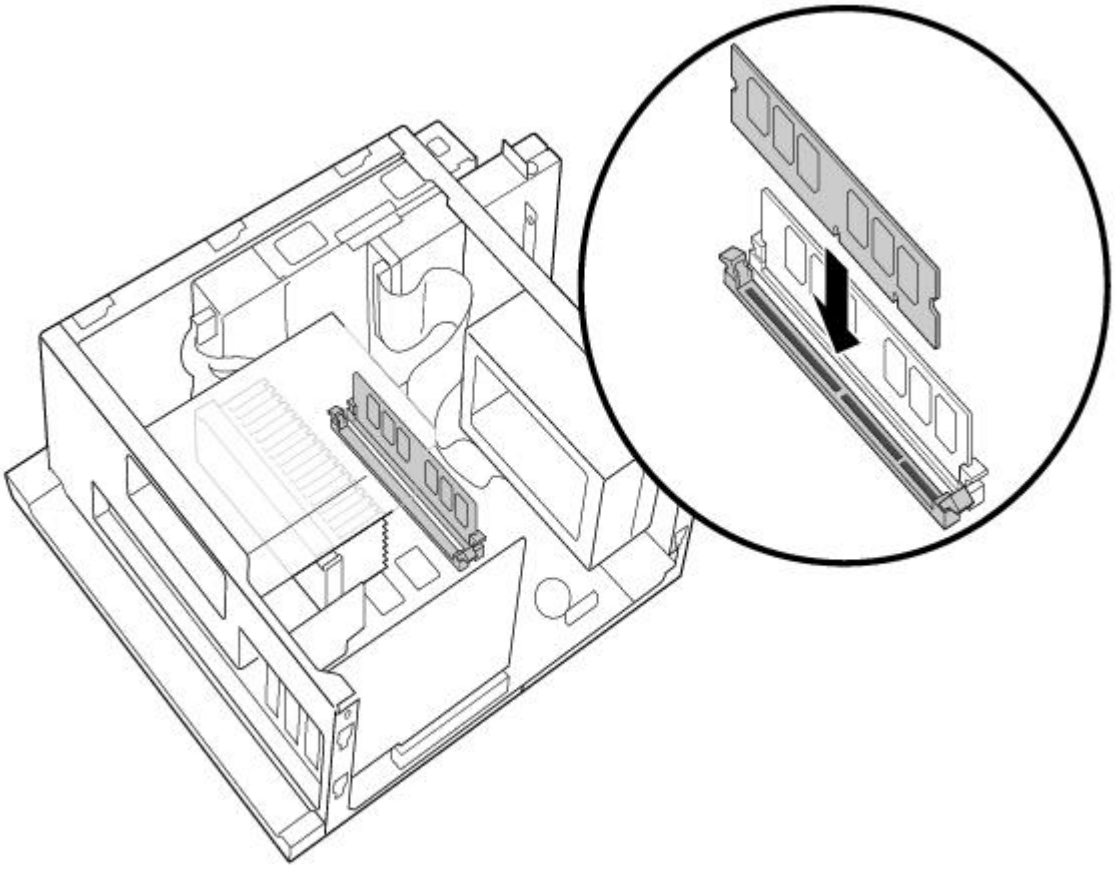

9. Firmly insert the bottom edge of the DIMM into the socket.
10. Press evenly against the DIMM's upper corners. The end latches snap into position automatically.
11. Reinstall any add-in cards or components you removed.
12. Replace the diskette drive and cover panels, as described in Replacing the Diskette Drive to Replacing the Left-Side Panel.

Replacing the Lithium Battery

After several years, when the lithium battery starts to weaken, the system settings stored in CMOS RAM, such as the date and time, may be wrong. When this occurs, you need to replace the lithium battery.

To replace the lithium battery

1. To run the Setup utility, press F3 when your computer is starting up. Then press F1 to run the BIOS setup utility.

2. Write down the current BIOS Setup options.
3. Shut down your computer and turn off all peripheral devices, such as your printer, display, and speakers. Unplug your computer.
4. Remove the left-side and bottom panels, as described in Removing the Left-Side Panel.
5. Install the new battery with the plus (+) side up.

There is danger of explosion if you replace the battery incorrectly. You must replace the battery only with a CR2032 type lithium battery. Discard used batteries according to the instructions on On Disposal of the Lithium Battery.

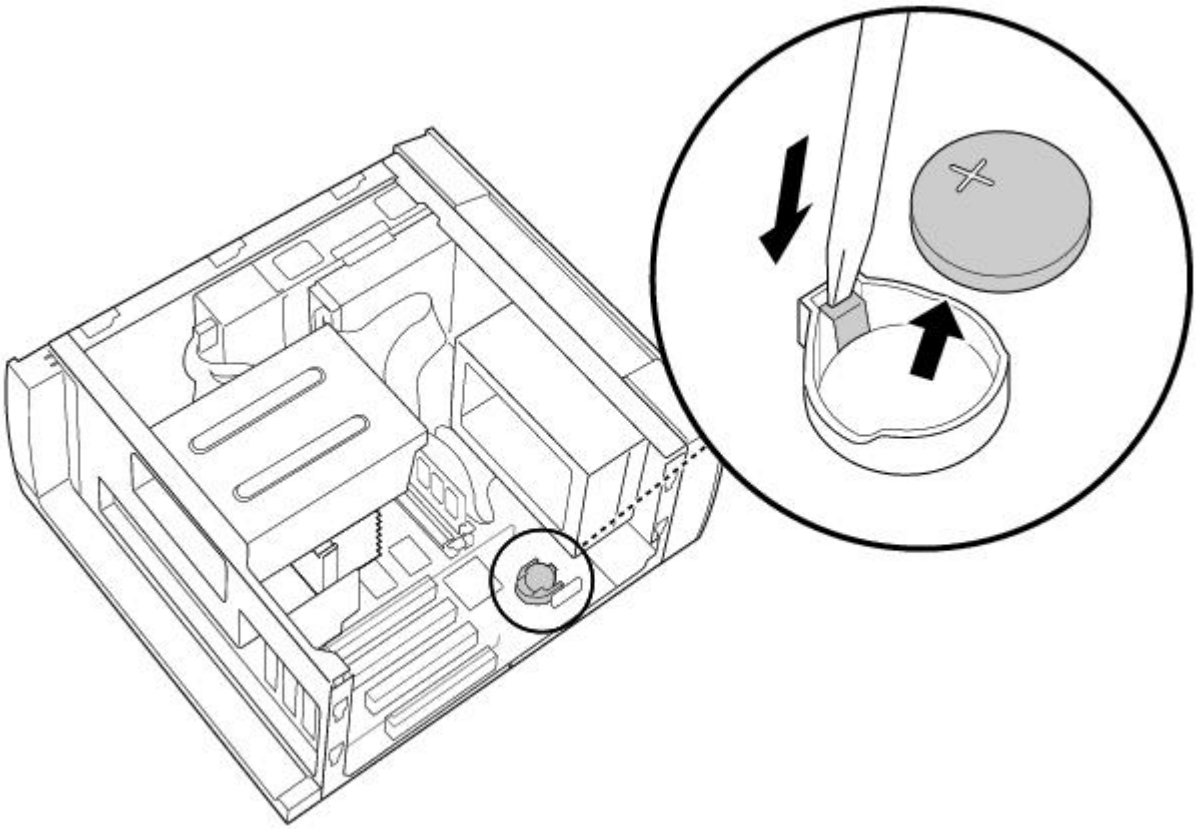

6. Replace the bottom and left-side panels, as described in Replacing the Bottom Panel.

The values stored in the CMOS memory are now reset to the factory default values. You must run the Setup utility to reset the date, time, passwords, and other options. See the VAIO Digital Studio Computer Reference Manual for details.

7. To run the Setup utility, press F3 when your computer is starting up. Then press F1 to run the BIOS setup utility.
8. Change the default values to the values you wrote down in step 2.
9. Save your Setup changes, and then exit the Setup utility.

Installing an Internal Hard Disk Drive

Your VAIO Digital Studio Computer comes with an available bay to hold an additional hard disk drive. The drive you install must not require front panel access. The hard disk drive access light blinks when either internal drive is active.

Before opening the system unit, save any open files, exit Windows, turn off the power of the computer and all attached peripherals, and then unplug the power cord.

1. Configure the jumpers on the new drive as a primary slave (see your drive's documentation for

configuration instructions).

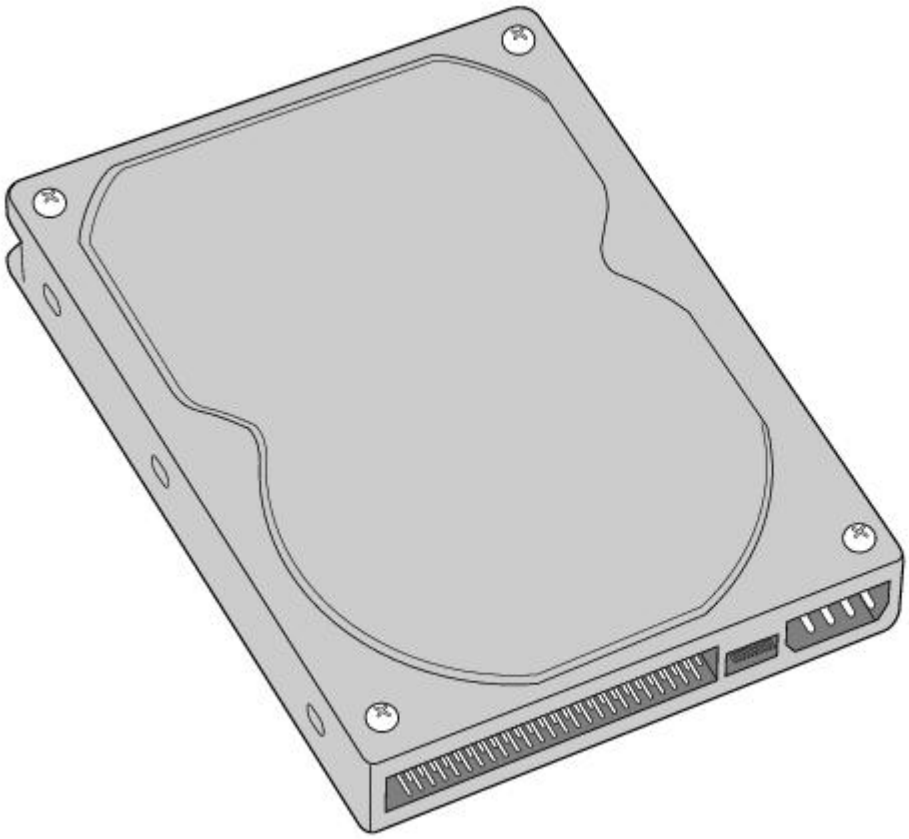

2. Remove the left-side panel, as described in Removing the Left-Side Panel.
3. Remove the front panel, as described in Removing the Front Panel.
4. Remove the bottom panel, as described in Removing the Bottom Panel.
5. Lay the system on its right side (left side faces up-see diagram that follows).
6. Remove the two screws that secure the drive holder.
7. Slide the drive holder forward and then out.

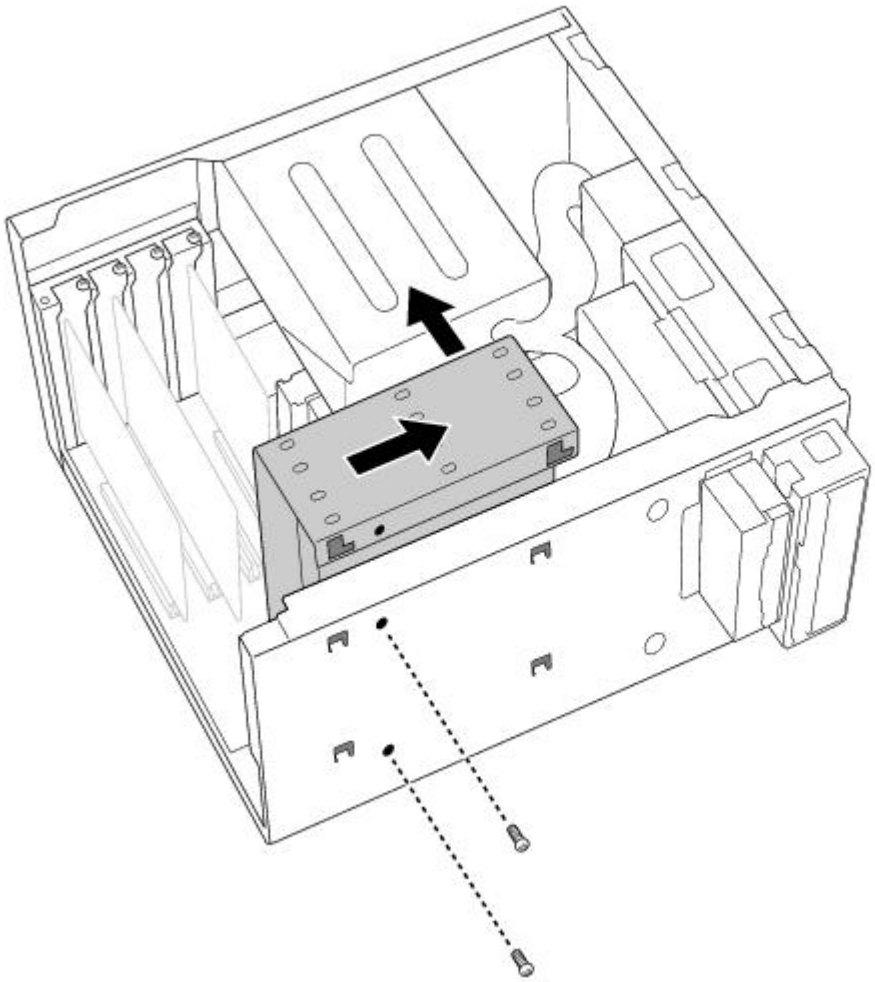

8. Place the drive holder upside down on top of the power supply.

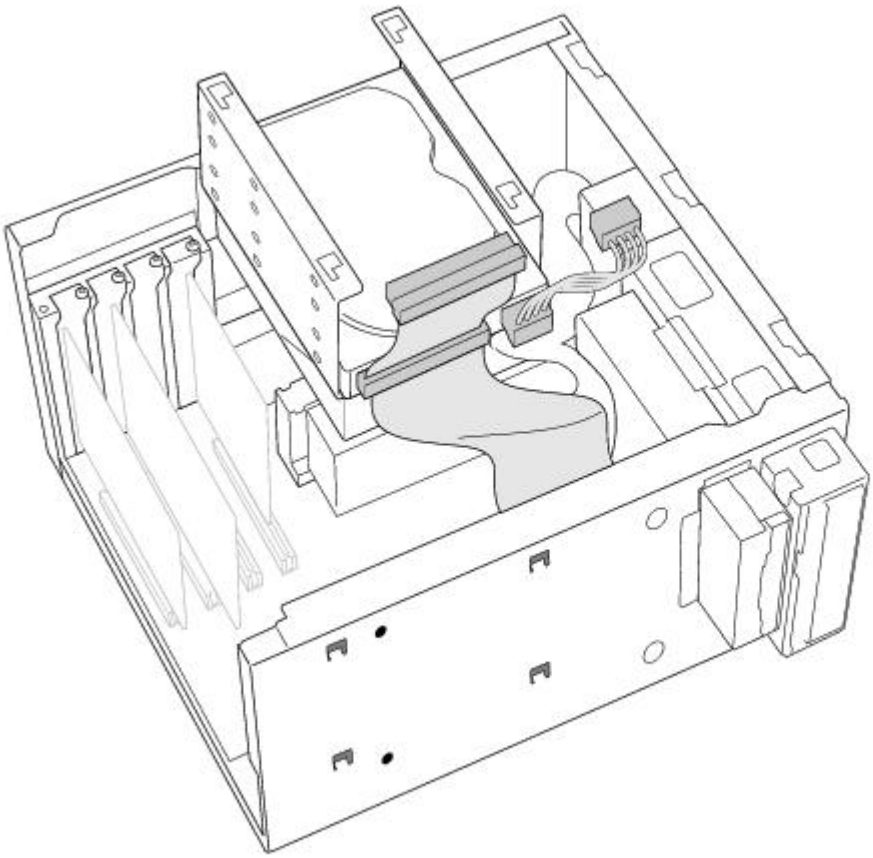

9. Slide the new drive into the drive holder and align the holes on each side of the drive bay.

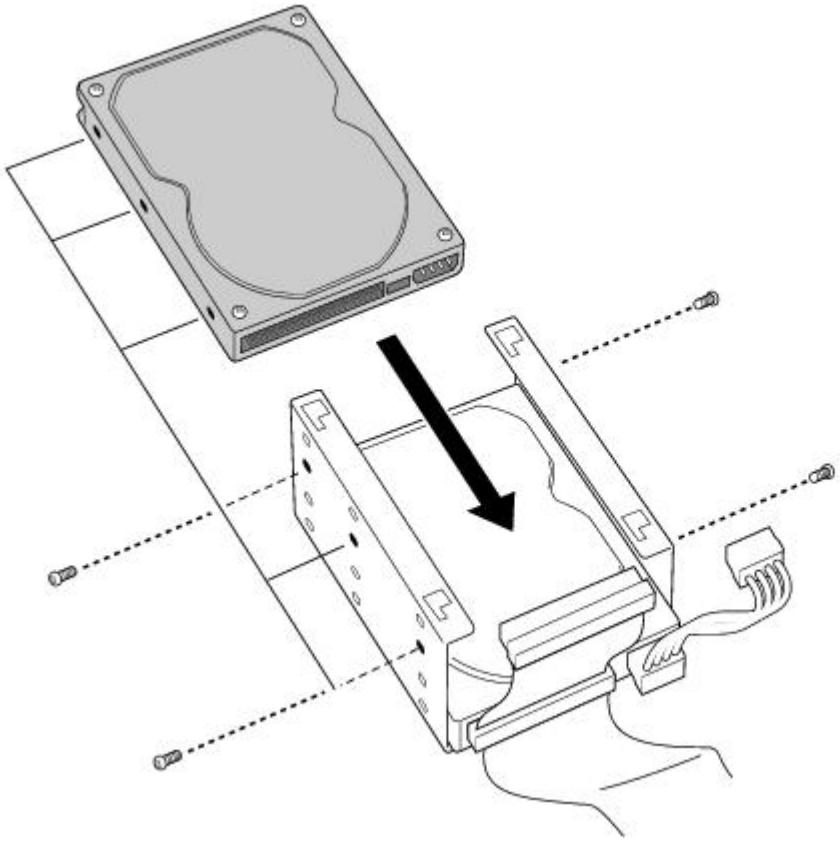

10. Secure the drive to the drive holder using any two of the three holes on each side of the drive holder (screws are provided with the new drive). Do not overtighten the screws.
11. Connect the second drive connector to the new drive.
12. Connect the second power connector to the new drive.

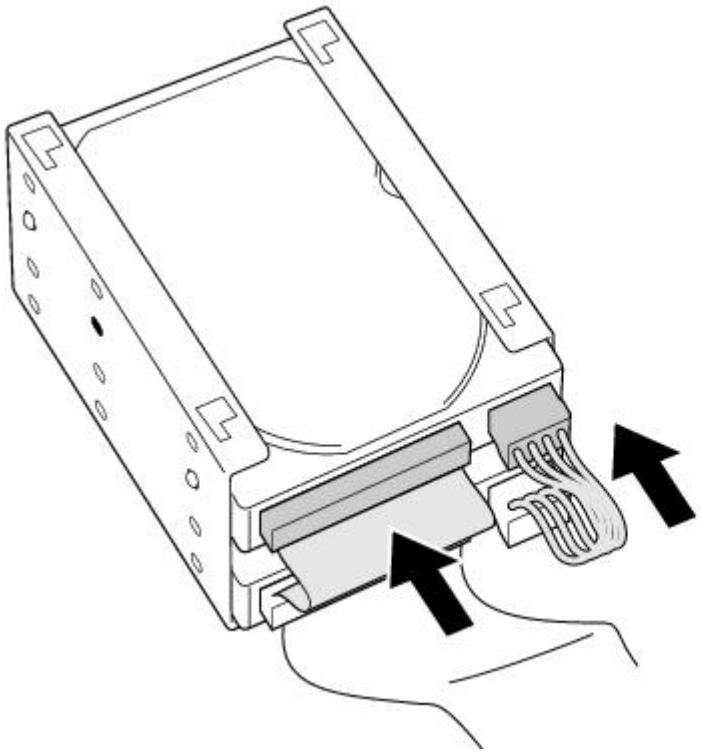

13. Place the drive holder against the inside of the front chassis and slide it back. Be sure to align the slots on the drive holder with the tabs on the inside of the chassis. Be sure to slide the drive holder back so that the tabs slip into the notch at the bottom of the slot.

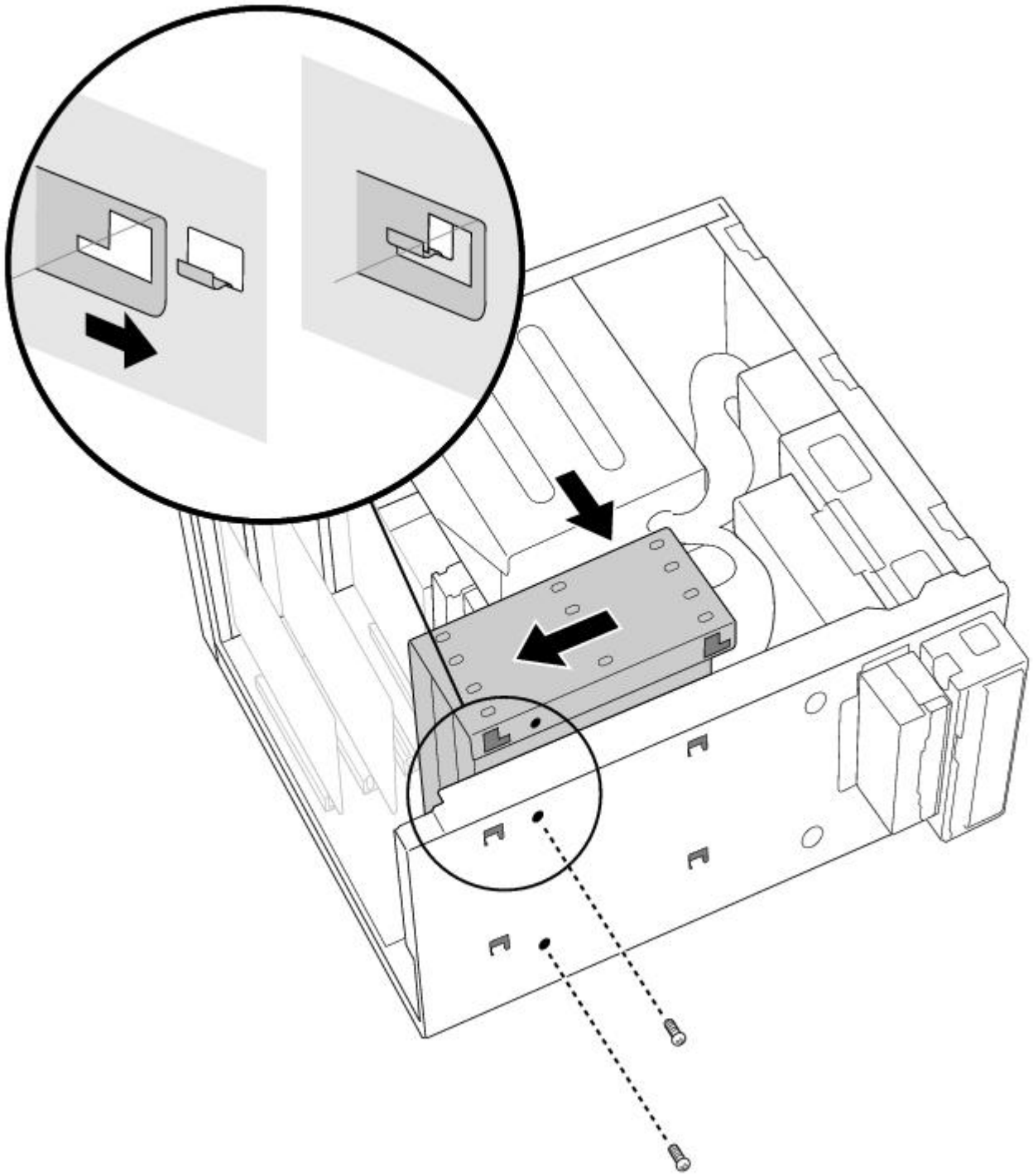

14. Replace the two screws that secure the holder to the chassis.
15. Replace the bottom panel, as described in Replacing the Bottom Panel.
16. Replace the front panel, as described in Replacing the Front Panel.
17. Replace the left-side panel, as described in Replacing the Left-Side Panel.
18. Reconnect the power cord and then turn on your computer.

Your computer automatically recognizes the new drive and configures itself accordingly when you turn it on. Format and partition the new drive following the instructions provided with the drive.

Removing the Left-Side Panel

To remove the left-side panel

1. Remove the two screws that secure the panel to the chassis.
2. Slide the panel back until it stops.
3. Pull the panel straight out to remove it.

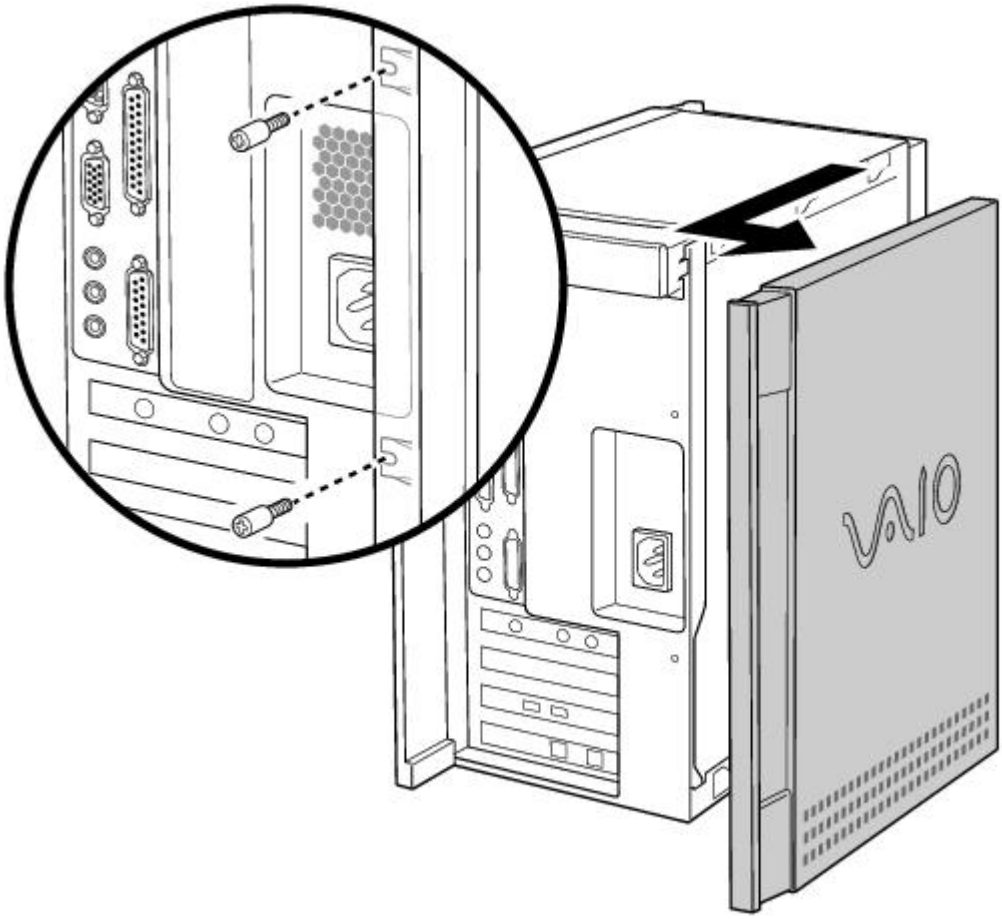

Removing the Bottom Panel

To remove the bottom panel

1. Remove the screw that secures the bottom panel to the chassis.
2. Pull the bottom panel straight out to remove it.

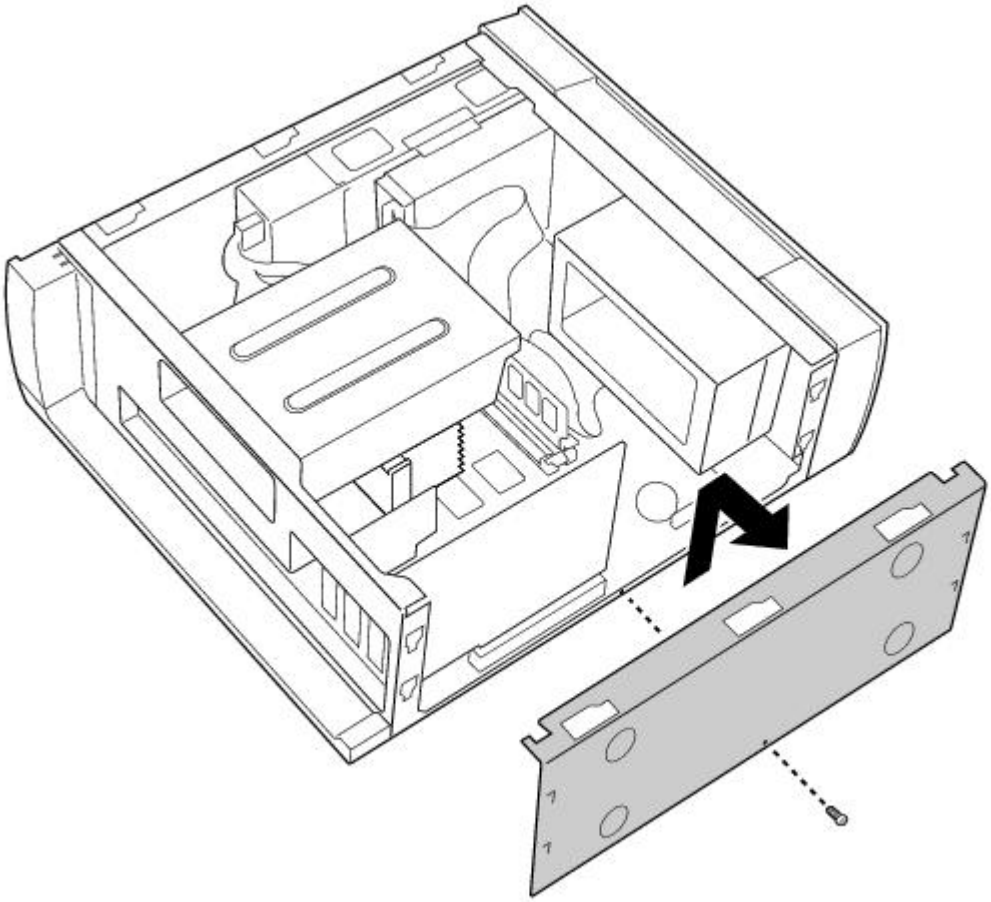

Removing the Front Panel

To remove the front panel

1. Open the CD tray by inserting a thin, pointed object into the emergency eject opening.
2. Slide the CD tray forward.
3. Remove the front cover of the CD tray by lifting it upwards.

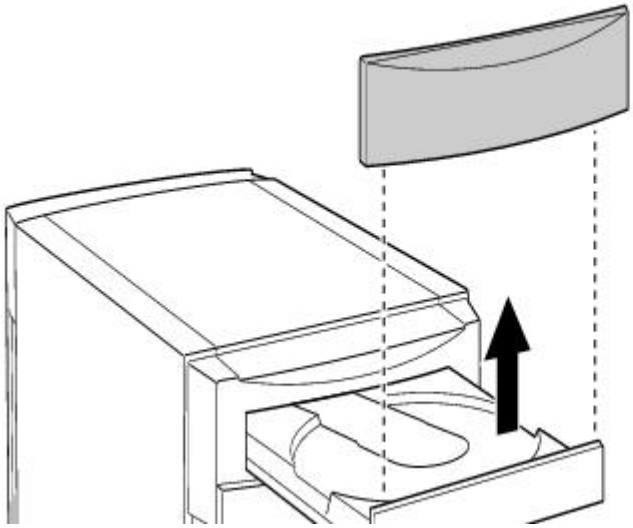

4. Press down on each of the two tabs on the bottom of the front panel to release the panel.
5. Pull the front panel forward to remove it.

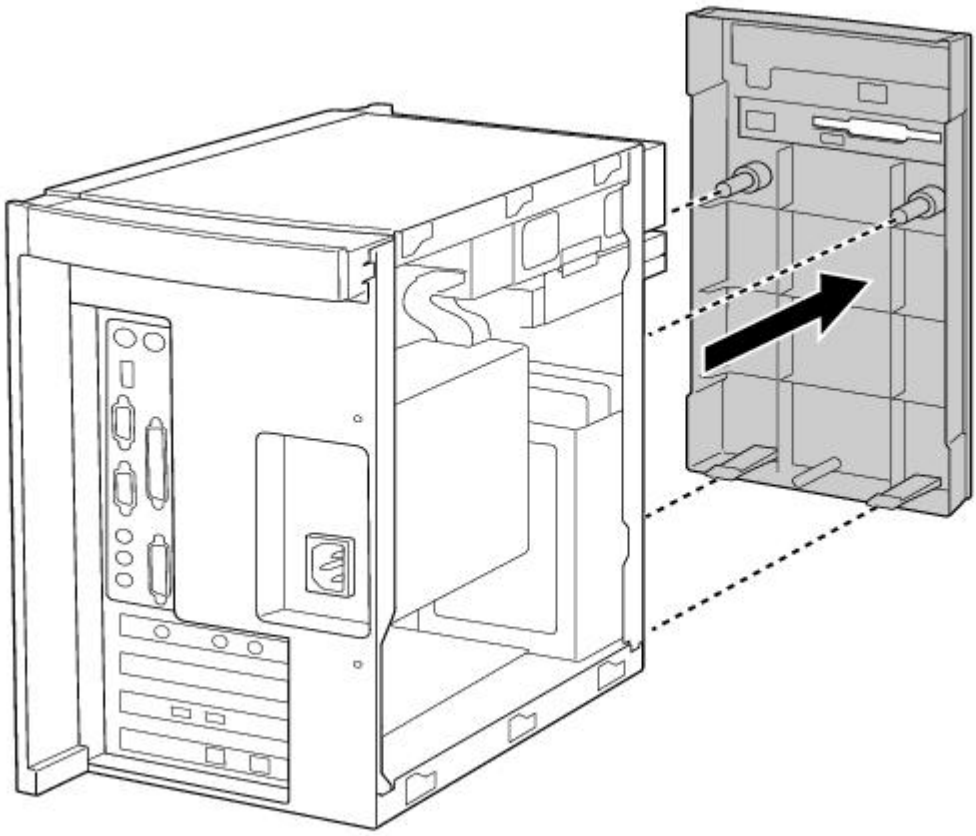

Detaching the Diskette Drive

To detach the diskette drive

1. Remove the front panel, as described in Removing the Front Panel.
2. Remove the two screws that secure the diskette drive to the front of the chassis.
3. Pull the diskette drive forward.

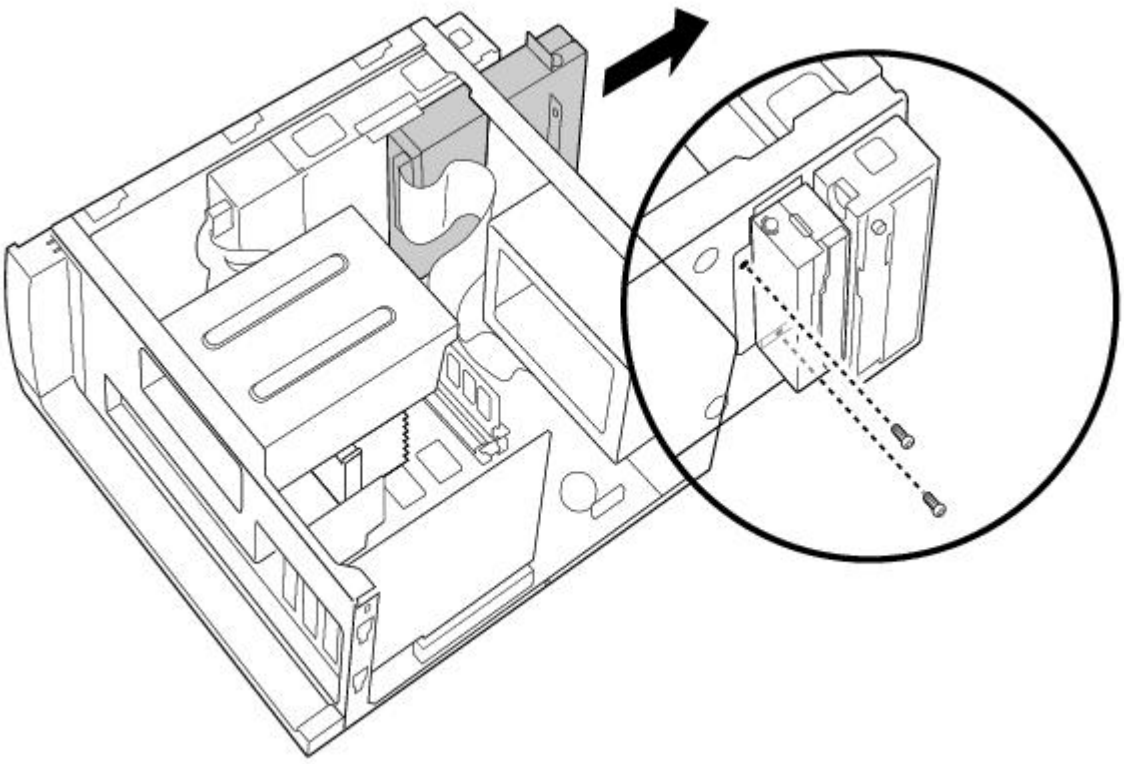

If you are adding memory, you do not need to completely remove the diskette drive or disconnect the cable.

Replacing the Diskette Drive

To replace the diskette drive

1. Push the diskette drive straight into the drive slot.
2. Replace the two screws that secure the diskette drive to the front of the chassis.
3. Replace the front panel, as described in Replacing the Front Panel.

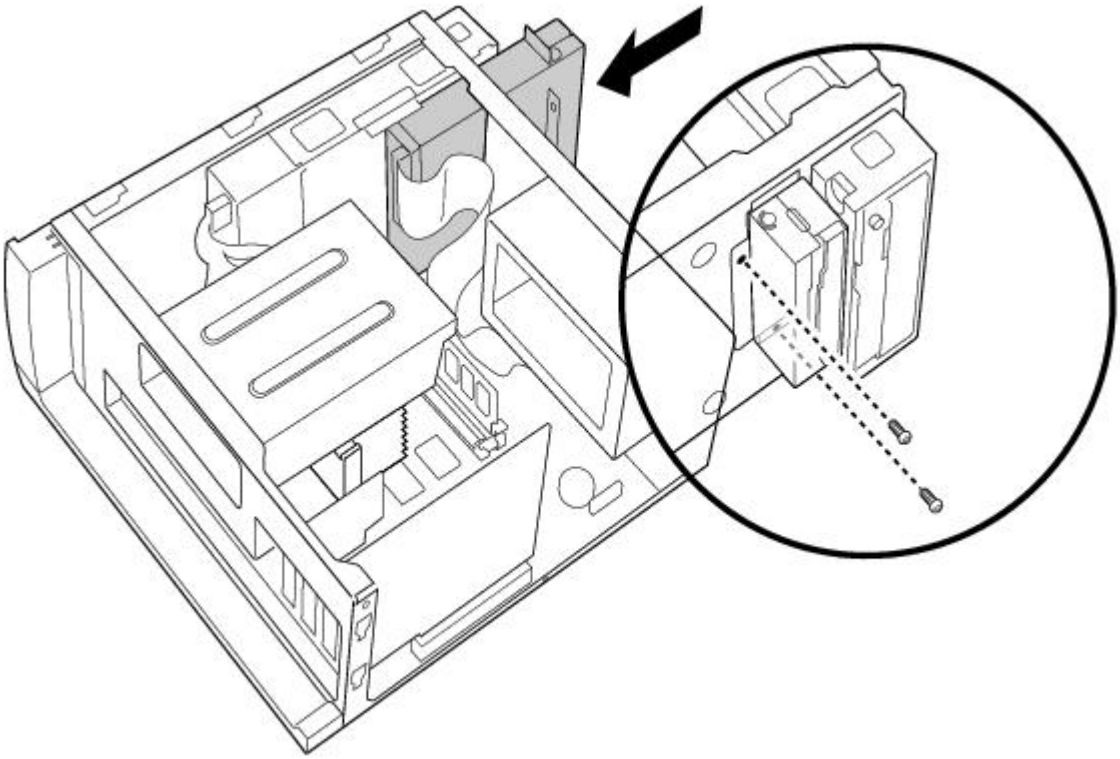

Replacing the Bottom Panel

To replace the bottom panel

1. Align the bottom panel with the screw hole on the bottom of the chassis.
2. Replace the screw that secures the bottom panel to the chassis.

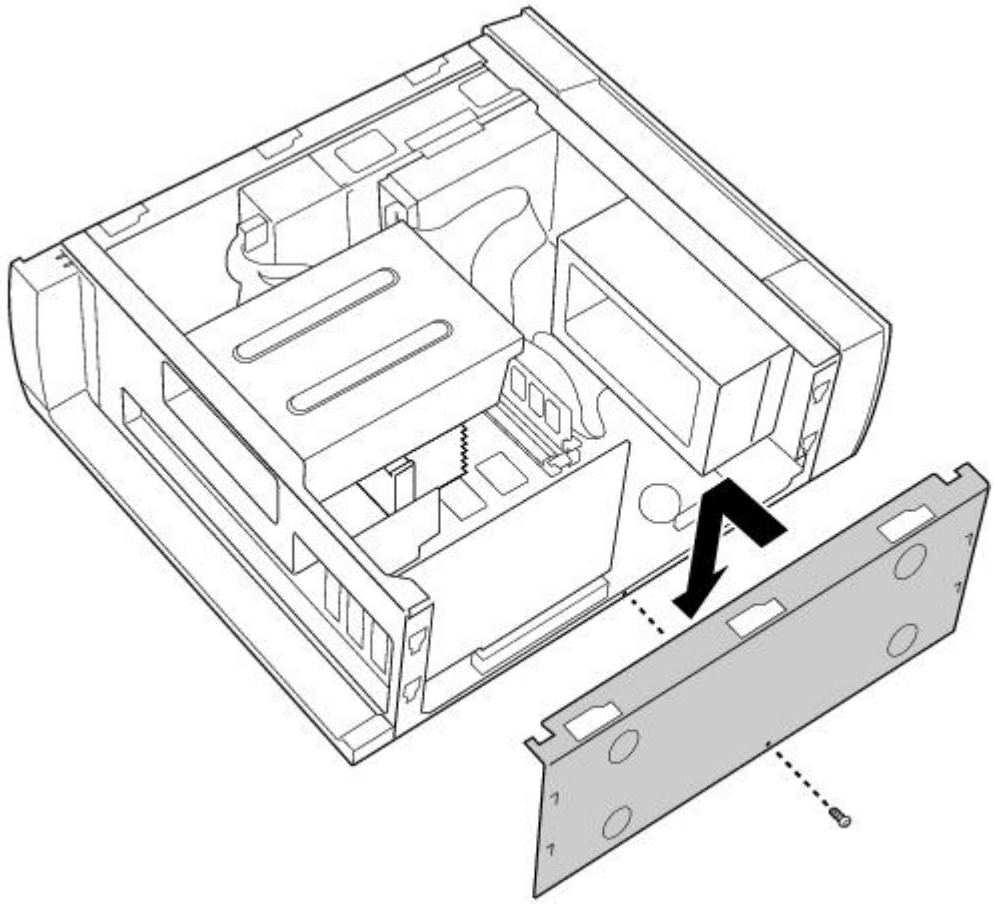

Replacing the Front Panel

To replace the front panel

1. Push the front panel straight onto the front of the chassis until it clicks into place.

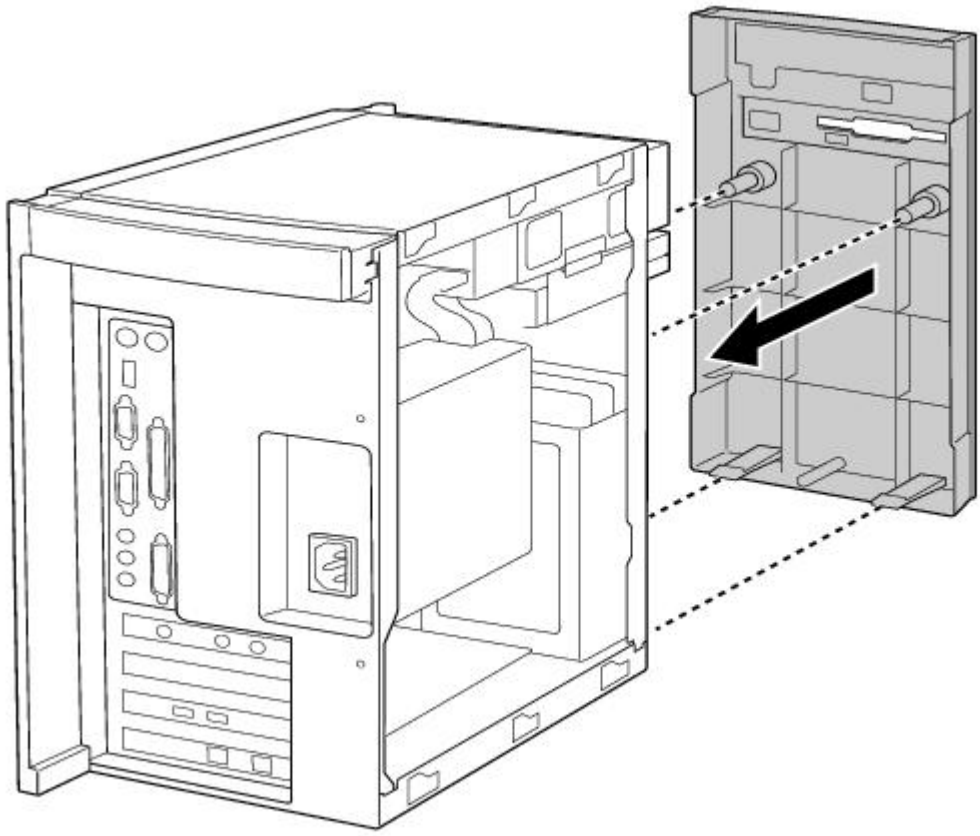

2. Replace the front cover of the CD tray by sliding it down onto the front of the open tray.
3. Close the CD tray.

Replacing the Left-Side Panel

To replace the left-side panel

1. Slide the panel forward until it stops.
2. Replace the two screws that secure the panel to the chassis.

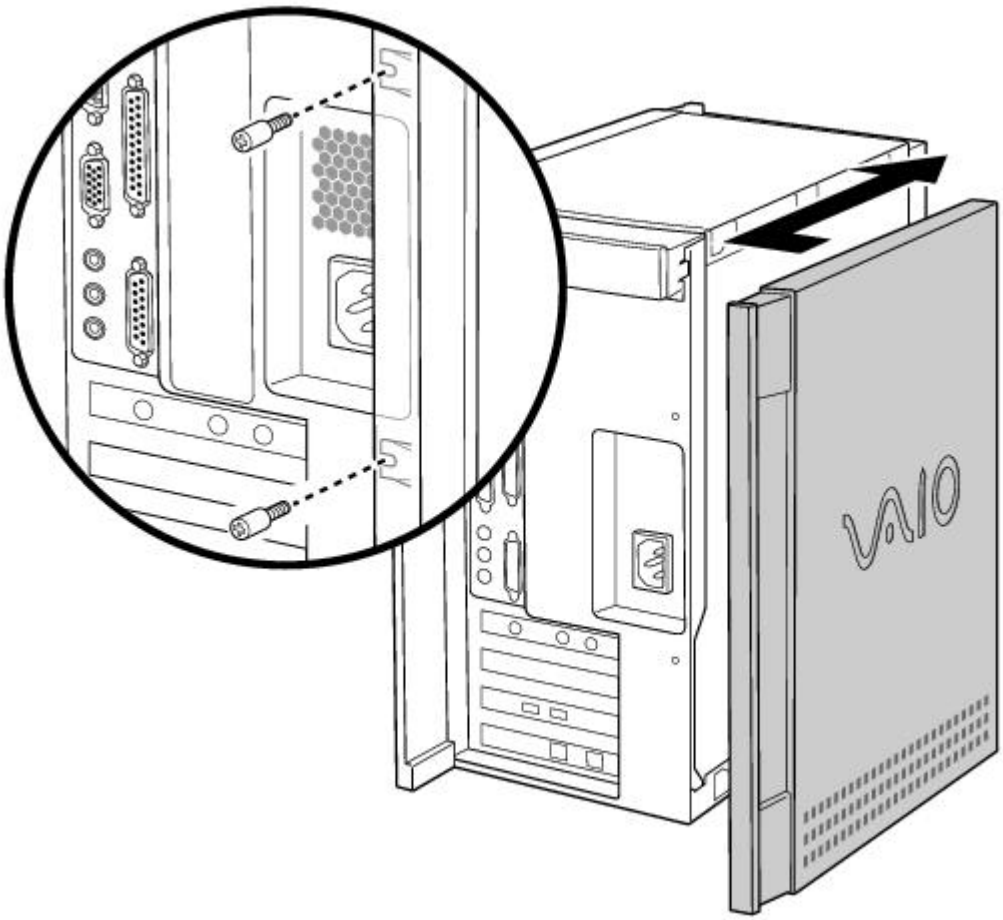

Upgrading and Maintaining Your VAIO Digital Studio Computer

In the future you may want to install additional boards to expand the functionality of your computer. This section describes how to open your computer and insert add-in boards, add memory, replace the lithium battery, and install an additional hard disk drive. For more information on upgrading your Sony computer, see the *VAIO Digital Studio Computer Reference Manual*. You can download this electronic document from the Sony Web site at http://www.sony.com/pcsupport.

The procedures in this section assume you are familiar with the general terminology associated with personal computers and with the safety practices and regulatory compliance required for using and modifying electronic equipment. Read Notes on Use before upgrading your Sony computer.

Always switch the power off before you open the system or connect your computer to peripheral equipment; otherwise, damage may occur to the integrated circuits in your computer.

Electrostatic discharge (ESD) can damage disk drives, add-in cards, and other components. Do the procedures described here only at an ESD workstation. If such a station is not available, do not work in a carpeted area and do not handle materials that produce or hold static electricity (cellophane wrappers, for example). Ground yourself by maintaining continuous contact with an unpainted metal portion of the chassis while performing the procedure.

Inserting an Add-in Board

You can add up to two additional PCI boards to the system.

Your VAIO Digital Studio Computer cannot accommodate PCI add-in boards exceeding 7.7" in length.

To insert an add-in board

Make sure you observe the proper safety precautions when you add boards to your Sony computer. See Notes on Use.

1. Shut down your computer and turn off all peripheral devices, such as your printer, display, and speakers.
2. Unplug your computer and any peripheral devices.
3. Remove the left-side panel as described in Removing the Left-Side Panel.
4. Identify the expansion slot where you want to insert the add-in board.
5. Remove the slot cover for the slot you have chosen.

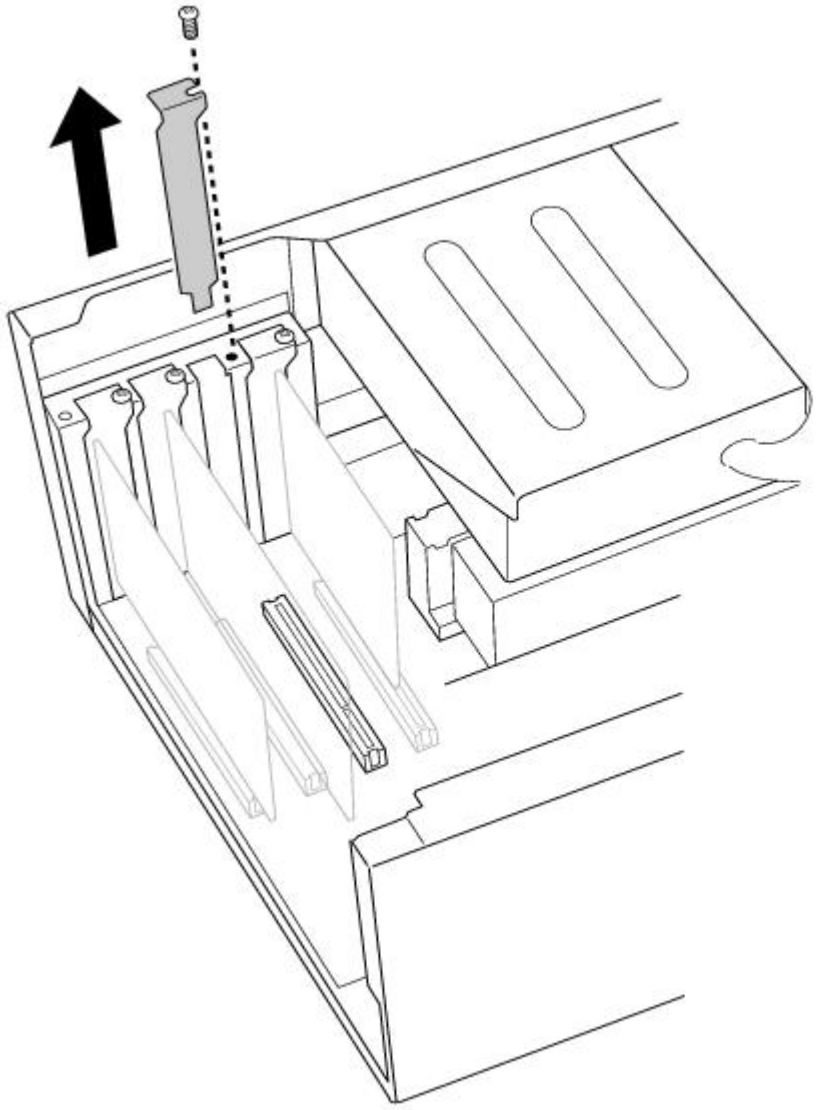

6. Install the add-in board by plugging it into the expansion slot on the system board. Attach any internal cables that the board requires (see the manual for the add-in board).

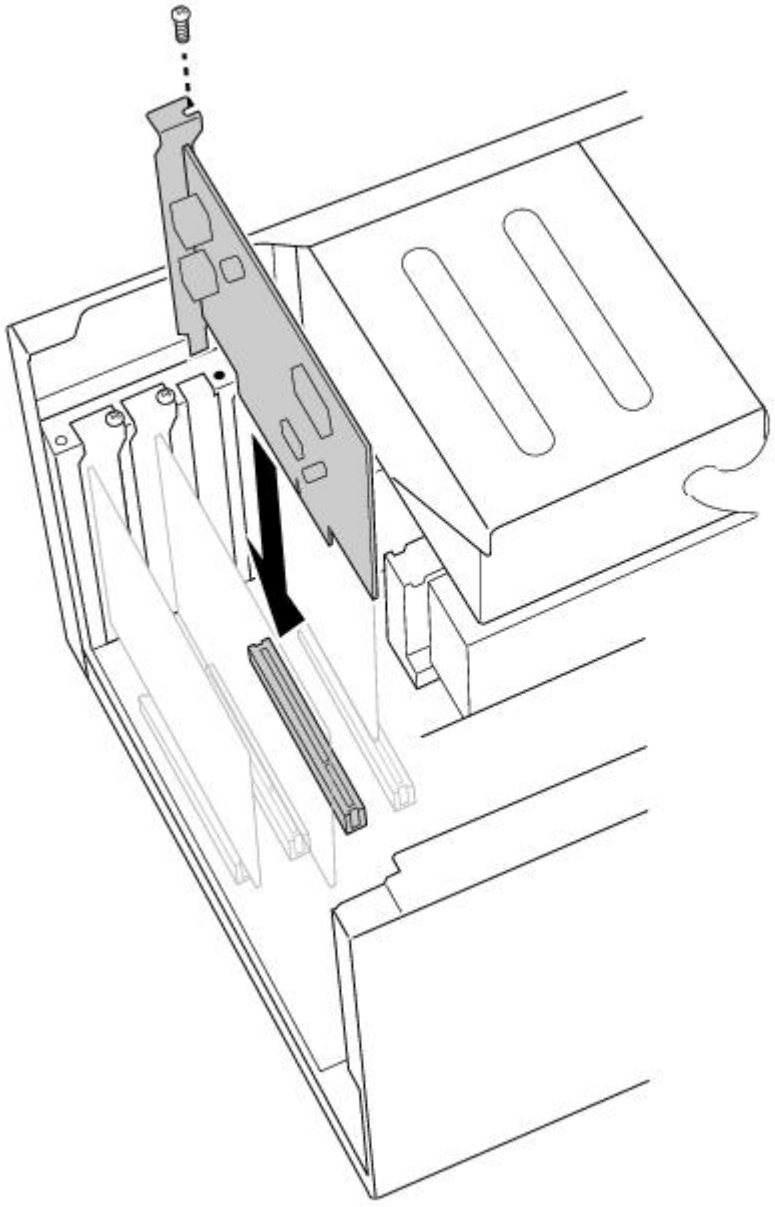

7. Replace the left-side panel as described in Replacing the Left-Side Panel.

Adding Memory

In order to increase your computer's memory, you may need to remove one of the factory-installed DIMMs and replace it with one of greater capacity. For details, see the *VAIO Digital Studio Computer Reference Manual*, which is available at Sony's Web site at http://www.sony.com/pcsupport.

For memory upgrades, use only 3.3V unbuffered 4-clock 64-bit 66 MHz SDRAM DIMM module Rev1.0 or 3.3V unbuffered 4-clock 72-bit 66 MHz SDRAM DIMM module Rev1.0. For more information on Digital Studio Computer compatible memory, call Sony at 1-888-4SONYPC (1-888-476-6972).

To install memory

Make sure you observe the proper safety precautions when you add DIMMs to your Sony computer. See Notes on Use .

1. Shut down your computer and turn off all peripheral devices, such as your printer, display, and speakers.
2. Unplug your computer and any peripheral devices.
3. Remove the left-side panel, bottom panel, and front panel, as described in Removing the Left-Side Panel. Then detach the diskette drive, as described in Detaching the Diskette Drive.

You do not need to completely remove the diskette drive in order to access the DIMM sockets.

4. If necessary, remove any cables, add-in cards, or other components to access the DIMM sockets.
5. Remove either (or both) of the factory-installed DIMMs.
6. Handle the DIMM only by the edges, and remove it from its anti-static package.
7. Locate the keys on the bottom edge of the DIMM .
8. Align the DIMM over the socket.

To avoid damaging the DIMM socket, move the DIMM socket tabs slightly outward to relieve pressure. The DIMM should then click easily into place.

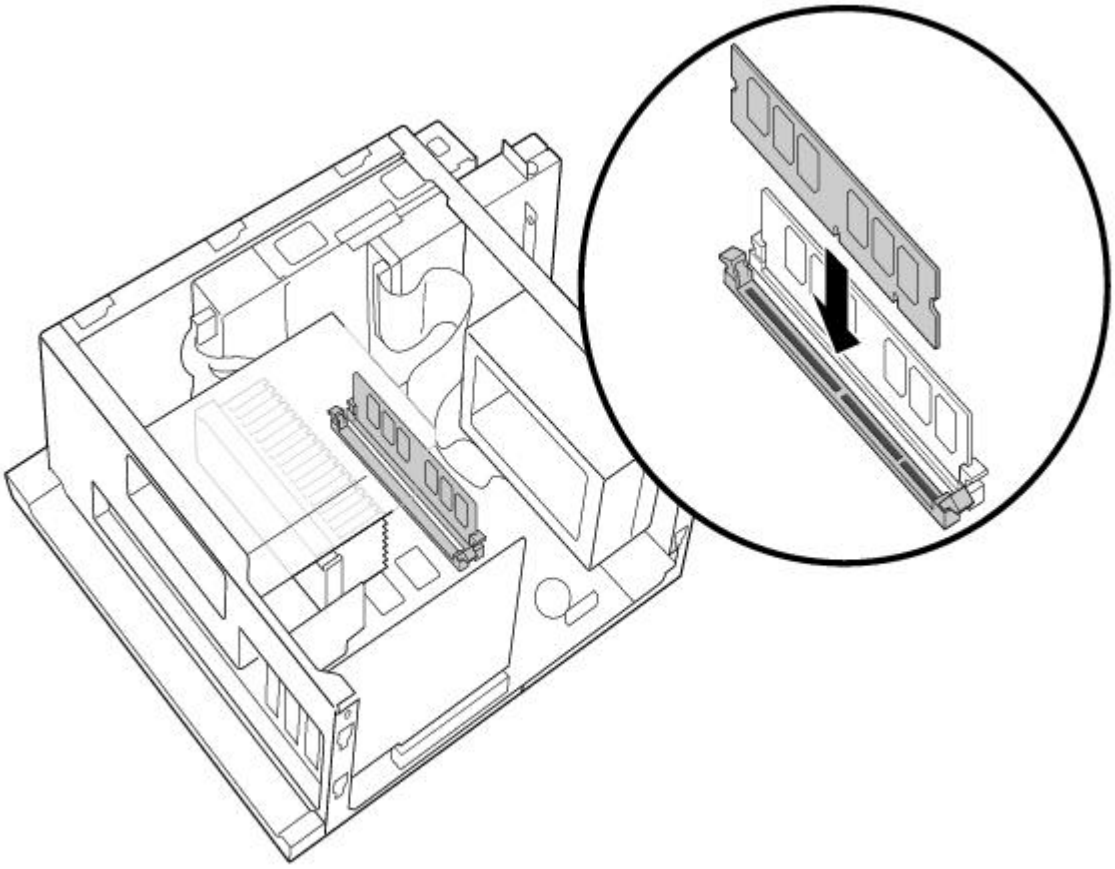

9. Firmly insert the bottom edge of the DIMM into the socket.
10. Press evenly against the DIMM's upper corners. The end latches snap into position automatically.
11. Reinstall any add-in cards or components you removed.
12. Replace the diskette drive and cover panels, as described in Replacing the Diskette Drive to Replacing the Left-Side Panel.

Replacing the Lithium Battery

After several years, when the lithium battery starts to weaken, the system settings stored in CMOS RAM, such as the date and time, may be wrong. When this occurs, you need to replace the lithium battery.

To replace the lithium battery

1. To run the Setup utility, press F3 when your computer is starting up. Then press F1 to run the BIOS setup utility.

2. Write down the current BIOS Setup options.
3. Shut down your computer and turn off all peripheral devices, such as your printer, display, and speakers. Unplug your computer.
4. Remove the left-side and bottom panels, as described in Removing the Left-Side Panel.
5. Install the new battery with the plus (+) side up.

There is danger of explosion if you replace the battery incorrectly. You must replace the battery only with a CR2032 type lithium battery. Discard used batteries according to the instructions on On Disposal of the Lithium Battery.

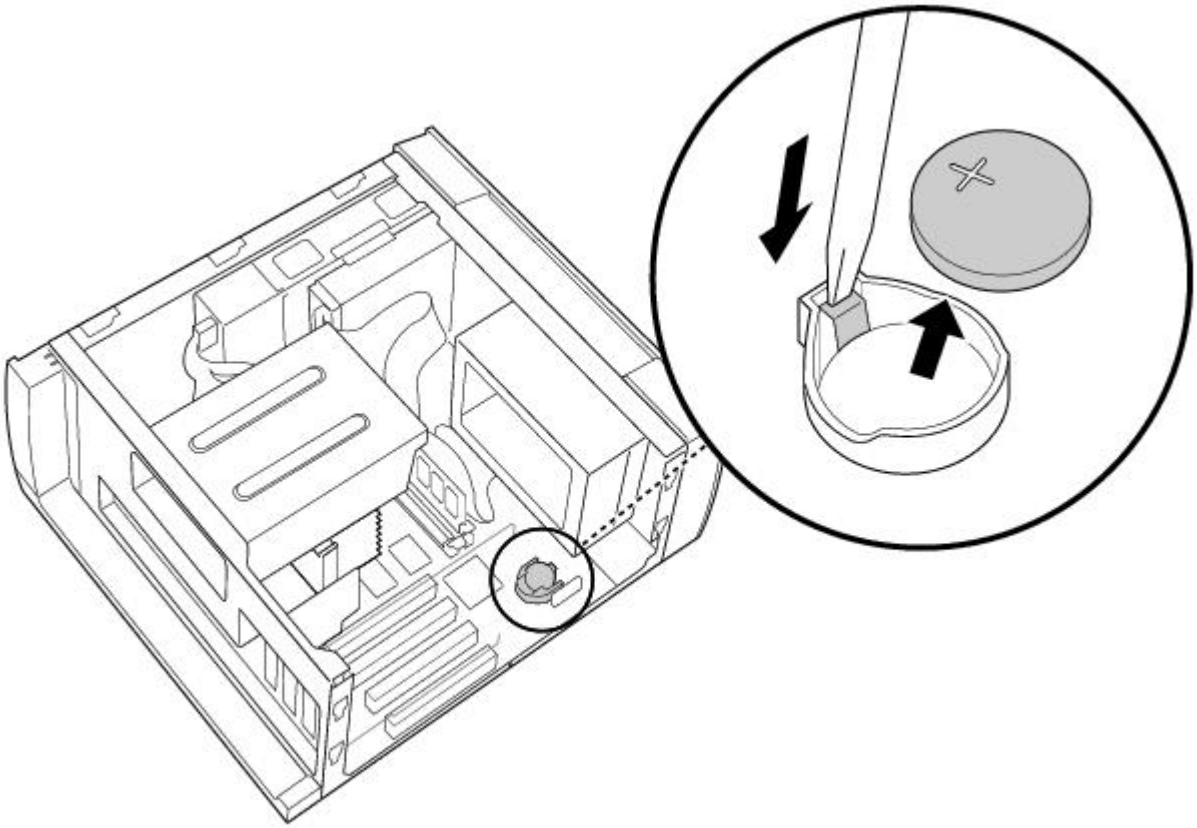

6. Replace the bottom and left-side panels, as described in Replacing the Bottom Panel.

The values stored in the CMOS memory are now reset to the factory default values. You must run the Setup utility to reset the date, time, passwords, and other options. See the VAIO Digital Studio Computer Reference Manual for details.

7. To run the Setup utility, press F3 when your computer is starting up. Then press F1 to run the BIOS setup utility.
8. Change the default values to the values you wrote down in step 2.
9. Save your Setup changes, and then exit the Setup utility.

Installing an Internal Hard Disk Drive

Your VAIO Digital Studio Computer comes with an available bay to hold an additional hard disk drive. The drive you install must not require front panel access. The hard disk drive access light blinks when either internal drive is active.

Before opening the system unit, save any open files, exit Windows, turn off the power of the computer and all attached peripherals, and then unplug the power cord.

1. Configure the jumpers on the new drive as a primary slave (see your drive's documentation for

configuration instructions).

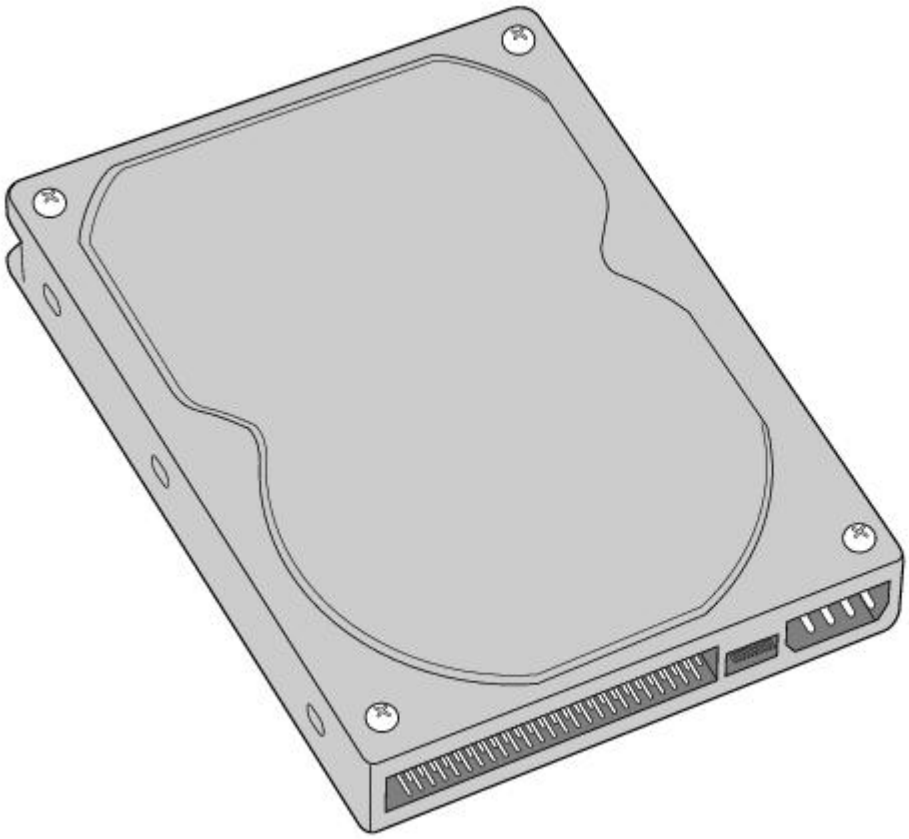

2. Remove the left-side panel, as described in Removing the Left-Side Panel.
3. Remove the front panel, as described in Removing the Front Panel.
4. Remove the bottom panel, as described in Removing the Bottom Panel.
5. Lay the system on its right side (left side faces up-see diagram that follows).
6. Remove the two screws that secure the drive holder.
7. Slide the drive holder forward and then out.

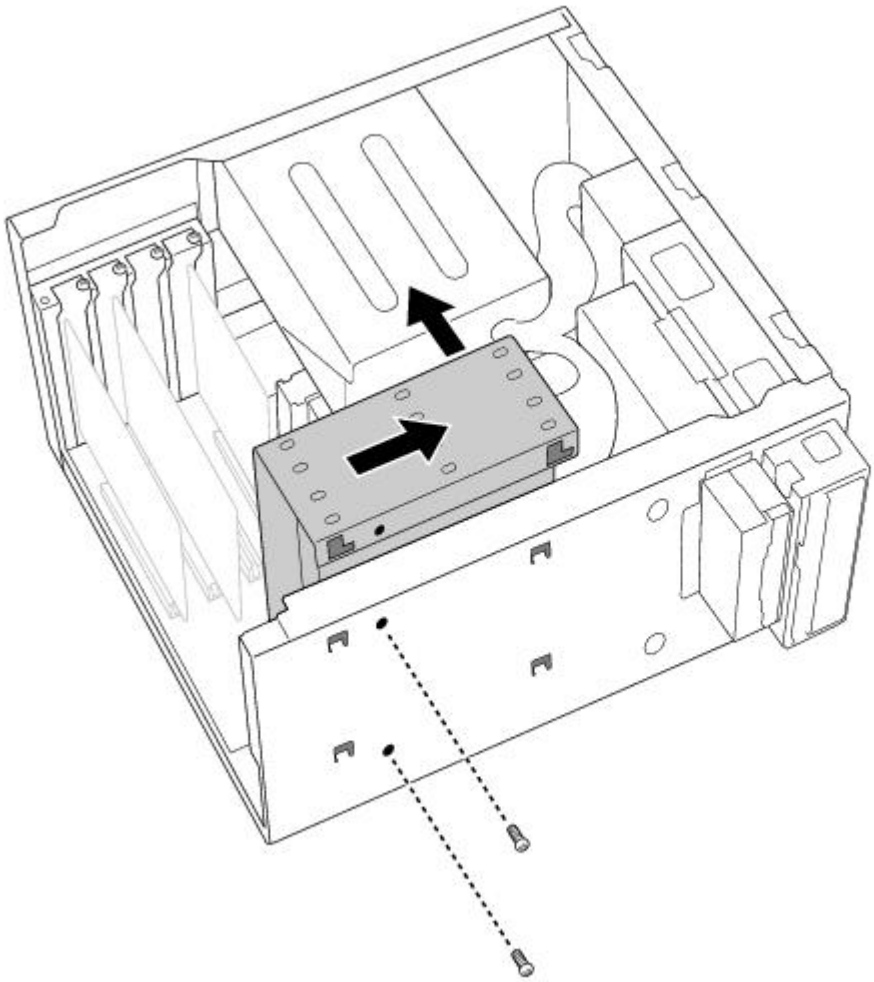

8. Place the drive holder upside down on top of the power supply.

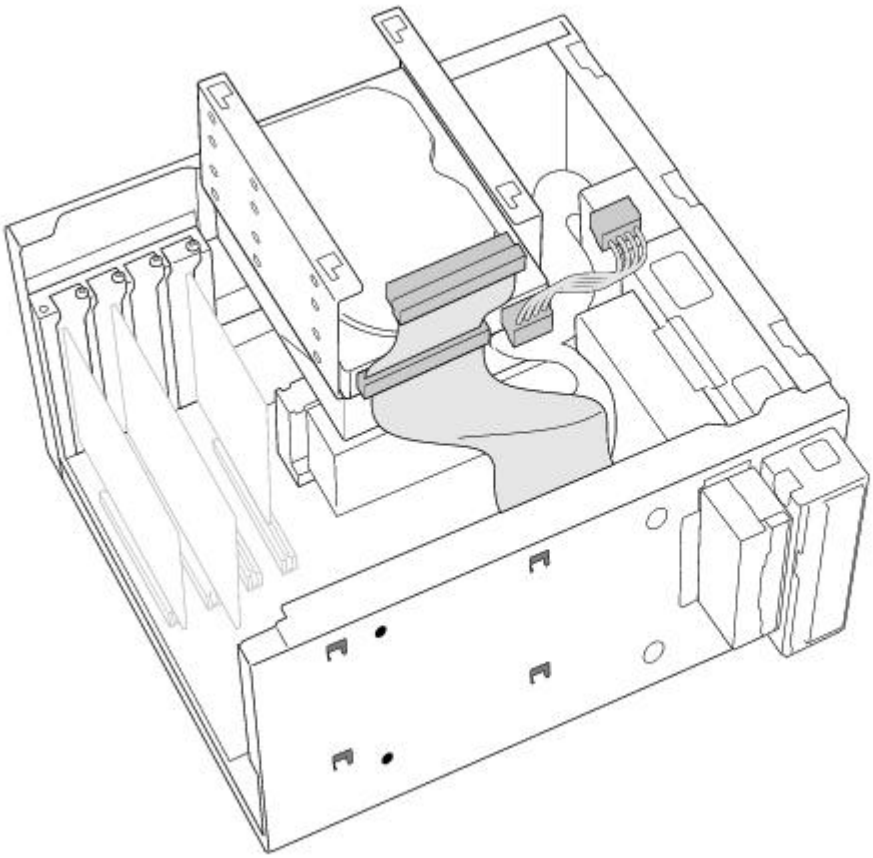

9. Slide the new drive into the drive holder and align the holes on each side of the drive bay.

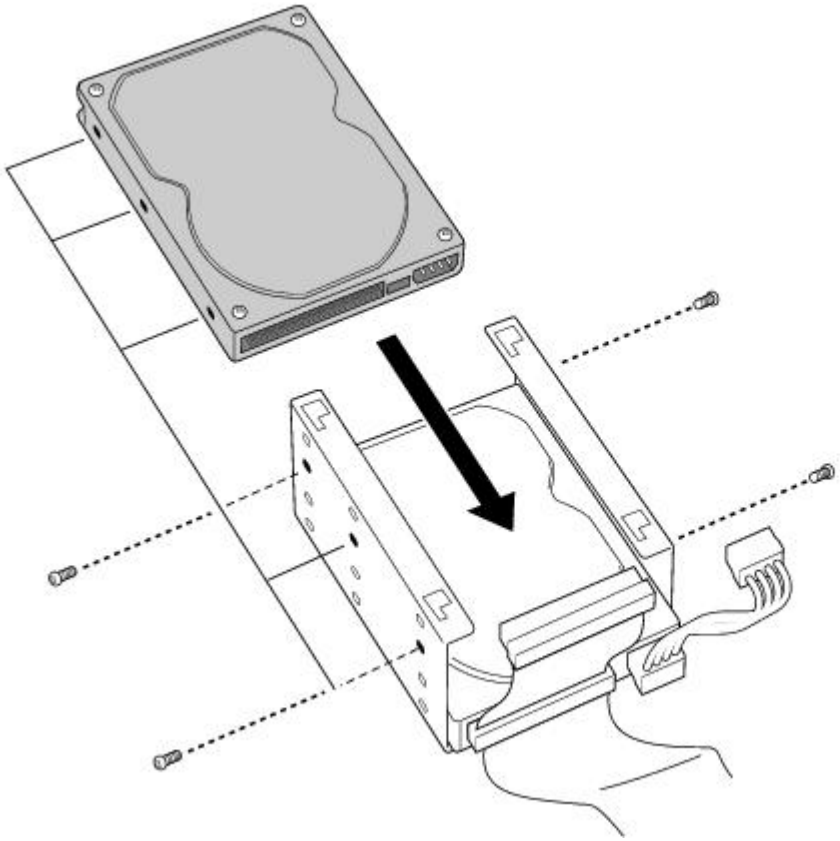

10. Secure the drive to the drive holder using any two of the three holes on each side of the drive holder (screws are provided with the new drive). Do not overtighten the screws.
11. Connect the second drive connector to the new drive.
12. Connect the second power connector to the new drive.

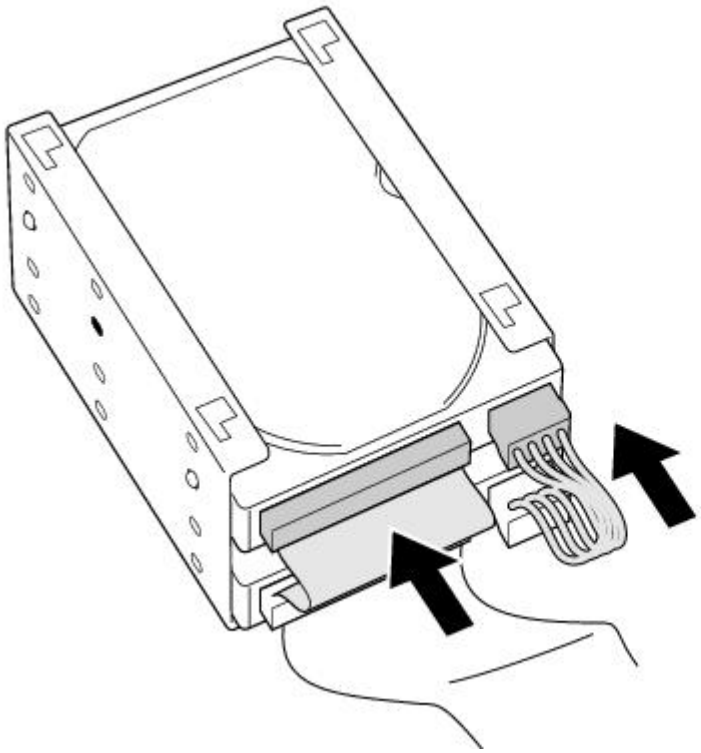

13. Place the drive holder against the inside of the front chassis and slide it back. Be sure to align the slots on the drive holder with the tabs on the inside of the chassis. Be sure to slide the drive holder back so that the tabs slip into the notch at the bottom of the slot.

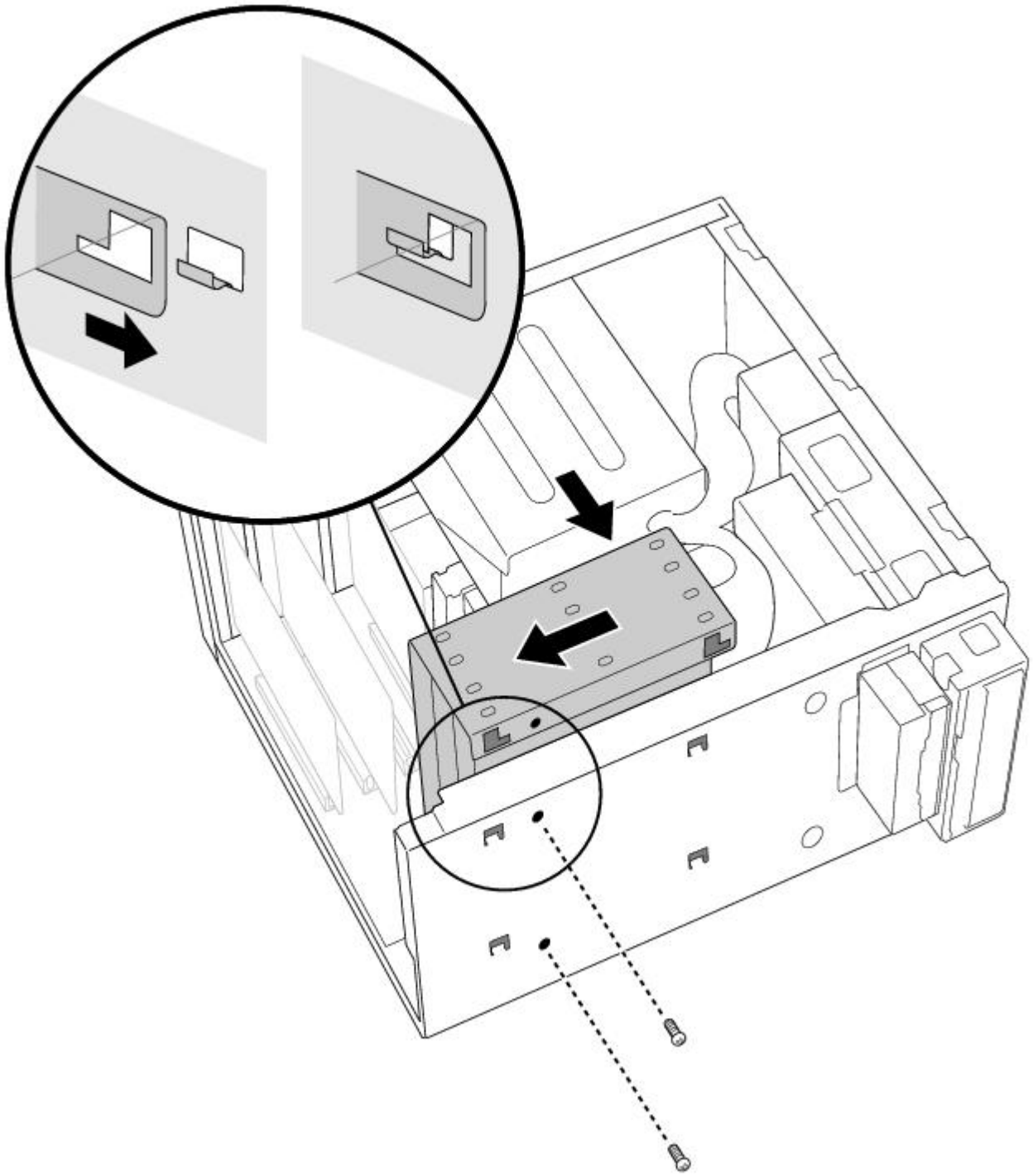

14. Replace the two screws that secure the holder to the chassis.
15. Replace the bottom panel, as described in Replacing the Bottom Panel.
16. Replace the front panel, as described in Replacing the Front Panel.
17. Replace the left-side panel, as described in Replacing the Left-Side Panel.
18. Reconnect the power cord and then turn on your computer.

Your computer automatically recognizes the new drive and configures itself accordingly when you turn it on. Format and partition the new drive following the instructions provided with the drive.

Removing the Left-Side Panel

To remove the left-side panel

1. Remove the two screws that secure the panel to the chassis.
2. Slide the panel back until it stops.
3. Pull the panel straight out to remove it.

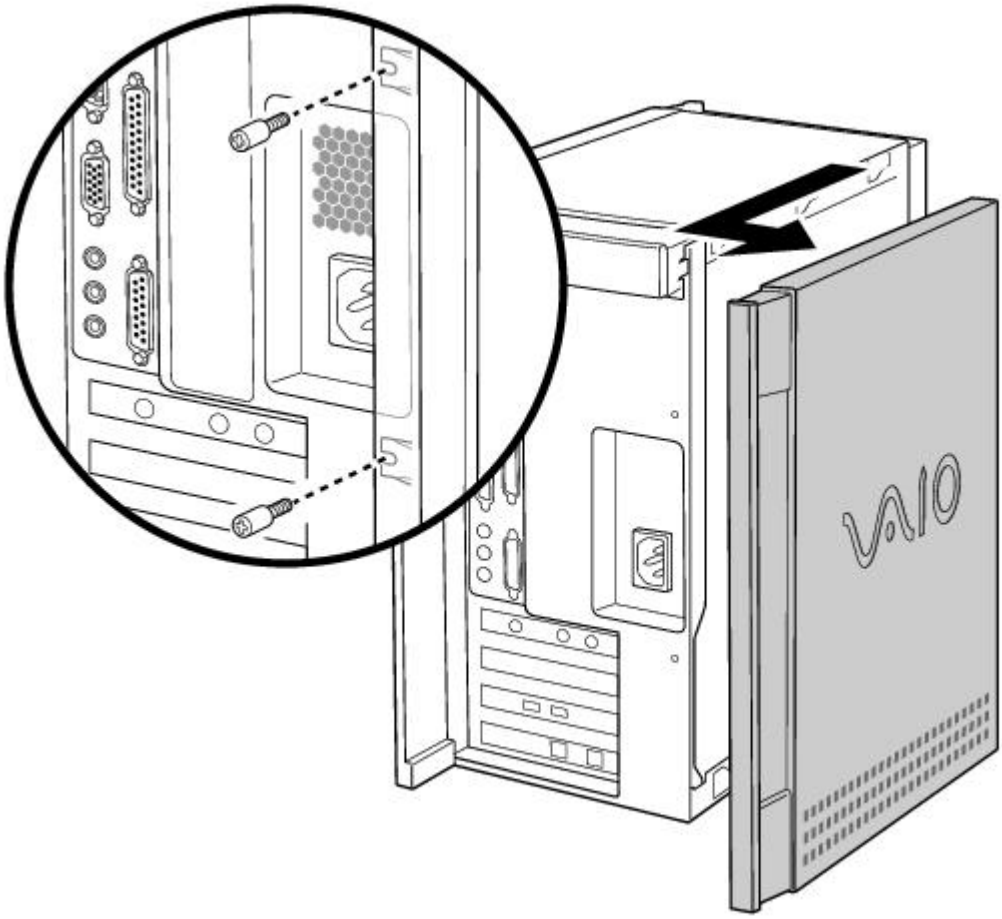

Removing the Bottom Panel

To remove the bottom panel

1. Remove the screw that secures the bottom panel to the chassis.
2. Pull the bottom panel straight out to remove it.

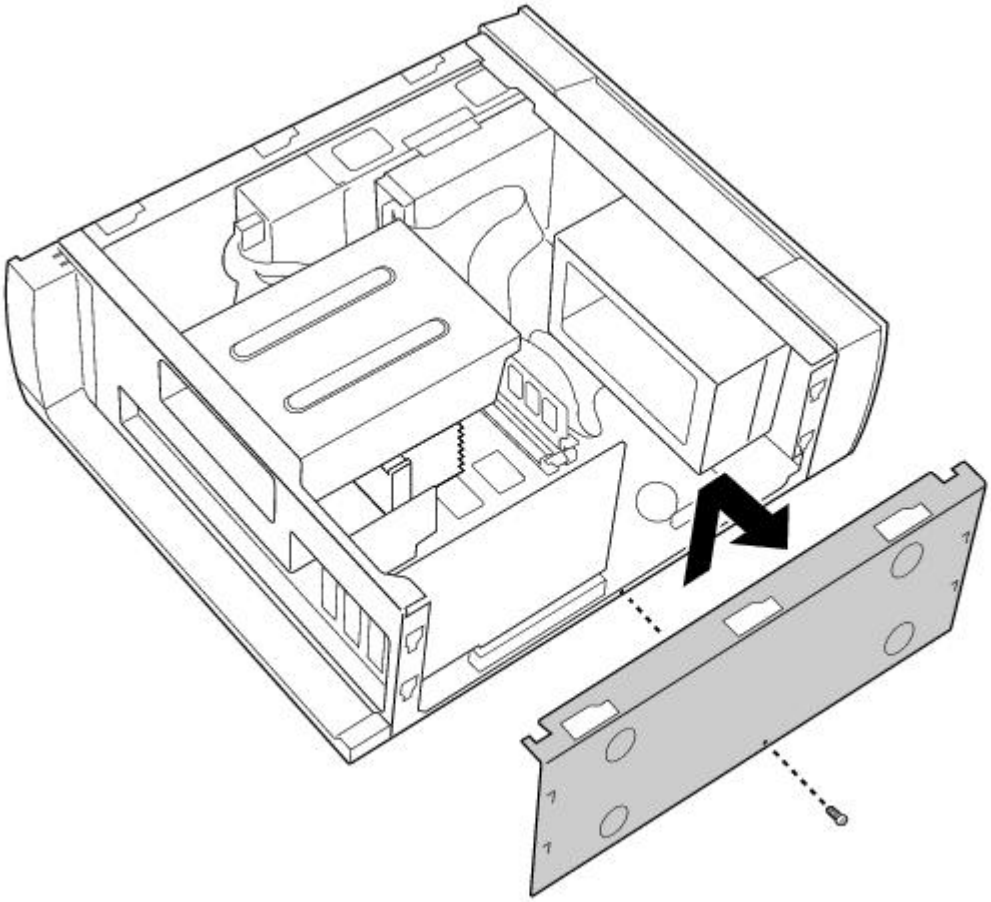

Removing the Front Panel

To remove the front panel

1. Open the CD tray by inserting a thin, pointed object into the emergency eject opening.
2. Slide the CD tray forward.
3. Remove the front cover of the CD tray by lifting it upwards.

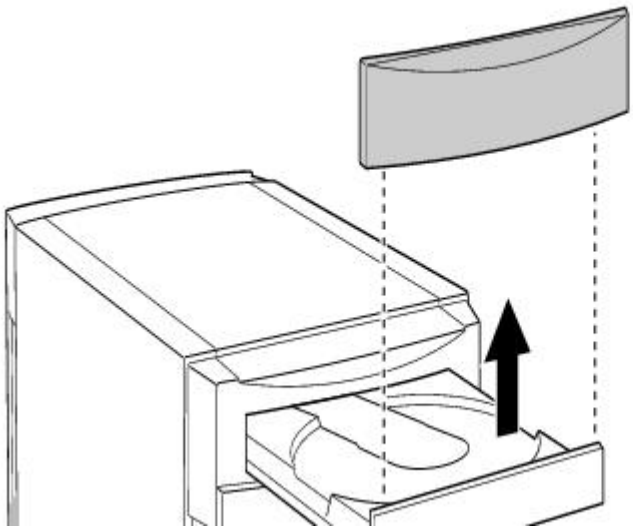

4. Press down on each of the two tabs on the bottom of the front panel to release the panel.
5. Pull the front panel forward to remove it.

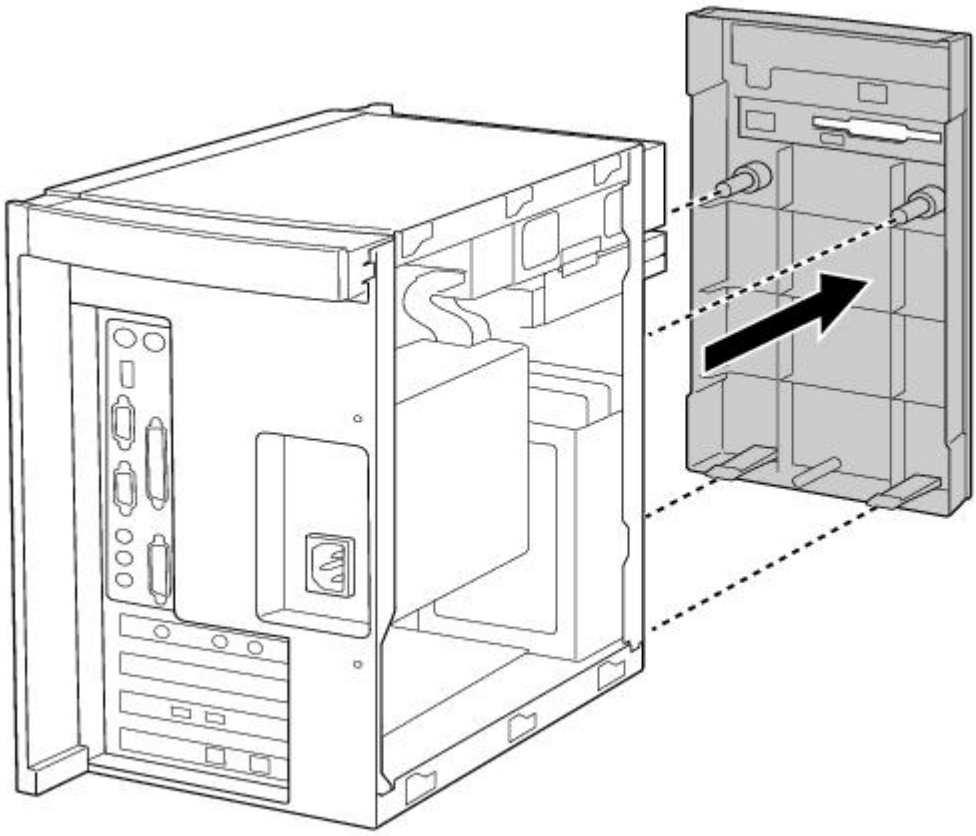

Detaching the Diskette Drive

To detach the diskette drive

1. Remove the front panel, as described in Removing the Front Panel.
2. Remove the two screws that secure the diskette drive to the front of the chassis.
3. Pull the diskette drive forward.

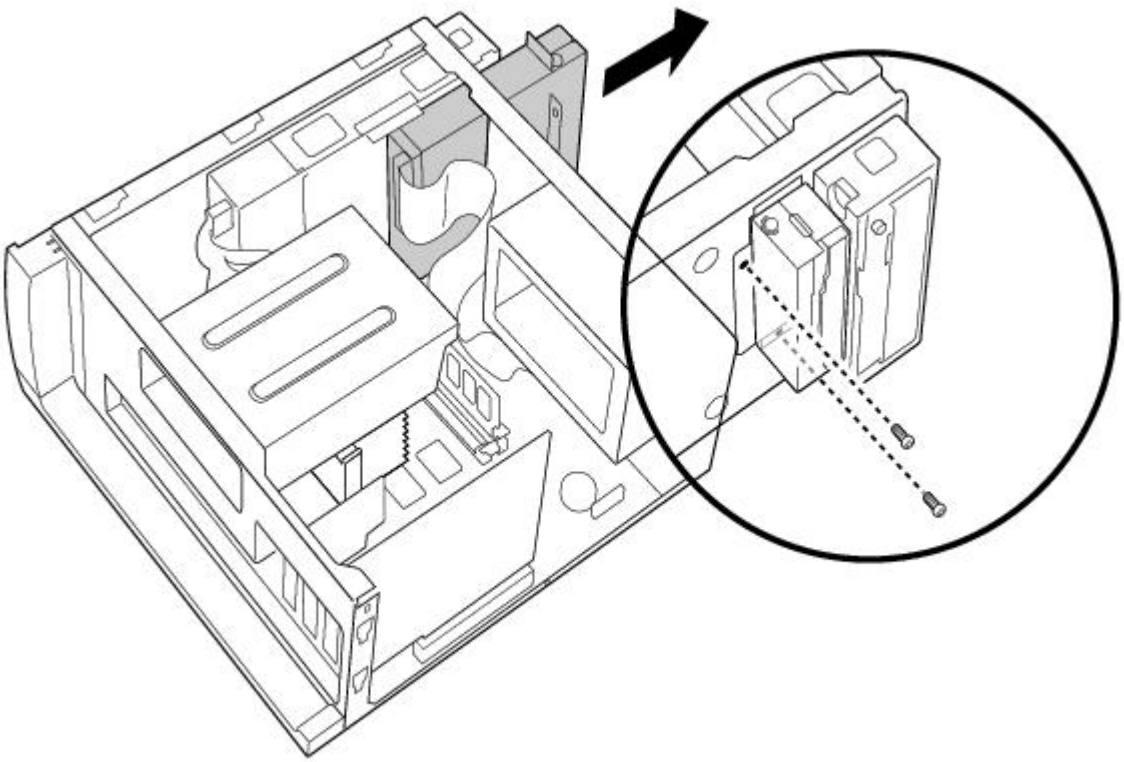

If you are adding memory, you do not need to completely remove the diskette drive or disconnect the cable.

Replacing the Diskette Drive

To replace the diskette drive

1. Push the diskette drive straight into the drive slot.
2. Replace the two screws that secure the diskette drive to the front of the chassis.
3. Replace the front panel, as described in Replacing the Front Panel.

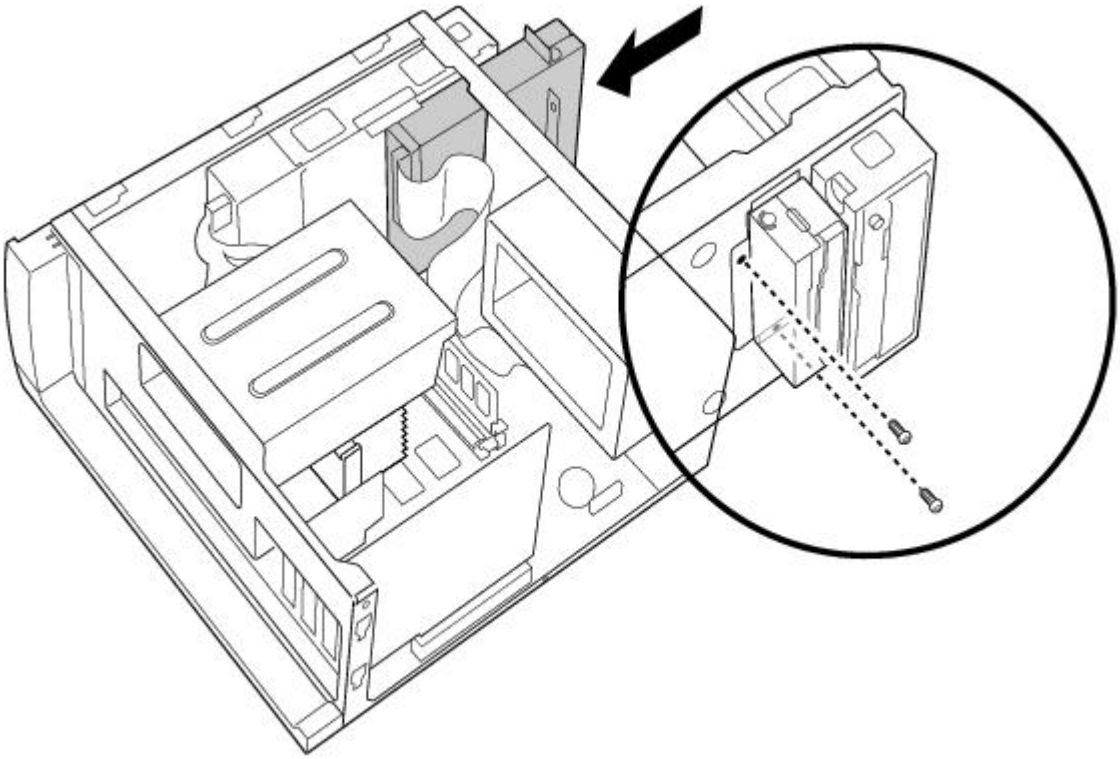

Replacing the Bottom Panel

To replace the bottom panel

1. Align the bottom panel with the screw hole on the bottom of the chassis.
2. Replace the screw that secures the bottom panel to the chassis.

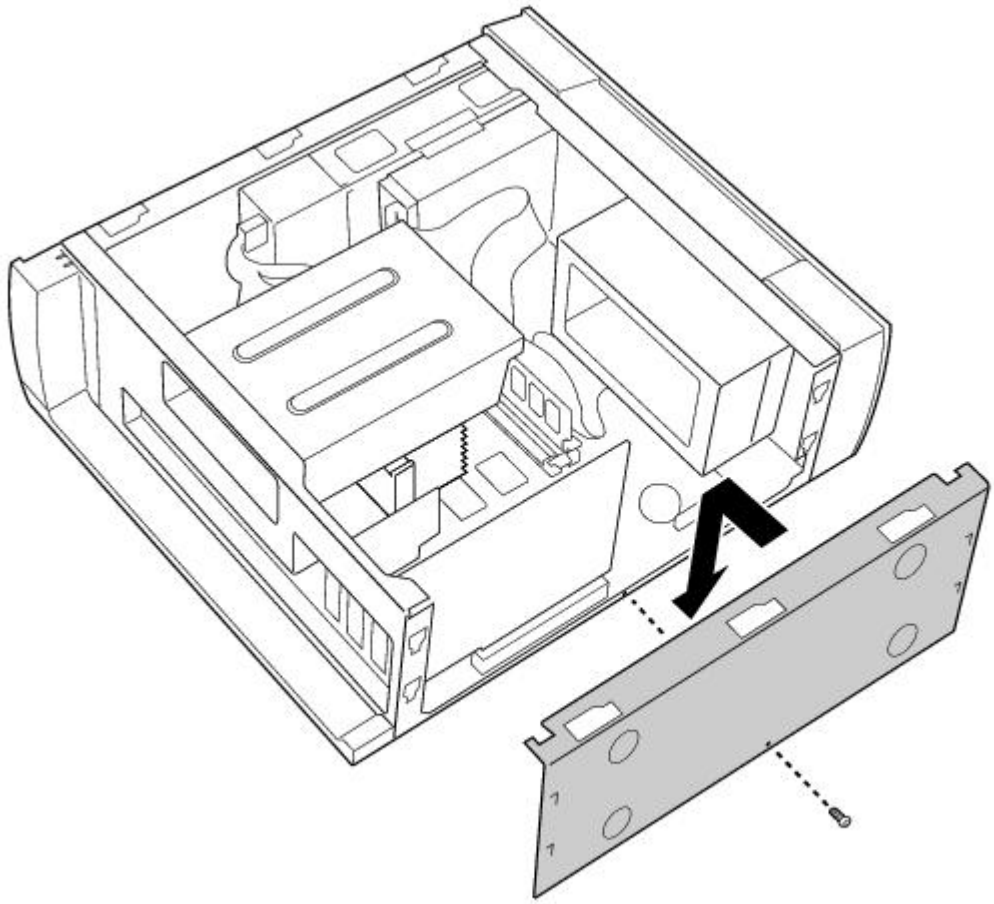

Replacing the Front Panel

To replace the front panel

1. Push the front panel straight onto the front of the chassis until it clicks into place.

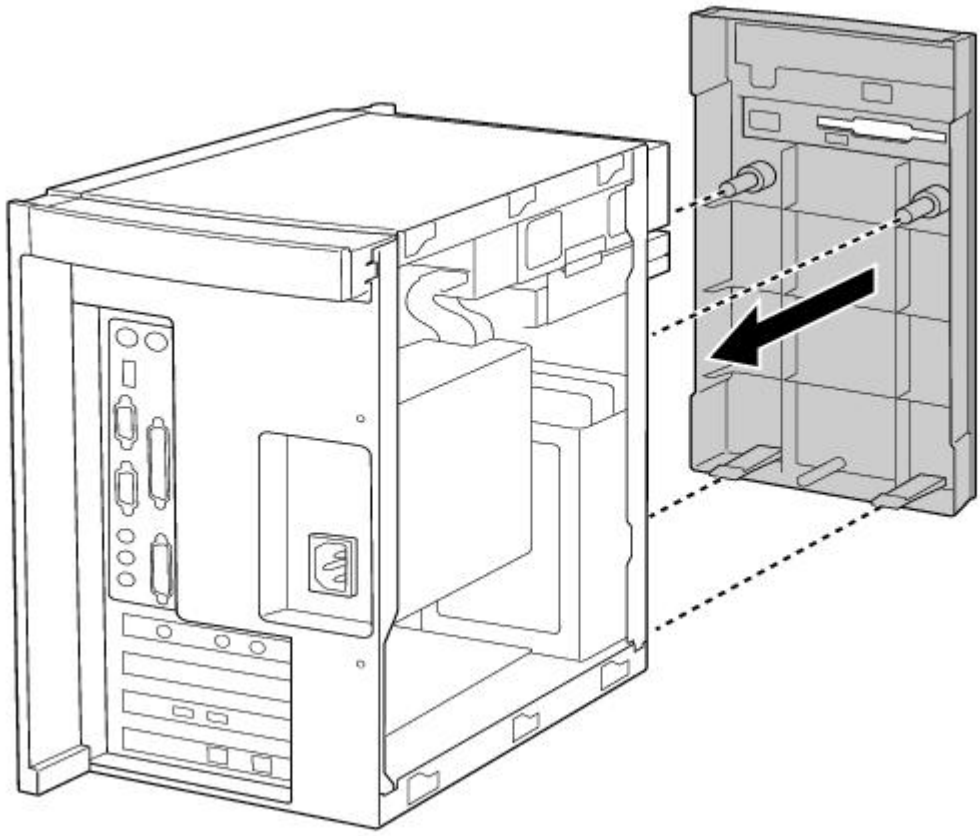

2. Replace the front cover of the CD tray by sliding it down onto the front of the open tray.
3. Close the CD tray.

Replacing the Left-Side Panel

To replace the left-side panel

1. Slide the panel forward until it stops.
2. Replace the two screws that secure the panel to the chassis.

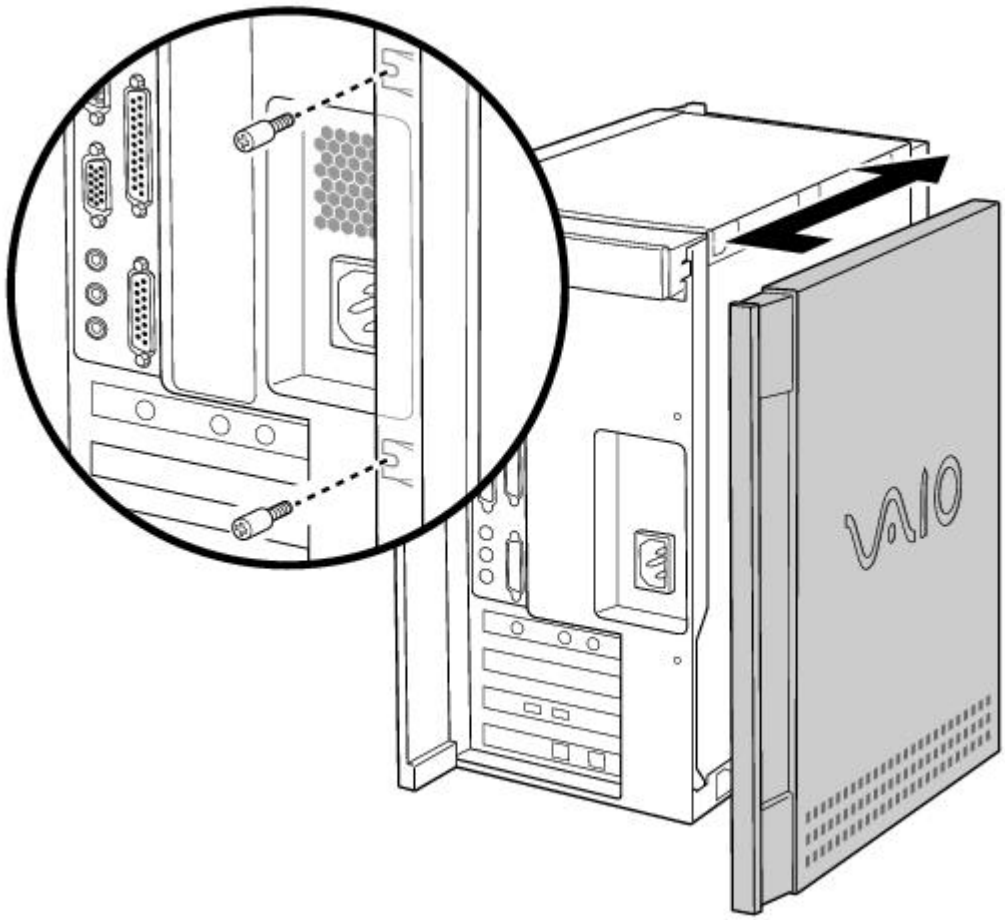

Upgrading and Maintaining Your VAIO Digital Studio Computer

In the future you may want to install additional boards to expand the functionality of your computer. This section describes how to open your computer and insert add-in boards, add memory, replace the lithium battery, and install an additional hard disk drive. For more information on upgrading your Sony computer, see the *VAIO Digital Studio Computer Reference Manual*. You can download this electronic document from the Sony Web site at http://www.sony.com/pcsupport.

The procedures in this section assume you are familiar with the general terminology associated with personal computers and with the safety practices and regulatory compliance required for using and modifying electronic equipment. Read Notes on Use before upgrading your Sony computer.

Always switch the power off before you open the system or connect your computer to peripheral equipment; otherwise, damage may occur to the integrated circuits in your computer.

Electrostatic discharge (ESD) can damage disk drives, add-in cards, and other components. Do the procedures described here only at an ESD workstation. If such a station is not available, do not work in a carpeted area and do not handle materials that produce or hold static electricity (cellophane wrappers, for example). Ground yourself by maintaining continuous contact with an unpainted metal portion of the chassis while performing the procedure.

Inserting an Add-in Board

You can add up to two additional PCI boards to the system.

Your VAIO Digital Studio Computer cannot accommodate PCI add-in boards exceeding 7.7" in length.

To insert an add-in board

Make sure you observe the proper safety precautions when you add boards to your Sony computer. See Notes on Use.

1. Shut down your computer and turn off all peripheral devices, such as your printer, display, and speakers.
2. Unplug your computer and any peripheral devices.
3. Remove the left-side panel as described in Removing the Left-Side Panel.
4. Identify the expansion slot where you want to insert the add-in board.
5. Remove the slot cover for the slot you have chosen.

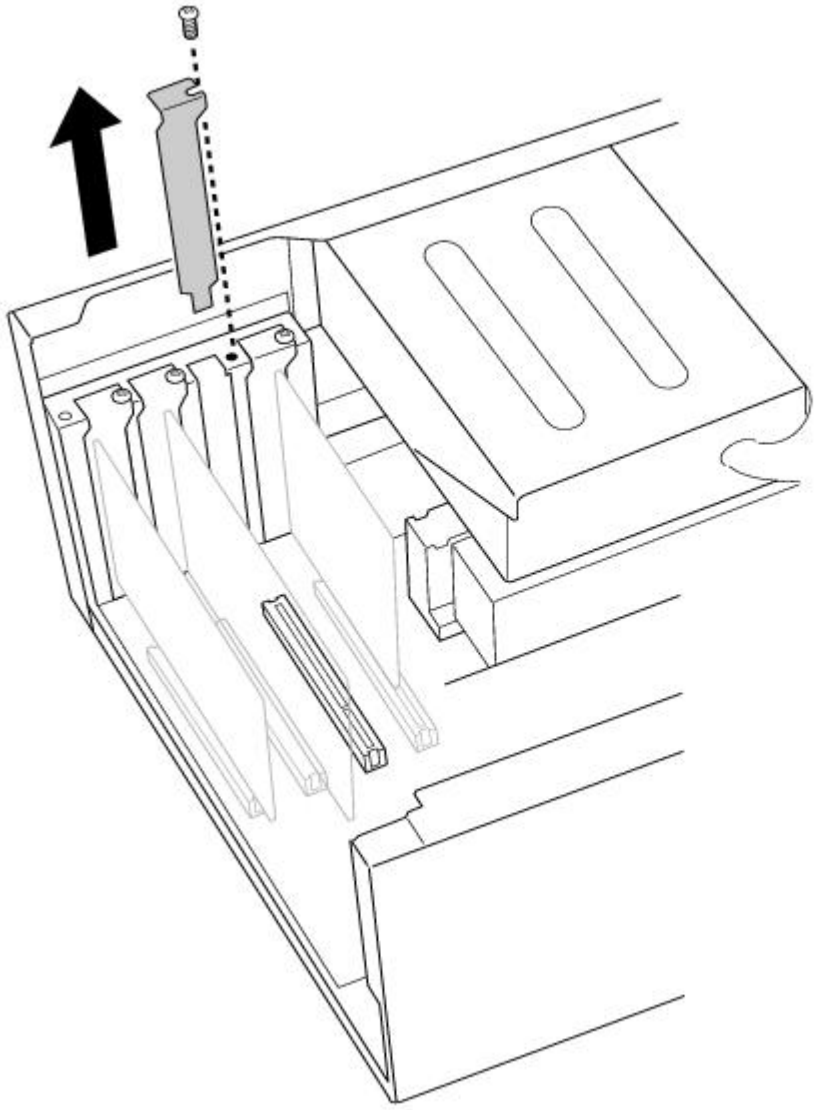

6. Install the add-in board by plugging it into the expansion slot on the system board. Attach any internal cables that the board requires (see the manual for the add-in board).

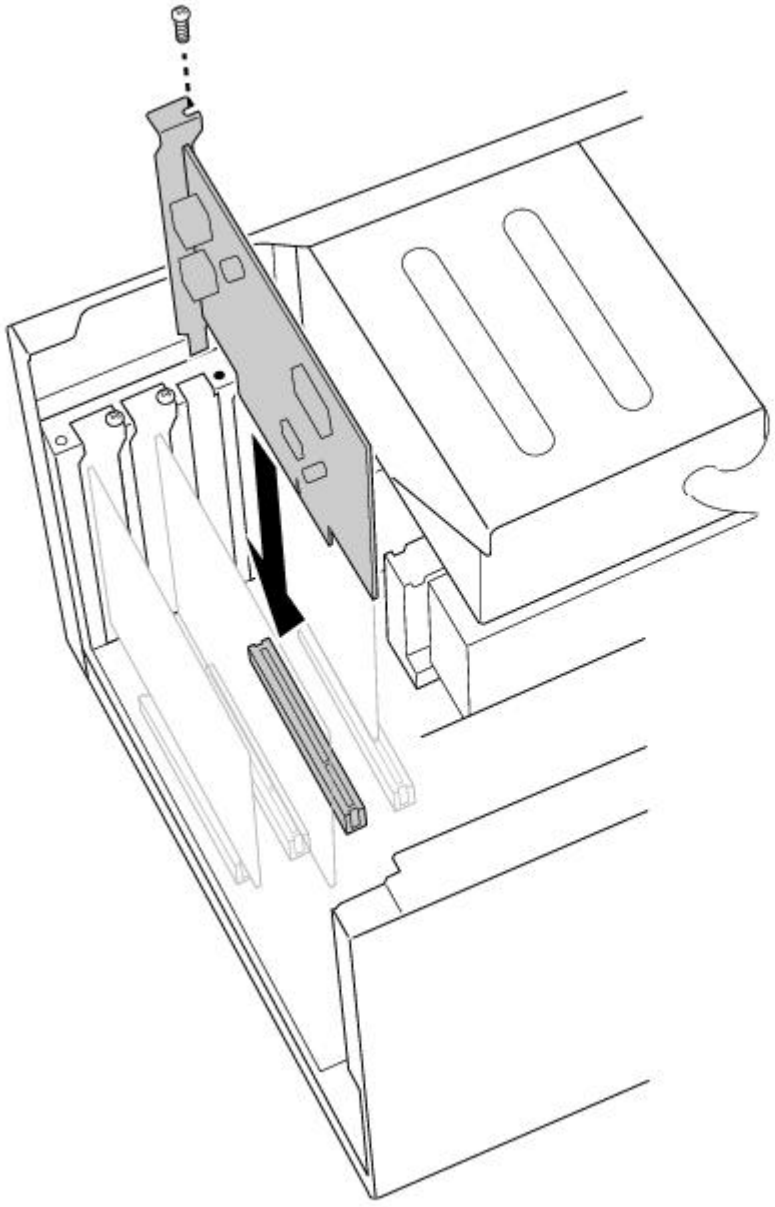

7. Replace the left-side panel as described in Replacing the Left-Side Panel.

Adding Memory

In order to increase your computer's memory, you may need to remove one of the factory-installed DIMMs and replace it with one of greater capacity. For details, see the *VAIO Digital Studio Computer Reference Manual*, which is available at Sony's Web site at http://www.sony.com/pcsupport.

For memory upgrades, use only 3.3V unbuffered 4-clock 64-bit 66 MHz SDRAM DIMM module Rev1.0 or 3.3V unbuffered 4-clock 72-bit 66 MHz SDRAM DIMM module Rev1.0. For more information on Digital Studio Computer compatible memory, call Sony at 1-888-4SONYPC (1-888-476-6972).

To install memory

Make sure you observe the proper safety precautions when you add DIMMs to your Sony computer. See Notes on Use .

1. Shut down your computer and turn off all peripheral devices, such as your printer, display, and speakers.
2. Unplug your computer and any peripheral devices.
3. Remove the left-side panel, bottom panel, and front panel, as described in Removing the Left-Side Panel. Then detach the diskette drive, as described in Detaching the Diskette Drive.

You do not need to completely remove the diskette drive in order to access the DIMM sockets.

4. If necessary, remove any cables, add-in cards, or other components to access the DIMM sockets.
5. Remove either (or both) of the factory-installed DIMMs.
6. Handle the DIMM only by the edges, and remove it from its anti-static package.
7. Locate the keys on the bottom edge of the DIMM .
8. Align the DIMM over the socket.

To avoid damaging the DIMM socket, move the DIMM socket tabs slightly outward to relieve pressure. The DIMM should then click easily into place.

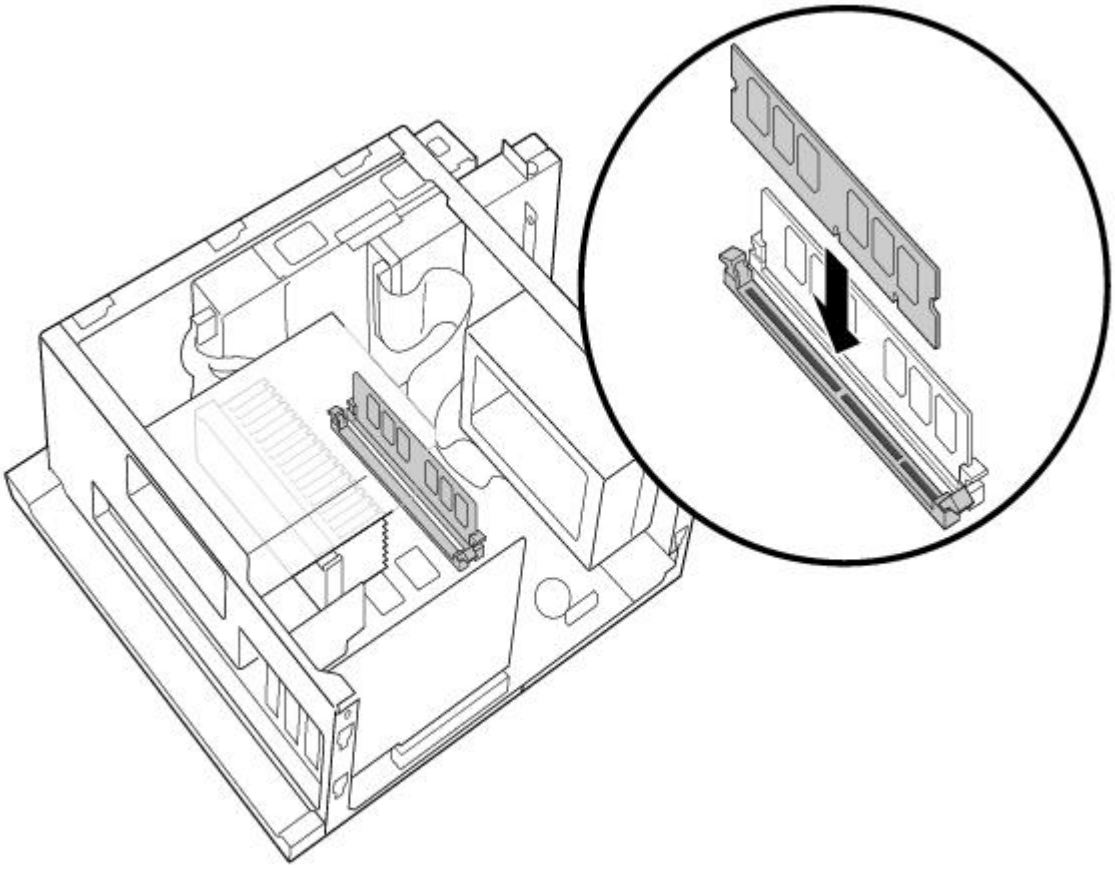

9. Firmly insert the bottom edge of the DIMM into the socket.
10. Press evenly against the DIMM's upper corners. The end latches snap into position automatically.
11. Reinstall any add-in cards or components you removed.
12. Replace the diskette drive and cover panels, as described in Replacing the Diskette Drive to Replacing the Left-Side Panel.

Replacing the Lithium Battery

After several years, when the lithium battery starts to weaken, the system settings stored in CMOS RAM, such as the date and time, may be wrong. When this occurs, you need to replace the lithium battery.

To replace the lithium battery

1. To run the Setup utility, press F3 when your computer is starting up. Then press F1 to run the BIOS setup utility.

2. Write down the current BIOS Setup options.
3. Shut down your computer and turn off all peripheral devices, such as your printer, display, and speakers. Unplug your computer.
4. Remove the left-side and bottom panels, as described in Removing the Left-Side Panel.
5. Install the new battery with the plus (+) side up.

There is danger of explosion if you replace the battery incorrectly. You must replace the battery only with a CR2032 type lithium battery. Discard used batteries according to the instructions on On Disposal of the Lithium Battery.

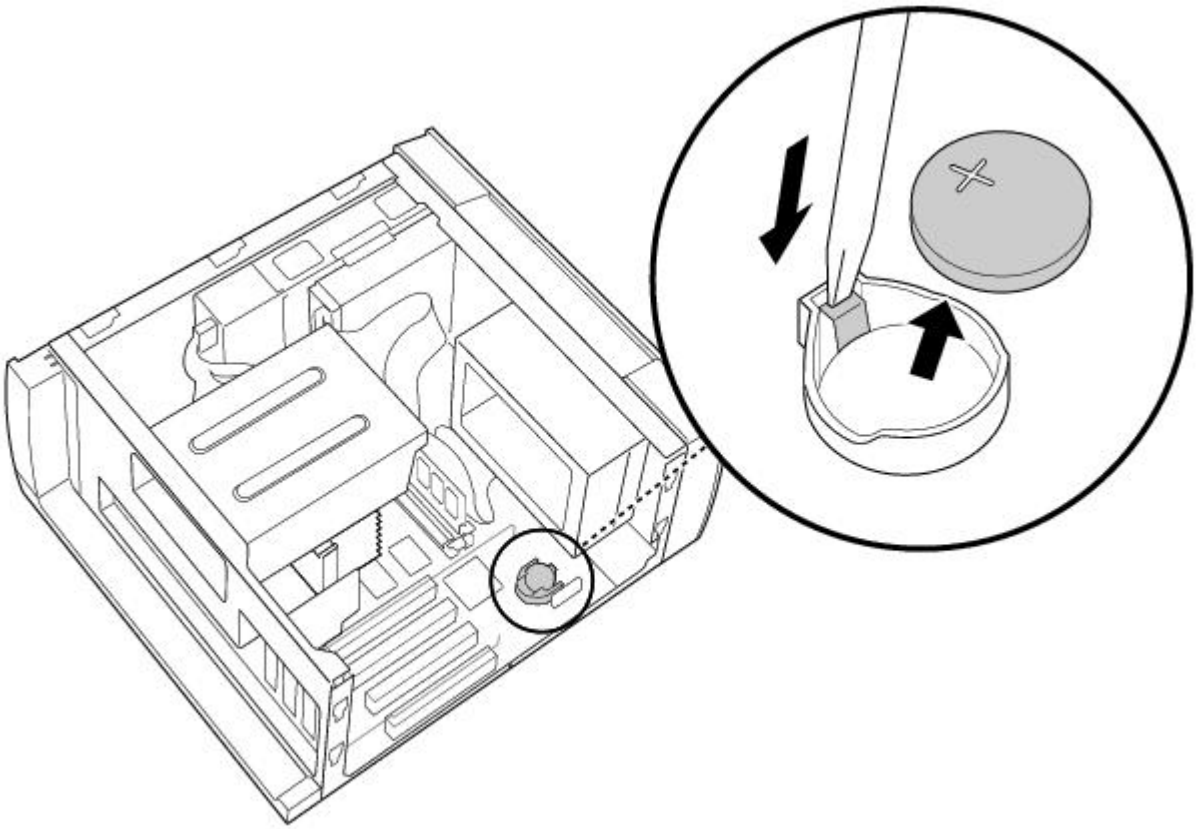

6. Replace the bottom and left-side panels, as described in Replacing the Bottom Panel.

The values stored in the CMOS memory are now reset to the factory default values. You must run the Setup utility to reset the date, time, passwords, and other options. See the VAIO Digital Studio Computer Reference Manual for details.

7. To run the Setup utility, press F3 when your computer is starting up. Then press F1 to run the BIOS setup utility.
8. Change the default values to the values you wrote down in step 2.
9. Save your Setup changes, and then exit the Setup utility.

Installing an Internal Hard Disk Drive

Your VAIO Digital Studio Computer comes with an available bay to hold an additional hard disk drive. The drive you install must not require front panel access. The hard disk drive access light blinks when either internal drive is active.

Before opening the system unit, save any open files, exit Windows, turn off the power of the computer and all attached peripherals, and then unplug the power cord.

1. Configure the jumpers on the new drive as a primary slave (see your drive's documentation for

configuration instructions).

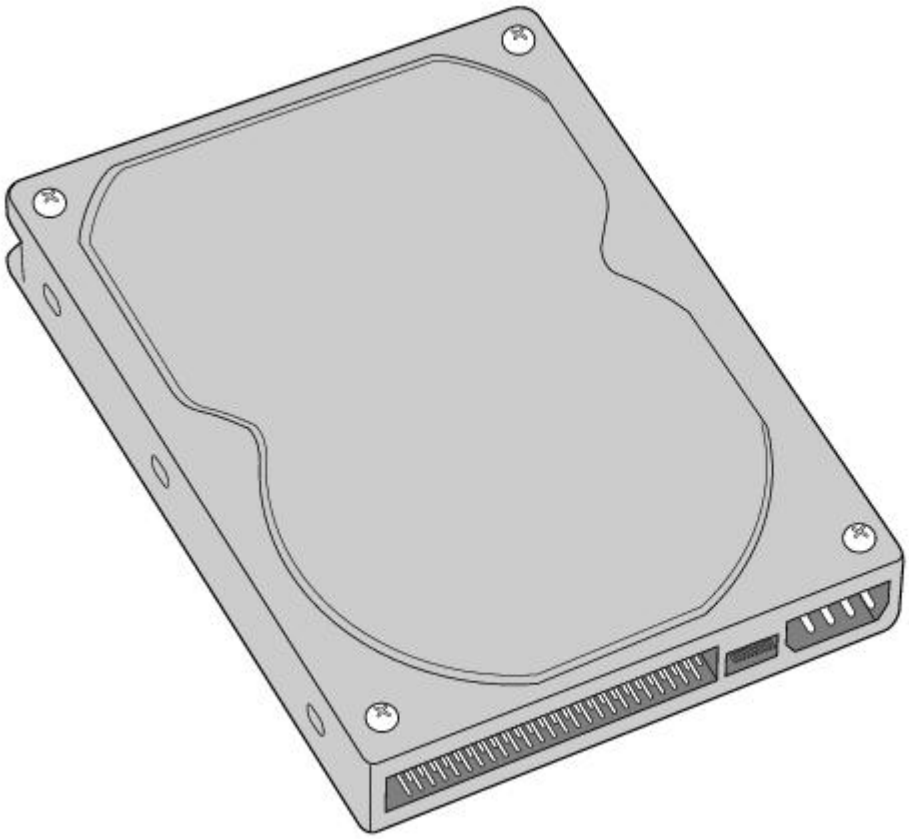

2. Remove the left-side panel, as described in Removing the Left-Side Panel.
3. Remove the front panel, as described in Removing the Front Panel.
4. Remove the bottom panel, as described in Removing the Bottom Panel.
5. Lay the system on its right side (left side faces up-see diagram that follows).
6. Remove the two screws that secure the drive holder.
7. Slide the drive holder forward and then out.

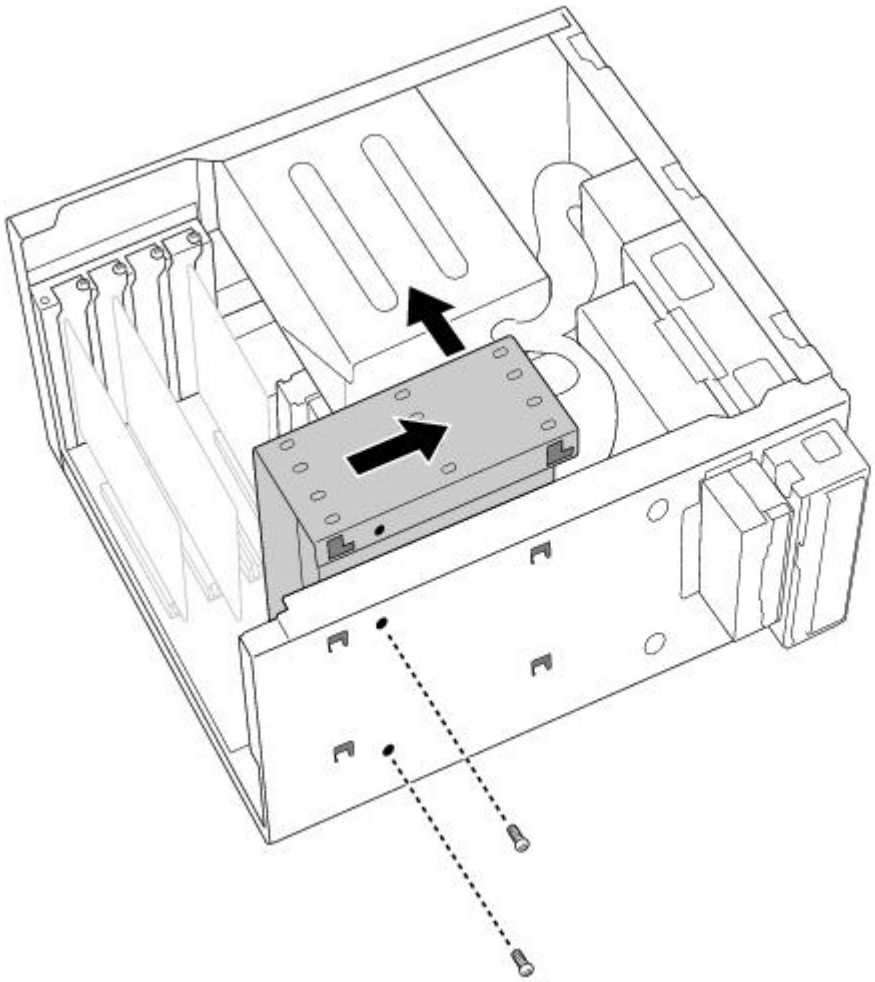

8. Place the drive holder upside down on top of the power supply.

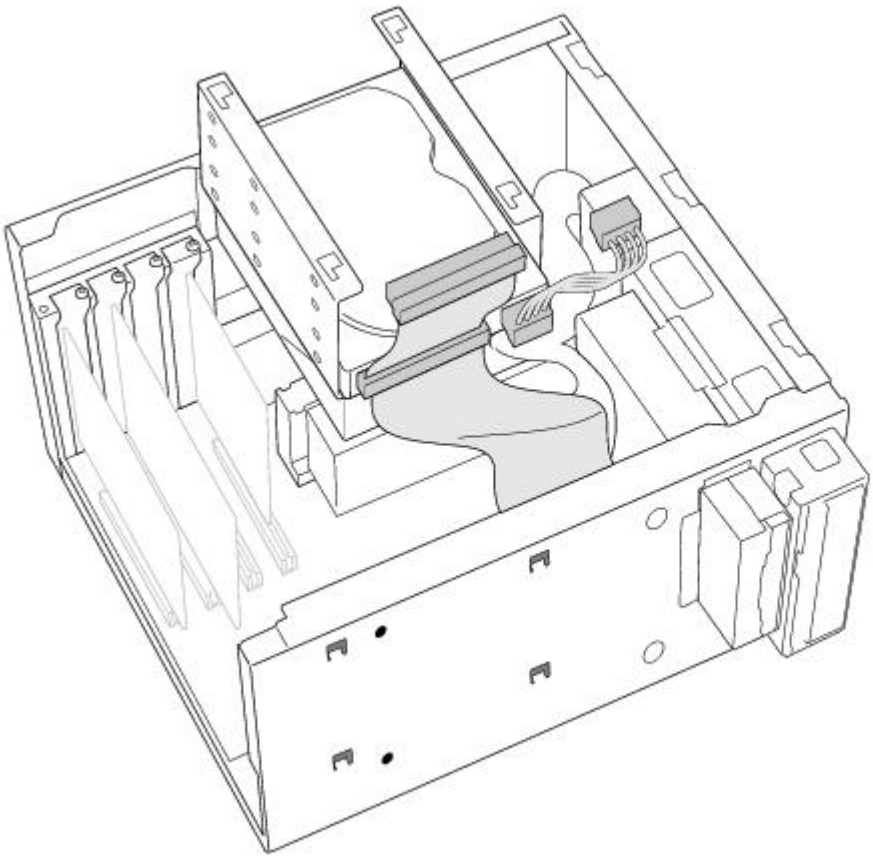

9. Slide the new drive into the drive holder and align the holes on each side of the drive bay.

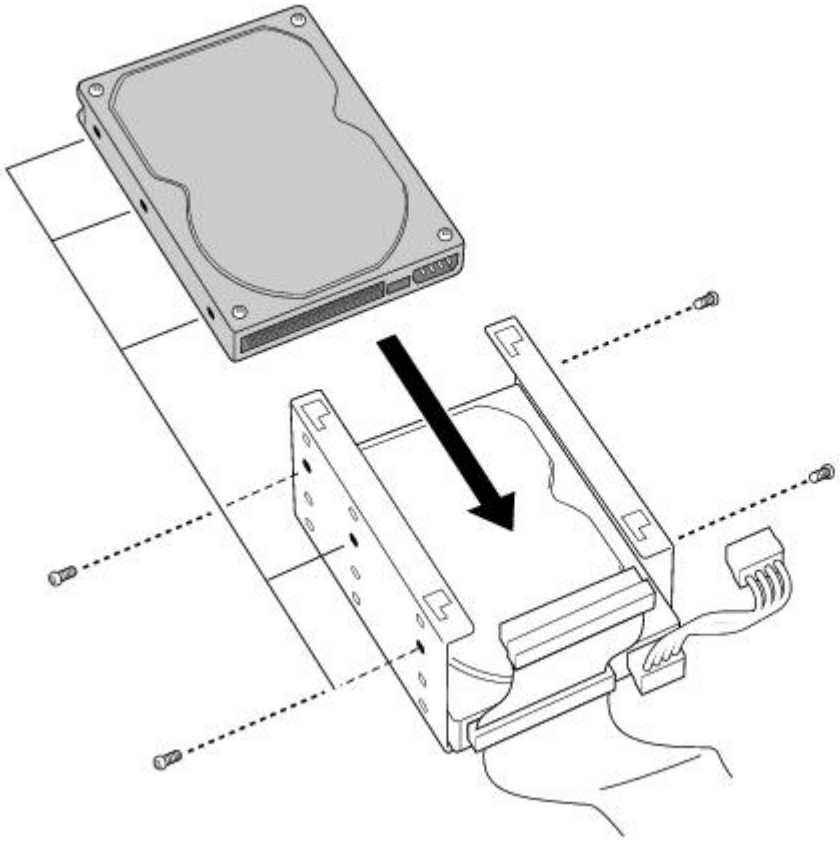

10. Secure the drive to the drive holder using any two of the three holes on each side of the drive holder (screws are provided with the new drive). Do not overtighten the screws.
11. Connect the second drive connector to the new drive.
12. Connect the second power connector to the new drive.

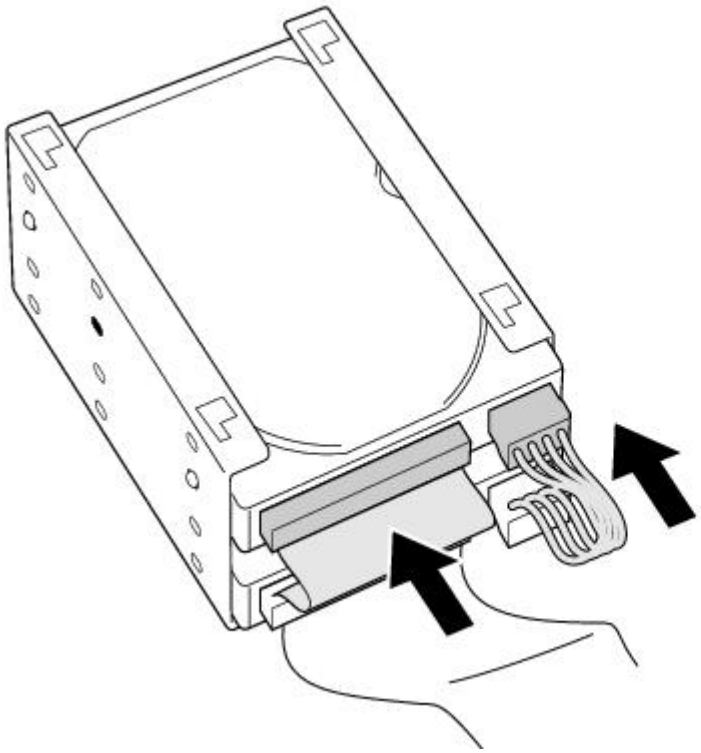

13. Place the drive holder against the inside of the front chassis and slide it back. Be sure to align the slots on the drive holder with the tabs on the inside of the chassis. Be sure to slide the drive holder back so that the tabs slip into the notch at the bottom of the slot.

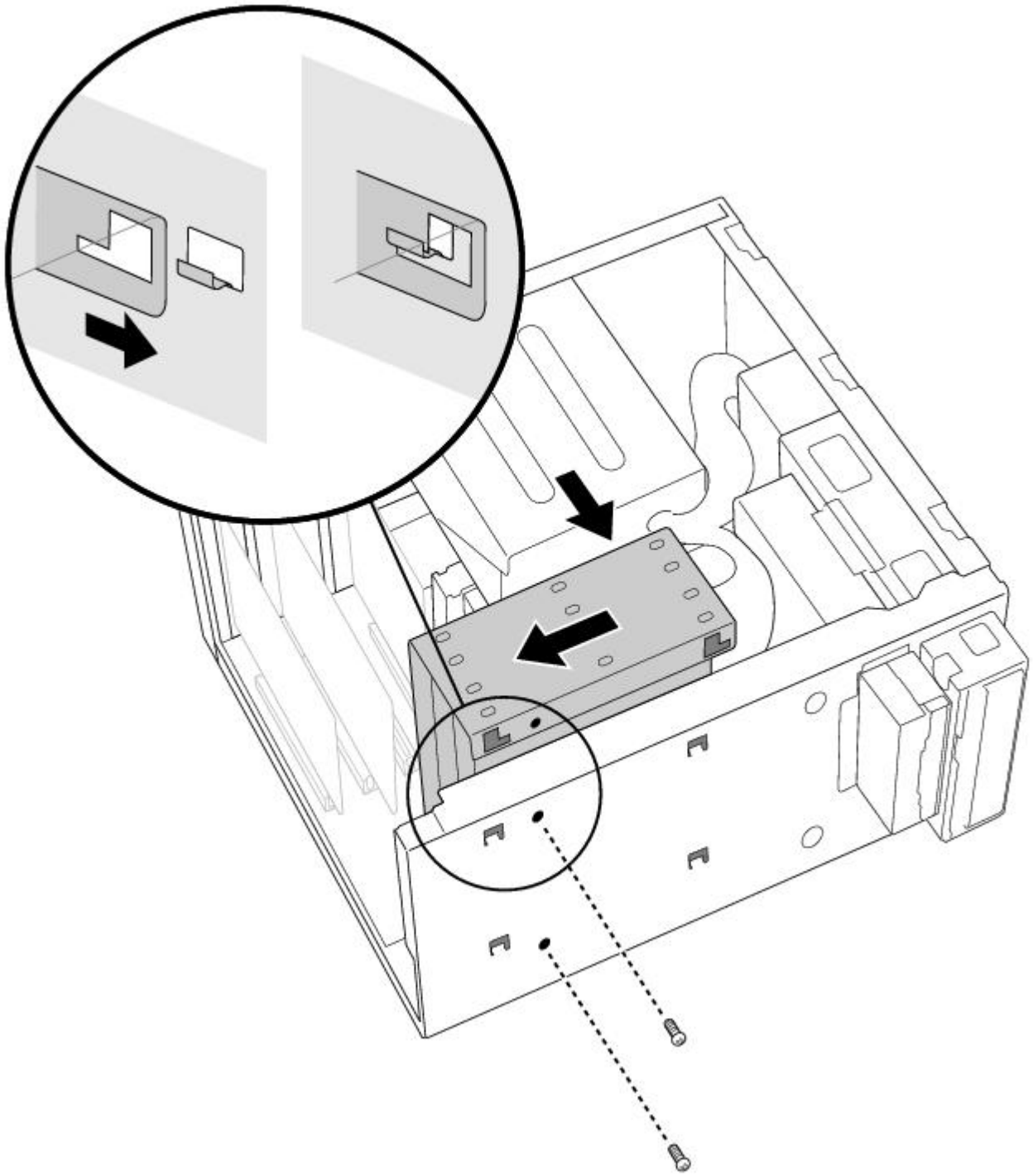

14. Replace the two screws that secure the holder to the chassis.
15. Replace the bottom panel, as described in Replacing the Bottom Panel.
16. Replace the front panel, as described in Replacing the Front Panel.
17. Replace the left-side panel, as described in Replacing the Left-Side Panel.
18. Reconnect the power cord and then turn on your computer.

Your computer automatically recognizes the new drive and configures itself accordingly when you turn it on. Format and partition the new drive following the instructions provided with the drive.

Removing the Left-Side Panel

To remove the left-side panel

1. Remove the two screws that secure the panel to the chassis.
2. Slide the panel back until it stops.
3. Pull the panel straight out to remove it.

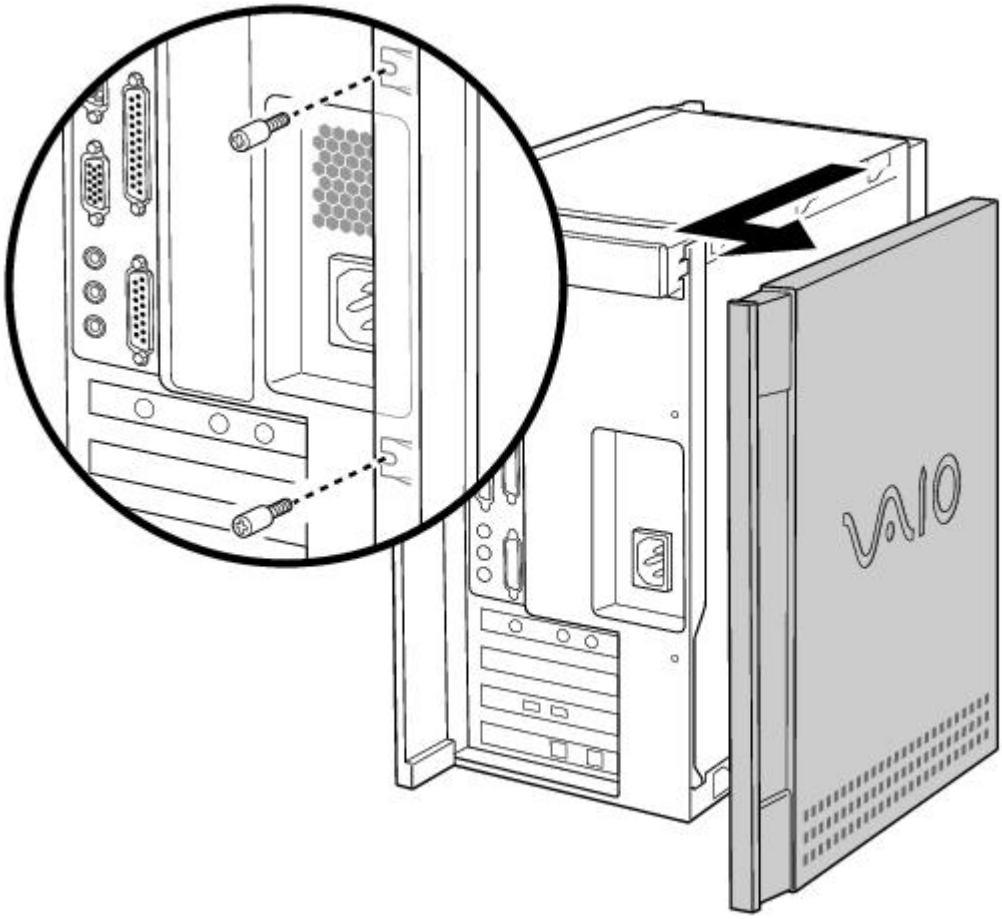

Removing the Bottom Panel

To remove the bottom panel

1. Remove the screw that secures the bottom panel to the chassis.
2. Pull the bottom panel straight out to remove it.

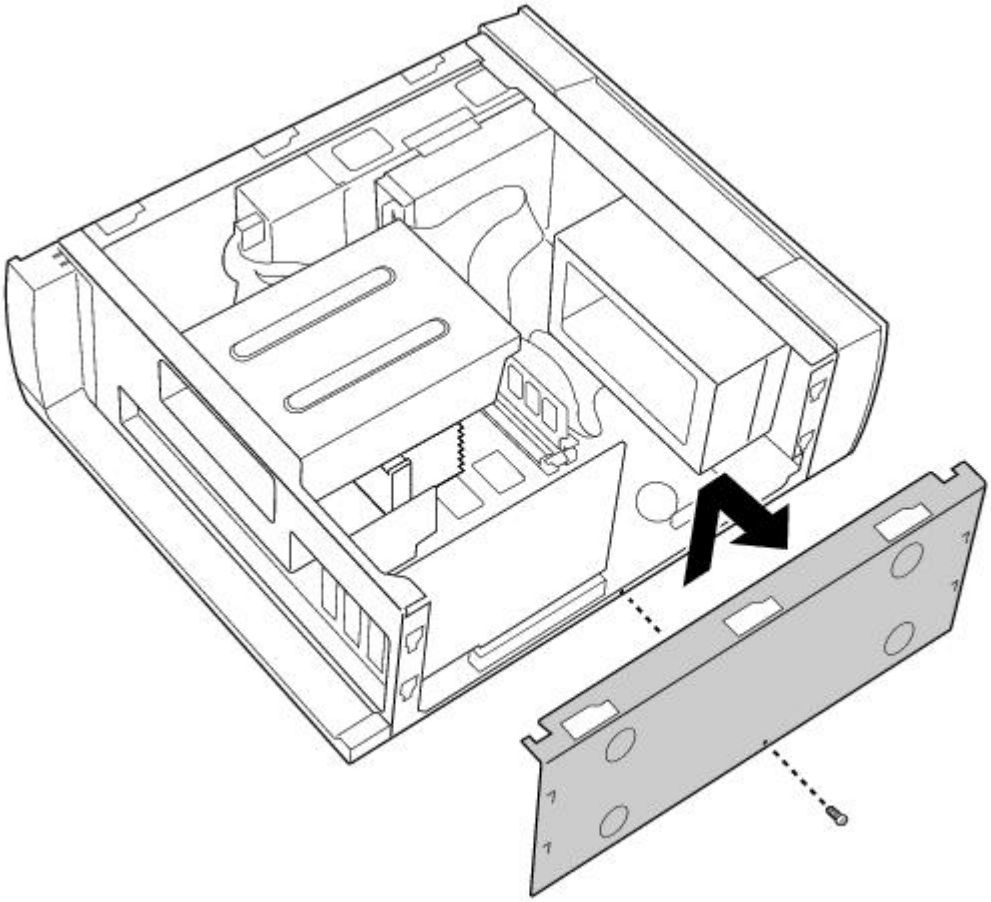

Removing the Front Panel

To remove the front panel

1. Open the CD tray by inserting a thin, pointed object into the emergency eject opening.
2. Slide the CD tray forward.
3. Remove the front cover of the CD tray by lifting it upwards.

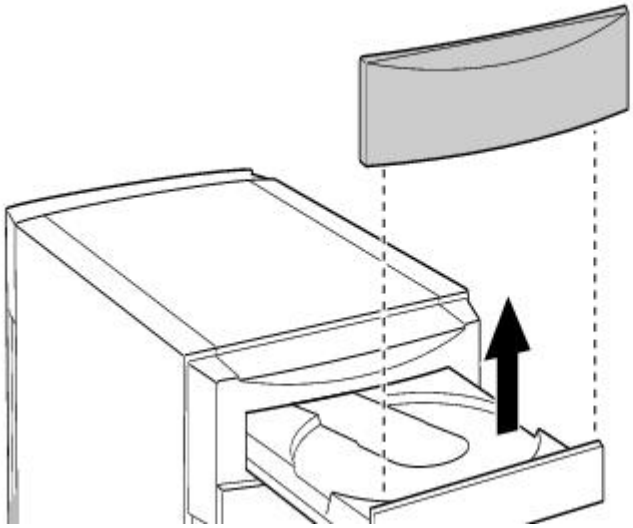

4. Press down on each of the two tabs on the bottom of the front panel to release the panel.
5. Pull the front panel forward to remove it.

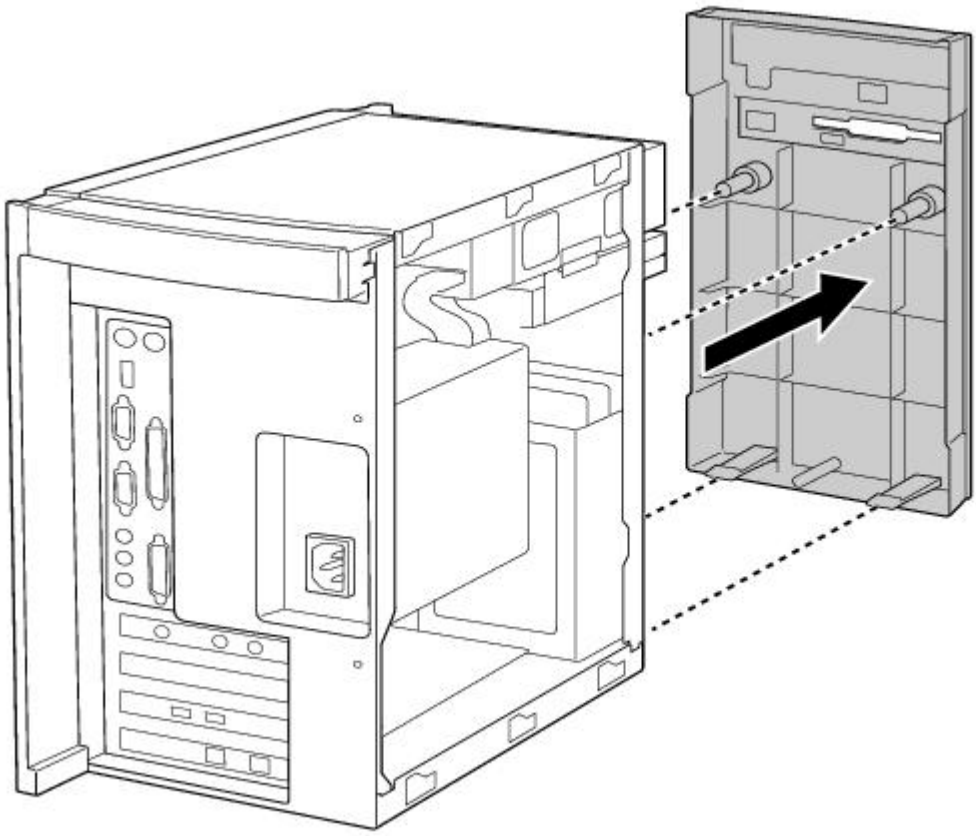

Detaching the Diskette Drive

To detach the diskette drive

1. Remove the front panel, as described in Removing the Front Panel.
2. Remove the two screws that secure the diskette drive to the front of the chassis.
3. Pull the diskette drive forward.

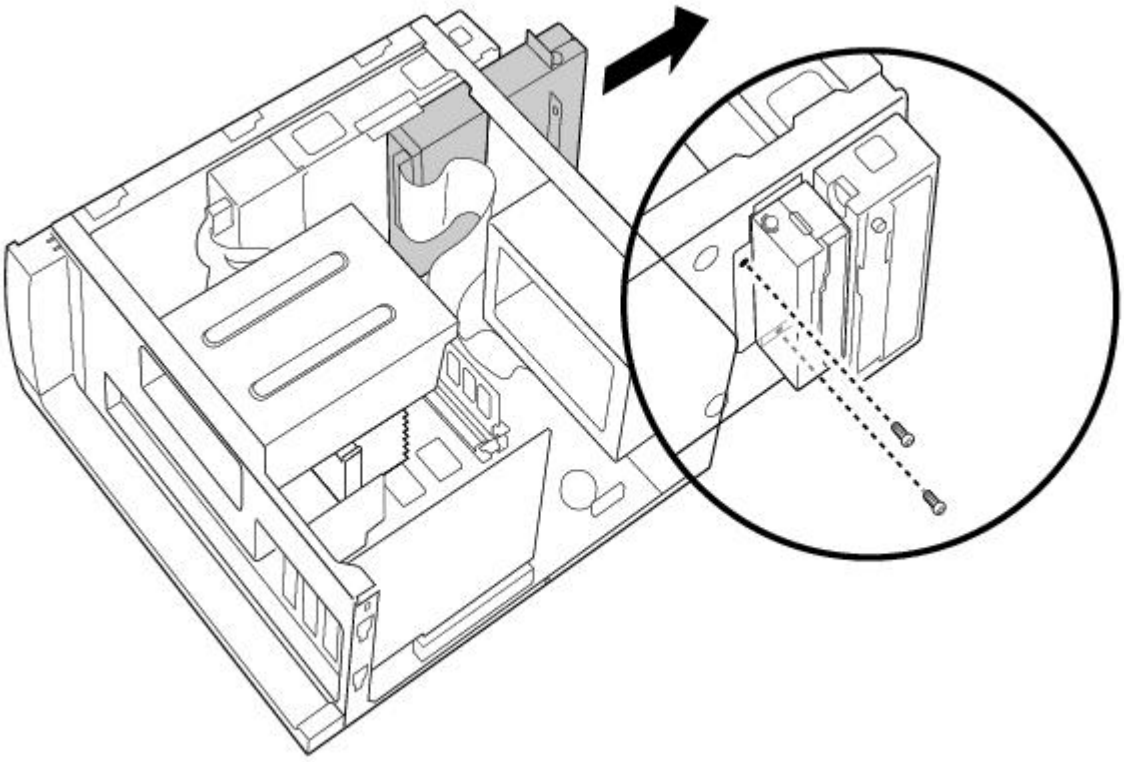

If you are adding memory, you do not need to completely remove the diskette drive or disconnect the cable.

Replacing the Diskette Drive

To replace the diskette drive

1. Push the diskette drive straight into the drive slot.
2. Replace the two screws that secure the diskette drive to the front of the chassis.
3. Replace the front panel, as described in Replacing the Front Panel.

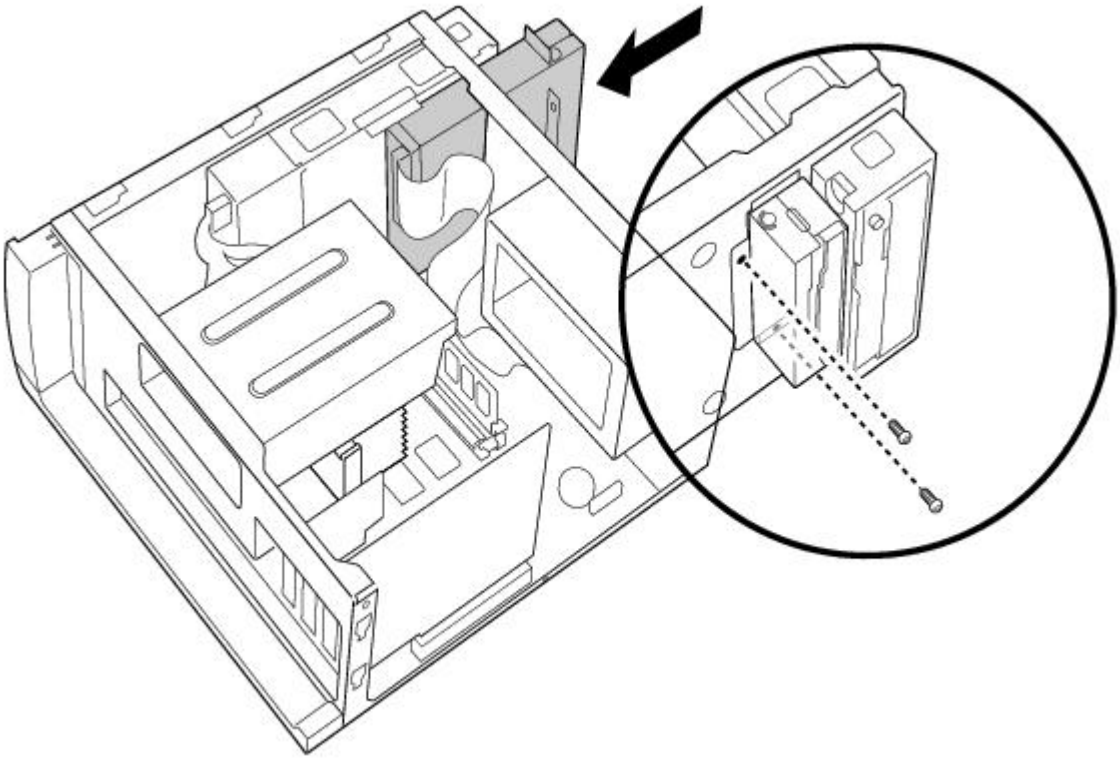

Replacing the Bottom Panel

To replace the bottom panel

1. Align the bottom panel with the screw hole on the bottom of the chassis.
2. Replace the screw that secures the bottom panel to the chassis.

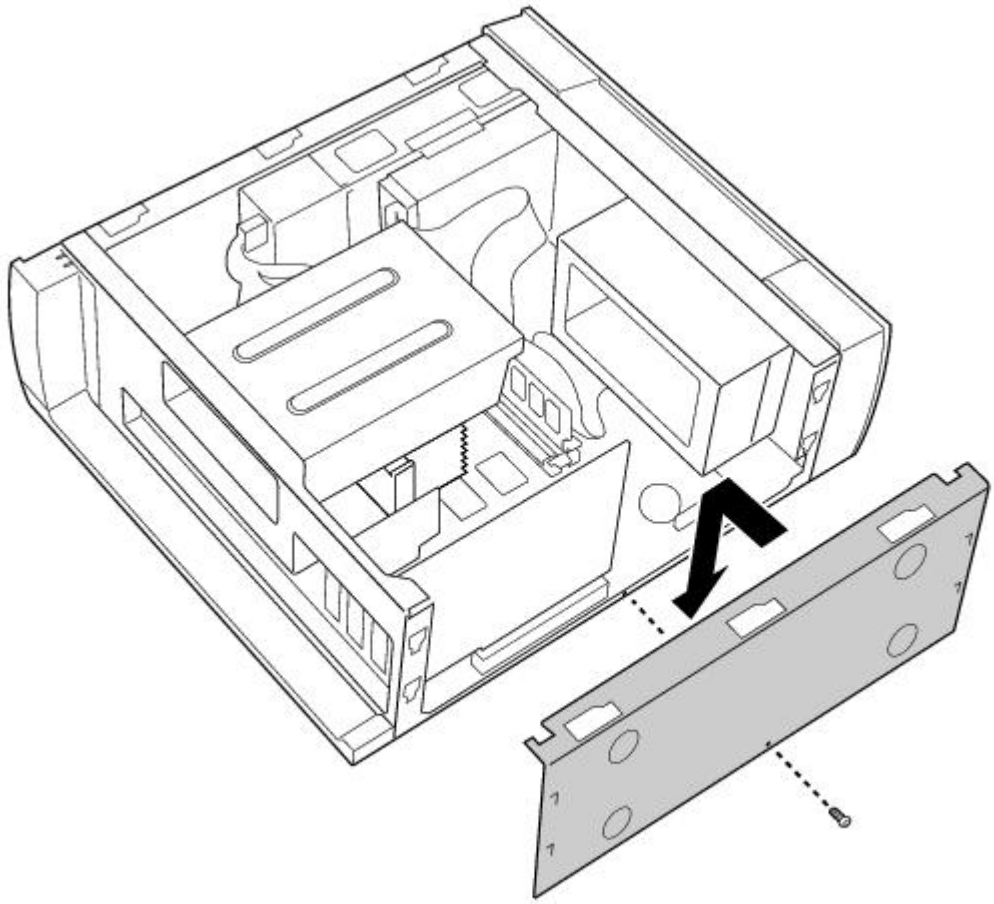

Replacing the Front Panel

To replace the front panel

1. Push the front panel straight onto the front of the chassis until it clicks into place.

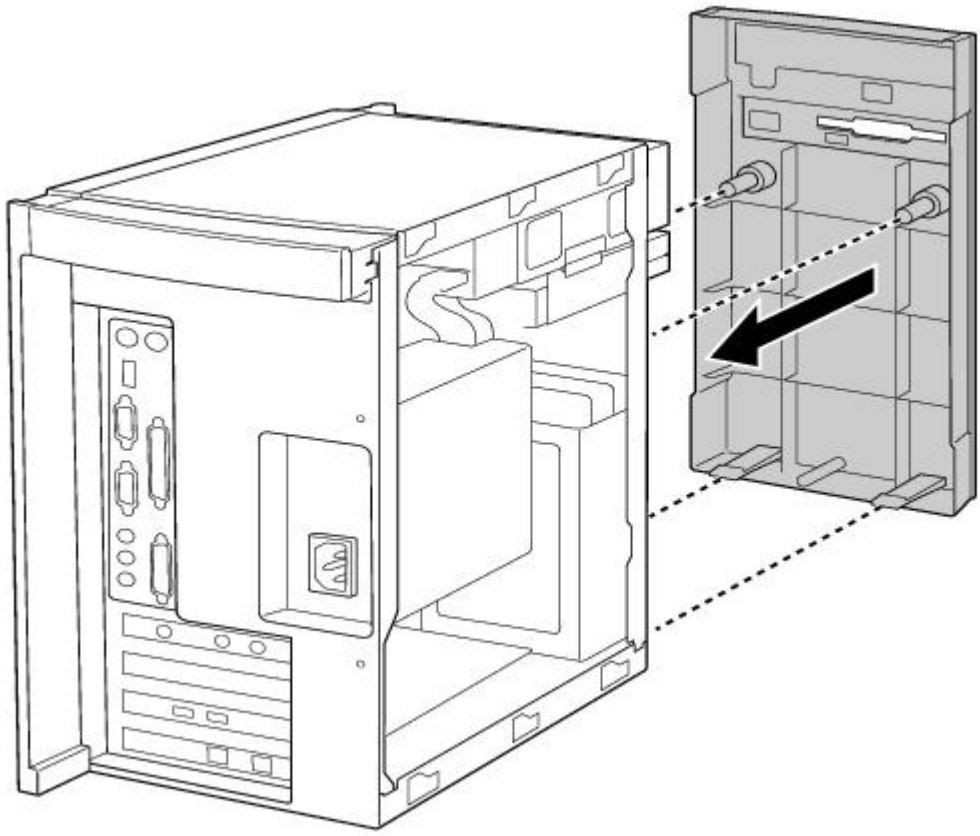

2. Replace the front cover of the CD tray by sliding it down onto the front of the open tray.
3. Close the CD tray.

Replacing the Left-Side Panel

To replace the left-side panel

1. Slide the panel forward until it stops.
2. Replace the two screws that secure the panel to the chassis.

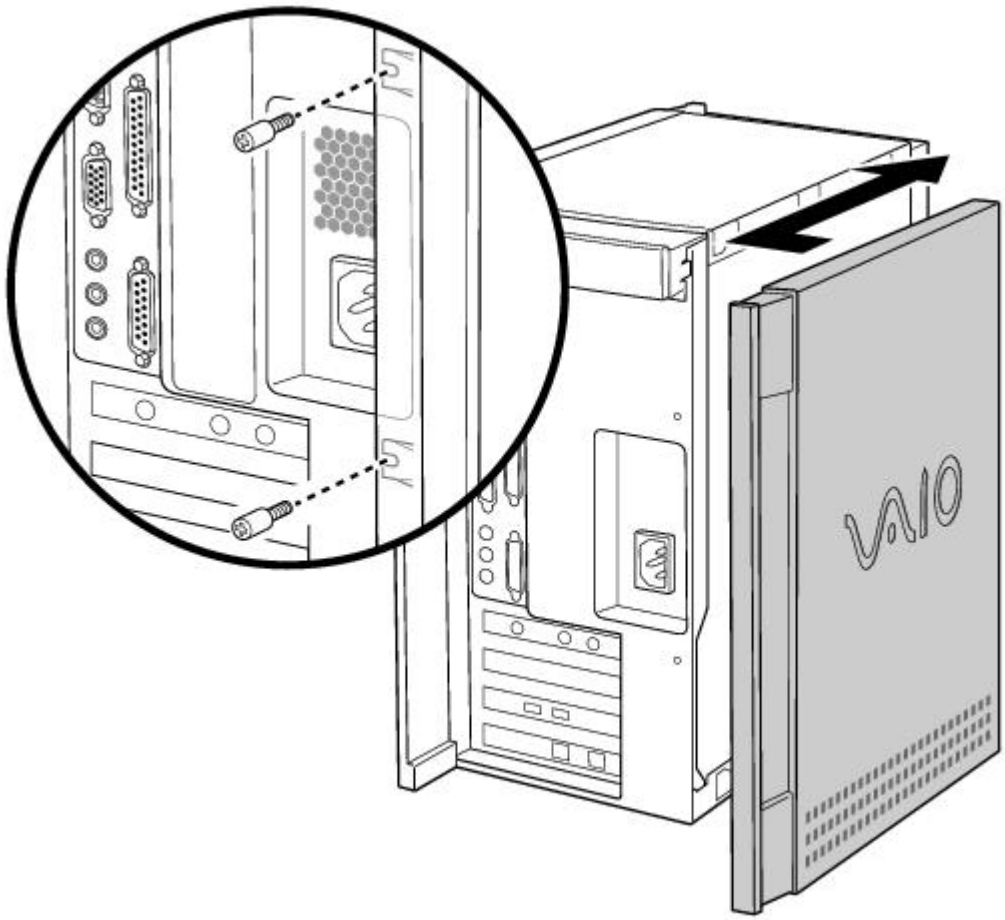

Upgrading and Maintaining Your VAIO Digital Studio Computer

In the future you may want to install additional boards to expand the functionality of your computer. This section describes how to open your computer and insert add-in boards, add memory, replace the lithium battery, and install an additional hard disk drive. For more information on upgrading your Sony computer, see the *VAIO Digital Studio Computer Reference Manual*. You can download this electronic document from the Sony Web site at http://www.sony.com/pcsupport.

The procedures in this section assume you are familiar with the general terminology associated with personal computers and with the safety practices and regulatory compliance required for using and modifying electronic equipment. Read Notes on Use before upgrading your Sony computer.

Always switch the power off before you open the system or connect your computer to peripheral equipment; otherwise, damage may occur to the integrated circuits in your computer.

Electrostatic discharge (ESD) can damage disk drives, add-in cards, and other components. Do the procedures described here only at an ESD workstation. If such a station is not available, do not work in a carpeted area and do not handle materials that produce or hold static electricity (cellophane wrappers, for example). Ground yourself by maintaining continuous contact with an unpainted metal portion of the chassis while performing the procedure.

Inserting an Add-in Board

You can add up to two additional PCI boards to the system.

Your VAIO Digital Studio Computer cannot accommodate PCI add-in boards exceeding 7.7" in length.

To insert an add-in board

Make sure you observe the proper safety precautions when you add boards to your Sony computer. See Notes on Use.

1. Shut down your computer and turn off all peripheral devices, such as your printer, display, and speakers.
2. Unplug your computer and any peripheral devices.
3. Remove the left-side panel as described in Removing the Left-Side Panel.
4. Identify the expansion slot where you want to insert the add-in board.
5. Remove the slot cover for the slot you have chosen.

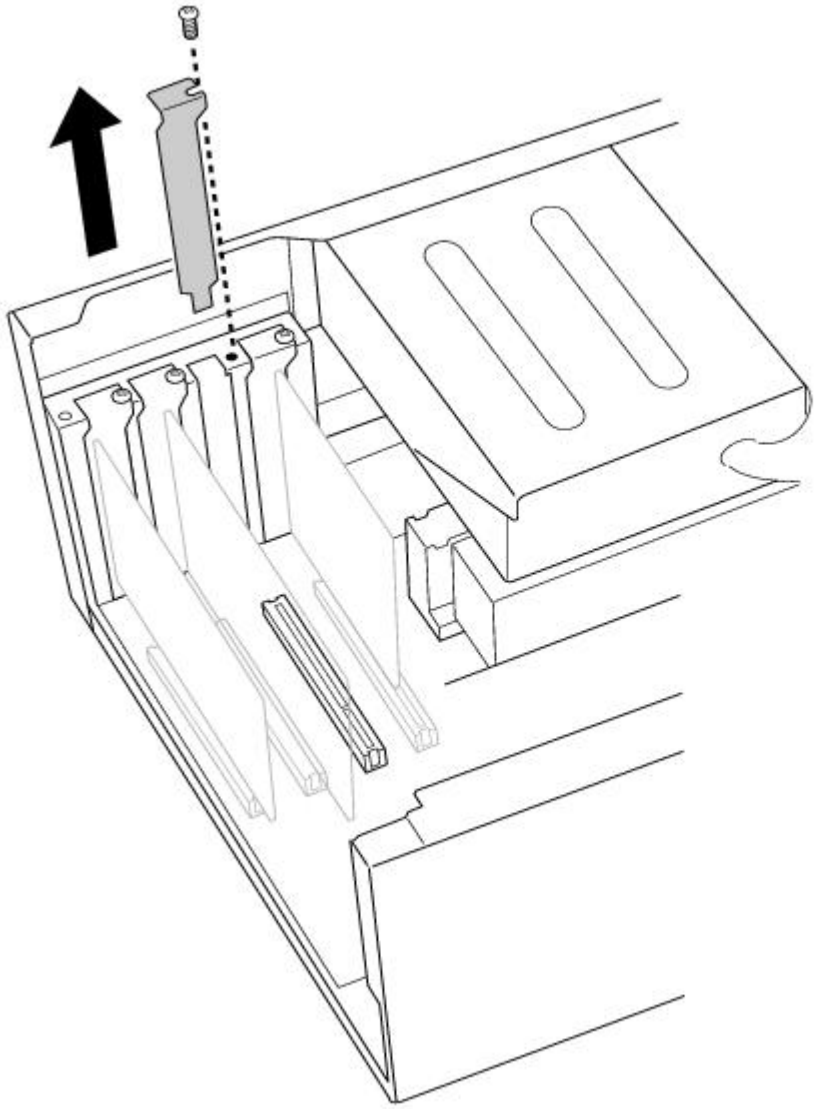

6. Install the add-in board by plugging it into the expansion slot on the system board. Attach any internal cables that the board requires (see the manual for the add-in board).

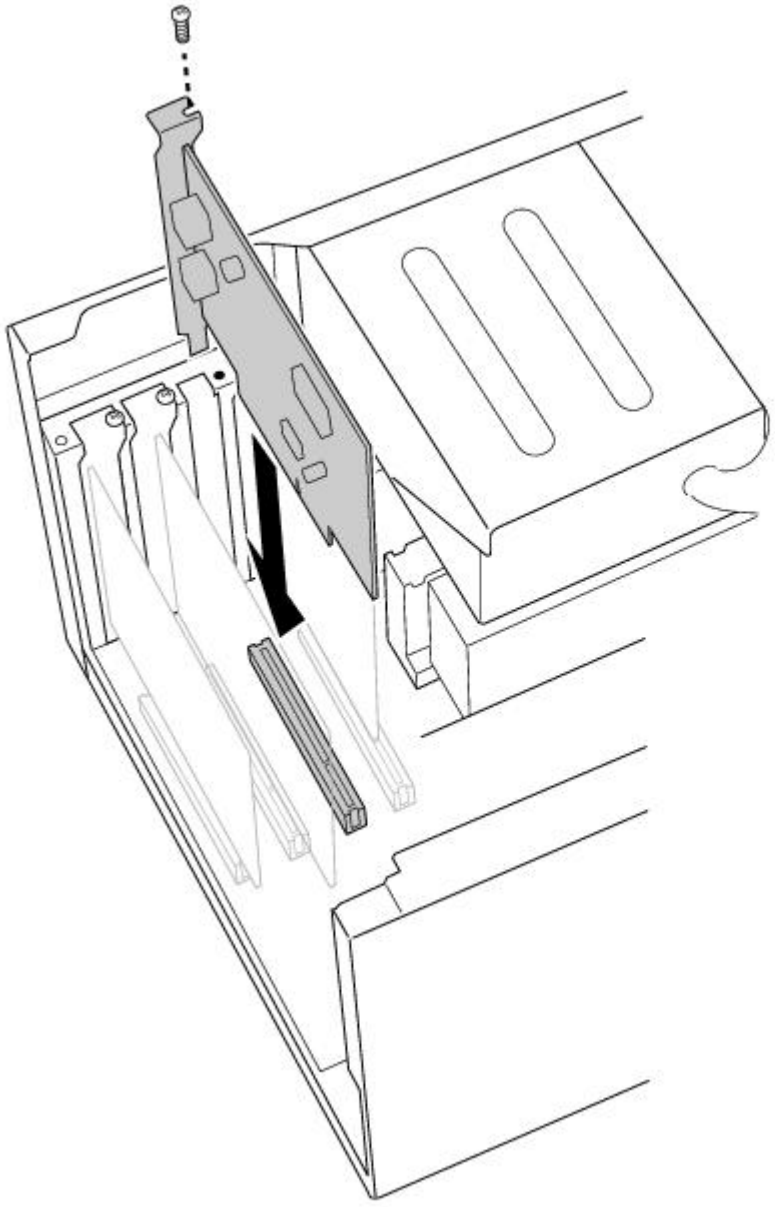

7. Replace the left-side panel as described in Replacing the Left-Side Panel.

Adding Memory

In order to increase your computer's memory, you may need to remove one of the factory-installed DIMMs and replace it with one of greater capacity. For details, see the *VAIO Digital Studio Computer Reference Manual*, which is available at Sony's Web site at http://www.sony.com/pcsupport.

For memory upgrades, use only 3.3V unbuffered 4-clock 64-bit 66 MHz SDRAM DIMM module Rev1.0 or 3.3V unbuffered 4-clock 72-bit 66 MHz SDRAM DIMM module Rev1.0. For more information on Digital Studio Computer compatible memory, call Sony at 1-888-4SONYPC (1-888-476-6972).

To install memory

Make sure you observe the proper safety precautions when you add DIMMs to your Sony computer. See Notes on Use .

1. Shut down your computer and turn off all peripheral devices, such as your printer, display, and speakers.
2. Unplug your computer and any peripheral devices.
3. Remove the left-side panel, bottom panel, and front panel, as described in Removing the Left-Side Panel. Then detach the diskette drive, as described in Detaching the Diskette Drive.

You do not need to completely remove the diskette drive in order to access the DIMM sockets.

4. If necessary, remove any cables, add-in cards, or other components to access the DIMM sockets.
5. Remove either (or both) of the factory-installed DIMMs.
6. Handle the DIMM only by the edges, and remove it from its anti-static package.
7. Locate the keys on the bottom edge of the DIMM .
8. Align the DIMM over the socket.

To avoid damaging the DIMM socket, move the DIMM socket tabs slightly outward to relieve pressure. The DIMM should then click easily into place.

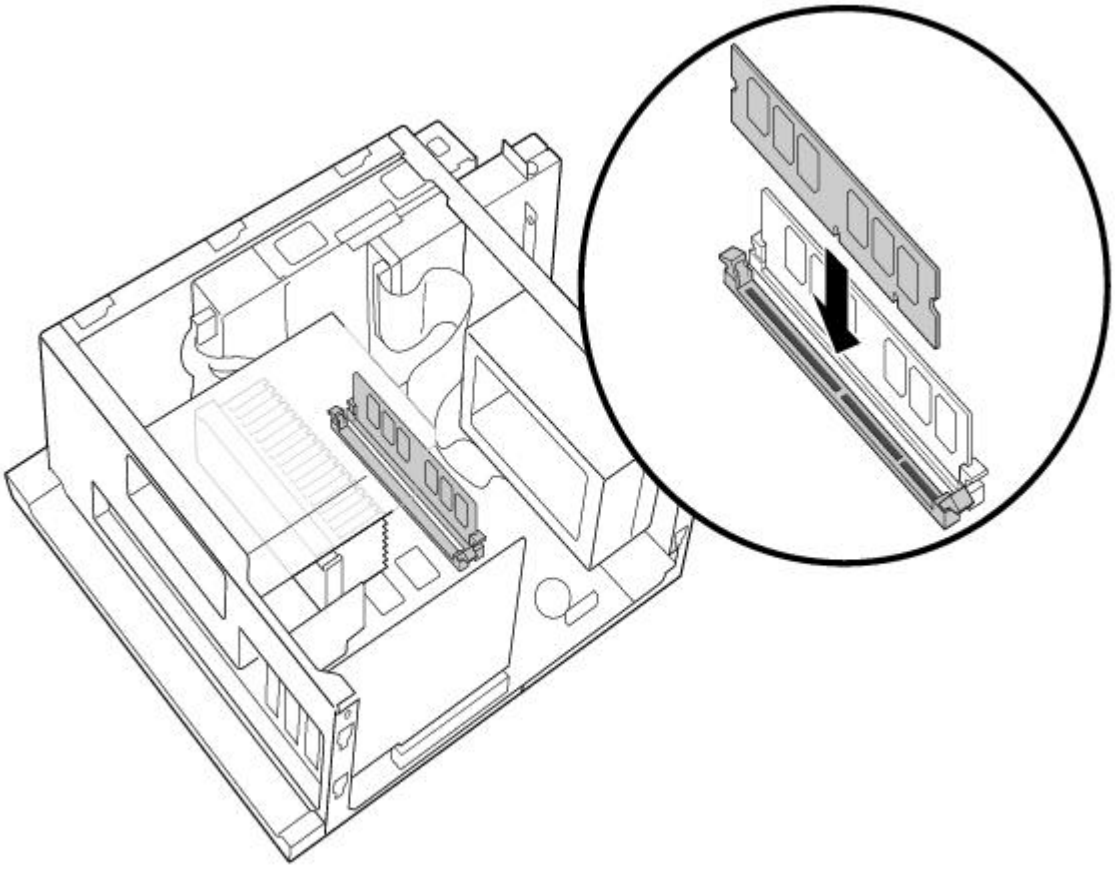

9. Firmly insert the bottom edge of the DIMM into the socket.
10. Press evenly against the DIMM's upper corners. The end latches snap into position automatically.
11. Reinstall any add-in cards or components you removed.
12. Replace the diskette drive and cover panels, as described in Replacing the Diskette Drive to Replacing the Left-Side Panel.

Replacing the Lithium Battery

After several years, when the lithium battery starts to weaken, the system settings stored in CMOS RAM, such as the date and time, may be wrong. When this occurs, you need to replace the lithium battery.

To replace the lithium battery

1. To run the Setup utility, press F3 when your computer is starting up. Then press F1 to run the BIOS setup utility.

2. Write down the current BIOS Setup options.
3. Shut down your computer and turn off all peripheral devices, such as your printer, display, and speakers. Unplug your computer.
4. Remove the left-side and bottom panels, as described in Removing the Left-Side Panel.
5. Install the new battery with the plus (+) side up.

There is danger of explosion if you replace the battery incorrectly. You must replace the battery only with a CR2032 type lithium battery. Discard used batteries according to the instructions on On Disposal of the Lithium Battery.

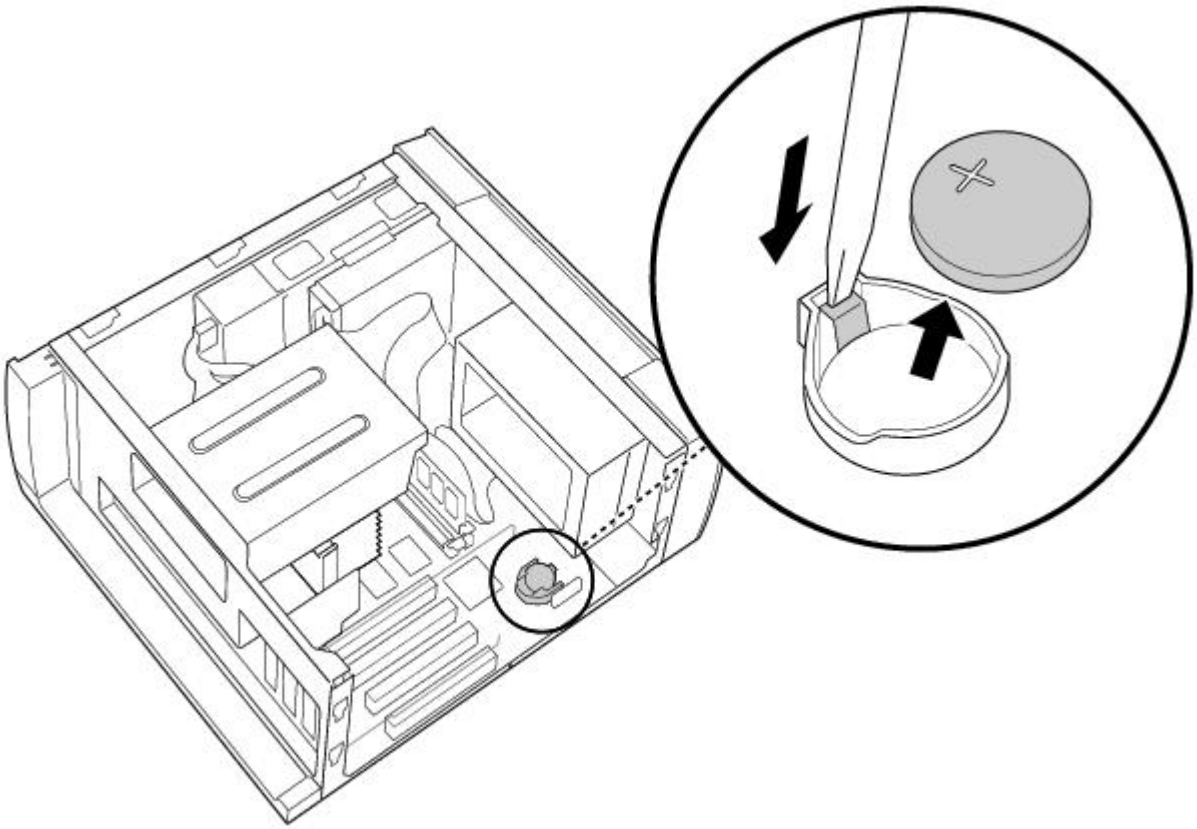

6. Replace the bottom and left-side panels, as described in Replacing the Bottom Panel.

The values stored in the CMOS memory are now reset to the factory default values. You must run the Setup utility to reset the date, time, passwords, and other options. See the VAIO Digital Studio Computer Reference Manual for details.

7. To run the Setup utility, press F3 when your computer is starting up. Then press F1 to run the BIOS setup utility.
8. Change the default values to the values you wrote down in step 2.
9. Save your Setup changes, and then exit the Setup utility.

Installing an Internal Hard Disk Drive

Your VAIO Digital Studio Computer comes with an available bay to hold an additional hard disk drive. The drive you install must not require front panel access. The hard disk drive access light blinks when either internal drive is active.

Before opening the system unit, save any open files, exit Windows, turn off the power of the computer and all attached peripherals, and then unplug the power cord.

1. Configure the jumpers on the new drive as a primary slave (see your drive's documentation for

configuration instructions).

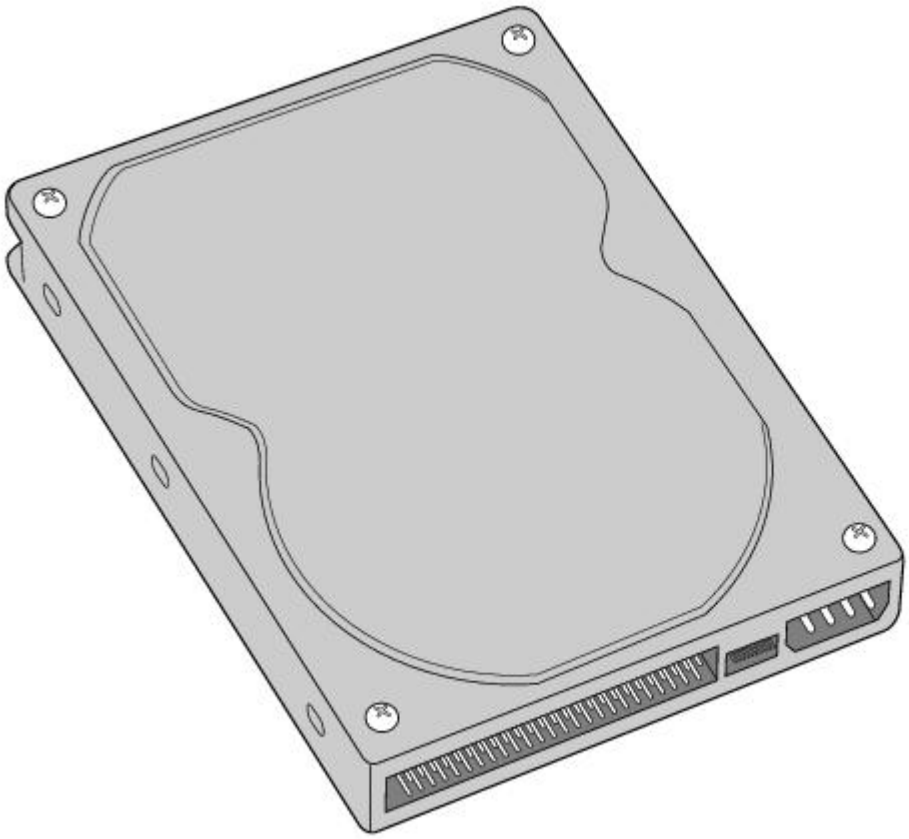

2. Remove the left-side panel, as described in Removing the Left-Side Panel.
3. Remove the front panel, as described in Removing the Front Panel.
4. Remove the bottom panel, as described in Removing the Bottom Panel.
5. Lay the system on its right side (left side faces up-see diagram that follows).
6. Remove the two screws that secure the drive holder.
7. Slide the drive holder forward and then out.

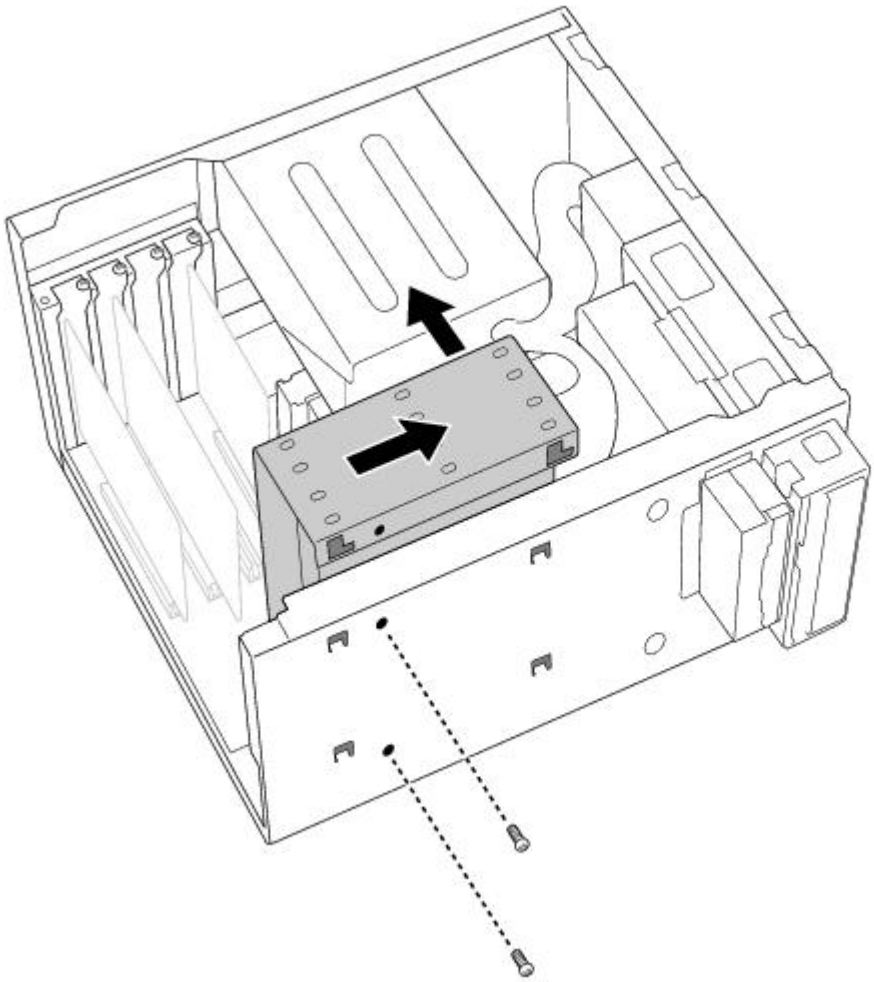

8. Place the drive holder upside down on top of the power supply.

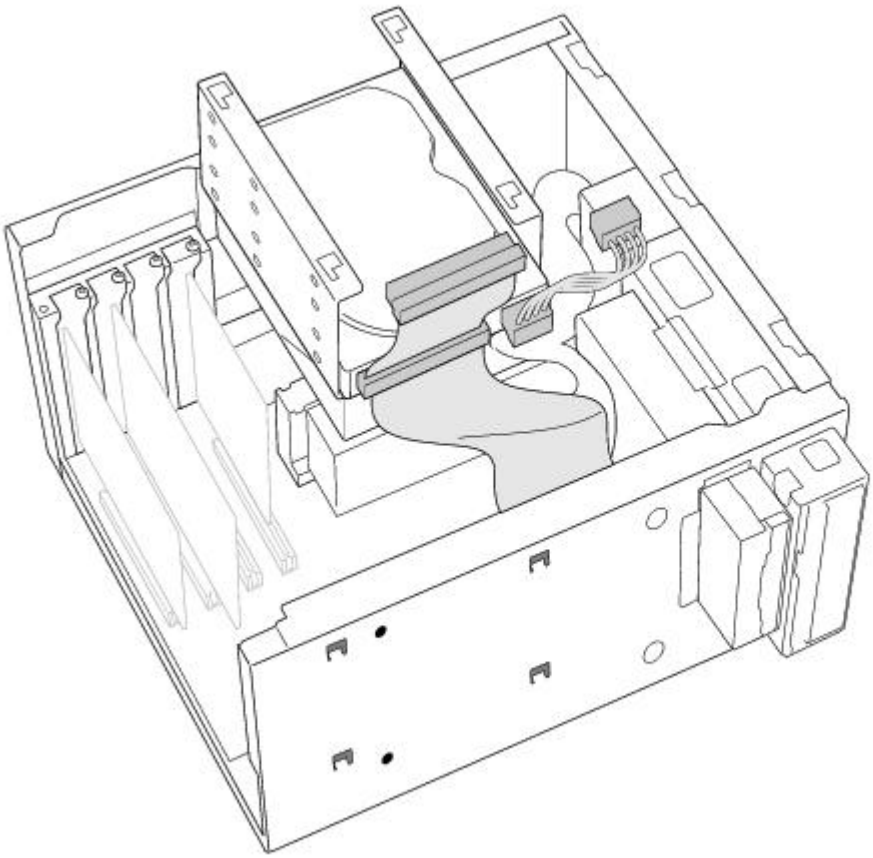

9. Slide the new drive into the drive holder and align the holes on each side of the drive bay.

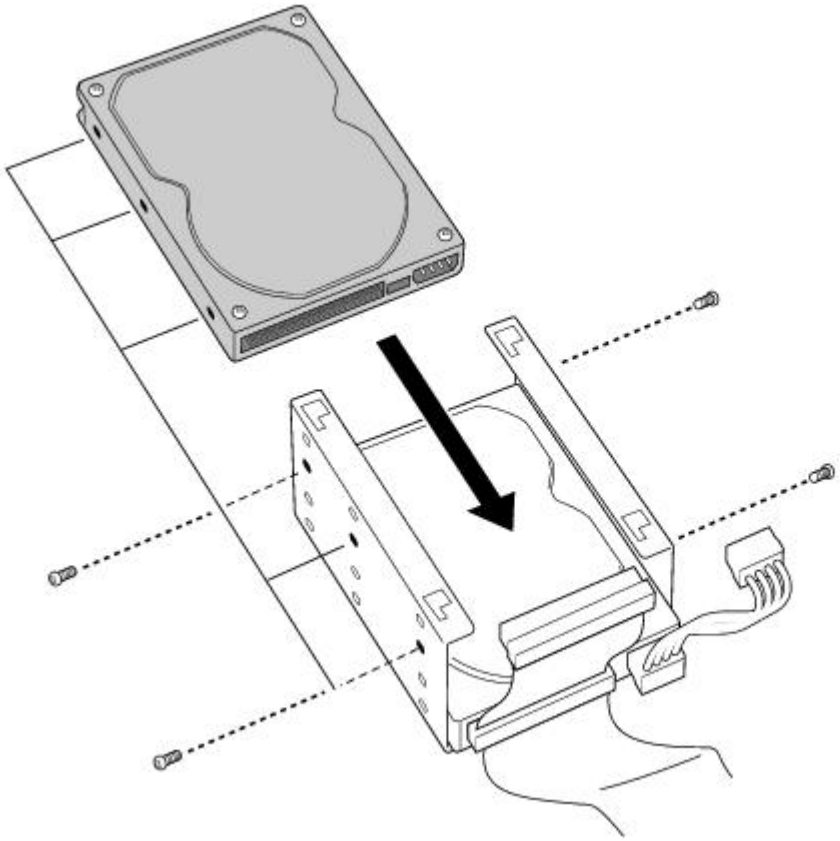

10. Secure the drive to the drive holder using any two of the three holes on each side of the drive holder (screws are provided with the new drive). Do not overtighten the screws.
11. Connect the second drive connector to the new drive.
12. Connect the second power connector to the new drive.

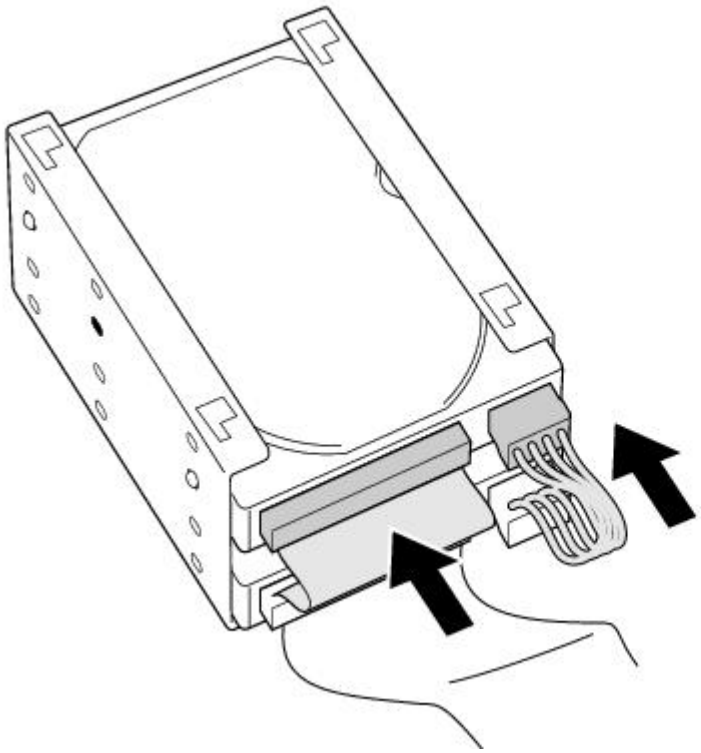

13. Place the drive holder against the inside of the front chassis and slide it back. Be sure to align the slots on the drive holder with the tabs on the inside of the chassis. Be sure to slide the drive holder back so that the tabs slip into the notch at the bottom of the slot.

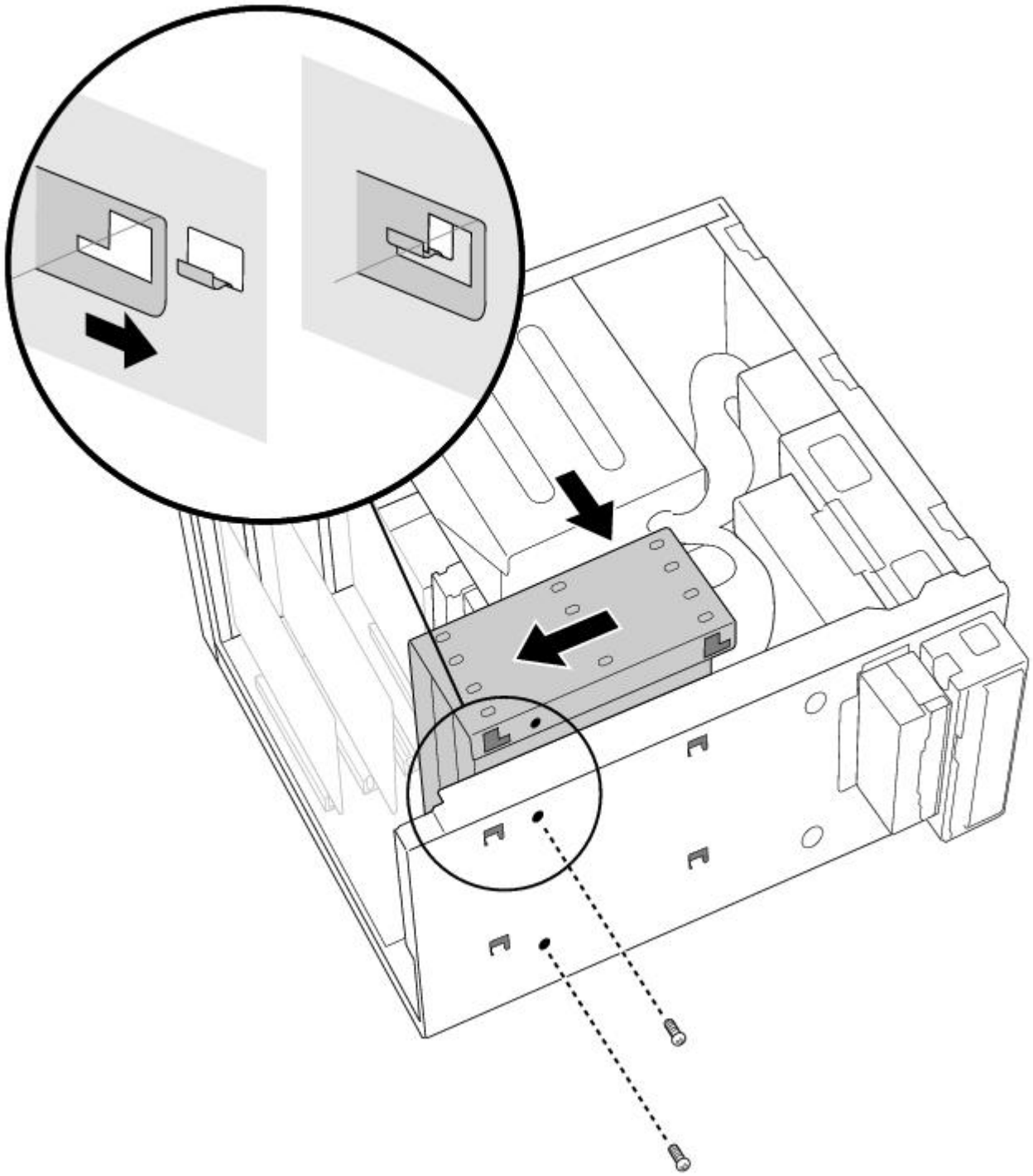

14. Replace the two screws that secure the holder to the chassis.
15. Replace the bottom panel, as described in Replacing the Bottom Panel.
16. Replace the front panel, as described in Replacing the Front Panel.
17. Replace the left-side panel, as described in Replacing the Left-Side Panel.
18. Reconnect the power cord and then turn on your computer.

Your computer automatically recognizes the new drive and configures itself accordingly when you turn it on. Format and partition the new drive following the instructions provided with the drive.

Removing the Left-Side Panel

To remove the left-side panel

1. Remove the two screws that secure the panel to the chassis.
2. Slide the panel back until it stops.
3. Pull the panel straight out to remove it.

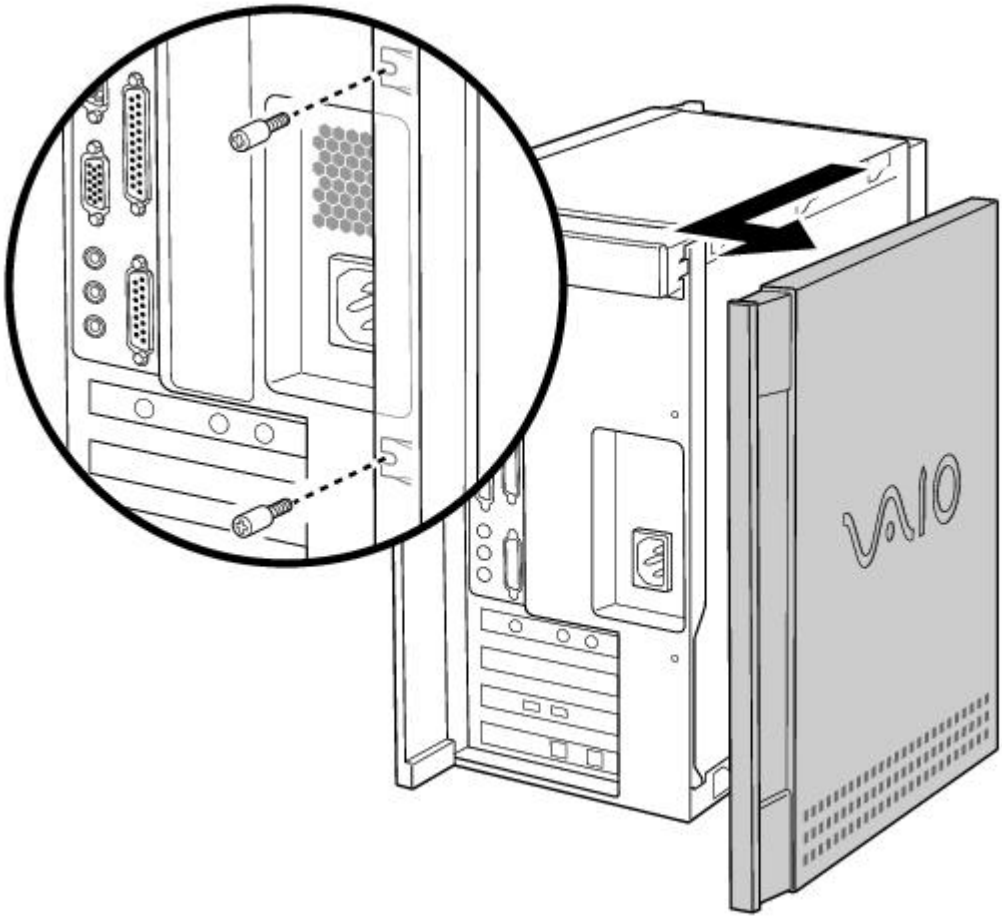

Removing the Bottom Panel

To remove the bottom panel

1. Remove the screw that secures the bottom panel to the chassis.
2. Pull the bottom panel straight out to remove it.

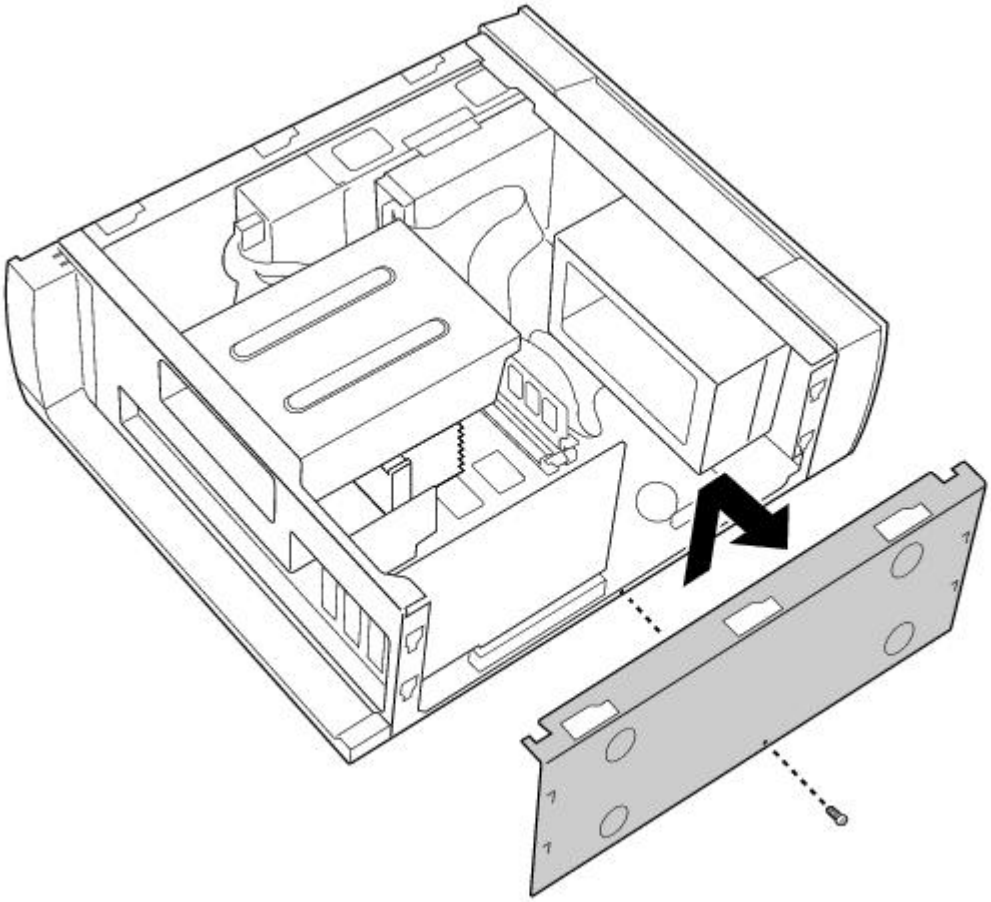

Removing the Front Panel

To remove the front panel

1. Open the CD tray by inserting a thin, pointed object into the emergency eject opening.
2. Slide the CD tray forward.
3. Remove the front cover of the CD tray by lifting it upwards.

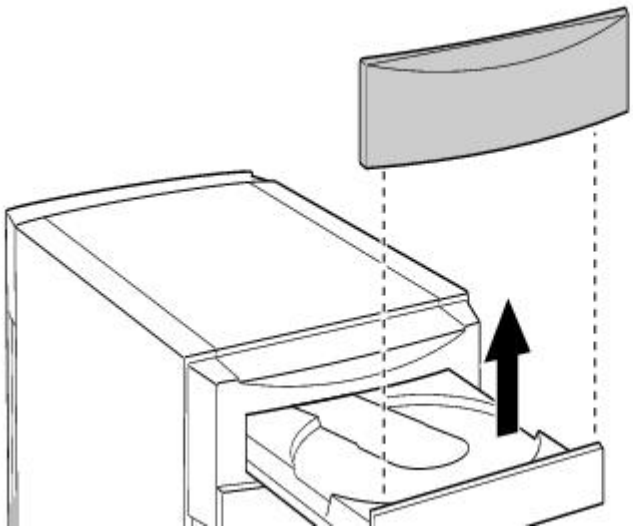

4. Press down on each of the two tabs on the bottom of the front panel to release the panel.
5. Pull the front panel forward to remove it.

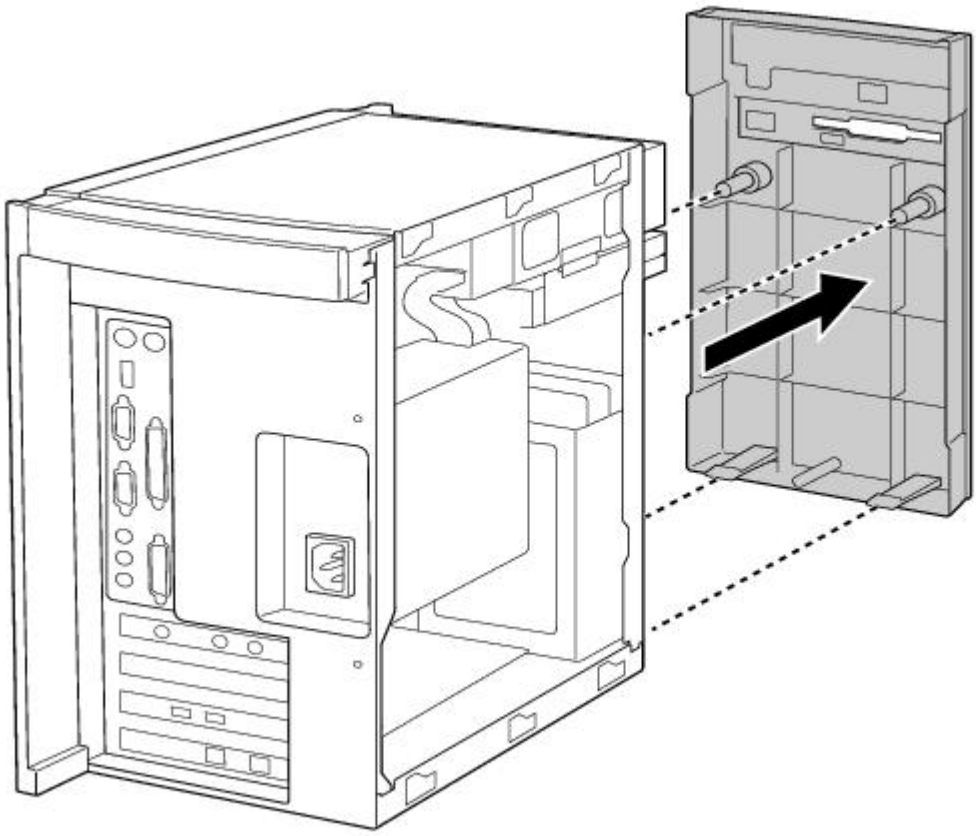

Detaching the Diskette Drive

To detach the diskette drive

1. Remove the front panel, as described in Removing the Front Panel.
2. Remove the two screws that secure the diskette drive to the front of the chassis.
3. Pull the diskette drive forward.

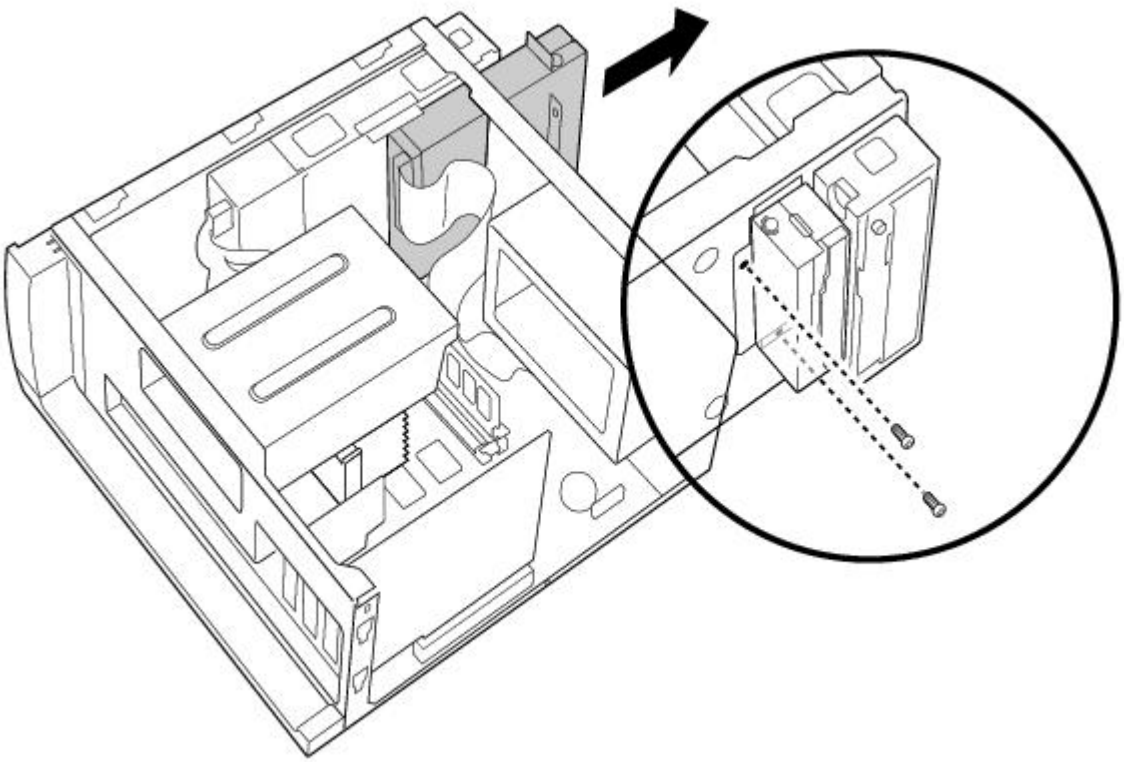

If you are adding memory, you do not need to completely remove the diskette drive or disconnect the cable.

Replacing the Diskette Drive

To replace the diskette drive

1. Push the diskette drive straight into the drive slot.
2. Replace the two screws that secure the diskette drive to the front of the chassis.
3. Replace the front panel, as described in Replacing the Front Panel.

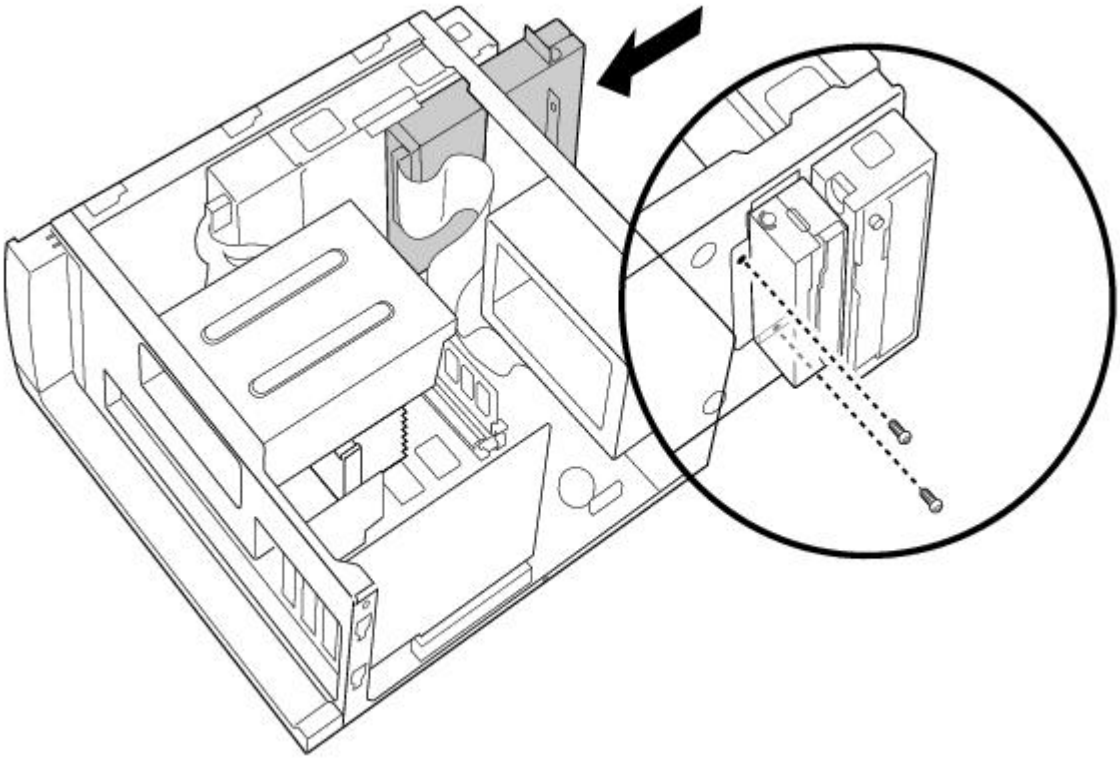

Replacing the Bottom Panel

To replace the bottom panel

1. Align the bottom panel with the screw hole on the bottom of the chassis.
2. Replace the screw that secures the bottom panel to the chassis.

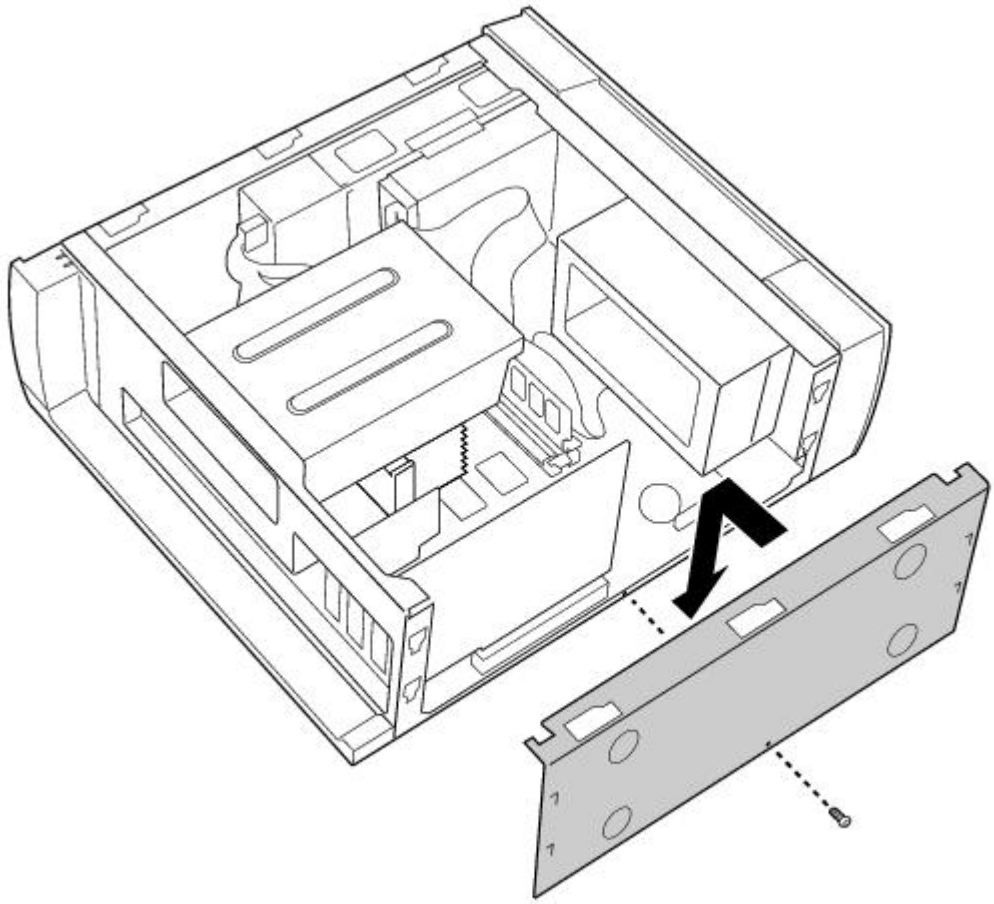

Replacing the Front Panel

To replace the front panel

1. Push the front panel straight onto the front of the chassis until it clicks into place.

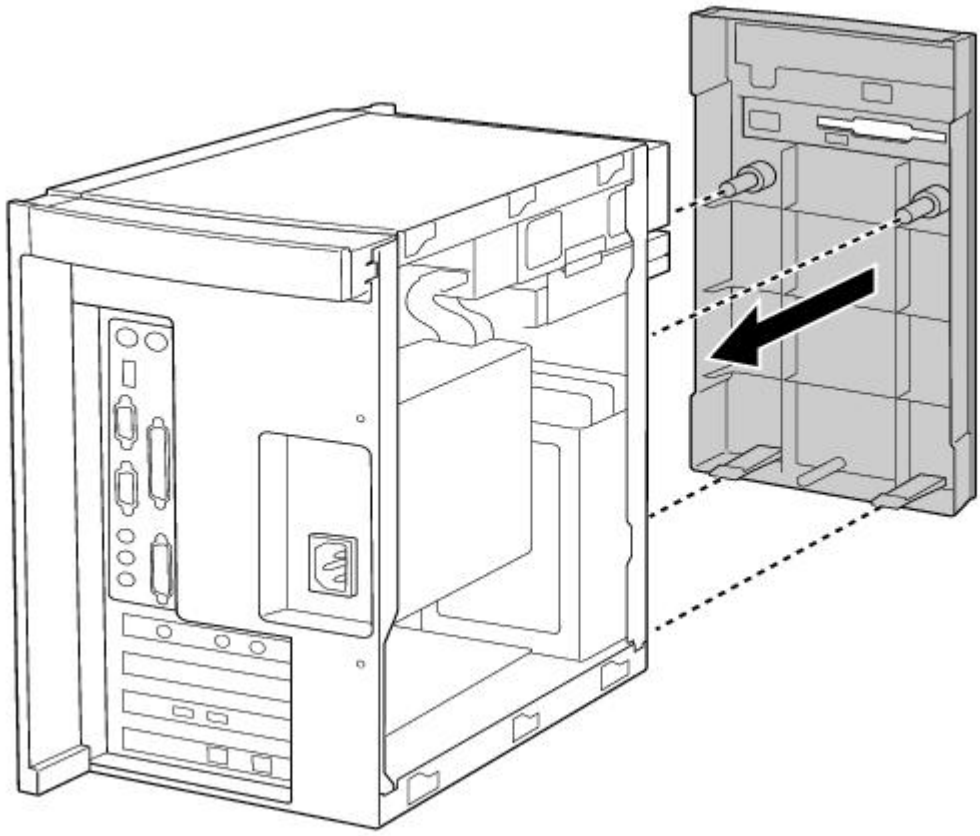

2. Replace the front cover of the CD tray by sliding it down onto the front of the open tray.
3. Close the CD tray.

Replacing the Left-Side Panel

To replace the left-side panel

1. Slide the panel forward until it stops.
2. Replace the two screws that secure the panel to the chassis.

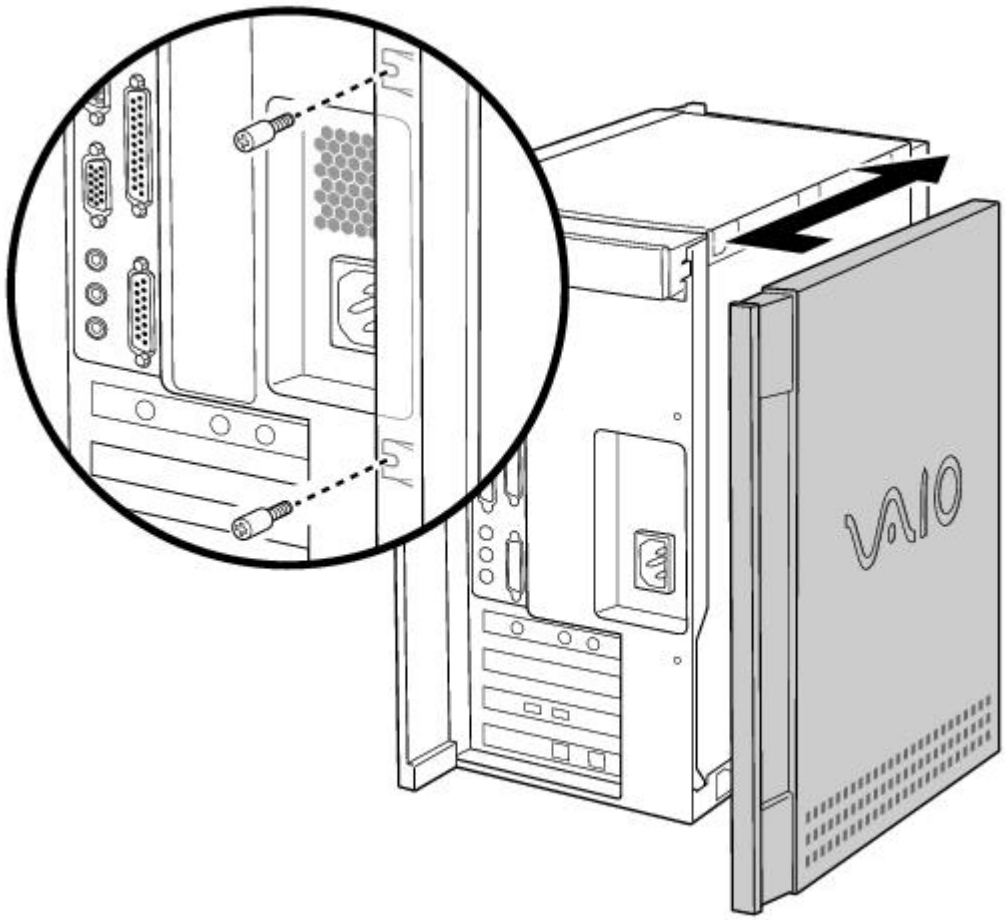

Other Information

Notes on Use

On the Power Source

- Your computer operates on 100-120 V AC 50/60 Hz for North American countries.
- The total power draw of installed add-in cards must not exceed the specifications for the power supply. Do not overload the system by installing add-in cards that draw excessive current. The system is designed to provide 2 amps (average) of 5V power for each card in the system not to exceed a total of 12 amps. The total from +5V current draw in a fully-loaded system (with all the add-in card slots filled) must not exceed 12 amps. If you add components to the system that draw current from the power supply, the maximum combined +3.3V and +5V output must not exceed 80 watts.
- Plug all the power cords for your computer and its peripheral equipment into the same AC supply line. AC derived from different supply lines may result in voltage differences that can cause unstable operation or unwanted weak currents at the time of connection.
- Do not share the AC outlet with any other power-consuming equipment, such as copying machines or shredders.
- You can purchase a power strip with a surge protector. This device prevents damage to your computer caused by sudden power surges such as those that may occur during an electrical storm.
- If you live in an area that experiences frequent power fluctuations, you may want to purchase a UPS (Uninterrupted Power Supply). This device contains both a surge protector and a battery backup. The surge protector prevents damage to your computer caused by power surges. The battery backup safeguards your data during a brief period of power loss.
- Do not place heavy objects on the power cord.
- Do not operate the system with the cover removed. Always reinstall the cover before turning on the system.
- To disconnect the cord, pull it out by the plug. Never pull the cord itself.
- Unplug your computer from the wall outlet if you will not be using the computer for a long time.
- The power control button on the front panel does not turn off the system AC power. To remove power from the system, you must shut down the computer as described in this manual and then unplug the AC power cord from the wall outlet or power strip.
- Before touching anything inside the computer, turn the system off and let it cool for ten minutes. This will ensure that the processor heat sink will not be hot.
- Do not attempt to open the power supply. There are no user-serviceable parts in the power supply. To avoid personal injury or damage to your equipment, refer the repair or replacement of the power supply to qualified personnel only.

On Disposal of the Lithium Battery

Dispose of the lithium battery properly. In some areas, the disposal of lithium batteries in household or business trash may be prohibited. You can return your unwanted lithium batteries to your nearest Sony Service Center or Factory Service Center. For the Sony Service Center nearest you, call 1-888-4SONY-PC (1-888-476-6972).

Do not handle damaged or leaking lithium batteries.

The lithium battery may explode if mistreated. Do not disassemble it or dispose of it in fire.

Replace the battery with a Sony CR2032 lithium battery. Using a type of battery other than a CR2032 may present a risk of fire or explosion.

On Handling

- Clean the cabinet with a soft, dry cloth or a soft cloth lightly moistened with a mild detergent solution. Do not use any type of abrasive pad, scouring powder, or solvent such as alcohol or benzine, as it may damage the finish of your Sony computer.
- Should any solid object or liquid fall into the cabinet, keyboard, or mouse, shut down your computer and then unplug it. You may want to have the computer checked by qualified personnel before operating it any further.

On Installation

- Do not place your Sony computer in a location subject to:
    - Heat sources, such as radiators or air ducts
    - Direct sunlight
    - Excessive dust
    - Mechanical vibration or shock
    - Strong magnets or speakers that are not magnetically shielded
    - Ambient temperature of more than 95ºF (35ºC) or less than 50ºF (10ºC)
    - High humidity, moisture, or rain
- Do not place electronic equipment near your computer. The computer's electromagnetic field may cause a malfunction.
- Provide adequate air circulation to prevent internal heat build-up. Do not place your computer on loose surfaces (such as rugs or blankets) or near materials (such as curtains or draperies) that may block its ventilation slots. Leave a space of at least 8 inches from the back panel of your computer.
- The computer uses high-frequency radio signals and may cause interference to radio or TV reception. Should this occur, relocate the computer a suitable distance away from the set.
- Use only specified peripheral equipment and interface cables; otherwise, problems may result.
- Do not use cut or damaged connection cables.
- Always switch the power off before connecting your computer to peripheral equipment; otherwise, damage may occur to the integrated circuits in your computer.
- Your computer, keyboard, and mouse consist of high-precision electronic parts. Do not drop them or bump them against other objects.
- Your Sony computer will not work with party lines, cannot be connected to a coin-operated telephone, and may not work with multiple phone lines or a private branch exchange (PBX).
- If the telephone company makes a service call to your home or office and determines that your computer is responsible for the problem, the telephone company may bill you for the service call. Also, if you do not disconnect your computer when it is adversely affecting the telephone line, the telephone company has the right to disconnect your service until you correct the problem.

On Moisture Condensation

If your computer is brought directly from a cold location to a warm one, moisture may condense

inside your computer. In this case, allow at least an hour before turning on your computer. If any problem occurs, unplug your computer, and contact your Sony Service Center.

On Upgrading the System

- The procedures described in the Upgrading and Maintaining Your VAIO Digital Studio Computer chapter of the online manual assume familiarity with the general terminology associated with personal computers and with the safety practices and regulatory compliance required for using and modifying electronic equipment.
- Disconnect the system from its power source and from any telecommunications links, networks, or modems before you open the system or do any of the procedures described in the Upgrading and Maintaining Your VAIO Digital Studio Computer chapter of the online manual. Failure to do so may result in personal injury or equipment damage.
- Electrostatic discharge (ESD) can damage disk drives, add-in cards, and other components. Do the procedures described in the Upgrading and Maintaining Your VAIO Digital Studio Computer chapter of the online manual only at an ESD workstation. If such a station is not available, do not work in a carpeted area, and do not handle materials that produce or hold static electricity (cellophane wrappers, for example). Ground yourself by maintaining contact with an unpainted metal portion of the chassis while performing the procedure.
- When removing a slot cover, be careful not to damage components on the system board or add-in cards. You may need to temporarily remove add-in cards that are next to the slot cover you want to remove.

On Using the Hard Disk Drive

- Do not place the computer in a location that is subject to vibration or shock.
- Do not move the computer during operation.
- Do not subject the computer to sudden changes in temperature.
- Do not turn off the power while the computer is accessing the hard disk drive.

On Handling Diskettes

- Do not open the shutter manually and touch the surface of the diskette.
- Keep diskettes away from magnets.
- Keep diskettes away from direct sunlight and other heat sources.

On Handling CD-ROMs and DVD-ROMs

- Do not touch the surface of the disc.
- Do not drop or bend the disc.

On Cleaning CD-ROMs and DVD-ROMs

- Fingerprints and dust on the surface of a disc may cause read errors. Proper care of the disc is essential to maintain its reliability. Do not use solvents such as benzine, thinner, commercially available cleaners or anti-static spray, as they may cause damage to the disc.
- For normal cleaning, hold the disc by its edge and use a soft cloth to wipe the surface from the center out.
- If the disc is badly soiled, moisten a soft cloth with water, wring it out well, and use it to wipe the surface of the disc from the center out. Wipe off any remaining moisture with a dry soft cloth.

Other Information

Notes on Use

On the Power Source

- Your computer operates on 100-120 V AC 50/60 Hz for North American countries.
- The total power draw of installed add-in cards must not exceed the specifications for the power supply. Do not overload the system by installing add-in cards that draw excessive current. The system is designed to provide 2 amps (average) of 5V power for each card in the system not to exceed a total of 12 amps. The total from +5V current draw in a fully-loaded system (with all the add-in card slots filled) must not exceed 12 amps. If you add components to the system that draw current from the power supply, the maximum combined +3.3V and +5V output must not exceed 80 watts.
- Plug all the power cords for your computer and its peripheral equipment into the same AC supply line. AC derived from different supply lines may result in voltage differences that can cause unstable operation or unwanted weak currents at the time of connection.
- Do not share the AC outlet with any other power-consuming equipment, such as copying machines or shredders.
- You can purchase a power strip with a surge protector. This device prevents damage to your computer caused by sudden power surges such as those that may occur during an electrical storm.
- If you live in an area that experiences frequent power fluctuations, you may want to purchase a UPS (Uninterrupted Power Supply). This device contains both a surge protector and a battery backup. The surge protector prevents damage to your computer caused by power surges. The battery backup safeguards your data during a brief period of power loss.
- Do not place heavy objects on the power cord.
- Do not operate the system with the cover removed. Always reinstall the cover before turning on the system.
- To disconnect the cord, pull it out by the plug. Never pull the cord itself.
- Unplug your computer from the wall outlet if you will not be using the computer for a long time.
- The power control button on the front panel does not turn off the system AC power. To remove power from the system, you must shut down the computer as described in this manual and then unplug the AC power cord from the wall outlet or power strip.
- Before touching anything inside the computer, turn the system off and let it cool for ten minutes. This will ensure that the processor heat sink will not be hot.
- Do not attempt to open the power supply. There are no user-serviceable parts in the power supply. To avoid personal injury or damage to your equipment, refer the repair or replacement of the power supply to qualified personnel only.

On Disposal of the Lithium Battery

Dispose of the lithium battery properly. In some areas, the disposal of lithium batteries in household or business trash may be prohibited. You can return your unwanted lithium batteries to your nearest Sony Service Center or Factory Service Center. For the Sony Service Center nearest you, call 1-888-4SONY-PC (1-888-476-6972).

Do not handle damaged or leaking lithium batteries.

The lithium battery may explode if mistreated. Do not disassemble it or dispose of it in fire.

Replace the battery with a Sony CR2032 lithium battery. Using a type of battery other than a CR2032 may present a risk of fire or explosion.

On Handling

- Clean the cabinet with a soft, dry cloth or a soft cloth lightly moistened with a mild detergent solution. Do not use any type of abrasive pad, scouring powder, or solvent such as alcohol or benzine, as it may damage the finish of your Sony computer.
- Should any solid object or liquid fall into the cabinet, keyboard, or mouse, shut down your computer and then unplug it. You may want to have the computer checked by qualified personnel before operating it any further.

On Installation

- Do not place your Sony computer in a location subject to:
    - Heat sources, such as radiators or air ducts
    - Direct sunlight
    - Excessive dust
    - Mechanical vibration or shock
    - Strong magnets or speakers that are not magnetically shielded
    - Ambient temperature of more than 95ºF (35ºC) or less than 50ºF (10ºC)
    - High humidity, moisture, or rain
- Do not place electronic equipment near your computer. The computer's electromagnetic field may cause a malfunction.
- Provide adequate air circulation to prevent internal heat build-up. Do not place your computer on loose surfaces (such as rugs or blankets) or near materials (such as curtains or draperies) that may block its ventilation slots. Leave a space of at least 8 inches from the back panel of your computer.
- The computer uses high-frequency radio signals and may cause interference to radio or TV reception. Should this occur, relocate the computer a suitable distance away from the set.
- Use only specified peripheral equipment and interface cables; otherwise, problems may result.
- Do not use cut or damaged connection cables.
- Always switch the power off before connecting your computer to peripheral equipment; otherwise, damage may occur to the integrated circuits in your computer.
- Your computer, keyboard, and mouse consist of high-precision electronic parts. Do not drop them or bump them against other objects.
- Your Sony computer will not work with party lines, cannot be connected to a coin-operated telephone, and may not work with multiple phone lines or a private branch exchange (PBX).
- If the telephone company makes a service call to your home or office and determines that your computer is responsible for the problem, the telephone company may bill you for the service call. Also, if you do not disconnect your computer when it is adversely affecting the telephone line, the telephone company has the right to disconnect your service until you correct the problem.

On Moisture Condensation

If your computer is brought directly from a cold location to a warm one, moisture may condense

inside your computer. In this case, allow at least an hour before turning on your computer. If any problem occurs, unplug your computer, and contact your Sony Service Center.

On Upgrading the System

- The procedures described in the Upgrading and Maintaining Your VAIO Digital Studio Computer chapter of the online manual assume familiarity with the general terminology associated with personal computers and with the safety practices and regulatory compliance required for using and modifying electronic equipment.
- Disconnect the system from its power source and from any telecommunications links, networks, or modems before you open the system or do any of the procedures described in the Upgrading and Maintaining Your VAIO Digital Studio Computer chapter of the online manual. Failure to do so may result in personal injury or equipment damage.
- Electrostatic discharge (ESD) can damage disk drives, add-in cards, and other components. Do the procedures described in the Upgrading and Maintaining Your VAIO Digital Studio Computer chapter of the online manual only at an ESD workstation. If such a station is not available, do not work in a carpeted area, and do not handle materials that produce or hold static electricity (cellophane wrappers, for example). Ground yourself by maintaining contact with an unpainted metal portion of the chassis while performing the procedure.
- When removing a slot cover, be careful not to damage components on the system board or add-in cards. You may need to temporarily remove add-in cards that are next to the slot cover you want to remove.

On Using the Hard Disk Drive

- Do not place the computer in a location that is subject to vibration or shock.
- Do not move the computer during operation.
- Do not subject the computer to sudden changes in temperature.
- Do not turn off the power while the computer is accessing the hard disk drive.

On Handling Diskettes

- Do not open the shutter manually and touch the surface of the diskette.
- Keep diskettes away from magnets.
- Keep diskettes away from direct sunlight and other heat sources.

On Handling CD-ROMs and DVD-ROMs

- Do not touch the surface of the disc.
- Do not drop or bend the disc.

On Cleaning CD-ROMs and DVD-ROMs

- Fingerprints and dust on the surface of a disc may cause read errors. Proper care of the disc is essential to maintain its reliability. Do not use solvents such as benzine, thinner, commercially available cleaners or anti-static spray, as they may cause damage to the disc.
- For normal cleaning, hold the disc by its edge and use a soft cloth to wipe the surface from the center out.
- If the disc is badly soiled, moisten a soft cloth with water, wring it out well, and use it to wipe the surface of the disc from the center out. Wipe off any remaining moisture with a dry soft cloth.

Other Information

Notes on Use

On the Power Source

- Your computer operates on 100-120 V AC 50/60 Hz for North American countries.
- The total power draw of installed add-in cards must not exceed the specifications for the power supply. Do not overload the system by installing add-in cards that draw excessive current. The system is designed to provide 2 amps (average) of 5V power for each card in the system not to exceed a total of 12 amps. The total from +5V current draw in a fully-loaded system (with all the add-in card slots filled) must not exceed 12 amps. If you add components to the system that draw current from the power supply, the maximum combined +3.3V and +5V output must not exceed 80 watts.
- Plug all the power cords for your computer and its peripheral equipment into the same AC supply line. AC derived from different supply lines may result in voltage differences that can cause unstable operation or unwanted weak currents at the time of connection.
- Do not share the AC outlet with any other power-consuming equipment, such as copying machines or shredders.
- You can purchase a power strip with a surge protector. This device prevents damage to your computer caused by sudden power surges such as those that may occur during an electrical storm.
- If you live in an area that experiences frequent power fluctuations, you may want to purchase a UPS (Uninterrupted Power Supply). This device contains both a surge protector and a battery backup. The surge protector prevents damage to your computer caused by power surges. The battery backup safeguards your data during a brief period of power loss.
- Do not place heavy objects on the power cord.
- Do not operate the system with the cover removed. Always reinstall the cover before turning on the system.
- To disconnect the cord, pull it out by the plug. Never pull the cord itself.
- Unplug your computer from the wall outlet if you will not be using the computer for a long time.
- The power control button on the front panel does not turn off the system AC power. To remove power from the system, you must shut down the computer as described in this manual and then unplug the AC power cord from the wall outlet or power strip.
- Before touching anything inside the computer, turn the system off and let it cool for ten minutes. This will ensure that the processor heat sink will not be hot.
- Do not attempt to open the power supply. There are no user-serviceable parts in the power supply. To avoid personal injury or damage to your equipment, refer the repair or replacement of the power supply to qualified personnel only.

On Disposal of the Lithium Battery

Dispose of the lithium battery properly. In some areas, the disposal of lithium batteries in household or business trash may be prohibited. You can return your unwanted lithium batteries to your nearest Sony Service Center or Factory Service Center. For the Sony Service Center nearest you, call 1-888-4SONY-PC (1-888-476-6972).

Do not handle damaged or leaking lithium batteries.

The lithium battery may explode if mistreated. Do not disassemble it or dispose of it in fire.

Replace the battery with a Sony CR2032 lithium battery. Using a type of battery other than a CR2032 may present a risk of fire or explosion.

On Handling

- Clean the cabinet with a soft, dry cloth or a soft cloth lightly moistened with a mild detergent solution. Do not use any type of abrasive pad, scouring powder, or solvent such as alcohol or benzine, as it may damage the finish of your Sony computer.
- Should any solid object or liquid fall into the cabinet, keyboard, or mouse, shut down your computer and then unplug it. You may want to have the computer checked by qualified personnel before operating it any further.

On Installation

- Do not place your Sony computer in a location subject to:
    - Heat sources, such as radiators or air ducts
    - Direct sunlight
    - Excessive dust
    - Mechanical vibration or shock
    - Strong magnets or speakers that are not magnetically shielded
    - Ambient temperature of more than 95ºF (35ºC) or less than 50ºF (10ºC)
    - High humidity, moisture, or rain
- Do not place electronic equipment near your computer. The computer's electromagnetic field may cause a malfunction.
- Provide adequate air circulation to prevent internal heat build-up. Do not place your computer on loose surfaces (such as rugs or blankets) or near materials (such as curtains or draperies) that may block its ventilation slots. Leave a space of at least 8 inches from the back panel of your computer.
- The computer uses high-frequency radio signals and may cause interference to radio or TV reception. Should this occur, relocate the computer a suitable distance away from the set.
- Use only specified peripheral equipment and interface cables; otherwise, problems may result.
- Do not use cut or damaged connection cables.
- Always switch the power off before connecting your computer to peripheral equipment; otherwise, damage may occur to the integrated circuits in your computer.
- Your computer, keyboard, and mouse consist of high-precision electronic parts. Do not drop them or bump them against other objects.
- Your Sony computer will not work with party lines, cannot be connected to a coin-operated telephone, and may not work with multiple phone lines or a private branch exchange (PBX).
- If the telephone company makes a service call to your home or office and determines that your computer is responsible for the problem, the telephone company may bill you for the service call. Also, if you do not disconnect your computer when it is adversely affecting the telephone line, the telephone company has the right to disconnect your service until you correct the problem.

On Moisture Condensation

If your computer is brought directly from a cold location to a warm one, moisture may condense

inside your computer. In this case, allow at least an hour before turning on your computer. If any problem occurs, unplug your computer, and contact your Sony Service Center.

On Upgrading the System

- The procedures described in the Upgrading and Maintaining Your VAIO Digital Studio Computer chapter of the online manual assume familiarity with the general terminology associated with personal computers and with the safety practices and regulatory compliance required for using and modifying electronic equipment.
- Disconnect the system from its power source and from any telecommunications links, networks, or modems before you open the system or do any of the procedures described in the Upgrading and Maintaining Your VAIO Digital Studio Computer chapter of the online manual. Failure to do so may result in personal injury or equipment damage.
- Electrostatic discharge (ESD) can damage disk drives, add-in cards, and other components. Do the procedures described in the Upgrading and Maintaining Your VAIO Digital Studio Computer chapter of the online manual only at an ESD workstation. If such a station is not available, do not work in a carpeted area, and do not handle materials that produce or hold static electricity (cellophane wrappers, for example). Ground yourself by maintaining contact with an unpainted metal portion of the chassis while performing the procedure.
- When removing a slot cover, be careful not to damage components on the system board or add-in cards. You may need to temporarily remove add-in cards that are next to the slot cover you want to remove.

On Using the Hard Disk Drive

- Do not place the computer in a location that is subject to vibration or shock.
- Do not move the computer during operation.
- Do not subject the computer to sudden changes in temperature.
- Do not turn off the power while the computer is accessing the hard disk drive.

On Handling Diskettes

- Do not open the shutter manually and touch the surface of the diskette.
- Keep diskettes away from magnets.
- Keep diskettes away from direct sunlight and other heat sources.

On Handling CD-ROMs and DVD-ROMs

- Do not touch the surface of the disc.
- Do not drop or bend the disc.

On Cleaning CD-ROMs and DVD-ROMs

- Fingerprints and dust on the surface of a disc may cause read errors. Proper care of the disc is essential to maintain its reliability. Do not use solvents such as benzine, thinner, commercially available cleaners or anti-static spray, as they may cause damage to the disc.
- For normal cleaning, hold the disc by its edge and use a soft cloth to wipe the surface from the center out.
- If the disc is badly soiled, moisten a soft cloth with water, wring it out well, and use it to wipe the surface of the disc from the center out. Wipe off any remaining moisture with a dry soft cloth.

Other Information

Notes on Use

On the Power Source

- Your computer operates on 100-120 V AC 50/60 Hz for North American countries.
- The total power draw of installed add-in cards must not exceed the specifications for the power supply. Do not overload the system by installing add-in cards that draw excessive current. The system is designed to provide 2 amps (average) of 5V power for each card in the system not to exceed a total of 12 amps. The total from +5V current draw in a fully-loaded system (with all the add-in card slots filled) must not exceed 12 amps. If you add components to the system that draw current from the power supply, the maximum combined +3.3V and +5V output must not exceed 80 watts.
- Plug all the power cords for your computer and its peripheral equipment into the same AC supply line. AC derived from different supply lines may result in voltage differences that can cause unstable operation or unwanted weak currents at the time of connection.
- Do not share the AC outlet with any other power-consuming equipment, such as copying machines or shredders.
- You can purchase a power strip with a surge protector. This device prevents damage to your computer caused by sudden power surges such as those that may occur during an electrical storm.
- If you live in an area that experiences frequent power fluctuations, you may want to purchase a UPS (Uninterrupted Power Supply). This device contains both a surge protector and a battery backup. The surge protector prevents damage to your computer caused by power surges. The battery backup safeguards your data during a brief period of power loss.
- Do not place heavy objects on the power cord.
- Do not operate the system with the cover removed. Always reinstall the cover before turning on the system.
- To disconnect the cord, pull it out by the plug. Never pull the cord itself.
- Unplug your computer from the wall outlet if you will not be using the computer for a long time.
- The power control button on the front panel does not turn off the system AC power. To remove power from the system, you must shut down the computer as described in this manual and then unplug the AC power cord from the wall outlet or power strip.
- Before touching anything inside the computer, turn the system off and let it cool for ten minutes. This will ensure that the processor heat sink will not be hot.
- Do not attempt to open the power supply. There are no user-serviceable parts in the power supply. To avoid personal injury or damage to your equipment, refer the repair or replacement of the power supply to qualified personnel only.

On Disposal of the Lithium Battery

Dispose of the lithium battery properly. In some areas, the disposal of lithium batteries in household or business trash may be prohibited. You can return your unwanted lithium batteries to your nearest Sony Service Center or Factory Service Center. For the Sony Service Center nearest you, call 1-888-4SONY-PC (1-888-476-6972).

Do not handle damaged or leaking lithium batteries.

The lithium battery may explode if mistreated. Do not disassemble it or dispose of it in fire.

Replace the battery with a Sony CR2032 lithium battery. Using a type of battery other than a CR2032 may present a risk of fire or explosion.

On Handling

- Clean the cabinet with a soft, dry cloth or a soft cloth lightly moistened with a mild detergent solution. Do not use any type of abrasive pad, scouring powder, or solvent such as alcohol or benzine, as it may damage the finish of your Sony computer.
- Should any solid object or liquid fall into the cabinet, keyboard, or mouse, shut down your computer and then unplug it. You may want to have the computer checked by qualified personnel before operating it any further.

On Installation

- Do not place your Sony computer in a location subject to:
    - Heat sources, such as radiators or air ducts
    - Direct sunlight
    - Excessive dust
    - Mechanical vibration or shock
    - Strong magnets or speakers that are not magnetically shielded
    - Ambient temperature of more than 95ºF (35ºC) or less than 50ºF (10ºC)
    - High humidity, moisture, or rain
- Do not place electronic equipment near your computer. The computer's electromagnetic field may cause a malfunction.
- Provide adequate air circulation to prevent internal heat build-up. Do not place your computer on loose surfaces (such as rugs or blankets) or near materials (such as curtains or draperies) that may block its ventilation slots. Leave a space of at least 8 inches from the back panel of your computer.
- The computer uses high-frequency radio signals and may cause interference to radio or TV reception. Should this occur, relocate the computer a suitable distance away from the set.
- Use only specified peripheral equipment and interface cables; otherwise, problems may result.
- Do not use cut or damaged connection cables.
- Always switch the power off before connecting your computer to peripheral equipment; otherwise, damage may occur to the integrated circuits in your computer.
- Your computer, keyboard, and mouse consist of high-precision electronic parts. Do not drop them or bump them against other objects.
- Your Sony computer will not work with party lines, cannot be connected to a coin-operated telephone, and may not work with multiple phone lines or a private branch exchange (PBX).
- If the telephone company makes a service call to your home or office and determines that your computer is responsible for the problem, the telephone company may bill you for the service call. Also, if you do not disconnect your computer when it is adversely affecting the telephone line, the telephone company has the right to disconnect your service until you correct the problem.

On Moisture Condensation

If your computer is brought directly from a cold location to a warm one, moisture may condense

inside your computer. In this case, allow at least an hour before turning on your computer. If any problem occurs, unplug your computer, and contact your Sony Service Center.

On Upgrading the System

- The procedures described in the Upgrading and Maintaining Your VAIO Digital Studio Computer chapter of the online manual assume familiarity with the general terminology associated with personal computers and with the safety practices and regulatory compliance required for using and modifying electronic equipment.
- Disconnect the system from its power source and from any telecommunications links, networks, or modems before you open the system or do any of the procedures described in the Upgrading and Maintaining Your VAIO Digital Studio Computer chapter of the online manual. Failure to do so may result in personal injury or equipment damage.
- Electrostatic discharge (ESD) can damage disk drives, add-in cards, and other components. Do the procedures described in the Upgrading and Maintaining Your VAIO Digital Studio Computer chapter of the online manual only at an ESD workstation. If such a station is not available, do not work in a carpeted area, and do not handle materials that produce or hold static electricity (cellophane wrappers, for example). Ground yourself by maintaining contact with an unpainted metal portion of the chassis while performing the procedure.
- When removing a slot cover, be careful not to damage components on the system board or add-in cards. You may need to temporarily remove add-in cards that are next to the slot cover you want to remove.

On Using the Hard Disk Drive

- Do not place the computer in a location that is subject to vibration or shock.
- Do not move the computer during operation.
- Do not subject the computer to sudden changes in temperature.
- Do not turn off the power while the computer is accessing the hard disk drive.

On Handling Diskettes

- Do not open the shutter manually and touch the surface of the diskette.
- Keep diskettes away from magnets.
- Keep diskettes away from direct sunlight and other heat sources.

On Handling CD-ROMs and DVD-ROMs

- Do not touch the surface of the disc.
- Do not drop or bend the disc.

On Cleaning CD-ROMs and DVD-ROMs

- Fingerprints and dust on the surface of a disc may cause read errors. Proper care of the disc is essential to maintain its reliability. Do not use solvents such as benzine, thinner, commercially available cleaners or anti-static spray, as they may cause damage to the disc.
- For normal cleaning, hold the disc by its edge and use a soft cloth to wipe the surface from the center out.
- If the disc is badly soiled, moisten a soft cloth with water, wring it out well, and use it to wipe the surface of the disc from the center out. Wipe off any remaining moisture with a dry soft cloth.

Other Information

Notes on Use

On the Power Source

- Your computer operates on 100-120 V AC 50/60 Hz for North American countries.
- The total power draw of installed add-in cards must not exceed the specifications for the power supply. Do not overload the system by installing add-in cards that draw excessive current. The system is designed to provide 2 amps (average) of 5V power for each card in the system not to exceed a total of 12 amps. The total from +5V current draw in a fully-loaded system (with all the add-in card slots filled) must not exceed 12 amps. If you add components to the system that draw current from the power supply, the maximum combined +3.3V and +5V output must not exceed 80 watts.
- Plug all the power cords for your computer and its peripheral equipment into the same AC supply line. AC derived from different supply lines may result in voltage differences that can cause unstable operation or unwanted weak currents at the time of connection.
- Do not share the AC outlet with any other power-consuming equipment, such as copying machines or shredders.
- You can purchase a power strip with a surge protector. This device prevents damage to your computer caused by sudden power surges such as those that may occur during an electrical storm.
- If you live in an area that experiences frequent power fluctuations, you may want to purchase a UPS (Uninterrupted Power Supply). This device contains both a surge protector and a battery backup. The surge protector prevents damage to your computer caused by power surges. The battery backup safeguards your data during a brief period of power loss.
- Do not place heavy objects on the power cord.
- Do not operate the system with the cover removed. Always reinstall the cover before turning on the system.
- To disconnect the cord, pull it out by the plug. Never pull the cord itself.
- Unplug your computer from the wall outlet if you will not be using the computer for a long time.
- The power control button on the front panel does not turn off the system AC power. To remove power from the system, you must shut down the computer as described in this manual and then unplug the AC power cord from the wall outlet or power strip.
- Before touching anything inside the computer, turn the system off and let it cool for ten minutes. This will ensure that the processor heat sink will not be hot.
- Do not attempt to open the power supply. There are no user-serviceable parts in the power supply. To avoid personal injury or damage to your equipment, refer the repair or replacement of the power supply to qualified personnel only.

On Disposal of the Lithium Battery

Dispose of the lithium battery properly. In some areas, the disposal of lithium batteries in household or business trash may be prohibited. You can return your unwanted lithium batteries to your nearest Sony Service Center or Factory Service Center. For the Sony Service Center nearest you, call 1-888-4SONY-PC (1-888-476-6972).

Do not handle damaged or leaking lithium batteries.

The lithium battery may explode if mistreated. Do not disassemble it or dispose of it in fire.

Replace the battery with a Sony CR2032 lithium battery. Using a type of battery other than a CR2032 may present a risk of fire or explosion.

On Handling

- Clean the cabinet with a soft, dry cloth or a soft cloth lightly moistened with a mild detergent solution. Do not use any type of abrasive pad, scouring powder, or solvent such as alcohol or benzine, as it may damage the finish of your Sony computer.
- Should any solid object or liquid fall into the cabinet, keyboard, or mouse, shut down your computer and then unplug it. You may want to have the computer checked by qualified personnel before operating it any further.

On Installation

- Do not place your Sony computer in a location subject to:
    - Heat sources, such as radiators or air ducts
    - Direct sunlight
    - Excessive dust
    - Mechanical vibration or shock
    - Strong magnets or speakers that are not magnetically shielded
    - Ambient temperature of more than 95ºF (35ºC) or less than 50ºF (10ºC)
    - High humidity, moisture, or rain
- Do not place electronic equipment near your computer. The computer's electromagnetic field may cause a malfunction.
- Provide adequate air circulation to prevent internal heat build-up. Do not place your computer on loose surfaces (such as rugs or blankets) or near materials (such as curtains or draperies) that may block its ventilation slots. Leave a space of at least 8 inches from the back panel of your computer.
- The computer uses high-frequency radio signals and may cause interference to radio or TV reception. Should this occur, relocate the computer a suitable distance away from the set.
- Use only specified peripheral equipment and interface cables; otherwise, problems may result.
- Do not use cut or damaged connection cables.
- Always switch the power off before connecting your computer to peripheral equipment; otherwise, damage may occur to the integrated circuits in your computer.
- Your computer, keyboard, and mouse consist of high-precision electronic parts. Do not drop them or bump them against other objects.
- Your Sony computer will not work with party lines, cannot be connected to a coin-operated telephone, and may not work with multiple phone lines or a private branch exchange (PBX).
- If the telephone company makes a service call to your home or office and determines that your computer is responsible for the problem, the telephone company may bill you for the service call. Also, if you do not disconnect your computer when it is adversely affecting the telephone line, the telephone company has the right to disconnect your service until you correct the problem.

On Moisture Condensation

If your computer is brought directly from a cold location to a warm one, moisture may condense

inside your computer. In this case, allow at least an hour before turning on your computer. If any problem occurs, unplug your computer, and contact your Sony Service Center.

On Upgrading the System

- The procedures described in the Upgrading and Maintaining Your VAIO Digital Studio Computer chapter of the online manual assume familiarity with the general terminology associated with personal computers and with the safety practices and regulatory compliance required for using and modifying electronic equipment.
- Disconnect the system from its power source and from any telecommunications links, networks, or modems before you open the system or do any of the procedures described in the Upgrading and Maintaining Your VAIO Digital Studio Computer chapter of the online manual. Failure to do so may result in personal injury or equipment damage.
- Electrostatic discharge (ESD) can damage disk drives, add-in cards, and other components. Do the procedures described in the Upgrading and Maintaining Your VAIO Digital Studio Computer chapter of the online manual only at an ESD workstation. If such a station is not available, do not work in a carpeted area, and do not handle materials that produce or hold static electricity (cellophane wrappers, for example). Ground yourself by maintaining contact with an unpainted metal portion of the chassis while performing the procedure.
- When removing a slot cover, be careful not to damage components on the system board or add-in cards. You may need to temporarily remove add-in cards that are next to the slot cover you want to remove.

On Using the Hard Disk Drive

- Do not place the computer in a location that is subject to vibration or shock.
- Do not move the computer during operation.
- Do not subject the computer to sudden changes in temperature.
- Do not turn off the power while the computer is accessing the hard disk drive.

On Handling Diskettes

- Do not open the shutter manually and touch the surface of the diskette.
- Keep diskettes away from magnets.
- Keep diskettes away from direct sunlight and other heat sources.

On Handling CD-ROMs and DVD-ROMs

- Do not touch the surface of the disc.
- Do not drop or bend the disc.

On Cleaning CD-ROMs and DVD-ROMs

- Fingerprints and dust on the surface of a disc may cause read errors. Proper care of the disc is essential to maintain its reliability. Do not use solvents such as benzine, thinner, commercially available cleaners or anti-static spray, as they may cause damage to the disc.
- For normal cleaning, hold the disc by its edge and use a soft cloth to wipe the surface from the center out.
- If the disc is badly soiled, moisten a soft cloth with water, wring it out well, and use it to wipe the surface of the disc from the center out. Wipe off any remaining moisture with a dry soft cloth.

Other Information

Notes on Use

On the Power Source

- Your computer operates on 100-120 V AC 50/60 Hz for North American countries.
- The total power draw of installed add-in cards must not exceed the specifications for the power supply. Do not overload the system by installing add-in cards that draw excessive current. The system is designed to provide 2 amps (average) of 5V power for each card in the system not to exceed a total of 12 amps. The total from +5V current draw in a fully-loaded system (with all the add-in card slots filled) must not exceed 12 amps. If you add components to the system that draw current from the power supply, the maximum combined +3.3V and +5V output must not exceed 80 watts.
- Plug all the power cords for your computer and its peripheral equipment into the same AC supply line. AC derived from different supply lines may result in voltage differences that can cause unstable operation or unwanted weak currents at the time of connection.
- Do not share the AC outlet with any other power-consuming equipment, such as copying machines or shredders.
- You can purchase a power strip with a surge protector. This device prevents damage to your computer caused by sudden power surges such as those that may occur during an electrical storm.
- If you live in an area that experiences frequent power fluctuations, you may want to purchase a UPS (Uninterrupted Power Supply). This device contains both a surge protector and a battery backup. The surge protector prevents damage to your computer caused by power surges. The battery backup safeguards your data during a brief period of power loss.
- Do not place heavy objects on the power cord.
- Do not operate the system with the cover removed. Always reinstall the cover before turning on the system.
- To disconnect the cord, pull it out by the plug. Never pull the cord itself.
- Unplug your computer from the wall outlet if you will not be using the computer for a long time.
- The power control button on the front panel does not turn off the system AC power. To remove power from the system, you must shut down the computer as described in this manual and then unplug the AC power cord from the wall outlet or power strip.
- Before touching anything inside the computer, turn the system off and let it cool for ten minutes. This will ensure that the processor heat sink will not be hot.
- Do not attempt to open the power supply. There are no user-serviceable parts in the power supply. To avoid personal injury or damage to your equipment, refer the repair or replacement of the power supply to qualified personnel only.

On Disposal of the Lithium Battery

Dispose of the lithium battery properly. In some areas, the disposal of lithium batteries in household or business trash may be prohibited. You can return your unwanted lithium batteries to your nearest Sony Service Center or Factory Service Center. For the Sony Service Center nearest you, call 1-888-4SONY-PC (1-888-476-6972).

Do not handle damaged or leaking lithium batteries.

The lithium battery may explode if mistreated. Do not disassemble it or dispose of it in fire.

Replace the battery with a Sony CR2032 lithium battery. Using a type of battery other than a CR2032 may present a risk of fire or explosion.

On Handling

- Clean the cabinet with a soft, dry cloth or a soft cloth lightly moistened with a mild detergent solution. Do not use any type of abrasive pad, scouring powder, or solvent such as alcohol or benzine, as it may damage the finish of your Sony computer.
- Should any solid object or liquid fall into the cabinet, keyboard, or mouse, shut down your computer and then unplug it. You may want to have the computer checked by qualified personnel before operating it any further.

On Installation

- Do not place your Sony computer in a location subject to:
    - Heat sources, such as radiators or air ducts
    - Direct sunlight
    - Excessive dust
    - Mechanical vibration or shock
    - Strong magnets or speakers that are not magnetically shielded
    - Ambient temperature of more than 95ºF (35ºC) or less than 50ºF (10ºC)
    - High humidity, moisture, or rain
- Do not place electronic equipment near your computer. The computer's electromagnetic field may cause a malfunction.
- Provide adequate air circulation to prevent internal heat build-up. Do not place your computer on loose surfaces (such as rugs or blankets) or near materials (such as curtains or draperies) that may block its ventilation slots. Leave a space of at least 8 inches from the back panel of your computer.
- The computer uses high-frequency radio signals and may cause interference to radio or TV reception. Should this occur, relocate the computer a suitable distance away from the set.
- Use only specified peripheral equipment and interface cables; otherwise, problems may result.
- Do not use cut or damaged connection cables.
- Always switch the power off before connecting your computer to peripheral equipment; otherwise, damage may occur to the integrated circuits in your computer.
- Your computer, keyboard, and mouse consist of high-precision electronic parts. Do not drop them or bump them against other objects.
- Your Sony computer will not work with party lines, cannot be connected to a coin-operated telephone, and may not work with multiple phone lines or a private branch exchange (PBX).
- If the telephone company makes a service call to your home or office and determines that your computer is responsible for the problem, the telephone company may bill you for the service call. Also, if you do not disconnect your computer when it is adversely affecting the telephone line, the telephone company has the right to disconnect your service until you correct the problem.

On Moisture Condensation

If your computer is brought directly from a cold location to a warm one, moisture may condense

inside your computer. In this case, allow at least an hour before turning on your computer. If any problem occurs, unplug your computer, and contact your Sony Service Center.

On Upgrading the System

- The procedures described in the Upgrading and Maintaining Your VAIO Digital Studio Computer chapter of the online manual assume familiarity with the general terminology associated with personal computers and with the safety practices and regulatory compliance required for using and modifying electronic equipment.
- Disconnect the system from its power source and from any telecommunications links, networks, or modems before you open the system or do any of the procedures described in the Upgrading and Maintaining Your VAIO Digital Studio Computer chapter of the online manual. Failure to do so may result in personal injury or equipment damage.
- Electrostatic discharge (ESD) can damage disk drives, add-in cards, and other components. Do the procedures described in the Upgrading and Maintaining Your VAIO Digital Studio Computer chapter of the online manual only at an ESD workstation. If such a station is not available, do not work in a carpeted area, and do not handle materials that produce or hold static electricity (cellophane wrappers, for example). Ground yourself by maintaining contact with an unpainted metal portion of the chassis while performing the procedure.
- When removing a slot cover, be careful not to damage components on the system board or add-in cards. You may need to temporarily remove add-in cards that are next to the slot cover you want to remove.

On Using the Hard Disk Drive

- Do not place the computer in a location that is subject to vibration or shock.
- Do not move the computer during operation.
- Do not subject the computer to sudden changes in temperature.
- Do not turn off the power while the computer is accessing the hard disk drive.

On Handling Diskettes

- Do not open the shutter manually and touch the surface of the diskette.
- Keep diskettes away from magnets.
- Keep diskettes away from direct sunlight and other heat sources.

On Handling CD-ROMs and DVD-ROMs

- Do not touch the surface of the disc.
- Do not drop or bend the disc.

On Cleaning CD-ROMs and DVD-ROMs

- Fingerprints and dust on the surface of a disc may cause read errors. Proper care of the disc is essential to maintain its reliability. Do not use solvents such as benzine, thinner, commercially available cleaners or anti-static spray, as they may cause damage to the disc.
- For normal cleaning, hold the disc by its edge and use a soft cloth to wipe the surface from the center out.
- If the disc is badly soiled, moisten a soft cloth with water, wring it out well, and use it to wipe the surface of the disc from the center out. Wipe off any remaining moisture with a dry soft cloth.

Other Information

Notes on Use

On the Power Source

- Your computer operates on 100-120 V AC 50/60 Hz for North American countries.
- The total power draw of installed add-in cards must not exceed the specifications for the power supply. Do not overload the system by installing add-in cards that draw excessive current. The system is designed to provide 2 amps (average) of 5V power for each card in the system not to exceed a total of 12 amps. The total from +5V current draw in a fully-loaded system (with all the add-in card slots filled) must not exceed 12 amps. If you add components to the system that draw current from the power supply, the maximum combined +3.3V and +5V output must not exceed 80 watts.
- Plug all the power cords for your computer and its peripheral equipment into the same AC supply line. AC derived from different supply lines may result in voltage differences that can cause unstable operation or unwanted weak currents at the time of connection.
- Do not share the AC outlet with any other power-consuming equipment, such as copying machines or shredders.
- You can purchase a power strip with a surge protector. This device prevents damage to your computer caused by sudden power surges such as those that may occur during an electrical storm.
- If you live in an area that experiences frequent power fluctuations, you may want to purchase a UPS (Uninterrupted Power Supply). This device contains both a surge protector and a battery backup. The surge protector prevents damage to your computer caused by power surges. The battery backup safeguards your data during a brief period of power loss.
- Do not place heavy objects on the power cord.
- Do not operate the system with the cover removed. Always reinstall the cover before turning on the system.
- To disconnect the cord, pull it out by the plug. Never pull the cord itself.
- Unplug your computer from the wall outlet if you will not be using the computer for a long time.
- The power control button on the front panel does not turn off the system AC power. To remove power from the system, you must shut down the computer as described in this manual and then unplug the AC power cord from the wall outlet or power strip.
- Before touching anything inside the computer, turn the system off and let it cool for ten minutes. This will ensure that the processor heat sink will not be hot.
- Do not attempt to open the power supply. There are no user-serviceable parts in the power supply. To avoid personal injury or damage to your equipment, refer the repair or replacement of the power supply to qualified personnel only.

On Disposal of the Lithium Battery

Dispose of the lithium battery properly. In some areas, the disposal of lithium batteries in household or business trash may be prohibited. You can return your unwanted lithium batteries to your nearest Sony Service Center or Factory Service Center. For the Sony Service Center nearest you, call 1-888-4SONY-PC (1-888-476-6972).

Do not handle damaged or leaking lithium batteries.

The lithium battery may explode if mistreated. Do not disassemble it or dispose of it in fire.

Replace the battery with a Sony CR2032 lithium battery. Using a type of battery other than a CR2032 may present a risk of fire or explosion.

On Handling

- Clean the cabinet with a soft, dry cloth or a soft cloth lightly moistened with a mild detergent solution. Do not use any type of abrasive pad, scouring powder, or solvent such as alcohol or benzine, as it may damage the finish of your Sony computer.
- Should any solid object or liquid fall into the cabinet, keyboard, or mouse, shut down your computer and then unplug it. You may want to have the computer checked by qualified personnel before operating it any further.

On Installation

- Do not place your Sony computer in a location subject to:
    - Heat sources, such as radiators or air ducts
    - Direct sunlight
    - Excessive dust
    - Mechanical vibration or shock
    - Strong magnets or speakers that are not magnetically shielded
    - Ambient temperature of more than 95ºF (35ºC) or less than 50ºF (10ºC)
    - High humidity, moisture, or rain
- Do not place electronic equipment near your computer. The computer's electromagnetic field may cause a malfunction.
- Provide adequate air circulation to prevent internal heat build-up. Do not place your computer on loose surfaces (such as rugs or blankets) or near materials (such as curtains or draperies) that may block its ventilation slots. Leave a space of at least 8 inches from the back panel of your computer.
- The computer uses high-frequency radio signals and may cause interference to radio or TV reception. Should this occur, relocate the computer a suitable distance away from the set.
- Use only specified peripheral equipment and interface cables; otherwise, problems may result.
- Do not use cut or damaged connection cables.
- Always switch the power off before connecting your computer to peripheral equipment; otherwise, damage may occur to the integrated circuits in your computer.
- Your computer, keyboard, and mouse consist of high-precision electronic parts. Do not drop them or bump them against other objects.
- Your Sony computer will not work with party lines, cannot be connected to a coin-operated telephone, and may not work with multiple phone lines or a private branch exchange (PBX).
- If the telephone company makes a service call to your home or office and determines that your computer is responsible for the problem, the telephone company may bill you for the service call. Also, if you do not disconnect your computer when it is adversely affecting the telephone line, the telephone company has the right to disconnect your service until you correct the problem.

On Moisture Condensation

If your computer is brought directly from a cold location to a warm one, moisture may condense

inside your computer. In this case, allow at least an hour before turning on your computer. If any problem occurs, unplug your computer, and contact your Sony Service Center.

On Upgrading the System

- The procedures described in the Upgrading and Maintaining Your VAIO Digital Studio Computer chapter of the online manual assume familiarity with the general terminology associated with personal computers and with the safety practices and regulatory compliance required for using and modifying electronic equipment.
- Disconnect the system from its power source and from any telecommunications links, networks, or modems before you open the system or do any of the procedures described in the Upgrading and Maintaining Your VAIO Digital Studio Computer chapter of the online manual. Failure to do so may result in personal injury or equipment damage.
- Electrostatic discharge (ESD) can damage disk drives, add-in cards, and other components. Do the procedures described in the Upgrading and Maintaining Your VAIO Digital Studio Computer chapter of the online manual only at an ESD workstation. If such a station is not available, do not work in a carpeted area, and do not handle materials that produce or hold static electricity (cellophane wrappers, for example). Ground yourself by maintaining contact with an unpainted metal portion of the chassis while performing the procedure.
- When removing a slot cover, be careful not to damage components on the system board or add-in cards. You may need to temporarily remove add-in cards that are next to the slot cover you want to remove.

On Using the Hard Disk Drive

- Do not place the computer in a location that is subject to vibration or shock.
- Do not move the computer during operation.
- Do not subject the computer to sudden changes in temperature.
- Do not turn off the power while the computer is accessing the hard disk drive.

On Handling Diskettes

- Do not open the shutter manually and touch the surface of the diskette.
- Keep diskettes away from magnets.
- Keep diskettes away from direct sunlight and other heat sources.

On Handling CD-ROMs and DVD-ROMs

- Do not touch the surface of the disc.
- Do not drop or bend the disc.

On Cleaning CD-ROMs and DVD-ROMs

- Fingerprints and dust on the surface of a disc may cause read errors. Proper care of the disc is essential to maintain its reliability. Do not use solvents such as benzine, thinner, commercially available cleaners or anti-static spray, as they may cause damage to the disc.
- For normal cleaning, hold the disc by its edge and use a soft cloth to wipe the surface from the center out.
- If the disc is badly soiled, moisten a soft cloth with water, wring it out well, and use it to wipe the surface of the disc from the center out. Wipe off any remaining moisture with a dry soft cloth.

Other Information

Notes on Use

On the Power Source

- Your computer operates on 100-120 V AC 50/60 Hz for North American countries.
- The total power draw of installed add-in cards must not exceed the specifications for the power supply. Do not overload the system by installing add-in cards that draw excessive current. The system is designed to provide 2 amps (average) of 5V power for each card in the system not to exceed a total of 12 amps. The total from +5V current draw in a fully-loaded system (with all the add-in card slots filled) must not exceed 12 amps. If you add components to the system that draw current from the power supply, the maximum combined +3.3V and +5V output must not exceed 80 watts.
- Plug all the power cords for your computer and its peripheral equipment into the same AC supply line. AC derived from different supply lines may result in voltage differences that can cause unstable operation or unwanted weak currents at the time of connection.
- Do not share the AC outlet with any other power-consuming equipment, such as copying machines or shredders.
- You can purchase a power strip with a surge protector. This device prevents damage to your computer caused by sudden power surges such as those that may occur during an electrical storm.
- If you live in an area that experiences frequent power fluctuations, you may want to purchase a UPS (Uninterrupted Power Supply). This device contains both a surge protector and a battery backup. The surge protector prevents damage to your computer caused by power surges. The battery backup safeguards your data during a brief period of power loss.
- Do not place heavy objects on the power cord.
- Do not operate the system with the cover removed. Always reinstall the cover before turning on the system.
- To disconnect the cord, pull it out by the plug. Never pull the cord itself.
- Unplug your computer from the wall outlet if you will not be using the computer for a long time.
- The power control button on the front panel does not turn off the system AC power. To remove power from the system, you must shut down the computer as described in this manual and then unplug the AC power cord from the wall outlet or power strip.
- Before touching anything inside the computer, turn the system off and let it cool for ten minutes. This will ensure that the processor heat sink will not be hot.
- Do not attempt to open the power supply. There are no user-serviceable parts in the power supply. To avoid personal injury or damage to your equipment, refer the repair or replacement of the power supply to qualified personnel only.

On Disposal of the Lithium Battery

Dispose of the lithium battery properly. In some areas, the disposal of lithium batteries in household or business trash may be prohibited. You can return your unwanted lithium batteries to your nearest Sony Service Center or Factory Service Center. For the Sony Service Center nearest you, call 1-888-4SONY-PC (1-888-476-6972).

Do not handle damaged or leaking lithium batteries.

The lithium battery may explode if mistreated. Do not disassemble it or dispose of it in fire.

Replace the battery with a Sony CR2032 lithium battery. Using a type of battery other than a CR2032 may present a risk of fire or explosion.

On Handling

- Clean the cabinet with a soft, dry cloth or a soft cloth lightly moistened with a mild detergent solution. Do not use any type of abrasive pad, scouring powder, or solvent such as alcohol or benzine, as it may damage the finish of your Sony computer.
- Should any solid object or liquid fall into the cabinet, keyboard, or mouse, shut down your computer and then unplug it. You may want to have the computer checked by qualified personnel before operating it any further.

On Installation

- Do not place your Sony computer in a location subject to:
    - Heat sources, such as radiators or air ducts
    - Direct sunlight
    - Excessive dust
    - Mechanical vibration or shock
    - Strong magnets or speakers that are not magnetically shielded
    - Ambient temperature of more than 95ºF (35ºC) or less than 50ºF (10ºC)
    - High humidity, moisture, or rain
- Do not place electronic equipment near your computer. The computer's electromagnetic field may cause a malfunction.
- Provide adequate air circulation to prevent internal heat build-up. Do not place your computer on loose surfaces (such as rugs or blankets) or near materials (such as curtains or draperies) that may block its ventilation slots. Leave a space of at least 8 inches from the back panel of your computer.
- The computer uses high-frequency radio signals and may cause interference to radio or TV reception. Should this occur, relocate the computer a suitable distance away from the set.
- Use only specified peripheral equipment and interface cables; otherwise, problems may result.
- Do not use cut or damaged connection cables.
- Always switch the power off before connecting your computer to peripheral equipment; otherwise, damage may occur to the integrated circuits in your computer.
- Your computer, keyboard, and mouse consist of high-precision electronic parts. Do not drop them or bump them against other objects.
- Your Sony computer will not work with party lines, cannot be connected to a coin-operated telephone, and may not work with multiple phone lines or a private branch exchange (PBX).
- If the telephone company makes a service call to your home or office and determines that your computer is responsible for the problem, the telephone company may bill you for the service call. Also, if you do not disconnect your computer when it is adversely affecting the telephone line, the telephone company has the right to disconnect your service until you correct the problem.

On Moisture Condensation

If your computer is brought directly from a cold location to a warm one, moisture may condense

inside your computer. In this case, allow at least an hour before turning on your computer. If any problem occurs, unplug your computer, and contact your Sony Service Center.

On Upgrading the System

- The procedures described in the Upgrading and Maintaining Your VAIO Digital Studio Computer chapter of the online manual assume familiarity with the general terminology associated with personal computers and with the safety practices and regulatory compliance required for using and modifying electronic equipment.
- Disconnect the system from its power source and from any telecommunications links, networks, or modems before you open the system or do any of the procedures described in the Upgrading and Maintaining Your VAIO Digital Studio Computer chapter of the online manual. Failure to do so may result in personal injury or equipment damage.
- Electrostatic discharge (ESD) can damage disk drives, add-in cards, and other components. Do the procedures described in the Upgrading and Maintaining Your VAIO Digital Studio Computer chapter of the online manual only at an ESD workstation. If such a station is not available, do not work in a carpeted area, and do not handle materials that produce or hold static electricity (cellophane wrappers, for example). Ground yourself by maintaining contact with an unpainted metal portion of the chassis while performing the procedure.
- When removing a slot cover, be careful not to damage components on the system board or add-in cards. You may need to temporarily remove add-in cards that are next to the slot cover you want to remove.

On Using the Hard Disk Drive

- Do not place the computer in a location that is subject to vibration or shock.
- Do not move the computer during operation.
- Do not subject the computer to sudden changes in temperature.
- Do not turn off the power while the computer is accessing the hard disk drive.

On Handling Diskettes

- Do not open the shutter manually and touch the surface of the diskette.
- Keep diskettes away from magnets.
- Keep diskettes away from direct sunlight and other heat sources.

On Handling CD-ROMs and DVD-ROMs

- Do not touch the surface of the disc.
- Do not drop or bend the disc.

On Cleaning CD-ROMs and DVD-ROMs

- Fingerprints and dust on the surface of a disc may cause read errors. Proper care of the disc is essential to maintain its reliability. Do not use solvents such as benzine, thinner, commercially available cleaners or anti-static spray, as they may cause damage to the disc.
- For normal cleaning, hold the disc by its edge and use a soft cloth to wipe the surface from the center out.
- If the disc is badly soiled, moisten a soft cloth with water, wring it out well, and use it to wipe the surface of the disc from the center out. Wipe off any remaining moisture with a dry soft cloth.

Other Information

Notes on Use

On the Power Source

- Your computer operates on 100-120 V AC 50/60 Hz for North American countries.
- The total power draw of installed add-in cards must not exceed the specifications for the power supply. Do not overload the system by installing add-in cards that draw excessive current. The system is designed to provide 2 amps (average) of 5V power for each card in the system not to exceed a total of 12 amps. The total from +5V current draw in a fully-loaded system (with all the add-in card slots filled) must not exceed 12 amps. If you add components to the system that draw current from the power supply, the maximum combined +3.3V and +5V output must not exceed 80 watts.
- Plug all the power cords for your computer and its peripheral equipment into the same AC supply line. AC derived from different supply lines may result in voltage differences that can cause unstable operation or unwanted weak currents at the time of connection.
- Do not share the AC outlet with any other power-consuming equipment, such as copying machines or shredders.
- You can purchase a power strip with a surge protector. This device prevents damage to your computer caused by sudden power surges such as those that may occur during an electrical storm.
- If you live in an area that experiences frequent power fluctuations, you may want to purchase a UPS (Uninterrupted Power Supply). This device contains both a surge protector and a battery backup. The surge protector prevents damage to your computer caused by power surges. The battery backup safeguards your data during a brief period of power loss.
- Do not place heavy objects on the power cord.
- Do not operate the system with the cover removed. Always reinstall the cover before turning on the system.
- To disconnect the cord, pull it out by the plug. Never pull the cord itself.
- Unplug your computer from the wall outlet if you will not be using the computer for a long time.
- The power control button on the front panel does not turn off the system AC power. To remove power from the system, you must shut down the computer as described in this manual and then unplug the AC power cord from the wall outlet or power strip.
- Before touching anything inside the computer, turn the system off and let it cool for ten minutes. This will ensure that the processor heat sink will not be hot.
- Do not attempt to open the power supply. There are no user-serviceable parts in the power supply. To avoid personal injury or damage to your equipment, refer the repair or replacement of the power supply to qualified personnel only.

On Disposal of the Lithium Battery

Dispose of the lithium battery properly. In some areas, the disposal of lithium batteries in household or business trash may be prohibited. You can return your unwanted lithium batteries to your nearest Sony Service Center or Factory Service Center. For the Sony Service Center nearest you, call 1-888-4SONY-PC (1-888-476-6972).

Do not handle damaged or leaking lithium batteries.

The lithium battery may explode if mistreated. Do not disassemble it or dispose of it in fire.

Replace the battery with a Sony CR2032 lithium battery. Using a type of battery other than a CR2032 may present a risk of fire or explosion.

On Handling

- Clean the cabinet with a soft, dry cloth or a soft cloth lightly moistened with a mild detergent solution. Do not use any type of abrasive pad, scouring powder, or solvent such as alcohol or benzine, as it may damage the finish of your Sony computer.
- Should any solid object or liquid fall into the cabinet, keyboard, or mouse, shut down your computer and then unplug it. You may want to have the computer checked by qualified personnel before operating it any further.

On Installation

- Do not place your Sony computer in a location subject to:
    - Heat sources, such as radiators or air ducts
    - Direct sunlight
    - Excessive dust
    - Mechanical vibration or shock
    - Strong magnets or speakers that are not magnetically shielded
    - Ambient temperature of more than 95ºF (35ºC) or less than 50ºF (10ºC)
    - High humidity, moisture, or rain
- Do not place electronic equipment near your computer. The computer's electromagnetic field may cause a malfunction.
- Provide adequate air circulation to prevent internal heat build-up. Do not place your computer on loose surfaces (such as rugs or blankets) or near materials (such as curtains or draperies) that may block its ventilation slots. Leave a space of at least 8 inches from the back panel of your computer.
- The computer uses high-frequency radio signals and may cause interference to radio or TV reception. Should this occur, relocate the computer a suitable distance away from the set.
- Use only specified peripheral equipment and interface cables; otherwise, problems may result.
- Do not use cut or damaged connection cables.
- Always switch the power off before connecting your computer to peripheral equipment; otherwise, damage may occur to the integrated circuits in your computer.
- Your computer, keyboard, and mouse consist of high-precision electronic parts. Do not drop them or bump them against other objects.
- Your Sony computer will not work with party lines, cannot be connected to a coin-operated telephone, and may not work with multiple phone lines or a private branch exchange (PBX).
- If the telephone company makes a service call to your home or office and determines that your computer is responsible for the problem, the telephone company may bill you for the service call. Also, if you do not disconnect your computer when it is adversely affecting the telephone line, the telephone company has the right to disconnect your service until you correct the problem.

On Moisture Condensation

If your computer is brought directly from a cold location to a warm one, moisture may condense

inside your computer. In this case, allow at least an hour before turning on your computer. If any problem occurs, unplug your computer, and contact your Sony Service Center.

On Upgrading the System

- The procedures described in the Upgrading and Maintaining Your VAIO Digital Studio Computer chapter of the online manual assume familiarity with the general terminology associated with personal computers and with the safety practices and regulatory compliance required for using and modifying electronic equipment.
- Disconnect the system from its power source and from any telecommunications links, networks, or modems before you open the system or do any of the procedures described in the Upgrading and Maintaining Your VAIO Digital Studio Computer chapter of the online manual. Failure to do so may result in personal injury or equipment damage.
- Electrostatic discharge (ESD) can damage disk drives, add-in cards, and other components. Do the procedures described in the Upgrading and Maintaining Your VAIO Digital Studio Computer chapter of the online manual only at an ESD workstation. If such a station is not available, do not work in a carpeted area, and do not handle materials that produce or hold static electricity (cellophane wrappers, for example). Ground yourself by maintaining contact with an unpainted metal portion of the chassis while performing the procedure.
- When removing a slot cover, be careful not to damage components on the system board or add-in cards. You may need to temporarily remove add-in cards that are next to the slot cover you want to remove.

On Using the Hard Disk Drive

- Do not place the computer in a location that is subject to vibration or shock.
- Do not move the computer during operation.
- Do not subject the computer to sudden changes in temperature.
- Do not turn off the power while the computer is accessing the hard disk drive.

On Handling Diskettes

- Do not open the shutter manually and touch the surface of the diskette.
- Keep diskettes away from magnets.
- Keep diskettes away from direct sunlight and other heat sources.

On Handling CD-ROMs and DVD-ROMs

- Do not touch the surface of the disc.
- Do not drop or bend the disc.

On Cleaning CD-ROMs and DVD-ROMs

- Fingerprints and dust on the surface of a disc may cause read errors. Proper care of the disc is essential to maintain its reliability. Do not use solvents such as benzine, thinner, commercially available cleaners or anti-static spray, as they may cause damage to the disc.
- For normal cleaning, hold the disc by its edge and use a soft cloth to wipe the surface from the center out.
- If the disc is badly soiled, moisten a soft cloth with water, wring it out well, and use it to wipe the surface of the disc from the center out. Wipe off any remaining moisture with a dry soft cloth.

Other Information

Notes on Use

On the Power Source

- Your computer operates on 100-120 V AC 50/60 Hz for North American countries.
- The total power draw of installed add-in cards must not exceed the specifications for the power supply. Do not overload the system by installing add-in cards that draw excessive current. The system is designed to provide 2 amps (average) of 5V power for each card in the system not to exceed a total of 12 amps. The total from +5V current draw in a fully-loaded system (with all the add-in card slots filled) must not exceed 12 amps. If you add components to the system that draw current from the power supply, the maximum combined +3.3V and +5V output must not exceed 80 watts.
- Plug all the power cords for your computer and its peripheral equipment into the same AC supply line. AC derived from different supply lines may result in voltage differences that can cause unstable operation or unwanted weak currents at the time of connection.
- Do not share the AC outlet with any other power-consuming equipment, such as copying machines or shredders.
- You can purchase a power strip with a surge protector. This device prevents damage to your computer caused by sudden power surges such as those that may occur during an electrical storm.
- If you live in an area that experiences frequent power fluctuations, you may want to purchase a UPS (Uninterrupted Power Supply). This device contains both a surge protector and a battery backup. The surge protector prevents damage to your computer caused by power surges. The battery backup safeguards your data during a brief period of power loss.
- Do not place heavy objects on the power cord.
- Do not operate the system with the cover removed. Always reinstall the cover before turning on the system.
- To disconnect the cord, pull it out by the plug. Never pull the cord itself.
- Unplug your computer from the wall outlet if you will not be using the computer for a long time.
- The power control button on the front panel does not turn off the system AC power. To remove power from the system, you must shut down the computer as described in this manual and then unplug the AC power cord from the wall outlet or power strip.
- Before touching anything inside the computer, turn the system off and let it cool for ten minutes. This will ensure that the processor heat sink will not be hot.
- Do not attempt to open the power supply. There are no user-serviceable parts in the power supply. To avoid personal injury or damage to your equipment, refer the repair or replacement of the power supply to qualified personnel only.

On Disposal of the Lithium Battery

Dispose of the lithium battery properly. In some areas, the disposal of lithium batteries in household or business trash may be prohibited. You can return your unwanted lithium batteries to your nearest Sony Service Center or Factory Service Center. For the Sony Service Center nearest you, call 1-888-4SONY-PC (1-888-476-6972).

Do not handle damaged or leaking lithium batteries.

The lithium battery may explode if mistreated. Do not disassemble it or dispose of it in fire.

Replace the battery with a Sony CR2032 lithium battery. Using a type of battery other than a CR2032 may present a risk of fire or explosion.

On Handling

- Clean the cabinet with a soft, dry cloth or a soft cloth lightly moistened with a mild detergent solution. Do not use any type of abrasive pad, scouring powder, or solvent such as alcohol or benzine, as it may damage the finish of your Sony computer.
- Should any solid object or liquid fall into the cabinet, keyboard, or mouse, shut down your computer and then unplug it. You may want to have the computer checked by qualified personnel before operating it any further.

On Installation

- Do not place your Sony computer in a location subject to:
    - Heat sources, such as radiators or air ducts
    - Direct sunlight
    - Excessive dust
    - Mechanical vibration or shock
    - Strong magnets or speakers that are not magnetically shielded
    - Ambient temperature of more than 95ºF (35ºC) or less than 50ºF (10ºC)
    - High humidity, moisture, or rain
- Do not place electronic equipment near your computer. The computer's electromagnetic field may cause a malfunction.
- Provide adequate air circulation to prevent internal heat build-up. Do not place your computer on loose surfaces (such as rugs or blankets) or near materials (such as curtains or draperies) that may block its ventilation slots. Leave a space of at least 8 inches from the back panel of your computer.
- The computer uses high-frequency radio signals and may cause interference to radio or TV reception. Should this occur, relocate the computer a suitable distance away from the set.
- Use only specified peripheral equipment and interface cables; otherwise, problems may result.
- Do not use cut or damaged connection cables.
- Always switch the power off before connecting your computer to peripheral equipment; otherwise, damage may occur to the integrated circuits in your computer.
- Your computer, keyboard, and mouse consist of high-precision electronic parts. Do not drop them or bump them against other objects.
- Your Sony computer will not work with party lines, cannot be connected to a coin-operated telephone, and may not work with multiple phone lines or a private branch exchange (PBX).
- If the telephone company makes a service call to your home or office and determines that your computer is responsible for the problem, the telephone company may bill you for the service call. Also, if you do not disconnect your computer when it is adversely affecting the telephone line, the telephone company has the right to disconnect your service until you correct the problem.

On Moisture Condensation

If your computer is brought directly from a cold location to a warm one, moisture may condense

inside your computer. In this case, allow at least an hour before turning on your computer. If any problem occurs, unplug your computer, and contact your Sony Service Center.

On Upgrading the System

- The procedures described in the Upgrading and Maintaining Your VAIO Digital Studio Computer chapter of the online manual assume familiarity with the general terminology associated with personal computers and with the safety practices and regulatory compliance required for using and modifying electronic equipment.
- Disconnect the system from its power source and from any telecommunications links, networks, or modems before you open the system or do any of the procedures described in the Upgrading and Maintaining Your VAIO Digital Studio Computer chapter of the online manual. Failure to do so may result in personal injury or equipment damage.
- Electrostatic discharge (ESD) can damage disk drives, add-in cards, and other components. Do the procedures described in the Upgrading and Maintaining Your VAIO Digital Studio Computer chapter of the online manual only at an ESD workstation. If such a station is not available, do not work in a carpeted area, and do not handle materials that produce or hold static electricity (cellophane wrappers, for example). Ground yourself by maintaining contact with an unpainted metal portion of the chassis while performing the procedure.
- When removing a slot cover, be careful not to damage components on the system board or add-in cards. You may need to temporarily remove add-in cards that are next to the slot cover you want to remove.

On Using the Hard Disk Drive

- Do not place the computer in a location that is subject to vibration or shock.
- Do not move the computer during operation.
- Do not subject the computer to sudden changes in temperature.
- Do not turn off the power while the computer is accessing the hard disk drive.

On Handling Diskettes

- Do not open the shutter manually and touch the surface of the diskette.
- Keep diskettes away from magnets.
- Keep diskettes away from direct sunlight and other heat sources.

On Handling CD-ROMs and DVD-ROMs

- Do not touch the surface of the disc.
- Do not drop or bend the disc.

On Cleaning CD-ROMs and DVD-ROMs

- Fingerprints and dust on the surface of a disc may cause read errors. Proper care of the disc is essential to maintain its reliability. Do not use solvents such as benzine, thinner, commercially available cleaners or anti-static spray, as they may cause damage to the disc.
- For normal cleaning, hold the disc by its edge and use a soft cloth to wipe the surface from the center out.
- If the disc is badly soiled, moisten a soft cloth with water, wring it out well, and use it to wipe the surface of the disc from the center out. Wipe off any remaining moisture with a dry soft cloth.

Other Information

Notes on Use

On the Power Source

- Your computer operates on 100-120 V AC 50/60 Hz for North American countries.
- The total power draw of installed add-in cards must not exceed the specifications for the power supply. Do not overload the system by installing add-in cards that draw excessive current. The system is designed to provide 2 amps (average) of 5V power for each card in the system not to exceed a total of 12 amps. The total from +5V current draw in a fully-loaded system (with all the add-in card slots filled) must not exceed 12 amps. If you add components to the system that draw current from the power supply, the maximum combined +3.3V and +5V output must not exceed 80 watts.
- Plug all the power cords for your computer and its peripheral equipment into the same AC supply line. AC derived from different supply lines may result in voltage differences that can cause unstable operation or unwanted weak currents at the time of connection.
- Do not share the AC outlet with any other power-consuming equipment, such as copying machines or shredders.
- You can purchase a power strip with a surge protector. This device prevents damage to your computer caused by sudden power surges such as those that may occur during an electrical storm.
- If you live in an area that experiences frequent power fluctuations, you may want to purchase a UPS (Uninterrupted Power Supply). This device contains both a surge protector and a battery backup. The surge protector prevents damage to your computer caused by power surges. The battery backup safeguards your data during a brief period of power loss.
- Do not place heavy objects on the power cord.
- Do not operate the system with the cover removed. Always reinstall the cover before turning on the system.
- To disconnect the cord, pull it out by the plug. Never pull the cord itself.
- Unplug your computer from the wall outlet if you will not be using the computer for a long time.
- The power control button on the front panel does not turn off the system AC power. To remove power from the system, you must shut down the computer as described in this manual and then unplug the AC power cord from the wall outlet or power strip.
- Before touching anything inside the computer, turn the system off and let it cool for ten minutes. This will ensure that the processor heat sink will not be hot.
- Do not attempt to open the power supply. There are no user-serviceable parts in the power supply. To avoid personal injury or damage to your equipment, refer the repair or replacement of the power supply to qualified personnel only.

On Disposal of the Lithium Battery

Dispose of the lithium battery properly. In some areas, the disposal of lithium batteries in household or business trash may be prohibited. You can return your unwanted lithium batteries to your nearest Sony Service Center or Factory Service Center. For the Sony Service Center nearest you, call 1-888-4SONY-PC (1-888-476-6972).

Do not handle damaged or leaking lithium batteries.

The lithium battery may explode if mistreated. Do not disassemble it or dispose of it in fire.

Replace the battery with a Sony CR2032 lithium battery. Using a type of battery other than a CR2032 may present a risk of fire or explosion.

On Handling

- Clean the cabinet with a soft, dry cloth or a soft cloth lightly moistened with a mild detergent solution. Do not use any type of abrasive pad, scouring powder, or solvent such as alcohol or benzine, as it may damage the finish of your Sony computer.
- Should any solid object or liquid fall into the cabinet, keyboard, or mouse, shut down your computer and then unplug it. You may want to have the computer checked by qualified personnel before operating it any further.

On Installation

- Do not place your Sony computer in a location subject to:
    - Heat sources, such as radiators or air ducts
    - Direct sunlight
    - Excessive dust
    - Mechanical vibration or shock
    - Strong magnets or speakers that are not magnetically shielded
    - Ambient temperature of more than 95ºF (35ºC) or less than 50ºF (10ºC)
    - High humidity, moisture, or rain
- Do not place electronic equipment near your computer. The computer's electromagnetic field may cause a malfunction.
- Provide adequate air circulation to prevent internal heat build-up. Do not place your computer on loose surfaces (such as rugs or blankets) or near materials (such as curtains or draperies) that may block its ventilation slots. Leave a space of at least 8 inches from the back panel of your computer.
- The computer uses high-frequency radio signals and may cause interference to radio or TV reception. Should this occur, relocate the computer a suitable distance away from the set.
- Use only specified peripheral equipment and interface cables; otherwise, problems may result.
- Do not use cut or damaged connection cables.
- Always switch the power off before connecting your computer to peripheral equipment; otherwise, damage may occur to the integrated circuits in your computer.
- Your computer, keyboard, and mouse consist of high-precision electronic parts. Do not drop them or bump them against other objects.
- Your Sony computer will not work with party lines, cannot be connected to a coin-operated telephone, and may not work with multiple phone lines or a private branch exchange (PBX).
- If the telephone company makes a service call to your home or office and determines that your computer is responsible for the problem, the telephone company may bill you for the service call. Also, if you do not disconnect your computer when it is adversely affecting the telephone line, the telephone company has the right to disconnect your service until you correct the problem.

On Moisture Condensation

If your computer is brought directly from a cold location to a warm one, moisture may condense

inside your computer. In this case, allow at least an hour before turning on your computer. If any problem occurs, unplug your computer, and contact your Sony Service Center.

On Upgrading the System

- The procedures described in the Upgrading and Maintaining Your VAIO Digital Studio Computer chapter of the online manual assume familiarity with the general terminology associated with personal computers and with the safety practices and regulatory compliance required for using and modifying electronic equipment.
- Disconnect the system from its power source and from any telecommunications links, networks, or modems before you open the system or do any of the procedures described in the Upgrading and Maintaining Your VAIO Digital Studio Computer chapter of the online manual. Failure to do so may result in personal injury or equipment damage.
- Electrostatic discharge (ESD) can damage disk drives, add-in cards, and other components. Do the procedures described in the Upgrading and Maintaining Your VAIO Digital Studio Computer chapter of the online manual only at an ESD workstation. If such a station is not available, do not work in a carpeted area, and do not handle materials that produce or hold static electricity (cellophane wrappers, for example). Ground yourself by maintaining contact with an unpainted metal portion of the chassis while performing the procedure.
- When removing a slot cover, be careful not to damage components on the system board or add-in cards. You may need to temporarily remove add-in cards that are next to the slot cover you want to remove.

On Using the Hard Disk Drive

- Do not place the computer in a location that is subject to vibration or shock.
- Do not move the computer during operation.
- Do not subject the computer to sudden changes in temperature.
- Do not turn off the power while the computer is accessing the hard disk drive.

On Handling Diskettes

- Do not open the shutter manually and touch the surface of the diskette.
- Keep diskettes away from magnets.
- Keep diskettes away from direct sunlight and other heat sources.

On Handling CD-ROMs and DVD-ROMs

- Do not touch the surface of the disc.
- Do not drop or bend the disc.

On Cleaning CD-ROMs and DVD-ROMs

- Fingerprints and dust on the surface of a disc may cause read errors. Proper care of the disc is essential to maintain its reliability. Do not use solvents such as benzine, thinner, commercially available cleaners or anti-static spray, as they may cause damage to the disc.
- For normal cleaning, hold the disc by its edge and use a soft cloth to wipe the surface from the center out.
- If the disc is badly soiled, moisten a soft cloth with water, wring it out well, and use it to wipe the surface of the disc from the center out. Wipe off any remaining moisture with a dry soft cloth.

Other Information

Notes on Use

On the Power Source

- Your computer operates on 100-120 V AC 50/60 Hz for North American countries.
- The total power draw of installed add-in cards must not exceed the specifications for the power supply. Do not overload the system by installing add-in cards that draw excessive current. The system is designed to provide 2 amps (average) of 5V power for each card in the system not to exceed a total of 12 amps. The total from +5V current draw in a fully-loaded system (with all the add-in card slots filled) must not exceed 12 amps. If you add components to the system that draw current from the power supply, the maximum combined +3.3V and +5V output must not exceed 80 watts.
- Plug all the power cords for your computer and its peripheral equipment into the same AC supply line. AC derived from different supply lines may result in voltage differences that can cause unstable operation or unwanted weak currents at the time of connection.
- Do not share the AC outlet with any other power-consuming equipment, such as copying machines or shredders.
- You can purchase a power strip with a surge protector. This device prevents damage to your computer caused by sudden power surges such as those that may occur during an electrical storm.
- If you live in an area that experiences frequent power fluctuations, you may want to purchase a UPS (Uninterrupted Power Supply). This device contains both a surge protector and a battery backup. The surge protector prevents damage to your computer caused by power surges. The battery backup safeguards your data during a brief period of power loss.
- Do not place heavy objects on the power cord.
- Do not operate the system with the cover removed. Always reinstall the cover before turning on the system.
- To disconnect the cord, pull it out by the plug. Never pull the cord itself.
- Unplug your computer from the wall outlet if you will not be using the computer for a long time.
- The power control button on the front panel does not turn off the system AC power. To remove power from the system, you must shut down the computer as described in this manual and then unplug the AC power cord from the wall outlet or power strip.
- Before touching anything inside the computer, turn the system off and let it cool for ten minutes. This will ensure that the processor heat sink will not be hot.
- Do not attempt to open the power supply. There are no user-serviceable parts in the power supply. To avoid personal injury or damage to your equipment, refer the repair or replacement of the power supply to qualified personnel only.

On Disposal of the Lithium Battery

Dispose of the lithium battery properly. In some areas, the disposal of lithium batteries in household or business trash may be prohibited. You can return your unwanted lithium batteries to your nearest Sony Service Center or Factory Service Center. For the Sony Service Center nearest you, call 1-888-4SONY-PC (1-888-476-6972).

Do not handle damaged or leaking lithium batteries.

The lithium battery may explode if mistreated. Do not disassemble it or dispose of it in fire.

Replace the battery with a Sony CR2032 lithium battery. Using a type of battery other than a CR2032 may present a risk of fire or explosion.

On Handling

- Clean the cabinet with a soft, dry cloth or a soft cloth lightly moistened with a mild detergent solution. Do not use any type of abrasive pad, scouring powder, or solvent such as alcohol or benzine, as it may damage the finish of your Sony computer.
- Should any solid object or liquid fall into the cabinet, keyboard, or mouse, shut down your computer and then unplug it. You may want to have the computer checked by qualified personnel before operating it any further.

On Installation

- Do not place your Sony computer in a location subject to:
    - Heat sources, such as radiators or air ducts
    - Direct sunlight
    - Excessive dust
    - Mechanical vibration or shock
    - Strong magnets or speakers that are not magnetically shielded
    - Ambient temperature of more than 95ºF (35ºC) or less than 50ºF (10ºC)
    - High humidity, moisture, or rain
- Do not place electronic equipment near your computer. The computer's electromagnetic field may cause a malfunction.
- Provide adequate air circulation to prevent internal heat build-up. Do not place your computer on loose surfaces (such as rugs or blankets) or near materials (such as curtains or draperies) that may block its ventilation slots. Leave a space of at least 8 inches from the back panel of your computer.
- The computer uses high-frequency radio signals and may cause interference to radio or TV reception. Should this occur, relocate the computer a suitable distance away from the set.
- Use only specified peripheral equipment and interface cables; otherwise, problems may result.
- Do not use cut or damaged connection cables.
- Always switch the power off before connecting your computer to peripheral equipment; otherwise, damage may occur to the integrated circuits in your computer.
- Your computer, keyboard, and mouse consist of high-precision electronic parts. Do not drop them or bump them against other objects.
- Your Sony computer will not work with party lines, cannot be connected to a coin-operated telephone, and may not work with multiple phone lines or a private branch exchange (PBX).
- If the telephone company makes a service call to your home or office and determines that your computer is responsible for the problem, the telephone company may bill you for the service call. Also, if you do not disconnect your computer when it is adversely affecting the telephone line, the telephone company has the right to disconnect your service until you correct the problem.

On Moisture Condensation

If your computer is brought directly from a cold location to a warm one, moisture may condense

inside your computer. In this case, allow at least an hour before turning on your computer. If any problem occurs, unplug your computer, and contact your Sony Service Center.

On Upgrading the System

- The procedures described in the Upgrading and Maintaining Your VAIO Digital Studio Computer chapter of the online manual assume familiarity with the general terminology associated with personal computers and with the safety practices and regulatory compliance required for using and modifying electronic equipment.
- Disconnect the system from its power source and from any telecommunications links, networks, or modems before you open the system or do any of the procedures described in the Upgrading and Maintaining Your VAIO Digital Studio Computer chapter of the online manual. Failure to do so may result in personal injury or equipment damage.
- Electrostatic discharge (ESD) can damage disk drives, add-in cards, and other components. Do the procedures described in the Upgrading and Maintaining Your VAIO Digital Studio Computer chapter of the online manual only at an ESD workstation. If such a station is not available, do not work in a carpeted area, and do not handle materials that produce or hold static electricity (cellophane wrappers, for example). Ground yourself by maintaining contact with an unpainted metal portion of the chassis while performing the procedure.
- When removing a slot cover, be careful not to damage components on the system board or add-in cards. You may need to temporarily remove add-in cards that are next to the slot cover you want to remove.

On Using the Hard Disk Drive

- Do not place the computer in a location that is subject to vibration or shock.
- Do not move the computer during operation.
- Do not subject the computer to sudden changes in temperature.
- Do not turn off the power while the computer is accessing the hard disk drive.

On Handling Diskettes

- Do not open the shutter manually and touch the surface of the diskette.
- Keep diskettes away from magnets.
- Keep diskettes away from direct sunlight and other heat sources.

On Handling CD-ROMs and DVD-ROMs

- Do not touch the surface of the disc.
- Do not drop or bend the disc.

On Cleaning CD-ROMs and DVD-ROMs

- Fingerprints and dust on the surface of a disc may cause read errors. Proper care of the disc is essential to maintain its reliability. Do not use solvents such as benzine, thinner, commercially available cleaners or anti-static spray, as they may cause damage to the disc.
- For normal cleaning, hold the disc by its edge and use a soft cloth to wipe the surface from the center out.
- If the disc is badly soiled, moisten a soft cloth with water, wring it out well, and use it to wipe the surface of the disc from the center out. Wipe off any remaining moisture with a dry soft cloth.

Limited Warranty Statement

The limited warranty on your VAIO Digital Studio Computer covers parts and labor against defects in material or workmanship for a period of three months from the original date of purchase. You can extend the warranty period for an additional nine months by registering your computer. See Registering Your Computer. Once you register your computer, the limited warranty period is twelve months from the original date of purchase.

SONY ELECTRONICS INC. ("SONY") warrants this computer hardware product ("the Product") against defects in material or workmanship as follows:

Labor: For a period of ninety (90) calendar days from the original date of purchase from SONY or a SONY authorized reseller, SONY will repair defects in the Product at no charge, or pay the associated labor charges to a SONY authorized personal computer service facility. The ninety (90) day warranty period is extendible only to the original purchaser, for an additional period of nine (9) months, for a total of twelve (12) months from date of purchase when the Product is registered electronically. After the applicable period you must pay for all labor charges.

Parts: For a period of ninety (90) calendar days from the original date of purchase from SONY or a SONY authorized reseller, SONY will supply, at no charge, new or rebuilt, at SONY's option, replacement parts in exchange for defective parts. Any replacement parts will be warranted for the remainder of the original warranty period or ninety (90) calendar days from installation by SONY's authorized personal computer service facility, whichever is longer. The ninety (90) day warranty period is extendible only to the original purchaser, for an additional period of nine (9) months, for a total of twelve (12) months from date of purchase when the Product is registered electronically. All defective parts replaced under this Limited Warranty will become the property of SONY.

This Limited Warranty covers only the hardware components packaged with the Product. It does not cover technical assistance for hardware or software usage and it does not cover any software products whether or not contained in the Product; any such software is provided "AS IS" unless expressly provided for in any enclosed software limited warranty. Please refer to the End User License Agreements included with the Product for your obligations with respect to the software.

This Limited Warranty is non-transferable.

Proof of purchase in the form of a bill of sale (which is evidence that the Product is within the warranty period) must be presented to obtain warranty service. In addition, if replacement parts are required and you wish to receive the most expedient service available, you will be required to provide SONY with a credit card authorization to bill your credit card in the event you fail to return the original parts in the postage-paid envelope we provide. The credit card will only be charged for SONY's list price for the part if the part has not been returned within thirty days.

If you purchased the Product in the United States and the Product is located in the United States, you may be entitled to on-site repair service during the warranty period, subject to certain restrictions. In all instances, however, prior to an on-site service call being provided, you must communicate with Sony sufficiently to allow it to perform initial diagnostics of your Product. Please contact SONY as set forth below for further information.

If you do not qualify for on-site warranty service or choose not to take advantage of any applicable on-site warranty service, you must take the Product, or deliver the Product freight prepaid, in either its original package or packaging providing the Product with a degree of protection equivalent to that of the original packaging, to any SONY authorized personal computer service facility. Please contact SONY as set forth below for further information.

With respect to all service provided, it is your responsibility to backup the contents of your hard drive, including any data you have stored or software you have installed on the hard drive. It is likely that the contents of your hard drive will be lost or reformatted in the course of service and SONY will not be responsible for any damage to or loss of any programs, data or other information stored on any media or any part of any Product serviced hereunder.

IF DURING THE REPAIR OF THE PRODUCT THE CONTENTS OF THE HARD DRIVE ARE ALTERED, DELETED, OR IN ANY WAY MODIFIED, SONY IS NOT RESPONSIBLE WHATSOEVER. YOUR PRODUCT

WILL BE RETURNED TO YOU CONFIGURED AS ORIGINALLY PURCHASED (SUBJECT TO AVAILABILITY OF SOFTWARE).

Be sure to remove all third party hardware, software, features, parts, options, alterations, and attachments not warranted by SONY prior to sending the product to SONY for service. SONY is not liable for any loss or damage to these items.

This Limited Warranty does not cover any consumable items (such as batteries) supplied with this Product; cosmetic damages; damage or loss to any software programs, data, or removable storage media; or damage due to (1) acts of God, accident, misuse, abuse, negligence, commercial use or modifications of this Product; (2) improper operation or maintenance of this Product; (3) connection to improper voltage supply; or (4) attempted repair by any party other than a SONY authorized personal computer service facility. This Limited Warranty does not apply when the malfunction results from the use of this Product in conjunction with accessories, products or ancillary or peripheral equipment, or where it is determined by SONY that there is no fault with this Product itself. This Limited Warranty is valid only in the United States of America.

This Limited Warranty is invalid if the factory applied serial number has been altered or removed from the Product.

Repair or replacement of defective parts or hardware as provided under this Limited Warranty is the exclusive remedy of the consumer. SONY SHALL NOT BE LIABLE FOR ANY INCIDENTAL OR CONSEQUENTIAL DAMAGES FOR BREACH OF ANY EXPRESS OR IMPLIED WARRANTY, BREACH OF CONTRACT, NEGLIGENCE, STRICT LIABILITY OR ANY OTHER LEGAL THEORY RELATED TO THIS PRODUCT. SUCH DAMAGES INCLUDE, BUT ARE NOT LIMITED TO, LOSS OF PROFITS, LOSS OF REVENUE, LOSS OF DATA, LOSS OF USE OF THE PRODUCT OR ANY ASSOCIATED EQUIPMENT, DOWN TIME AND PURCHASER'S TIME. EXCEPT TO THE EXTENT PROHIBITED BY APPLICABLE LAW, ANY IMPLIED WARRANTY OF MERCHANTABILITY OR FITNESS FOR A PARTICULAR PURPOSE ON THIS PRODUCT IS LIMITED IN DURATION TO THE DURATION OF THIS WARRANTY.

Some states do not allow the exclusion or limitation of incidental or consequential damages, or allow limitations on how long an implied warranty lasts, so the above limitations or exclusions may not apply to you. This Limited Warranty gives you specific legal rights, and you may have other rights which vary from state to state.

Technical Support: Although technical support is not provided free of charge under this Limited Warranty, SONY has established a telephone number for technical support. Charges may apply for technical support, unless and to the extent that free technical support for a limited period is provided in writing as a feature of your Product. Prior to placing your call, please have available the model and serial number for your Product, date of purchase, a list of all options installed in your Product and a detailed description of the problem.

For Product support, on-line knowledge base, frequently asked questions, and free updates via the Internet: http://www.sony.com/pcsupport.

For Product information, service assistance, resolution of a service problem, or technical assistance, call: 1-888-4SONYPC