Part No.504021120002
Rev: A
Aug. 2022

Parts Manual

GTZZ15J/AB15J/AB480J

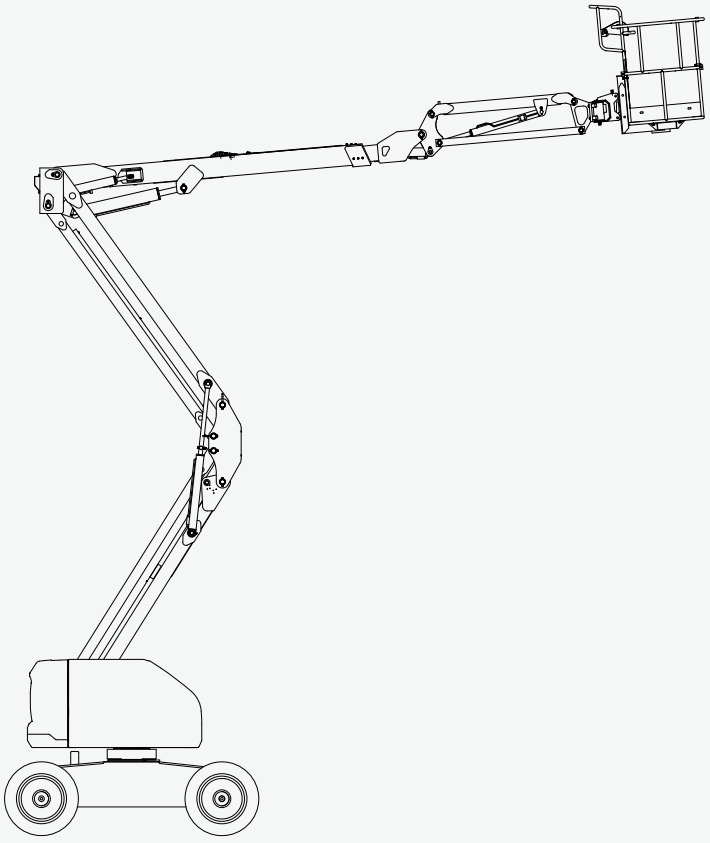

CE EAC GB

SINOBOOM

⚠ WARNING

Operating, servicing and maintaining this vehicle or equipment can expose you to chemicals including engine exhaust, carbon monoxide, phthalates, and lead, which are known to the State of California to cause cancer and birth defects or other reproductive harm. To minimize exposure, avoid breathing exhaust, do not idle the engine except as necessary, service your vehicle or equipment in a well-ventilated area and wear gloves or wash your hands frequently when servicing. For more information go to: www.P65warnings.ca.gov.
For disposal, please follow your nation regulation.

Manual revision history：

REV	DATE	DESCRIPTION	REMARK
A	Aug, 2022	Original issue of the manual	

Please contact us:

Website : www.sinoboom.com

E-mail : sales@sinoboom.com

Sales Tel : 0086-0731-87116222

Service Tel : 0086-0731–87116333

Address : No.128, East Jinzhou Avenue, Ningxiang High-tech Industrial Park, Changsha, Hunan, China

Zip Code : 410600

Copyright © Hunan Sinoboom Intelligent Equipment Co., Ltd. All Rights Reserved

The final interpretation right of this manual belongs to Hunan Sinoboom Intelligent Equipment Co., Ltd.

APPLICATION

Use the following table to identify the specific serial number for models included in this manual. Check the model of your machine before consulting the manual, and then use the correct manual according to the serial number of the model. See the nameplate on your machine to identify the model and serial number.(See ***Decals*** of this manual for details.)

Model	Trade Identification		Serial No.
	Metric	Imperial	
GTZZ15J	AB15J	AB480J	From 0402100100 to present

NOTE:

- Product model is applied in product nameplate for distinction of products of different main parameters.
- Product trade identification is applied in marketing and machine decals for distinction of products of different main parameters, and can be classified as metric type and imperial type: The metric type of trade identification is applicable to machines for countries/regions using metric system or as specially required by customers; The imperial type of trade identification is applicable to the machines for countries/regions using imperial system or as specially required by customers.

STATEMENTS

Hunan Sinoboom Intelligent Equipment Co., Ltd. (Hereinafter referred to as Sinoboom) will upload the latest product manual information to the website www. sinoboom. com as soon as possible. However, due to continuous product improvement, the information in this manual is subject to change without prior notice.

This manual covers the basic parts information of one or more products. Therefore, please use this manual according to your needs. If you find problems in the manual or have suggestions for improvement, feel free to share your feedback with Sinoboom, and we will address these issues as soon as possible.

Feel free to consult and download the *Operation Manual*, *Maintenance Manual* and *Parts Manual* of the products you need online at www.sinoboom.com.

Hunan Sinoboom Intelligent Equipment Co., Ltd. retains the right of final interpretation of the manual.

SINOBOOM

All of the above are registered trademarks of Hunan Sinoboom Intelligent Equipment Co., Ltd..

GENERAL INFORMATION

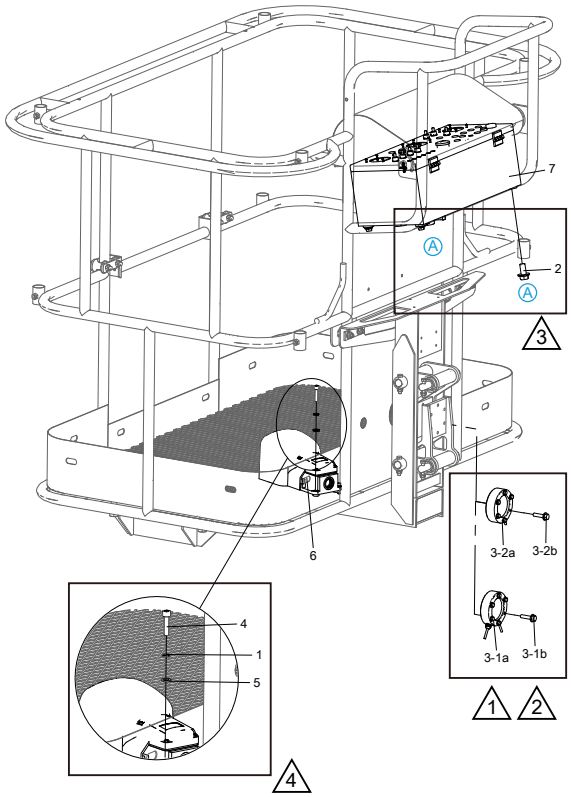

No.	Part No.	Qty.	Description
1	215040000004	3	Washer 6-A2-70 GB/T 93
2	215010000237	4	Bolt M10×20-8.8-ZnD GB/T 5789
3	103006060034		Options, Load sensor
3-1	103006060026	1	Load sensor installation
3-1a	203150000070	1	Load sensor
3-1b	215010000232	6	Bolt M6×25-8.8-ZnD GB/T 5789
3-2	103006060029	1	Load sensor installation
3-2a	203150000069	1	Load sensor
3-2b	215010000232	6	Bolt M6×25-8.8-ZnD GB/T 5789
4	215020000013	3	Screw M6×25-A2-70 GB/T 70.1
5	215040000033	3	Washer 6-A2 GB/T 97.1
6	203060000009	1	Footswitch
6	105002040001	1	Platform control box assembly

1 2

The special meanings expressed in the illustrations and tables in this manual are explained as follows :

1 Add "-1, -2, -3…" after the number to represents an options (one multiple choice), such as choose 3-1 and 3-2 according to specific needs.

2 Add "lowercase a, b, c…" after the number to indicate by a variety of components, such as 1a and 1b composition 1.

3 "A,B,C..." in figure indicates the same parts in many places, and the same place is indicated by the same symbol.

4 The diagram indicated by the lead is a local enlargement or a local illustration.

TABLE OF CONTENTS

1 Chassis Components 3

1.1 Drive System 4
1.2 Front outrigger (4WD) 6
1.3 Steer System 8
1.4 Steer Linkage 10
1.5 Pad Installation (Models Without Oscillation) 11
1.6 Oscillate Cylinder Installation (Models With Oscillation) 13
1.7 Chassis Shield Installation (4WD) 14

2 Turntable Components 17

2.1 Swing Drive Installation 18
2.2 Turntable Left Hoods Installation 20
2.3 Turntable Left Hoods Installation (Deutz Engine) 22
2.4 Turntable Right Hoods Installation 24
2.5 Turntable RightHoods Installation (Deutz Engine) 27
2.6 Counterweight Installation 30
2.7 Fuel Tank Installation 32
2.8 Turntable Shield Installation 33

3 Engine Components 35

3.1 Engine Components (Deutz Engine D2011L03I) 36
3.1.1 Engine Support Installation (Deutz Engine D2011L03I) 37
3.1.2 Engine Installation (Deutz Engine D2011L03I) 38
3.1.3 Deutz Engine D2011 L03i (PN.201010000006) 41
3.2 Engine Components (Yanmar Engine 4TNV88-BDFLTC) 42
3.2.1 Engine Support Installation (Yanmar Engine 4TNV88-BDFLTC-ZCDCSI)) 43
3.2.2 Engine Installation (Yanmar Engine 4TNV88-BDFLTC) 45
3.2.3 Engine-Yanmar 4TNV88-BDFLTC(PN.201010003023) 47
3.2.4 Radiator Installation (Yanmar Engine 4TNV88-BDFLTC) 48
3.2.5 Fuel FilterFuel-water Separator Installation (Yanmar Engine 4TNV88-BDFLTC) 49
3.3 Engine Installation (Yanmar Engine 4TNV88C-DFLT) 50

3.3.1 Engine Support Installation (Yanmar Engine 4TNV88C-DFLT) 51
3.3.2 Engine Installation (Yanmar Engine 4TNV88C-DFLT) 52
3.3.3 Engine-Yanmar 4TNV88C-DFLT(PN.201010003018) 54
3.3.4 Radiator Installation (Yanmar Engine 4TNV88C-DFLT) 56
3.3.5 Fuel FilterFuel-water Separator Installation (Yanmar Engine 4TNV88C-DFLT) 57
3.4 Engine Installation (Yanmar Engine 4TNV88-ZCDCSI) 58
3.4.1 Engine Support Installation (Yanmar Engine 4TNV88-BDFLTC-ZCDCSI)) 59
3.4.2 Engine Installation (Yanmar Engine 4TNV88-ZCDCSI) 61
3.4.3 Engine-Yanmar 4TNV88-ZCDCSI(PN.201010003056) 63
3.4.4 Radiator Installation (Yanmar Engine 4TNV88-ZCDCSI) 64
3.4.5 Fuel FilterFuel-water Separator Installation (Yanmar Engine 4TNV88-ZCDCSI) 65

4 Boom Components 67

4.1 Tower Boom Installation 68
4.2 Base Boom Installation 71
4.3 Telescopic Boom Installation 73
4.4 Cable Track Installation 75
4.5 Jib Boom Installation 76

5 Platform Components 79

5.1 Platform Support Installation 80
5.2 Platform Installation(Small-sized) 82
5.3 Platform Installation(Middle-sized) 84

6 Hydraulic System 87

6.1 Drive Control Valve(PN.202040003217) 88
6.2 brake/2-speed Oscillate control valve(PN.202040003183) 90
6.3 Deutz Pump Drive Unit 91
6.4 Yanmar Pump Drive Unit 92
6.5 Turntable Hydraulic Components Installation 93
6.6 Hydraulic Tank Assembly 95
6.7 Function Vavle Assembly(PN.202040000185) 97
6.8 Boom Hydraulic Components Installation 99
6.9 Leveling Counterbalance Valve(PN.202040000011) 101
6.10 Platform Duplex Valve(PN.202040000329) 102

6.11 Platform Manifold, Duplex (PN.202040003259) 104
6.12 Lift Counterbalance Valve, Tower Boom(PN.202040000327) 106
6.13 Main Lift Counterbalance Valve(PN.202040000328) 107
6.14 Telescope Counterbalance Valve (PN.202040000107)..... 108
6.15 Chassis HydraulicComponents Installation(4WD) 109
6.16 Traction System Piping Layout (4WD) 111
6.17 Oscillate System Layout 114
6.18 Boom Tubes Layout 115
6.19 Turntable Piping layout 117
6.20 Variable Displacment Pump Piping Layout 120
6.21 Drive Pump Layout 121
6.22 Drive Pump Layout 122
6.23 Gear Pump Layout 124
6.24 Gear Pump Layout 125
6.25 Hydraulic Schematic Diagram 126

7 Electrical System 127

7.1 Electrical System (Rising) 128
7.1.1 Chassis Electrical Components Installation 129
7.1.2 Batteries Installation 130
7.1.3 Electrical Installation-Deutz Engine 131
7.1.4 Deutz Engine Harness (PN.104021063000) 132
7.1.5 Boom Electrical Components Installation 134
7.1.6 Cable Track Diagram(PN.104021063058) 136
7.1.7 Platform Harness(PN.103006063009) 137
7.1.8 Platform Harness(PN.104020060028) 138
7.1.9 Platform Sensors Harness(PN.104020060004)..... 140
7.1.10 Platform Electrical Components Installation 141
7.1.11 Platform Control Box Assembly(PN.104020060015) 142
7.1.12 Platform Control Box Harness(PN.104020060008)-EN 145
7.1.13 Turntable Electrical Components Installation 147
7.1.14 Ground Control Box Assembly(PN.104020060011) 149
7.1.15 Ground Control Box Harness(PN.104020060005) 152
7.1.16 Turntable Sensors Harness(PN.104020060002) 154
7.1.17 Turntable Harness(PN.104020063005) 156
7.1.18 Electrical Power Wiring Layout(PN.104021063052)..... 159

7.1.19 Electrical Schematic-Power Switch Box(PN.104021063039) 161
7.1.20 Electrical Schematic Diagram(Rising) 162
7.2 Electrical System (Rising-Deutz) 164
7.2.1 Chassis Electrical Components Installation 165
7.2.2 Batteries Installation 166
7.2.3 Engine Electrical Components Installation 167
7.2.4 Engine Harness(PN104021063090)-Rising-Deutz 168
7.2.5 Boom Electrical Components Installation 170
7.2.6 Cable Track Diagram(PN.104021063058) 172
7.2.7 Platform Harness(PN.103006063009) 173
7.2.8 Platform Harness(PN.104020060028) 174
7.2.9 Platform Sensors Harness(PN.104020060004) 176
7.2.10 Platform Electrical Components Installation 177
7.2.11 Platform Control Box Assembly(PN.104020060015) 178
7.2.12 Platform Control Box Harness(PN.104020060008)-EN 181
7.2.13 Turntable Electrical Components Installation 183
7.2.14 Ground Control Box Assembly(PN.104020060011) 185
7.2.15 Ground Control Box Harness(PN.104020060005) 188
7.2.16 Turntable Sensors Harness(PN.104020060002) 190
7.2.17 Turntable Harness(PN.104020063005) 192
7.2.18 Electrical Schematic Diagram 195
7.2.19 Electrical Schematic of Engine 196
7.2.20 Electrical Schematic Diagram(Rising & Deutz, China Stage III) 197
7.3 Electrical System (Rexroth) 199
7.3.1 Chassis Electrical Components Installation 200
7.3.2 Batteries Installation 201
7.3.3 Electrical Installation-Deutz Engine 202
7.3.4 Deutz Engine Harness (PN.104009060066) 203
7.3.5 Boom Electrical Components Installation (Rexroth) 205
7.3.6 Cable Track Diagram(PN.104021063058) 207
7.3.7 Platform Harness(PN.104021063016) 208
7.3.8 Platform Harness(PN.103006063009) 210
7.3.9 Platform Sensors Harness(PN.104021063017) 211
7.3.10 Platform Electrical Components Installation (Rexroth) 213
7.3.11 Platform Control Box Assembly(PN.104021063009) 215
7.3.12 Platform Control Box Harness(PN.104021063013) 218

7.3.13 Turntable Electrical Components Installation 220
7.3.14 Ground Control Box Assembly(PN.104021063056) 222
7.3.15 Ground Control Box Harness(PN.104021063012) 224
7.3.16 Turntable Sensors Harness (PN.104021063015) 226
7.3.17 Turntable Harness(PN.104021063014) 228
7.3.18 Electrical Power Wiring Layout(PN.104021063052) 231
7.3.19 Electrical Schematic-Power Switch Box(PN.104021063039) 233
7.3.20 Electrical Schematic Diagram(Rexroth) 234
7.4 Electrical System (Rexroth-Yanmar) 236
7.4.1 Chassis Electrical Components Installation 237
7.4.2 Batteries Installation 238
7.4.3 Engine Electrical Components Installation (Yanmar) 239
7.4.4 Engine Harness(PN.104021063087) 240
7.4.5 Turntable Electrical Components Installation 242
7.4.6 Ground Control Box Assembly(PN.104021063056) 244
7.4.7 Ground Control Box Harness(PN.104021063012) 246
7.4.8 Electrical Power Wiring Layout(PN.104021063088) 248
7.4.9 Turntable Sensors Harness (PN.104021063015) 250
7.4.10 Turntable Harness(PN.104021063054) 252
7.4.11 Boom Electrical Components Installation (Rexroth) 255
7.4.12 Cable Track Diagram(PN.104021063058) 257
7.4.13 Platform Harness(PN.104021063016) 258
7.4.14 Platform Harness(PN.103006063009) 260
7.4.15 Platform Sensors Harness(PN.104021063017) 261
7.4.16 Platform Electrical Components Installation (Rexroth) 263
7.4.17 Platform Control Box Assembly(PN.104021063009) 265
7.4.18 Platform Control Box Harness(PN.104021063013) 268
7.4.19 Electrical Schematic Diagram 270
7.4.20 Electrical Schematic Diagram(Rexroth & Yanmar, China Stage III) 271
7.5 Electrical System(Rexroth-Yanmar) 273
7.5.1 Chassis Electrical Components Installation 274
7.5.2 Batteries Installation 275
7.5.3 Electrical Installation (Yanmar) 276
7.5.4 Engine Harness 277
7.5.5 Turntable Electrical Components Installation 280
7.5.6 Ground Control Box Assembly(PN.104021063112) 282

7.5.7 Ground Control Box Harness(PN.104021063120) 285
7.5.8 Electrical Power Wiring Layout(PN.104021063088) 287
7.5.9 Turntable Sensors Harness (PN.104021063015) 289
7.5.10 Turntable Harness(PN.104021063119) 291
7.5.11 Boom Electrical Components Installation 294
7.5.12 Cable Track Diagram(PN.104021063058) 296
7.5.13 Platform Harness(PN.103006063009) 297
7.5.14 Platform Harness(PN.104021063016) 298
7.5.15 Platform Sensors Harness(PN.104021063017) 300
7.5.16 Platform Electrical Components Installation 302
7.5.17 Platform Control Box Assembly(PN.104021063123) 304
7.5.18 Platform Control Box Harness(P[N.104021063118) 307
7.5.19 Electrical Schematic Diagram 309
7.5.20 Electrical Schematic of Engine 310
7.5.21 Electrical Schematic Diagram(Rexroth & Yanmar, China Stage IV) 311

8 Decals 313

8.1 Decals(GB) 314
8.2 Decals(CE) 317
8.3 Decal(AS) 320

9 Hydraulic Generator(Options) 323

9.1 Hydraulic generator installation 324

10 Special Options 327

10.1 Work Light Installation 328
10.2 GPS Installation 329
10.3 Overhead Protection Installation 330
10.4 Manual Storage Container Installation 331
10.5 Civil AC Power Installation 332
10.6 Anti-pinch device installation 334
10.7 Anti-pinch Harness(PN.105078063081) 336
10.8 Electrical diagram of anti-pinch device 338

INTRODUCTION

Thank you for choosing and using the machinery of Hunan Sinoboom Intelligent Equipment Co., Ltd. Always read, understand and become familiar with the operation requirements of the machine and its associated safety procedures before operating, maintaining and repairing the machine. Operating the machine without becoming familiar with its specific operation requirements and safety procedures poses serious risks. Operators who follow safety rules and operate the machine carefully and effectively will prevent personal injury, property loss and accidents.

The information contained in this manual is designed to aid the user in locating and identifying replacement parts. Component parts of various assemblies and sub-assemblies are illustrated and accompanied by a descriptive parts list. Exploded drawings are used to show relative location of component parts in disassembly or assembly order.

This product uses the latest technology and the highest quality components. When replacement parts are required, Hunan Sinoboom Intelligent Equipment Co., Ltd. recommends that only the original or recommended parts be used. When ordering replacement parts, the complete part number and description should be used to ensure proper identification and delivery of the desired item. This complete identification should also be used when requesting equipment information.

Consider this manual a part of the machine, along with *Operation Manual* and *Maintenance Manual*, and always keep the manuals with the machine. The owner or administrator of the machine shall offer all manuals and other necessary information provided by the machine manufacturer regarding the daily inspection and maintenance to each of the renters. If the machine is sold, the owner or administrator must pass along the manuals and other necessary information to the purchaser. The owner or administrator of the machine shall also provide the manufacturer’s maintenance information to the person responsible for maintaining the machine.

If you have any questions, contact Hunan Sinoboom Intelligent Equipment Co., Ltd..

This Page Intentionally Left Blank

1 CHASSIS COMPONENTS

1.1 DRIVE SYSTEM

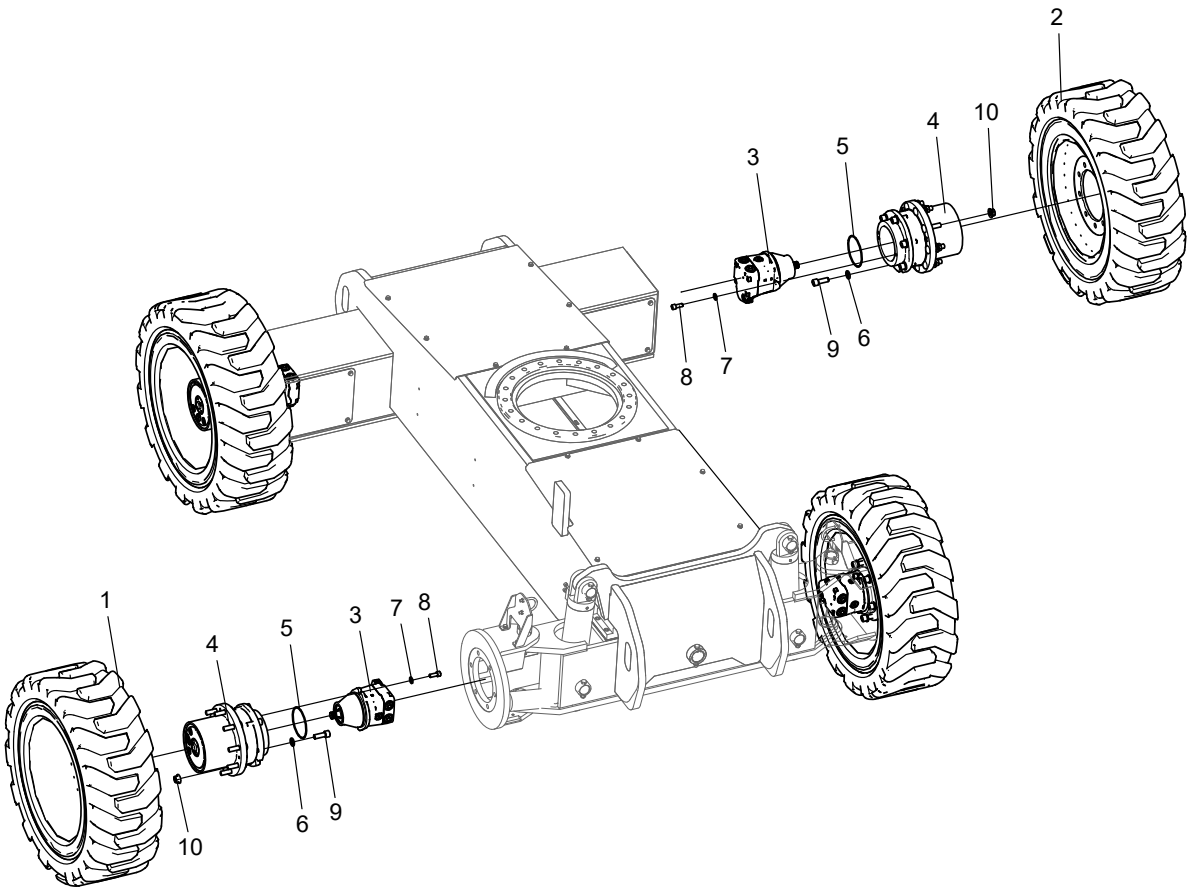

No.	Part No.	Qty.	Description
1	104009030016		Right tire options
1-1	104021033020	2	Right tire and wheel assembly, non-marking, foam filled
1-2	104020030003	2	Tire assembly, foam-filled, right
1-3	104009030013	2	Tire assembly, solid, right
1-4	104021030011	2	Right non-marking tire and wheel assembly
2	104009030014		Left tire options
2-1	104021033018	2	Left tire and wheel assembly, non-marking, foam filled
2-2	104021030010	2	Left non-marking tire and wheel assembly
2-3	104020030004	2	Tire assembly, foam-filled, left
2-4	104009030020	2	Tire, solid, left
3	202020000024	4	Drive motor
3a	207990003104	1	Seal kit, drive motor
4	204020000026	4	Reducer
5	207040000058	4	O-ring
6	215040000052	24	Washer 16-DKL GB/T 1230
7	215040000051	8	Washer 12-DKL GB/T 1230
8	215020000074	8	Screw M12×30-10.9-DKL GB/T 70.1
9	215020000084	24	Screw M16×45-10.9-DKL GB/T 70.1
10	215030000063	36	Nut M16×1.5-10-DKL DTF 6177.2

© Aug. 2022

1.2 FRONT OUTRIGGER (4WD)

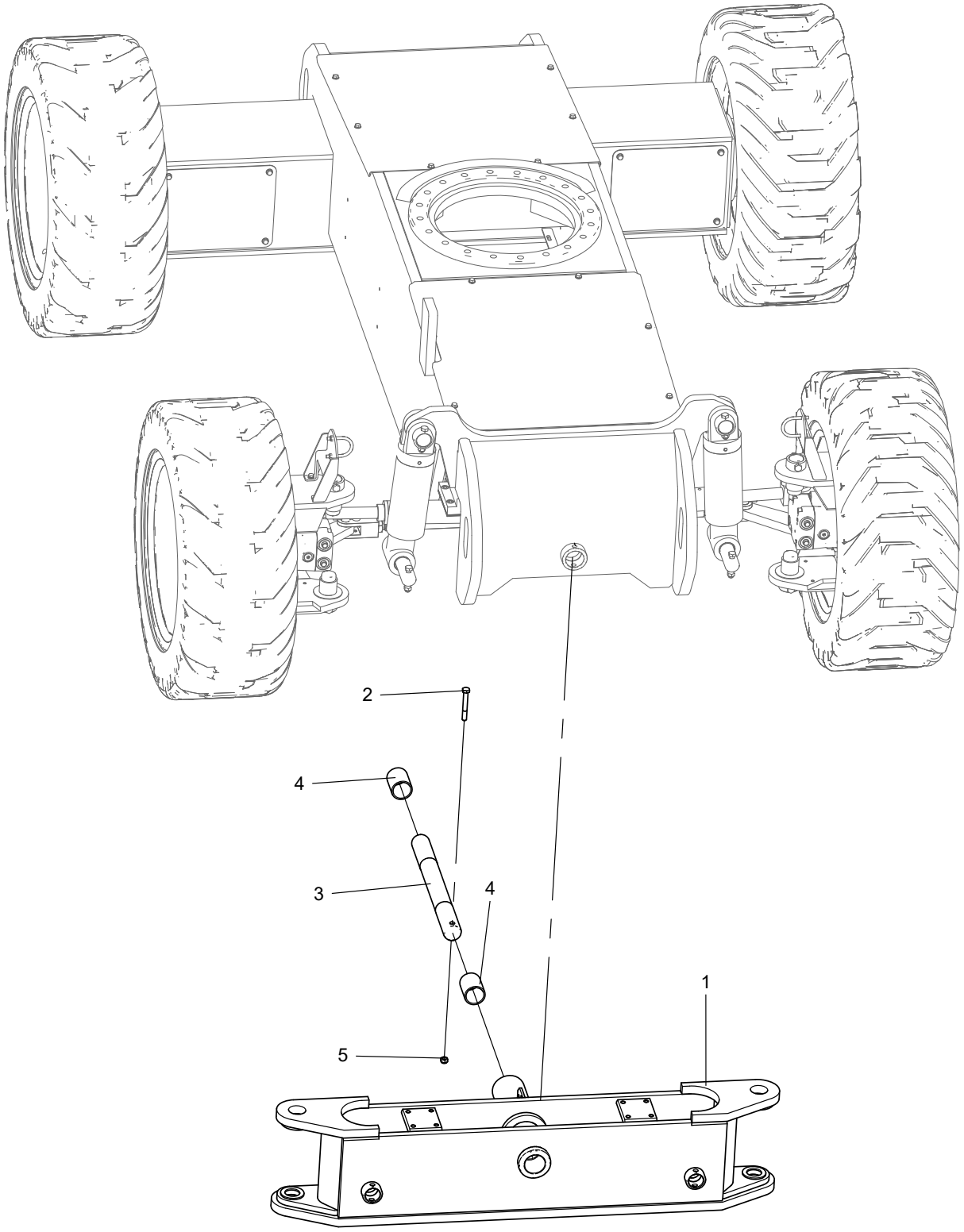

No.	Part No.	Qty.	Description
1	104021030005	1	Outrigger, fixed, front
2	215010000016	1	Bolt M12×90-8.8-ZnD GB/T 5782
3	104009030025	1	Pin XJΦ50-511[Z]
4	214030000070	2	Bearing, self-lubricating
5	215030000029	1	Nut M12-8-ZnD GB/T 6184

 © Aug. 2022

1.3 STEER SYSTEM

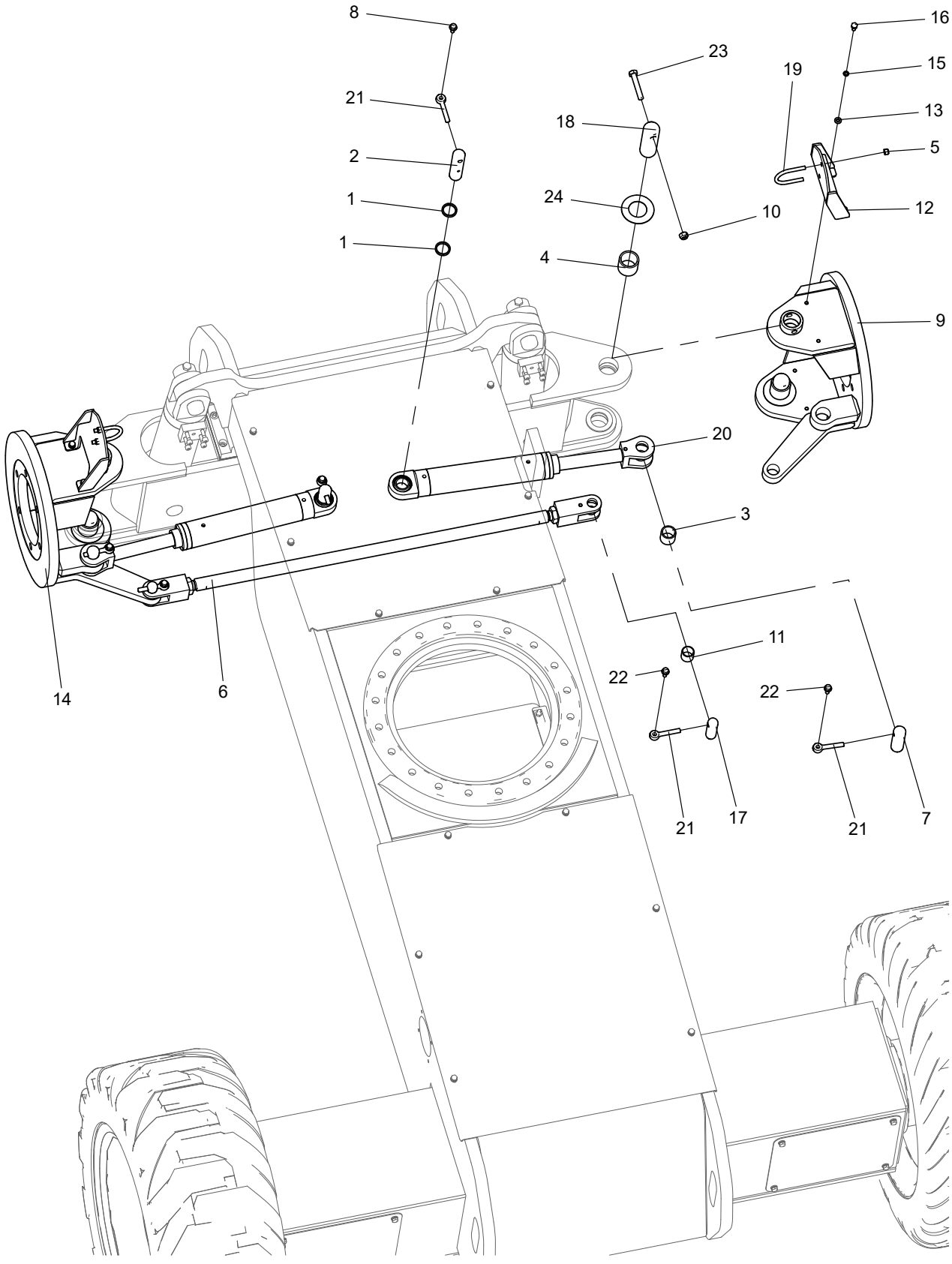

No.	Part No.	Qty.	Description
1	104009030066	4	Sleeve
2	105001030055	2	Pin XGΦ30-105
3	214030000006	2	Bearing, self-lubricating
4	214030000053	4	Bearing, self-lubricating
5	215030000026	4	Nut M8-8-ZnD GB/T889.1
6	104009030001	1	Steer linkage
7	105001030060	2	Pin XGΦ30-80
8	215010000234	4	Bolt M8×20-8.8-ZnD GB/T 5789
9	104009030003	1	Connection disc, steer right
10	215030000029	4	Nut M12-8-ZnD GB/T 6184
11	214030000035	2	Bearing, self-lubricating
12	104021030002	2	Tube support
13	215040000034	4	Washer 8-200HV-ZnD GB/T 97.1
14	104009030004	1	Steer disc, left
15	215040000005	4	Washer 8-ZnD GB/T 93
16	215010000056	4	Bolt M8×16-8.8-ZnD GB/T 5783
17	104009030049	2	Pin XGΦ25-65[Z]
18	104009030051	4	Pin XGΦ40-110[Z]
19	104016020023	2	U-clamp
20	104009030076	2	Steer cylinder(A)
20a	207990003247	1	Seal kit, cylinder
21	101012010044	6	Keeper pin
22	215010000234	2	Bolt M8×20-8.8-ZnD GB/T 5789
23	215010000106	4	Bolt M12×70-8.8-ZnD GB/T 5783
24	105001030054	4	Washer

1.4 STEER LINKAGE



No.	Part No.	Qty.	Description
1	104009030062	1	Mounting head 2
2	215030000076	1	Nut M24×2-8 GB/T6173
3	104009030053	1	Connecting rod
4	215030000077	1	Nut M24×2-8 left GB/T6173
5	104009030042	1	Mounting head 1

1.5 PAD INSTALLATION (MODELS WITHOUT OSCILLATION)

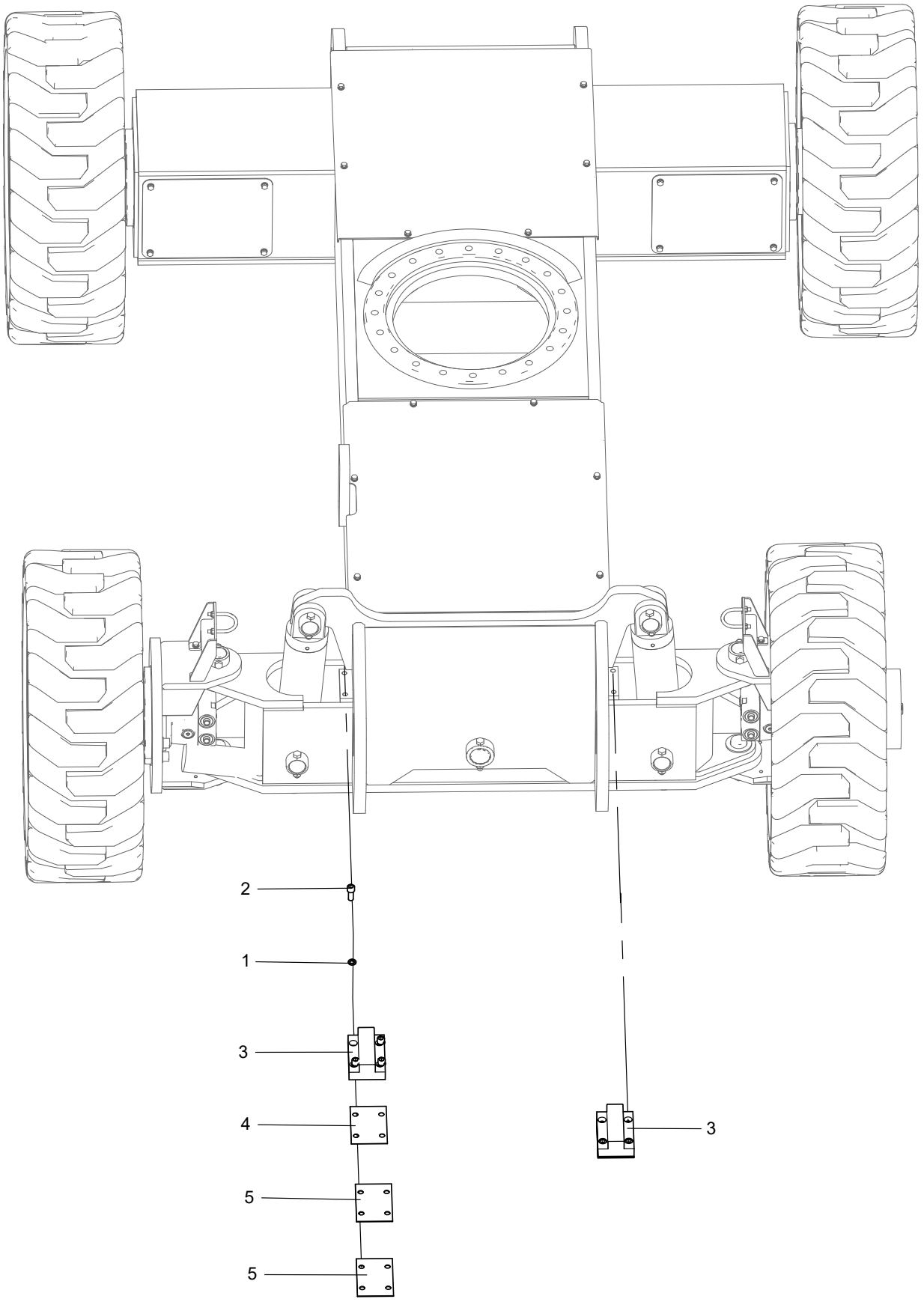

No.	Part No.	Qty.	Description
1	215040000007	8	Washer 12-ZnD GB/T 93
2	215020000073	8	Screw M12×30-8.8-ZnD GB/T 70.1
3	104009030043	2	Plate
4	104009030059	2	Shim
5	104009030058	4	Shim

1.6 OSCILLATE CYLINDER INSTALLATION （MODELS WITH OSCILLATION）

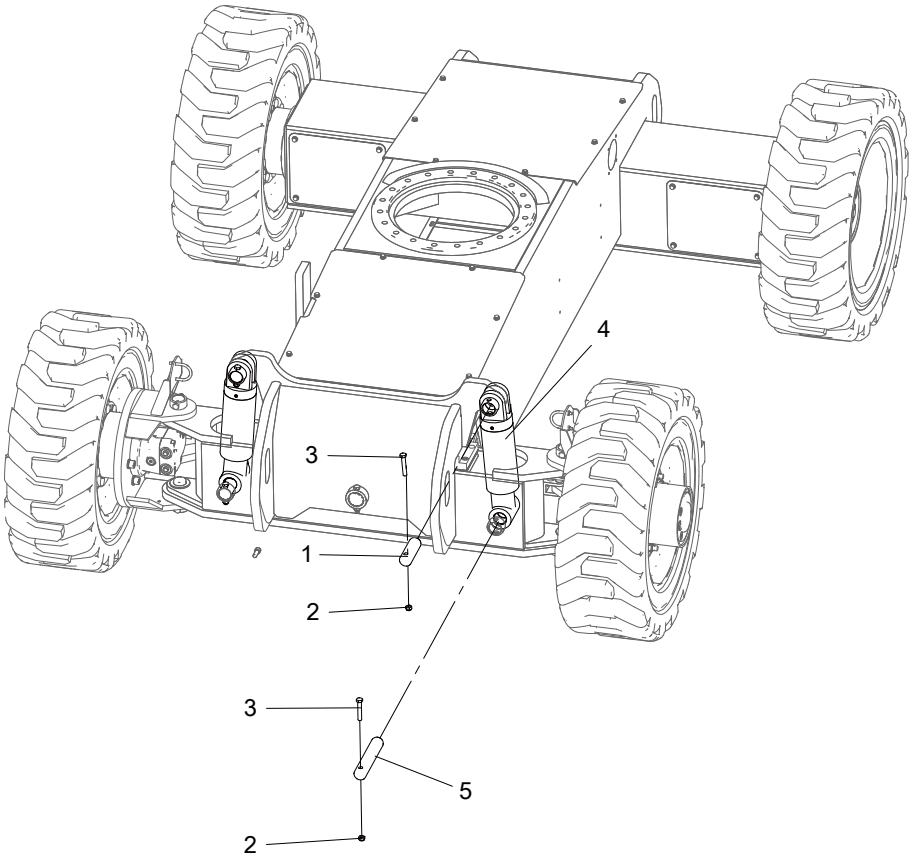

No.	Part No.	Qty.	Description
1	104008030005	2	Pin XGΦ40-125
2	215030000029	4	Nut M12-8-ZnD GB/T 6184
3	215010000106	4	Bolt M12×70-8.8-ZnD GB/T 5783
4	104009030077	2	Oscillate cylinder(B)
4a	207990003240	1	Seal kit, cylinder(1000122)
4b	207990003291	1	Seal kit, cylinder(1000145)
5	104009030052	2	Pin XGΦ40-220[Z]

1.7 CHASSIS SHIELD INSTALLATION (4WD)

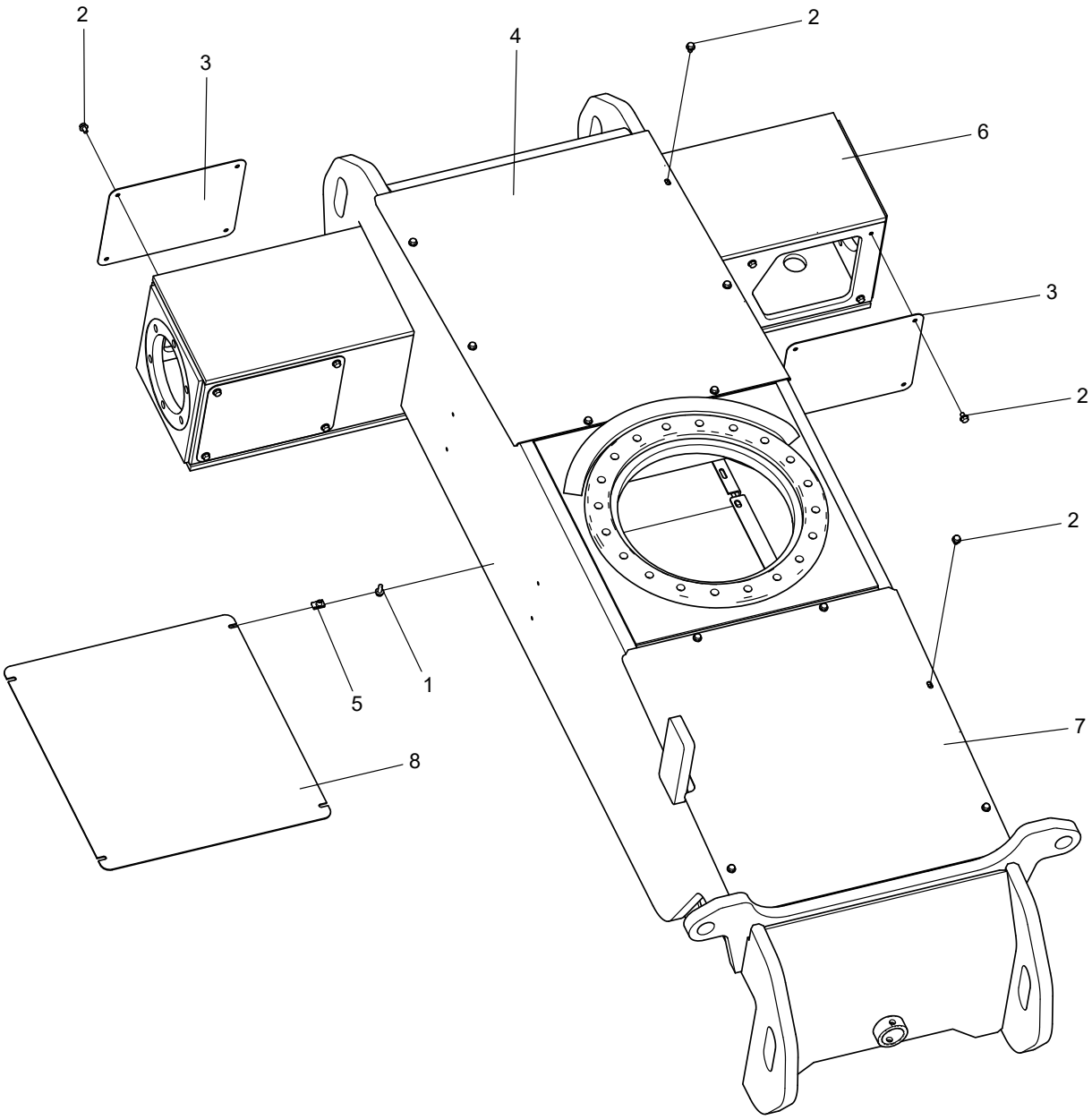

No.	Part No.	Qty.	Description
1	215010000234	4	Bolt M8×20-8.8-ZnD GB/T 5789
2	215010000233	28	Bolt M8×12-8.8-ZnD GB/T 5789
3	105001030052	4	Cover
4	104015030001	1	Cover
5	215030000106	4	B type spring nuts
6	104021030006	1	Chassis
7	104015030002	1	Front cover
8	104009030002	1	Plate

This Page Intentionally Left Blank

2 TURNTABLE COMPONENTS

2.1 SWING DRIVE INSTALLATION

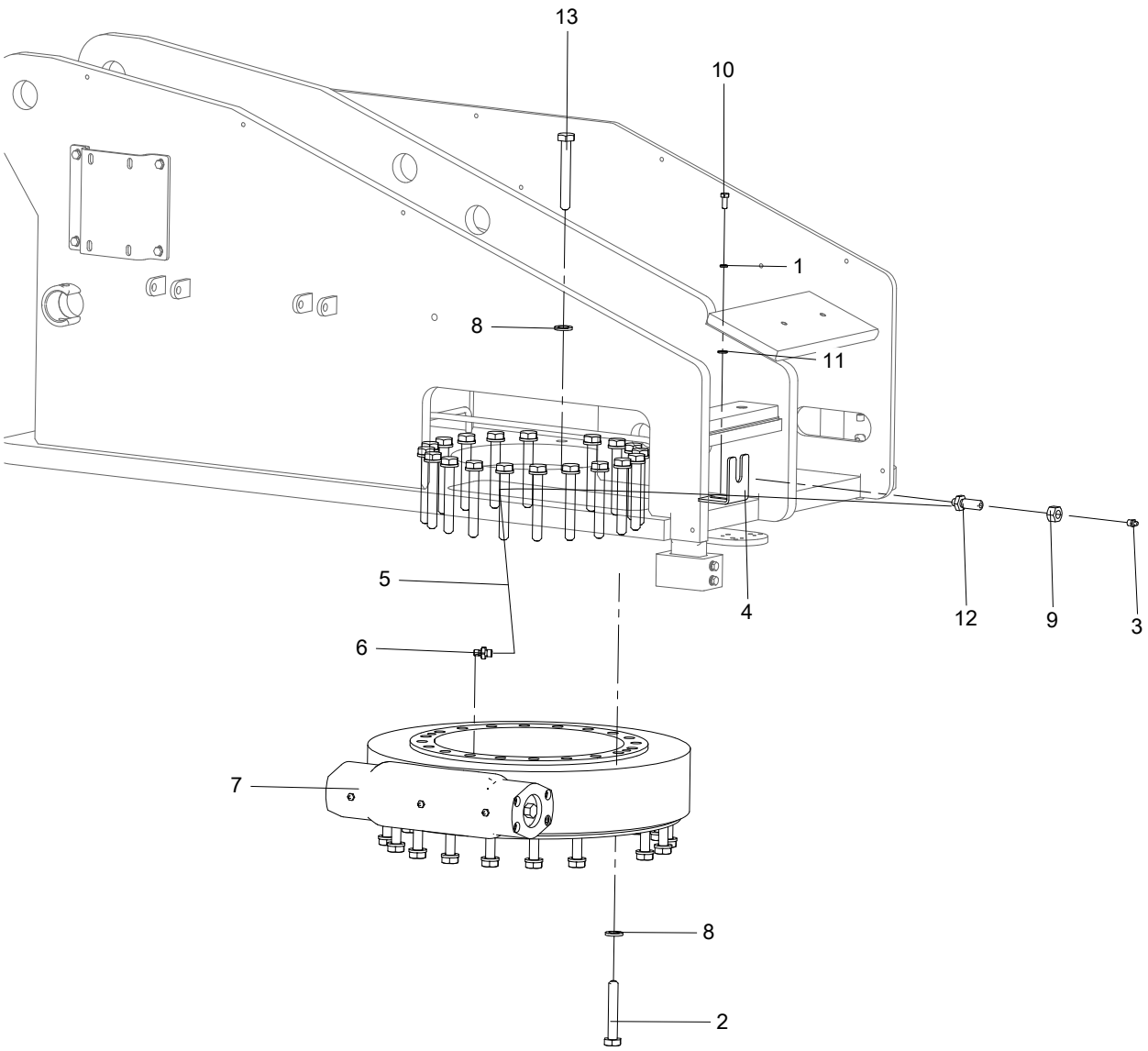

No.	Part No.	Qty.	Description
1	215040000005	1	Washer 8-ZnD GB/T 93
2	215010000152	20	Bolt M16×100-10.9-DKL GB/T 1228
3	207010000003	1	Grease nipple M10×1 GB/T 1152
4	105001020226	1	Plate
5	213050000088	1	Hose
6	213010000060	1	Fitting
7	204020000015	1	Slewing reducer
9	215030000010	1	Nut M16-8-ZnD GB/T 6170
10	215010000057	1	Bolt M8×20-8.8-ZnD GB/T 5783
11	215040000034	1	Washer 8-200HV-ZnD GB/T 97.1
12	105001020225	1	Fitting
13	215010000154	20	Bolt M16×120-10.9-DKL GB/T 1228
8	215040000052	40	Washer 16-DKL GB/T 1230
14	305120000001	1	Lithium-based grease

2.2 TURNTABLE LEFT HOODS INSTALLATION

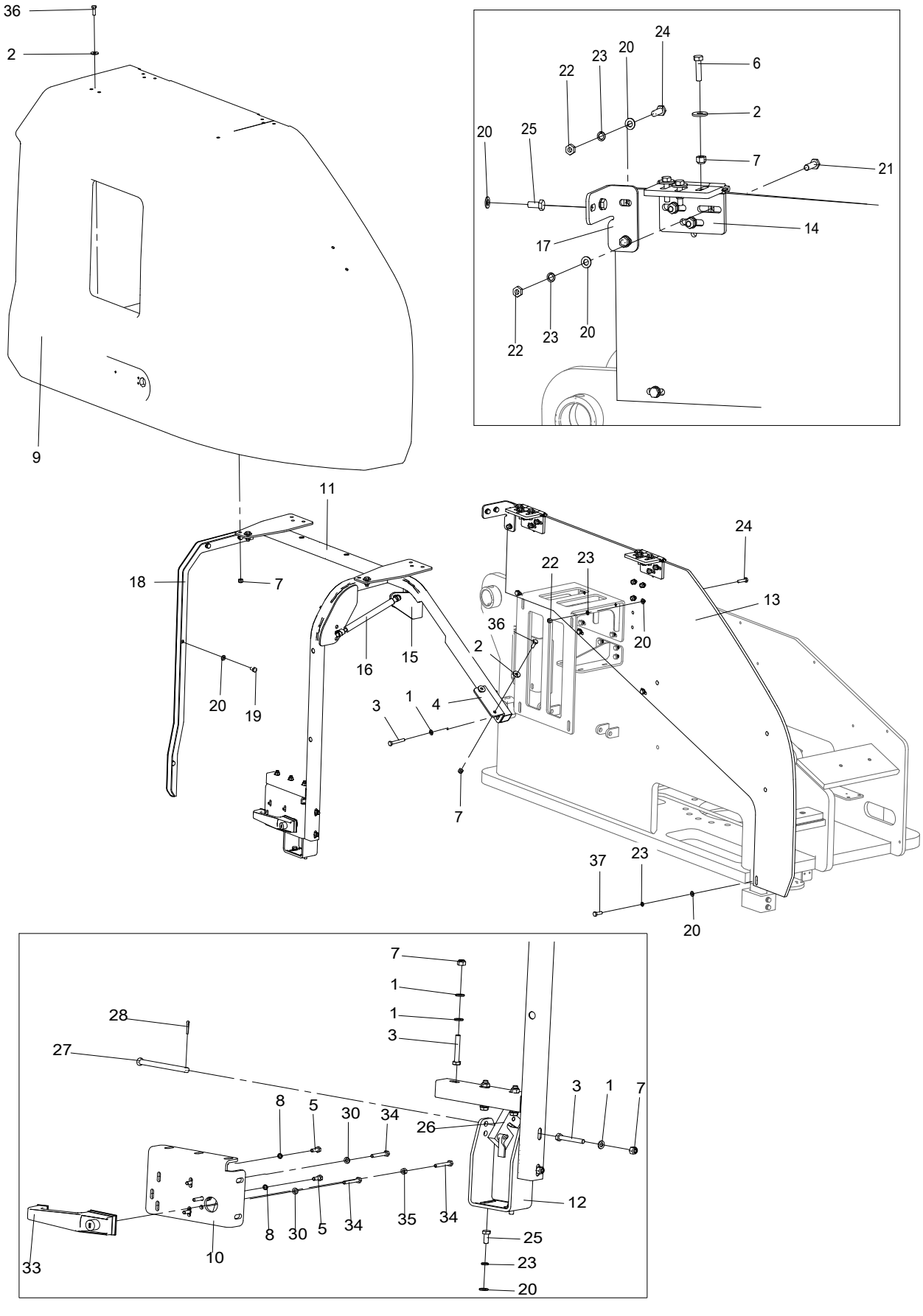

No.	Part No.	Qty.	Description
1	215040000034	25	Washer 8-200HV-ZnD GB/T 97.1
2	215040000015	11	Washer 8-200HV-ZnD GB/T 96.1
3	215010000064	7	Bolt M8×55-8.8-ZnD GB/T 5783
4	104021020048	1	Bracket
5	215010000050	4	Bolt M6×16-A2-70 GB/T 5783
6	215010000059	6	Bolt M8×30-8.8-ZnD GB/T 5783
7	215030000026	18	Nut M8-8-ZnD GB/T889.1
8	215040000004	4	Washer 6-A2-70 GB/T 93
9	104021020022	1	Skin, LH cover
10	104021020026	1	Bracket
11	104021020024	1	Bracket
12	104021020021	1	Bracket
13	104021020080	1	Plate, left
14	105001020118	2	Hinge
15	104021020031	1	Gas strut mount, LH
16	210010000098	1	Gas strut
17	104021020001	1	Bracket
18	104021020027	1	Bracket
19	215010000056	4	Bolt M8×16-8.8-ZnD GB/T 5783
20	215040000034	35	Washer 8-200HV-ZnD GB/T 97.1
21	215010000060	6	Bolt M8×35-8.8-ZnD GB/T 5783
22	215030000005	12	Nut M8-8-ZnD GB/T 6170
23	215040000005	18	Washer 8-ZnD GB/T 93
24	215010000059	6	Bolt M8×30-8.8-ZnD GB/T 5783
25	215010000057	4	Bolt M8×20-8.8-ZnD GB/T 5783
26	209050000003	1	Latch, left
27	105017020107	1	Clevis pin XJΦ10-115
28	215060000003	1	Pin 3.2×16-ZnD GB/T 91
29	215010000050	2	Bolt M6×16-A2-70 GB/T 5783
30	215040000033	5	Washer 6-A2 GB/T 97.1
31	103003020076	1	Adjusting pad
32	103003020073	1	Adjusting pad
33	209030000009	1	Latch handle
34	215010000054	4	Bolt M6×40-A2-70 GB/T 5783
35	215030000004	1	Nut M6-A2-70 GB/T 6170
36	215010000058	5	Bolt M8×25-8.8-ZnD GB/T 5783
37	215010000058	4	Bolt M8×25-8.8-ZnD GB/T 5783

2.3 TURNTABLE LEFT HOODS INSTALLATION (DEUTZ ENGINE)

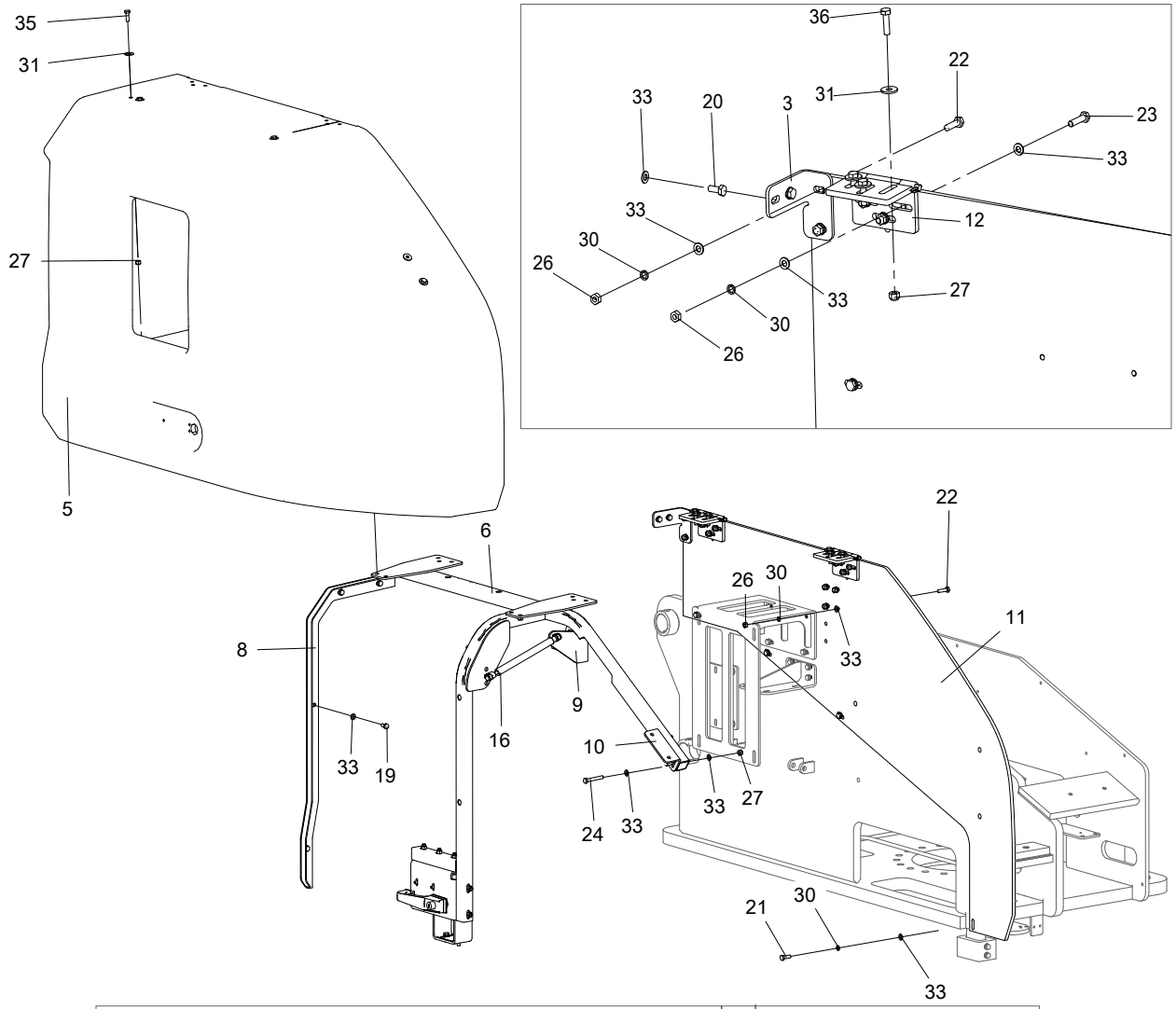

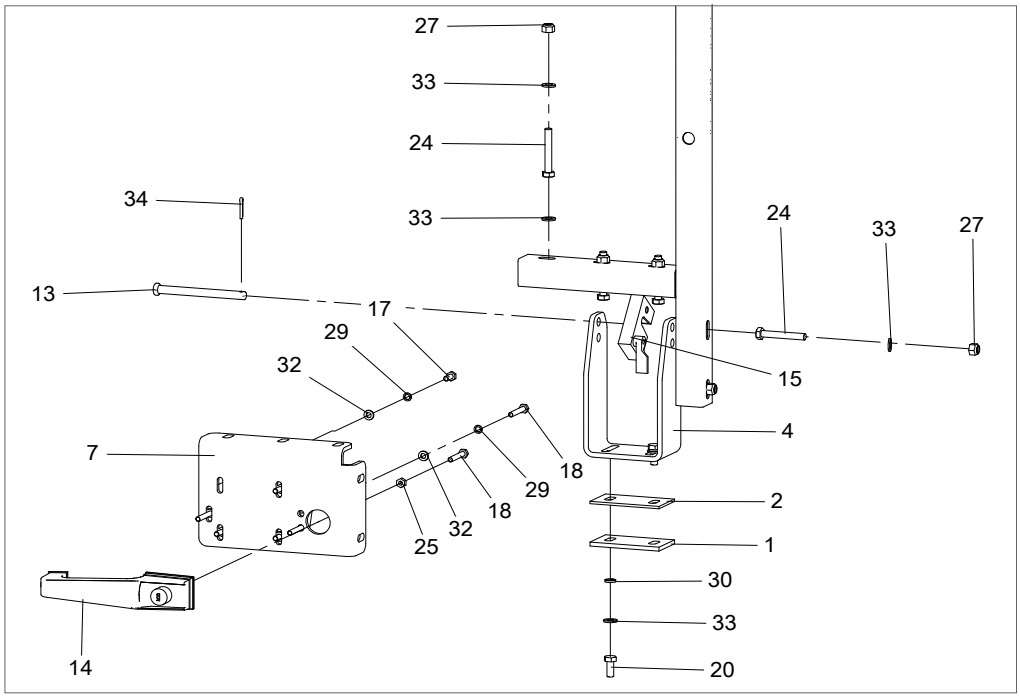

No.	Part No.	Qty.	Description
1	103003020073	1	Adjusting pad
2	103003020076	1	Adjusting pad
3	104021020001	1	Bracket
4	104021020021	1	Bracket
5	104021020022	1	Skin, LH cover
6	104021020024	1	Bracket
7	104021020026	1	Bracket
8	104021020027	1	Bracket
9	104021020031	1	Gas strut mount, LH
10	104021020048	1	Bracket
11	104021020080	1	Plate, left
12	105001020118	2	Hinge
13	105017020107	1	Clevis pin XJΦ10-115
14	209030000009	1	Latch handle
15	209050000003	1	Latch, left
16	210010000098	1	Gas strut
17	215010000050	4	Bolt M6×16-A2-70 GB/T 5783
18	215010000054	4	Bolt M6×40-A2-70 GB/T 5783
19	215010000056	4	Bolt M8×16-8.8-ZnD GB/T 5783
20	215010000057	4	Bolt M8×20-8.8-ZnD GB/T 5783
21	215010000058	4	Bolt M8×25-8.8-ZnD GB/T 5783
23	215010000060	6	Bolt M8×35-8.8-ZnD GB/T 5783
24	215010000064	7	Bolt M8×55-8.8-ZnD GB/T 5783
25	215030000004	1	Nut M6-A2-70 GB/T 6170
26	215030000005	12	Nut M8-8-ZnD GB/T 6170
27	215030000026	18	Nut M8-8-ZnD GB/T889.1
28	215030000027	2	Nut M10-8-ZnD GB/T 6184
29	215040000004	4	Washer 6-A2-70 GB/T 93
30	215040000005	18	Washer 8-ZnD GB/T 93
31	215040000015	11	Washer 8-200HV-ZnD GB/T 96.1
32	215040000033	4	Washer 6-A2 GB/T 97.1
33	215040000034	36	Washer 8-200HV-ZnD GB/T 97.1
34	215060000003	1	Pin 3.2×16-ZnD GB/T 91
35	215010000058	5	Bolt M8×25-8.8-ZnD GB/T 5783
22	215010000059	6	Bolt M8×30-8.8-ZnD GB/T 5783
36	215010000059	6	Bolt M8×30-8.8-ZnD GB/T 5783

2.4 TURNTABLE RIGHT HOODS INSTALLATION

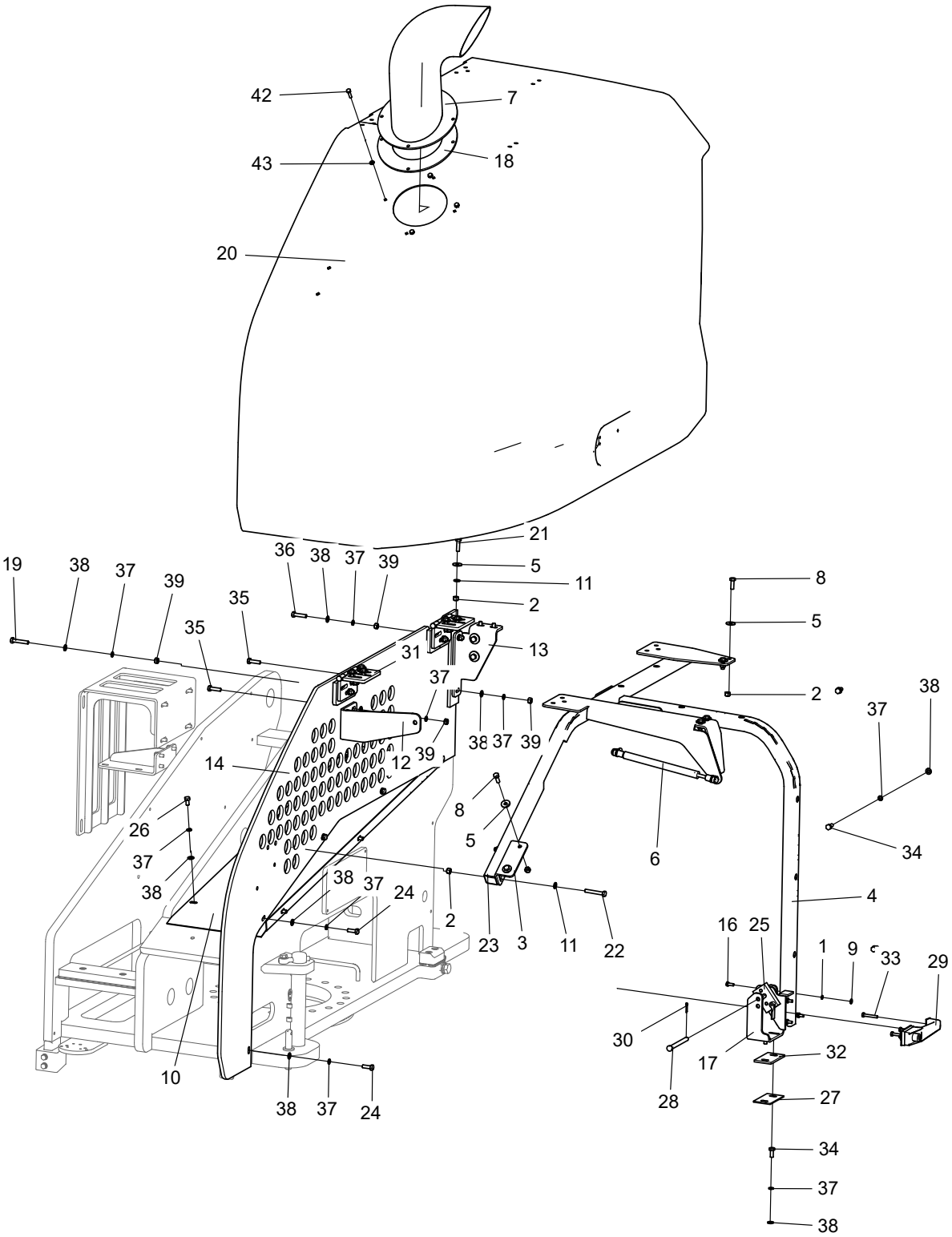

No.	Part No.	Qty.	Description
1	215040000004	4	Washer 6-A2-70 GB/T 93
2	215030000026	19	Nut M8-8-ZnD GB/T889.1
3	104021020048	1	Bracket
4	104021020053	1	Bracket
5	215040000015	12	Washer 8-200HV-ZnD GB/T 96.1
6	210010000049	1	Gas strut
7	104021020062	1	Exhaust bend
8	215010000058	10	Bolt M8×25-8.8-ZnD GB/T 5783
9	215040000033	4	Washer 6-A2 GB/T 97.1
10	104016020022	1	Cover
11	215040000034	24	Washer 8-200HV-ZnD GB/T 97.1
12	104021020034	1	Gas strut mount,RH
13	104016020011	1	Bracket
14	104021020038	1	Plate, right
15	215040000005	2	Washer 8-ZnD GB/T 93
16	215010000050	4	Bolt M6×16-A2-70 GB/T 5783
17	104021020020	1	Bracket
18	104021020060	1	Bottom plate
19	215010000062	3	Bolt M8×45-8.8-ZnD GB/T 5783
20	104021020043	1	Skin, RH cover
21	215010000059	6	Bolt M8×30-8.8-ZnD GB/T 5783
22	215010000064	2	Bolt M8×55-8.8-ZnD GB/T 5783
23	104021020054	1	Bracket
24	215010000058	5	Bolt M8×25-8.8-ZnD GB/T 5783
25	209050000002	1	Latch, right
26	215010000056	6	Bolt M8×16-8.8-ZnD GB/T 5783
27	103003020076	1	Adjusting pad
28	105017020107	1	Clevis pin XJΦ10-115
29	209030000009	1	Latch handle
30	215060000003	1	Pin 3.2×16-ZnD GB/T 91
31	105001020118	2	Hinge
32	103003020073	1	Adjusting pad
33	215010000054	4	Bolt M6×40-A2-70 GB/T 5783
34	215010000057	9	Bolt M8×20-8.8-ZnD GB/T 5783
35	215010000059	6	Bolt M8×30-8.8-ZnD GB/T 5783
36	215010000060	3	Bolt M8×35-8.8-ZnD GB/T 5783
37	215040000005	32	Washer 8-ZnD GB/T 93
38	215040000034	42	Washer 8-200HV-ZnD GB/T 97.1

No.	Part No.	Qty.	Description
39	215030000005	9	Nut M8-8-ZnD GB/T 6170
40	215030000005	3	Nut M8-8-ZnD GB/T 6170
41	215040000103	2	Washer 8-100HV-ZnD GB/T 5287
42	215010000052	4	Bolt M6×25-A2-70 GB/T 5783
43	215040000033	4	Washer 6-A2 GB/T 97.1

2.5 TURNTABLE RIGHTHOODS INSTALLATION (DEUTZ ENGINE)

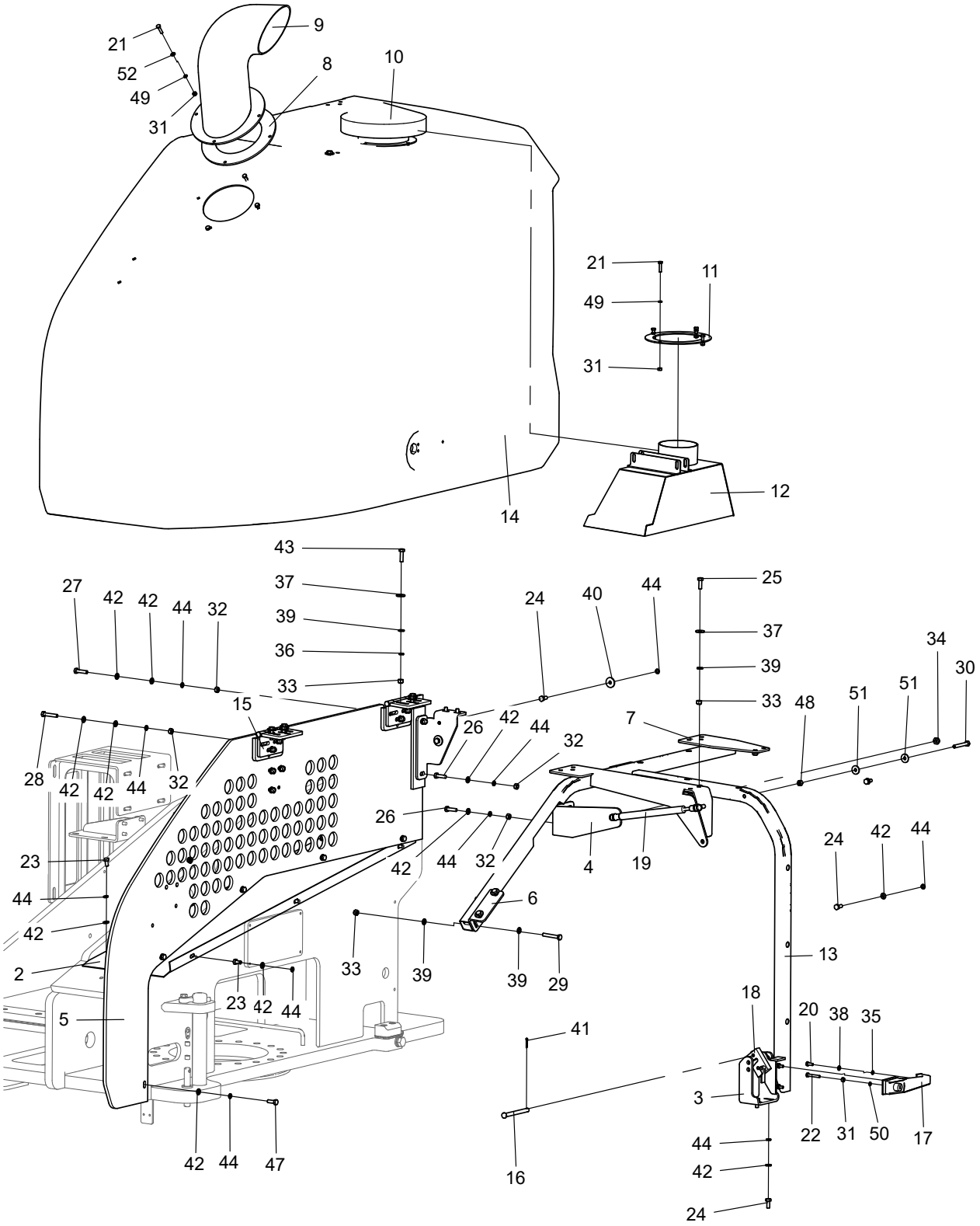

No.	Part No.	Qty.	Description
1	104016020011	2	Bracket
2	104016020022	1	Cover
3	104021020020	1	Bracket
4	104021020034	1	Gas strut mount,RH
5	104021020038	1	Plate, right
6	104021020048	1	Bracket
7	104021020054	1	Bracket
8	104021020060	1	Bottom plate
9	104021020062	1	Exhaust bend
10	104021023001	1	Cap, waterproof
11	104021023004	1	Mounting plate
12	104021023005	1	Wind hood
13	104021023014	1	Bracket
14	104021023016	1	Skin, RH cover
15	105001020118	2	Hinge
16	105017020107	1	Clevis pin XJΦ10-115
17	209030000009	1	Latch handle
18	209050000002	1	Latch, right
19	210010000049	1	Gas strut
20	215010000050	4	Bolt M6×16-A2-70 GB/T 5783
21	215010000052	8	Bolt M6×25-A2-70 GB/T 5783
22	215010000054	3	Bolt M6×40-A2-70 GB/T 5783
23	215010000056	6	Bolt M8×16-8.8-ZnD GB/T 5783
24	215010000057	9	Bolt M8×20-8.8-ZnD GB/T 5783
25	215010000058	10	Bolt M8×25-8.8-ZnD GB/T 5783
27	215010000060	3	Bolt M8×35-8.8-ZnD GB/T 5783
28	215010000062	3	Bolt M8×45-8.8-ZnD GB/T 5783
29	215010000064	2	Bolt M8×55-8.8-ZnD GB/T 5783
30	215010000065	2	Bolt M8×60-8.8-ZnD GB/T 5783
31	215030000004	9	Nut M6-A2-70 GB/T 6170
32	215030000005	12	Nut M8-8-ZnD GB/T 6170
33	215030000026	19	Nut M8-8-ZnD GB/T889.1
34	215030000027	2	Nut M10-8-ZnD GB/T 6184
35	215040000004	4	Washer 6-A2-70 GB/T 93
36	215040000005	2	Washer 8-ZnD GB/T 93
37	215040000015	12	Washer 8-200HV-ZnD GB/T 96.1
38	215040000033	4	Washer 6-A2 GB/T 97.1
40	215040000103	2	Washer 8-100HV-ZnD GB/T 5287

No.	Part No.	Qty.	Description
41	215060000003	1	Pin 3.2×16-ZnD GB/T 91
39	215040000034	24	Washer 8-200HV-ZnD GB/T 97.1
42	215040000034	42	Washer 8-200HV-ZnD GB/T 97.1
26	215010000059	6	Bolt M8×30-8.8-ZnD GB/T 5783
43	215010000059	6	Bolt M8×30-8.8-ZnD GB/T 5783
44	215040000005	32	Washer 8-ZnD GB/T 93
45	215010000052	1	Bolt M6×25-A2-70 GB/T 5783
46	215010000054	1	Bolt M6×40-A2-70 GB/T 5783
47	215010000058	5	Bolt M8×25-8.8-ZnD GB/T 5783
48	215030000026	2	Nut M8-8-ZnD GB/T889.1
49	215040000004	11	Washer 6-A2-70 GB/T 93
50	215040000004	7	Washer 6-A2-70 GB/T 93
51	215040000015	4	Washer 8-200HV-ZnD GB/T 96.1
52	215040000033	6	Washer 6-A2 GB/T 97.1

2.6 COUNTERWEIGHT INSTALLATION

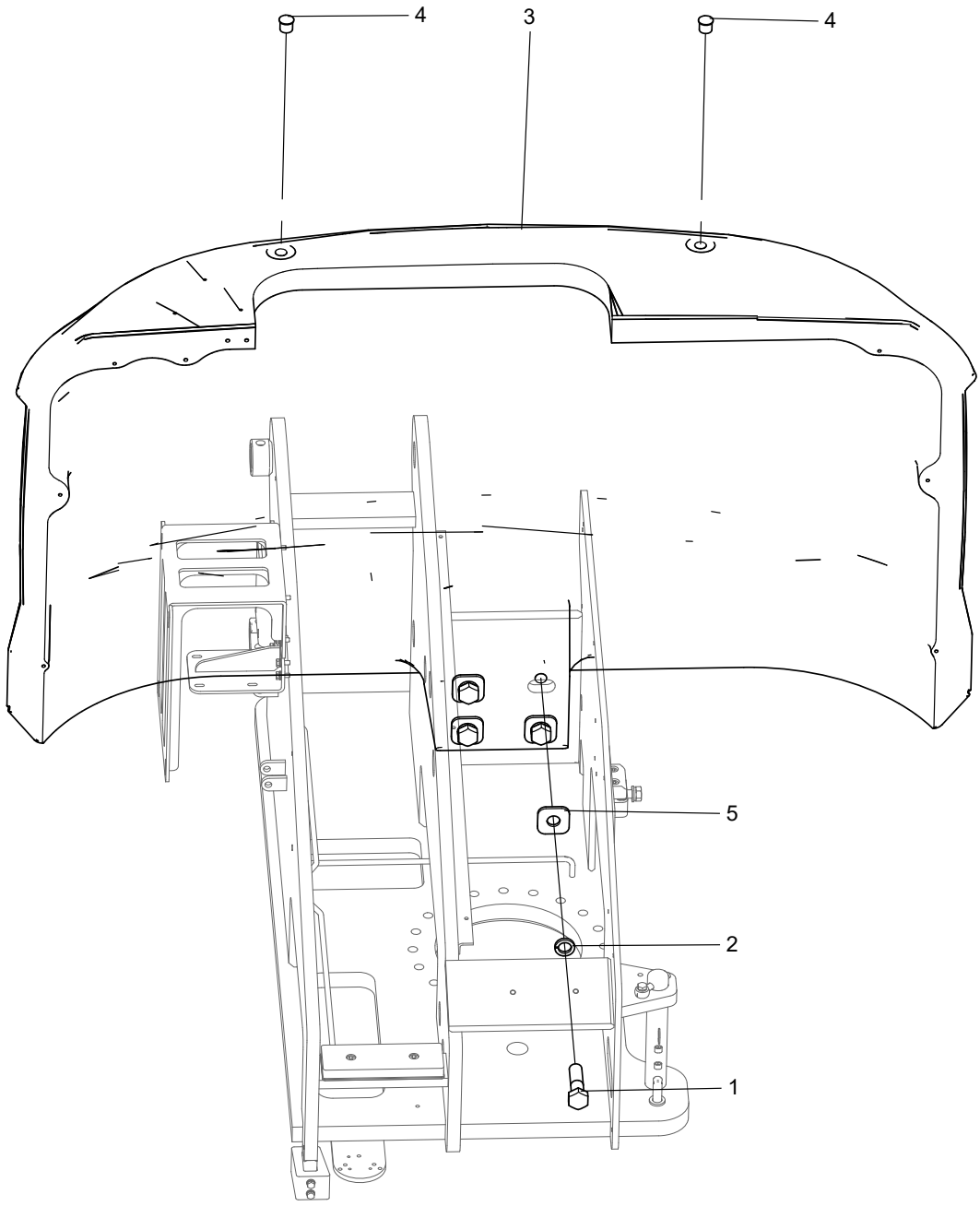

No.	Part No.	Qty.	Description
1	215010000030	4	Bolt M24×90-8.8-ZnD GB/T 5782
2	215040000010	4	Washer 24-ZnD GB/T 93
3	104021020012	1	Counterweight
4	213060003001	2	Choke plug
5	105001020138	4	Pad

2.7 FUEL TANK INSTALLATION

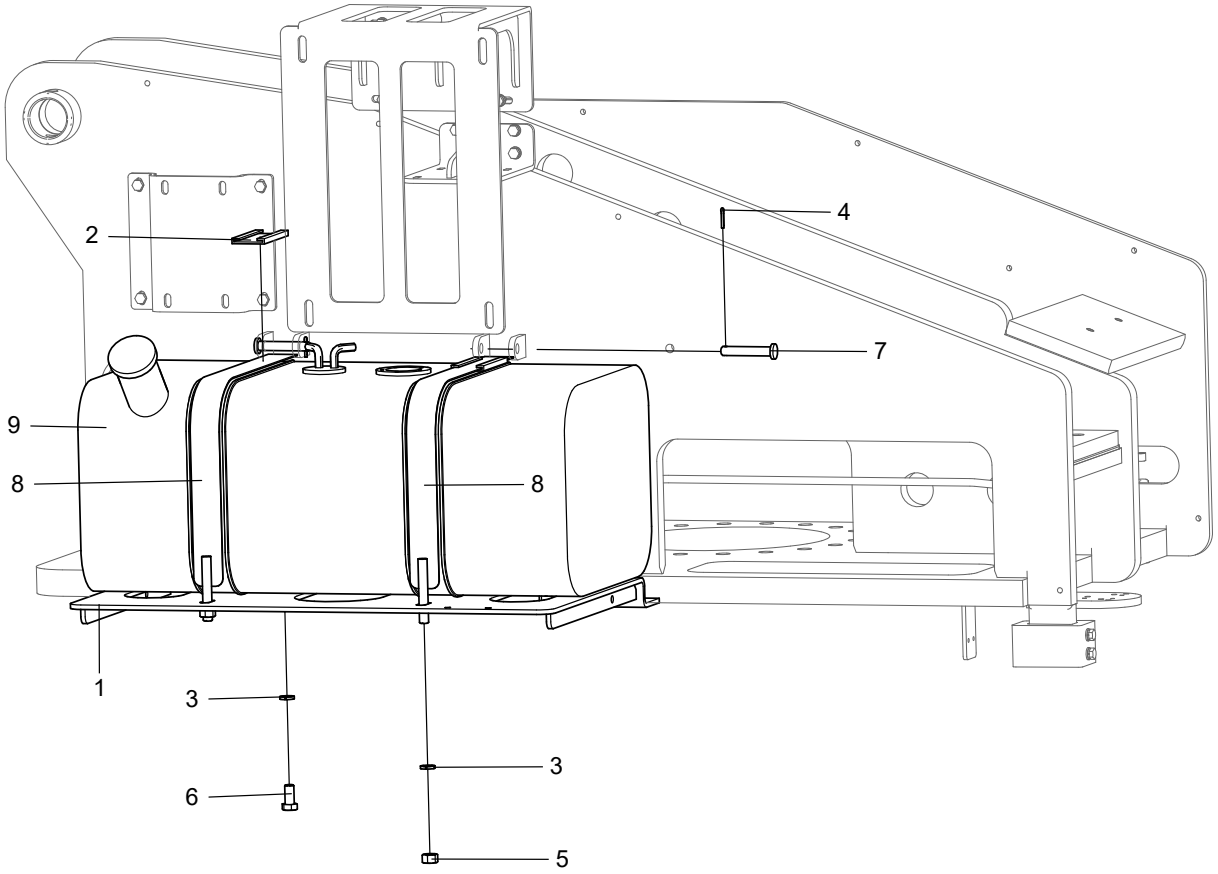

No.	Part No.	Qty.	Description
1	104021020014	1	Bottom plate, oil tank
2	216030000023	4	Clamp, double U type
3	215040000007	4	Washer 12-ZnD GB/T 93
4	215060000003	2	Pin 3.2×16-ZnD GB/T 91
5	215030000008	2	Nut M12-8-ZnD GB/T 6170
6	215010000089	2	Bolt M12×25-8.8-ZnD GB/T 5783
7	215060000034	2	Clevis Pin
8	104015020011	2	Safety lanyard
9	104015020009	1	Fuel tank

2.8 TURNTABLE SHIELD INSTALLATION

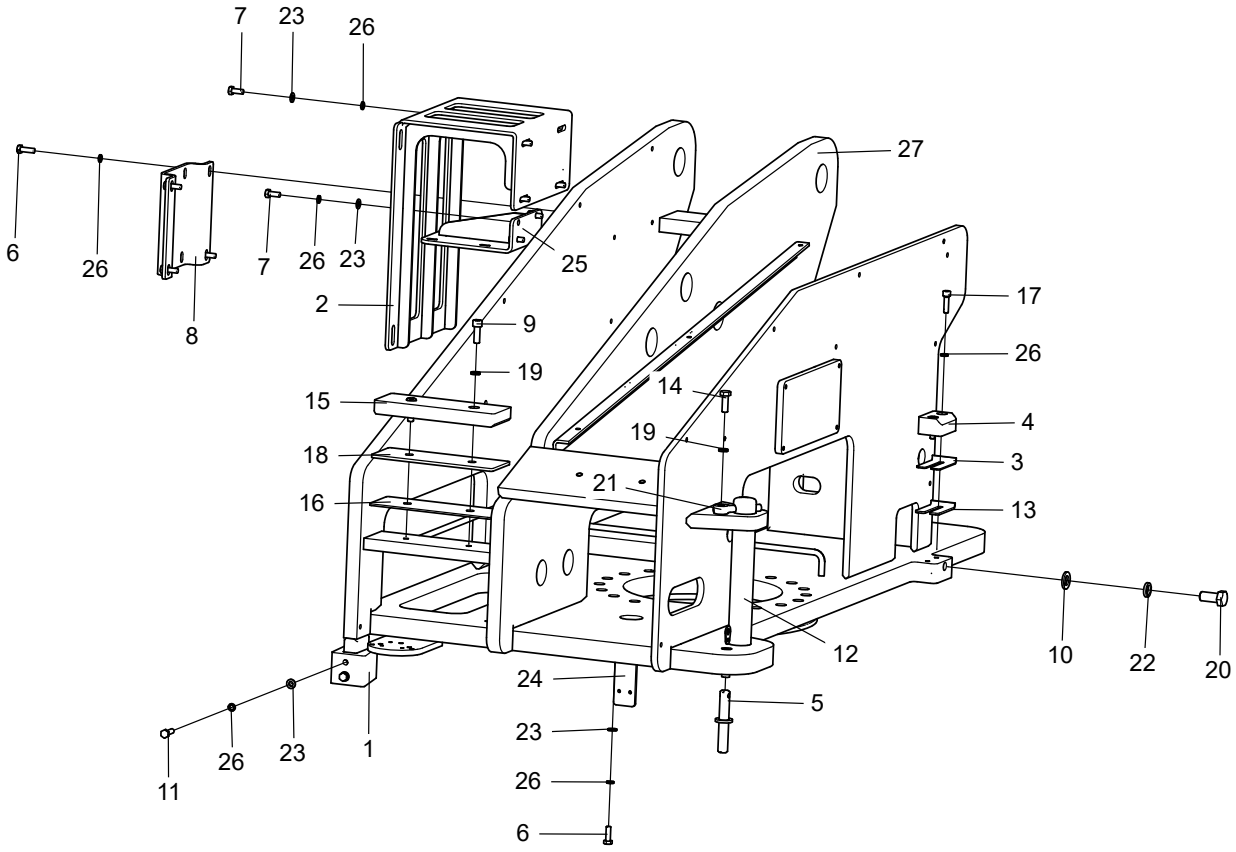

No.	Part No.	Qty.	Description
1	104009020079	1	block
2	104021020082	1	Bracket
3	104009020066	1	Adjusting pad
4	104009020075	1	Pad
5	105001020178	1	Safety pin
6	215010000058	6	Bolt M8×25-8.8-ZnD GB/T 5783
7	215010000057	7	Bolt M8×20-8.8-ZnD GB/T 5783
8	104009020069	1	Bracket, manifold
9	215020000050	2	Screw M10×30-8.8-ZnD GB/T 70.1
10	215040000039	1	Washer 16-200HV-ZnD GB/T 97.1
11	215010000059	2	Bolt M8×30-8.8-ZnD GB/T 5783
12	104009020077	1	Pin XGΦ40-295
13	104009020068	1	Adjusting pad
14	215010000071	1	Bolt M10×30-8.8-ZnD GB/T 5783
15	104009020074	1	Pad
16	104009020159	1	Shim

No.	Part No.	Qty.	Description
17	215020000025	2	Screw M8×30-8.8-ZnD GB/T 70.1
18	104009020158	1	Shim
19	215040000006	3	Washer 10-ZnD GB/T 93
20	215010000109	1	Bolt M16×35-8.8-ZnD GB/T 5783
21	209020000002	1	Keeper pin Φ12-75
22	215040000008	1	Washer 16-ZnD GB/T 93
23	215040000034	11	Washer 8-200HV-ZnD GB/T 97.1
24	104009020071	1	Plate
25	104021021713	1	Bracket
26	215040000005	17	Washer 8-ZnD GB/T 93
27	104021020086	1	Weldment, Turbtable

3 ENGINE COMPONENTS

3.1 ENGINE COMPONENTS（DEUTZ ENGINE D2011L03I）

3.1.1 ENGINE SUPPORT INSTALLATION（DEUTZ ENGINE D2011L03I）

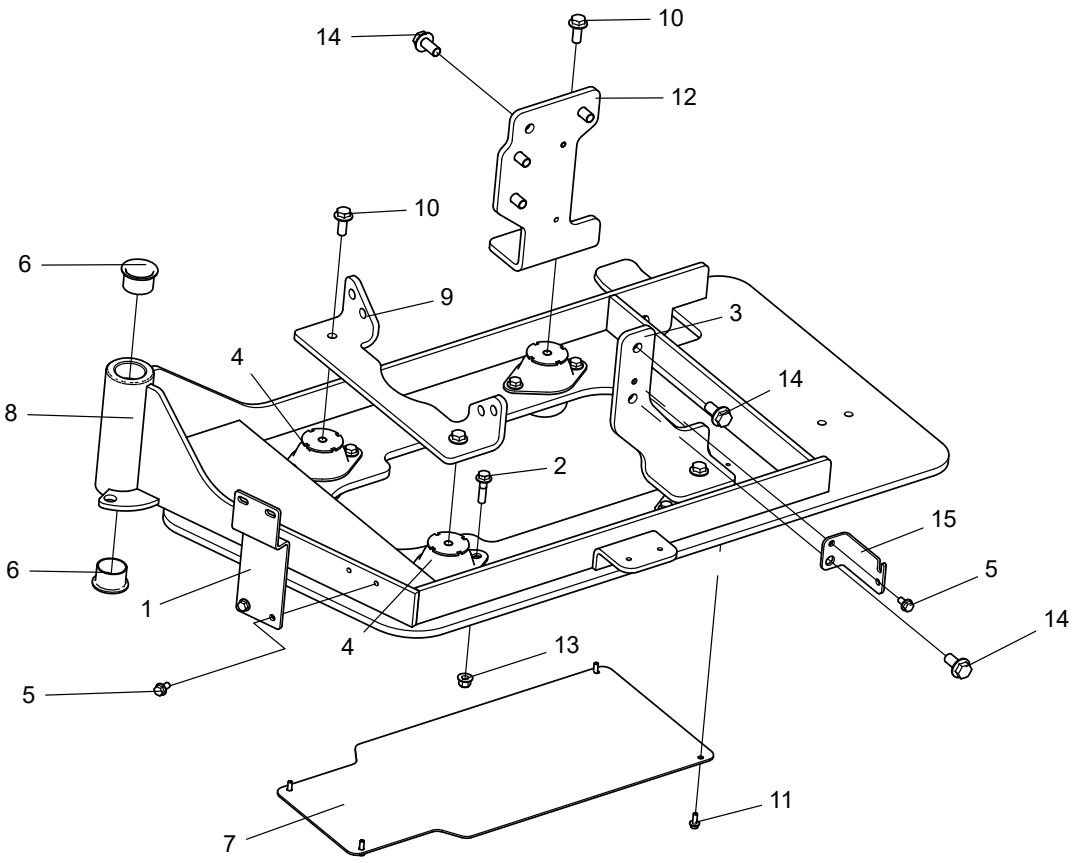

No.	Part No.	Qty.	Description
1	104009020170	1	Plate
2	215010000269	8	Bolt M10×40-10.9-DKL GB/T 5789
3	104021020068	1	Plate, bending
4	216040000019	4	Cushion
5	215010000263	3	Bolt M8×16-10.9-DKL GB/T 5789
6	214030000015	2	Bearing 40×44×30 SF-1F
7	104021020069	1	Cover
8	104021020063	1	Engine tray
9	104021020075	1	Mounting plate
10	215010000261	4	Bolt M12×30-10.9 DKL GB/T 5789
11	215010000230	4	Bolt M6×16-8.8-ZnD GB/T 5789
12	104021020067	1	Plate, bending
13	215030000109	8	Nut M10-8-ZnD GB/T 6183
14	215010000272	6	Bolt M14×30-10.9-DKL GB/T 5789
15	102001030161	1	Plate, bending

3.1.2 ENGINE INSTALLATION (DEUTZ ENGINE D2011L03I)

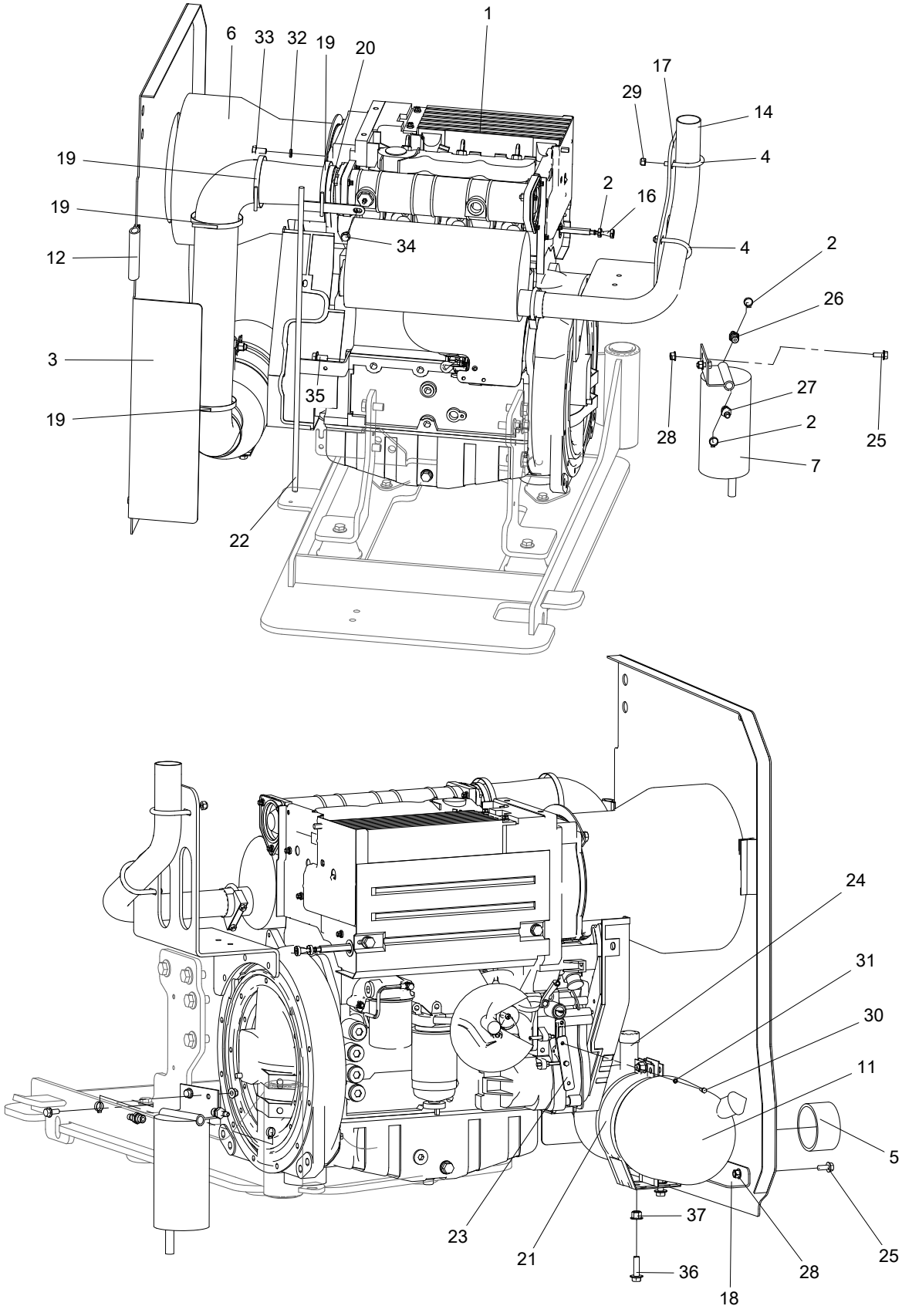

No.	Part No.	Qty.	Description
1	201010000006	1	Deutz engine
2	216020000004	5	Clamp, non-perforated, DIN
3	104021020011	1	Wind plate
4	104016020023	2	U-clamp
5	104009020188	1	Sheath, rubber
6	104016020043	1	Wind hood
7	201050000001	1	Diesel strainer
8	207060000002	1	Combined sealing washer
9	213050000085	1	Fuel hose, Φ10
10	213050000095	1	Fuel hose, Φ8
11	201020000013	1	Air filter
12	207070000003	2	Seal, heat-resistant
13	213050000096	1	Fuel line
14	104021020071	1	Exhaust pipe
15	104021020070	1	Hose, intake
16	104009020051	1	Reducing coupler
17	104009020163	1	Support plate
18	104021023011	1	Mounting plate
19	216020000005	5	T-clamp
20	216020000015	3	T-clamp
21	102001030220	1	Clamp, A753
22	102001030173	1	Rod, cable routing
23	102001010091	1	Plate
24	216080000004	1	Indicator, air filter
25	215010000234	5	Bolt M8×20-8.8-ZnD GB/T 5789
26	102001010093	1	Adapter
27	105001020038	1	Fittings body
28	215030000108	5	Nut M8-8-ZnD GB/T 6183
29	215030000026	4	Nut M8-8-ZnD GB/T889.1
30	215010000041	2	Bolt M5×12-A2-70 GB/T 5783
31	215040000003	2	Washer 5-A2-70 GB/T 93
32	215040000006	2	Washer 10-ZnD GB/T 93
33	215010000068	2	Bolt M10×20-8.8-ZnD GB/T 5783
34	215010000263	2	Bolt M8×16-10.9-DKL GB/T 5789
35	215010000237	1	Bolt M10×20-8.8-ZnD GB/T 5789
36	215010000248	3	Bolt M10x35-8.8 ZnD GB/T 5789

No.	Part No.	Qty.	Description
37	215030000109	3	Nut M10-8-ZnD GB/T 6183
	104021020016	0.	

3.1.3 DEUTZ ENGINE D2011 L03I (PN.201010000006)

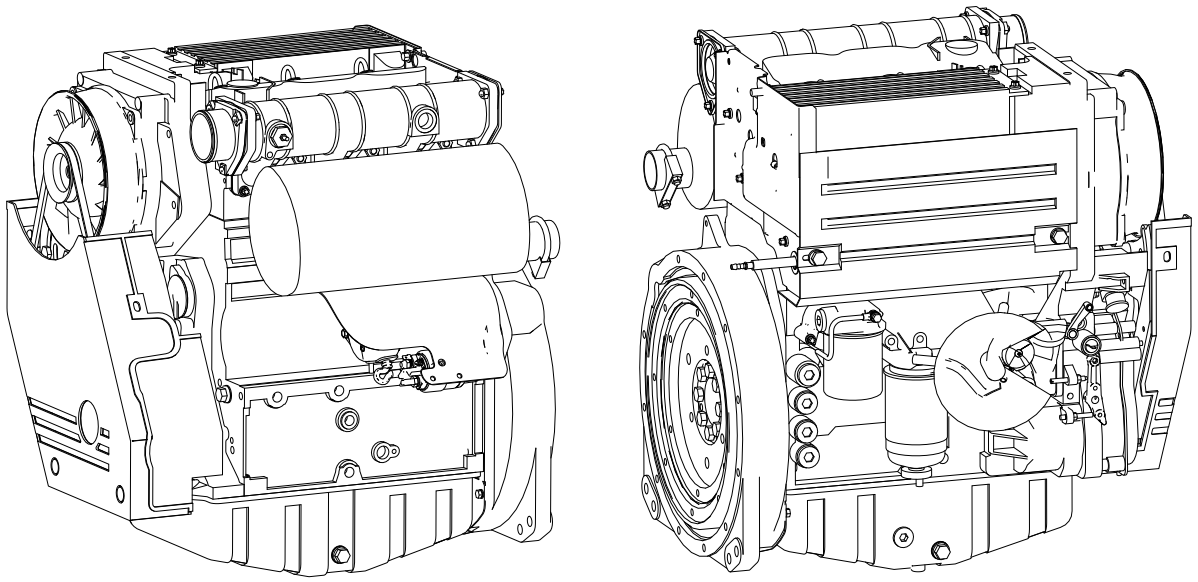

No.	Part No.	Qty.	Description
1	201990003050	1	Starting Motor
2	216070000013	1	Filter element, fuel-water separator
3	203020000004	1	Start/stop controller
4	201020000013	1	Air filter
5	201990003052	1	Belt roller
6	201990000036	1	Air filter main element
7	201990000038	1	Air filter safety element
8	201990003051	1	Generator
9	201990000072	1	Belt
10	201990000039	1	Engine oil filter element
11	201990000037	1	Diesel filter element
12	201050000001	1	Diesel strainer
13	201990003053	1	Oil pan screw

3.2 ENGINE COMPONENTS（YANMAR ENGINE 4TNV88-

3.2.1 ENGINE SUPPORT INSTALLATION（YANMAR ENGINE 4TNV88-BDFLTC-ZCDCSI）)

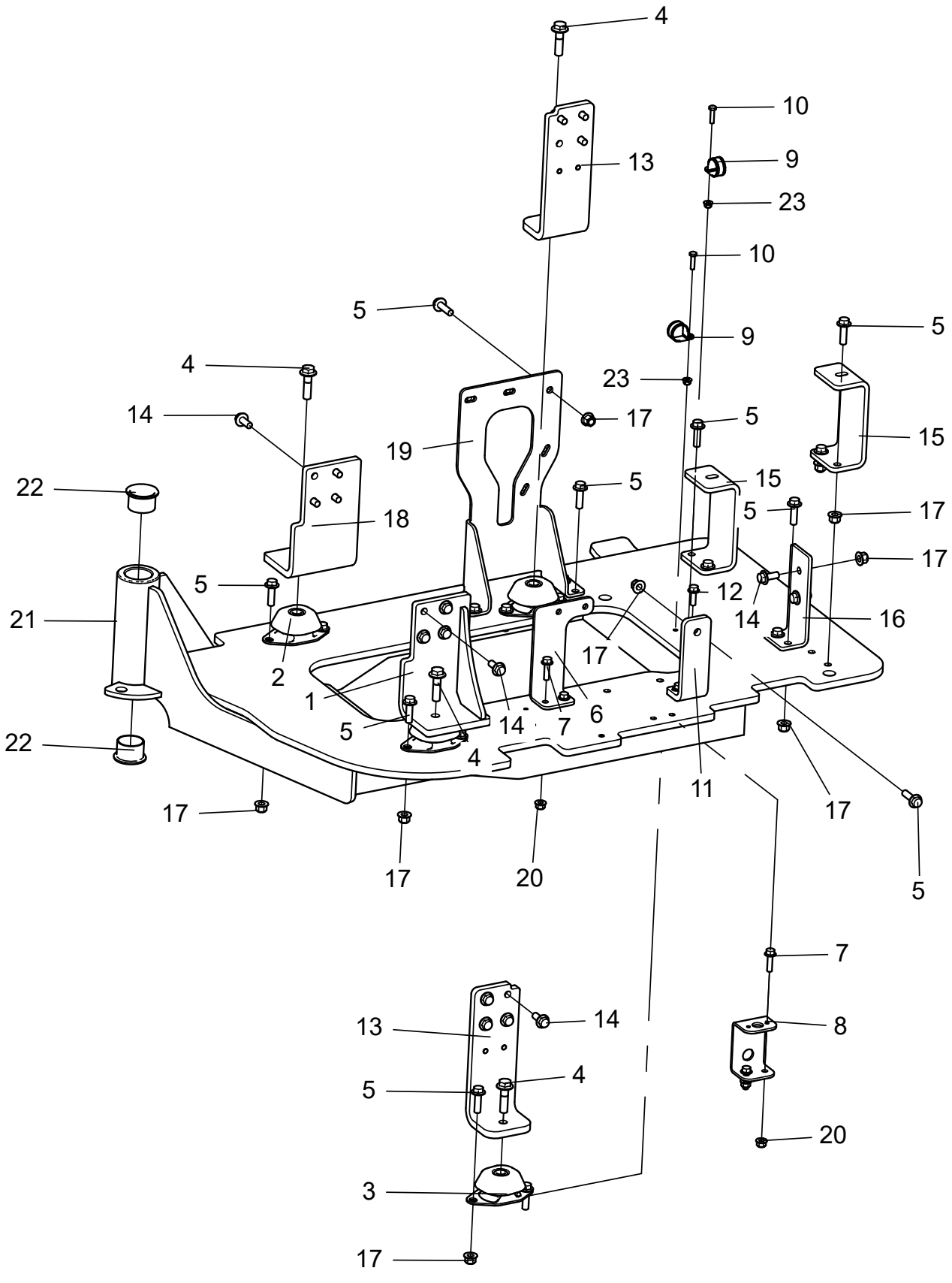

No.	Part No.	Qty.	Description
1	104020023087	1	Bracket
2	216040003004	2	Cushion
3	216040003010	2	Cushion
4	215010000293	4	Bolt M12×45-8.8 ZnD GB/T 5789
5	215010000248	20	Bolt M10x35-8.8 ZnD GB/T 5789
6	104020023120	1	Bend plate
7	215010000236	4	Bolt M8×30-8.8-ZnD GB/T 5789
8	104021023040	1	Channel plate
9	216020000051	2	Retaning ring, SSG
10	215010000052	2	Bolt M6×25-A2-70 GB/T 5783
11	105055023056	1	Washer
12	215010000235	2	Bolt M8×25-8.8-ZnD GB/T 5789
13	104020023088	2	Bend plate
14	215010000238	18	Bolt M10×25-8.8-ZnD GB/T 5789
15	104020023086	2	Channel plate
16	104020023102	1	Bend plate
17	215030000109	22	Nut M10-8-ZnD GB/T 6183
18	104020023079	1	Bracket
19	104020023076	1	Bend plate
20	215030000108	8	Nut M8-8-ZnD GB/T 6183
21	104020023084	1	Mount, engine
22	214030000015	2	Bearing 40×44×30 SF-1F
23	215030000107	2	Nut M6-8-ZnD GB/T 6183

3.2.2 ENGINE INSTALLATION (YANMAR ENGINE 4TNV88-BDFLTC)

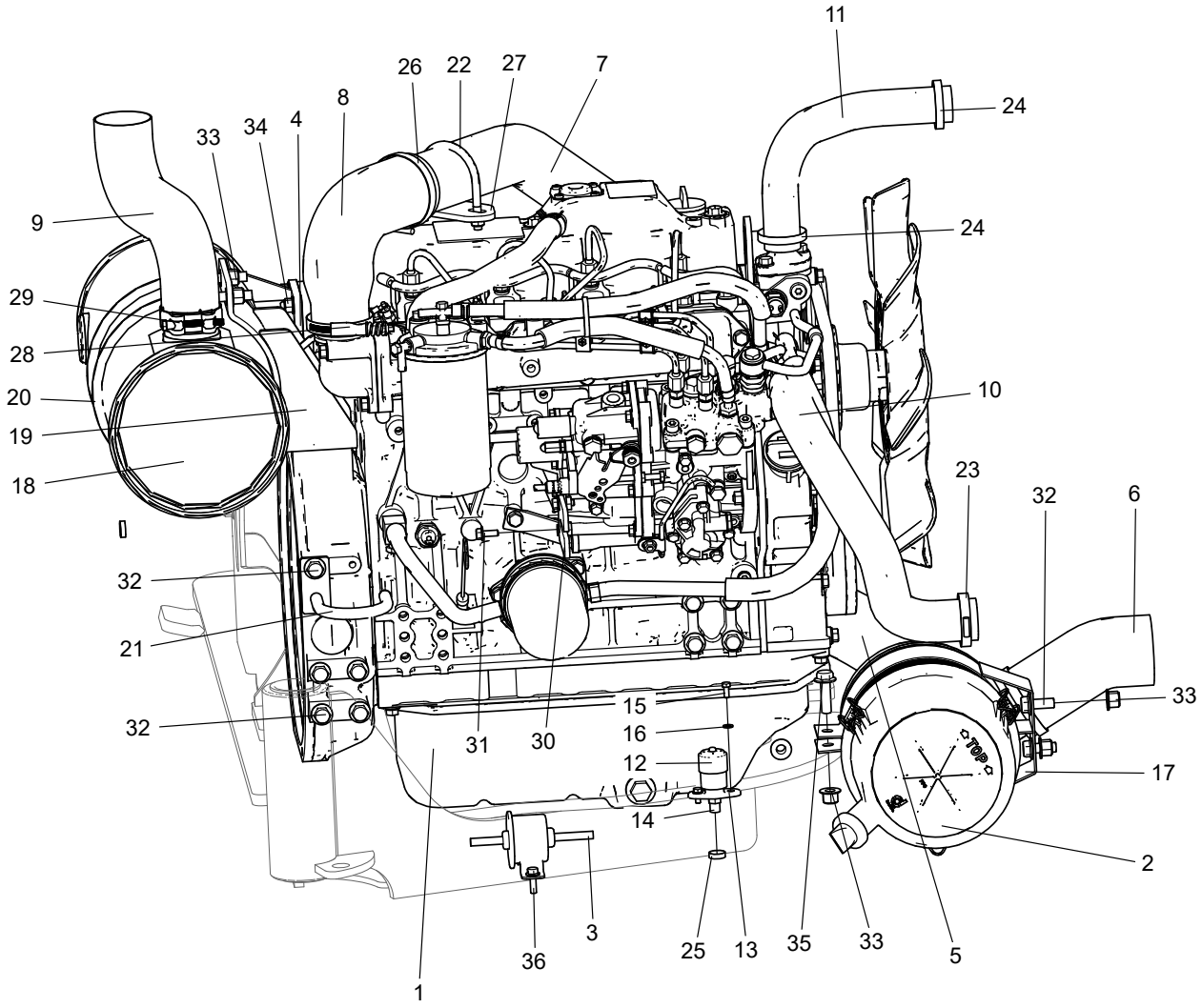

No.	Part No.	Qty.	Description
1	201010003023	1	Engine
2	201020000029	1	Air filter
3	201050003012	1	Electric feed pump
4	201010003025	1	Sealing washer, muffler (provided with engine)
5	104020023080	1	Supply hose
6	104020023094	1	Pipe
7	104020023117	1	Supply hose
8	104020023116	1	Hose, air charge
9	104020023095	1	Exhaust pipe
10	104020023121	1	supply hose
11	102013033011	1	Pipe, water outlet
12	201020003014	1	Blockage sensor, air filter
13	201020003017	1	Plate, flange
14	201020003008	1	Fitting, copper
15	215010000041	2	Bolt M5×12-A2-70 GB/T 5783
16	215040000032	2	Washer 5-A2 GB/T 97.1
17	102001030220	1	Clamp, A753
18	201030003001	1	Muffler
19	104020023113	1	Bracket, muffler
20	104020023111	2	U-clasp
21	104008050010	1	Hook, tube
22	102013033032	3	U-bolt
23	216020000002	2	Clamp, non-perforated, DIN
24	216020000003	2	Clamp, non-perforated, DIN
25	216020000004	12	Clamp, non-perforated, DIN
26	216020000006	4	T-clamp
27	104020023128	1	Bracket, intake hose
28	216020003008	1	Clamp
29	216020003007	1	Clamp
30	104020023119	1	Bracket
31	215010000230	2	Bolt M6×16-8.8-ZnD GB/T 5789
32	215010000238	23	Bolt M10×25-8.8-ZnD GB/T 5789
33	215030000109	10	Nut M10-8-ZnD GB/T 6183
34	215030000108	10	Nut M8-8-ZnD GB/T 6183
35	215010000248	1	Bolt M10x35-8.8 ZnD GB/T 5789
36	215010000231	2	Bolt M6×20-8.8-ZnD GB/T 5789

3.2.3 ENGINE-YANMAR 4TNV88-BDFLTC(PN.201010003023)

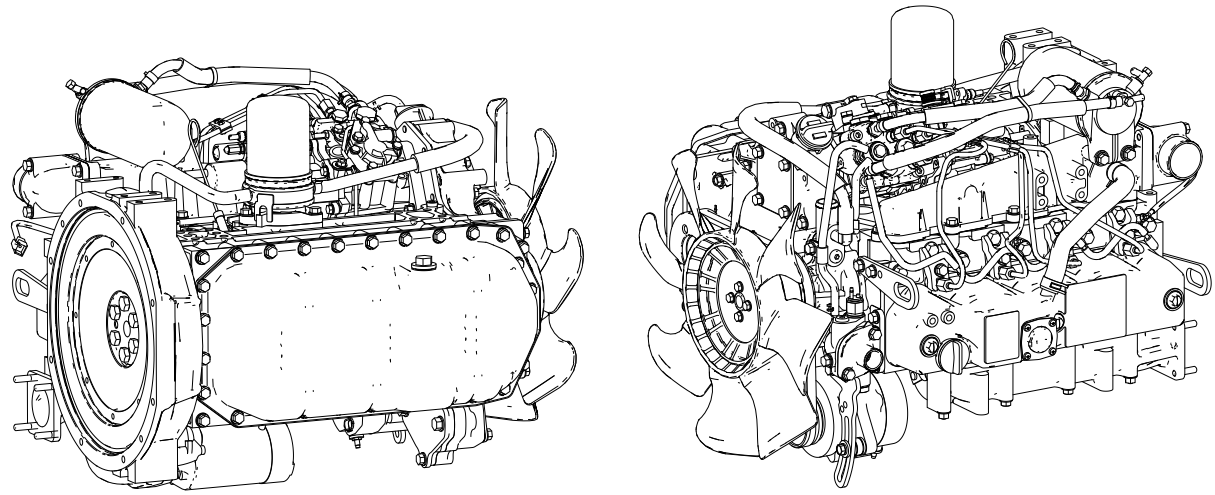

No.	Part No.	Qty.	Description
1	201010003040	1	Starting Motor
2	201990003017	1	Belt
3-1	216990003043	1	Shutdown solenoid valve
3-2	216990003044	1	Shutdown solenoid valve
4-1	216990000017	1	Engine oil filter element
4-2	216990003039	1	Oil filter element
5-1	216990003040	1	Prefilter element, diesel
5-2	216990000022	1	Prefilter element, diesel
6	201050003014	1	Fuel-water separator
6a	201990003016	1	Filter element,oil-water separator

3.2.4 RADIATOR INSTALLATION (YANMAR ENGINE 4TNV88-BDFLTC)

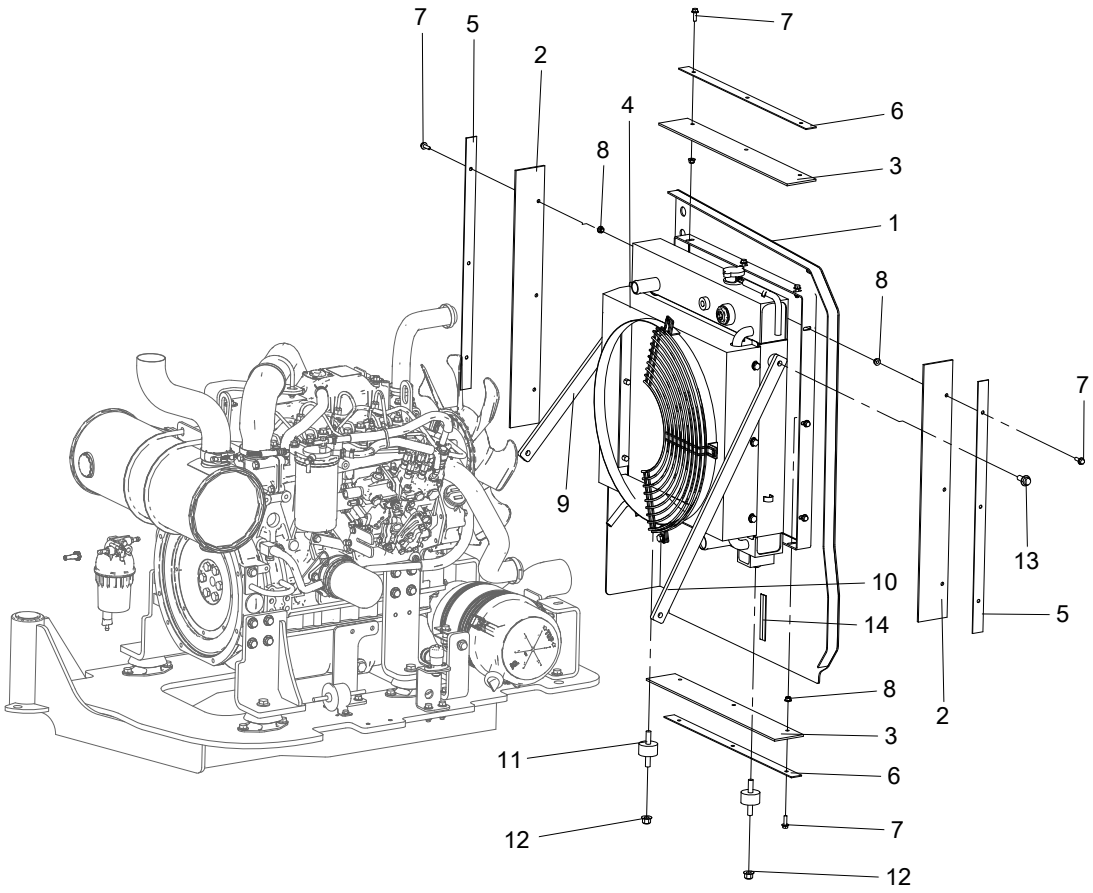

No.	Part No.	Qty.	Description
1	104020023090	1	Wind plate
2	104020023078	2	Rubber plate
3	104020023100	2	Rubber plate
4	201040003002	1	Radiator
5	104020023071	2	Holding plate
6	104020023085	2	Holding plate
7	215010000231	12	Bolt M6×20-8.8-ZnD GB/T 5789
8	215030000107	12	Nut M6-8-ZnD GB/T 6183
9	104020023074	1	Tie rod
10	104020023091	1	Tie rod
11	216030000002	2	Cushion, water tank
12	215030000109	2	Nut M10-8-ZnD GB/T 6183
13	215010000238	2	Bolt M10×25-8.8-ZnD GB/T 5789
14	207070000001	1	Rubber seal

3.2.5 FUEL FILTERFUEL-WATER SEPARATOR INSTALLATION (YANMAR ENGINE 4TNV88-BDFLTC)

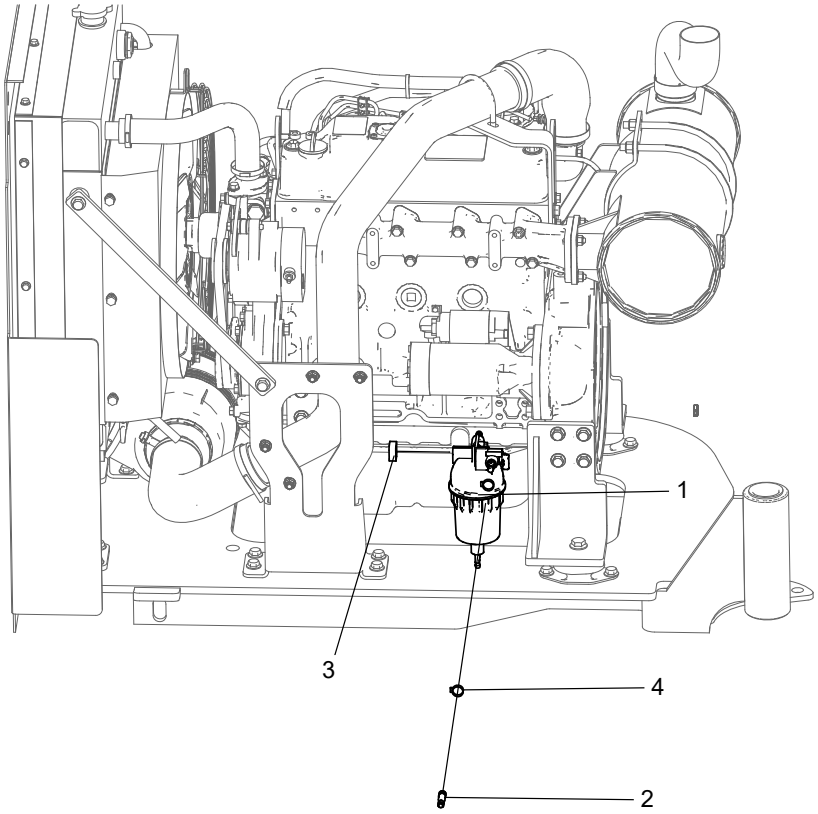

No.	Part No.	Qty.	Description
1	201050003014	1	Fuel-water separator
2	104020023104	2	Reducing coupler
3	104021023039	1	Gasket
4	216020000004	14	Clamp, non-perforated, DIN

3.3 ENGINE INSTALLATION (YANMAR ENGINE 4TNV88C-

3.3.1 ENGINE SUPPORT INSTALLATION (YANMAR ENGINE 4TNV88C-DFLT)

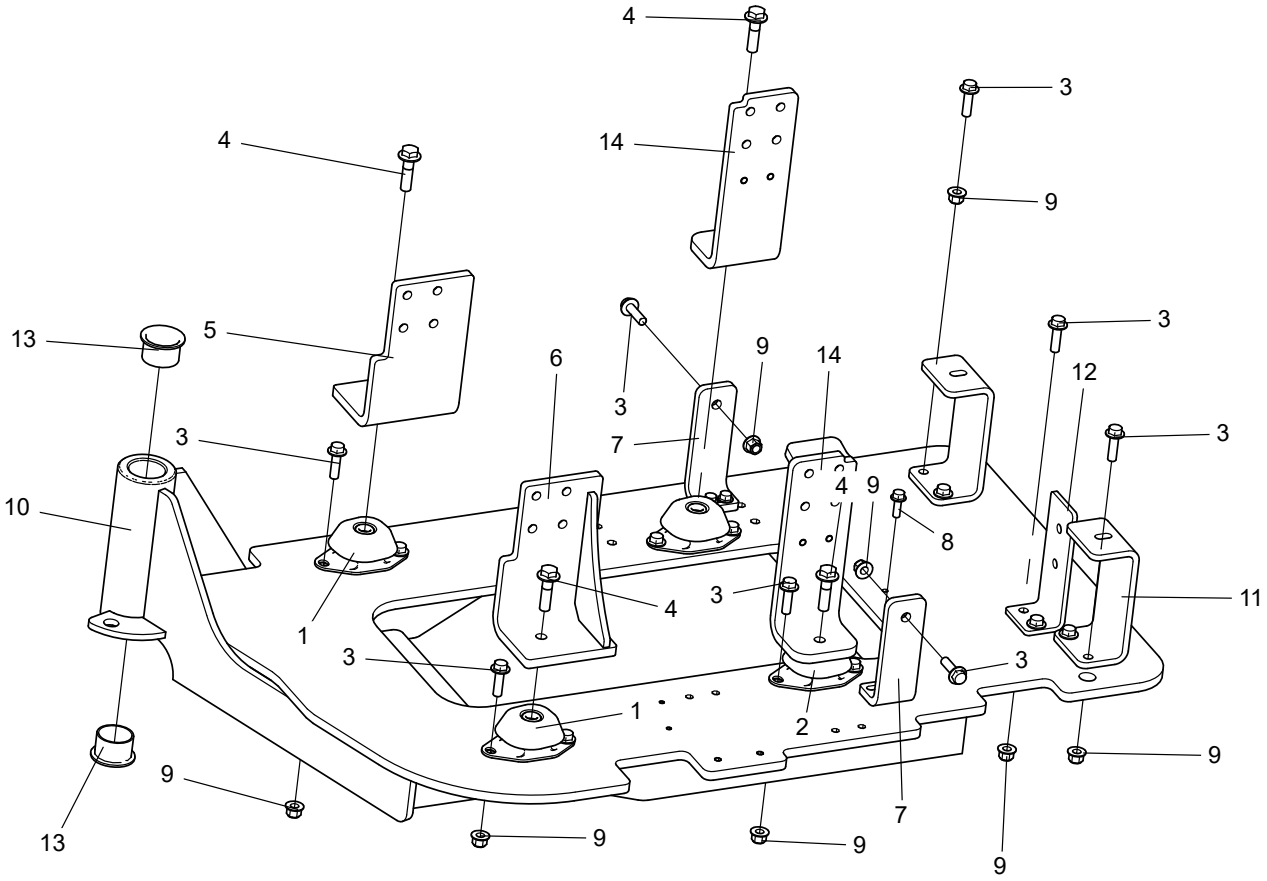

No.	Part No.	Qty.	Description
1	216040003005	2	Cushion
2	216040003004	2	Cushion
3	215010000248	16	Bolt M10x35-8.8 ZnD GB/T 5789
4	215010000293	4	Bolt M12×45-8.8 ZnD GB/T 5789
5	104020023079	1	Bracket
6	104020023087	1	Bracket
7	105055023056	2	Washer
8	215010000235	4	Bolt M8×25-8.8-ZnD GB/T 5789
9	215030000109	16	Nut M10-8-ZnD GB/T 6183
10	104020023084	1	Mount, engine
11	104020023086	2	Channel plate
12	104020023102	1	Bend plate
13	214030000015	2	Bearing 40×44×30 SF-1F
14	104020023088	2	Bend plate

3.3.2 ENGINE INSTALLATION (YANMAR ENGINE 4TNV88C-DFLT)

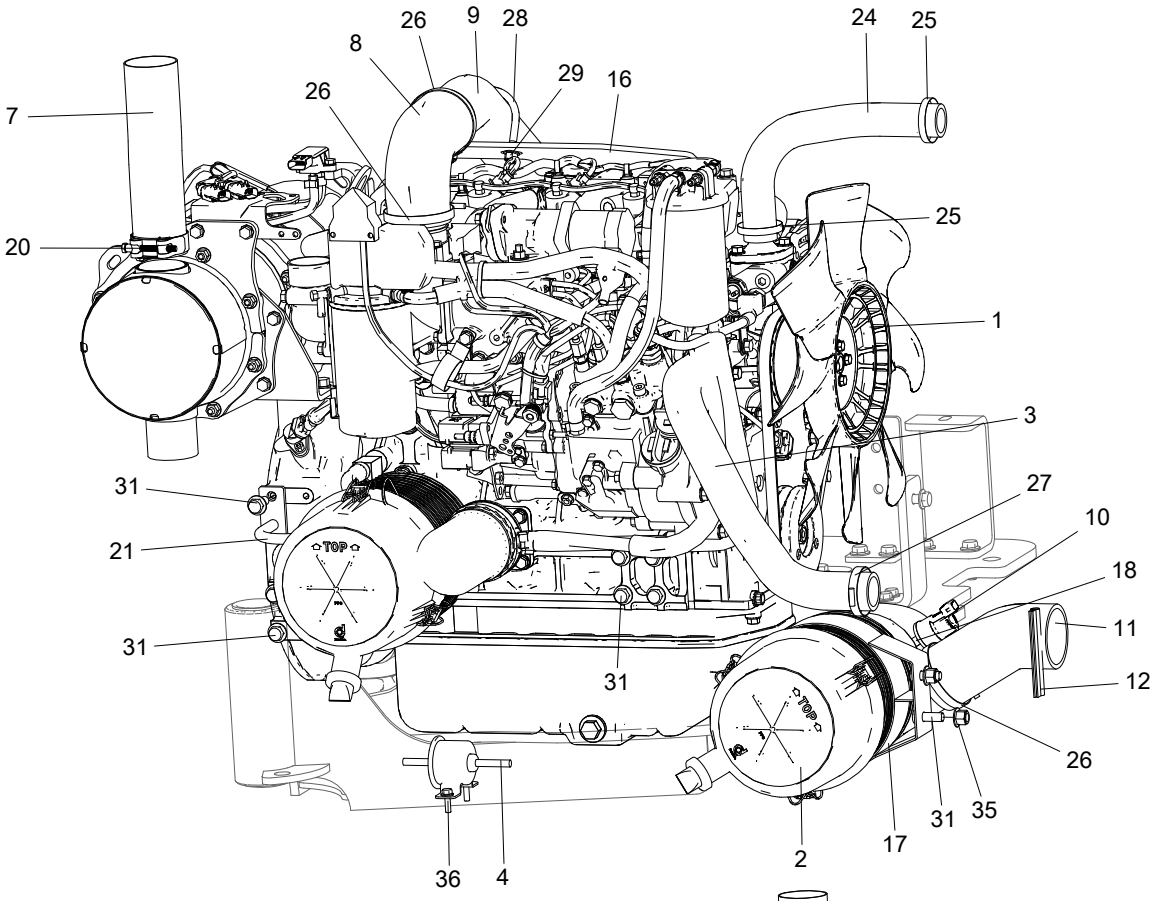

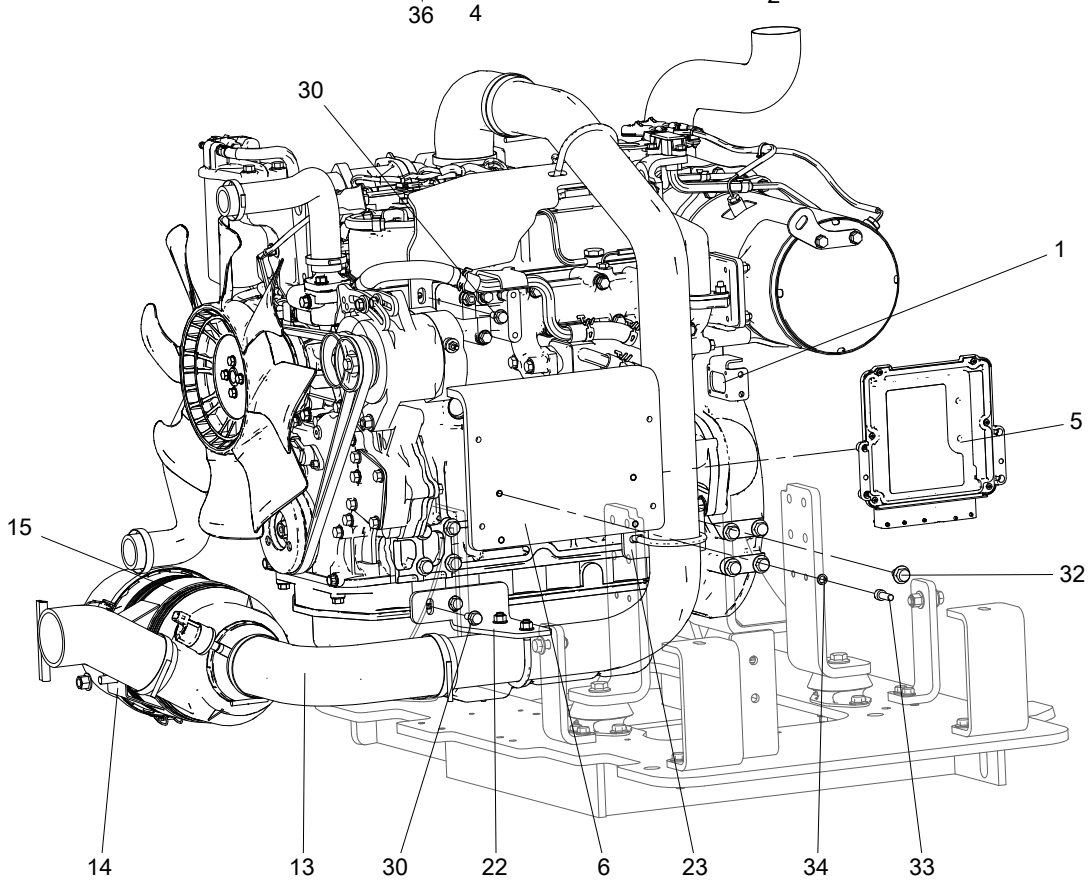

No.	Part No.	Qty.	Description
1	201010003018	1	Yanmar engine 4TNV88C-DFLT
2	201020000029	1	Air filter
3	102013033012	1	Hose, water supply
4	201050003012	1	Electric feed pump
5	203020003037	1	ECU
6	105046023026	1	Mounting plate，ECU
7	104020023095	1	Exhaust pipe
8	104020023073	1	Hose, intake
9	104020023099	1	Hose, intake
10	201020003007	1	Blockage sensor, air filter
11	104020023094	1	Pipe
12	207070000001	1	Rubber seal
13	104020023080	1	Supply hose
14	102001030221	1	Plate, bending
15	102001030219	1	Clamp
16	105046023029	1	Bracket, intake
17	102001030220	1	Clamp, A753
18	201020003008	1	Fitting, copper
19	105072063020	1	Receptacle mount
20	216020003007	1	Clamp
21	104008050010	1	Hook, tube
22	105046023028	1	Bracket, intake
23	105046023030	1	Bracket, intake
24	102013033011	1	Pipe, water outlet
25	216020000003	2	Clamp, non-perforated, DIN
26	216020000006	5	T-clamp
27	216020000002	2	Clamp, non-perforated, DIN
28	102013033032	3	U-bolt
29	215030000108	6	Nut M8-8-ZnD GB/T 6183
30	215010000234	4	Bolt M8×20-8.8-ZnD GB/T 5789
31	215010000238	19	Bolt M10×25-8.8-ZnD GB/T 5789
32	215010000245	2	Bolt M10×16-8.8-ZnD GB/T 5789
33	215020000024	4	Screw M8×25-8.8-ZnD GB/T 70.1
34	215040000005	4	Washer 8-ZnD GB/T 93
35	215030000109	2	Nut M10-8-ZnD GB/T 6183
36	215010000231	2	Bolt M6×20-8.8-ZnD GB/T 5789

3.3.3 ENGINE-YANMAR 4TNV88C-DFLT(PN.201010003018)

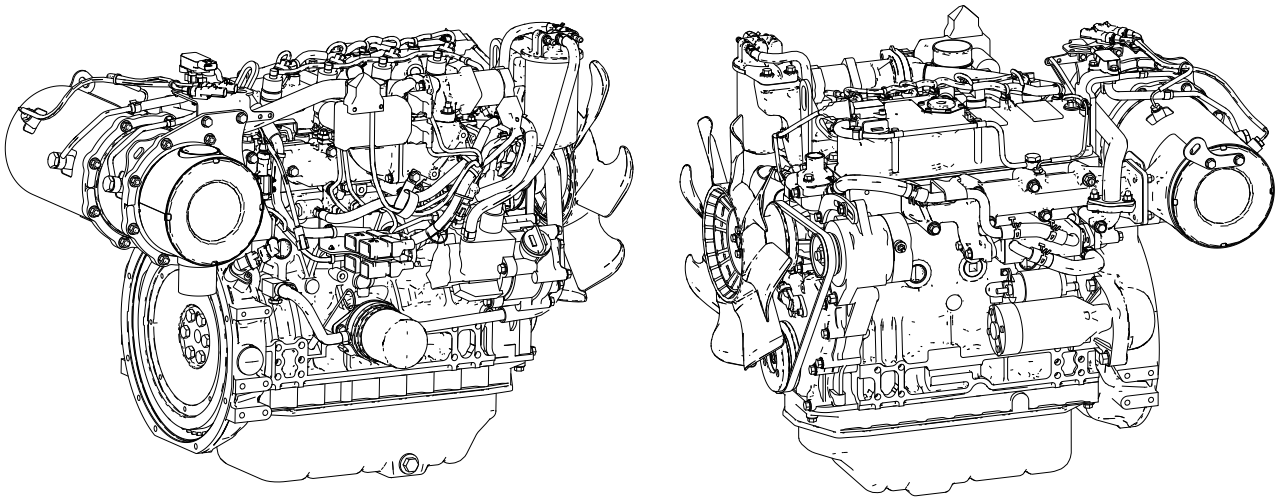

No.	Part No.	Qty.	Description
1	201990003039	1	Generator
2	203020003037	1	ECU
3	201990003049	1	Oil pan screw
4	216990000023	1	Air filter element, inner
5	201990003041	1	Water temperature sensor
6	201990003043	1	Oil pressure switch
7	201990003047	1	Camshaft sensor
8	201990003048	1	Common rail pressure sensor
9	201010003040	1	Starting Motor
10	201990003044	1	Thermostat
11-1	216990003036	1	Engine oil filter element
11-2	216990003050	1	Engine oil filter element
12	201990003046	1	Oil pump
13	201050003011	1	Fuel-water separator
14	201020000029	1	Air filter
15	201990003042	1	Crankshaft position sensor
16	201990003040	1	Belt roller
17	204090003001	1	Belt
18	216990003035	1	Diesel filter
19	201990003015	1	Filter element, fuel-water separator

No.	Part No.	Qty.	Description
20	216990000024	1	Air filter element, outer
21	201990003045	1	Water Pump
22	201990003055	1	Fan

3.3.4 RADIATOR INSTALLATION (YANMAR ENGINE 4TNV88C-DFLT)

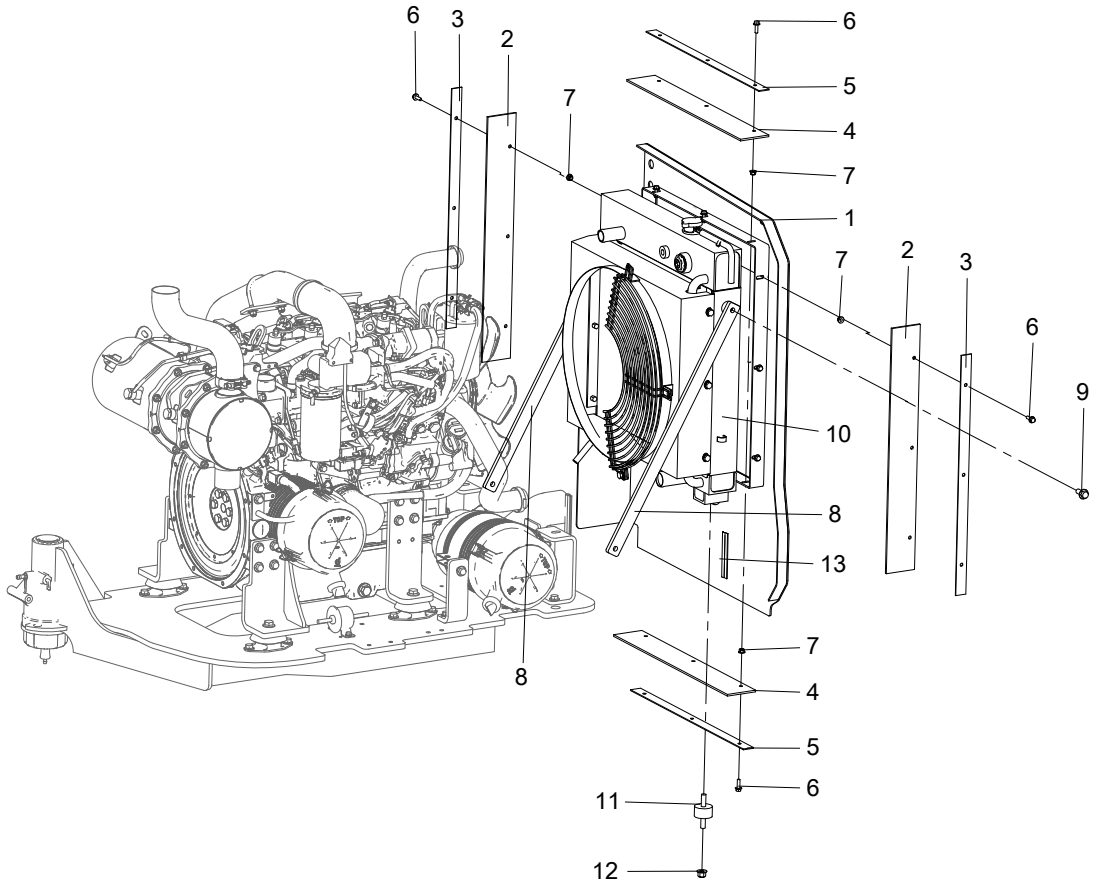

No.	Part No.	Qty.	Description
1	104020023090	1	Wind plate
2	104020023078	2	Rubber plate
3	104020023071	2	Holding plate
4	104020023100	2	Rubber plate
5	104020023085	2	Holding plate
6	215010000231	12	Bolt M6×20-8.8-ZnD GB/T 5789
7	215030000107	12	Nut M6-8-ZnD GB/T 6183
8	104020023091	2	Tie rod
9	215010000238	2	Bolt M10×25-8.8-ZnD GB/T 5789
10	201040003002	1	Radiator
11	216030000002	2	Cushion, water tank
12	215030000109	2	Nut M10-8-ZnD GB/T 6183
13	207070000001	1	Rubber seal

3.3.5 FUEL FILTERFUEL-WATER SEPARATOR INSTALLATION (YANMAR ENGINE 4TNV88C-DFLT)

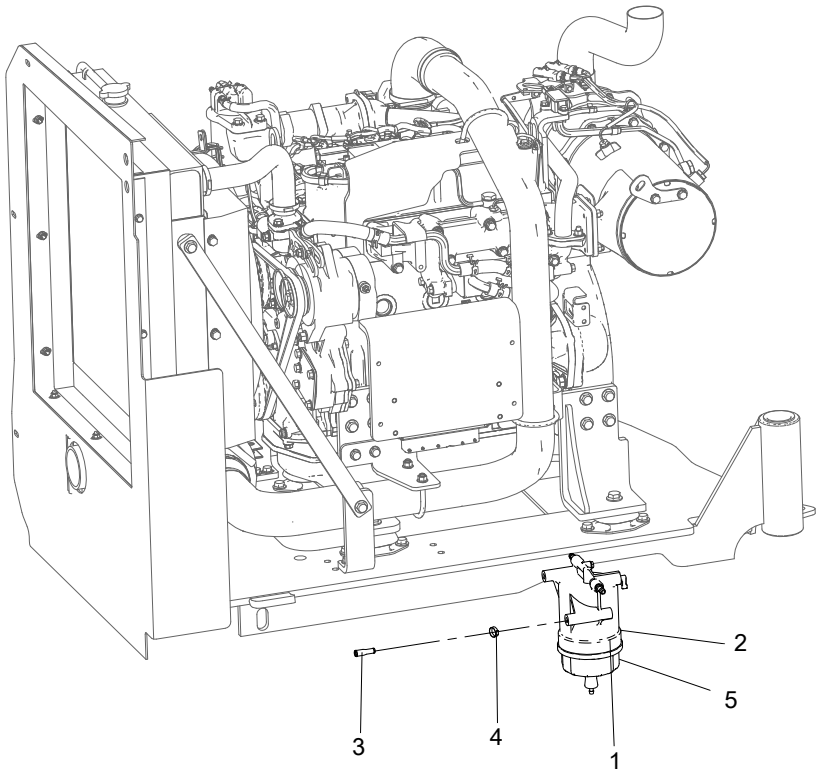

No.	Part No.	Qty.	Description
1	201050003011	1	Fuel-water separator
2	213050000095	4	Fuel hose, Φ8
3	104020023104	2	Reducing coupler
4	216020000004	12	Clamp, non-perforated, DIN
5	213050000085	2	Fuel hose, Φ10

3.4 ENGINE INSTALLATION (YANMAR ENGINE 4TNV88-

3.4.1 ENGINE SUPPORT INSTALLATION（YANMAR ENGINE 4TNV88-BDFLTC-ZCDCSI）)

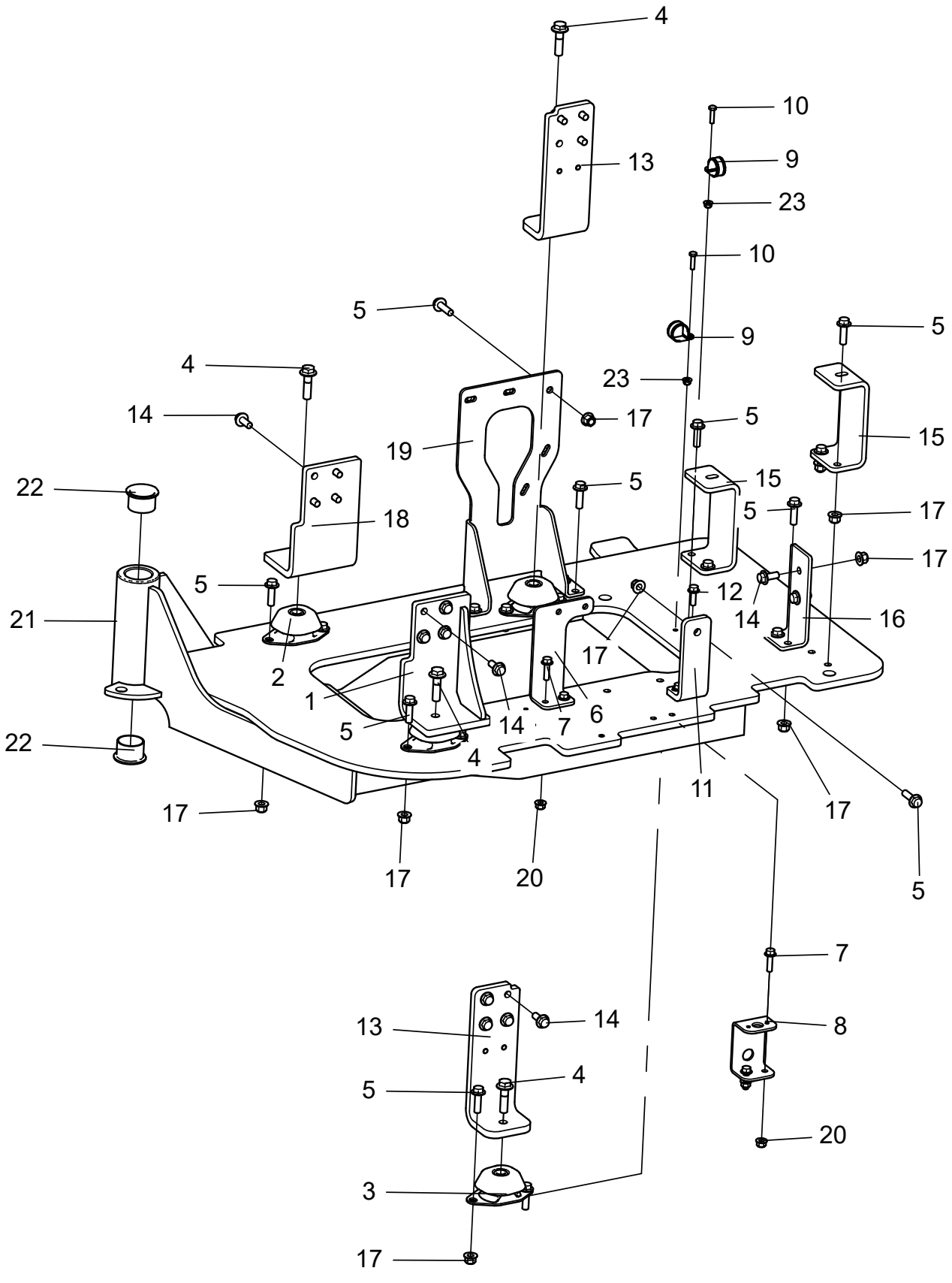

No.	Part No.	Qty.	Description
1	104020023087	1	Bracket
2	216040003004	2	Cushion
3	216040003010	2	Cushion
4	215010000293	4	Bolt M12×45-8.8 ZnD GB/T 5789
5	215010000248	20	Bolt M10x35-8.8 ZnD GB/T 5789
6	104020023120	1	Bend plate
7	215010000236	4	Bolt M8×30-8.8-ZnD GB/T 5789
8	104021023040	1	Channel plate
9	216020000051	2	Retaning ring, SSG
10	215010000052	2	Bolt M6×25-A2-70 GB/T 5783
11	105055023056	1	Washer
12	215010000235	2	Bolt M8×25-8.8-ZnD GB/T 5789
13	104020023088	2	Bend plate
14	215010000238	18	Bolt M10×25-8.8-ZnD GB/T 5789
15	104020023086	2	Channel plate
16	104020023102	1	Bend plate
17	215030000109	22	Nut M10-8-ZnD GB/T 6183
18	104020023079	1	Bracket
19	104020023076	1	Bend plate
20	215030000108	8	Nut M8-8-ZnD GB/T 6183
21	104020023084	1	Mount, engine
22	214030000015	2	Bearing 40×44×30 SF-1F
23	215030000107	2	Nut M6-8-ZnD GB/T 6183

3.4.2 ENGINE INSTALLATION (YANMAR ENGINE 4TNV88-ZCDCSI)

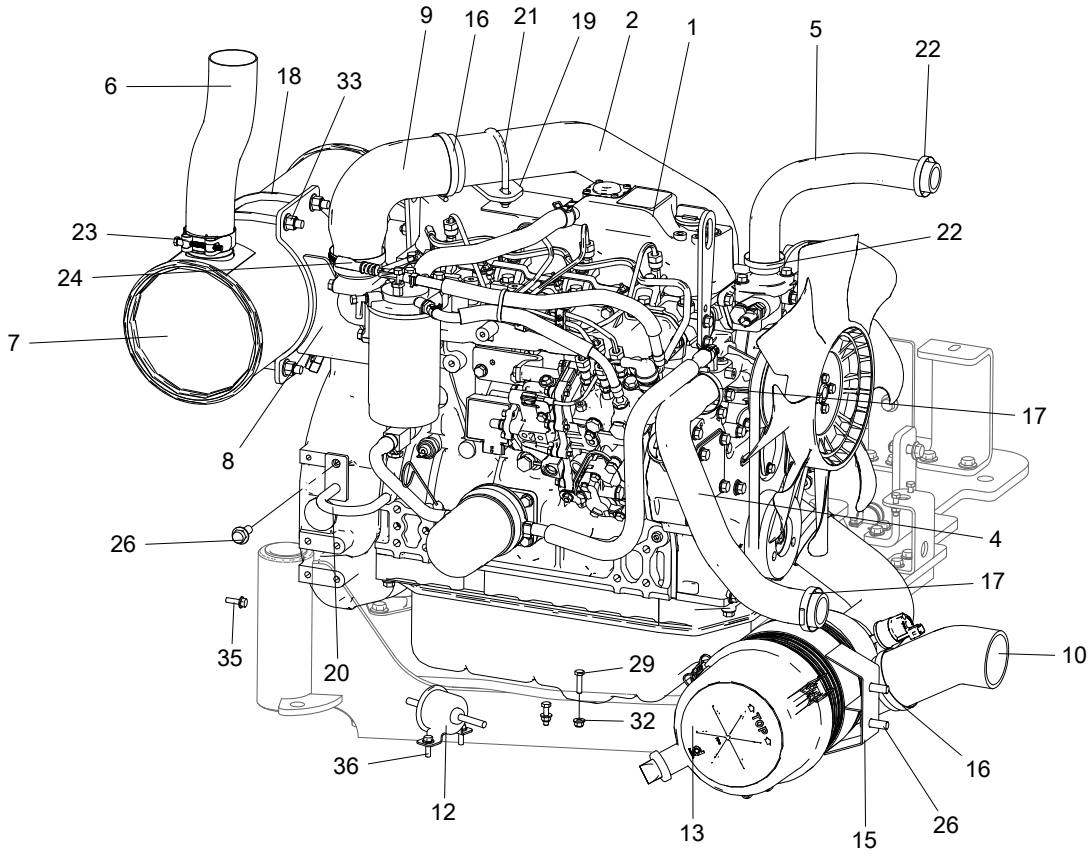

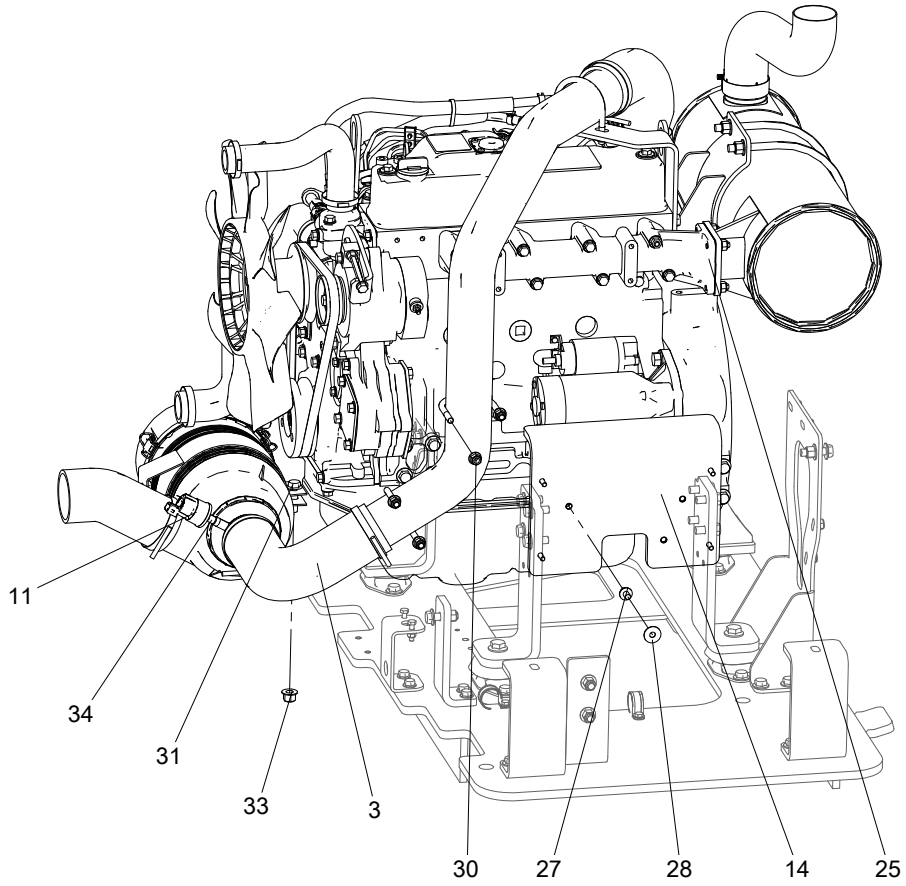

No.	Part No.	Qty.	Description
1	201010003056	1	engine
2	104020023117	1	Supply hose
3	104020023080	1	Supply hose
4	104020023121	1	supply hose
5	102013033011	1	Pipe, water outlet
6	104020023095	1	Exhaust pipe
7	201030003001	1	Muffler
8	104020023113	1	Bracket, muffler
9	104020023116	1	Hose, air charge
10	104020023094	1	Pipe
11	201020003007	1	Blockage sensor, air filter
12	201050003012	1	Electric feed pump
13	201020000029	1	Air filter
14	105074023138	1	ECU mounting plate
15	102001030220	1	Clamp, A753
16	216020000006	4	T-clamp
17	216020000002	2	Clamp, non-perforated, DIN
18	104020023111	2	U-clasp
19	104020023128	1	Bracket, intake hose
20	104008050010	1	Hook, tube
21	102013033032	3	U-bolt
22	216020000003	2	Clamp, non-perforated, DIN
23	216020003007	1	Clamp
24	216020003008	1	Clamp
25	201010003025	1	Sealing washer, muffler (provided with engine)
26	215010000238	15	Bolt M10×25-8.8-ZnD GB/T 5789
27	215010000233	3	Bolt M8×12-8.8-ZnD GB/T 5789
28	201010003059	3	ECU shim
29	215010000052	6	Bolt M6×25-A2-70 GB/T 5783
30	215030000108	10	Nut M8-8-ZnD GB/T 6183
31	215010000248	1	Bolt M10x35-8.8 ZnD GB/T 5789
32	215030000107	2	Nut M6-8-ZnD GB/T 6183
33	215030000109	5	Nut M10-8-ZnD GB/T 6183
34	201020003008	1	Fitting, copper
35	215010000231	1	Bolt M6×20-8.8-ZnD GB/T 5789
36	215010000231	2	Bolt M6×20-8.8-ZnD GB/T 5789

3.4.3 ENGINE-YANMAR 4TNV88-ZCDCSI(PN.201010003056)

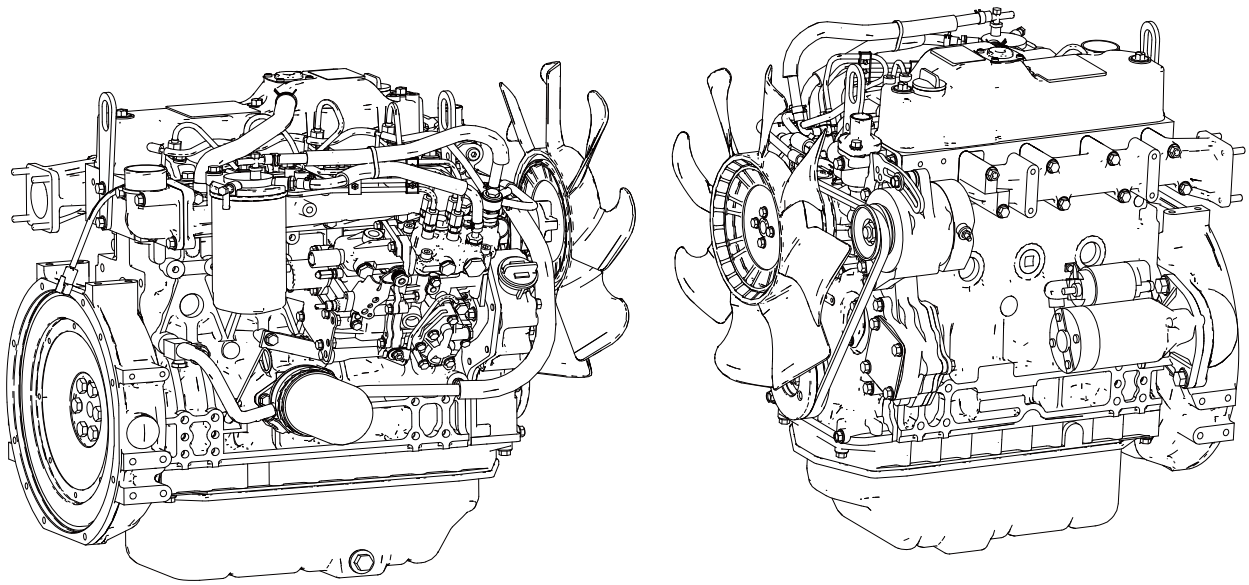

No.	Part No.	Qty.	Description
1	201010003040	1	Starting Motor
2	201990003058	1	Generator
3-1	201990003061	1	Diesel filter
3-2	201990003062	1	Diesel filter
4-1	201990003063	1	Engine oil filter element
4-2	201990003064	1	Engine oil filter element
5	201990003015	1	Filter element, fuel-water separator
6	201990003069	1	Belt
7-1	201990003071	1	Shutdown solenoid valve
7-2	201990003072	1	Shutdown solenoid valve
8	201990003074	1	RPM sensor
9	201990003041	1	Water temperature sensor
10	201990003043	1	Oil pressure switch
11	201020003021	1	ATM Pressure Sensor

3.4.4 RADIATOR INSTALLATION (YANMAR ENGINE 4TNV88-ZCDCSI)

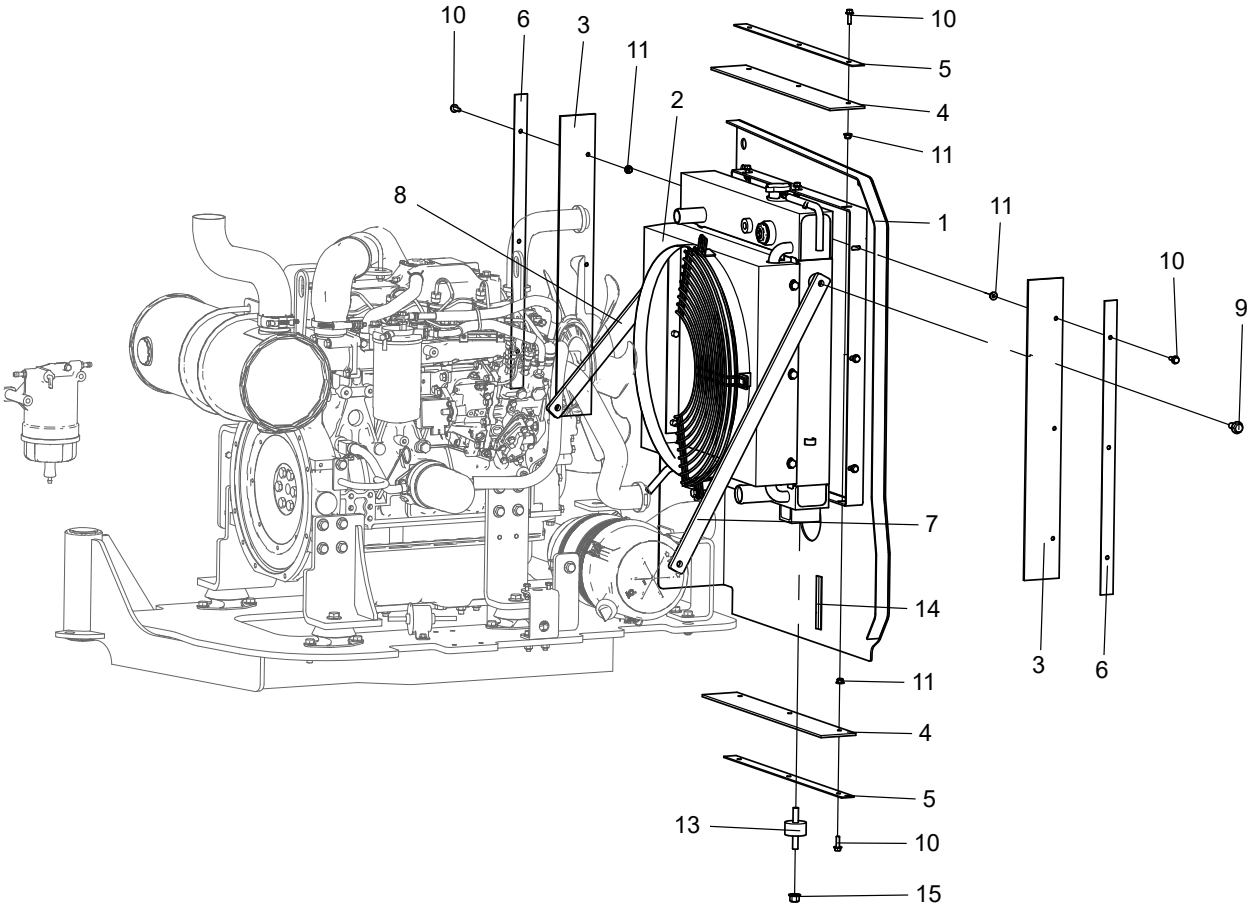

No.	Part No.	Qty.	Description
1	104020023090	1	Wind plate
2	201040003002	1	Radiator
3	104020023078	2	Rubber plate
4	104020023100	2	Rubber plate
5	104020023085	2	Holding plate
6	104020023071	2	Holding plate
7	104020023091	1	Tie rod
8	104020023074	1	Tie rod
9	215010000238	2	Bolt M10×25-8.8-ZnD GB/T 5789
10	215010000231	12	Bolt M6×20-8.8-ZnD GB/T 5789
11	215030000107	12	Nut M6-8-ZnD GB/T 6183
13	216030000002	2	Cushion, water tank
14	207070000001	1	Rubber seal
15	215030000109	2	Nut M10-8-ZnD GB/T 6183

3.4.5 FUEL FILTERFUEL-WATER SEPARATOR INSTALLATION (YANMAR ENGINE 4TNV88-ZCDCSI)

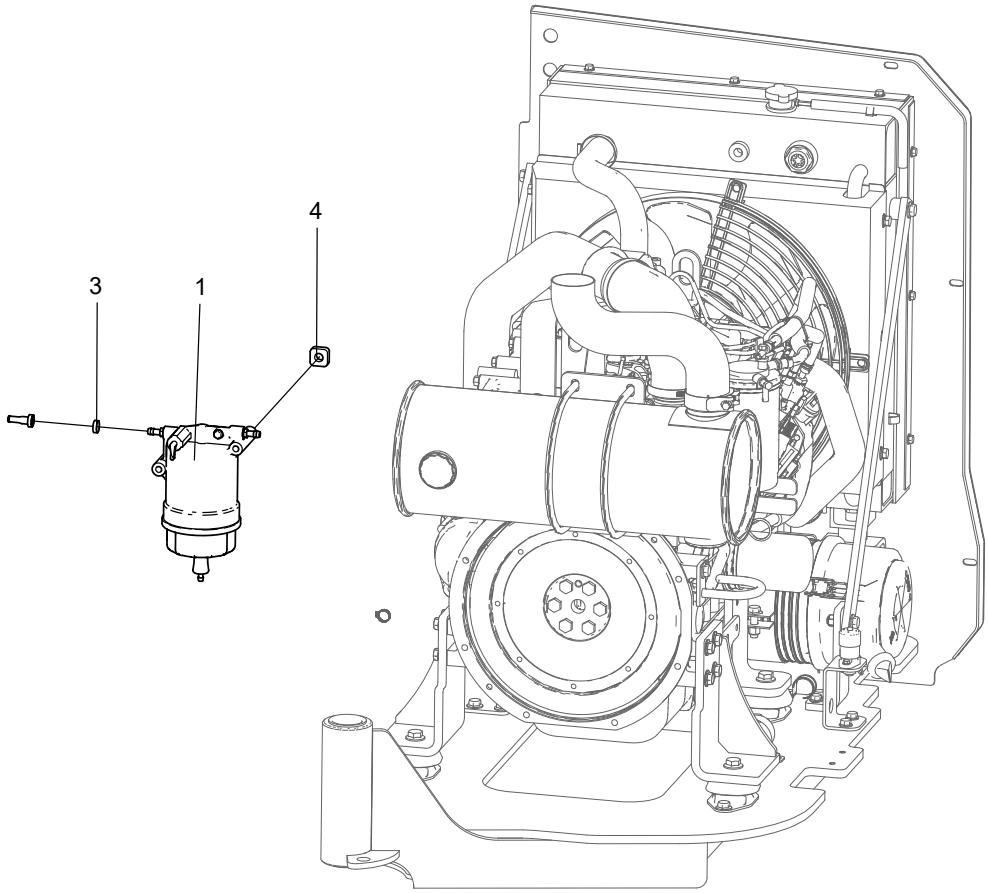

No.	Part No.	Qty.	Description
1	201010003058	1	oil water separator
2	104020023104	2	Reducing coupler
3	216020000004	12	Clamp, non-perforated, DIN
4	104021023039	2	Gasket

This Page Intentionally Left Blank

4 BOOM COMPONENTS

4.1 TOWER BOOM INSTALLATION

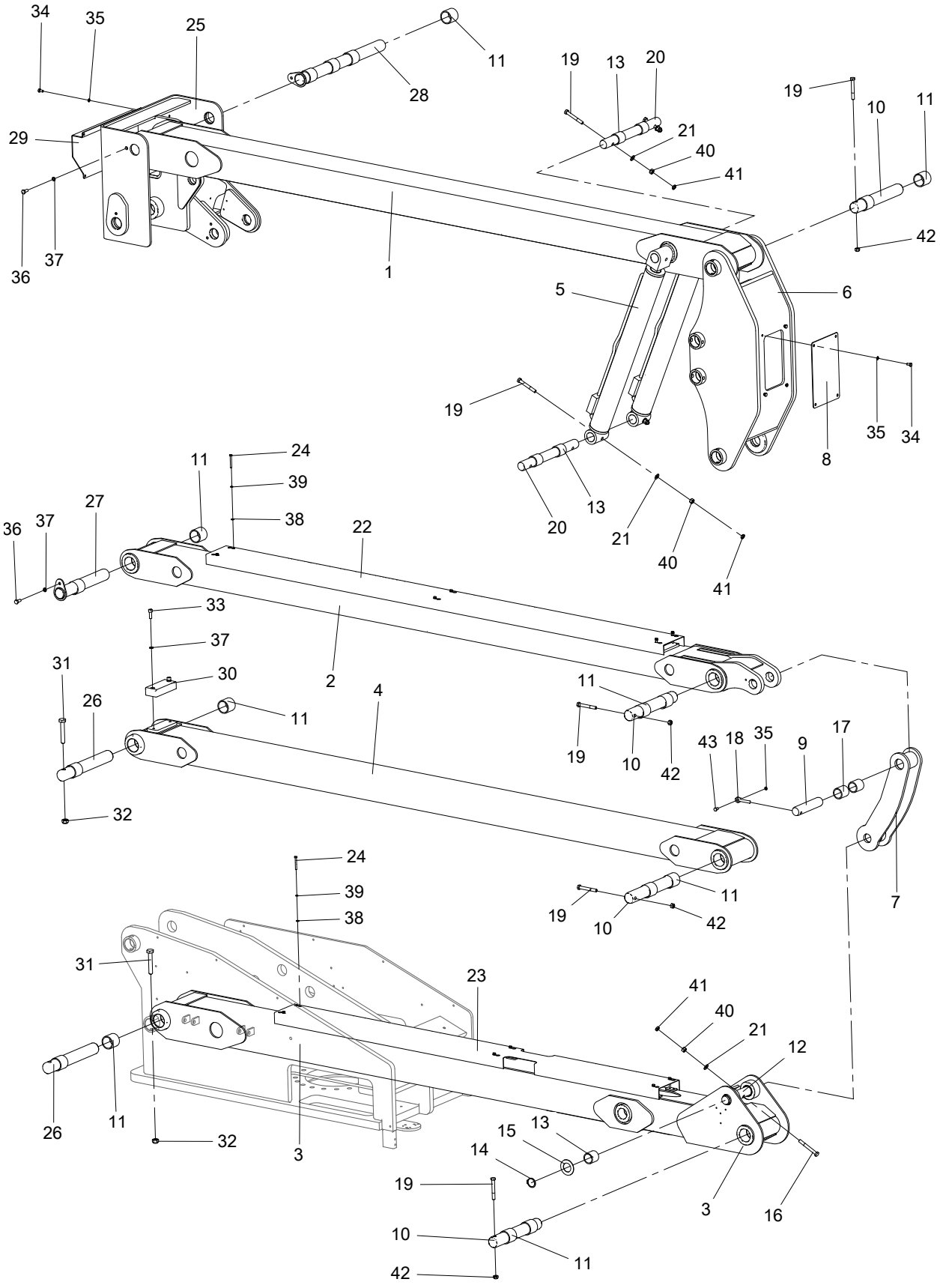

No.	Part No.	Qty.	Description
1	104020010023	1	Link, upper
2	104020010007	1	Link, upper
3	104020010008	1	Link, lower
4	104020010004	1	Link, lower
5	104015050003	2	Secondary Boom Cylinder
5a	207990003244	1	Seal kit, cylinder
5b	207990003286	1	Seal kit, cylinder
6	104016010013	1	Upright, lower
7	104015010009	1	Tie rod
8	104009010137	1	Cover
9	104009010120	1	Pin XGΦ40-176[Z]
10	104016010014	4	Pin XGΦ50-328[Z]
11	214030000067	18	Bushing, self-lubricating
12	104009010118	1	Pin XJΦ40-220[Z]
13	214030000065	6	Bearing, self-lubricating
14	215040000097	2	Retaining ring 40-DKL JB/ZQ 4342
15	104009010136	2	Shim
16	215010000017	1	Bolt M12×100-8.8-ZnD GB/T 5782
17	214030000054	2	Bearing, self-lubricating
18	101012010044	1	Keeper pin
19	215010000016	8	Bolt M12×90-8.8-ZnD GB/T 5782
20	104009010122	2	Pin XGΦ40-397[Z]
21	215040000037	5	Washer 12-200HV-ZnD GB/T 97.1
22	104015010003	1	Cover
23	104015010005	1	Cover
24	215010000205	12	Bolt M6×55-A2-70 GB/T5783
25	104021010016	1	Upright, upper
26	105001020165	2	Pin XGΦ50-347
27	104009010139	1	Pin assembly Φ50-325[Z]
28	104009010140	1	Pin assembly Φ50-592[Z]
29	104020010031	1	Plate, bending
30	104015010018	1	Pad
31	215010000152	2	Bolt M16×100-10.9-DKL GB/T 1228
32	215030000031	2	Nut M16-8-ZnD GB/T 6184
33	215020000050	2	Screw M10×30-8.8-ZnD GB/T 70.1
34	215010000056	8	Bolt M8×16-8.8-ZnD GB/T 5783
35	215040000005	9	Washer 8-ZnD GB/T 93

No.	Part No.	Qty.	Description
36	215010000069	2	Bolt M10×25-8.8-ZnD GB/T 5783
37	215040000006	4	Washer 10-ZnD GB/T 93
38	215040000033	12	Washer 6-A2 GB/T 97.1
39	215040000004	12	Washer 6-A2-70 GB/T 93
40	215030000008	5	Nut M12-8-ZnD GB/T 6170
41	215030000018	5	Nut M12-8-ZnD GB/T 6172.1
42	215030000029	4	Nut M12-8-ZnD GB/T 6184
43	215010000058	1	Bolt M8×25-8.8-ZnD GB/T 5783

4.2 BASE BOOM INSTALLATION

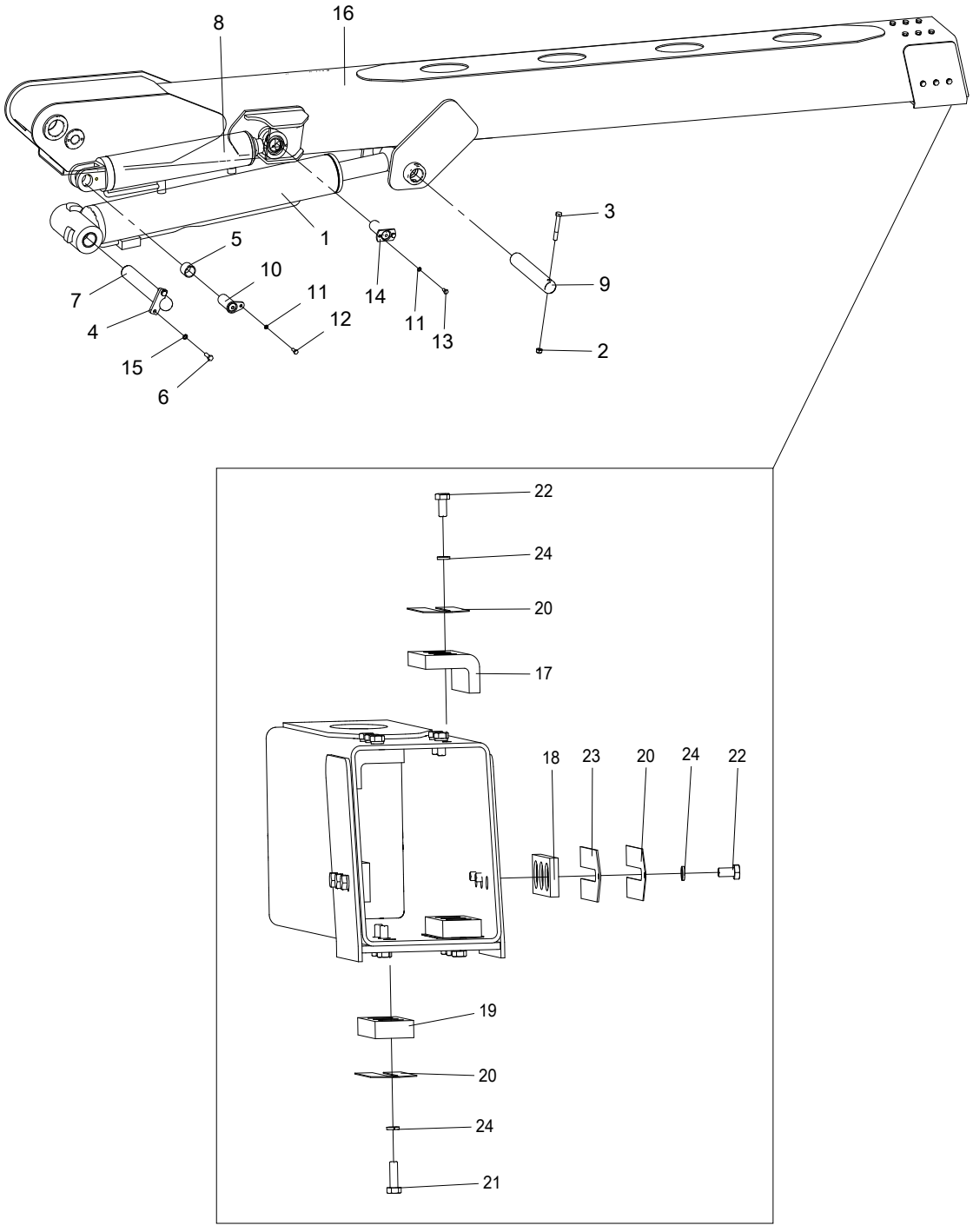

No.	Part No.	Qty.	Description
1	104013050001	1	Main lift cylinder
1a	207990003246	1	Seal kit, cylinder
1b	207990003289	1	Seal kit, cylinder
2	215030000029	1	Nut M12-8-ZnD GB/T 6184
3	215010000016	1	Bolt M12×90-8.8-ZnD GB/T 5782
4	104008010135	1	Snab plate
5	214030000069	1	Bushing, self-lubricating
6	215010000071	2	Bolt M10×30-8.8-ZnD GB/T 5783
7	104009010160	1	Pin XGΦ45-285[Z]
8	104009010152	1	Lower leveling cylinder
9	104009010182	1	Pin XGΦ45-246[Z]
10	104009010099	1	Pin assembly Φ35-70[Z]
11	215040000005	3	Washer 8-ZnD GB/T 93
12	215010000057	1	Bolt M8×20-8.8-ZnD GB/T 5783
13	215010000056	2	Bolt M8×16-8.8-ZnD GB/T 5783
14	104009010117	1	Pin assembly Φ35-85[Z]
15	215040000006	2	Washer 10-ZnD GB/T 93
16	104020010002	1	Base boom
17	104020010019	2	Wear pad assembly
18	103006013021	2	Wear pad assembly
19	104009010112	2	Wear pad assembly
20	104009010103	6	Shim
21	215010000071	6	Bolt M10×30-8.8-ZnD GB/T 5783
22	215010000068	12	Bolt M10×20-8.8-ZnD GB/T 5783
23	104011010072	2	Shim
24	215040000006	18	Washer 10-ZnD GB/T 93

4.3 TELESCOPIC BOOM INSTALLATION

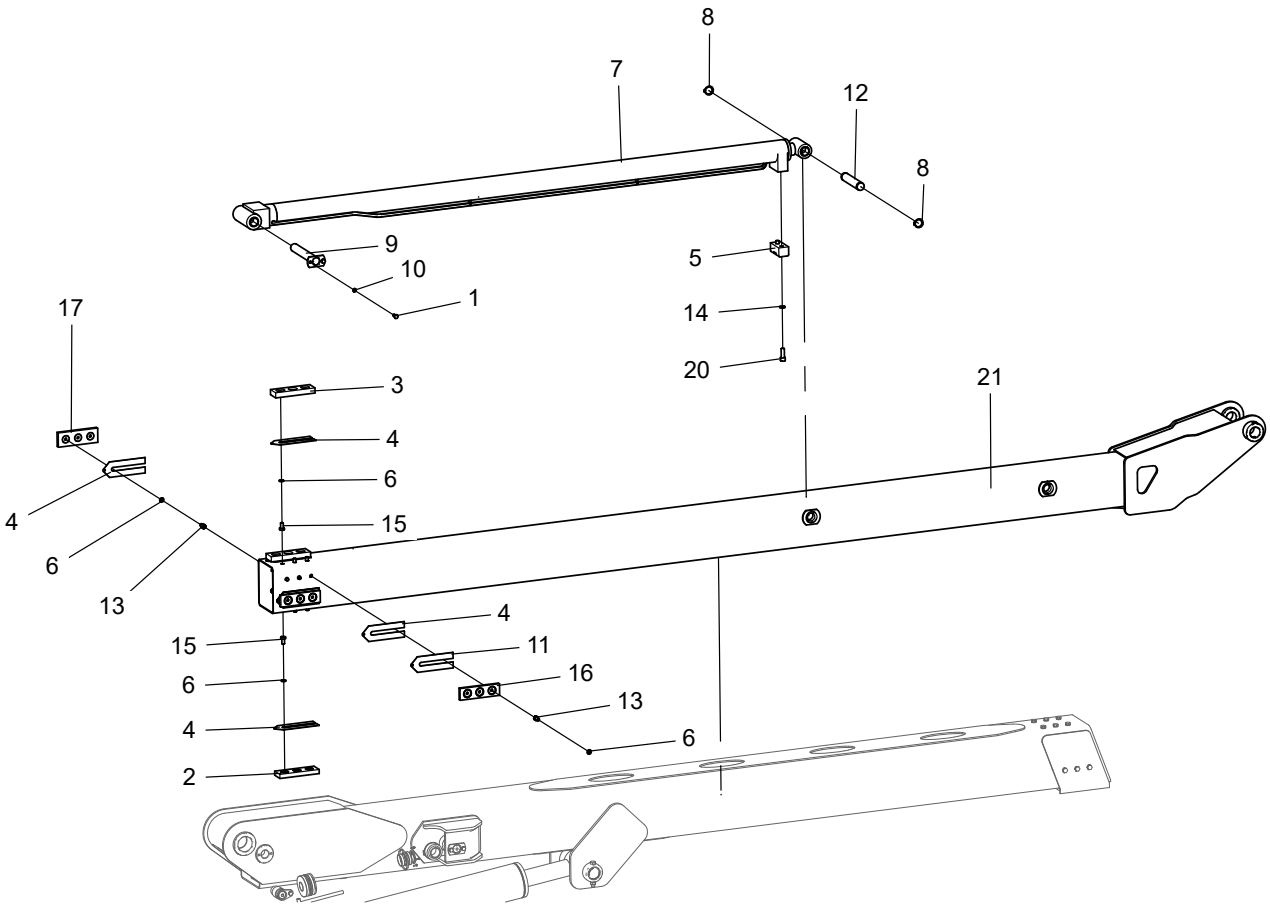

No.	Part No.	Qty.	Description
1	215010000057	2	Bolt M8×20-8.8-ZnD GB/T 5783
2	104009010106	2	Wear pad assembly
3	104009010112	2	Wear pad assembly
4	104009010103	8	Shim
5	104020010026	1	Pad, wear
6	215040000006	24	Washer 10-ZnD GB/T 93
7	104017050008	1	Telescope cylinder
7a	207990003242	1	Seal kit, cylinder
7b	207990003290	1	Seal kit, cylinder
8	215040000096	2	Retaining ring 30-DKL JB/ZQ 4342
9	104021010024	1	Pin assembly Φ30-210[Z]
10	215040000005	2	Washer 8-ZnD GB/T 93
11	104011010072	3	Shim
12	104020010024	1	Pin XGΦ30-156[Z]
13	215020000047	12	Screw M10×16-8.8-ZnD GB/T 70.1

No.	Part No.	Qty.	Description
14	215040000007	2	Washer 12-ZnD GB/T 93
15	215010000068	12	Bolt M10×20-8.8-ZnD GB/T 5783
16	103006013021	3	Wear pad assembly
17	104008010106	1	Wear pad assembly
18	215020000047	12	Screw M10×16-8.8-ZnD GB/T 70.1
19	215010000071	8	Bolt M10×30-8.8-ZnD GB/T 5783
20	215020000076	2	Screw M12×35-8.8-ZnD GB/T 70.1
21	104021010005	1	Telescopic boom

4.4 CABLE TRACK INSTALLATION

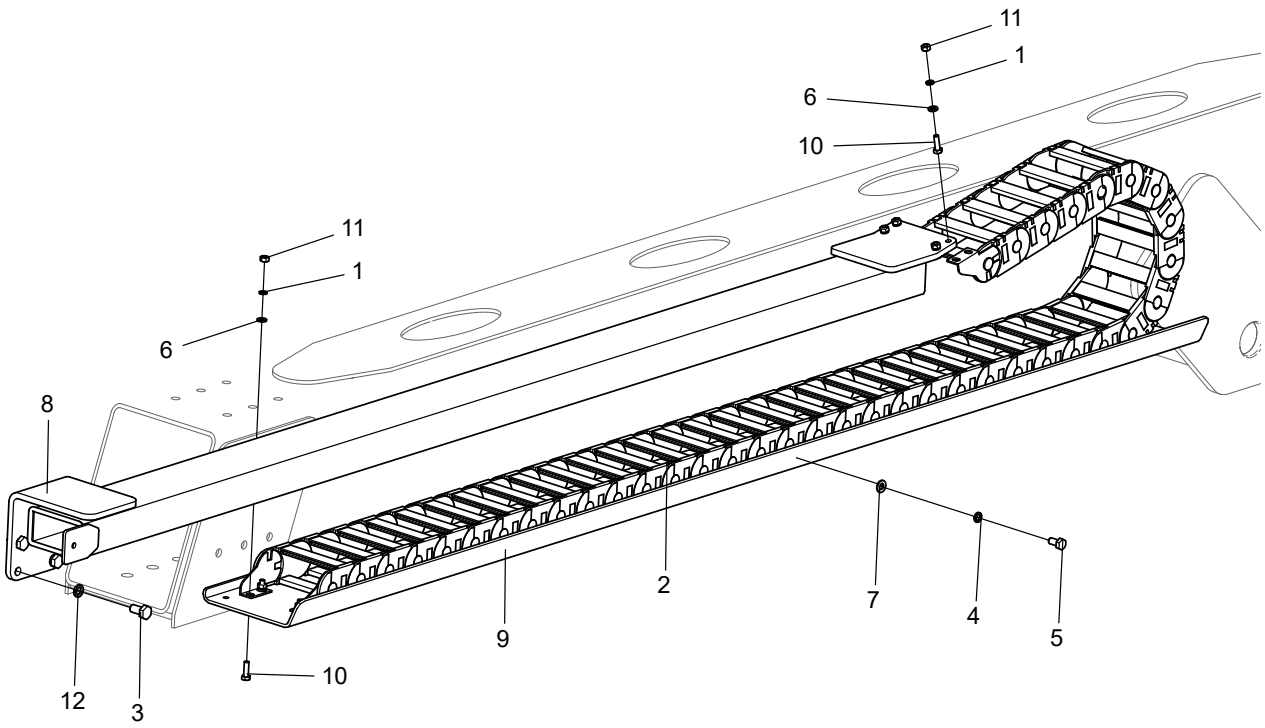

No.	Part No.	Qty.	Description
1	215040000004	8	Washer 6-A2-70 GB/T 93
2	204190000005	1	Cable track and joints
3	215010000068	4	Bolt M10×20-8.8-ZnD GB/T 5783
4	215040000005	6	Washer 8-ZnD GB/T 93
5	215010000056	6	Bolt M8×16-8.8-ZnD GB/T 5783
6	215040000033	8	Washer 6-A2 GB/T 97.1
7	215040000034	6	Washer 8-200HV-ZnD GB/T 97.1
8	104021010019	1	Tube, push
9	104021010011	1	Bracket，cable track
10	215010000051	8	Bolt M6×20-A2-70 GB/T 5783
11	215030000004	8	Nut M6-A2-70 GB/T 6170
12	215040000006	4	Washer 10-ZnD GB/T 93

4.5 JIB BOOM INSTALLATION

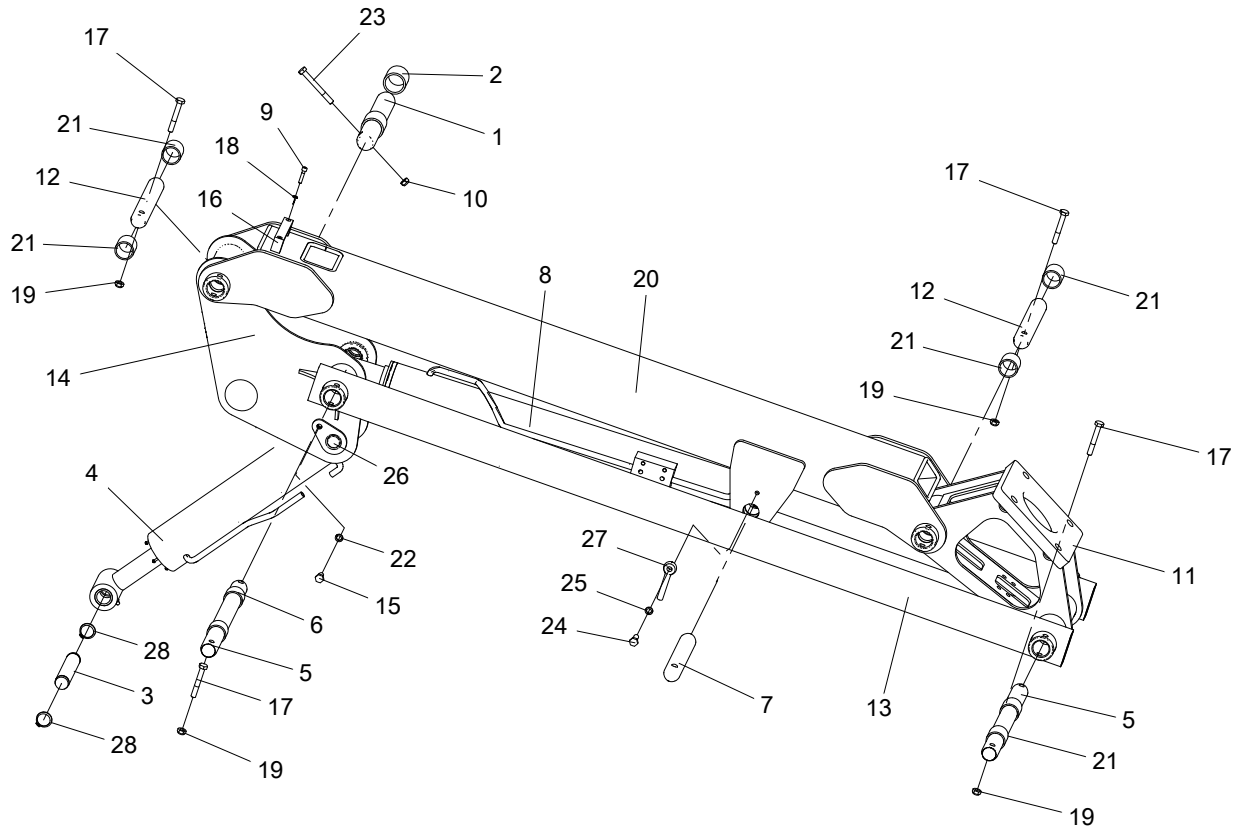

No.	Part No.	Qty.	Description
1	104009010186	1	Pin XGΦ40-275[Z]
2	214030000065	2	Bearing, self-lubricating
3	104020010024	1	Pin XGΦ30-156[Z]
4	104016050001	1	Level cylinder, upper
4a	207990003241	1	Seal kit, cylinder
4b	207990003287	1	Seal kit, cylinder
5	104014010080	2	Pin XGΦ35-405
6	214030000069	4	Bushing, self-lubricating
7	104022010042	1	Pin XGΦ35-225
8	105002010039	1	Lift cylinder, jib
8a	207990003014	1	Seal kit, Jib lift cylinder
9	215020000014	2	Screw M6×30-A2-70 GB/T 70.1
10	215030000027	1	Nut M10-8-ZnD GB/T 6184
11	104014010088	1	Connector
12	104014010070	2	Pin XGΦ35-235

No.	Part No.	Qty.	Description
13	105002010036	2	Level arm
14	104017010007	1	Pivot
15	215010000068	1	Bolt M10×20-8.8-ZnD GB/T 5783
16	105002010023	1	Clamp
17	215010000011	6	Bolt M10×70-8.8-ZnD GB/T 5782
18	215040000004	2	Washer 6-A2-70 GB/T 93
19	215030000027	6	Nut M10-8-ZnD GB/T 6184
20	105029013006	1	Boom tube
21	214030000004	6	Bearing, self-lubricating
22	215040000006	1	Washer 10-ZnD GB/T 93
23	215010000013	1	Bolt M10×90-8.8-ZnD GB/T 5782
24	215010000071	1	Bolt M10×30-8.8-ZnD GB/T 5783
25	215040000006	1	Washer 10-ZnD GB/T 93
26	104010010011	1	Pin assembly Φ35-152[Z]
27	209020000002	1	Keeper pin Φ12-75
28	215040000096	2	Retaining ring 30-DKL JB/ZQ 4342

This Page Intentionally Left Blank

5 PLATFORM COMPONENTS

5.1 PLATFORM SUPPORT INSTALLATION

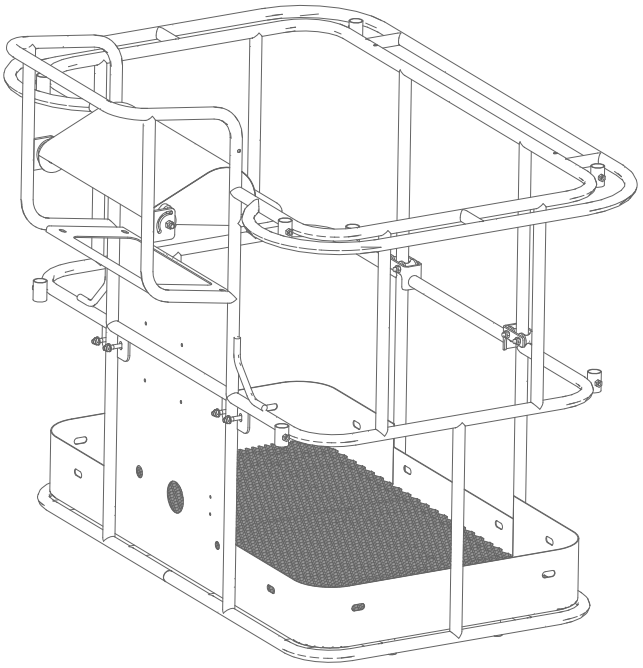

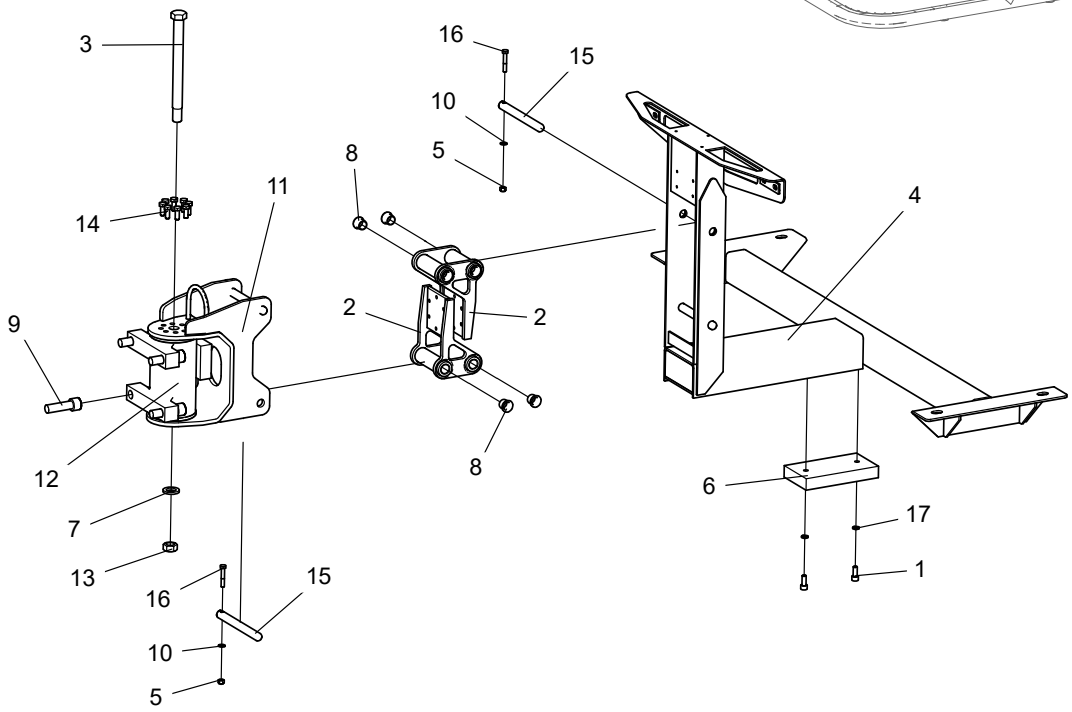

No.	Part No.	Qty.	Description
1	215020000049	2	Screw M10×25-8.8-ZnD GB/T 70.1
2	105001040075	2	Load support
3	105001040032	1	Bolt, swing motor
4-1	105001040002	1	Bracket(For small or medium platform)
4-2	105003040008	1	Bracket(For large platform)
5	215030000026	4	Nut M8-8-ZnD GB/T889.1
6	105001040006	1	Pad
7	215040000108	1	Washer 22-DKL GB/T 1230
8	214080000001	8	Bearing 20×23×21.5 SF-1F
9	215020000278	4	Screw M20×70-8.8-ZnD GB/T 70.1
10	215040000034	4	Washer 8-200HV-ZnD GB/T 97.1
11	105001040020	1	Bracket
12	202020000003	1	Rotator
13	215030000069	1	Nut M22-8-ZnD GB/T6170
14	215010000070	8	Bolt M10×25-10.9-DKL GB/T 5783
15	105001040034	4	Pin XGΦ20-195
16	215010000163	4	Bolt M8×50-8.8-ZnD GB/T 5782
17	215040000006	2	Washer 10-ZnD GB/T 93

5.2 PLATFORM INSTALLATION(SMALL-SIZED)

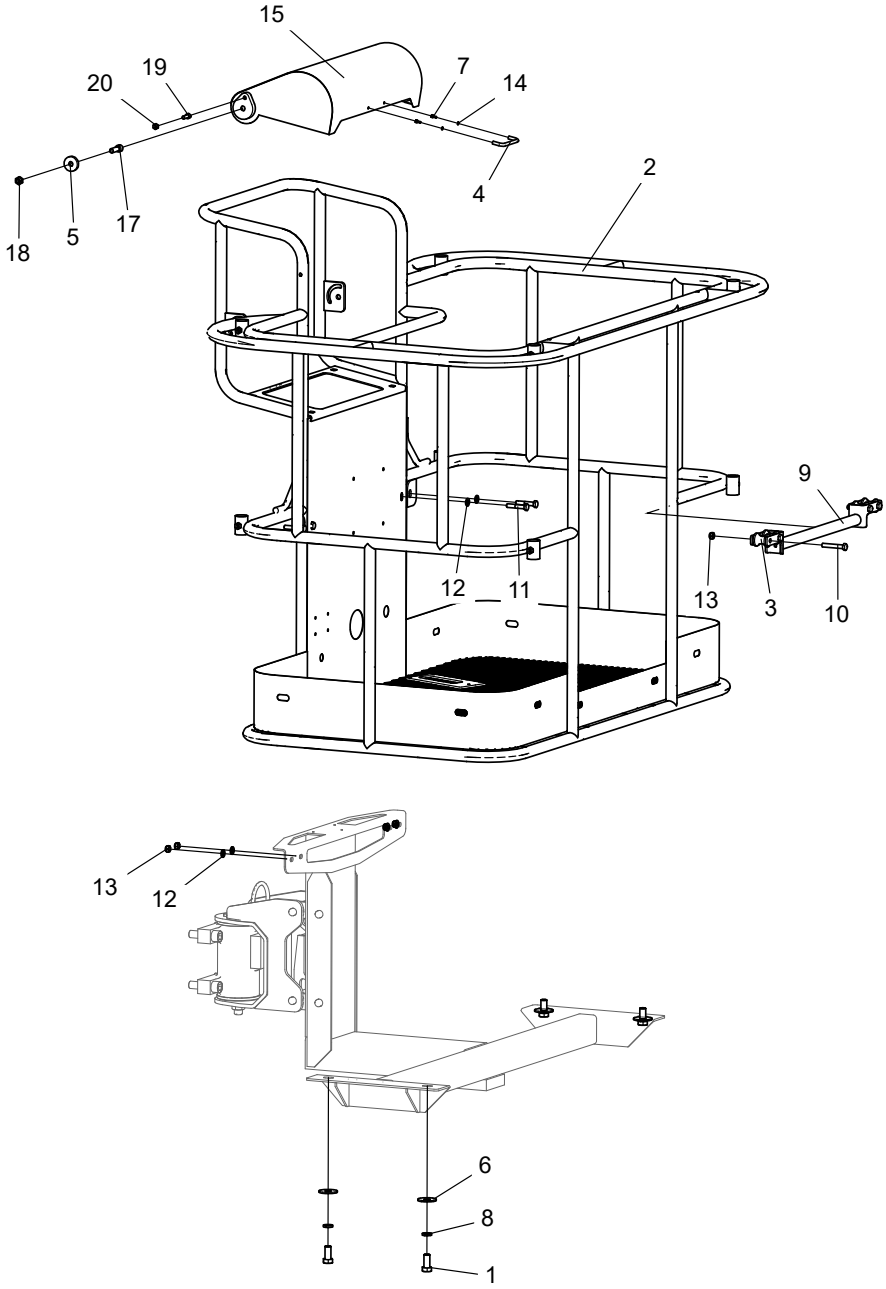

No.	Part No.	Qty.	Description
1	215010000109	4	Bolt M16×35-8.8-ZnD GB/T 5783
2	105001040039	1	The action bar
3	105001040078	4	Roller
4	209030000001	1	Handle, C.C.96mm
5	105001040055	2	Plate
6	215040000020	4	Washer 16-200HV-ZnD GB/T 96.1
7	215020000001	2	Screw M4×10-A2-70 GB/T 70.1
8	215040000008	4	Washer 16-ZnD GB/T 93
9	105001040023	1	Bar, drop
10	215010000085	4	Bolt M10×65-8.8-ZnD GB/T 5783
11	215010000009	4	Bolt M10×55-8.8-ZnD GB/T 5782
12	215040000035	8	Washer 10-200HV-ZnD GB/T 97.1
13	215030000027	8	Nut M10-8-ZnD GB/T 6184
14	215040000002	2	Washer 4-A2-70 GB/T 93
15	105001040029	1	Dust cover
17	215020000208	2	Screw M12×40-8.8-ZnD GB/T 70.1
18	215030000029	2	Nut M12-8-ZnD GB/T 6184
19	215020000024	2	Screw M8×25-8.8-ZnD GB/T 70.1
20	215030000005	2	Nut M8-8-ZnD GB/T 6170

© Aug. 2022

5.3 PLATFORM INSTALLATION(MIDDLE-SIZED)

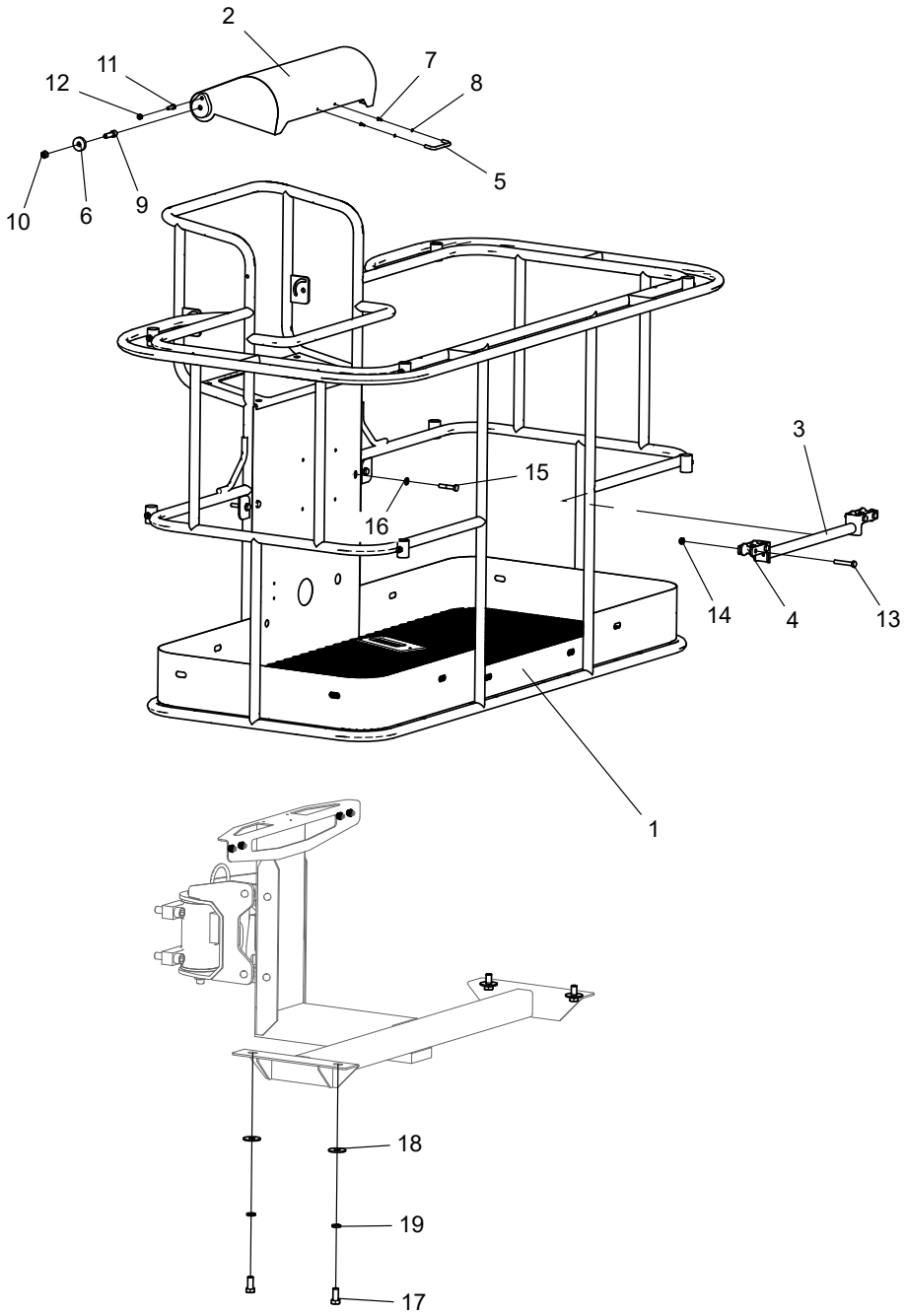

No.	Part No.	Qty.	Description
1	105021040007	1	The action bar
2	105001040029	1	Dust cover
3	105001040023	1	Bar, drop
4	105001040078	4	Roller
5	209030000001	1	Handle, C.C.96mm
6	105001040055	2	Plate
7	215020000001	2	Screw M4×10-A2-70 GB/T 70.1
8	215040000002	2	Washer 4-A2-70 GB/T 93
9	215020000208	2	Screw M12×40-8.8-ZnD GB/T 70.1
10	215030000029	2	Nut M12-8-ZnD GB/T 6184
11	215020000024	2	Screw M8×25-8.8-ZnD GB/T 70.1
12	215030000005	2	Nut M8-8-ZnD GB/T 6170
13	215010000085	4	Bolt M10×65-8.8-ZnD GB/T 5783
14	215030000027	8	Nut M10-8-ZnD GB/T 6184
15	215010000009	4	Bolt M10×55-8.8-ZnD GB/T 5782
16	215040000035	8	Washer 10-200HV-ZnD GB/T 97.1
17	215010000109	4	Bolt M16×35-8.8-ZnD GB/T 5783
18	215040000020	4	Washer 16-200HV-ZnD GB/T 96.1
19	215040000008	4	Washer 16-ZnD GB/T 93

This Page Intentionally Left Blank

6 HYDRAULIC SYSTEM

6.1 DRIVE CONTROL VALVE(PN.202040003217)

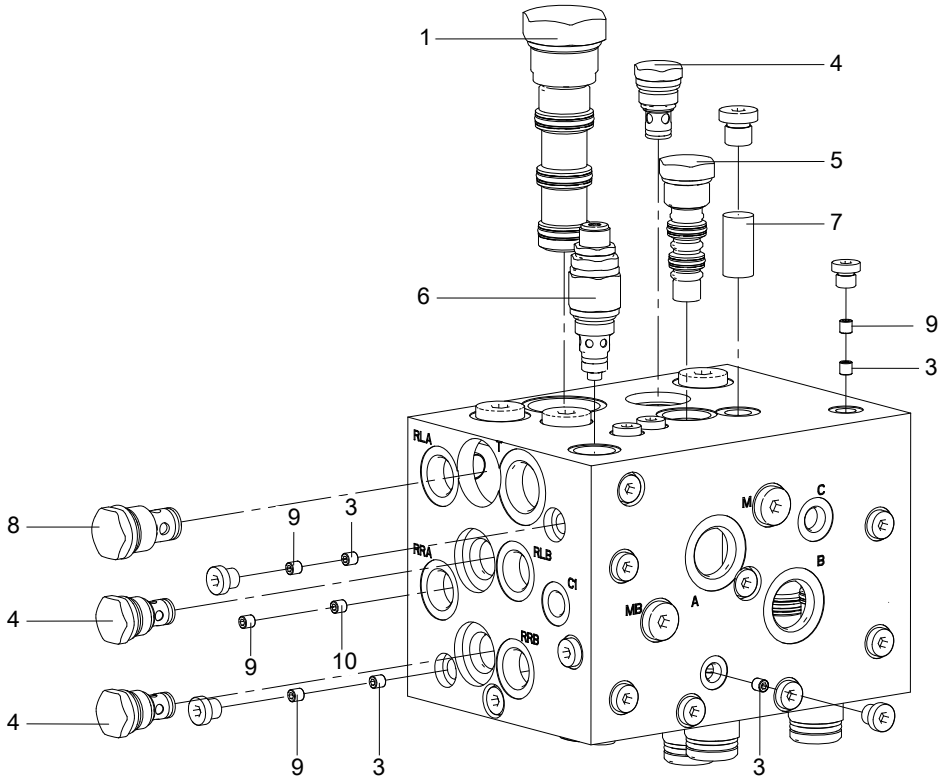

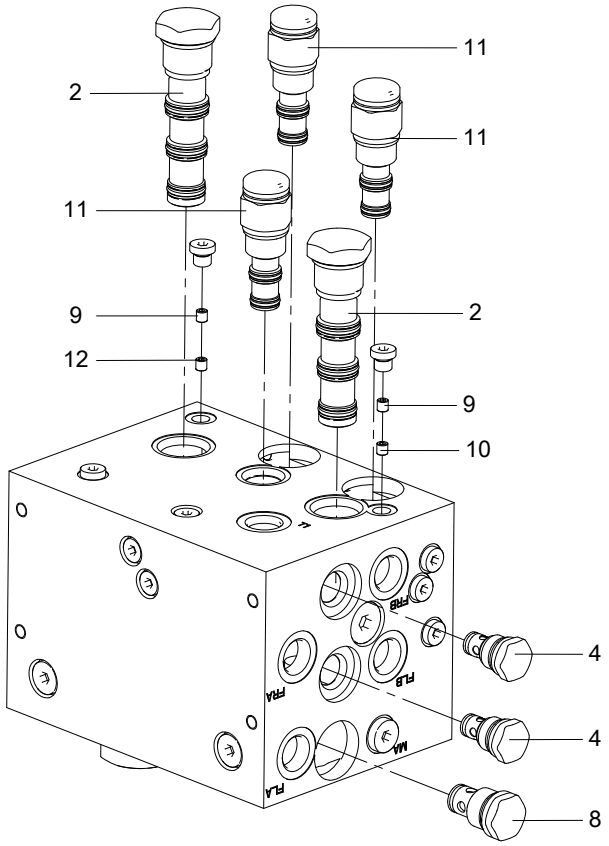

No.	Part No.	Qty.	Description
1	202990003109	1	Dividing-combining valve
2	202990003110	2	Dividing-combining valve
3	202040003370	1	Hydraulic control valve
4	202130003015	4	Damper
5	202990003071	5	Check valve
6	202990003108	1	Flushing valve
7	202990003188	1	Relief valve
8	202990003154	1	Shuttle valve
9	202990003095	2	Check valve
10	202130003004	6	Damper
11	202130003003	2	Damper
12	202130000008	1	Damper plug

6.2 BRAKE/2-SPEED OSCILLATE CONTROL VALVE (PN.202040003183)

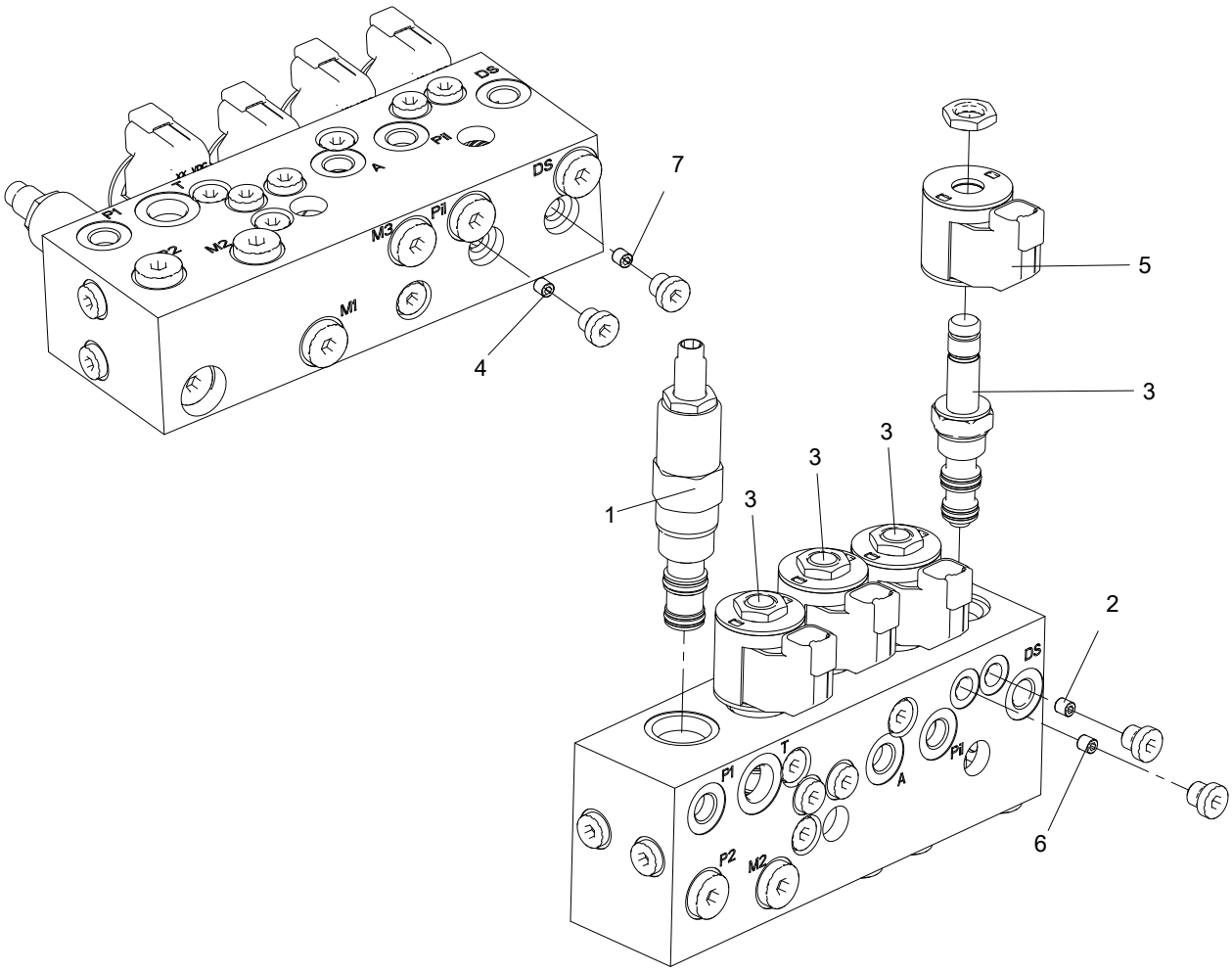

No.	Part No.	Qty.	Description
1	202990003103	1	Relief valve
2	202130000008	1	Damper plug
3	202990003105	4	Solenoid valve
4	202130000004	1	Plug
5	202990000037	4	Coil
6	202130003015	1	Damper
7	202130000001	1	Damper

6.3 DEUTZ PUMP DRIVE UNIT

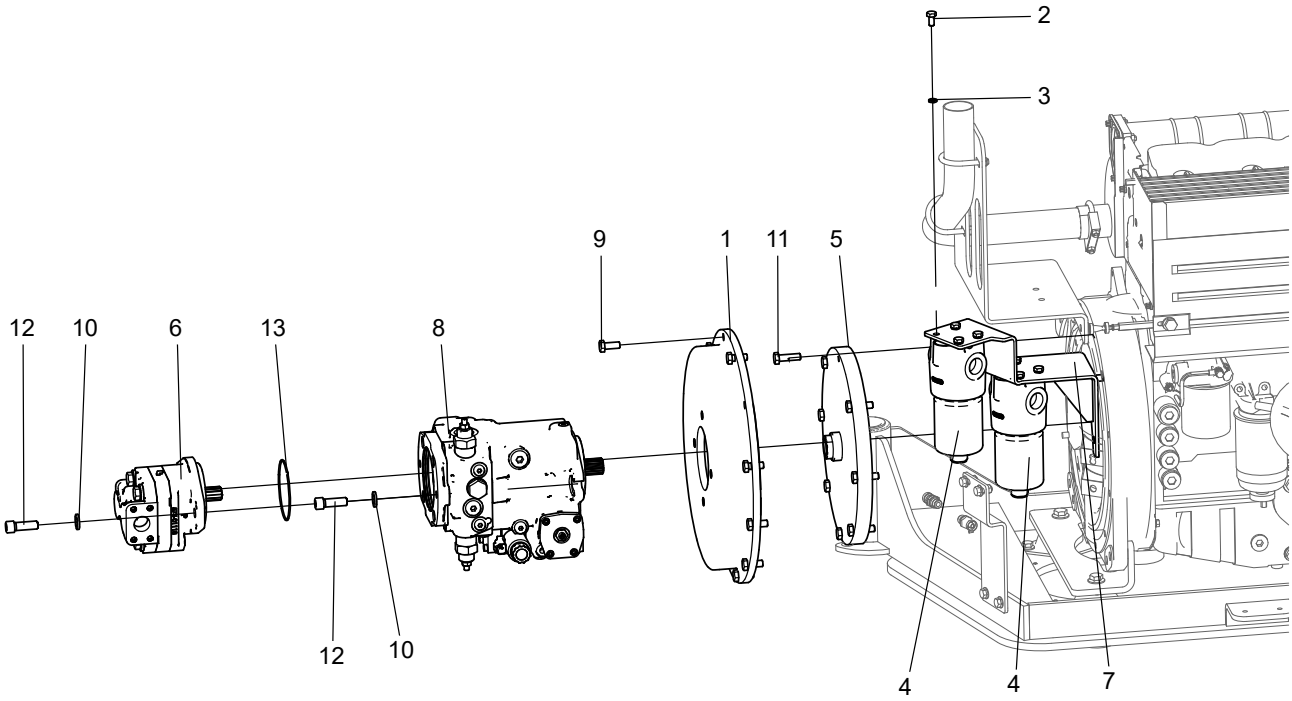

No.	Part No.	Qty.	Description
1	102001030196	1	Flange disc
2	215010000056	8	Bolt M8×16-8.8-ZnD GB/T 5783
3	215040000005	8	Washer 8-ZnD GB/T 93
4	202080000046	2	High pressure filter
5	204040000002	1	Shaft coupling
6	104009050006		Gear pump options
6-1	202010000020	1	Gear pump
7	104020023001	1	Bracket, filter
8	104009050005		Closed variable displacement pump options
8-1	202010000006	1	Closed variable displacement pump
9	215010000069	12	Bolt M10×25-8.8-ZnD GB/T 5783
10	215040000051	4	Washer 12-DKL GB/T 1230
11	215010000073	8	Bolt M10×35-8.8-ZnD GB/T 5783
12	215080000005	4	Screw 1/2-13UNC-1.5-GR8-DKL ASME B18.3
13	207040000060	1	O-ring

6.4 YANMAR PUMP DRIVE UNIT

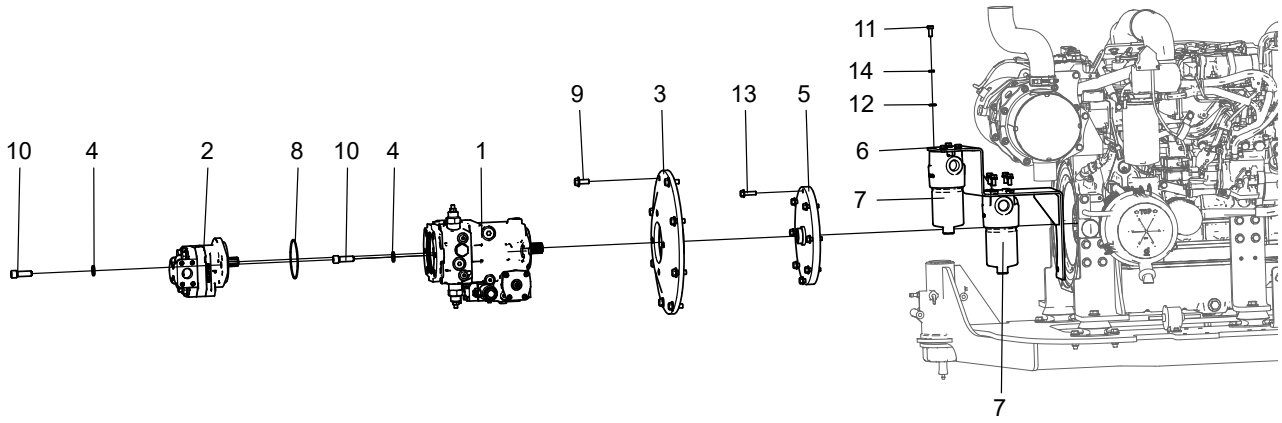

No.	Part No.	Qty.	Description
1	104009050005		Closed variable displacement pump options
1-1	202010000006	1	Closed variable displacement pump
2	104009050006		Gear pump options
2-2	202010000020	1	Gear pump
3	102013033007	1	Flange disc
4	215040000051	4	Washer 12-DKL GB/T 1230
5	204040000001	1	Shaft coupling
6	104021053046	1	Bracket, filter
7	202080000046	2	High pressure filter
8	207040000060	1	O-ring
9	215010000238	8	Bolt M10×25-8.8-ZnD GB/T 5789
10	215080000005	4	Screw 1/2-13UNC-1.5-GR8-DKL ASME B18.3
11	215010000057	8	Bolt M8×20-8.8-ZnD GB/T 5783
12	215040000034	8	Washer 8-200HV-ZnD GB/T 97.1
13	215010000236	8	Bolt M8×30-8.8-ZnD GB/T 5789
14	215040000005	8	Washer 8-ZnD GB/T 93

6.5 TURNTABLE HYDRAULIC COMPONENTS INSTALLATION

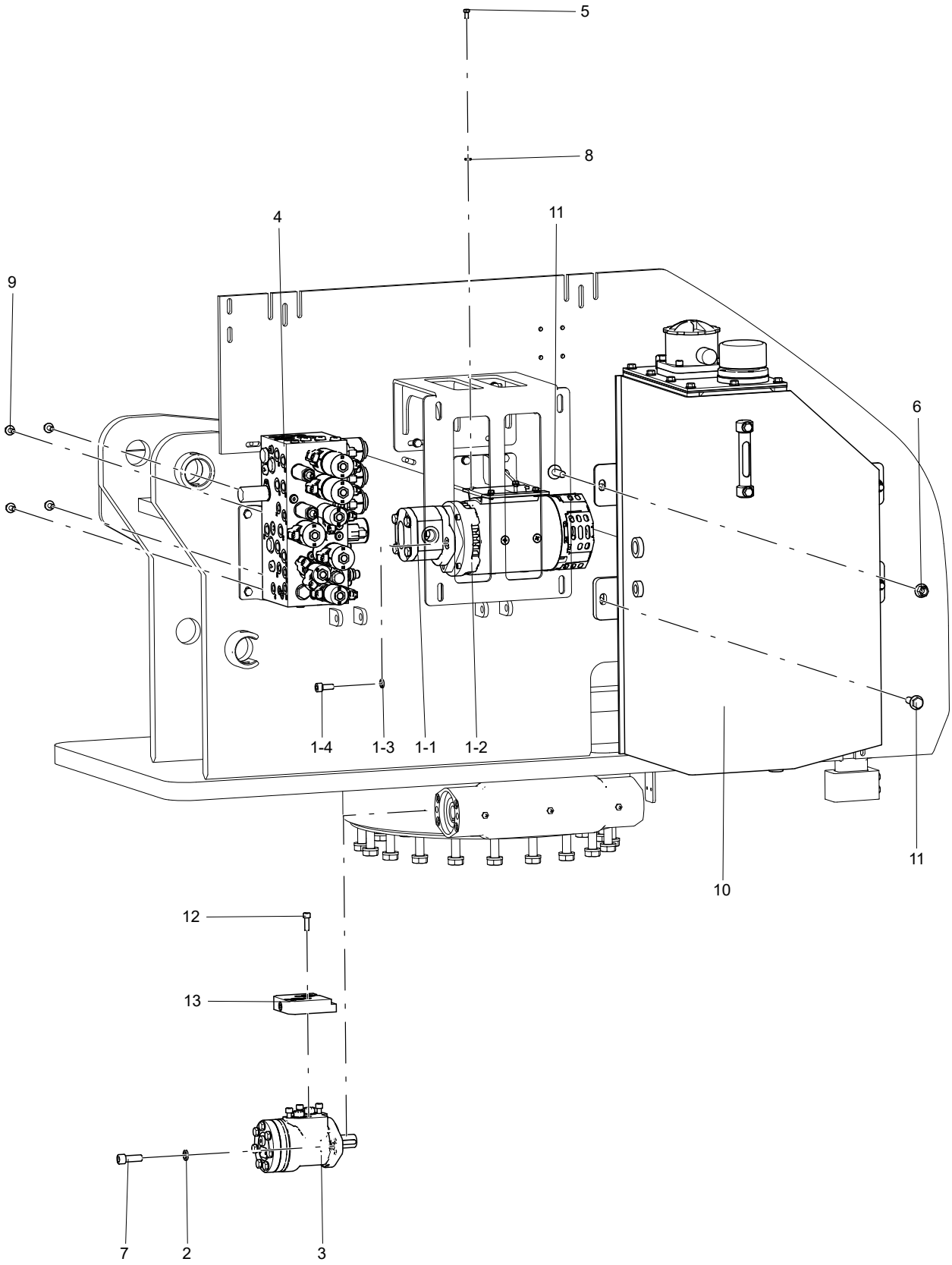

No.	Part No.	Qty.	Description
1-1	202010000034	1	Gear pump(1000106)
1-1a	207990003011	1	Seal kit, gear pump(Not shown)
1-2	203010003001	1	DC motor
1-2a	203240000016	1	Carbon brush
1-3	215040000006	2	Washer 10-ZnD GB/T 93
1-4	215080000001	2	Screw 3/8-24UNF-1-GR8-DKL ASME B18.3
2	215040000007	2	Washer 12-ZnD GB/T 93
3	202020000014	1	Swing motor
4	104021050014		Boom function manifold options
4-1	202040000185	1	Boom function manifold
5	215080000026	4	Bolt 1/4-20UNC-0.5-GR8-DKL ASME B18.2.1
6	215030000110	3	Nut M12-8-ZnD GB/T 6183
7	215020000076	2	Screw M12×35-8.8-ZnD GB/T 70.1
8	215040000033	4	Washer 6-A2 GB/T 97.1
9	215010000286	4	Bolt M8×16-8.8-ZnD GB/T 5789
10	104009020149	1	Hydraulic tank assembly
11	215010000244	4	Bolt M12×40-8.8 ZnD GB/T 5789
12	215020000024	4	Screw M8×25-8.8-ZnD GB/T 70.1
13	202990003005	1	Transition block, slewing

6.6 HYDRAULIC TANK ASSEMBLY

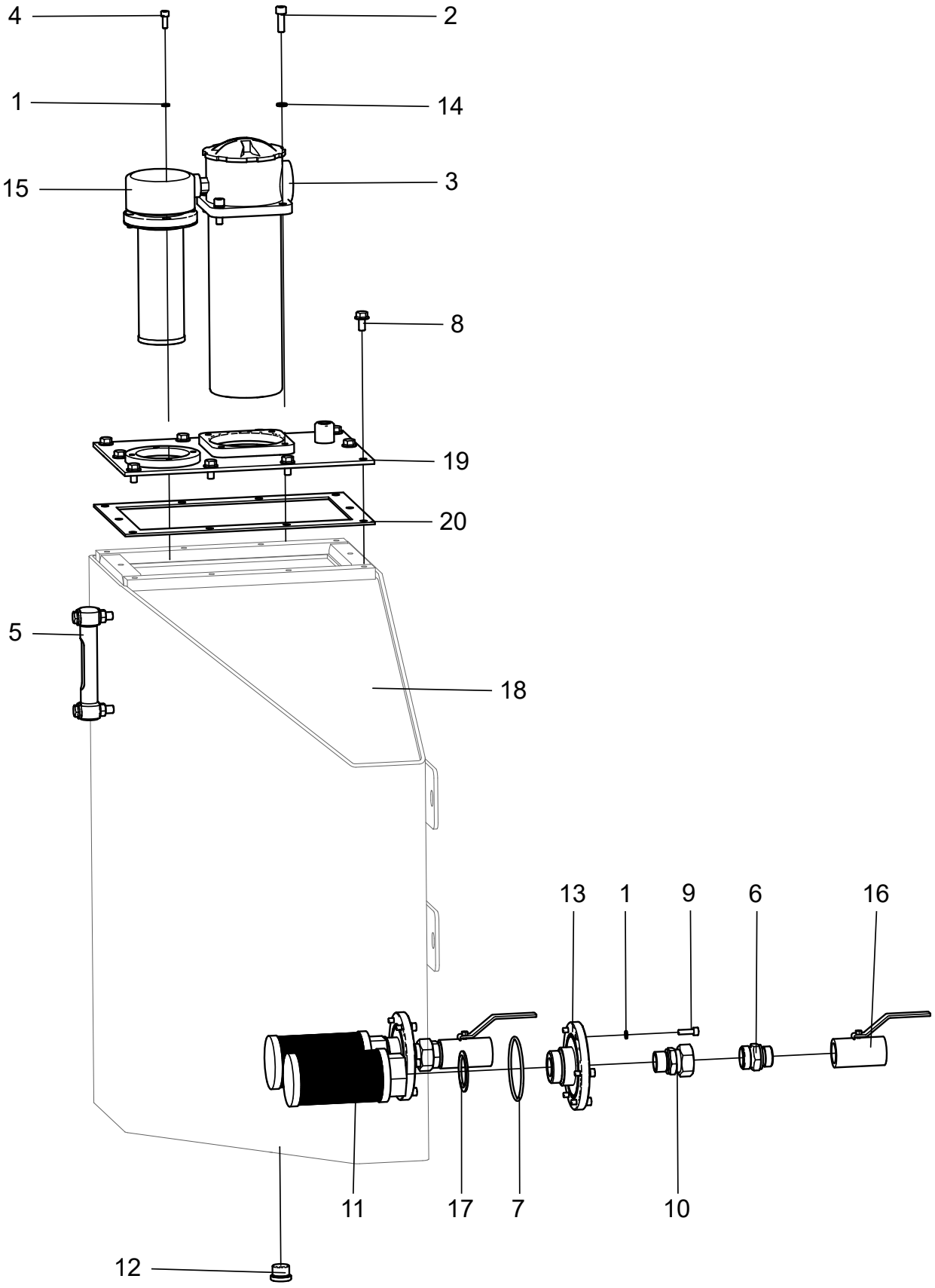

No.	Part No.	Qty.	Description
1	215040000004	16	Washer 6-A2-70 GB/T 93
2	215020000024	4	Screw M8×25-8.8-ZnD GB/T 70.1
3	202080000007	1	Return filter
4	215020000011	4	Screw M6×16-A2-70 GB/T 70.1
5	202120000005	1	Liquid level indicator
6	105001050027	2	Fitting, non-standard
7	207040000020	2	O-ring 77.5×3.55 GB/T 3452.1
8	215010000286	10	Bolt M8×16-8.8-ZnD GB/T 5789
9	215020000012	12	Screw M6×20-A2-70 GB/T 70.1
10	213010000123	2	Fitting
11	202080000006	2	Suction filter
12	213060000004	1	Plug
13	104009020135	2	Flange
14	215040000005	4	Washer 8-ZnD GB/T 93
15	202070003014	1	Air filter
16	202040000049	2	Ball valve
17	207060000005	2	Combined sealing washer
18	104009020134	1	Hydraulic tank
19	104009020145	1	Fuel tank plate
20	104009020151	1	Rubber plate

6.7 FUNCTION VAVLE ASSEMBLY(PN.202040000185)

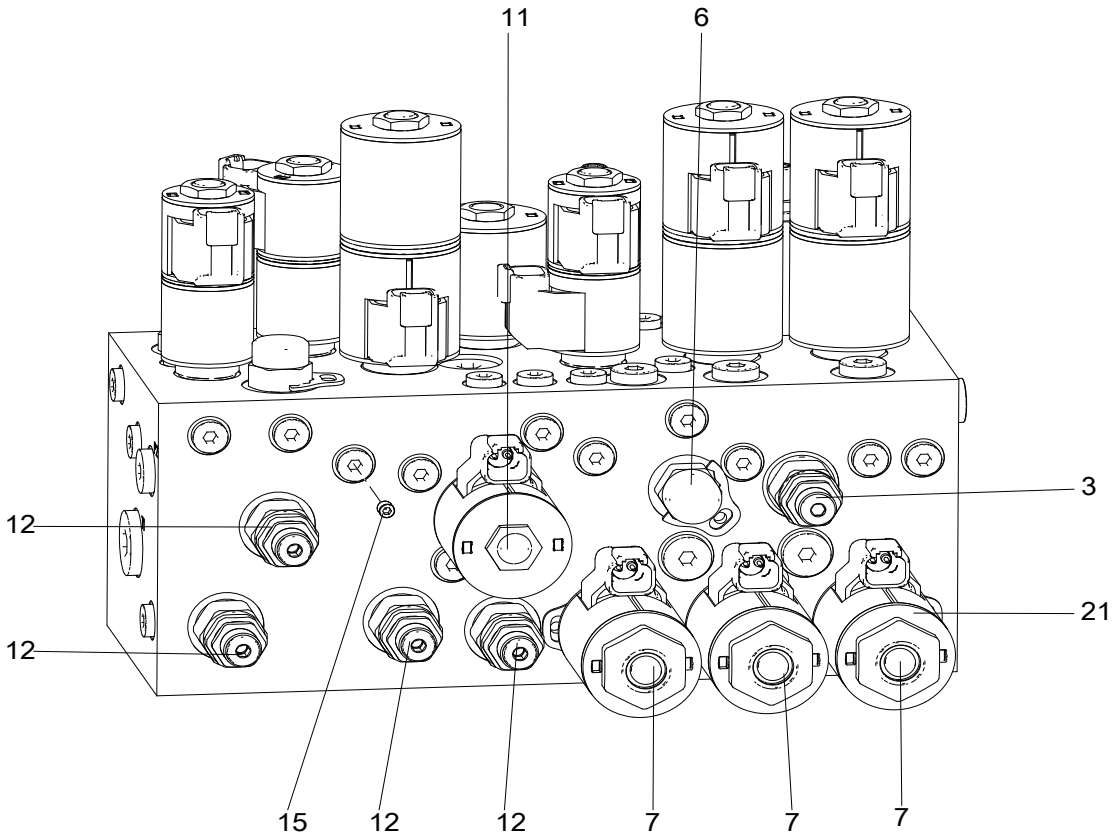

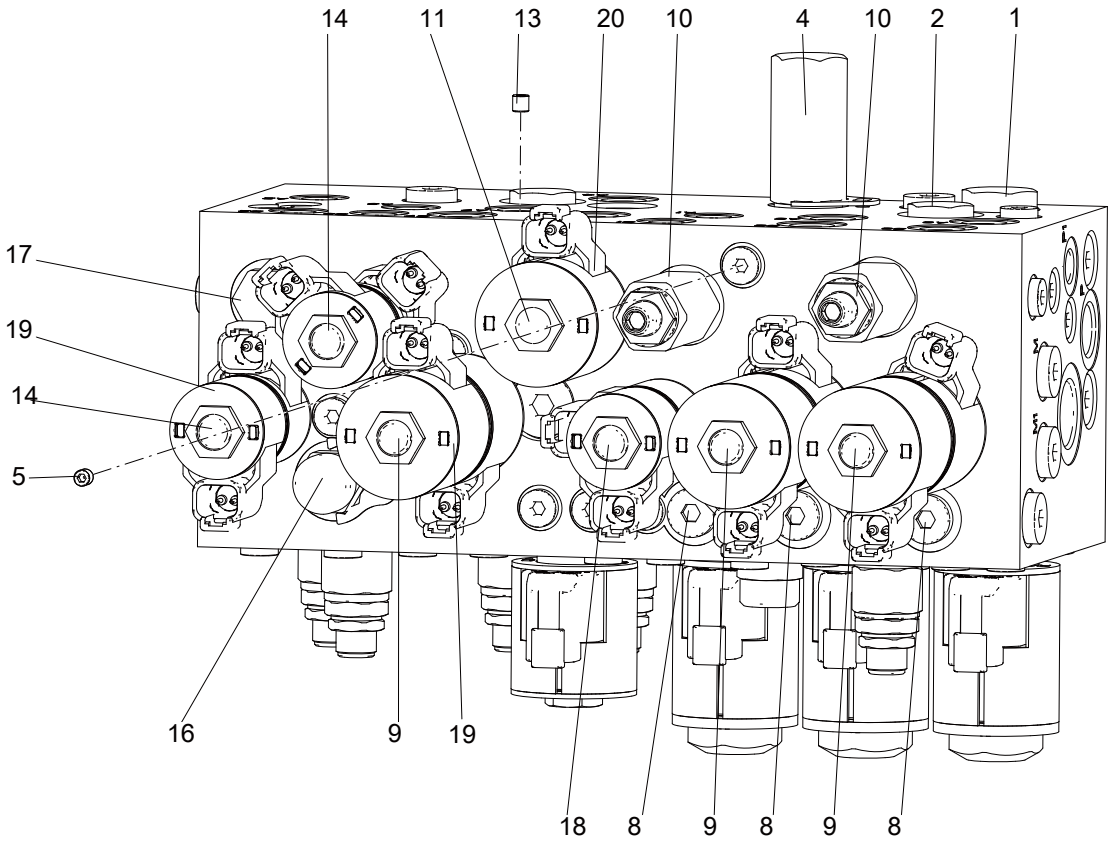

No.	Part No.	Qty.	Description
1	202990003095	1	Check valve
2	202990003071	2	Check valve
3	202990000011	1	Spool
4	202990003214	1	Compensator valve
5	202130003028	1	Damper
6	202040003206	1	Flow valve
7	202990000009	3	Spool
8	202040000410	3	Check valve
9	202990003282	3	Solenoid valve
10	202040003151	2	Relief valve
11	202040003334	2	Solenoid valve
12	202990000028	4	Relief valve
13	202130000005	1	Damper plug
14	202040000399	2	Solenoid valve
15	202130003005	1	Damper
16	202990003042	1	Pressure compensator valve
17	202990003044	1	Bi-directional hydraulic lock
18	202990003008	1	3-position 4-way solenoid directional valve
19	202990000037	6	Coil
20	202990000035	8	Coil
21	202990000038	3	Coil

6.8 BOOM HYDRAULIC COMPONENTS INSTALLATION

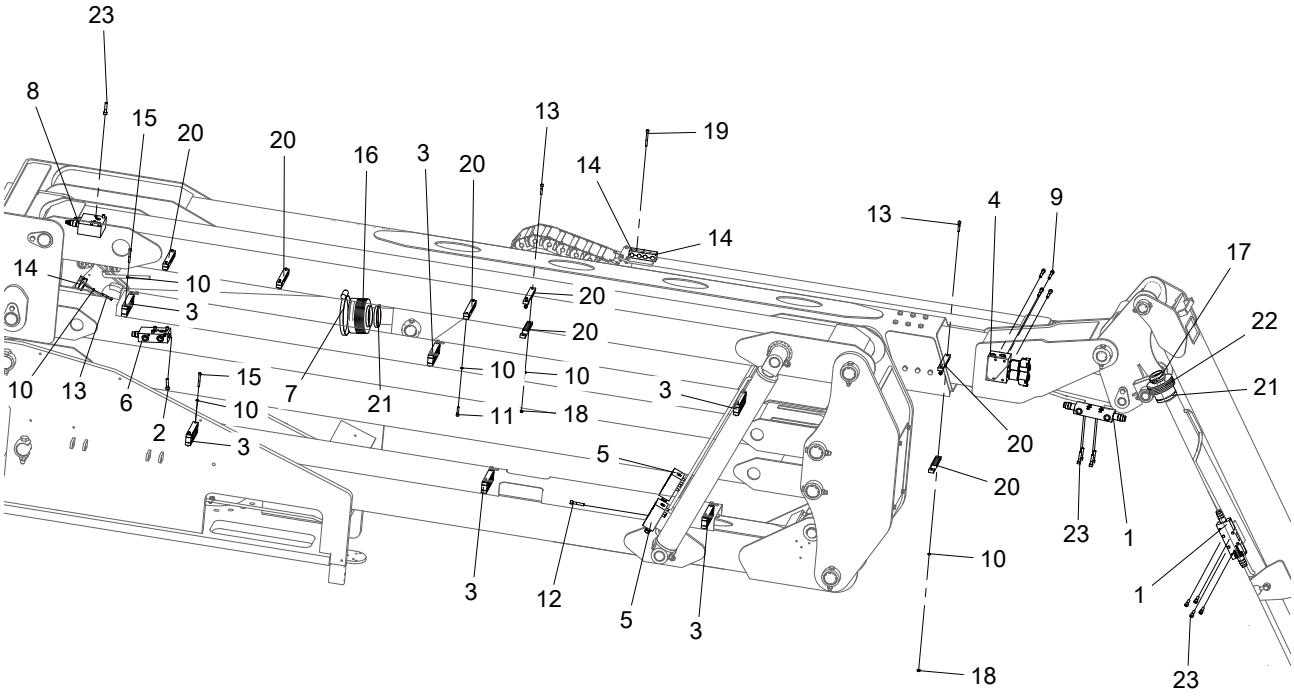

No.	Part No.	Qty.	Description
1	103004050024		2-way counterbalance valve options
1-1	202040000011	2	Counterbalance valve, leveling
2	215020000027	4	Screw M8×35-10.9-DKL GB/T 70.1
3	104009050018	6	Clamp
4	104021050008		Platform manifold options, duplex
4-1	202040000329	1	Platform manifold, duplex
4-2	202040003259	1	Platform manifold, duplex
5	104021050009		Lift counterbalance valve, tower boom options
5-1	202040000327	2	Lift counterbalance valve, tower boom
6	104021050007		Main lift counterbalance valve options
6-1	202040000328	1	Main lift counterbalance valve
7	216020000012	1	Clamp
8	104021050011		Telescope counterbalance valve options
8-1	202040000107	1	Telescope counterbalance valve
9	215020000036	4	Screw M8×55-10.9-DKLGB/T 70.1

No.	Part No.	Qty.	Description
10	215040000004	23	Washer 6-A2-70 GB/T 93
11	215020000014	6	Screw M6×30-A2-70 GB/T 70.1
12	215020000031	8	Screw M8×45-10.9-DKL GB/T 70.1
13	215020000015	5	Screw M6×35-A2-70 GB/T 70.1
14	216010000012	3	Clamp
15	215020000018	12	Screw M6×50-A2-70 GB/T 70.1
16	104009050007	1	Rod jacket, lift cylinder
17	216020000007	1	Clamp, non-perforated, DIN
18	215030000004	4	Nut M6-A2-70 GB/T 6170
19	215020000020	1	Screw M6×60-A2-70 GB/T 70.1
20	104020050004	10	Clamp
21	216020000009	2	Clamp
22	103005050008	1	Jacket, cylinder
23	215020000029	12	Screw M8×40-10.9-DKL GB/T 70.1

6.9 LEVELING COUNTERBALANCE VALVE(PN.202040000011)

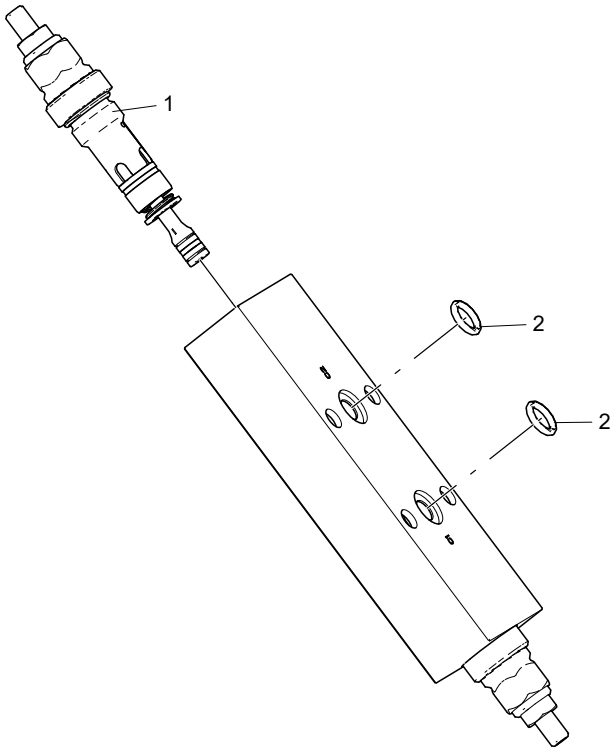

No.	Part No.	Qty.	Description
1	202990003040	2	Counterbalance valve spool
2	207040003003	2	O-ring

6.10 PLATFORM DUPLEX VALVE(PN.202040000329)

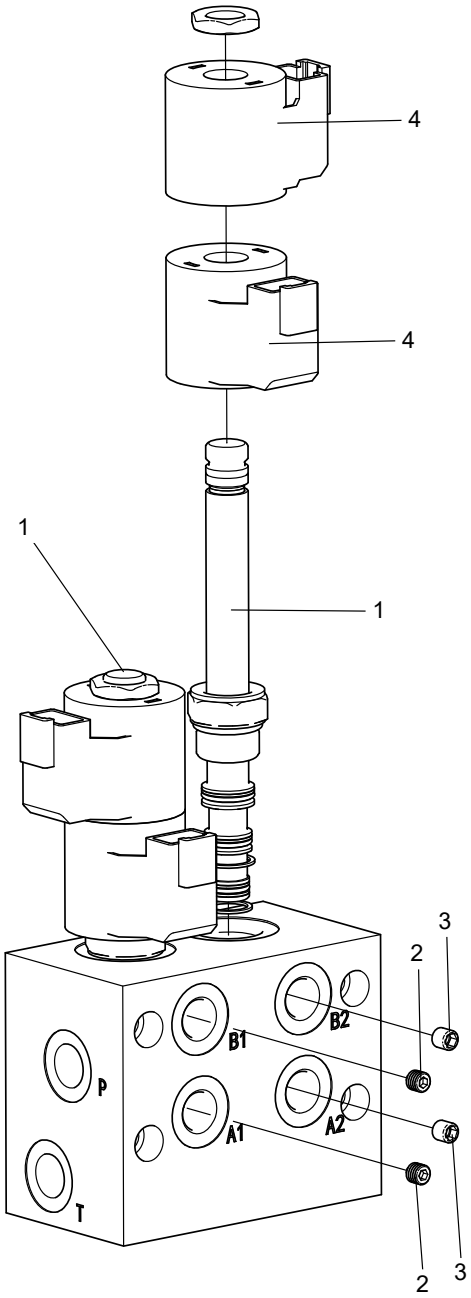

No.	Part No.	Qty.	Description
1	202040000399	2	Solenoid valve
2	202130000008	2	Damper plug
3	202130003005	2	Damper
4	202990000037	4	Coil

6.11 PLATFORM MANIFOLD, DUPLEX (PN.202040003259)

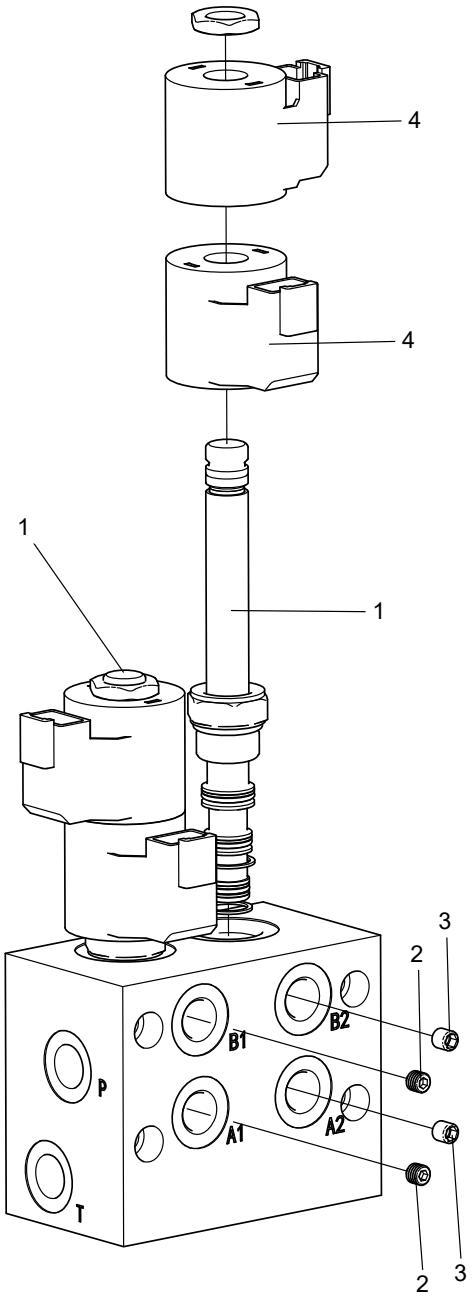

No.	Part No.	Qty.	Description
1	202040000399	2	Solenoid valve
2	202130000008	2	Damper plug
3	202130000001	2	Damper
4	202990003242	4	Coil

6.12 LIFT COUNTERBALANCE VALVE, TOWER BOOM (PN.202040000327)

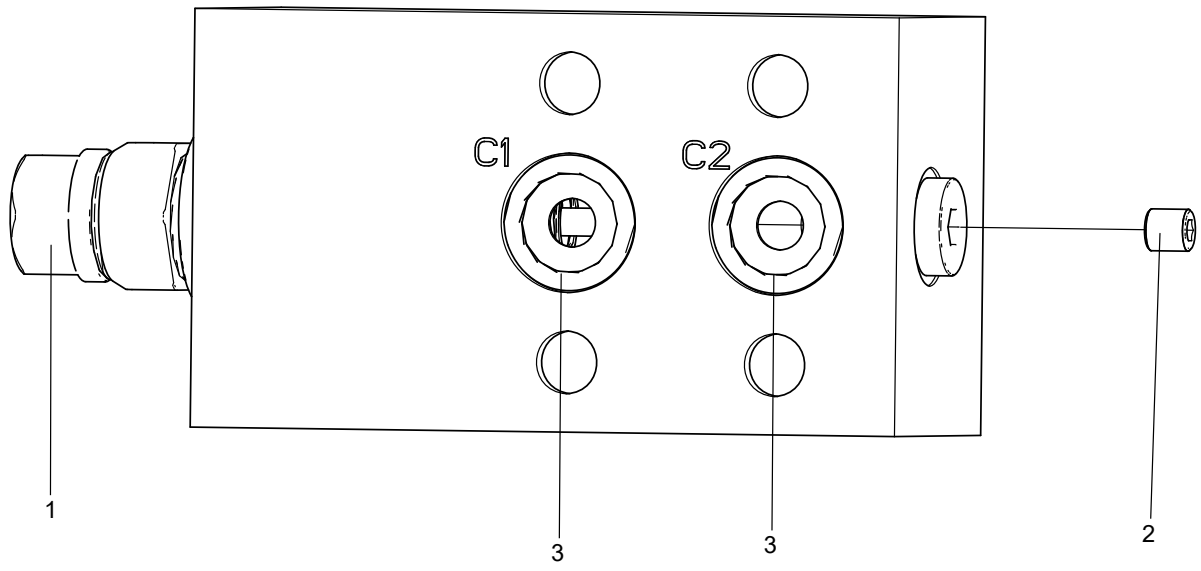

No.	Part No.	Qty.	Description
1	202990003276	1	Counterbalance valve
2	202130003028	1	Damper
3	207060003005	2	O-ring

6.13 MAIN LIFT COUNTERBALANCE VALVE(PN.202040000328)

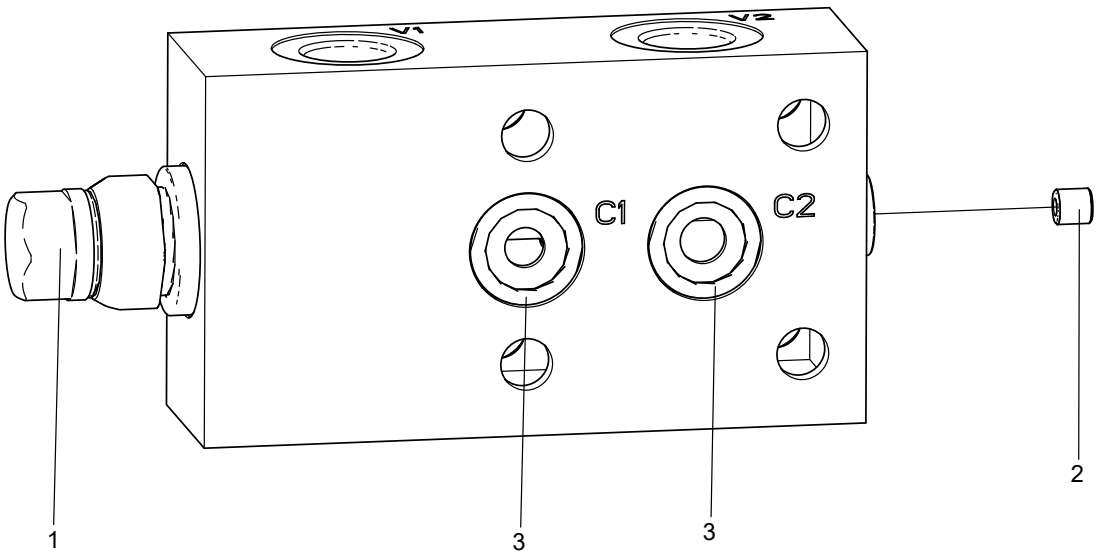

No.	Part No.	Qty.	Description
1	202990003275	1	Counterbalance valve
2	202130003028	1	Damper
3	207060003005	2	O-ring

6.14 TELESCOPE COUNTERBALANCE VALVE (PN.202040000107)

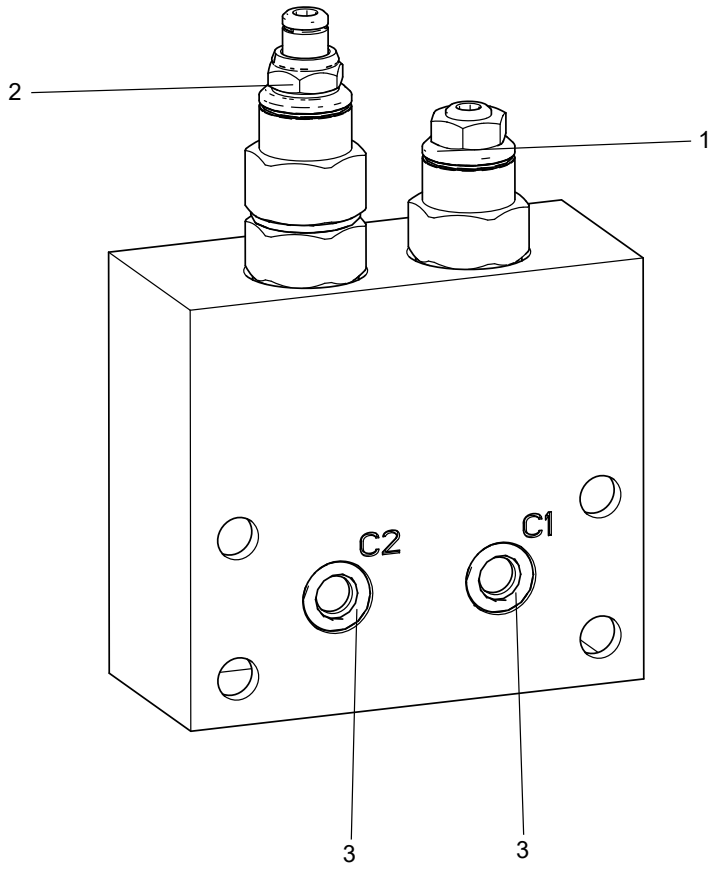

No.	Part No.	Qty.	Description
1	202990003277	1	Counterbalance valve
2	202990003278	1	Counterbalance valve
3	207040003003	2	O-ring

6.15 CHASSIS HYDRAULICCOMPONENTS INSTALLATION(4WD)

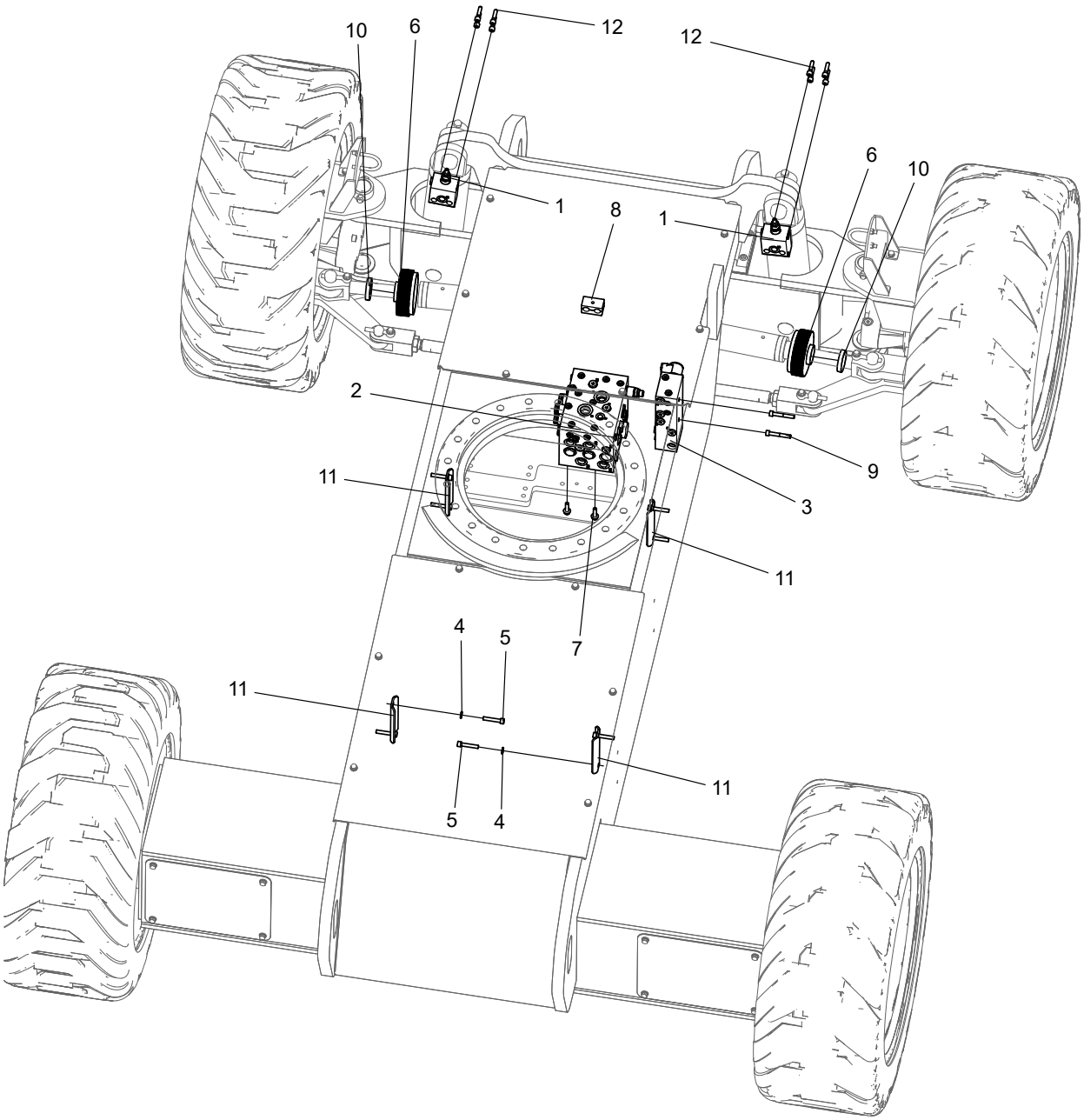

No.	Part No.	Qty.	Description
1	104021033016		Oscillate couterbalance vlave options
1-1	202040003109	2	Oscillate couterbalance vlave
2	104021053002		Drive control valve options (4WD)
2-1	202040003217	1	Drive control valve
3	104021050012		Brake/2-speed oscillate control vlave options
3-1	202040003183	1	Oscillate control valve, brake/2-speed
4	215040000034	8	Washer 8-200HV-ZnD GB/T 97.1
5	215020000030	8	Screw M8×45-8.8-ZnD GB/T 70.1
6	105017050010	2	Rod jacket, level cylinder
7	215010000236	4	Bolt M8×30-8.8-ZnD GB/T 5789
8	216010000012	1	Clamp
9	215020000035	2	Screw M8×55-8.8-ZnD GB/T 70.1
10	216020000002	4	Clamp, non-perforated, DIN
11	103003050039	4	Bracket
12	215020000027	8	Screw M8×35-10.9-DKL GB/T 70.1

6.16 TRACTION SYSTEM PIPING LAYOUT (4WD)

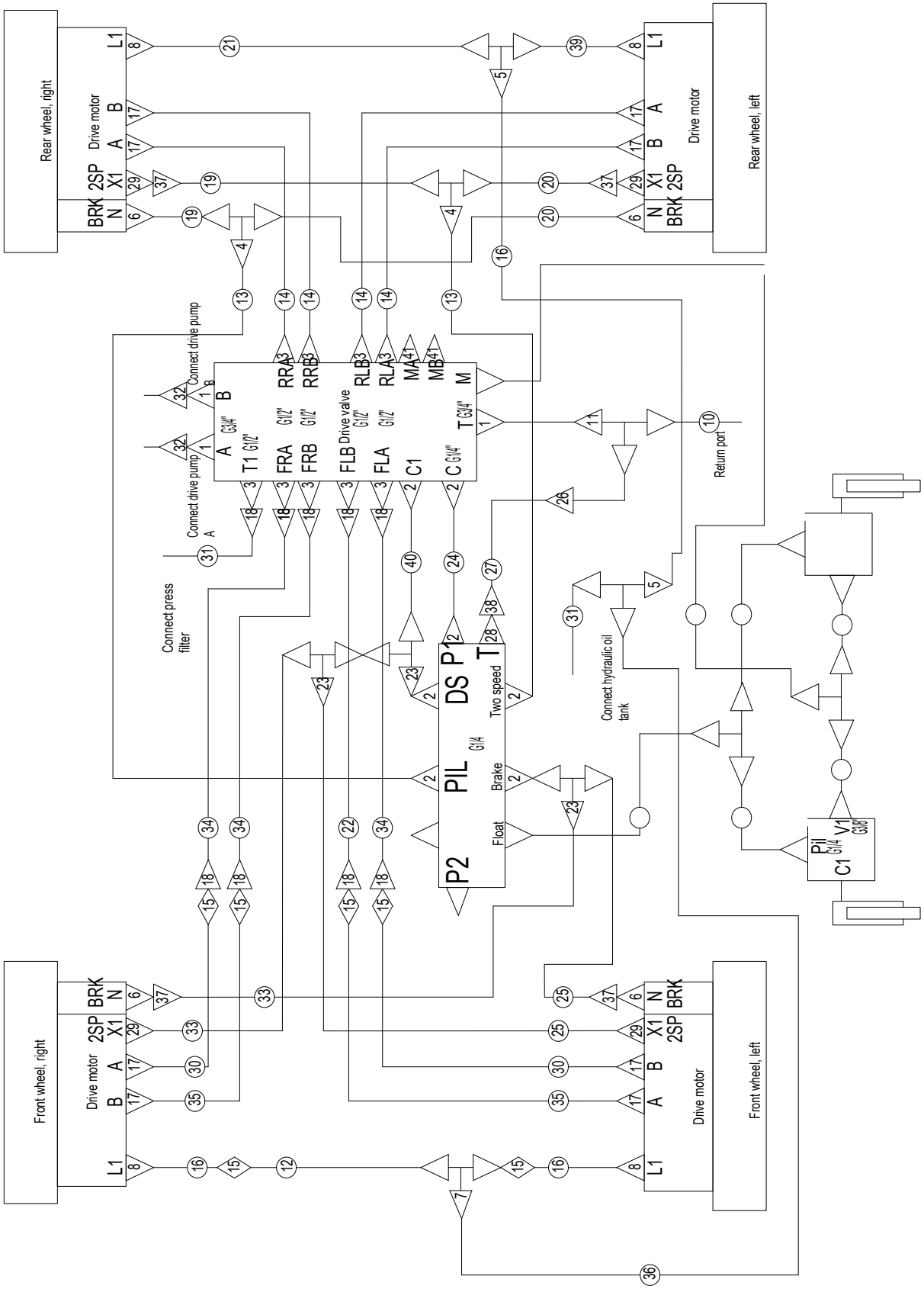

No.	Part No.	Qty.	Description
	104020050012	1	Traction system piping layout (4WD)
1	213010000045	3	Fitting
2	213010000007	7	Fitting
3	213010000039	9	Fitting
4	213010000035	2	Fitting
5	213010000119	2	Fitting
6	213010000013	4	Fitting
6	213050000236	2	Hose
7	213010000078	1	Fitting
8	213010000106	4	Fitting
9	213050000733	1	Hose
10	213010000043	1	Fitting
11	213050003000	1	Hose
12	213050000514	2	Hose
13	213050001358	4	Hose
14	213010000110	6	Fitting
15	213050001360	3	Hose
16	213010000152	8	Fitting
17	213010000008	9	Fitting
18	213050000196	2	Hose
19	213050001357	2	Hose
20	213050000982	1	Hose
21	213050001353	1	Hose
22	213010000026	3	Fitting
23	213050000350	1	Hose
24	213050000057	2	Hose
25	213010000046	1	Fitting
26	213050000369	1	Hose
27	213010000005	1	Fitting
28	213010000144	4	Fitting
30	213050000580	2	Hose
31	213010000041	2	Fitting
32	213050001361	2	Hose
33	213050001352	3	Hose
34	213050000548	2	Hose
35	213050001350	1	Hose
36	213010000024	3	Fitting

No.	Part No.	Qty.	Description
37	213010000055	1	Fitting
38	213050000718	1	Hose
39	213050000951	1	Hose
40	213010000010	2	Fitting

6.17 OSCILLATE SYSTEM LAYOUT

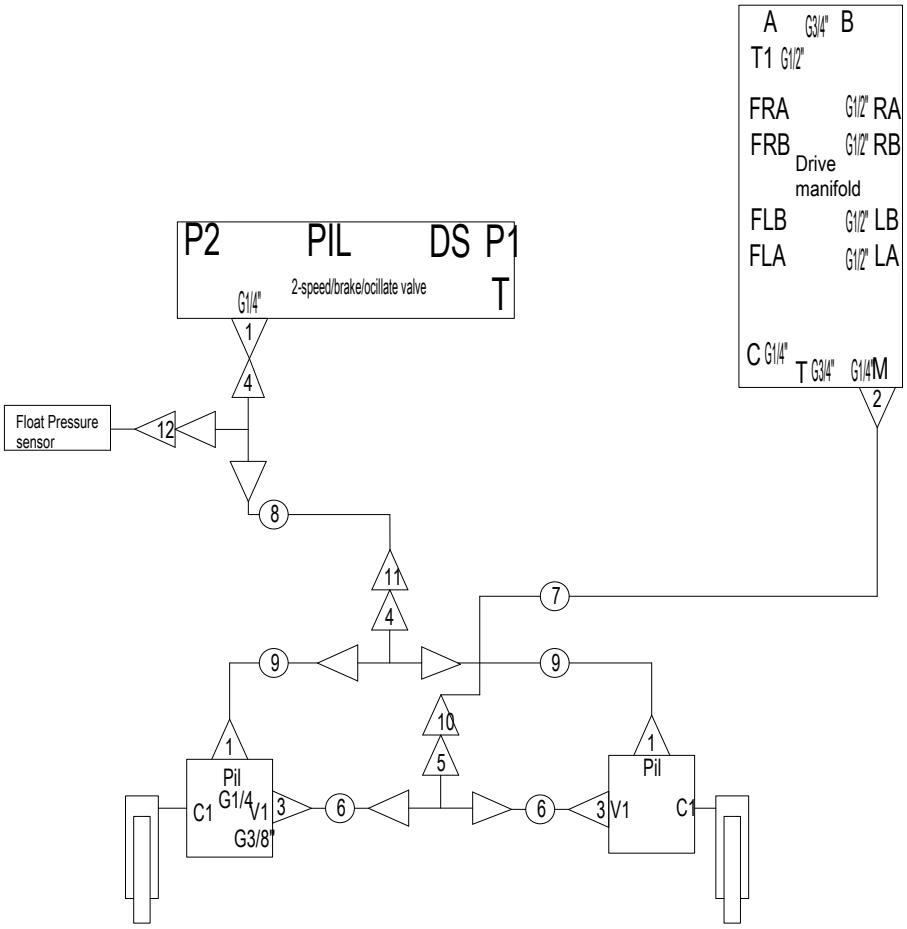

No.	Part No.	Qty.	Description
	104020050007	1	Piping diagram, oscillate system layout
1	213010000007	3	Fitting
2	213010000012	1	Fitting
3	213010000006	2	Fitting
4	213010000026	2	Fitting
5	213010000079	1	Fitting
6	213050001354	2	Hose
7	213050001411	1	Hose
8	213050001410	1	Hose
9	213050001347	2	Hose
10	213010000093	1	Fitting
11	213010000139	1	Fitting
12	213010003037	1	Fitting

6.18 BOOM TUBES LAYOUT

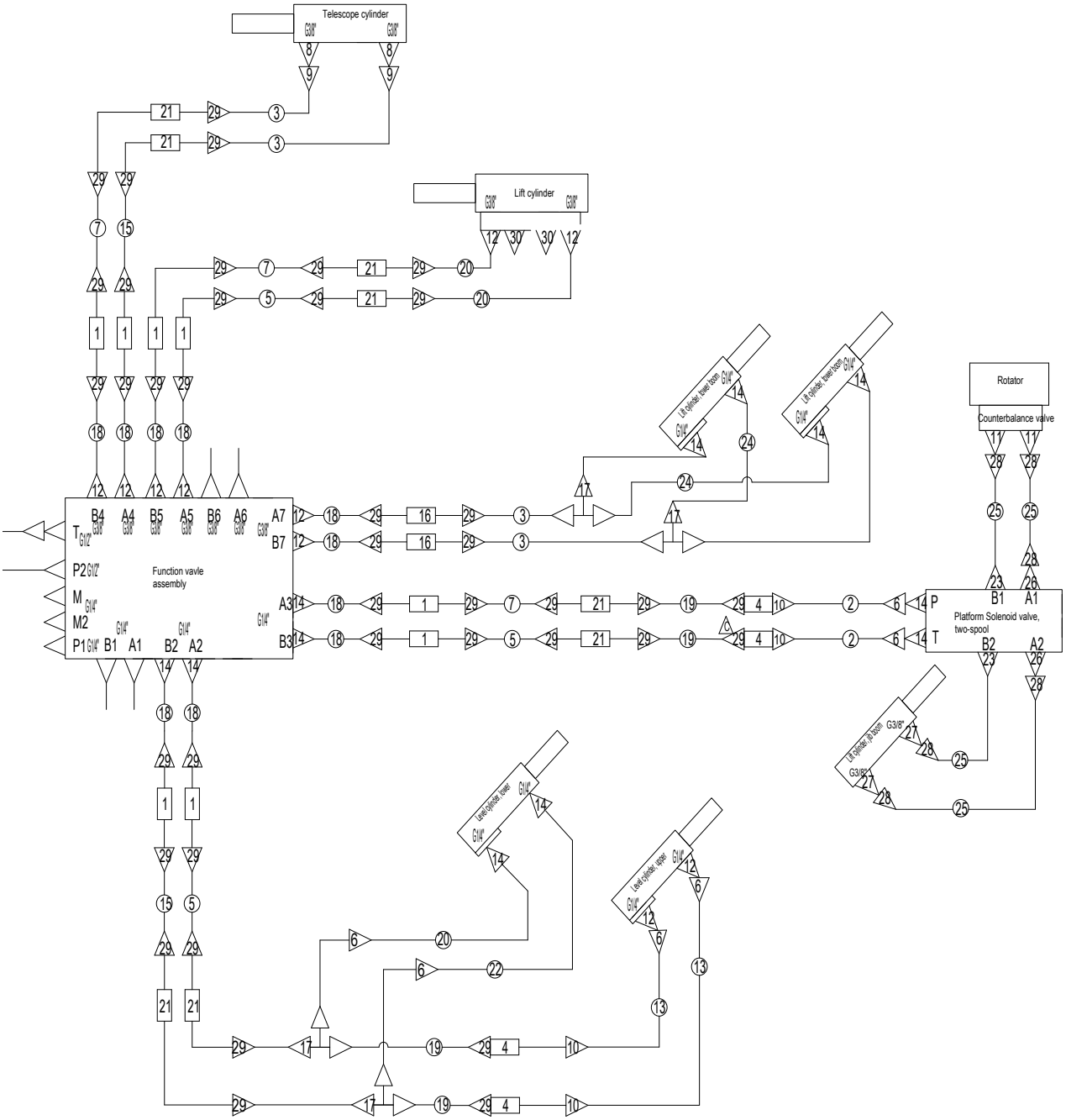

No.	Part No.	Qty.	Description
	104021050003	1	Boom piping layout
1	104009050052	8	Tube
2	213050001484	2	Hose
3	213050000372	4	Hose
4	104020050005	4	Steel tube
5	213050000371	3	Hose
6	213010000009	6	Fitting
7	213050001371	3	Hose
8	213010000136	2	Fitting
9	213010000083	2	Fitting
10	213010000063	4	Fitting
11	213010000013	2	Fitting
12	213010000006	10	Fitting
13	213050000808	2	Hose
14	213010000012	12	Fitting
15	213050001372	2	Hose
16	104009050049	2	Tube
17	213010000079	6	Fitting
18	213050000391	10	Hose
19	213050000381	4	Hose
20	213050001482	3	Hose
21	104009050051	8	Tube
22	213050000488	1	Hose
23	213010000146	2	Fitting
24	213050000981	2	Hose
25	213050008476	4	Hose
26	105030050010	2	Fitting
27	213010000047	2	Fitting
28	213010000024	6	Fitting
29	213010000126	40	Fitting
30	213060000001	2	Plug

6.19 TURNTABLE PIPING LAYOUT

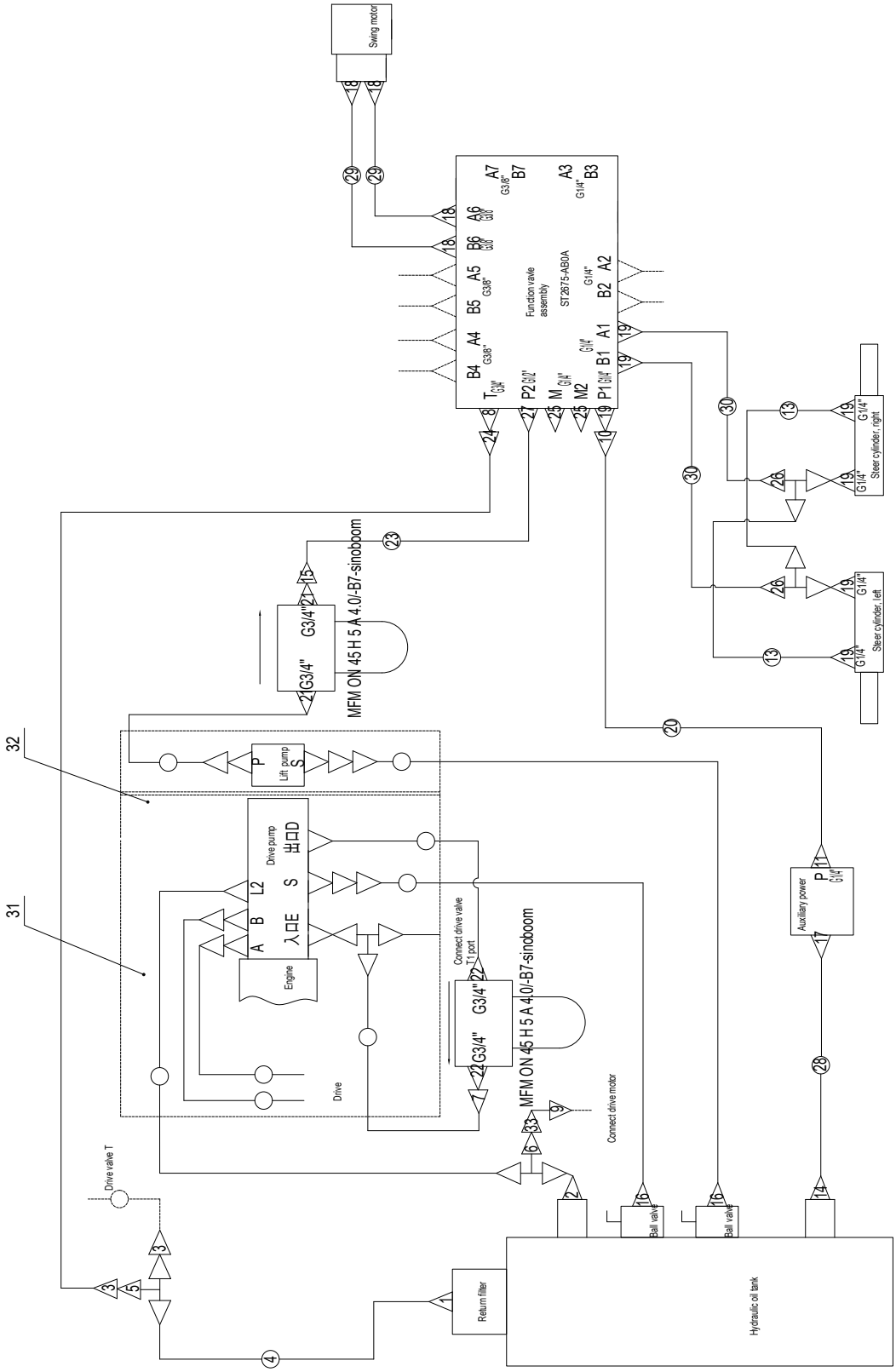

No.	Part No.	Qty.	Description
	104020050008	1	Turntable piping layout
1	213010000128	1	Fitting
2	213010000037	1	Fitting
3	213010000034	2	Fitting
4	213050000775	1	Hose
5	213010000130	1	Fitting
6	213010000223	1	Fitting
7	213010000008	1	Fitting
8	213010000045	1	Fitting
9	213010000098	1	Fitting
10	213010000009	1	Fitting
11	213010000125	1	Fitting
13	213050001348	2	Hose
14	213010000108	1	Fitting
15	213010000067	1	Fitting
16	105001050027	2	Fitting, non-standard
17	213010000039	1	Fitting
18	213010000047	4	Fitting
19	213010000012	7	Fitting
20	213050001483	1	Hose
21	213010000082	2	Fitting
22	213010000014	2	Fitting
23	213050000707	1	Hose
24	213010000134	1	Fitting
25	213010000010	2	Fitting
26	213010000079	2	Fitting
27	213010000092	1	Fitting
28	213050001457	1	Hose
29	213050000978	2	Hose
30	213050000373	2	Hose
31-1	104020050011	1	Variable displacment pump piping layout
31-2	104021053039	1	Piping diagram, drive pump
31-3	104021053040	1	Piping diagram, drive pump
31	104020050013		Piping diagram options, closed-circuit pump
32-1	104009050029	1	Gear pump layout
32-2	104020050009	1	Gear pump layout

No.	Part No.	Qty.	Description
32	104020050015		Gear pump layout options
33	213010000041	1	Fitting

6.20 VARIABLE DISPLACMENT PUMP PIPING LAYOUT

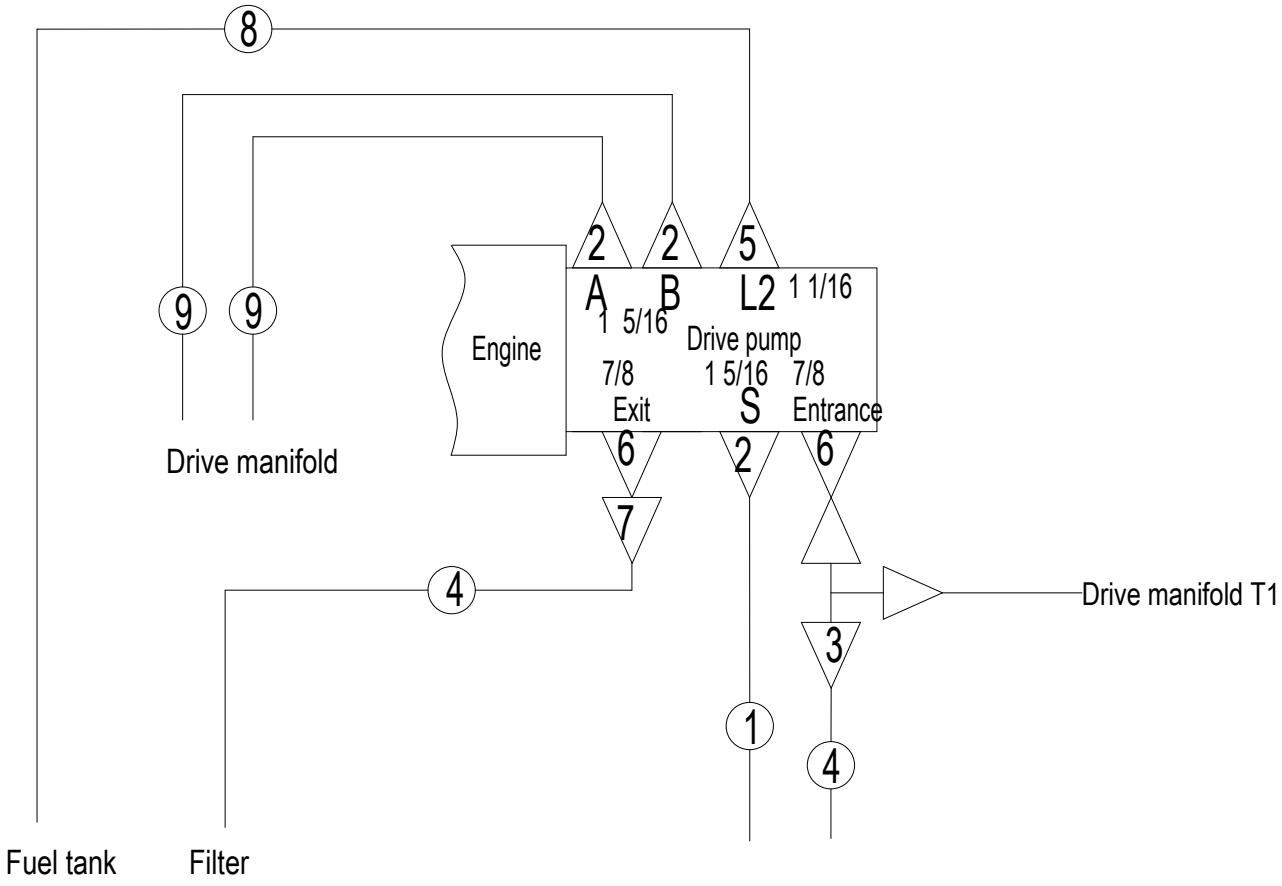

No.	Part No.	Qty.	Description
1	213050000696	1	Hose
2	213010000019	3	Fitting
3	213010000241	1	Fitting
4	213050000475	2	Hose
5	213010000029	1	Fitting
6	213010000162	2	Fitting
7	213010000008	1	Fitting
8	213050001359	1	Hose
9	213050001370	2	Hose

6.21 DRIVE PUMP LAYOUT

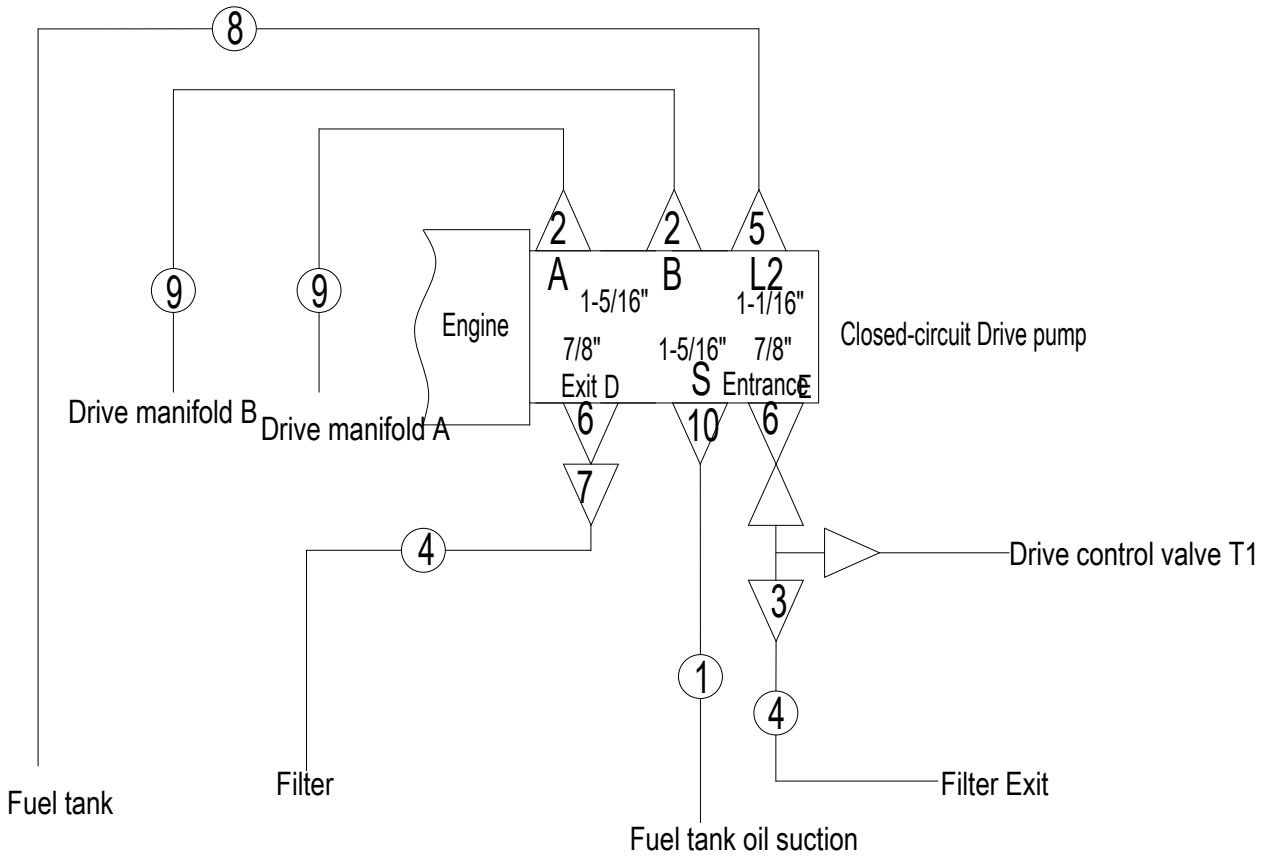

No.	Part No.	Qty.	Description
1	213050000696	1	Hose
2	213010000019	2	Fitting
3	213010000241	1	Fitting
4	213050000475	2	Hose
5	213010000029	1	Fitting
6	213010000162	2	Fitting
7	213010000008	1	Fitting
8	213050001359	1	Hose
9	213050001370	2	Hose
10	213010003017	1	Fitting

6.22 DRIVE PUMP LAYOUT

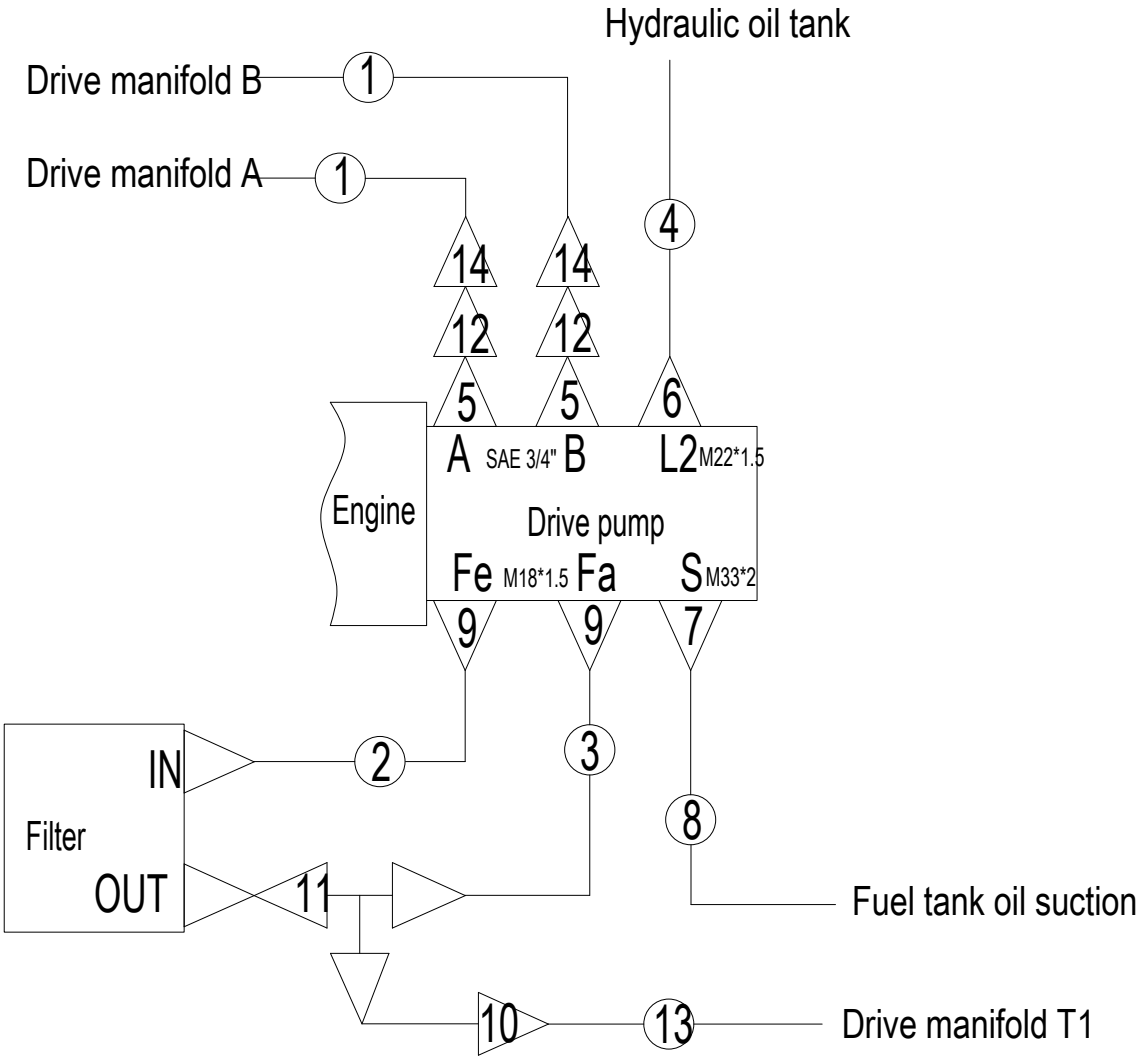

No.	Part No.	Qty.	Description
1	213050001802	2	Hose
3	213050001804	1	Hose
3	213050001803	1	Hose
4	213050000149	1	Hose
5	213030000018	2	Flange
6	213010000168	1	Fitting
7	213010000103	1	Fitting
8	213050000696	1	Hose
9	213010000108	2	Fitting
10	213010000008	3	Fitting
11	213010000078	1	Fitting
12	215020000052	8	Screw M10×35-10.9-DKL GB/T 70.1

No.	Part No.	Qty.	Description
13	213050001805	1	Hose
14	213010000022	2	Fitting

6.23 GEAR PUMP LAYOUT

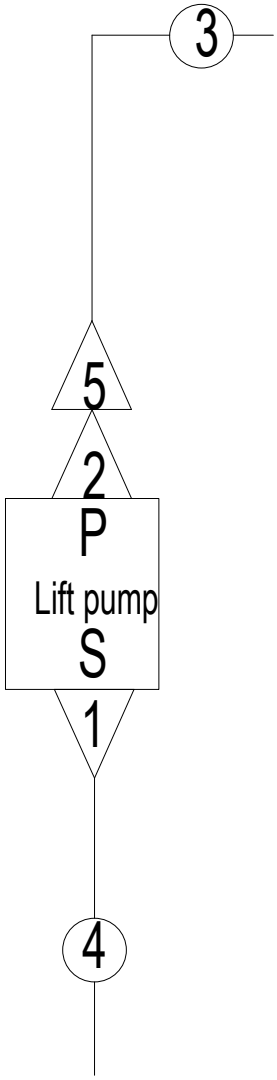

No.	Part No.	Qty.	Description
1	213010000029	1	Fitting
2	213010000019	1	Fitting
3	213050000320	1	Hose
4	213050000056	1	Hose
5	213010000104	1	Fitting

6.24 GEAR PUMP LAYOUT

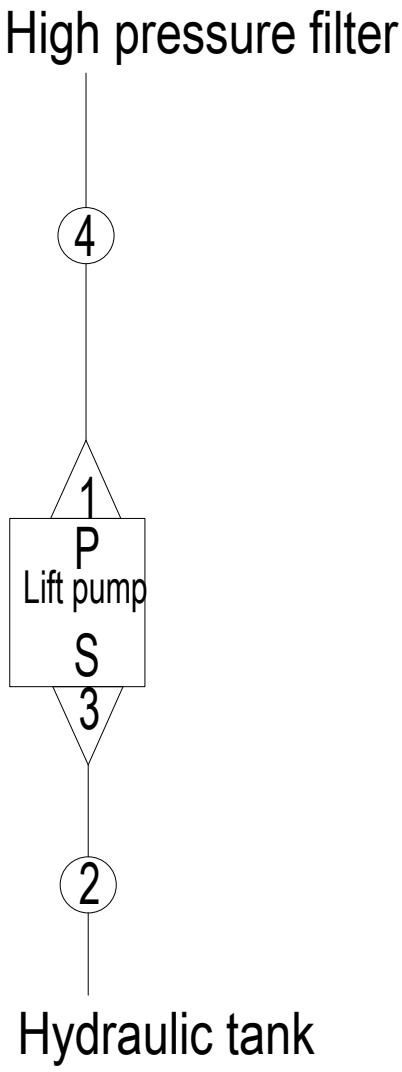

No.	Part No.	Qty.	Description
1	213030000001	1	Flange
2	213050001368	1	Hose
3	213030000009	1	Flange
4	213050001349	1	Hose

6.25 HYDRAULIC SCHEMATIC DIAGRAM

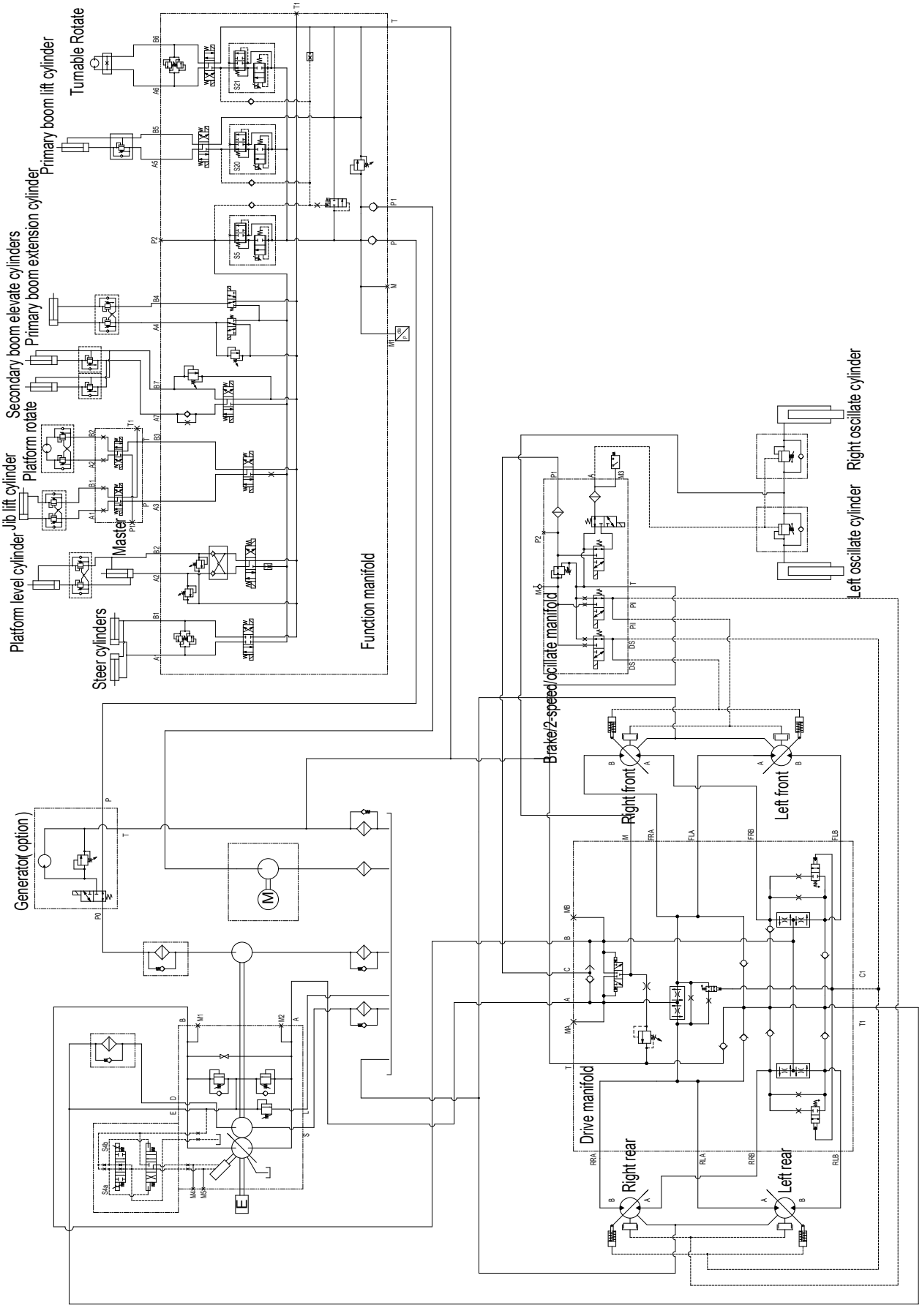

7 ELECTRICAL SYSTEM

7.1 ELECTRICAL SYSTEM（RISING）

7.1.1 CHASSIS ELECTRICAL COMPONENTS INSTALLATION

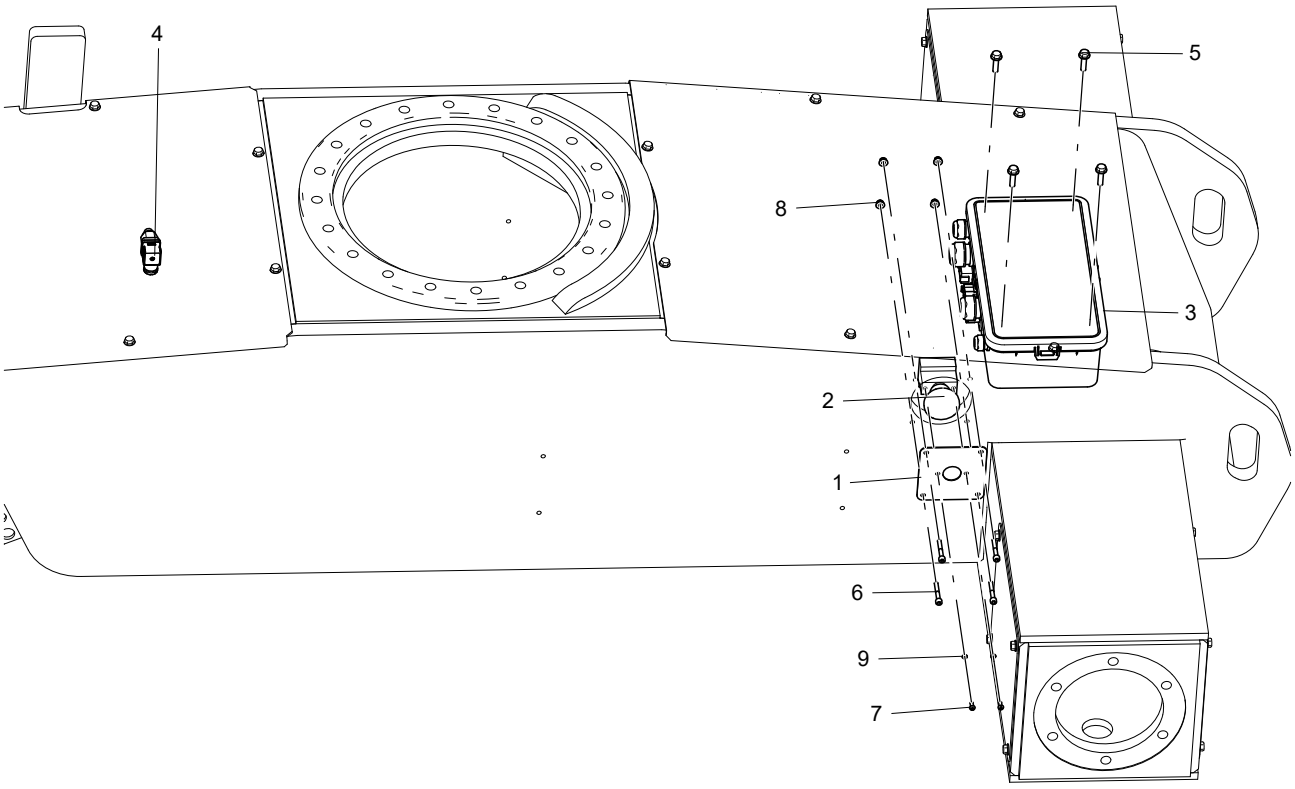

No.	Part No.	Qty.	Description
1	104009060001	1	Mounting plate, power-off switch
2	203060000024	1	Power-off switch
3	203100003010	1	Power switch box
4	203150003016	1	Pressure switch
5	215010000236	4	Bolt M8×30-8.8-ZnD GB/T 5789
6	215020000017	4	Screw M6×45-A2-70 GB/T 70.1
7	215020000110	2	Screw M5×12-A2-70 GB/T 818
8	215030000107	4	Nut M6-8-ZnD GB/T 6183
9	215040000003	2	Washer 5-A2-70 GB/T 93

7.1.2 BATTERIES INSTALLATION

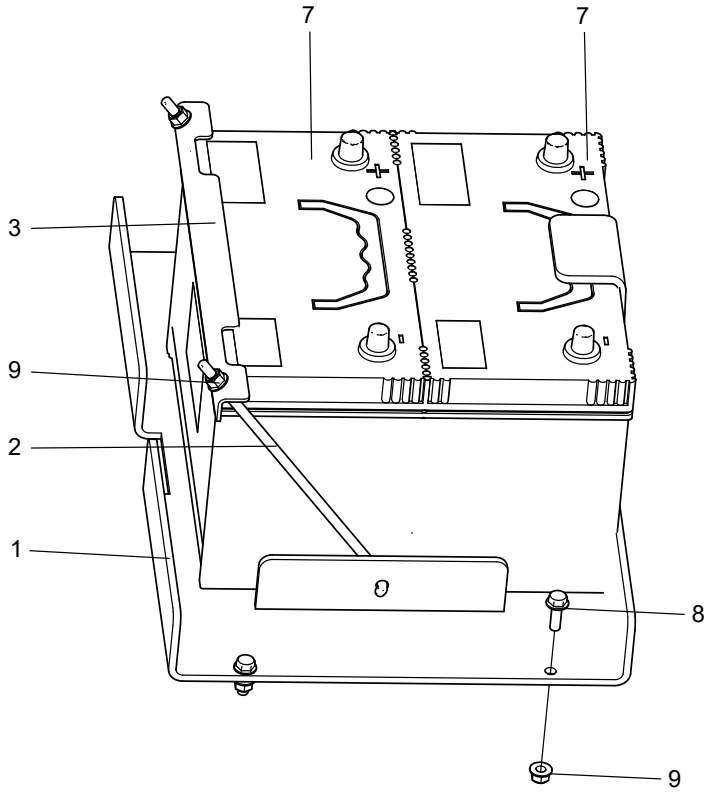

No.	Part No.	Qty.	Description
1	104009060024	1	Bracket,battery
2	105001020169	2	Tie rod
3	105001020176	1	Pressbar 2
4	203080000250	2	Battery terminal (Not Shown)
5	203100000051	2	Jacket, flexible(Not Shown)
6	203100000053	2	Jacket, flexible(Not Shown)
7	203100000061	2	Battery, maintenance-free
8	215010000235	4	Bolt M8×25-8.8-ZnD GB/T 5789
9	215030000108	6	Nut M8-8-ZnD GB/T 6183

7.1.3 ELECTRICAL INSTALLATION-DEUTZ ENGINE

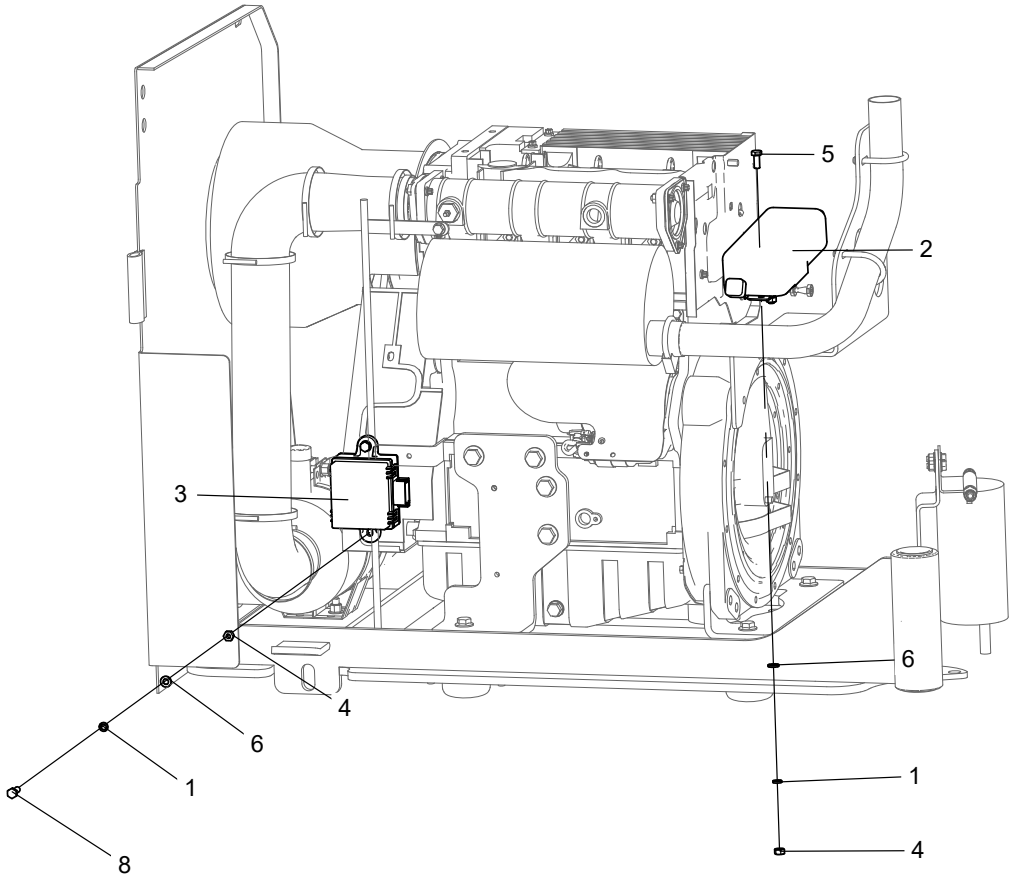

No.	Part No.	Qty.	Description
1	215040000005	4	Washer 8-ZnD GB/T 93
2	203020000004	1	Start/stop controller
3	203040003003	1	Relay box
5	215010000057	2	Bolt M8×20-8.8-ZnD GB/T 5783
6	215040000034	4	Washer 8-200HV-ZnD GB/T 97.1
7	216020000019	1	Clip, steel cable(Not Shown)
8	215010000058	2	Bolt M8×25-8.8-ZnD GB/T 5783
4	215030000005	4	Nut M8-8-ZnD GB/T 6170

7.1.4 DEUTZ ENGINE HARNESS (PN.104021063000)

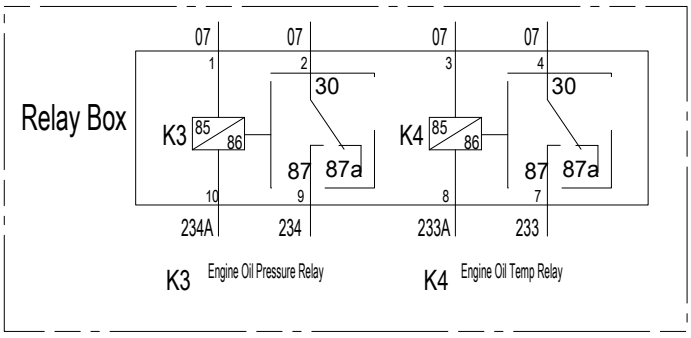

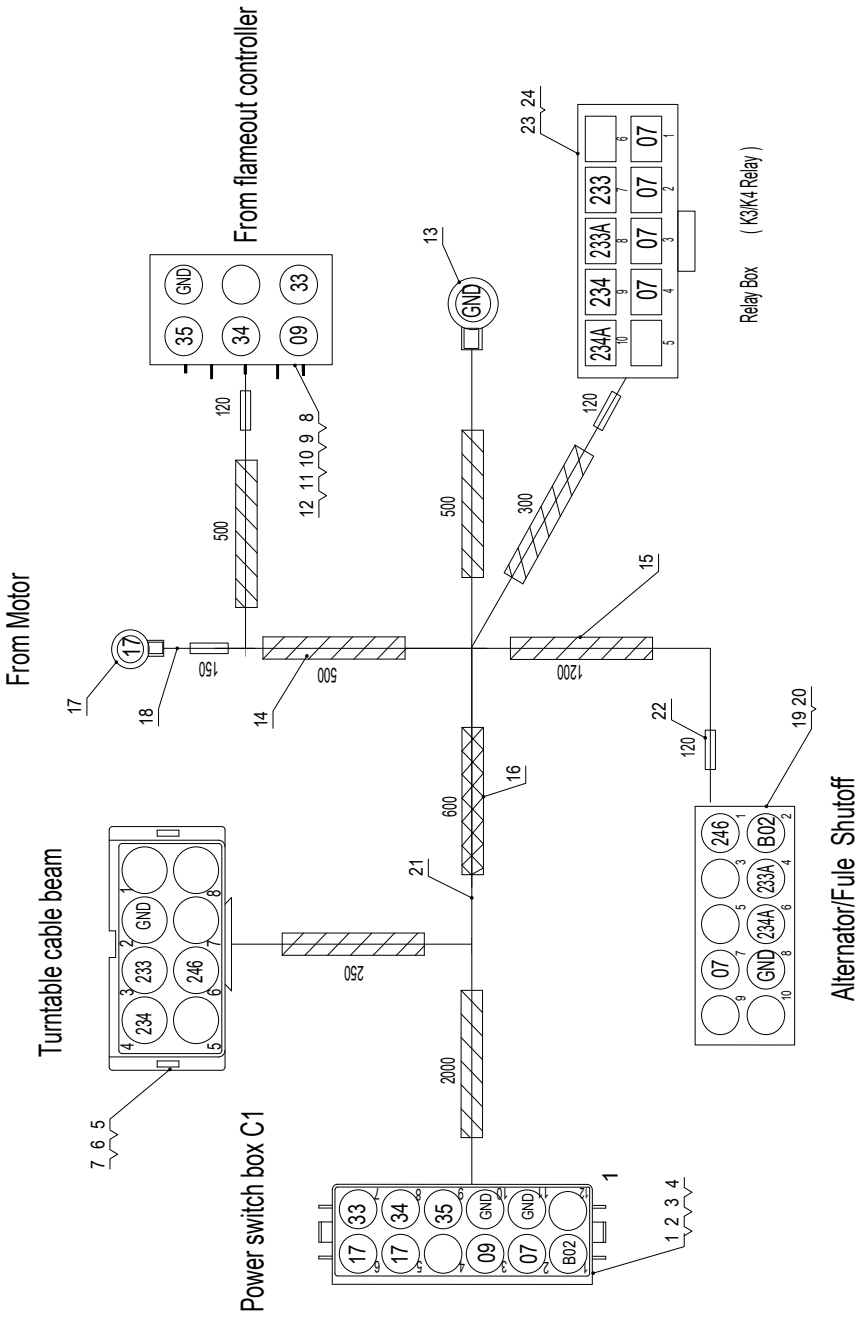

No.	Part No.	Qty.	Description
	104021063000	1	Deutz Engine Harness
1	203080000414	1	Sheath
2	203080000159	1	Lock
3	203080000041	13	Terminal, female
4	203080000068	6	Blind plug
5	203080000413	1	Sheath
6	203080000126	1	Lock
7	203080000033	6	Terminal, male
8	203080000210	1	Sheath
9	203080000215	1	Lock
10	203080000213	5	Terminal
11	203080000214	1	Seal ring
12	203080000211	1	Plug
13	203080000124	1	Terminal, blade-hole type
14	203080000424	1	Nylon hose, closed-end
15	203080000422	3	Nylon hose, closed-end
16	203080000037	1	Corrugated pipe
17	203080000039	1	Terminal, blade-hole type
18	203080000375	20	Cable
19	203080003004	1	Plug
20	203080000428	6	Pin, female
21	203080000370	3	Cable
22	203080000030	1	Heat shrink tube
23	203080003008	1	Sheath
24	203080003009	8	Terminal

7.1.5 BOOM ELECTRICAL COMPONENTS INSTALLATION

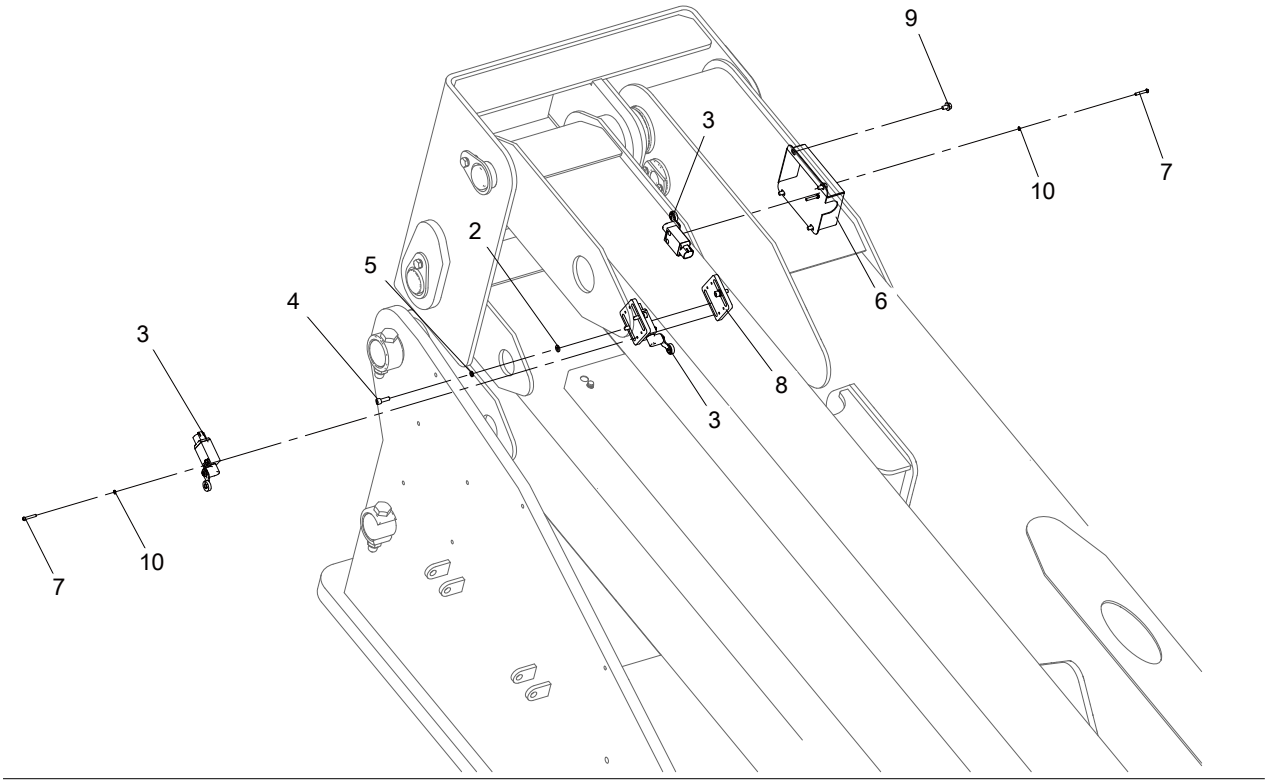

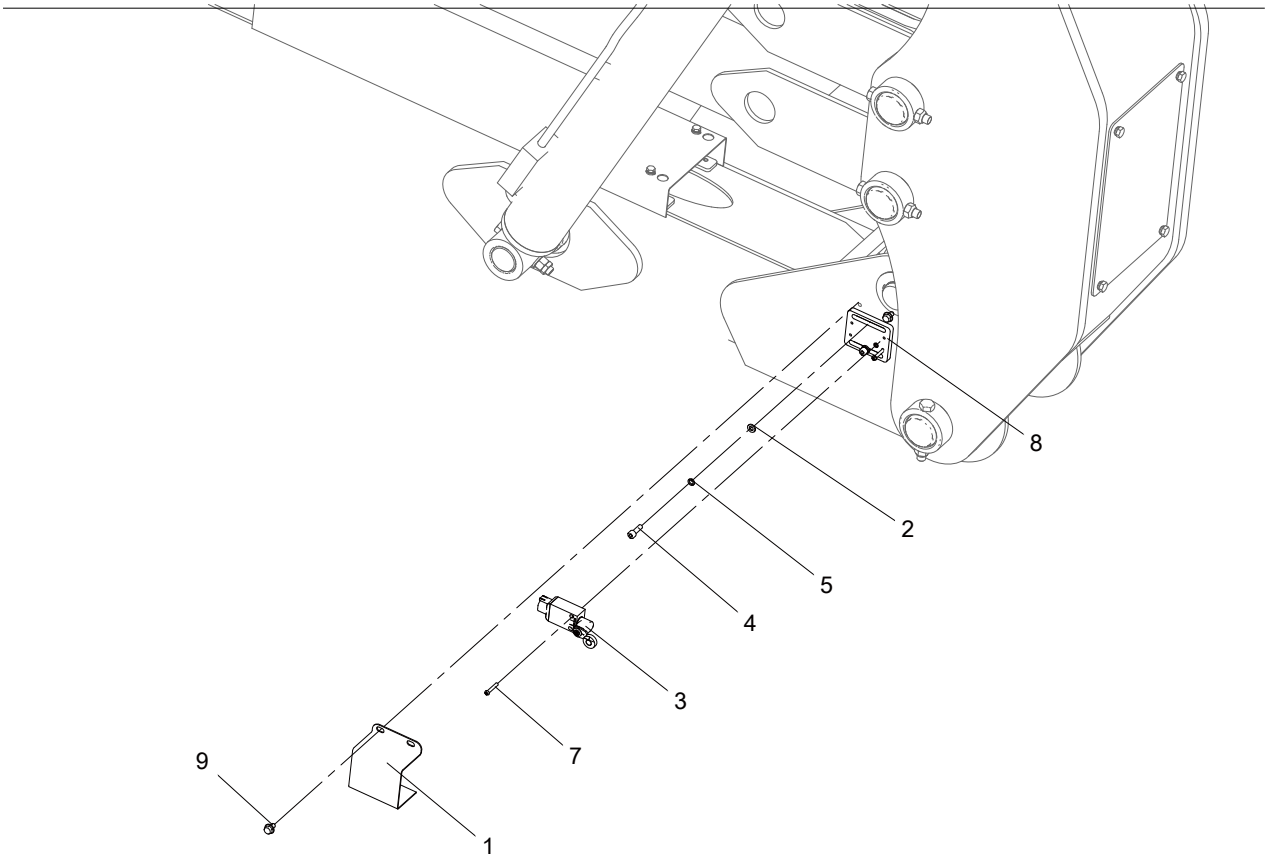

No.	Part No.	Qty.	Description
1	104009060078	1	Cover, travel switch
2	215040000033	6	Washer 6-A2 GB/T 97.1
3	203060000146	4	Travel switch
4	215020000012	6	Screw M6×20-A2-70 GB/T 70.1
5	215040000004	6	Washer 6-A2-70 GB/T 93
6	104011060052	1	Cover, travel switch
7	215020000108	8	Screw M4×25-A2-70 GB/T 818
8	104009060027	3	Mounting plate, travel switch
9	215010000229	6	Bolt M6×10-8.8-ZnD GB/T 5789
10	215040000002	8	Washer 4-A2-70 GB/T 93

7.1.6 CABLE TRACK DIAGRAM(PN.104021063058)

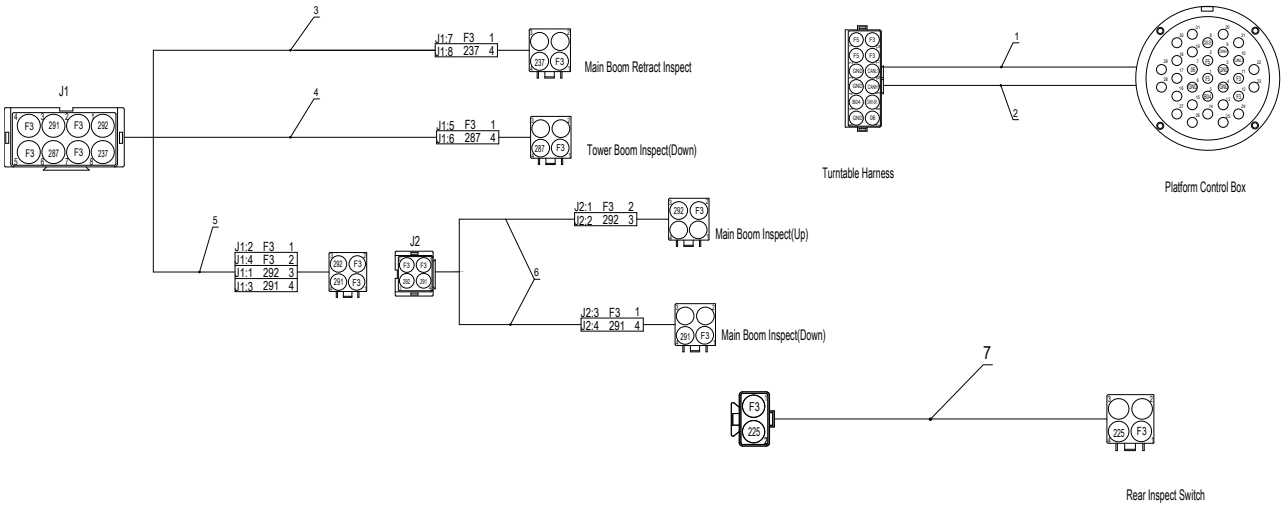

No.	Part No.	Qty.	Description
	104021063058	1	Cable track diagram
1	203230000652	1	Cable, chain
2	203230000653	1	Cable, CAN bus, cable track
3	203230000643	1	Cable, chain
4	203230000638	1	Cable, chain
5	203230000642	1	Cable, chain
6	203230000634	2	Cable, cable track
7	203230000837	1	Cable, chain

7.1.7 PLATFORM HARNESS(PN.103006063009)

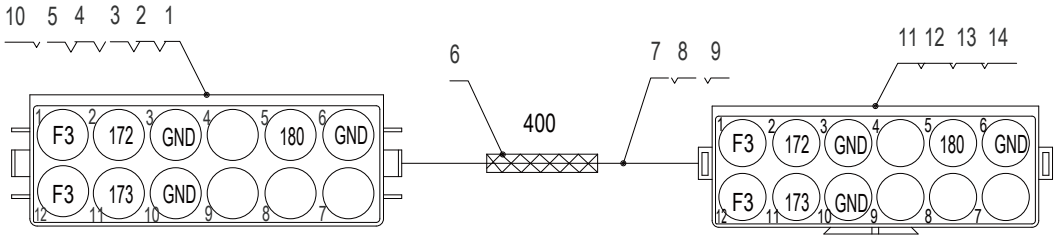

No.	Part No.	Qty.	Description
	103006063009	1	Wiring harness, platform
1	203080000155	1	Sheath
2	203080000159	1	Lock
3	203080000041	8	Terminal, female
4	203080000068	8	Blind plug
5	203080003001	1	End clip
6	203080000037	1m	Corrugated pipe
7	203080000562	2	Cable, thin wall (red)
8	203080000563	2	Cable, thin wall (black)
9	203080000564	1	Cable, thin wall (white)
10	203080003010	1	Nut, big-size
11	203080000403	1	Sheath
12	203080000157	1	Lock
13	203080000033	8	Terminal, male
14	203080000459	1	End clip

7.1.8 PLATFORM HARNESS(PN.104020060028)

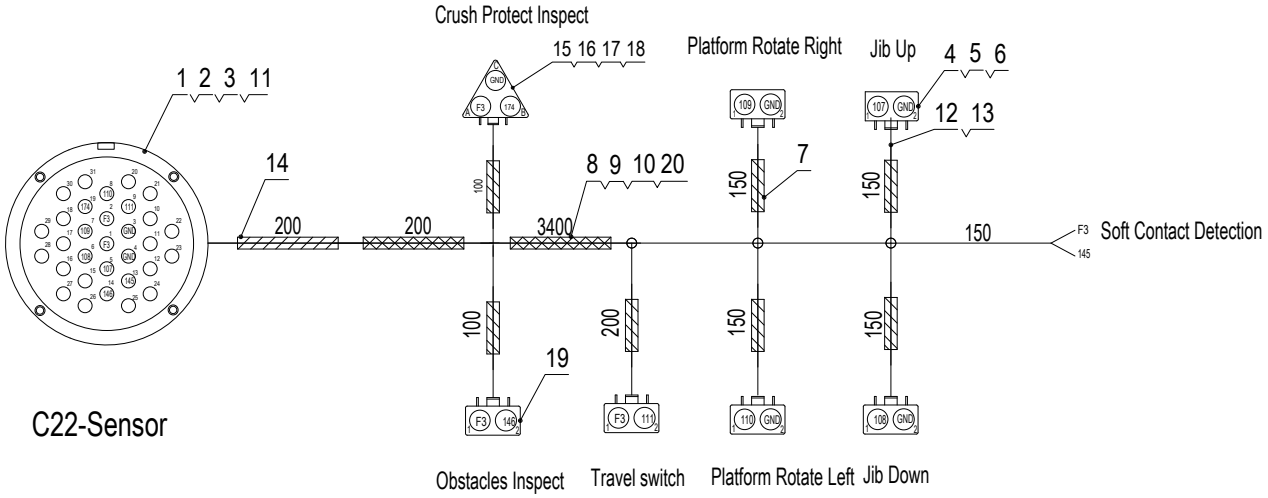

No.	Part No.	Qty.	Description
	104020060028	1	Wiring harness, platform
1	203080000515	1	Connector, 31P, male
2	203080000068	19	Blind plug
3	203080000033	12	Terminal, male
4	203080000410	6	Sheath
5	203080000016	6	Lock
6	203080000041	15	Terminal, female
7	203080000463	1	Nylon hose, closed-end
8	203080000564	30	Cable, thin wall (white)
9	203080000563	16	Cable, thin wall (black)
10	203080000562	16	Cable, thin wall (red)
11	203060000096	1	End clip, 180 deg.
12	203080000437	6	End attachments, 2-pin, female
13	203080000448	6	Rubber, 2-pin
14	203080000419	1	Nylon hose, closed-end

No.	Part No.	Qty.	Description
15	203080000404	1	Sheath
16	203080000032	1	Lock
17	203080000508	1	End clip
18	203080000473	1	Cover, waterproof
19	203080000474	1	Cover, waterproof
20	203080000037	1	Corrugated pipe

7.1.9 PLATFORM SENSORS HARNESS(PN.104020060004)

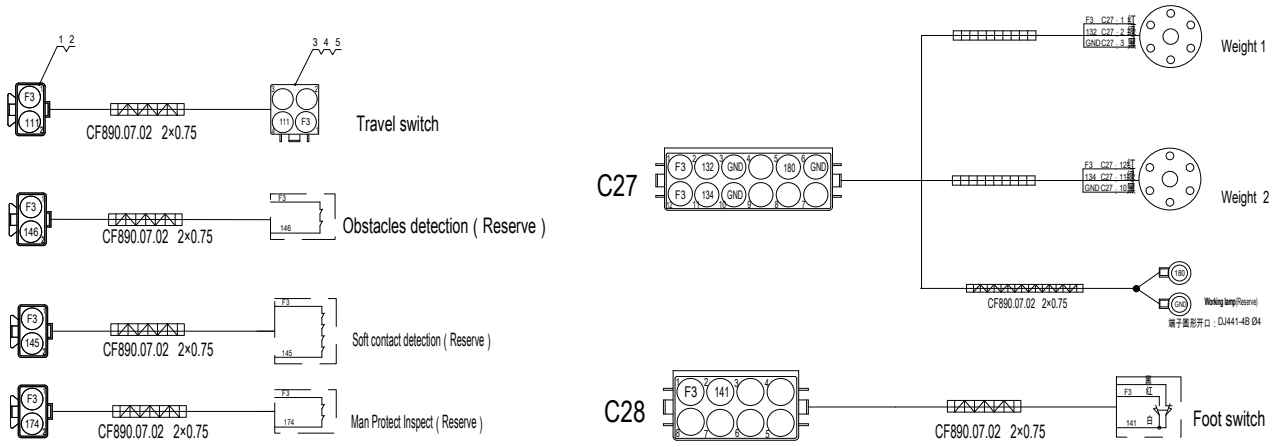

No.	Part No.	Qty.	Description
	104020060004	1	Wiring harness, platform sensor
1	203080000408	1	Sheath
2	203080000021	1	Lock
3	203080000044	1	Sheath
4	203080000020	1	Lock
5	203080000068	2	Blind plug

7.1.10 PLATFORM ELECTRICAL COMPONENTS INSTALLATION

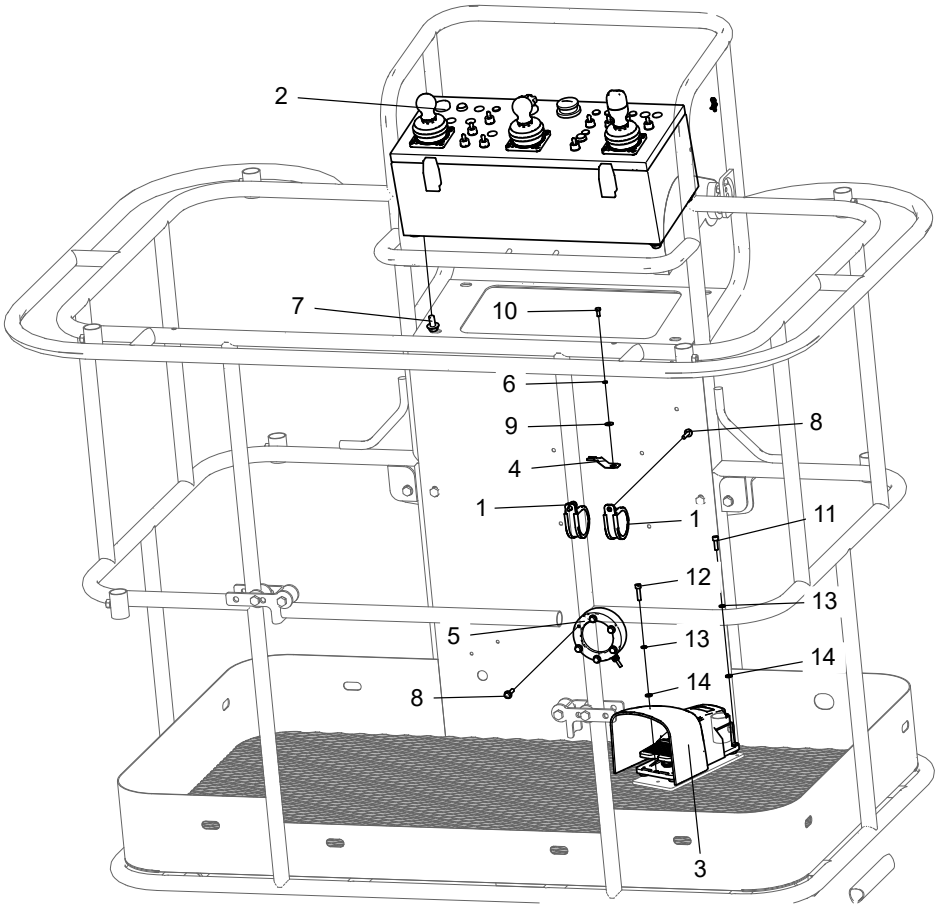

No.	Part No.	Qty.	Description
1	216020000025	2	Retaning ring, SSG
2	104020060015	1	Platform controller assembly
3	203060000009	1	Footswitch
4	203080000525	1	Fixture
5	203150000069	1	Load sensor
6	215040000003	1	Washer 5-A2-70 GB/T 93
7	215010000237	4	Bolt M10×20-8.8-ZnD GB/T 5789
8	215010000232	8	Bolt M6×25-8.8-ZnD GB/T 5789
9	215040000132	1	Washer 5-200HV-A2 GT/B 96.1
10	215010000041	1	Bolt M5×12-A2-70 GB/T 5783
11	215020000012	2	Screw M6×20-A2-70 GB/T 70.1
12	215020000013	1	Screw M6×25-A2-70 GB/T 70.1
13	215040000004	3	Washer 6-A2-70 GB/T 93
14	215040000033	3	Washer 6-A2 GB/T 97.1

7.1.11 PLATFORM CONTROL BOX ASSEMBLY(PN.104020060015)

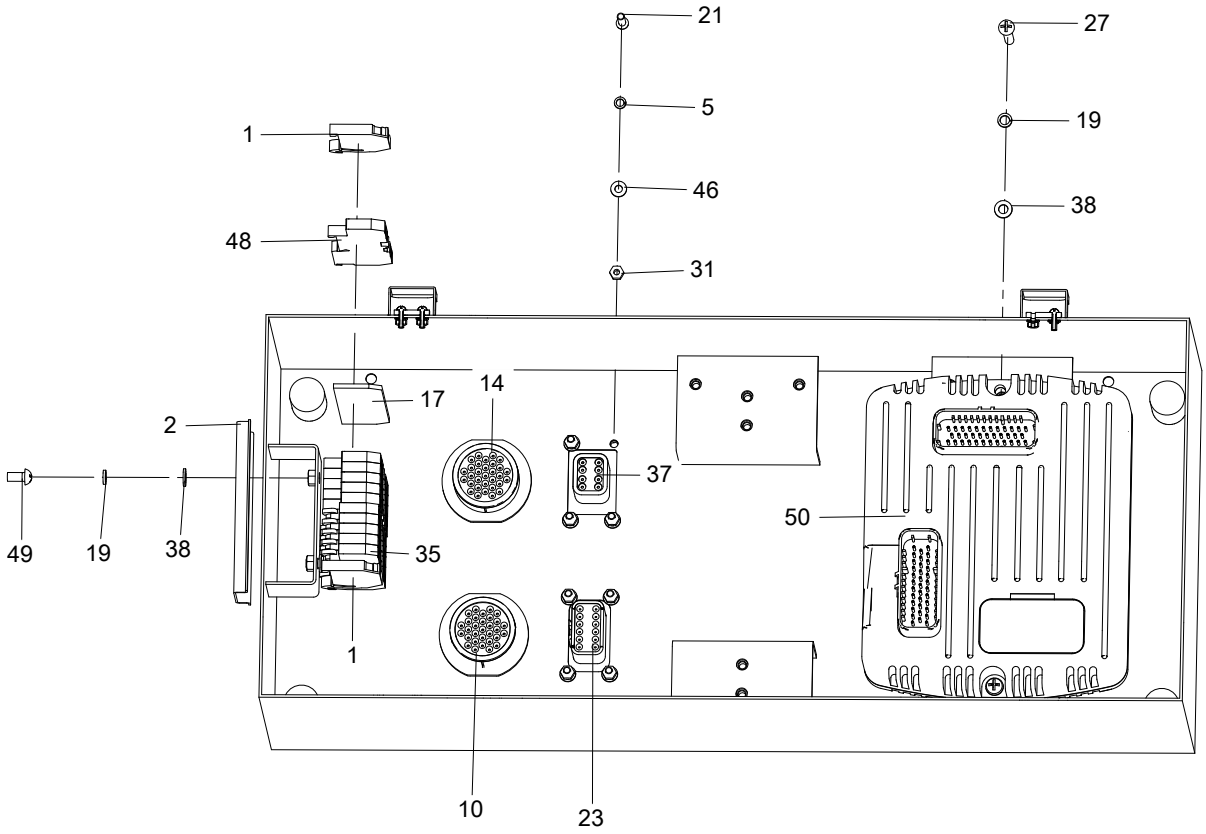

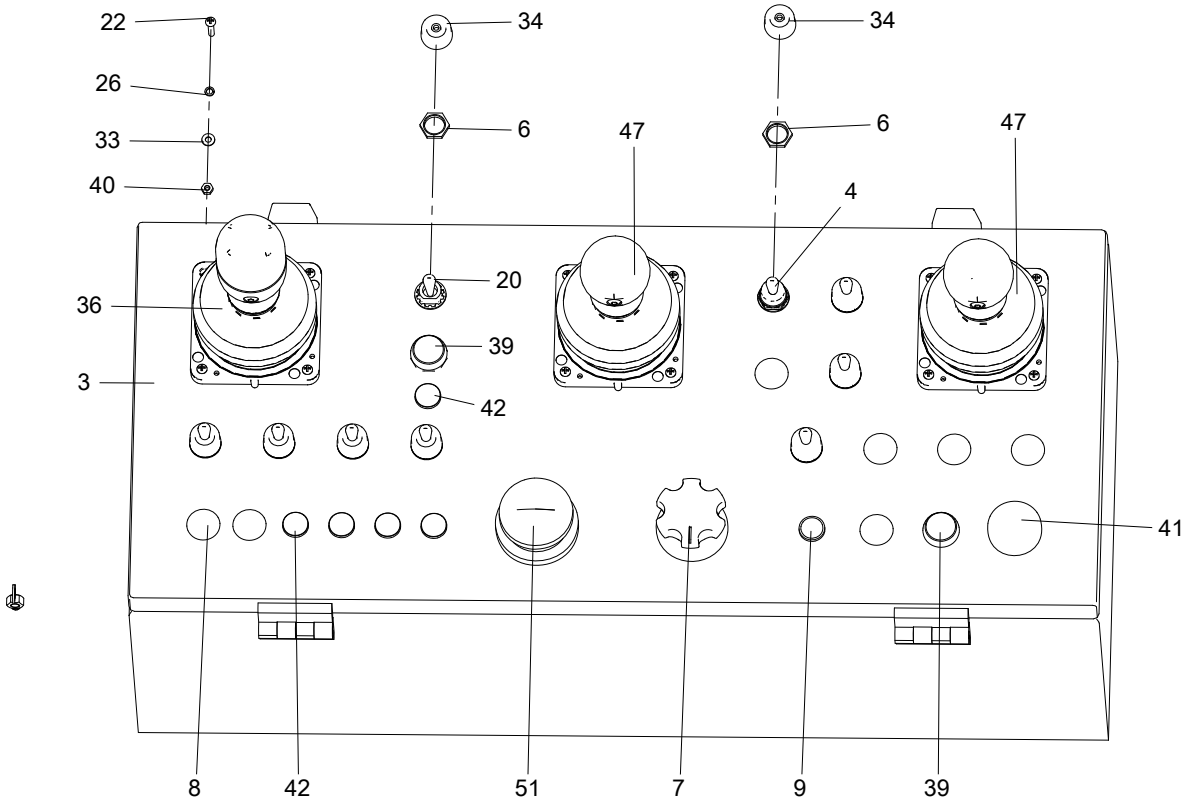

No.	Part No.	Qty.	Description
1	203080003053	2	Terminal block end plate
2	203990000001	1	Guiderail
3	104019060031	1	Platform controller
4	203060000003	4	Switch, toggle
5	215040000002	8	Washer 4-A2-70 GB/T 93
6	203080000109	9	Nut
7	203150000021	1	Potentiometer
8	105045060004	7	Plug, controller
9	203050000008	1	Indicator light
10	203080000516	1	Connector, 31P, female
11	203080000099	11	Terminal
12	203080000041	12	Terminal, female
13	203060000098	2	Spring plate, metal
14	203080000523	1	Connector, 31P, male
15	203060000014	3	Connector, handle
16	203080003055	1	Tag, terminal
17	203080003052	1	End plate
18	203080000157	1	Lock
19	215040000003	4	Washer 5-A2-70 GB/T 93
20	203060000021	5	Switch, toggle
21	215020000106	8	Screw M4×16-A2-70 GB/T 818
22	215020000102	12	Screw M3×16-A2-70 GB/T 818
23	203060000090	1	Connector, 12p, with flange
24	203080000033	21	Terminal, male
25	203080000068	49	Blind plug
26	215040000001	12	Washer 3-A2-70 GB/T 93
27	215020000114	2	Screw M5×30-A2-70 GB/T 818
28	104019060004	1	Platform Control Box Assembly
29	203060000101	2	Nut, retaining
30	203080003056	1	Tag, terminal
31	215030000002	8	Nut M4-8-A2-70 GB/T 6170
32	104020060010	1	PC film, platform controller
33	215040000030	12	Washer 3-A2 GB/T 97.1
34	203080000101	9	Cap, waterproof
35	203080003054	5	Terminal, GND
36	203060000017	1	Joystick
37	203060000088	1	Connector, 8p, with flange

No.	Part No.	Qty.	Description
38	215040000032	4	Washer 5-A2 GB/T 97.1
39	203060000020	2	Button, yellow
40	215030000001	12	Nut M3-A2-70 GB/T 6170
41	203050000006	1	Buzzer
42	203050000007	5	Indicator light
43	203080000126	1	Lock
44	203080000019	3	Socket lock, 6-pin
45	203080003145	1	Connector assy, SEHC-283A
46	215040000031	8	Washer 4-A2 GB/T 97.1
47	203060000049	2	Joystick
48	203080003051	6	Terminal
49	215020000109	2	Screw M5×10-A2-70 GB/T 818
50	203020000041	1	Controller
51	203060000142	1	Emergency stop switch
52	203080000085	7	Blind plug

7.1.12 PLATFORM CONTROL BOX HARNESS(PN.104020060008)-EN

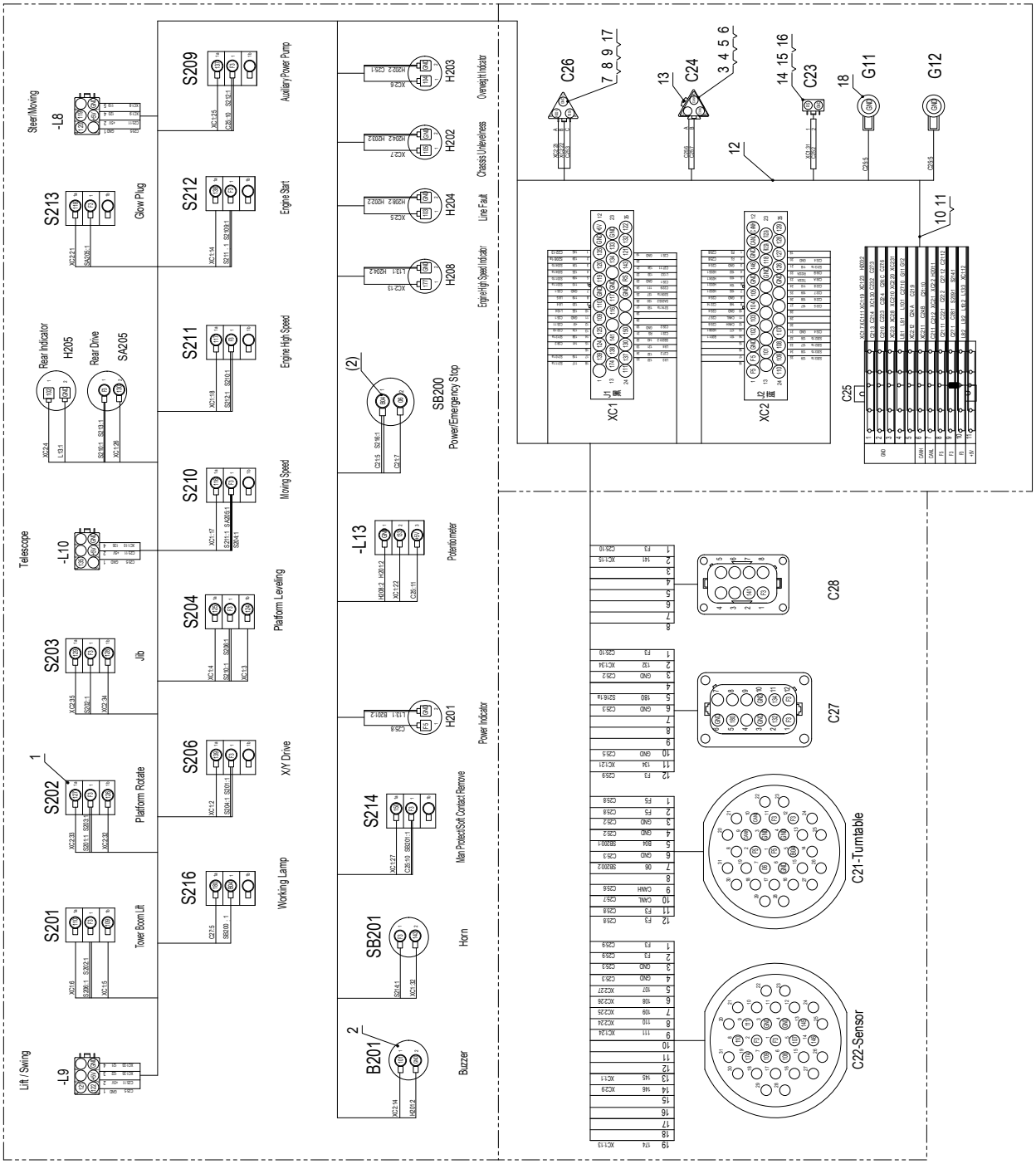

No.	Part No.	Qty.	Description
	104020060008	1	Platform control box wiring diagram
1	203080000023	30	Terminal, blade-hole type
2	203080000036	8	Terminal
3	203080000405	1	Sheath
4	203080000046	1	Lock
5	203080000033	2	Terminal, male
6	203080000086	1	Sheath
7	203080000404	1	Sheath
8	203080000032	1	Lock
9	203080000041	5	Terminal, female
10	203080000096	15	Cable, thin wall
11	203080000107	5	Cable, thin wall
12	216020000020	20	Cable tie, nylon
13	203080000068	1	Blind plug
14	203080000410	1	Sheath
15	203080000016	1	Lock
16	203080000474	1	Cover, waterproof
17	203080000473	1	Cover, waterproof
18	203080000133	2	Terminal, blade-hole type

7.1.13 TURNTABLE ELECTRICAL COMPONENTS INSTALLATION

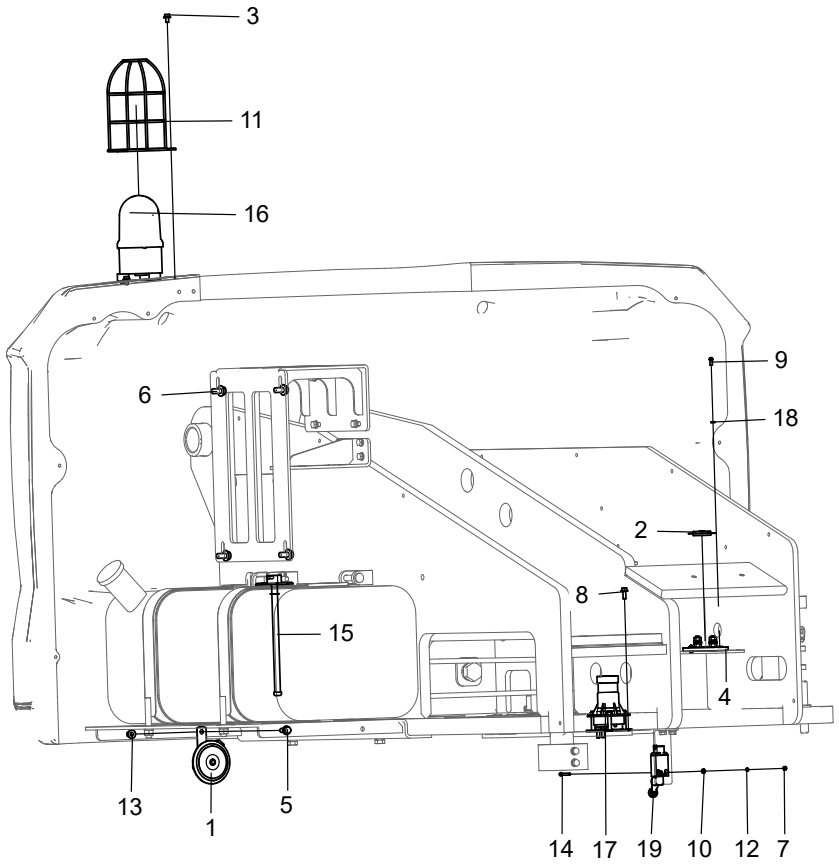

No.	Part No.	Qty.	Description
1	203050000034	1	Horn
2	203070000048	1	Fuse
3	215010000229	3	Bolt M6×10-8.8-ZnD GB/T 5789
4	203070000056	1	Fuse holder
5	215010000234	1	Bolt M8×20-8.8-ZnD GB/T 5789
6	215010000237	4	Bolt M10×20-8.8-ZnD GB/T 5789
7	215030000002	2	Nut M4-8-A2-70 GB/T 6170
8	215010000230	3	Bolt M6×16-8.8-ZnD GB/T 5789
9	215020000110	2	Screw M5×12-A2-70 GB/T 818
10	215040000031	2	Washer 4-A2 GB/T 97.1
11	105021060024	1	Guard, beacon light
12	215040000002	2	Washer 4-A2-70 GB/T 93
13	215030000108	1	Nut M8-8-ZnD GB/T 6183
14	215020000212	2	Screw M4×35-A2-70 GB/T 818
15	203150000026	1	Sensor, liquid level
16	203050003017	1	Beacon light

No.	Part No.	Qty.	Description
17	203150000039	1	Level sensor
18	215040000003	2	Washer 5-A2-70 GB/T 93
19	203060000146	1	Travel switch

7.1.14 GROUND CONTROL BOX ASSEMBLY(PN.104020060011)

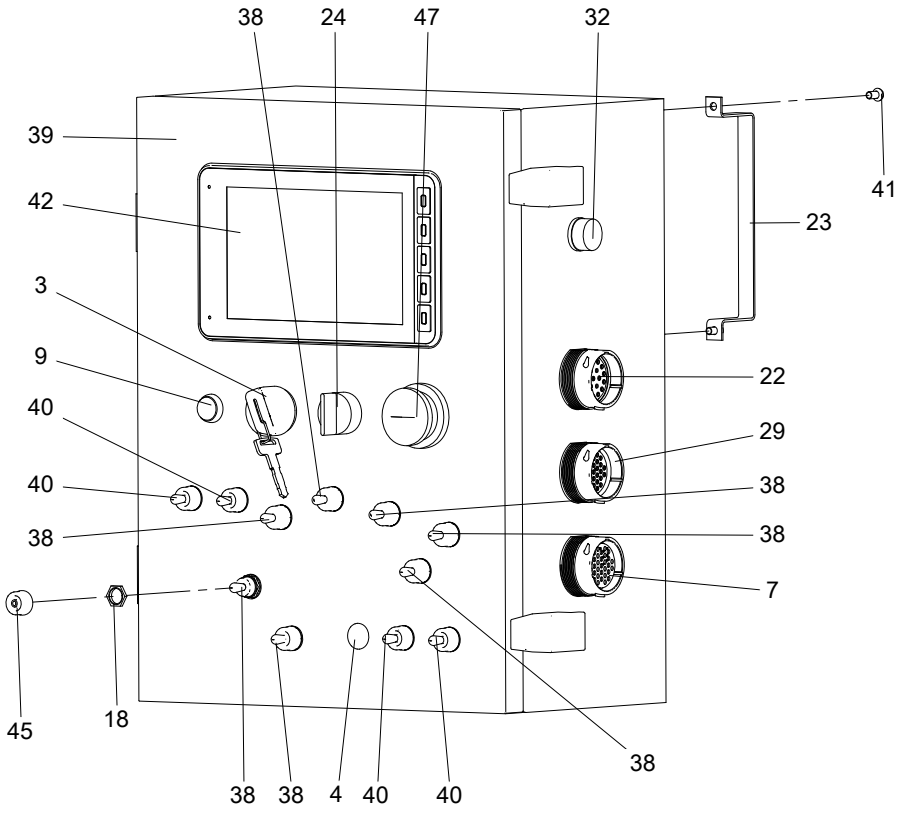

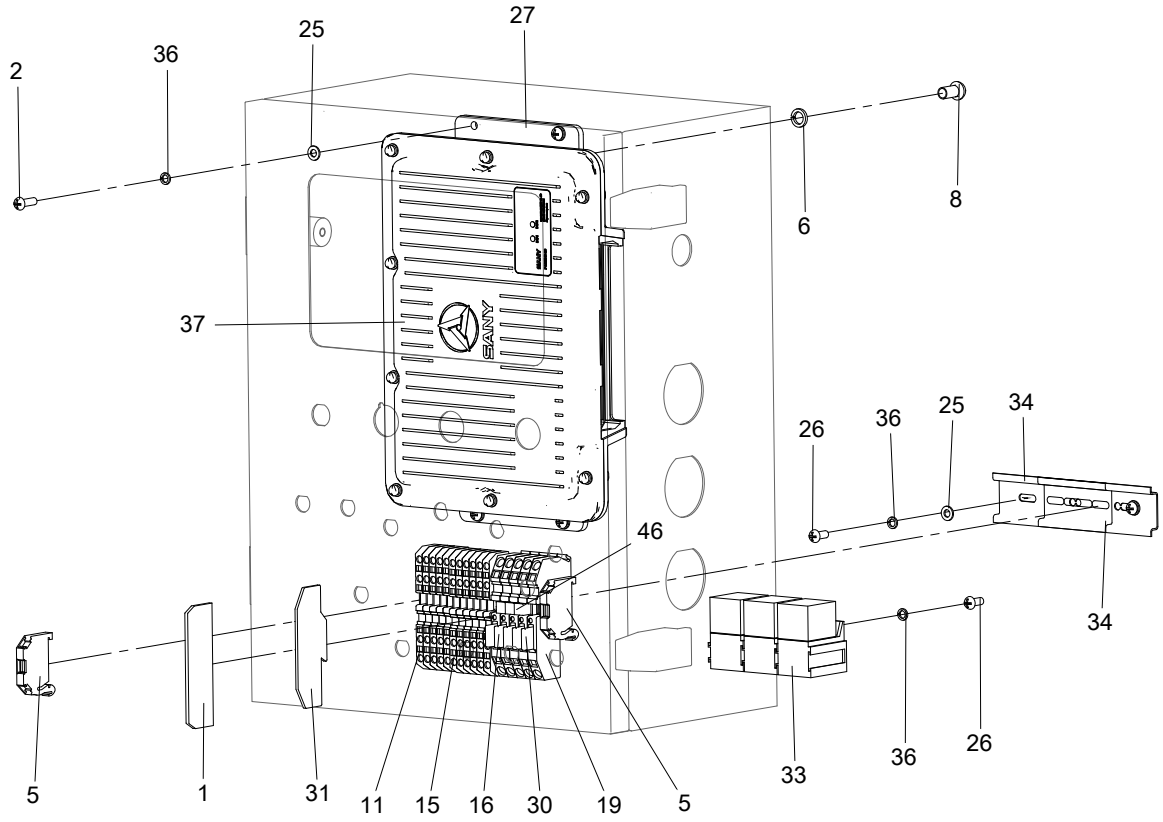

No.	Part No.	Qty.	Description
1	203080003052	1	End plate
2	215020000111	4	Screw M5×16-A2-70 GB/T 818
3	203060000114	1	Key switch
4	105045060004	1	Plug, controller
5	203080003053	2	Terminal block end plate
6	215040000005	4	Washer 8-ZnD GB/T 93
7	203080000516	1	Connector, 31P, female
8	215020000120	4	Screw M8×16-4.8-ZnD GB/T 818
9	203060000020	1	Button, yellow
10	203080000033	31	Terminal, male
11	203080003054	5	Terminal, GND
12	203080003055	1	Tag, terminal
13	203060000103	4	Terminal, #12, male
14	203080003056	1	Tag, terminal
15	203080003051	6	Terminal
16	203070000008	1	Fuse
17	203080003147	1	Connector assy, SECD-7I0A
18	203080000109	11	Nut
19	203080003057	5	Terminal
20	104020060001	1	Membrane, ground controller
21	203080000068	24	Blind plug
22	203080000518	1	Connector, 21-pin, male
23	105001060106	3	Retaining plate, display screen
24	203060000029	1	Select switch
25	215040000032	12	Washer 5-A2 GB/T 97.1
26	215020000110	5	Screw M5×12-A2-70 GB/T 818
27	105001060108	2	Connecting plate, controller
28	203080000041	24	Terminal, female
29	203080000523	1	Connector, 31P, male
30	203070000018	4	Fuse
31	203080003059	1	End plate
32	203050000005	1	Buzzer
33	203040000003	3	Relay
34	203990000001	2	Guiderail
35	203060000101	3	Nut, retaining
36	215040000003	15	Washer 5-A2-70 GB/T 93
37	203020000040	1	Controller

No.	Part No.	Qty.	Description
38	203060000003	7	Switch, toggle
39	104020060022	1	Ground controller assembly
40	203060000021	4	Switch, toggle
41	215020000109	6	Screw M5×10-A2-70 GB/T 818
42	203200000004	1	Display screen
43	203080003146	1	Connector assy, SEHC-283B
44	203060000098	3	Spring plate, metal
45	203080000101	11	Cap, waterproof
46	203080003060	3	Jumper
47	203060000142	1	Emergency stop switch

7.1.15 GROUND CONTROL BOX HARNESS(PN.104020060005)

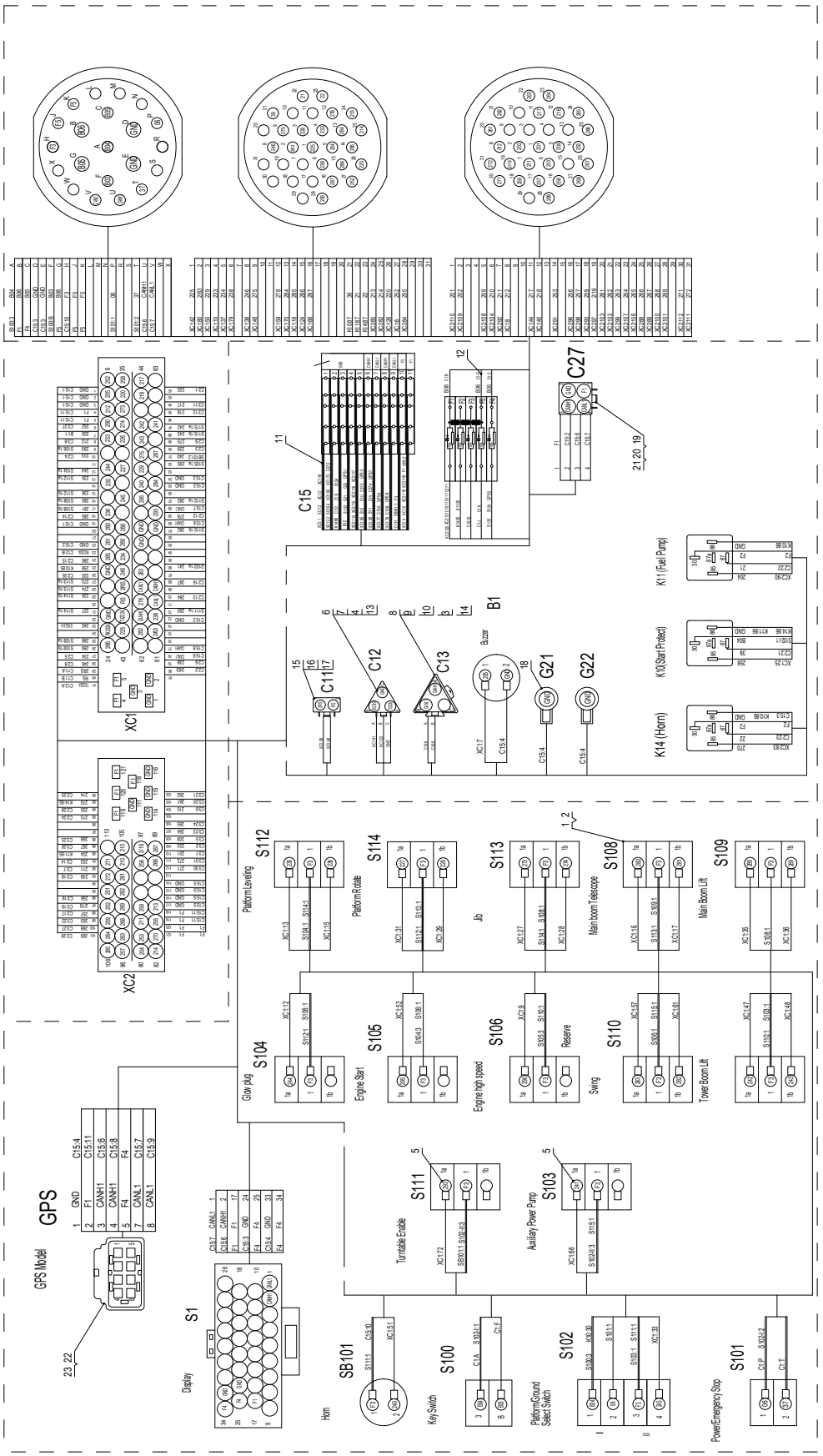

No.	Part No.	Qty.	Description
	104020060005	1	Ground controller wiring diagram
1	203080000023	26	Terminal, blade-hole type
2	203080000022	1	Heat shrink tube
3	203080000033	2	Terminal, male
4	203080000041	10	Terminal, female
5	203080000036	12	Terminal
6	203080000404	1	Sheath
7	203080000032	1	Lock
8	203080000405	1	Sheath
9	203080000046	1	Lock
10	203080000086	1	Sheath
11	203080000096	50	Cable, thin wall
12	203080000047	1	Cable
13	203080000473	1	Cover, waterproof
14	203080000068	1	Blind plug
15	203080000410	1	Sheath
16	203080000016	1	Lock
17	203080000474	1	Cover, waterproof
18	203080000133	2	Terminal, blade-hole type
19	203080000044	1	Sheath
20	203080000020	1	Lock
21	203080000492	1	Cover, waterproof
22	203080003216	1	Sheath
23	203080003218	7	Terminal AMP

7.1.16 TURNTABLE SENSORS HARNESS(PN.104020060002)

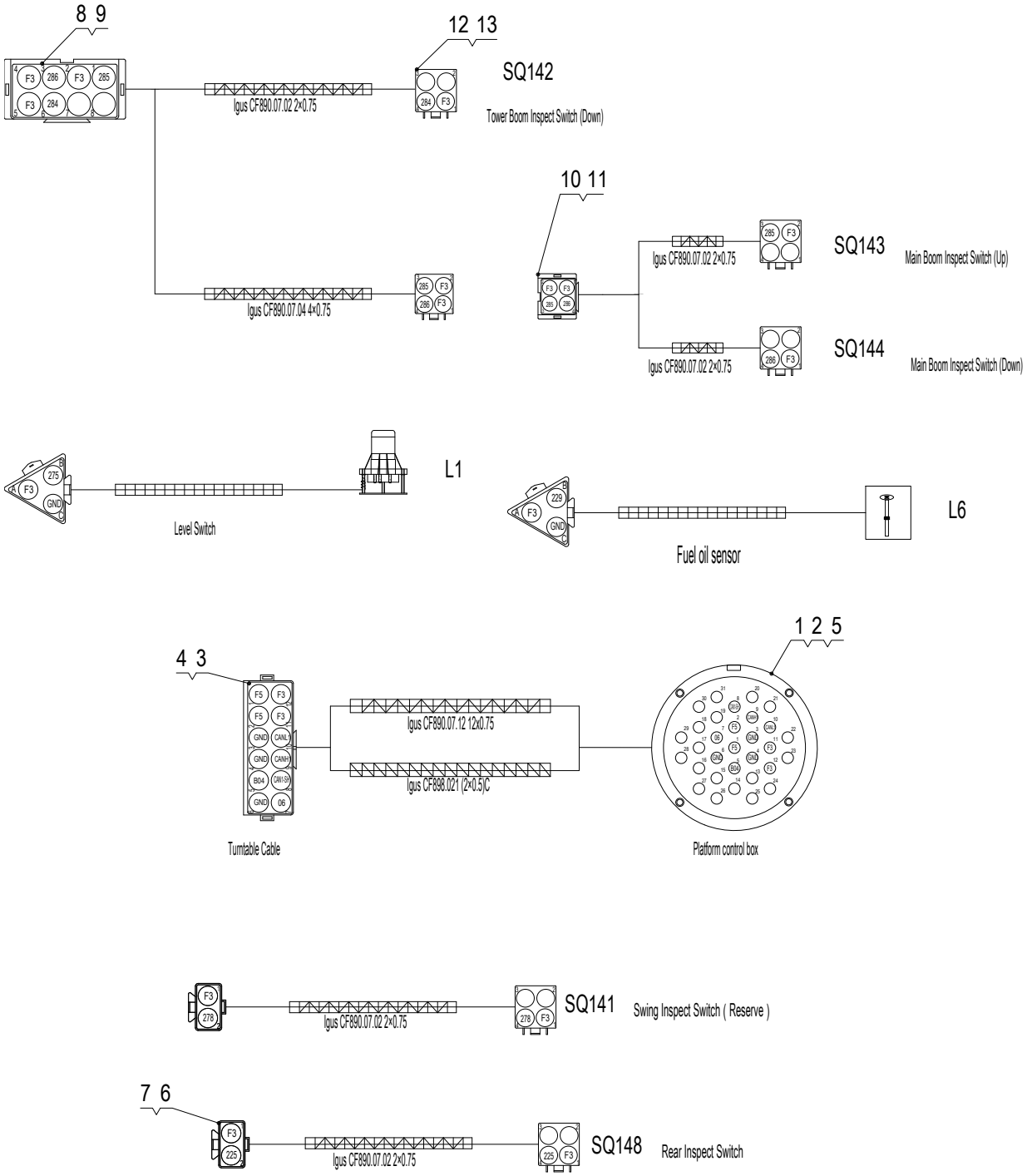

No.	Part No.	Qty.	Description
	104020060002	1	Turntable Sensors Harness
1	203080000520	1	Connector, 31P, female
2	203060000096	1	End clip, 180 deg.
3	203080000403	1	Sheath
4	203080000157	1	Lock
5	203080000068	29	Blind plug
6	203080000408	1	Sheath
7	203080000021	1	Lock
8	203080000413	1	Sheath
9	203080000126	1	Lock
10	203080000054	1	Sheath
11	203080000088	1	Lock
12	203080000044	5	Sheath
13	203080000020	5	Lock

7.1.17 TURNTABLE HARNESS(PN.104020063005)

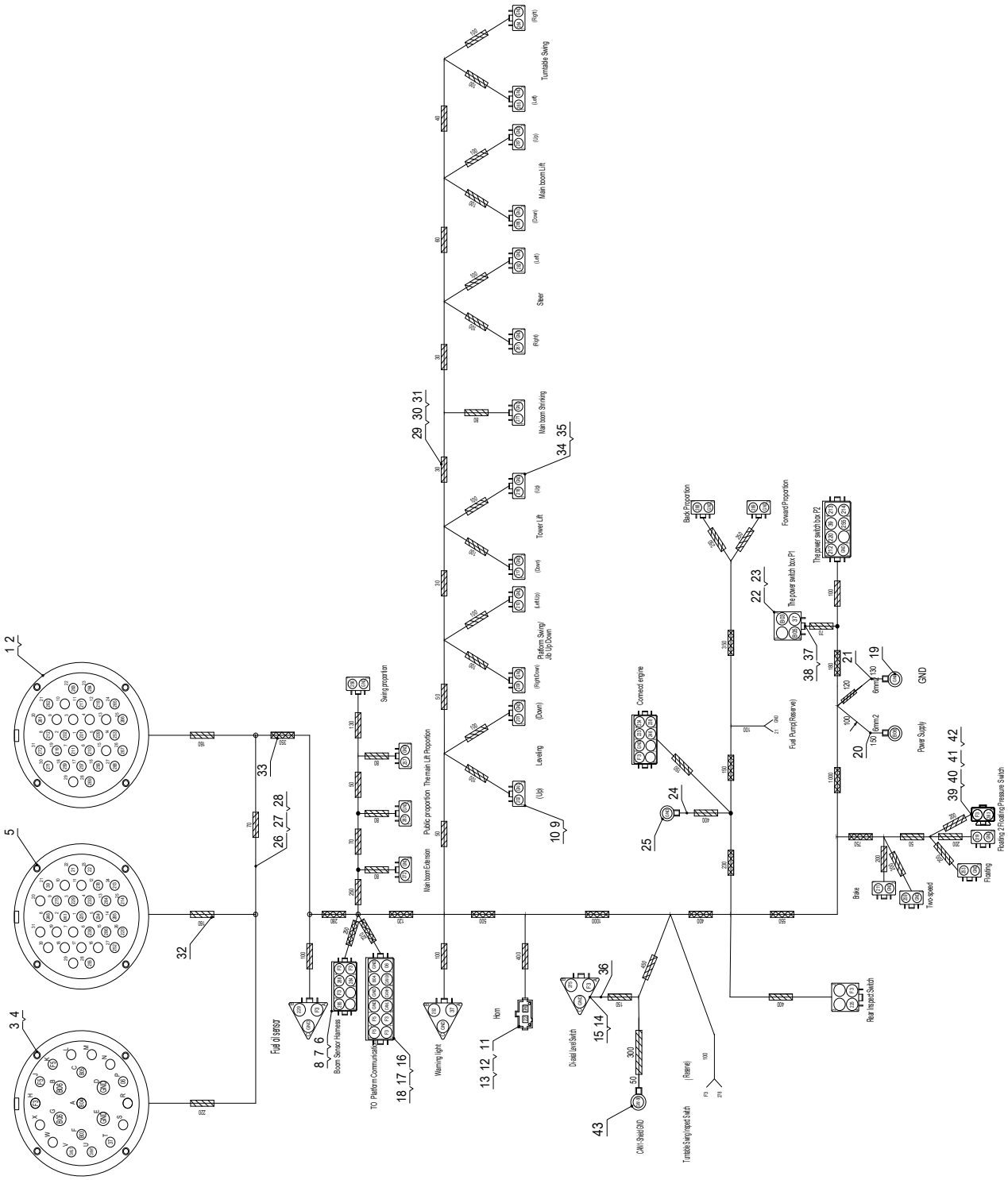

No.	Part No.	Qty.	Description
	104020063005	1	Turntable harness
1	203080000515	1	Connector, 31P, male
2	203060000096	3	End clip, 180 deg.
3	203080000517	1	Connector, 21-pin, female
4	203060000097	4	Terminal, #12, female
5	203080000520	1	Connector, 31P, female
6	203080000406	3	Sheath
7	203080000112	3	Lock
8	203080000041	123	Terminal, female
9	203080000410	26	Sheath
10	203080000016	25	Lock
11	203080000427	1	Sheath
12	203080000428	2	Pin, female
13	203080000429	1	Cap, waterproof
14	203080000404	3	Sheath
15	203080000032	3	Lock
16	203080000414	1	Sheath
17	203080000159	1	Lock
18	203080000068	33	Blind plug
19	203080000134	2	Terminal, blade-hole type
20	203080000161	6	Cable
21	203080000191	5	Cable
22	203080000044	2	Sheath
23	203080000020	2	Lock
24	203080000030	1	Heat shrink tube
25	203080000244	1	Terminal, round top insulated
26	203080000564	150	Cable, thin wall (white)
27	203080000563	60	Cable, thin wall (black)
28	203080000562	40	Cable, thin wall (red)
29	203080000424	6	Nylon hose, closed-end
30	203080000422	4	Nylon hose, closed-end
31	203080000037	2	Corrugated pipe
32	203080000417	1	Nylon hose, closed-end
33	203080000419	1	Nylon hose, closed-end
34	203080000437	25	End attachments, 2-pin, female
35	203080000448	26	Rubber, 2-pin
36	203080000508	3	End clip

No.	Part No.	Qty.	Description
37	203080000445	2	End attachments, 4-pin, female
38	203080000446	2	Rubber, 4-pin
39	203080000408	1	Sheath
40	203080000021	1	Lock
41	203080000465	1	End clip
42	203080000033	26	Terminal, male
43	203080000133	1	Terminal, blade-hole type

7.1.18 ELECTRICAL POWER WIRING LAYOUT(PN.104021063052)

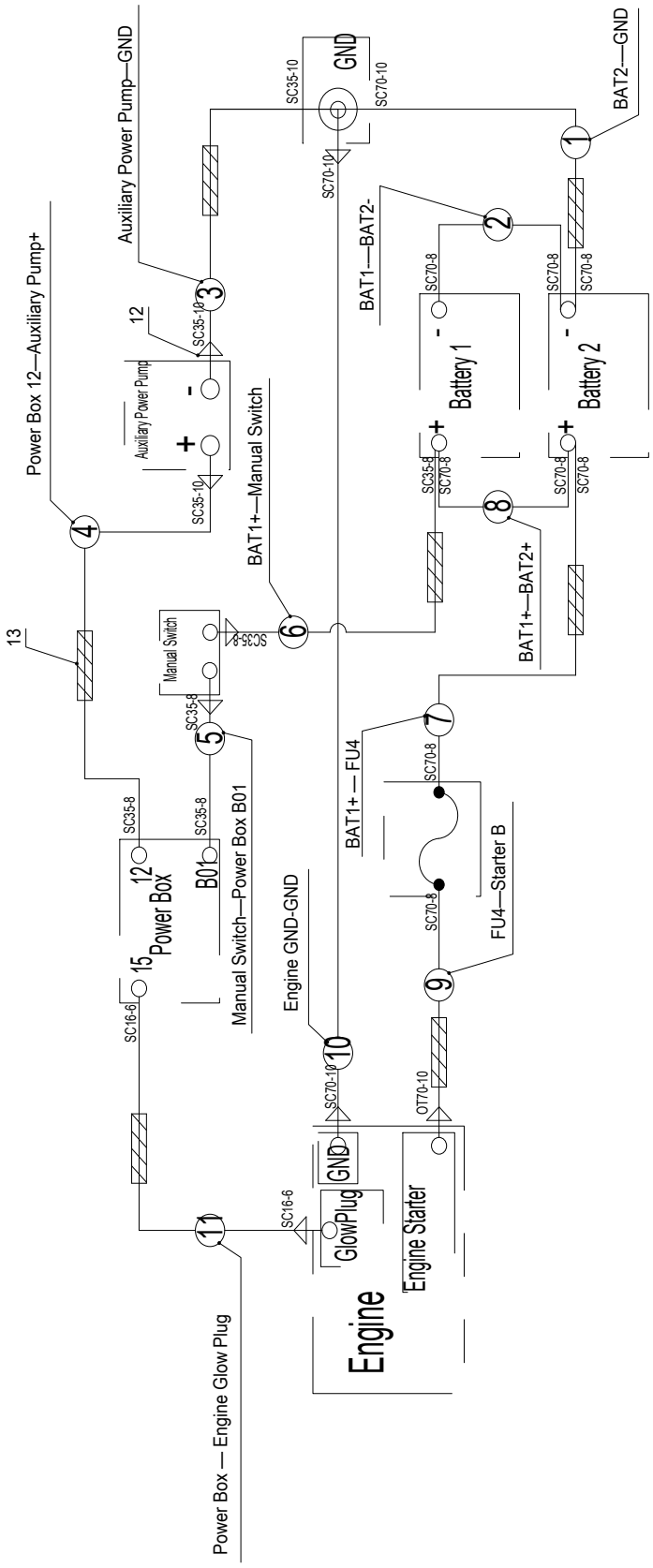

No.	Part No.	Qty.	Description
	104021063052	1	Electrical power wiring layout
1	203230000582	1	Power harness
2	203230000364	1	Power harness
3	203230000625	1	Power harness
4	203230000801	1	Power harness
5	203230000528	1	Power harness
6	203230000506	1	Power harness
7	203230000802	1	Power harness
8	203230000404	1	Power harness
9	203230000623	1	Power harness
10	203230000523	1	Power harness
11	203230000624	1	Power harness
12	203080000004	8	Connector, PVC
13	203080000422	16	Nylon hose, closed-end

7.1.19 ELECTRICAL SCHEMATIC-POWER SWITCH BOX(PN.104021063039)

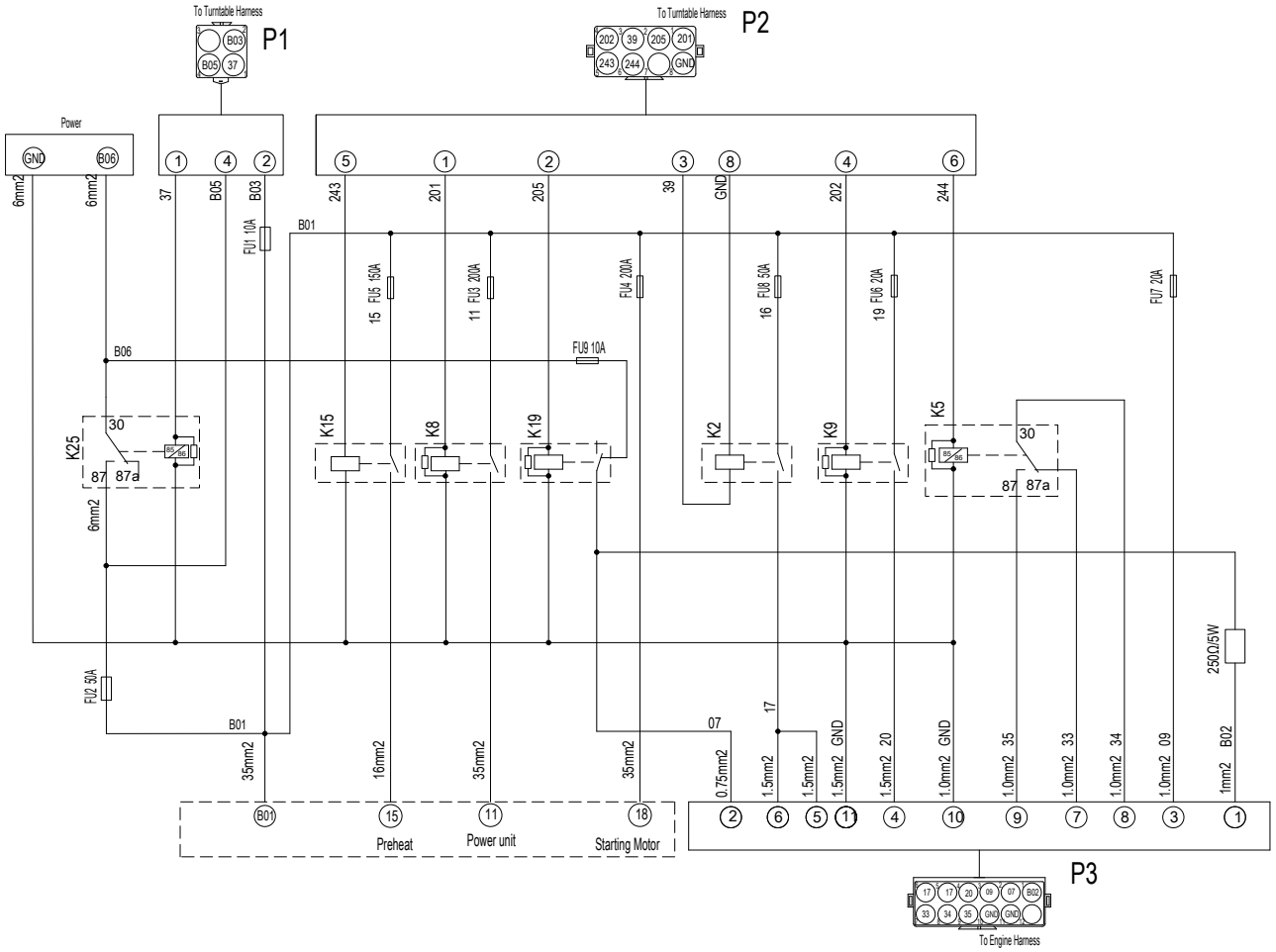

7.1.20 ELECTRICAL SCHEMATIC DIAGRAM(RISING)

Electrical schematic diagram of turntable

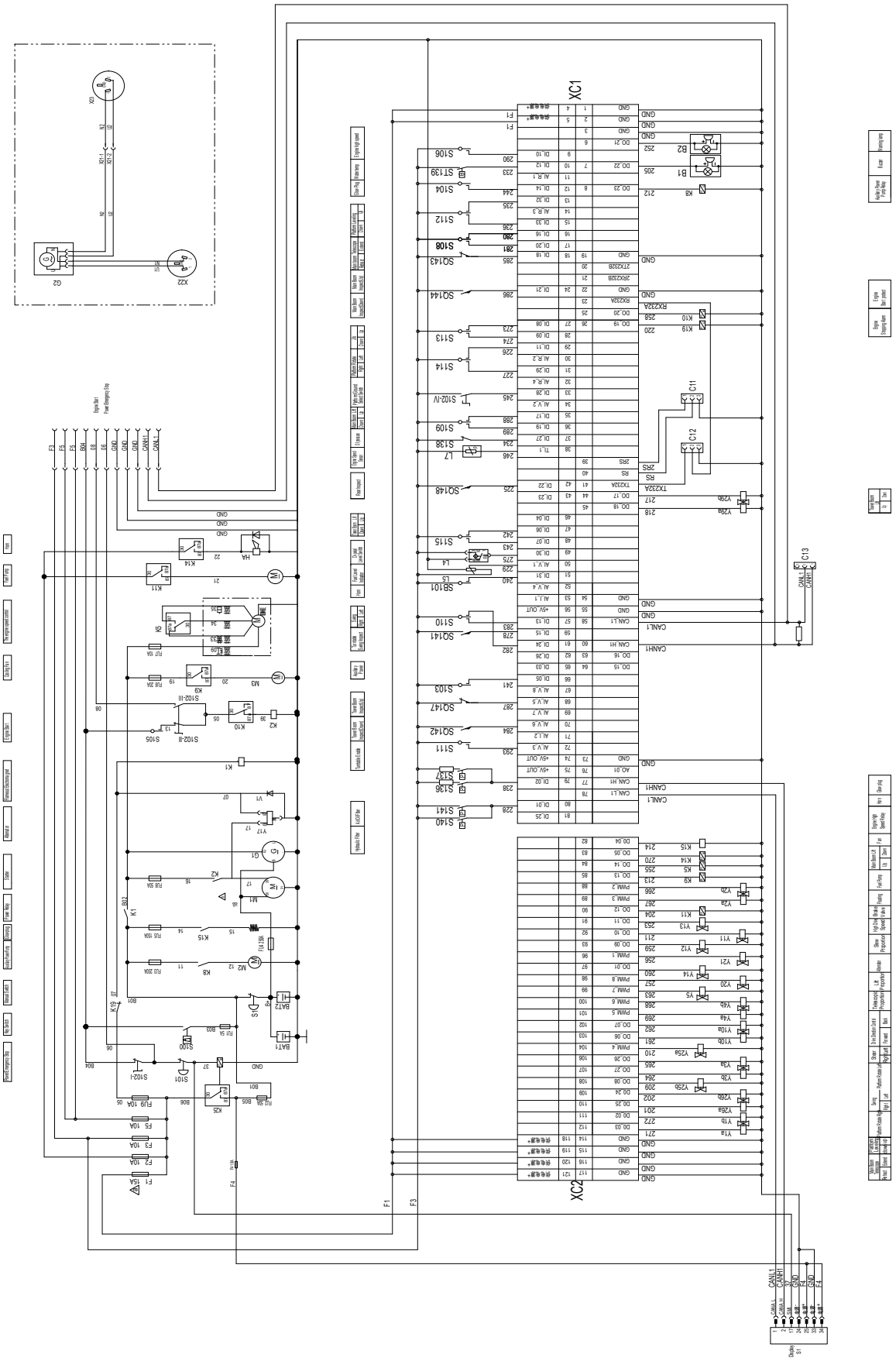

Electrical schematic diagram of platform

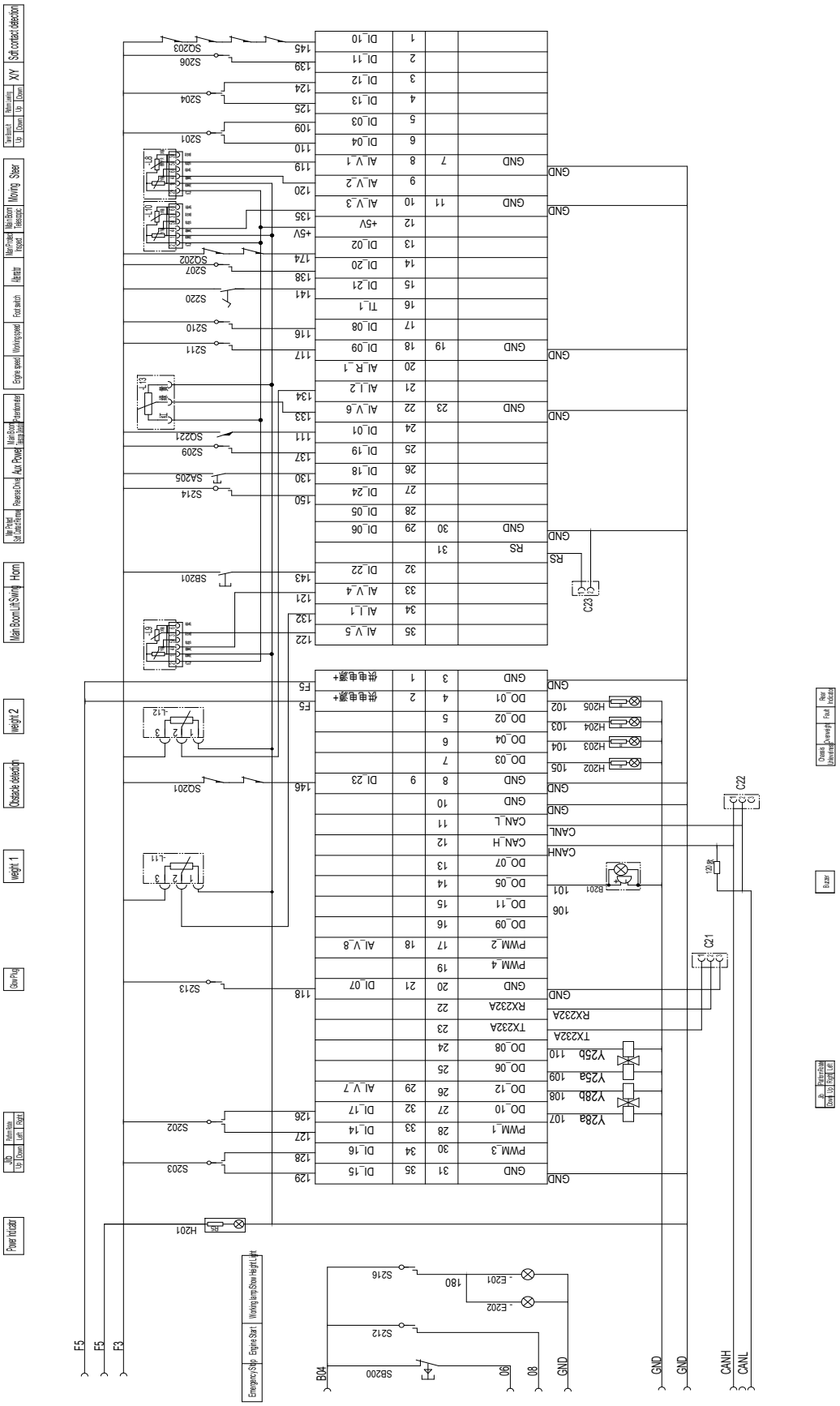

7.2 ELECTRICAL SYSTEM（RISING-DEUTZ）

7.2.1 CHASSIS ELECTRICAL COMPONENTS INSTALLATION

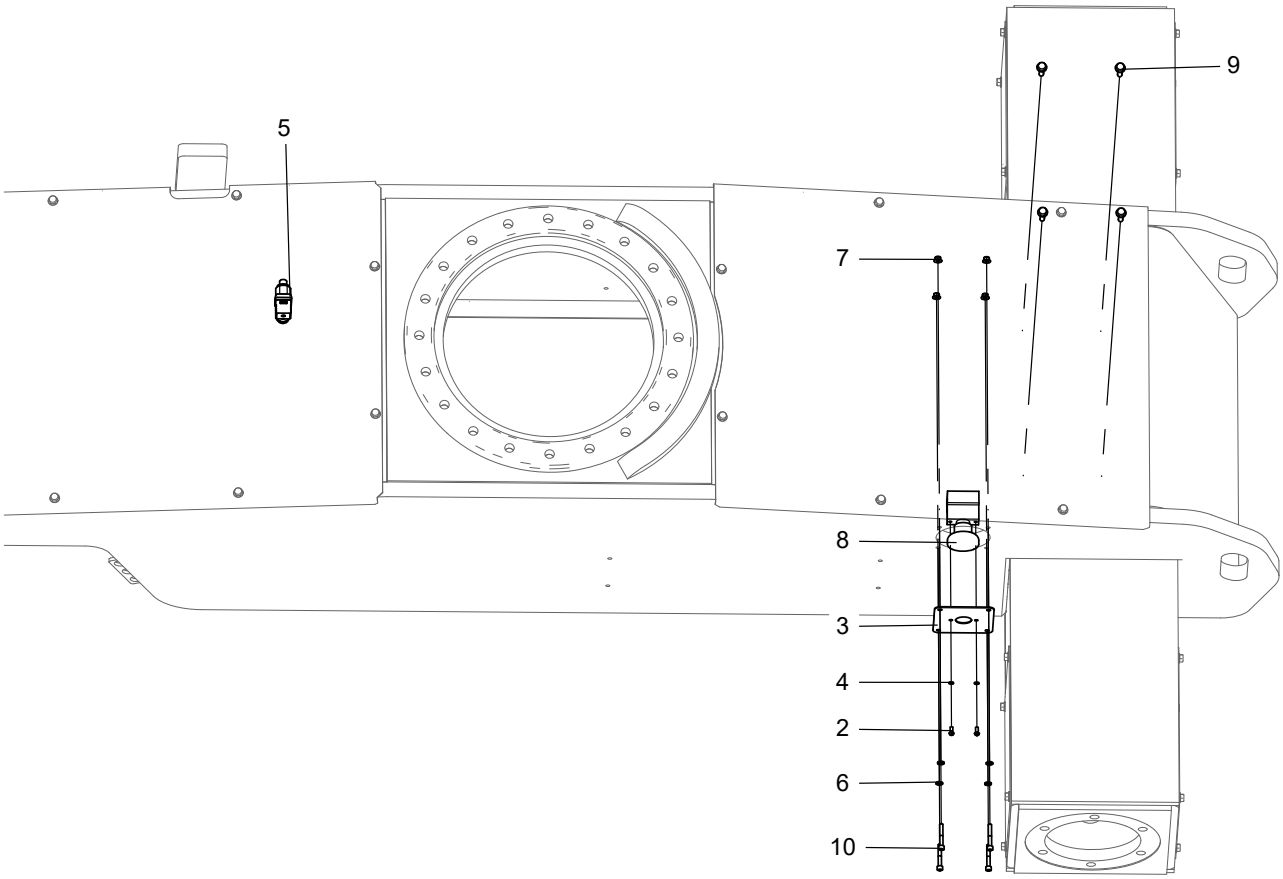

No.	Part No.	Qty.	Description
1	203100003063	1	Power switch box
2	215020000110	2	Screw M5×12-A2-70 GB/T 818
3	104009060001	1	Mounting plate, power-off switch
4	215040000003	2	Washer 5-A2-70 GB/T 93
5	203150003016	1	Pressure switch
6	215040000033	4	Washer 6-A2 GB/T 97.1
7	215030000107	4	Nut M6-8-ZnD GB/T 6183
8	203060000024	1	Power-off switch
9	215010000236	4	Bolt M8×30-8.8-ZnD GB/T 5789
10	215020000017	4	Screw M6×45-A2-70 GB/T 70.1

7.2.2 BATTERIES INSTALLATION

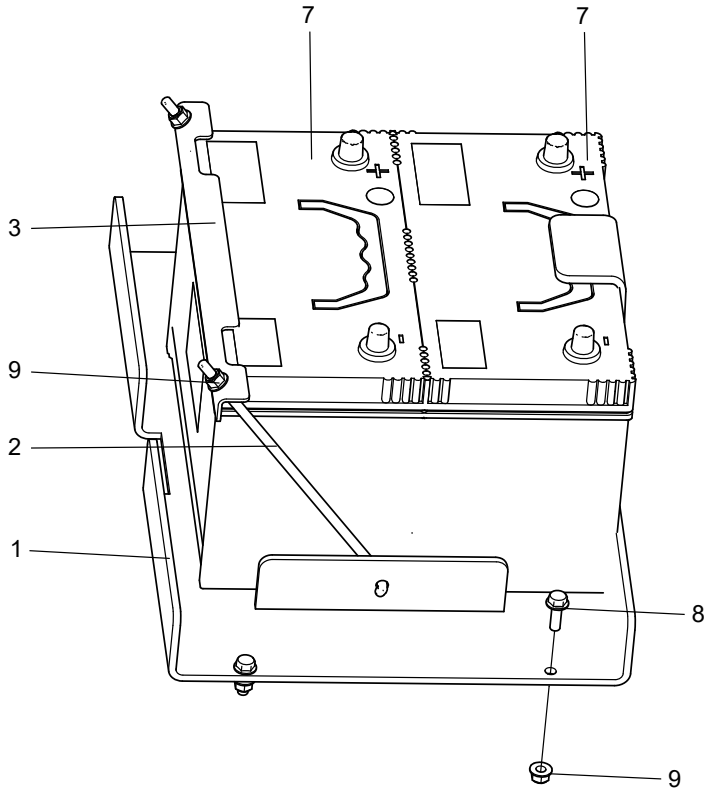

No.	Part No.	Qty.	Description
1	104009060024	1	Bracket,battery
2	105001020169	2	Tie rod
3	105001020176	1	Pressbar 2
4	203080000250	2	Battery terminal (Not Shown)
5	203100000051	2	Jacket, flexible(Not Shown)
6	203100000053	2	Jacket, flexible(Not Shown)
7	203100000061	2	Battery, maintenance-free
8	215010000235	4	Bolt M8×25-8.8-ZnD GB/T 5789
9	215030000108	6	Nut M8-8-ZnD GB/T 6183

7.2.3 ENGINE ELECTRICAL COMPONENTS INSTALLATION

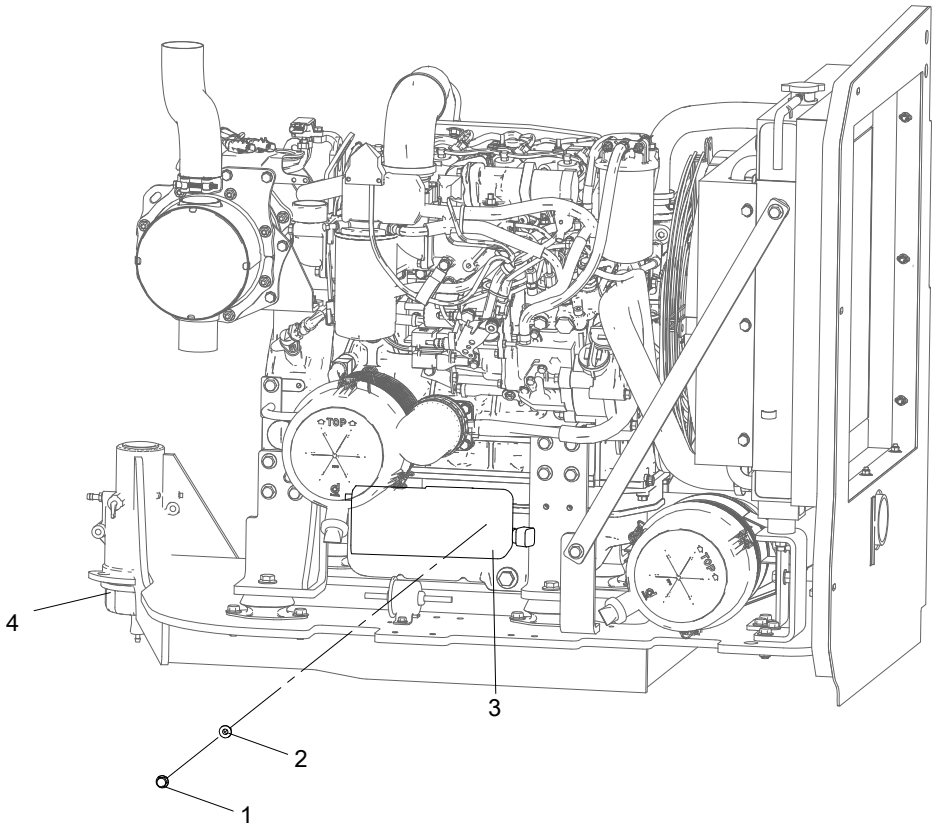

No.	Part No.	Qty.	Description
1	203020000004	1	Start/stop controller
2	215040000034	4	Washer 8-200HV-ZnD GB/T 97.1
3	203040003003	1	Relay box
4	215040000005	4	Washer 8-ZnD GB/T 93
5	216020000019	1	Clip, steel cable
6	215030000005	4	Nut M8-8-ZnD GB/T 6170
7	215010000057	2	Bolt M8×20-8.8-ZnD GB/T 5783
8	215010000058	2	Bolt M8×25-8.8-ZnD GB/T 5783

7.2.4 ENGINE HARNESS(PN104021063090)-RISING-DEUTZ

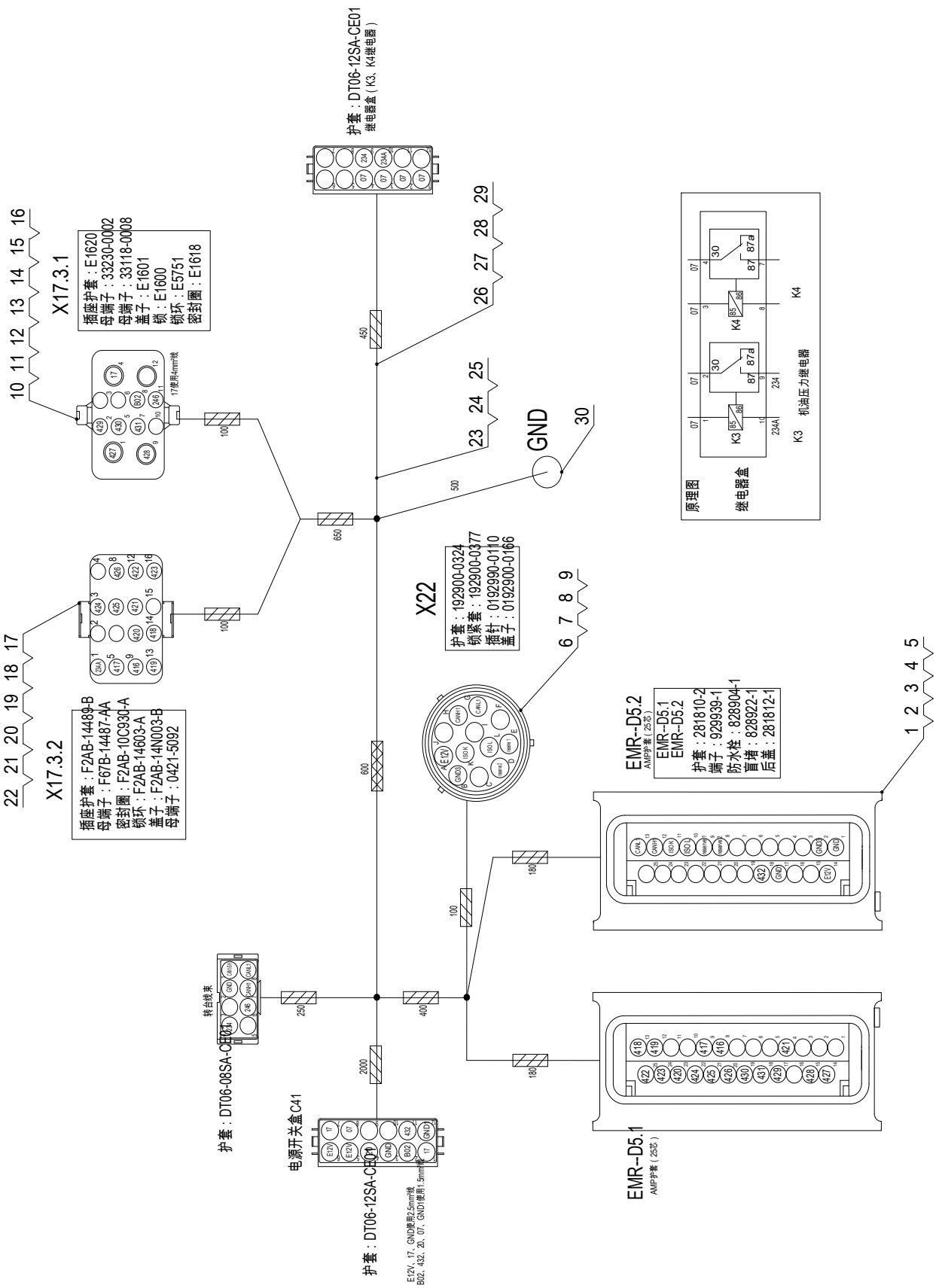

No.	Part No.	Qty.	Description
	104021063090	1	Wiring harness, Deutz engine
1	203080003107	2	Socket protector
2	203080003108	27	Terminal
3	203080003109	27	Waterproof hose
4	203080003110	23	Blind plug
5	203080003111	2	Back cover
6	203080003112	1	Sheath
7	203080003113	1	Locking sleeve
8	203080003114	1	Pin
9	203080003115	1	Cover
10	203080003116	1	Socket protector
11	203080003117	5	Terminal, female
12	203080003118	3	Terminal, female
13	203080003119	1	Cover
14	203080003120	1	Lock
15	203080003121	1	Grommet
16	203080003122	1	Seal ring
17	203080003123	1	Plug protector
18	203080003124	11	Terminal, female
19	203080003125	1	Seal ring
20	203080003126	1	Grommet
21	203080003127	1	Cover
22	203080003128	1	Terminal, female
23	203080000463	1	Nylon hose, closed-end
24	203080000037	1	Corrugated pipe
25	203080000442	2	End attachments, 3-pin, female
26	203080000372	20	Cable
27	203080000393	5	Cable
28	203080000582	3	Cable
29	203080000369	3	Cable
30	203080000124	1	Terminal, blade-hole type

7.2.5 BOOM ELECTRICAL COMPONENTS INSTALLATION

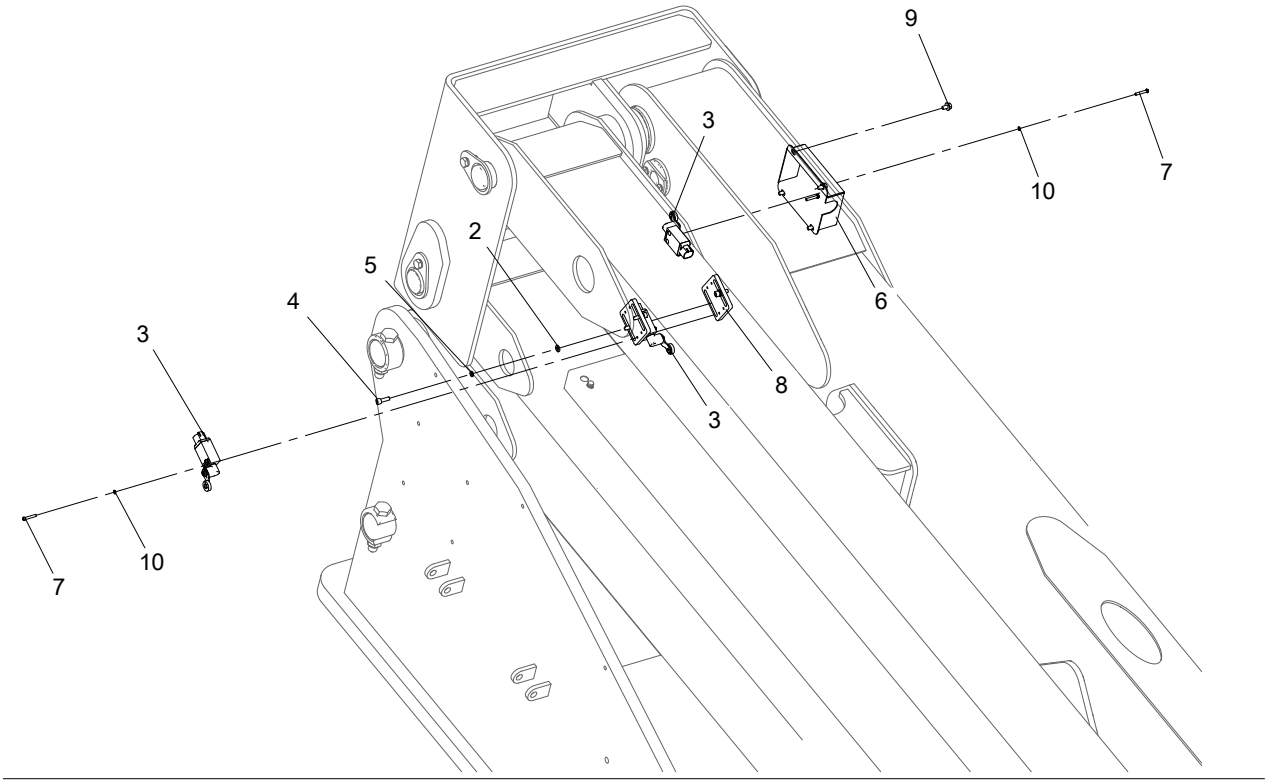

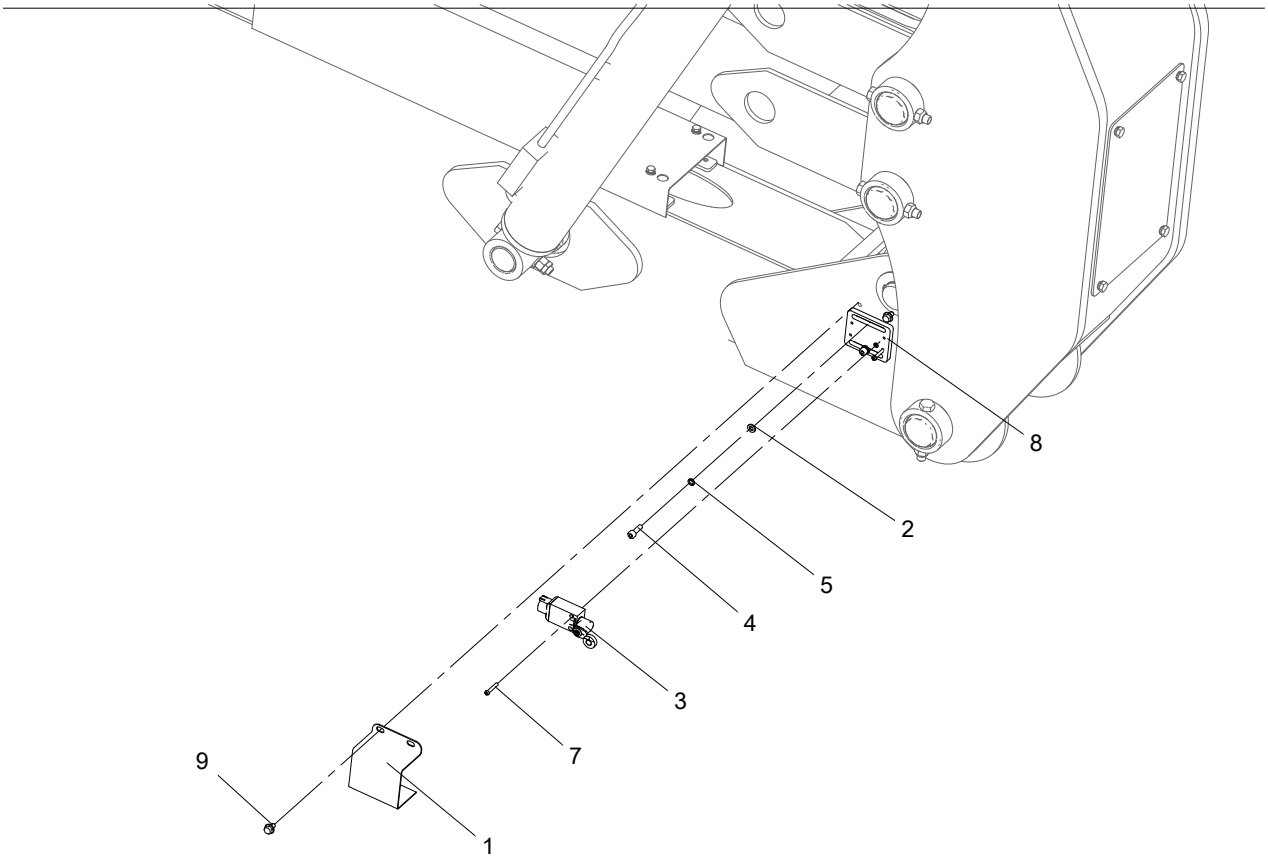

No.	Part No.	Qty.	Description
1	104009060078	1	Cover, travel switch
2	215040000033	6	Washer 6-A2 GB/T 97.1
3	203060000146	4	Travel switch
4	215020000012	6	Screw M6×20-A2-70 GB/T 70.1
5	215040000004	6	Washer 6-A2-70 GB/T 93
6	104011060052	1	Cover, travel switch
7	215020000108	8	Screw M4×25-A2-70 GB/T 818
8	104009060027	3	Mounting plate, travel switch
9	215010000229	6	Bolt M6×10-8.8-ZnD GB/T 5789
10	215040000002	8	Washer 4-A2-70 GB/T 93

7.2.6 CABLE TRACK DIAGRAM(PN.104021063058)

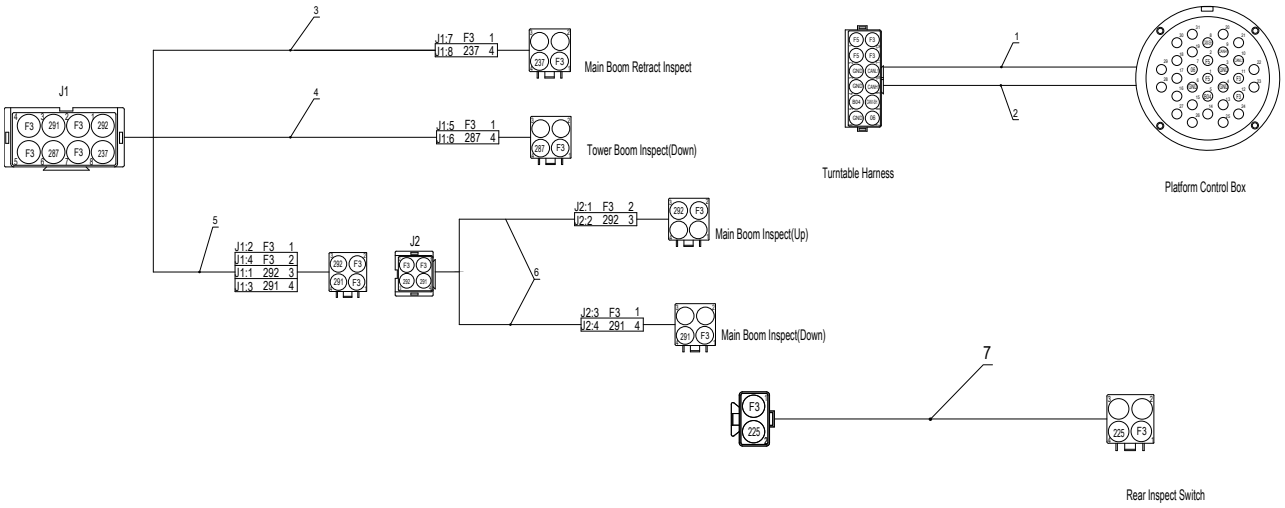

No.	Part No.	Qty.	Description
	104021063058	1	Cable track diagram
1	203230000652	1	Cable, chain
2	203230000653	1	Cable, CAN bus, cable track
3	203230000643	1	Cable, chain
4	203230000638	1	Cable, chain
5	203230000642	1	Cable, chain
6	203230000634	2	Cable, cable track
7	203230000837	1	Cable, chain

7.2.7 PLATFORM HARNESS(PN.103006063009)

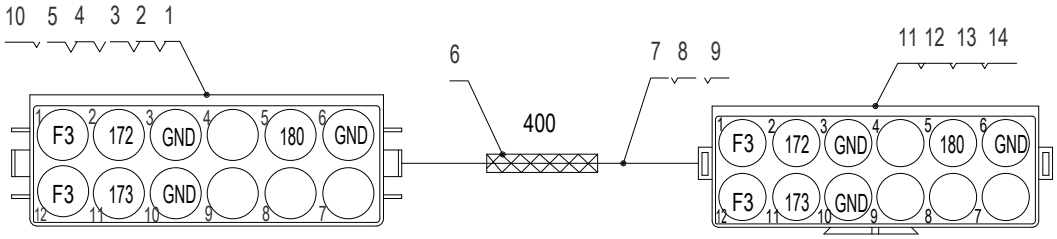

No.	Part No.	Qty.	Description
	103006063009	1	Wiring harness, platform
1	203080000155	1	Sheath
2	203080000159	1	Lock
3	203080000041	8	Terminal, female
4	203080000068	8	Blind plug
5	203080003001	1	End clip
6	203080000037	1m	Corrugated pipe
7	203080000562	2	Cable, thin wall (red)
8	203080000563	2	Cable, thin wall (black)
9	203080000564	1	Cable, thin wall (white)
10	203080003010	1	Nut, big-size
11	203080000403	1	Sheath
12	203080000157	1	Lock
13	203080000033	8	Terminal, male
14	203080000459	1	End clip

7.2.8 PLATFORM HARNESS(PN.104020060028)

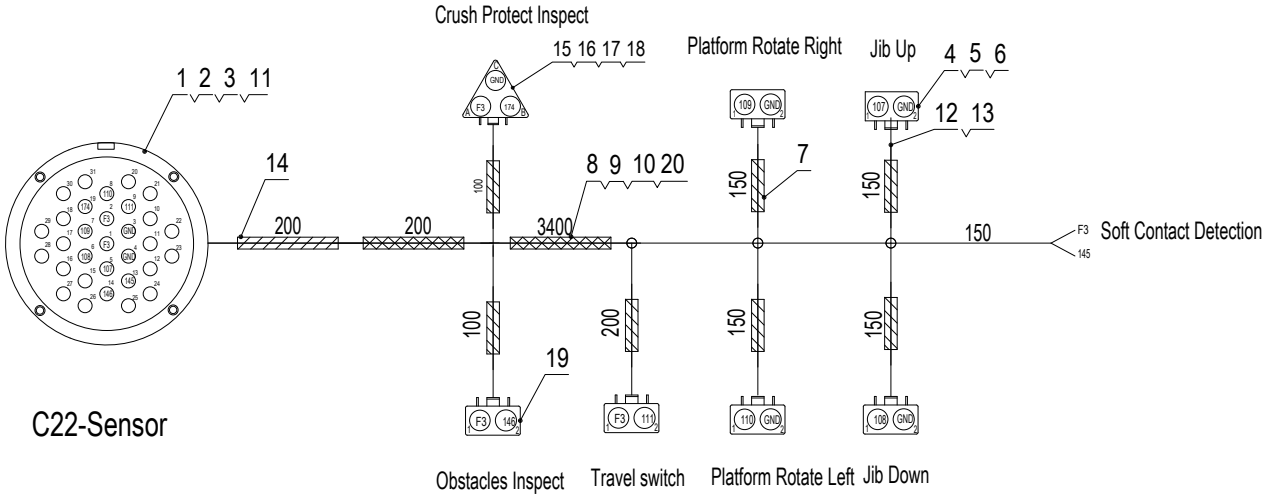

No.	Part No.	Qty.	Description
	104020060028	1	Wiring harness, platform
1	203080000515	1	Connector, 31P, male
2	203080000068	19	Blind plug
3	203080000033	12	Terminal, male
4	203080000410	6	Sheath
5	203080000016	6	Lock
6	203080000041	15	Terminal, female
7	203080000463	1	Nylon hose, closed-end
8	203080000564	30	Cable, thin wall (white)
9	203080000563	16	Cable, thin wall (black)
10	203080000562	16	Cable, thin wall (red)
11	203060000096	1	End clip, 180 deg.
12	203080000437	6	End attachments, 2-pin, female
13	203080000448	6	Rubber, 2-pin
14	203080000419	1	Nylon hose, closed-end

No.	Part No.	Qty.	Description
15	203080000404	1	Sheath
16	203080000032	1	Lock
17	203080000508	1	End clip
18	203080000473	1	Cover, waterproof
19	203080000474	1	Cover, waterproof
20	203080000037	1	Corrugated pipe

7.2.9 PLATFORM SENSORS HARNESS(PN.104020060004)

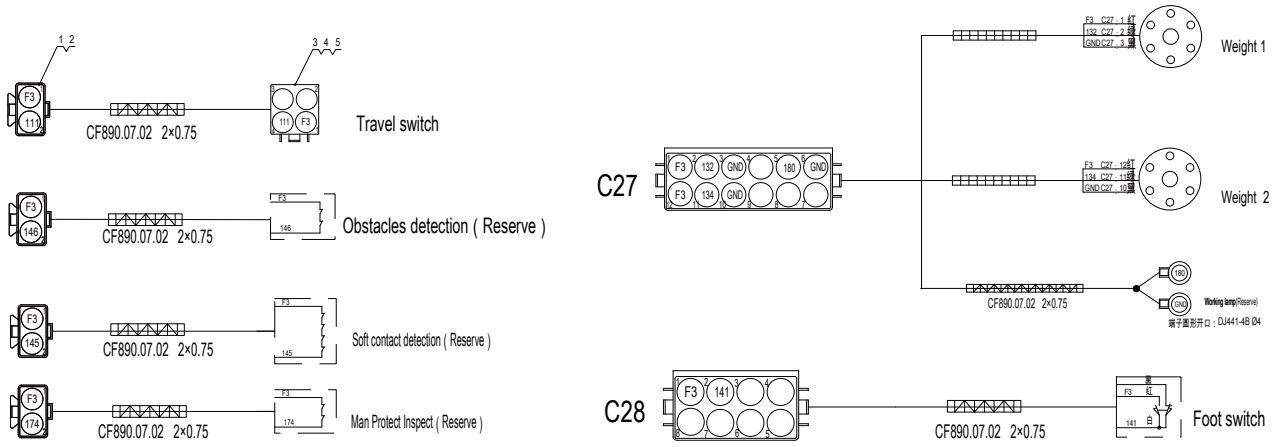

No.	Part No.	Qty.	Description
	104020060004	1	Wiring harness, platform sensor
1	203080000408	1	Sheath
2	203080000021	1	Lock
3	203080000044	1	Sheath
4	203080000020	1	Lock
5	203080000068	2	Blind plug

7.2.10 PLATFORM ELECTRICAL COMPONENTS INSTALLATION

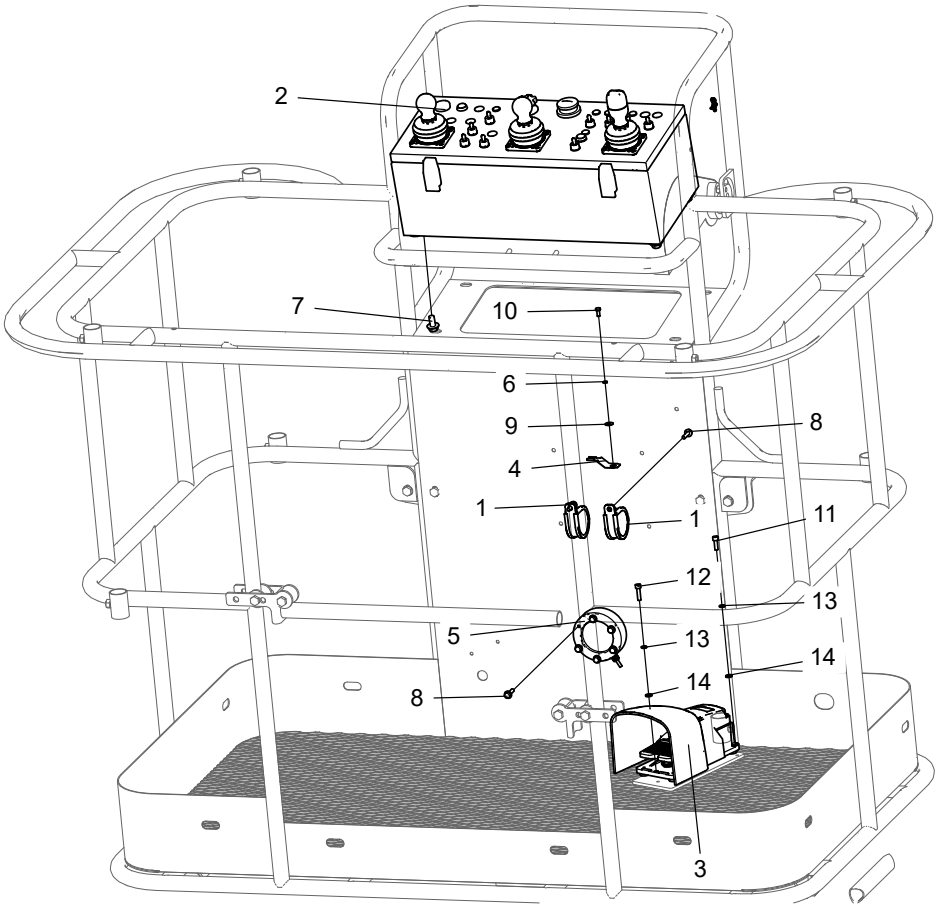

No.	Part No.	Qty.	Description
1	216020000025	2	Retaning ring, SSG
2	104020060015	1	Platform controller assembly
3	203060000009	1	Footswitch
4	203080000525	1	Fixture
5	203150000069	1	Load sensor
6	215040000003	1	Washer 5-A2-70 GB/T 93
7	215010000237	4	Bolt M10×20-8.8-ZnD GB/T 5789
8	215010000232	8	Bolt M6×25-8.8-ZnD GB/T 5789
9	215040000132	1	Washer 5-200HV-A2 GT/B 96.1
10	215010000041	1	Bolt M5×12-A2-70 GB/T 5783
11	215020000012	2	Screw M6×20-A2-70 GB/T 70.1
12	215020000013	1	Screw M6×25-A2-70 GB/T 70.1
13	215040000004	3	Washer 6-A2-70 GB/T 93
14	215040000033	3	Washer 6-A2 GB/T 97.1

7.2.11 PLATFORM CONTROL BOX ASSEMBLY(PN.104020060015)

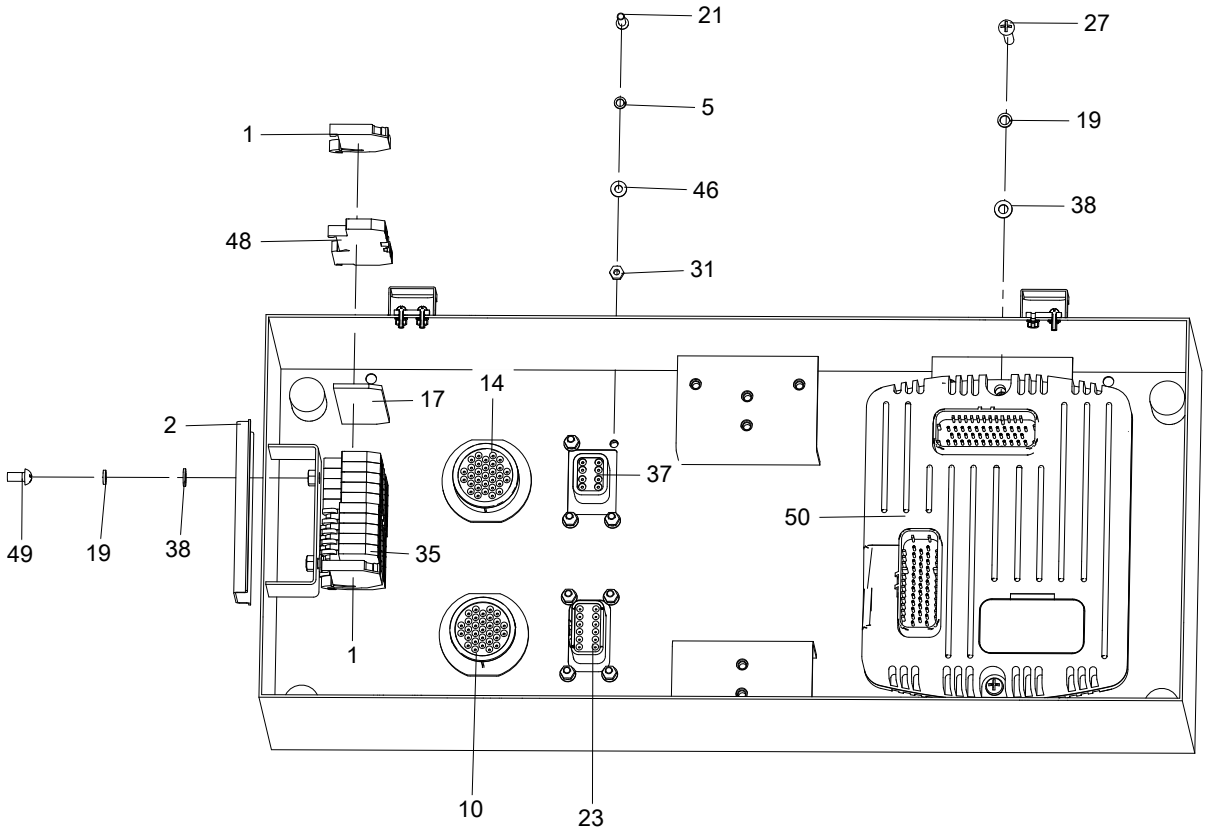

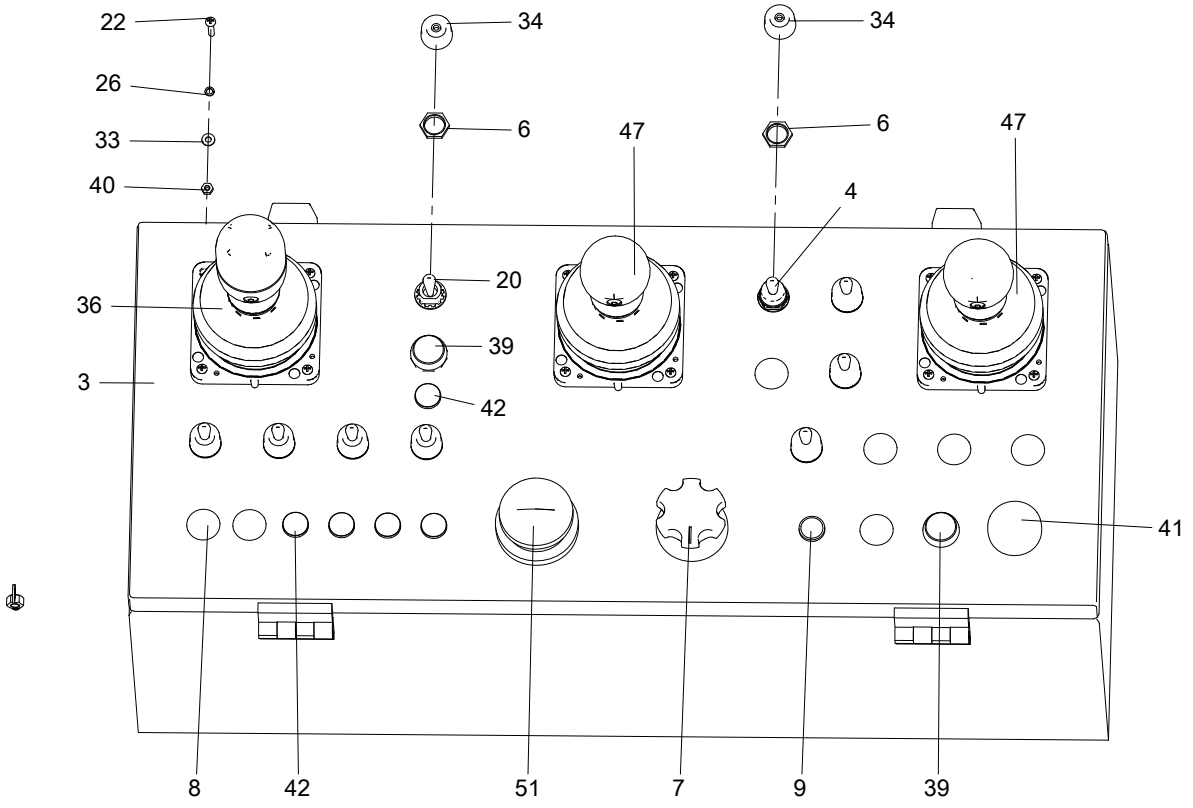

No.	Part No.	Qty.	Description
1	203080003053	2	Terminal block end plate
2	203990000001	1	Guiderail
3	104019060031	1	Platform controller
4	203060000003	4	Switch, toggle
5	215040000002	8	Washer 4-A2-70 GB/T 93
6	203080000109	9	Nut
7	203150000021	1	Potentiometer
8	105045060004	7	Plug, controller
9	203050000008	1	Indicator light
10	203080000516	1	Connector, 31P, female
11	203080000099	11	Terminal
12	203080000041	12	Terminal, female
13	203060000098	2	Spring plate, metal
14	203080000523	1	Connector, 31P, male
15	203060000014	3	Connector, handle
16	203080003055	1	Tag, terminal
17	203080003052	1	End plate
18	203080000157	1	Lock
19	215040000003	4	Washer 5-A2-70 GB/T 93
20	203060000021	5	Switch, toggle
21	215020000106	8	Screw M4×16-A2-70 GB/T 818
22	215020000102	12	Screw M3×16-A2-70 GB/T 818
23	203060000090	1	Connector, 12p, with flange
24	203080000033	21	Terminal, male
25	203080000068	49	Blind plug
26	215040000001	12	Washer 3-A2-70 GB/T 93
27	215020000114	2	Screw M5×30-A2-70 GB/T 818
28	104019060004	1	Platform Control Box Assembly
29	203060000101	2	Nut, retaining
30	203080003056	1	Tag, terminal
31	215030000002	8	Nut M4-8-A2-70 GB/T 6170
32	104020060010	1	PC film, platform controller
33	215040000030	12	Washer 3-A2 GB/T 97.1
34	203080000101	9	Cap, waterproof
35	203080003054	5	Terminal, GND
36	203060000017	1	Joystick
37	203060000088	1	Connector, 8p, with flange

No.	Part No.	Qty.	Description
38	215040000032	4	Washer 5-A2 GB/T 97.1
39	203060000020	2	Button, yellow
40	215030000001	12	Nut M3-A2-70 GB/T 6170
41	203050000006	1	Buzzer
42	203050000007	5	Indicator light
43	203080000126	1	Lock
44	203080000019	3	Socket lock, 6-pin
45	203080003145	1	Connector assy, SEHC-283A
46	215040000031	8	Washer 4-A2 GB/T 97.1
47	203060000049	2	Joystick
48	203080003051	6	Terminal
49	215020000109	2	Screw M5×10-A2-70 GB/T 818
50	203020000041	1	Controller
51	203060000142	1	Emergency stop switch
52	203080000085	7	Blind plug

7.2.12 PLATFORM CONTROL BOX HARNESS(PN.104020060008)-EN

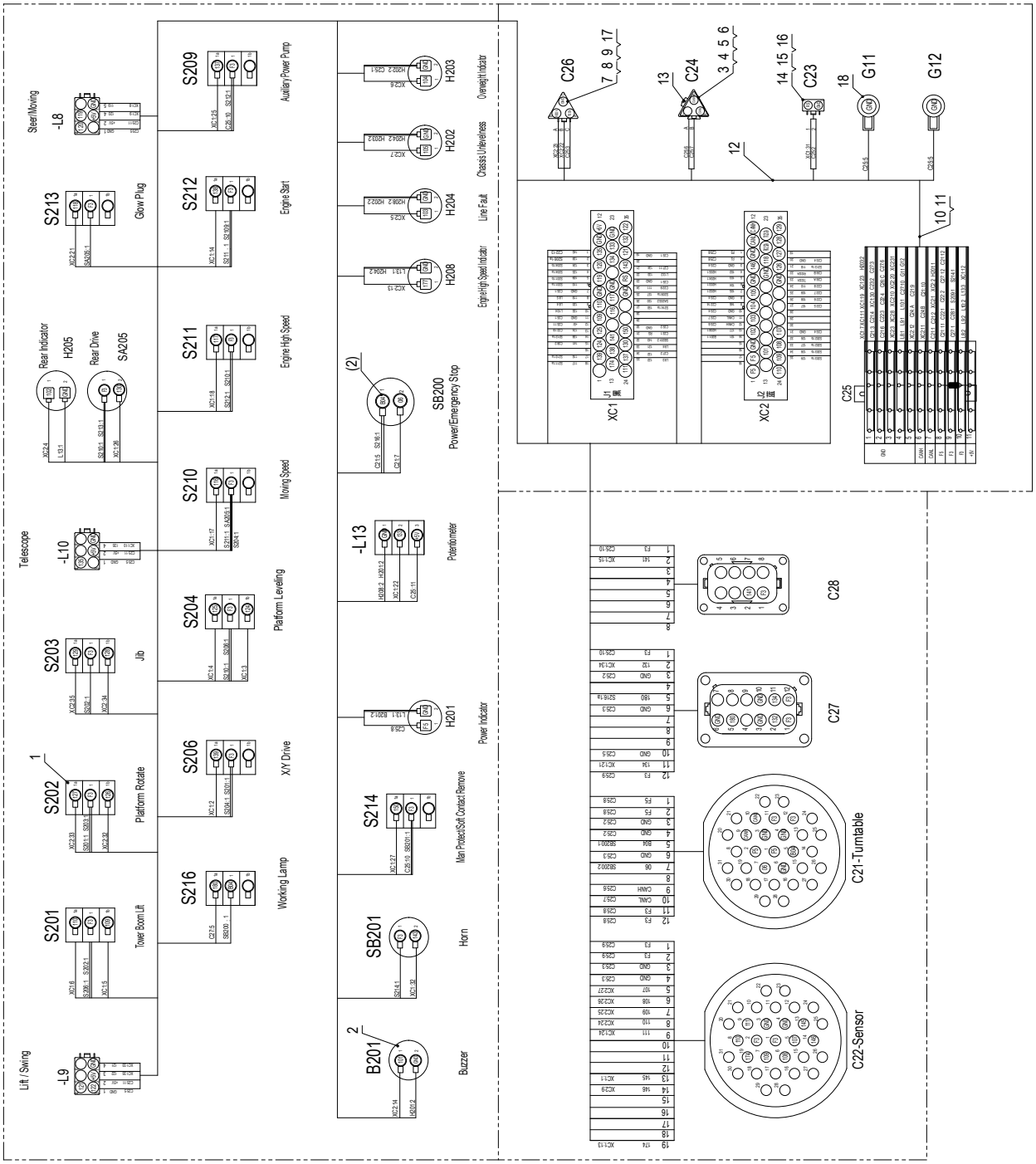

No.	Part No.	Qty.	Description
	104020060008	1	Platform control box wiring diagram
1	203080000023	30	Terminal, blade-hole type
2	203080000036	8	Terminal
3	203080000405	1	Sheath
4	203080000046	1	Lock
5	203080000033	2	Terminal, male
6	203080000086	1	Sheath
7	203080000404	1	Sheath
8	203080000032	1	Lock
9	203080000041	5	Terminal, female
10	203080000096	15	Cable, thin wall
11	203080000107	5	Cable, thin wall
12	216020000020	20	Cable tie, nylon
13	203080000068	1	Blind plug
14	203080000410	1	Sheath
15	203080000016	1	Lock
16	203080000474	1	Cover, waterproof
17	203080000473	1	Cover, waterproof
18	203080000133	2	Terminal, blade-hole type

7.2.13 TURNTABLE ELECTRICAL COMPONENTS INSTALLATION

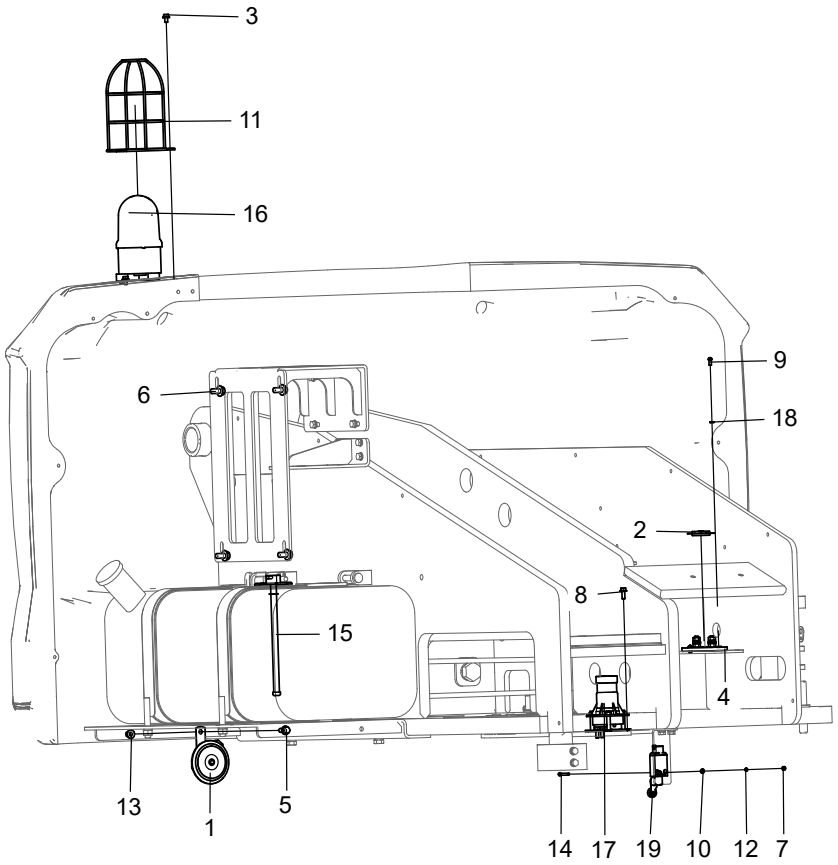

No.	Part No.	Qty.	Description
1	203050000034	1	Horn
2	203070000048	1	Fuse
3	215010000229	3	Bolt M6×10-8.8-ZnD GB/T 5789
4	203070000056	1	Fuse holder
5	215010000234	1	Bolt M8×20-8.8-ZnD GB/T 5789
6	215010000237	4	Bolt M10×20-8.8-ZnD GB/T 5789
7	215030000002	2	Nut M4-8-A2-70 GB/T 6170
8	215010000230	3	Bolt M6×16-8.8-ZnD GB/T 5789
9	215020000110	2	Screw M5×12-A2-70 GB/T 818
10	215040000031	2	Washer 4-A2 GB/T 97.1
11	105021060024	1	Guard, beacon light
12	215040000002	2	Washer 4-A2-70 GB/T 93
13	215030000108	1	Nut M8-8-ZnD GB/T 6183
14	215020000212	2	Screw M4×35-A2-70 GB/T 818
15	203150000026	1	Sensor, liquid level
16	203050003017	1	Beacon light

No.	Part No.	Qty.	Description
17	203150000039	1	Level sensor
18	215040000003	2	Washer 5-A2-70 GB/T 93
19	203060000146	1	Travel switch

7.2.14 GROUND CONTROL BOX ASSEMBLY(PN.104020060011)

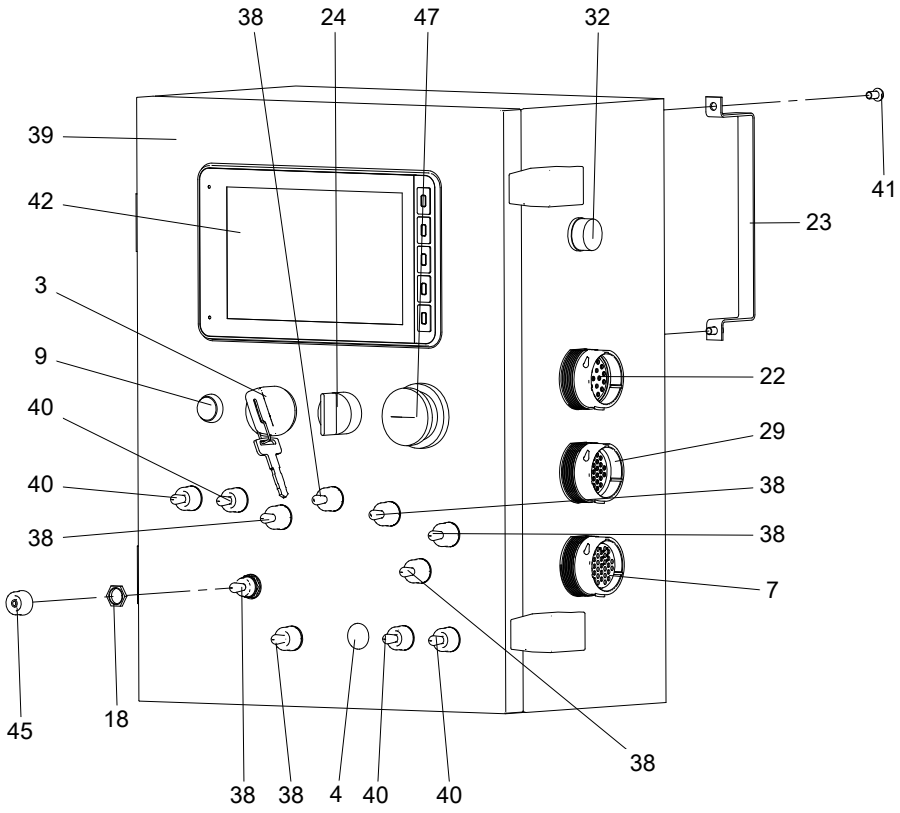

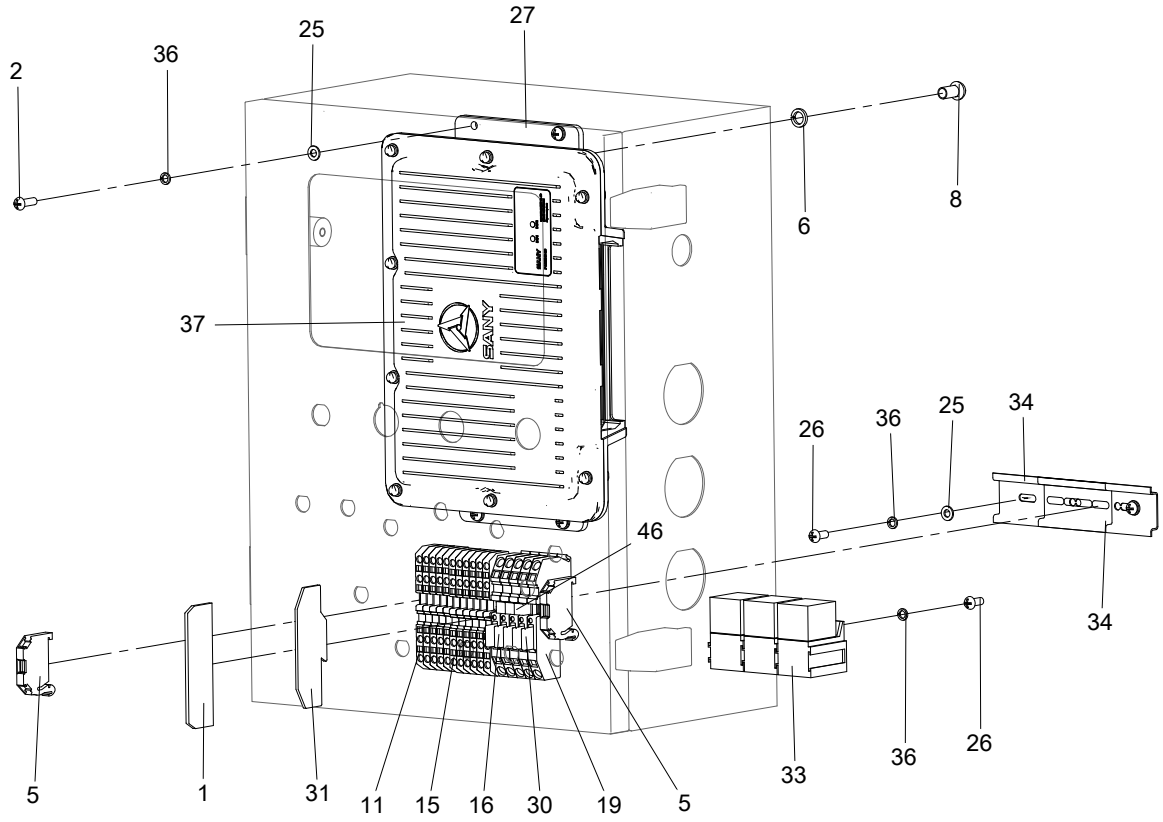

No.	Part No.	Qty.	Description
1	203080003052	1	End plate
2	215020000111	4	Screw M5×16-A2-70 GB/T 818
3	203060000114	1	Key switch
4	105045060004	1	Plug, controller
5	203080003053	2	Terminal block end plate
6	215040000005	4	Washer 8-ZnD GB/T 93
7	203080000516	1	Connector, 31P, female
8	215020000120	4	Screw M8×16-4.8-ZnD GB/T 818
9	203060000020	1	Button, yellow
10	203080000033	31	Terminal, male
11	203080003054	5	Terminal, GND
12	203080003055	1	Tag, terminal
13	203060000103	4	Terminal, #12, male
14	203080003056	1	Tag, terminal
15	203080003051	6	Terminal
16	203070000008	1	Fuse
17	203080003147	1	Connector assy, SECD-7I0A
18	203080000109	11	Nut
19	203080003057	5	Terminal
20	104020060001	1	Membrane, ground controller
21	203080000068	24	Blind plug
22	203080000518	1	Connector, 21-pin, male
23	105001060106	3	Retaining plate, display screen
24	203060000029	1	Select switch
25	215040000032	12	Washer 5-A2 GB/T 97.1
26	215020000110	5	Screw M5×12-A2-70 GB/T 818
27	105001060108	2	Connecting plate, controller
28	203080000041	24	Terminal, female
29	203080000523	1	Connector, 31P, male
30	203070000018	4	Fuse
31	203080003059	1	End plate
32	203050000005	1	Buzzer
33	203040000003	3	Relay
34	203990000001	2	Guiderail
35	203060000101	3	Nut, retaining
36	215040000003	15	Washer 5-A2-70 GB/T 93
37	203020000040	1	Controller

No.	Part No.	Qty.	Description
38	203060000003	7	Switch, toggle
39	104020060022	1	Ground controller assembly
40	203060000021	4	Switch, toggle
41	215020000109	6	Screw M5×10-A2-70 GB/T 818
42	203200000004	1	Display screen
43	203080003146	1	Connector assy, SEHC-283B
44	203060000098	3	Spring plate, metal
45	203080000101	11	Cap, waterproof
46	203080003060	3	Jumper
47	203060000142	1	Emergency stop switch

7.2.15 GROUND CONTROL BOX HARNESS(PN.104020060005)

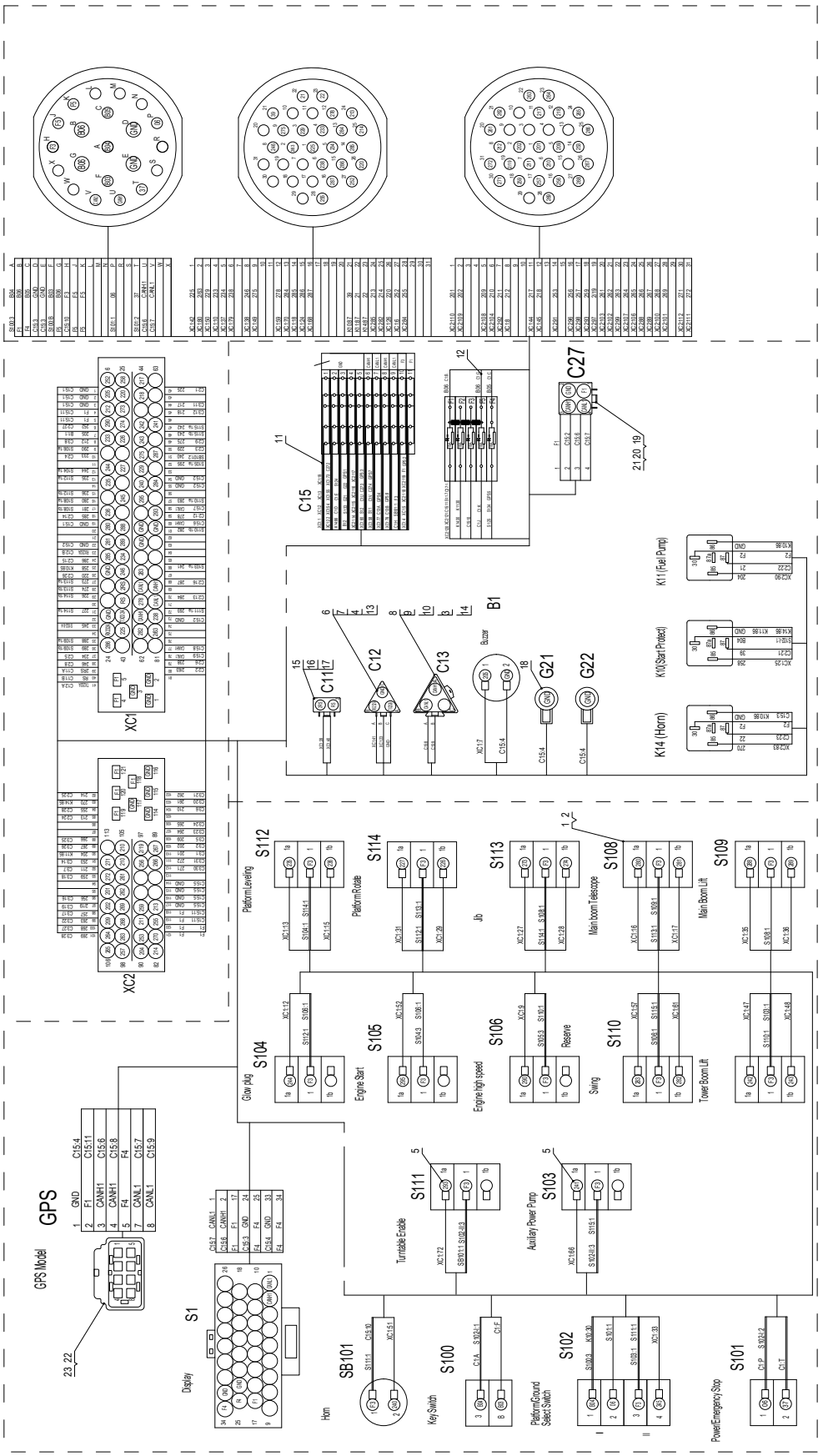

No.	Part No.	Qty.	Description
	104020060005	1	Ground controller wiring diagram
1	203080000023	26	Terminal, blade-hole type
2	203080000022	1	Heat shrink tube
3	203080000033	2	Terminal, male
4	203080000041	10	Terminal, female
5	203080000036	12	Terminal
6	203080000404	1	Sheath
7	203080000032	1	Lock
8	203080000405	1	Sheath
9	203080000046	1	Lock
10	203080000086	1	Sheath
11	203080000096	50	Cable, thin wall
12	203080000047	1	Cable
13	203080000473	1	Cover, waterproof
14	203080000068	1	Blind plug
15	203080000410	1	Sheath
16	203080000016	1	Lock
17	203080000474	1	Cover, waterproof
18	203080000133	2	Terminal, blade-hole type
19	203080000044	1	Sheath
20	203080000020	1	Lock
21	203080000492	1	Cover, waterproof
22	203080003216	1	Sheath
23	203080003218	7	Terminal AMP

7.2.16 TURNTABLE SENSORS HARNESS(PN.104020060002)

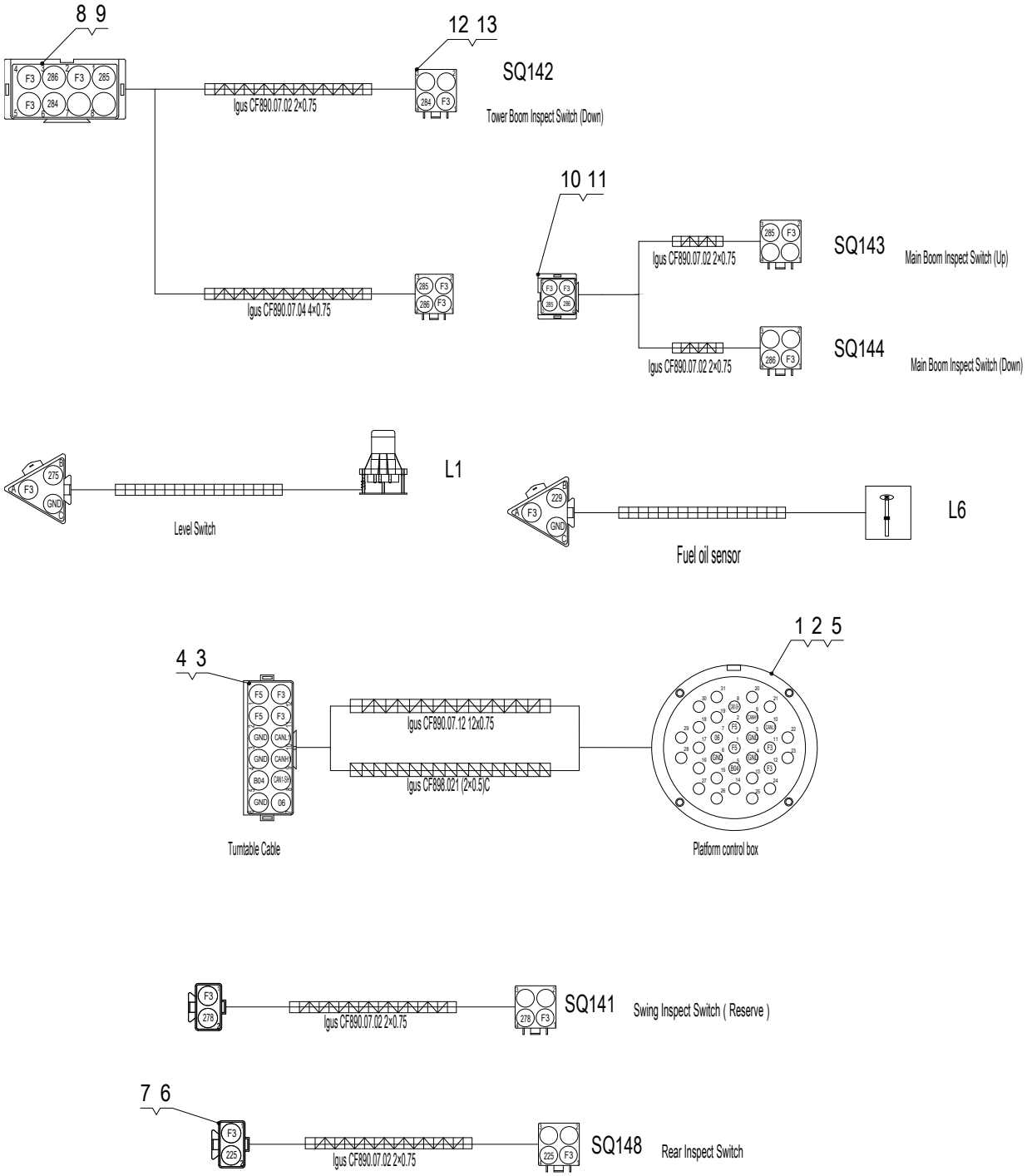

No.	Part No.	Qty.	Description
	104020060002	1	Turntable Sensors Harness
1	203080000520	1	Connector, 31P, female
2	203060000096	1	End clip, 180 deg.
3	203080000403	1	Sheath
4	203080000157	1	Lock
5	203080000068	29	Blind plug
6	203080000408	1	Sheath
7	203080000021	1	Lock
8	203080000413	1	Sheath
9	203080000126	1	Lock
10	203080000054	1	Sheath
11	203080000088	1	Lock
12	203080000044	5	Sheath
13	203080000020	5	Lock

7.2.17 TURNTABLE HARNESS(PN.104020063005)

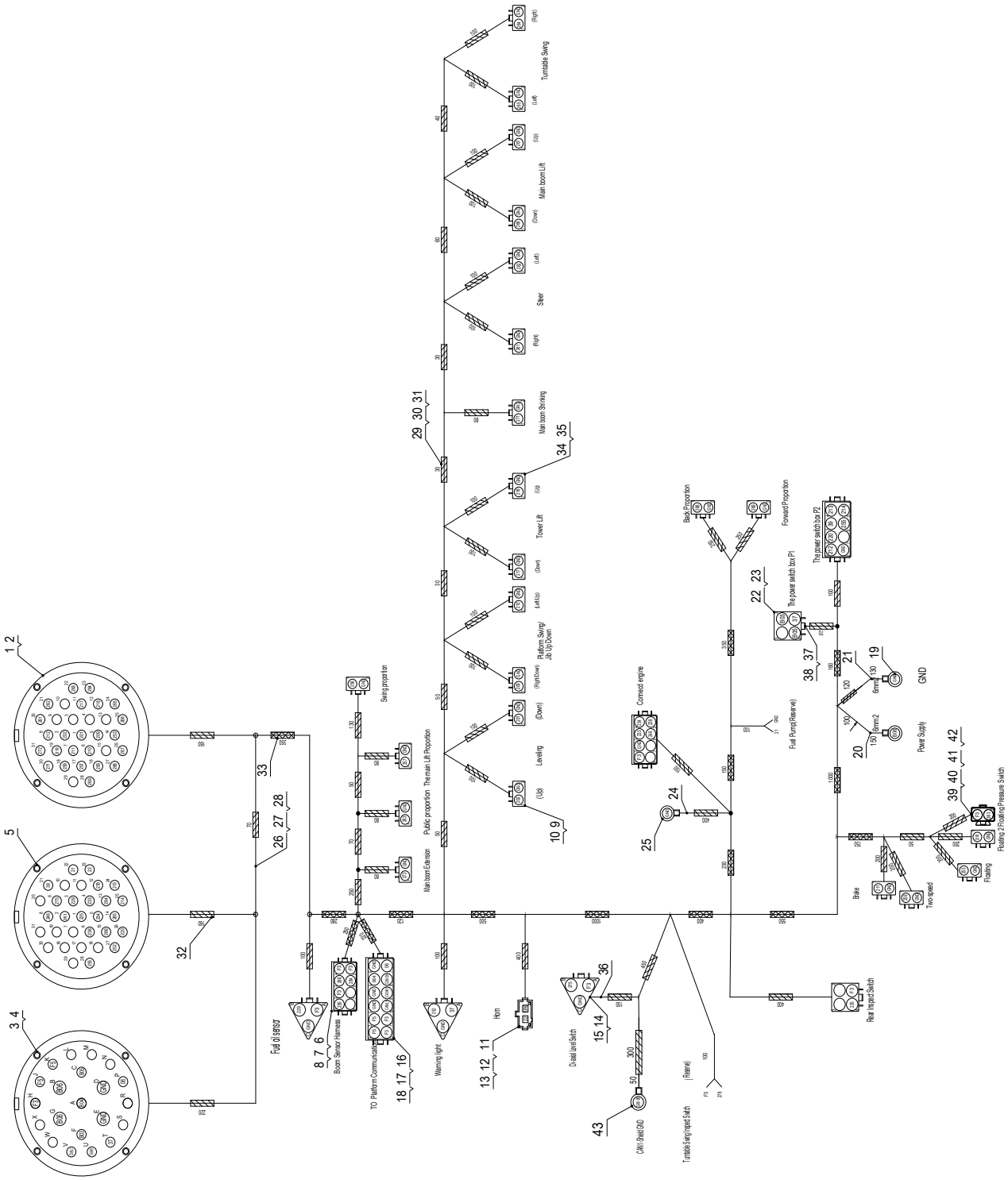

No.	Part No.	Qty.	Description
	104020063005	1	Turntable harness
1	203080000515	1	Connector, 31P, male
2	203060000096	3	End clip, 180 deg.
3	203080000517	1	Connector, 21-pin, female
4	203060000097	4	Terminal, #12, female
5	203080000520	1	Connector, 31P, female
6	203080000406	3	Sheath
7	203080000112	3	Lock
8	203080000041	123	Terminal, female
9	203080000410	26	Sheath
10	203080000016	25	Lock
11	203080000427	1	Sheath
12	203080000428	2	Pin, female
13	203080000429	1	Cap, waterproof
14	203080000404	3	Sheath
15	203080000032	3	Lock
16	203080000414	1	Sheath
17	203080000159	1	Lock
18	203080000068	33	Blind plug
19	203080000134	2	Terminal, blade-hole type
20	203080000161	6	Cable
21	203080000191	5	Cable
22	203080000044	2	Sheath
23	203080000020	2	Lock
24	203080000030	1	Heat shrink tube
25	203080000244	1	Terminal, round top insulated
26	203080000564	150	Cable, thin wall (white)
27	203080000563	60	Cable, thin wall (black)
28	203080000562	40	Cable, thin wall (red)
29	203080000424	6	Nylon hose, closed-end
30	203080000422	4	Nylon hose, closed-end
31	203080000037	2	Corrugated pipe
32	203080000417	1	Nylon hose, closed-end
33	203080000419	1	Nylon hose, closed-end
34	203080000437	25	End attachments, 2-pin, female
35	203080000448	26	Rubber, 2-pin
36	203080000508	3	End clip

No.	Part No.	Qty.	Description
37	203080000445	2	End attachments, 4-pin, female
38	203080000446	2	Rubber, 4-pin
39	203080000408	1	Sheath
40	203080000021	1	Lock
41	203080000465	1	End clip
42	203080000033	26	Terminal, male
43	203080000133	1	Terminal, blade-hole type

7.2.18 ELECTRICAL SCHEMATIC DIAGRAM

Electrical Schematic Diagram(PN.104021063091)

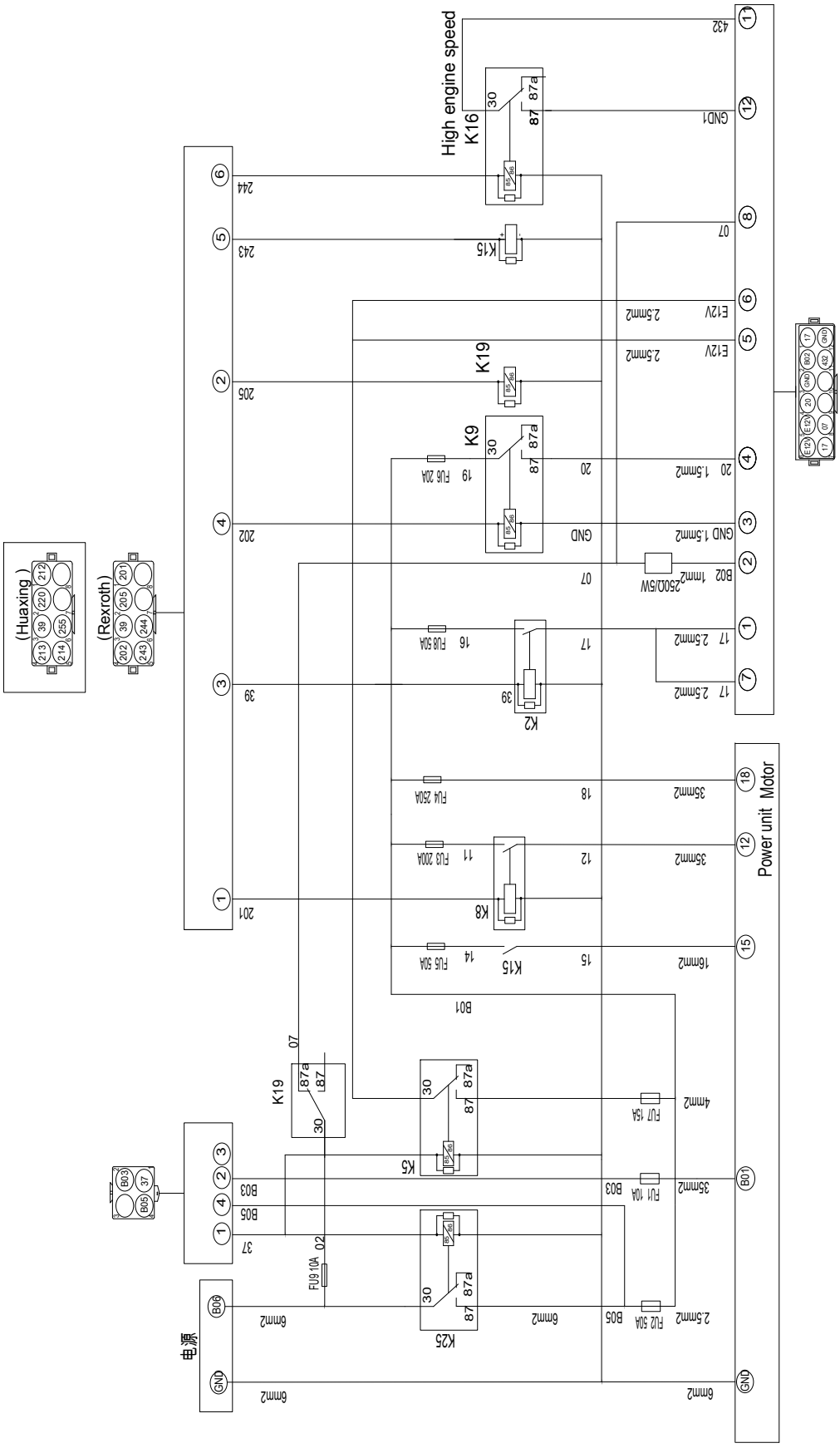

7.2.19 ELECTRICAL SCHEMATIC OF ENGINE

Electrical schematic of engine(PN.104021063093)

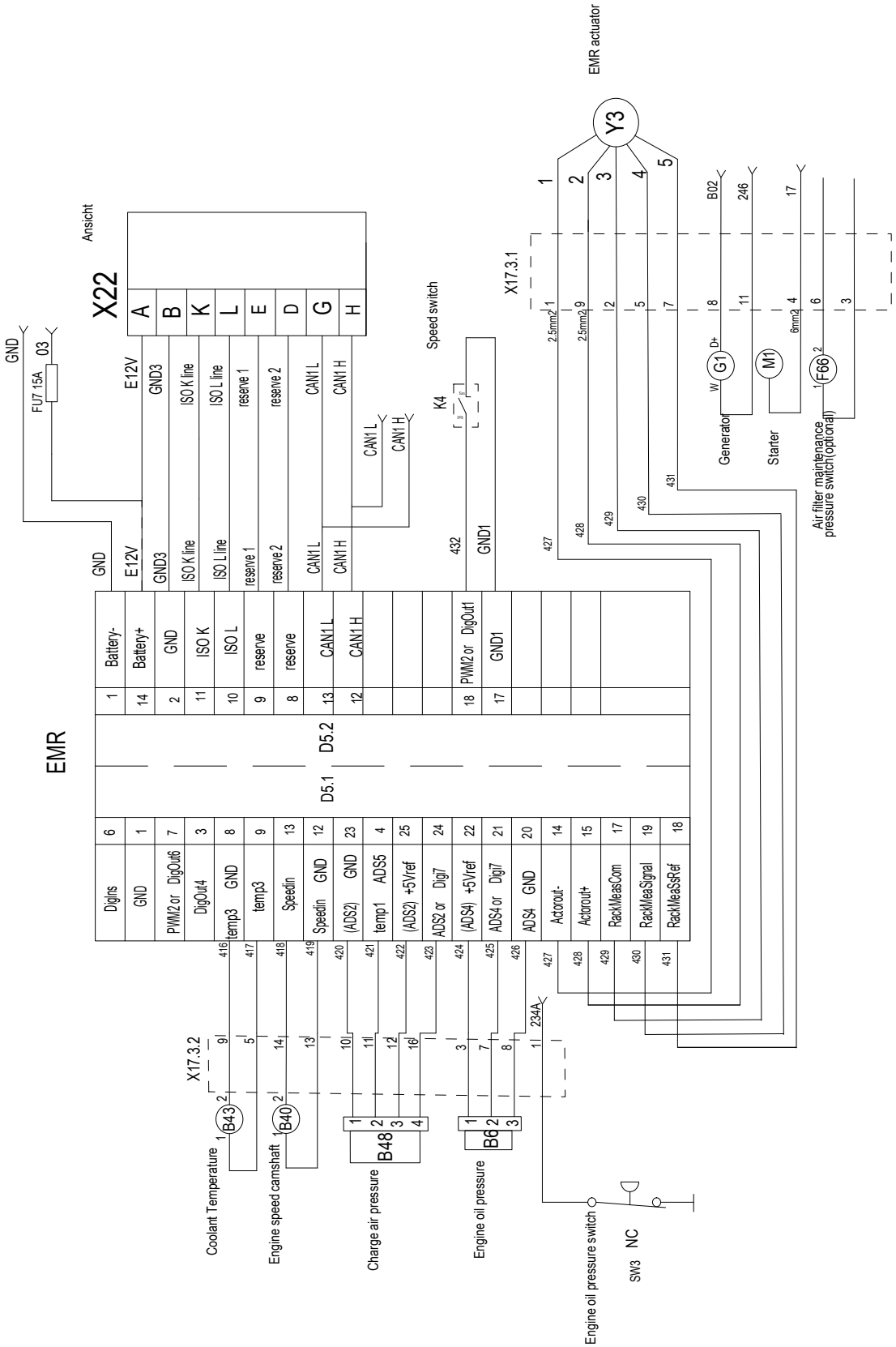

7.2.20 ELECTRICAL SCHEMATIC DIAGRAM(RISING & DEUTZ, CHINA STAGE III)

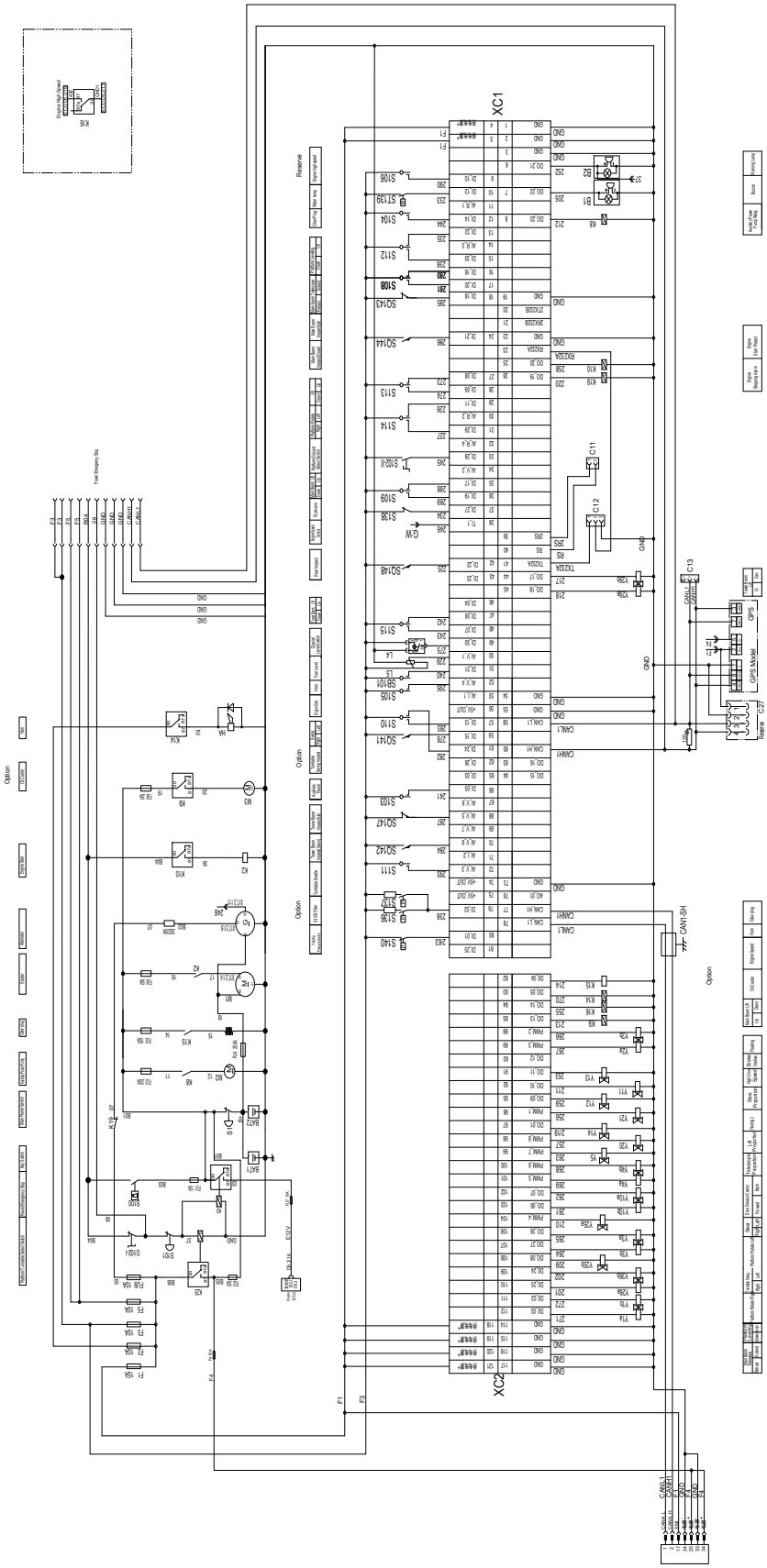

Electrical schematic diagram of platform

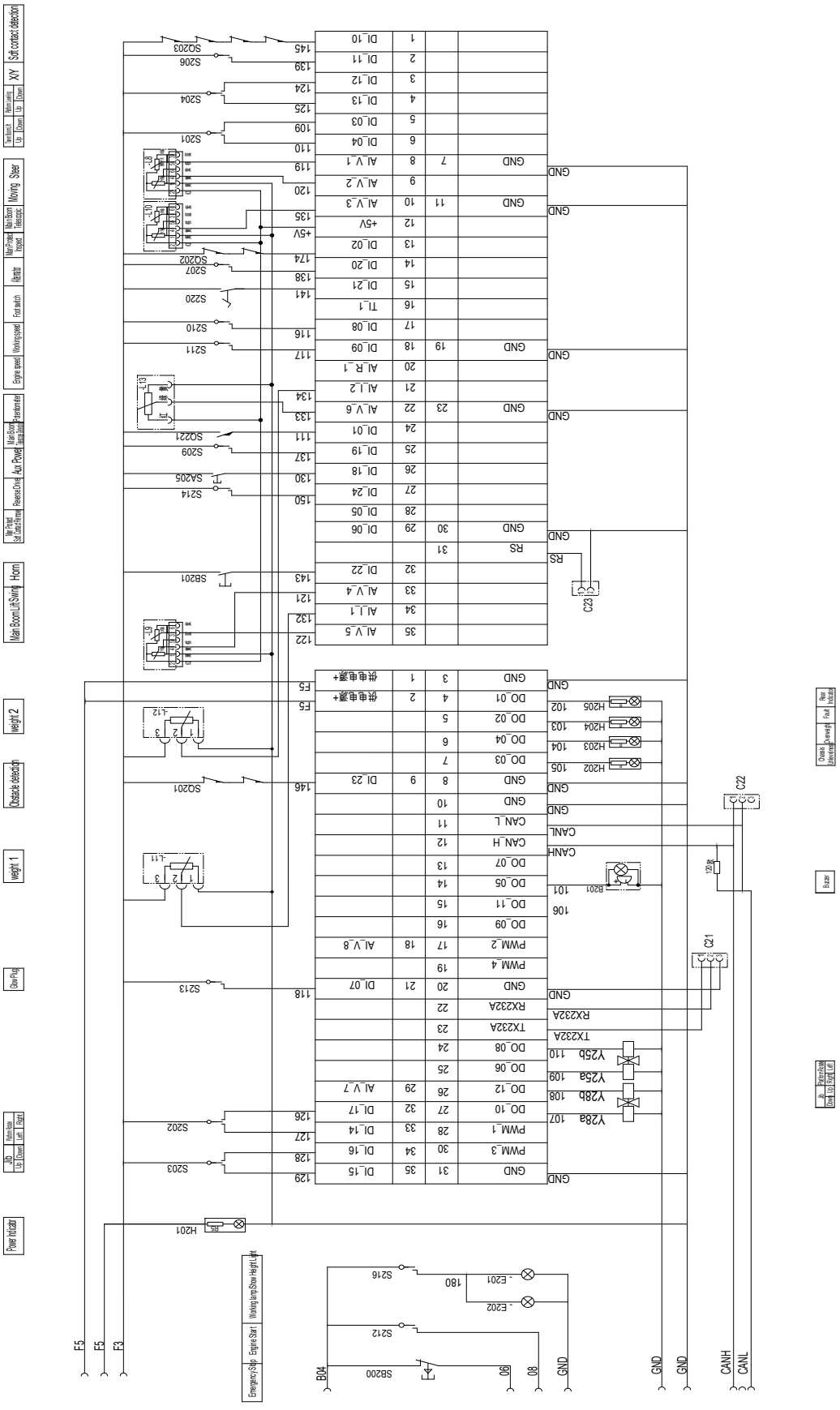

7.3 ELECTRICAL SYSTEM（REXROTH）

7.3.1 CHASSIS ELECTRICAL COMPONENTS INSTALLATION

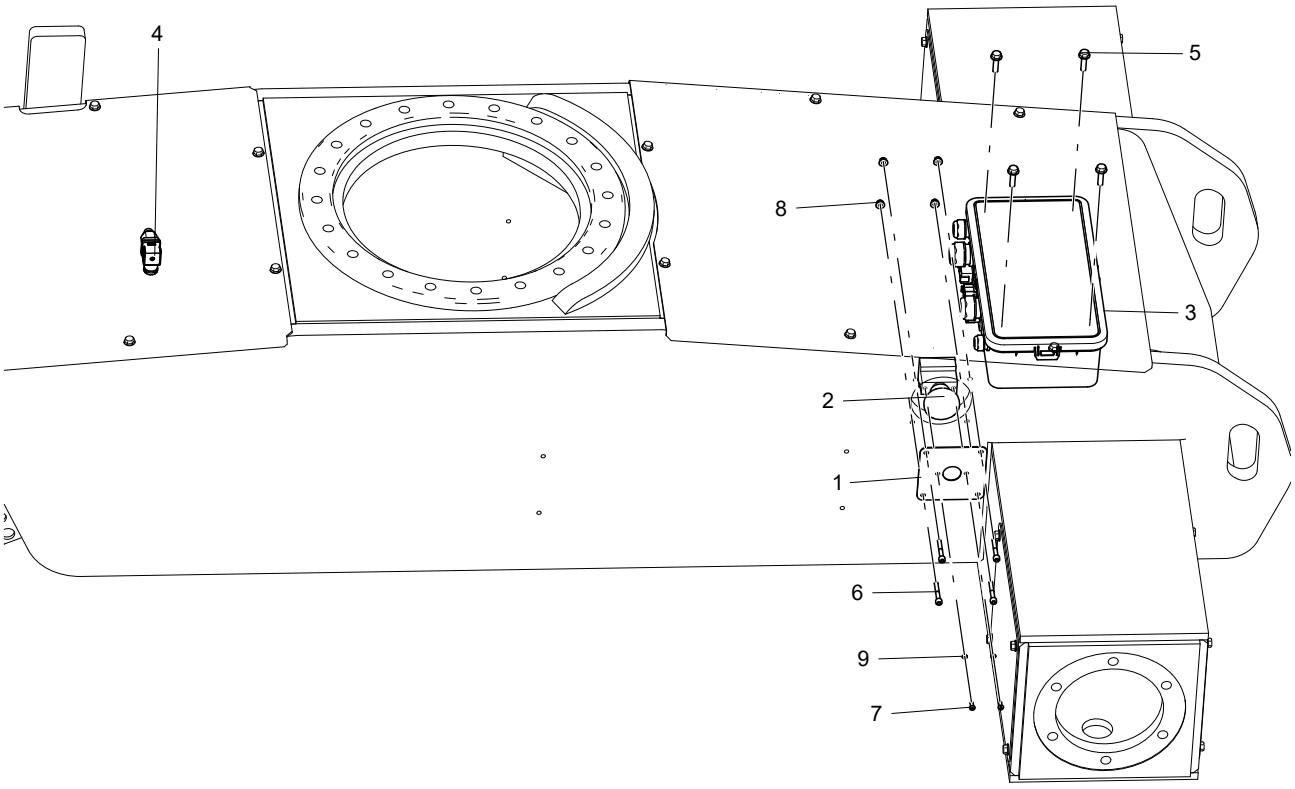

No.	Part No.	Qty.	Description
1	104009060001	1	Mounting plate, power-off switch
2	203060000024	1	Power-off switch
3	203100003010	1	Power switch box
4	203150003016	1	Pressure switch
5	215010000236	4	Bolt M8×30-8.8-ZnD GB/T 5789
6	215020000017	4	Screw M6×45-A2-70 GB/T 70.1
7	215020000110	2	Screw M5×12-A2-70 GB/T 818
8	215030000107	4	Nut M6-8-ZnD GB/T 6183
9	215040000003	2	Washer 5-A2-70 GB/T 93

7.3.2 BATTERIES INSTALLATION

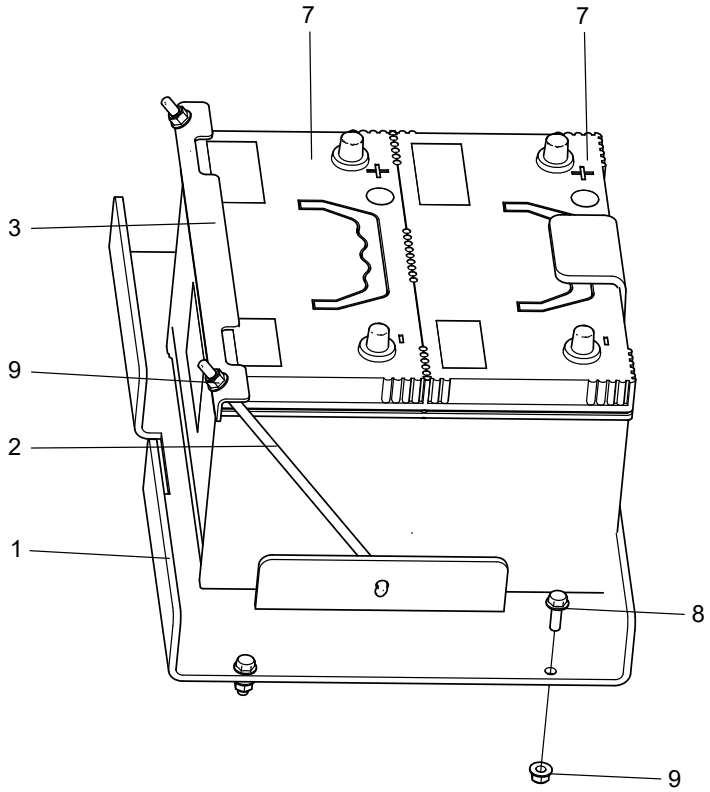

No.	Part No.	Qty.	Description
1	104009060024	1	Bracket,battery
2	105001020169	2	Tie rod
3	105001020176	1	Pressbar 2
4	203080000250	2	Battery terminal (Not Shown)
5	203100000051	2	Jacket, flexible(Not Shown)
6	203100000053	2	Jacket, flexible(Not Shown)
7	203100000061	2	Battery, maintenance-free
8	215010000235	4	Bolt M8×25-8.8-ZnD GB/T 5789
9	215030000108	6	Nut M8-8-ZnD GB/T 6183

7.3.3 ELECTRICAL INSTALLATION-DEUTZ ENGINE

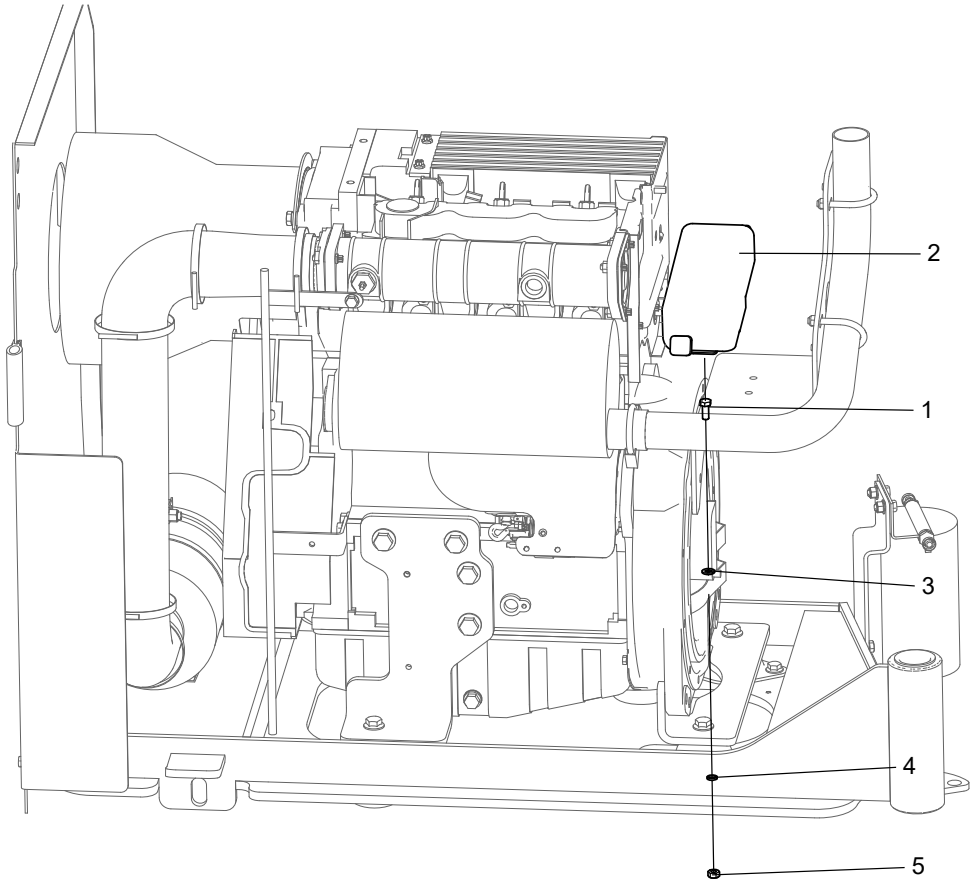

No.	Part No.	Qty.	Description
1	215010000057	2	Bolt M8×20-8.8-ZnD GB/T 5783
2	203020000004	1	Start/stop controller
6	216020000019	1	Clip, steel cable
5	215030000005	2	Nut M8-8-ZnD GB/T 6170
3	215040000034	2	Washer 8-200HV-ZnD GB/T 97.1
4	215040000005	2	Washer 8-ZnD GB/T 93

7.3.4 DEUTZ ENGINE HARNESS (PN.104009060066)

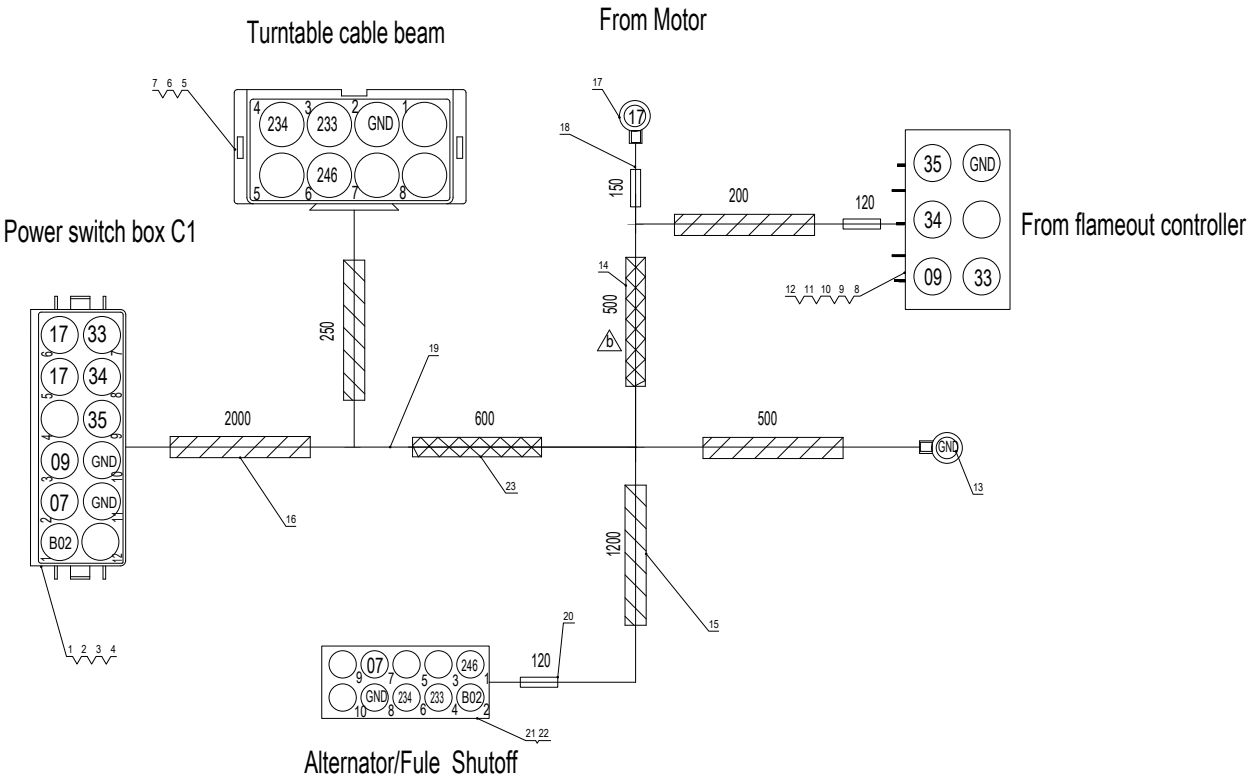

No.	Part No.	Qty.	Description
	104009060066	1	Deutz Engine Harness
1	203080000414	1	Sheath
2	203080000159	1	Lock
3	203080000041	13	Terminal, female
4	203080000068	3	Blind plug
5	203080000413	1	Sheath
6	203080000126	1	Lock
7	203080000033	6	Terminal, male
8	203080000210	1	Sheath
9	203080000215	1	Lock
10	203080000213	5	Terminal
11	203080000214	1	Seal ring
12	203080000211	1	Plug
13	203080000124	1	Terminal, blade-hole type
14	203080000424	1	Nylon hose, closed-end

No.	Part No.	Qty.	Description
15	203080000422	3	Nylon hose, closed-end
16	203080000421	1	Nylon hose, closed-end
17	203080000039	1	Terminal, blade-hole type
18	203080000375	20	Cable
19	203080000370	3	Cable
20	203080000030	1	Heat shrink tube
21	203080003004	1	Plug
22	203080000428	6	Pin, female
23	203080000135	1	Corrugated pipe (Black)

7.3.5 BOOM ELECTRICAL COMPONENTS INSTALLATION (REXROTH)

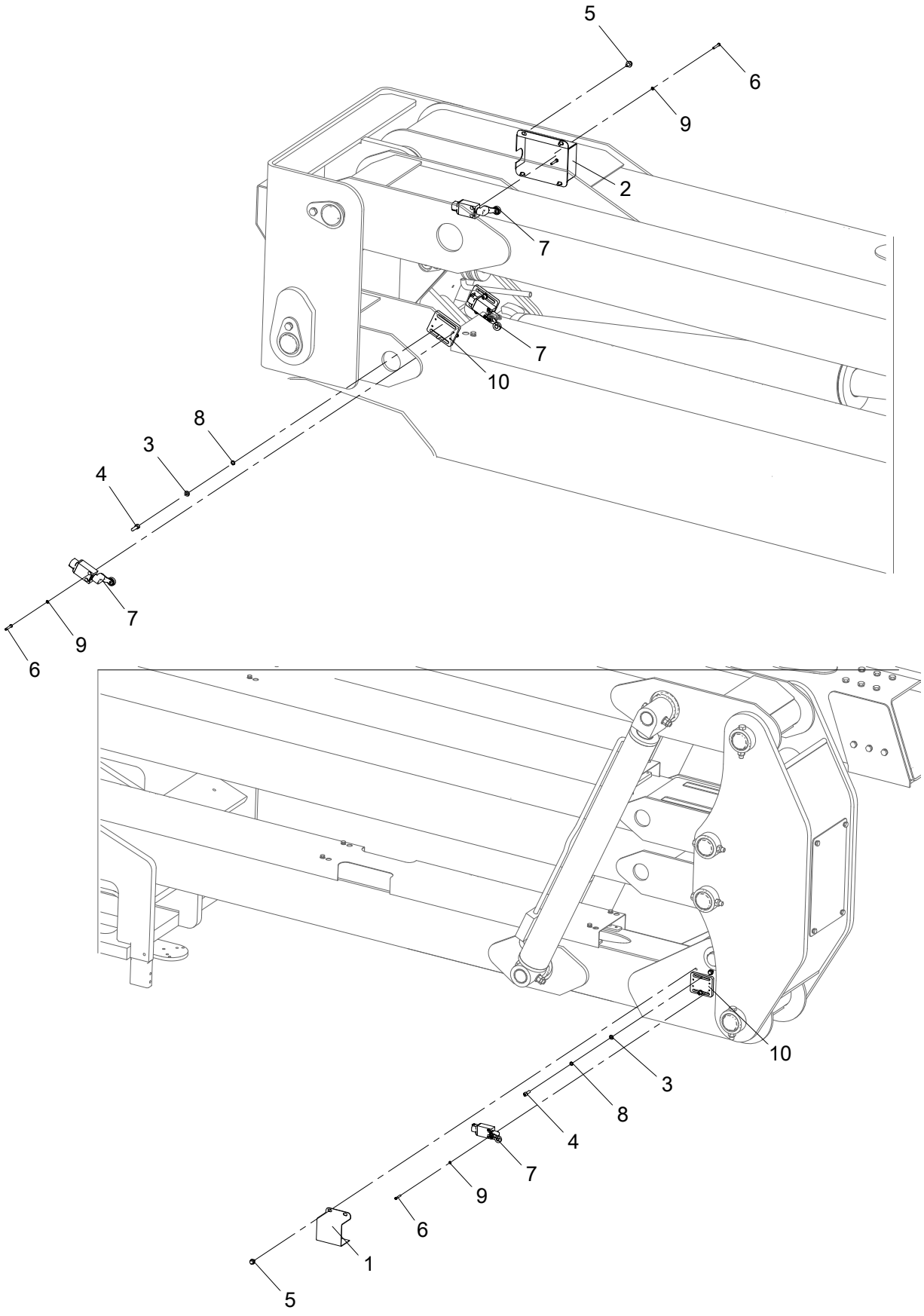

No.	Part No.	Qty.	Description
1	104009060078	1	Cover, travel switch
2	104011060052	1	Cover, travel switch
3	215040000033	6	Washer 6-A2 GB/T 97.1
4	215020000012	6	Screw M6×20-A2-70 GB/T 70.1
5	215010000229	6	Bolt M6×10-8.8-ZnD GB/T 5789
6	215020000108	8	Screw M4×25-A2-70 GB/T 818
7	203060000146	4	Travel switch
8	215040000004	6	Washer 6-A2-70 GB/T 93
9	215040000002	8	Washer 4-A2-70 GB/T 93
10	104009060027	3	Mounting plate, travel switch

7.3.6 CABLE TRACK DIAGRAM(PN.104021063058)

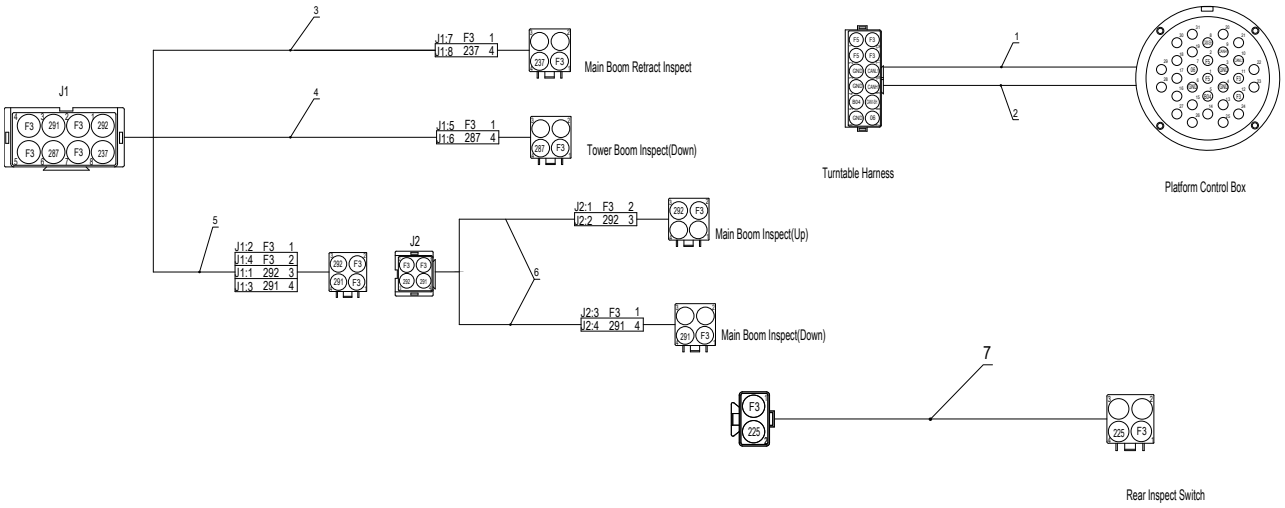

No.	Part No.	Qty.	Description
	104021063058	1	Cable track diagram
1	203230000652	1	Cable, chain
2	203230000653	1	Cable, CAN bus, cable track
3	203230000643	1	Cable, chain
4	203230000638	1	Cable, chain
5	203230000642	1	Cable, chain
6	203230000634	2	Cable, cable track
7	203230000837	1	Cable, chain

7.3.7 PLATFORM HARNESS(PN.104021063016)

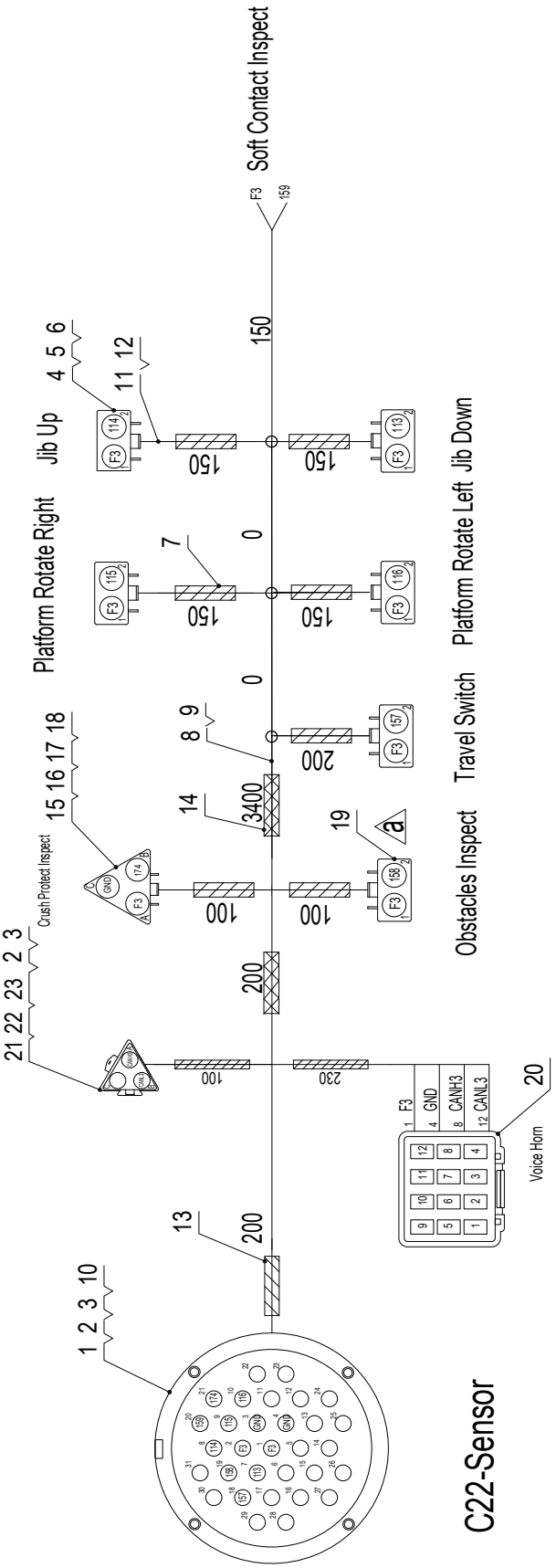

No.	Part No.	Qty.	Description
	104021063016	1	Wiring harness, platform
1	203080000515	1	Connector, 31P, male
2	203080000068	20	Blind plug
3	203080000033	14	Terminal, male
4	203080000410	6	Sheath
5	203080000016	6	Lock
6	203080000041	15	Terminal, female
7	203080000463	1	Nylon hose, closed-end
8	203080000564	32	Cable, thin wall (white)
9	203080000562	32	Cable, thin wall (red)
10	203060000096	1	End clip, 180 deg.
11	203080000437	6	End attachments, 2-pin, female
12	203080000448	6	Rubber, 2-pin
13	203080000419	1	Nylon hose, closed-end
14	203080000037	3	Corrugated pipe
15	203080000404	1	Sheath
16	203080000032	1	Lock
17	203080000508	1	End clip
18	203080000473	1	Cover, waterproof
19	203080000474	1	Cover, waterproof
20	203080003584	1	Sheath
21	203080000405	1	Sheath
22	203080000046	1	Lock
23	203080000086	1	Sheath

7.3.8 PLATFORM HARNESS(PN.103006063009)

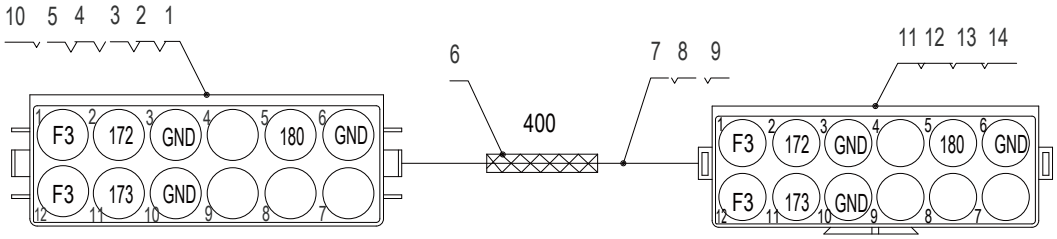

No.	Part No.	Qty.	Description
	103006063009	1	Wiring harness, platform
1	203080000155	1	Sheath
2	203080000159	1	Lock
3	203080000041	8	Terminal, female
4	203080000068	8	Blind plug
5	203080003001	1	End clip
6	203080000037	1m	Corrugated pipe
7	203080000562	2	Cable, thin wall (red)
8	203080000563	2	Cable, thin wall (black)
9	203080000564	1	Cable, thin wall (white)
10	203080003010	1	Nut, big-size
11	203080000403	1	Sheath
12	203080000157	1	Lock
13	203080000033	8	Terminal, male
14	203080000459	1	End clip

7.3.9 PLATFORM SENSORS HARNESS(PN.104021063017)

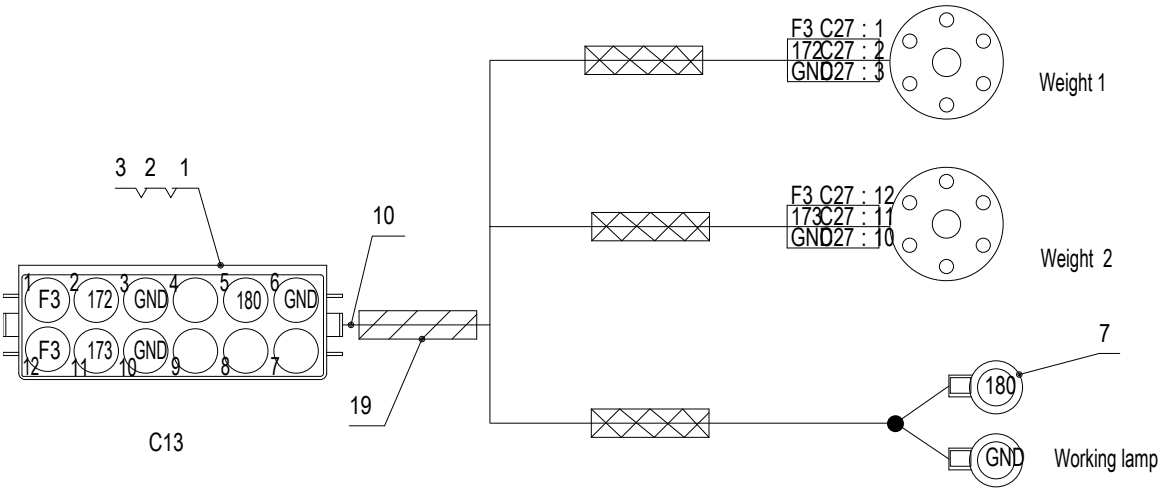

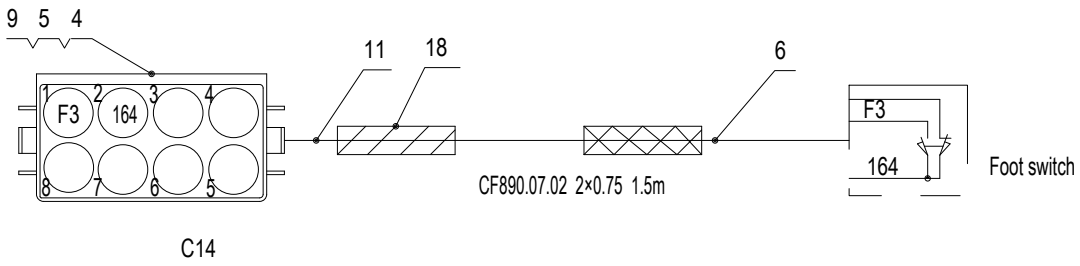

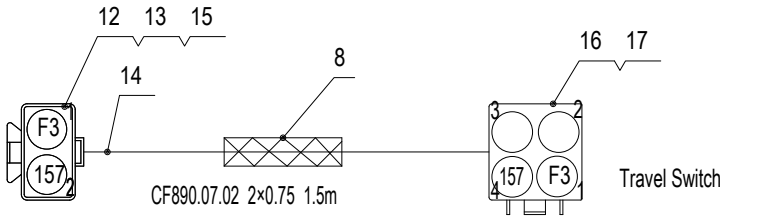

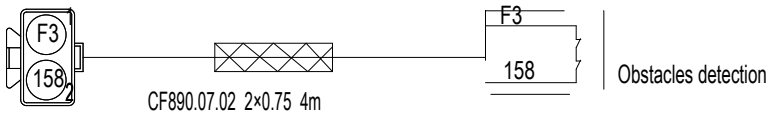

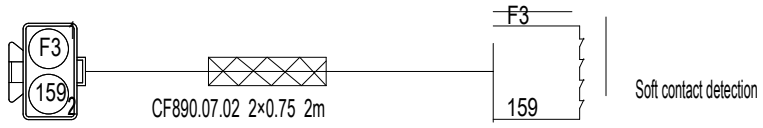



No.	Part No.	Qty.	Description
	104021063017	1	Wiring harness, platform sensor
1	203080000414	1	Sheath
2	203080000159	1	Lock
3	203080000041	12	Terminal, female
4	203080000406	1	Sheath
5	203080000112	1	Lock
6	203080000558	11	Cable, cable track
7	203080000105	2	Terminal round opening
8	203080000006	10	Corrugated pipe
9	203080000068	12	Blind plug
10	203080000461	1	End clip
11	203080000449	1	End clip
12	203080000408	4	Sheath
13	203080000021	4	Lock
14	203080000465	4	End clip
15	203080000033	8	Terminal, male
16	203080000044	1	Sheath
17	203080000020	1	Lock
18	203080000409	1	Nylon hose, closed-end
19	203080000411	1	Nylon hose, closed-end

7.3.10 PLATFORM ELECTRICAL COMPONENTS INSTALLATION （REXROTH）

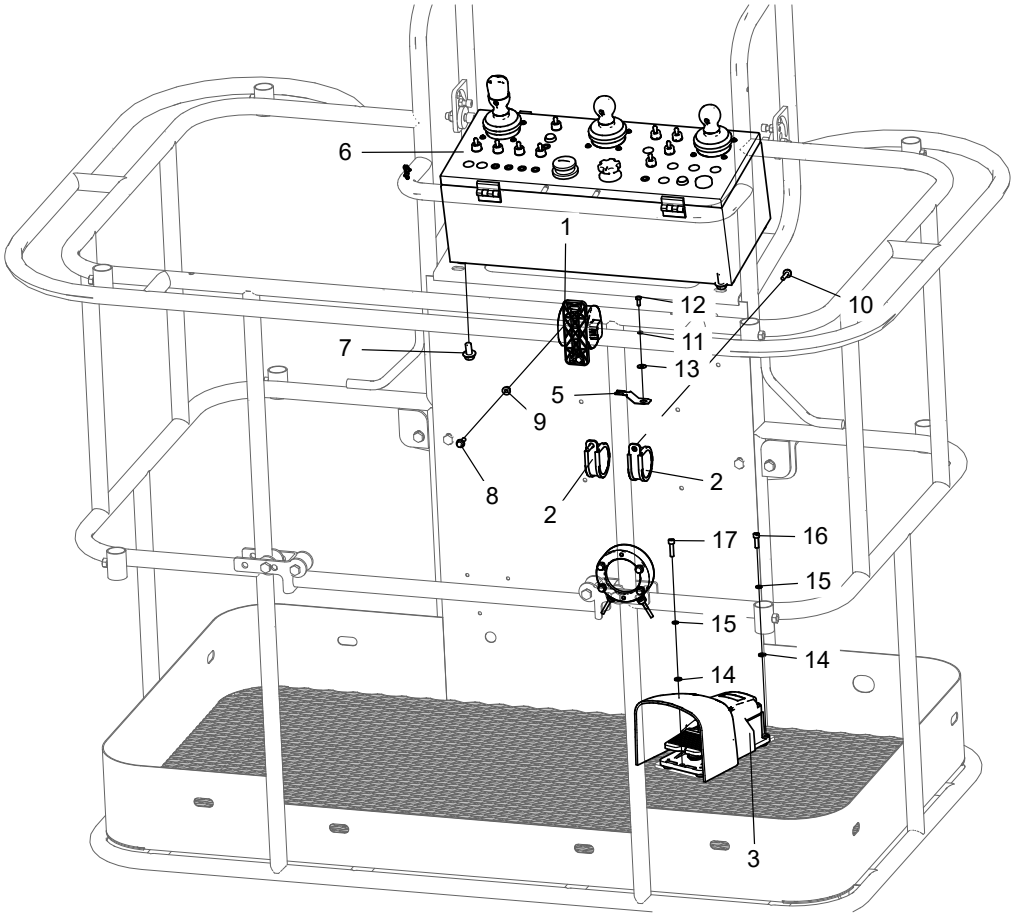

No.	Part No.	Qty.	Description
1	203050003040	1	Voice Horn
2	216020000025	2	Retaning ring, SSG
3	203060000009	1	Footswitch
4	103006060034		Load sensor options
4-1	103006060029	1	Load sensor
4-2	103006060026	1	Load sensor, dual-channel
4-3	103006063056	1	Load Sensor
4-4	103006063057	1	Load Sensor
4-5	103006063058	1	Load Sensor
5	203080000525	1	Fixture
6	104021063009	1	Platform controller assembly
7	215010000237	4	Bolt M10×20-8.8-ZnD GB/T 5789
8	215010000231	2	Bolt M6×20-8.8-ZnD GB/T 5789
9	215030000107	2	Nut M6-8-ZnD GB/T 6183
10	215010000232	2	Bolt M6×25-8.8-ZnD GB/T 5789

No.	Part No.	Qty.	Description
11	215040000003	1	Washer 5-A2-70 GB/T 93
12	215010000041	1	Bolt M5×12-A2-70 GB/T 5783
13	215040000132	1	Washer 5-200HV-A2 GT/B 96.1
14	215040000033	3	Washer 6-A2 GB/T 97.1
15	215040000004	3	Washer 6-A2-70 GB/T 93
16	215020000012	2	Screw M6×20-A2-70 GB/T 70.1
17	215020000013	1	Screw M6×25-A2-70 GB/T 70.1

7.3.11 PLATFORM CONTROL BOX ASSEMBLY(PN.104021063009)

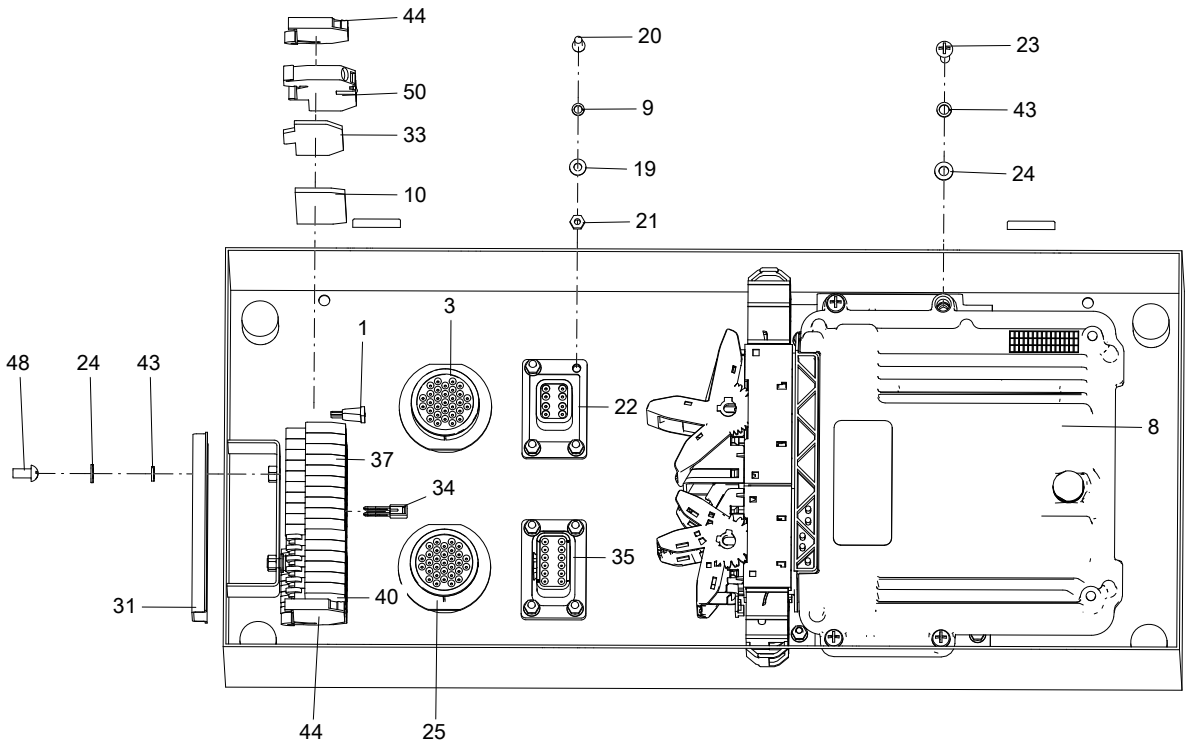

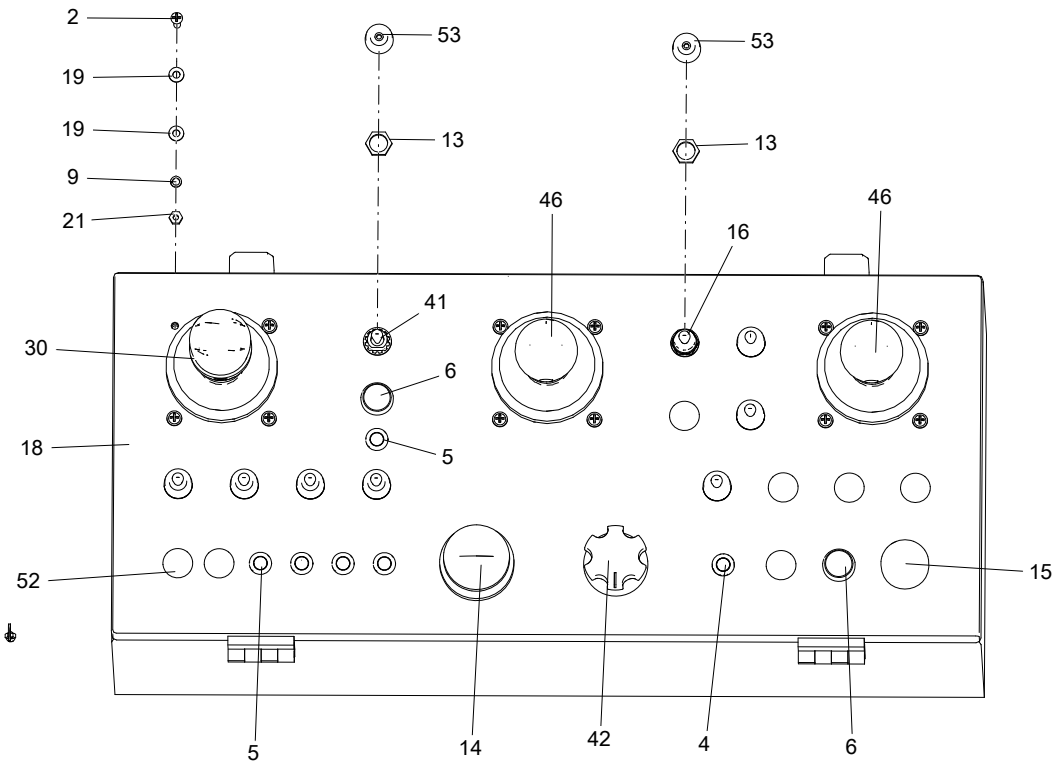

No.	Part No.	Qty.	Description
1	203070000053	1	Fuse
2	215020000107	12	Screw M4×20-A2-70 GB/T 818
3	203080000523	1	Connector, 31P, male
4	203050003014	1	Indicator light
5	203050003015	5	Indicator light
6	203060000020	2	Button, yellow
7	203060000098	2	Spring plate, metal
8	203020000038	1	Controller
9	215040000002	20	Washer 4-A2-70 GB/T 93
10	203080003052	1	End plate
11	203080000068	47	Blind plug
12	203080003056	1	Tag, terminal
13	203080000109	9	Nut
14	203060000142	1	Emergency stop switch
15	203050003021	1	Buzzer
16	203060000003	4	Switch, toggle
17	203080000126	1	Lock
18	104019060044	1	Platform controller
19	215040000031	32	Washer 4-A2 GB/T 97.1
20	215020000106	8	Screw M4×16-A2-70 GB/T 818
21	215030000002	20	Nut M4-8-A2-70 GB/T 6170
22	203060000088	1	Connector, 8p, with flange
23	215020000113	4	Screw M5×25-A2-70 GB/T 818
24	215040000032	6	Washer 5-A2 GB/T 97.1
25	203080000516	1	Connector, 31P, female
26	203080000019	3	Socket lock, 6-pin
27	104019060004	1	Platform Control Box Assembly
28	203080000033	21	Terminal, male
29	203080000041	14	Terminal, female
30	203060003081	1	Joystick
31	203990000001	1	Guiderail
32	203060000101	2	Nut, retaining
33	203080003059	1	End plate
34	203080003058	3	Jumper
35	203060000090	1	Connector, 12p, with flange
36	203080000085	7	Blind plug
37	203080003051	10	Terminal

No.	Part No.	Qty.	Description
38	203080003055	1	Tag, terminal
39	104020060010	1	PC film, platform controller
40	203080003054	6	Terminal, GND
41	203060000021	5	Switch, toggle
42	203150000021	1	Potentiometer
43	215040000003	6	Washer 5-A2-70 GB/T 93
44	203080003053	2	Terminal block end plate
45	203080000099	11	Terminal
46	203060003084	2	Joystick
47	203080000378	1	Connector
48	215020000109	2	Screw M5×10-A2-70 GB/T 818
49	203080000157	1	Lock
50	203080003057	1	Terminal
51	203060000014	3	Connector, handle
52	105045060004	7	Plug, controller
53	203080000101	9	Cap, waterproof

7.3.12 PLATFORM CONTROL BOX HARNESS(PN.104021063013)

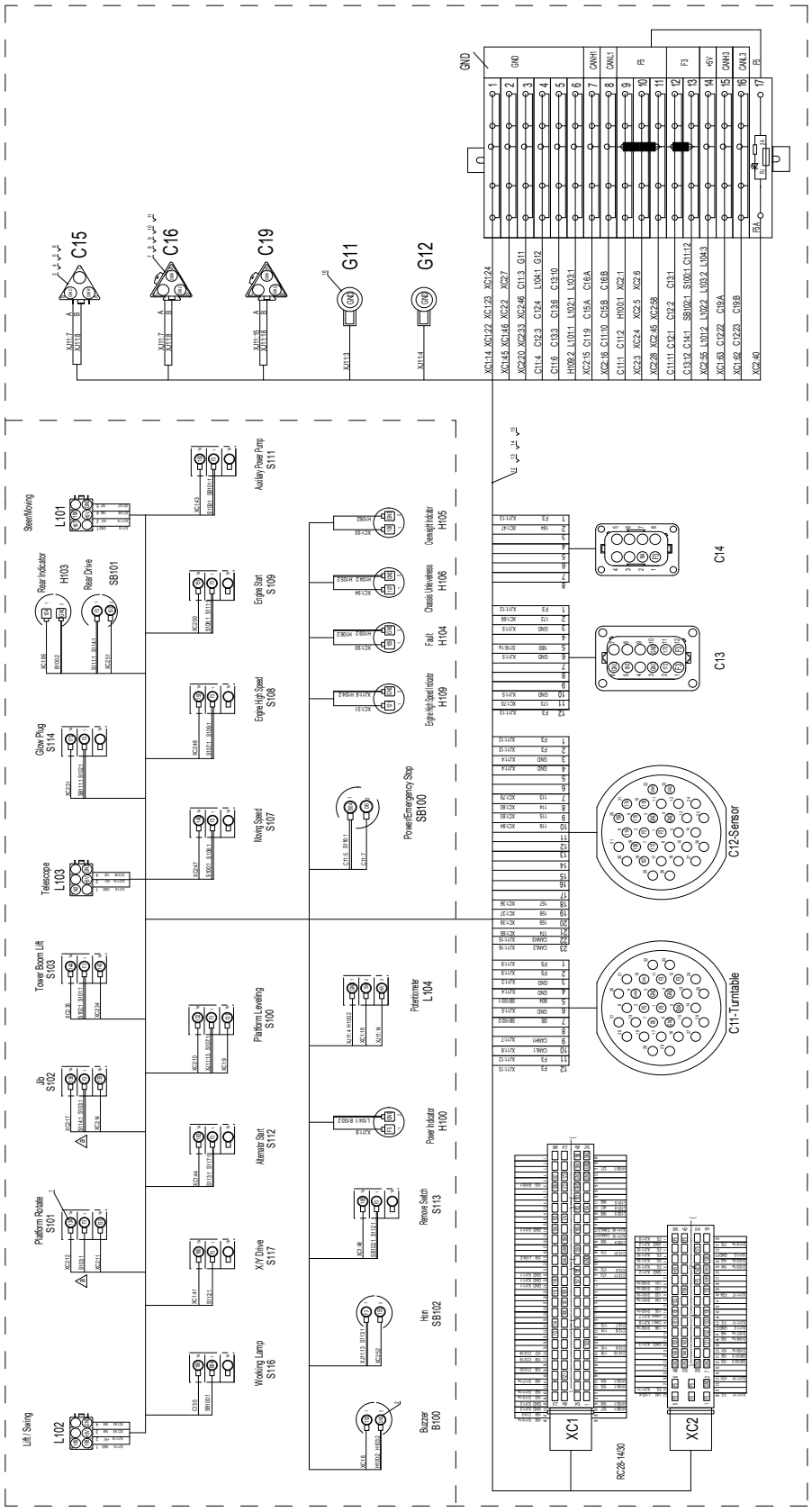

No.	Part No.	Qty.	Description
	104021063013	1	Platform control box wiring diagram
1	203080000023	27	Terminal, blade-hole type
2	203080000036	16	Terminal
3	203080000404	1	Sheath
4	203080000032	1	Lock
5	203080000041	2	Terminal, female
6	203080000473	1	Cover, waterproof
7	203080000405	2	Sheath
8	203080000046	2	Lock
9	203080000033	4	Terminal, male
10	203080000068	3	Blind plug
11	203080000086	2	Sheath
12	203080000562	5	Cable, thin wall (red)
13	203080000563	7	Cable, thin wall (black)
14	203080000564	15	Cable, thin wall (white)
15	216020000020	30	Cable tie, nylon
16	203080000133	2	Terminal, blade-hole type

7.3.13 TURNTABLE ELECTRICAL COMPONENTS INSTALLATION

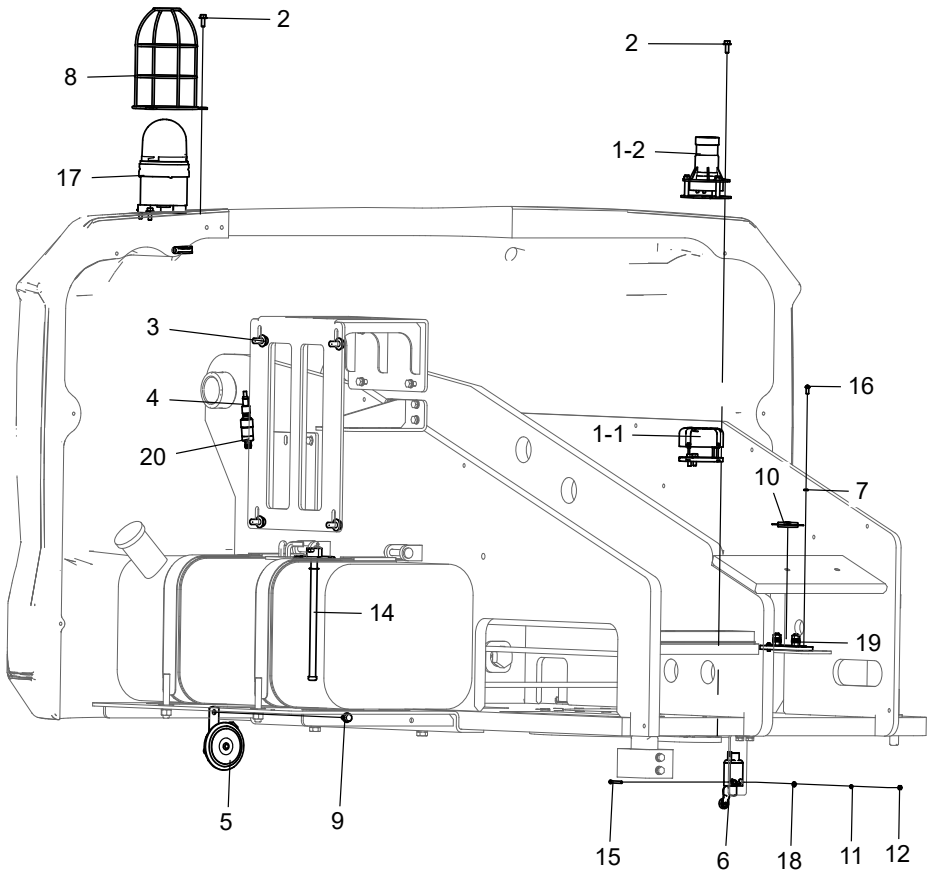

No.	Part No.	Qty.	Description
1	103008063058		Options, Level sensor installation
1-1	203060000111	1	Level sensor
1-2	203150000039	1	Level sensor
2	215010000230	6	Bolt M6×16-8.8-ZnD GB/T 5789
3	215010000237	4	Bolt M10×20-8.8-ZnD GB/T 5789
4	203080003094	1	Plug, with cable
5	203050000034	1	Horn
6	203060000146	1	Travel switch
7	215040000003	2	Washer 5-A2-70 GB/T 93
8	105021060024	1	Guard, beacon light
9	215010000233	1	Bolt M8×12-8.8-ZnD GB/T 5789
10	203070000048	1	Fuse
11	215040000002	2	Washer 4-A2-70 GB/T 93
12	215030000002	2	Nut M4-8-A2-70 GB/T 6170
13	216020000024	3	Retaning ring, SSG
14	203150000026	1	Sensor, liquid level

No.	Part No.	Qty.	Description
15	215020000212	2	Screw M4×35-A2-70 GB/T 818
16	215020000110	2	Screw M5×12-A2-70 GB/T 818
17	203050000060	1	Beacon light
18	215040000031	2	Washer 4-A2 GB/T 97.1
19	203070000056	1	Fuse holder
20	203150000055	1	Pressure sensor

7.3.14 GROUND CONTROL BOX ASSEMBLY(PN.104021063056)

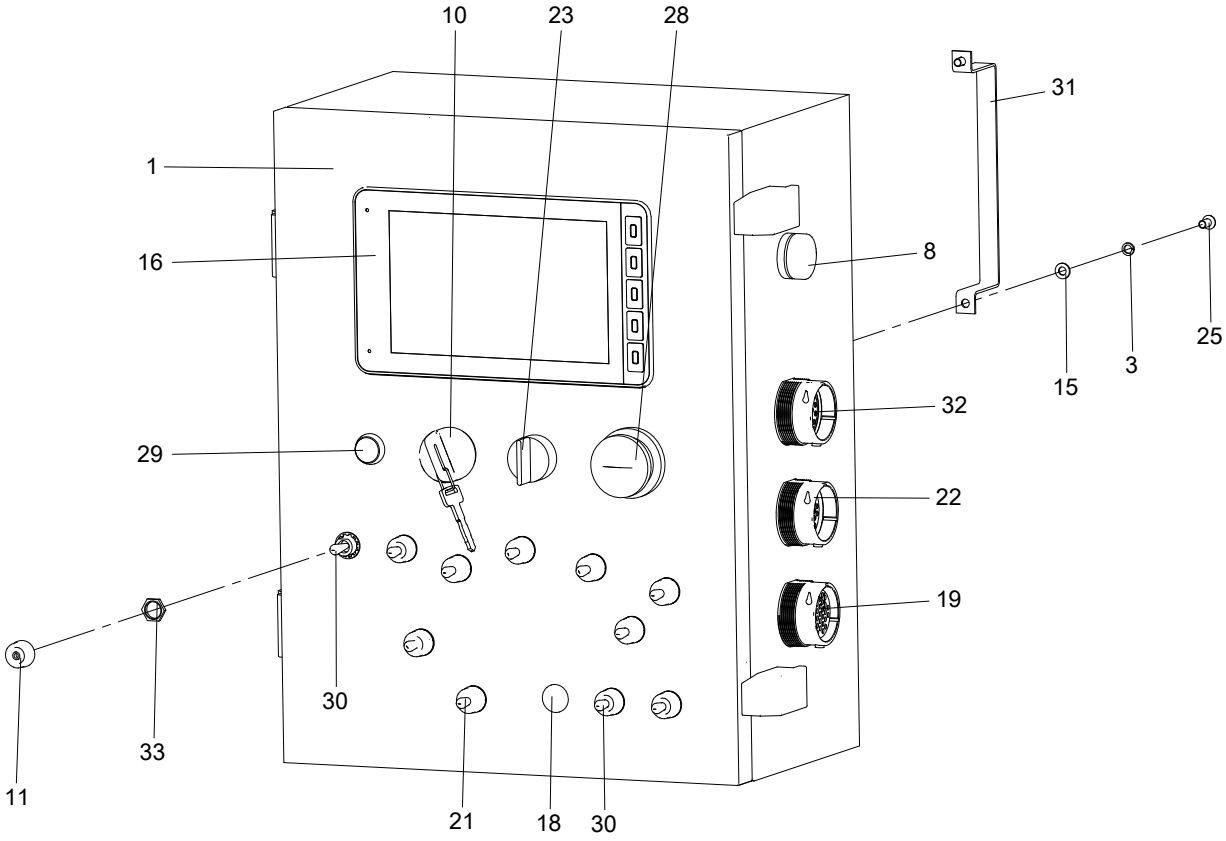

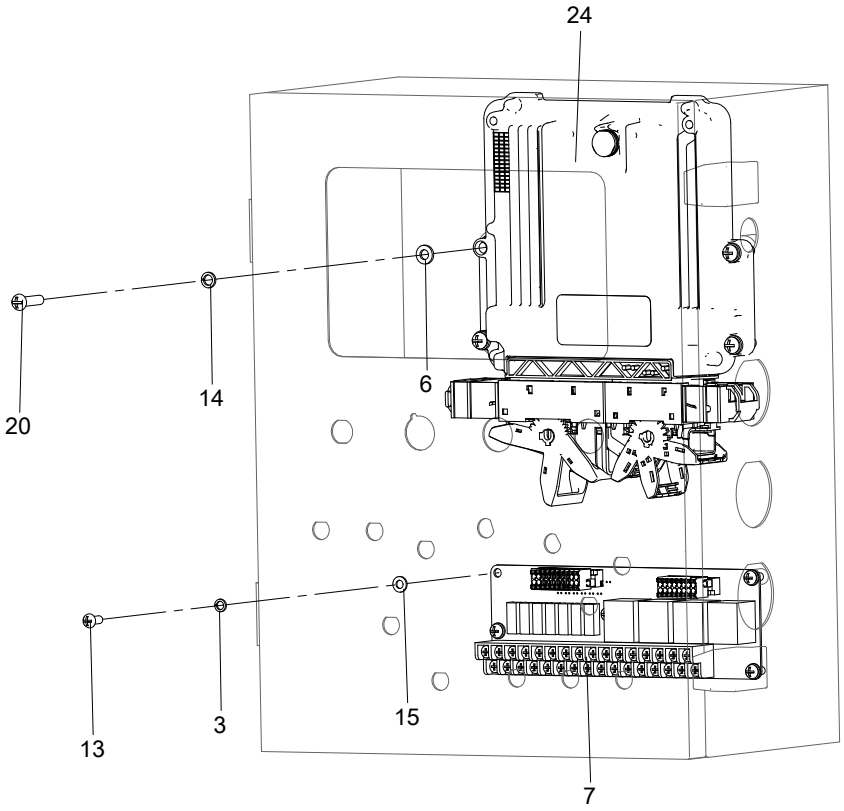

No.	Part No.	Qty.	Description
1	104021063008	1	Ground controller assembly
2	203060000103	4	Terminal, #12, male
3	215040000003	11	Washer 5-A2-70 GB/T 93
4	203080003147	1	Connector assy, SECD-7I0A
5	203060000101	3	Nut, retaining
6	215040000033	4	Washer 6-A2 GB/T 97.1
7	203030000015	1	Integrated board, relay
8	203050003021	1	Buzzer
9	203080000041	24	Terminal, female
10	203060000114	1	Key switch
11	203080000101	11	Cap, waterproof
12	104020060001	1	Membrane, ground controller
13	215020000110	5	Screw M5×12-A2-70 GB/T 818
14	215040000004	4	Washer 6-A2-70 GB/T 93
15	215040000032	11	Washer 5-A2 GB/T 97.1
16	203200000004	1	Display screen
17	104021063057	1	PC film, ground controller
18	105045060004	1	Plug, controller
19	203080000516	1	Connector, 31P, female
20	215020000118	4	Screw M6×25-A2-70 GB/T 818
21	203060000003	7	Switch, toggle
22	203080000523	1	Connector, 31P, male
23	203060000029	1	Select switch
24	203020000038	1	Controller
25	215020000109	6	Screw M5×10-A2-70 GB/T 818
26	203080000068	25	Blind plug
27	203080000378	1	Connector
28	203060000142	1	Emergency stop switch
29	203060000020	1	Button, yellow
30	203060000021	4	Switch, toggle
31	105001060106	3	Retaining plate, display screen
32	203080000518	1	Connector, 21-pin, male
33	203080000109	11	Nut
34	203080000033	30	Terminal, male
35	203060000098	3	Spring plate, metal

7.3.15 GROUND CONTROL BOX HARNESS(PN.104021063012)

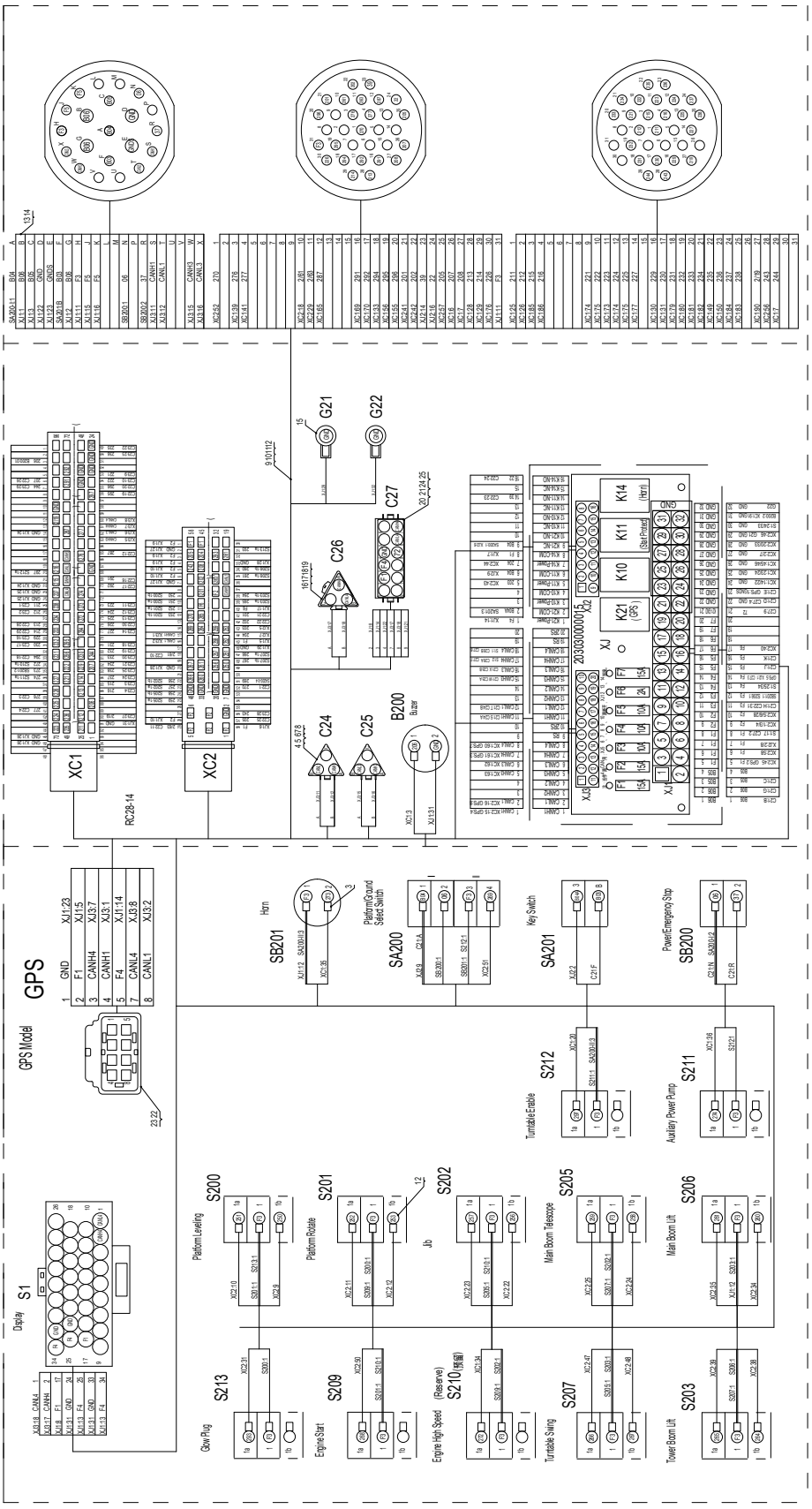

No.	Part No.	Qty.	Description
	104021063012	1	Ground controller wiring diagram
1	203080000036	29	Terminal
2	203080000022	1	Heat shrink tube
3	203080000023	6	Terminal, blade-hole type
4	203080000404	1	Sheath
5	203080000032	1	Lock
6	203080000041	2	Terminal, female
7	203080000068	2	Blind plug
8	203080000473	1	Cover, waterproof
9	203080000564	15	Cable, thin wall (white)
10	203080000562	5	Cable, thin wall (red)
11	203080000563	7	Cable, thin wall (black)
12	216020000020	30	Cable tie, nylon
13	203080000047	1	Cable
14	203080000196	1	Cable
15	203080000133	2	Terminal, blade-hole type
16	203080000405	1	Sheath
17	203080000046	1	Lock
18	203080000033	2	Terminal, male
19	203080000086	1	Sheath
20	203080003532	1	Sheathed
21	203080003533	1	Lock
22	203080003218	7	Terminal AMP
23	203080003216	1	Sheath
24	203060000085	6	Terminal, female
25	203080000085	6	Blind plug

 © Aug. 2022

7.3.16 TURNTABLE SENSORS HARNESS (PN.104021063015)

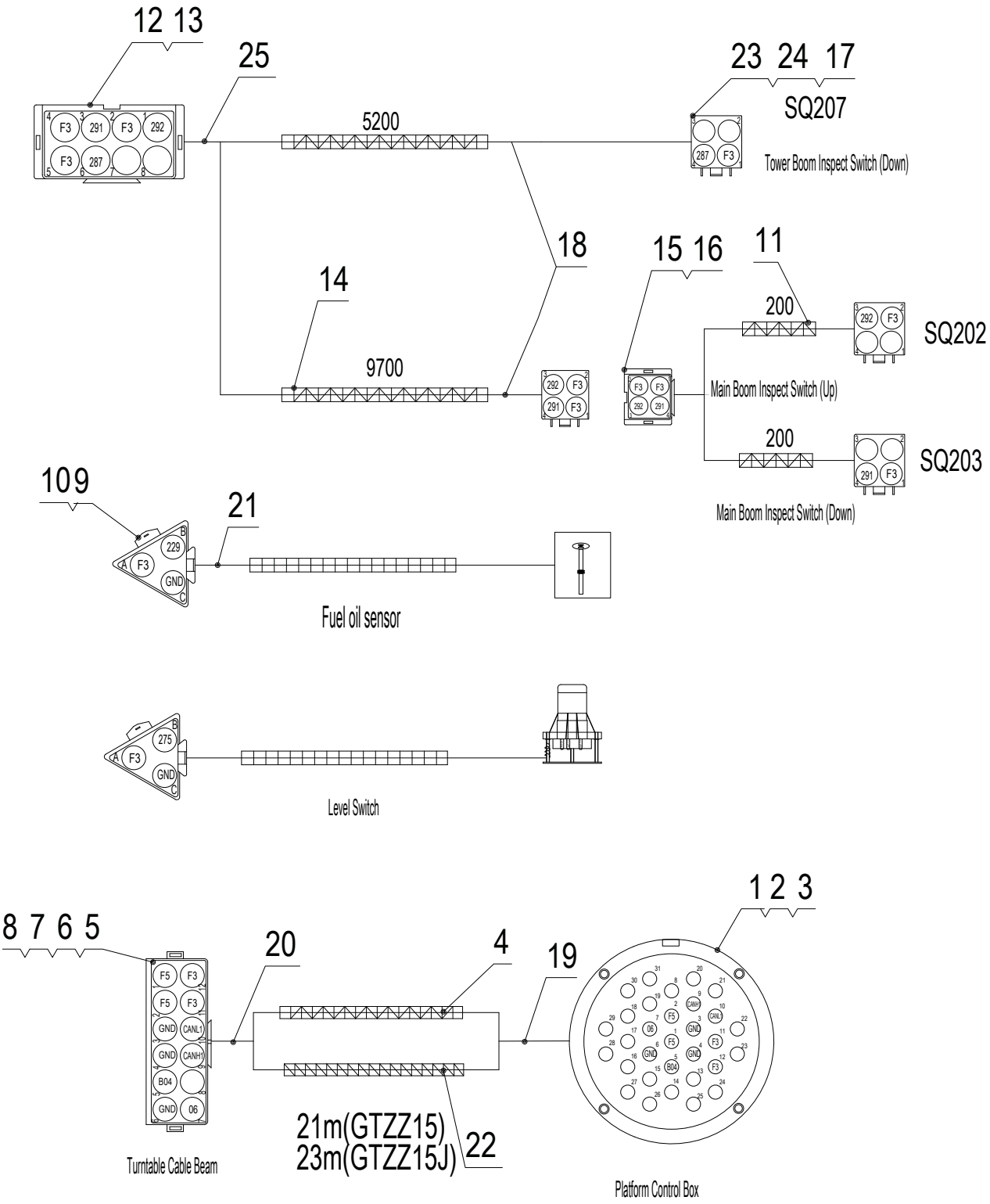

No.	Part No.	Qty.	Description
	104021063015	1	Turntable Sensors Harness
1	203080000520	1	Connector, 31P, female
2	203060000096	1	End clip, 180 deg.
3	203080000524	11	Terminal, female
4	203080000560	23	Cable, cable track
5	203080000403	1	Sheath
6	203080000157	1	Lock
7	203080000033	27	Terminal, male
8	203080000068	28	Blind plug
9	203080000405	2	Sheath
10	203080000046	2	Lock
11	203080000558	6	Cable, cable track
12	203080000413	1	Sheath
13	203080000126	1	Lock
14	203080000557	10	Cable, chain
15	203080000054	1	Sheath
16	203080000088	1	Lock
17	203080000041	10	Terminal, female
18	203080000006	16	Corrugated pipe
19	203080000419	1	Nylon hose, closed-end
20	203080000459	1	End clip
21	203080000466	2	End clip
22	203080000555	23	Cable, CAN bus, cable track
23	203080000044	4	Sheath
24	203080000020	4	Lock
25	203080000447	1	End clip

7.3.17 TURNTABLE HARNESS(PN.104021063014)

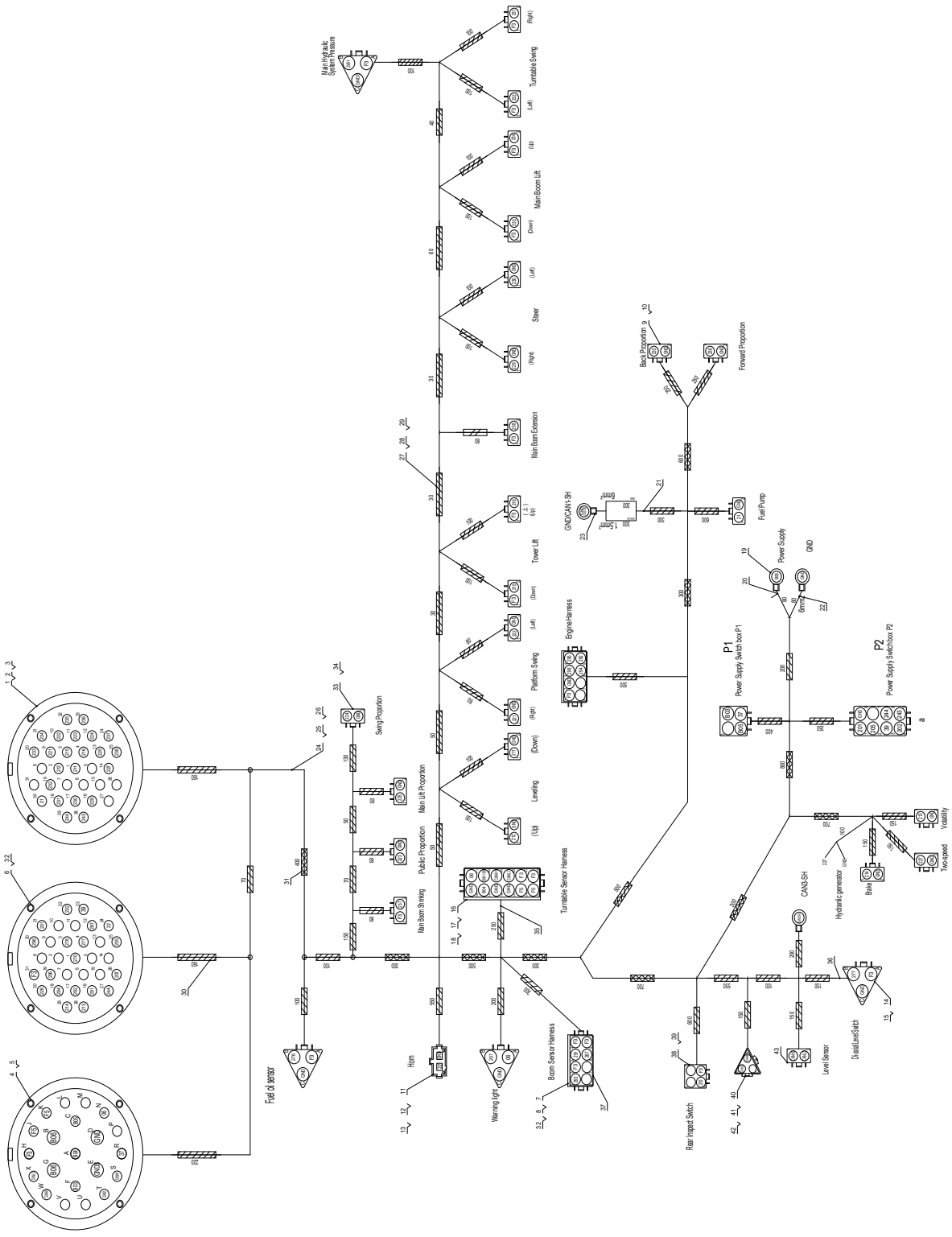

No.	Part No.	Qty.	Description
	104021063014	1	Turntable harness
1	203080000515	1	Connector, 31P, male
2	203060000096	3	End clip, 180 deg.
3	203080000033	23	Terminal, male
4	203080000517	1	Connector, 21-pin, female
5	203060000097	4	Terminal, #12, female
6	203080000520	1	Connector, 31P, female
7	203080000406	2	Sheath
8	203080000112	2	Lock
9	203080000410	23	Sheath
10	203080000016	23	Lock
11	203080000427	1	Sheath
12	203080000428	2	Pin, female
13	203080000429	1	Cap, waterproof
14	203080000404	3	Sheath
15	203080000032	3	Lock
16	203080000414	2	Sheath
17	203080000159	2	Lock
18	203080000068	32	Blind plug
19	203080000134	2	Terminal, blade-hole type
20	203080000161	5	Cable
21	203080000030	1	Heat shrink tube
22	203080000191	5	Cable
23	203080000244	1	Terminal, round top insulated
24	203080000564	150	Cable, thin wall (white)
25	203080000563	60	Cable, thin wall (black)
26	203080000562	40	Cable, thin wall (red)
27	203080000424	6	Nylon hose, closed-end
28	203080000422	4	Nylon hose, closed-end
29	203080000037	2	Corrugated pipe
30	203080000417	1	Nylon hose, closed-end
31	203080000135	1	Corrugated pipe (Black)
32	203080000041	124	Terminal, female
33	203080000437	23	End attachments, 2-pin, female
34	203080000448	23	Rubber, 2-pin
35	203080000461	2	End clip
36	203080000508	3	End clip

No.	Part No.	Qty.	Description
37	203080000449	2	End clip
38	203080000044	2	Sheath
39	203080000020	2	Lock
40	203080000405	1	Sheath
41	203080000046	1	Lock
42	203080000086	1	Sheath
43	203080000474	1	Cover, waterproof

7.3.18 ELECTRICAL POWER WIRING LAYOUT(PN.104021063052)

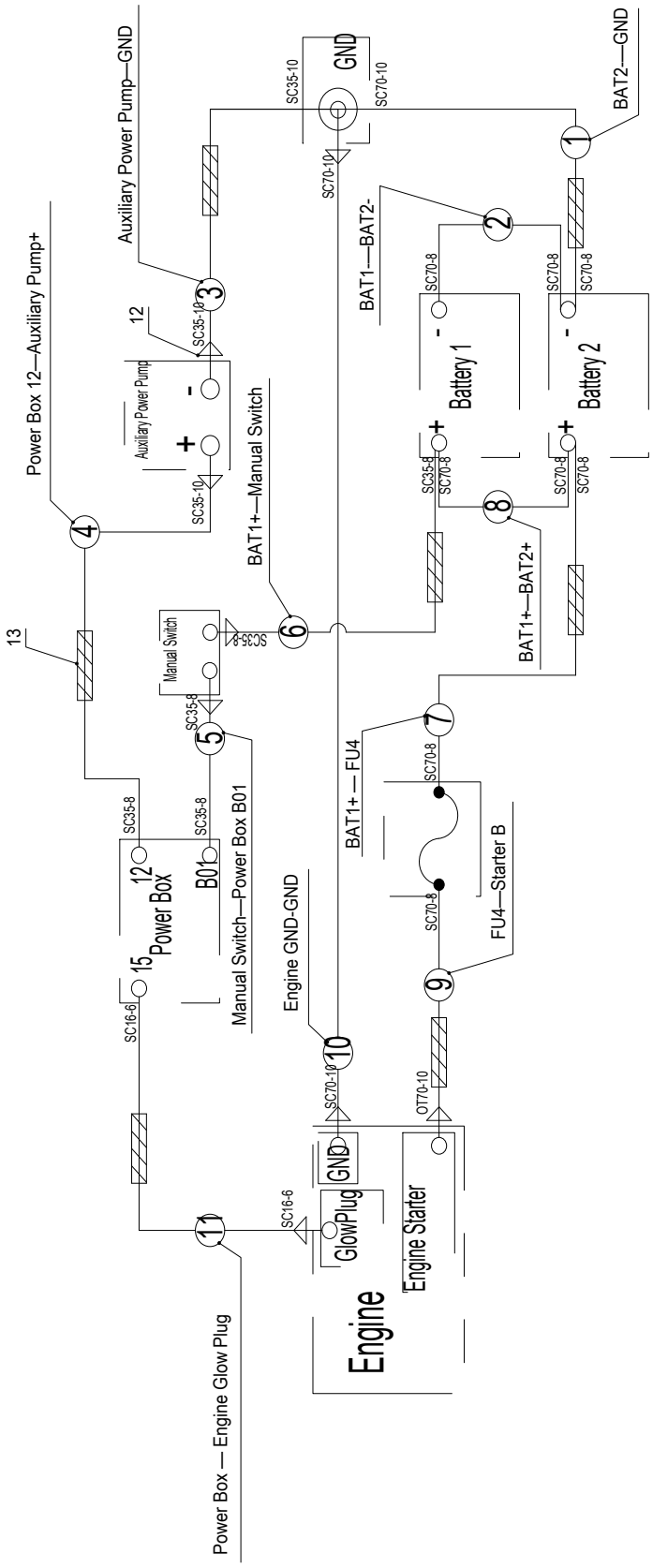

No.	Part No.	Qty.	Description
	104021063052	1	Electrical power wiring layout
1	203230000582	1	Power harness
2	203230000364	1	Power harness
3	203230000625	1	Power harness
4	203230000801	1	Power harness
5	203230000528	1	Power harness
6	203230000506	1	Power harness
7	203230000802	1	Power harness
8	203230000404	1	Power harness
9	203230000623	1	Power harness
10	203230000523	1	Power harness
11	203230000624	1	Power harness
12	203080000004	8	Connector, PVC
13	203080000422	16	Nylon hose, closed-end

7.3.19 ELECTRICAL SCHEMATIC-POWER SWITCH BOX(PN.104021063039)

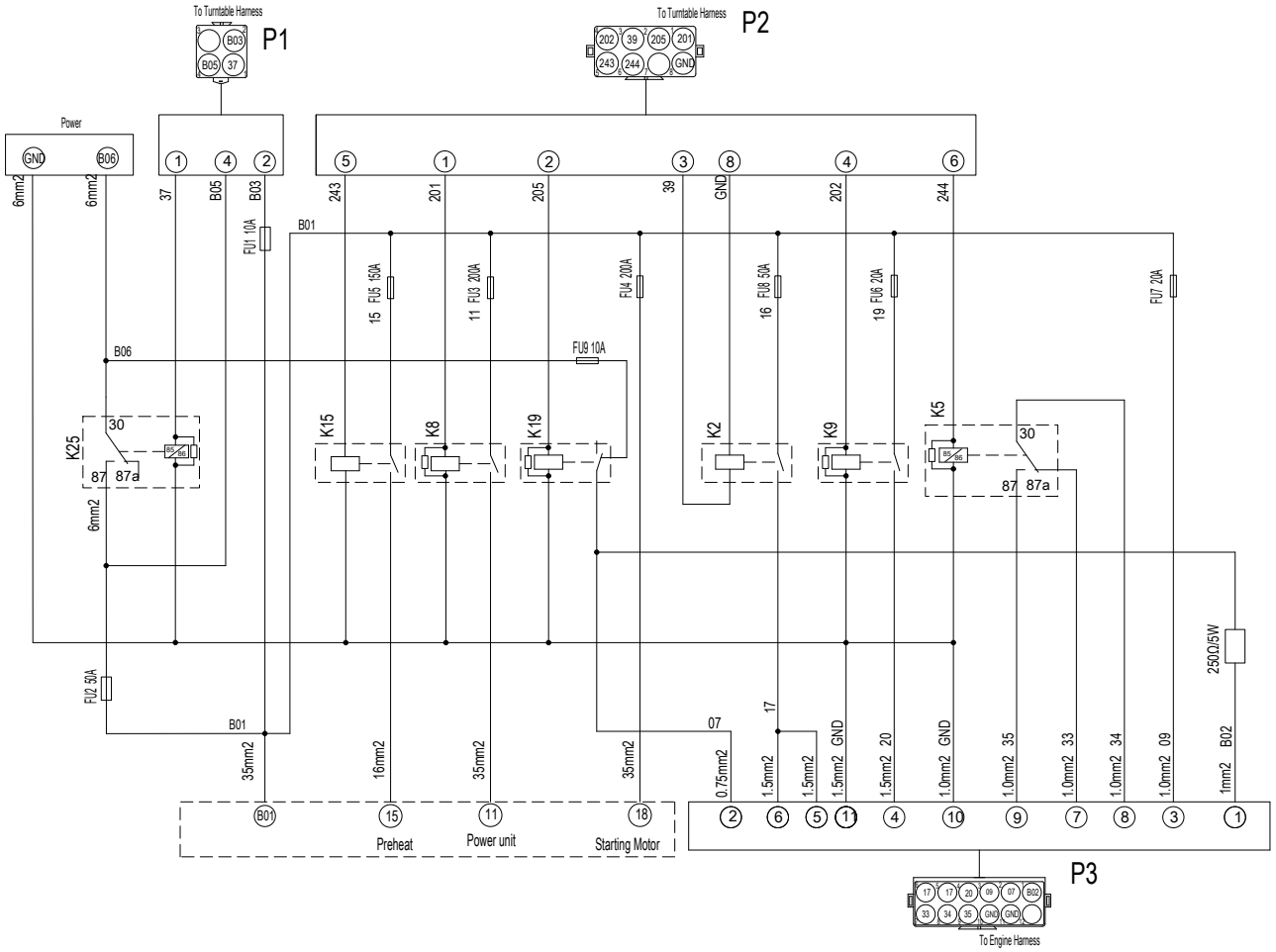

7.3.20 ELECTRICAL SCHEMATIC DIAGRAM(REXROTH)

Electrical schematic diagram of turntable

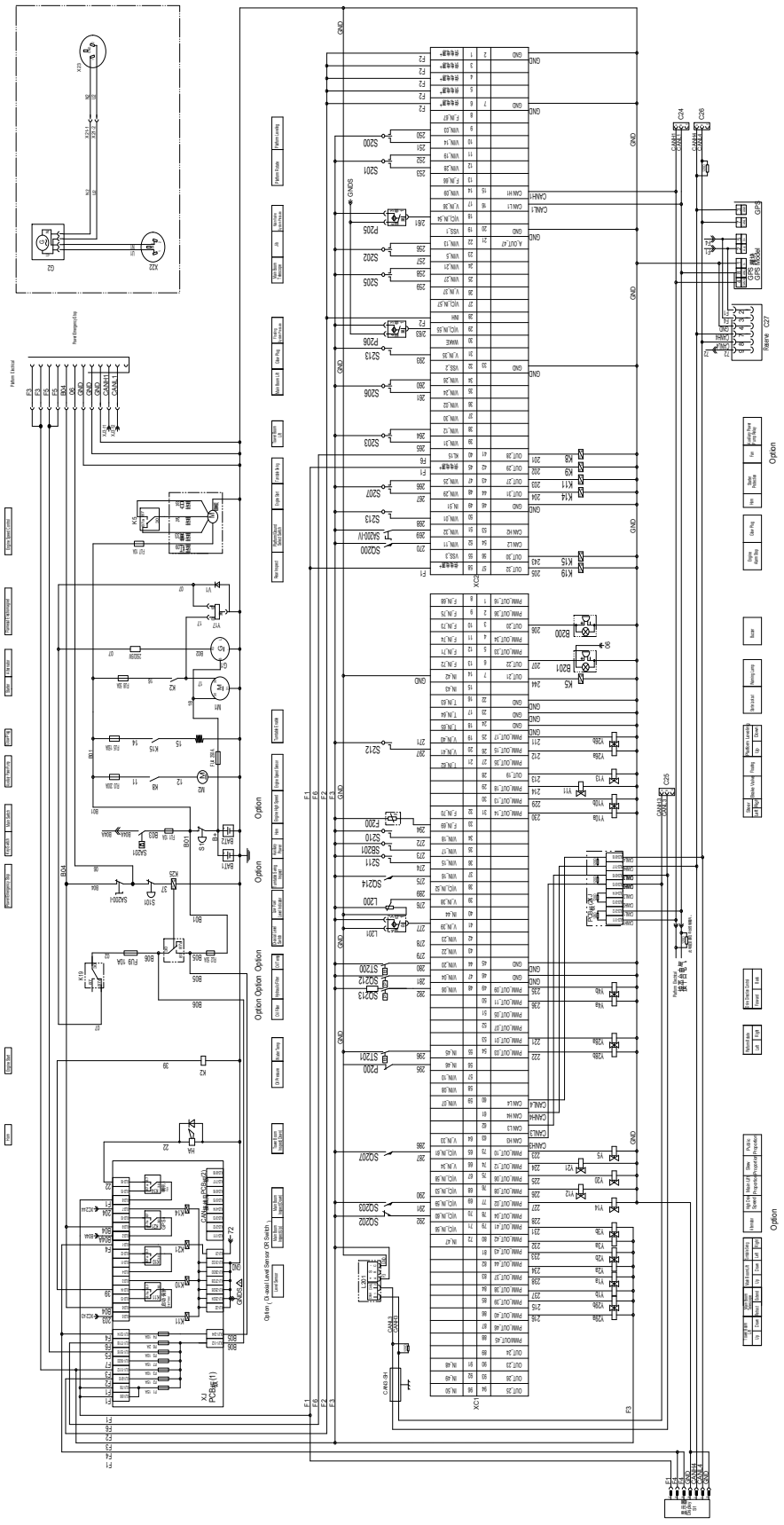

Electrical schematic diagram of platform

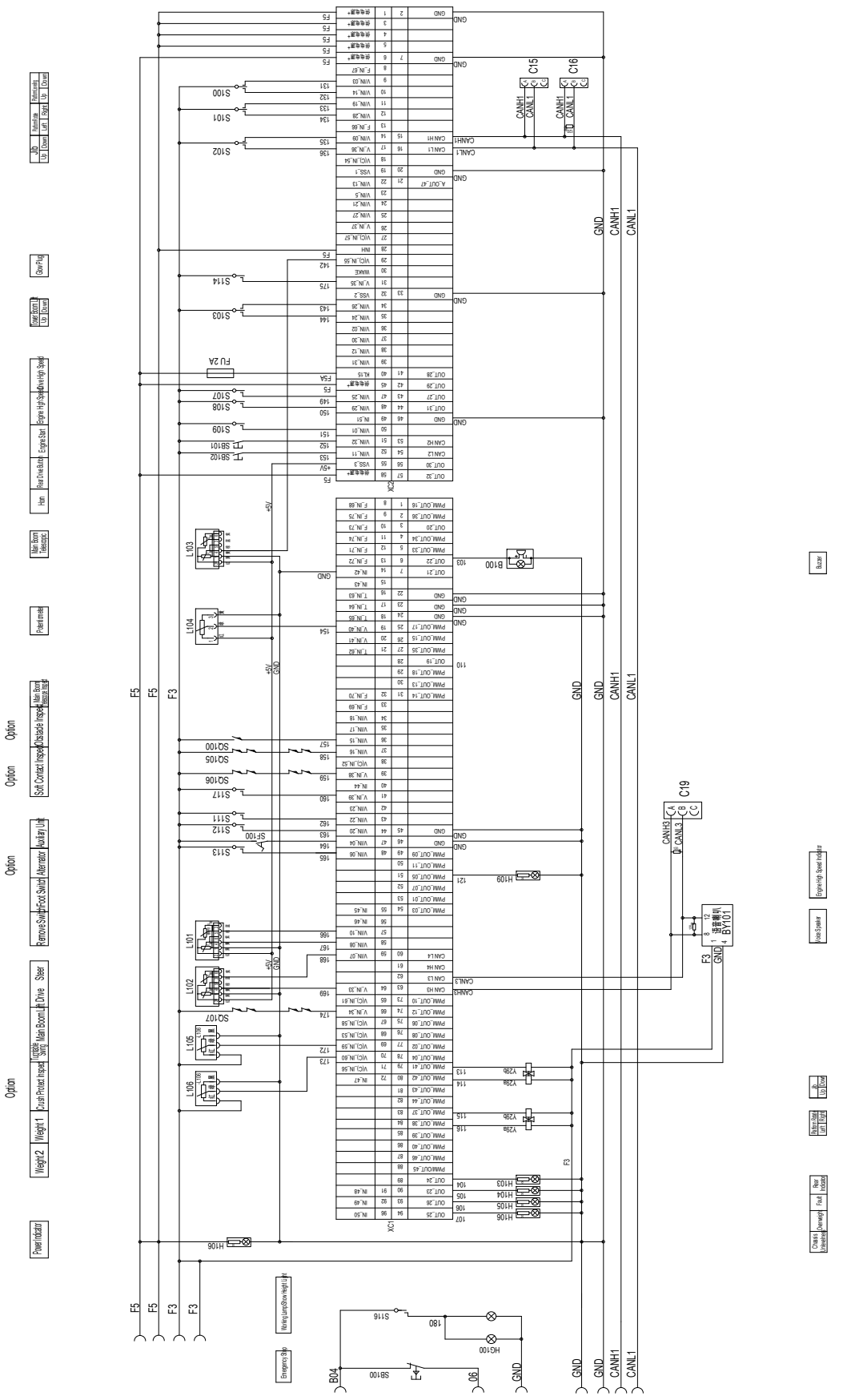

7.4 ELECTRICAL SYSTEM（REXROTH-YANMAR）

7.4.1 CHASSIS ELECTRICAL COMPONENTS INSTALLATION

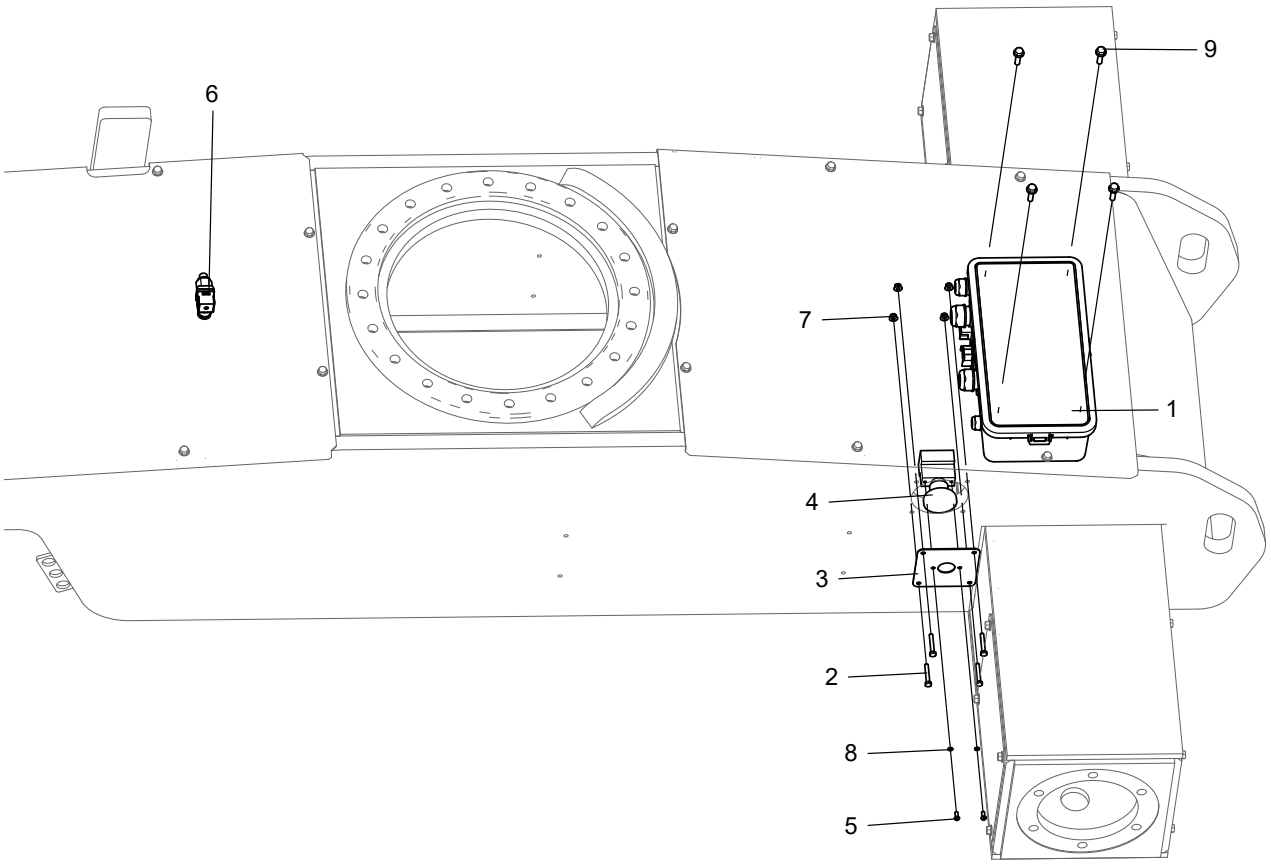

No.	Part No.	Qty.	Description
1	203100003046	1	Power switch box
2	215010000054	4	Bolt M6×40-A2-70 GB/T 5783
3	104009060001	1	Mounting plate, power-off switch
4	203060000024	1	Power-off switch
5	215020000110	2	Screw M5×12-A2-70 GB/T 818
6	203150003016	1	Pressure switch
7	215030000107	4	Nut M6-8-ZnD GB/T 6183
8	215040000003	2	Washer 5-A2-70 GB/T 93
9	215010000236	4	Bolt M8×30-8.8-ZnD GB/T 5789

7.4.2 BATTERIES INSTALLATION

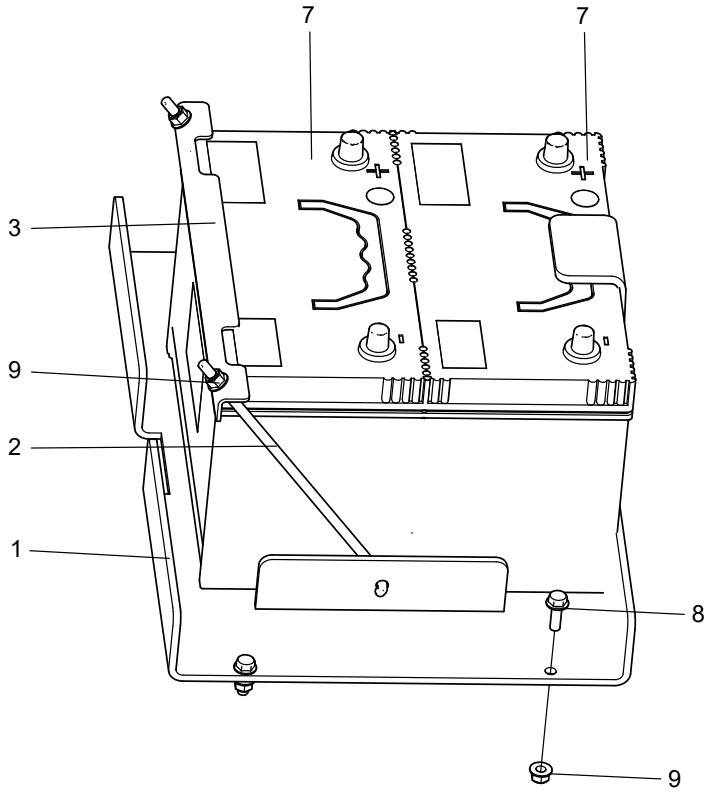

No.	Part No.	Qty.	Description
1	104009060024	1	Bracket,battery
2	105001020169	2	Tie rod
3	105001020176	1	Pressbar 2
4	203080000250	2	Battery terminal (Not Shown)
5	203100000051	2	Jacket, flexible(Not Shown)
6	203100000053	2	Jacket, flexible(Not Shown)
7	203100000061	2	Battery, maintenance-free
8	215010000235	4	Bolt M8×25-8.8-ZnD GB/T 5789
9	215030000108	6	Nut M8-8-ZnD GB/T 6183

7.4.3 ENGINE ELECTRICAL COMPONENTS INSTALLATION (YANMAR)

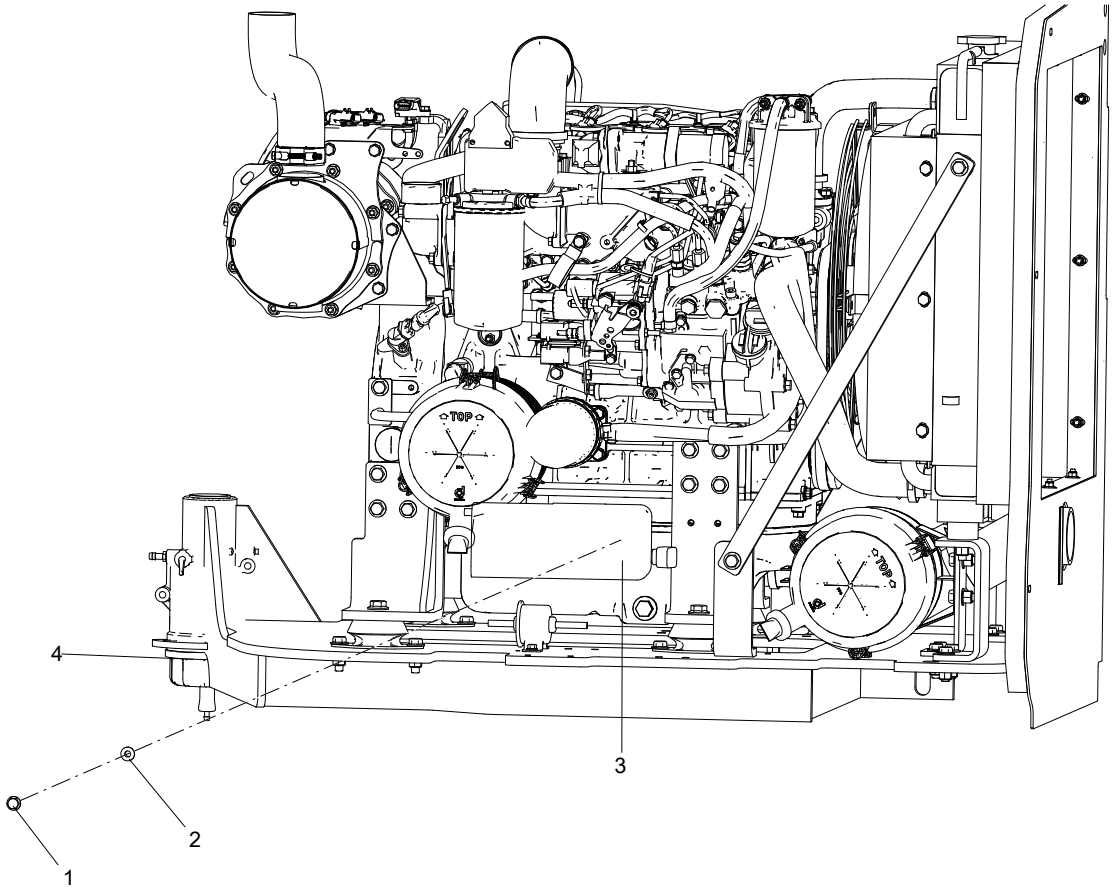

No.	Part No.	Qty.	Description
1	215010000234	2	Bolt M8×20-8.8-ZnD GB/T 5789
2	215030000108	2	Nut M8-8-ZnD GB/T 6183
3	203020000004	1	Start/stop controller
4	216020000019	1	Clip, steel cable

7.4.4 ENGINE HARNESS(PN.104021063087)

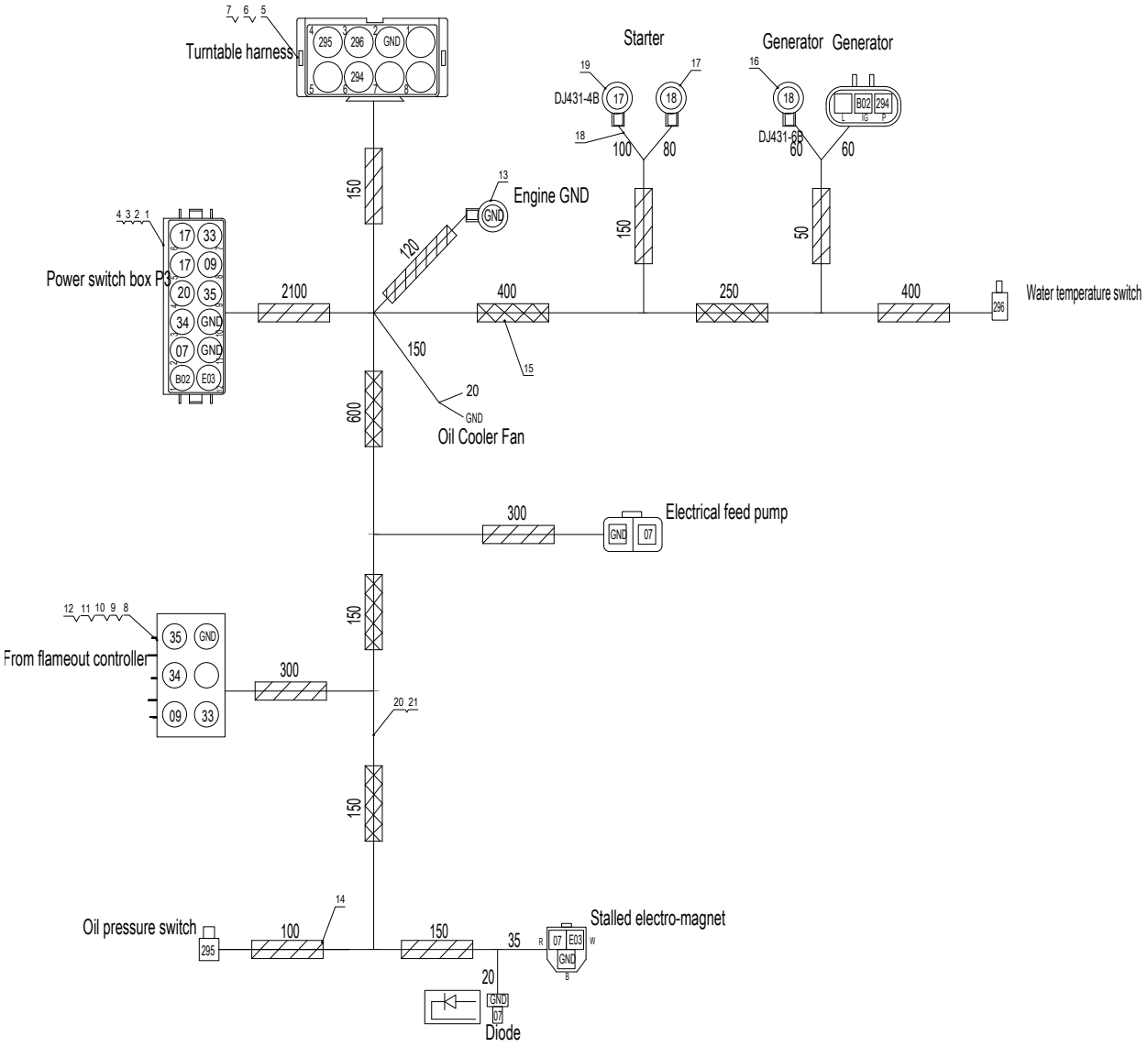

No.	Part No.	Qty.	Description
	104021063087	1	Yanmar Engine harness
1	203080000414	1	Sheath
2	203080000159	1	Lock
3	203080000041	11	Terminal, female
4	203080000068	4	Blind plug
5	203080000413	1	Sheath
6	203080000126	1	Lock
7	203080000033	4	Terminal, male
8	203080000210	1	Sheath
9	203080000215	1	Lock
10	203080000213	5	Terminal
11	203080000214	1	Seal ring
12	203080000211	1	Plug
13	203080000124	1	Terminal, blade-hole type
14	203080000006	2	Corrugated pipe
15	203080000037	1	Corrugated pipe
16	203080000133	1	Terminal, blade-hole type
17	203080000018	1	Terminal, blade-hole type
18	203080000372	4	Cable
19	203080000039	1	Terminal, blade-hole type
20	203080000375	10	Cable
21	203080000370	5	Cable

7.4.5 TURNTABLE ELECTRICAL COMPONENTS INSTALLATION

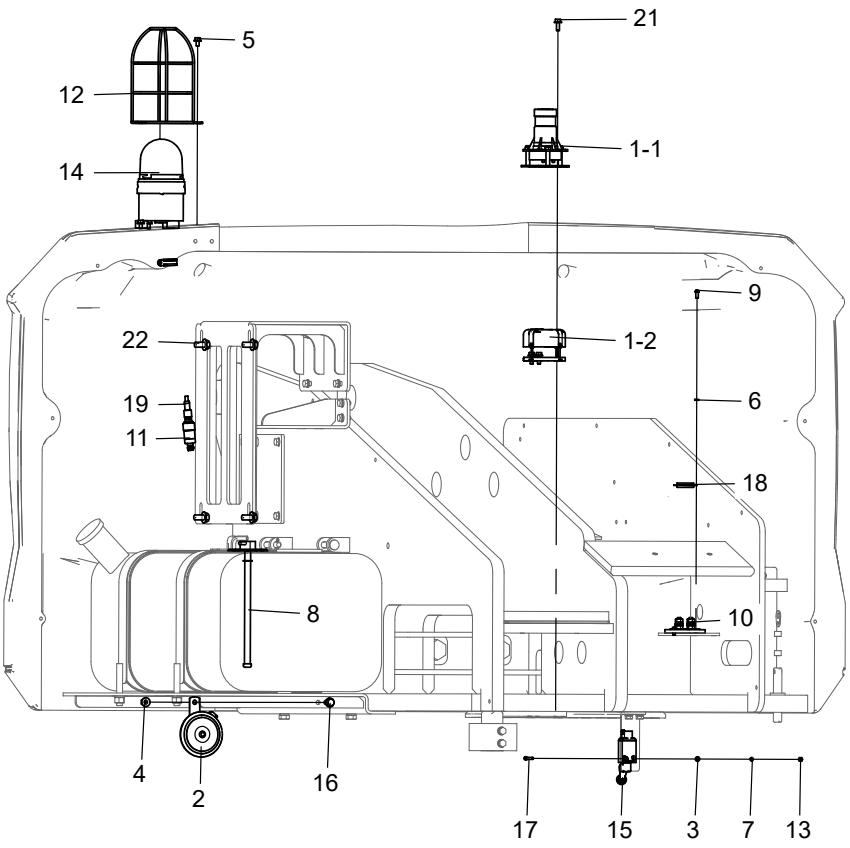

No.	Part No.	Qty.	Description
1	103008063058		Options, Level sensor installation
1-1	203150000039	1	Level sensor
1-2	203060000111	1	Level sensor
2	203050000034	1	Horn
3	215040000031	2	Washer 4-A2 GB/T 97.1
4	215030000108	1	Nut M8-8-ZnD GB/T 6183
5	215010000229	3	Bolt M6×10-8.8-ZnD GB/T 5789
6	215040000003	2	Washer 5-A2-70 GB/T 93
7	215040000002	2	Washer 4-A2-70 GB/T 93
8	203150000026	1	Sensor, liquid level
9	215020000110	2	Screw M5×12-A2-70 GB/T 818
10	203070000056	1	Fuse holder
11	203150000055	1	Pressure sensor
12	105021060024	1	Guard, beacon light
13	215030000002	2	Nut M4-8-A2-70 GB/T 6170
14	203050000060	1	Beacon light

No.	Part No.	Qty.	Description
15	203060000146	1	Travel switch
16	215010000234	1	Bolt M8×20-8.8-ZnD GB/T 5789
17	215020000212	2	Screw M4×35-A2-70 GB/T 818
18	203070000048	1	Fuse
19	203080003094	1	Plug, with cable
20	216020000024	3	Retaning ring, SSG
21	215010000230	3	Bolt M6×16-8.8-ZnD GB/T 5789
22	215010000237	4	Bolt M10×20-8.8-ZnD GB/T 5789

7.4.6 GROUND CONTROL BOX ASSEMBLY(PN.104021063056)

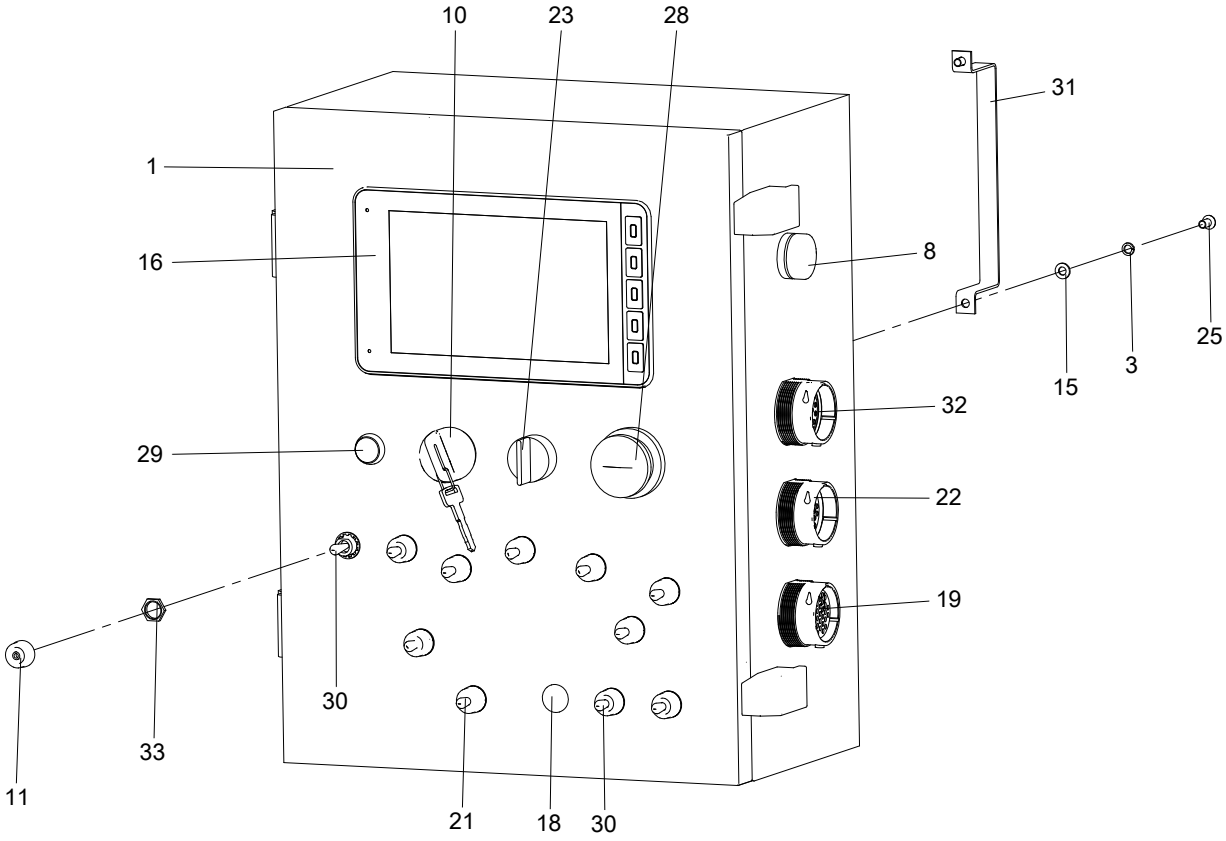

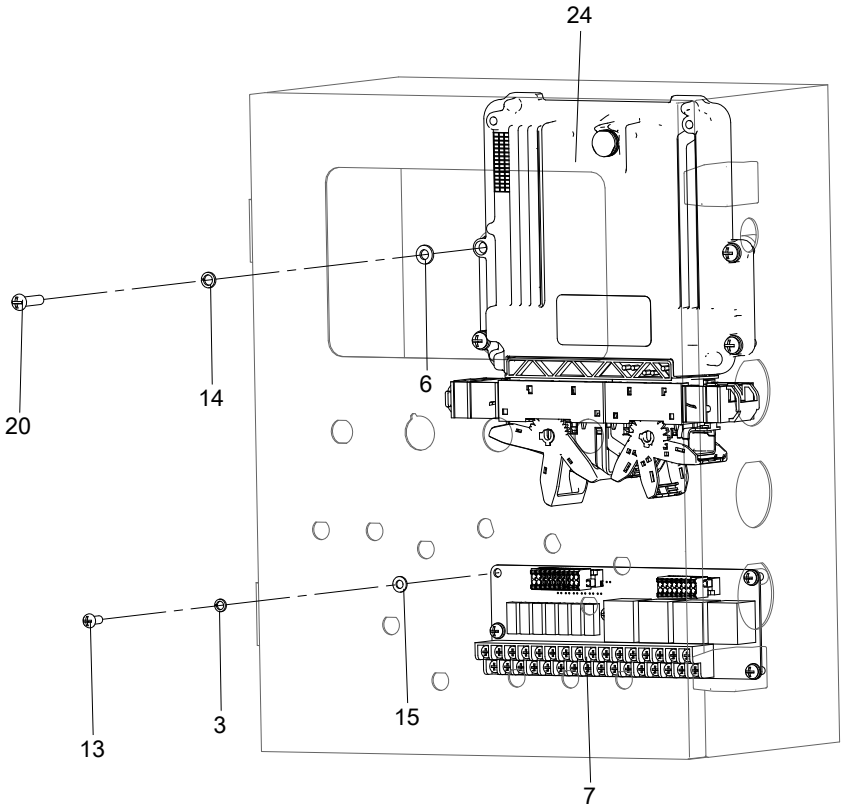

No.	Part No.	Qty.	Description
1	104021063008	1	Ground controller assembly
2	203060000103	4	Terminal, #12, male
3	215040000003	11	Washer 5-A2-70 GB/T 93
4	203080003147	1	Connector assy, SECD-7I0A
5	203060000101	3	Nut, retaining
6	215040000033	4	Washer 6-A2 GB/T 97.1
7	203030000015	1	Integrated board, relay
8	203050003021	1	Buzzer
9	203080000041	24	Terminal, female
10	203060000114	1	Key switch
11	203080000101	11	Cap, waterproof
12	104020060001	1	Membrane, ground controller
13	215020000110	5	Screw M5×12-A2-70 GB/T 818
14	215040000004	4	Washer 6-A2-70 GB/T 93
15	215040000032	11	Washer 5-A2 GB/T 97.1
16	203200000004	1	Display screen
17	104021063057	1	PC film, ground controller
18	105045060004	1	Plug, controller
19	203080000516	1	Connector, 31P, female
20	215020000118	4	Screw M6×25-A2-70 GB/T 818
21	203060000003	7	Switch, toggle
22	203080000523	1	Connector, 31P, male
23	203060000029	1	Select switch
24	203020000038	1	Controller
25	215020000109	6	Screw M5×10-A2-70 GB/T 818
26	203080000068	25	Blind plug
27	203080000378	1	Connector
28	203060000142	1	Emergency stop switch
29	203060000020	1	Button, yellow
30	203060000021	4	Switch, toggle
31	105001060106	3	Retaining plate, display screen
32	203080000518	1	Connector, 21-pin, male
33	203080000109	11	Nut
34	203080000033	30	Terminal, male
35	203060000098	3	Spring plate, metal

7.4.7 GROUND CONTROL BOX HARNESS(PN.104021063012)

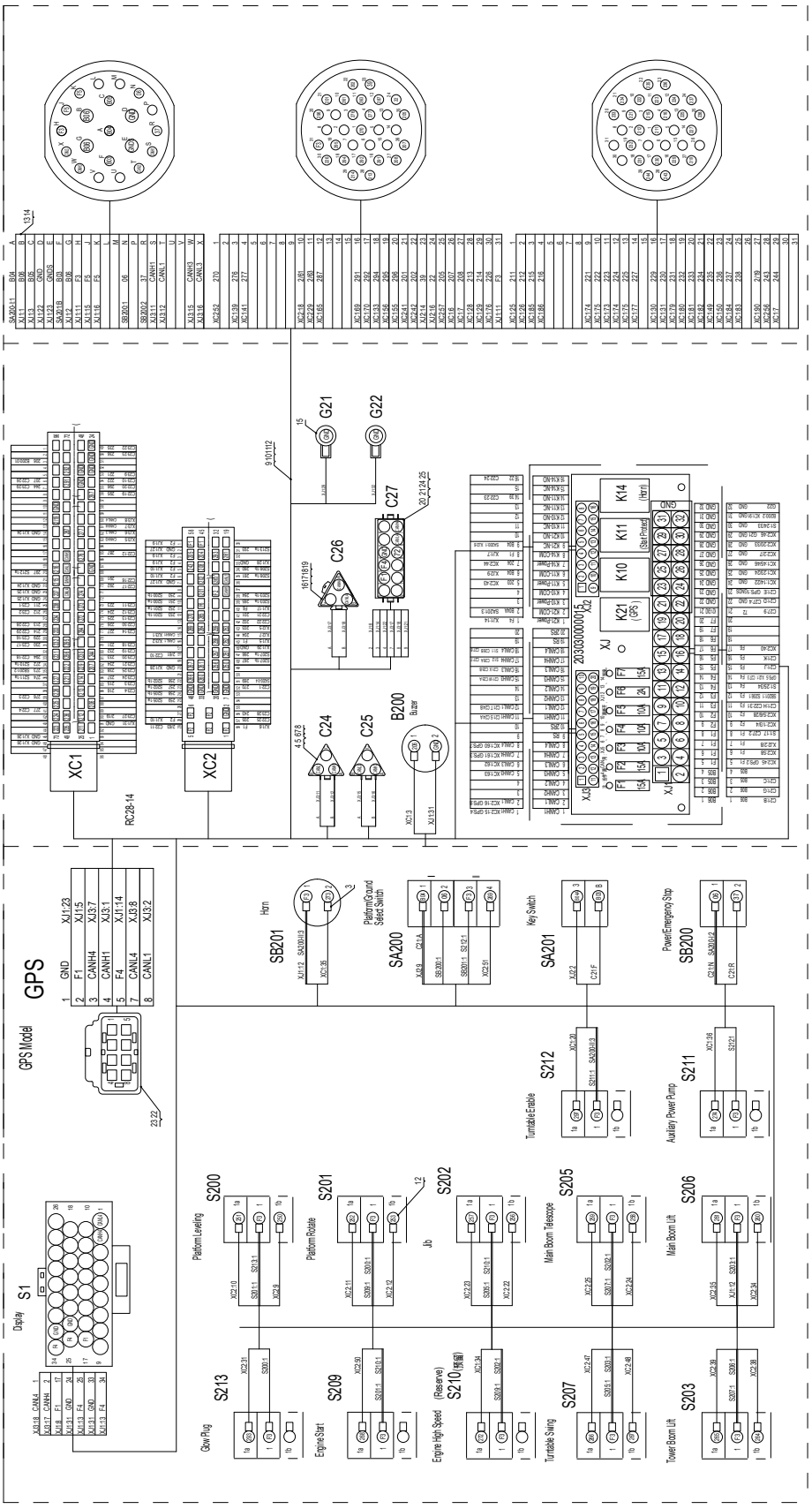

No.	Part No.	Qty.	Description
	104021063012	1	Ground controller wiring diagram
1	203080000036	29	Terminal
2	203080000022	1	Heat shrink tube
3	203080000023	6	Terminal, blade-hole type
4	203080000404	1	Sheath
5	203080000032	1	Lock
6	203080000041	2	Terminal, female
7	203080000068	2	Blind plug
8	203080000473	1	Cover, waterproof
9	203080000564	15	Cable, thin wall (white)
10	203080000562	5	Cable, thin wall (red)
11	203080000563	7	Cable, thin wall (black)
12	216020000020	30	Cable tie, nylon
13	203080000047	1	Cable
14	203080000196	1	Cable
15	203080000133	2	Terminal, blade-hole type
16	203080000405	1	Sheath
17	203080000046	1	Lock
18	203080000033	2	Terminal, male
19	203080000086	1	Sheath
20	203080003532	1	Sheathed
21	203080003533	1	Lock
22	203080003218	7	Terminal AMP
23	203080003216	1	Sheath
24	203060000085	6	Terminal, female
25	203080000085	6	Blind plug

7.4.8 ELECTRICAL POWER WIRING LAYOUT(PN.104021063088)

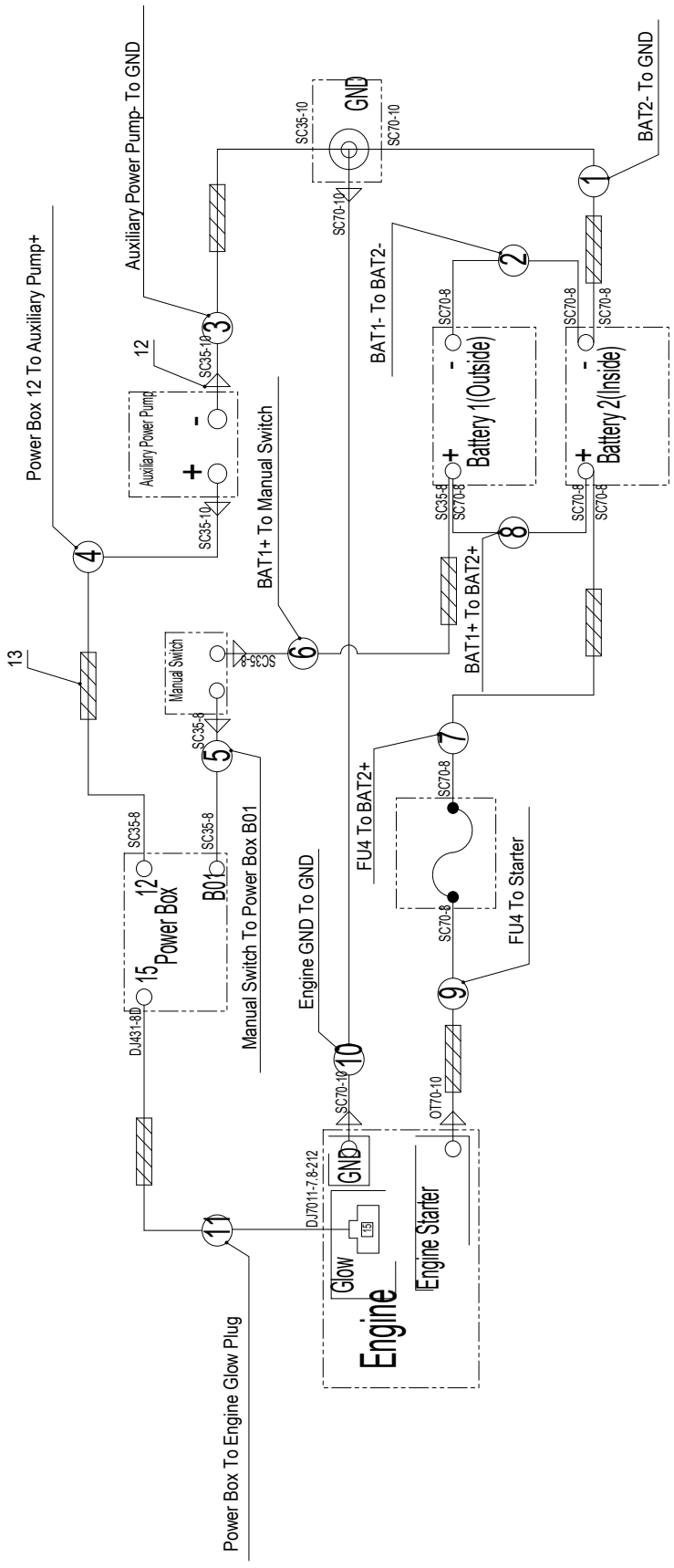

No.	Part No.	Qty.	Description
	104021063088	1	Electrical power wiring layout
1	203230000582	1	Power harness
2	203230000364	1	Power harness
3	203230000625	1	Power harness
4	203230000801	1	Power harness
5	203230000528	1	Power harness
6	203230000506	1	Power harness
7	203230000802	1	Power harness
8	203230000404	1	Power harness
9	203230000623	1	Power harness
10	203230000523	1	Power harness
11	203230000908	1	Power harness
12	203080000004	8	Connector, PVC
13	203080000422	16	Nylon hose, closed-end

7.4.9 TURNTABLE SENSORS HARNESS (PN.104021063015)

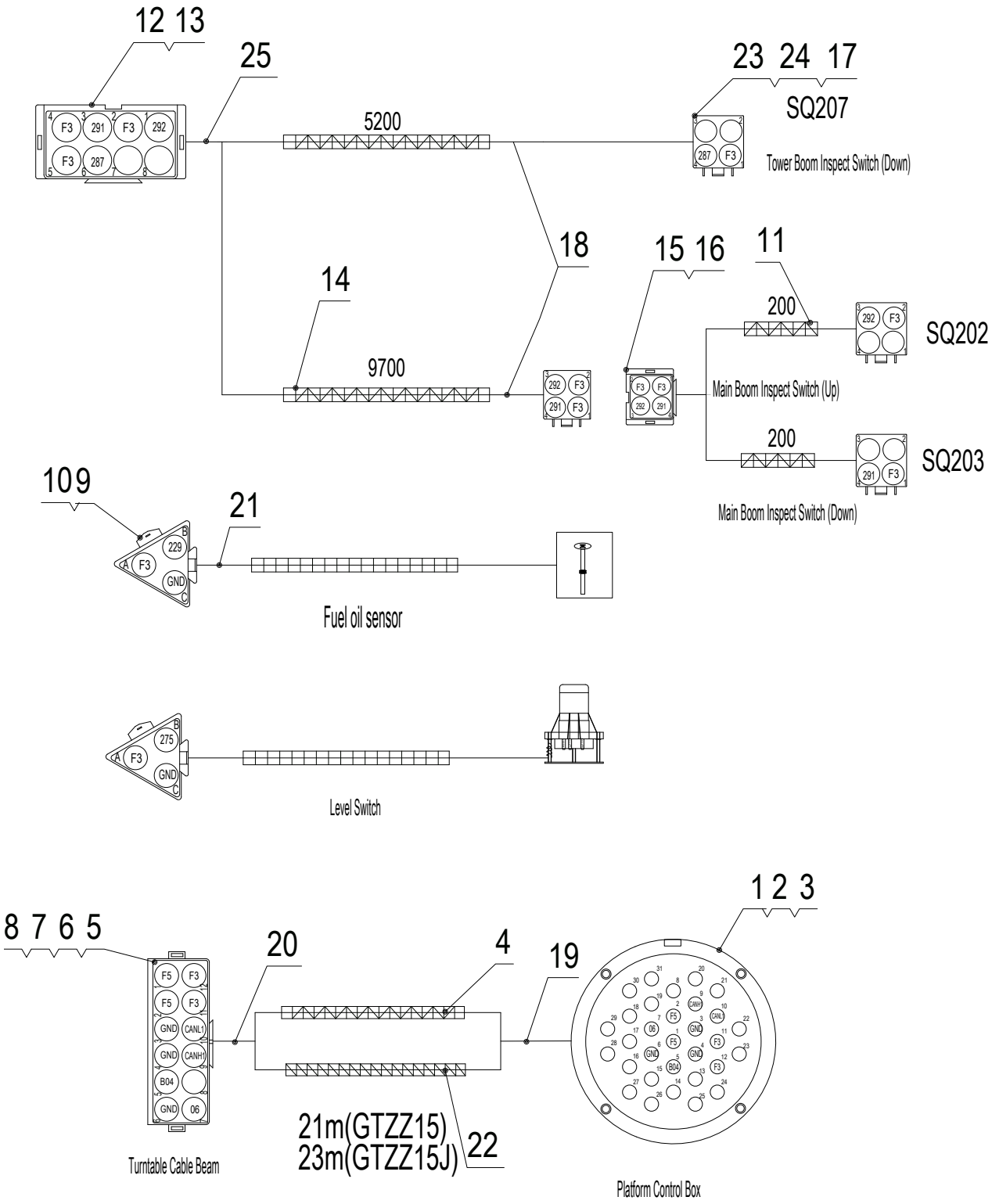

No.	Part No.	Qty.	Description
	104021063015	1	Turntable Sensors Harness
1	203080000520	1	Connector, 31P, female
2	203060000096	1	End clip, 180 deg.
3	203080000524	11	Terminal, female
4	203080000560	23	Cable, cable track
5	203080000403	1	Sheath
6	203080000157	1	Lock
7	203080000033	27	Terminal, male
8	203080000068	28	Blind plug
9	203080000405	2	Sheath
10	203080000046	2	Lock
11	203080000558	6	Cable, cable track
12	203080000413	1	Sheath
13	203080000126	1	Lock
14	203080000557	10	Cable, chain
15	203080000054	1	Sheath
16	203080000088	1	Lock
17	203080000041	10	Terminal, female
18	203080000006	16	Corrugated pipe
19	203080000419	1	Nylon hose, closed-end
20	203080000459	1	End clip
21	203080000466	2	End clip
22	203080000555	23	Cable, CAN bus, cable track
23	203080000044	4	Sheath
24	203080000020	4	Lock
25	203080000447	1	End clip

7.4.10 TURNTABLE HARNESS(PN.104021063054)

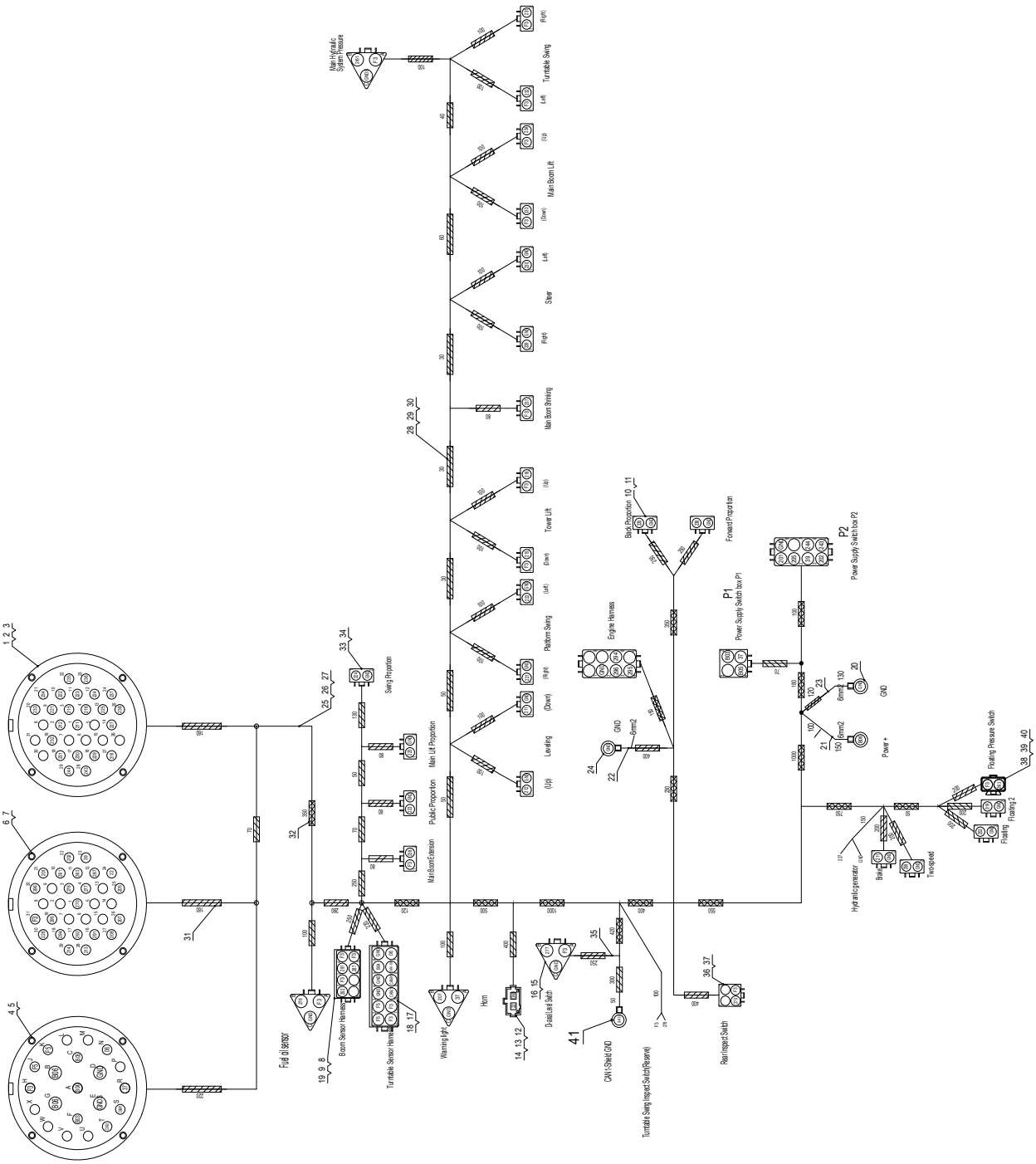

No.	Part No.	Qty.	Description
	104021063054	1	Turntable harness,Yanmar Engine
1	203080000515	1	Connector, 31P, male
2	203060000096	3	End clip, 180 deg.
3	203080000033	26	Terminal, male
4	203080000517	1	Connector, 21-pin, female
5	203060000097	4	Terminal, #12, female
6	203080000520	1	Connector, 31P, female
7	203080000041	128	Terminal, female
8	203080000406	3	Sheath
9	203080000112	3	Lock
10	203080000410	23	Sheath
11	203080000016	23	Lock
12	203080000427	1	Sheath
13	203080000428	2	Pin, female
14	203080000429	1	Cap, waterproof
15	203080000404	4	Sheath
16	203080000032	4	Lock
17	203080000414	1	Sheath
18	203080000159	1	Lock
19	203080000068	31	Blind plug
20	203080000134	2	Terminal, blade-hole type
21	203080000161	5	Cable
22	203080000030	1	Heat shrink tube
23	203080000191	5	Cable
24	203080000244	1	Terminal, round top insulated
25	203080000564	150	Cable, thin wall (white)
26	203080000563	60	Cable, thin wall (black)
27	203080000562	40	Cable, thin wall (red)
28	203080000424	6	Nylon hose, closed-end
29	203080000422	4	Nylon hose, closed-end
30	203080000037	2	Corrugated pipe
31	203080000417	1	Nylon hose, closed-end
32	203080000135	1	Corrugated pipe (Black)
33	203080000437	23	End attachments, 2-pin, female
34	203080000448	23	Rubber, 2-pin
35	203080000508	4	End clip
36	203080000044	2	Sheath

No.	Part No.	Qty.	Description
37	203080000020	1	Lock
38	203080000408	1	Sheath
39	203080000021	1	Lock
40	203080000465	1	End clip
41	203080000133	1	Terminal, blade-hole type

7.4.11 BOOM ELECTRICAL COMPONENTS INSTALLATION (REXROTH)

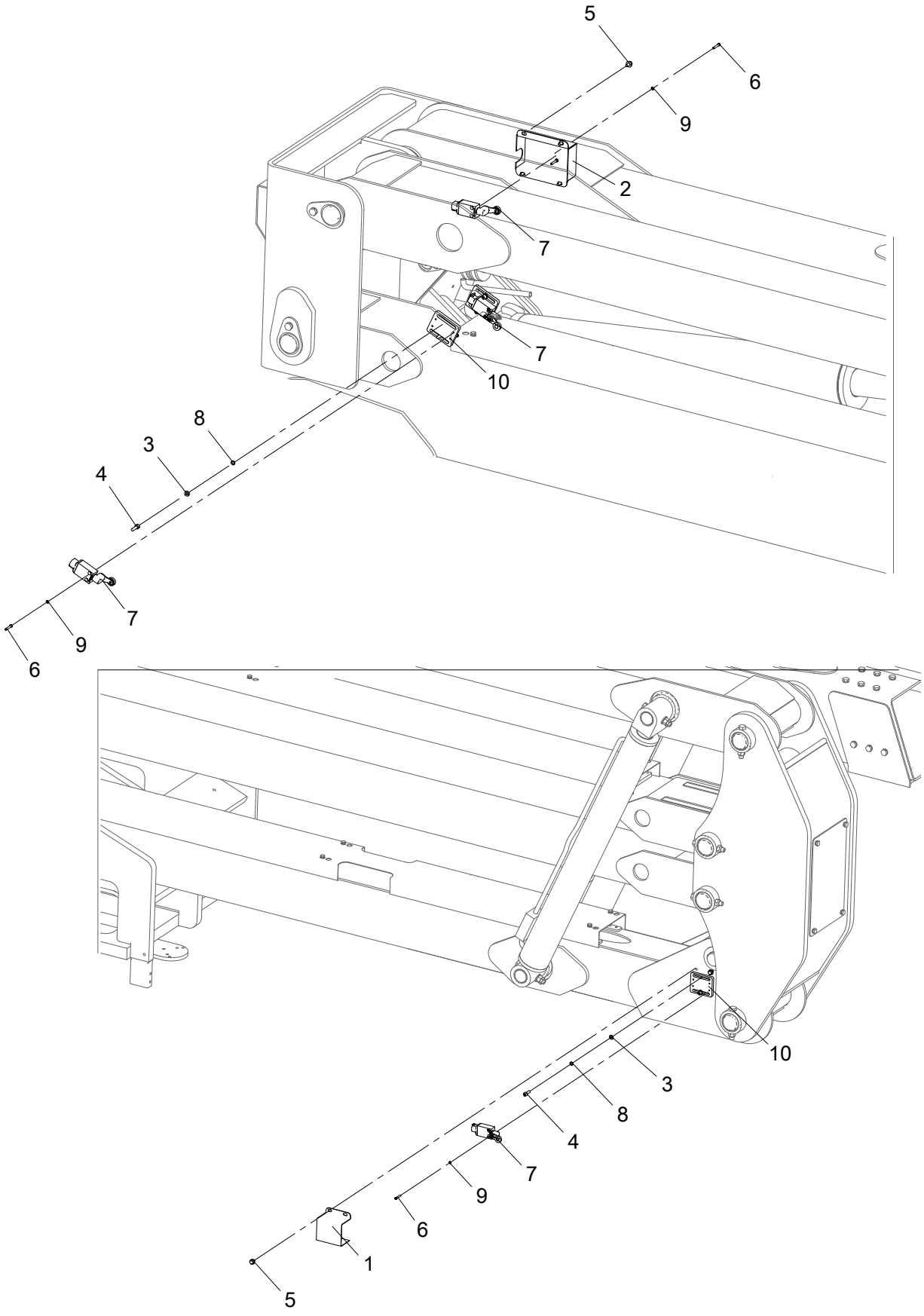

No.	Part No.	Qty.	Description
1	104009060078	1	Cover, travel switch
2	104011060052	1	Cover, travel switch
3	215040000033	6	Washer 6-A2 GB/T 97.1
4	215020000012	6	Screw M6×20-A2-70 GB/T 70.1
5	215010000229	6	Bolt M6×10-8.8-ZnD GB/T 5789
6	215020000108	8	Screw M4×25-A2-70 GB/T 818
7	203060000146	4	Travel switch
8	215040000004	6	Washer 6-A2-70 GB/T 93
9	215040000002	8	Washer 4-A2-70 GB/T 93
10	104009060027	3	Mounting plate, travel switch

7.4.12 CABLE TRACK DIAGRAM(PN.104021063058)

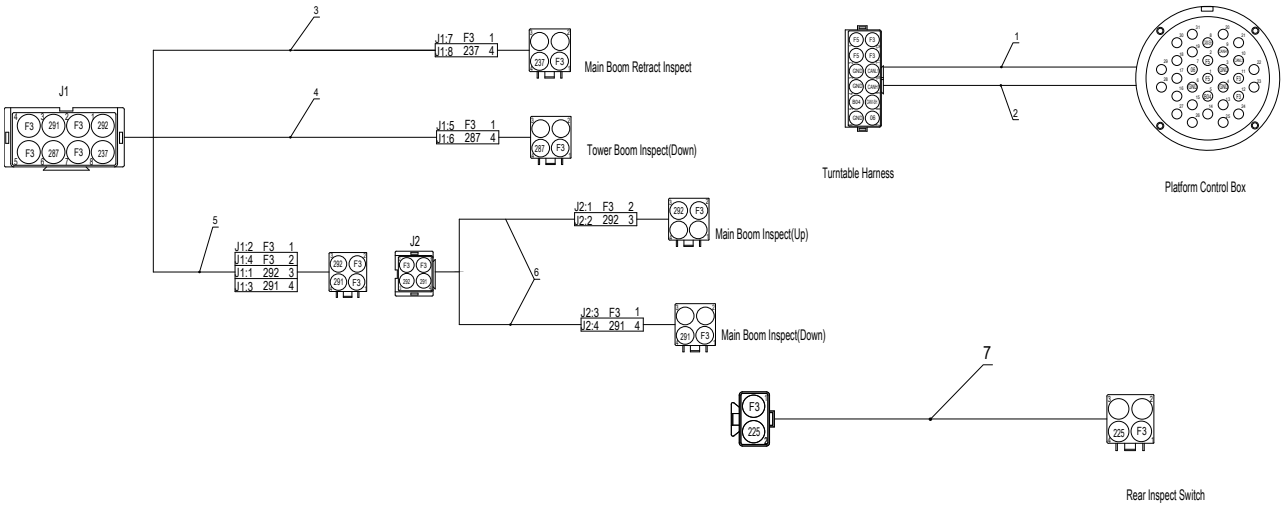

No.	Part No.	Qty.	Description
	104021063058	1	Cable track diagram
1	203230000652	1	Cable, chain
2	203230000653	1	Cable, CAN bus, cable track
3	203230000643	1	Cable, chain
4	203230000638	1	Cable, chain
5	203230000642	1	Cable, chain
6	203230000634	2	Cable, cable track
7	203230000837	1	Cable, chain

7.4.13 PLATFORM HARNESS(PN.104021063016)

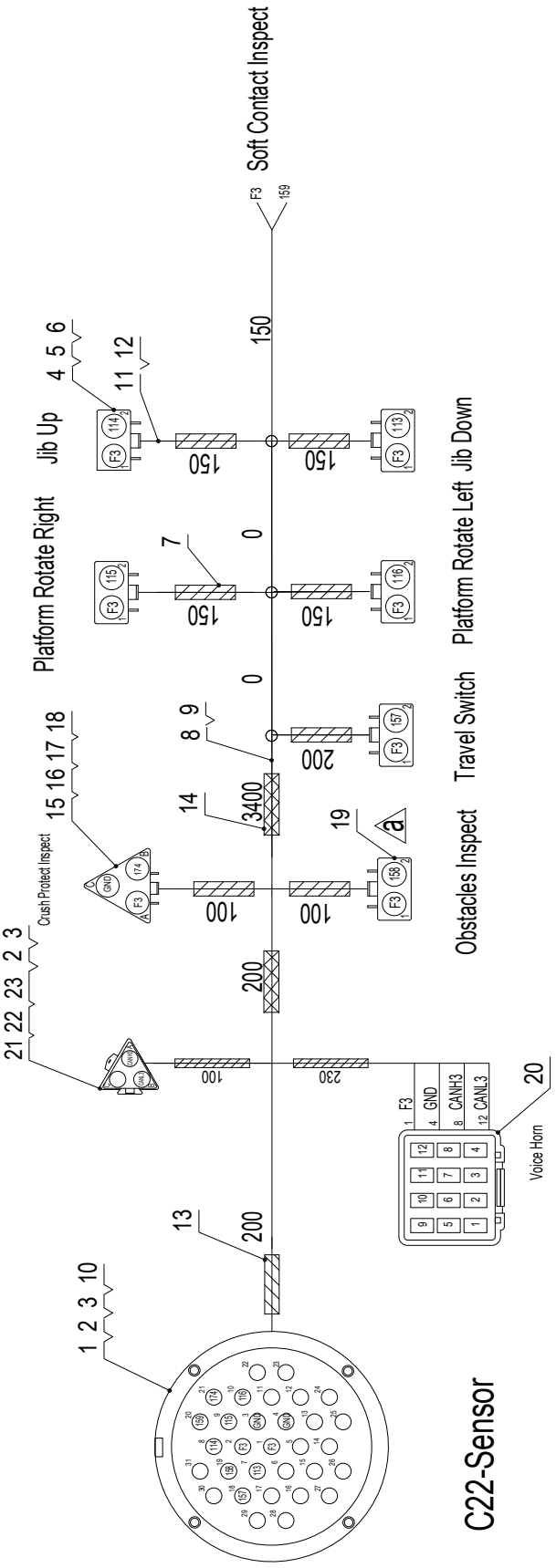

No.	Part No.	Qty.	Description
	104021063016	1	Wiring harness, platform
1	203080000515	1	Connector, 31P, male
2	203080000068	20	Blind plug
3	203080000033	14	Terminal, male
4	203080000410	6	Sheath
5	203080000016	6	Lock
6	203080000041	15	Terminal, female
7	203080000463	1	Nylon hose, closed-end
8	203080000564	32	Cable, thin wall (white)
9	203080000562	32	Cable, thin wall (red)
10	203060000096	1	End clip, 180 deg.
11	203080000437	6	End attachments, 2-pin, female
12	203080000448	6	Rubber, 2-pin
13	203080000419	1	Nylon hose, closed-end
14	203080000037	3	Corrugated pipe
15	203080000404	1	Sheath
16	203080000032	1	Lock
17	203080000508	1	End clip
18	203080000473	1	Cover, waterproof
19	203080000474	1	Cover, waterproof
20	203080003584	1	Sheath
21	203080000405	1	Sheath
22	203080000046	1	Lock
23	203080000086	1	Sheath

7.4.14 PLATFORM HARNESS(PN.103006063009)

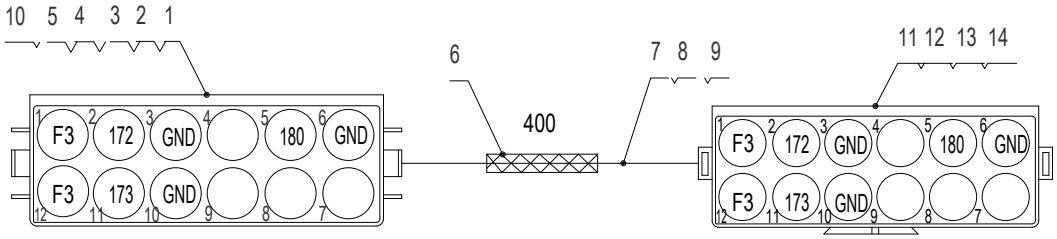

No.	Part No.	Qty.	Description
	103006063009	1	Wiring harness, platform
1	203080000155	1	Sheath
2	203080000159	1	Lock
3	203080000041	8	Terminal, female
4	203080000068	8	Blind plug
5	203080003001	1	End clip
6	203080000037	1m	Corrugated pipe
7	203080000562	2	Cable, thin wall (red)
8	203080000563	2	Cable, thin wall (black)
9	203080000564	1	Cable, thin wall (white)
10	203080003010	1	Nut, big-size
11	203080000403	1	Sheath
12	203080000157	1	Lock
13	203080000033	8	Terminal, male
14	203080000459	1	End clip

7.4.15 PLATFORM SENSORS HARNESS(PN.104021063017)

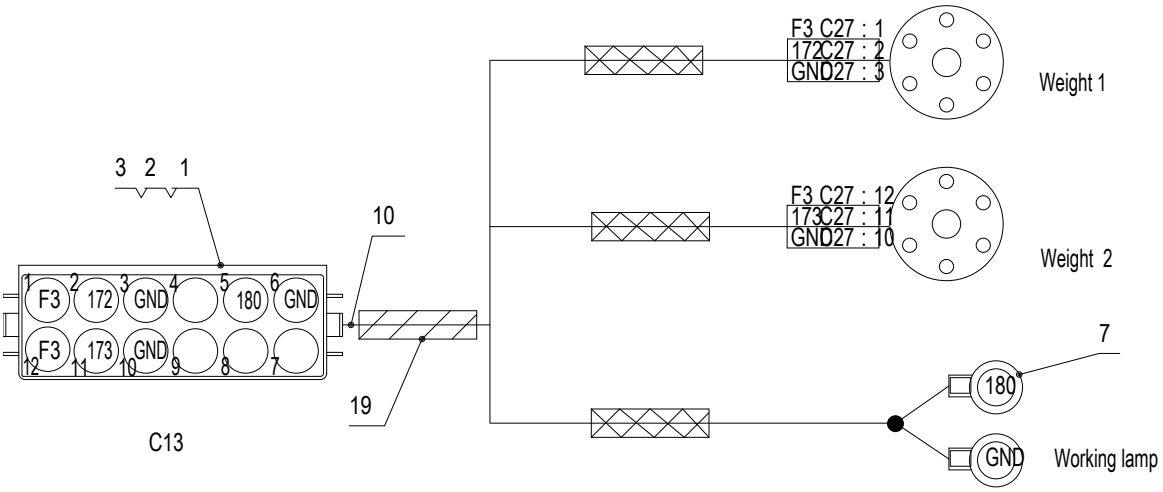

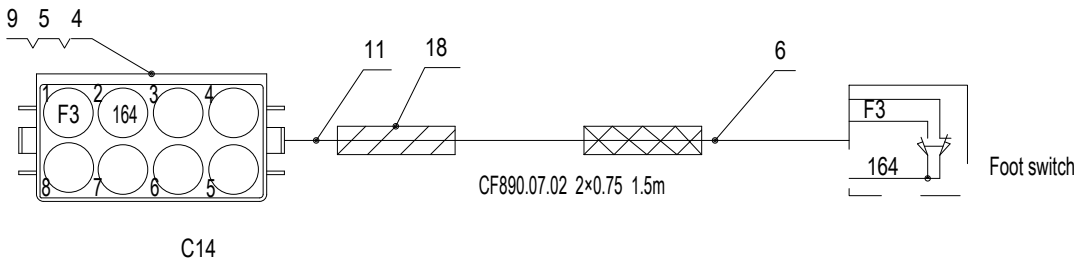

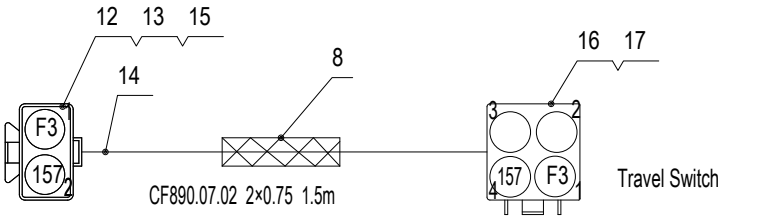

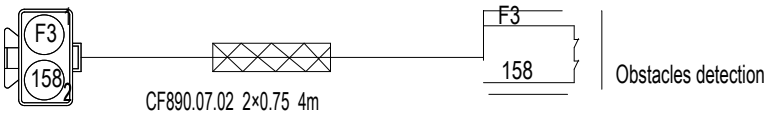

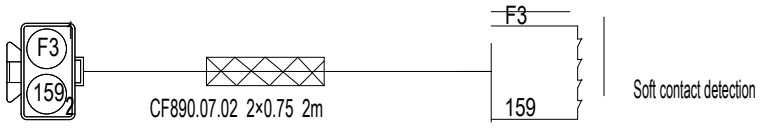



No.	Part No.	Qty.	Description
	104021063017	1	Wiring harness, platform sensor
1	203080000414	1	Sheath
2	203080000159	1	Lock
3	203080000041	12	Terminal, female
4	203080000406	1	Sheath
5	203080000112	1	Lock
6	203080000558	11	Cable, cable track
7	203080000105	2	Terminal round opening
8	203080000006	10	Corrugated pipe
9	203080000068	12	Blind plug
10	203080000461	1	End clip
11	203080000449	1	End clip
12	203080000408	4	Sheath
13	203080000021	4	Lock
14	203080000465	4	End clip
15	203080000033	8	Terminal, male
16	203080000044	1	Sheath
17	203080000020	1	Lock
18	203080000409	1	Nylon hose, closed-end
19	203080000411	1	Nylon hose, closed-end

7.4.16 PLATFORM ELECTRICAL COMPONENTS INSTALLATION （REXROTH）

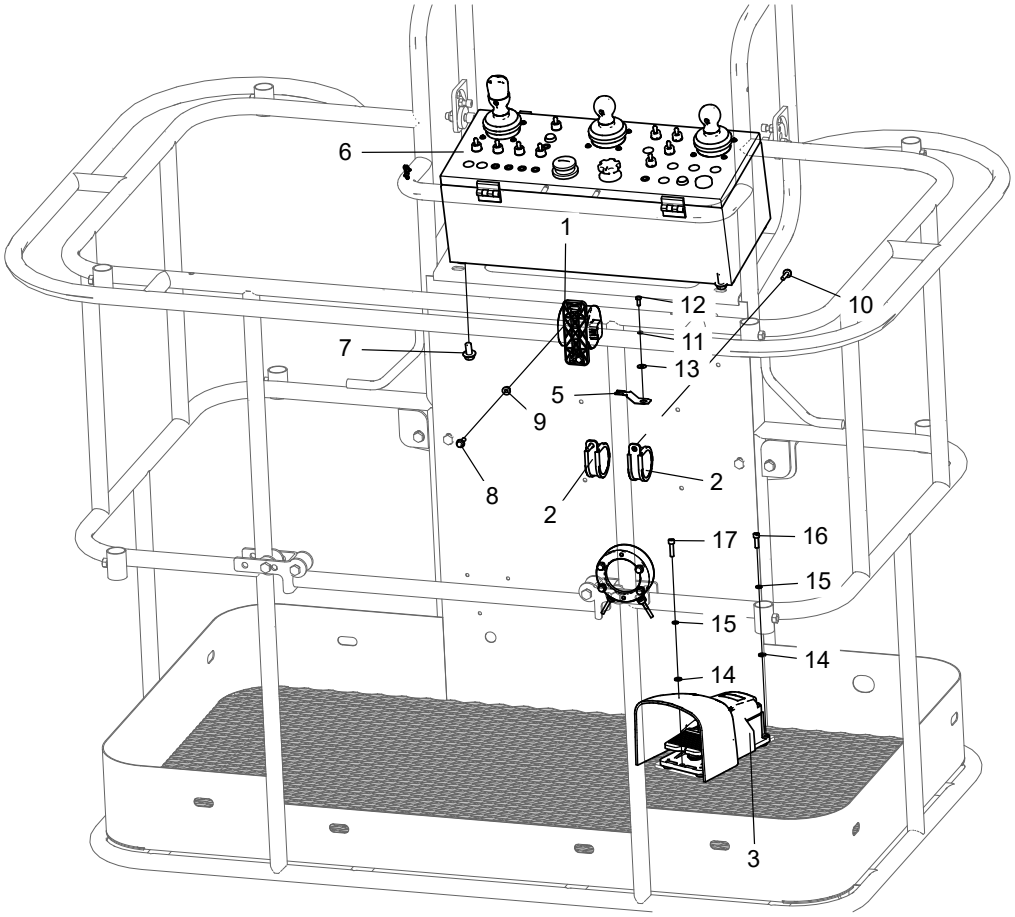

No.	Part No.	Qty.	Description
1	203050003040	1	Voice Horn
2	216020000025	2	Retaning ring, SSG
3	203060000009	1	Footswitch
4	103006060034		Load sensor options
4-1	103006060029	1	Load sensor
4-2	103006060026	1	Load sensor, dual-channel
4-3	103006063056	1	Load Sensor
4-4	103006063057	1	Load Sensor
4-5	103006063058	1	Load Sensor
5	203080000525	1	Fixture
6	104021063009	1	Platform controller assembly
7	215010000237	4	Bolt M10×20-8.8-ZnD GB/T 5789
8	215010000231	2	Bolt M6×20-8.8-ZnD GB/T 5789
9	215030000107	2	Nut M6-8-ZnD GB/T 6183
10	215010000232	2	Bolt M6×25-8.8-ZnD GB/T 5789

No.	Part No.	Qty.	Description
11	215040000003	1	Washer 5-A2-70 GB/T 93
12	215010000041	1	Bolt M5×12-A2-70 GB/T 5783
13	215040000132	1	Washer 5-200HV-A2 GT/B 96.1
14	215040000033	3	Washer 6-A2 GB/T 97.1
15	215040000004	3	Washer 6-A2-70 GB/T 93
16	215020000012	2	Screw M6×20-A2-70 GB/T 70.1
17	215020000013	1	Screw M6×25-A2-70 GB/T 70.1

7.4.17 PLATFORM CONTROL BOX ASSEMBLY(PN.104021063009)

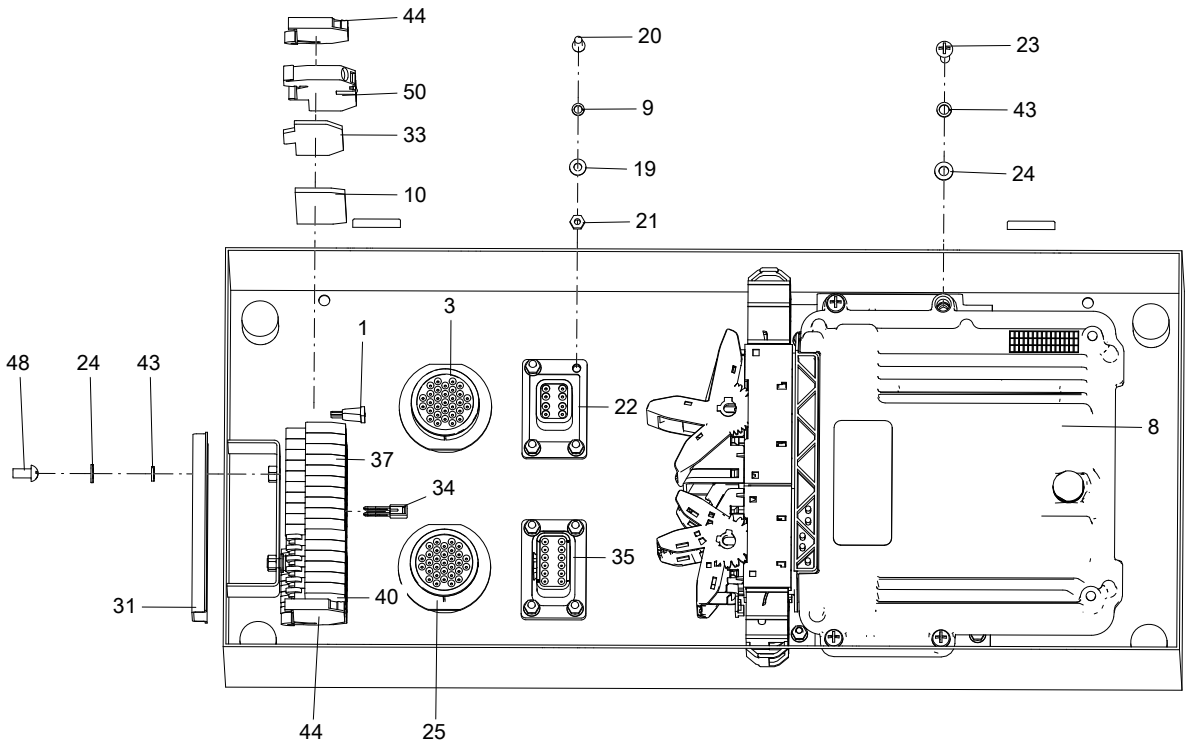

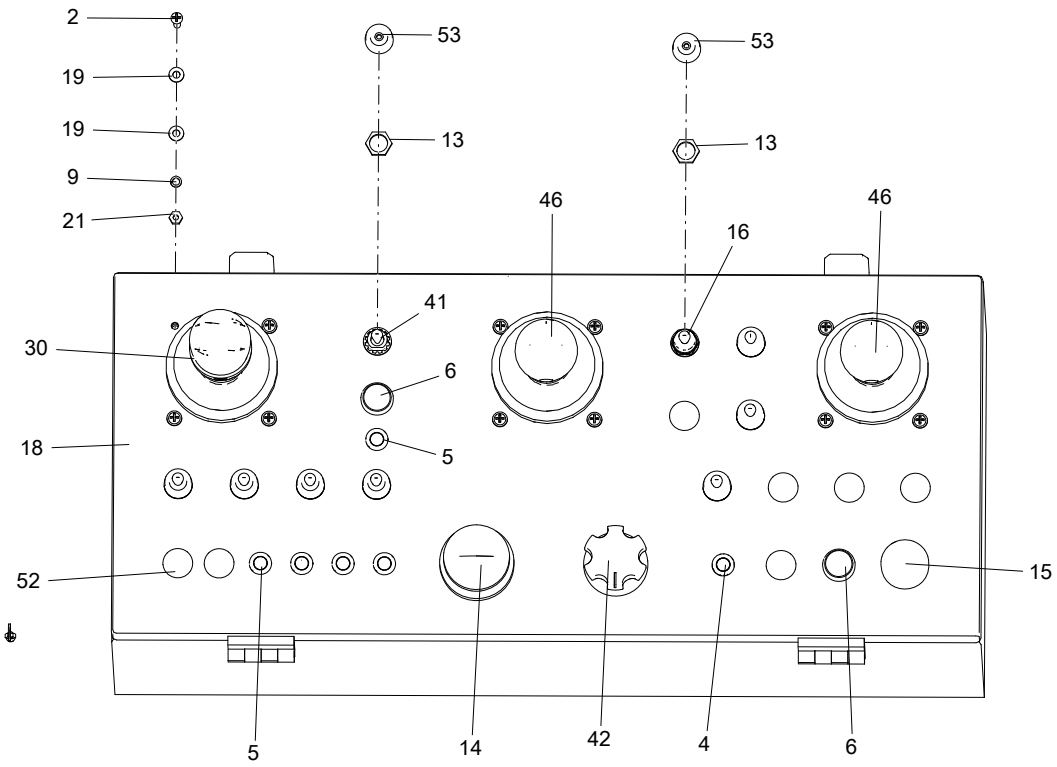

No.	Part No.	Qty.	Description
1	203070000053	1	Fuse
2	215020000107	12	Screw M4×20-A2-70 GB/T 818
3	203080000523	1	Connector, 31P, male
4	203050003014	1	Indicator light
5	203050003015	5	Indicator light
6	203060000020	2	Button, yellow
7	203060000098	2	Spring plate, metal
8	203020000038	1	Controller
9	215040000002	20	Washer 4-A2-70 GB/T 93
10	203080003052	1	End plate
11	203080000068	47	Blind plug
12	203080003056	1	Tag, terminal
13	203080000109	9	Nut
14	203060000142	1	Emergency stop switch
15	203050003021	1	Buzzer
16	203060000003	4	Switch, toggle
17	203080000126	1	Lock
18	104019060044	1	Platform controller
19	215040000031	32	Washer 4-A2 GB/T 97.1
20	215020000106	8	Screw M4×16-A2-70 GB/T 818
21	215030000002	20	Nut M4-8-A2-70 GB/T 6170
22	203060000088	1	Connector, 8p, with flange
23	215020000113	4	Screw M5×25-A2-70 GB/T 818
24	215040000032	6	Washer 5-A2 GB/T 97.1
25	203080000516	1	Connector, 31P, female
26	203080000019	3	Socket lock, 6-pin
27	104019060004	1	Platform Control Box Assembly
28	203080000033	21	Terminal, male
29	203080000041	14	Terminal, female
30	203060003081	1	Joystick
31	203990000001	1	Guiderail
32	203060000101	2	Nut, retaining
33	203080003059	1	End plate
34	203080003058	3	Jumper
35	203060000090	1	Connector, 12p, with flange
36	203080000085	7	Blind plug
37	203080003051	10	Terminal

No.	Part No.	Qty.	Description
38	203080003055	1	Tag, terminal
39	104020060010	1	PC film, platform controller
40	203080003054	6	Terminal, GND
41	203060000021	5	Switch, toggle
42	203150000021	1	Potentiometer
43	215040000003	6	Washer 5-A2-70 GB/T 93
44	203080003053	2	Terminal block end plate
45	203080000099	11	Terminal
46	203060003084	2	Joystick
47	203080000378	1	Connector
48	215020000109	2	Screw M5×10-A2-70 GB/T 818
49	203080000157	1	Lock
50	203080003057	1	Terminal
51	203060000014	3	Connector, handle
52	105045060004	7	Plug, controller
53	203080000101	9	Cap, waterproof

7.4.18 PLATFORM CONTROL BOX HARNESS(PN.104021063013)

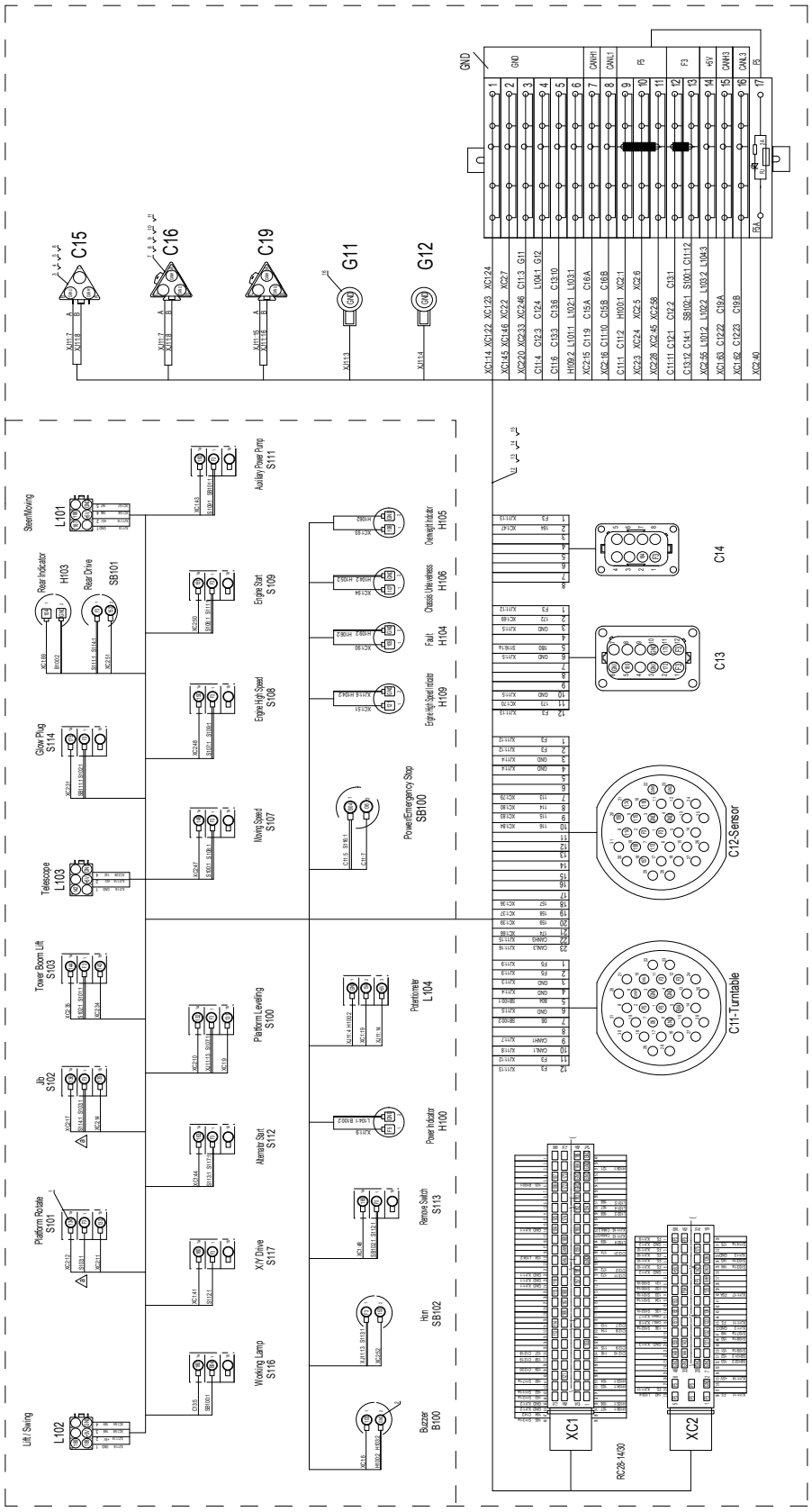

No.	Part No.	Qty.	Description
	104021063013	1	Platform control box wiring diagram
1	203080000023	27	Terminal, blade-hole type
2	203080000036	16	Terminal
3	203080000404	1	Sheath
4	203080000032	1	Lock
5	203080000041	2	Terminal, female
6	203080000473	1	Cover, waterproof
7	203080000405	2	Sheath
8	203080000046	2	Lock
9	203080000033	4	Terminal, male
10	203080000068	3	Blind plug
11	203080000086	2	Sheath
12	203080000562	5	Cable, thin wall (red)
13	203080000563	7	Cable, thin wall (black)
14	203080000564	15	Cable, thin wall (white)
15	216020000020	30	Cable tie, nylon
16	203080000133	2	Terminal, blade-hole type

7.4.19 ELECTRICAL SCHEMATIC DIAGRAM

Electrical Schematic Diagram(PN.105073063015)

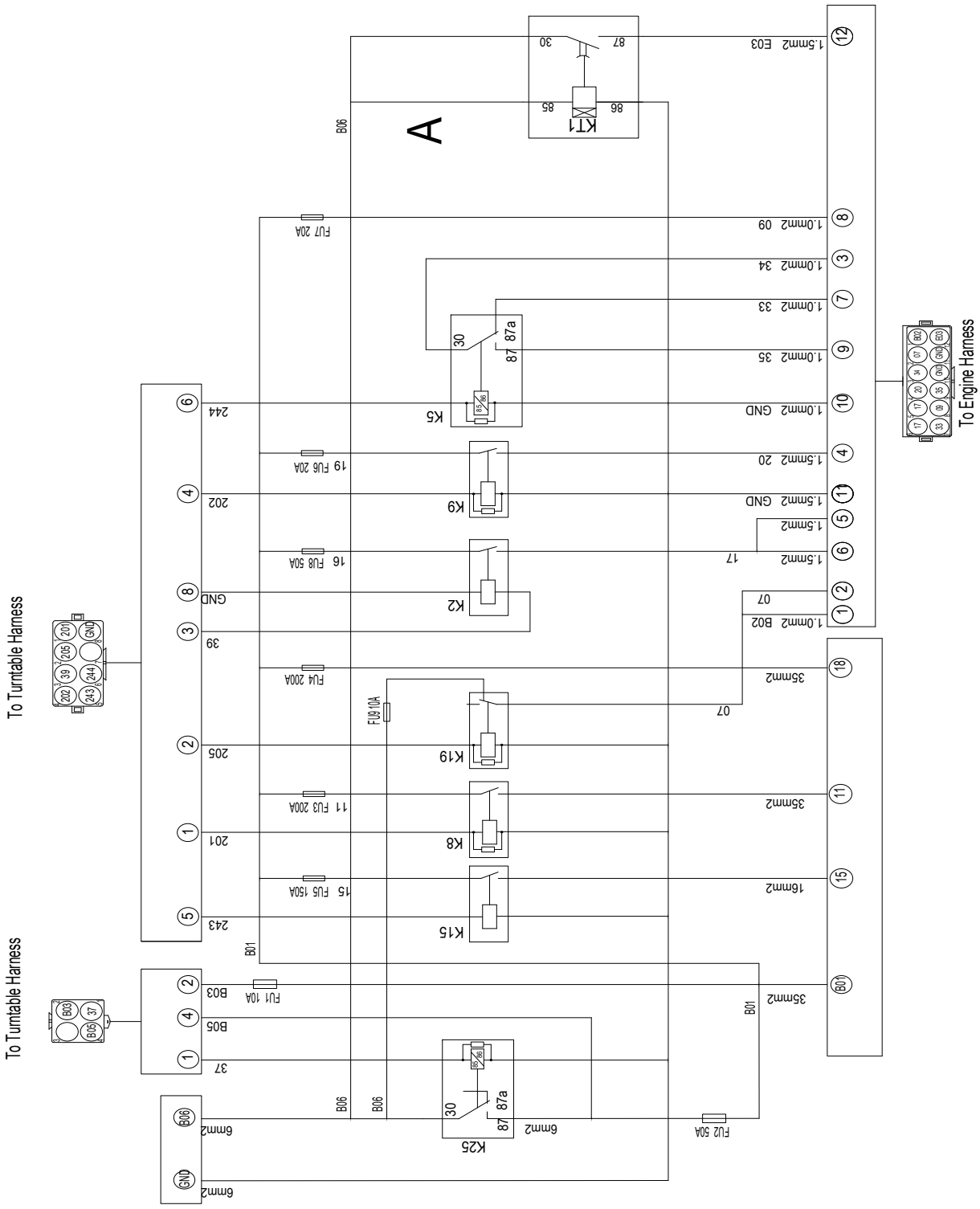

7.4.20 ELECTRICAL SCHEMATIC DIAGRAM(REXROTH & YANMAR, CHINA STAGE III)

Electrical schematic diagram of turntable

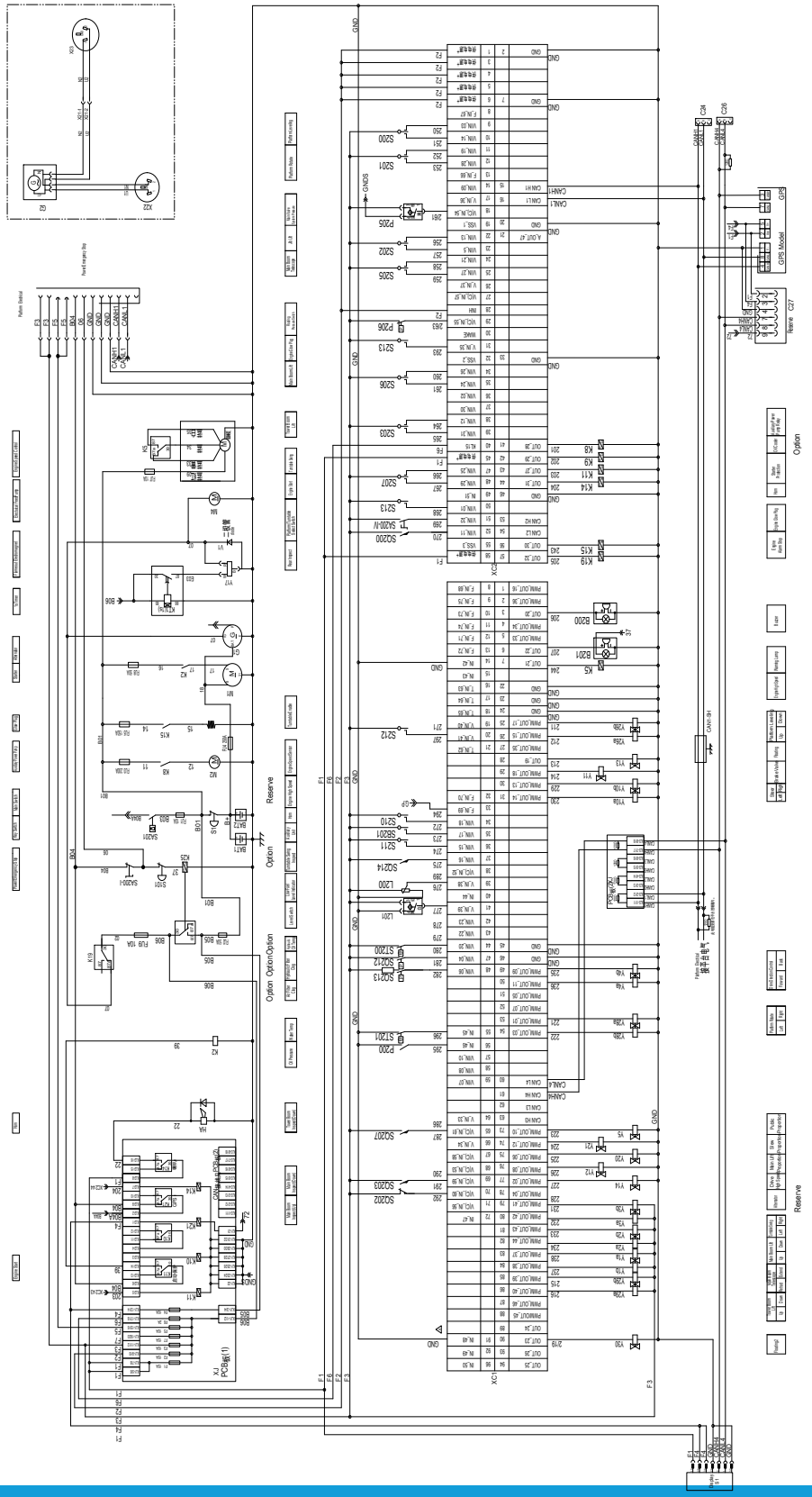

Electrical schematic diagram of platform

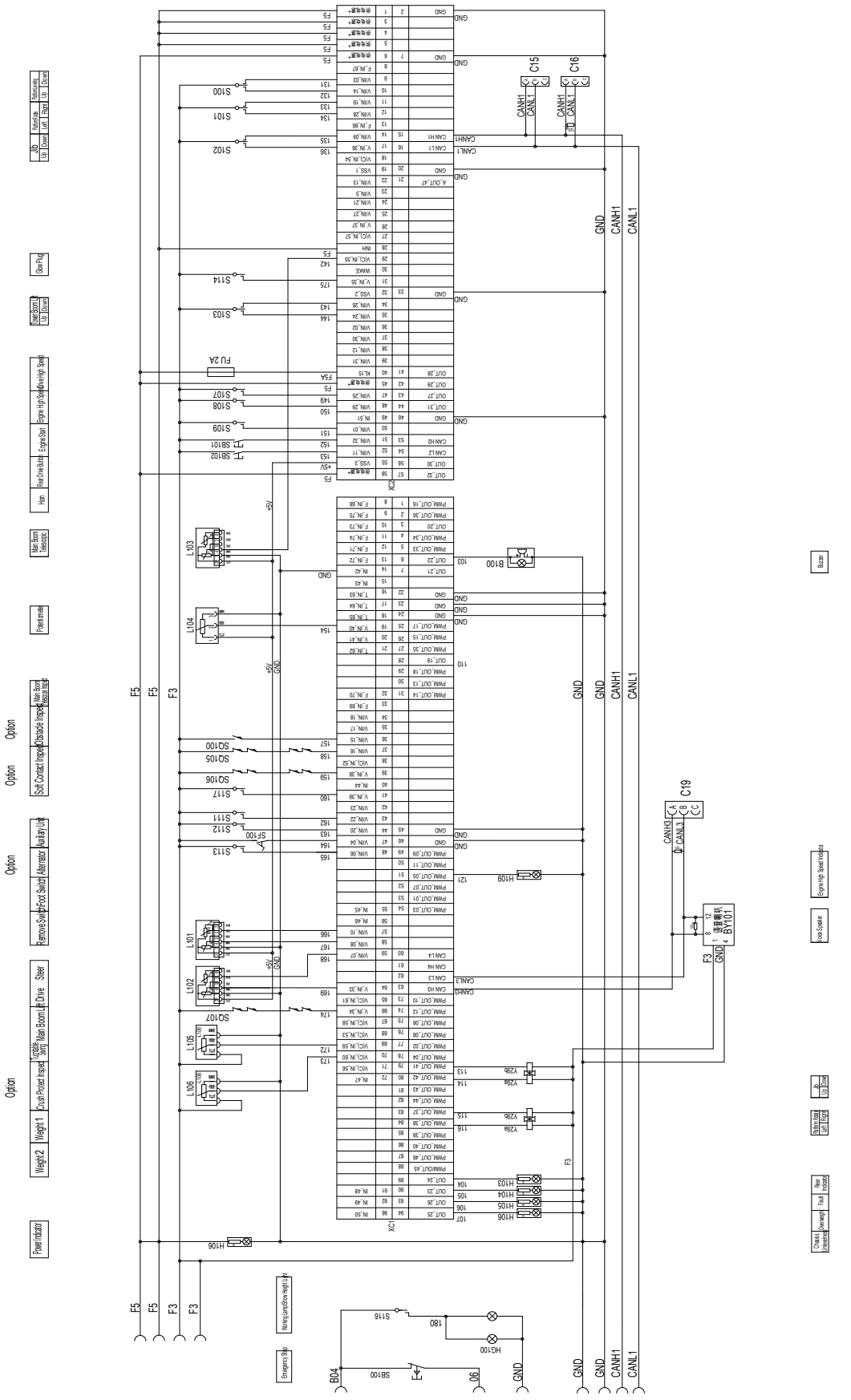

7.5 ELECTRICAL SYSTEM(REXROTH-YANMAR)

7.5.1 CHASSIS ELECTRICAL COMPONENTS INSTALLATION

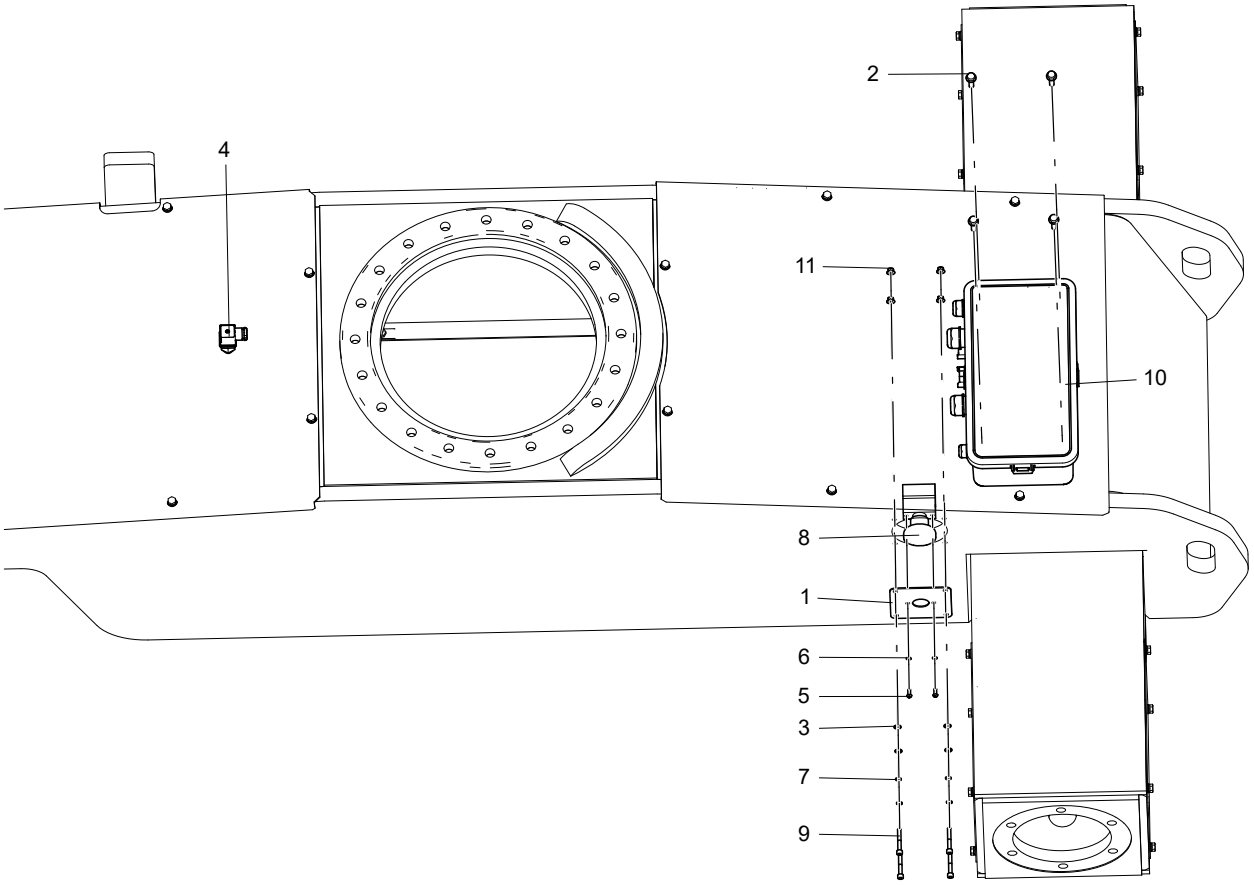

No.	Part No.	Qty.	Description
1	104009060001	1	Mounting plate, power-off switch
2	215010000236	4	Bolt M8×30-8.8-ZnD GB/T 5789
3	215040000033	4	Washer 6-A2 GB/T 97.1
4	203150003016	1	Pressure switch
5	215020000110	2	Screw M5×12-A2-70 GB/T 818
6	215040000003	2	Washer 5-A2-70 GB/T 93
7	215040000004	4	Washer 6-A2-70 GB/T 93
8	203060000024	1	Power-off switch
9	215020000017	4	Screw M6×45-A2-70 GB/T 70.1
10	203100003042	1	Power switch box
11	215030000107	4	Nut M6-8-ZnD GB/T 6183

7.5.2 BATTERIES INSTALLATION

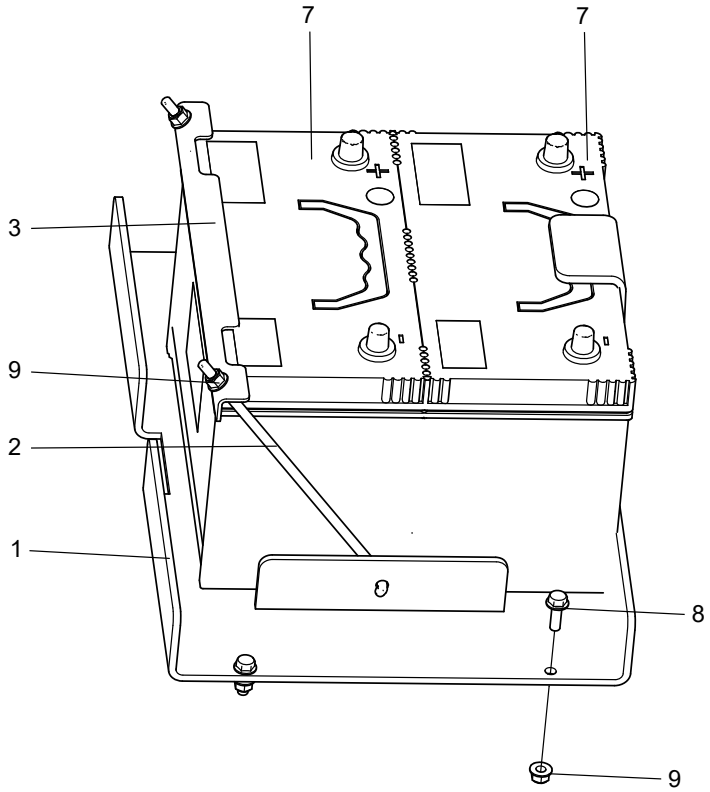

No.	Part No.	Qty.	Description
1	104009060024	1	Bracket,battery
2	105001020169	2	Tie rod
3	105001020176	1	Pressbar 2
4	203080000250	2	Battery terminal (Not Shown)
5	203100000051	2	Jacket, flexible(Not Shown)
6	203100000053	2	Jacket, flexible(Not Shown)
7	203100000061	2	Battery, maintenance-free
8	215010000235	4	Bolt M8×25-8.8-ZnD GB/T 5789
9	215030000108	6	Nut M8-8-ZnD GB/T 6183

7.5.3 ELECTRICAL INSTALLATION (YANMAR)

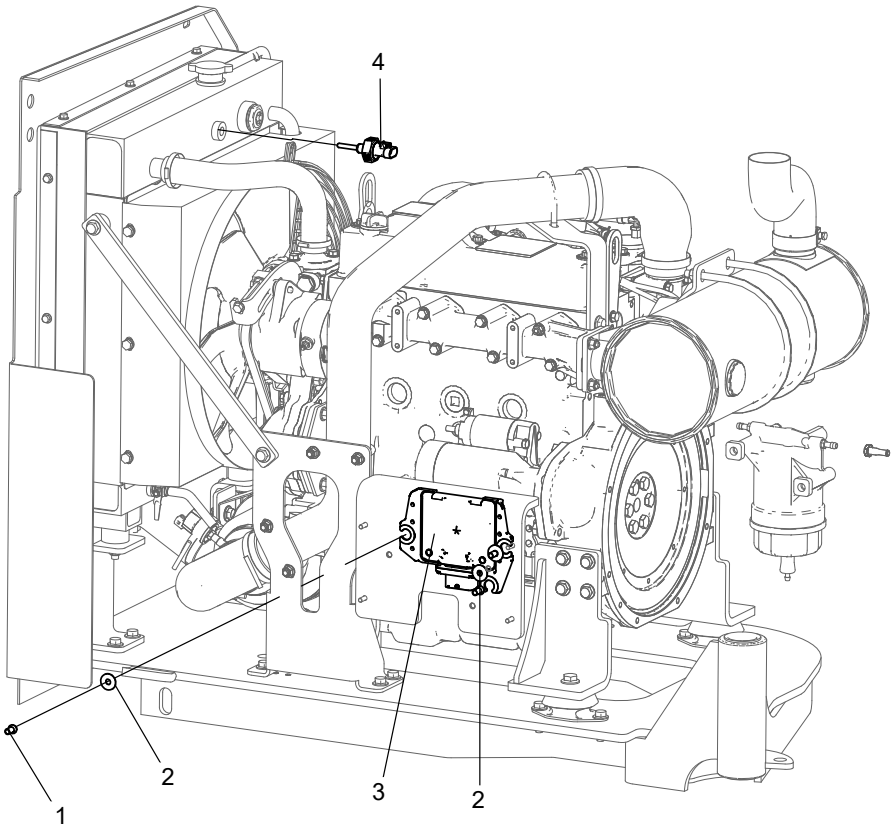

No.	Part No.	Qty.	Description
1	215020000120	3	Screw M8×16-4.8-ZnD GB/T 818
2	201010003059	3	ECU shim
3	203020003092	1	Controller
4	203150003026	1	Liquid level sensor

7.5.4 ENGINE HARNESS

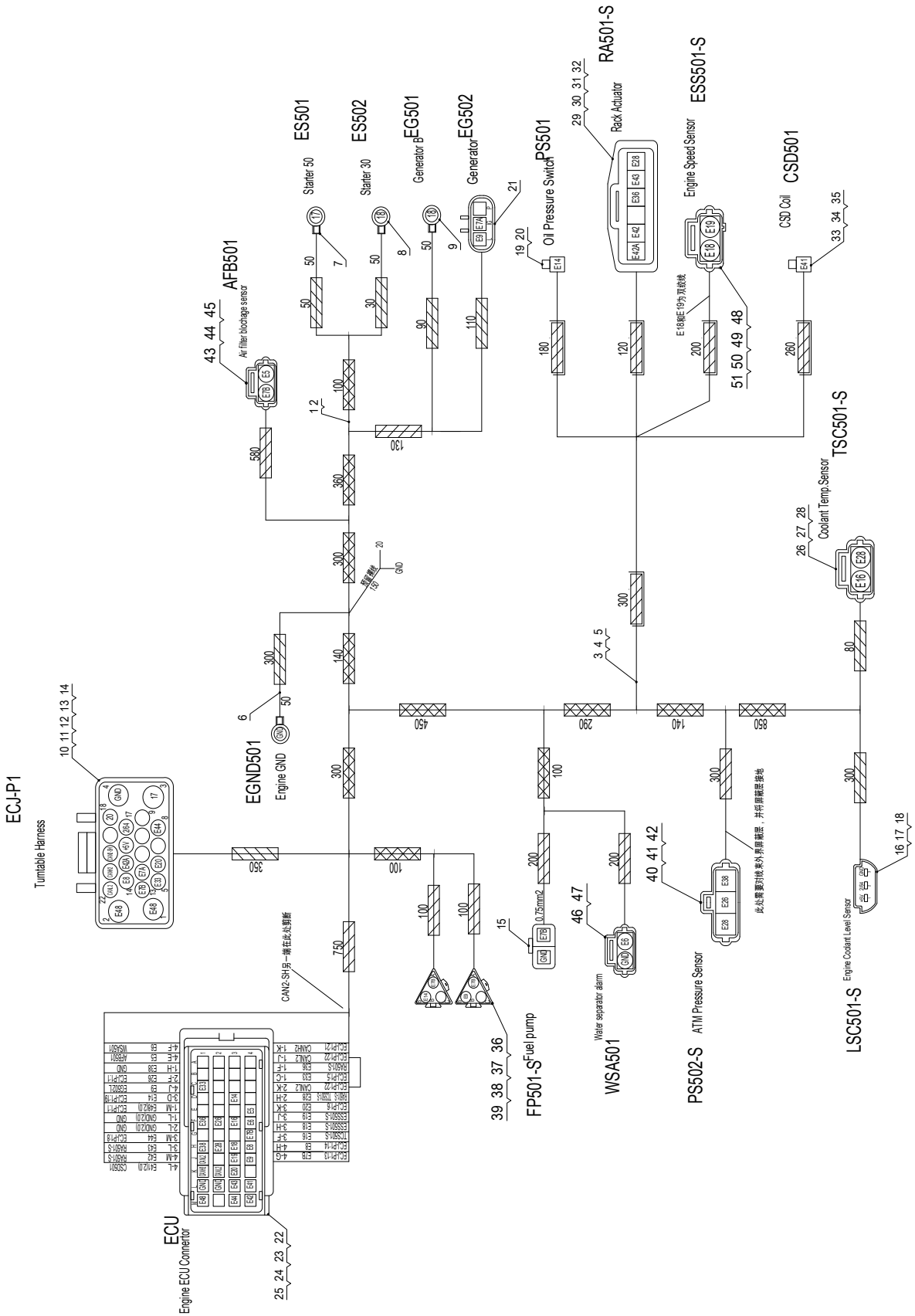

No.	Part No.	Qty.	Description
	105074063051	1	Engine Harness
1	203080000367	4	Cable
2	203080000582	4	Cable
3	203080003207	15	Cable
4	203080000372	10	Cable
5	203080003208	3	Cable
6	203080000394	3	Cable
7	203080000039	1	Terminal, blade-hole type
8	203080003457	1	Terminal, round top insulated
9	203080003394	1	Terminal, round top insulated
10	203080003209	1	Socket, 4+18pin
11	203080003211	1	Waterproof shim, panel
12	203080003210	4	Pin, male, 30A
13	203080000141	13	Pin, male
14	203080003212	1	End clip
15	203080003306	1	Connector
16	203080000331	1	Fitting
17	203080000323	3	Pin
18	203080000332	1	Seal plug
19	203080000129	1	Jacket, flexible
20	203080000130	1	Terminal
21	203080000376	1	Sheath
22	203080003436	1	Sheath
23	203080003437	1	Cover
24	203080003438	17	Terminal, small
25	203080003439	7	Terminal
26	203080003440	1	Sheath
27	203080003441	2	Terminal
28	203080003103	1	Waterproof hose
29	203080003442	1	Sheath
30	203080003443	5	Terminal
31	203080003444	1	Plug, waterproof
32	203080003445	1	Blind plug
33	203080003450	1	Sheath
34	203080003452	1	Terminal
35	203080003453	1	Waterproof hose
36	203080000405	2	Sheath

No.	Part No.	Qty.	Description
37	203080000046	2	Lock
38	203080000086	2	Sheath
38	203080000455	2	End attachments, 3-pin, male
40	203080003546	1	Sheath
41	203080003547	3	Terminal
42	203080003548	1	Waterproof Bolt
43	203080003564	1	Sheath
44	203080003565	2	Terminal
45	203080000387	1	Kit, seal
46	203080003434	1	Sheath
47	203080003435	2	Terminal
48	203080003446	1	Sheath
49	203080003447	1	Card buckle
50	203080003448	2	Terminal
51	203080003449	1	Waterproof hose

7.5.5 TURNTABLE ELECTRICAL COMPONENTS INSTALLATION

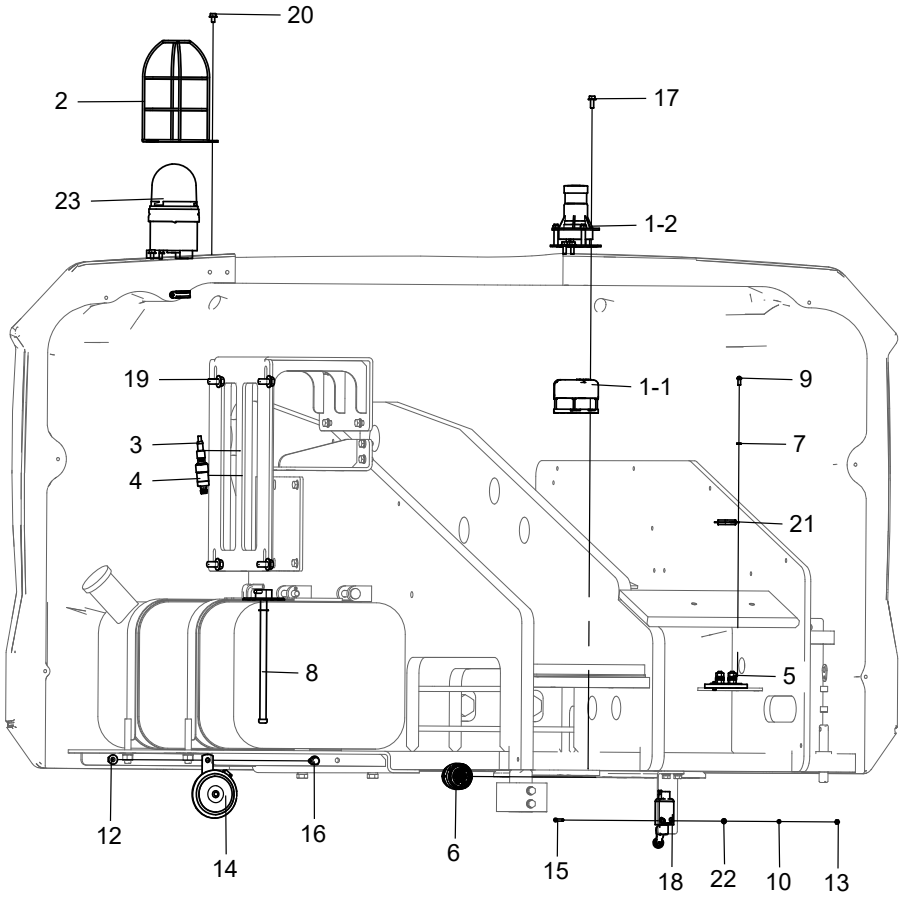

No.	Part No.	Qty.	Description
1	103008063058		Options, Level sensor installation
1-1	203060000111	1	Level sensor
1-2	203150000039	1	Level sensor
2	105021060024	1	Guard, beacon light
3	203080003094	1	Plug, with cable
4	203150000055	1	Pressure sensor
5	203070000056	1	Fuse holder
6	104021063015	1	Turntable Sensors Harness
7	215040000003	2	Washer 5-A2-70 GB/T 93
8	203150000026	1	Sensor, liquid level
9	215020000110	2	Screw M5×12-A2-70 GB/T 818
10	215040000002	2	Washer 4-A2-70 GB/T 93
11	216020000024	3	Retaning ring, SSG
12	215030000108	1	Nut M8-8-ZnD GB/T 6183
13	215030000002	2	Nut M4-8-A2-70 GB/T 6170
14	203050000034	1	Horn

No.	Part No.	Qty.	Description
15	215020000212	2	Screw M4×35-A2-70 GB/T 818
16	215010000234	1	Bolt M8×20-8.8-ZnD GB/T 5789
17	215010000230	3	Bolt M6×16-8.8-ZnD GB/T 5789
18	203060000146	1	Travel switch
19	215010000237	4	Bolt M10×20-8.8-ZnD GB/T 5789
20	215010000229	3	Bolt M6×10-8.8-ZnD GB/T 5789
21	203070003009	1	Fuse
22	215040000031	2	Washer 4-A2 GB/T 97.1
23	203050000060	1	Beacon light

7.5.6 GROUND CONTROL BOX ASSEMBLY(PN.104021063112)

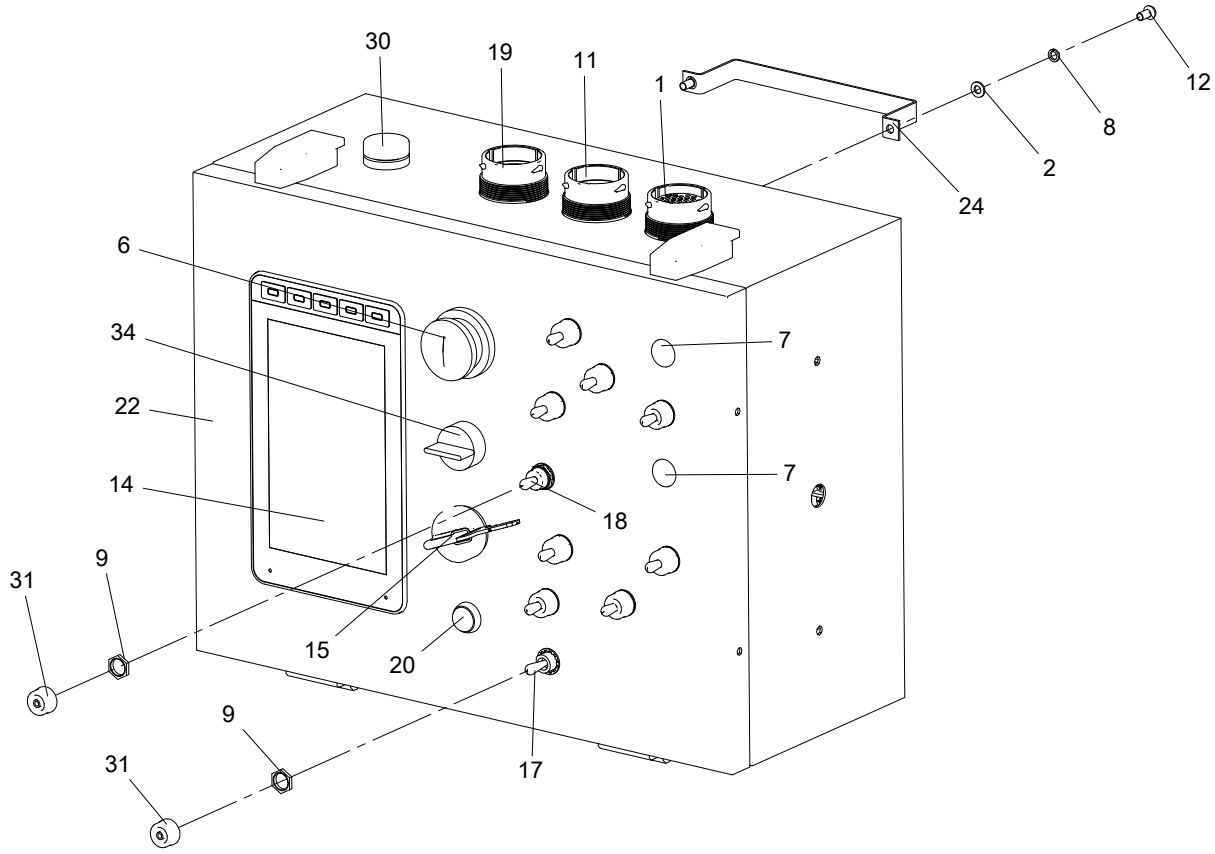

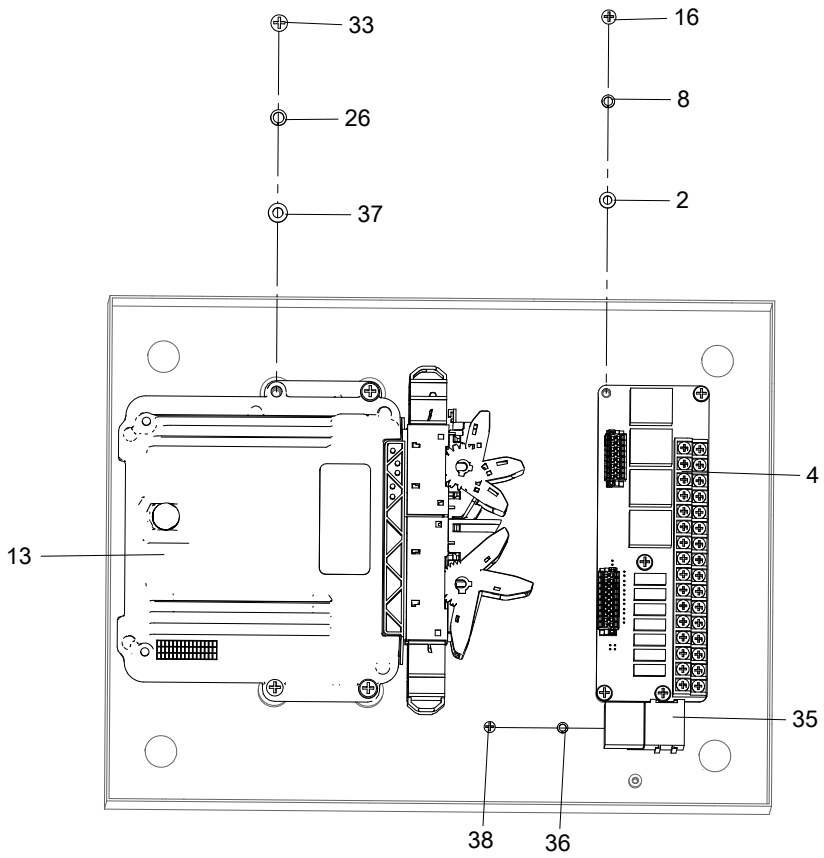

No.	Part No.	Qty.	Description
1	203080000516	1	Connector, 31P, female
2	215040000032	11	Washer 5-A2 GB/T 97.1
3	203080000068	23	Blind plug
4	203030000015	1	Integrated board, relay
5	203080003147	1	Connector assy, SECD-7I0A
6	203060000142	1	Emergency stop switch
7	105045060004	2	Plug, controller
8	215040000003	11	Washer 5-A2-70 GB/T 93
9	203080000109	10	Nut
10	203080000033	32	Terminal, male
11	203080000523	1	Connector, 31P, male
12	215020000109	6	Screw M5×10-A2-70 GB/T 818
13	203020000038	1	Controller
14	203200000004	1	Display screen
15	203060000114	1	Key switch
16	215020000110	5	Screw M5×12-A2-70 GB/T 818
17	203060000021	3	Switch, toggle
18	203060000003	7	Switch, toggle
19	203080000518	1	Connector, 21-pin, male
20	203060000020	1	Button, yellow
21	104020060001	1	Membrane, ground controller
22	104021063008	1	Ground controller assembly
23	203060000103	4	Terminal, #12, male
24	105001060106	3	Retaining plate, display screen
25	203080000378	1	Connector
26	215040000004	4	Washer 6-A2-70 GB/T 93
27	203060000101	3	Nut, retaining
28	203060000098	3	Spring plate, metal
29	203080000041	24	Terminal, female
30	203050003021	1	Buzzer
31	203080000101	10	Cap, waterproof
32	104021063057	1	PC film, ground controller
33	215020000118	4	Screw M6×25-A2-70 GB/T 818
34	203060000029	1	Select switch
36	215040000002	1	Washer 4-A2-70 GB/T 93
37	215040000033	4	Washer 6-A2 GB/T 97.1

© Aug. 2022

No.	Part No.	Qty.	Description
38	215020000104	1	Screw M4×10-A2-70 GB/T 818
35	203040003005	1	Delay relay

7.5.7 GROUND CONTROL BOX HARNESS(PN.104021063120)

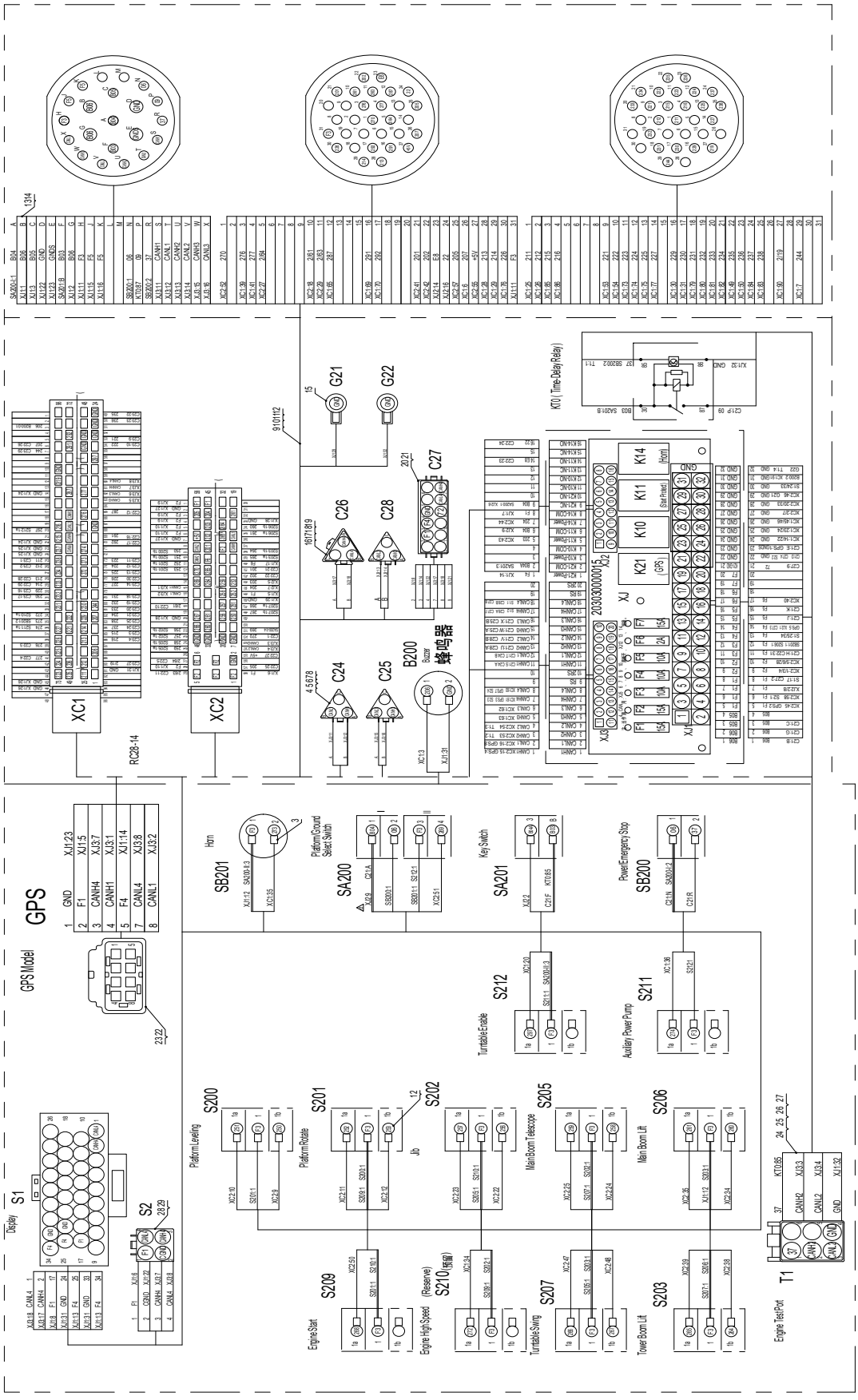

No.	Part No.	Qty.	Description
	104021063120	1	Turntable controller box wiring diagram
1	203080000036	29	Terminal
2	203080000022	1	Heat shrink tube
3	203080000023	6	Terminal, blade-hole type
4	203080000404	2	Sheath
5	203080000032	2	Lock
6	203080000041	10	Terminal, female
7	203080000068	3	Blind plug
8	203080000473	2	Cover, waterproof
9	203080000564	15	Cable, thin wall (white)
10	203080000562	5	Cable, thin wall (red)
11	203080000563	7	Cable, thin wall (black)
12	216020000020	30	Cable tie, nylon
13	203080000047	1	Cable
14	203080000196	1	Cable
15	203080000133	2	Terminal, blade-hole type
16	203080000405	1	Sheath
17	203080000046	1	Lock
18	203080000033	2	Terminal, male
19	203080000086	1	Sheath
20	203080003532	1	Sheathed
21	203080003533	1	Lock
22	203080003218	7	Terminal AMP
23	203080003216	1	Sheath
24	203080003184	1	Sheath
25	203060000085	10	Terminal, female
26	203080000019	1	Socket lock, 6-pin
27	203080000085	8	Blind plug
28	203080000044	1	Sheath
29	203080000020	1	Lock

7.5.8 ELECTRICAL POWER WIRING LAYOUT(PN.104021063088)

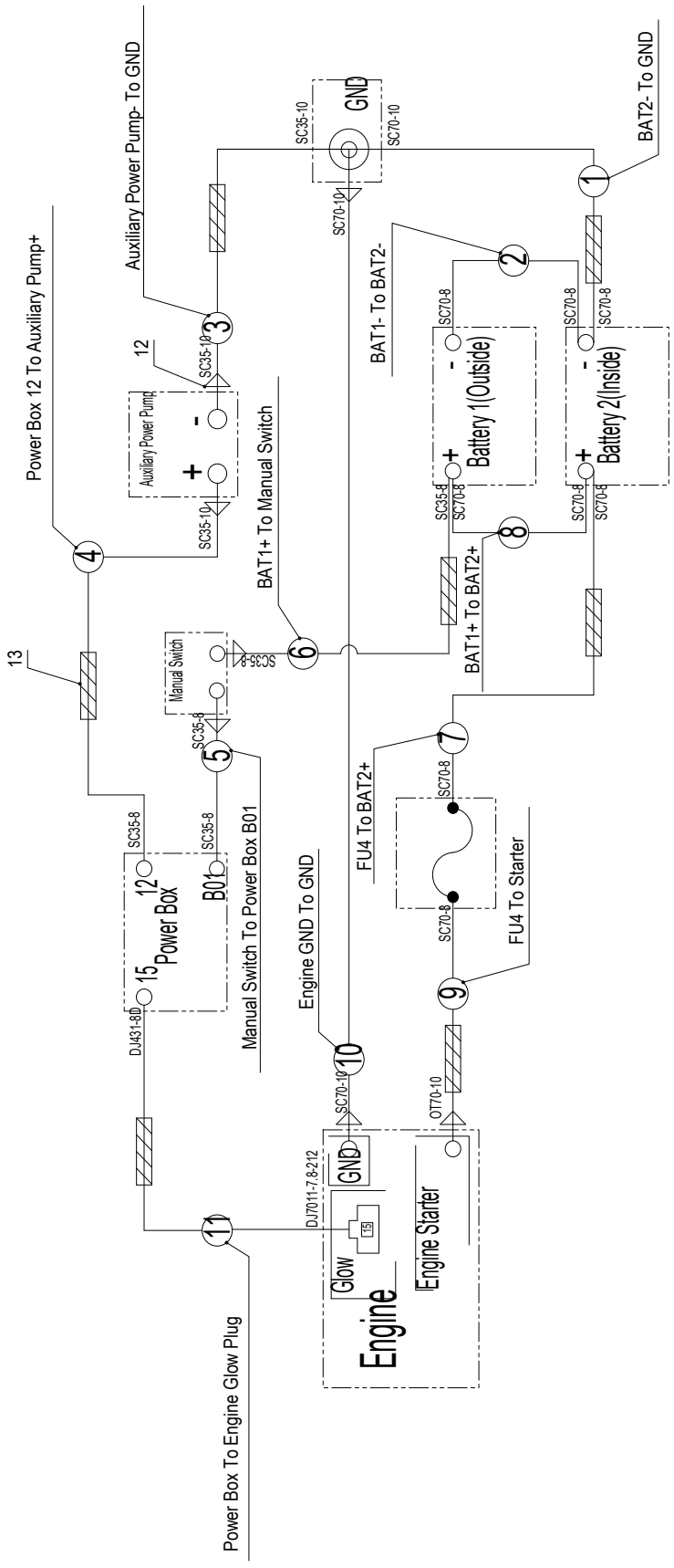

No.	Part No.	Qty.	Description
	104021063088	1	Electrical power wiring layout
1	203230000582	1	Power harness
2	203230000364	1	Power harness
3	203230000625	1	Power harness
4	203230000801	1	Power harness
5	203230000528	1	Power harness
6	203230000506	1	Power harness
7	203230000802	1	Power harness
8	203230000404	1	Power harness
9	203230000623	1	Power harness
10	203230000523	1	Power harness
11	203230000908	1	Power harness
12	203080000004	8	Connector, PVC
13	203080000422	16	Nylon hose, closed-end

7.5.9 TURNTABLE SENSORS HARNESS (PN.104021063015)

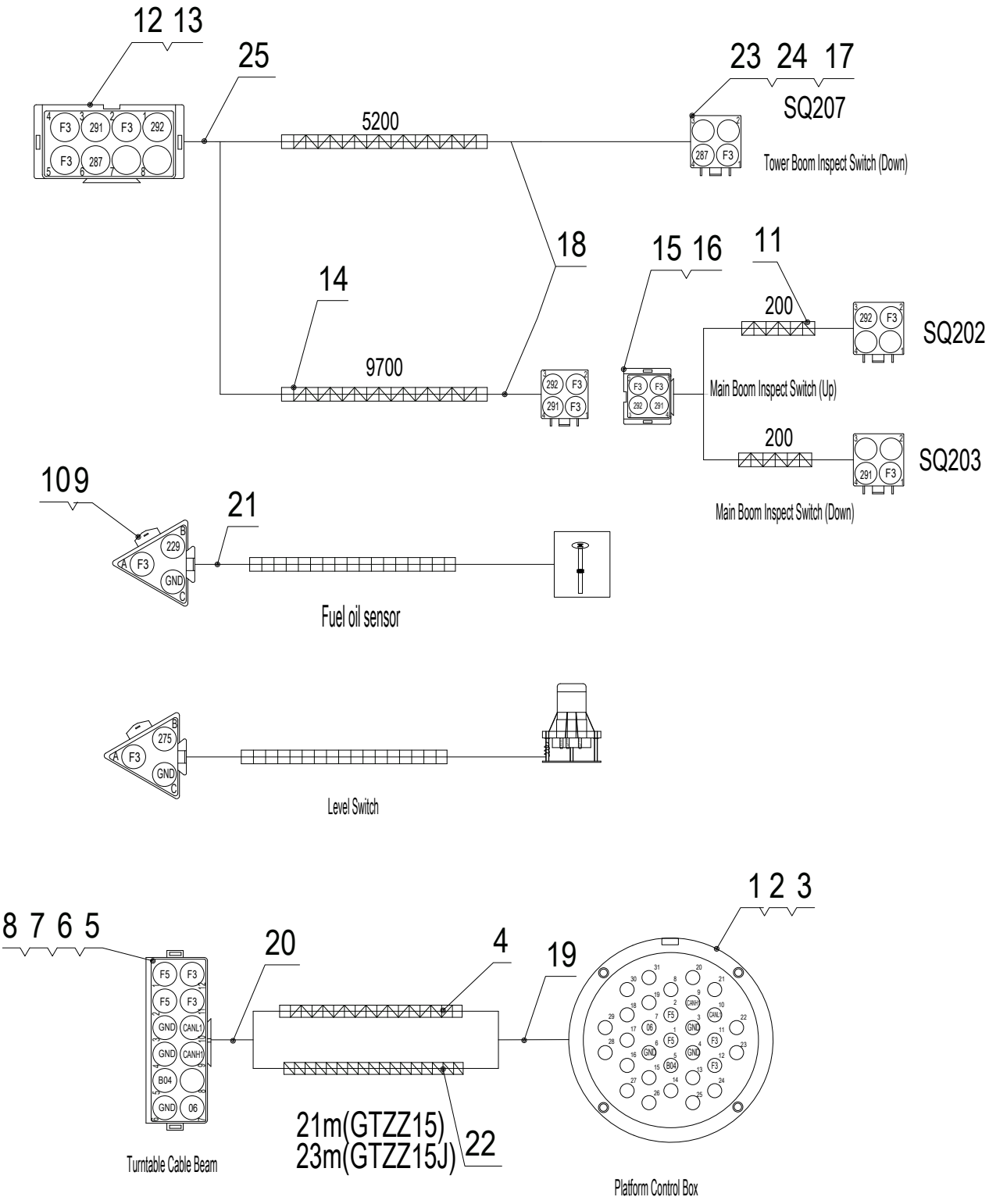

No.	Part No.	Qty.	Description
	104021063015	1	Turntable Sensors Harness
1	203080000520	1	Connector, 31P, female
2	203060000096	1	End clip, 180 deg.
3	203080000524	11	Terminal, female
4	203080000560	23	Cable, cable track
5	203080000403	1	Sheath
6	203080000157	1	Lock
7	203080000033	27	Terminal, male
8	203080000068	28	Blind plug
9	203080000405	2	Sheath
10	203080000046	2	Lock
11	203080000558	6	Cable, cable track
12	203080000413	1	Sheath
13	203080000126	1	Lock
14	203080000557	10	Cable, chain
15	203080000054	1	Sheath
16	203080000088	1	Lock
17	203080000041	10	Terminal, female
18	203080000006	16	Corrugated pipe
19	203080000419	1	Nylon hose, closed-end
20	203080000459	1	End clip
21	203080000466	2	End clip
22	203080000555	23	Cable, CAN bus, cable track
23	203080000044	4	Sheath
24	203080000020	4	Lock
25	203080000447	1	End clip

7.5.10 TURNTABLE HARNESS(PN.104021063119)

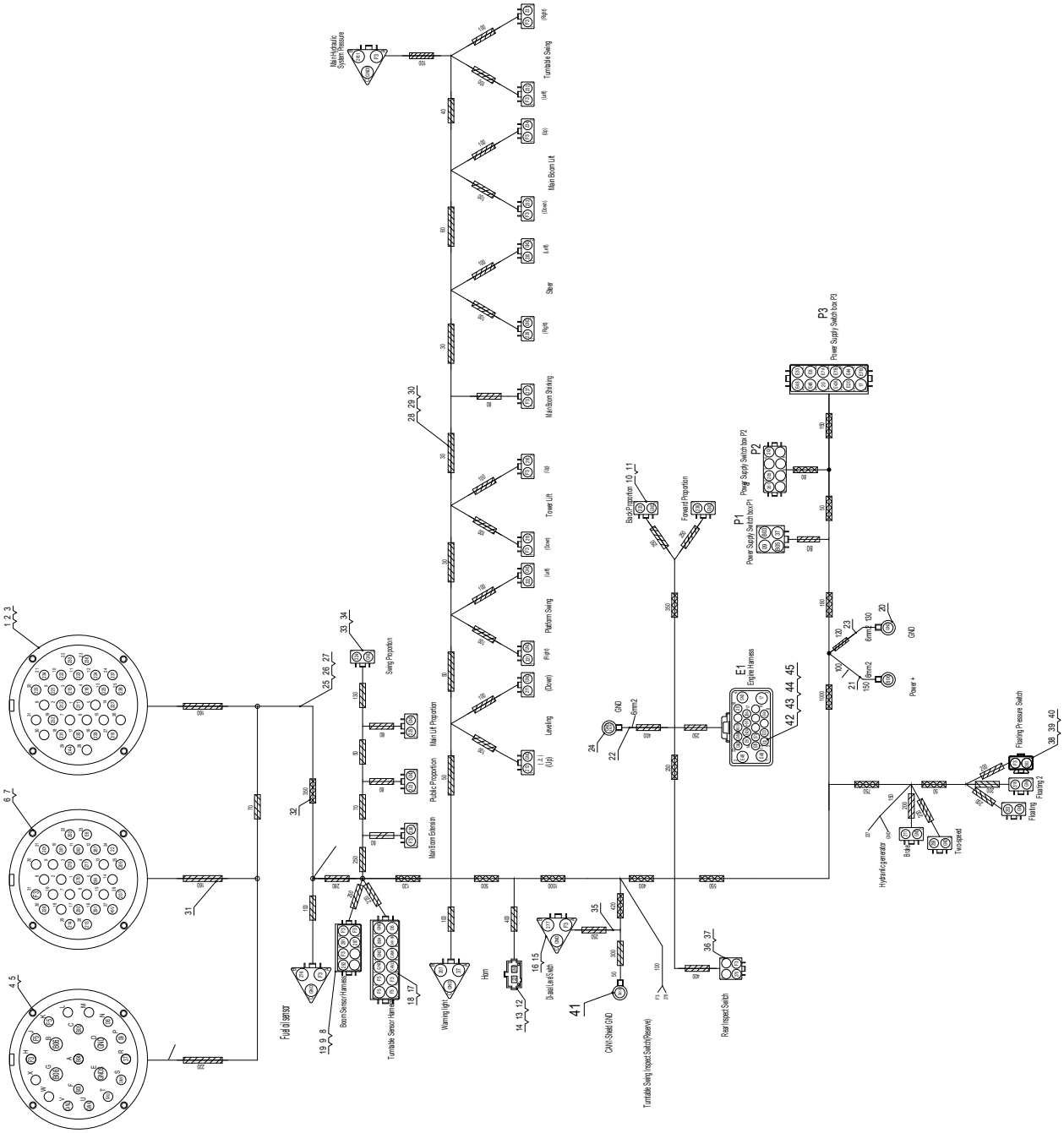

No.	Part No.	Qty.	Description
	104021063119	1	Turntable Harness
1	203080000515	1	Connector, 31P, male
2	203060000096	3	End clip, 180 deg.
3	203080000033	26	Terminal, male
4	203080000517	1	Connector, 21-pin, female
5	203060000097	4	Terminal, #12, female
6	203080000520	1	Connector, 31P, female
7	203080000041	128	Terminal, female
8	203080000406	2	Sheath
9	203080000112	2	Lock
10	203080000410	23	Sheath
11	203080000016	23	Lock
12	203080000427	1	Sheath
13	203080000428	2	Pin, female
14	203080000429	1	Cap, waterproof
15	203080000404	4	Sheath
16	203080000032	4	Lock
17	203080000414	2	Sheath
18	203080000159	2	Lock
19	203080000068	31	Blind plug
20	203080000134	2	Terminal, blade-hole type
21	203080000161	5	Cable
22	203080000030	1	Heat shrink tube
23	203080000191	5	Cable
24	203080000244	1	Terminal, round top insulated
25	203080000564	150	Cable, thin wall (white)
26	203080000563	60	Cable, thin wall (black)
27	203080000562	40	Cable, thin wall (red)
28	203080000424	6	Nylon hose, closed-end
29	203080000422	4	Nylon hose, closed-end
30	203080000037	2	Corrugated pipe
31	203080000417	1	Nylon hose, closed-end
32	203080000135	1	Corrugated pipe (Black)
33	203080000437	23	End attachments, 2-pin, female
34	203080000448	23	Rubber, 2-pin
35	203080000508	4	End clip
36	203080000044	2	Sheath

No.	Part No.	Qty.	Description
37	203080000020	2	Lock
38	203080000408	1	Sheath
39	203080000021	1	Lock
40	203080000465	1	End clip
41	203080000133	1	Terminal, blade-hole type
42	203080003213	1	Plug, 4+18P
43	203080000146	15	Pin, female
44	203080003214	4	Pin, female, 30A
45	203080003212	1	End clip

7.5.11 BOOM ELECTRICAL COMPONENTS INSTALLATION

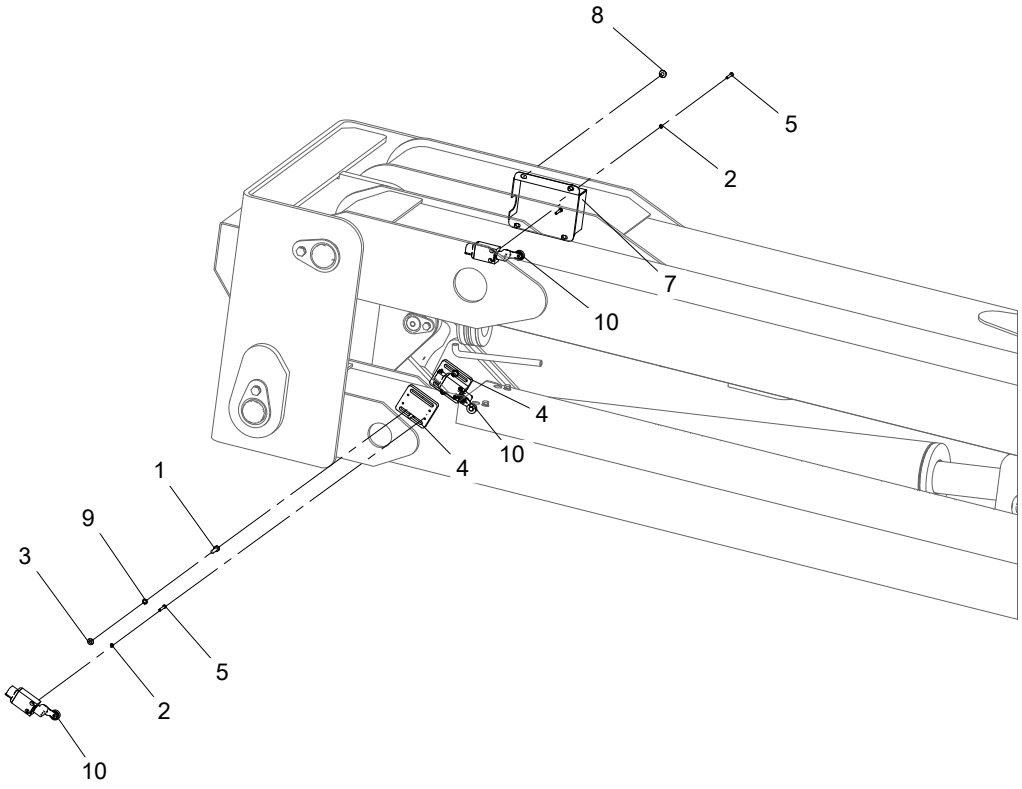

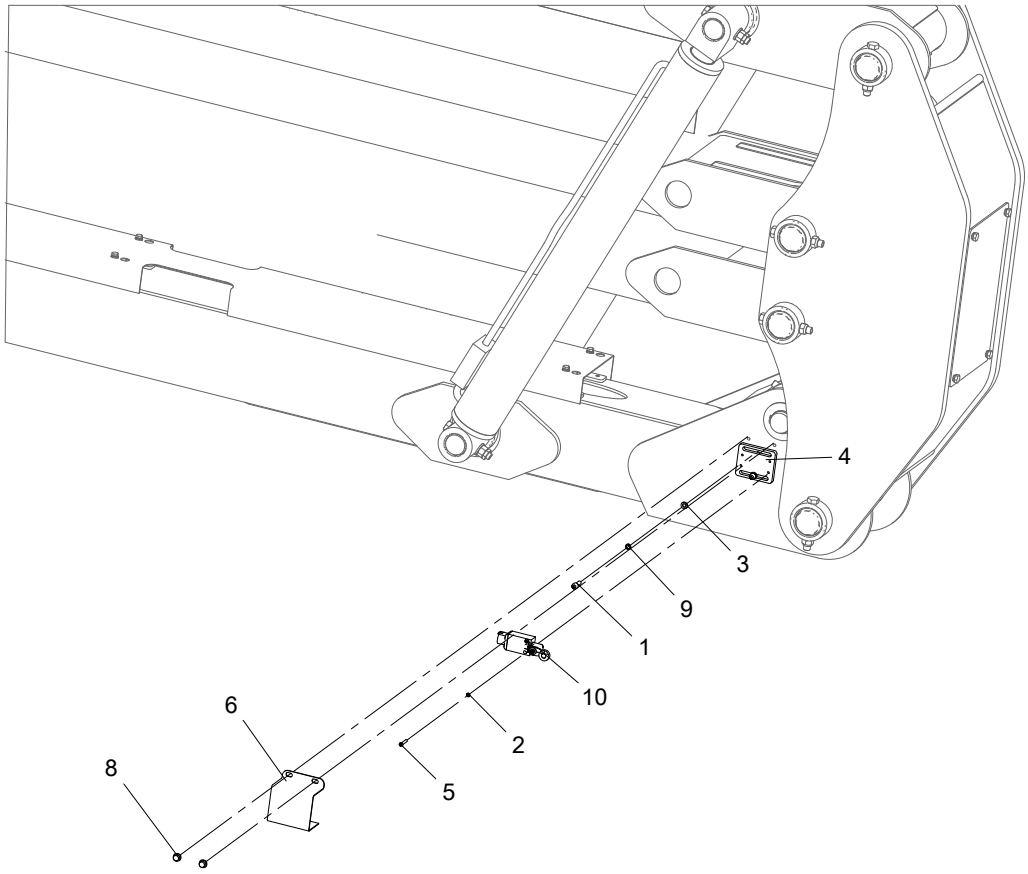

No.	Part No.	Qty.	Description
1	215020000012	6	Screw M6×20-A2-70 GB/T 70.1
2	215040000002	8	Washer 4-A2-70 GB/T 93
3	215040000033	6	Washer 6-A2 GB/T 97.1
4	104009060027	3	Mounting plate, travel switch
5	215020000108	8	Screw M4×25-A2-70 GB/T 818
6	104009060078	1	Cover, travel switch
7	104011060052	1	Cover, travel switch
8	215010000229	6	Bolt M6×10-8.8-ZnD GB/T 5789
9	215040000004	6	Washer 6-A2-70 GB/T 93
10	203060000146	4	Travel switch

7.5.12 CABLE TRACK DIAGRAM(PN.104021063058)

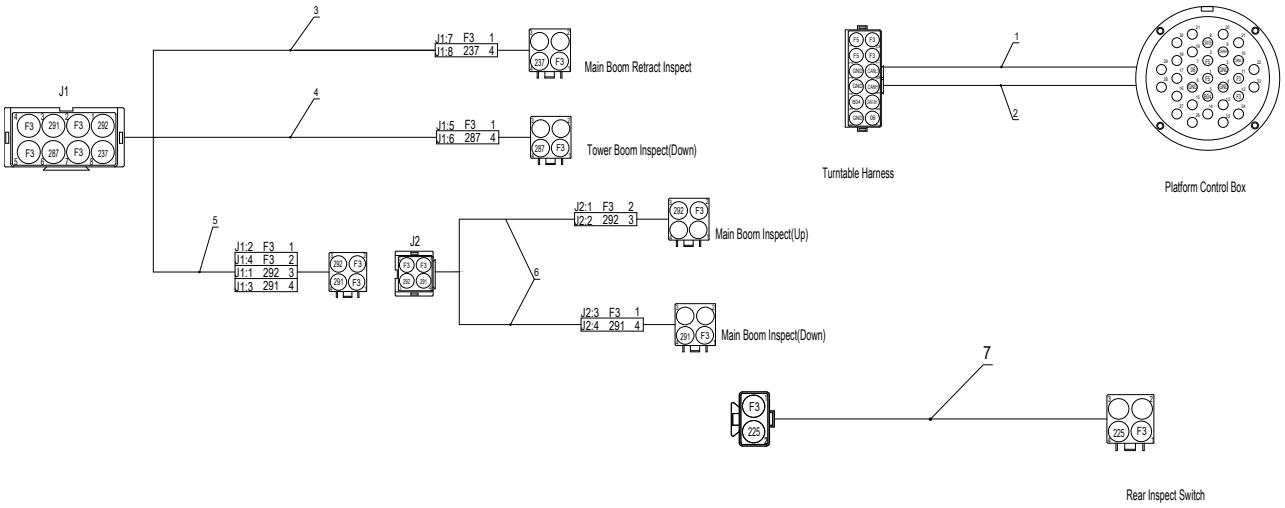

No.	Part No.	Qty.	Description
	104021063058	1	Cable track diagram
1	203230000652	1	Cable, chain
2	203230000653	1	Cable, CAN bus, cable track
3	203230000643	1	Cable, chain
4	203230000638	1	Cable, chain
5	203230000642	1	Cable, chain
6	203230000634	2	Cable, cable track
7	203230000837	1	Cable, chain

7.5.13 PLATFORM HARNESS(PN.103006063009)

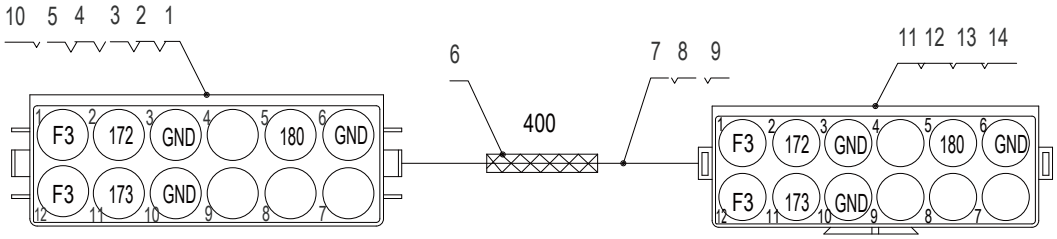

No.	Part No.	Qty.	Description
	103006063009	1	Wiring harness, platform
1	203080000155	1	Sheath
2	203080000159	1	Lock
3	203080000041	8	Terminal, female
4	203080000068	8	Blind plug
5	203080003001	1	End clip
6	203080000037	1m	Corrugated pipe
7	203080000562	2	Cable, thin wall (red)
8	203080000563	2	Cable, thin wall (black)
9	203080000564	1	Cable, thin wall (white)
10	203080003010	1	Nut, big-size
11	203080000403	1	Sheath
12	203080000157	1	Lock
13	203080000033	8	Terminal, male
14	203080000459	1	End clip

7.5.14 PLATFORM HARNESS(PN.104021063016)

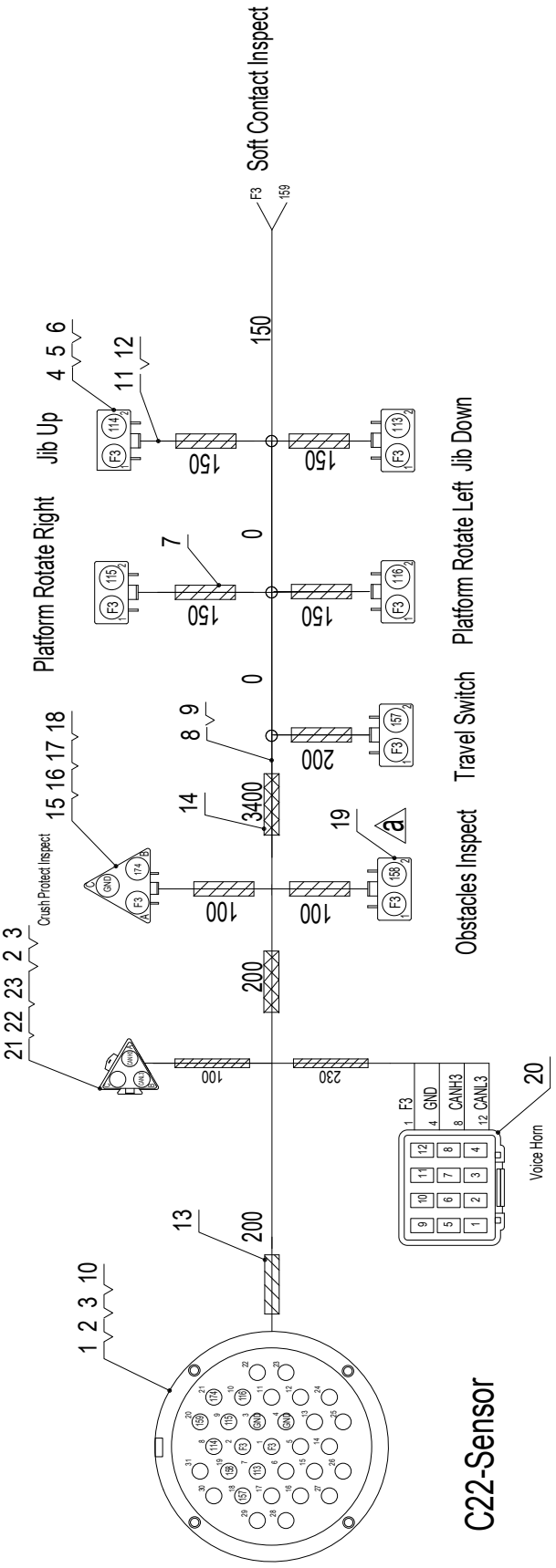

No.	Part No.	Qty.	Description
	104021063016	1	Wiring harness, platform
1	203080000515	1	Connector, 31P, male
2	203080000068	20	Blind plug
3	203080000033	14	Terminal, male
4	203080000410	6	Sheath
5	203080000016	6	Lock
6	203080000041	15	Terminal, female
7	203080000463	1	Nylon hose, closed-end
8	203080000564	32	Cable, thin wall (white)
9	203080000562	32	Cable, thin wall (red)
10	203060000096	1	End clip, 180 deg.
11	203080000437	6	End attachments, 2-pin, female
12	203080000448	6	Rubber, 2-pin
13	203080000419	1	Nylon hose, closed-end
14	203080000037	3	Corrugated pipe
15	203080000404	1	Sheath
16	203080000032	1	Lock
17	203080000508	1	End clip
18	203080000473	1	Cover, waterproof
19	203080000474	1	Cover, waterproof
20	203080003584	1	Sheath
21	203080000405	1	Sheath
22	203080000046	1	Lock
23	203080000086	1	Sheath

7.5.15 PLATFORM SENSORS HARNESS(PN.104021063017)

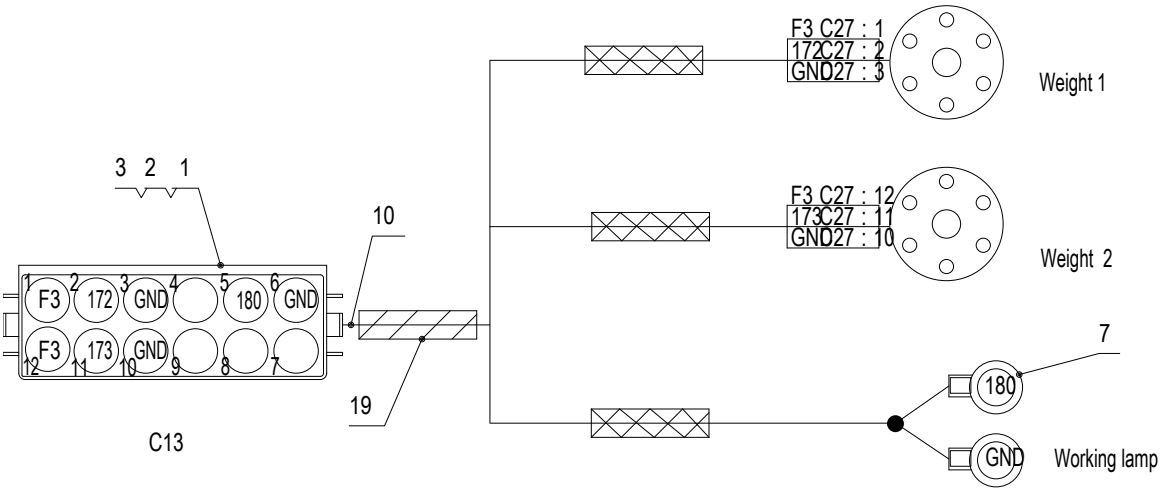

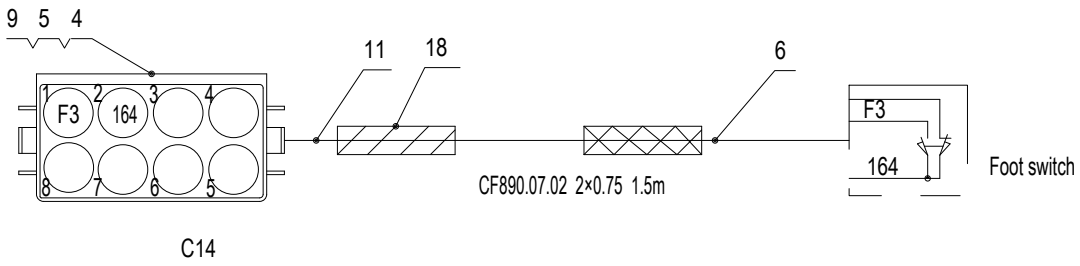

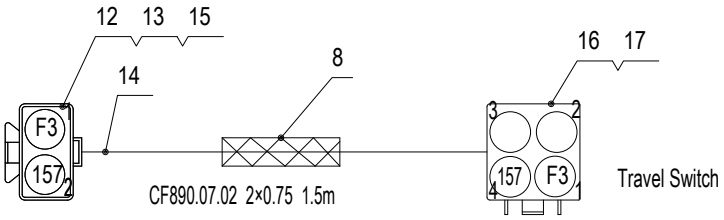

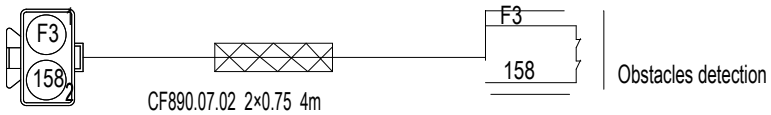

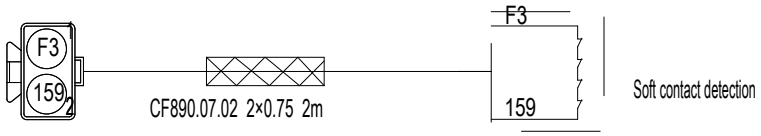



No.	Part No.	Qty.	Description
	104021063017	1	Wiring harness, platform sensor
1	203080000414	1	Sheath
2	203080000159	1	Lock
3	203080000041	12	Terminal, female
4	203080000406	1	Sheath
5	203080000112	1	Lock
6	203080000558	11	Cable, cable track
7	203080000105	2	Terminal round opening
8	203080000006	10	Corrugated pipe
9	203080000068	12	Blind plug
10	203080000461	1	End clip
11	203080000449	1	End clip
12	203080000408	4	Sheath
13	203080000021	4	Lock
14	203080000465	4	End clip
15	203080000033	8	Terminal, male
16	203080000044	1	Sheath
17	203080000020	1	Lock
18	203080000409	1	Nylon hose, closed-end
19	203080000411	1	Nylon hose, closed-end

7.5.16 PLATFORM ELECTRICAL COMPONENTS INSTALLATION

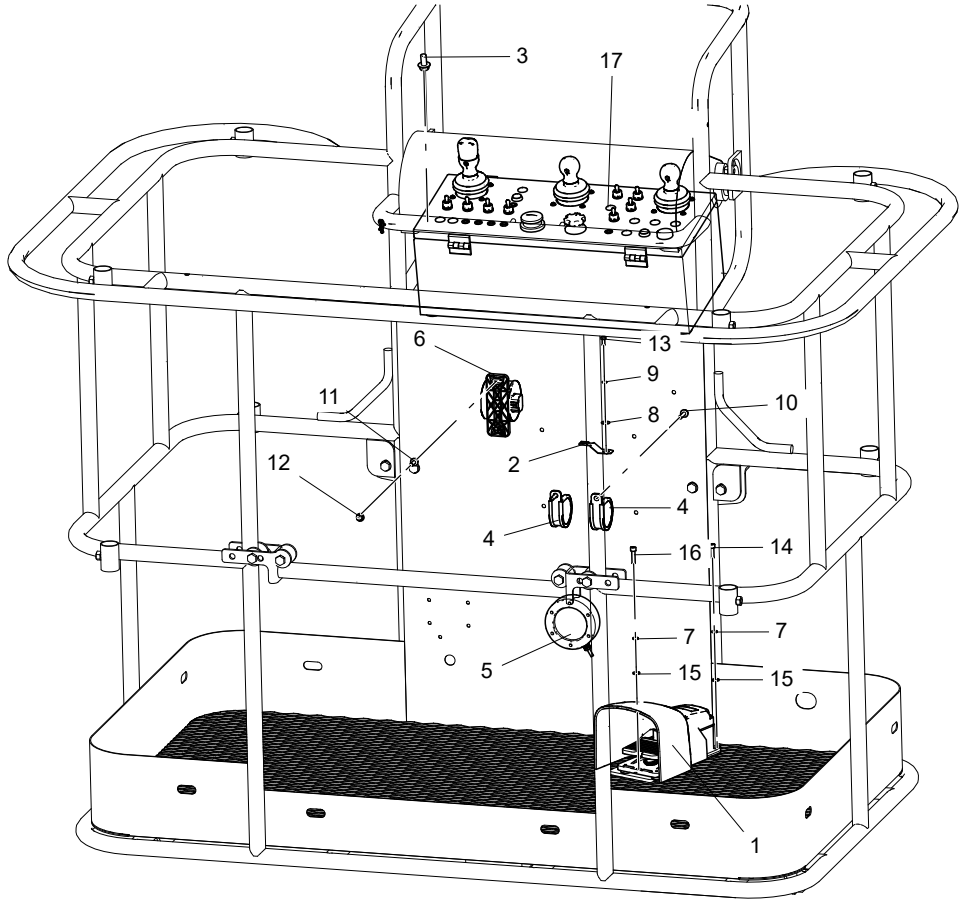

No.	Part No.	Qty.	Description
1	203060000009	1	Footswitch
2	203080000525	1	Fixture
3	215010000237	4	Bolt M10×20-8.8-ZnD GB/T 5789
4	216020000025	2	Retaning ring, SSG
5	103006060034	1	Load sensor options
6	203050003040	1	Voice Horn
7	215040000004	3	Washer 6-A2-70 GB/T 93
8	215040000132	1	Washer 5-200HV-A2 GT/B 96.1
9	215040000003	1	Washer 5-A2-70 GB/T 93
10	215010000232	2	Bolt M6×25-8.8-ZnD GB/T 5789
11	215010000230	2	Bolt M6×16-8.8-ZnD GB/T 5789
12	215030000107	2	Nut M6-8-ZnD GB/T 6183
13	215010000041	1	Bolt M5×12-A2-70 GB/T 5783
14	215020000012	2	Screw M6×20-A2-70 GB/T 70.1
15	215040000033	3	Washer 6-A2 GB/T 97.1
16	215020000013	1	Screw M6×25-A2-70 GB/T 70.1

No.	Part No.	Qty.	Description
17	104021063123	1	Platform control box

7.5.17 PLATFORM CONTROL BOX ASSEMBLY(PN.104021063123)

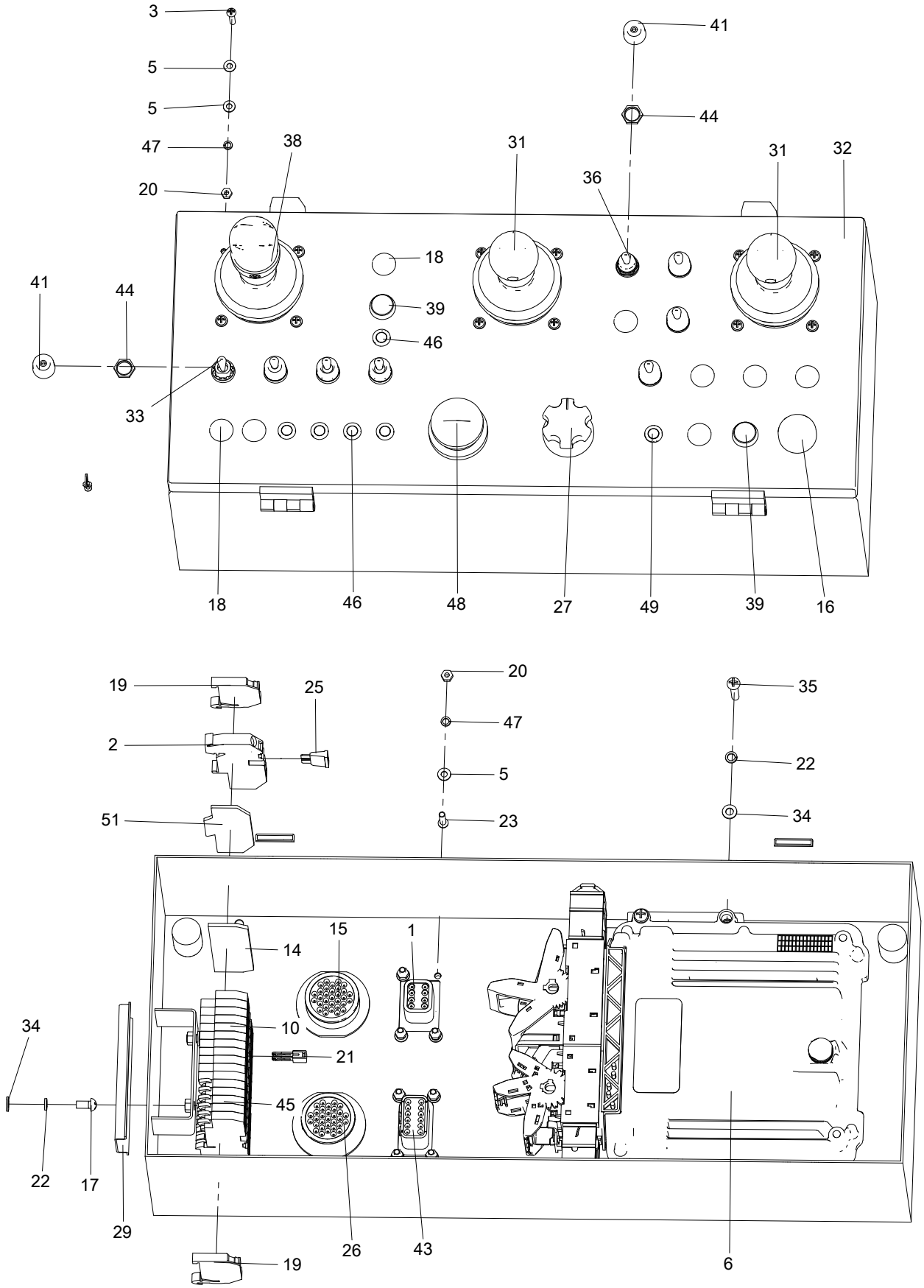

No.	Part No.	Qty.	Description
1	203060000088	1	Connector, 8p, with flange
2	203080003057	1	Terminal
3	215020000107	12	Screw M4×20-A2-70 GB/T 818
4	203060000101	2	Nut, retaining
5	215040000031	32	Washer 4-A2 GB/T 97.1
6	203020000038	1	Controller
7	203080000033	21	Terminal, male
8	203080003056	1	Tag, terminal
9	203080000041	12	Terminal, female
10	203080003051	10	Terminal
11	203060000014	3	Connector, handle
12	203080000126	1	Lock
13	203080000378	1	Connector
14	203080003052	1	End plate
15	203080000523	1	Connector, 31P, male
16	203050003021	1	Buzzer
17	215020000109	2	Screw M5×10-A2-70 GB/T 818
18	105045060004	8	Plug, controller
19	203080003053	2	Terminal block end plate
20	215030000002	20	Nut M4-8-A2-70 GB/T 6170
21	203080003058	3	Jumper
22	215040000003	6	Washer 5-A2-70 GB/T 93
23	215020000106	8	Screw M4×16-A2-70 GB/T 818
24	203080000085	7	Blind plug
25	203070000053	1	Fuse
26	203080000516	1	Connector, 31P, female
27	203150000021	1	Potentiometer
28	203080003055	1	Tag, terminal
29	203990000001	1	Guiderail
30	203080000019	3	Socket lock, 6-pin
31	203060003084	2	Joystick
32	104019060044	1	Platform controller
33	203060000021	4	Switch, toggle
34	215040000032	6	Washer 5-A2 GB/T 97.1
35	215020000113	4	Screw M5×25-A2-70 GB/T 818
36	203060000003	4	Switch, toggle
37	104020060010	1	PC film, platform controller

No.	Part No.	Qty.	Description
38	203060003081	1	Joystick
39	203060000020	2	Button, yellow
40	203080000068	49	Blind plug
41	203080000101	9	Cap, waterproof
42	104019060004	1	Platform Control Box Assembly
43	203060000090	1	Connector, 12p, with flange
44	203080000109	9	Nut
45	203080003054	6	Terminal, GND
46	203050003015	5	Indicator light
47	215040000002	20	Washer 4-A2-70 GB/T 93
48	203060000142	1	Emergency stop switch
49	203050003014	1	Indicator light
50	203060000098	2	Spring plate, metal
51	203080003059	1	End plate
52	203080000157	1	Lock
53	203080000099	11	Terminal

7.5.18 PLATFORM CONTROL BOX HARNESS(P[N.104021063118)

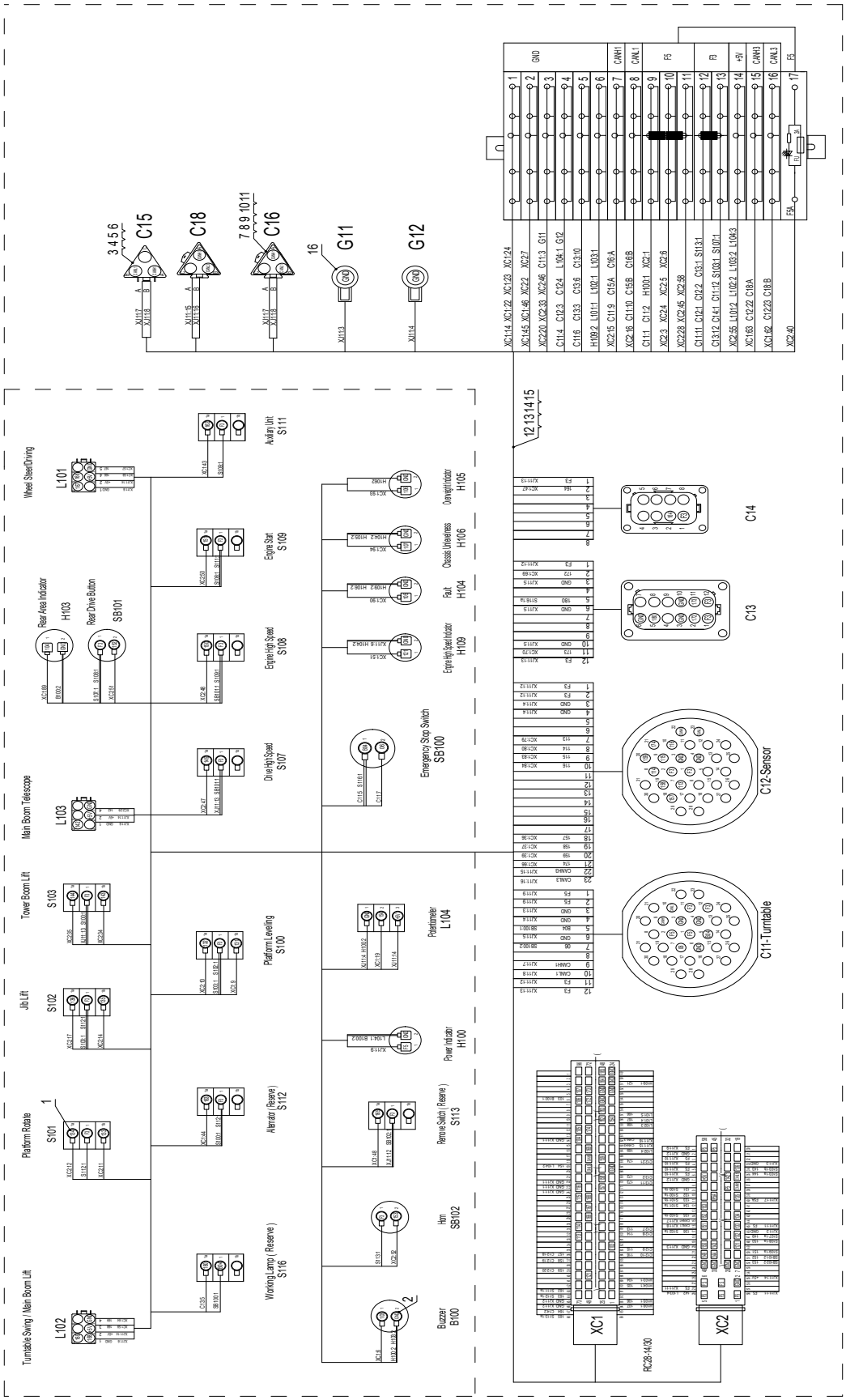

No.	Part No.	Qty.	Description
	104021063118	1	Platform controller box wiring diagram
1	203080000023	27	Terminal, blade-hole type
2	203080000036	16	Terminal
3	203080000404	1	Sheath
4	203080000032	1	Lock
5	203080000041	2	Terminal, female
6	203080000473	2	Cover, waterproof
7	203080000405	2	Sheath
8	203080000046	2	Lock
9	203080000033	4	Terminal, male
10	203080000068	3	Blind plug
11	203080000086	2	Sheath
12	203080000562	5	Cable, thin wall (red)
13	203080000563	7	Cable, thin wall (black)
14	203080000564	15	Cable, thin wall (white)
15	216020000020	30	Cable tie, nylon
16	203080000133	2	Terminal, blade-hole type

7.5.19 ELECTRICAL SCHEMATIC DIAGRAM

Electrical Schematic Diagram(PN.104021063048)

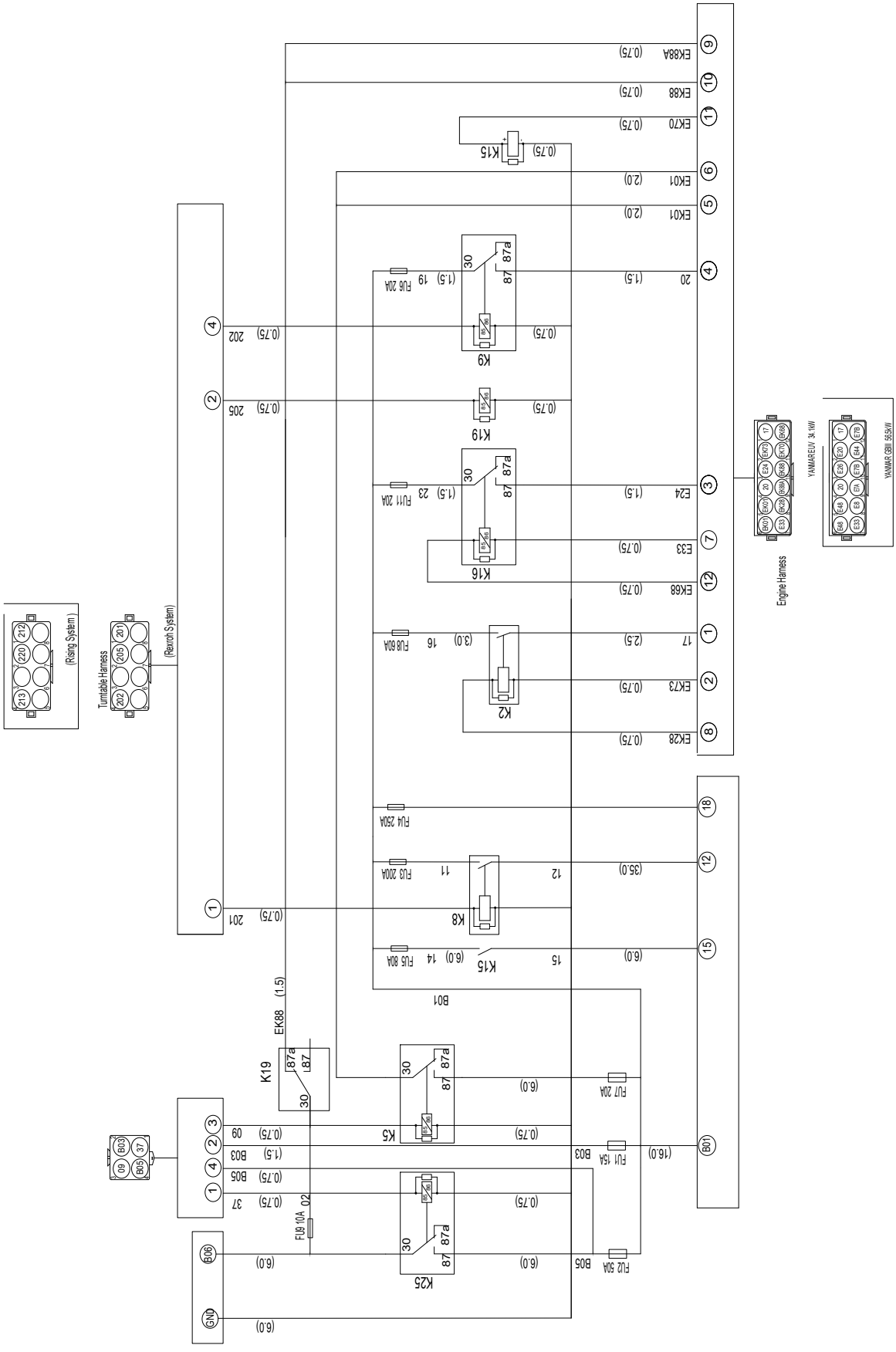

7.5.20 ELECTRICAL SCHEMATIC OF ENGINE

Electrical schematic of engine(PN.105074063048)

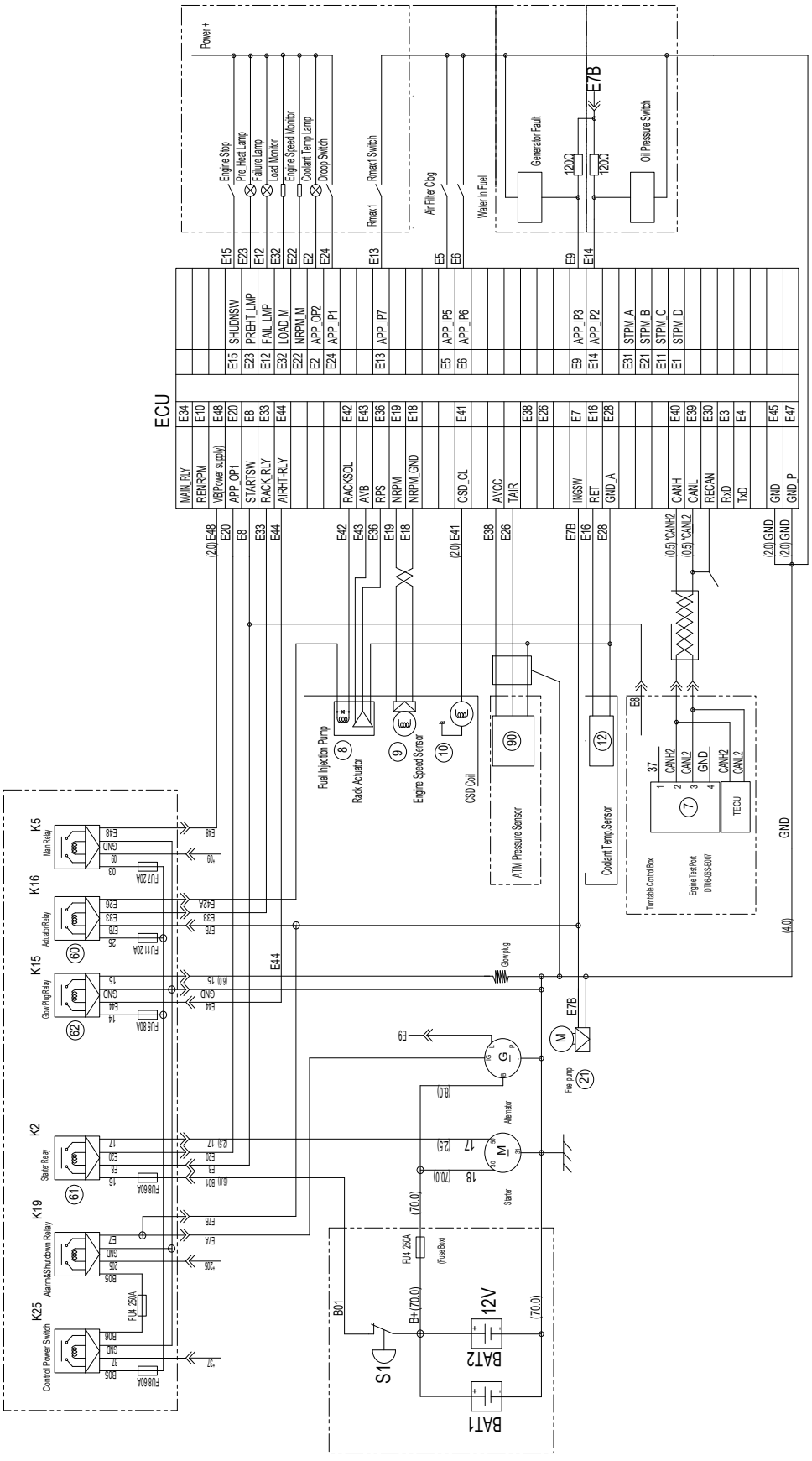

7.5.21 ELECTRICAL SCHEMATIC DIAGRAM(REXROTH & YANMAR, CHINA STAGE IV)

Electrical schematic diagram of turntable

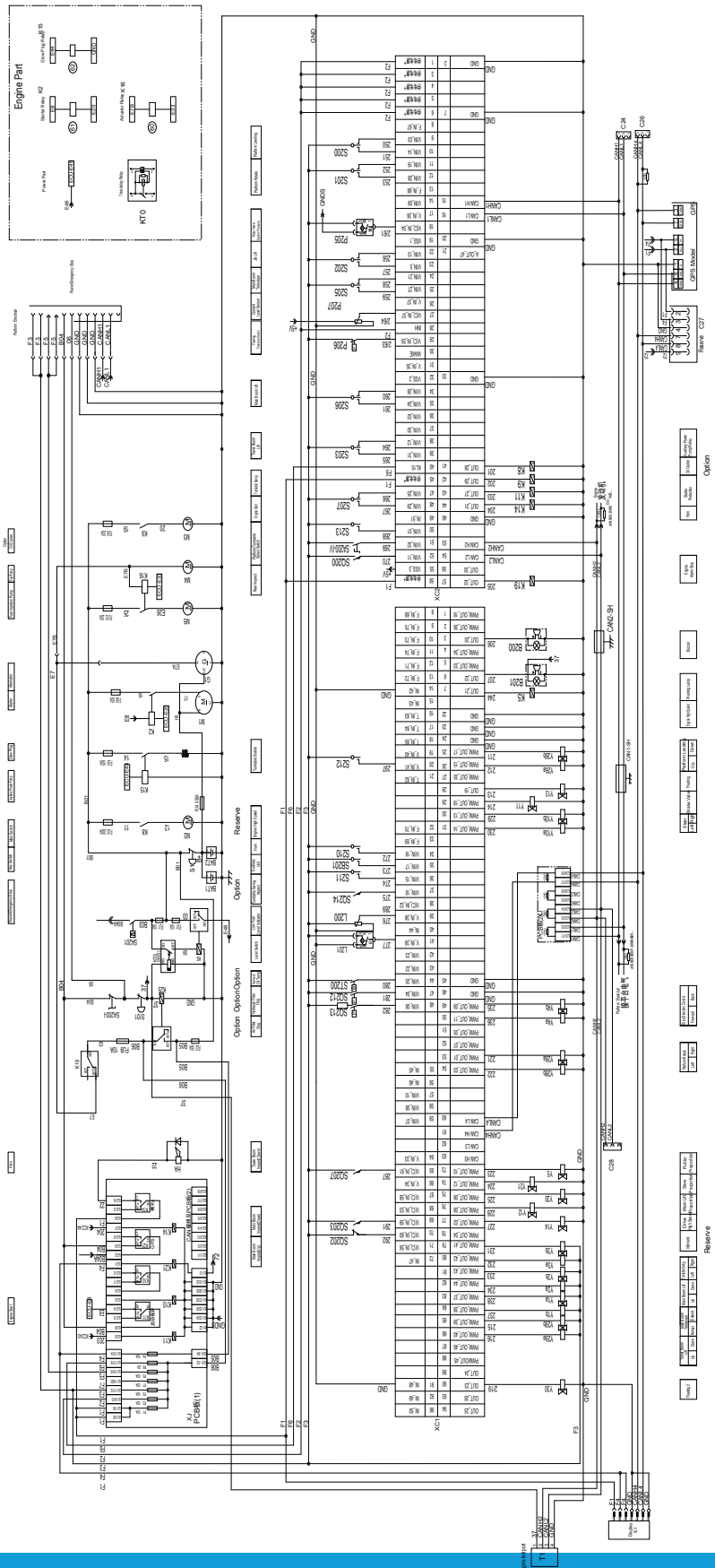

 © Aug. 2022

Electrical schematic diagram of platform

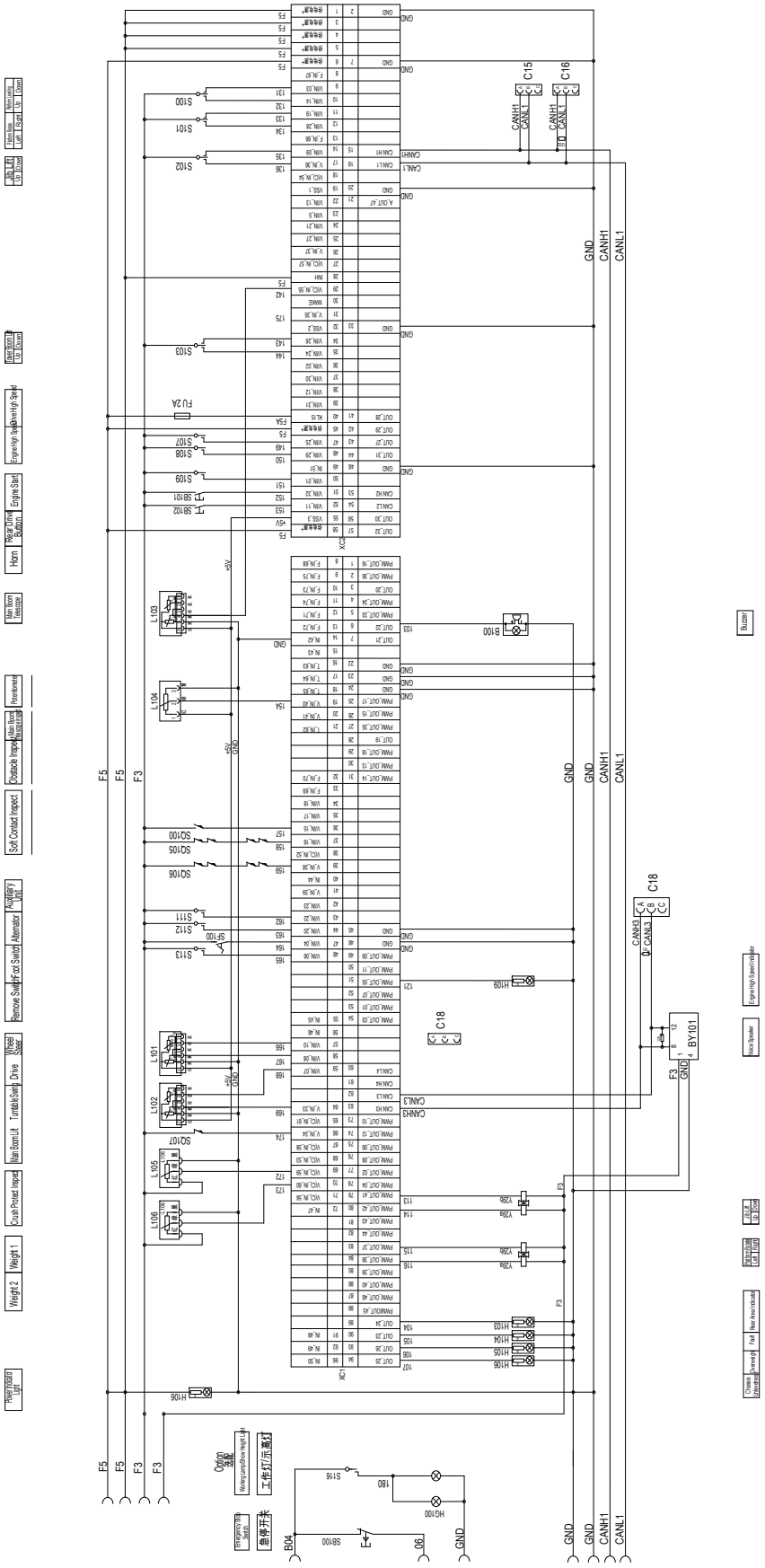

8 DECALS

8.1 DECALS(GB)

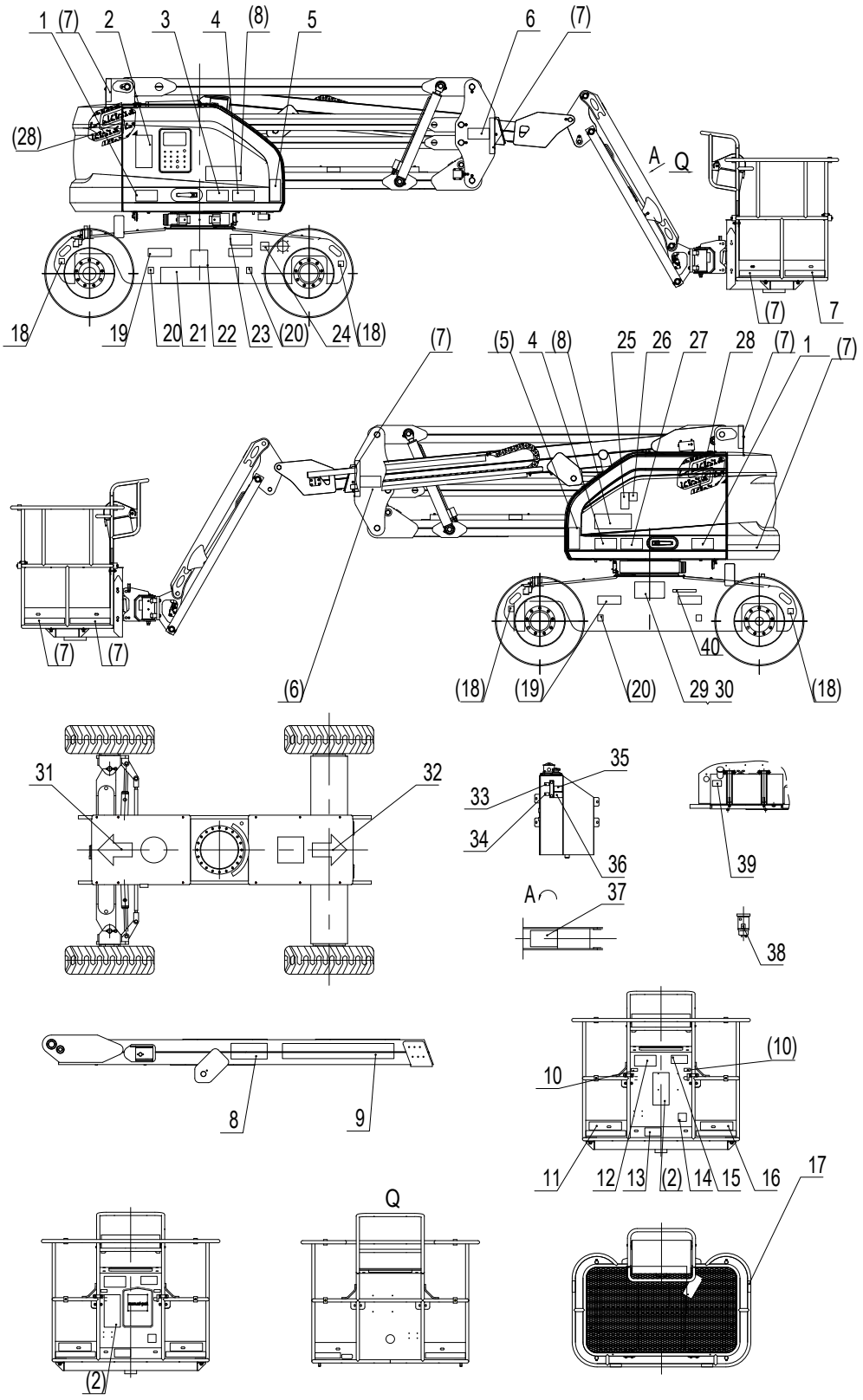
1 (7) 2 3 4 (8) 5 6 (7)
(28)
A Q
(7) 7
18 19 20 21 22 23 (20) 24 (18)
(7) (5) 4 (8) 25 26 27 28 (7) 1 (7)
(7) (7)
40
(6) (18) (19) (20) 29 30 (18)
31 32
33 34 35 36
39
A 37
38
8 9
10 (10)
11 12 13 (2) 14 15 16 17
Q
(2)

No.	Part No.	Qty.	Description
	104021000005	1	Decals(GB)-AB15J
1	104011100006	2	Decal-Bulkhead overhaul
2	104011100020	2	Decal-General safety
3	104011100014	1	Decal-Explosion hazard
4	104011100013	2	Decal-Electrocution hazard
5	104011100011	2	Decal-Crush hazard
6	104011100007	2	Decal-Tipping hazard
7	216060000002	9	Attention line
8	104021103002	3	Decal-AB15J
9	105058103003	1	LOGO-SINOBOOM
10	101016100030	2	Decal-Lanyard anchorage points
11	103007103002	1	Decal-Tipping hazard
12	104011100015	1	Decal-Tipping hazard
13	104011100019	1	Decal-Crush hazard
14	104011100017	1	Decal-Footswitch
15	104011100009	1	Decal-Read manuals
16	104010100014	1	Decal-Rated load 250kg
17	104011100021	4	Decal-Crush hazard
18	104011100002	4	Decal-Lifting points
19	104011100001	4	Decal-Tipping hazard
20	104021103003	4	Decal-Wheel load 3700kg
21	103003100004	1	Decal-Contact information
22	114006103012	1	Decal-QR code
23	104011100022	1	Decal-Turntable rotary lock
24	104011100016	1	Decal-Emergency stop switch
25	104011100018	1	Decal-Burn hazard
26	104011100008	1	Decal-Noise 82dB
27	104011100005	1	Decal-Explosion hazard
28	103008103006	2	LOGO-symbol
29	105001100057	1	Nameplate-GB
30	215050000001	4	Blind rivet 3×8-ZnD GB/T 12618.2
31	105001100053	1	Decal-Direction
32	105001100051	1	Decal-Direction
33	104011100010	1	Decal-Hydraulic oil level
34	104011100003	1	Decal-Hydraulic oil level
35	104010100021	1	Decal-Hydraulic oil temperature range
36	104009100018	1	Decal-Hydraulic oil

No.	Part No.	Qty.	Description
37	104011100012	1	Decal-Fall hazard
38	104009100020	1	Decal-Fuel-water separator
39	104009100019	1	Decal-Diesel fuels

8.2 DECALS(CE)

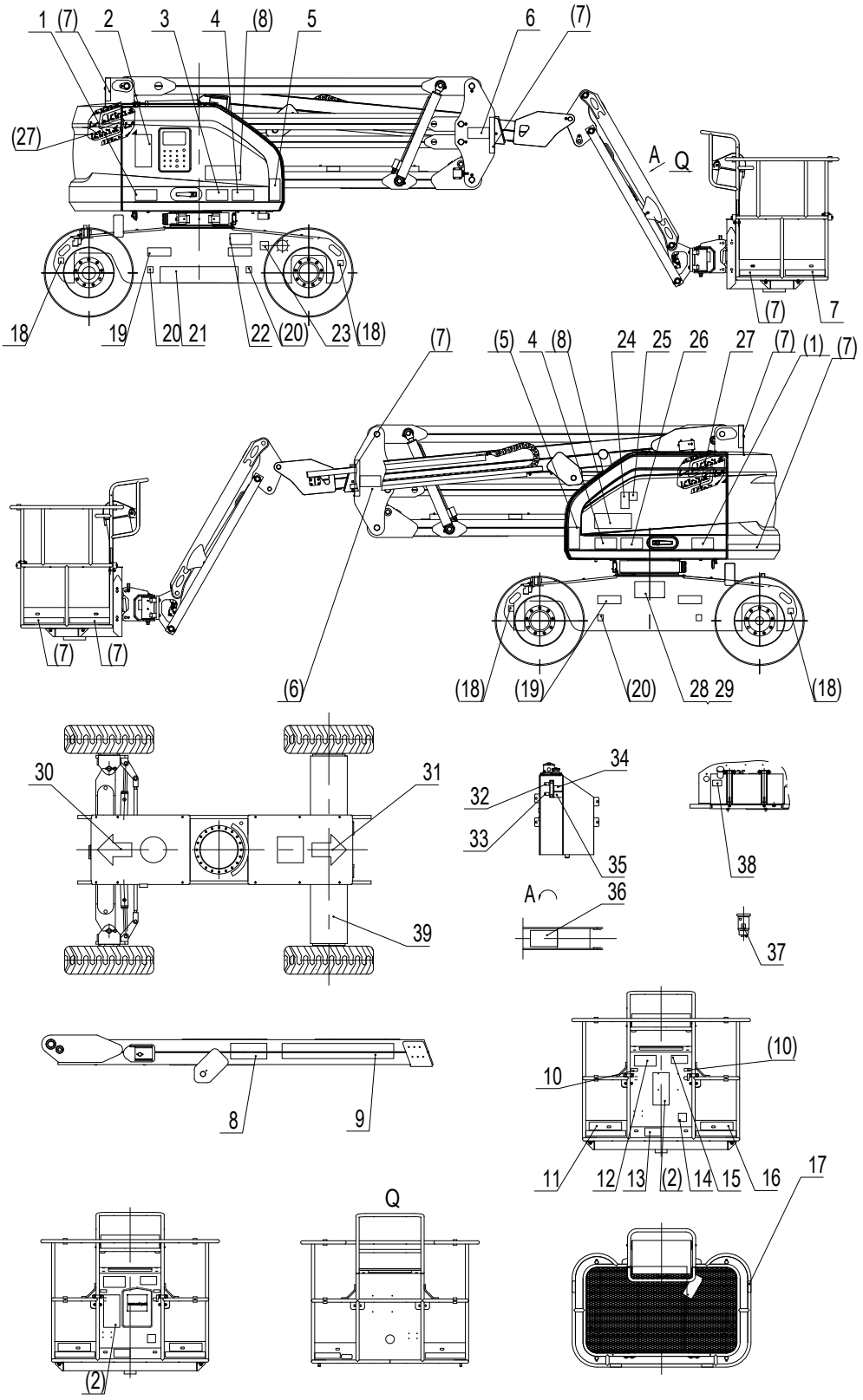
1 (7) 2 3 4 (8) 5 6 (7)
(27)
A Q
18 19 20 21 22 (20) 23 (18) (7) 7
(7) (5) 4 (8) 24 25 26 27 (7) (1) (7)
(7) (7)
(6) (18) (19) (20) 28 29 (18)
30 31 39
32 33 34 35 36
A
38 37
8 9
10 (10) 11 12 13 (2) 14 15 16 17
Q
(2)

No.	Part No.	Qty.	Description
	104021000004	1	Decals(CE-Metric)-AB15J
1	104011100006	2	Decal-Bulkhead overhaul
2	104011100020	2	Decal-General safety
3	104011100014	1	Decal-Explosion hazard
4	104011100013	2	Decal-Electrocution hazard
5	104011100011	2	Decal-Crush hazard
6	104011100007	2	Decal-Tipping hazard
7	216060000002	9	Attention line
8	104021103002	3	Decal-AB15J
9	105058103003	1	LOGO-SINOBOOM
10	101016100030	2	Decal-Lanyard anchorage points
11	103007103002	1	Decal-Tipping hazard
12	104011100015	1	Decal-Tipping hazard
13	104011100019	1	Decal-Crush hazard
14	104011100017	1	Decal-Footswitch
15	104011100009	1	Decal-Read manuals
16	104010100014	1	Decal-Rated load 250kg
17	104011100021	4	Decal-Crush hazard
18	104011100002	4	Decal-Lifting points
19	104011100001	4	Decal-Tipping hazard
20	104021103003	4	Decal-Wheel load 3700kg
21	105001100050	1	Decal-Contact information
22	104011100022	1	Decal-Turntable rotary lock
23	104011100016	1	Decal-Emergency stop switch
24	104011100018	1	Decal-Burn hazard
25	104011100008	1	Decal-Noise 82dB
26	104011100005	1	Decal-Explosion hazard
27	103008103006	2	LOGO-symbol
28	103011103013	1	Nameplate-UKCA&CE (AB)
29	215050000001	4	Blind rivet 3×8-ZnD GB/T 12618.2
30	105001100053	1	Decal-Direction
31	105001100051	1	Decal-Direction
32	104011100010	1	Decal-Hydraulic oil level
33	104011100003	1	Decal-Hydraulic oil level
34	104010100021	1	Decal-Hydraulic oil temperature range
35	104009100022	1	Decal-Hydraulic oil
36	104011100012	1	Decal-Fall hazard

No.	Part No.	Qty.	Description
37	104009100020	1	Decal-Fuel-water separator
38	104009100021	1	Decal-Diesel fuels

8.3 DECAL(AS)

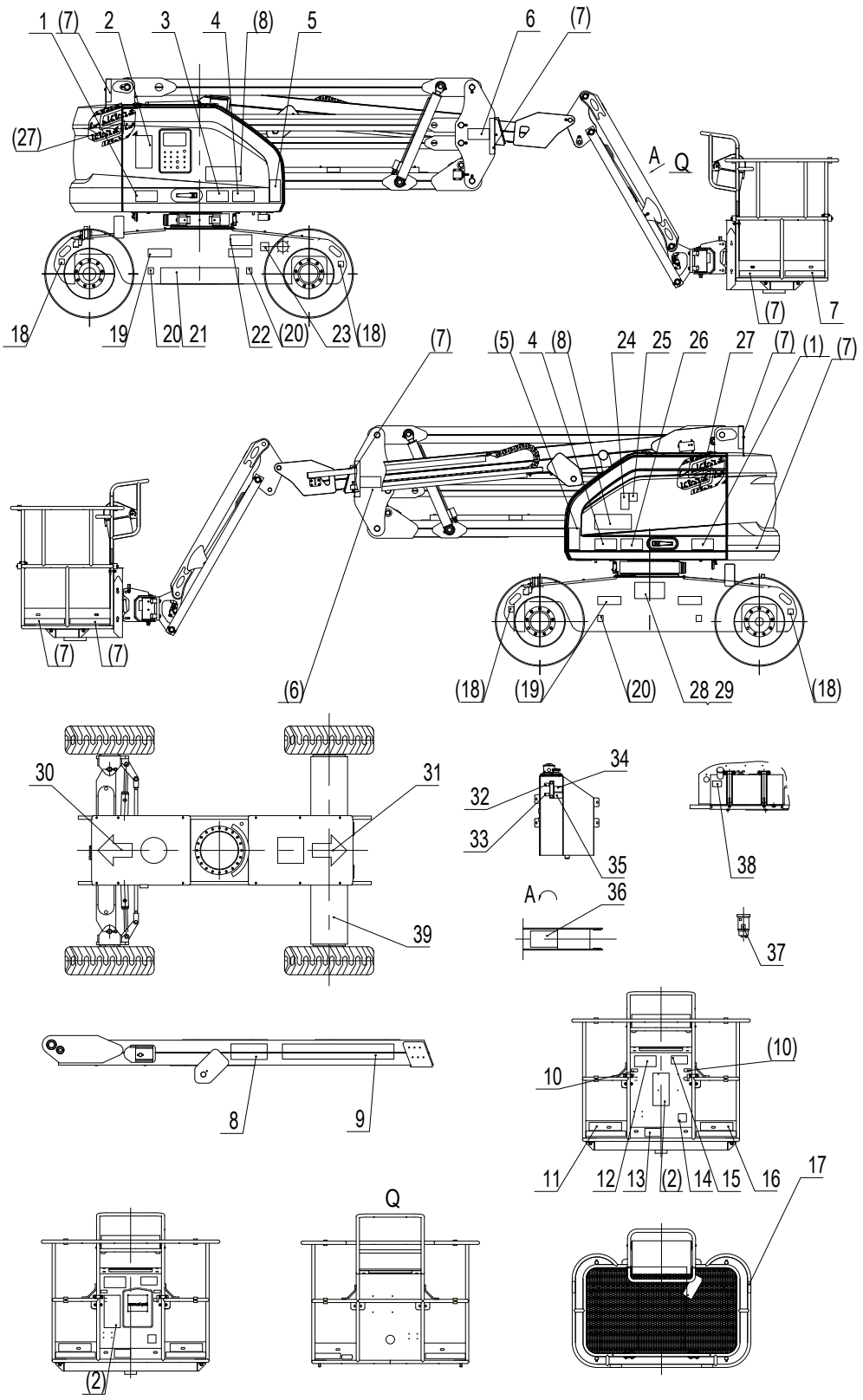
1 (7) 2 3 4 (8) 5 6 (7)
(27)
A Q
18 19 20 21 22 (20) 23 (18) (7) 7
(7) (5) 4 (8) 24 25 26 27 (7) (1) (7)
(7) (7)
(6) (18) (19) (20) 28 29 (18)
30 31
32 33 34 35
38
A 36
37
39
8 9
10 (10)
11 12 13 (2) 14 15 16 17
Q
(2)

No.	Part No.	Qty.	Description
	104021103007	1	Decals(AS)-AB15J
1	104011100006	2	Decal-Bulkhead overhaul
2	104011100020	2	Decal-General safety
3	104011100014	1	Decal-Explosion hazard
4	104011100013	2	Decal-Electrocution hazard
5	104011100011	2	Decal-Crush hazard
6	104011100007	2	Decal-Tipping hazard
7	216060000002	9	Attention line
8	104021103002	3	Decal-AB15J
9	105058103003	1	LOGO-SINOBOOM
10	101016100030	2	Decal-Lanyard anchorage points
11	103007103002	1	Decal-Tipping hazard
12	104011100015	1	Decal-Tipping hazard
13	104011100019	1	Decal-Crush hazard
14	104011100017	1	Decal-Footswitch
15	104011100009	1	Decal-Read manuals
16	104010100014	1	Decal-Rated load 250kg
17	104011100021	4	Decal-Crush hazard
18	104011100002	4	Decal-Lifting points
19	104011100001	4	Decal-Tipping hazard
20	104021103003	4	Decal-Wheel load 3700kg
21	105001100050	1	Decal-Contact information
22	104011100022	1	Decal-Turntable rotary lock
23	104011100016	1	Decal-Emergency stop switch
24	104011100018	1	Decal-Burn hazard
25	104011100008	1	Decal-Noise 82dB
26	104011100005	1	Decal-Explosion hazard
27	103008103006	2	LOGO-symbol
28	105018100005	1	Nameplate-AS（AB）
29	215050000001	4	Blind rivet 3×8-ZnD GB/T 12618.2
30	105001100053	1	Decal-Direction
31	105001100051	1	Decal-Direction
32	104011100010	1	Decal-Hydraulic oil level
33	104011100003	1	Decal-Hydraulic oil level
34	104010100021	1	Decal-Hydraulic oil temperature range
35	104009100022	1	Decal-Hydraulic oil
36	104011100012	1	Decal-Fall hazard

No.	Part No.	Qty.	Description
37	104009100020	1	Decal-Fuel-water separator
38	104009100021	1	Decal-Diesel fuels

9 HYDRAULIC GENERATOR (OPTIONS)

9.1 HYDRAULIC GENERATOR INSTALLATION

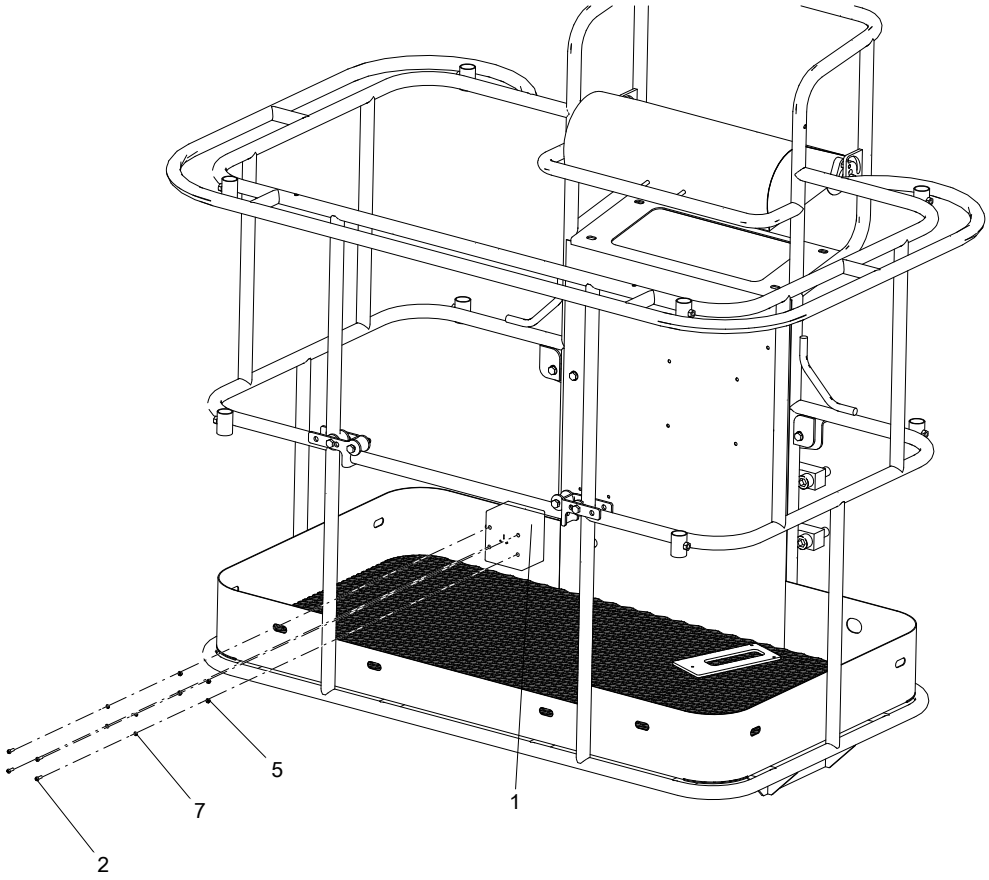

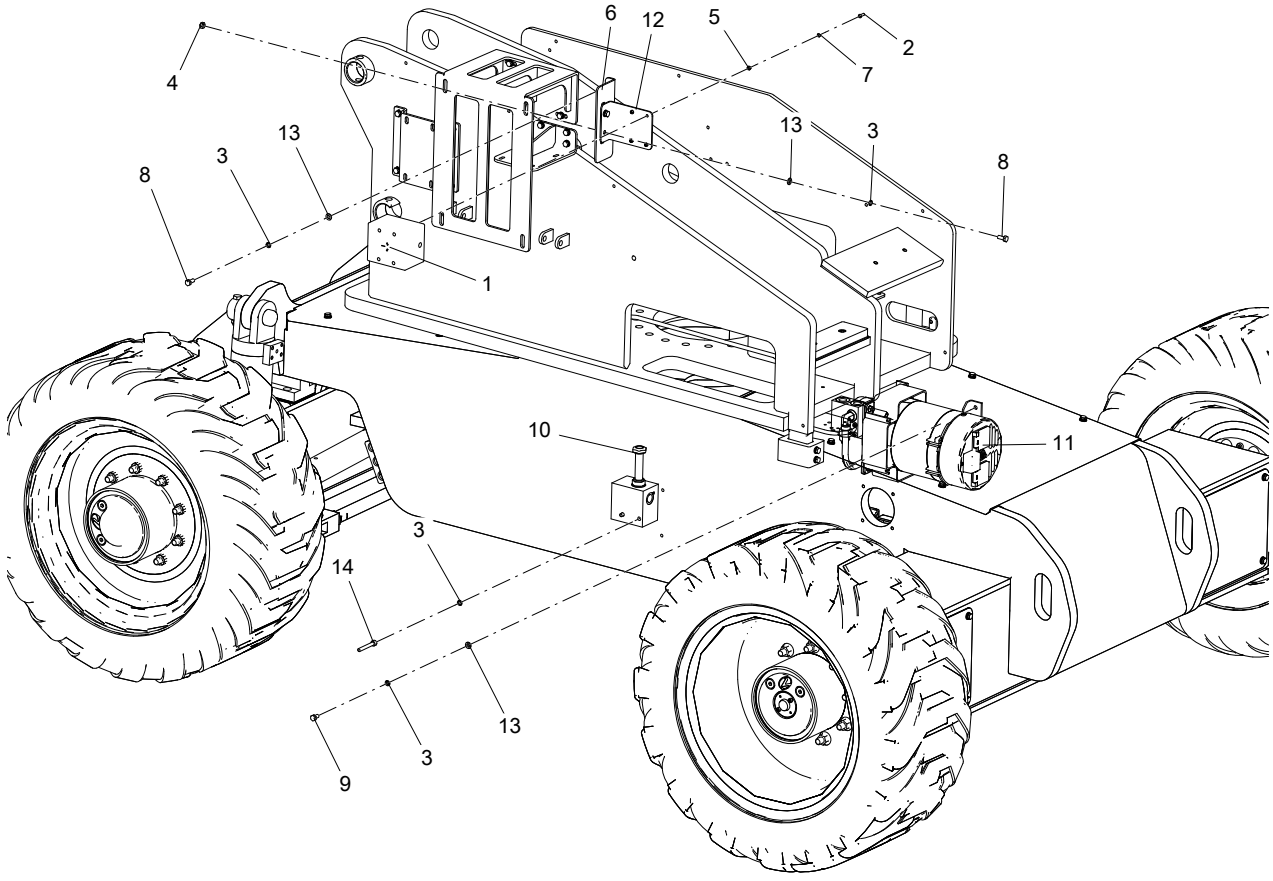

No.	Part No.	Qty.	Description
1	203080000249	2	Socket, waterproof
2	215020000111	8	Screw M5×16-A2-70 GB/T 818
3	215040000005	10	Washer 8-ZnD GB/T 93
4	215030000005	2	Nut M8-8-ZnD GB/T 6170
5	215030000003	8	Nut M5-A2-70 GB/T 6170
6	104009060063	1	Plate, bending
7	215040000003	8	Washer 5-A2-70 GB/T 93
8	215010000057	4	Bolt M8×20-8.8-ZnD GB/T 5783
9	215010000056	4	Bolt M8×16-8.8-ZnD GB/T 5783
10	202040000077	1	Control manifold, generator
11	203180000001	1	Hydraulic generator
12	105017060061	1	Bracket, waterproof socket
13	215040000034	8	Washer 8-200HV-ZnD GB/T 97.1
14	215020000038	2	Screw M8×60-8.8-ZnD GB/T 70.1

This Page Intentionally Left Blank

10 SPECIAL OPTIONS

10.1 WORK LIGHT INSTALLATION

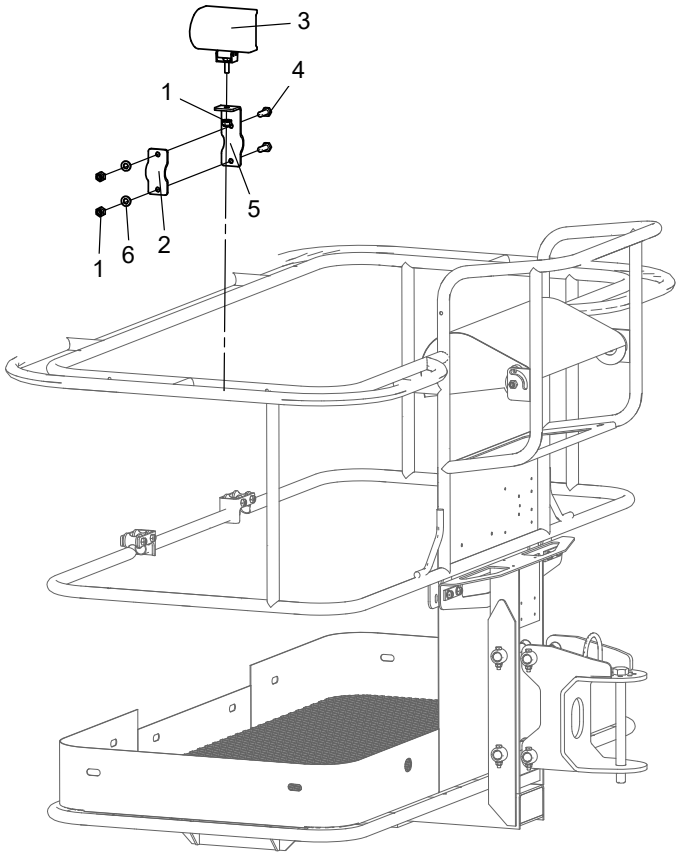

No.	Part No.	Qty.	Description
1	215030000026	3	Nut M8-8-ZnD GB/T889.1
2	105017060067	1	Plate
3	203050000020	1	Work Light, LED
4	215010000058	2	Bolt M8×25-8.8-ZnD GB/T 5783
5	105017060066	1	Plate
6	215040000034	3	Washer 8-200HV-ZnD GB/T 97.1
7	203080000104	2	Cable, copper-cored(Not shown)
8	203080000033	2	Terminal, male(Not shown)
9	203080000021	1	Lock(Not shown)
10	203080000011	1	Sheath(Not shown)

10.2 GPS INSTALLATION

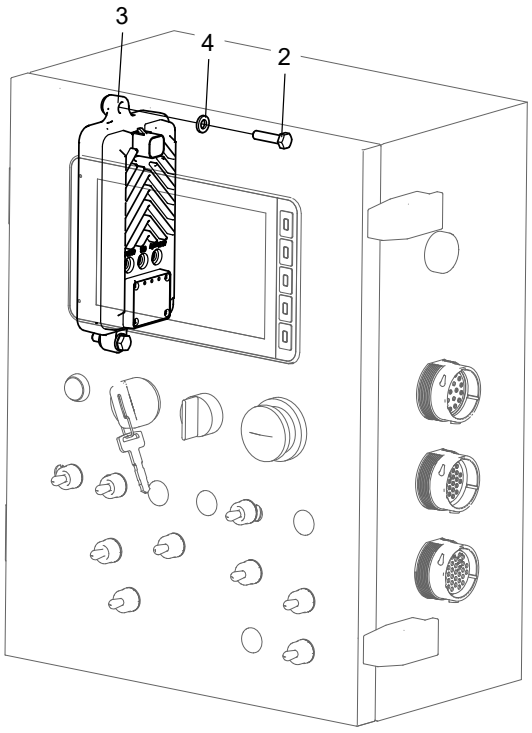

No.	Part No.	Qty.	Description
1	203150003022	1	GPS/LTE antenna(Not Shown)
2	215010003054	2	Nylon Bolt M6×25-4.8-PA66
3	203150003021	1	GPS module (4G)
4	215040003034	4	Nylon Washer 6-PA66

10.3 OVERHEAD PROTECTION INSTALLATION

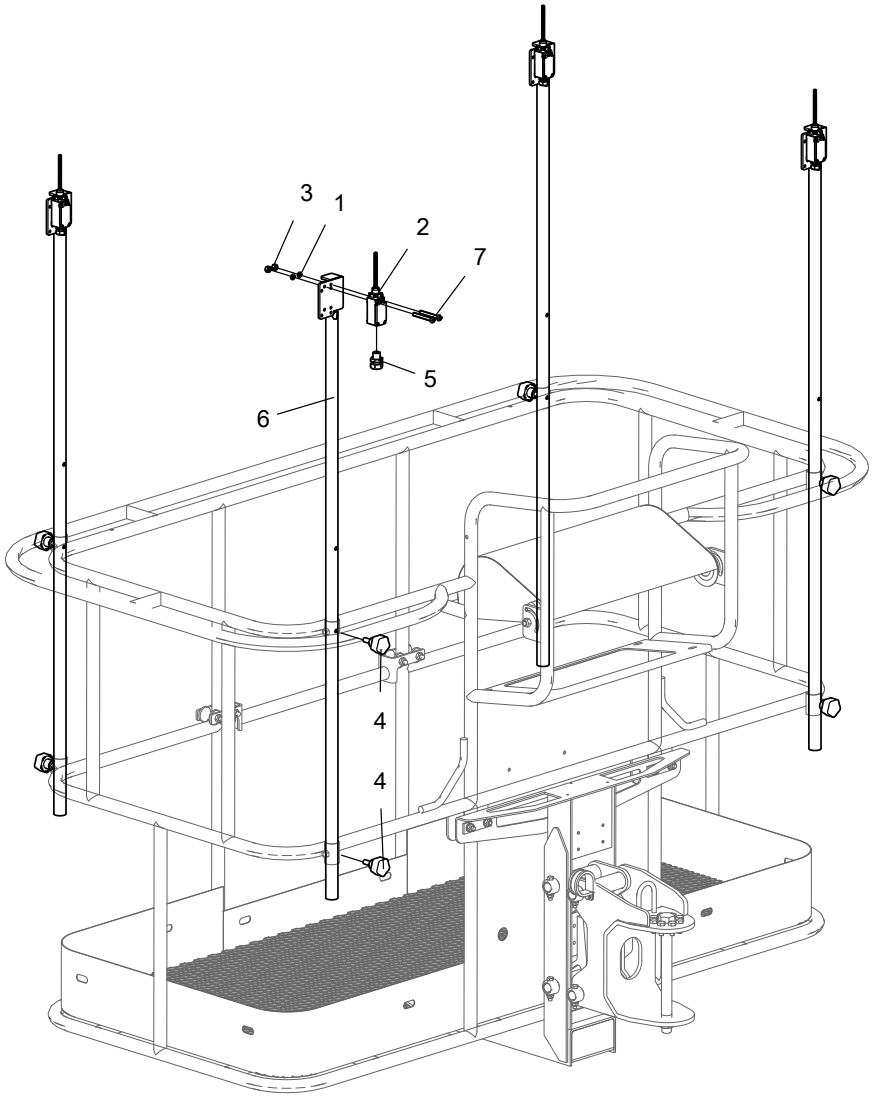

No.	Part No.	Qty.	Description
1	215040000003	8	Washer 5-A2-70 GB/T 93
2	203060000056	4	Travel switch
3	215030000003	8	Nut M5-A2-70 GB/T 6170
4	209030000006	8	Bolt, star-headed
5	203990000005	4	Connector, waterproof, nylon
6	105017060001	4	Steel pipe, overhead
7	215020000215	8	Screw M5×40-A2-70 GB/T 818

10.4 MANUAL STORAGE CONTAINER INSTALLATION

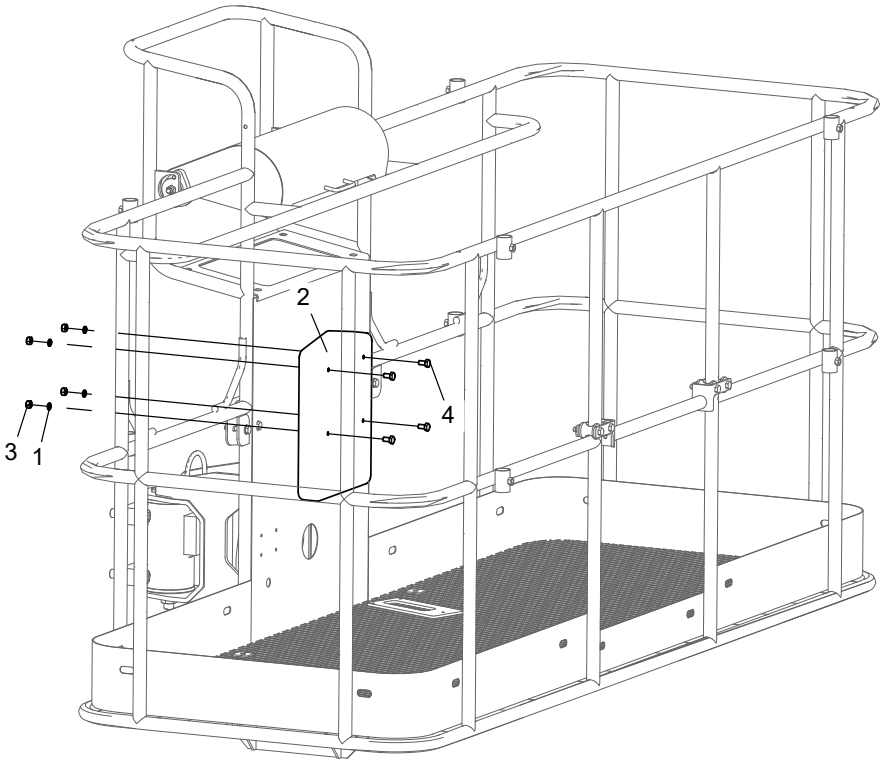

No.	Part No.	Qty.	Description
1	215040000004	4	Washer 6-A2-70 GB/T 93
2	216070000001	1	Manual storage container
3	215030000004	4	Nut M6-A2-70 GB/T 6170
4	215010000049	4	Bolt M6×12-A2-70 GB/T 5783

10.5 CIVIL AC POWER INSTALLATION

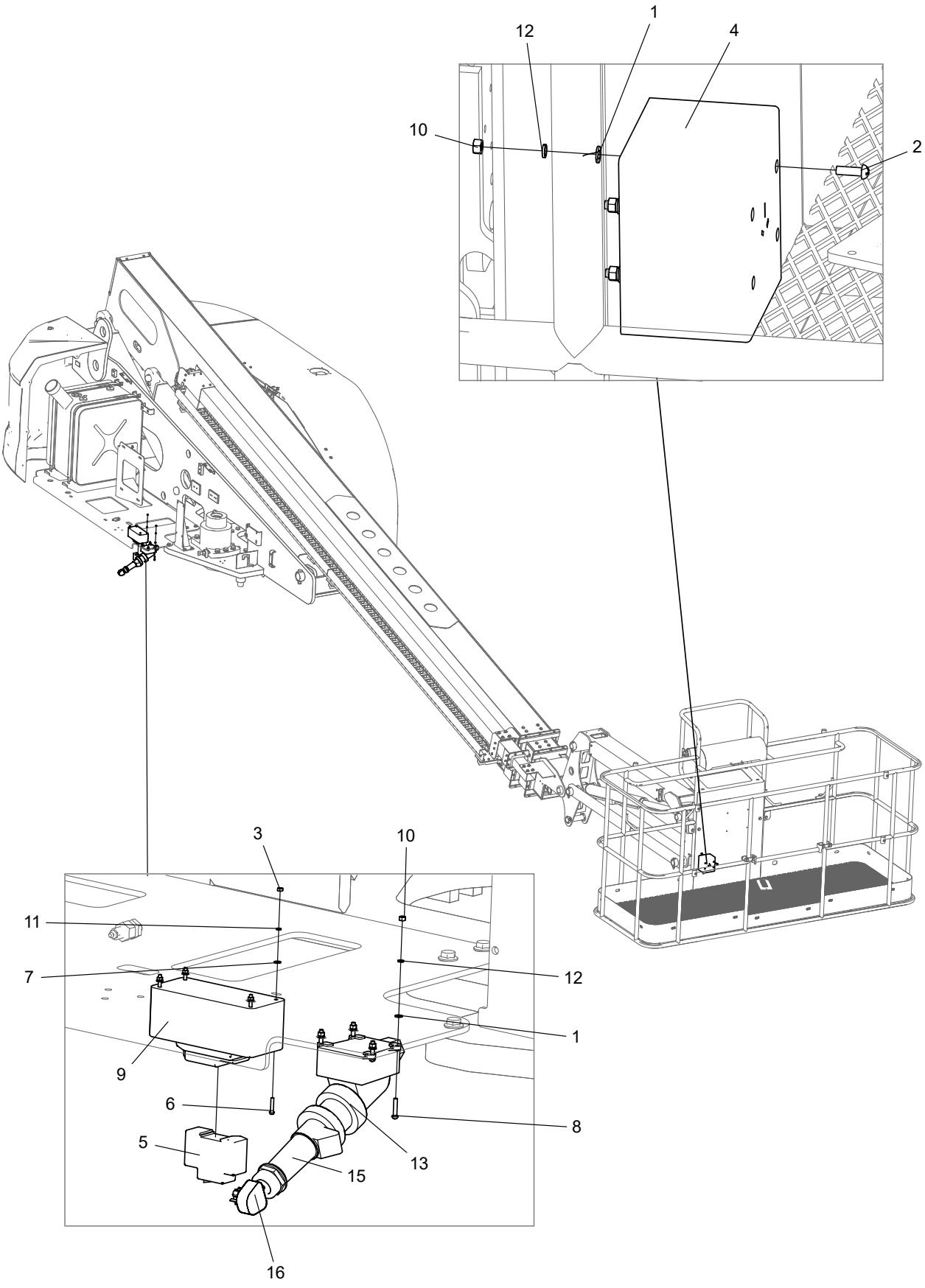

No.	Part No.	Qty.	Description
1	215040000032	8	Washer 5-A2 GB/T 97.1
2	215020000111	4	Screw M5×16-A2-70 GB/T 818
3	215030000002	4	Nut M4-8-A2-70 GB/T 6170
4	203080000249	1	Socket, waterproof
5	203160000002	1	RCBO
6	215020000107	4	Screw M4×20-A2-70 GB/T 818
7	215040000031	4	Washer 4-A2 GB/T 97.1
8	215020000113	4	Screw M5×25-A2-70 GB/T 818
9	203090000002	1	Waterproof Cover, RCBO
10	215030000003	8	Nut M5-A2-70 GB/T 6170
11	215040000002	4	Washer 4-A2-70 GB/T 93
12	215040000003	12	Washer 5-A2-70 GB/T 93
13	203080003079	1	Socket, 3P16A IP67, male terminal, externally installed
14	105050063048	1	Civil AC power supply wiring diagram(Not shown)
15	203080003078	1	Plug, 3P16A IP67, female terminal
16	101015060036	1	Electrical plug options
16-1	203080000530	1	Electrical plug(Type I, China and Australian specs)
16-2	203080000537	1	Electrical plug(Type M, Macao specs)
16-3	203080000532	1	Electrical plug(Type G, HongKong and Middle East specs)
16-4	203080000534	1	Electrical plug(Type B, American and South American specs)
16-5	203080000538	1	Electrical plug(Type E+F, European and Brazilian specs)
16-6	203080000539	1	Electrical plug (Type J, Swiss specs)

10.6 ANTI-PINCH DEVICE INSTALLATION

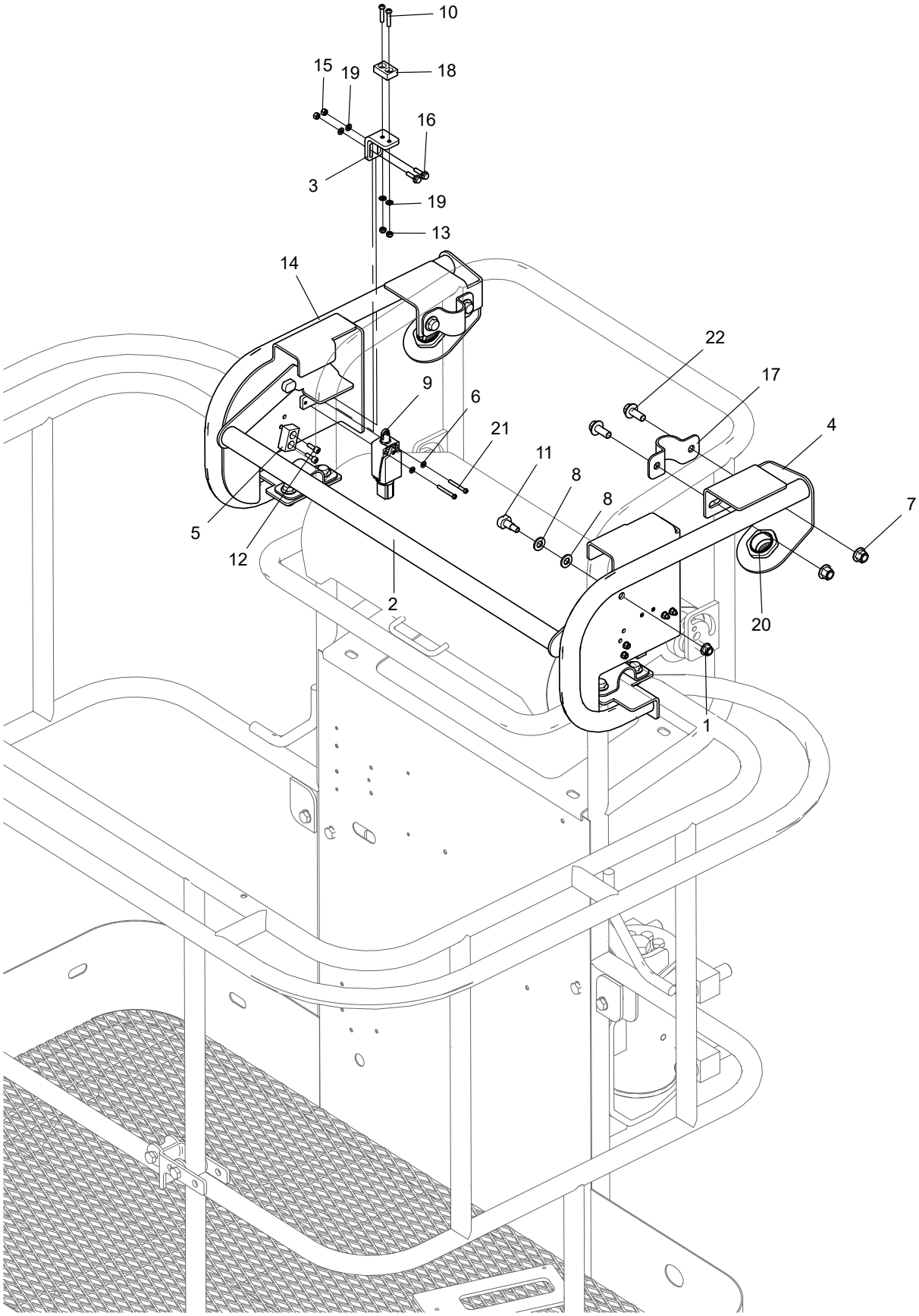

No.	Part No.	Qty.	Description
1	215030000108	2	Nut M8-8-ZnD GB/T 6183
2	105070043011	1	Bracket
3	105070043028	2	Bending plate
4	105070043030	1	bracket
5	103010013495	2	Pad
6	215040000031	4	Washer 4-A2 GB/T 97.1
7	215030000109	8	Nut M10-8-ZnD GB/T 6183
8	215040000035	4	Washer 10-200HV-ZnD GB/T 97.1
9	203060003031	2	Travel switch
10	215020000113	4	Screw M5×25-A2-70 GB/T 818
11	105070043031	2	Bolt
12	215020000007	4	Screw M5×16-A2-70 GB/T 70.1
13	215030000091	4	Nut M5-A2-70 GB/T 6184
14	105070043032	1	Bracket
15	215030000003	8	Nut M5-A2-70 GB/T 6170
16	215010000256	4	Bolt M5×20-8.8-ZnD GB/T 5789
17	105029043013	4	Plate
18	209990003011	2	magnet
19	215040000032	12	Washer 5-A2 GB/T 97.1
20	203050003058	2	Beacon Light
21	215020000212	4	Screw M4×35-A2-70 GB/T 818
22	215010000238	8	Bolt M10×25-8.8-ZnD GB/T 5789

10.7 ANTI-PINCH HARNESS(PN.105078063081)

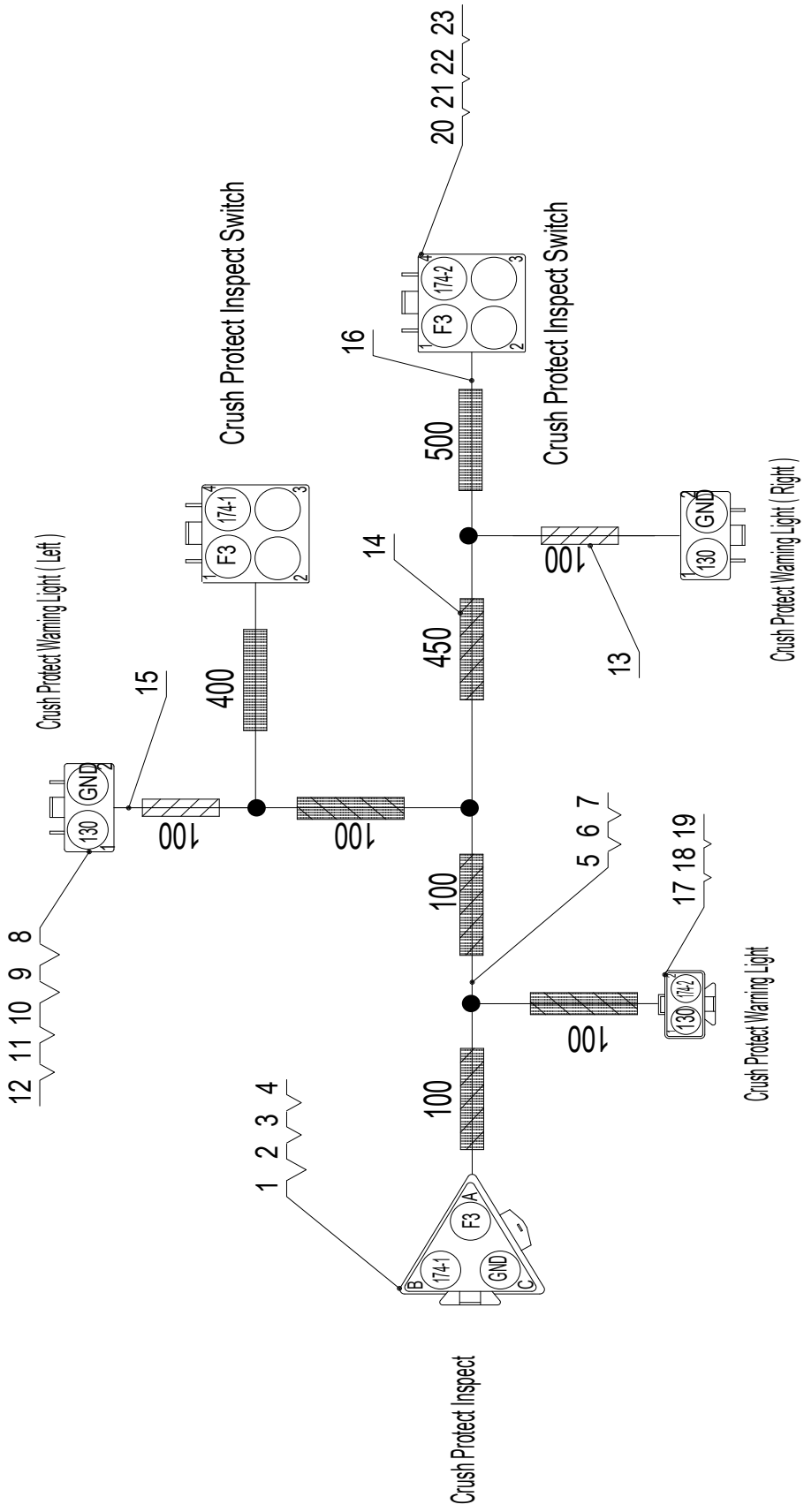

No.	Part No.	Qty.	Description
	105078063081	1	Harness, anti-pinch device
1	203080000405	1	Sheath
2	203080000046	1	Lock
3	203080000033	5	Terminal, male
4	203080000466	1	End clip
5	203080003313	2	Cable, thin wall
6	203080003326	1	Cable, thin wall
7	203080000564	5	Cable, thin wall (white)
8	203080000410	2	Sheath
9	203080000016	2	Lock
10	203080000041	8	Terminal, female
11	203080000437	2	End attachments, 2-pin, female
12	203080000448	2	Rubber, 2-pin
13	203080000417	1	Nylon hose, closed-end
14	203080000424	1	Nylon hose, closed-end
15	203080000563	1	Cable, thin wall (black)
16	203080000562	1	Cable, thin wall (red)
17	203080000408	1	Sheath
18	203080000021	1	Lock
19	203080000462	1	End attachments, 2-pin, male
20	203080000044	2	Sheath
21	203080000020	2	Lock
22	203080000445	2	End attachments, 4-pin, female
23	203080000446	2	Rubber, 4-pin

10.8 ELECTRICAL DIAGRAM OF ANTI-PINCH DEVICE

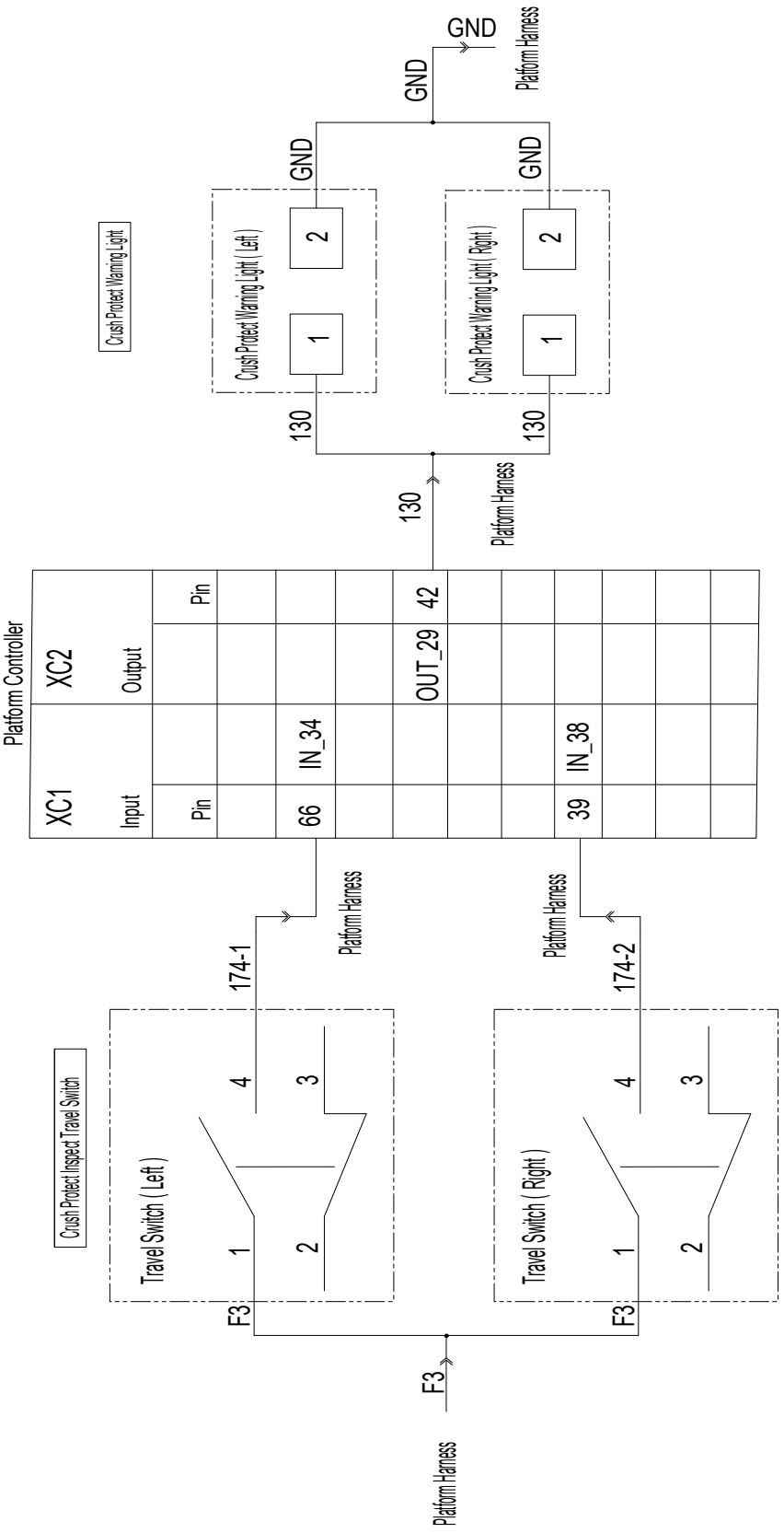

Always for Better Access Solutions

Hunan Sinoboom Intelligent Equipment Co., Ltd.

No.128, East Jinzhou Avenue, Ningxiang High-tech Industrial Park, Changsha, Hunan, China

0086-0731-87116222 (Sales) & 0086-0731-87116333 (Service)
sales@sinoboom.com
www.sinoboom.com

North American Subsidiary

Sinoboom North American LLC

310 Mason Creek Drive
unit #100
Katy, TX 77450, US
Tel: (281) 729–5425
E-mail: info@sinoboom.us

Europe Subsidiary

Sinoboom B.V.

Nikkelstraat 26, NL-2984 AM Ridderkerk,
The Netherlands
Tel: +31 180 225 666
E-mail: info@sinoboom.eu

Korea Subsidiary

Sinoboom Korea Co., Ltd.

95, Docheong-ro, Yeongtong-gu, Suwon-si, Gyeonggi-do, Republic of Korea
Tel: 010–8310–8026
E-mail: ka1@sinoboom.com

Australia Subsidiary

Sinoboom Intelligent Equipment Pty Ltd.

50/358 Clarendon St, South Melbourne
VIC 3205, Australia
E-mail: au@sinoboom.com

Singapore Subsidiary

Star Access Solutions Pte. Ltd.

112 Robinson Road #03-01 Robinson 112
Singapore 068902

Poland Subsidiary

Sinoboom Poland sp. z o.o.

Ul. Bolesława Krzywoustego 74A
61-144 Poznań, Poland