SIEMENS

SIMATIC NET

Industrial Wireless LAN SCALANCE W786C

Operating Instructions

Introduction 1

Security recommendations 2

Description 3

Mounting 4

Connection 5

Technical data 6

Dimension drawing SCALANCE W786 7

Approvals 8

07/2019

A5E03692138-12

Legal information

Warning notice system

This manual contains notices you have to observe in order to ensure your personal safety, as well as to prevent damage to property. The notices referring to your personal safety are highlighted in the manual by a safety alert symbol, notices referring only to property damage have no safety alert symbol. These notices shown below are graded according to the degree of danger.

⚠DANGER

indicates that death or severe personal injury **will** result if proper precautions are not taken.

⚠WARNING

indicates that death or severe personal injury **may** result if proper precautions are not taken.

⚠CAUTION

indicates that minor personal injury can result if proper precautions are not taken.

NOTICE

indicates that property damage can result if proper precautions are not taken.

If more than one degree of danger is present, the warning notice representing the highest degree of danger will be used. A notice warning of injury to persons with a safety alert symbol may also include a warning relating to property damage.

Qualified Personnel

The product/system described in this documentation may be operated only by **personnel qualified** for the specific task in accordance with the relevant documentation, in particular its warning notices and safety instructions. Qualified personnel are those who, based on their training and experience, are capable of identifying risks and avoiding potential hazards when working with these products/systems.

Proper use of Siemens products

Note the following:

⚠WARNING

Siemens products may only be used for the applications described in the catalog and in the relevant technical documentation. If products and components from other manufacturers are used, these must be recommended or approved by Siemens. Proper transport, storage, installation, assembly, commissioning, operation and maintenance are required to ensure that the products operate safely and without any problems. The permissible ambient conditions must be complied with. The information in the relevant documentation must be observed.

Trademarks

All names identified by ® are registered trademarks of Siemens AG. The remaining trademarks in this publication may be trademarks whose use by third parties for their own purposes could violate the rights of the owner.

Disclaimer of Liability

We have reviewed the contents of this publication to ensure consistency with the hardware and software described. Since variance cannot be precluded entirely, we cannot guarantee full consistency. However, the information in this publication is reviewed regularly and any necessary corrections are included in subsequent editions.

Siemens AG
Digital Industries
Postfach 48 48
90026 NÜRNBERG
GERMANY

A5E03692138-12
℗ 07/2019 Subject to change

Copyright © Siemens AG 2012 - 2019.
All rights reserved

Table of contents

1 Introduction 5

1.1 Information on the Operating Instructions 5

2 Security recommendations 7

3 Description 13

3.1 Description of the device 13

3.2 Structure of the type designations 14

3.3 Scope of delivery 15

3.4 Accessories 16
3.4.1 Flexible connecting cables and antennas 17
3.4.1.1 Flexible connecting cables 17
3.4.1.2 Antennas 18

3.5 LED display 21

3.6 Reset button 22

4 Mounting 23

4.1 Safety notes relating to installation 23

4.2 Removing / fitting the housing cover 24

4.3 Laying the cables 26

4.4 Mounting without an adapter (wall mounting only) 28

4.5 Installation with mounting plate 31
4.5.1 Fitting the mounting plate to a wall 31
4.5.2 Screwing the cover plate for the cable feedthrough to the mounting plate 33
4.5.3 Fitting the mounting plate to an S7-300 standard rail 34
4.5.4 Fitting the mounting plate to a DIN rail 35
4.5.5 Fitting the mounting plate to a mast 36
4.5.6 Fitting/removing the SCALANCE W786 to/from a mounting plate 37

5 Connection 39

5.1 General safety instructions for the SCALANCE W786C 39

5.2 Lightning protection, power supply and grounding 40

5.3 Suitable cables for power supply and Ethernet 44

5.4 Connecting the cables 46

5.5 Connecting the power supply 49

5.6 Connecting a power supply adapter 52

5.7 Connecting to Industrial Ethernet 56

5.8 SFP/SFP+ transceivers 57

5.9 Connecting external antennas 59
6 Technical data 61
6.1 Technical specifications (SCALANCE W786C-2) 61
6.2 Radiation patterns diagrams of SCALANCE W786 internal antennas 64
7 Dimension drawing SCALANCE W786 67
8 Approvals 69
Index 71

Introduction 1

1.1 Information on the Operating Instructions

Validity of the Operating Instructions

These operating instructions cover the following products:

Product	Article number
SCALANCE W786C-2 RJ-45	6GK5786-2FC00-1AA0
SCALANCE W786C-2IA RJ-45	6GK5786-2HC00-1AA0
SCALANCE W786C-2 SFP	6GK5786-2FE00-1AA0

If information relates to all the named products, the term SCALANCE W786 will be used.

These operating instructions apply to the following software version:

- SCALANCE W786C with firmware as of version 8.31

Operating instructions

Based on the operating instructions, you will be able to install and connect up the SCALANCE W786 correctly. Configuring the SCALANCE W786 and integration in a WLAN are not dealt with in this manual.

Documentation on the accompanying CD

You will find introductory information about configuration in the document "Getting Started SCALANCE WLC711" on the accompanying SIMATIC NET IWLAN CD under the file name:

GS_SCALANCE-WLC711_76.pdf

Note

Make sure that you read the explanations and instructions in the README.txt file

Security information

Siemens provides products and solutions with industrial security functions that support the secure operation of plants, systems, machines and networks.

In order to protect plants, systems, machines and networks against cyber threats, it is necessary to implement – and continuously maintain – a holistic, state-of-the-art industrial security concept. Siemens' products and solutions constitute one element of such a concept.

Customers are responsible for preventing unauthorized access to their plants, systems, machines and networks. Such systems, machines and components should only be connected to an enterprise network or the internet if and to the extent such a connection is necessary and only when appropriate security measures (e.g. firewalls and/or network segmentation) are in place.

For additional information on industrial security measures that may be implemented, please visit (https://www.siemens.com/industrialsecurity)

Siemens' products and solutions undergo continuous development to make them more secure. Siemens strongly recommends that product updates are applied as soon as they are available and that the latest product versions are used. Use of product versions that are no longer supported, and failure to apply the latest updates may increase customers' exposure to cyber threats.

To stay informed about product updates, subscribe to the Siemens Industrial Security RSS Feed under (https://www.siemens.com/industrialsecurity)

Recycling and disposal

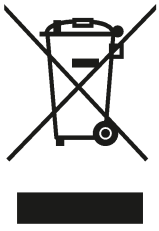

The products are low in pollutants, can be recycled and meet the requirements of the WEEE directive 2012/19/EU for the disposal of electrical and electronic equipment.

Do not dispose of the products at public disposal sites.

For environmentally friendly recycling and the disposal of your old device contact a certified disposal company for electronic scrap or your Siemens contact (Product return (https://support.industry.siemens.com/cs/ww/en/view/109479891)).

Note the different national regulations.

Trademarks

The following and possibly other names not identified by the registered trademark sign ® are registered trademarks of Siemens AG:

SIMATIC NET, SCALANCE, C-PLUG, RCoax

Security recommendations

2

To prevent unauthorized access, note the following security recommendations.

General

- You should make regular checks to make sure that the device meets these recommendations and/or other security guidelines.
- Evaluate your plant as a whole in terms of security. Use a cell protection concept with suitable products (https://www.industry.siemens.com/topics/global/en/industrial-security/pages/default.aspx).
- When the internal and external network are disconnected, an attacker cannot access internal data from the outside. Therefore operate the device only within a protected network area.
- For communication via non-secure networks use additional devices with VPN functionality to encrypt and authenticate the communication.
- Terminate management connections correctly (WBM. Telnet, SSH etc.).

Physical access

- Restrict physical access to the device to qualified personnel.
- The memory card or the PLUG (C-PLUG, KEY-PLUG, security PLUG) contains sensitive data such as certificates, keys etc. that can be read out and modified.

Software (security functions)

- Keep the firmware up to date. Check regularly for security updates of the product. You will find information on this on the Internet pages "Industrial Security (https://www.siemens.com/industrialsecurity)".
- Inform yourself regularly about security advisories and bulletins published by Siemens ProductCERT (https://www.siemens.com/cert/en/cert-security-advisories.htm).
- Only activate protocols that you really require to use the device.
- Use the security functions such as address translation with NAT (Network Address Translation) or NAPT (Network Address Port Translation) to protect receiving ports from access by third parties.
- Restrict access to the device with a firewall or rules in an access control list (ACL - Access Control List).
- If RADIUS authentication is via remote access, make sure that the communication is within the secured network area or is via a secure channel.
- The option of VLAN structuring provides good protection against DoS attacks and unauthorized access. Check whether this is practical or useful in your environment.

- Use a central logging server to log changes and access operations. Operate your logging server within the protected network area and check the logging information regularly.
- Use WPA2/ WPA2-PSK with AES to protect the WLAN. If iPCF or iPCF-MC is used, use the AES encryption.

Passwords

- Define rules for the use of devices and assignment of passwords.
- Regularly update passwords and keys to increase security.
- Change all default passwords for users before you operate the device.
- Only use passwords with a high password strength. Avoid weak passwords for example password1, 123456789, abcdefgh.
- Make sure that all passwords are protected and inaccessible to unauthorized personnel.
- Do not use the same password for different users and systems or after it has expired.

Keys and certificates

This section deals with the security keys and certificates you require to set up HTTPS (HyperText Transfer Protocol Secured Socket Layer).

- We strongly recommend that you create your own HTTPS certificates and make them available.

  There are preset certificates and keys on the device. The preset and automatically created HTTPS certificates are self-signed.

  We recommend that you use HTTPS certificates signed either by a reliable external or by an internal certification authority. The HTTPS certificate checks the identity of the device and controls the encrypted data exchange. You can install the HTTPS certificate via the WBM (System > Load and Save).
- Handle user-defined private keys with great caution if you use user-defined SSH or SSL keys.
- Use the certification authority including key revocation and management to sign the certificates.
- Verify certificates and fingerprints on the server and client to avoid "man in the middle" attacks.
- We recommend that you use certificates with a key length of 2048 bits.
- Change keys and certificates immediately, if there is a suspicion of compromise.

Secure/non-secure protocols and services

- Avoid and disable non-secure protocols, for example Telnet and TFTP. For historical reasons, these protocols are still available, however not intended for secure applications. Use non-secure protocols on the device with caution.
- Check whether use of the following protocols and services is necessary:
  - Non-authenticated and unencrypted ports
  - LLDP
  - Syslog
  - DHCP options 66/67
  - TFTP
- The following protocols provide secure alternatives:
  - SNMPv1/v2 → SNMPv3

    Check whether use of SNMPv1 is necessary. SNMPv1 is classified as non-secure. Use the option of preventing write access. The product provides you with suitable setting options.

    If SNMP is enabled, change the community names. If no unrestricted access is necessary, restrict access with SNMP.

    Use SNMPv3 in conjunction with passwords.
  - HTTP → HTTPS
  - Telnet → SSH
- Use secure protocols when access to the device is not prevented by physical protection measures.
- To prevent unauthorized access to the device or network, take suitable protective measures against non-secure protocols.
- If you require non-secure protocols and services, operate the device only within a protected network area.
- Restrict the services and protocols available to the outside to a minimum.
- For the DCP function, enable the "Read Only" mode after commissioning.

Available protocols

The following list provides you with an overview of the open protocol ports.

The table includes the following columns:

- **Protocol**
- **Port**
- **Port status**
  - Open

    The port is always open and cannot be closed.
  - Open (when configured)

    The port is open if it has been configured.
- **Factory setting**
  - Open

    The factory setting of the port is "Open".
  - Closed

    The factory setting of the port is "Closed".
- **Authentication**

  Specifies whether or not the protocol is authenticated.
- **Encryption**

  Specifies whether or not the transfer is encrypted.

Protocol	Port number	Port status	Factory setting of the port	Authentication
SSH	TCP/22	Open (when configured)	Open	Yes
TELNET	TCP/23	Open (when configured)	Open	Yes
HTTP	TCP/80	Open (when configured)	Open	Yes
HTTPS	TCP/443	Open (when configured)	Open	Yes
SNTP NTP	UDP/123	Open (when configured)	Closed	No
SNMP	UDP/161	Open (when configured)	Open	Yes
PROFINET	UDP/34964, UDP/49154, 49155	Open	Open	No
Syslog	UDP/514	Open (when configured)	Open	No
EtherNet/IP	TCP/44818, UDP/2222,44818	Open (when configured)	Open	No

Protocol	Port number	Port status	Factory setting of the port	Authentication
DHCP	UDP/67,68	Open (when configured)	Closed	No
RADIUS	UDP/1812,1813	Open (when configured)	Closed	No
TFTP	UDP/69	Open (when configured)	Closed	No

Description

3

3.1 Description of the device

SCALANCE W786C - IP65 degree of protection

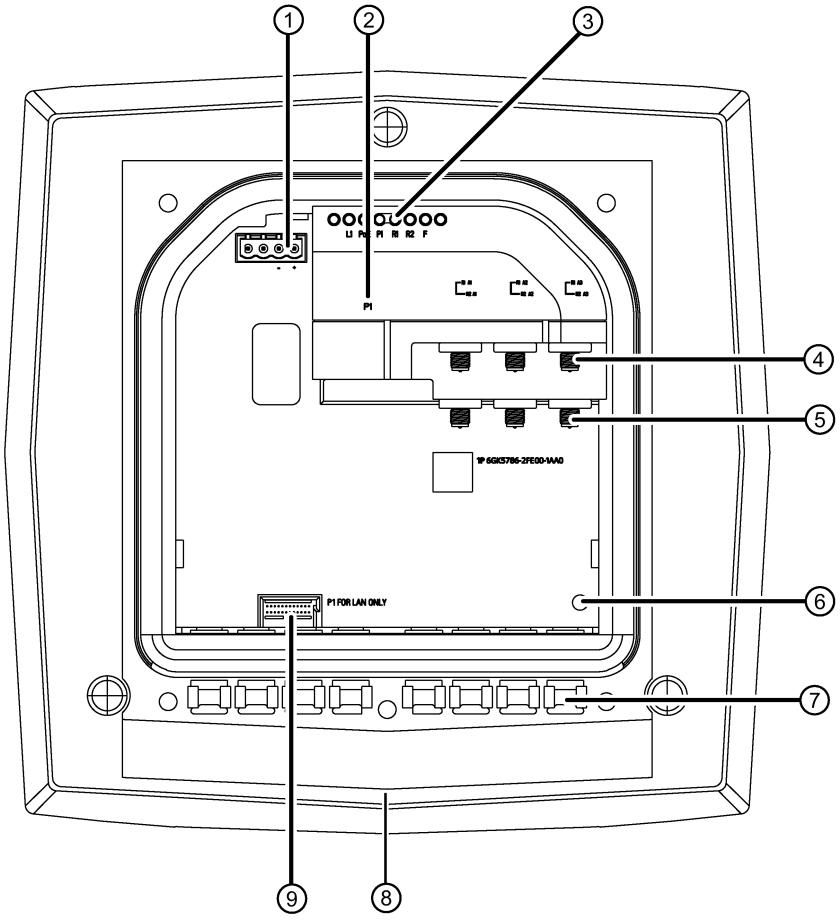

① Connector for power supply / feed-in adaptor
② Connector for Ethernet, RJ-45 type
③ LEDs
④ Antenna connectors R1A1, R1A2, R1A3
Devices with one IWLAN interface: 3 connectors.
⑤ Antenna connectors R2A1, R2A2, R2A3
Devices with two IWLAN interfaces: 6 connectors
⑥ Reset button
⑦ Cable feedthrough
⑧ Grounding connector thread M4 (on the back of the device)
⑨ PLUG compartment (not with W786C)

Figure 3-1 SCALANCE W786C

3.2 Structure of the type designations

The type designation of a SCALANCE W786 is made up of several parts that have the following meaning:

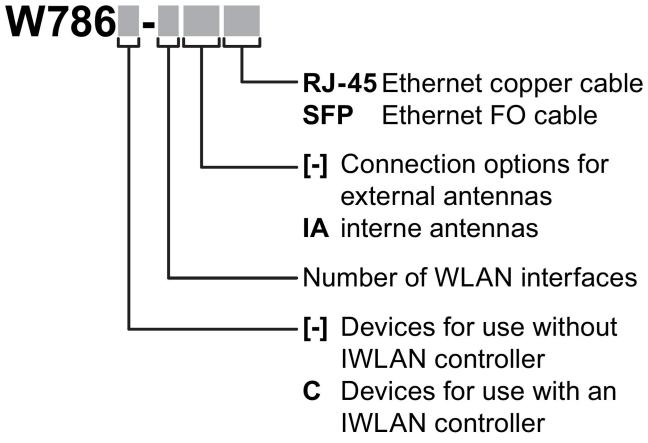

3.3 Scope of delivery

The following components are supplied with the SCALANCE W786:

- SCALANCE W786
- 5 caps for the cover screws
- Depending on the version, up to 8 plugs for sealing the housing
- Depending on the version, up to 8 strain relief clamps
- 2-pin terminal block for the 24 VDC power supply
- SIMATIC NET Industrial Wireless LAN CD

Note

The mounting set with the holding plate does not ship with the device, see Accessories.

Please check that the consignment you have received is complete. If the consignment is incomplete, contact your supplier or your local Siemens office.

3.4 Accessories

Technical data subject to change.

You will find further information on the range of accessories in the Industry Mall (https://mall.industry.siemens.com)

Mounting set

Component	Description	Article number
Mounting set	Mounting set can only be used in conjunction with SCALANCE W-786; consisting of holding plate for wall mounting, for mounting on an S7-300 rail and a DIN rail and for mast mounting with additional hose clips	6GK5798-8MG00-0AA0

Cables Industrial Ethernet

Component	Description	Article number
IE FC TP cable 4 x 2	Industrial Ethernet FastConnect TP standard cable GP 4 x 2, TP installation cable CAT6A for connection to IE FC RJ45 Plug 4 x 2, 24 AWG Sold by the meter	6XV1878-2A

* Available in different lengths

Lightning protection

Component	Description	Article number
LP798-1N	Lighting protector with N/N female/female connector with gas discharge technology	6GK5798-2LP00-2AA6
LP798-2N	Lighting protector with N/N female/female connector with quarter wave technology	6GK5798-2LP10-2AA6

Terminating resistor

Component	Description	Article number
TI795-1R	Electrical connection RSMA-Connect, male	6GK5795-1TR10-0AA6

3.4.1 Flexible connecting cables and antennas

3.4.1.1 Flexible connecting cables

Flexible connecting cable N-Connect/R-SMA

Flexible connecting cable for connecting an antenna to a SCALANCE W device with R-SMA connectors, preassembled with a connector N-male and R-SMA male

Length	Article number
0.3 m	6XV1875-5CE30
1 m	6XV1875-5CH10
2 m	6XV1875-5CH20
5 m	6XV1875-5CH50
10 m	6XV1875-5CN10

For railway applications, the following connecting cable are available:

Length	Article number
1 m	6XV1875-5TH10
2 m	6XV1875-5TH20
5 m	6XV1875-5TH50

Flexible connecting cable N-Connect/N-Connect

Flexible connecting cable for connecting an antenna to a SCALANCE W device with N-Connect connectors.
Preassembled with two N male connectors:

Length	Article number
1 m	6XV1875-5AH10
2 m	6XV1875-5AH20
5 m	6XV1875-5AH50
10 m	6XV1875-5AN10

For railway applications, the following connecting cable are available:

Length	Article number
1 m	6XV1875-5SH10
2 m	6XV1875-5SH20
5 m	6XV1875-5SH50

Flexible connecting cable IWLAN QMA/N-Connect male/female

Adapter cable for connecting a MIMO antenna with QMA connectors with the flexible connecting cables. Preassembled with two connectors QMA male and N-Connect female. pack of 3

Length	Article number
1 m	6XV1875-5JH10

For railway applications, the following connecting cable is available Note: Scope of delivery: Pack of 1

Length	Article number
1 m	6XV1875-5VH10

3.4.1.2 Antennas

Note

When you select an antenna, keep in mind the national approvals for your device.

You can find additional information under Wireless approvals (https://www.siemens.com/wireless-approvals)

The SCALANCE W786C-2IA RJ-45 uses internal omni antennas (3/4 dBi at 2.4 GHz or 5 GHz).

Type	Properties	Article number
ANT792-4DN	RCoax helical antenna, circular polarization, 4 dBi, 2.4 GHz, N-Connect female.	6GK5792-4DN00-0AA6
ANT792-6MN	Omni antenna, mast/wall mounting, 6 dBi 2.4 GHz, N-Connect female	6GK5792-6MN00-0AA6
ANT792-8DN	Directional antenna, mast/wall mounting, 14 dBi 2.4 GHz, N-Connect female	6GK5792-8DN00-0AA6
ANT793-6DG	Wide angle antenna, mast/wall mounting, 9 dBi 5 GHz, 2 x N-Connect female	6GK5793-6DG00-0AA0
ANT793-6MN	Omni antenna, mast/wall mounting, 5 dBi 5 GHz, N-Connect female	6GK5793-6MN00-0AA6
ANT793-8DJ	Directional antenna, mast/wall mounting, 18 dBi 5 GHz, 2 x N-Connect female	6GK5793-8DJ00-0AA0
ANT793-8DK	Directional antenna, mast/wall mounting, 23 dBi 5 GHz, 2 x N-Connect female	6GK5793-8DK00-0AA0
ANT793-8DQ	Circular polarized antenna, mast mounting, 18 dBi, 5.8 GHz, 1 x N-Connector female	6GK5793-8DQ00-0AA0
ANT795-4MA	Omni antenna, directly on the device, 3/5 dBi 2.4 GHz and 5 GHz, IP30, R-SMA connector male for direct installation on the device, angle connector adjustable 0° to 180°.	6GK5795-4MA00-0AA3

Type	Properties	Article number
ANT795-4MC	Omnidirectional antenna, 3/5 dBi, 2.4 GHz and 5 GHz, IP65, N-Connect male for direct installation on the device, straight connector.	6GK5795-4MC00-0AA3
ANT795-4MD	Omnidirectional antenna, 3/5 dBi, 2.4 GHz and 5 GHz, IP65, N-Connect male for direct installation on the device, 90° connector.	6GK5795-4MD00-0AA3
ANT795-6DC	Wide angle antenna, mast/wall mounting, 9 dBi 2.4 GHz and 5 GHz, N-Connect female	6GK5795-6DC00-0AA0
ANT795-4MB	Omnidirectional antenna, 2/3 dBi 2.4 GHz and 5 GHz, IP30, R-SMA connector female for direct mounting on the device, angle connector adjustable 0° to 90°.	6GK5795-4MB00-0Ax0
ANT795-6MN	Omni antenna, mounted on roof/vehicle, 6/8 dBi 2.4 GHz and 5 GHz, N-Connect female	6GK5795-6MN10-0AA6
ANT795-6MT	Omni antenna (MIMO), mounted on roof/vehicle/ceiling, 5/7 dBi 2.4 GHz and 5 GHz, 3 x QMA connector female	6GK5795-6MT00-0AA0
ANT793-8DL	Directional antenna vertical-horizontal polarized, 5 GHz, 14dBi, IP66, 2xN-Connect female	6GK5793-8DL00-0AA0
ANT793-8DP	Directional antenna, mast/wall mounting, 13 / 13.5 dBi 4.9 GHz and 5 GHz, N-Connect female	6GK5793-8DP00-0AA0
ANT795-4MX	Omnidirectional antenna, 2/2.5 dBi, 2.4 GHz and 5 GHz, IP69K, N-Connect male	6GK5795-4MX00-0AA0
ANT795-6MP	Omnidirectional antenna, 5/7 dBi, 2.4 GHz and 5 GHz, IP65/67, N-Connect female	6GK5795-6MP00-0AA0
ANT896-6MM	Omnidirectional antenna for mobile wireless, WLAN and GPS, WLAN: 6/7 dBi, 2.4 GHz and 5 GHz, IP68, IP69 K, QMA-Connect female, port 2	6GK5896-6MM00-0AA0
IWLAN RCoax Cable 2,4 GHz PE 1/2"	Omni antenna, 0 dBi 2.400 - 2.485 GHz, N-Connect female	6XV1875-2A
IWLAN RCoax Cable 5 GHz PE 1/2"	Omni antenna, 0 dBi 5.150 – 5.875 GHz, N-Connect female	6XV1875-2D

NOTICE

ANT795-4MA

The ANT795-4MA antenna has degree of protection IP30 and is therefore only suitable for dry environments.

Note

ANT793-8DJ

The antenna ANT793-8DJ may only be used with the flexible connecting cable 6XV1875-5CH50 (5 m length) or 6XV1875-5CN10 (10 m length). Other flexible connecting cables are not permitted.

Notice for USA/Canada

Only one antenna per device can be used (connected to R1A1, R1A2 or R2A1, R2A2).

Note

ANT793-8DK

The antenna ANT793-8DK may only be used with the flexible connecting cable 6XV1875-5CN10 (10 m length). Other flexible connecting cables are not permitted.

Notice for USA/Canada

Only one antenna per device can be used (connected to R1A1, R1A2 or R2A1, R2A2).

3.5 LED display

Information on operating status and data transfer

On the front of the housing, several LEDs provide information on the operating status of the SCALANCE W786C-2:

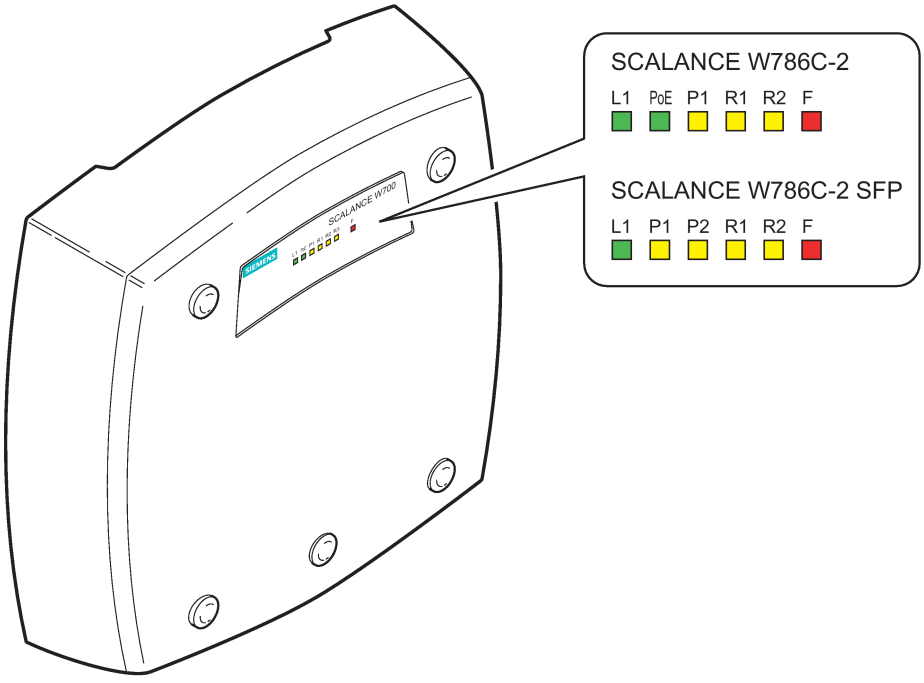

Figure 3-2 LED display of the SCALANCE W786C-2. You will find information on the significance of the individual elements in the documentation for the WLC700.

3.6 Reset button



WARNING

Danger from line voltage

After removing the housing cover, there is a risk of touching live parts in the area of the connecting terminals of the power supply adapter.

Opening the device and all work performed on the open device (for example connecting and disconnecting cables, pressing the reset button) must therefore only be performed by electrical specialists!

Reset button

The reset button is located below the housing cover beside on the right-hand side above the cable feed:

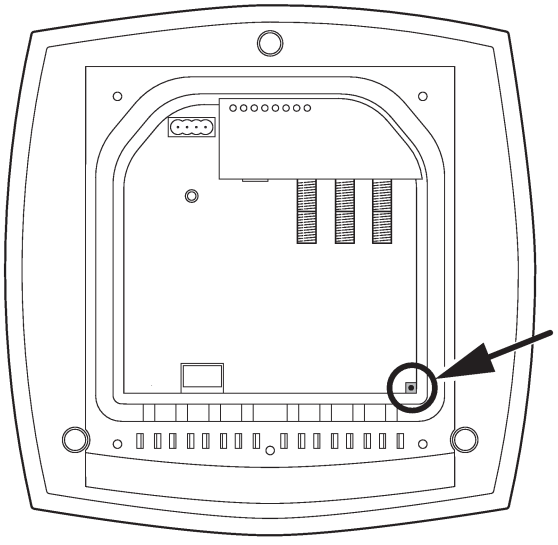

Figure 3-3 Position of the reset button with the housing cover removed

Mounting

4

4.1 Safety notes relating to installation

CAUTION

Danger of injury by falling objects

If the SCALANCE W7x8 is subjected to strong vibration (> 10 g), mounting on a 35 mm DIN rail does not provide adequate support. Under such conditions, the device can come out of the mounting and may cause injury.

In this case, install the device on an S7-300 standard rail or on a wall.

CAUTION

Minimum distance to antennas

Fit the device so that there is a minimum clearance of 20 cm between antennas and persons.

WARNING

If a device is operated in an ambient temperature of more than 40 °C, the temperature of the device housing may be higher than 70 °C. The device must therefore be installed so that it is only accessible to service personnel or users that are aware of the reason for restricted access and the required safety measures at an ambient temperature higher than 40 °C.

4.2 Removing / fitting the housing cover

When does the housing cover need to be removed?

You can only perform the following activities when the cover is removed.

- You want to screw the SCALANCE W786 to a wall or onto the optional mounting plate.
- You want to connect cables to the SCALANCE W786 for the power supply, for Ethernet or for external antennas.
- You want to use the reset button.

Removing the housing cover



⚠ WARNING

Danger from line voltage

After removing the housing cover, there is a risk of touching live parts in the area of the connecting terminals of the power supply adapter.

Opening the device and all work performed on the open device (for example connecting and disconnecting cables, pressing the reset button) must therefore only be performed by electrical specialists!

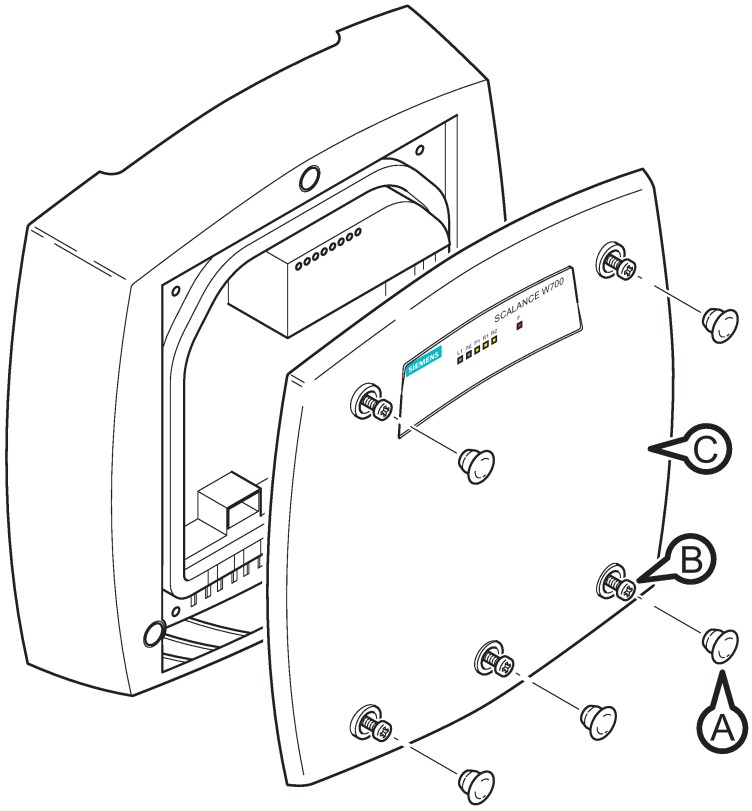

A Sealing cap
B Cover fastening
C Enclosure cover

Figure 4-1 Cover disassembly

Follow the steps below to remove the housing cover:

1. Remove the sealing caps from the housing cover (position **A** in the figure above)
2. Loosen the screws in the cover (position **B** in the figure above).
3. Remove the housing cover (position **C** in the figure above).

Fitting the housing cover

Fitting the housing cover is carried out in the reverse order. Tightening torque for the cover screws 1.8 Nm.

4.3 Laying the cables

Connecting up cables prior to mounting

Before you screw a SCALANCE W786 to a wall or to the optional mounting plate, the cables for the power supply, for Ethernet, and, when necessary, for the external antennas must be connected up first. The available options are as follows:

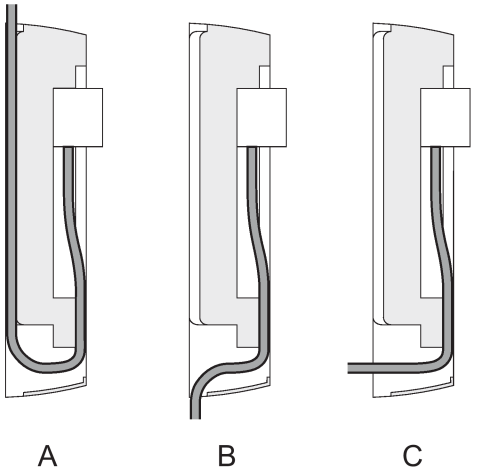

Figure 4-2 Side view of a SCALANCE W786 with cables entering from different directions

- The cables are inserted from above (position **A** in the previous schematic). The housing of the SCALANCE W786 has an opening at the top for this purpose.
- The cables are inserted from below (position **B** in the previous schematic). There is also an opening at the bottom for this purpose.
- Cables inserted through a wall behind the SCALANCE W786 (position **C** in the previous schematic). In this case, you will need to mount the SCALANCE W786 so that the opening in the wall is located above the lower edge of the device.

Grounding terminal

⚠ WARNING

Do not use the device without grounding

To operate the device safely, the grounding connector must have a suitable cable connected. Do not use the device without a grounding cable connected.

The ground connector is located on the rear of the device (M4 thread, max. screw length 20 mm). Connect the grounding cable before you mount the device on a wall or on the optional mounting plate. Once the device is mounted, this connector is no longer accessible.

Place the supplied toothed washer directly on the rear of the device before screwing on the ground cable. Only then can you be sure that there is ideal contact with the screwed-on cable.

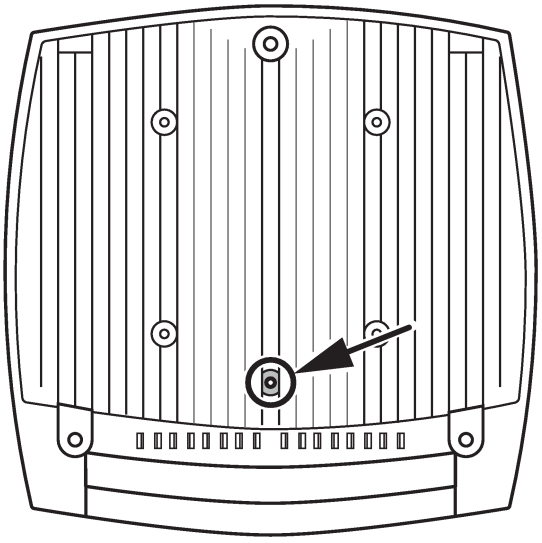

Figure 4-3 Grounding connector on the rear of the SCALANCE W786

4.4 Mounting without an adapter (wall mounting only)

Drilling template

Note

Installation location

The following should be noted with regard to the installation location:

- Devices with an internal antenna must be aligned according to the characteristics of the internal antenna (refer to the technical specifications of the antenna --> Radiation pattern diagrams). Since the internal antennas are integrated in the housing, the location and alignment of the housing decides the radiation direction of the antennas.
- There are no restrictions relating to devices without internal antennas.

The location of the holes for mounting the SCALANCE W786 on a wall is shown in the following figure:

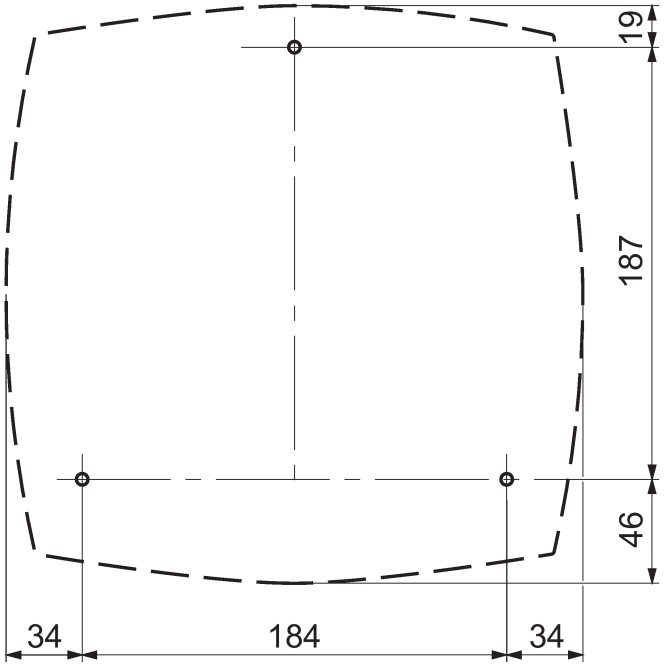

Figure 4-4 Drilling template for wall mounting of the SCALANCE W786

Procedure

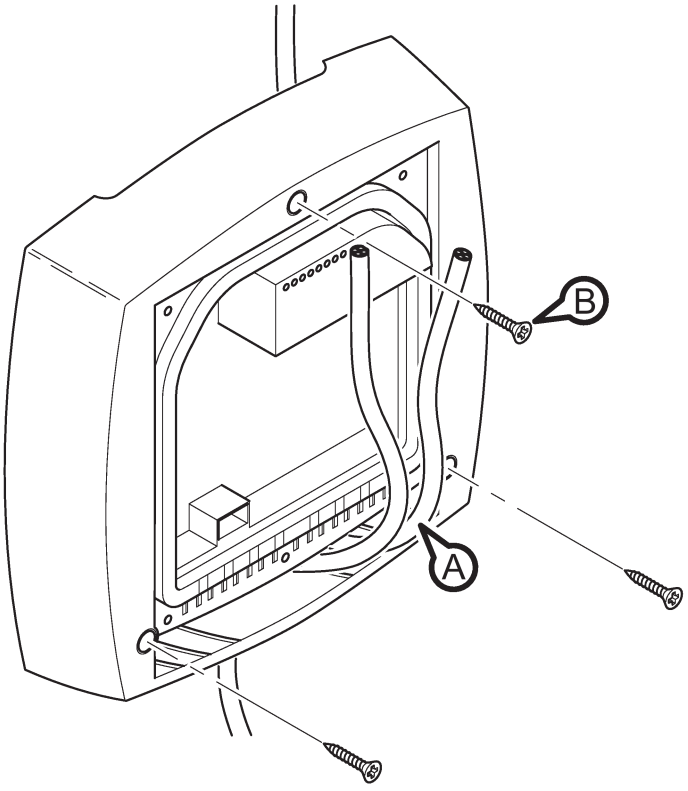

Figure 4-5 SCALANCE W786 wall mounting

Follow the steps below to screw a SCALANCE W786 to a wall:

1. Lead the cables into the housing of the SCALANCE W786 (position **A** in the figure above). Note the information in the section "Connecting up cables".
2. Secure the SCALANCE W786 to the wall with three screws (position **B** in the figure above). The screws are not supplied with the device. The type and length of the screws depend on the type of wall.
   Type of screw:
   - for wooden walls: wood screw 4 x 30 mm
   - for concrete walls: 4 x 50 mm with 5 mm concrete plug
   - for metal walls: M4 x 25 mm with machine thread in the wall

Option: Threaded holes on rear of housing

When a wall is extremely thin, it is often not possible to use wall plugs for the screws. To allow wall mounting even in this situation, there are four M4 threaded holes on the rear of the SCALANCE W786. The drilling template is a square with sides 100 mm long. The device can therefore be mounted on a wall with bolts through the wall.

Calculate the length of the required M4 screws as follows:

Screw length = wall thickness + 7 mm

4.5 Installation with mounting plate

4.5.1 Fitting the mounting plate to a wall

Drilling template

Note

Installation location

The following should be noted with regard to the installation location:

- Devices with an internal antenna must be aligned according to the characteristics of the internal antenna (refer to the technical specifications of the antenna --> Radiation pattern diagrams). Since the internal antennas are integrated in the housing, the location and alignment of the housing decides the radiation direction of the antennas.
- There are no restrictions relating to devices without internal antennas.

The location of the holes for fitting the mounting plate to a wall is shown in the following figure:

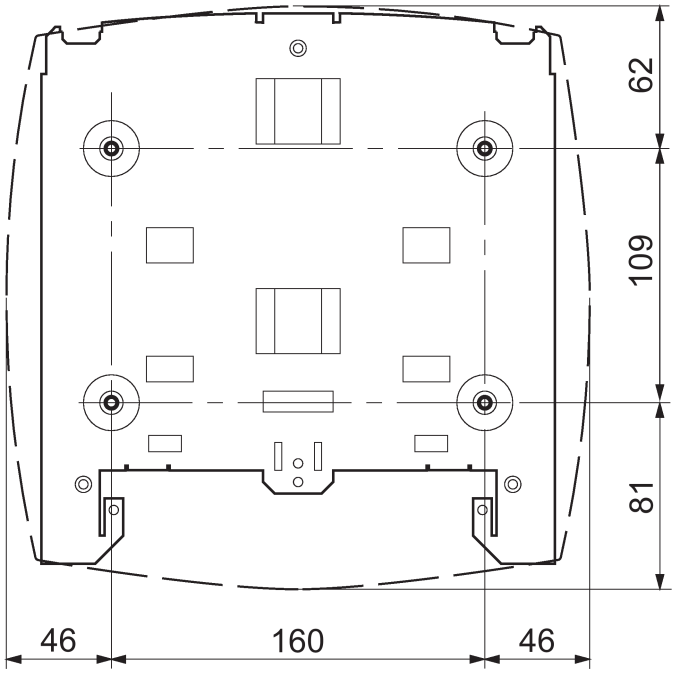

Figure 4-6 Drilling template for fitting the mounting plate to a wall

Procedure

Secure the mounting plate to the wall with four screws. The screws are not supplied with the device. The type and length of the screws depend on the type of wall.
Type of screw:

- for wooden walls: wood screw 4 x 30 mm
- for concrete walls: 4 x 50 mm with 5 mm concrete plug
- for metal walls: M4 x 25 mm with machine thread in the wall

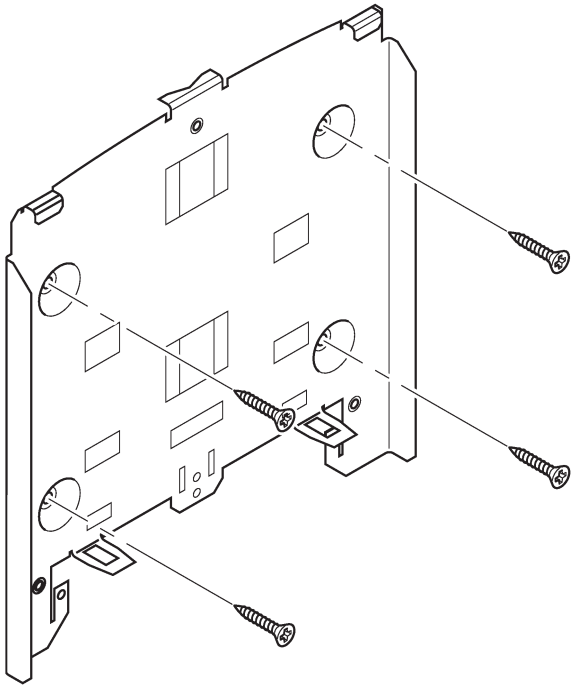

Figure 4-7 Fitting the mounting plate for the SCALANCE W786 to a wall

4.5.2 Screwing the cover plate for the cable feedthrough to the mounting plate

Protection of the cable feedthrough against strong water jets

The cabling of a SCALANCE W786 is led out of the rear of the device. The housing seal is effective only when it is not subjected to water jets. If the device is mounted on a wall, this is the case and no further measures are necessary. When mounted in any other way, except for mounting on an S7-300 standard rail, an additional cover plate must be screwed to the mounting plate.



⚠ WARNING

Danger from line voltage

If the cable feedthrough is subjected to strong water jets, water can penetrate the device and create a live connection to the line voltage. There is then a risk of electric shock.

Make sure that you use the cover plate for the cable feedthrough if you do not mount the SCALANCE W786 on a wall.

Procedure

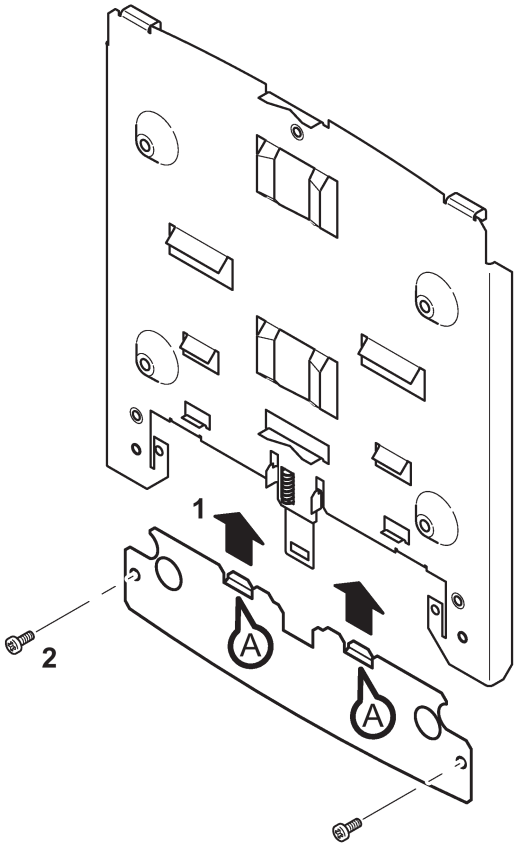

Figure 4-8 Fitting and securing the cover plate for the cable feedthrough

To screw the cover plate for the cable feedthrough to the mounting plate, follow the steps below:

1. Fit the cover plate on the mounting plate from below until the two lugs (position **A** in the figure above) engage the lower edge of the mounting plate.
2. Secure the cover plate to the mounting plate with two M4 screws. The screws are supplied with the assembly kit.

4.5.3 Fitting the mounting plate to an S7-300 standard rail

Procedure

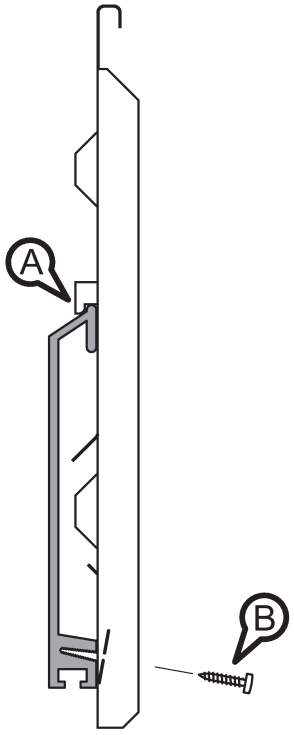

Figure 4-9 Side view of a mounting plate on an S7-300 standard rail

Follow the steps below to fit the mounting plate to an S7-300 standard rail:

1. Place the mounting plate with the two protruding catches on the top edge of the S7-300 standard rail (position **A** in the figure above).
2. At the bottom, the mounting plate has two lugs with holes. Screw the lugs to the S7-300 standard rail (position **B** in the figure above). The required screws are supplied with the mounting plate.

4.5.4 Fitting the mounting plate to a DIN rail

Procedure

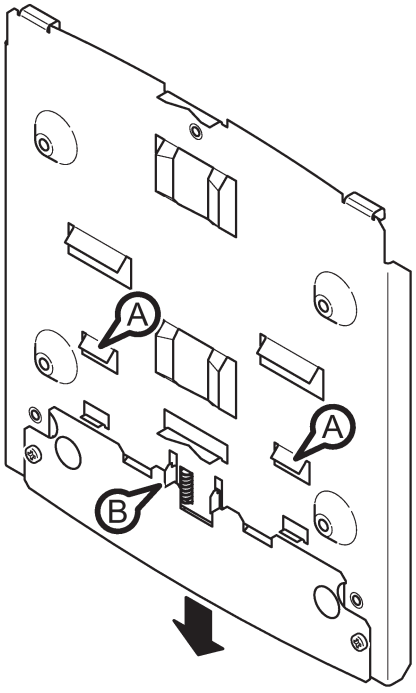

Figure 4-10 Mounting plate with fittings for DIN rail mounting

Follow the steps below to fit the mounting plate to a DIN rail:

1. Place the mounting plate with the two catches (position A in the figure above) on the upper edge of the DIN rail.
2. Pull down the DIN rail sliding catch (position B in the figure above) and press the mounting plate against the DIN rail until the sliding catch engages.

4.5.5 Fitting the mounting plate to a mast

Procedure

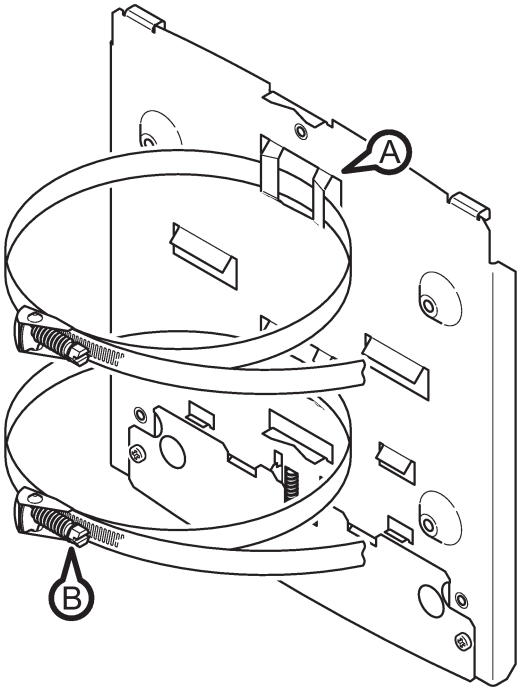

Figure 4-11 Holding plate with hose clips for mast mounting

Follow the steps below to fit the holding plate to a mast:

1. Guide the hose clips through the slots of the holding plate (position **A** in the figure above).
2. Place the hose clips at the required position round the mast.
3. Place the free end of a hose clip through the quick release fastener. You can swivel the clamping screw (position **B** in the figure above) to the side to adapt the diameter of the hose clip to the mast diameter. The minimum mast diameter is 44 mm and the maximum mast diameter is 178 mm.
4. Press the clamping screw against the securing strap and tighten the clamping screw, tightening torque 4.5 Nm.

4.5.6 Fitting/removing the SCALANCE W786 to/from a mounting plate

Procedure for mounting the device

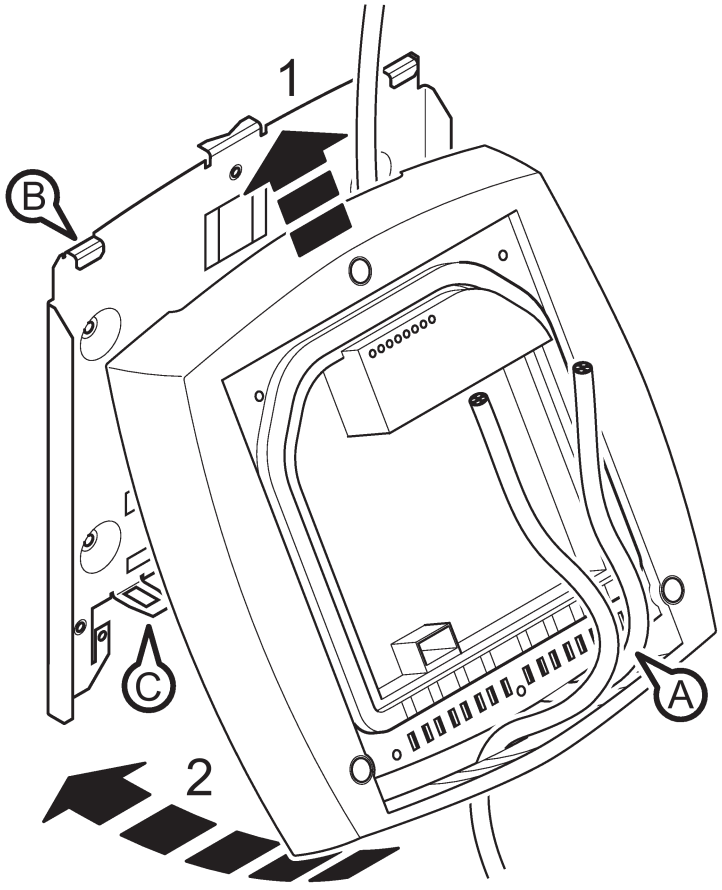

Figure 4-12 Fitting the SCALANCE W786 to a mounting plate

Follow the steps below to fit a SCALANCE W786 to a mounting plate:

1. Lead the cables into the housing of the SCALANCE W786 (position **A** in the figure above). Note the information in the section "Connecting up cables".
2. Fit the SCALANCE W786 so that the upper edge of the rear of the housing is below the two catches of the mounting plate (position **B** in the figure above).

3. Push in the SCALANCE W786 until it engages in the notches at the lower edge of the mounting plate (position **C** in the figure above).

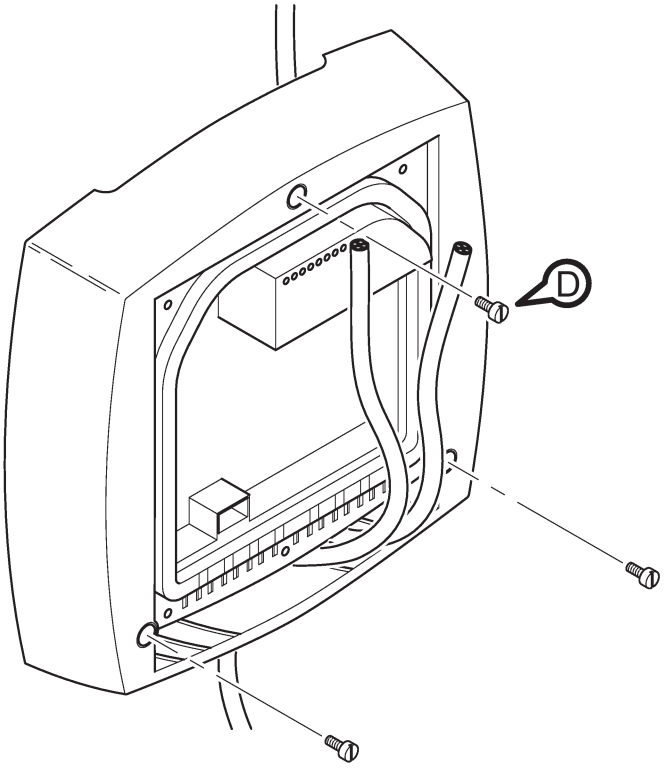

Figure 4-13 Screwing a SCALANCE W786 to a mounting plate

4. Screw the SCALANCE W786 using the three M4 screws supplied with the mounting plate (position **D** in the figure above), tightening torque 1.8 Nm.

Procedure for removing the device

Follow the steps below to remove a SCALANCE W786 from a mounting plate:

1. Loosen the screws between the SCALANCE W786 and mounting plate.
2. Using a screwdriver or similar tool, press down the two lugs on the lower edge of the mounting plate (position **C** in the first figure in this section) and release the SCALANCE W786 from the recesses.
3. Pull out the lower edge of the SCALANCE W786 to the front and then release it from the two clips on the mounting plate (position **B** in the first figure in this section).

Connection

5

5.1 General safety instructions for the SCALANCE W786C



WARNING

Danger from line voltage

Once you have removed the housing cover, there is the danger from line voltage in the area of the connecting terminals on the power supply adapter.

Opening the device and all work performed on the open device (for example connecting and disconnecting cables, pressing the reset button) must therefore only be performed by electrical specialists!

5.2 Lightning protection, power supply and grounding

Notes on lightning protection



⚠ WARNING

Danger due to lightning strikes

Antennas installed outdoors must be within the area covered by a lightning protection system. Make sure that all conducting systems entering from outdoors can be protected by a lightning protection potential equalization system.

When implementing your lightning protection concept, make sure you adhere to the VDE 0182 or IEC 62305 standard.

Suitable lightning protectors are available in the accessories of SIMATIC NET Industrial WLAN.



⚠ WARNING

Danger due to lightning strikes

Installing this lightning protector between an antenna and a SCALANCE W700 is not adequate protection against a lightning strike. The LP798-1N lightening protector only works within the framework of a comprehensive lightning protection concept. If you have questions, ask a qualified specialist company.

Note

The requirements of EN61000-4-5, surge immunity tests on power supply lines, are met only when a Blitzductor is used with 12 to 24 VDC:

BVT AVD 24
article number: 918 422
Manufacturer: DEHN+SÖHNE GmbH+Co.KG, Hans Dehn Str. 1, Postfach 1640, D - 92306 Neumarkt, Germany

Safety extra low voltage



⚠ WARNING

Danger to life from overvoltage, fire hazard

SCALANCE W700 devices are designed for operation with a directly connectable safety extra-low voltage or with the power supply adapters available as accessories (available only for the SCALANCE W786 device). Therefore only safety extra-low voltage (SELV) with limited power source (LPS) complying with IEC950/EN60950/VDE0805 may be connected to the power supply terminals (exception: Power supply adapter for 100 - 240 VAC for the SCALANCE W786).

Take measures to prevent transient voltage surges of more than 40% of the rated voltage. This is the case if you only operate devices with SELV (safety extra-low voltage).

The power supply unit to supply the SCALANCE W700 must comply with NEC Class 2 (requirements of class 2 for power supply units of the "National Electrical Code, table 11 (b)") or SELV with LPS (Limited Power Source) EN 60950-1. If the power supply is designed redundantly (two separate power supplies), both power supplies must meet these requirements.

Exception:
Power supply with PELV (according to VDE 0100-410 or IEC 60364-4-41) is also possible if the generated rated voltage does not exceed the voltage limits 25 VAC or 60 VDC.

Grounding

NOTICE

Damage to the device due to potential differences

To fully eliminate the influence of electromagnetic interference, the device must be grounded. There must be no potential difference between the following parts, otherwise the device or other connected device could be severely damaged:

- Housing of the SCALANCE W700 and the ground potential of the antenna.
- Housing of the SCALANCE W700 and the ground potential of a device connected over Ethernet.
- Housing of the SCALANCE W700 and the shield contact of the connected Ethernet cable.

Connect both grounds to the same foundation earth or use an equipotential bonding cable.

If it is used outdoors, the device must always be connected to protective earth.

Notice for USA/Canada (UL Requirements)

When an external antenna or the device itself is located outdoor:

- The Ethernet-Port (RJ45) is considered a TNV-1 circuit (according IEC 60950-1). Connected Ethernet circuits must fulfill TNV-1 requirements (SELV circuits are not sufficient).

- The device must be properly earthed at the chassis earthing terminal.

- The 12 – 24 V power supply lines of the device are considered a TNV-1 circuit. Connected power supply circuits must fulfill TNV-1 requirements. The PS791-2AC power supply may be connected directly to 100 – 240 C AC primary circuits. The 100 – 240 AC wiring system must be conducted to conduits. This wiring system (including conduits) shall be secured before installation of the product, for example by using an outlet box, according to NEC or CEC.

When the device is located indoor:

- The Ethernet Port (RJ45) is considered a SELV circuit (according IEC 60950-1). All connected Ethernet circuits must fulfill SELV requirements and shall be entirely contained within a single low-voltage power distribution and within a single building.

- Do not connect any external LAN-circuit, powersupply or antenna coming from outdoor.

WARNING

EXPLOSION HAZARD

Do not connect or disconnect cables to or from the device when a flammable or combustible atmosphere is present.

WARNING

EXPLOSION HAZARD

Replacing components may impair suitability for Class 1, Division 2 or Zone 2.

WARNING

EXPLOSION HAZARD

Do not open the device when the supply voltage is turned on.

General notes on use according to ATEX and IECEx

WARNING

Take measures to prevent transient voltage surges of more than 40% of the rated voltage. This is the case if you only operate devices with SELV (safety extra-low voltage).

General notes on use in hazardous areas according to UL-HazLoc

⚠ WARNING

EXPLOSION HAZARD

You may only connect or disconnect cables carrying electricity when the power supply is switched off or when the device is in an area without inflammable gas concentrations.

This equipment is suitable for use in Class I, Division 2, Groups A, B, C and D or non-hazardous locations only.

This equipment is suitable for use in Class I, Zone 2, Group IIC or non-hazardous locations only.

WARNING - Cat. Nos. EAPN-Wx-yy-zx (US installation only):

- PLTC cable type and manufacturer shall be specified: Listed (QPTZ), Type 5240U1 (Waterdog PLTC-ER) manufactured by Belden.

- The PLTC cable for the power supply must be installed in a manner to avoid tensile stress at the termination fittings in accordance with Article 501.10 (B)(1)(4) of the NEC.

- The PLTC cable for the power supply must be installed in accordance with Article 725.154 (D)(1) through (D)(4) of the NEC.

WARNING -Cat. Nos. EAPN-Wx-yy-zx (Canadian installation only):

- TC cable type and manufacturer shall be specified: Listed (QPOR), Type JZ-604 TC manufactured by Helukabel GmbH.

- The TC cable for the power supply must be installed in areas of industrial establishments that are inaccessible to the public and in a manner that meets the requirements in Rule 12-2202(2) of the CEC:
Installed in conduit, other suitable raceway, or direct buried, when not in cable tray. Provided with mechanical protection where subject to damage either during or after installation.
Installed only where qualified persons service the installation.

When operated in potential hazardous areas:

WARNING - Explosion Hazard – Do not disconnect while circuit is live unless area is known to be non-hazardous.

5.3 Suitable cables for power supply and Ethernet

Cable specification

The following table lists the requirements for a cable depending on the use case.

Application	Specification
Direct 24 V DC supply	• Round cable cross-section with 6 to 8 mm diameter. Two-wire cable with 0.5 to 1.5 mm^2 cross-section per wire. • Permitted tensile load at least 100 N. • UL listing: Type PLTC or ITC
Power supply adapter 12 to 24 VDC	• Round cable cross-section with 6 to 8 mm diameter. Two-wire cable with 0.5 to 1.5 mm^2 cross-section per wire. • Permitted tensile load at least 100 N. • UL listing: Type PLTC or ITC
Power supply adapter 100 to 240 VAC	• Round cable cross-section with 6 to 8 mm diameter. • Three-core cable with 0.5 - 1.5 mm^2 cross section of the individual cores. • Permitted tensile load at least 100 N.
Ethernet	1. IE FC TP standard cable GP 2 x 2 (Type A) article no.: 6XV1840-2AH10 2. IE TP Torsion Cable 2 x 2 (Type C) Article number: 6XV1870-2F 3. IE FC TP Trailing Cable 2 x 2 (Type C) Article number: 6XV1840-3AH10 UL listing: Type PLTC or ITC (the three named types have this approval)
Fiber-optic cable multimode (for device variants with optical connectors)	FO Standard Cable GP Article number: 6XV1873-2A Minimum bending radius 65 mm. You can find detailed information on preassembled cable lengths and connectors in the catalog "IK PI".
	FO Robust Cable GP 2G50/125/900 Article number: 6XV1873-2R Halogen-free, UV-resistant cable for indoors and outdoors for ambient temperatures -40 °C ... +70 °C.

⚠ WARNING

Only use cables suitable for high temperatures!

If temperatures in excess of 70 °C occur on the cable or at the housing socket, or the temperature at the branching points of the cables exceeds 80 °C, special measures need to be taken.

If the equipment is operated at an ambient temperature of 45 - 60 °C, only use cables with maximum permitted operating temperature of at least 90 °C.

5.4 Connecting the cables

Procedure



⚠ WARNING

Danger from line voltage

If the housing is not perfectly sealed, there is a danger to life due to the line voltage if the SCALANCE W786 is subjected to spray water or dampness. Make sure that you keep to the following safety rules.

- Before connecting up, turn of the power supply.
- The sealing of the cable feedthroughs of the SCALANCE W786 is only assured when the cable has a suitable diameter and adequate tensile strength. Only use cables that meet the specifications in the section "Cables for the SCALANCE W786".
- Never wrap insulating tape, adhesive tape or other materials around thinner cables to achieve the required diameter. In this case, neither the housing seal nor the strain relief clamps can fulfill their function.
- Close all unused openings in the housing seal with the sealing plugs supplied with the SCALANCE W786. Do not use fillers or any other material under any circumstances.



⚠ WARNING

Danger from line voltage

If the supply cable of a power supply adapter for 100 to 240 VAC is disconnected from the line power, a dangerous voltage may be present for a brief period.

For this reason, do not connect the contacts of the supply cable to the mains power supply using a plug-in connector but screw the contacts to a terminal block that can be disconnected from the mains power by a switch.

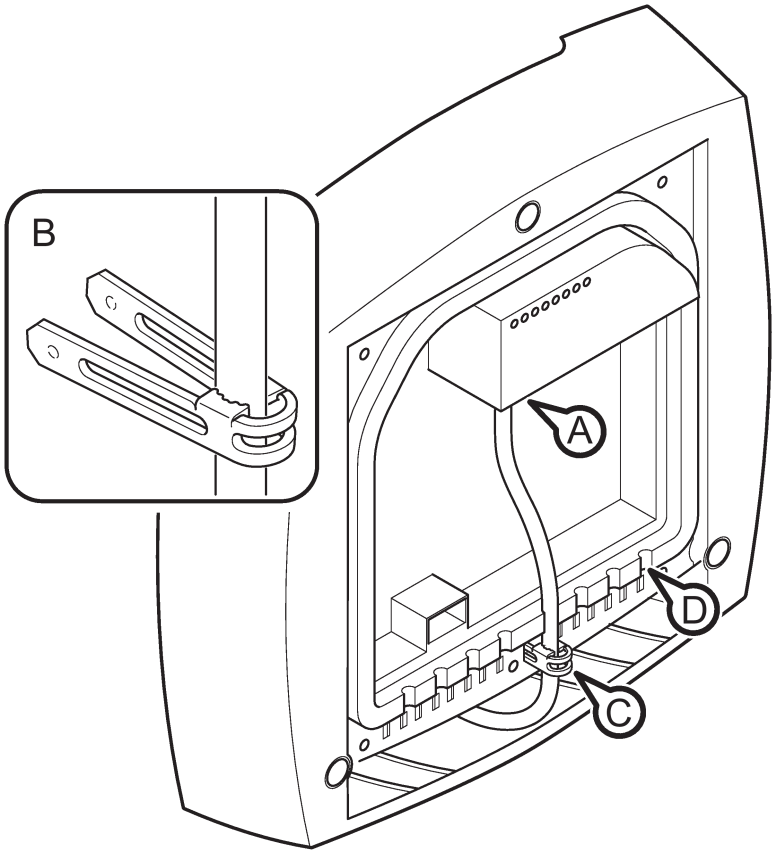

Figure 5-1 Connecting a cable and fitting the strain relief clamps

Follow the steps below to connect cables to the SCALANCE W786:

1. Connect the cables to the appropriate contacts. (Position **A** in the figure above) You have the following options:
   – Connect cables preassembled with a connector (Ethernet, antennas) by inserting the connector into the appropriate socket. Secure antenna cables by tightening the sleeve nut of the connector (key size SW8). You will find more information on this topic in the sections "Connection for Industrial Ethernet" and "Connections for external antennas".

   Note

   Connecting the grounding cable

   First connect the grounding cable on the rear of the device. Refer to the information in the section "Installation".

- 24 V DC power supply. Use the connector supplied with the SCALANCE W786. For details of the terminal assignment, refer to the section "Connectors for the power supply".
- 12 - 24 V DC or 100 - 240 V AC power supply. With these power supplies, you require a power supply adapter (do not ship with the SCALANCE W786). You will find more information in the section "Connecting a power supply adapter".

2. Fit a strain relief clamp to the connected cable. The toothed part of the clamp must enclose the cable completely (as shown by position **B** in the figure above).
3. Press the strain relief clamp into the housing until the cable is located completely in the opening in the housing seal (position **C** in the figure above).
4. Seal all openings not required for cables with sealing plugs (position **D** in the figure above).
5. Fit these sealing plugs in a strain relief clamp. The lower surrounding notch must be enclosed by the toothing of the strain relief clamp (as shown in the figure below). Press the strain relief clamp into the housing until the sealing plug is located completely in the opening of the housing seal.

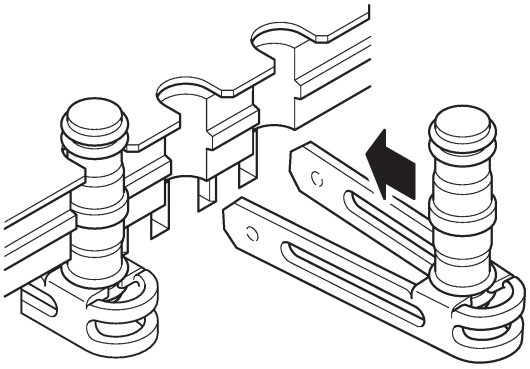

Figure 5-2 Securing a sealing plug with a strain relief clamp

Note

Keep unused sealing plugs and strain relief clamps for later use.

5.5 Connecting the power supply

Possible power supplies

You have the following options for the power supply of the SCALANCE W786:

Direct 24 VDC supply - direct voltage

A 2-terminal terminal block ships with the SCALANCE W786.

Power supply adapter 12 to 24 VDC - direct voltage

The power supply adapter Power Supply PS791-2DC is available as an accessory, article number: 6GK5791-2DC00-0AA0

Power supply adapter 100 to 240 VAC alternating voltage

The power supply adapter Power Supply PS791-2AC is available as an accessory, article number: 6GK5791-2AC00-0AA0

Power over Ethernet (PoE)

With the SCALANCE W786-x RJ-45, power supply using Power over Ethernet (PoE) is also possible. The devices support the standards 802.3at type 1 (IEEE 802.3af) and IEEE 802.3at type 2. With SCALANCE W786-2SFP, Power over Ethernet is not possible in any situation.

- Gigabit Ethernet

  When you connect to gigabit Ethernet, the power supply is a phantom power supply over data wires 1, 2, 3 and 6. This corresponds to alternative A according to IEEE 802.3af.

- Fast Ethernet

  On an 8-wire Fast Ethernet cable, the power is supplied via the free data wires 4, 5, 7 and 8. This corresponds to alternative B according to IEEE 802.3af.

Note

Disabling the PoE power supply

Before you pull a plug via which the device is supplied with power using PoE, disable the relevant PoE power supply.

Note

No power sourcing equipment (PSE)

The W786 cannot be used as a PoE power supply for other devices.

Procedure for connecting the supplied connector for direct supply 24 VDC

The cable for direct power supply is connected to the SCALANCE W786 with the supplied connector. The connector is safe against polarity reversal and can only be inserted in the left-hand half of the housing. When connecting the wires, you should therefore make sure that the connector is oriented as shown in the following figure:

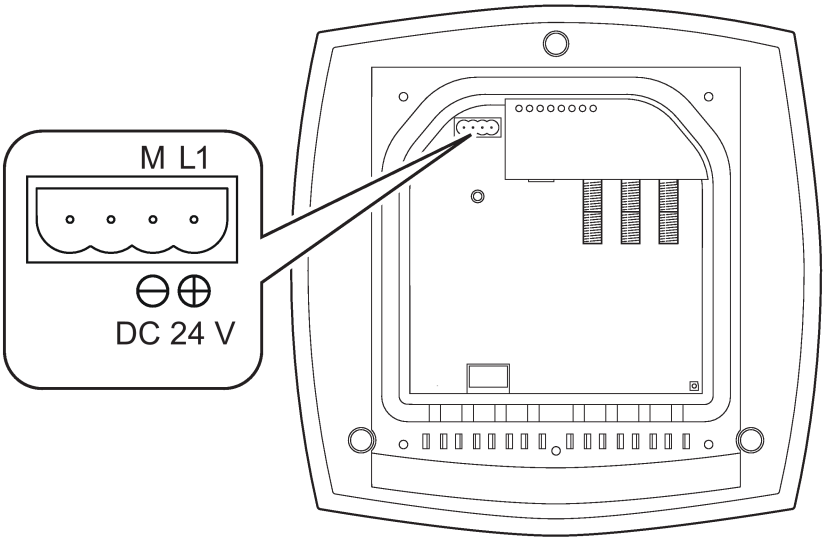

Figure 5-3 Position of the socket in the housing for the power supply

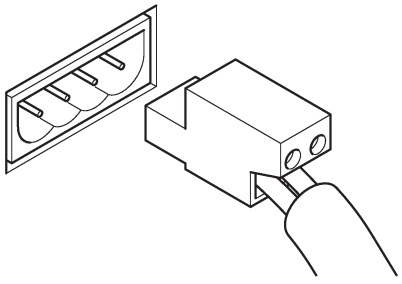

Figure 5-4 Position of the connector when inserted in the socket of the housing

Note

Grounding connector

The device has a grounding connector on the back of the device. You need to mount the grounding connector before securing the device. Refer to the information in the section Laying the cables (Page 26).

Follow the steps below to connect a 24 VDC cable to a SCALANCE W786:

1. Connect the supplied connector to the 24 VDC cable.
2. Press the plug into the left-hand half of the socket until it locks in place.
3. Secure the power supply with a strain relief clamp as shown in the section "Connecting the cables".

5.6 Connecting a power supply adapter

Input voltage options

The optional power supply adapter is available in two versions:

- Power supply adapter for 12 to 24 VDC direct voltage
  Power Supply PS791-2DC
  article number: 6GK5791-2DC00-0AA0
- Power supply adapter for 100 to 240 VAC alternating voltage
  Power Supply PS791-2AC
  article number: 6GK5791-2AC00-0AA0

Note

Applies only to SCALANCE W786-2

If a SCALANCE W786-2 is operated with six external antennas, the power supply for 12 to 24 VDC cannot be supplied redundantly. In this case, there is no further opening in the housing for a second power cable.



⚠WARNING

Danger from line voltage

Only electrical specialists may open the device and connect the power supply adapter.

Connect or disconnect power supply cables only when the power is turned off.

Start the SCALANCE W786 only when you have screwed down the housing cover again so that there is once again protection against touching live parts.

NOTICE

Exceeding the EMC limit values

SCALANCE W786 with RJ-45 interface with DC power supply adapter or without power supply adapter

When using a SCALANCE W786 with RJ-45 connector without a power supply adapter or with a DC power adapter, no additional measures are necessary for use in a residential environment.

SCALANCE W786 with RJ-45 interface with AC power supply adapter PS791-2AC

When using a SCALANCE W786 with a power supply adapter PS791-2AC (100 to 240 VAC), the requirements for use in an industrial environment are met without any additional measures being necessary.

When used in a residential environment, noise produced by this configuration can be reduced by fitting an EMC ferrite (a snap ferrite) to the power supply cable as close as possible to the power supply adapter.

If you use the power supply adapter PS791-2AC (100 to 240 V AC voltage) in a domestic area (EMC class B), fit an EMC ferrite (a snap ferrite) to the supply cable as close as possible to the power supply adapter. This measure is unnecessary in an industrial environment.

You can order suitable ferrites from the following company:

Würth Elektronik eiSos GmbH & Co. KG
Max-Eyth-Strasse 1-3; 74638 Waldenburg, Germany

Model designation: STAR-TEC with safety lock
cable diameter 6 – 7.5 mm, article number: 74271131
cable diameter 7 – 8.5 mm, article number: 74271132

Applies only to the power supply adapter PS791-2AC (100 to 240 VAC)



WARNING

Danger from line voltage

The strain relief clamp may damage the insulation under unfavorable circumstances. You run the risk of encountering danger from line voltage through the strain relief clamp.

For a line with 100 to 240 VAC use an insulated strain relief clamp only; this ships with the power supply adapter.

How to fit a power supply adapter

The following figure shows how a power supply adapter is fitted:

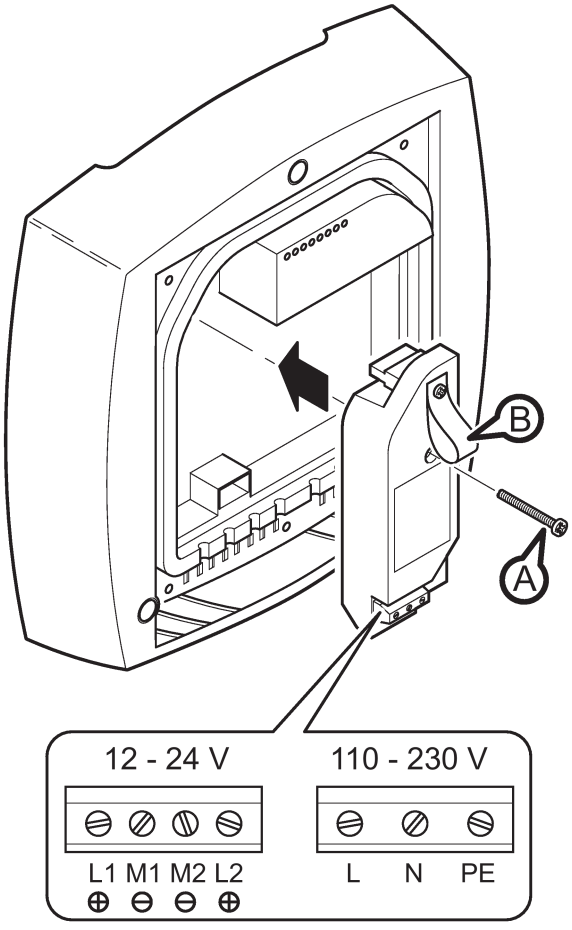

A Securing screw

B Pull-out loop

Figure 5-5 Fitting a power supply adapter

Follow the steps below to fit and connect a power supply adapter:

1. Fit the power supply adapter in the SCALANCE W786 as shown in the figure above.
   - The connector on the rear of the power supply adapter must engage fully in the socket of the housing.
   - The entire rear surface of the power supply adapter must make contact with the inner surface of the SCALANCE W786.
2. Connect the power supply adapter and the SCALANCE W786 using the screw (position A) that ships with the power supply adapter.
3. Connect the cable for the power supply. The assignment of the terminals is shown above.
4. Secure the power supply cable with a strain relief clamp. For more detailed information on this topic, refer to the section "Connecting the cables".

How to remove the power supply adapter

NOTICE
With careless disassembly the connector can break off Use only the dismantling loop (position B) if you take the power supply adapter out of the SCALANCE W786. This prevents the connector skewing on the back of the power supply adapter and breaking off.

Follow the steps below to remove a power supply adapter from a SCALANCE W786:

1. Disconnect the power supply cable from the power supply adapter.
2. Loosen the securing screw of the power supply adapter (position A).
3. Pull the dismantling loop (position B) to remove the plug on the rear of the power supply adapter from the socket in the housing.
4. Remove the power supply adapter.

5.7 Connecting to Industrial Ethernet

With the W786, the Ethernet cable is connected via an RJ-45 jack (copper cable). The following figure shows the position of the Ethernet interface with the housing cover open:

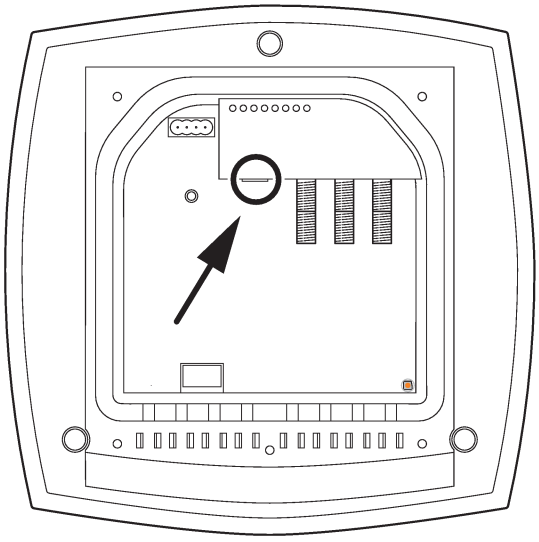

Figure 5-6 Position of the Ethernet interface

Device variant W786-x RJ-45

Follow the steps below to connect an Ethernet cable to a SCALANCE W786 with an RJ-45 jack:

1. Insert the RJ-45 plug of the Ethernet cable in the jack of the SCALANCE W786-x RJ-45.
2. Secure the Ethernet cable with a strain relief clamp.

Note

Keep the dummy plugs

Keep any dummy plugs taken out of the slots for later use.

5.8 SFP/SFP+ transceivers

Transceivers permitted for SCALANCE W786-2 SFP and W786C-2 SFP

SFP/SFP+ transceivers allow the SCALANCE W786-2 SFP and W786C-2 SFP devices to be equipped with interfaces for fiber-optic cables. There are SFPs for different cable materials (multimode, single mode) and cable lengths. The following table lists the models approved for SCALANCE W786-2 SFP and W786C-2 SFP.

Transceiver	Properties	Article number
SFP992-1	1 x 1000 Mbps, LC port optical, multimode glass, up to max. 750 m	6GK5992-1AL00-8AA0
SFP992-1LD	1 x 1000 Mbps, LC port optical, single mode glass, up to max. 10 km	6GK5992-1AM00-8AA0
SFP992-1LH	1 x 1000 Mbps, LC port optical, single mode glass, up to max. 40 km	6GK5992-1AN00-8AA0
SFP992-1LH+	1 x 1000 Mbps, LC port optical, single mode glass, up to max. 70 km	6GK5992-1AP00-8AA0
SFP992-1ELH	1 x 1000 Mbps, LC port optical, single mode glass, up to max. 120 km	6GK5992-1AQ00-8AA0

NOTICE

The maximum operating temperature depends on the transceiver you are using

The following temperature limits apply for the individual transceivers:

SFP992-1: 60 °C
SFP992-1LD: 55 °C
SFP992-1LH: 50 °C
SFP992-1LH+: 50 °C
SFP992-1ELH: 45 °C

If a SCALANCE W786 -2 SFP or W786C-2 SFP is operated at a temperature higher than the specified temperature, the device and transceiver may be damaged. For this reason, do not use the SCALANCE in ambient temperatures above the specified temperature limits.

NOTICE

Use only approved SFP transceivers

If you use SFPs not approved by Siemens AG, Siemens cannot accept any responsibility for the correct functioning of the device according to the specification.

If components are used that have not been Siemens approved, Siemens cannot vouch for their compatibility or for risk-free use of these components.

You will find detailed information on installing and connecting transceivers in the "Operating Instructions SFP/SFP+ Transceiver". This document is on the CD that ships with the SCALANCE W786 or W786C.

NOTICE
Insert and remove transceivers only when the power is off SFP/SFP+ transceivers may only be inserted in or removed from an SFP slot when the power supply to the device has been turned off.

Position of the SFP slots

The SFP slots are located below the housing cover to the left of the antenna sockets.

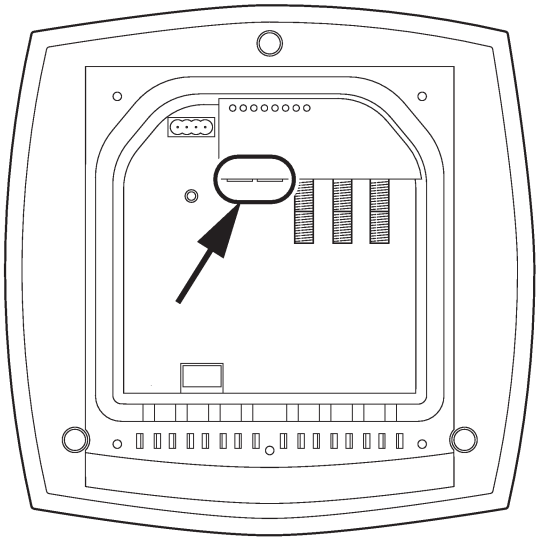

Figure 5-7 Position of the SFP slots with the housing cover removed

5.9 Connecting external antennas

How to connect external antennas

Note

- If both interfaces of access points with two IWLAN interfaces are operated in the same frequency range,
  - the distance between the antennas connected to R1A1, R1A2, R1A3 and those connected to R2A1, R2A2, R2A3 must be at least 1 m.
  - there may be wireless interference on one or both IWLAN interfaces if the transmit power is higher than 15 dB.
- First, connect the cables to the "R2" sockets if you are using more than one antenna for an interface. After connecting the cables to the "R1" sockets, the "R2" sockets are difficult to reach.

The following figure shows the interfaces of a SCALANCE W786-2 with the housing cover removed:

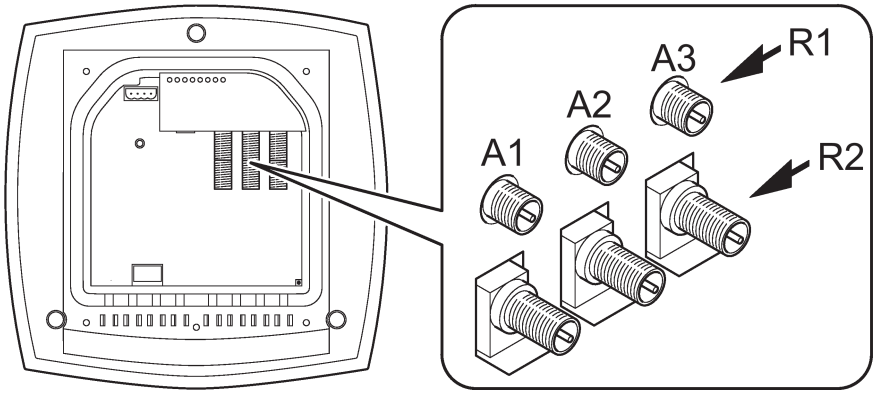

Figure 5-8 R1: Interface for the first wireless card
R2: Interface for the second wireless card. On devices with only one IWLAN interface (W786-1), this interface does not exist.

For each WLAN port, there are three R-SMA sockets on a SCALANCE W786 to connect external antennas. The figure above shows how the R-SMA sockets are assigned to the WLAN ports. On device variants with only one WLAN interface (W786-1), there is only one row of sockets labeled "R1".

Perform the following steps to connect a cable for an external antenna to a SCALANCE W786:

1. Insert the connector on the antenna cable into the R-SMA socket and tighten the sleeve nut of the plug on the socket (key size SW8), tightening torque 1 Nm. First connect the cable for the "R2" interface if you want to use both interfaces. Once the cable for interface "R1" is connected, it is difficult to reach socket "R2".

NOTICE
R-SMA antenna connector When securing antennas to the device, only the screw cap of the antenna can be rotated. Rotating the entire antenna could damage the R-SMA connector of the device.

2. Screw a terminating resistor to the unused socket if you use only one antenna on a port.
3. Secure the antenna cable(s) with a strain relief clamp. For more detailed information on this topic, refer to the section "Connecting the cables".

Note

Terminating resistor

Each WLAN interface has three antenna connectors. Connectors that are not used must have a terminating resistor fitted, see Accessories (Page 16).

The antennas R1A1 and R2A1 must be always be connected as soon as the associated WLAN Interface is turned on. if no antenna is connected, the relevant interface must also be disabled for RX and TX. Otherwise, there may be transmission disruptions.

You will find information on the configuration of the antennas in the following documents:

- SCALANCE W786
  SCALANCE W700 configuration manual, section "Configuring antennas"
- SCALANCE W786C
  SCALANCE WLC711 User Guide, section "Configuring wireless AP radio properties"

Technical data

6

6.1 Technical specifications (SCALANCE W786C-2)

The following technical specifications apply to the following devices:

- SCALANCE W786C-2 RJ45
- SCALANCE W786C-2IA RJ45
- SCALANCE W786C-2 SFP

Note

You will find detailed information on the transmit power and receiver sensitivity in the document "Leistungsdaten 802.11abgn PCIe Minicard / Characteristics 802.11abgn PCIe Minicard" (REF_W700-RadioInterface.pdf).

Technical specifications		
Data transfer		
Ethernet transfer rate		10 / 100 / 1000 Mbps
Wireless transmission rate		1 ... 450 Mbps
Wireless standards supported		IEEE 802.11a IEEE 802.11b IEEE 802.11g IEEE 802.11h IEEE 802.11n
Power supply standards supported	Type	IEEE 802.3at type 1 (802.3af) IEEE 802.3at type 2 (Power over Ethernet)
	Class	Class 4
Attachment to Industrial Ethernet		
RJ-45 variants	Quantity	1
	Design	RJ-45 jack
	Properties	Half duplex/full duplex, autocrossover, autonegotiation, autosensing, PoE, floating
SFP variants	Quantity	2
	Design	Pluggable transceiver slots
	Properties	Half duplex/full duplex, autocrossover, autonegotiation, autosensing, PoE, floating

Technical specifications		
Permitted cable lengths (Ethernet)	**(Alternative combinations per length range)**	
	IE TP torsion cable	0 ... 55 m 0 ... 45 m + 10 m TP cord
	IE FC TP marine cable IE FC TP trailing cable IE FC TP flexible cable IE FC TP FRNC cable IE FC TP festoon cable IE FC TP food cable	0 ... 85 m 0 ... 75 m + 10 m TP cord
	IE FC TP standard cable	0 ... 100 m 0 ... 90 m + 10 m TP cord
Wireless interface		
IWLAN interface	Quantity	2
Antenna connector	Quantity	6
• RJ-45 variants	Design	R-SMA female
• SFP variants	Impedance	50 Ω nominal
Internal antenna	Quantity	2
• IA RJ-45 variants		
Frequency range		2412 ... 2480 MHz 4920 ... 5875 MHz
Electrical data		
Direct 24 VDC supply	Supply voltage from terminal block/socket	24 VDC Safety Extra Low Voltage (SELV)
	Permitted range	19.2 to 28.8 VDC
	Design	Terminal block, 4 terminals
	Properties	Not electrically isolated
Supply voltage from PoE	Supply voltage from terminal block/socket	48 VDC
	Permitted range	36 to 57 VDC
	Design	Via RJ-45 jack
	Properties	Electrically isolating Corresponding to IEEE802.3at Insulation resistance > 2 MOhms
Power supply via optional power supply adapter		12 to 24 VDC (9.6 to 28.8 VDC) 100 to 240 VAC
Fusing		2.5 A / 24 VDC 1 A / 48 VDC PoE
Current consumption	At 12 ... 24 VDC / max.	1400 to 700 mA
	At 240 VAC / max	264 to 144 mA
Effective power loss	At 12 ... 24 VDC / typical	15 W

Technical specifications		
Permitted ambient conditions		
Ambient temperature	Operation with 100 ... 240 VAC You should also note the temperature ranges specified in the approvals.	-40 °C to +60 °C
Maximum ambient temperature during operation	With SFP variants depends on plug-in transceiver:	
	SFP992-1	+60 °C
	SFP992-1LD	+55 °C
	SFP992-1LH	+50 °C
	SFP992-1LH+	+50 °C
	SFP992-1ELH	+45 °C
Ambient temperature	During storage	-40 °C to +70 °C
	During transportation	-40 °C to +70 °C
Relative humidity	During operation	≤ 95% at 25 °C, no condensation
Operating altitude	During operation	≤ 2,000 m above sea level at max. 60 °C ambient temperature
Contaminant concentration		According to IEC 60721
Degree of protection		
	IP code	IP65
Dimensions and weight		
Dimensions	W x H x D	251 x 251 x 72 mm
Weight	Without power supply adapter	2.24 kg
	With power supply adapter 12 - 24 VDC	2.4 kg
	With power supply adapter 100 ... 240 VAC	2.4 kg
Installation options		
Direct	Wall mounting	
With additional holding plate	Mast mounting • Minimum mast diameter: 44 mm • Maximum mast diameter 178 mm Mounting on a DIN rail Mounting on an S7-300 standard rail	
Mean time between failure (MTBF)		
	At 40 °C ambient temperature	36 years

6.2 Radiation patterns diagrams of SCALANCE W786 internal antennas

Horizontal radiation pattern 2500 MHz

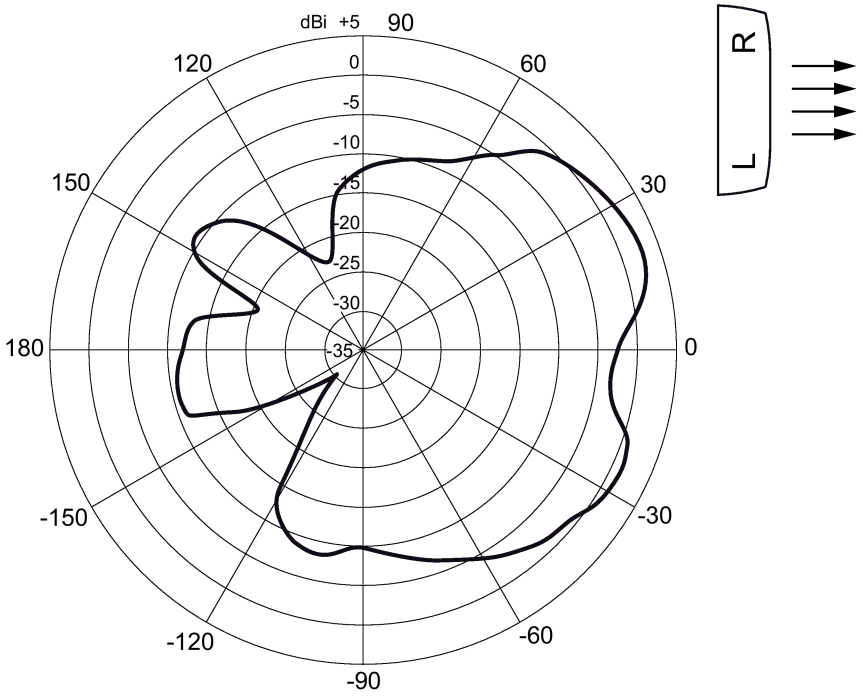

Vertical radiation pattern 2500 MHz

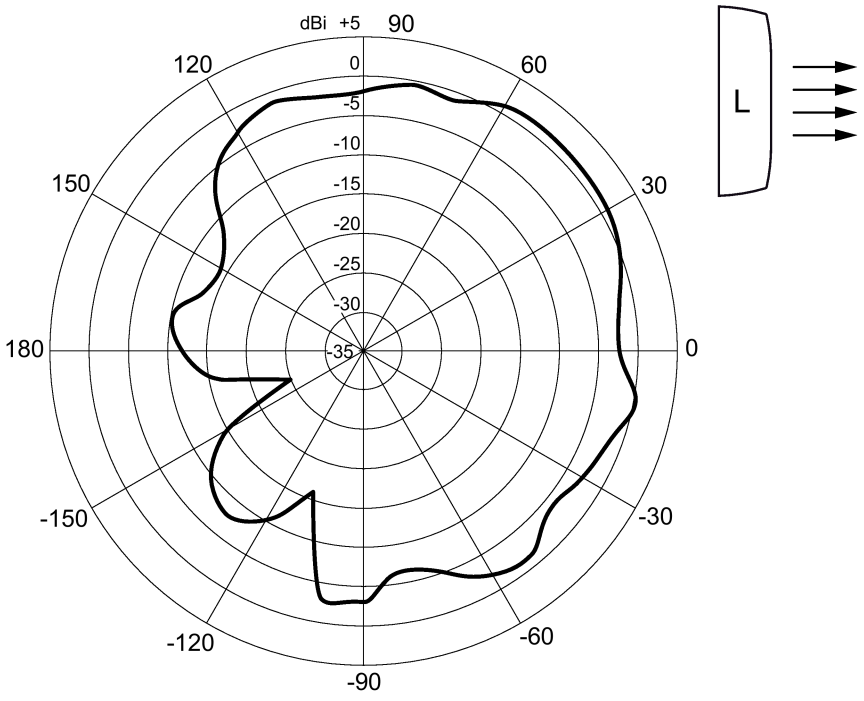

Horizontal radiation pattern 5800 MHz

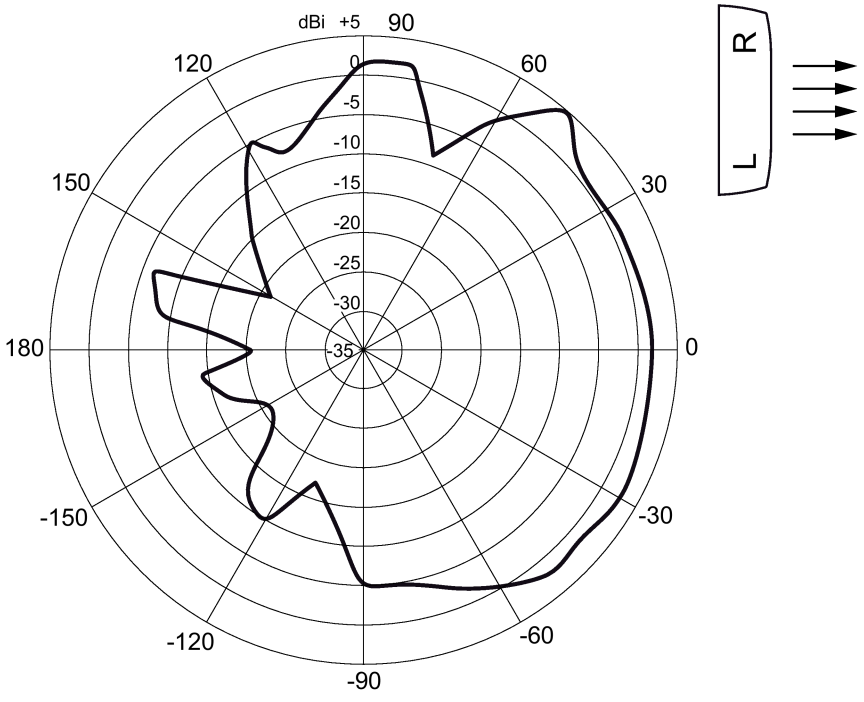

Vertical radiation pattern 5800 MHz

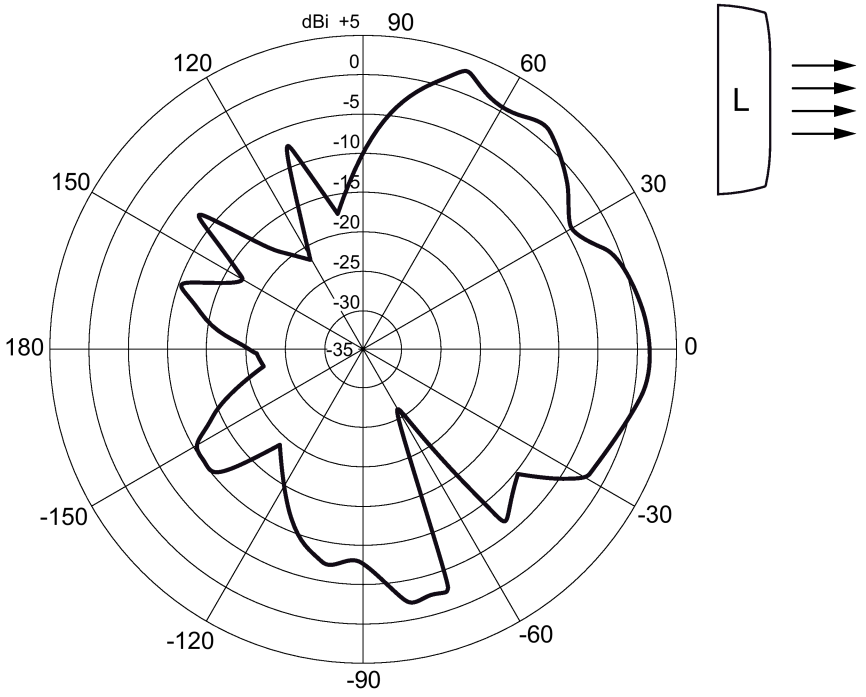

Dimension drawing SCALANCE W786

Front view and view from above of the SCALANCE W786

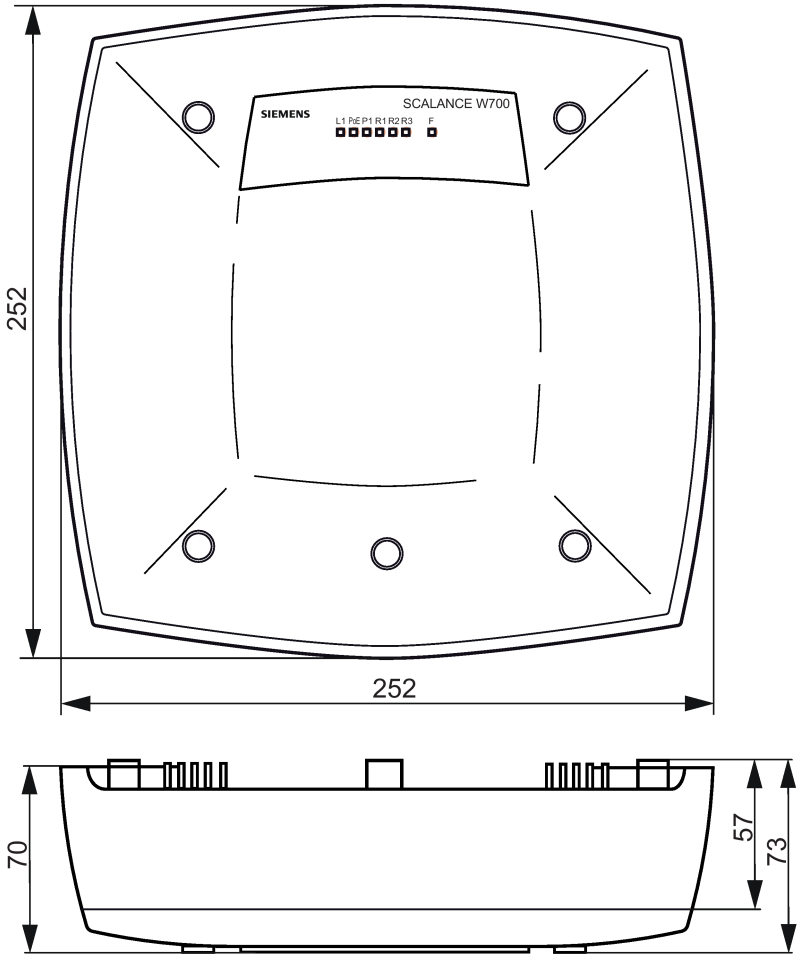

Approvals

8

You will find the approvals of the products in the reference work "Approvals SCALANCE W700 802.11n" on the Internet pages of Siemens Industry Online Support:

- Using the search function at Siemens Industry Online Support (https://support.industry.siemens.com/cs/ww/en/)
- Using the search function at Industrial communication (https://support.industry.siemens.com/cs/ww/en/ps/15859/cert)

Enter the entry ID of the relevant manual as the search item.

You will find the documentation for the SIMATIC NET products relevant here on the data storage medium that ships with some products:

- Product CD / product DVD
- SIMATIC NET Manual Collection
- SIMATIC NET IWLAN CD

Index

A

Antenna cables, 17
Antennas, 17
Article numbers, 5

C

Cables
    Permitted lengths, 61
Connectors, 15

D

Dimension drawings, 67
Documentation on the CD, 5

E

Ethernet, 56

G

Grounding, 40

I

Interfaces, 61

L

LED display, 21
Lightning protection, 40
Loading firmware, 22

P

Power supply, 49
Protective caps, 15

R

Reset button, 22
Resetting the device, 22
Restart of the device, 22

S

Safety extra low voltage, 40, 41
Scope of delivery, 15
SELV, 40

T

Technical specifications, 61, 61
Type designations, 14