SANYO

INSTRUCTION MANUAL

MCO-17AIC

CO_2 Incubator

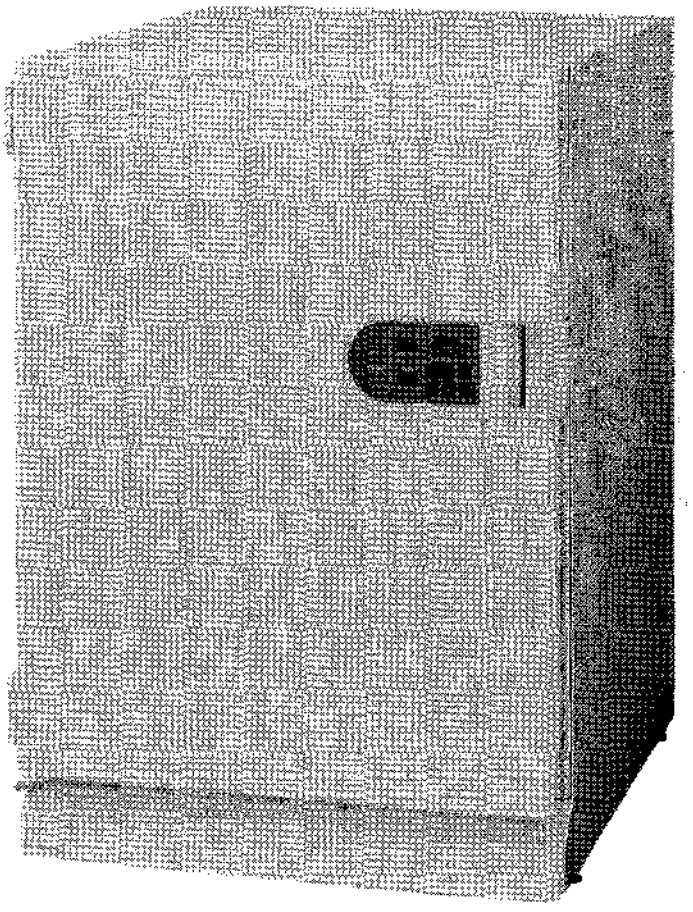

Note:

1. **No part of this manual may be reproduced in any form without the expressed written permission of SANYO.**
2. **The contents of this manual are subject to change without notice.**
3. **Please contact SANYO if any point in this manual is unclear or if there are any inaccuracies.**

SANYO Electric Biomedical Co., Ltd. All rights reserved. Printed in Japan.

CONTENTS

PRECAUTIONS FOR SAFE OPERATION	P. 2
CAUTIONS FOR USAGE	P. 6
INCUBATOR COMPONENTS	P. 7
INSTALLATION	P. 10
BEFORE COMMENCING OPERATION	P. 12
OPERATING INSTRUCTIONS	P. 13
ALARM & SAFETY FUNCTIONS	P. 15
ROUTINE MAINTENANCE	P. 17
CALIBRATION	P. 19
SPECIAL FUNCTIONS	P. 20
TROUBLE SHOOTING	P. 21
ENVIRONMENTAL CONDITIONS	P. 22
DISPOSAL OF UNIT	P. 22
SPECIFICATIONS	P. 23
PERFORMANCE	P. 24
SAFETY CHECK SHEET	P. 25

PRECAUTIONS FOR SAFE OPERATION

It is imperative that the user complies with this manual as it contains important safety advice.

Items and procedures are described so that you can use this unit correctly and safely. If the precautions advised are followed, this will prevent possible injury to the user and any other person.

Precautions are illustrated in the following way:

⚠WARNING

Failure to observe WARNING signs could result in a hazard to personnel possibly resulting in serious injury or death.

⚠CAUTION

Failure to observe CAUTION signs could result in injury to personnel and damage to the unit and associated property.

Symbol shows;

△ this symbol means caution.

⃠ this symbol means an action is prohibited.

● this symbol means an instruction must be followed.

Be sure to keep this manual in a place accessible to users of this unit.

PRECAUTIONS FOR SAFE OPERATION

⚠WARNING

Do not use the unit outdoors. Current leakage or electric shock may result if the unit is exposed to rain water.

Only qualified engineers or service personnel should install the unit. The installation by unqualified personnel may cause electric shock or fire.

Install the unit on a sturdy floor. If the floor is not strong enough or the installation site is not adequate, this may result in injury from the unit falling or tipping over.

Never install the unit in a humid place or a place where it is likely to be splashed by water. Deterioration of the insulation may result which could cause current leakage or electric shock.

Never install the unit in a flammable or volatile location. This may cause explosion or fire.

Never install the unit where acid or corrosive gases are present as current leakage or electric shock may result due to corrosion.

Use a dedicated power source as indicated on the rating label attached to the unit.

Remove dust from the power supply plug before inserting in a power source. A dusty plug or improper insertion may pose a hazard.

Use a power supply outlet with ground (earth) to prevent electric shock. If the power supply outlet is not grounded, it will be necessary to install a ground by qualified engineers.

Never ground the unit through a gas pipe, water main, telephone line or lightning rod. Such grounding may cause electric shock in the case of an incomplete circuit.

Check the gas type and ensure that it is fit for the purpose. Make sure that all pipes are connected correctly and are not liable to become disconnected. Ensure that the gas pressure is set at the specified value. Improper connection of the gas pipe or use of incorrect gas pressure may result in leakage of CO_2 gas. Elevated level of CO_2 gas can be hazardous to health and may lead to asphyxiation and risk of death.

Do not insert metal objects such as a pin or a wire into any vent, gap or any outlet for inner air circulation. This may cause electric shock or injury by accidental contact with moving parts.

Never store volatile or flammable substances in this unit. This may cause explosion or fire.

PRECAUTIONS FOR SAFE OPERATION

⚠WARNING

As with any equipment that uses CO_2 gas, there is a likelihood of oxygen depletion in the vicinity of the equipment. It is important that you assess the work site to ensure there is suitable and sufficient ventilation. If restricted ventilation is suspected, then other methods of ensuring a safe environment must be considered. These may include atmosphere monitoring and warning devices.

Ventilate a room air occasionally when using CO_2 gas for control. The gas density will increase in an enclosed small room and high level of gas density is harmful for human. In addition, avoid inhaling the chamber air directly when opening the door if CO_2 gas is used.
Si l'appareil est utilisé dans un evdroit restreint, le niveau de la densité CO_2 de l'air peut s'élever et peut être nocif aux humains. Évitez d'aspirer l'air provenant de l'intérieur de l'appareil quand vous ouverz la porte.

Use this unit in safe area when treating the poison, harmful or radiate articles. Improper use may cause bad effect on your health or environment.

Disconnect the power supply to the unit prior to any repair or maintenance of the unit in order to prevent electric shock or injury.

Ensure you do not inhale or consume medication or aerosols from around the unit at the time of maintenance. These may be harmful to your health.

Never splash water directly onto the unit as this may cause electric shock or short circuit.

Never disassemble, repair, or modify the unit yourself. Any such work carried out by an unauthorized person may result in fire or injury due to a malfunction.

Disconnect the power supply plug if there is something wrong with the unit. Continued abnormal operation may cause electric shock or fire.

If the unit is to be stored unused in an unsupervised area for an extended period, **ensure that children do not have access and that doors cannot be closed completely.**

The disposal of the unit should be accomplished by appropriate personnel. Remove doors to prevent accidents such as suffocation.

Prepare a safety check sheet when you request any repair or maintenance for the safety of service personnel.

PRECAUTIONS FOR SAFE OPERATION

⚠CAUTION

Select a level and sturdy floor for installation. This precaution will prevent the unit from tipping. Improper installation may result in water spillage or injury from the unit tipping over.

Connect the unit to a power source as indicated on the rating label attached to the unit. Use of any other voltage or frequency other than that on the rating label may cause fire or electric shock.

Fix the shelves securely. Incomplete installation may cause injury or damage.

When removing the plug from the power supply outlet, grip the power supply plug, not the cord. Pulling the cord may result in electric shock or fire by short circuit.

Never damage or break the power supply plug or cord. Do not use the supply plug if its cord is loose. This may cause fire or electric shock.

Do not touch any electrical parts such as the power supply plug or any switches with a wet hand. This may cause electric shock.

Do not put a container with water or heavy articles on the unit. It may cause injury if the articles fall. Current leakage or electric shock may be resulted form the deterioration of insulation by spilled water.

Do not climb onto the unit or do not put articles on the unit. This may cause injury by tipping or damage to the unit.

Never lean or press on the glass. Intentional force may cause injury if the glass breaks.

Do not lean on the door. This may cause injury, current leakage, or electric shock if the unit tips over or door drops out.

Disconnect the power supply plug before moving the unit. Take care not to damage the power cord. A damaged cord may cause electric shock or fire.

Empty the humidifying pan completely before moving the unit. Spilled or splashed water may cause current leakage or electric shock.

Be careful not to tip over the unit during movement to prevent damage or injury.

Disconnect the power plug when the unit is not used for long periods.

Do not put the packing plastic bag within reach of children as suffocation may result

CAUTIONS FOR USAGE

1. 5°C higher than the ambient temperature

The chamber temperature must be at least 5°C higher than the ambient temperature. For example, the chamber temperature is set to 37°C, the ambient temperature must be less than 32°C. Keep the ambient temperature in adequate range.

2. Install in proper environment

With an automatic calibrating function, the CO_2 sensor is calibrated according to an ambient air gas. Place the unit in proper environment.

3. Do not subject to direct air flow

Do not allow the air for air conditioning to hit the unit or door directly. Direct hit may cause condensation or contamination.

4. Allow adequate space between the cultures

When storing cultures in the chamber, keep the Petri dishes or bottles containing the cultures sufficiently apart from each other to allow adequate air circulation. Inadequate space may result in uneven temperature distribution and CO_2 concentration in the chamber.

5. Connect a pressure regulator to the gas cylinder

A pressure regulator must be installed when connecting the CO_2 gas cylinder to this unit. This work should be done by a qualified personnel. A regulator rated at 25Mpa on the primary side and 0.3Mpa on the secondary side is recommended. Also, use CO_2 gas having a high level of purity.

6. Always keep the chamber clean

The Petri dishes or bottles for culturing may cause contamination in the chamber. Clean the containers before storing them in the chamber.

7. Keep the inside panels dry

To protect the inside of the unit from contamination, the inside panels should always be kept dry. If water is spilled from a humidifying pan or if the door is kept open for a long period, condensation will form on the panels, allowing germs to breed. In such a case, wipe away the water with a dry sterile gauze. Particularly, if the medium is spilled, wipe it up immediately and sterilize the area.

8. Fill the humidifying pan with sterile distilled water

Always use sterile distilled water to fill the pan. Check the water level every day and replenish the water promptly if the level is low. Note that when low temperature water is poured, the chamber temperature drops significantly. Set the pan properly so that the shorter edges are positioned in the front and back. Improper setting may cause faulty humidifying or condensation. Also, clean the pan once a month.

9. Always shut the inner door

Shut the inner door completely, and then shut the door. If the inner door is not closed completely, even if the door is closed, the unit will fail to exhibit its maximum performance. And close the doors gently. Rude closing may cause spillage of medium, incomplete closing, or damage of gasket.

INCUBATOR COMPONENTS

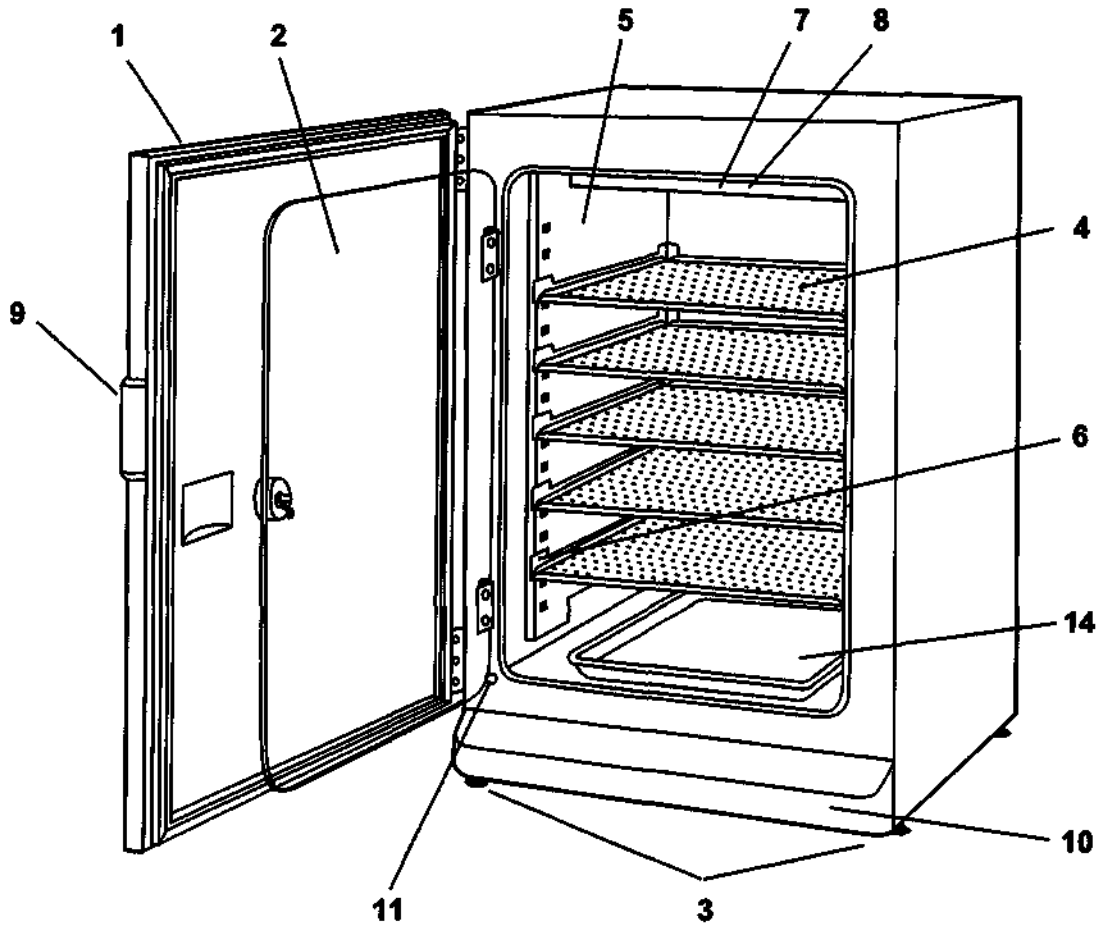

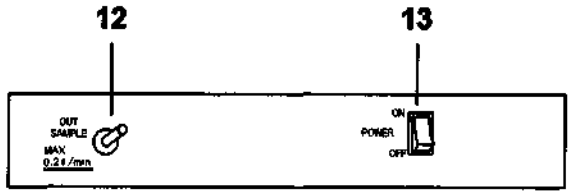

Inside of front cover

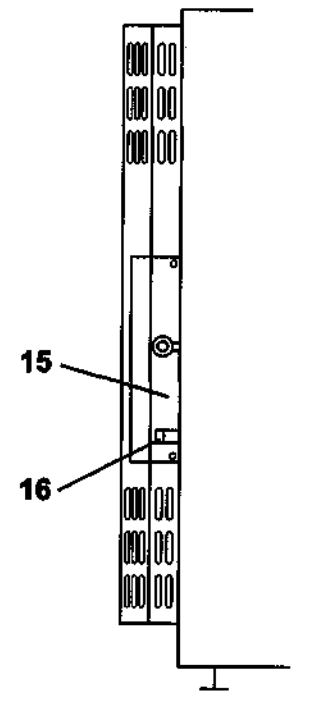

Back side

INCUBATOR COMPONENTS

1. Outer door: Sticks to frame with magnetic packing. Door heater is installed in the door panel. The heater eliminates moisture on the inner door.

2. Inner door: Made of tempered glass. The inner door is removable for cleaning.

3. Leveling feet: Used for leveling the unit. This is a screw type and when it is turned to clockwise, the leg becomes shorter.

4. Tray: Made of copper alloy resistant to contamination. Shelves can be easily removed from the unit to be cleaned or disinfected.

5. Side panel: Right and left side panels are removal for disinfection.

6. Tray support: 5 supports can be attached to each side (right and left). They can be removed after removing trays.

7. Top panel: Located on the ceiling of the chamber. This covers a circulating fan. The panel is removal for cleaning and disinfection.

8. Fan (inside the top panel): For circulating the chamber air to distribute the gas equally. The fan is removal for cleaning and disinfection.

9. Control panel (on the door): See page 13 for the operation.

10. Front cover: Sample air outlet and power switch are located inside the cover.

11. Door switch: When the door is opened, this switch stop the CO_2 solenoid valve and the fan.

12. Sample air outlet (inside the front cover): For taking out the chamber air for sampling. This also functions as an internal gas outlet, so do not cap it.

13. Power switch (inside the front cover): Main ON-OFF switch for all power.

14. Humidifying pan: Use the sterile distilled water to fill the pan. The humidifying heater is provided at the bottom of the chamber. Install the pan properly to keep appropriate performance. See item 8 on page 6.

15. Remote alarm terminal (on the back side): This is used to notice an alarm condition of the unit to remote location. Refer to page 16 "Remote alarm terminal".

16. Gas pipe connector (on the back side): For connecting CO_2 gas pipe.

INCUBATOR COMPONENTS

Control panel and keypad

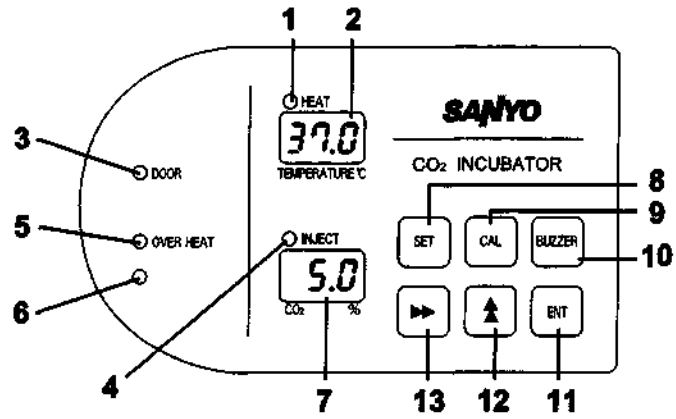

1. Heater lamp (HEAT): This lamp lights when the heater is energized.

2. Digital temperature indicator (TEMPERATURE °C): Normally, this indicator shows the chamber temperature. In the setting mode, it shows the set value of the chamber temperature. If the self diagnostic function detects any abnormality, an error code will be displayed.

3. Door lamp (DOOR): This lamp lights when the door is open.

4. CO_2 inject lamp (INJECT): This lamp lights when CO_2 gas is being supplied.

5. Over heat lamp (OVER HEAT): This lamp lights when the chamber temperature reaches the upper limit set value.

6. Upper limit regulator: This regulator is used to set the upper limit temperature.

7. Digital CO_2 density indicator (CO_2 %): Normally, this indicator shows the CO_2 concentration in the chamber. In the setting mode, it indicates the set value of the CO_2 concentration.

8. Set key (SET): By pressing this key, the unit enters the setting mode, and the digits that can be set flash.

9. Calibration key (CAL): By pressing this key for about 5 seconds, the unit enters the calibration mode. Refer to page 19 "Calibration" for details.

10. Alarm buzzer stop key (BUZZER): Press this key to silence the buzzer when the alarm operates and the buzzer sounds. Press it once again to reactivate the buzzer.

11. Enter key (ENT): Pressing this key memorizes the set value in the controller.

12. Numerical value shift key (▲): Pressing this key in the setting mode causes the numerical value to shift. In key lock mode, pressing this key makes key lock ON or OFF.

13. Digit shift key (▶▶): Pressing this key in the setting mode causes the changeable digit to shift. Pressing this key more than 5 seconds enters to key lock mode. See page 14.

INSTALLATION

Installation site

To operate this unit properly and to obtain maximum performance, install the unit in a location with the following conditions:

Note: The ambient temperature must be at least 5°C lower than the set temperature.

1. **A location not subjected to direct sunlight or direct air flow from an air conditioner**

2. **A location with clean air and adequate ventilation** (Small and sealed room is not recommended.)

⚠ WARNING

If the unit is used in a small confined room, the CO_2 density level in the air could rise and may be harmful to humans.

3. **A location away from heat generating sources**

4. **A location with a sturdy and level floor**

⚠ WARNING

Install the unit on a sturdy floor. If the floor is not strong enough or the installation site is not adequate, this may result in injury from the unit falling or tipping over.

Select a level and sturdy floor for installation. This precaution will prevent the unit from tipping. Improper installation may result in water spillage or injury from the unit tipping over.

5. **A location without flammable or corrosive gas**

⚠ WARNING

Never install the unit in a flammable or volatile location. This may cause explosion or fire.

Never install the unit where acid or corrosive gases are present as current leakage or electric shock may result due to corrosion.

6. **A location not prone to high humidity**

⚠ WARNING

Do not use the unit outdoors. Current leakage or electric shock may result if the unit is exposed to rain water.

Never install the unit in a humid place or a place where it is likely to be splashed by water. Deterioration of the insulation may result which could cause current leakage or electric shock.

INSTALLATION

Prevent contamination

To prevent contamination of the chamber, select an appropriate location for installation as well as the complete disinfection of the chamber components.

1. Avoid hot and humid location

Avoid location with high temperature and/or humidity as the presence of bacteria in the air is greater than in normal environment.

2. Avoid drafty location and location with many passers-by

Avoid locations near doors, air conditioners, fans, etc., where slight breezes can facilitate the entry of bacteria into the chamber.

3. Installation in a sterile room

To get the cultivation more efficiently, install the unit in a sterile room.

4. Use clean containers

The contamination is mainly caused by the containers such as Petri dishes or bottles stored in the chamber. Always keep the containers clean.

Installation

1. Remove the packaging materials and tapes

Remove all transportation packaging materials and tapes. Open the doors and ventilate the unit. If the outside panels are dirty, clean them with a neutral detergent and wipe it up with a wet cloth.

2. Adjust the leveling feet

Extend the leveling legs by rotating them counterclockwise to contact them to the floor. Ensure the unit is level.

3. Fix the unit

Two fixtures are attached to the rear of the frame. Fix the frame to the wall with these hooks and rope or chain.

4. Ground (earth)

⚠WARNING

Use a power supply outlet with ground (earth) to prevent electric shock. If the power supply outlet is not grounded, it is necessary to install a ground by qualified engineers.

Never ground the unit through a gas pipe, water main, telephone line or lightning rod. Such grounding may cause electric shock in the case of an incomplete circuit.

BEFORE COMMENCING OPERATION

Connection of CO_2 gas cylinder

⚠WARNING

Check the gas type and ensure that it is fit for the purpose. Make sure that all pipes are connected correctly and are not liable to become disconnected. Ensure that the gas pressure is set at the specified value. Improper connection of the gas pipe or use of incorrect gas pressure may result in leakage of CO_2 gas. Elevated level of CO_2 gas can be hazardous to health and may lead to asphyxiation and risk of death.

Use a liquefied CO_2 gas cylinder, not a siphon (dip tube) type. The CO_2 gas should be 99.5% or more pure.

Install a pressure regulator on the cylinder. Use a regulator rated at 25Mpa on the primary side and 0.2Mpa on the secondary side. Use the following procedure to attach the incubator to the cylinder:

1. Using the gas supply pipe provided, connect the pressure regulator to the CO_2 inlet located at the rear left hand side of the CO_2 incubator.

2. Set the CO_2 pressure on the secondary side to 0.03Mpa. Excessive pressure may cause disconnection of internal pipes inside the CO_2 incubator which will result in leakage of CO_2 gas into the atmosphere. **Elevated level of CO_2 gas can be hazardous to health and may lead to asphyxiation and risk of death.**

3. Check that no gas is leaking at any point where the pipe connects with the CO_2 regulator or the CO_2 incubator.

Note:

The incubator, including the gas supply pipes and services must be examined at frequent intervals to ensure they are sage. Ensure that items such as pipes are replaced if there is any sign of deterioration.

Sterilizing of chamber and attachments

Before first start-up of the unit, the chamber and internal attachments should be cleaned and sterilized as follows.

1. Take out all trays and a humidifying pan from the chamber.

2. Remove top panel, side panels (right and left side), tray supports, and a fan as shown in the figures on page 18.

3. Clean the all attachments with neutral detergent and then wash out the detergent with distilled water.

4. Wipe the attachments with a gauze containing alcohol for sterilization and then wipe off with a dry gauze.

5. Wipe the inside wall of the with a gauze containing alcohol for sterilization and then wipe off with a dry gauze.

6. Replace all attachments in the chamber.

7. Fill the humidifying pan with the sterile distilled water.

Note:

Do not clean the inside of the unit with a solution of disodium chlorate or other halogen-based solution because this may cause rust.

OPERATING INSTRUCTIONS

Set of chamber temperature and CO_2 density

Table below shows the basic procedure for setting the chamber temperature and CO_2 density. The upper limit alarm temperature setting is also shown in the table. Perform key operations in the sequence indicated in the table. The example in the table is based on the assumption that the desired temperature is 37°C and CO_2 density is 5%.

Note: The unit is set at the factory so that the chamber temperature is 37°C and CO_2 control is 0%.

Allow at least 3 hours until the next setting after setting of desired chamber temperature and setting CO_2 density to 0%, at the time of first start-up or start-up after no use for long term.

Basic operation sequence (Example: Chamber temperature; 37°C, CO_2 density; 5%)

	Description of operation	Key operated	Indication after operation
1	Turn the power switch ON.	----	The current chamber temperature is displayed in temperature indicator.
2	Press SET key.	SET	The left digit is flashed. 
3	By pressing ▶▶ key and ▲ key, set the figure to 37.0.	▶▶	When pressed, the changeable digit is shifted.
		▲	When pressed, the figure of settable digit increases.
4	Press ENT key.	ENT	Set temperature is memorized.  Left digit in CO_2 density indicator is flashed. 
5	By pressing ▶▶ key and ▲ key, set the figure to 05.0.	▶▶	When pressed, the changeable digit is shifted.
		▲	When pressed, the figure of settable digit increases.
6	Press ENT key.	ENT	Set CO_2 density is memorized. 
7	Adjust upper alarm temperature set knob so that the alarm temp. is 1°C higher than chamber temp.		In CO_2 density indicator, H1 is displayed.  In temperature indicator, 38.0 is displayed. 
8	Press ENT key.	ENT	This is the end of set mode and the indicators display current temperature and CO_2 density.

Note:

In each set mode, the indicator returns to the current temperature and CO_2 density display mode automatically when 90 seconds has passed without any key operation.

In each set mode, if the change setting is not necessary, pressing SET key skips to next set mode.

When the CO_2 density is set to 00.0, the control is OFF with regardless of chamber density.

The upper limit alarm temperature set value will change when the set knob is turned even if the unit is not in set mode, because the alarm circuit is an independent circuit.

OPERATING INSTRUCTIONS

Key lock function

This unit is provided with the key lock function. When the key lock is ON, change of temperature or CO_2 density setting through the key pad is not available.

Note: The key lock is set in OFF at the factory.

Display	Mode	Function
LO	Key lock is OFF	Enable to change of temperature setting
L1	Key lock is ON	Disable to change of temperature setting

Procedure for key lock setting (change from key lock OFF to key lock ON)

	Description of operation	Key operated	Indication after operation
1		----	The current chamber temperature is displayed.
2	Press ▶▶ key for 5 seconds.	▶▶	LO is displayed in the temperature indicator. LO
3	Press ▲ key and scroll the figure to 1.	▲	When pressed, the figure of settable digit increases. L1
4	Press ENT key.	ENT	The key lock is set to ON. The current chamber temperature is displayed.

ALARMS & SAFETY FUNCTIONS

This unit has the alarms and safety functions shown in table below, and also self diagnostic functions.

Alarms and safety functions

Alarm & Safety	Situation	Indication	Buzzer	Safety operation
Upper limit temperature alarm	If the chamber temperature exceeds the upper limit alarm temperature set value.	Over heat lamp lights. E09 or E12 is displayed on the temperature indicator.	Continuous tone	Heater OFF
Automatic set temperature alarm	If the chamber temperature deviates from the set temperature by ±1°C or more.	All digits on the temperature indicator flash.	Intermittent tone with 15 minutes delay.	-----
Automatic set CO_2 density alarm	If the chamber CO_2 density deviates from the set value by ±1% or more.	All digits on the CO_2 density indicator flash.	Intermittent tone with 15 minutes delay.	-----
Auto-return	When there is no key pressing in each setting mode for 90 seconds.	Normal display mode.	-----	The setting mode is canceled.
Key lock	When the key lock is "ON".	-----	-----	The setting is disabled.
Automatic calibration function	Normally, the zero point of the CO_2 sensor is calibrated every 4 hours (or very 10 minutes for the first hour after switch ON), using the atmosphere as the gas to be calibrated.	The decimal point (period) on the CO_2 density indicator flashes.	-----	-----
CO_2 gas cylinder empty	If the CO_2 density does not increase when the gas valve is opened.	E01 is displayed alternately with the temperature on the temperature indicator.	Intermittent tone	-----
Temperature sensor abnormality	If the temperature sensor goes open circuit or short circuit.	E05 is displayed alternately with the temperature on the temperature indicator.	Intermittent tone	Heater OFF
CO_2 sensor abnormality	If the output voltage of the CO_2 sensor is abnormal.	E06 is displayed alternately with the temperature on the temperature indicator.	Intermittent tone	The CO_2 valve close.
Sensor box temperature sensor abnormality	If the sensor box temperature sensor goes open or short circuit.	E08 is displayed alternately with the temperature on the temperature indicator.	Intermittent tone	The CO_2 valve close.
Main heater abnormality	If the upper limit alarm temperature alarm operates, or if the main heater is open circuit, or the main heater relay short circuit.	E09 is displayed alternately with the temperature on the temperature indicator.	Intermittent tone	-----
Bottom heater abnormality	If the bottom heater goes open circuit, or the bottom heater relay short circuit.	E10 is displayed alternately with the temperature on the temperature indicator.	Intermittent tone	-----
Sensor box heater abnormality	If the sensor box heater goes open circuit, or the sensor box relay short circuit.	E11 is displayed alternately with the temperature on the temperature indicator.	Intermittent tone	-----
Relay for each sensor abnormality	If the relay of main heater, bottom heater or sensor box heater goes open circuit.	E12 is displayed alternately with the temperature on the temperature indicator.	Intermittent tone	-----
Air pump (sampling for CO_2 or auto-zero) failure	If the air pump (sampling or auto zero) does not operate, or if there is something wrong in the gas piping.	E13 is displayed alternately with the temperature on the temperature indicator.	Intermittent tone	The CO_2 valve close.
Ambient temperature sensor abnormality	If the ambient temperature sensor goes open circuit or short circuit.	E14 is displayed alternately with the temperature on the temperature indicator.	Intermittent tone	-----

Note:

The remote alarm is silenced by pressing the buzzer stop key (BUZZER) as the remote alarm is operated in conjunction with the buzzer. The upper limit temperature alarm cannot be silenced with the BUZZER key.

E01 is cleared automatically when the gas is connected correctly and the buzzer is silenced with the BUZZER key. If one of E05 to E14 is emitted, consult with the shop where you purchased the unit.

ALARMS & SAFETY FUNCTIONS

Terminal for remote alarm and remote recorder

The remote alarm terminal and remote recorder terminals are located in the box found at the rear left side. Remove the screws fixing the panel cover, and make connections to the terminals inside the panel, taking care to connect the wires correctly.

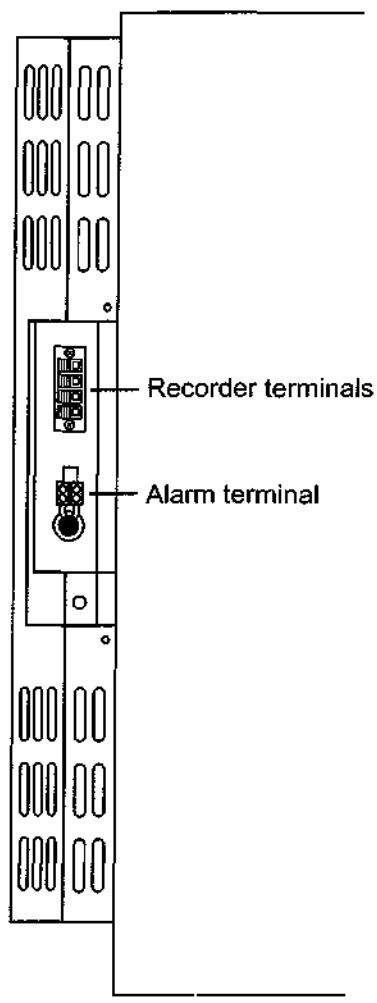

Rear left side

The remote alarm terminal is a contact output.

Normal : OPEN
Abnormal : CLOSE
Contact capacity : DC 30V, 2A, no voltage contact

When the power switch is OFF or the power failure condition, the contact output is OPEN.

The output from the remote recorder terminals are each 0 to 100mV. This means that the output is as follows for each control element:

Terminal No. 1 Common (-)
Terminal No. 2 Temperature (°C) (+)
Terminal No. 3 CO_2 density (%) (+)
Terminal No. 4 Not used

	Range	Output
Temperature	0 to 100°C	1mV/°C
CO_2 density	0 to 20%	5mV/%

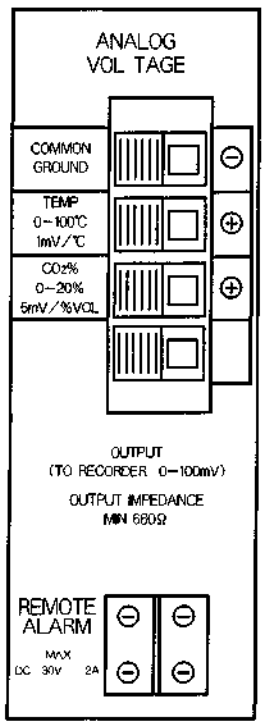

ROUTINE MAINTENANCE

⚠WARNING

Always disconnect the power supply to the unit prior to any repair or maintenance of the unit in order to prevent electric shock or injury.

Ensure you do not inhale or consume medication or aerosols from around the unit at the time of maintenance. These may be harmful to your health.

⚠CAUTION

Always put on the dry gloves to protect the hands at the time of maintenance. No gloves may cause cut of the finger by the edge or corner.

Sterilizing of chamber and attachments

When the chamber of the unit is contaminated, the chamber and internal attachments should be cleaned and sterilized as follows.

1. Take out all trays and a humidifying pan from the chamber.

2. Remove top panel, side panels (right and left side), tray supports, and a fan as shown in the figures on page 18.

3. Clean the all attachments with neutral detergent and then wash out the detergent with distilled water.

4. Wipe the attachments with a gauze containing alcohol for sterilization and then wipe off with a dray gauze.

5. Wipe the inside wall of the with a gauze containing alcohol for sterilization and then wipe off with a dray gauze.

6. Replace all attachments in the chamber.

7. Fill the humidifying pan with the sterile distilled water.

Note:

Do not clean the inside of the unit with a solution of disodium chlorate or other halogen-based solution because this may cause rust.

ROUTINE MAINTENANCE

Removal of attachments

1. Close the tap of the gas cylinder and turn off the power.

2. Open the outer door. Then open the inner door slightly and lift to remove it. See Fig. 1

3. Pull out the humidifying pan and trays. See Fig. 2

4. To remove the right and left panel and the top panel, first remove the screw on the left side and lift and pull the panel to remove it. Then remove the top panel. Finally, remove the right panel as same as left panel. See Fig. 3.

5. Pull the spring in the center of the fun downwards and remove it as shown in Fig. 4.

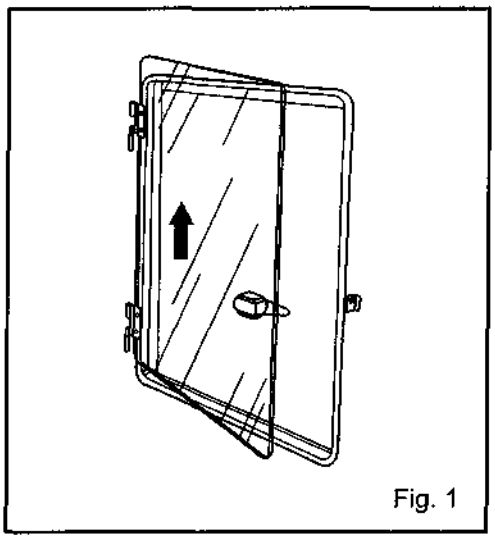

Fig. 1

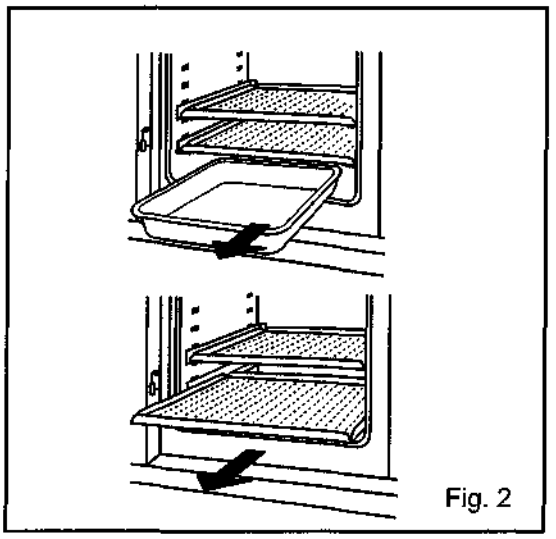

Fig. 2

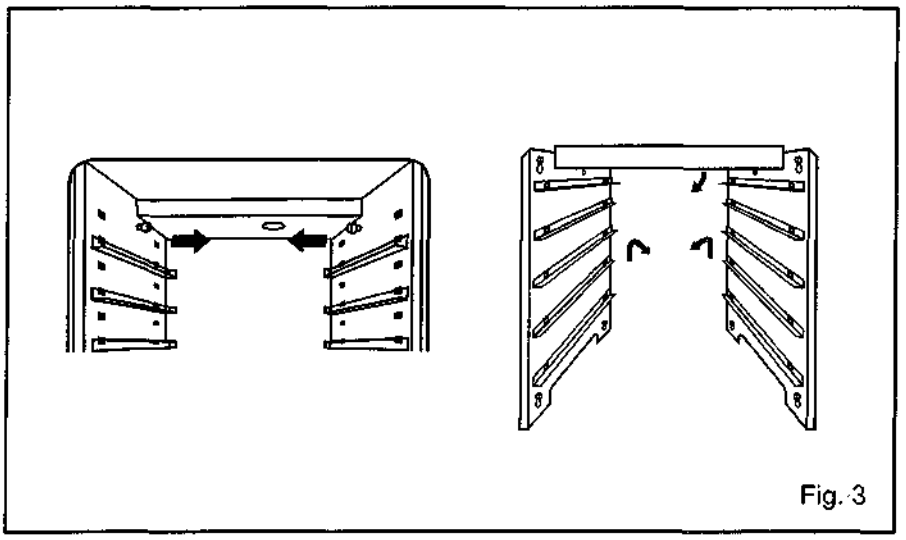

Fig. 3

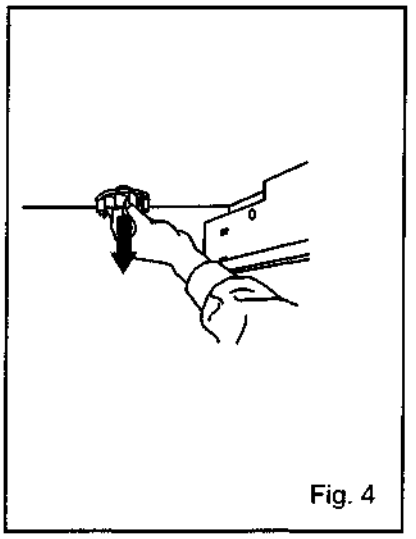

Fig. 4

CALIBRATION

Temperature calibration

1. Press the CAL key for about 5 seconds.
2. The third digit of the temperature indicator flashes, and the CO_2 density indicator goes out.
3. Set the present correct temperature with the ▶▶ key and ▲ key, then press the ENT key.
4. The unit automatically reverts to the display mode.

[Example]
If the displayed chamber temperature is 37.0°C (set value) and the actual temperature is 36.8°C.
1. Press the CAL key for about 5 seconds.
2. The "3" on the temperature indicator flashes, and the CO_2 density indicator goes out.
3. Adjust the set value to the actual value of 36.8°C with the ▶▶ key and ▲ key, then press ENT key.
4. The unit automatically reverts to the display mode.

Note:
It is important to accurately measure the temperature inside the unit when performing temperature calibration. Particularly, the temperature gauge used must have an accuracy of 0.5 Class or better. The temperature must be measured at several points.
The temperature setting must not change by more than ±1.0°C during calibration. If it exceeds this, an error tone is emitted, the input data is ignored, and the unit reverts to the display mode. Consequently, if it is necessary to change the temperature by more than 1.0°C, perform calibration in several stages over a period of time.

CO_2 calibration

Span setting
Span setting should be done under stable condition of temperature, humidity, and CO_2 density.
1. Press the CAL key for about 5 seconds.
2. The third digit on the temperature indicator flashes, and the CO_2 density indicator goes out.
3. Press the CAL key once again.
4. The third digit on the CO_2 density indicator flashes, and the temperature indicator goes out.
5. Set the present correct CO_2 density with the ▶▶ key and ▲ key, then press the ENT key.
6. The unit automatically reverts to the display mode.

Note:
This calibration is available when the setting of CO_2 density is 2% or more.

[Example]
For an internal CO_2 density of 5.0% (setting) and a measured value of 4.5%.
1. Press the CAL key for about 5 seconds.
2. The third digit on the temperature indicator flashes, and the CO_2 density indicator goes out.
3. Press the CAL key once again.
4. The third digit on the CO_2 density indicator flashes, and the temperature indicator goes out.
5. Set the present correct CO_2 density (4.5%) with the ▶▶ key and ▲ key, then press the ENT key.
6. The unit automatically reverts to the display mode.

SPECIAL FUNCTION

This function enables the various functions and parts of the unit to be checked and changes. This function affects its performance, so **do not use this function, except for a special case**. If this is the case, please contact you sales representative.

1. Press the CAL key for about 5 seconds.

2. The third digit on the temperature indicator flashes, and the CO_2 density indicator goes out.

3. Set the third digit to F with the ▲ key.

4. Set the remaining digits to the desired function number with the ▶▶ and ▲ keys.

5. Confirm that there are no errors, then press the ENT key.

As a result of the above operations, the various function data appears on the CO_2 density indicator. If a change is necessary, press the ENT key to store the new data. If no change is necessary, wait for about 90 seconds, and the unit return automatically to the present value display mode.

F00 ROM version number indication.

F01

Used to set the output ratio of the bottom heater with respect to the other heater. This function influences the basic performance. Therefore, contact your sales representative about the details.

Effective only when the value of the first digit of the CO_2 density indicator is between 0 and 9. Each time the numerical value increases by 1, the output ratio will increase.

F02

The unit is designed so that when this indication is displayed, the voltage VRT output to the temperature analog output terminal is measured, a value of twice VRT (mV) (numbers below the decimal point are discarded) set on the CO_2 density indicator, and the ENT key pressed, 0 to 50°C will automatically correspond to 0 to 50 mV. If there is no key input, the unit will automatically revert to the original indication.

F03

Automatic calibration takes place so that when this indication is displayed, the voltage VRC output to the CO2 analog output terminal is measured, VRC (mV) (numbers below the decimal point are discarded) is set on the CO_2 density indicator, and the ENT key pressed, 0 to 20% CO_2 will correspond to 0 to 100 mV.

F05 CO_2 sensor output voltage indication

The A/D converter input voltage (V) of the CO_2 sensor output is displayed on the CO_2 density indicator. When the ENT key is pressed, a forced auto zero operation will take place within one minute. In this mode, the auto return will be ignored, so be sure to press the ENT key at the end of this operation.

F08 Memory switch

First digit: When 0, a normal auto zero takes place. When 1, no auto zero takes place.

Second digit: When 0, a normal indication is obtained. For control 1, the demo mode is activated. The set values are also displayed in the main heater, door gasket heater OFF display mode. All alarms are cancelled.

Third digit: Not used.

F09 CO_2 sensor box temperature indicator

Indicates the temperature of the sensor box temperature regulating sensor.

TROUBLE SHOOTING

If the unit malfunctions, check out the following before calling for service.

The unit does not operate at all

1. The unit is not plugged correctly into a power outlet.
2. The circuit breaker of power source is active.
3. The power failure has occurred.

The key operation is disable

1. The key lock function is set in OFF.

If the alarm function operates

If the alarm function and the buzzer operates, check the cause using the following procedure.
[At the beginning of operation]

1. The chamber temperature is not equal to the set value?
2. The chamber CO_2 density is not equal to the set value?
   a. The secondary pressure of the pressure regulator is not equal to the set value (0.03Mpa).
   b. The tube is not connected securely between the pressure regulator and the unit.

[During operation]
1. The upper limit alarm temperature is not set at least 1°C higher than the set chamber temperature.
2. The set temperature value was changed, or the door was left open for a long period. A low temperature load was placed inside the unit? In this case, if the unit is left as it is, the alarm will eventually clear itself.
3. The gas tube has slipped off?
4. The set value of the gas density was changed.
5. The gas cylinder is empty. Check the primary pressure of the CO_2 cylinder once a week.

If the chamber temperature is not equal to the set temperature

1. The temperature in the vicinity is too high. The ambient temperature must always be at least 5°C less than the set temperature.
2. The outer door was closed while the inner door was left open.

If the gas density does not coincide with the set value

1. The secondary pressure is not set to 0.03Mpa.
2. The gas tube is clogged.

If the chamber humidity does not rise

1. The humidifying pan is not filled with sterile distilled water. (Always use the sterile distilled water.)
2. The humidifying pan is not placed in proper direction. The shorter sides are positioned front and back.

If the CO_2 consumption is too much

1. The door is opened frequently.
2. There is any gas leakage at the connection or pin hole on the tube. It is recommended to replace the tube once a year.
3. The gasket of inner door is not completely sealed.
4. The access port at the upper left corner is opened.

If normal cultivation cannot be done and chamber gas density is suspect

1. The environment around the unit is not normal. The source of the contaminated gas is nearby.
2. The unit installed is in an enclosed space.

If it takes much time to recover the gas density

1. HEPA filter is provided in the gas piping. If it takes much time to recover the gas density even though the gas pressure is normal, it seems that the dust on the HEPA filter prevents the gas flow. Consult the shop or us.

ENVIRONMENTAL CONDITIONS

This equipment is designed to be safe at least under the following conditions (based on the IEC 1010-1):

1. Indoor use;

2. Altitude up to 2000 m;

3. Ambient temperature 5°C to 40°C

4. Maximum relative humidity 80% for temperature up to 31°C decreasing linearly to 50% relative humidity at 40°C;

5. Mains supply voltage fluctuations not to exceed ±10% of the nominal voltage;

6. Other supply voltage fluctuations as stated by the manufacturer;

7. Transient overvoltages according to Installation Categories (Overvoltage Categories) II; For mains supply the minimum and normal category is II;

8. Pollution degree 2 in accordance with IEC 664.

DISPOSAL OF UNIT

⚠WARNING

If the unit is to be stored unused in an unsupervised area for an extended period **ensure that children do not have access and doors cannot be closed completely.**

The disposal of the unit should be accomplished by appropriate personnel. **Always remove doors** to prevent accidents such as suffocation.

SPECIFICATIONS

Name	CO_2 Incubator
Model	MCO-17AIC
External dimensions	W620 x D685 x H900 (mm)
Internal dimensions	W490 x D505x H665 (mm)
Effective capacity	164 L
Exterior	Acrylic finish baked on zinc galvanized steel
Interior	Stainless steel containing copper
Outer door	Acrylic finish baked on zinc galvanized steel
Inner door	Tempered glass
Tray	5 trays made of stainless steel containing copper W450 x D450 x H10 (mm), Maximum load; 10 kg/tray
Access port	Inner diameter; 30 mm, On the back side
Insulation	Rigid polyurethane foamed-in place (CFC-FREE)
Heating system	DHA system (heater jacket + air jacket system)
Heater	389 W
Humidifying system	Natural evaporation with humidifying pan
Temperature controller	PID control
Temperature display	Digital display
CO_2 controller	ON-OFF control system
CO_2 density display	Digital display
Air circulation	Stir up of breeze
Air filter	0.3 μ m, Efficiency; 99.97%
Alarm	Temperature alarm, CO_2 density alarm, Upper limit temperature alarm, Door alarm
Remote alarm contact	Allowable contact capacity: DC 30V, 2A
CO_2 connecting inlet	4 to 6 mm diameter tube
CO_2 pressure	0.03 Mpa (0.3 kg/cm^2)
Accessories	5 trays, 5 sets of tray support, 1 gas tube, 1 humidifying pan
Weight	91 Kg
Optional component	CO_2 pressure regulator (MCO-100L), Stainless tray (MCO-45ST), Stack kit (MCO-17PS)

Note: Design or specifications will be subject to change without notice.

PERFORMANCE

Usable environment condition	Temperature; +5°C to 35°C, Humidity; equal or less than 80% R.H.
Temperature control range	Ambient temperature +5°C to 50°C (ambient temperature; 5°C to 35°C)
Temperature distribution	±0.2°C* (ambient temperature; 25°C, setting; 37°C, 5%, no load)
Temperature variation	±0.1°C (ambient temperature; 25°C, setting; 37°C, 5%, no load)
CO_2 control range	0 to 20%
CO_2 variation	±0.15% (ambient temperature; 25°C, setting; 37°C, 5%, no load)
Chamber humidity	95±5% R.H.
Maximum power consumption	440 W
Total maximum current	3.7 A (AC 110 to 120 V), 1.8 A (AC 220 to 240 V)
Maximum heat emission	1584 kJ/h
Noise level	33dB (A scale)

Note : The unit with CE mark complies with EC directives 89/336/EEC, 93/68/EEC and 73/23/EEC.

* *It is based on our measuring method.*

⚠ CAUTION

Please fill in this form before servicing.
Hand over this form to the service engineer to keep for his and your safety.

Safety check sheet

1. Refrigerator contents : ☐Yes ☐No
   Risk of infection: ☐Yes ☐No
   Risk of toxicity: ☐Yes ☐No
   Risk from radioactive sources: ☐Yes ☐No

   (List all potentially hazardous materials that have been stored in this unit.)
   Notes :

2. Contamination of the unit
   Unit interior ☐Yes ☐No
   No contamination ☐Yes ☐No
   Decontaminated ☐Yes ☐No
   Contaminated ☐Yes ☐No
   Others:

3. Instructions for safe repair/maintenance of the unit
   a) The unit is safe to work on ☐Yes ☐No
   b) There is some danger (see below) ☐Yes ☐No
   Procedure to be adhered to in order to reduce safety risk indicated in b) below.

Date :
Signature :
Address, Division :
Telephone :

Product name :	Model :	Serial number :	Date of Installation :
CO_2 incubator	MCO-17AIC		

Please decontaminate the unit yourself before calling the service engineer.

7FB6P101261003

Recycled paper

SANYO

SANYO Electric Biomedical Co., Ltd.

Printed in Japan