Inductive proximity switch
IKN 090.05 GH

- Plastic housing 110 x 110 x 43 mm
- Rated operating distance (S_n) 90 mm
- AC/DC 2 wire normally open
- Ambient temperature up to 100 °C



Product Characteristics

Type	**IKN 090.05 GH**
Connection	**Art.-No.**
2 m silicone cable	2050M
5 m silicone cable	2050M-5
10 m silicone cable	2050M-10
15 m silicone cable	2050M-15
20 m silicone cable	2050M-20
Application	Non-contact detection of metallic objects

Technical Data

Rated operating distance (S_n)	90 mm
Target steel St37, 1 mm thick	270 x 270 mm
Operating distance adjustable	yes
Switching hysteresis (H)	1 - 15 %
Location at metal	non flush
Supply voltage (U_B)	20 - 260 V AC/DC
Power frequency	40 – 440 Hz
Ripple voltage	max. 15 % (DC)
Output	normally open
Continuous current	5 - 400 mA (over +70 °C 5 - 200 mA)
Short-circuit protection	yes, pulsing
Residual current (I_r)	1,7 mA / 260 V AC 1,0 mA / 24 V DC
Voltage drop (U_d)	< 9 V
Operating frequency (f)	25 Hz (AC) / 35 Hz (DC)
Ambient temperature	-25 ... +100 °C
Protection class	IP 67
Housing material	plastic
Functional display	LED

Connection

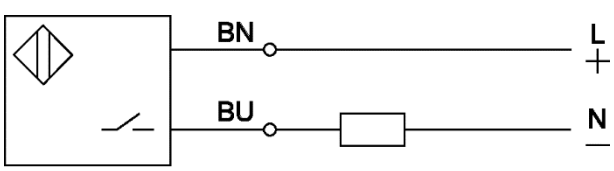

Dimension (mm)

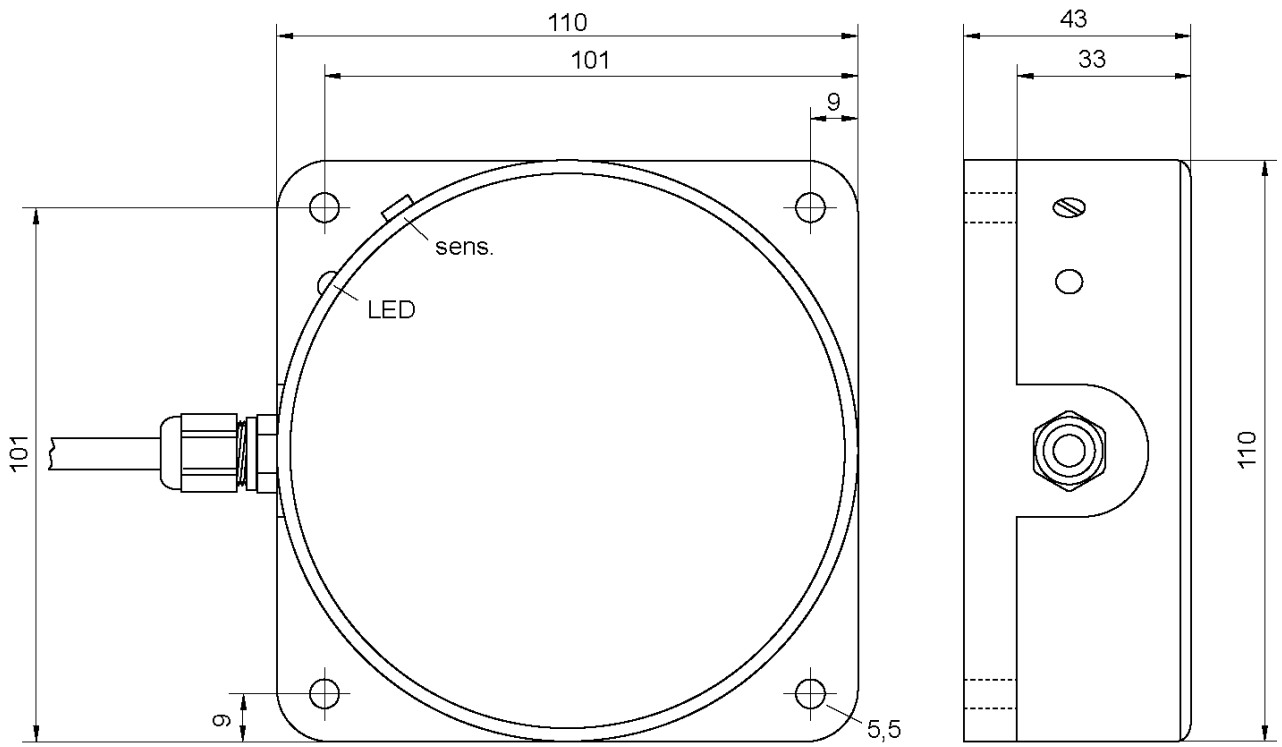

Accessories (in scope of supply)

	Type	Art.-No.
-	-	-

Accessories (**not** in scope of supply)

	Type	Art.-No.
-	-	-

Further information

	Document
Operating manual	BDA_IK_D_E