Model W355B04/-0003

Ring-style, high sensitivity, ceramic shear ICP® accel., 1 V/g, 1 to 10k Hz,

Installation and Operating Manual

For assistance with the operation of this product,
contact PCB Piezotronics, Inc.

Toll-free: 800-828-8840
24-hour SensorLine: 716-684-0001
Fax: 716-684-0987
E-mail: info@pcb.com
Web: www.pcb.com





Warranty, Service, Repair, and Return Policies and Instructions

The information contained in this document supersedes all similar information that may be found elsewhere in this manual.

Total Customer Satisfaction – PCB Piezotronics guarantees Total Customer Satisfaction. If, at any time, for any reason, you are not completely satisfied with any PCB product, PCB will repair, replace, or exchange it at no charge. You may also choose to have your purchase price refunded in lieu of the repair, replacement, or exchange of the product.

Service – Due to the sophisticated nature of the sensors and associated instrumentation provided by PCB Piezotronics, user servicing or repair is not recommended and, if attempted, may void the factory warranty. Routine maintenance, such as the cleaning of electrical connectors, housings, and mounting surfaces with solutions and techniques that will not harm the physical material of construction, is acceptable. Caution should be observed to insure that liquids are not permitted to migrate into devices that are not hermetically sealed. Such devices should only be wiped with a dampened cloth and never submerged or have liquids poured upon them.

Repair – In the event that equipment becomes damaged or ceases to operate, arrangements should be made to return the equipment to PCB Piezotronics for repair. User servicing or repair is not recommended and, if attempted, may void the factory warranty.

Calibration – Routine calibration of sensors and associated instrumentation is recommended as this helps build confidence in measurement accuracy and acquired data. Equipment calibration cycles are typically established by the users own quality regimen. When in doubt about a calibration cycle, a good “rule of thumb” is to recalibrate on an annual basis. It is also good practice to recalibrate after exposure to any severe temperature extreme, shock, load, or other environmental influence, or prior to any critical test.

PCB Piezotronics maintains an ISO-9001 certified metrology laboratory and offers calibration services, which are accredited by A2LA to ISO/IEC 17025, with full traceability to SI through N.I.S.T. In addition to the normally supplied calibration, special testing is also available, such as: sensitivity at elevated or cryogenic temperatures, phase response, extended high or low frequency response, extended range, leak testing, hydrostatic pressure testing, and others. For information on standard recalibration services or special testing, contact your local PCB Piezotronics distributor, sales representative, or factory customer service representative.

Returning Equipment – *Following these procedures will insure that your returned materials are handled in the most expedient manner*. Before

returning any equipment to PCB Piezotronics, contact your local distributor, sales representative, or factory customer service representative to obtain a Return **Warranty, Service, Repair, and Return Policies and Instructions** Materials Authorization (RMA) Number. This RMA number should be clearly marked on the outside of all package(s) and on the packing list(s) accompanying the shipment. A detailed account of the nature of the problem(s) being experienced with the equipment should also be included inside the package(s) containing any returned materials.

A Purchase Order, included with the returned materials, will expedite the turn-around of serviced equipment. It is recommended to include authorization on the Purchase Order for PCB to proceed with any repairs, as long as they do not exceed 50% of the replacement cost of the returned item(s). PCB will provide a price quotation or replacement recommendation for any item whose repair costs would exceed 50% of replacement cost, or any item that is not economically feasible to repair. For routine calibration services, the Purchase Order should include authorization to proceed and return at current pricing, which can be obtained from a factory customer service representative.

Warranty – All equipment and repair services provided by PCB Piezotronics, Inc. are covered by a limited warranty against defective material and workmanship for a period of one year from date of original purchase. Contact PCB for a complete statement of our warranty. Expendable items, such as batteries and mounting hardware, are not covered by warranty. Mechanical damage to equipment due to improper use is not covered by warranty. Electronic circuitry failure caused by the introduction of unregulated or improper excitation power or electrostatic discharge is not covered by warranty.

Contact Information – International customers should direct all inquiries to their local distributor or sales office. A complete list of distributors and offices can be found at www.pcb.com. Customers within the United States may contact their local sales representative or a factory customer service representative. A complete list of sales representatives can be found at www.pcb.com. Toll-free telephone numbers for a factory customer service representative, in the division responsible for this product, can be found on the title page at the front of this manual. Our ship to address and general contact numbers are:

PCB Piezotronics, Inc.
3425 Walden Ave.
Depew, NY14043 USA
Toll-free: (800) 828-8840
24-hour SensorLine^{SM}: (716) 684-0001
Website: www.pcb.com
E-mail: info@pcb.com

PCB工业监视和测量设备 - 中国RoHS2公布表

PCB Industrial Monitoring and Measuring Equipment - China RoHS 2 Disclosure Table

部件名称	有害物质					
	铅 (Pb)	汞 (Hg)	镉 (Cd)	六价铬 (Cr(VI))	多溴联苯 (PBB)	多溴二苯醚 (PBDE)
住房	O	O	O	O	O	O
PCB板	X	O	O	O	O	O
电气连接器	O	O	O	O	O	O
压电晶体	X	O	O	O	O	O
环氧	O	O	O	O	O	O
铁氟龙	O	O	O	O	O	O
电子	O	O	O	O	O	O
厚膜基板	O	O	X	O	O	O
电线	O	O	O	O	O	O
电缆	X	O	O	O	O	O
塑料	O	O	O	O	O	O
焊接	X	O	O	O	O	O
铜合金/黄铜	X	O	O	O	O	O
本表格依据 SJ/T 11364 的规定编制。						
O： 表示该有害物质在该部件所有均质材料中的含量均在 GB/T 26572 规定的限量要求以下。						
X： 表示该有害物质至少在该部件的某一均质材料中的含量超出 GB/T 26572 规定的限量要求。 铅是欧洲RoHS指令2011/65/ EU附件三和附件四目前由于允许的豁免。						

CHINA RoHS COMPLIANCE

Component Name	Hazardous Substances					
	Lead (Pb)	Mercury (Hg)	Cadmium (Cd)	Chromium VI Compounds (Cr(VI))	Polybrominated Biphenyls (PBB)	Polybrominated Diphenyl Ethers (PBDE)
Housing	O	O	O	O	O	O
PCB Board	X	O	O	O	O	O
Electrical Connectors	O	O	O	O	O	O
Piezoelectric Crystals	X	O	O	O	O	O
Epoxy	O	O	O	O	O	O
Teflon	O	O	O	O	O	O
Electronics	O	O	O	O	O	O
Thick Film Substrate	O	O	X	O	O	O
Wires	O	O	O	O	O	O
Cables	X	O	O	O	O	O
Plastic	O	O	O	O	O	O
Solder	X	O	O	O	O	O
Copper Alloy/Brass	X	O	O	O	O	O

This table is prepared in accordance with the provisions of SJ/T 11364.

O: Indicates that said hazardous substance contained in all of the homogeneous materials for this part is below the limit requirement of GB/T 26572.

X: Indicates that said hazardous substance contained in at least one of the homogeneous materials for this part is above the limit requirement of GB/T 26572.
Lead is present due to allowed exemption in Annex III or Annex IV of the European RoHS Directive 2011/65/EU.

DOCUMENT NUMBER: 21354
*DOCUMENT REVISION: **C***
ECN: 45605

General
OPERATING GUIDE

for use with

PIEZOELECTRIC ICP® ACCELEROMETERS

SPECIFICATION SHEET, INSTALLATION DRAWING
AND CALIBRATION INFORMATION ENCLOSED

PCB ASSUMES NO RESPONSIBILITY FOR DAMAGE CAUSED TO THIS PRODUCT AS A RESULT OF PROCEDURES THAT ARE INCONSISTENT WITH THIS OPERATING GUIDE.

1.0 INTRODUCTION

Congratulations on the purchase of a quality, ICP® acceleration sensor. In order to ensure the highest level of performance for this product, it is imperative that you properly familiarize yourself with the correct mounting and installation techniques before attempting to operate this device. If, after reading this manual, you have any additional questions concerning this sensor or its application, feel free to call a factory Application Engineer at 716-684-0001 or your nearest PCB sales representative.

2.0 ICP® ACCELEROMETERS

Powered by simple, inexpensive, constant-current signal conditioners, these sensors are easy to operate and interface with signal analysis, data acquisition and recording instruments. The following features further characterize ICP® sensors:

- Fixed voltage sensitivity, regardless of cable type or length.
- Low-impedance output signal, which can be transmitted over long cables in harsh environments with virtually no loss in signal quality.
- Two-wire operation with low cost coaxial cable, two-conductor ribbon wire or twisted-pair cabling.
- Low-noise, voltage-output signal compatible with standard readout, signal analysis, recording, and data acquisition equipment.
- Low cost per-channel - ICP® accelerometers require only an inexpensive, constant-current signal conditioner to operate.
- Intrinsic self-test feature – monitoring the sensor's output bias voltage provides an indication of proper operation, faulty condition, and bad cables.

In the rear of this manual you will find a **Specification Sheet**, which provides the complete performance characteristics of your particular sensor.

3.0 OPTIONAL FEATURES

Many sensors are supplied with standard, optional features. When listed before the model number, the following prefix letters indicate that the sensor is manufactured or supplied with a particular optional feature: **"A"** option: adhesive mount; **"HT"** option: extended high temperature range; **"J"** option: electrically ground isolated; **"M"** option: metric mounting thread; **"Q"** option: extended discharge time constant; **"T"** option: built-in transducer electronic data sheet (TEDS); and **"W"** option: attached, water-resistant cabling. Other prefix letters, such as **"K"**, **"KR"**, **"GK"**, **"GKR"**, **"KL"**, and **"GKL"**, indicate that the sensor is ordered in kit form, including interconnect cabling and signal conditioner. If you have any questions or concerns regarding optional features, consult the Vibration Division's product catalog or contact a PCB factory representative.

4.0 INSTALLATION OVERVIEW

When choosing a mounting method, consider closely both the advantages and disadvantages of each technique. Characteristics like location, ruggedness, amplitude range, accessibility, temperature, and portability are extremely critical. However, the most important and often overlooked consideration is the effect the mounting technique has on the high-frequency performance of the accelerometer.

® ICP is a registered trademark of PCB Group, Inc., which uniquely identifies PCB sensors that incorporate built-in microelectronics.

Shown in figure 1 are six possible mounting techniques and their effects on the performance of a typical piezoelectric accelerometer. (Note that not all of the mounting methods may apply to your particular sensor). The mounting configurations and corresponding graph demonstrate how the high-frequency response of the accelerometer may be compromised as mass is added to the system and/or the mounting stiffness is reduced.

NOTE: *The low-frequency response is unaffected by the mounting technique. This roll-off behavior is typically fixed by the sensor's built-in electronics. However, when operating AC-coupled signal conditioners with readout devices having an input impedance of less than one megohm, the low frequency range may be affected. If necessary, contact a factory representative for further assistance.*

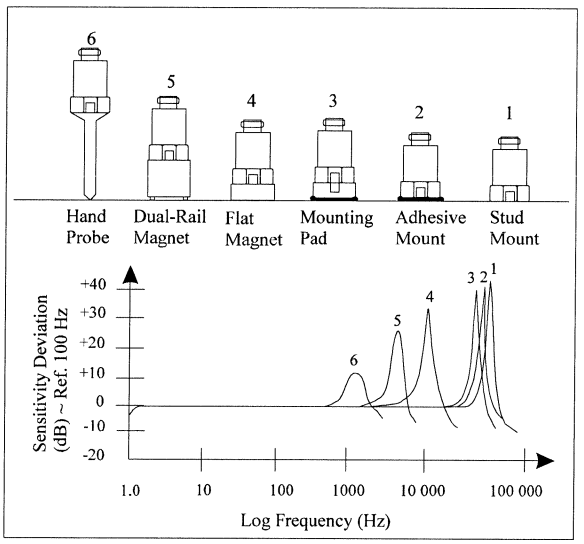

Figure 1. Assorted Mounting Configurations and Their Effects on High Frequency

4.1 STUD MOUNT

This mounting technique requires smooth, flat contact surfaces for proper operation and is recommended for permanent and/or secure installations. Stud mounting is also recommended when testing at high frequencies.

NOTE: *Do NOT attempt mounting on curved, rough, or uneven surfaces, as the potential for misalignment and limited contact surface may significantly reduce the sensor's upper operating frequency range.*

STEP 1: First, prepare a smooth, flat mounting surface, then drill and tap a mounting hole in the center of this area as shown in Figure 2 and in accordance with the enclosed **Installation Drawing**.

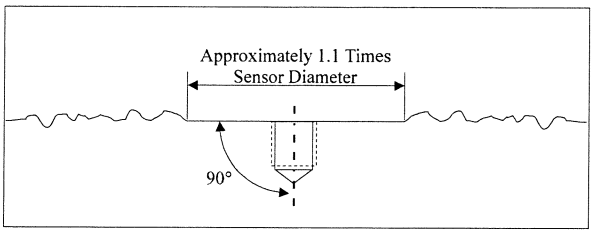

Figure 2. Mounting Surface Preparation

A precision-machined mounting surface with a minimum finish of 63 µin (0.00016 mm) is recommended. (If it is not possible to properly prepare the test structure mounting surface, consider adhesive mounting as a possible alternative). Inspect the area, checking that there are no burrs or other foreign particles interfering with the contact surface.

STEP 2: Wipe clean the mounting surface and spread on a light film of grease, oil, or similar coupling fluid prior to installation.

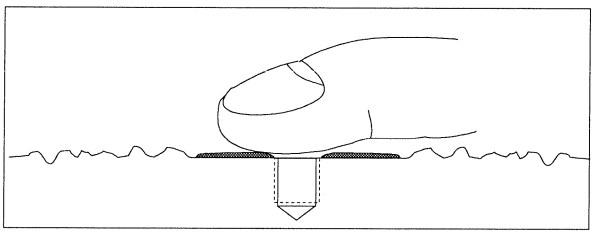

Figure 3. Mounting Surface Lubrication

Adding a coupling fluid improves vibration transmissibility by filling small voids in the mounting surface and increasing the mounting stiffness. For semi-permanent mounting, substitute epoxy or another type of adhesive.

STEP 3: Screw the mounting stud into the base of accelerometer and hand-tighten (this step is unnecessary for units having an integral mounting stud). Then, screw the sensor into the tapped hole that was prepared in the test object. Tighten the unit in place by applying, with a torque wrench, the recommended mounting torque, as listed on the enclosed **Installation Drawing**.

NOTE: *It is important to use a torque wrench during this step. Under-torquing the sensor may not adequately couple the device; over-torquing may result in stud failure.*

4.2 ADHESIVE MOUNT

Adhesive mounting is often used for temporary installation or when the test object surface cannot be adequately prepared for stud mounting. Adhesives like hot glue and wax perform well for temporary installations whereas two-part epoxies and quick-bonding gels (super glue) provide a more permanent installation. Two

techniques are used for adhesive mounting; they are via an adhesive mounting base (method 1 below) or direct adhesive mounting (method 2 below).

NOTE: *Adhesively mounted sensors often exhibit a reduction in high-frequency range. Generally, smooth surfaces and stiff adhesives provide the best high frequency response.*

METHOD 1 - Adhesive Mounting Base

This method involves attaching a base to the test structure, then securing the sensor to the base. This allows for easy removal of the accelerometer. Also, since many bases are manufactured of "hard-coated" aluminum, they provide electrical isolation to eliminate ground loops and reduce electrical interference that may propagate from the surface of the test object.

STEP 1: Prepare a smooth, flat mounting surface. A minimum surface finish of 63 µin (0.00016 mm) generally works best.

STEP 2: Stud-mount the sensor to the flat side of the appropriate adhesive mounting base according to the guidelines set forth in **STEPS 2** and **3** of the Stud Mount Procedure presented above.

STEP 3: Place a small portion of adhesive on the underside of the mounting base (the underside is discernable by the concentric grooves which are designed to accept the adhesive). Firmly press down on the assembly to displace any extra adhesive remaining under the base.

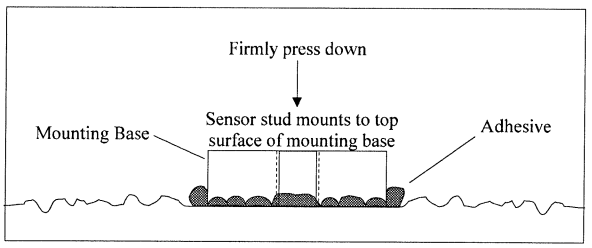

Figure 4. Mounting Base: Adhesive Installation

METHOD 2 - Direct Adhesive Mount

For restrictions of space or for convenience, most sensors can be adhesive-mounted directly to the test structure (an exception being units having integral mounting studs).

STEP 1: Prepare a smooth, flat mounting surface. A minimum surface finish of 63 µin (0.00016 mm) generally works best.

STEP 2: Place a small portion of adhesive on the underside of the sensor. Firmly press down on the top of the assembly to displace any adhesive. Be aware that excessive amounts of adhesive can make sensor removal difficult. Also, adhesive that may invade the tapped mounting hole in the base of the sensor will compromise future ability to stud mount the unit.

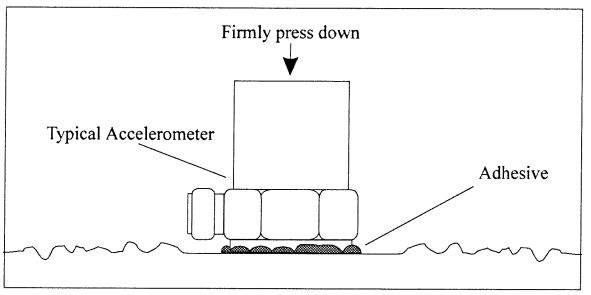

Figure 5. Direct Adhesive Mounting

4.2-1 ADHESIVE MOUNT REMOVAL (other than wax)

NOTE: *A debonder should always be used to avoid sensor damage.*

To avoid damaging the accelerometer, a debonding agent must be applied to the adhesive prior to sensor removal. With so many adhesives in use (everything from super glues, dental cement, epoxies, etc), there is no universal debonding agent available. The debonder for the Loctite 454 adhesive that PCB offers is Acetone. If you are using anything other than Loctite 454, you will have to check with the individual manufacturers for their debonding recommendations. The debonding agent must be allowed to penetrate the surface in order to properly react with the adhesive, so it is advisable to wait a few minutes before removing the sensor.

After the debonding agent has set, you can use an ordinary open-end wrench if the accelerometer has a hex base or square base, or the supplied removal tool for teardrop accelerometers. After attaching either, use a gentle shearing (or twisting) motion (by hand only) to remove the sensor from the test structure.

4.3 MAGNETIC MOUNT

Magnetic mounting provides a convenient means for making quick, portable measurements and is commonly used for machinery condition monitoring, predictive maintenance, spot checks, and vibration trending applications.

NOTE: *The correct magnet choice and an adequately prepared mounting surface are critical for obtaining reliable measurements, especially at high frequencies. Poor installations can cause as much as a 50% drop in the sensor frequency range.*

Not every magnet is suitable for all applications. For example, rare earth magnets are commonly used because

of their high strength. Flat magnets work well on smooth, flat surfaces, while dual-rail magnets are required for curved surfaces such as motor housings and pipes. In the case of non-magnetic or rough surfaces, it is recommended that the user first weld, epoxy, or otherwise adhere a steel mounting pad to the test surface. This provides a smooth location for mounting and a target to insure that subsequent measurements for trending purposes are taken at the same location.

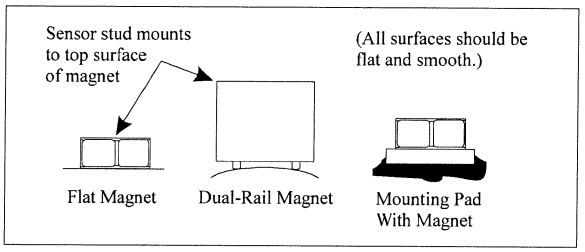

Figure 6. Magnet Types

STEP 1: Prepare a smooth, flat mounting surface. A minimum surface finish of 63 µin (0.00016 mm) generally works best. After cleaning the surface and checking for burrs, apply a light film of silicone grease, machine oil, or similar-type coupling fluid.

STEP 2: After choosing the correct magnet type, inspect the magnet, verifying that its mounting surfaces are flat and smooth.

STEP 3: Stud-mount the accelerometer to the appropriate magnet according to the guidelines set forth in **STEP 3** of the above Stud Mount Procedure.

STEP 4: To avoid damage to the sensor, install the magnet/sensor assembly to the prepared test surface by gently "rocking" or "sliding" it into place.

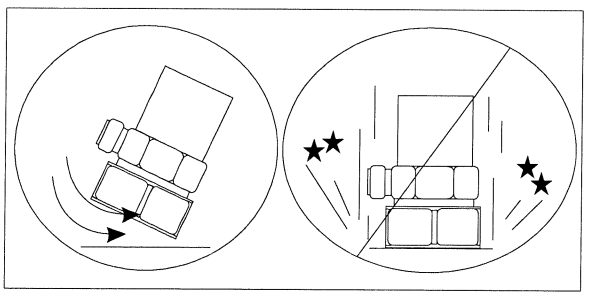

Figure 7. Magnet Mounting

CAUTION: *Magnetically mounting of an accelerometer has the potential to generate very high (and very damaging) acceleration (g) levels. To prevent such damage, exercise caution and install the assembly gently by rocking it into place. If shock is expected to be a particular concern, use a sensor with built-in shock protection. For further assistance, contact a factory representative.*

4.4 HANDHELD OR PROBE TIP MOUNT

This method is NOT recommended for most applications. Both the accuracy and repeatability at low (<5 Hz) and high frequency (>1 kHz) ranges are questionable. It is generally used only for machinery condition monitoring, when installation space is restricted, or other portable trending applications. The technique, however, can be useful for initially determining locations of greatest vibration to establish a permanent sensor installation point.

5.0 CABLING

Care and attention to cable installation and cable condition is essential as the reliability and accuracy of any measurement system is no better than that of its weakest link. Do to the nature of vibration measurements, all sensor cables will ultimately fatigue and fail. Good installation practice will extend the life of a cable, however, it is highly recommended to keep spare cables on hand to enable continuation of the test in the event of a cable failure.

STEP 1: Ascertain that you have the correct cable type.

One cable type cannot satisfy all applications. ICP® sensors can be operated with any ordinary two-wire or coaxial cable. Special, low-noise cables that are typically recommended for use with high-impedance, charge-output sensors can also be used. For applications requiring conformity to CE, low noise cables are essential. Industrial applications often require shielded, twisted-pair cables to reduce the effects of EMI and RFI that is present near electrical motors and machinery. Teflon-jacketed cabling may be necessary to withstand corrosive environments and higher temperatures. Consult the Vibration Division's product catalog for more information about cables or feel free to contact a factory representative for a specific recommendation on cables that are best suited for your application.

STEP 2: Connect the cable to the accelerometer.

A small amount of thread-locking compound placed on the connector threads prior to attachment helps secure the cable during testing. In wet, oily, or dirty environments, the connection can be sealed with silicone rubber sealant, O-rings, and flexible, heat-shrink tubing.

Coaxial Cables: Make connection by inserting the cable's connector pin into the sensor's mating socket. Then thread the connector into place by turning the cable connector's outer shell onto the accelerometer's electrical connector.

NOTE: *Do not spin the accelerometer while holding the cable connector stationary, as this will cause undue*

friction on the center pin of the cable connector and lead to premature fatigue.

Multi-pin connectors: Make connection by inserting the sensor's mating pins onto the cable connector's mating sockets. Then thread the connector into place by turning the cable connector's outer shell onto the accelerometer's electrical connector.

Pigtail Connections: Certain miniature accelerometers and shock sensors are provided with lightweight cables attached to "Pigtail" connections. This type of connection reduces overall weight and incidence of connection intermittency under shock conditions. In the event of a cable or connection failure, the cables may be repaired in the field simply by re-soldering the stripped leads to the exposed pins on the sensor. (Check the **Installation Drawing** to determine signal and ground pins). In many cases, it is also helpful to protect the solder joint with heat-shrink tubing or epoxy.

NOTE: *If you do not have the experience or resources to attach pigtail leads, consult PCB to discuss factory attachment. Damage to internal electronics may be caused by excessive heat during soldering and such failure is not covered by warranty.*

STEP 3: Route the cable to the signal conditioner, making certain to relieve stress on the sensor/cable connection. Also, minimize cable motion by securing it with tape, clamps or ties at regular intervals.

Common sense should be used to avoid physical damage and minimize electrical noise. For instance, avoid routing cables near high-voltage wires. Do not route cables along floors or walkways where they may be stepped on or become contaminated. To avoid ground loops, shielded cables should have the shield grounded at one end only, typically at the signal conditioner.

STEP 4: Finally, connect the remaining cable end to the signal conditioner. It is good practice to dissipate any electrical charge that may have accumulated in the cable by shorting the signal pin to the ground pin or shell prior to attachment.

6.0 POWERING

All ICP® sensors require constant current excitation for proper operation. For this reason, use only PCB constant-current signal conditioners or other approved constant-current sources. A typical system schematic is shown in Figure 8.

NOTE: *Damage to the built-in electronics resulting from the application of incorrect power, or the use of an unapproved power source, is NOT covered by warranty.*

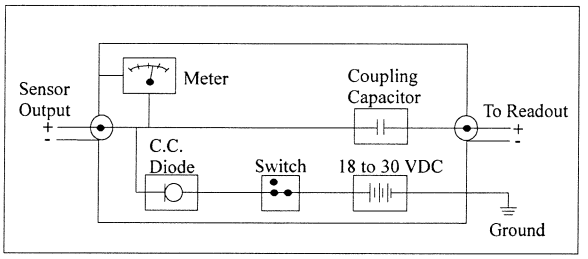

Figure 8. Typical System Schematic

The power supply consists of a current-regulated, 18 to 30 VDC source. This power is regulated by a current-limiting circuit, which provides the constant-current excitation required for proper operation of ICP® sensors. In general, battery-powered devices offer versatility for portable, low-noise measurements, whereas line-powered units provide the capability for continuous monitoring. Consult the Vibration Division's product catalog for more information about signal conditioners.

NOTE: *Under no circumstances should a voltage be supplied to an ICP® accelerometer without a current-regulating diode or equivalent electrical circuit. This may include ohmmeters, multi-meters and continuity testers.*

Meters or LEDs are used on PCB signal conditioners to monitor the bias voltage on the sensor output signal, to check sensor operation, and detect cable faults. Normally, a "yellow" reading indicates an open circuit; "green" indicates normal operation; and "red" indicates either a short or overload condition. Finally, a capacitor at the output stage of the device removes the sensor output bias voltage from the measurement signal. This provides a zero-based, AC-coupled output signal that is compatible with most standard readout devices.

NOTE: *Units having a low bias voltage may be in the "red," when actually they are working properly. If suspect, the bias voltage can be checked with a voltmeter attached to a "T" connector installed on the input connector to the signal conditioner.*

Note: *For readout devices having an input impedance near one gigohm (as encountered with some A to D converters), it may be necessary to place a one megohm resistor in parallel to the readout input to eliminate slow turn-on and signal drift.*

Today, many FFT analyzers, data acquisition modules, and data collectors have the proper constant-current excitation built-in for direct use with ICP® sensors. Before using this feature, however, check that the supply voltage and constant current are within acceptable limits for use with your particular sensor. (Check enclosed **Specification Sheet**). Please contact the respective signal

conditioner manufacturer or check the product manual for more information.

7.0 OPERATING

After completing the system setup, switch on the signal conditioner and allow 1 to 2 minutes for the system to stabilize. The meter (or LED) on the signal conditioner should be reading "green." This indicates proper operation and you may begin taking measurements. If a faulty condition is indicated (red or yellow reading), first check all system connections, then check the functionality of the cable and signal conditioner. If the system still does not operate properly, consult a PCB factory representative.

NOTE: *Always operate the accelerometer within the limitations listed on the enclosed* ***Specification Sheet****. Operating the device outside these parameters can cause temporary or permanent damage to the sensor.*

8.0 ACCELEROMETER CALIBRATION

Accelerometer calibration provides, with a definable degree of accuracy, the necessary link between the physical quantity being measured and the electrical signal generated by the sensor. In addition, other useful information concerning operational limits, physical parameters, electrical characteristics, or environmental influences may also be determined. Without this link, analyzing data becomes a nearly impossible task. Fortunately, most sensor manufacturers provide a calibration record that documents the exact characteristics of each sensor. (The type and amount of data varies depending on the manufacturer, sensor type, contractual regulations, and other special requirements).

Under normal conditions, piezoelectric sensors are extremely stable, and their calibrated performance characteristics do not change over time. However, the sensor may be temporarily or permanently affected by harsh environments influences or other unusual conditions that may cause the sensor to experience dynamic phenomena outside of its specified operating range. This change manifests itself in a variety of ways, including: a shift of the sensor resonance due to a cracked crystal; a temporary loss of low-frequency measuring capability due to a drop in insulation resistance; or total failure of the built-in microelectronic circuit due to a high mechanical shock.

For these reasons, it is recommended that a recalibration cycle be established for each accelerometer. This schedule is unique and is based on a variety of factors, such as: extent of use, environmental conditions, accuracy requirements, trend information obtained from previous calibration records, contractual regulations, frequency of "cross-checking" against other equipment, manufacturer recommendation, and any risk associated with incorrect readings. International standards, such as ISO 10012-1, provide insight and suggest methods for determining recalibration intervals for most measuring equipment. With the above information in mind and under "normal" circumstances, PCB conservatively suggests a 12- to 24-month recalibration cycle for most piezoelectric accelerometers.

NOTE: *It is good measurement practice to verify the performance of each accelerometer with a Handheld Shaker or other calibration device before and after each measurement. The PCB Handheld Shaker operates at a fixed frequency and known amplitude (1.0 g) to provide a quick check of sensor sensitivity.*

8.1 RECALIBRATION SERVICE

PCB offers recalibration services for our piezoelectric accelerometers, as well as units produced by other manufacturers. Our internal metrology laboratory is certified to ISO 9001, accredited by A2LA to ANSI/IEC 17025 and ANSI/NCSL Z540-1, complies with ISO 10012-1 (and former MIL-STD-45662A), and uses equipment directly traceable to NIST. Our investment in equipment, traceability and conformance to industry standards ensures accurate calibration against relevant specifications, in a timely fashion.

8.2 BACK-TO-BACK CALIBRATION THEORY

Many companies choose to purchase the equipment necessary to perform the recalibration procedure in house. While this may result in both a savings of time and money, it has also been attributed to incorrect readings and costly errors. Therefore, in an effort to prevent the common mistakes associated with customer-performed calibration, this document includes a broad overview of the Back-to-Back Calibration technique. This technique provides a quick and easy method for determining the sensitivity of a test accelerometer over a wide frequency range.

Back-to-Back Calibration is perhaps the most common method for determining the sensitivity of piezoelectric accelerometers. This method relies on a simple comparison to a previously calibrated accelerometer, typically referred to as a reference standard.

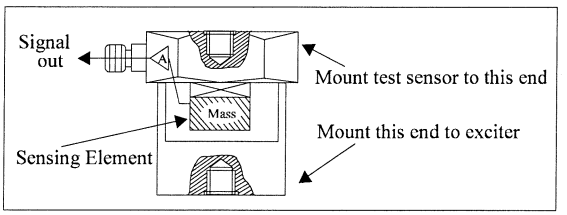

Figure 9. Reference Standard Accelerometer

These high-accuracy devices, which are directly traceable to a recognized standards laboratory, are designed for stability, as well as configured to accept a test accelerometer. By mounting a test accelerometer to the reference standard and then connecting this combination to a suitable vibration source, it is possible to vibrate both devices and compare the data as shown in Figure 10. (Test set-ups may be automated and vary, depending on the type and number of accelerometers being calibrated).

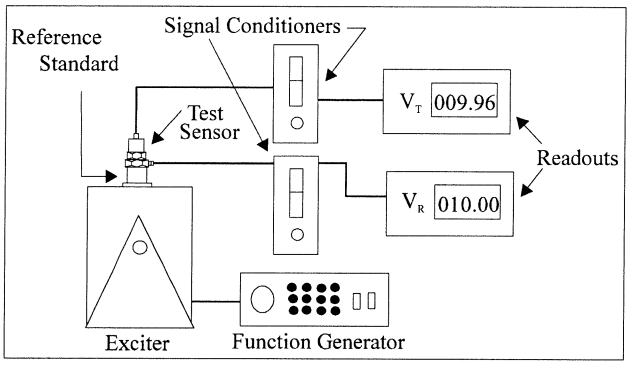

Figure 10. Typical Back-to-Back Calibration System

Because the acceleration is the same on both sensors, the ratio of their outputs (V_T/V_R) must also be the ratio of their sensitivities. With the sensitivity of the reference standard (S_R) known, the exact sensitivity of the test sensor (S_T) is easily calculated by using the following equation:

$$S_T = S_R (V_T/V_R)$$

By varying the frequency of the vibration, the sensor may be calibrated over its entire operating frequency range. The typical response of an unfiltered accelerometer is shown in Figure 11.

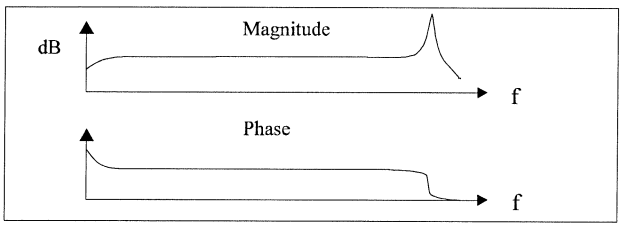

Figure 11. Typical Test Accelerometer Response

8.3 PCB CALIBRATION PROCEDURE

Numerous precautions are taken at PCB to insure accurate and repeatable results. This section provides a brief overview of the primary areas of concern.

Since the Back-to-Back Calibration technique relies on each sensor experiencing an identical acceleration level, proper mounting of the test sensor to the reference standard is imperative. Sensors with mounting holes are attached directly to the reference standard with a stud tightened to the recommended mounting torque. A shouldered mounting stud is typically used to prevent the stud from "bottoming out" in the hole. Both mounting surfaces are precision-machined and lapped to provide a smooth, flat interface according to the manufacturer's specification. A thin layer of silicone grease is placed between the mating surfaces to fill any imperfections and increase the mounting stiffness. The cables are stress-relieved by first routing them to the shaker head, then to a nearby stationary location. This reduces cable motion, which is especially important when testing charge output sensors, and helps to prevent extraneous motion or stresses from being imparted into the system. A typical set-up is shown in Figure 12.

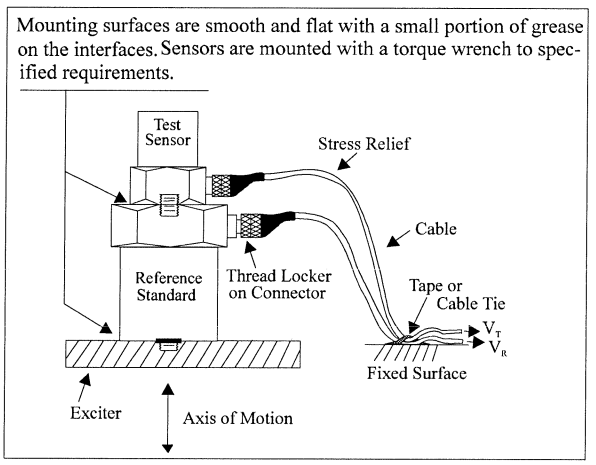

Figure 12. Typical Calibration Set-Up

Adhesively mounted sensors use similar practices. However, in this case, a small portion of quick-bonding gel, or similar temporary adhesive, is used to attach the test sensor to a reference standard designed with a smooth, flat mounting surface.

In addition to mounting, the selection of the proper equipment is critical. Some of the more important considerations include: 1) the reference standard must be specified and previously calibrated over the frequency and/or amplitude range of interest; 2) the shaker should be selected to provide minimal transverse (lateral) motion and minimal distortion; and 3) the quality of the meters, signal generator, and other devices should be selected so as to operate within the limits of permissible error.

8.4 COMMON MISTAKES

Most calibration errors are caused by simply overlooking some of the fundamental principals of dynamics. This section attempts to address some of the more common concerns.

For stud-mount sensors, always mount the accelerometer directly to the reference standard. Ensure that the mounting surfaces are smooth, flat, and free of any burrs. Always use a

coupling fluid, such as silicone grease, in the mounting interface to maintain a high mounting stiffness. Mount the sensor according to the manufacturer's recommended mounting torque. DO NOT use any intermediate mounting adaptors, as the mounted resonant frequency may be reduced, and thereby compromise the high-frequency performance. If necessary, use adaptor studs.

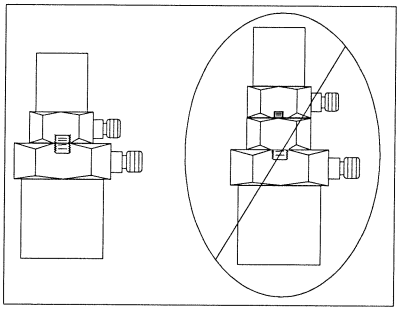

Figure 13. Stud Mounting

For adhesive mount sensors, use a thin, stiff layer of temporary adhesive such as quick-bonding gel or superglue. DO NOT use excessive amounts of glue or epoxy, as the mounting stiffness may be reduced and compromise high-frequency performance. It may also damage the sensor during removal.

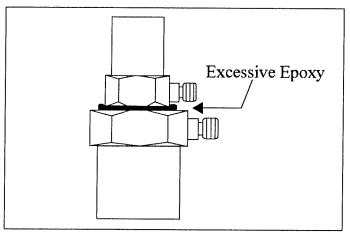

Figure 14. Incorrect Adhesive Mounting

Triaxial accelerometers should always be mounted directly to the reference standard. Unless absolutely required, DO NOT use adaptors to re-orient the sensor along the axis of motion, as the mounting stiffness may be altered. The vibration at the test sensor's sensing element may differ from the vibration at the reference standard due to a "cantilever" effect, seen in Figure 15.

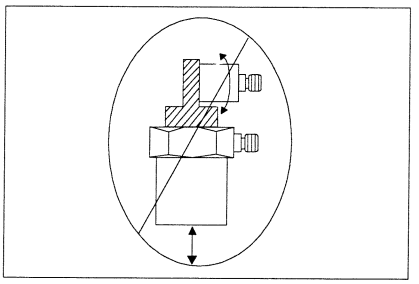

Figure 15. Mounting Triaxial Sensors (Incorrect)

Understand Back-to-Back Calibration limitations. Do not expect the uncertainty of calibration to be any better than ±2%. (In fact, the uncertainty may be as high as ±3% or ±4% for frequencies <10 Hz or >2 kHz.) Since large sensors may affect high-frequency accuracy, verify that the test sensor does not mass load the reference standard. Validate your calibration system with another accelerometer prior to each calibration session. Check with the manufacturer for exact system specifications.

8.5 CONCLUSIONS

Without an adequate understanding of dynamics, determining what, when, and how to test a sensor is a difficult task. Therefore, each user must weigh the cost, time, and risk associated with self-calibration versus utilizing the services of an accredited laboratory.

9.0 SERVICE

See the supplement sheet, contained in this manual, for information on our warranty, service, repair, and return policies and instructions.

When unexpected measurement problems arise, call our 24-hour SensorLine[SM] to discuss your immediate dynamic instrumentation needs with a factory representative.
Dial 716-684-0001.

PCB PIEZOTRONICS INC
VIBRATION DIVISION

3425 Walden Avenue, Depew, NY 14043-2495 USA **Vibration Division toll-free** 888-684-0013
24-hour SensorLine[SM] 716-684-0001 **FAX** 716-685-3886 **E-mail** vibration@pcb.com **Website** www.pcb.com

A PCB GROUP COMPANY ISO 9001 CERTIFIED A2LA ACCREDITED to ISO 17025

© 2002 PCB Group, Inc. In the interest of constant product improvement, specifications are subject to change without notice.
PCB and ICP are registered trademarks of PCB Group, Inc. SensorLine is a service mark of PCB Group, Inc.
All other trademarks are properties of their respective owners.

Manual Number: 18292
Manual Revision: B
ECN Number: 19829

VIB-ICPMANUAL-0

Printed in U.S

PCB Piezotronics Inc. claims proprietary rights in the information disclosed hereon. Neither it nor any reproduction thereof will be disclosed to others without the written consent of PCB Piezotronics Inc.

18864

REVISIONS			
REV	DESCRIPTION	ECN	APP'D
A	REVISED PER ECN	22234	DM 6-05
B	CHANGED NOTE	29162	

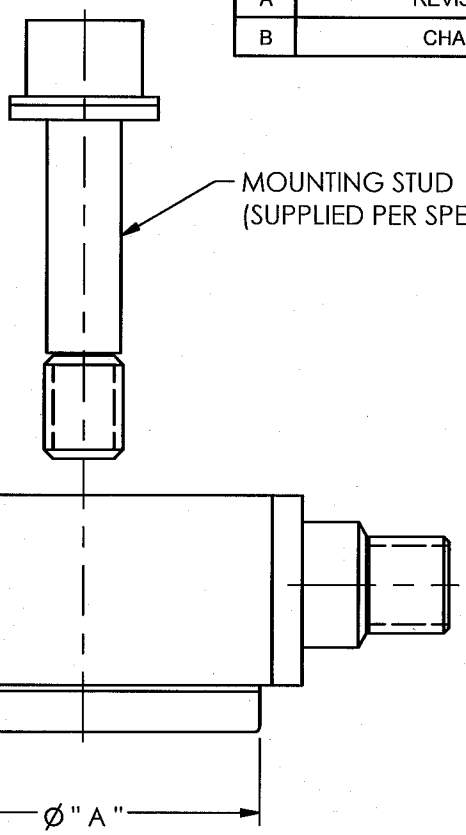

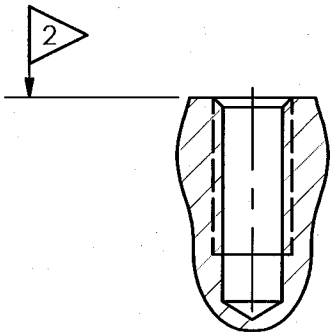

MOUNTING HOLE PREPARATION: 1

STANDARD THREAD:	**METRIC THREAD:**
Ø.109 [Ø2.78]	Ø.099 [Ø2.50]
X .35 [8.9] ↧ MIN	X .35 [8.9] ↧ MIN
6-32 UNC-2B	M3 X 0.5
X .27 [6.9] ↧ MIN	X .27 [6.9] ↧ MIN

4.) RECOMMENDED MOUNTING TORQUE ON MOUNTING STUD. 5-10 IN-LBS [55-113 N-CM].

3.) FOR BEST RESULTS, PLACE A THIN LAYER OF SILICON GREASE (OR EQUIVALENT) ON INTERFACE PRIOR TO MOUNTING.

2 MOUNTING SURFACE SHOULD BE FLAT TO WITHIN .001 [0.03] TIR OVER DIM " A " WITH A MINIMUM 63 [1.6] FINISH FOR BEST RESULTS.

1 DRILL PERPENDICULAR TO MOUNTING SURFACE TO WITHIN ± 1°.

UNLESS OTHERWISE SPECIFIED TOLERANCES ARE:	
DIMENSIONS IN INCHES	DIMENSIONS IN MILLIMETERS [IN BRACKETS]
DECIMALS XX ± .01	DECIMALS X ± 0.3
XXX ± .005	XX ± 0.13
ANGLES ± 2 DEGREES	ANGLES ± 2 DEGREES
FILLETS AND RADII .003 - .005	FILLETS AND RADII [0.07 - 0.13]

DRAWN	SMB	10/3/08	MFG	PRR	7/21/08
CHK'D			ENGR	JF	7/1/08
APP'D	BM	7/15/08	SALES	WDC	7/7/08

TITLE

INSTALLATION DRAWING
MODEL 355XXX & 357XXX SERIES
RING ACCELEROMETERS

PCB PIEZOTRONICS INC.
3425 WALDEN AVE. DEPEW, NY 14043
(716) 684-0001 E-MAIL: sales@pcb.com

CODE IDENT. NO.	DWG. NO.	
52681	18864	
SCALE: 3X	SHEET 1 OF 1	

APPLICATION		
NEXT ASS'Y	USED ON	VAR

REVISIONS				
REV	DESCRIPTION	ECN	DATE	APP'D

10614

PCB Piezotronics Inc. claims proprietary rights in the information disclosed hereon. Neither it nor any reproduction thereof will be disclosed to others without written consent of PCB Piezotronics Inc.

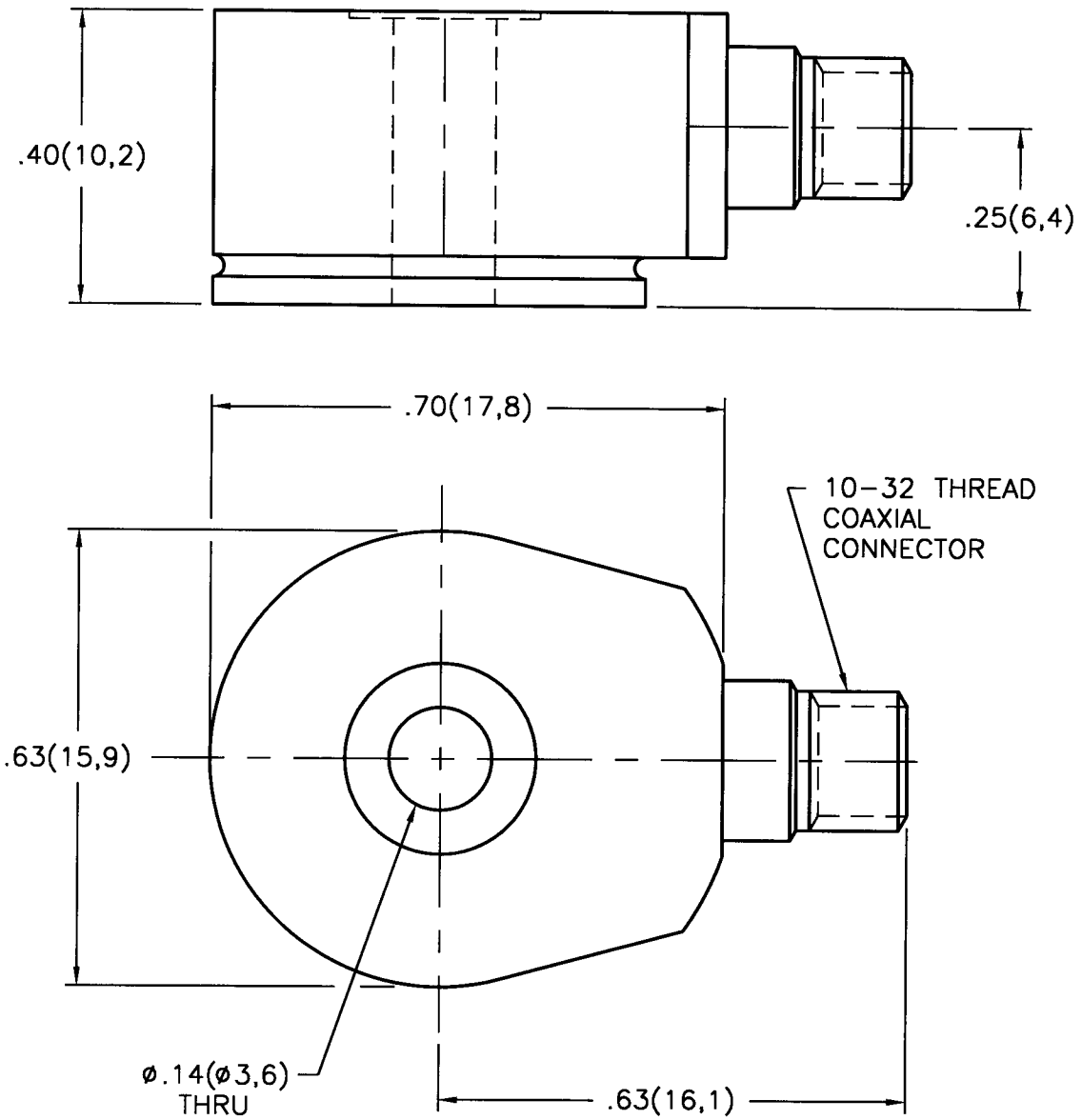

UNLESS SPECIFIED TOLERANCES	
DIMENSIONS IN INCHES DECIMALS XX ±.01 XXX ±.005 ANGLES ±2 DEGREES	DIMENSIONS IN MILLIMETERS (IN PARENTHESIS) DECIMALS XX ±0.3 XXX ±0.13 ANGLES ±2 DEGREES
FILLETS AND RADII .003 - .005	FILLETS AND RADII (0.07 - 0.13)
DD011 REV. B 03/13/98	

DRAWN	DRM	3/10/99	MFG	DA	3/10/99
CHK'D	DM	3/10/99	ENGR	[illegible]	3/11/99
APP'D			SALES	CSA	3/10/99

TITLE: OUTLINE DRAWING
MODEL 355B02
ACCELEROMETER

PCB PIEZOTRONICS INC.
3425 WALDEN AVE. DEPEW, NY 14043
(716) 684-0001 EMAIL: SALES@PCB.COM

CODE IDENT. NO.	DWG. NO.
52681	10614
SCALE: 4X	SHEET 1 OF 1