Model S111A24

General purpose ICP® pressure probe, 1000 psi, 5 mV/psi, 0.218" dia. diaphragm, accel. comp., stainless diaphragm

Installation and Operating Manual

**For assistance with the operation of this product,
contact the PCB Piezotronics, Inc.**

Toll-free: 716-684-0001
24-hour SensorLine: 716-684-0001
Fax: 716-684-0987
E-mail: info@pcb.com
Web: www.pcb.com





Repair and Maintenance

PCB guarantees Total Customer Satisfaction through its "Lifetime Warranty Plus" on all Platinum Stock Products sold by PCB and through its limited warranties on all other PCB Stock, Standard and Special products. Due to the sophisticated nature of our sensors and associated instrumentation, **field servicing and repair is not recommended and, if attempted, will void the factory warranty**.

Beyond routine calibration and battery replacements where applicable, our products require no user maintenance. Clean electrical connectors, housings, and mounting surfaces with solutions and techniques that will not harm the material of construction. Observe caution when using liquids near devices that are not hermetically sealed. Such devices should only be wiped with a dampened cloth—never saturated or submerged.

In the event that equipment becomes damaged or ceases to operate, our Application Engineers are here to support your troubleshooting efforts 24 hours a day, 7 days a week. Call or email with model and serial number as well as a brief description of the problem.

Calibration

Routine calibration of sensors and associated instrumentation is necessary to maintain measurement accuracy. We recommend calibrating on an annual basis, after exposure to any extreme environmental influence, or prior to any critical test.

PCB Piezotronics is an ISO-9001 certified company whose calibration services are accredited by A2LA to ISO/IEC 17025, with full traceability to SI through N.I.S.T. In addition to our standard calibration services, we also offer specialized tests, including: sensitivity at elevated or cryogenic temperatures, phase response, extended high or low frequency response, extended range, leak testing, hydrostatic pressure testing, and others. For more information, contact your local PCB Piezotronics distributor, sales representative, or factory customer service representative.

Returning Equipment

If factory repair is required, our representatives will provide you with a Return Material Authorization (RMA) number, which we use to reference any information you have already provided and expedite the repair process. This number should be clearly marked on the outside of all returned package(s) and on any packing list(s) accompanying the shipment.

Contact Information

PCB Piezotronics, Inc.
3425 Walden Ave.
Depew, NY14043 USA
Toll-free: (800) 828-8840
24-hour SensorLine: (716) 684-0001
General inquiries: info@pcb.com
Repair inquiries: rma@pcb.com

For a complete list of distributors, global offices and sales representatives, visit our website, www.pcb.com.

Safety Considerations

This product is intended for use by qualified personnel who recognize shock hazards and are familiar with the precautions required to avoid injury. While our equipment is designed with user safety in mind, the protection provided by the equipment may be impaired if equipment is used in a manner not specified by this manual.

Discontinue use and contact our 24-Hour Sensorline if:

- Assistance is needed to safely operate equipment
- Damage is visible or suspected
- Equipment fails or malfunctions

For complete equipment ratings, refer to the enclosed specification sheet for your product.

Definition of Terms and Symbols

The following symbols may be used in this manual:



DANGER
Indicates an immediate hazardous situation, which, if not avoided, may result in death or serious injury.



CAUTION
Refers to hazards that could damage the instrument.



NOTE
Indicates tips, recommendations and important information. The notes simplify processes and contain additional information on particular operating steps.

The following symbols may be found on the equipment described in this manual:



This symbol on the unit indicates that high voltage may be present. Use standard safety precautions to avoid personal contact with this voltage.



This symbol on the unit indicates that the user should refer to the operating instructions located in the manual.



This symbol indicates safety, earth ground.

PCB工业监视和测量设备 - 中国RoHS2公布表

PCB Industrial Monitoring and Measuring Equipment - China RoHS 2 Disclosure Table

部件名称	有害物质					
	铅 (Pb)	汞 (Hg)	镉 (Cd)	六价铬 (Cr(VI))	多溴联苯 (PBB)	多溴二苯醚 (PBDE)
住房	O	O	O	O	O	O
PCB板	X	O	O	O	O	O
电气连接器	O	O	O	O	O	O
压电晶体	X	O	O	O	O	O
环氧	O	O	O	O	O	O
铁氟龙	O	O	O	O	O	O
电子	O	O	O	O	O	O
厚膜基板	O	O	X	O	O	O
电线	O	O	O	O	O	O
电缆	X	O	O	O	O	O
塑料	O	O	O	O	O	O
焊接	X	O	O	O	O	O
铜合金/黄铜	X	O	O	O	O	O

本表格依据 SJ/T 11364 的规定编制。

O： 表示该有害物质在该部件所有均质材料中的含量均在 GB/T 26572 规定的限量要求以下。

X： 表示该有害物质至少在该部件的某一均质材料中的含量超出 GB/T 26572 规定的限量要求。

铅是欧洲RoHS指令2011/65/ EU附件三和附件四目前由于允许的豁免。

CHINA RoHS COMPLIANCE

Component Name	Hazardous Substances					
	Lead (Pb)	Mercury (Hg)	Cadmium (Cd)	Chromium VI Compounds (Cr(VI))	Polybrominated Biphenyls (PBB)	Polybrominated Diphenyl Ethers (PBDE)
Housing	O	O	O	O	O	O
PCB Board	X	O	O	O	O	O
Electrical Connectors	O	O	O	O	O	O
Piezoelectric Crystals	X	O	O	O	O	O
Epoxy	O	O	O	O	O	O
Teflon	O	O	O	O	O	O
Electronics	O	O	O	O	O	O
Thick Film Substrate	O	O	X	O	O	O
Wires	O	O	O	O	O	O
Cables	X	O	O	O	O	O
Plastic	O	O	O	O	O	O
Solder	X	O	O	O	O	O
Copper Alloy/Brass	X	O	O	O	O	O

This table is prepared in accordance with the provisions of SJ/T 11364.

O: Indicates that said hazardous substance contained in all of the homogeneous materials for this part is below the limit requirement of GB/T 26572.

X: Indicates that said hazardous substance contained in at least one of the homogeneous materials for this part is above the limit requirement of GB/T 26572.
Lead is present due to allowed exemption in Annex III or Annex IV of the European RoHS Directive 2011/65/EU.

OPERATION MANUAL FOR ICP® PRESSURE SENSORS MODELS 101A, A02, A03, A04, A05, A06 MODELS 111A21, A22, A23, A24, A26

1.0 INTRODUCTION

These two miniature sensor series are intended for general purpose pressure measurements. Eight models in the series, 101A02, 101A03, 101A04, 101A06, 111A22 and 111A23, 111A24 and 111A26 are acceleration compensated.

Models 101A, 101A05, and 111A21 also have acceleration compensation but are recommended for applications where acceleration compensation is not critical.

Other applications for these sensors include the monitoring of pulsating pneumatic and hydraulic pressures in R & D and industrial applications.

2.0 DESCRIPTION

This series consists of sensors with three basic mechanical configurations and six different sensitivities (.5, 1.0, 5.0, 10, 40 and 50 mV/psi). Each model is basically similar in internal design and construction.

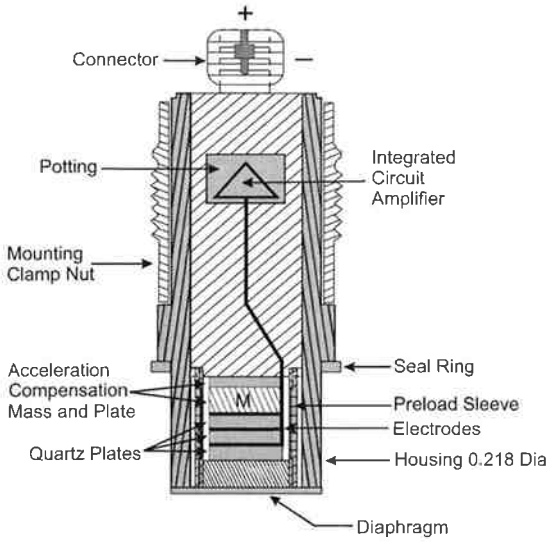

Typical ICP® Probe Style Sensor

The pressure element used in the 101A, 101A05 and 111A21 sensors is the Model 111A. The acceleration-compensated models in both the 101A and 111A20 Series use the Model 113A quartz element.

These elements consist of an IC source follower amplifier and an acceleration-compensated or non-compensated quartz package. The amplifier and element are joined as an inseparable unit.

Refer to "General Guide to ICP® Instrumentation," G-0001 for a complete treatment of the ICP® concept.

The Models 111A21, 111A22, 111A23, 111A24 and 111A26 are in the basic probe configuration as illustrated below and are installed with a hollow clamp nut with 5/16-24 external threads.

The housing of these models is at electrical ground potential.

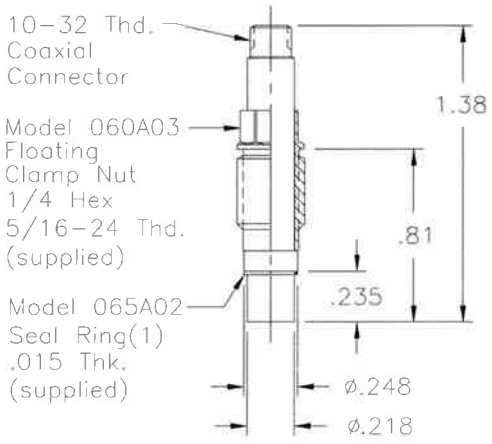

Series 111A20 Probe Style Sensor

The Models 101A02, 101A03, 101A04, 101A05 and 101A06 use the same basic pressure probe mounted in a 3/8-24 threaded mounting adaptor with shoulder seal. The probe is assembled into the adaptor at the factory in an "off-ground" configuration, i.e. the probe body is electrically insulated from the external mounting adaptor body. Do not attempt to disassemble probe and adaptor.

Drawing Number: 21073
Revision: A

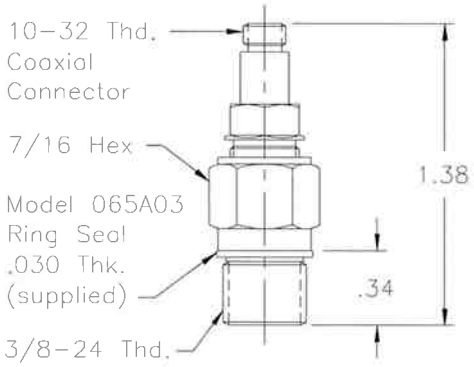

Models 101A02 through A06: Thread Mount Design, Ground-Isolated Sensor

The remaining Model 101A uses the same inner probe design but in a 3/8-24 threaded adaptor with floating clamp nut to permit adjustment of diaphragm depth where it is necessary to adapt to various wall thickness. This model, supplied only in the low-pressure (250 psi) version, is also "off-ground."

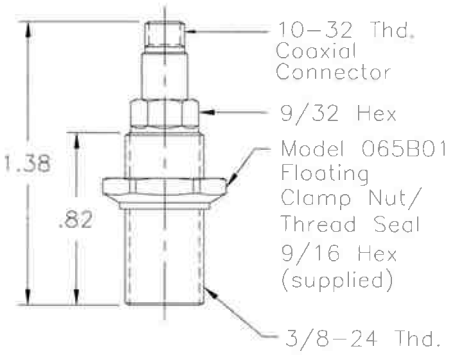

Model 101A: Thread Mount Design With Floating Clamp Nut, Ground-Isolated

3.0 INSTALLATION

Accompanying this manual is an installation drawing for your specific model. Prepare mounting ports in accordance with the installation drawing for the specific model, paying particular attention to sealing surfaces.

These surfaces must be smooth and free from chatter marks, nicks, and other irregularities which could preclude a pressure-tight seal.

Seals are provided with each sensor and should always be used. Extra seals for all standard models are in stock at the factory. Replace seals when they become unserviceable.

3.1 FLASH TEMPERATURE PROTECTION

In some cases, e.g. where flash temperatures such as those generated by combustion processes are present, it may be necessary to thermally insulate the diaphragm to minimize spurious signals generated by these effects.

Common black vinyl electrical tape has been found to be an effective insulating material in many cases. One or more layers may be used across the end of the diaphragm without affecting response or sensitivity.

A silicone rubber coating approximately .010 inches thick has also been proven effective in many applications. General Electric RTV type 106 silicone rubber is recommended.

Apply the rubber coating and allow to cure in accordance with the manufacturer's instructions. Use standard coaxial cable between the sensor and power unit.

4.0 OPERATION

It is necessary only to supply the sensor with a 2 to 20 mA constant current at +20 to +30 VDC through a current-regulating diode or equivalent circuit. See Guide G-0001B for powering and signal conditioning information pertaining to all ICP® instrumentation.

Most of the signal conditioners manufactured by PCB have an adjustable current feature allowing a choice of input currents from 2 to 20 mA. In general, for lowest noise (best resolution), choose the lower current ranges. When driving long cables (to several

thousand feet), use the higher current, up to 20 mA maximum. Consult the factory to determine if higher current settings are required.

Switch power on and observe reading of bias monitoring voltmeter on front panel of power unit.

If indicator is in green section of indicator panel, the IC amplifier is producing proper bias (+8 to 14 VDC), the cable connections are normal, and the system is ready to operate.

If the pointer moves into the red area of the fault monitor meter, output is zero and a short is indicated. Short could be located in amplifier, cable, connectors, or power unit.

If pointer moves into the yellow area of the fault monitor meter, an open circuit is indicated with full power supply voltage. An open circuit could be the result of a faulty amplifier, an open cable, or open connectors.

5.0 POLARITY

This sensor series produces a positive-going output voltage for increasing pressure input.

6.0 LOW-FREQUENCY RESPONSE

The low-frequency response of an ICP® system is determined by:

1. The discharge time constant of the sensor.

2. If AC-coupled at the power unit, the coupling time constant.

Depending upon the sensor's built-in discharge time constant, repetitive output signals slowly or rapidly move toward a stable condition where the average signal level corresponds to a zero voltage position.

In this position, the area contained by the signal above zero is equalized with the area below zero. Such output signal behavior is typical of an AC-coupled system. Since the signal output from the sensor is inherently AC coupled, any static pressure influence applied to the unit will decay away according to the nature of the system's discharge time constant.

Consult Section 7.0 in General Guide G-0001B for detailed explanation of low-frequency characteristics of ICP® instruments.

7.0 CALIBRATION

Piezoelectric sensors are dynamic devices, but static calibration techniques can be employed if discharge time constants are sufficiently long. Generally, static calibration methods are not employed when testing sensors with a discharge time constant that is less than several hundred seconds.

To calibrate statically, direct couple the sensor to the DVM readout using a T-connector from the "xducer" jack or use the Model 484B in the calibrate mode.

Apply pressure with a dead weight tester and take readings quickly. Release pressure after each calibration point.

For the shorter TC series, rapid step functions of pressure are generated by a pneumatic pressure pulse calibrator or dead weight tester and readout is by recorder or storage oscilloscope.

PCB offers a complete recalibration service. Consult factory for details.

8.0 MAINTENANCE

Although ICP® sensors have low output impedance and are not usually affected by moisture, in extreme environments it is good practice to protect cable connections with shrink tubing.

The miniature size and sealed construction of the 101A and 111A20 ICP® series precludes field maintenance.

®ICP is a registered trademark of PCB Piezotronics

Model Number 111A24	ICP® PRESSURE SENSOR	Revision: N ECN #: 54949

Performance	ENGLISH	SI	
Measurement Range(for ±5V output)	1,000 psi	6,895 kPa	
Useful Overrange(for ± 10V output)	2,000 psi	13,790 kPa	[1]
Sensitivity(± 0.5 mV/psi)	5.0 mV/psi	0.73 mV/kPa	
Maximum Pressure	10,000 psi	68,950 kPa	
Resolution	0.02 psi	0.14 kPa	[2]
Resonant Frequency	≥ 400 kHz	≥ 400 kHz	
Rise Time(Reflected)	≤ 1.5 µ sec	≤ 1.5 µ sec	
Low Frequency Response(- 5 %)	0.005 Hz	0.005 Hz	
Non-Linearity	≤ 2.0 % FS	≤ 2.0 % FS	[3]
Environmental			
Acceleration Sensitivity	0.002 psi/g	0.0014 kPa/(m/s²)	[2]
Temperature Range(Operating)	-100 to +275 °F	-73 to +135 °C	
Temperature Coefficient of Sensitivity	≤ 0.03 %/°F	≤ 0.054 %/°C	
Maximum Flash Temperature	3,000 °F	1,649 °C	
Maximum Vibration	2,000 g pk	19,600 m/s² pk	
Maximum Shock	20,000 g pk	196,000 m/s² pk	
Electrical			
Output Polarity(Positive Pressure)	Positive	Positive	
Discharge Time Constant(at room temp)	≥ 100 sec	≥ 100 sec	
Excitation Voltage	20 to 30 VDC	20 to 30 VDC	
Constant Current Excitation	2 to 20 mA	2 to 20 mA	
Output Impedance	≤ 100 Ohm	≤ 100 Ohm	
Output Bias Voltage	8 to 14 VDC	8 to 14 VDC	
Physical			
Sensing Geometry	Compression	Compression	
Sensing Element	Quartz	Quartz	
Housing Material	17-4 Stainless Steel	17-4 Stainless Steel	
Diaphragm	Invar	Invar	
Sealing	Welded Hermetic	Welded Hermetic	
Electrical Connector	10-32 Coaxial Jack	10-32 Coaxial Jack	
Weight	0.21 oz	6 gm	

CE

UK CA [4]

All specifications are at room temperature unless otherwise specified.
In the interest of constant product improvement, we reserve the right to change specifications without notice.
ICP® is a registered trademark of PCB Piezotronics, Inc.

OPTIONAL VERSIONS

Optional versions have identical specifications and accessories as listed for the standard model except where noted below. More than one option may be used.

CA - Ablative Coating [5]

E - Emralon coating [6]

Coating	Emralon	Emralon
Electrical Isolation	10^8 Ohm	10^8 Ohm

Supplied Accessory: Model 065A08 Isolation ring 0.250"OD x 0.218" ID x 0.027" thk anodized aluminum (3)
Supplied Accessory: Model 065A22 Isolation Seal, .250" OD x .218" ID x .015", Torlon or Vespel (3) [6][5]

J - Ground Isolated [6]

Electrical Isolation(50 V)	10^8 Ohm	10^8 Ohm

N - Negative Output Polarity [6]

S - Stainless Steel Diaphragm [6][7]

Diaphragm	316L Stainless Steel	316L Stainless Steel

W - Water Resistant Cable [6][7]

WM - Water Resistant Cable

NOTES:

[1]For +10 volt output, minimum 24 VDC supply voltage required. Negative 10 volt output may be limited by output bias.
[2]Typical.
[3]Zero-based, least-squares, straight line method.
[4]See PCB Declaration of Conformance PS023 for details.
[5]Used with optional mounting adaptor.
[6]For sensor mounted in thread adaptor, see adaptor installation drawing for supplied accessories and pressure limitations.
[7]Clamp nut installed prior to cable attachment

SUPPLIED ACCESSORIES:

Model 060A03 Clamp nut, 5/16-24-2A thd, 1/4" hex, stainless steel (1)
Model 060A05 Clamp nut M7 x 0.75-6g thd (1)
Model 065A02 Seal ring, sensor flush mount, 0.248" OD x 0.219" ID x 0.015" thk, brass (3)
Model 065A05 Seal sleeve sensor recess mount 0.248" OD x 0.221" ID x 0.240" thk 17-4 (1)
Model PCS-1AZ Sensitivity calibration at 100% and 10% of sensor range

Entered: ND	Engineer: AJA	Sales: RWM	Approved: RPF	Spec Number:
Date: 06/26/2024	Date: 06/26/2024	Date: 06/26/2024	Date: 06/26/2024	111-1240-80

PCB PIEZOTRONICS
AN AMPHENOL COMPANY
Phone: 716-684-0001
Fax: 716-684-0987
E-Mail: info@pcb.com
3425 Walden Avenue, Depew, NY 14043

PCB Piezotronics Inc. claims proprietary rights in the information disclosed hereon. Neither it nor any reproduction thereof will be disclosed to others without the written consent of PCB Piezotronics Inc.

REVISIONS		
REV	DESCRIPTION	DIN
A	UPDATED OVERALL LENGTH	53183

40623

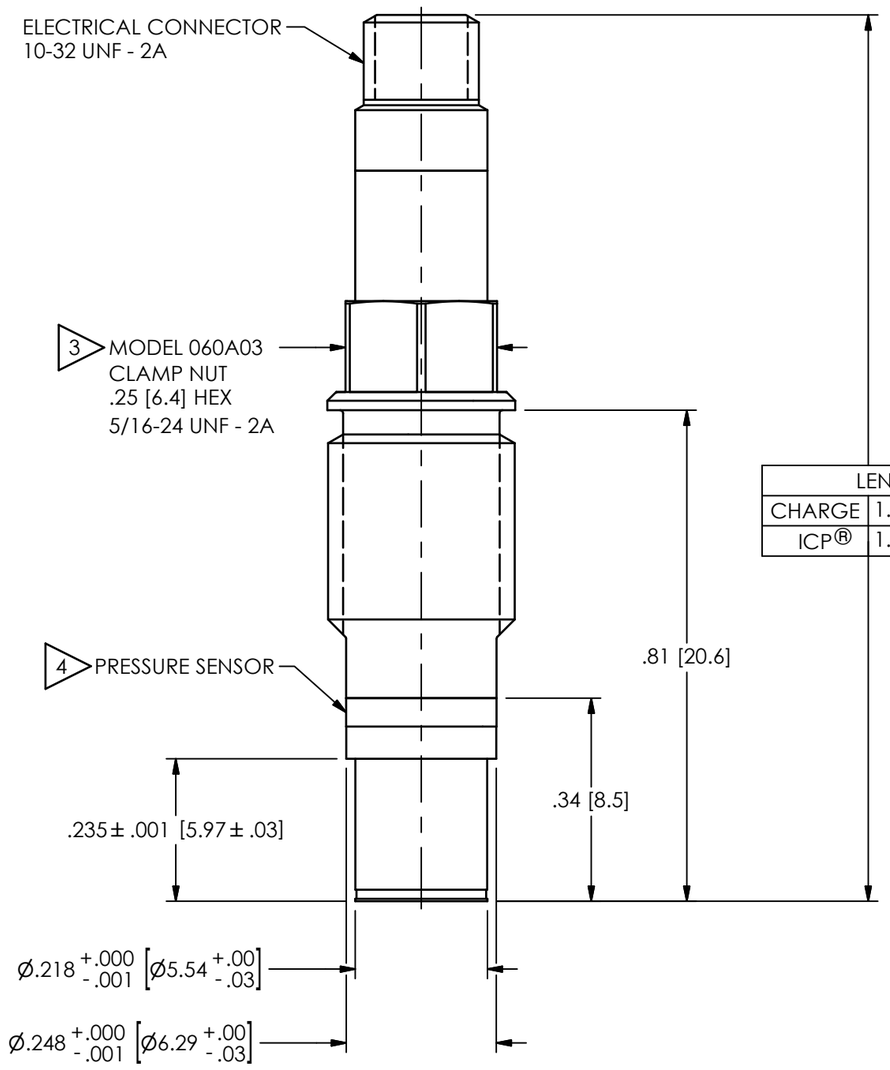

LENGTH	
CHARGE	1.32± .05 [33.5]
ICP®	1.46± .05 [37.1]

MOUNTING HOLE PREPARATION

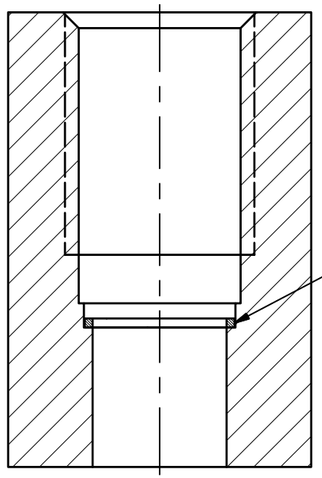

1 FLUSH INSTALLATION

Ø.221± .002 [5.61± .05] THRU
⌴Ø.250 +.003 -.000 [⌴Ø6.35 +.08 -.00] ↧.520 [13.20]
5/16-24 UNF - 2B ↧.400 [10.16]

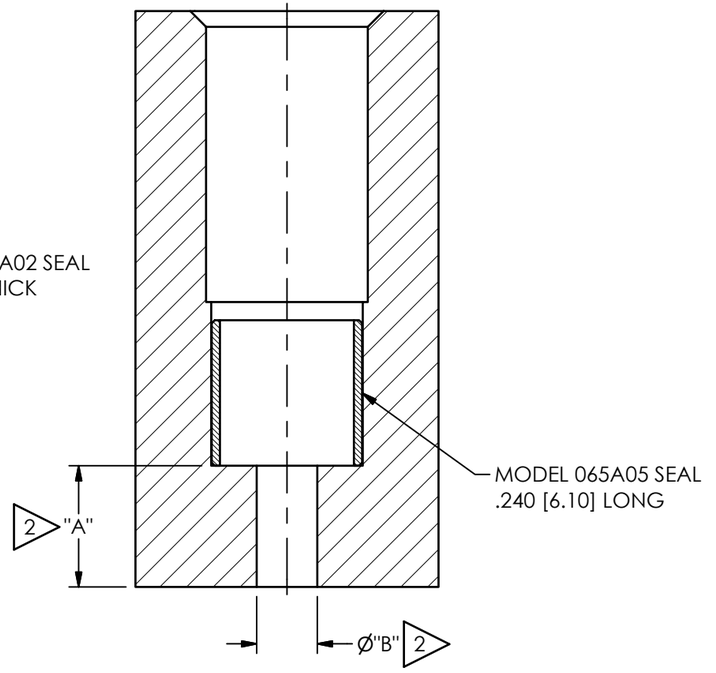

RECESSED INSTALLATION

⌴Ø.250 +.003 -.000 [⌴Ø6.35 +.08 -.00] ↧.750 [19.05]
5/16-24 UNF - 2B ↧.400 [10.16]

4 IC AMP & SENSOR ARE SEALED ASSEMBLIES & SHOULD BE RETURNED TO THE FACTORY FOR SERVICE &/OR REPAIR

3 RECOMMENDED TORQUE ON .25 [6.3] HEX: 25-35 IN-LBS [2.8-3.9 N-m]

2 DIMENSIONS "A" & "B" TO SUIT USER REQUIREMENTS

1 THESE DIMENSIONS FOR .750 [19.05] THICK WALL. C'BORE FOR THICKER WALLS

UNLESS OTHERWISE SPECIFIED TOLERANCES ARE:	
DIMENSIONS IN INCHES DECIMALS XX ±.01 XXX ±.005 ANGLES ± 2 DEGREES	DIMENSIONS IN MILLIMETERS [IN BRACKETS] DECIMALS X ± 0.3 XX ± 0.13 ANGLES ± 2 DEGREES
CABLE TOLERANCES IN ENGLISH 1"≤ LENGTH < 1' = +1"/ - 0 1'≤ LENGTH < 5' = +2"/ - 0 5'≤ LENGTH < 100' = +6"/ - 0 100'≤ LENGTH = +1'/ - 0	CABLE TOLERANCES IN METRIC 2.54cm ≤ LENGTH < 30.5cm = +2.54cm/ - 0 30.5cm ≤ LENGTH < 1.5m = +5.1cm/ - 0 1.5m ≤ LENGTH < 30.5m = +15.2cm/ - 0 30.5m ≤ LENGTH = +30.5cm/ - 0
FILLETS AND RADII .003 - .005	FILLETS AND RADII 0.07 - 0.13

DRAWN		CHECKED		ENGINEER	
NJF	09/23/22	JDM	09/23/22	AJA	09/23/22

TITLE
INSTALLATION DRAWING
ENGLISH MOUNT
MODELS 111, 112, & 113 SERIES
PRESSURE SENSOR

PCB PIEZOTRONICS
AN AMPHENOL COMPANY
3425 WALDEN AVE. DEPEW, NY 14043
(716) 684-0001 E-MAIL: sales@pcb.com

CODE IDENT. NO.	DWG. NO.
52681	40623
SCALE: 4X	SHEET 1 OF 2

PCB Piezotronics Inc. claims proprietary rights in the information disclosed hereon. Neither it nor any reproduction thereof will be disclosed to others without the written consent of PCB Piezotronics Inc.

REVISIONS		
REV	DESCRIPTION	DIN
	-SEE SHEET 1-	

40623

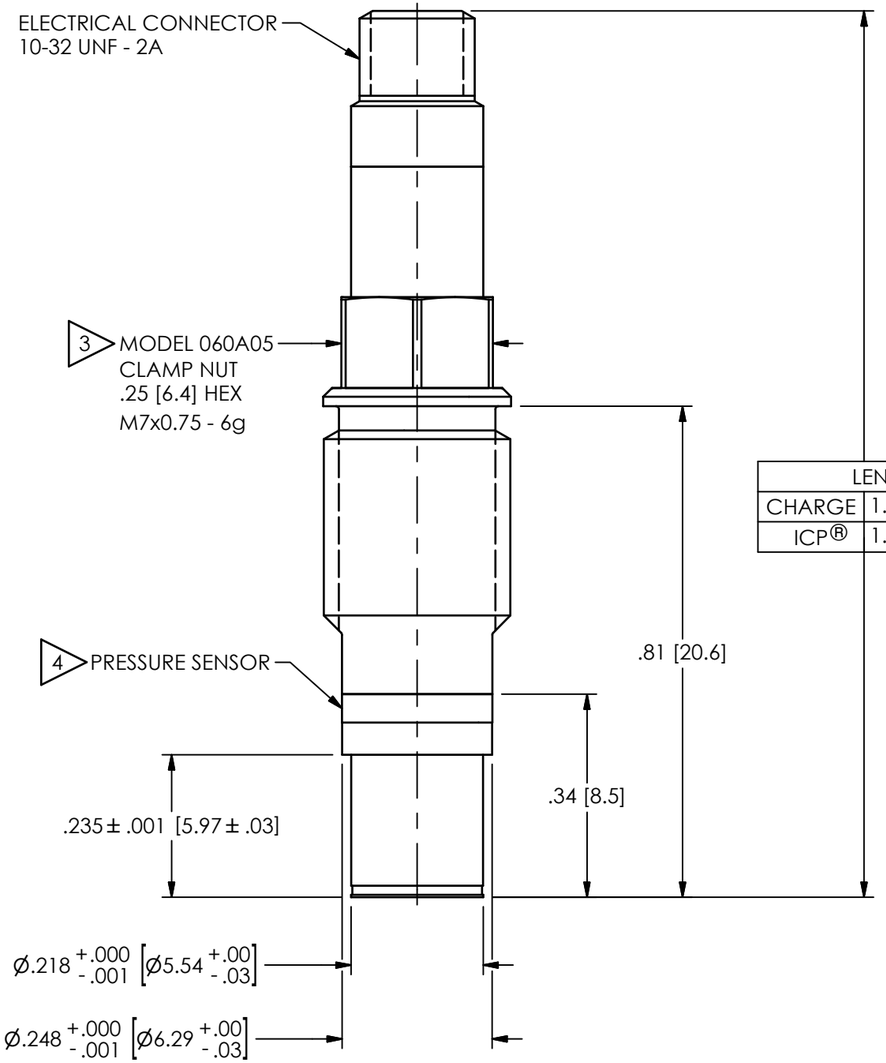

LENGTH	
CHARGE	1.32± .05 [33.5]
ICP®	1.46± .05 [37.1]

MOUNTING HOLE PREPARATION

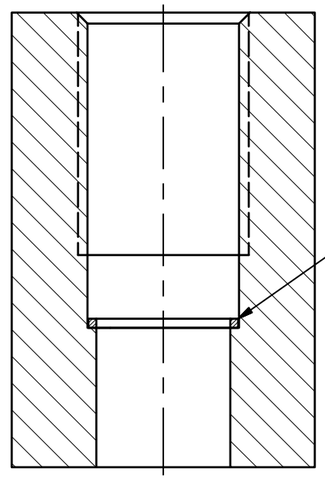

1 FLUSH INSTALLATION

Ø.221± .002 [5.61± .05] THRU
⌴Ø.250 +.003 -.000 [⌴Ø6.35 +.08 -.00] ↧.520 [13.20]
M7x0.75 - 6H ↧.400 [10.16]

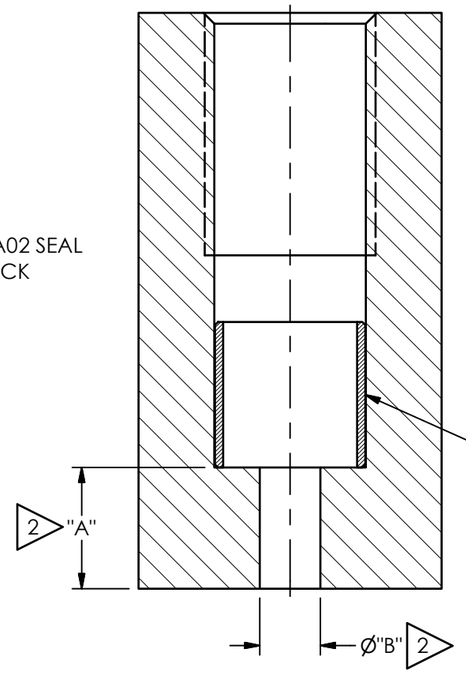

RECESSED INSTALLATION

⌴Ø.250 +.003 -.000 [⌴Ø6.35 +.08 -.00] ↧.750 [19.05]
M7x0.75 - 6H ↧.400 [10.16]

4 IC AMP & SENSOR ARE SEALED ASSEMBLIES & SHOULD BE RETURNED TO THE FACTORY FOR SERVICE &/OR REPAIR

3 RECOMMENDED TORQUE ON .25 [6.3] HEX: 25-35 IN-LBS [2.8-3.9 N-m]

2 DIMENSIONS "A" & "B" TO SUIT USER REQUIREMENTS

1 THESE DIMENSIONS FOR .750 [19.05] THICK WALL. C'BORE FOR THICKER WALLS

UNLESS OTHERWISE SPECIFIED TOLERANCES ARE:	
DIMENSIONS IN INCHES DECIMALS XX ±.01 XXX ±.005 ANGLES ± 2 DEGREES	DIMENSIONS IN MILLIMETERS [IN BRACKETS] DECIMALS X ± 0.3 XX ± 0.13 ANGLES ± 2 DEGREES
CABLE TOLERANCES IN ENGLISH 1"≤ LENGTH < 1' = +1"/ - 0 1'≤ LENGTH < 5' = +2"/ - 0 5'≤ LENGTH < 100' = +6"/ - 0 100'≤ LENGTH = +1'/ - 0	CABLE TOLERANCES IN METRIC 2.54cm ≤ LENGTH < 30.5cm = +2.54cm/ - 0 30.5cm ≤ LENGTH < 1.5m = +5.1cm/ - 0 1.5m ≤ LENGTH < 30.5m = +15.2cm/ - 0 30.5m ≤ LENGTH = +30.5cm/ - 0
FILLETS AND RADII .003 - .005	FILLETS AND RADII 0.07 - 0.13

	DRAWN		CHECKED		ENGINEER	
	NJF	09/23/22	JDM	09/23/22	AJA	09/23/22

TITLE
INSTALLATION DRAWING
METRIC MOUNT
MODELS 111, 112, & 113 SERIES
PRESSURE SENSOR

PCB PIEZOTRONICS
AN AMPHENOL COMPANY
3425 WALDEN AVE. DEPEW, NY 14043
(716) 684-0001 E-MAIL: sales@pcb.com

CODE IDENT. NO.	DWG. NO.
52681	40623
SCALE: 4X	SHEET 2 OF 2