Model CAM102B16

High frequency ICP® pressure sensor, 100 psi, 50 mV/psi, M10 x 1.0 mtg thd, accel. comp., ground isolated, ablative coating

Installation and Operating Manual

**For assistance with the operation of this product,
contact the PCB Piezotronics, Inc.**

Toll-free: 716-684-0001
24-hour SensorLine: 716-684-0001
Fax: 716-684-0987
E-mail: info@pcb.com
Web: www.pcb.com

Repair and Maintenance

PCB guarantees Total Customer Satisfaction through its "Lifetime Warranty Plus" on all Platinum Stock Products sold by PCB and through its limited warranties on all other PCB Stock, Standard and Special products. Due to the sophisticated nature of our sensors and associated instrumentation, **field servicing and repair is not recommended and, if attempted, will void the factory warranty**.

Beyond routine calibration and battery replacements where applicable, our products require no user maintenance. Clean electrical connectors, housings, and mounting surfaces with solutions and techniques that will not harm the material of construction. Observe caution when using liquids near devices that are not hermetically sealed. Such devices should only be wiped with a dampened cloth—never saturated or submerged.

In the event that equipment becomes damaged or ceases to operate, our Application Engineers are here to support your troubleshooting efforts 24 hours a day, 7 days a week. Call or email with model and serial number as well as a brief description of the problem.

Calibration

Routine calibration of sensors and associated instrumentation is necessary to maintain measurement accuracy. We recommend calibrating on an annual basis, after exposure to any extreme environmental influence, or prior to any critical test.

PCB Piezotronics is an ISO-9001 certified company whose calibration services are accredited by A2LA to ISO/IEC 17025, with full traceability to SI through N.I.S.T. In addition to our standard calibration services, we also offer specialized tests, including: sensitivity at elevated or cryogenic temperatures, phase response, extended high or low frequency response, extended range, leak testing, hydrostatic pressure testing, and others. For more information, contact your local PCB Piezotronics distributor, sales representative, or factory customer service representative.

Returning Equipment

If factory repair is required, our representatives will provide you with a Return Material Authorization (RMA) number, which we use to reference any information you have already provided and expedite the repair process. This number should be clearly marked on the outside of all returned package(s) and on any packing list(s) accompanying the shipment.

Contact Information

PCB Piezotronics, Inc.
3425 Walden Ave.
Depew, NY14043 USA
Toll-free: (800) 828-8840
24-hour SensorLine: (716) 684-0001
General inquiries: info@pcb.com
Repair inquiries: rma@pcb.com

For a complete list of distributors, global offices and sales representatives, visit our website, www.pcb.com.

Safety Considerations

This product is intended for use by qualified personnel who recognize shock hazards and are familiar with the precautions required to avoid injury. While our equipment is designed with user safety in mind, the protection provided by the equipment may be impaired if equipment is used in a manner not specified by this manual.

Discontinue use and contact our 24-Hour Sensorline if:

- Assistance is needed to safely operate equipment
- Damage is visible or suspected
- Equipment fails or malfunctions

For complete equipment ratings, refer to the enclosed specification sheet for your product.

Definition of Terms and Symbols

The following symbols may be used in this manual:



DANGER
Indicates an immediate hazardous situation, which, if not avoided, may result in death or serious injury.



CAUTION
Refers to hazards that could damage the instrument.



NOTE
Indicates tips, recommendations and important information. The notes simplify processes and contain additional information on particular operating steps.

The following symbols may be found on the equipment described in this manual:



This symbol on the unit indicates that high voltage may be present. Use standard safety precautions to avoid personal contact with this voltage.



This symbol on the unit indicates that the user should refer to the operating instructions located in the manual.



This symbol indicates safety, earth ground.

PCB工业监视和测量设备 - 中国RoHS2公布表

PCB Industrial Monitoring and Measuring Equipment - China RoHS 2 Disclosure Table

部件名称	有害物质					
	铅 (Pb)	汞 (Hg)	镉 (Cd)	六价铬 (Cr(VI))	多溴联苯 (PBB)	多溴二苯醚 (PBDE)
住房	O	O	O	O	O	O
PCB板	X	O	O	O	O	O
电气连接器	O	O	O	O	O	O
压电晶体	X	O	O	O	O	O
环氧	O	O	O	O	O	O
铁氟龙	O	O	O	O	O	O
电子	O	O	O	O	O	O
厚膜基板	O	O	X	O	O	O
电线	O	O	O	O	O	O
电缆	X	O	O	O	O	O
塑料	O	O	O	O	O	O
焊接	X	O	O	O	O	O
铜合金/黄铜	X	O	O	O	O	O

本表格依据 SJ/T 11364 的规定编制。

O： 表示该有害物质在该部件所有均质材料中的含量均在 GB/T 26572 规定的限量要求以下。

X： 表示该有害物质至少在该部件的某一均质材料中的含量超出 GB/T 26572 规定的限量要求。

铅是欧洲RoHS指令2011/65/ EU附件三和附件四目前由于允许的豁免。

CHINA RoHS COMPLIANCE

Component Name	Hazardous Substances					
	Lead (Pb)	Mercury (Hg)	Cadmium (Cd)	Chromium VI Compounds (Cr(VI))	Polybrominated Biphenyls (PBB)	Polybrominated Diphenyl Ethers (PBDE)
Housing	O	O	O	O	O	O
PCB Board	X	O	O	O	O	O
Electrical Connectors	O	O	O	O	O	O
Piezoelectric Crystals	X	O	O	O	O	O
Epoxy	O	O	O	O	O	O
Teflon	O	O	O	O	O	O
Electronics	O	O	O	O	O	O
Thick Film Substrate	O	O	X	O	O	O
Wires	O	O	O	O	O	O
Cables	X	O	O	O	O	O
Plastic	O	O	O	O	O	O
Solder	X	O	O	O	O	O
Copper Alloy/Brass	X	O	O	O	O	O

This table is prepared in accordance with the provisions of SJ/T 11364.

O: Indicates that said hazardous substance contained in all of the homogeneous materials for this part is below the limit requirement of GB/T 26572.

X: Indicates that said hazardous substance contained in at least one of the homogeneous materials for this part is above the limit requirement of GB/T 26572.
Lead is present due to allowed exemption in Annex III or Annex IV of the European RoHS Directive 2011/65/EU.

OPERATION MANUAL FOR
QUARTZ PRESSURE SENSORS
SERIES 102
SERIES 113

1.0 INTRODUCTION

This series of miniature dynamic pressure sensors is specifically designed for shock tube and blast wave measurements and for other applications requiring very high frequency, near non-resonant response.

The term used to describe the transient response of this model series is "Frequency Tailoring" and it encompasses several mechanical and electrical design features coupled with stringent in-process fabrication/test procedures with heavy emphasis on the shock tube as a tool.

2.0 DESCRIPTION

Although this series consists of sensors with three basic mechanical configurations and six different sensitivities, each model is basically similar in internal design.

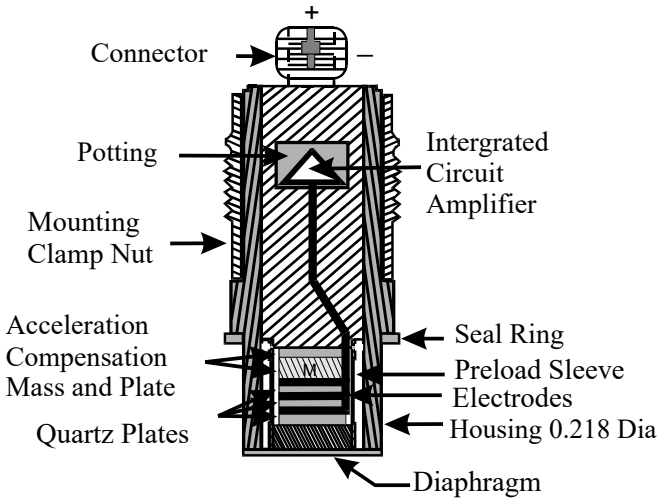

Typical ICP® Probe Style Sensor

Each utilizes the acceleration-compensated Series 113 quartz piezoelectric element coupled to a source follower type miniature electronics. (See "General Guide to ICP® Instrumentation," G-0001, for a detailed description of the ICP® concept.)

The figure above shows the components of the basic ICP® probe, i.e. the piezoelectric element and the ICP® source follower amplifier. These components are joined together as an inseparable sealed assembly at the factory. Disassembly should not be attempted in the field.

Series 113B2x are in a probe configuration and are installed with a hollow clamp nut with 5/16-24 or M7x0.75 external threads. The housing of these models is at electrical ground potential.

Series 113B3x are similar to the B2x Series with an additional feature; all Invar construction. The all Invar sensors are designed to have minimal susceptibility to thermal transient events and are specifically suited for high-temperature shock and blast measurements.

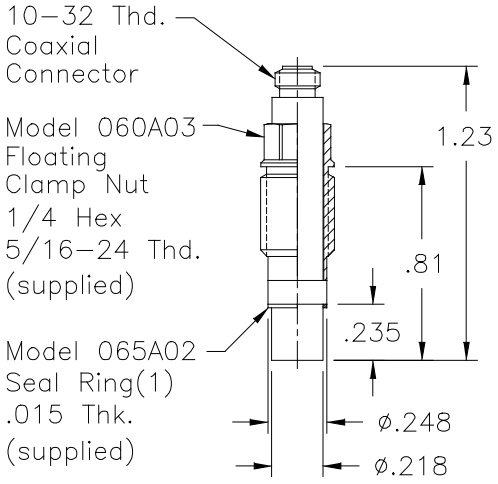

Series 113: Probe Style Sensor

Series 102 consist of the basic 113 Series probe, as in the above mentioned series, mounted in a 3/8-24 or M10 x 1.0 threaded mounting adaptor. The probe is installed at the factory in an "off ground" configuration, i.e. the probe body is insulated from the external mounting adaptor body.

The Model 102A12 utilizes the same inner probe design as the above two designs but in a 3/8-24 or

Drawing Number: 21075
Revision: D
ECN Number: 53304

M10x 1.0 threaded adaptor with floating seal to allow adjustment of diaphragm mounting depth where it is necessary to adapt to various wall thicknesses. These models are supplied only as low-pressure (250 psi and 100 psi) sensors and are also "off ground".

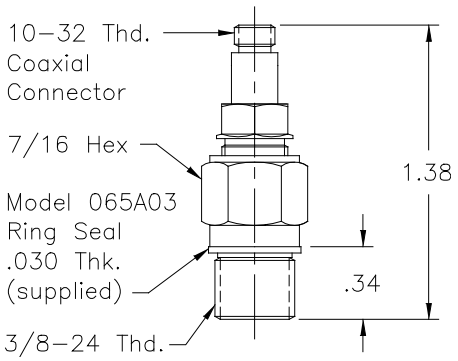

Series 102: Thread Mount Design, Ground-Isolated Sensor

3.0 INSTALLATION

This manual contains outline and installation information for your specific model.

Prepare mounting ports in accordance with instructions given in specific installation drawings, paying particular attention to sealing surfaces. These surfaces must be smooth and free from chatter marks, nicks and other irregularities which could preclude a pressure tight seal.

To fully realize the high-frequency response capabilities of this sensor series, flush mounting of the diaphragm must be used.

In some cases, where flash temperatures such as those generated by blasts and shock fronts are present, it may be necessary to thermally insulate the diaphragm to minimize signals generated by these effects.

Common black vinyl electrical tape has been found to be an effective insulating material in many cases. One or more layers may be used across the end of diaphragm and adaptor.

A silicone rubber coating approximately .010" thick has also been proven effective in many applications. General Electric RTV type 106 is recommended. Apply the rubber coating to the surface of the diaphragm and allow it to cure in accordance with the manufacturer's instructions. (If you have ordered the CA option, ablative coated models, further protection will not be necessary.)

Although ICP® sensors have low-output impedance and in general are not affected by moisture, in extreme environments it is good practice to protect cable connections with shrink tubing.

It is not necessary to use low-noise cable with this sensor series. In fact, an optional Model 070B09 Solder Connector Adaptor allows the use of ordinary two-wire cable if desired.

4.0 OPERATION

It is only necessary to supply the sensor with a 2 to 20 mA constant current at +20 to +30 VDC through a current-regulating diode or equivalent circuit. (See guide G-0001for powering and signal utilization information pertaining to all ICP® instrumentation).

Most of the signal conditioners manufactured by PCB have an adjustable current feature allowing a choice of input currents from 2 to 20 mA. In general, for lowest noise (best resolution), choose the lower current ranges. For driving long cables (to several thousand feet), use higher current, up to 20 mA maximum.

To operate system using a PCB signal conditioner:

1. Switch power on.

2. Wait several minutes for the IC amplifier to turn on and stabilize.

3. Proceed with measurements.

5.0 POLARITY

The sensors in this series produce a positive-going output voltage for increasing pressure input.

Drawing Number: 21075
Revision: D
ECN Number: 53304

6.0 LOW-FREQUENCY RESPONSE

The low-frequency response of an ICP® system is determined by:

1. The discharge T.C. of the sensor
2. If AC-coupled at power unit, the coupling time constant.

Consult Section 7.0 in guide G-0001 detailed explanation of low-frequency characteristics of ICP® instruments.

7.0 HIGH-FREQUENCY RESPONSE

Frequency tailoring and the very high-natural frequency of the sensor give an extremely wide usable frequency range (beyond 100 kHz). Exceptionally fast response time (1 µsec) and clean, virtually non-resonant response to rapid step functions are also features of these sensors. As mentioned previously, the diaphragm must be flush-mounted to fully realize the high-frequency response capabilities of this series.

8.0 CALIBRATION

Piezoelectric sensors are dynamic devices, but static calibration means can be employed if discharge time constants are sufficiently long. Generally, static methods are not employed below several hundred seconds time constant.

To employ static means, direct couple the sensor to the DVM readout using a T-Connector from the sensor jack or use the Model 484B06 or 482C24 in the calibrate mode. Apply pressure with dead weight tester and take readings quickly. Release pressure after each calibration point.

For the shorter time constant, rapid step functions of pressure are generated by a pneumatic pressure pulse calibrator or dead weight tester and readout is by recorder or storage oscilloscope.

PCB offers a complete calibration service. Consult factory for details.

®ICP is a registered trademark of PCB Piezotronics

Drawing Number: 21075
Revision: D
ECN Number: 53304

Model Number 102B16	ICP® PRESSURE SENSOR	Revision: D ECN #: 54949

Performance	ENGLISH	SI	
Measurement Range(for ±5V output)	100 psi	689.4 kPa	
Useful Overrange(for ± 10V output)	200 psi	1378.8 kPa	[1]
Sensitivity(± 5 mV/psi)	50 mV/psi	7.25 mV/kPa	
Maximum Pressure	1,000 psi	6,895 kPa	
Resolution	1 mpsi	0.007 kPa	[2]
Resonant Frequency	≥ 500 kHz	≥ 500 kHz	
Rise Time(Reflected)	≤ 1.0 µ sec	≤ 1.0 µ sec	
Low Frequency Response(- 5 %)	0.5 Hz	0.5 Hz	
Non-Linearity	≤ 1.0 % FS	≤ 1.0 % FS	[3]
Environmental			
Acceleration Sensitivity	0.002 psi/g	0.0014 kPa/(m/s²)	[2]
Temperature Range(Operating)	-100 to +275 °F	-73 to +135 °C	
Temperature Coefficient of Sensitivity	≤ 0.03 %/°F	≤ 0.054 %/°C	
Maximum Flash Temperature	3,000 °F	1,650 °C	
Maximum Vibration	2,000 g pk	19,600 m/s² pk	
Maximum Shock	20,000 g pk	196,000 m/s² pk	
Electrical			
Output Polarity(Positive Pressure)	Positive	Positive	
Discharge Time Constant(at room temp)	≥ 1.0 sec	≥ 1.0 sec	
Excitation Voltage	20 to 30 VDC	20 to 30 VDC	
Constant Current Excitation	2 to 20 mA	2 to 20 mA	
Output Impedance	< 100 Ohm	< 100 Ohm	
Output Bias Voltage	8 to 14 VDC	8 to 14 VDC	
Electrical Isolation	10^8 Ohm	10^8 Ohm	
Physical			
Sensing Geometry	Compression	Compression	
Sensing Element	Quartz	Quartz	
Housing Material	Stainless Steel	Stainless Steel	
Diaphragm	Invar	Invar	
Sealing	Welded Hermetic	Welded Hermetic	
Electrical Connector	10-32 Coaxial Jack	10-32 Coaxial Jack	
Weight	0.50 oz	14.3 gm	

CE

UK CA [4]

All specifications are at room temperature unless otherwise specified.
In the interest of constant product improvement, we reserve the right to change specifications without notice.
ICP® is a registered trademark of PCB Piezotronics, Inc.

OPTIONAL VERSIONS

Optional versions have identical specifications and accessories as listed for the standard model except where noted below. More than one option may be used.

CA - Ablative Coating

M - Metric Mount
Supplied Accessory: Model 065A40 Seal ring 0.435" OD x 0.397" ID x 0.030" thk brass (3) replaces Model 065A03

N - Negative Output Polarity

S - Stainless Steel Diaphragm

Diaphragm	316L Stainless Steel	316L Stainless Steel

W - Water Resistant Cable

NOTES:

[1]For +10 volt output, minimum 24 VDC supply voltage required. Negative 10 volt output may be limited by output bias.
[2]Typical.
[3]Zero-based, least-squares, straight line method.
[4]See PCB Declaration of Conformance PS023 for details.

SUPPLIED ACCESSORIES:

Model 065A03 Seal ring 0.435" OD x 0.377" ID x 0.030" thk brass (3)
Model PCS-1AZ Sensitivity calibration at 100% and 10% of sensor range

Entered: ND	Engineer: AJA	Sales: RWM	Approved: RPF	Spec Number:
Date: 06/25/2024	Date: 06/25/2024	Date: 06/25/2024	Date: 06/25/2024	40740

PCB PIEZOTRONICS
AN AMPHENOL COMPANY
Phone: 716-684-0001
Fax: 716-684-0987
E-Mail: info@pcb.com
3425 Walden Avenue, Depew, NY 14043

PCB Piezotronics Inc. claims proprietary rights in the information disclosed hereon. Neither it nor any reproduction thereof will be disclosed to others without the written consent of PCB Piezotronics Inc.

6449

REVISIONS		
REV	DESCRIPTION	DIN
E	UPDATED NOTES	54569

ABLATIVE INSTALLATION

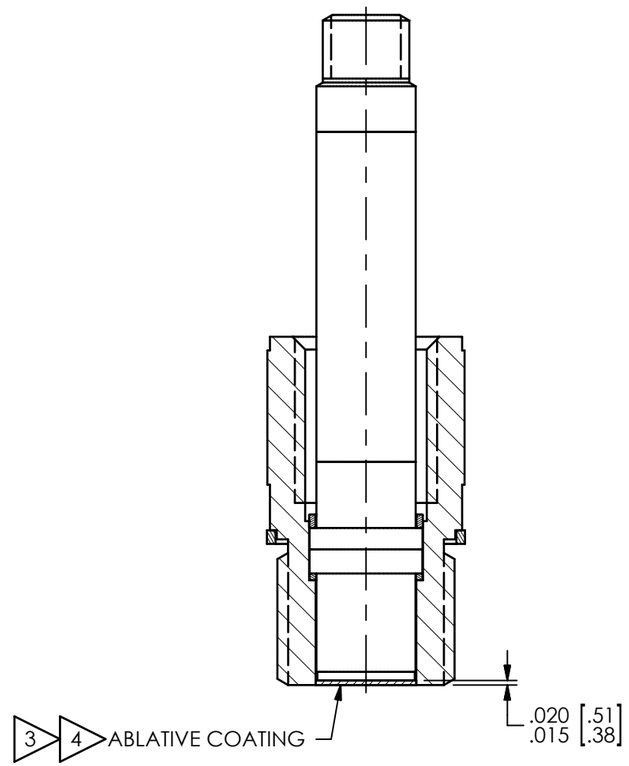

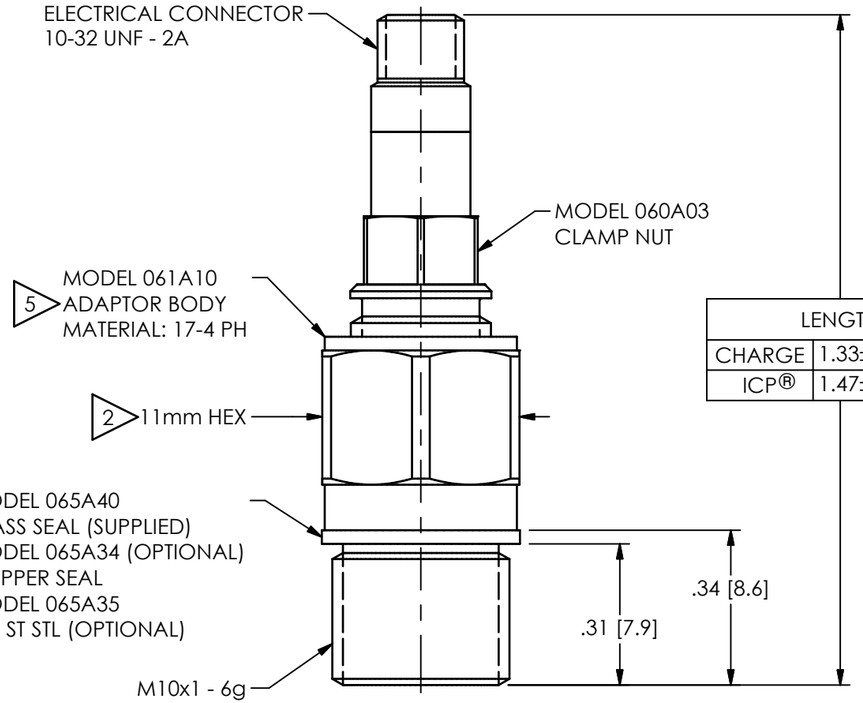

MOUNTING HOLE PREPARATION:

M10x1 - 6H THRU

⌴Ø.437± .001 [11.10± .03] ↧.030 [.76]

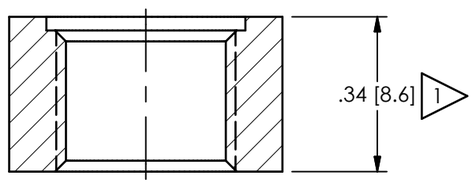

5 ADAPTOR MAY BE PURCHASED SEPARATELY: 061A10 (17-4PH) OR 061A11 (316L)

4 BLACK VINYL ELECTRICIANS TAPE HAS BEEN FOUND TO BE AN EFFECTIVE ABLATIVE MATERIAL, AS IS DC-4 SILICON GREASE

3 "CA" OPTION ONLY

2 MOUNTING TORQUE ON 11mm HEX: 5-8 FT-LBS [6.78-10.85 Nm]

1 ABOVE INSTALLATION SHOWN FOR WALL THICKNESS OF .34 [8.6]. ⌴ THICKER WALLS Ø.75 [19.1] TO CLEAR 11mm HEX AND ALLOW FOR SOCKET WRENCH

UNLESS OTHERWISE SPECIFIED TOLERANCES ARE:	
DIMENSIONS IN INCHES DECIMALS XX ±.01 XXX ±.005 ANGLES ± 2 DEGREES	DIMENSIONS IN MILLIMETERS [IN BRACKETS] DECIMALS X ± 0.3 XX ± 0.13 ANGLES ± 2 DEGREES
CABLE TOLERANCES IN ENGLISH 1"≤ LENGTH < 1' = +1"/ - 0 1'≤ LENGTH < 5' = +2"/ - 0 5'≤ LENGTH < 100' = +6"/ - 0 100'≤ LENGTH = +1'/ - 0	CABLE TOLERANCES IN METRIC 2.54cm ≤ LENGTH < 30.5cm = +2.54cm/ - 0 30.5cm ≤ LENGTH < 1.5m = +5.1cm/ - 0 1.5m ≤ LENGTH < 30.5m = +15.2cm/ - 0 30.5m ≤ LENGTH = +30.5cm/ - 0
FILLETS AND RADII .003 - .005	FILLETS AND RADII 0.07 - 0.13

DRAWN		CHECKED		ENGINEER	
NJF	02/02/24	JDM	02/02/24	MJB	02/02/24

TITLE

INSTALLATION DRAWING
MODELS (M)101A, (M)102A,
(M)102B, & 061A10/A11
PRESSURE SENSOR

PCB PIEZOTRONICS
AN AMPHENOL COMPANY
3425 WALDEN AVE. DEPEW, NY 14043
(716) 684-0001 E-MAIL: sales@pcb.com

CODE IDENT. NO.	SHEET	DWG. NO.
52681	B	6449
SCALE: 3X		SHEET 1 OF 1