Cat. No. W226-E1-7

SYSMAC
CQM1
Programmable Controllers

OPERATION MANUAL

OMRON

CQM1 Programmable Controllers

Operation Manual

Revised September 2000

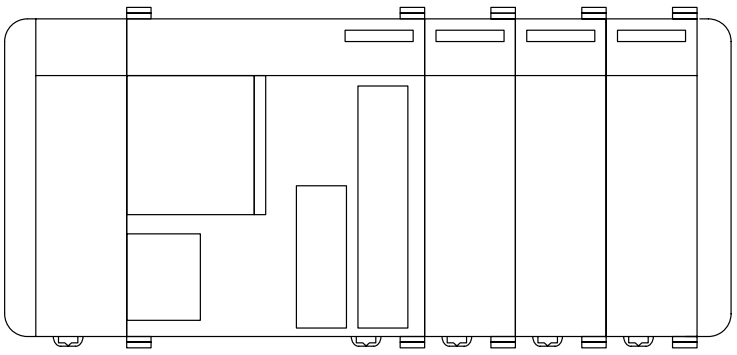

Notice:

OMRON products are manufactured for use according to proper procedures by a qualified operator and only for the purposes described in this manual.

The following conventions are used to indicate and classify precautions in this manual. Always heed the information provided with them. Failure to heed precautions can result in injury to people or damage to property.

⚠ DANGER Indicates an imminently hazardous situation which, if not avoided, will result in death or serious injury.

⚠ WARNING Indicates a potentially hazardous situation which, if not avoided, could result in death or serious injury.

⚠ Caution Indicates a potentially hazardous situation which, if not avoided, may result in minor or moderate injury, or property damage.

OMRON Product References

All OMRON products are capitalized in this manual. The word “Unit” is also capitalized when it refers to an OMRON product, regardless of whether or not it appears in the proper name of the product.

The abbreviation “Ch,” which appears in some displays and on some OMRON products, often means “word” and is abbreviated “Wd” in documentation in this sense.

The abbreviation “PC” means Programmable Controller and is not used as an abbreviation for anything else.

Visual Aids

The following headings appear in the left column of the manual to help you locate different types of information.

Note Indicates information of particular interest for efficient and convenient operation of the product.

1, 2, 3... 1. Indicates lists of one sort or another, such as procedures, checklists, etc.

© OMRON, 1993

All rights reserved. No part of this publication may be reproduced, stored in a retrieval system, or transmitted, in any form, or by any means, mechanical, electronic, photocopying, recording, or otherwise, without the prior written permission of OMRON.

No patent liability is assumed with respect to the use of the information contained herein. Moreover, because OMRON is constantly striving to improve its high-quality products, the information contained in this manual is subject to change without notice. Every precaution has been taken in the preparation of this manual. Nevertheless, OMRON assumes no responsibility for errors or omissions. Neither is any liability assumed for damages resulting from the use of the information contained in this publication.

TABLE OF CONTENTS

PRECAUTIONS . . . . . .

1 Intended Audience . . . . . .
2 General Precautions . . . . . .
3 Safety Precautions . . . . . .
4 Operating Environment Precautions . . . . . .
5 Application Precautions . . . . . .
6 Conformance to EC Directives . . . . . .

SECTION 1
Introduction . . . . . .

1-1 Overview . . . . . .
1-2 System Configuration . . . . . .
1-3 CQM1 Features . . . . . .

SECTION 2
Units and Installation . . . . . .

2-1 CPU Unit . . . . . .
2-2 Power Supply Unit . . . . . .
2-3 I/O Units . . . . . .
2-4 PC Assembly and Installation . . . . . .
2-5 Wiring and Connections . . . . . .
2-6 Unit Specifications . . . . . .

SECTION 3
The LSS, SSS, SYSMAC-CPT, and Programming Consoles . . . . . .

3-1 LSS Capabilities . . . . . .
3-2 SSS Capabilities . . . . . .
3-3 SYSMAC-CPT Precautions . . . . . .
3-4 Compatible Programming Consoles . . . . . .
3-5 Preparation for Operation . . . . . .
3-6 Programming Console Operations . . . . . .

SECTION 4
Troubleshooting . . . . . .

4-1 Introduction . . . . . .
4-2 Programming Console Operation Errors . . . . . .
4-3 Programming Errors . . . . . .
4-4 User-defined Errors . . . . . .
4-5 Operating Errors . . . . . .
4-6 Troubleshooting Flowcharts . . . . . .

Appendices

A Standard Models . . . . . .
B Battery Service Life . . . . . .
C SYSMAC-CPT Precautions . . . . . .

Glossary . . . . . .

Index . . . . . .

Revision History . . . . . .

About this Manual:

The CQM1 is a compact, high-speed Programmable Controller (PC) designed for advanced control operations in systems requiring from 16 to 256 I/O points per PC. There are two manuals describing the setup and operation of the CQM1: The *CQM1 Operation Manual* (this manual) and the *CQM1 Programming Manual*. Also available is the *CQM1-series Dedicated I/O Units Operation Manual*.

This manual describes the system configuration and installation of the CQM1 and provides an basic explanation of operating procedures for the Programming Consoles and introduces the capabilities of the Ladder Support Software (LSS) and SYSMAC Support Software (SSS). Read this manual first to acquaint yourself with the CQM1.

The *CQM1 Programming Manual* provides detailed descriptions of the CQM1's programming functions. The *Ladder Support Software Operation Manual* and the *SYSMAC Support Software Operation Manual: C-series PCs* provides descriptions of LSS and SSS operations for the CQM1 and C-series PCs. Use Version-3 LSS or a later version for CQM1 operation.

Please read this manual carefully and be sure you understand the information provide before attempting to install and operate the CQM1.

Section 1 gives a brief overview of the steps involved in developing of a CQM1 System, describes the possible system configurations, and describes the CQM1's special features and functions.

Section 2 describes the Units that go together to create a CQM1 PC and provides information on switch settings, installation, and hardware maintenance. Technical specifications of the Units are also provided.

Section 3 describes LSS/SSS capabilities, how to connect the Programming Console, and how to perform the various Programming Console operations.

Section 4 describes how to diagnose and correct the hardware and software errors that can occur during PC operation.

The ***Appendix*** provides tables of CQM1 Units and related products.

⚠WARNING Failure to read and understand the information provided in this manual may result in personal injury or death, damage to the product, or product failure. Please read each section in its entirety and be sure you understand the information provided in the section and related sections before attempting any of the procedures or operations given.

PRECAUTIONS

This section provides general precautions for using the Programmable Controller (PC) and related devices.

The information contained in this section is important for the safe and reliable application of the Programmable Controller. You must read this section and understand the information contained before attempting to set up or operate a PC system.

1 Intended Audience . . . . . .
2 General Precautions . . . . . .
3 Safety Precautions . . . . . .
4 Operating Environment Precautions . . . . . .
5 Application Precautions . . . . . .
6 Conformance to EC Directives . . . . . .

1 Intended Audience

This manual is intended for the following personnel, who must also have knowledge of electrical systems (an electrical engineer or the equivalent).

- Personnel in charge of installing FA systems.
- Personnel in charge of designing FA systems.
- Personnel in charge of managing FA systems and facilities.

2 General Precautions

The user must operate the product according to the performance specifications described in the operation manuals.

Before using the product under conditions which are not described in the manual or applying the product to nuclear control systems, railroad systems, aviation systems, vehicles, combustion systems, medical equipment, amusement machines, safety equipment, and other systems, machines, and equipment that may have a serious influence on lives and property if used improperly, consult your OMRON representative.

Make sure that the ratings and performance characteristics of the product are sufficient for the systems, machines, and equipment, and be sure to provide the systems, machines, and equipment with double safety mechanisms.

This manual provides information for programming and operating the Unit. Be sure to read this manual before attempting to use the Unit and keep this manual close at hand for reference during operation.

⚠ WARNING It is extremely important that a PC and all PC Units be used for the specified purpose and under the specified conditions, especially in applications that can directly or indirectly affect human life. You must consult with your OMRON representative before applying a PC System to the above-mentioned applications.

3 Safety Precautions

⚠ WARNING Do not attempt to take any Unit apart while the power is being supplied. Doing so may result in electric shock.

⚠ WARNING Do not touch any of the terminals while the power is being supplied. Doing so may result in electric shock.

⚠ WARNING Do not attempt to disassemble, repair, or modify any Units. Any attempt to do so may result in malfunction, fire, or electric shock.

⚠ Caution Tighten the screws on the terminal block of the AC Power Supply Unit to the torque specified in the manual. Loose screws may result in burning or malfunction.

4 Operating Environment Precautions

⚠ Caution Do not operate the control system in the following locations:

- Locations subject to direct sunlight.
- Locations subject to temperatures or humidity outside the range specified in the specifications.

- Locations subject to condensation as the result of severe changes in temperature.
- Locations subject to corrosive or flammable gases.
- Locations subject to dust (especially iron dust) or salts.
- Locations subject to exposure to water, oil, or chemicals.
- Locations subject to shock or vibration.

⚠ Caution Take appropriate and sufficient countermeasures when installing systems in the following locations:

- Locations subject to static electricity or other forms of noise.
- Locations subject to strong electromagnetic fields.
- Locations subject to possible exposure to radioactivity.
- Locations close to power supplies.

⚠ Caution The operating environment of the PC System can have a large effect on the longevity and reliability of the system. Improper operating environments can lead to malfunction, failure, and other unforeseeable problems with the PC System. Be sure that the operating environment is within the specified conditions at installation and remains within the specified conditions during the life of the system.

5 Application Precautions

Observe the following precautions when using the PC System.

⚠ WARNING Always heed these precautions. Failure to abide by the following precautions could lead to serious or possibly fatal injury.

- Always connect to a ground of 100 Ω or less when installing the Units. Not connecting to a ground of 100 Ω or less may result in electric shock.
- Always turn OFF the power supply to the PC before attempting any of the following. Not turning OFF the power supply may result in malfunction or electric shock.
  - Mounting or dismounting Power Supply Units, I/O Units, CPU Units, Memory Cassettes, or any other Units.
  - Assembling the Units.
  - Setting DIP switches or rotary switches.
  - Connecting or wiring the cables.
  - Connecting or disconnecting the connectors.

⚠ Caution Failure to abide by the following precautions could lead to faulty operation of the PC or the system, or could damage the PC or PC Units. Always heed these precautions.

- Fail-safe measures must be taken by the customer to ensure safety in the event of incorrect, missing, or abnormal signals caused by broken signal lines, momentary power interruptions, or other causes.
- Interlock circuits, limit circuits, and similar safety measures in external circuits (i.e., not in the Programmable Controller) must be provided by the customer.
- Always use the power supply voltage specified in the manual. An incorrect voltage may result in malfunction or burning.
- Take appropriate measures to ensure that the specified power with the rated voltage and frequency is supplied. Be particularly careful in places where the power supply is unstable. An incorrect power supply may result in malfunction.

- Install external breakers and take other safety measures against short-circuiting in external wiring. Insufficient safety measures against short-circuiting may result in burning.
- Do not apply voltages to the Input Units in excess of the rated input voltage. Excess voltages may result in burning.
- Do not apply voltages or connect loads to the Output Units in excess of the maximum switching capacity. Excess voltage or loads may result in burning.
- Disconnect the functional ground terminal when performing withstand voltage tests. Not disconnecting the functional ground terminal may result in burning.
- Install and wire the Unit properly as specified in the manual. Improper installation of the Unit may result in malfunction.
- Be sure that all the mounting screws, terminal screws, and cable connector screws are tightened to the torque specified in the relevant manuals. Incorrect tightening torque may result in malfunction.
- Leave the label attached to the Unit when wiring. Removing the label may result in malfunction.
- Remove the label after the completion of wiring to ensure proper heat dissipation. Leaving the label attached may result in malfunction.
- Use crimp terminals for wiring. Do not connect bare stranded wires directly to terminals. Connection of bare stranded wires may result in burning.
- Double-check all the wiring before turning ON the power supply. Incorrect wiring may result in burning.
- Mount the Unit only after checking the terminal block completely.
- Be sure that the terminal blocks, Memory Units, expansion cables, and other items with locking devices are properly locked into place. Improper locking may result in malfunction.
- Check the user program for proper execution before actually running it on the Unit. Not checking the program may result in an unexpected operation.
- Confirm that no adverse effect will occur in the system before attempting any of the following. Not doing so may result in an unexpected operation.
  - Changing the operating mode of the PC.
  - Force-setting/force-resetting any bit in memory.
  - Changing the present value of any word or any set value in memory.
- Do not pull on the cables or bend the cables beyond their natural limit. Doing either of these may break the cables.
- When replacing parts, be sure to confirm that the rating of a new part is correct. Not doing so may result in malfunction or burning.
- Before touching a Unit, be sure to first touch a grounded metallic object in order to discharge any static built-up. Not doing so may result in malfunction or damage.

6 Conformance to EC Directives

The CQM1 PCs comply with EC Directives. To ensure that the machine or device in which a CQM1 PC is used complies with EC Directives, the PC must be installed as follows:

1, 2, 3...

1. The PC must be installed within a control panel.
2. Reinforced insulation or double insulation must be used for the DC power supplies used for the communications and I/O power supplies.
3. PCs complying with EC Directives also conform to the Common Emission Standard (EN50081-2). When a PC is built into a machine, however, noise can be generated by switching devices using relay outputs and cause the

overall machine to fail to meet the Standard. If this occurs, surge killers must be connected or other measures taken external to the PC.

The following methods represent typical methods for reducing noise, and may not be sufficient in all cases. Required countermeasures will vary depending on the devices connected to the control panel, wiring, the configuration of the system, and other conditions.

Determining if Countermeasures Are Required

Refer to EN50081-2 for more details.

Countermeasures are not required if the frequency of load switching for the whole system including the PC is less than 5 times per minute.

Countermeasures are required if the frequency of load switching for the whole system including the PC is more than 5 times per minute.

Countermeasure Examples

When switching an inductive load, connect an surge protector, diodes, etc., in parallel with the load or contact as shown below.

Circuit	Current		Characteristic	Required element
	AC	DC		
CR method 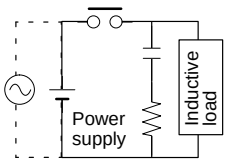	Yes	Yes	If the load is a relay or solenoid, there is a time lag between the moment the circuit is opened and the moment the load is reset. If the supply voltage is 24 or 48 V, insert the surge protector in parallel with the load. If the supply voltage is 100 to 200 V, insert the surge protector between the contacts.	The capacitance of the capacitor must be 1 to 0.5 μF per contact current of 1 A and resistance of the resistor must be 0.5 to 1 Ω per contact voltage of 1 V. These values, however, vary with the load and the characteristics of the relay. Decide these values from testing, and take into consideration that the capacitance suppresses spark discharge when the contacts are separated and the resistance limits the current that flows into the load when the circuit is closed again. The dielectric strength of the capacitor must be 200 to 300 V. If the circuit is an AC circuit, use a capacitor with no polarity.
Diode method 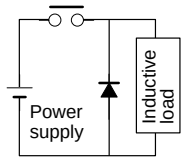	No	Yes	The diode connected in parallel with the load changes energy accumulated by the coil into a current, which then flows into the coil so that the current will be converted into Joule heat by the resistance of the inductive load. This time lag, between the moment the circuit is opened and the moment the load is reset, caused by this method is longer than that caused by the CR method.	The reversed dielectric strength value of the diode must be at least 10 times as large as the circuit voltage value. The forward current of the diode must be the same as or larger than the load current. The reversed dielectric strength value of the diode may be two to three times larger than the supply voltage if the surge protector is applied to electronic circuits with low circuit voltages.
Varistor method 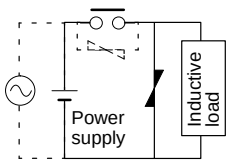	Yes	Yes	The varistor method prevents the imposition of high voltage between the contacts by using the constant voltage characteristic of the varistor. There is time lag between the moment the circuit is opened and the moment the load is reset. If the supply voltage is 24 or 48 V, insert the varistor in parallel with the load. If the supply voltage is 100 to 200 V, insert the varistor between the contacts.	---

When switching a load with a high inrush current, such as an incandescent lamp, suppress the inrush current as shown below.

Countermeasure 1

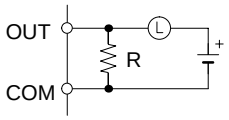

Providing a dark current of approx. one-third of the rated value through an incandescent lamp

Countermeasure 2

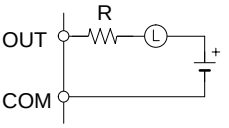

Providing a limiting resistor

SECTION 1
Introduction

This section gives a brief overview of the steps involved in developing of a CQM1 System, describes the possible system configurations, and describes the CQM1's special features and functions.

1-1 Overview . . . . . .
1-2 System Configuration . . . . . .
1-3 CQM1 Features . . . . . .

1-1 Overview

The following diagram shows the steps involved in setting up and operating a CQM1 System and the sections in this and the *CQM1 Programming Manual* that will be most useful at each step.

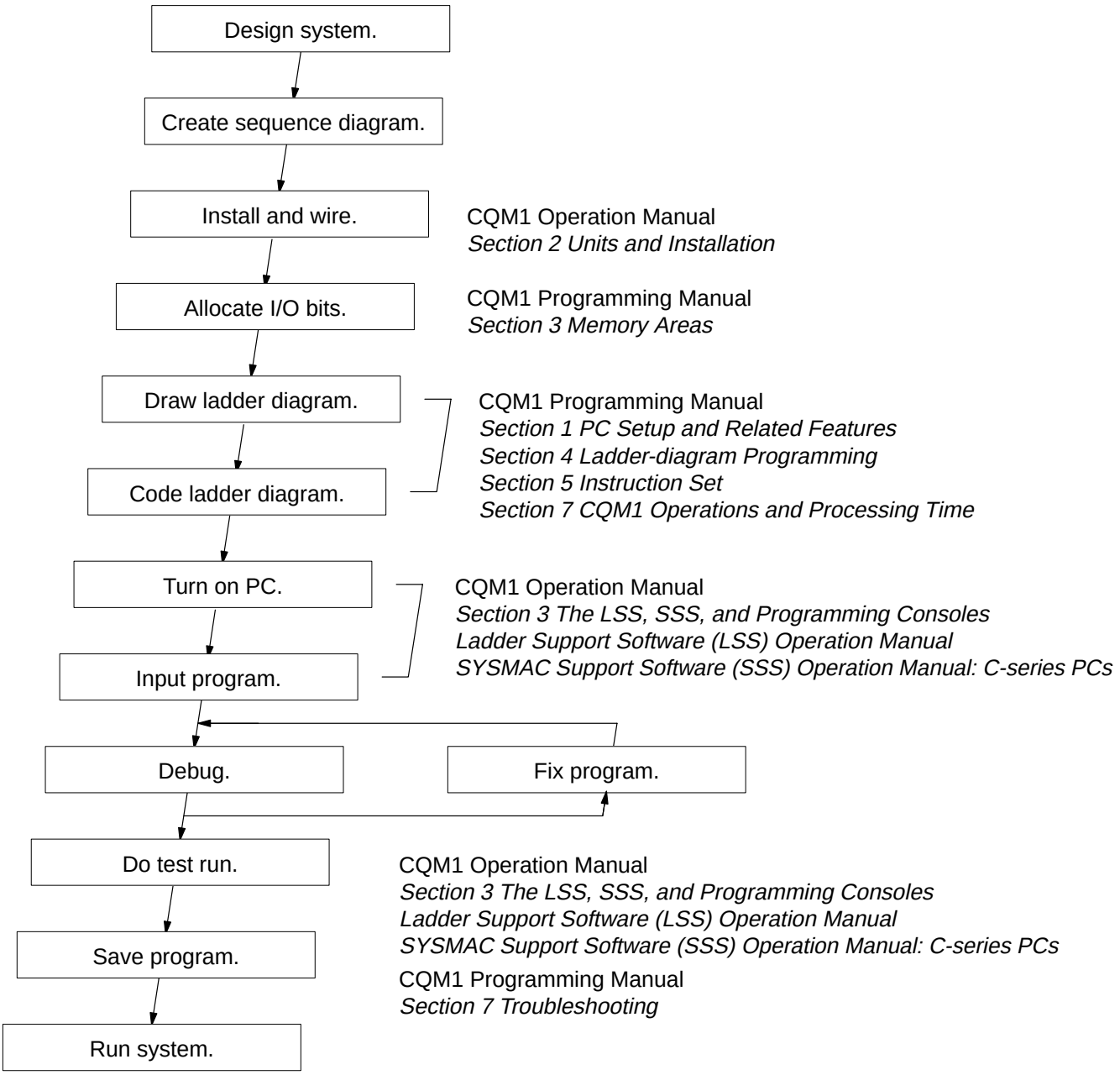

1-2 System Configuration

The CQM1 is a compact, high-speed PC composed of a Power Supply Unit, a CPU Unit, and I/O Units. All of these Units connect at the sides to form a single PC, which is normally mounted to a DIN track.

All CQM1 CPU Units, except for the CQM1-CPU11-E, are equipped with an RS-232C port that can be connected directly to a host computer, another CQM1, or other serial devices.

The following diagram shows the system configurations possible with the CQM1. Refer to *Section 2 Hardware Considerations* for more details on system components and specifications.

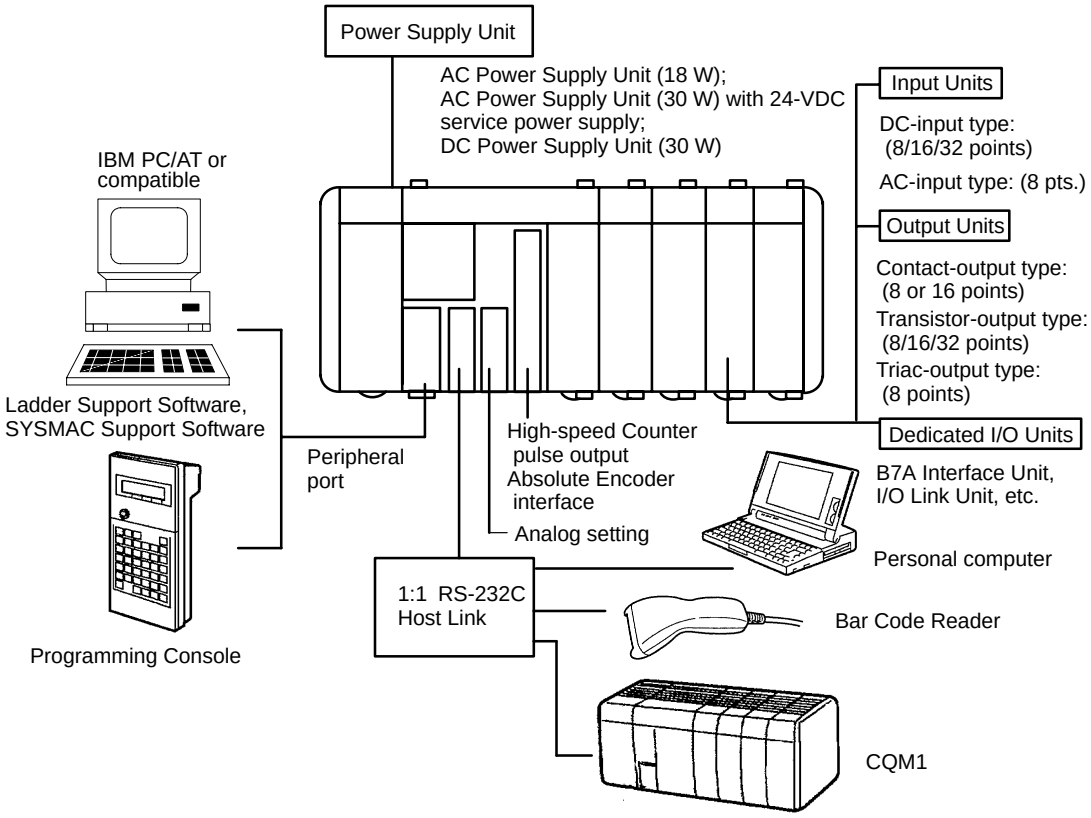

1-3 CQM1 Features

Main Features

The CQM1 provides many advanced features, including the following:

- The CPU Unit provides 16 built-in input terminals.
- I/O Units can be added to increase I/O capacity.
- The CQM1 is much faster: about 20 times faster than P-type PCs.
- High-speed timers and counters are built in.
- Outputs are processed when instructions are executed (direct outputs).

Interrupts

The CQM1 supports three types of interrupts:

- Input Interrupts

  Input interrupts are used to process input signals from an external device that are shorter than the program execution time. Input signals with a pulse width as short as 0.1 ms can be used.

- Scheduled Interrupts

  Scheduled interrupts can be performed using a high-speed interval timer.

- High-speed Counter Interrupts

  Single-phase pulses up to 5 kHz and two-phase pulses up to 2.5 kHz can be input. High-speed counter interrupts can be combined with pulse outputs for applications such as motor control. The CQM1-CPU43-EV1 and CQM1-CPU44-EV1 can accept single-phase pulses up to 50 kHz and two-phase pulses up to 25 kHz. The high-speed counter (absolute encoder input for the CPU44-EV1) has two points added.

Pulse Output Function

Pulses up to 1 kHz can be output from Output Unit contacts. The CQM1-CPU43-EV1 has two dedicated ports for outputting 50 kHz pulses.

Communications

A peripheral port and RS-232C port are available and are used to communicate with external devices using the following methods.

- Host Link

  The CQM1 using the host link can communicate with a personal computer and Programmable Terminal using host link commands.

- RS-232C

  The CQM1 using the RS-232C can read data from a bar code reader or measurement device and output data to a printer.

- 1-to-1 Link

  A data link can be created with a data area in another CQM1 to monitor the other PC's status and synchronize processes controlled by the PCs.

Analog Setting Function

The CQM1-CPU42-EV1 provides volume controls with four channels for adjusting analog settings.

Convenient I/O Instructions

A single instruction can be used to input or output data, simplifying the program.

- The TEN KEY INPUT instruction can be used to read 8-digit BCD data input from a ten-key.
- The HEXADECIMAL KEY INPUT instruction can be used to read 8-digit hexadecimal key input data from I/O Units.
- The DIGITAL SWITCH instruction can be used to read 4 or 8-digit BCD data from digital switches.
- The 7-SEGMENT DISPLAY OUTPUT instruction can be used to output 4 or 8-digit data to 7-segment displays.

Macros

The MACRO instruction can be used to call and execute subroutines, designating the I/O word for the subroutine as an argument. Using an argument to specify a subroutine I/O words allows subroutines to be used more easily in different locations, simplifying the program.

Differentiation Monitoring

Up to now, differentiation monitoring was available only in top-of-the-line PCs. Differentiation monitoring indicates when a bit goes from OFF to ON or from ON to OFF. It can be used to monitor the status of inputs or bits that turn on and off in very short intervals.

SECTION 2
Units and Installation

This section describes the Units that go together to create a CQM1 PC and provides information on switch settings, installation, and hardware maintenance. Technical specifications of the Units are also provided.

2-1 CPU Unit
- 2-1-1 CPU Unit Components
- 2-1-2 DIP Switch
- 2-1-3 Indicators
- 2-1-4 PC Modes
- 2-1-5 Dimensions and Weights
- 2-1-6 Memory Cassette
- 2-1-7 Battery Replacement
- 2-1-8 Programmable Controller Power Interruptions
- 2-1-9 Analog Setting Function
- 2-1-10 Pulse I/O Function
- 2-1-11 ABS Interface Function

2-2 Power Supply Unit
- 2-2-1 Power Supply Unit Components
- 2-2-2 Dimensions
- 2-2-3 Selecting a Power Supply Unit

2-3 I/O Units
- 2-3-1 Maximum No. of I/O Units and I/O Points
- 2-3-2 Terminal Block Type
- 2-3-3 Connector Type
- 2-3-4 CQM1-OC224 Dimensions
- 2-3-5 Standard Dimensions

2-4 PC Assembly and Installation
- 2-4-1 Connecting PC Components
- 2-4-2 DIN Track Installation

2-5 Wiring and Connections
- 2-5-1 AC Power Supply Unit Wiring
- 2-5-2 DC Power Supply Unit Wiring
- 2-5-3 Wiring Precautions for Ground Wires
- 2-5-4 I/O Unit Wiring
- 2-5-5 Compliance with EC Directives
- 2-5-6 Cable Preparation (Connector Type)
- 2-5-7 Cable Preparation (Pulse Output and ABS Interface)
- 2-5-8 Peripheral Port Connection
- 2-5-9 RS-232C Port

2-6 Unit Specifications
- 2-6-1 Power Supply Units
- 2-6-2 CPU Unit Specifications
- 2-6-3 Pulse Input Port (CQM1-CPU43-EV1)
- 2-6-4 ABS Interface Port (CQM1-CPU44-EV1)
- 2-6-5 24-VDC Inputs (Built into CPU Unit)
- 2-6-6 12-VDC Input Units
- 2-6-7 12 to 24-VDC and 24-VDC Input Units
- 2-6-8 24-VDC Input Units
- 2-6-9 AC Input Units
- 2-6-10 Contact Output Units
- 2-6-11 Transistor Output Units

2-1 CPU Unit

The CQM1 is a compact, high-speed PC made up of a CPU Unit, Power Supply Unit, and I/O Units that together provide up to 256 total I/O points. These components lock together at the sides, allowing simple changes in the size and capacity of the PC. There are six types of CPU Unit, shown in the table below. All of the CPU Units except for the CQM1-CPU11-E have a built-in RS-232C interface.

Model	Maximum I/O points	Program capacity (words)	DM capacity (Words)	RS-232C port	Analog setting	Pulse I/O	ABS interface	AD/DA conversion
CQM1-CPU11-E	128 pts (7 Units max.)	3.2K	1K	---	---	---	---	---
CQM1-CPU21-E				Yes	---	---	---	---
CQM1-CPU41-EV1	256 pts (11 Units max.)	7.2K	6K		---	---	---	---
CQM1-CPU42-EV1					Yes	---	---	---
CQM1-CPU43-EV1					---	Yes	---	---
CQM1-CPU44-EV1					---	---	Yes	---

CQM1-CPU11-E and CQM1-CPU21-E CPU Units

CQM1-CPU11-E and CQM1-CPU21-E CPU Units provide a maximum of 128 I/O points. The only difference between the two models is the RS-232C port that is added to the CQM1-CPU21-E.

Built-in Analog Setting Function

The CQM1-CPU42-EV1 CPU Unit provides a built-in analog setting function. It has four dedicated volume controls, and their respective values (0 to 200 BCD) appear in words 220 to 223. This function can be used for operations such as changing timer and counter set values during operation.

Built-in Pulse I/O Function

The CQM1-CPU43-EV1 CPU Unit provides a built-in pulse input and output function. It has two dedicated ports for high-speed counting of up to 25-kHz two-phase pulse inputs from a device such as a rotary encoder and outputting up to 50-kHz pulses to a device such as a stepping motor.

Built-in ABS Interface Function

The CQM1-CPU44-EV1 has two ABS interfaces (absolute encoder interfaces) that can directly receive inputs from absolute-type rotary encoders.

Note In this manual, CQM1-CPU11-E/21-E CPU Units are referred to as “standard CPU Units,” and CQM1-CPU41-EV1/42-EV1/43-EV1/44-EV1 CPU Units are referred to as “highly functional, large-capacity CPU Units.”

2-1-1 CPU Unit Components

The following diagram shows the basic components of the CPU Unit that are used in general operation of the PC.

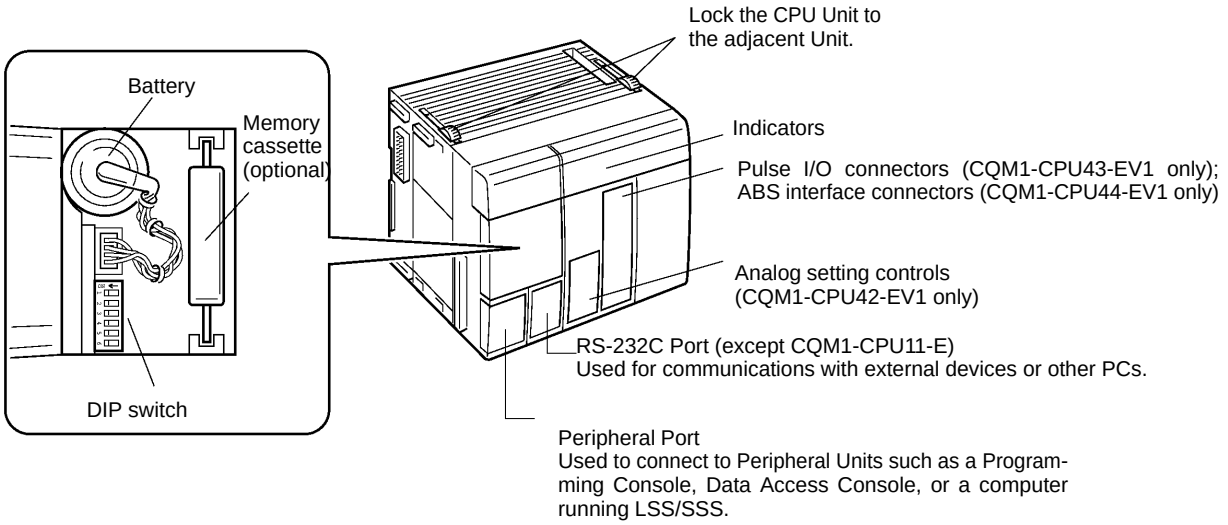

2-1-2 DIP Switch

The DIP switch is located under a cover on the front of the CPU Unit as shown in *2-1-1 CPU Unit Components*. The setting of these switches is described in the following table.

Pin	Setting	Function
1	ON	Program Memory and read-only DM (DM 6144 to DM 6655) data cannot be overwritten from a Peripheral Device.
	OFF	Program Memory and read-only DM (DM 6144 to DM 6655) data can be overwritten from a Peripheral Device.
2	ON	Auto-boot enabled. The contents of Memory Cassette will be transferred to the CPU Unit automatically at start-up.
	OFF	Auto-boot disabled.
3	ON	Programming Console messages will be displayed in English.
	OFF	Programming Console messages will be displayed in the language stored in system ROM. (Messages will be displayed in Japanese with the Japanese version of system ROM.)
4	ON	Expansion instructions set by user. Normally ON when using a host computer for programming/monitoring.
	OFF	Expansion instructions set to defaults.
5	ON	Standard communications parameters (see note 2) will be set for the following serial communications ports. • Built-in RS-232C port • Peripheral port (only when a CQM1-CIF01/-CIF02 Cable is connected. Does not apply to Programming Console.) **Note** 1. Standard communications parameters are as follows: Serial communications mode: Host Link or peripheral bus; start bits: 1; data length: 7 bits; parity: even; stop bits: 2; baud rate: 9,600 bps 2. The CX-Programmer running on a personal computer can be connected to the peripheral port via the peripheral bus using the above standard communications parameters.
	OFF	The communications parameters for the following serial communications ports will be set in PC Setup as follows: • Built-in RS-232C port: DM 6645 and DM 6646 • Peripheral port: DM 6650 and DM 6651 **Note** When the CX-Programmer is connected to the peripheral port with the peripheral bus, either set bits 00 to 03 of DM 6650 to 0 Hex (for standard parameters), or set bits 12 to 15 of DM 6650 to 0 Hex and bits 00 to 03 of DM 6650 to 1 Hex (for Host Link or peripheral bus) separately.
6	ON	The setting of pin 6 determines the ON/OFF status of AR 0712. If pin 6 is ON, AR 0712 will be ON and if pin 6 is OFF, AR 0712 will be OFF. (See note 3.)
	OFF	

Note

1. All DIP switch pins except pin 3 are turned OFF at the factory.
2. The above settings apply to CPU Units manufactured from July 1995 (lot number □□75 for July 1995). For CPU Units manufactured before July 1995 (lot number □□65 for June 1995), only 1 stop bit will be set and the baud rate will be 2,400 bps.
3. Pin 6 can be used to control the status of AR 0712 in memory to provide optional control of program execution.

2-1-3 Indicators

CPU Unit indicators provide visual information on the general operation of the PC. Although not substitutes for proper error programming using the flags and other error indicators provided in the data areas of memory, these indicators provide ready confirmation of proper operation. CPU Unit indicators are shown below and are described in the following table.

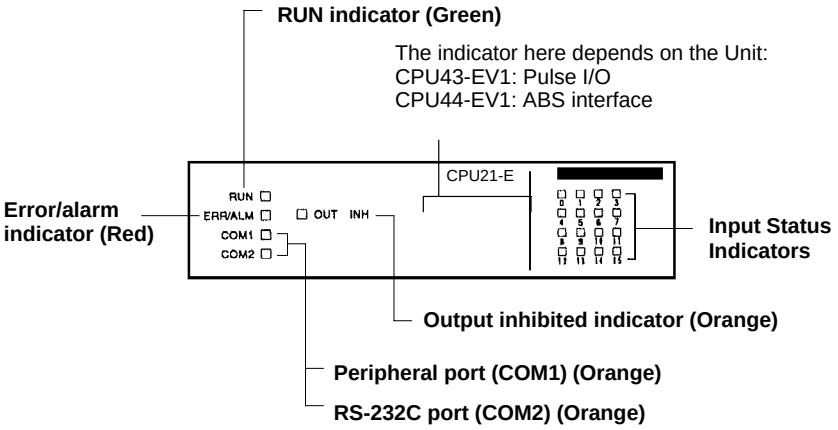

Indicator	Name	Function
RUN	RUN indicator	Lights when the CPU Unit is operating normally.
ERR/ALM	Error/Alarm indicator	Flashes when there is a non-fatal error. The CPU Unit will continue operating. Lit when there is a fatal error. When this indicator lights, the RUN indicator will go off, CPU Unit operation will be stopped, and all outputs will be turned OFF.
COM1	Peripheral port indicator	Flashes then the CPU Unit is communicating with another device via the peripheral port.
COM2	RS-232C port indicator	Flashes when the CPU Unit is communicating with another device via the RS-232C port. (CQM1-CPU21-E only)
OUT INH	Output inhibited indicator	Lights when the Output OFF Bit, SR 25215, is turned ON. All PC outputs will be turned OFF.
0, 1, 2 . . .	Input status indicators	Indicate the ON and OFF status of input bits in IR 000.

2-1-4 PC Modes

The CQM1 PCs have three operating modes: PROGRAM, MONITOR, and RUN. The PC mode can be changed from the mode selector on the Programming Console.

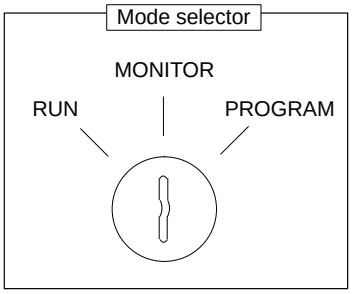

The key cannot be removed when the mode selector is set to PROGRAM.

Note Some Programming Devices (e.g., the Programming Console) will clear the current display and display the new operating mode when the mode selector is changed. You can change the mode without changing the display by first pressing the SHIFT Key and then changing the setting of the mode selector.

The function of each mode is described briefly below.

PROGRAM Mode

PROGRAM mode is used when making basic changes to the PC program or settings, such as transferring, writing, editing, or checking the program, or changing the PC Setup. The program cannot be executed in PROGRAM mode. Output points at Output Units will remain OFF, even when the corresponding output bit is ON.

MONITOR Mode

MONITOR mode is used when monitoring program execution, such as making a trial run of a program. The program is executed just as it is in RUN mode, but bit status, timer and counter SV/PV, and the data content of most words can be changed online. Output points at Output Units will be turned ON when the corresponding output bit is ON.

RUN Mode

RUN mode is used when operating the PC in normal control conditions. Bit status cannot be force set or reset, and SVs, PVs, and data cannot be changed online.

Note When a program section is displayed on the Programming Console and the PC is in RUN or MONITOR Mode, the ON/OFF status of bits in that program section will be displayed in the upper-right corner of the display.

Mode Changes

The factors that determine the initial operating mode of the PC (the mode when the PC is turned on) are listed below in order of importance.

1, 2, 3...

1. No Devices mounted:

   If no Peripheral Devices are mounted to the PC, the PC will enter RUN mode when turned ON unless the startup mode setting in the PC Setup (DM 6600) has been set to MONITOR or PROGRAM Mode.

2. Programming Console mounted:

   If the Programming Console is connected to the PC when PC power is applied, the PC will enter the mode set on the Programming Console's mode selector.

3. Other Peripheral Device mounted:

   If a Programming Console is not mounted to the PC, but another Peripheral Device is connected to the PC, the PC will enter PROGRAM mode.

If the PC power supply is already turned on when a Peripheral Device is attached to the PC, the PC will stay in the same mode it was in before the peripheral device was attached. If the Programming Console is connected, the PC will enter the mode set on the Programming Console's mode selector once the password has been entered.

2-1-5 Dimensions and Weights

Dimensions

The following diagrams show the dimensions of the CPU Unit and right End Cover, which covers the Unit at the far right side of the PC. All dimensions are in millimeters.

CPU Unit Front View

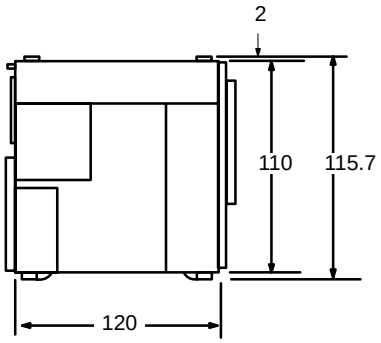

CPU Unit Side View

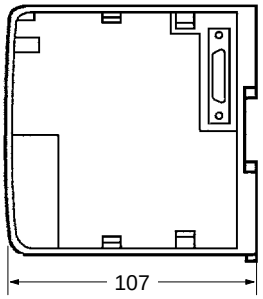

End Cover Front View

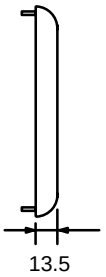

Note The depth is the same for all Units.

Weights

The CQM1-CPU11-E weighs 520 g max.; the CQM1-CPU21-E and CQM1-CPU41-EV1, 530 g max. All the other CPU Units weigh 600 g max.

2-1-6 Memory Cassette

Four Memory Cassettes are available as accessories to store the program or PC Setup. When pin 2 of the CPU Unit's DIP switch is ON, the contents of the Memory Cassette will be transferred to the CPU Unit automatically at start-up.

Memory	Clock Function	Model	Comments
EEPROM	No	CQM1-ME04K	The Programming Console is used to write to EEPROM. (4K words)
	Yes	CQM1-ME04R	
	No	CQM1-ME08K	The Programming Console is used to write to EEPROM. (8K words)
	Yes	CQM1-ME08R	
EPROM	No	CQM1-MP08K	A PROM Writer is used to write to EPROM.
	Yes	CQM1-MP08R	

Memory Cassette Installation Follow the procedure below to install a Memory Cassette in the CPU Unit.

⚠ Caution Always turn off power to the CQM1 before installing or removing a Memory Cassette.

1, 2, 3... 1. Remove the mounting bracket from inside the memory cassette compartment.

2. Slide the Memory Cassette into the CPU Unit on the tracks provided. Press the Memory Cassette in so that the connectors fit securely.

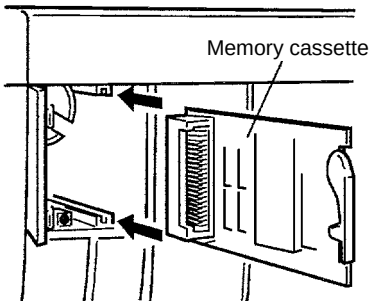

3. Replace the bracket as shown below and tighten the screw.

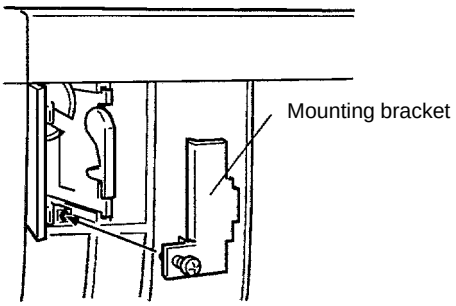

EEPROM Write Protection

Turn on the write-protect switch on the EEPROM Memory Cassette to prevent the program or PC Setup from being deleted accidentally. Turn the switch off when writing to the Memory Cassette.

⚠ Caution Always turn off the CQM1 and remove the Memory Cassette when changing the write-protect switch setting.

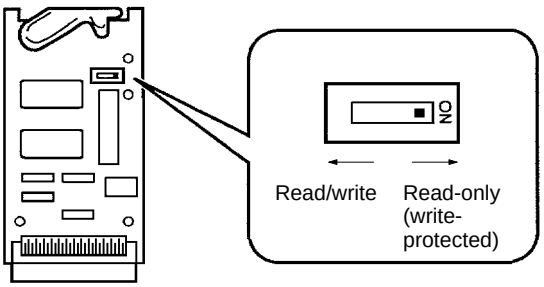

Note Flag AR 1302 will be ON when the write-protect switch is ON.

EPROM Version

The four EPROM chips listed below can be used in the Memory Cassettes.

EPROM Version	Capacity	Access Speed	Model Number
27128	8K words	150 ns	ROM-ID-B
27256	16K words	150 ns	ROM-JD-B
27512	32K words	150 ns	ROM-KD-B

Install an EPROM chip onto the memory cassette as shown in the following diagram.

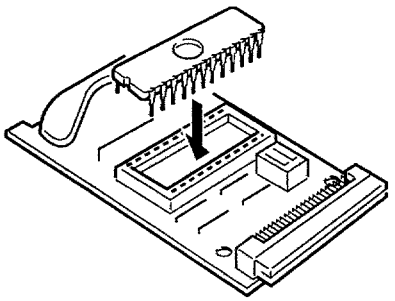

Be sure that the EPROM version set with the switch on the Memory Cassette agrees with the EPROM version of the installed chip. Refer to the following diagram and table for the location of the switch and its settings.

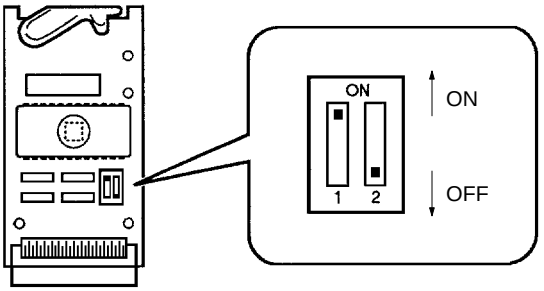

EPROM Version	Pin 1 Setting	Pin 2 Setting
27128	OFF	OFF
27256	ON	OFF
27512	ON	ON

2-1-7 Battery Replacement

CQM1 CPU Units contain a 3G2A9-BAT08 Battery Set, which must be replaced when its effective life has expired. The effective life under normal conditions is approximately 5 years. The effective life will be reduced at higher temperatures. Refer to *Appendix B Battery Service Life* for more details.

A battery error will occur when the voltage of the battery starts to drop, causing the ALARM/ERROR indicator to flash, causing SR 25308 to turn ON, and generating a battery error message readable from Programming Devices. The battery must be replaced within one week after a battery error is indicated.

⚠ Caution Replace the battery within one week after the first indication that the battery requires replacement. Always keep a spare Battery Set on hand. It will be highly unlikely that you will be able to obtain a replacement Battery Set in time otherwise. If the battery is not replaced in time, the user program and other data may be lost.

Use the following procedure to replace the battery. You must complete this procedure within five minutes after turning off the power to the CQM1 to ensure memory backup.

1, 2, 3... 1. Turn off the power to the CQM1.

or If the CQM1 is not turned on, turn it on for at least one minute and then turn it off.

Note If power is not turned on for at least one minute before replacing the battery, the capacitor that backs up memory when the battery is

removed will not be fully charged and memory may be lost before the new battery is inserted.

2. Open the compartment on the upper left of the CPU Unit and carefully draw out the battery.
3. Remove the battery connector.
4. Connect the new battery, place it into the compartment, and close the cover.

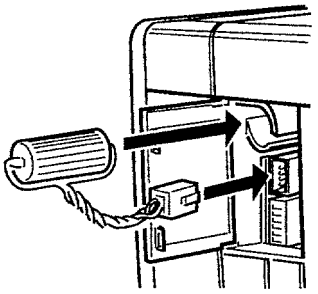

The battery error will automatically be cleared when a new battery is inserted.

⚠ WARNING Never short-circuit the battery terminals; never charge the battery; never disassemble the battery; and never heat or incinerate the battery. Doing any of these may cause the battery to leak, burn, or rupturing resulting in injury, fire, and possible loss of life or property.

2-1-8 Programmable Controller Power Interruptions

A sequential circuit is built into the PC to handle power interruptions. This circuit prevents malfunctions due to momentary power loss or voltage drops. A timing diagram for the operation of this circuit is shown below.

The PC ignores all momentary power failures if the interruption lasts no longer than 10 ms. If the interruption lasts between 10 and 25 ms, the interruption may or may not be detected. If the supply voltage drops below 85% of the rated voltage for longer that 25 ms (less for the DC Power Supply), the PC will stop operating and the external outputs will be automatically turned OFF.

Operation is resumed automatically when the voltage is restored to more than 85% of the rated value. The diagram below shows the timing of PC operation and stopping during a power interruption. The time it takes to detect the power failure is 5 ms when the power supply is DC.

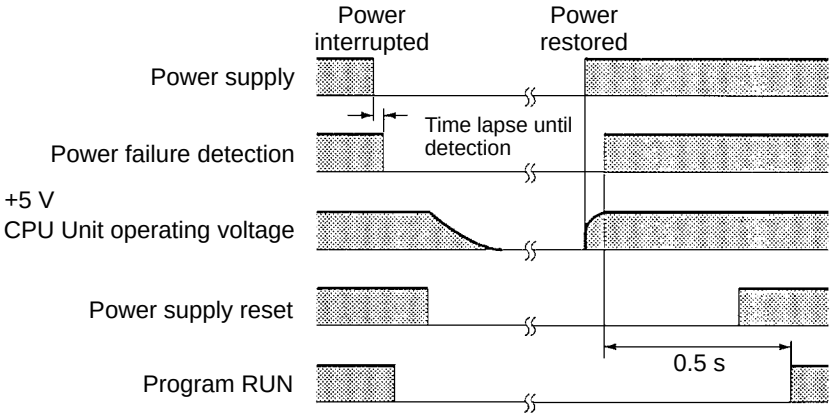

2-1-9 Analog Setting Function

The CQM1-CPU42-EV1 has four volume controls. By adjusting these controls, the contents of words 220 through 223 can be changed within a range of 0000 to 0200 (in four digits BCD). This is called the “analog setting function.”

A commercially available mini-screwdriver can be used to turn the volume controls. The value increases as they are turned in a clockwise direction.

If words 220 through 223 are designated as the SV for instructions such as TIM, they cannot be used as the analog timer. With CPU Unit models other than the CQM1-CPU42-EV1, there is no particular use for words 220 through 223, and they can be use as IR words.

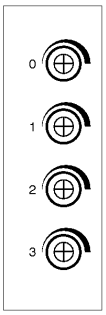

The value for this control is stored in word 220.

The value for this control is stored in word 221.

The value for this control is stored in word 222.

The value for this control is stored in word 223.

⚠ Caution While the power is turned on for CQM1-CPU42-EV1 CPU Units, words 220 through 223 are constantly refreshed with the values from these volume controls. Be sure that writing is not executed within this range by the program or peripheral devices.

2-1-10 Pulse I/O Function

The CQM1-CPU43-EV1 has two dedicated ports (CN1 and CN2) that can input and output high-speed pulses.

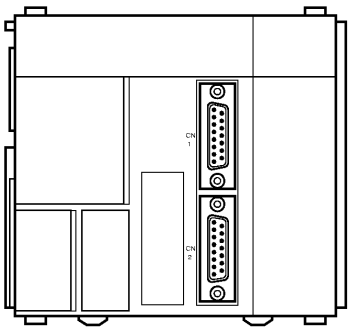

These two ports can be used to perform the functions described below.

Pulse Output

Pulses from 10 Hz to 50 kHz can be output. In comparison with pulse output from a contact, wide-frequency band pulses can be output more smoothly while changing frequencies.

High-Speed Counter Interrupts

High-speed pulses input to the port (up to 50 kHz for single phase and 25 kHz for two-phase) can be counted, and processing can be executed according to the count. There are three kinds of count mode:

- Phase-difference pulse input mode
- Pulse and direction input mode
- Increment/Decrement input mode

⚠ Caution The following instructions cannot be used when the CQM1-CPU43-EV1 is set to high-speed counter mode by PC Setup (DM 6611): PLS2 and ACC mode 0.

LED Indicators

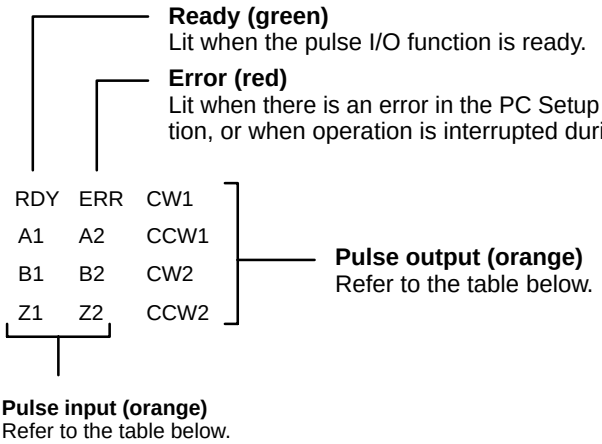

Pulse Output Indicators

Indicator	Port	Function
CW1	Port 1	Lit during pulse output to port 1 CW.
CCW1		Lit during pulse output to port 1 CCW.
CW2	Port 2	Lit during pulse output to port 2 CW.
CCW2		Lit during pulse output to port 2 CCW.

Pulse Input Indicators

Port 1	Port 2	Function
A1	A2	Lit when pulse input is ON at phase A for each port.
B1	B2	Lit when pulse input is ON at phase B for each port.
Z1	Z2	Lit when pulse input is ON at phase Z for each port.

Dimensions With Connectors Mounted

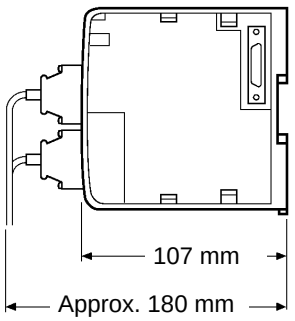

2-1-11 ABS Interface Function

The CQM1-CPU44-EV1 has two dedicated ports (CN1 and CN2) for receiving grey codes from an absolute-type rotary encoder.

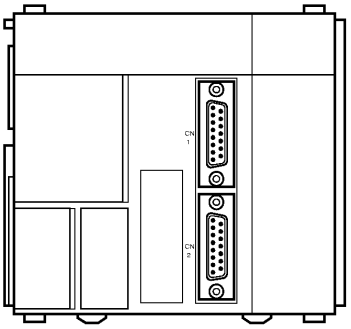

These two ports can be used to carry out absolute-type high-speed counter interrupts. Grey codes input to the ports can be received at a computation speed of up to 4 kHz, and processing can be executed according to that value.

LED Indicators

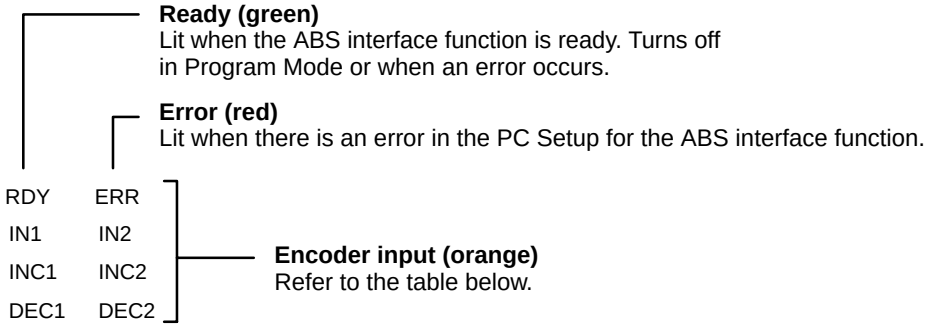

Encoder Input Indicators

Port 1	Port 2	Function
IN1	IN2	Lit when input bit 0 of each port is ON.
INC1	INC2	Lit when value input for each port is incremented.
DEC1	DEC2	Lit when value input for each port is decremented.

Dimensions With Connectors Mounted

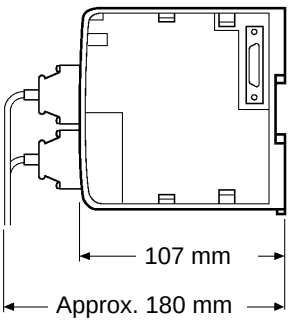

2-2 Power Supply Unit

There are three AC Power Supply Units available, the CQM1-PA203, the CQM1-PA206, and the CQM1-PA216, and one DC, the CQM1-PD026. Select a Power Supply Unit that matches the current consumption of the system.

2-2-1 Power Supply Unit Components

The following diagram shows the basic components of a Power Supply Unit.

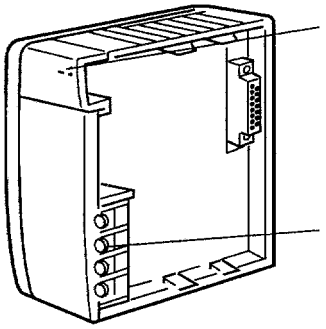

Crimp connectors should be used for Power Supply Unit wiring and should be less than 7 mm wide. The wires should be 1.04 to 2.63 mm^2.



2-2-2 Dimensions

The following diagrams show the dimensions of the four Power Supply Units. All dimensions are in millimeters.

CQM1-PA203

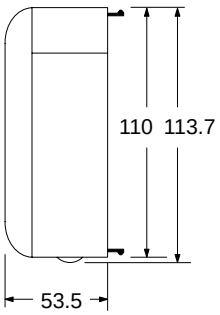

CQM1-PA206/PA216/PD026

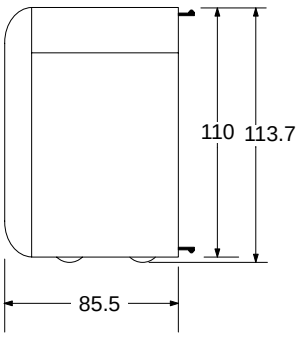

Note The CQM1-PA203 weighs 460 g max. and the CQM1-PA206, CQM1-PA216, and CQM1-PD026 each weigh 560 g max.

2-2-3 Selecting a Power Supply Unit

As mentioned previously, there are three AC Power Supply Units and one DC Power Supply Unit. Select the appropriate Power Supply Unit based on the total 5-VDC current consumption requirements of the Units in the configured system and the 24-VDC output terminals (PA206/PA216).

Model Number	Capacity
CQM1-PA203	5 VDC, 3.6 A (18 W)
CQM1-PA206, CQM1-PA216	5 VDC, 6.0 A; 24 VDC output, 0.5 A (30 W total) The total power consumption from the 5-VDC supply and 24-VDC output must be less than 30 W. In other words: 5 VDC current consumption × 5 + 24 VDC current consumption × 24 ≤ 30 (W).
CQM1-PD026	5 VDC, 6 A (30 W)

Current Consumption of Components

The following table shows the current consumption of the CPU Unit and I/O Units:

Unit	Model Number	Current Consumption (5 VDC)
CPU Units	CQM1-CPU11-E	800 mA
	CQM1-CPU21-E	820 mA
	CQM1-CPU41-EV1	820 mA
	CQM1-CPU42-EV1	820 mA
	CQM1-CPU43-EV1	980 mA
	CQM1-CPU44-EV1	980 mA
DC Input Units	CQM1-ID111	85 mA
	CQM1-ID112	170 mA
	CQM1-ID211	50 mA
	CQM1-ID212	85 mA
	CQM1-ID213	170 mA
	CQM1-ID214	170 mA
AC Input Units	CQM1-IA121/221	50 mA
Contact Output Units	CQM1-OC221	430 mA
	CQM1-OC222	850 mA
	CQM1-OC224	440 mA
Transistor Output Units	CQM1-OD211	90 mA
	CQM1-OD212	170 mA
	CQM1-OD213	240 mA
	CQM1-OD214	170 mA
	CQM1-OD215	110 mA
	CQM1-OD216	240 mA
Triac Output Unit	CQM1-OA221	110 mA
	CQM1-OA222	250 mA
B7A Interface Units	CQM1-B7A□□	100 mA
I/O Link Unit	CQM1-LK501	150 mA
Analog Input Unit	CQM1-AD041	80 mA
Analog Output Unit	CQM1-DA021	90 mA
Power Supply Units	CQM1-IPS01	420 mA
	CQM1-IPS02	950 mA
Sensor Unit	CQM1-SEN01	600 mA max.
Linear Sensor Interface Unit	CQM1-LSE01	380 mA
	CQM1-LSE02	450 mA
Temperature Control Units	CQM1-TC00□/10□	220 mA
	CQM1-TC20□/30□	190 mA
G730 Interface Units	CQM1-G7M21 (Master)	250 mA
	CQM1-G7N11/01 Expansion Master	80 mA
CompoBus Units	CQM1-SRM21	180 mA
	CQM1-DRT21	80 mA

The total current consumption of the components in a PC must be less than the capacity of the Power Supply Unit being used. For example, a CQM1-PA203 Power Supply Unit (capacity: 3.6 A) can be used with a CQM1-CPU21-E CPU Unit, two 16-point DC Input Units, and three 16-point Contact Output Units, as shown below:

Current Consumption = $0.82 + (0.085 \times 2) + (0.85 \times 3) = 3.54 \text{ A} \leq 3.6 \text{ A}$

2-3 I/O Units

There are two basic types of I/O Units available: Terminal block types and connector types. Most of the I/O Units shown in the following table are terminal block types. Only CQM1-OD213 DC Input Units (32 pts.) and CQM1-OD213 Transistor Output Units (32 pts.) are connector-type I/O Units.

Unit	Model number	Specifications	Weight
DC Input Unit	CQM1-ID111	16 input points, 12 V	180 g max.
	CQM1-ID112	32 input points, 12 V	160 g max.
	CQM1-ID211	8 input points, 12 to 24 V, independent commons	180 g max.
	CQM1-ID212	16 input points, 24 V	180 g max.
	CQM1-ID213	32 input points, 24 V	160 g max.
	CQM1-ID214	32 input points, 24 V	160 g max.
AC Input Unit	CQM1-IA121	8 input pts., 100 to 120 V	210 g max.
	CQM1-IA221	8 input pts., 200 to 240 V	210 g max.
Contact Output Unit	CQM1-OC221	8 output points, 2 A (independent commons, 16 A per Unit)	200 g max.
	CQM1-OC222	16 output points, 2 A (8 A per Unit)	230 g max.
	CQM1-OC224	8 output points, 2 A (independent commons, 16 A per Unit)	270 g max.
Transistor Output Unit	CQM1-OD211	8 output points, 2A (5 A per Unit)	200 g max.
	CQM1-OD212	16 output points, 0.3 A	180 g max.
	CQM1-OD213	32 output points, 0.1 A	160 g max.
	CQM1-OD214	16 output points, 0.3 A, PNP output	210 g max.
	CQM1-OD215	8 output points, 1 A (4 A/Unit), PNP output, with short-circuit protection	240 g max.
	CQM1-OD216	32 output points, 0.5 A (5 A/Unit), PNP output, with short-circuit protection	210 g max.
Triac Output Unit	CQM1-OA221	8 output pts., 0.4 A	240 g max.
	CQM1-OA222	6 output pts., 0.4 A	240 g max.

The following diagram shows the basic components of an I/O Unit.

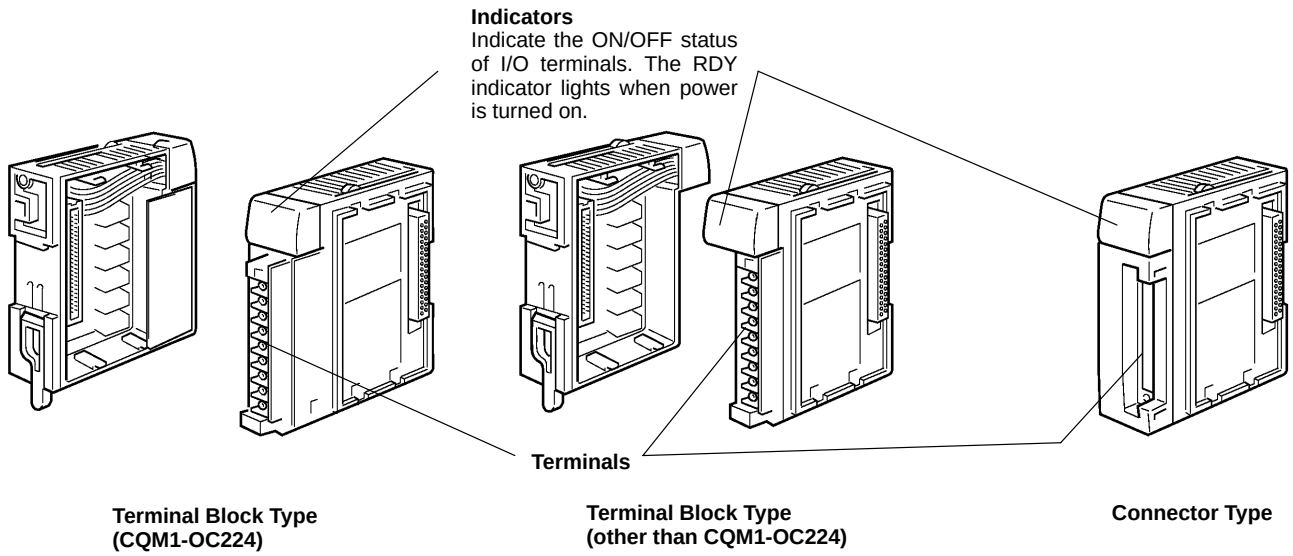

2-3-1 Maximum No. of I/O Units and I/O Points

The maximum number of I/O and Special I/O Units that can be connected and the maximum number of I/O points that can be controlled are listed in the following table. Previous models (without a "V1" suffix) are also included for reference.

CPU Unit	Max. No. of Units	Max. No. of I/O points
CQM1-CPU11/21-E	7 Units max.	128 pts (8 words) max.
CQM1-CPU4□-EV1	11 Units max.	256 pts (16 words) max.
CQM1-CPU4□-E		192 pts (12 words) max.

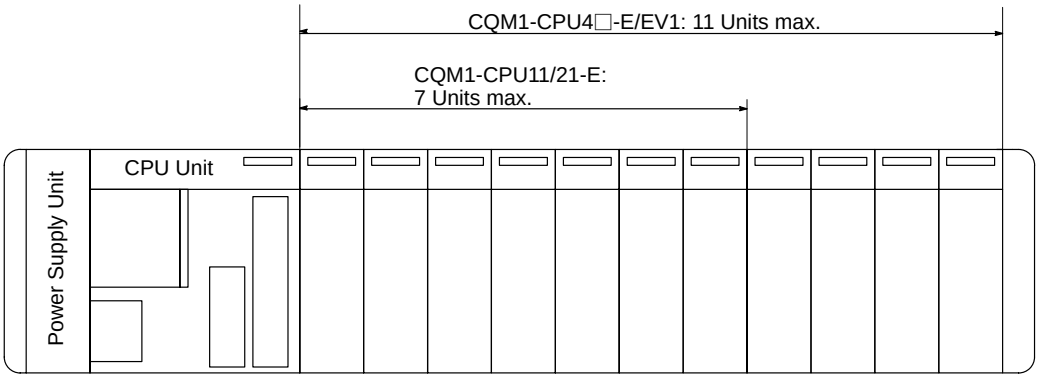

Model	Max. No. of I/O points	I/O points on CPU Unit	I/O and Special I/O Units
CQM1-CPU11/21-E	128 pts max. (8 words)	16 pts (1 word)	7 Units max. (16 pts/Unit x 7 Units = 7 words)
CQM1-CPU11/21-E			
CQM1-CPU41-EV1	256 pts (16 words) max.		11 Units max. (I/O or Special I/O Units can be connected until the total number of words for I/O and Special I/O Units is 15 words or less)
CQM1-CPU42-EV1			
CQM1-CPU43-EV1			
CQM1-CPU44-EV1			
(CQM1-CPU41-E)	192 pts (12 words) max.		11 Units max. (16-pt Units x 11 Units = 11 words max.)
(CQM1-CPU42-E)			
(CQM1-CPU43-E)			
(CQM1-CPU44-E)			

Note When the number of I/O points for the CQM1 exceeds the maximum number of I/O points specified above, an "I/O UNIT OVER" message will be displayed and operation will stop. Operation will not stop, however, if the number of I/O Units exceeds the maximum number of I/O Units specified above for the CQM1-CPU4□-EV1 as long as the maximum number of I/O points is not exceeded. Be sure to confirm that the number of Units mounted does not exceed the specified maximum number of I/O Units.

2-3-2 Terminal Block Type

The I/O Unit's terminal blocks are removable. Be sure that the connector tabs are locked in the vertical position, as shown in the following diagram. Although the terminal block position of the CQM1-OC224 is different, the removal method is the same.

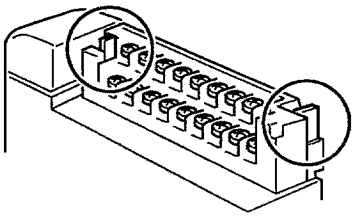

To remove the terminal block, push the connector tabs to the sides and lift the terminal block off of the connector, as shown in the following diagram.

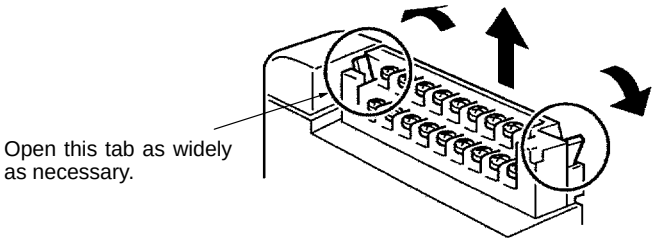

Crimp connectors for I/O Unit wiring should be less than 6.2 mm wide (M3), and the wire should be AWG22 to 18 (0.3 to 1.75 mm^{2}).

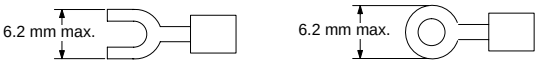

⚠ **Caution** Forked crimp connectors are required by UL and CSA standards.

2-3-3 Connector Type

Connect the cable to the I/O Unit connectors.

Connector Position

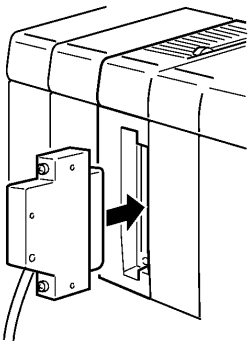

Dimensions when Mounted

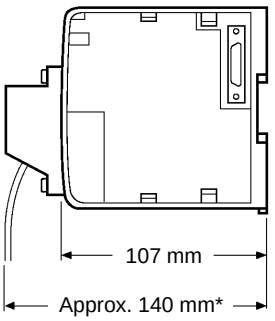

*Approximately 120 mm when pressure-welded connectors are used.

2-3-4 CQM1-OC224 Dimensions

The following diagram shows the dimensions of a CQM1-OC224 I/O Unit. All dimensions are in millimeters.

Dimensions when Mounted

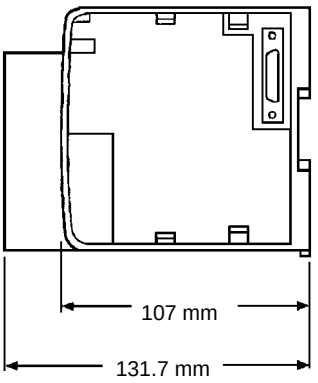

2-3-5 Standard Dimensions

The following diagram shows the dimensions of a standard I/O Unit. All dimensions are in millimeters.

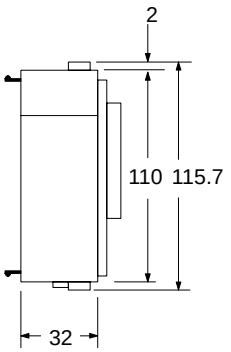

Note Refer to the table on page 20 for the weights of I/O Units.

Assembled Dimensions

The following diagram shows the dimensions of a CQM1 PC consisting of a CPU Unit, 4 I/O Units, and a Power Supply Unit. The width varies with the Power Supply Unit, as indicated.

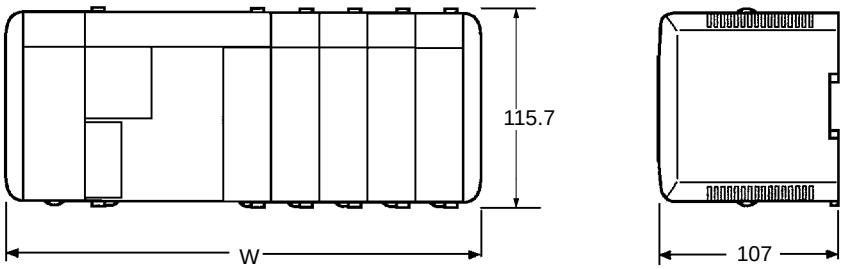

CQM1-PA203: W = 315
CQM1-PA206: W = 347
CQM1-PA216: W = 347
CQM1-PD026: W = 347

Note The I/O capacity of CQM1-CPU4□-EV1 CPU Unit has been increased to 256 points, but only 11 Units can be connected in the PC.

2-4 PC Assembly and Installation

This section describes how to assemble the Units that make up the CQM1 PC and install the PC on a DIN Track.

PC Orientation

When installing the CQM1 in the control panel, always mount the Units so that the ventilation openings are facing up. Also, there must be at least a 20-mm space both above and below the PC.

Correct

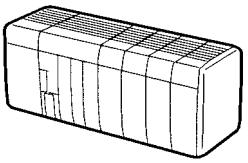

Wrong

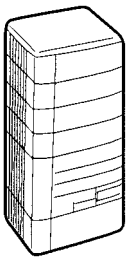

Wrong

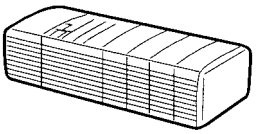

2-4-1 Connecting PC Components

The Units that make up a CQM1 PC can be connected simply by pressing the Units together and sliding the locking tabs towards the back of the Units. The End Cover is connected in the same way to the Unit on the far right side of the PC. Follow the procedure listed below to connect PC components.

Always turn off the CQM1 when connecting or disconnecting Units. Replace Units only after shutting down the CQM1 system.

1, 2, 3...

1. The following diagram shows the connection of two Units that make up a CQM1 PC. Join the Units so that the connectors fit exactly.

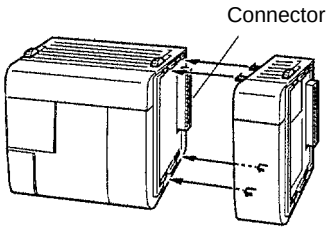

2. The yellow locking tabs at the top and bottom of each Unit lock the Units together. Slide these locking tabs towards the back of the Units as shown below.

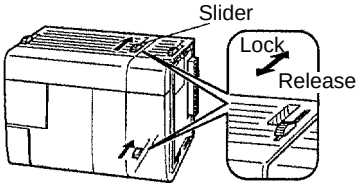

3. Attach the End Cover to the Unit on the far right side of the PC.

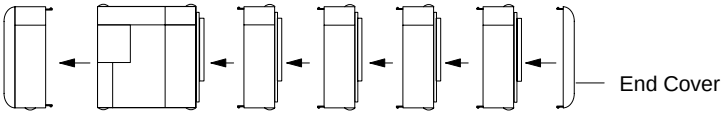

⚠ Caution Be sure to attach the End Cover to the Unit on the far right side of the PC. The PC will not operate properly if the End Cover is not connected.

2-4-2 DIN Track Installation

A CQM1 PC must be installed on DIN Track and secured with the DIN Track Brackets shown below.

DIN Track (PFP-50N or PFP-100N)

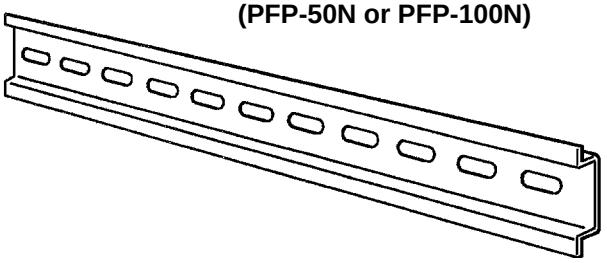

DIN Track Brackets (PFP-M)

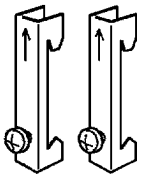

Use the following procedure to install a CQM1 PC on DIN Track.

1, 2, 3...

1. Mount the DIN Track securely to the control board or inside the control panel using screws in at least 3 separate locations.
2. Release the pins on the backs of the CQM1 Units. These pins lock the PC to the DIN Track.

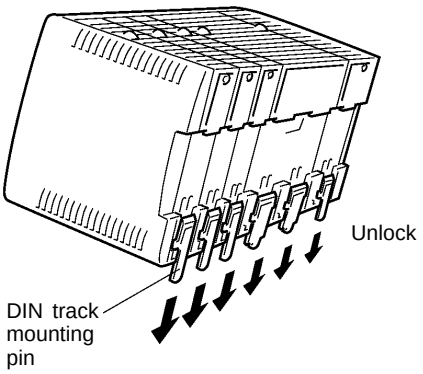

3. Fit the back of the PC onto the DIN Track by inserting the top of the track and then pressing in at the bottom of the PC, as shown below.

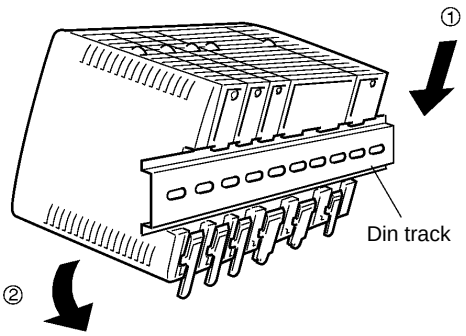

4. Lock the pins on the backs of the CQM1 Units.

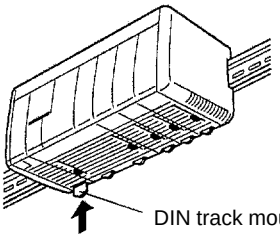

5. Install a DIN Track Bracket on each side of the PC. To install a bracket, hook the bottom of the Bracket on the bottom of the track, rotate the Bracket to hook the top of the Bracket on the top of the track, and then tighten the screw to lock the Bracket in place.

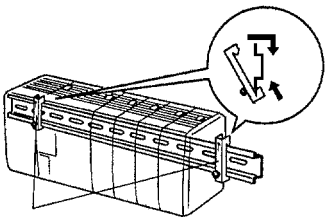

DIN Track Brackets

2-5 Wiring and Connections

This section provides basic information on wiring the Power Supply Unit and I/O Units, and on connecting Peripheral Devices.

2-5-1 AC Power Supply Unit Wiring

The following diagram shows the proper connection to an AC power supply. The AC voltage should be between 100 and 240 VAC. Refer to *2-2-3 Selecting a Power Supply Unit* for details on Power Supply Unit capacity.

Remove the seal from the top of the Power Supply Unit only after wiring is completed. This seal must be removed before operating the Unit to prevent overheating.

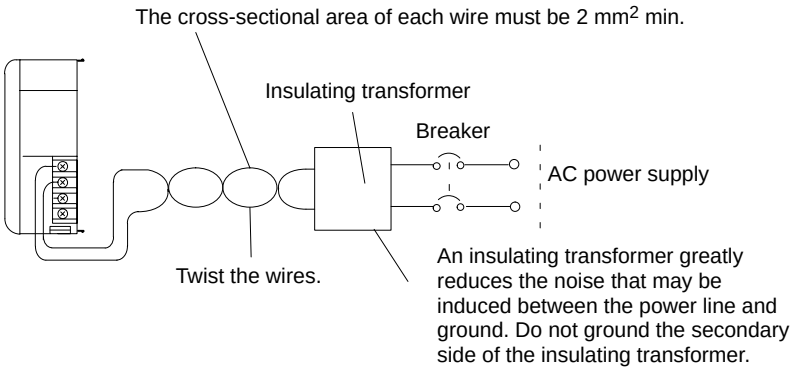

⚠ **Caution** Be sure that the AC power supply voltage remains within the allowed fluctuation range of 85 to 264 VAC.

CQM1-PA216 is switchable with an input voltage range of 80 to 138 VAC or 160 to 264 VAC.

Terminal Block

The following diagram shows the terminal blocks for the two AC Power Supply Units.

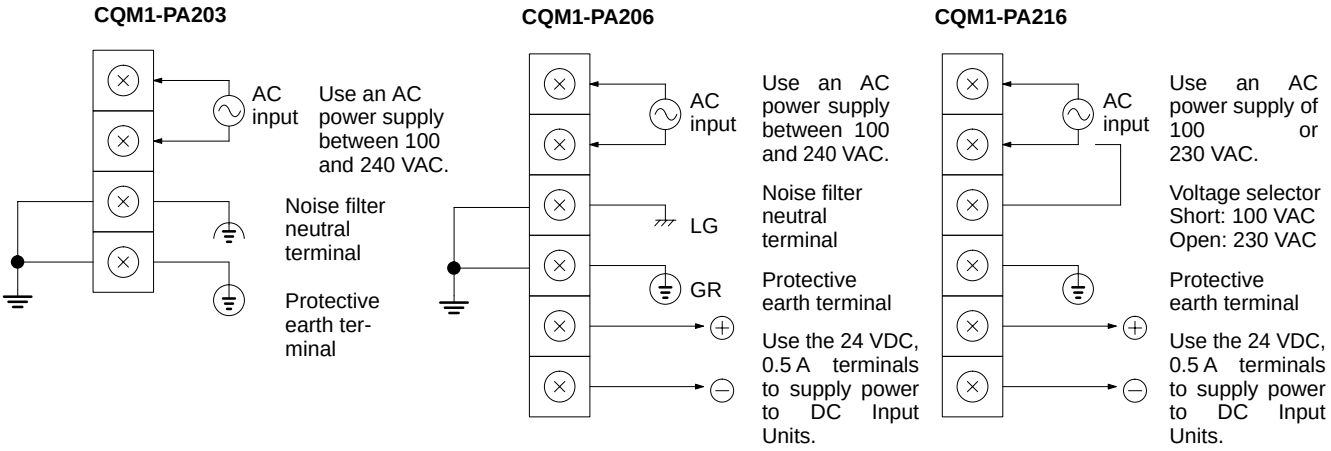

The wire used should be at least 2 mm^2. Provide the grounding point as close to the CQM1 PC as possible.

⚠ WARNING LG (⏚ or ⏚): Noise filter neutral terminal. Short-circuit the LG (⏚ or ⏚) terminal and GR (⏚) terminals using the attached short-circuit bar and ground them at a resistance of less than 100 Ω to reduce noise and prevent electric shock.

⚠ WARNING GR (⏚): Protective earth terminal. Connect to a separate ground wire of at least 2 mm^2 to ground the terminal at a resistance of less than 100 Ω to prevent electric shock.

⚠ Caution Avoid sharing the grounding wire with other equipment or attaching to the beam of a building, otherwise it may cause an adverse effect.

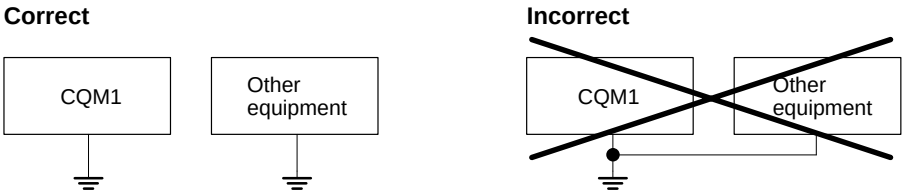

2-5-2 DC Power Supply Unit Wiring

The following diagram shows the proper connection to a DC power supply. Refer to *2-2-3 Selecting a Power Supply Unit* for details on Power Supply Unit capacity.

Remove the seal from the top of the Power Supply Unit only after wiring is completed. This seal must be removed before operating the Unit to prevent overheating.

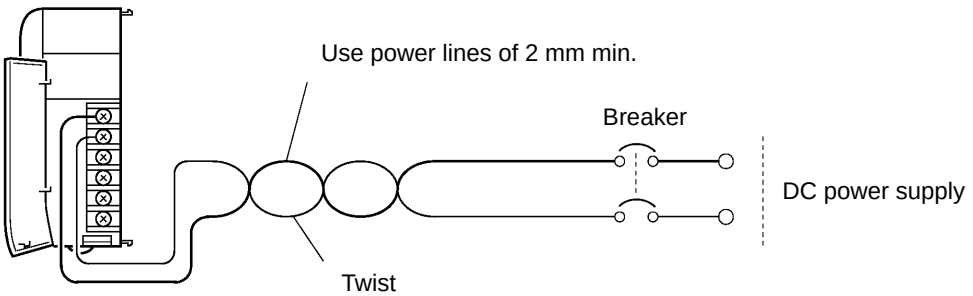

⚠ Caution Be sure that the DC power supply voltage remains within the allowed fluctuation range of 20 to 28 VDC.

Terminal Block

The following diagram shows the terminal blocks for the DC Power Supply Unit.

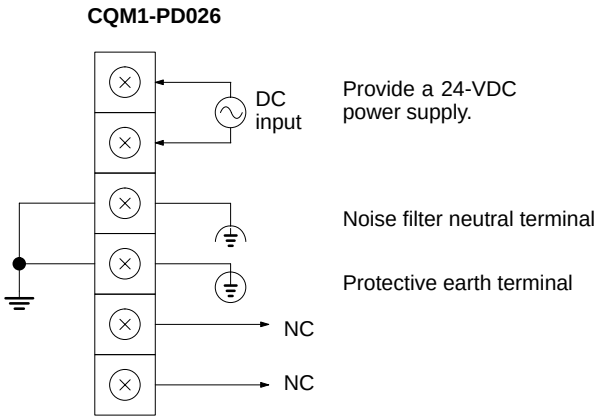

The wire used should be at least 2 mm^2. Provide the grounding point as close to the CQM1 PC as possible.

Note To satisfy the EC directives (low-voltage directive), provide reinforced insulation or double insulation for the power supply.

⚠ WARNING LG (or):

Noise filter neutral terminal. Short-circuit the LG ( ) terminal and GR ( ) terminals using the attached short-circuit bar and ground them at a resistance of less than 100 Ω to reduce noise and prevent electric shock.

⚠ WARNING GR ( ):

Protective earth terminal. Connect to a separate ground wire of at least 2 mm^2 to ground the terminal at a resistance of less than 100 Ω to prevent electric shock.

⚠ Caution Avoid sharing the grounding wire with other equipment or attaching to the beam of a building, otherwise it may cause an adverse effect.

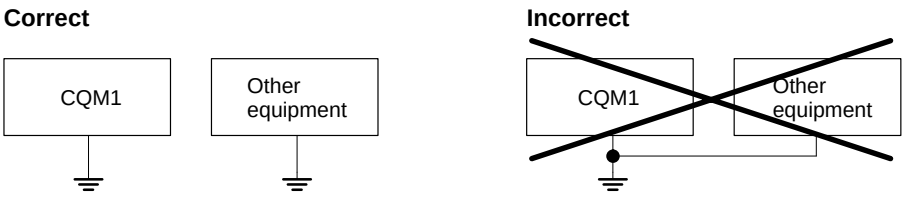

2-5-3 Wiring Precautions for Ground Wires

Wire the grounding wires according to the diagram shown below. The CQM1 PC with the lot number □□Z5 manufactured in December 1995 and later is provided with the LG-GR short-circuit bar and the DIN-track cable.

In order to improve the electromagnetic compatibility (EMC), connect the LG (⏚ or ⏚) terminal to the screw on the end plate using the supplied DIN-track connecting cable.

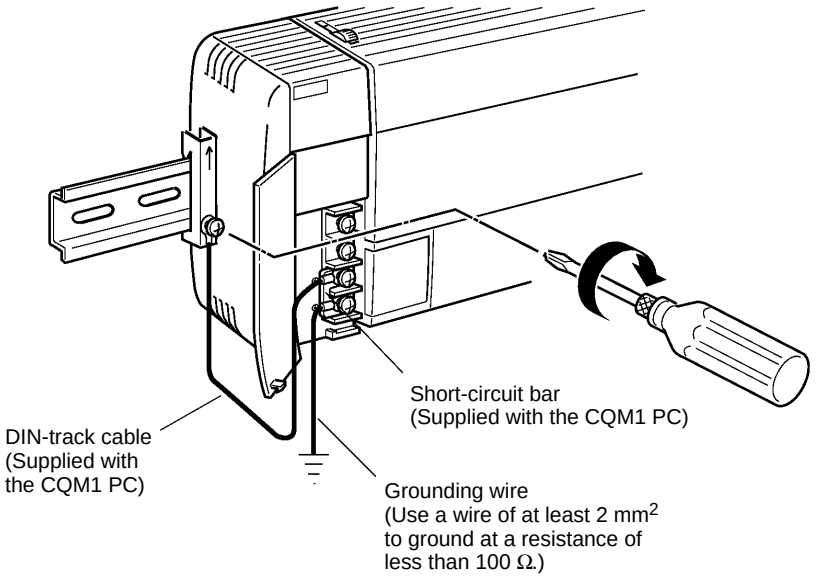

Note Definition of EMC:
The EMC refers to the capacity of equipment represented in terms of emission, which indicates the degree to which electromagnetic waves produced by equipment do not affect other communications equipment, and also in terms of immunity, which indicates the degree of resistance against electromagnetic disturbance.

2-5-4 I/O Unit Wiring

Note To satisfy the EC directives (low-voltage directives), provide reinforced insulation or double insulation for the DC power supply used with the I/O Unit.

The following information must be considered when connecting electrical devices to I/O Units.

⚠ **Caution** Tighten the terminal screws to a torque of 0.5 to 0.6 N • m.

⚠ **WARNING** Do not apply voltages exceeding the input voltages to Input Units nor voltages exceeding the switching capacity to Output Units. Doing so may result in damage or destruction of the I/O Unit or result in fire.

Leakage Current (24 VDC)

A leakage current can cause false inputs when using 2-wire sensors (proximity switches or photoelectric switches) or limit switches with LEDs on 24 VDC.

If the leakage current exceeds 1.3 mA, insert a bleeder resistor in the circuit to reduce the input impedance, as shown in the following diagram.

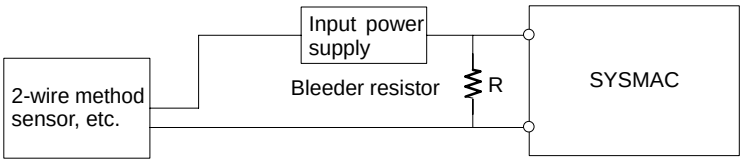

R = 7.2/(2.4I–3) kΩ max. I: Device's leakage current (mA)
R: Bleeder resistance (kΩ)
W = 2.3/R W min. W: Bleeder resistor's power rating (W)

The equations above were derived from the following equation:

$$I \times \frac{R \times \text{Input voltage (24)} \times \text{Input current (10)}}{R + \text{Input voltage (24)} \times \text{Input current (10)}} \leq \text{OFF voltage (3)}$$

$$W \geq \text{Input voltage (24)}/R \times \text{Input voltage (24)} \times \text{tolerance (4)}$$

Inrush Current

The following diagram shows two methods that can be used to reduce the large inrush current caused by certain loads, such as incandescent light bulbs.

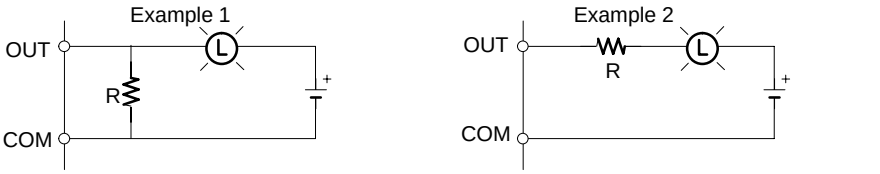

Generating a dark current (about 1/3 of the rated current) through the incandescent bulb.

Inserting a regulating resistance.

Be careful not to damage the output transistor.

I/O Line Noise

Do not run CQM1 I/O lines in the same duct or conduit as multi-conductor cables of other control lines. If power cables carry more than 10 A at 400 V or more than 20 A at 220 V, they must be run parallel to I/O wiring. Leave at least 300 mm between the power cables and the I/O wiring, as shown in the following diagram.

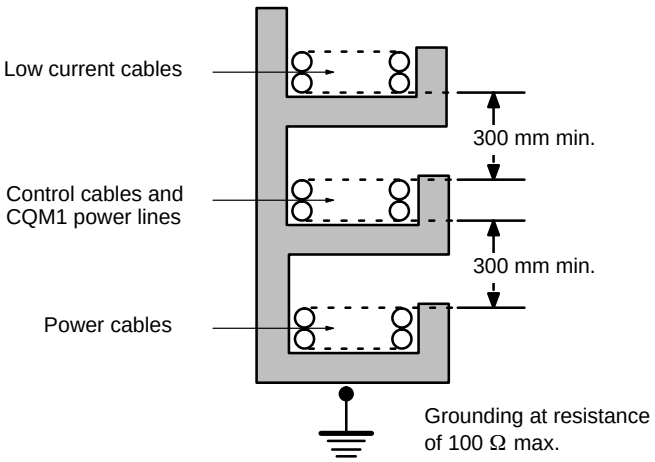

If the I/O wiring and power cables must be placed in the same duct (for example, where they are connected to the equipment), shield them from each other using grounded metal plates. In addition, use shielded cables for the I/O signal lines to improve noise immunity. Also, connect the shielded cables to the GR terminal of the PC.

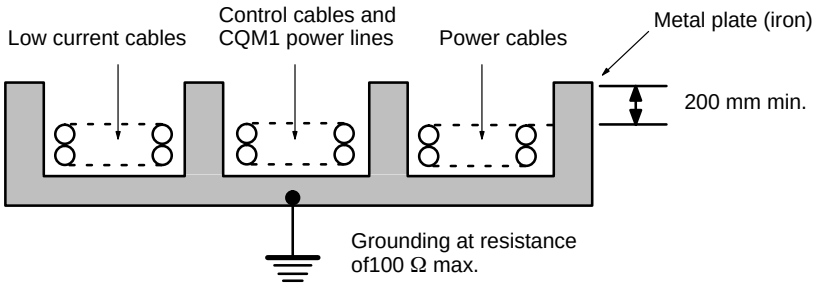

Inductive Loads

When connecting an inductive load to an I/O Unit, connect a diode in parallel with the load. The diode should satisfy the following requirements:

1, 2, 3...

1. Peak reverse-breakdown voltage must be at least 3 times the load voltage.
2. Average rectified current must be 1 A.



⚠ Caution Do not apply a voltage exceeding the maximum permissible input voltage of the Input Unit or the maximum switching capacity of the Output Unit, otherwise the Units may be damaged, a malfunction may occur, or a fire may result.

Input Devices

When connecting an external device with a DC output to a DC Input Unit, wire the device as shown in the following table.

Device	Circuit Diagram
Contact output	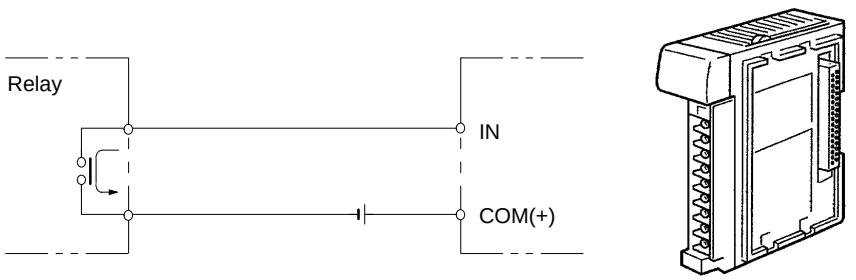
NPN open collector	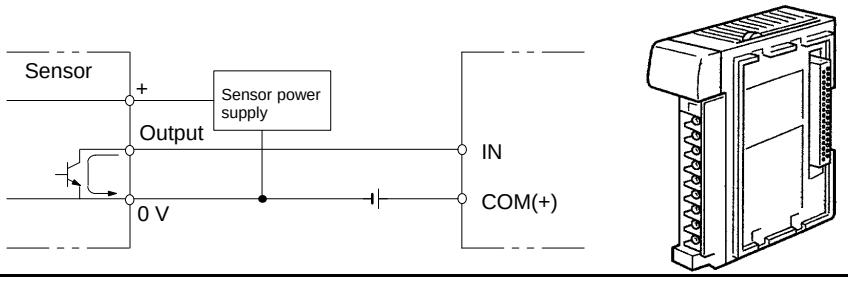

Device	Circuit Diagram
NPN current output	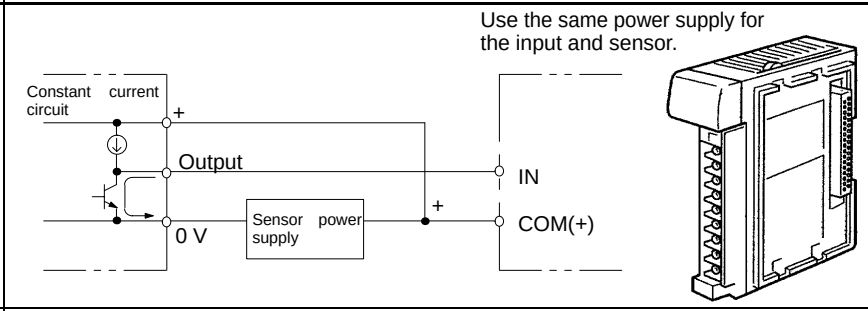
PNP current output	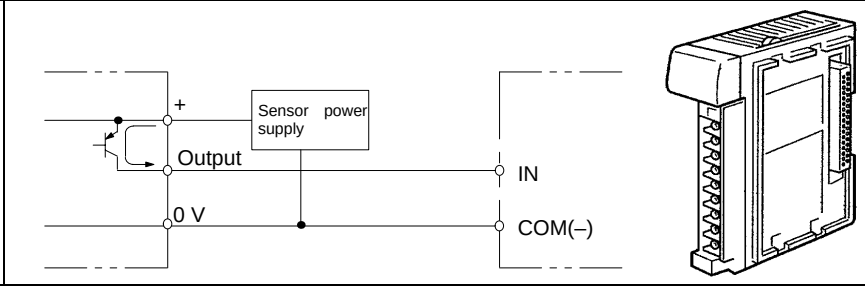
Voltage output	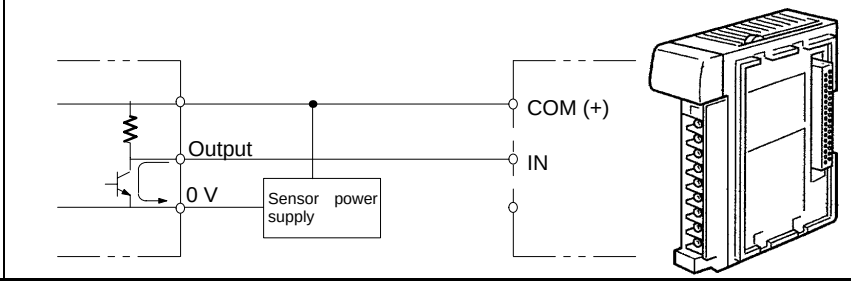

Precautions in Connecting 2-wire DC Sensors

The following conditions must be met when using a 2-wire DC sensor input from a 12-/24-VDC input device. Malfunctions will occur if these connections are not met.

1, 2, 3...

1. The relationship between the PC's ON voltage and the sensor's residual voltage must be as follows:

   $V_{ON} \leq V_{CC} - V_R$

2. The relationship between the PC's ON current and the sensor's control output (load current) must be as follows:

   I_{OUT} (min.) $\leqq I_{ON} \leqq I_{OUT}$ (max.)

   Where, $I_{ON} = (V_{CC} - V_R - 1.5$ (residual voltage in PC))$/R_{IN}$

   If I_{ON} is less than I_{OUT} (min.), connect a bleeder resistor, R. The resistance constant of the bleeder resistor can be calculated as follows:

   $R \leqq (V_{CC} - V_R)/(I_{OUT}$ (min.) $- I_{ON})$
   Power $W \geqq (V_{CC} - V_R)^2/R$ x 4 (tolerance)

3. The relationship between the PC's OFF current and the sensor's residual current must be as follows:

   $I_{OFF} \geqq I_{leak}$

   Refer to *Leakage Current (24 VDC)* earlier in this section for details.

The value of I_{OFF} is different for different Units, and is 1.3 mA for all Units for which the OFF current is not listed in the Unit specifications.

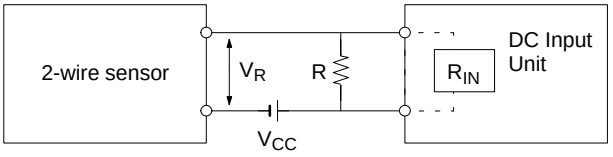

V_{CC}: Power supply voltage
V_{ON}: PC's ON voltage
I_{ON}: PC's ON current
I_{OFF}: PC's OFF current
R_{IN}: PC's input impedance

V_R: Sensor's output residual voltage
I_{OUT}: Sensor's control output (load current)
I_{leak}: Sensor's leakage current
R: Bleeder resistor

2-5-5 Compliance with EC Directives

The following precautions must be abided by when installing CQM1-series PCs to meet EC Directives.

1, 2, 3...

1. CQM1-series PCs are classified as open-structure devices and must be installed inside a control panel.
2. Use reinforced insulation or double insulation on the DC power supply connected to DC Power Supply Unit and DC I/O Units.
3. CQM1-series PCs that meet EC Directives meet the common emission standard (EN50081-2) of the EMC Directives as individual products. When assembled into machinery, however, the noise generated by switching relay outputs can fail to meet the standard. When noise is excessive, surge killers must be installed or other measures must be taken outside of the PC. The measures required to meet the standard will vary with the load being driven, wiring, the configuration of the machinery, etc.

   The following examples show means of reducing noise. These means will only reduce the amount of noise and will not eliminate noise. They are provided here as examples only.

Requirement

The following conditions can be used to determine if measures to reduce noise are necessary. Refer to the EN50081-2 Standard for details.

- If the loads of the devices into which the PC is built are switched less than 5 times a minute, then no measures need to be taken.
- If the loads of the devices into which the PC is built are switched 5 times or more a minute, then measures need to be taken.

Examples

Inductive Load Surge Suppressor

Connect a surge suppressor or diode in parallel with the load, as shown in the following diagrams, when switching inductive loads.

CR Method (AC or DC)

The reset time will be increased if the load is a relay, solenoid, or similar device. Connect the CR between the load connections for 24-V and 48-V power supply voltages and between the contact connections for 100 to 200-V power supply voltages.

The capacitor and resistors can be based on the following guidelines.

C: 0.5 to 1 μF for each amp of contact current
R: 0.5 to 1 Ω for each volt of contact voltage.

You will need to adjust the above values depending on the characteristics of the load, relay, etc., based on the discharge suppression of the capacitor when the contacts are open and the current control effect of the resistor the next time the circuit is closed.

The dielectric strength of the capacitor generally needs to be between 200 and 300 V. Use an AC capacitor (without polarity) in an AC circuit.

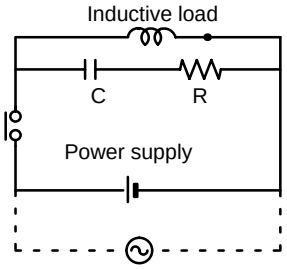

Diode Method (DC Only)

The energy stored in the coil is impressed on the coil as a current by the action of the parallel diode and converted to Joule heat by the resistance of the inductive load. Here, the reset time will be increased even more than for the CR method.

The reverse dielectric strength of the diode must be 10 times the circuit voltage and the forward current must be at least as high as that of the load. If the circuit voltage is low enough, as it is for most electronic circuits, then the reverse dielectric strength of the diode can be as low as 2 to 3 times the circuit voltage.

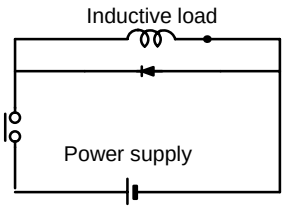

Varistor (AC or DC)

The method uses the fixed voltage characteristics of a varistor to prevent high voltages from being applied to the contacts. Here, as well, the reset time will be increase somewhat.

Connect the varistor between the load connections for 24-V and 48-V power supply voltages and between the contact connections for 100 to 200-V power supply voltages.

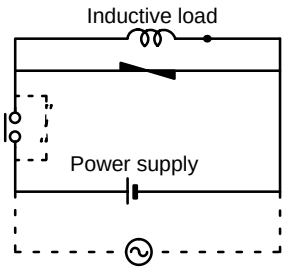

Output Surge Current

When connecting an output device having a high surge current (such as an incandescent lamp), use one of the following circuit configurations to protect the Output Unit.

The following circuit lets the load draw a small current (about one third the rated current) while the output is OFF, significantly reducing the surge current.

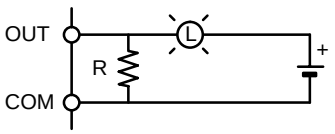

The following circuit reduces the surge current by employing a current-limiting resistor.

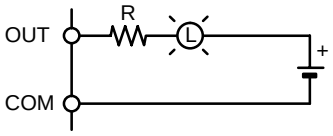

2-5-6 Cable Preparation (Connector Type)

Prepare the cable for connector-type I/O Units as explained below.

Recommended Connectors (Cable Side)

Connector type	Model (by Fujitsu)	Set (from OMRON)
Soldered	Socket: FCN-361J040-AU Connector cover: FCN-360C040-J2	C500-CE404
Crimp	Housing: FCN-363J040 Contact: FCN-363J-AU Connector cover: FCN-360C040-J2	C500-CE405
Pressure welded	FCN-367J040-AU/F	C500-CE403

A soldered-type socket and connector cover are provided with each I/O Unit.

Recommended Wire

Use AWG26 to 24 (0.2 to 0.13 mm^2) wire for connecting to all of the connector pins.

Note For details on pin arrangement and the internal circuitry of connectors at the CQM1 side, refer to the sections on DC Input Units (32 points) and Transistor Output Units (32 points) in this manual.

Wiring and Assembly

The following illustrations show the procedure for wiring and assembly of solder-type connectors. First pass the electrical wires through heat-contraction tubes and solder them to the socket pins.

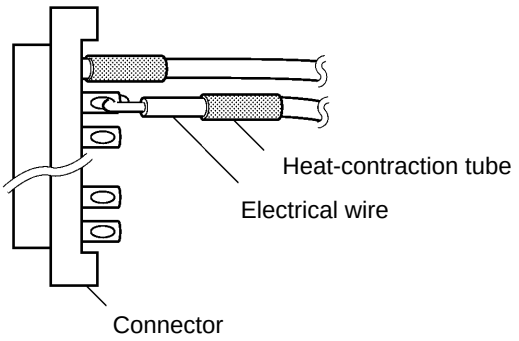

After soldering all of the necessary pins, slide the heat-contraction tubes over the soldered areas of the respective wires. Then shrink the tubes by heating them with a jet of hot air.

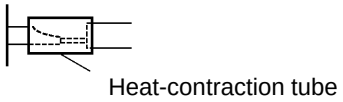

Finally, assemble the socket and connector cover as shown below.

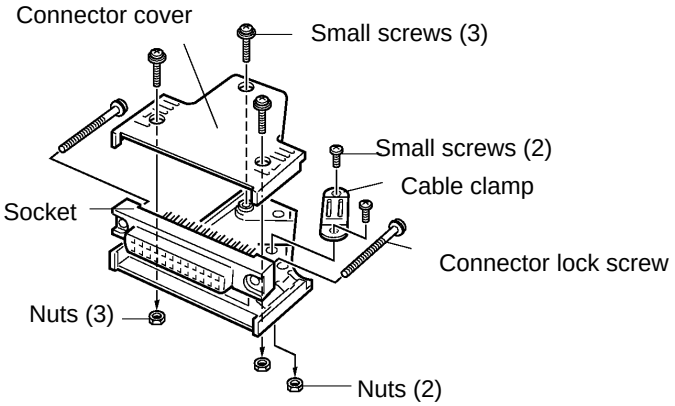

2-5-7 Cable Preparation (Pulse Output and ABS Interface)

Dedicated ports are required for the pulse I/O (CQM1-CPU43-EV1 only) and ABS interface (CQM1-CPU44-EV1 only) functions. Follow the procedure explained here to prepare cable for these ports.

Applicable Connectors (Cable Side)

Use the following products or equivalents for the connector on the cable side.

Socket: XM2D-1501 (OMRON)

Hood: XM2S-1511 (OMRON)

Cable

Use shielded twisted-pair wire for the cable.

Note For details on pin arrangement and the internal circuitry of connectors at the CQM1 side, refer to the sections on CQM1-CPU43-EV1 and CQM1-CPU44-EV1 CPU Units in this manual.

Wiring and Assembly

The following illustrations show the procedure for wiring and assembly of the connectors. First pass the signal wires through heat-contraction tubes and solder them to the socket pins.

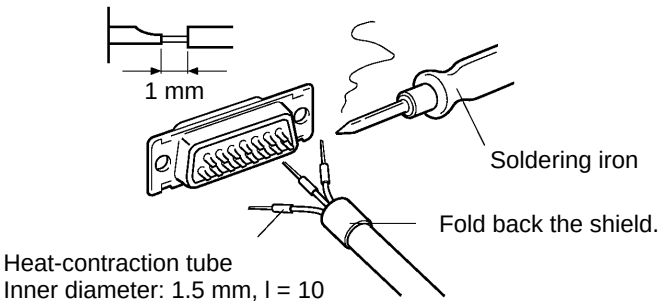

After soldering all of the necessary pins, slide the heat-contraction tubes over the soldered areas of the respective wires. Then shrink the tubes by heating them with a jet of hot air.

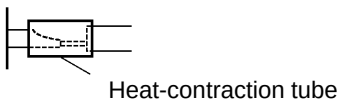

Assemble the socket and hood as shown in the illustration below. At the connector on the CQM1 side, wrap aluminum tape around the twisted wire as shown in the illustration, and secure the wire to the hood.

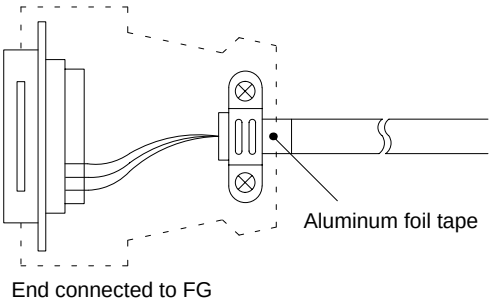

2-5-8 Peripheral Port Connection

Host Computer Connection

The CQM1 CPU Unit can be connected to an IBM PC/AT compatible computer running LSS/SSS with a CQM1-CIF02 Connecting Cable, as shown in the following diagram. The RS-232C port can also be used, but the user must provide the RS-232C cable.

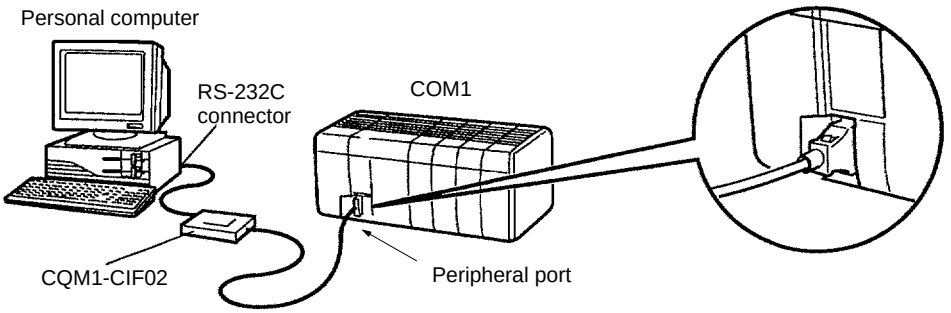

Peripheral Device Connection

The CQM1 CPU Unit can be connected to a C200H-PRO27-E Programming Console with a standard C200H-CN222 (2 m) or C200H-CN422 (4 m) Connecting Cable. The CQM1 CPU Unit can be also connected to a CQM1-PRO01-E. The CQM1-PRO01-E is provided with a 2-m Connecting Cable.

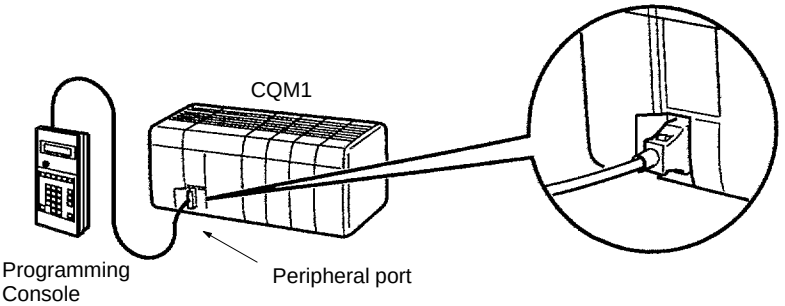

2-5-9 RS-232C Port

RS-232C Connections

The RS-232C port on the CQM1-CPU21-E/4□-EV1 can be connected to various devices for communications with the PC via PORT INPUT and PORT OUTPUT instructions or for automatic data links with other CQM1 PCs (also CQM1-CPU21-E/4□-EV1), as shown in the following diagram.

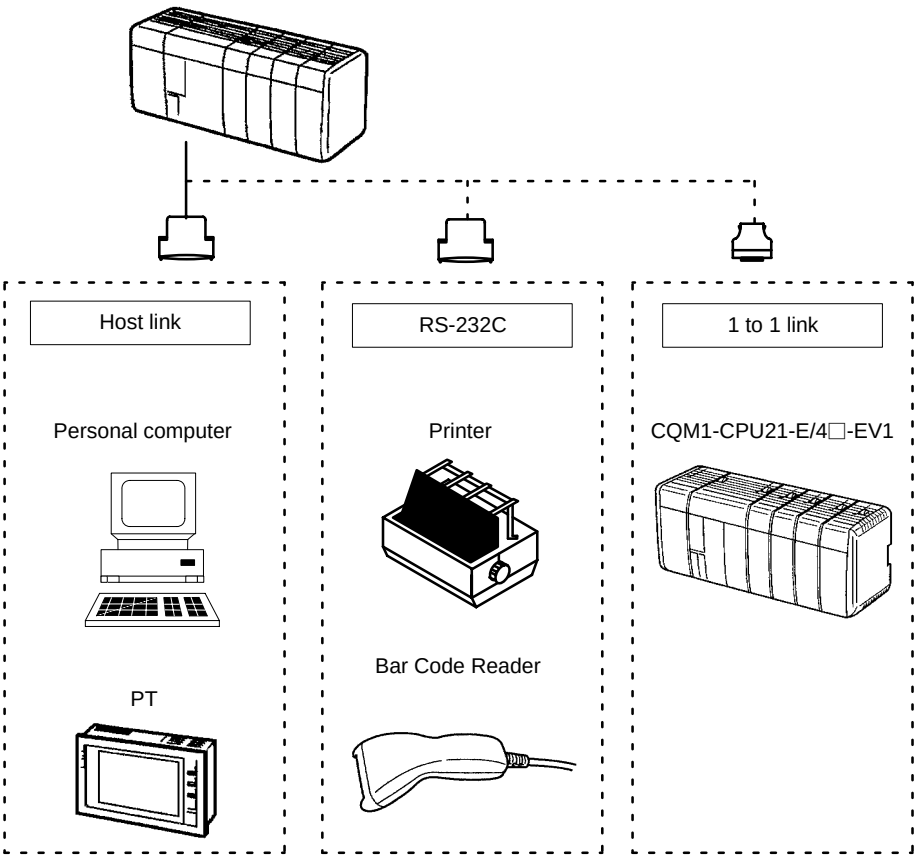

RS-232C Specifications

The specifications for the RS-232C port are given below. Devices that meet these specifications can be connected.

Connector Pin Assignments

Pin assignments for the RS-232C port are given in the following table.

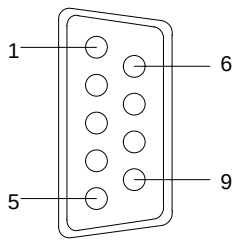

Pin	Abbreviation	Name	Direction
1	FG	Field ground	---
2	SD (TXD)	Send data	Output
3	RD (RXD)	Receive data	Input
4	RS (RTS)	Request to send	Output
5	CS (CTS)	Clear to send	Input
6	---	Not used.	---
7	---	Not used.	---
8	---	Not used.	---
9	SG	Signal ground	---
Connector fitting	FG	Field ground	---

Connections

The connections between the CQM1 and a personal computer are illustrated below as an example.

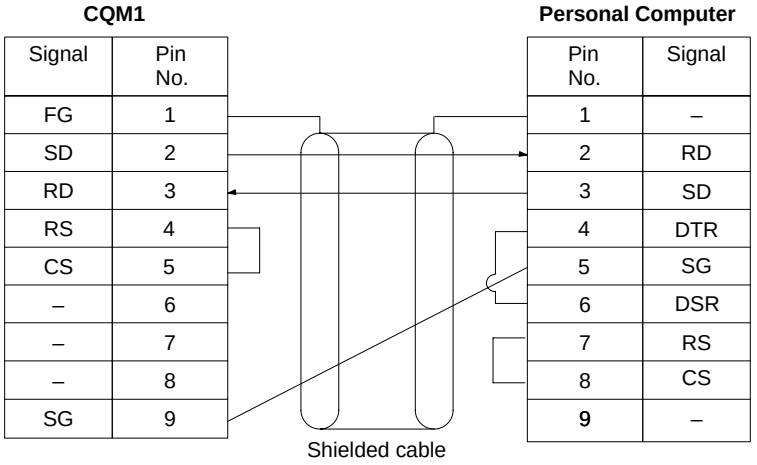

Applicable Connectors

The following connectors are applicable. One plug and one hood are included with the CPU Unit.

Plug: XM2A-0901 (OMRON) or equivalent
Hood: XM2S-0901 (OMRON) or equivalent

Port Specifications

Item	Specification
Communications method	Half duplex
Sync	Start-stop
Baud rate	1,200, 2,400, 4,800, 9,600, or 19,200 bps
Transmission method	Point to point
Transmission distance	15 m max.
Interface	EIA RS-232C

One-to-one Link Connections

The RS-232C port on the CQM1-CPU21-E and CQM1-CPU4□-EV1 can be connected to the same port on another CQM1 PC to create a data link. Wire the cable as shown in the diagram below.

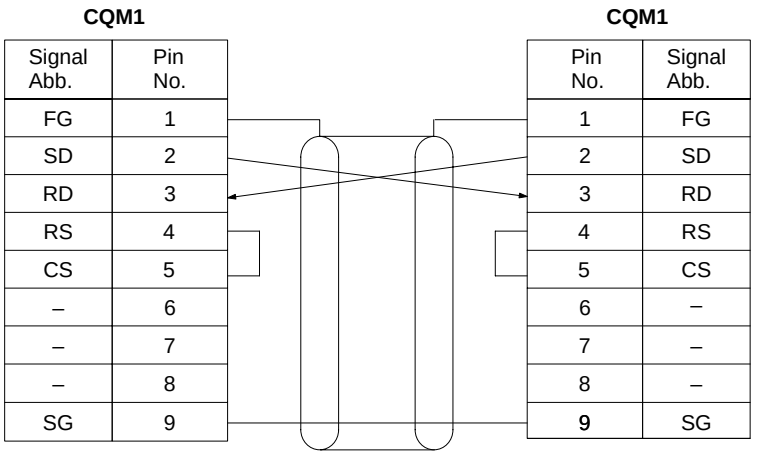

Ground the FG terminals of CQM1 Units at a resistance of less than 100 Ω.

2-6 Unit Specifications

2-6-1 Power Supply Units

Item	CQM1-PA203	CQM1-PA206	CQM1-PA216	CQM1-PD026
Supply voltage	100 to 240 VAC, 50/60 Hz		100 or 230 VAC (selectable), 50/60 Hz	24 VDC
Operating voltage range	85 to 264 VAC		85 to 132 VAC or 170 to 264 VAC	20 to 28 VDC
Operating frequency range	47 to 63 Hz			---
Power consumption	60 VA max.	120 VA max.		50 W max.
Inrush current	30 A max.			
Output capacity	5 VDC: 3.6 A (18 W)	5 VDC: 6 A 24 VDC: 0.5 A (30 W total)		5 VDC: 6 A (30 W)
Insulation resistance	20 MΩ min. (at 500 VDC) between AC external terminals and GR terminals (see note 1)			20 MΩ min. (at 500 VDC) between AC external terminals and GR terminals (see note 1)
Dielectric strength	2,300 VAC 50/60 Hz for 1 min between AC external and GR terminals, (see note 1) leakage current: 10 mA max. 1,000 VAC 50/60 Hz for 1 min between DC external and GR terminals, (see note 1) leakage current: 20 mA max.			
Noise immunity	1,500 Vp-p, pulse width: 100 ns to 1 μs, rise time: 1 ns (via noise simulation)			
Vibration resistance	10 to 57 Hz, 0.075-mm amplitude, 57 to 150 Hz, acceleration: 9.8 m/s^2 (see note 2) in X, Y, and Z directions for 80 minutes each (Time coefficient; 8 minutes × coefficient factor 10 = total time 80 minutes)			
Shock resistance	147 m/s^2 (21.8 m/s^2 for Contact Output Units) 3 times each in X, Y, and Z directions			
Ambient temperature	Operating: 0° to 55°C Storage: –20° to 75°C (except battery)			
Humidity	10% to 90% (with no condensation)			
Atmosphere	Must be free from corrosive gasses			
Grounding	Less than 100 Ω			
Enclosure rating	Mounted in a panel			
Weight	5 kilograms max.			
Dimensions (without cables)	219 to 443 × 110 × 107 mm (W×H×D)			

Note 1. Disconnect the LG terminal of the Power Supply Unit from the GR terminal when performing insulation and dielectric strength tests. If the tests are repeatedly performed with the LG and GR terminals short-circuited, the internal components may be damaged.

2.

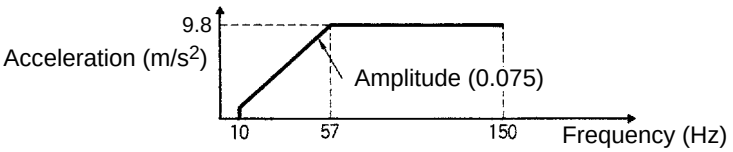

2-6-2 CPU Unit Specifications

Item	CQM1-CPU11-E/21-E	CQM1-CPU41 -EV1	CQM1-CPU42 -EV1	CQM1-CPU43-EV1 /44-EV1
Control method	Stored program method			
I/O control method	Cyclic scan with direct output; immediate interrupt processing			
Programming language	Ladder diagram			

Item	CQM1-CPU11-E/21-E	CQM1-CPU41 -EV1	CQM1-CPU42 -EV1	CQM1-CPU43-EV1 /44-EV1
Instruction length	1 step per instruction, 1 to 4 words per instruction			
Types of instructions	117 instructions (14 basic types)	137 instructions (14 basic types)		
Execution time	Basic instructions: 0.50 to 1.50 μs Special instructions: 24 μs (MOV instruction)			
Program capacity	3.2K words	7.2K words		
Input bits	00000 to 01115	I/O total within 128 points (8 words)	I/O total within 256 points (12 words)	
Output bits	10000 to 11115			
	Bits not used as I/O bits can be used as work bits.			
Work bits	2720 bits min. 01200 to 09515 11200 to 19515 21600 to 21915 22400 to 22915			
Function expansion bits	20000 to 21515: Used as work bits.			
	22000 to 22315: Used as work bits.		Analog SV area	Used as work bits.
	23200 to 23515: Used as work bits.			High-speed Counter 1,2 PV
	23600 to 23915: Used as work bits.			Pulse output 1, 2 volume (CPU43-EV1 only)
	24000 to 24315: Used as work bits.			
MACRO instruction bits	Inputs: 64 bits (IR 09600 to IR 09915) Outputs: 64 bits (IR 19600 to IR 19915)			
High-speed Counter 0 PV	32 bits (IR 23000 to IR 23115)			
Special bits (SR area)	192 bits (IR 24400 to IR 25515)			
Temporary bits (TR area)	8 bits (TR0 to TR7)			
Holding bits (HR area)	1,600 bits (HR 0000 to HR 9915)			
Auxiliary bits (AR area)	448 bits (AR0000 to AR 2715)			
Link bits (LR area)	1,024 bits (LR 0000 to LR6315)			
Timers/counters	512 timers/counters (TIM/CNT 000 to TIM/CNT 511).Interrupt refreshing possible for TIM 000 to TIM 015 (high-speed timer only).Interval timers 0 to 2 (interval timer 2 is used with the high-speed counter 0). High-speed counter input.			In addition to the specifications on the left, high-speed counter 1, 2 inputs (2 pts.)
Data memory	1,024 words (DM 0000 to DM 1023) plus DM 6144 to DM 6655 (read-only)	6,144 words (DM 0000 to DM 6143) plus DM 6144 to DM 6655 (read-only)		
Interrupt processing	External interrupts: 4 Scheduled interrupts: 3 (one of which can be used as a high-speed counter interrupt and one of which can be used as pulse output)			In addition to the specifications on the left, high-speed counter 1, 2 interrupts (2 pts.)
Memory protection	HR, AR, and DM area contents; counter values; and clock (RTC) values maintained during power interruptions.			
Memory backup	Battery life is 5 years regardless of presence or absence of clock (RTC). Backup time varies with ambient temperature. If BAT ERR indicator lights, replace the battery with a new one within 1 week. Connect new battery within 5 min of removing battery.			
Self-diagnostic functions	CPU Unit failure (watchdog timer), I/O bus error, memory failure, battery error, and host link error			
Program checks	No END instruction, programming errors (continuously checked during operation)			

2-6-3 Pulse Input Port (CQM1-CPU43-EV1)

Item		Specifications	
Name		[Pulse I/O] CQM1-CPU43-EV1 (Built-in pulse function type)	
Pulse input	Signals	Encoder inputs A, B; pulse input Z	
	Input voltage	12 VDC ± 10%	24 VDC ± 10%
	Input current	A, B: 5 mA, TYP Z: 12 mA, TYP	
	ON voltage	10.2 VDC min.	20.4 VDC min.
	OFF voltage	3.0 VDC max.	4.0 VDC max.
	Computation speed	Single-phase: 50 kHz, two-phase: 25 kHz	
	Minimum response pulse	Encoder input A, B: Encoder input A, B waveform Input rising/falling time: 3 μs max. 50-kHz duty ratio: 50% pulse 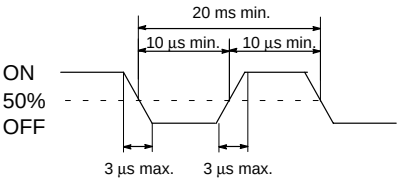 Pulse input Z: A minimum pulse width of 0.1 ms is required. 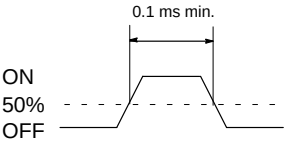 Relation between phases A and B when phase-difference inputs are used. 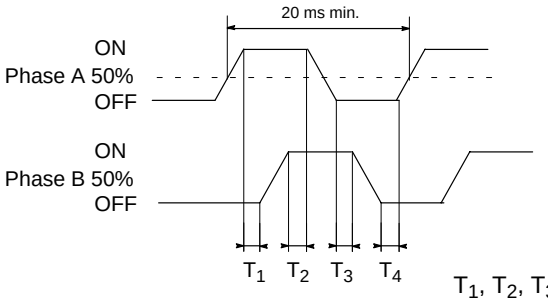 T_1, T_2, T_3, T_4: 4.5 μs max. A minimum of 4.5 μs must be allowed for changing between phase A and phase B.	

Item		Specifications
Pulse output	Signals	Pulse output CW, CCW
	Output frequency	50 kHz (20 kHz max. when stepping motor is connected)
	Max. switching capacity	NPN open collector, 30 mA, 5 to 24 VDC ± 10%
	Min. switching capacity	NPN open collector, 7 mA, 5 to 24 VDC ± 10%
	Leakage current	0.1 mA max.
	Residual voltage	0.4 V max.
	External power supply	5 VDC ± 10%, 30 mA min. 24 VDC $^{+10\%}/_{-15\%}$, 30 mA min.
	Pulse output specifications	Minimum pulse width 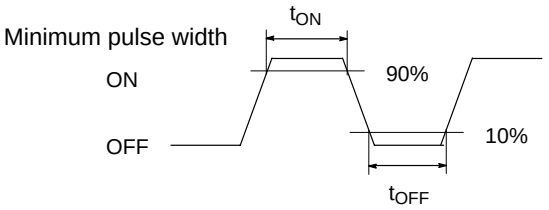

Pulse frequency	Switching current/Load power supply voltage			
	7 to 30 mA/5 VDC ±10%		7 to 30 mA/24 VDC $^{+10}/_{-15}$%	
	t ON	t OFF	t ON	t OFF
10 kpps max.	49.5 μs min.	48.5 μs min.	49.6 μs min.	46.0 μs min.
30 kpps max.	19.5 μs min.	18.5 μs min.	19.6 μs min.	16.0 μs min.
50 kpps max.	9.5 μs min.	8.5 μs min.	9.6 μs min.	6.0 μs min.

Internal Circuit Configuration

- **Pulse Input Section**

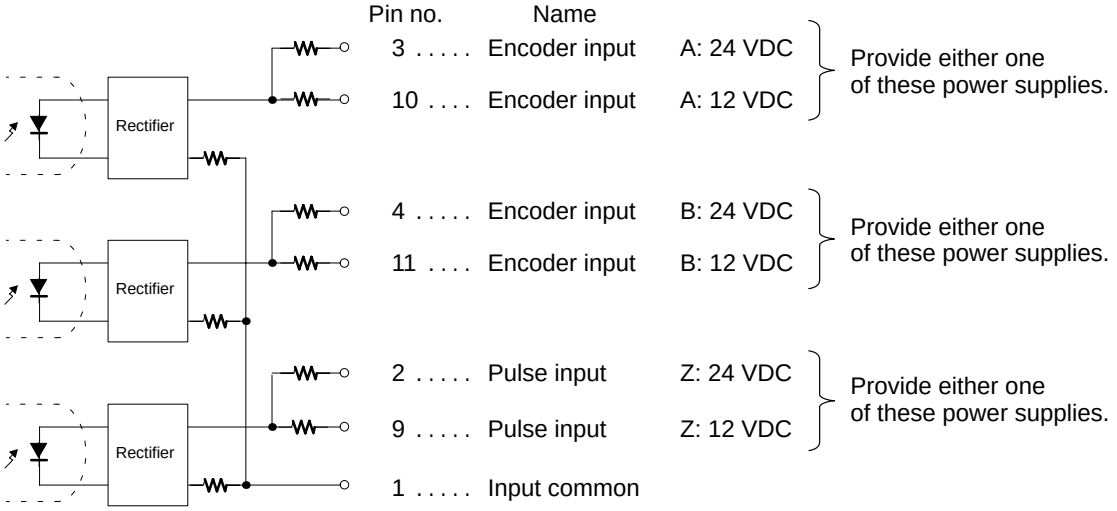

• Pulse Output Section

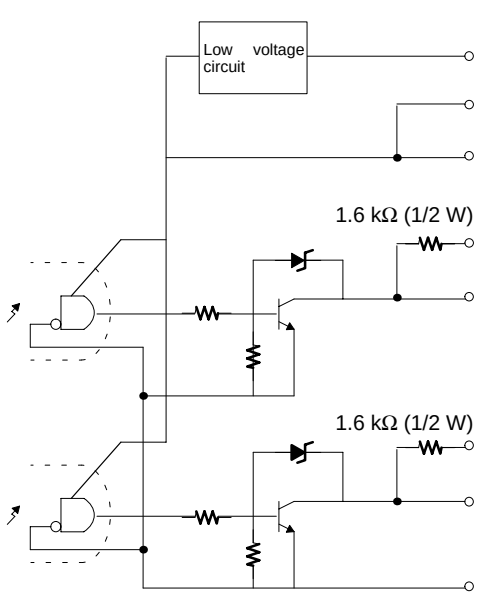

Pin no. Name

15 . . . . Power supply input for output 24 VDC
7 . . . . . Power supply input for output 5 VDC
8 . . . . . Power supply input for output 5 VDC

Provide either one of these power supplies. Do not provide both, or the circuits will be damaged.

13 . . . . CCW pulse output (with 1.6-kΩ resistance)
5 . . . . . CCW pulse output
14 . . . . CW pulse output / PWM output (with 1.6-kΩ resistance)
6 . . . . . CW pulse output / PWM output
12 . . . . Output common (0 V)

Note Ports 1 and 2 are the same.

Connector Pin Arrangement

Pin arrangement	Pin no.	Signals
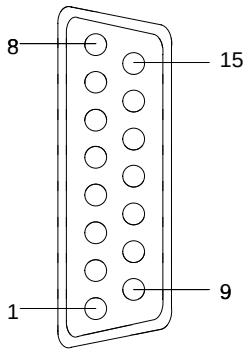	1	Input common
	2	Pulse input Z: 24 VDC
	3	Encoder input A: 24 VDC
	4	Encoder input B: 24 VDC
	5	CCW pulse output
	6	CW pulse output / PWM output
	7	Power supply input for output: 5 VDC
	8	Power supply input for output: 5 VDC
	9	Pulse input Z: 12 VDC
	10	Encoder input A: 12 VDC
	11	Encoder input B: 12 VDC
	12	Output common (0 V)
	13	CCW pulse output (with 1.6-Ω resistance)
	14	CW pulse output / PWM output (with 1.6-Ω resistance)
	15	Power supply input for output: 24 VDC

Wiring Examples

1) Pulse Input Connection

Depending on the count mode, the outputs from the encoder are connected to Port 1 and Port 2 as shown below.

Ports 1 and 2		Encoder outputs		
Pin no.	Signal name	Phase-difference input mode	Pulse + direction input mode	Inc/Dec pulse input mode
3, 10	Encoder input A	Encoder phase A output	Direction signal output	Decrement pulse output
4, 11	Encoder input B	Encoder phase B output	Pulse output	Increment pulse output

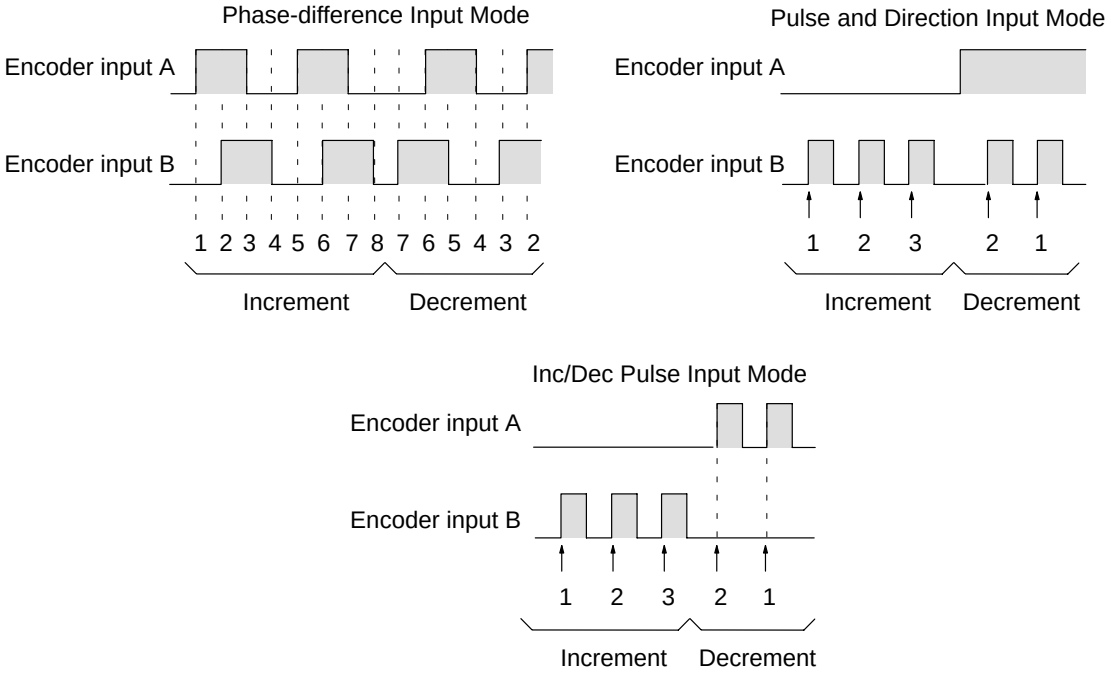

For example, the following diagram shows the connection of an encoder with phases A, B, and C.

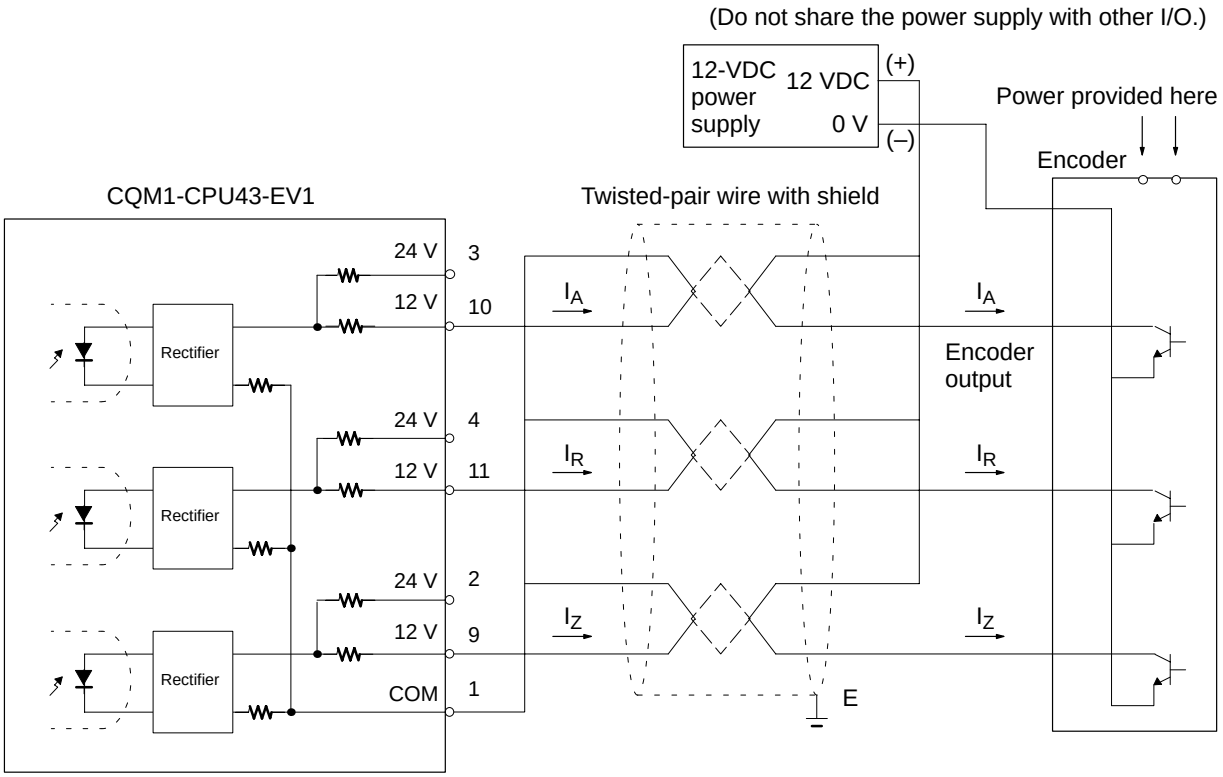

2) Pulse Output Connection

In these two example diagrams, the CQM1-CPU43-EV1 is connected to a 5-V input motor driver.

- **When a 5-VDC Power Supply is Used**

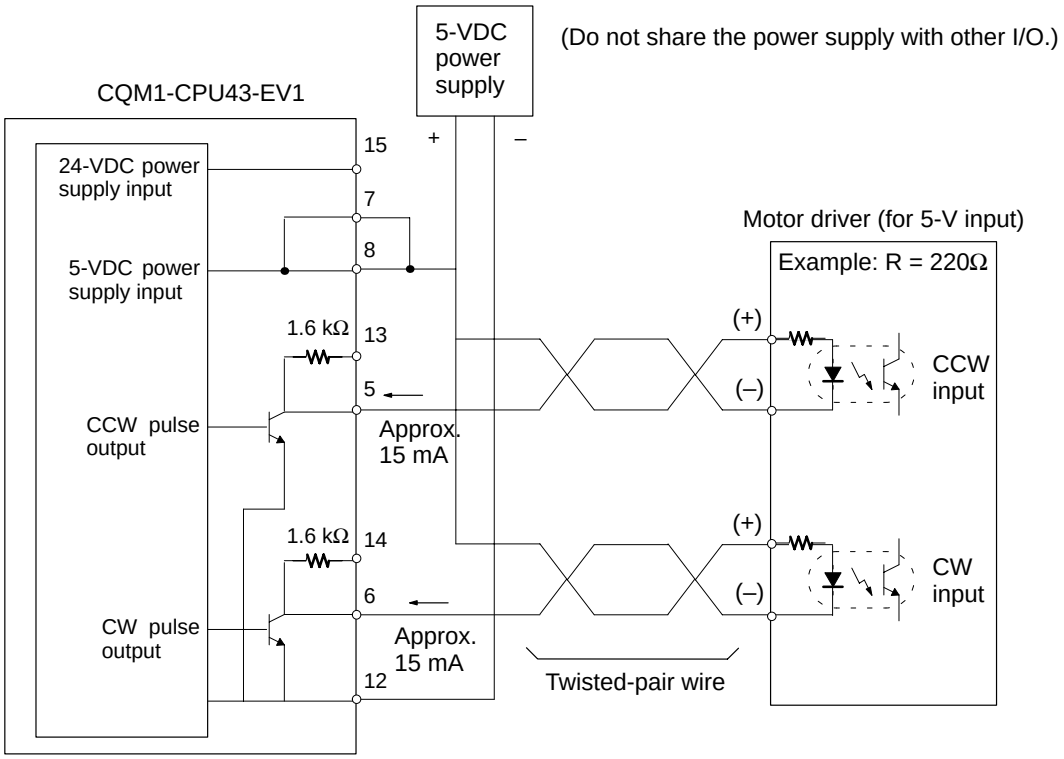

• When a 24-VDC Power Supply is Used

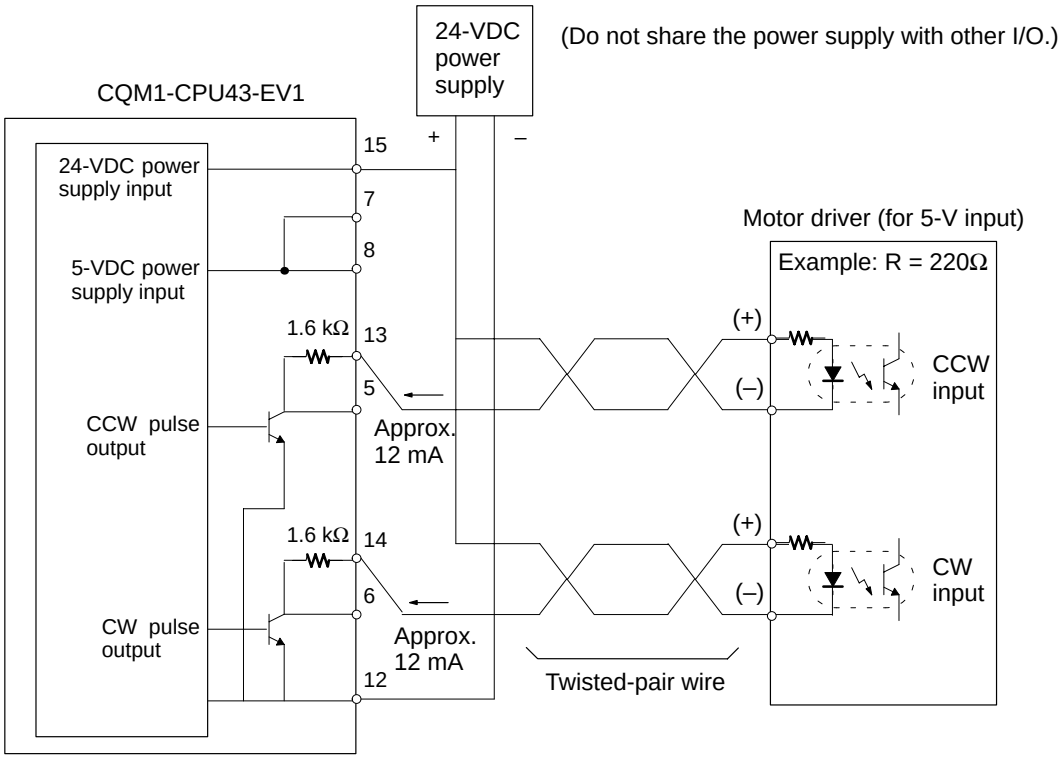

Note In this example, in order to use a 5-V input motor driver with a 24-VDC power supply, the CQM1 internal resistance (1.6 kΩ) is used. Be careful with regard to the drive current at the motor driver.

⚠ Caution Be careful when connecting the power supply inputs for the output section. If both 5-VDC and 24-VDC power supplies are provided, and if they are accidentally reversed, the CPU Unit and the power supply may be damaged.

For the pulse output, connect a 7-mA to 30-mA load. (If using a load smaller than 7 mA, install a bypass resistor.)

Two 1.6-kΩ (1/2 W) resistors are built into the internal circuitry (pin numbers 13 and 14) for the pulse output. Use either one of the following outputs, to conform with the power supply, motor driver, and so on, that are used.

Open Collector Output

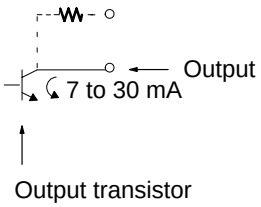

Open Collector Output with 1.6-kΩ Series Resistance

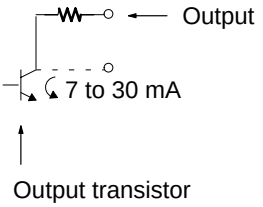

The built-in 1.6-kΩ resistors can be used as bypass resistors as shown in the example diagram below. In this example, the output-section transistor current of 7 mA equals the load current of 4 mA plus the bypass current of 3 mA.

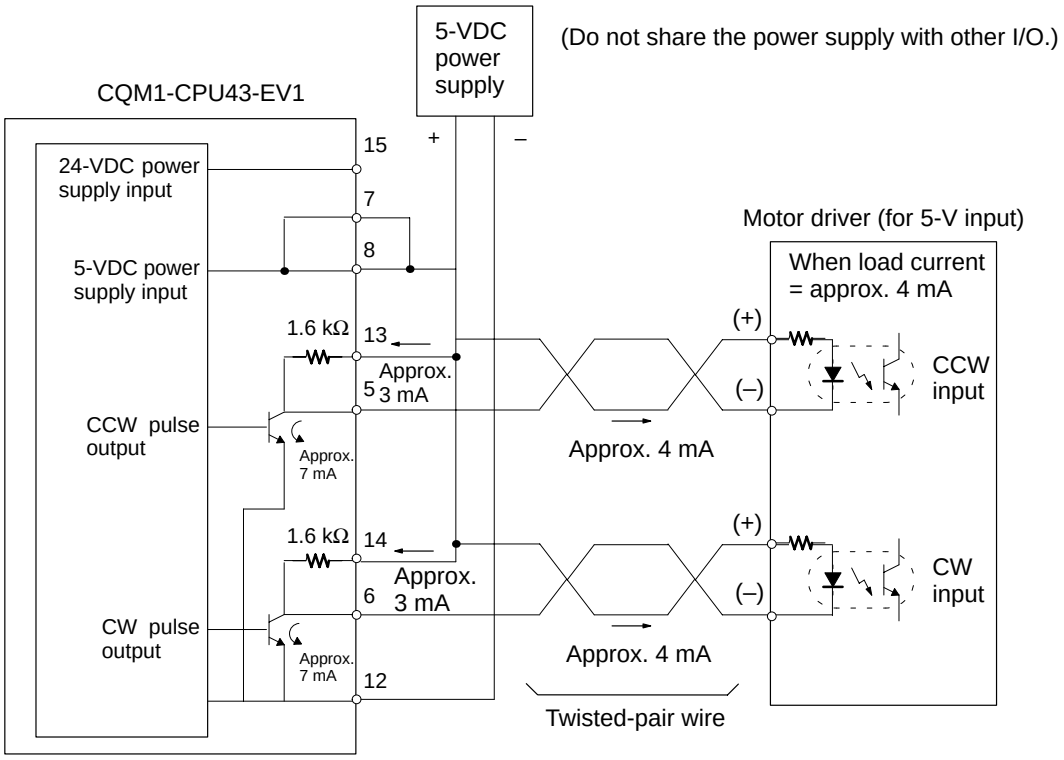

The pulse output section's internal circuit transistor is off while pulse output is stopped.



2-6-4 ABS Interface Port (CQM1-CPU44-EV1)

Item	Specifications
Name	[ABS interface] CQM1-CPU44-EV1 (built-in ABS interface type)
Input Voltage	24 VDC $^{+10\%}/_{-15\%}$
Input Impedance	5.4 kΩ
Input Current	4 mA typical
ON Voltage	16.8 VDC min.
OFF Voltage	3.0 VDC max.
Computation speed	4 kHz max.
Input code	Grey, binary (8, 10, 12 bits)

Internal Circuit Configuration

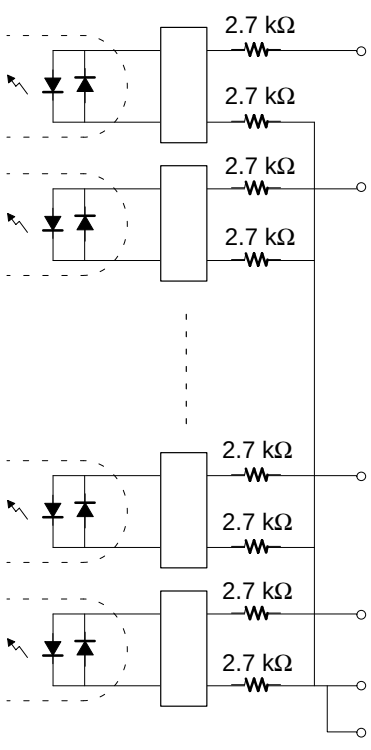

Bit no.	Name	
2	Encoder input	Grey code 2^{11} bit
10	Encoder input	Grey code 2^{10} bit
7	Encoder input	Grey code 2^{1} bit
15	Encoder input	Grey code 2^{0} bit
1	Input common	
9	Input common	

Connector Pin Arrangement

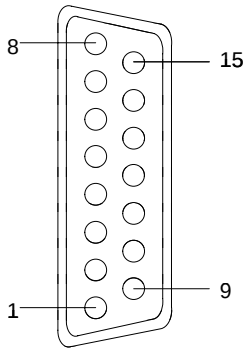

Pin no.	Signals
1	Input common
2	Encoder input, grey code 2^{11} bit
3	Encoder input, grey code 2^{9} bit
4	Encoder input, grey code 2^{7} bit
5	Encoder input, grey code 2^{5} bit
6	Encoder input, grey code 2^{3} bit
7	Encoder input, grey code 2^{1} bit
8	NC
9	Input common
10	Encoder input, grey code 2^{10} bit
11	Encoder input, grey code 2^{8} bit
12	Encoder input, grey code 2^{6} bit
13	Encoder input, grey code 2^{4} bit
14	Encoder input, grey code 2^{2} bit
15	Encoder input, grey code 2^{0} bit

Note Ports 1 and 2 are the same.

⚠ Caution The only absolute-type encoder that can be connected is the grey binary code output type.

Wiring Example

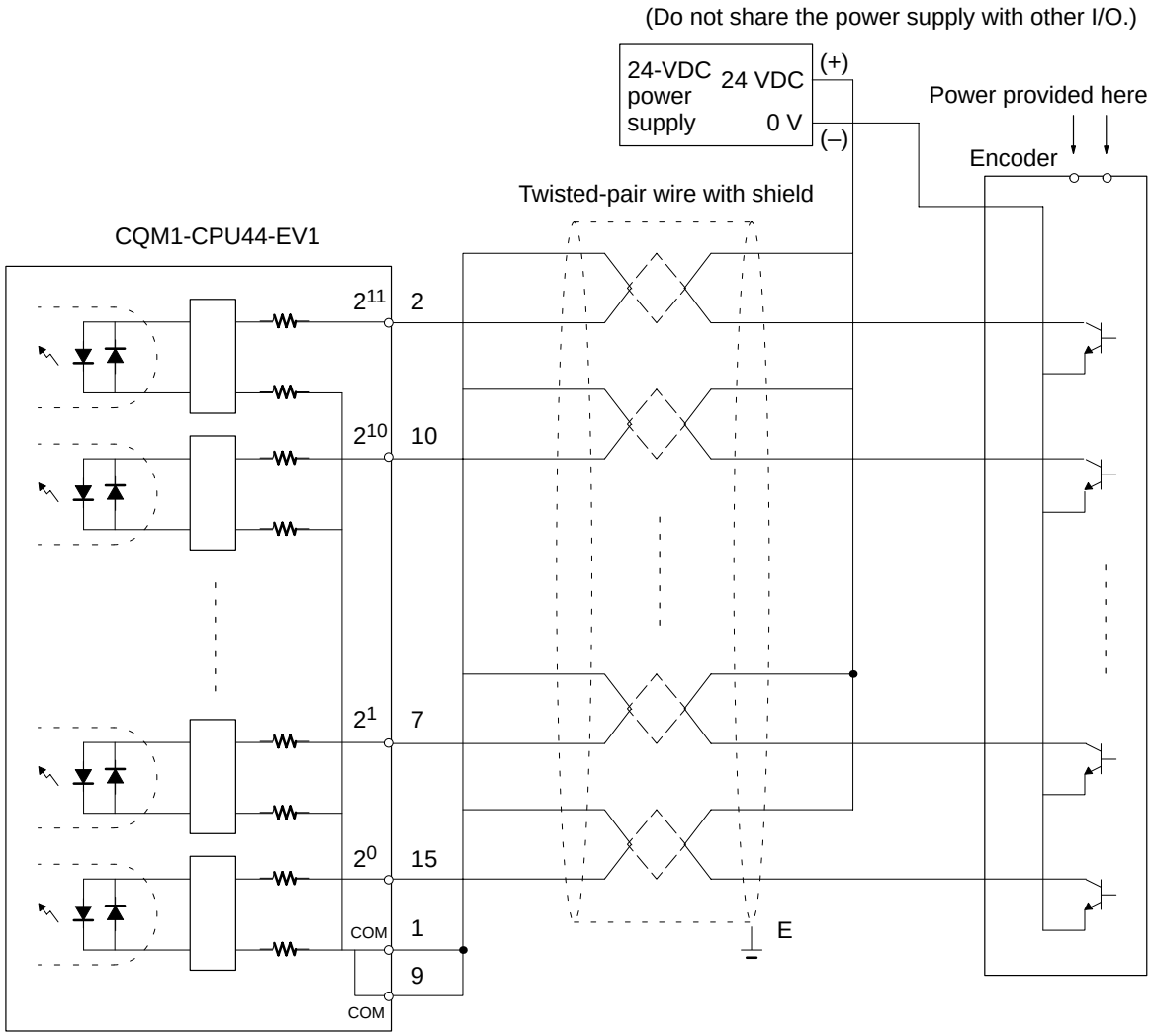

2-6-5 24-VDC Inputs (Built into CPU Unit)

Item	CQM1-CPU11-E/21-E/41-EV1/42-EV1/43-EV1/44-EV1
Input Voltage	24 VDC $^{+10\%}/_{-15\%}$
Input Impedance	IN4 and IN5: 2.2 kΩ; other inputs: 3.9 kΩ
Input Current	IN4 and IN5: 10 mA typical; other inputs: 6 mA typical (at 24 VDC)
ON Voltage	14.4 VDC min.
OFF Voltage	5.0 VDC max.
ON Delay	Default: 8 ms max. (can be set between 1 and 128 ms in PC Setup; see note)
OFF Delay	Default: 8 ms max. (can be set between 1 and 128 ms in PC Setup; see note)
No. of Inputs	16 points (16 inputs/common, 1 circuits)
Circuit Configuration	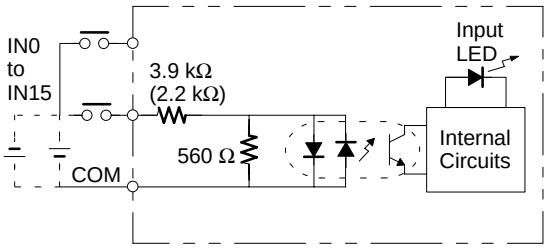 **Note** Figures in parentheses are for IN4 and IN5. The input power supply polarity may be connected in either direction.
Terminal Connections	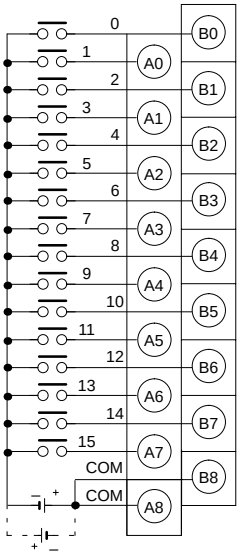

Note IN0 through IN3 can be set for use as input interrupts in the PC Setup. The ON and OFF delays for input interrupts are fixed at 0.1 ms max. and 0.5 ms max., respectively. IN4 through IN6 can be set for use as high-speed counter interrupts. The delays for high-speed counter interrupts are shown in the following table.

Input	Increment input mode	Differential phase mode
IN4 (A)	5 KHz	2.5 KHz
IN5 (B)	Normal input	
IN6 (Z)	ON: 100 μs min. required; OFF delay: 500 μs min. required	

The minimum response pulses will be as follows:

Input A (IN4), Input B (IN5)

Increment Mode (5 kHz max.)

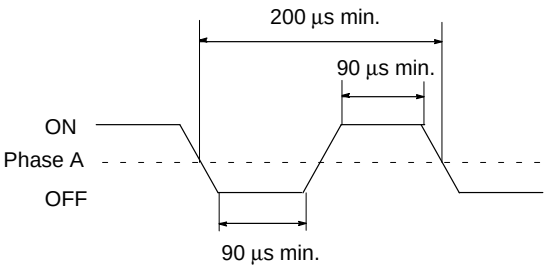

Phase-input Difference Mode (2.5 kHz max.)

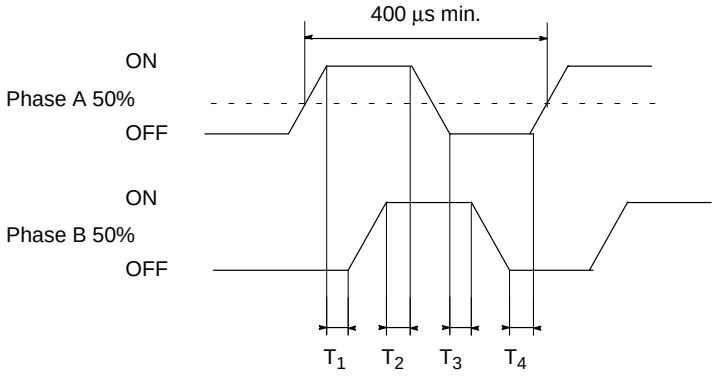

T_1, T_2, T_3, T_4: 90 μs min.

Input Z (IN6)

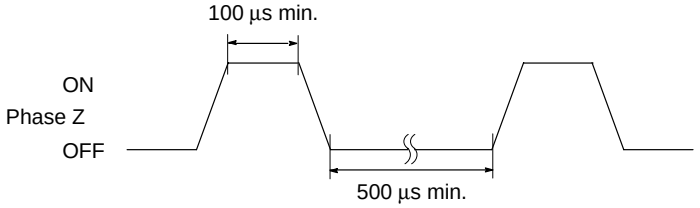

2-6-6 12-VDC Input Units

Item	CQM1-ID111
Input Voltage	12 VDC $^{+10\%}/_{-15\%}$
Input Impedance	1.8 kΩ
Input Current	6 mA typical (at 12 VDC)
ON Voltage	8.0 VDC min.
OFF Voltage	3.0 VDC max.
ON Delay	Default: 8 ms max. (can be set between 1 and 128 ms in PC Setup, see note)
OFF Delay	Default: 8 ms max. (can be set between 1 and 128 ms in PC Setup, see note)
No. of Inputs	16 points (16 points/common, 1 circuit)
Internal Current Consumption	85 mA max. at 5 VDC
Weight	180 grams max.
Circuit Configuration	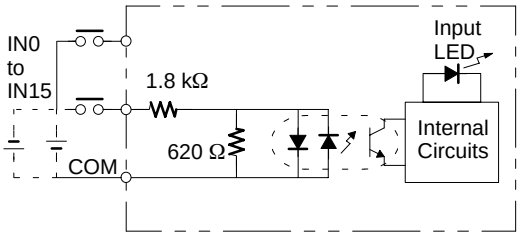 **Note** The input power supply polarity may be connected in either direction.
Terminal Connections	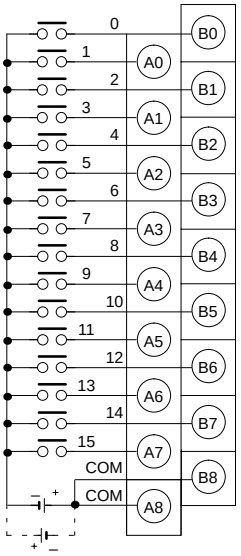

Note Refer to *3-1-1 Offline Operations*.

Item	CQM1-ID112
Input Voltage	12 VDC $^{+10\%}/_{-15\%}$
Input Impedance	2.2 kΩ
Input Current	4 mA typical (at 12 VDC)
ON Voltage	8.0 VDC min.
OFF Voltage	3.0 VDC max.
ON Delay	Default: 8 ms max. (can be set between 1 and 128 ms in PC Setup)
OFF Delay	Default: 8 ms max. (can be set between 1 and 128 ms in PC Setup)
No. of Inputs	32 points (32 inputs/common, 1 circuit)
Internal current consumption	5 VDC, 170 mA max.
Weight	160 g max.
Circuit Configuration	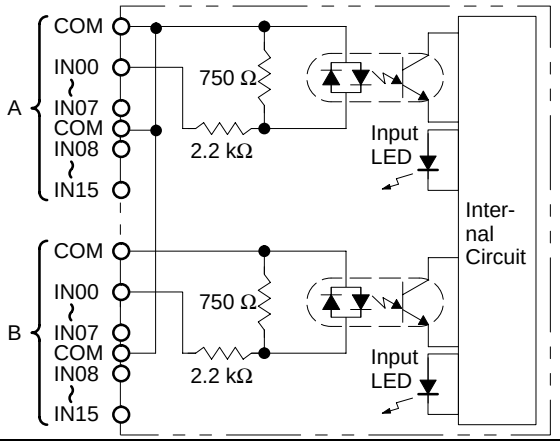
Terminal Connections	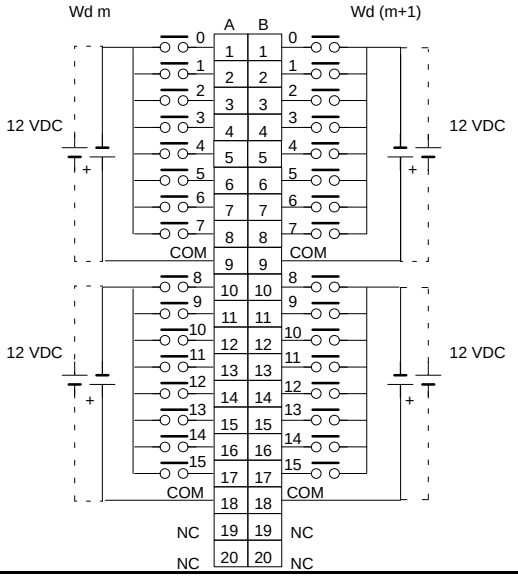 The polarity of the input power supply can be either plus or minus. The polarity of all the commons, however, must match. The respective COMs are internally connected, but they all must be wired.

2-6-7 12 to 24-VDC and 24-VDC Input Units

Item	CQM1-ID211	CQM1-ID212
Input Voltage	12 to 24 VDC $^{+10\%}/_{-15\%}$	24 VDC $^{+10\%}/_{-15\%}$
Input Impedance	2.4 kΩ	3.9 kΩ
Input Current	10 mA typical (at 24 VDC)	6 mA typical (at 24 VDC)
ON Voltage	10.2 VDC min.	14.4 VDC min.
OFF Voltage	3.0 VDC max.	5.0 VDC max.
ON Delay	Default: 8 ms max. (can be set between 1 and 128 ms in PC Setup, see note)	Default: 8 ms max. (can be set between 1 and 128 ms in PC Setup, see note)
OFF Delay	Default: 8 ms max. (can be set between 1 and 128 ms in PC Setup, see note)	Default: 8 ms max. (can be set between 1 and 128 ms in PC Setup, see note)
No. of Inputs	8 points (independent commons)	16 points (16 points/common, 1 circuit)
Internal Current Consumption	50 mA max. at 5 VDC	85 mA max. at 5 VDC
Weight	180 grams max.	180 grams max.
Circuit Configuration	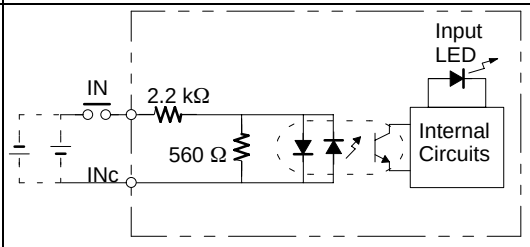 **Note** The input power supply polarity may be connected in either direction.	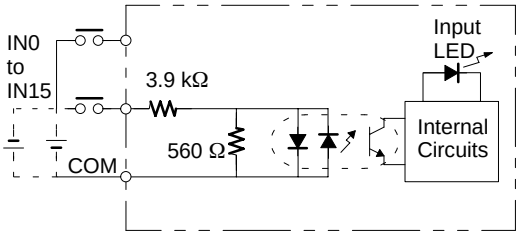 **Note** The input power supply polarity may be connected in either direction.
Terminal Connections	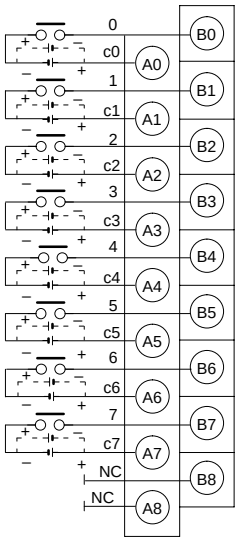	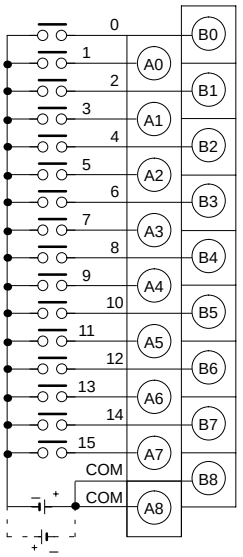

Note Refer to *3-1-1 Offline Operations*.

2-6-8 24-VDC Input Units

Item	CQM1-ID213	CQM1-ID214
Input Voltage	24 VDC $^{+10\%}/_{-15\%}$	24 VDC $^{+10\%}/_{-15\%}$
Input Impedance	5.6 kΩ	3.9 kΩ
Input Current	4 mA typical (at 24 VDC)	6 mA typical (at 24 VDC)
ON Voltage/ Current	14.4 VDC min.	15.4 VDC/3.5 mA min.
OFF Voltage/ Current	5.0 VDC max.	5.0 VDC/1 mA max.
ON Delay	Default: 8 ms max. (can be set between 1 and 128 ms in PC Setup)	
OFF Delay	Default: 8 ms max. (can be set between 1 and 128 ms in PC Setup)	
No. of Inputs	32 points (32 inputs/common, 1 circuit)	32 points (32 inputs/common, 1 circuit) Number of simultaneously ON inputs is limited by ambient temperature. See diagrams after table.
Internal Current Consumption	5 VDC, 170 mA max.	5 VDC, 170 mA max.
Weight	160 g max.	160 g max.
Circuit Configuration	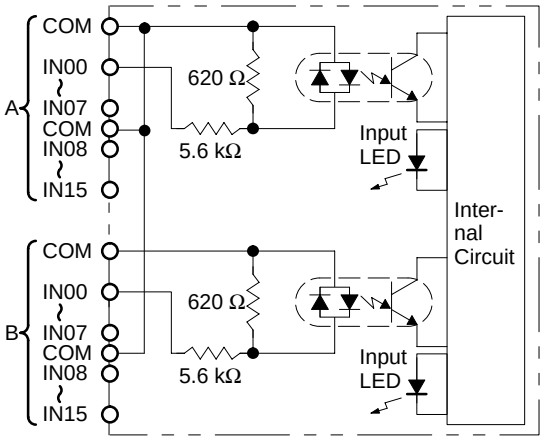	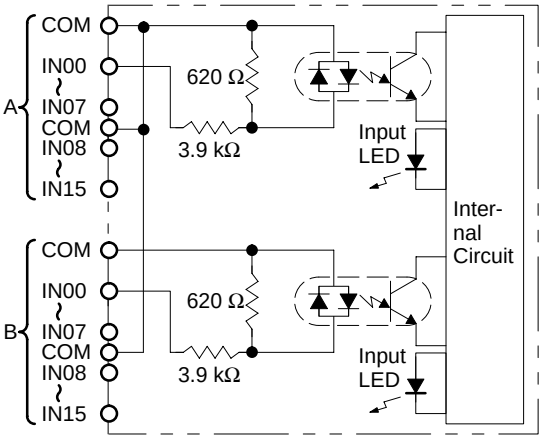
Terminal Connections	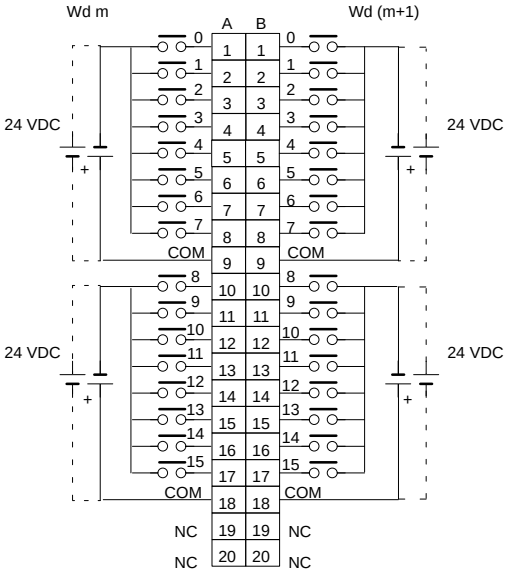 The polarity of the input power supply can be either plus or minus. The polarity of all the commons, however, must be the same. The COMs are internally connected, but they all must be wired.	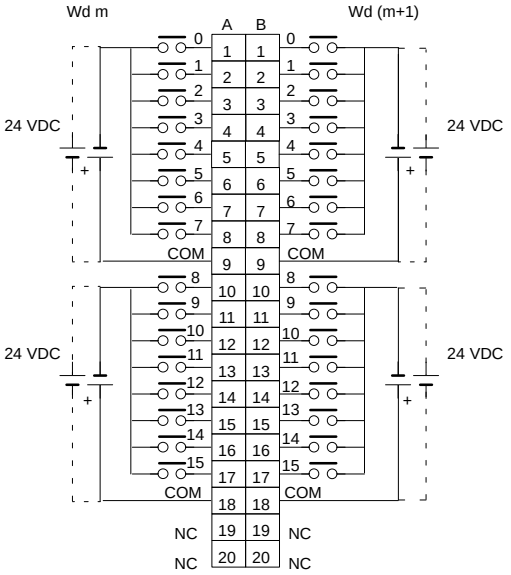 The polarity of the input power supply can be either plus or minus. The polarity of all the commons, however, must be the same. The COMs are internally connected, but they all must be wired.

Number of Simultaneously ON Inputs for CQM1-ID214

Ambient Temperature for Simultaneously ON Points

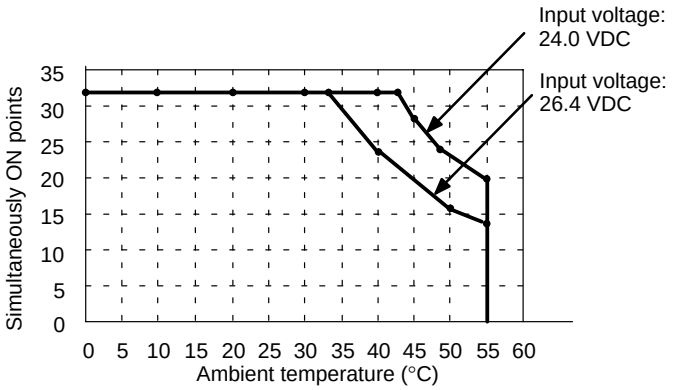

2-6-9 AC Input Units

Item	CQM1-IA121	CQM1-IA221
Input Voltage	100 to 120 VAC $^{+10\%}/_{-15\%}$, 50/60 Hz	200 to 240 VAC $^{+10\%}/_{-15\%}$, 50/60 Hz
Input Impedance	20 kΩ (50 Hz), 17 kΩ (60 Hz)	38 kΩ (50 Hz), 32 kΩ (60 Hz)
Input Current	5 mA typical (at 100 VAC)	6 mA typical (at 200 VAC)
ON Voltage	60 VAC min.	150 VAC min.
OFF Voltage	20 VAC max.	40 VAC max.
ON Delay	35 ms max.	35 ms max.
OFF Delay	55 ms max.	55 ms max.
No. of Inputs	8 points (8 points/common, 1 circuit)	8 points (8 points/common, 1 circuit)
Internal Current Consumption	50 mA max. at 5 VDC	50 mA max. at 5 VDC
Weight	210 grams max.	210 grams max.
Circuit Configuration	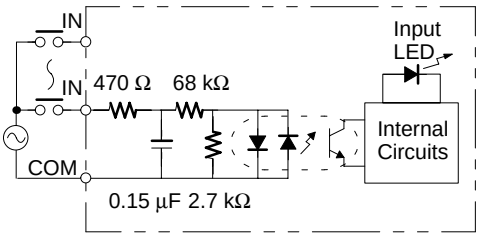	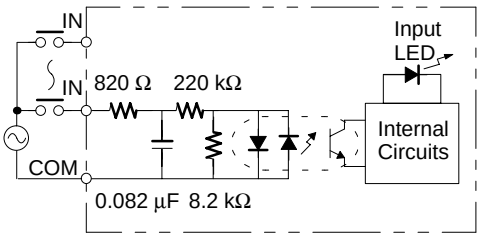
Terminal Connections	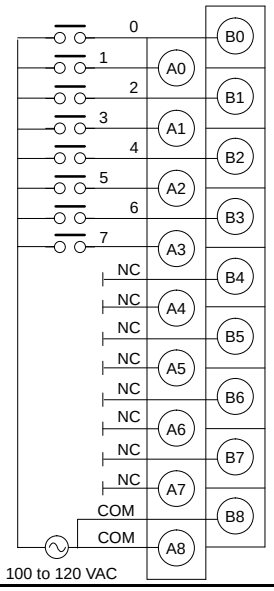	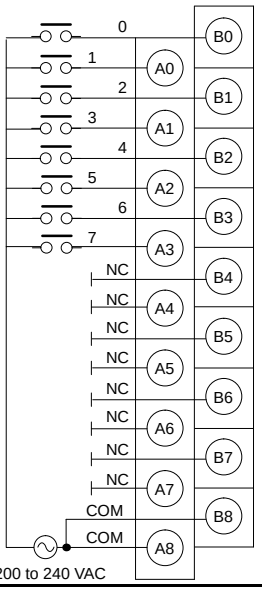

2-6-10 Contact Output Units

Item	CQM1-OC221	CQM1-OC222
Max. Switching Capacity	2 A, 250 VAC (cosϕ= 1) 2 A, 250 VAC (cosϕ= 0.4) 2 A, 24 VDC (16 A/Unit)	2 A, 250 VAC (cosϕ= 1) 2 A, 250 VAC (cosϕ= 0.4) 2 A, 24 VDC (8 A/Unit)
Min. Switching Capacity	10 mA, 5 VDC	10 mA, 5 VDC
Relay	G6D-1A	G6D-1A
Service Life of Relay	Electrical: 300,000 operations (resistive load) 100,000 operations (inductive load) Mechanical: 20,000,000 operations	Electrical: 300,000 operations (resistive load) 100,000 operations (inductive load) Mechanical: 20,000,000 operations
ON Delay	10 ms max.	10 ms max.
OFF Delay	5 ms max.	5 ms max.
No. of Outputs	8 points (independent commons)	16 points (16 points/common, 1 circuit))
Internal Current Consumption	430 mA max. at 5 VDC	850 mA max. at 5 VDC
Weight	200 grams max.	230 grams max.
Circuit Configuration	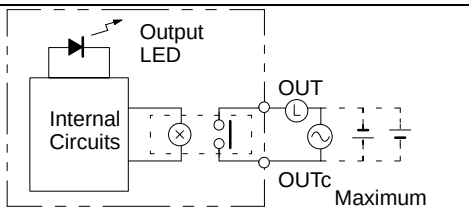	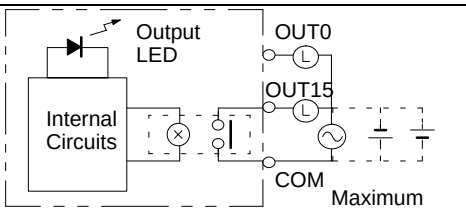
Terminal Connections	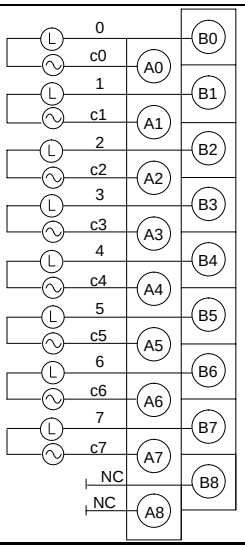	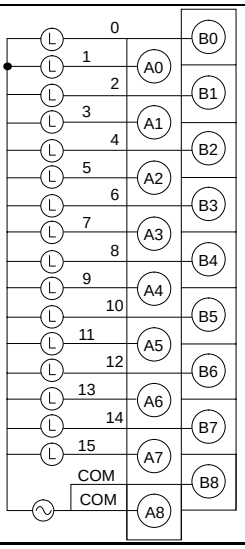

Item	CQM1-OC224
Max. Switching Capacity	2 A, 250 VAC (cosϕ= 1) 2 A, 250 VAC (cosϕ= 0.4) 2 A, 24 VDC (16 A/Unit)
Min. Switching Capacity	10 mA, 5 VDC
Relay	G6R-1A or G6RN-1A
Service Life of Relay	Electrical: 300,000 operations Mechanical: 10,000,000 operations
ON Delay	15 ms max.
OFF Delay	5 ms max.
No. of Outputs	8 points (independent commons)
Internal Current Consumption	440 mA max. at 5 VDC
Weight	270 grams max.
Circuit Configuration	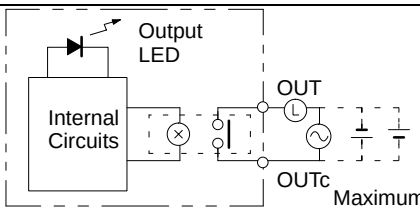 Maximum 250 VAC: 2 A 24 VDC: 2 A
Terminal Connections	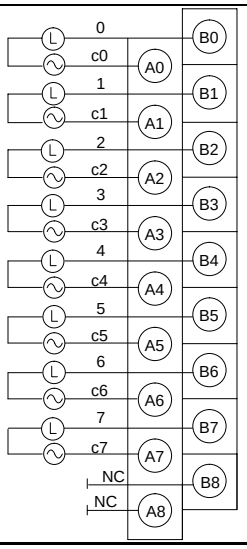

2-6-11 Transistor Output Units

8-point Transistor Output Unit

Item	CQM1-OD211
Max. Switching Capacity	2 A at 24 VDC $^{+10\%}/_{-15\%}$ 5 A/Unit
Leakage Current	0.1 mA max.
Residual Voltage	0.7 V max.
ON Delay	0.1 ms max.
OFF Delay	0.3 ms max.
No. of Outputs	8 points (8 points/common, 1 circuit)
Internal Current Consumption	90 mA max. at 5 VDC max.
Fuse	7 A (one per common), one only Fuse is not user replaceable.
Service Power Supply	15 mA min. at 24 VDC $^{+10\%}/_{-15\%}$ (1.9 mA × number of ON points)
Weight	200 grams max.
Circuit Configuration	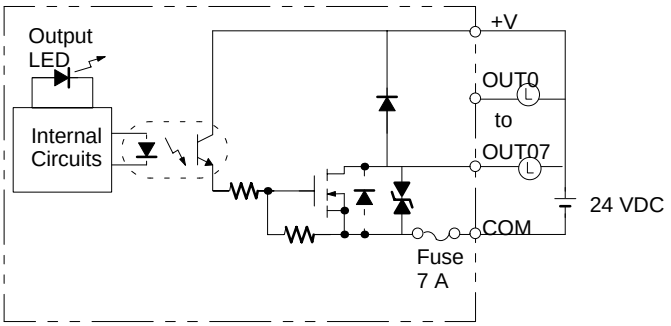
Terminal Connections	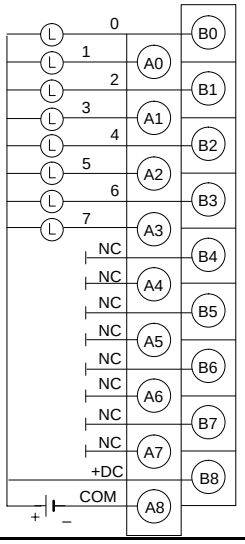

Note Do not reverse the connections for +DC and the common. If +DC and the common are connected incorrectly, internal circuits may be damaged.

16-point Transistor Output Unit

Item	CQM1-OD212
Max. Switching Capacity	50 mA at 4.5 VDC to 300 mA at 26.4 V (see diagram below)
Leakage Current	0.1 mA max.
Residual Voltage	0.8 V max.
ON Delay	0.1 ms max.
OFF Delay	0.4 ms max.
No. of Outputs	16 points (16 points/common, 1 circuit)
Internal Current Consumption	170 mA max. at 5 VDC
Fuse	5 A (one per common), one only Fuse is not user replaceable.
Service Power Supply	40 mA min. at 5 to 24 VDC ±10% (2.5 mA × number of ON points)
Weight	180 grams max.
Circuit Configuration	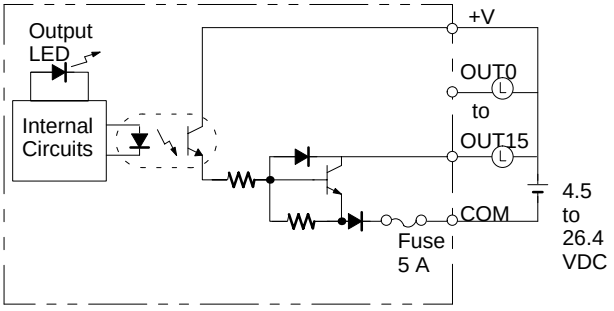 **Max. Switch Capacity (per Point)** 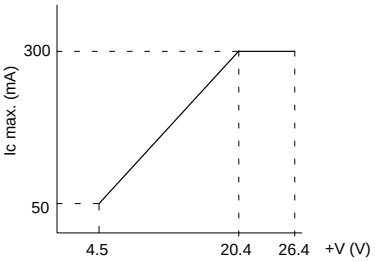 **Max. Switch Capacity (Total for Unit)** 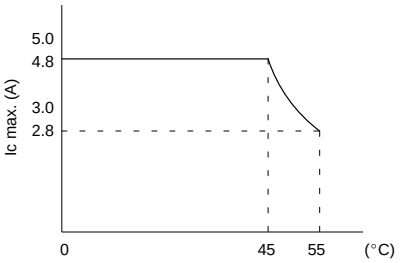
Terminal Connections	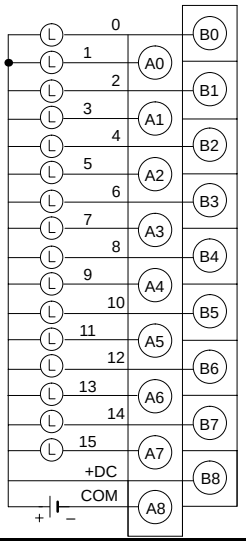

32-point Transistor Output Unit

Item	CQM1-OD213
Max. Switching Capacity	16 mA at 4.5 VDC to 100 mA at 26.4 V (see diagram below)
Leakage Current	0.1 mA max.
Residual Voltage	0.8 V max.
ON Delay	0.1 ms max.
OFF Delay	0.4 ms max.
No. of Outputs	32 points (32 points/common, 1 circuit)
Internal Current Consumption	240 mA max. at 5 VDC
Fuse	3.5 A (one per common), one only Fuse is not user replaceable.
Service Power Supply	110 mA min. at 5 to 24 VDC ±10% (3.4 mA × number of ON points)
Weight	180 grams max.

Circuit Configuration

Units manufactured on or before December 28th, 1999 (manufacturing numbers 28Z9 or earlier*)

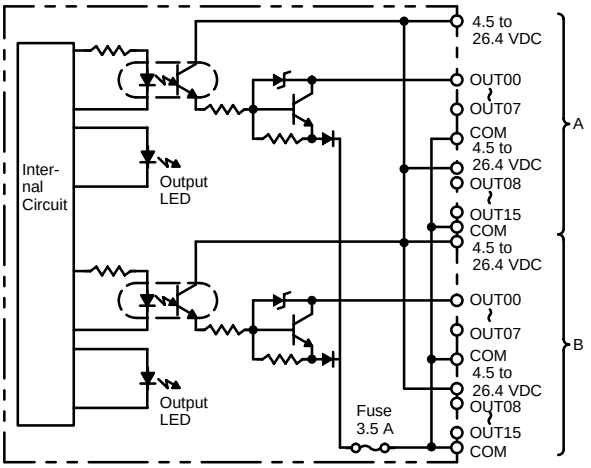

Units manufactured on or after January 5th, 2000 (manufacturing numbers 0510 or later*)

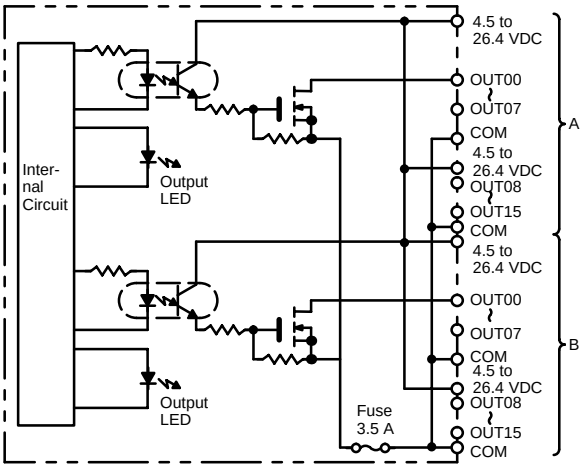

***Manufacturing Numbers**

□□Z9

- Year. Last digit of calendar year, e.g., 1999→9, 2000→0
- Month: 1 to 9 (January to September), X (October), Y (nOVEMBER), Z(December)
- Day: 01 to 31

Max. Switch Capacity (per Point)

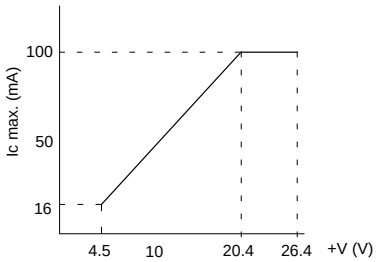

Item	CQM1-OD213
Terminal Connections	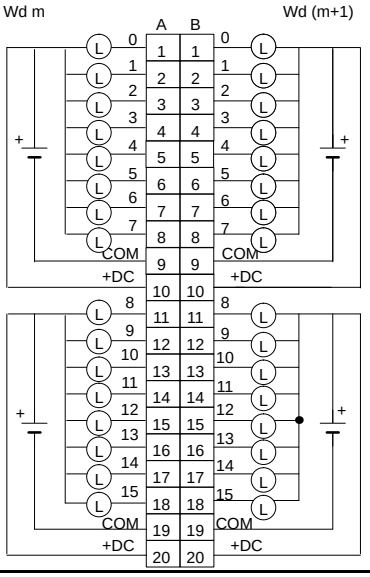 The respective COMs are internally connected, but they all must be wired. **Note** Be sure to wire the external power supply with the correct polarity. Wiring with the wrong polarity may result in malfunction of the load.

16-point Transistor PNP Output Unit

Item	CQM1-OD214
Max. Switching Capacity	50 mA at 4.5 VDC to 300 mA at 26.4 V (see diagram below)
Leakage Current	0.1 mA max.
Residual Voltage	0.8 V max.
ON Delay	0.1 ms max.
OFF Delay	0.4 ms max.
No. of Outputs	16 points (16 points/common, 1 circuit)
Internal Current Consumption	170 mA max. at 5 VDC
Fuse	3.5 A (one per common), two only used. Fuse is not user replaceable.
Service Power Supply	60 mA min. at 5 to 24 VDC ±10% (3.5 mA × number of ON points)
Circuit Configuration	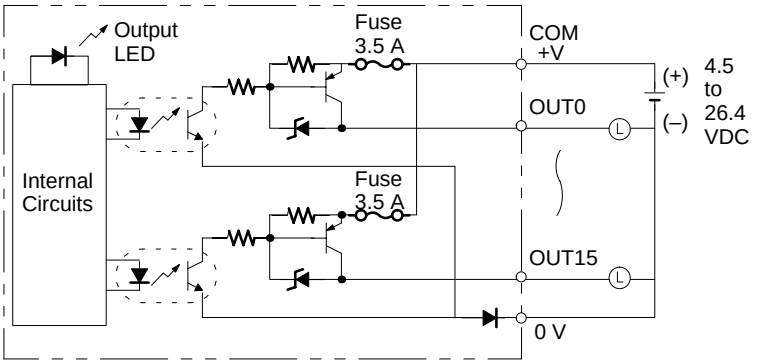 **Max. Switch Capacity (per Point)** 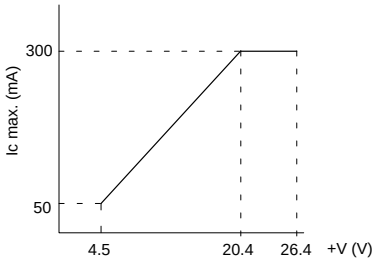 **Max. Switch Capacity (Total for Unit)** 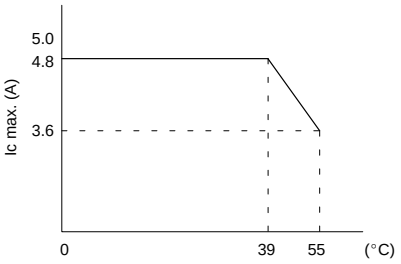
Terminal Connections	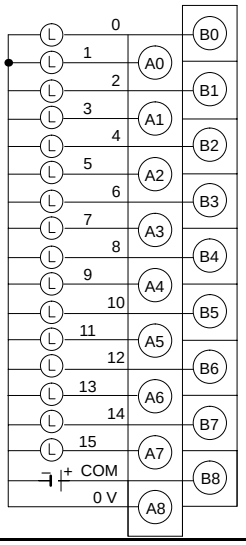

8-point Transistor Output Unit

Item	CQM1-OD215	
Max. Switching Capacity	1.0 A at 24 VDC $^{+10\%}/_{-15\%}$ 4 A/Unit	
Leakage Current	0.1 mA max.	
Residual Voltage	1.2 V max.	
ON Delay	0.2 ms max.	
OFF Delay	0.8 ms max.	
No. of Outputs	8 points (8 points/common, 1 circuit)	
Internal Current Consumption	110 mA max. at 5 VDC max.	
Service Power Supply	24 mA min. at 24 VDC $^{+10\%}/_{-15\%}$ (3 mA × number of ON points)	
Weight	240 grams max.	
Alarm Output	No. of outputs	2 outputs ALM0: Alarm output OUT 0 to 3 ALM1: Alarm output OUT 4 to 7
	Output specifications	Max. switching capacity: 100 mA at 24 VDC $^{+10\%}/_{-15\%}$ Leakage current: 0.1 mA max. Residual voltage: 0.7 V max.
Reset Input	No. of inputs	2 inputs RST0: Reset input OUT 0 to 3 RST1: Reset input OUT 4 to 7
	Input specifications	Input voltage: 24 VDC $^{+10\%}/_{-15\%}$ Input current: 7 mA, typical (24 VDC) ON voltage: 16.0 VDC min. OFF voltage: 5.0 VDC max.
Short-circuit Protection (*1)	Detection current: 2 A (minimum value), 1.6 A (typical)	
Circuit Configuration	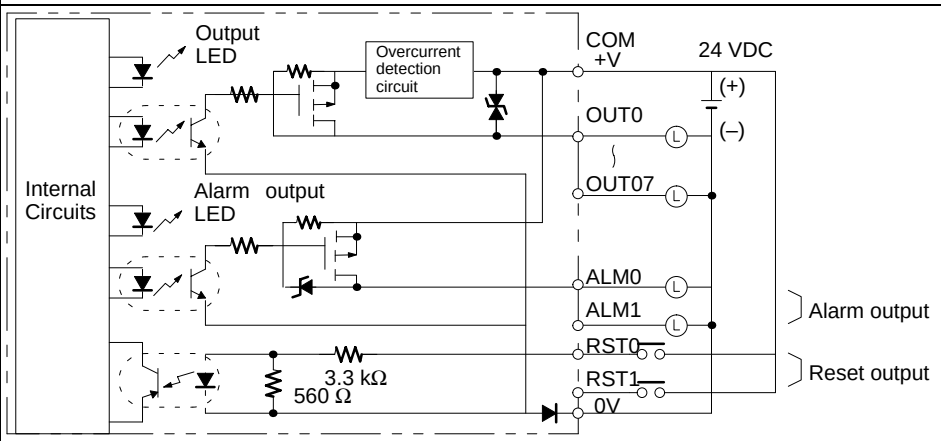	

Item	CQM1-OD215
Terminal Connections	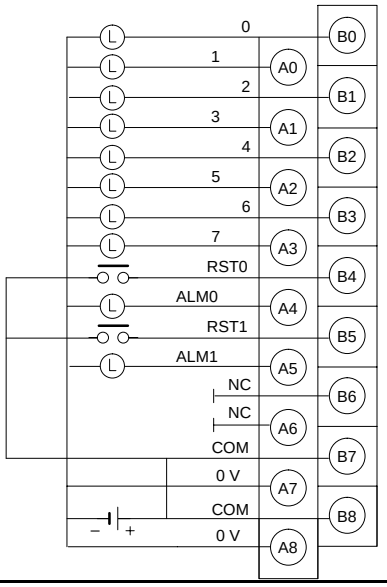

Note If the output current of any output exceeds the detection current, the outputs will be turned OFF at the four points (OUT0 to 3 or OUT4 to 7) which include that output. At the same time, the alarm output (ALM0 or ALM 1) will turn ON and the alarm indicator will light.

If an alarm output turns ON, first eliminate the problem that caused the detection current to be exceeded. Then turn from ON to OFF the reset input (RST0 or RST1) on the side where the alarm output turned ON. The alarm output indicator will then turn off, the alarm output will return to OFF, and the contact's output will be restored.

Item	CQM1-OD216	
Name	**32-point PNP Transistor Output Unit**	
Max. Switching Capacity	0.5 A at 24 V DC $^{+10\%}/_{-15\%}$ 5 A/Unit	
Leakage Current	0.1 mA max.	
Residual Voltage	0.8 V max.	
ON Delay	0.1 ms max.	
OFF Delay	0.3 ms max.	
No. of Outputs	32 points (32 points/common, 1 circuit)	
Internal Current Consumption	240 mA max. at 5 V DC max.	
Fuse	7 A (one per common), one used Fuse is not user replaceable.	
Service Power Supply	160 mA min. at 24 V DC $^{+10\%}/_{-15\%}$ (5 mA × number of ON points)	
Weight	210 grams max.	
Alarm Output	No. of outputs	1 output (PNP): Turns ON when output short-circuit or overcurrent is detected.
	Output specifications	Max. switching capacity: 50 mA at 24 V DC $^{+10\%}/_{-15\%}$ Leakage current: 0.1 mA max. Residual voltage: 0.8 V max.
Short-circuit Protection (see note)	Detection current: 0.7 to 2.5 A (Operation restored automatically after error cleared.)	
Circuit Configuration	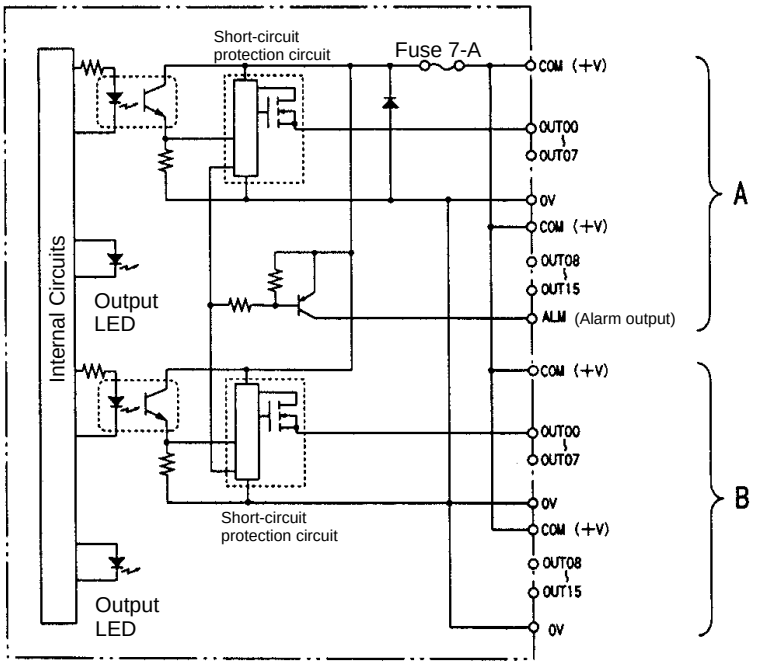	

Item	CQM1-OD216
Terminal Connections	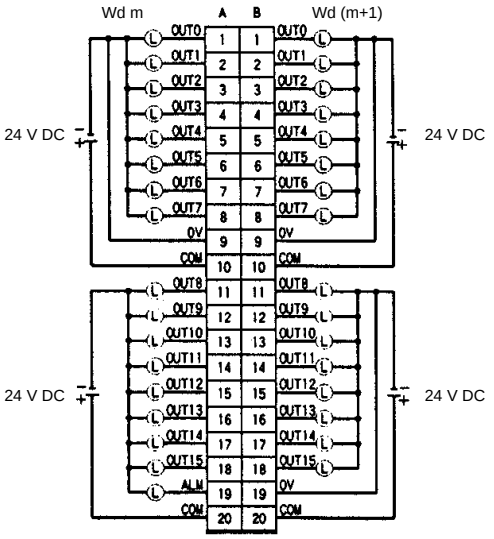 The COM terminals and 0-V outputs are internally connected, but they all must be wired.

Note If the output current of any output exceeds the detection current, the output will be turned OFF. At the same time, the alarm output (ALM) will turn ON (Low).

If an alarm output turns ON, eliminate the problem that caused the detection current to be exceeded. The internal temperature of the element will drop and the alarm will automatically be cleared.

8-point Triac Output Unit

Item	CQM1-OA221
Max. Switching Capacity	0.4 A at 100 to 240 VAC
Leakage Current	1 mA max. at 100 VAC and 2 mA max. at 200 VAC
Residual Voltage	1.5 V max. (0.4 A)
ON Delay	6 ms max.
OFF Delay	1/2 cycle + 5 ms max.
No. of Outputs	8 points (4 points/common, 2 circuits)
Internal Current Consumption	110 mA max. at 5 VDC
Fuse	2 A (one per common), two only used. Fuse is not user replaceable.
Weight	240 grams max.
Circuit Configuration	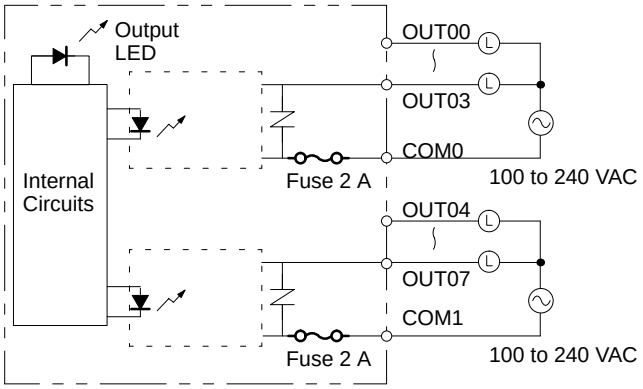
Terminal Connections	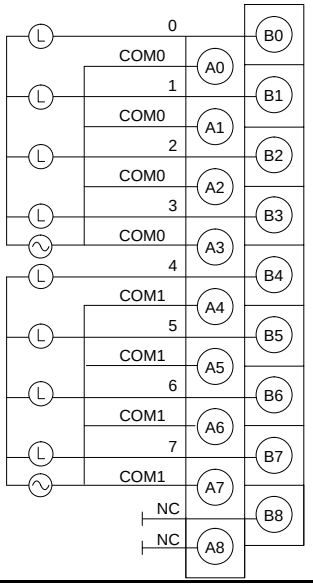 COM0 and COM1 are not connected internally.

6-point Triac Output Unit

Item	CQM1-OA222
Max. Switching Capacity	0.4 A at 100 to 240 VAC (50/60 Hz)
Min. Switching Capacity	100 mA at 10 VAC 50 mA at 24 VAC 10 mA at 100 VAC 10 mA at 240 VAC
Leakage Current	1 mA max. at 100 VAC and 2 mA max. at 200 VAC
Residual Voltage	1.5 V max. (0.4 A)
ON Delay	1 ms max.
OFF Delay	Load frequency of 1/2 cycle + 1 ms max.
No. of Outputs	6 points (4 points/common, 1 circuit; 2 points/common, 1 circuit)
Inrush current	6 A at 100 ms 15 A at 10 ms
Internal Current Consumption	250 mA max. at 5 VDC
Fuse	5 A at 250 V (one per common), two only used. Fuse is not user replaceable.
Weight	240 grams max.
Circuit Configuration	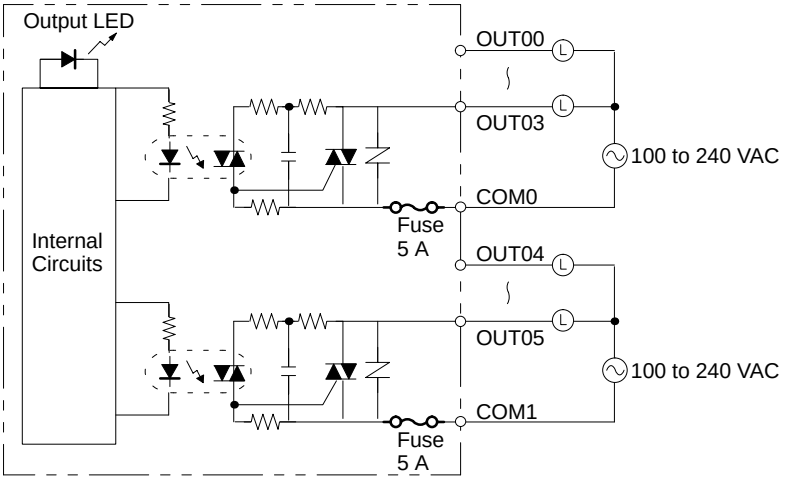
Terminal Connections	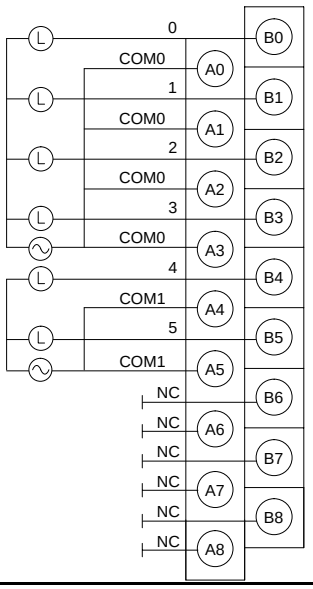 COM0 and COM1 are not connected internally.

SECTION 3
The LSS, SSS, SYSMAC-CPT, and Programming Consoles

This section outlines the operations possible with Ladder Support Software (LSS), SYSMAC Support Software (SSS), the SYSMAC-CPT, and the Programming Consoles. Actual LSS operating procedures are provided in the *LSS Operation Manual*, actual SSS operating procedures are provided in the *SSS Operation Manual: C-series PCs*, and actual SYSMAC-CPT operating procedures are provided in the *SYSMAC-CPT Support Software User Manual*. Programming Console connection and operating procedures are provided in this section.

3-1 LSS Capabilities
- 3-1-1 Offline Operations
- 3-1-2 Online Operations
- 3-1-3 Offline and Online Operations

3-2 SSS Capabilities
- 3-2-1 Offline Operations
- 3-2-2 Online Operations
- 3-2-3 Offline and Online Operations

3-3 SYSMAC-CPT Precautions
- 3-3-1 I/O Table Display
- 3-3-2 Inputting Ladder Diagrams

3-4 Compatible Programming Consoles

3-5 Preparation for Operation

3-6 Programming Console Operations
- 3-6-1 Designating Operands
- 3-6-2 Clearing Memory
- 3-6-3 Reading/Clearing Error Messages
- 3-6-4 Buzzer Operation
- 3-6-5 Reading and Changing Expansion Instructions
- 3-6-6 Reading and Changing the Clock
- 3-6-7 Setting and Reading a Program Memory Address
- 3-6-8 Instruction Search
- 3-6-9 Bit Operand Search
- 3-6-10 Inserting and Deleting Instructions
- 3-6-11 Entering or Editing Programs
- 3-6-12 Checking the Program
- 3-6-13 Bit, Digit, Word Monitor
- 3-6-14 Differentiation Monitor
- 3-6-15 Binary Monitor
- 3-6-16 3-Word Monitor
- 3-6-17 Decimal Monitor With Sign
- 3-6-18 Decimal Monitor Without Sign
- 3-6-19 3-Word Data Modification
- 3-6-20 Changing Timer, Counter SV
- 3-6-21 Hexadecimal, BCD Data Modification
- 3-6-22 Binary Data Modification
- 3-6-23 Decimal Data Modification With Sign
- 3-6-24 Decimal Data Modification Without Sign
- 3-6-25 Force Set, Reset
- 3-6-26 Clear Force Set/Reset
- 3-6-27 Hex-ASCII Display Change
- 3-6-28 Displaying the Cycle Time
- 3-6-29 Inputting Signed Binary Data Using Decimal Values
- 3-6-30 Using Signed Binary Instructions

3-1 LSS Capabilities

The LSS is a complete programming and control package designed for C-series PCs. It provides not only programming capabilities, but also advanced debugging, monitoring, and program/data management. The following tables provide only a brief introduction to the capabilities of the LSS. For further information and actual operating procedures, please refer to the *Ladder Support Software Operation Manual*.

Note Use Version-3.0 LSS or a later version for CQM1 operation.

3-1-1 Offline Operations

Group	Description	
General Programming	General programming operations feature function keys to easily read, write, and store programs.	
PROGRAMMING	**SAVE PROGRAM**	Writes all or part of the user program to a data disk.
	RETRIEVE PROGRAM	Retrieves all or part of the user program from on a data disk.
	CHANGE DISPLAY	Switches the display between four display modes: Ladder, Ladder with Comments, Mnemonic 1 (function key and numeric key input mode) and Mnemonic 2 (alphanumeric key input mode).
	SEARCH INSTRUCTION	Searches for instructions including specified operands.
	I/O COMMENT	Creates, reads, modifies, and searches for I/O comments.
	BLOCK COMMENT	Creates, edits, and searches for block comments for output instructions.
	LINE COMMENT	Creates, searches for, and edits line comments.
	CUT AND PASTE	Edits programs by copying, moving, or deleting instruction blocks.
	EDIT I/O COMMENT	Displays 32 I/O comments at once to write, edit, and search.
	RETRIEVE COMMENTS	Retrieves comments from programs stored on a data disk.
	MEMORY USAGE	Displays the used capacity of user program memory, comments, and internal memory.
	CLEAR MEMORY	Clears the user program memory.
	CHECK PROGRAM	Checks whether the user program contains syntax errors. The check can be performed in three levels.
DM (data memory)	DM operations are used to edit DM data in hexadecimal or ASCII form. There are also features for copying, filling and printing DM data, as well as data disk save and retrieve operations.	
I/O TABLE	I/O TABLE is used to edit, check, and print I/O tables. It also provides data disk save and retrieve operations.	
UTILITY	**DATA AREA LISTS**	Displays lists of such items as used areas and cross-references (i.e., instructions that use specified operands).
	CHANGE ADDRESS	Globally changes bit and word addresses in the user program.
	PRINT LISTS	Prints lists, ladder diagrams, and mnemonics.
	EPROM FUNCTIONS	Writes, reads, and compares the user program between the PROM Writer and system work disk.
	C500 → C2000H	Converts the program format from C500 to C2000H
	NETWORK DATA LINKS	Creates a data link table.
	CREATE LIBRARY FILE	Formats a floppy disk or hard disk for use with the LSS.
	TIME CHART MONITOR	Accesses the time chart monitor displays produced online.
	INSTRUCTION TRACE	Accesses the instruction trace displays produced online.
	DATA TRACE	Accesses the data trace displays produced online.
	SET INSTRUCTIONS	Used to assign instructions to function codes in instructions tables and to save/retrieve instructions tables to/from data disk files.
	RETRIEVE/SAVE INSTR	Used to save and retrieve expansion instruction sets to and from data disk files.
	PC SETUP	Used to set the PC operating parameters in the PC Setup and to save and retrieve PC Setups to and from data disk files.

3-1-2 Online Operations

Group	Function name	Description
ON-LINE	**MONITOR DATA**	Used to monitor up to 20 bits/words during program execution. The status of bits and contents of words being monitored can also be controlled.
	TRANSFER PROGRAM	Transfers and compares the user program between the LSS and PC.
	ON-LINE EDIT	Edits the PC program during MONITOR mode execution.
	READ SCAN TIME	Reads and displays the scan/cycle time of the PC.
	CLEAR DATA AREAS	Clears the PC data areas such as HR, CNT, AR, and DM (to zero).
	MEMORY USAGE	Displays the used capacity of program memory area, comments, and internal memory.
	Operations are also available to change display modes and search for instructions and comments.	
DM	DM area operations are available to transfer and compare DM data between the PC, LSS, and data disks, and to monitor DM contents in the PC.	
I/O TABLE	I/O TABLE operations are used to write, transfer, and compare I/O tables between the PC and LSS.	
UTILITY	**FILE MEMORY**	Displays file memory lists; transfers file memory contents between PC and LSS; clears file memory; transfers file memory contents between PC and File Memory Unit; saves or retrieves file memory contents to or from floppy disk; and edits file memory data.
	TIME CHART MONITOR	Used monitor up 12 bits and 3 words in time chart form and to display, save, or retrieve results.
	INSTRUCTION TRACE	Used to trace instruction execution status during program execution and to display, save, or retrieve results.
	DATA TRACE	Used to trace up 12 bits and 3 words during program execution in time chart form and to display, save, or retrieve results. Similar to TIME CHART MONITOR, but can run with a shorter sample time and has different trigger conditions.
	DEBUG	Used to execute the execution instructions one at a time or in blocks while displaying execution results to debug programs.
	XFER DATA LINK TBL	Transfers and compares data link tables between the PC and computer.
	CLOCK	Used to read and set the internal clock in the PC.
	TRANSFER INSTR	Used to transfer the expansion instruction set from the PC to the LSS.
	TRANSFER PC SETUP	Used to transfer the PC Setup between the PC and the LSS

3-1-3 Offline and Online Operations

Group	Description
SYSTEM SETUP	The SYSTEM SETUP provides settings for the operating environment of the LSS, including the PC that's being communicated with (including network and interface settings) and disk drive, comment, printer, PROM Writer, and monitor settings. It also provides settings for transfer of I/O table and data link tables to UM.
FILE MANAGEMENT	FILE MANAGEMENT operations include basic file management features so that files can be manipulated directly from the LSS. It also provides a feature for merging program files.

3-2 SSS Capabilities

The SSS is a complete programming and control package designed for C-series and CVM1 PCs. It provides not only programming capabilities, but also advanced debugging, monitoring, and program/data management. The following tables provide only a brief introduction to the capabilities of the SSS. For further information and actual operating procedures, please refer to the *SYSMAC Support Software Operation Manual: C-series*.

3-2-1 Offline Operations

Group	Name	Description
Programming	**Connect line**	Draws a line between two ladder diagram objects.
	Save program	Writes all or part of the user program developed in the system work area to the data disk.
	Retrieve program	Retrieves all or part of the user program stored on a data disk to the system work area.
	Change display	Specifies the display modes for the user program. C-series PCs • Ladder • Ladder with comments • Mnemonic F keys (function key and numeric key inputs) • Mnemonic typed (alphanumeric key inputs) CVM1 PCs • Ladder (no comments) • Ladder (2 rows of comments) • Ladder (4 rows of comments) • Mnemonic
	Search	Searches for instructions including specified operands. An address from which the search is to be started can be specified
	I/O comment	Creates I/O comments corresponding to bit addresses in the Ladder With Comments mode. In addition, reads (searches) and edits the program for comments.
	Instr comment (C-series PCs only)	Creates and edits instruction comments for output instructions in the Ladder With Comments mode.
	Block comment	Creates, reads (searches), and edits block comment in the Ladder With Comments mode.
	Edit ladder	Edits ladder diagrams using the following: • Moving specified instruction blocks • Copying specified instruction blocks • Deleting specified instruction blocks
	Edit comments	Displays I/O comments simultaneously to write, edit, and search for specified comments.
	Retrieve comments	Retrieves comments from the program stored on a data disk. The I/O comments are read to the system work area. Instruction comments (C-series PCs only) and block comments are copied to the currently displayed program.
	Memory usage	Displays the used capacity of the user program memory, the number of comments used, and the available capacity of the internal memory.
	Clear memory	Clears the user program memory. The starting address for clearing can be specified. The comment memory can also be cleared
	Check program	Checks whether the user program contains syntax errors. The check can be performed in three levels.
	Edit interrupt program (CVM1 PCs only)	Used to create I/O interrupt, scheduled interrupt, power off interrupt, and power on interrupt programs.
	Program input mode (CVM1 PCs only)	Used to change the ladder diagram input mode between symbols and text strings.

Group	Name	Description
DM (data memory)	**Go To Page** (C-series PCs only)	Displays the contents of the data memory in the system work area in pages (units of 160 words). The data can be altered with this function.
	Copy	Copies the contents of the DM area of the system work area (data memory information).
	Fill	Writes the same data to more than one data word in the system work area data memory area.
	Print	Prints a specified range of DM words.
	Hex <—> ASCII	Specifies the display mode for the data memory contents when the work disk data memory contents are to be altered. The display mode can be hexadecimal or ASCII.
	Save DM Data	Writes the contents of a specified range of system work area data memory to the data disk.
	Retrieve DM Data	Retrieves the saved data disk data memory to the system work area DM area.
	Read DM Address (CVM1 PCs only)	Used to display DM data from the work disk up to 160 words at a time. Displayed data can be modified.
	Switch Bank Number (CVM1 PCs only)	Used to specify the Expansion DM bank on the work disk.
	Save file (CVM1 PCs only)	Used to save file data (with an .IOM) extension from the work disk to a data disk.
	Retrieve file (CVM1 PCs only)	Use to retrieve file data (with an .IOM extension) from a data disk to the work disk.
I/O Table	**Write I/O Table**	Edits the I/O table in the system work area.
	Check I/O Table	Checks the contents of the I/O table in the system work area.
	Save I/O Table	Writes the I/O table in the system work area to a data disk.
	Retrieve I/O Table	Retrieves the I/O table data stored on a data disk to the system work area.
	Clear I/O Table (CVM1 PCs only)	Used to delete the I/O table from the work disk.
	Custom I/O Table SIOU (CVM1 PCs only)	Used to specify CPU Bus Unit classifications.
	Print I/O Table (C-series PCs only)	Prints an I/O table list.

Group	Name	Description
Utility	**Data Area Lists**	Displays lists (such as used areas and cross-references) in accordance with the contents of the user program in the system work area.
	Change Addresses	Globally changes bit and word addresses in the user program in the system work area.
	Print Lists	Prints lists, ladder diagrams, and mnemonics in accordance with the contents of the user program in the system work area.
	EPROM/Memory Card	Writes, reads, and compares the user program between the PROM Writer/Memory Card and system work area.
	Program Conversion	C500 → C2000H: Converts C500-family programs to C2000H programs. C2000H → CVM1: Converts C2000H-family programs to CVM1 programs
	Create Library File	Creates a library on a floppy disk or hard disk for use as an LSS data disk.
	Time Chart Monitor (C-series PCs only)	Accesses the time chart monitor data produced online.
	Instruction Trace (C-series PCs only)	Accesses the instruction trace data produced online.
	Data trace	Accesses the data trace data produced online.
	Set Instructions (C-series PCs only)	Used to assign instructions to function codes in the instructions table and to save and retrieve instructions tables to and from data disk files.
	Retrieve/Save Instr (C-series PCs only)	Used to save and retrieve expansion instruction sets to and from data disk files.
	PC Setup	Used to set the PC operating parameters in the PC Setup and to save and retrieve PC Setups to and from data disk files.
	Allocate UM (C-series PCs only)	Used to allocate parts of the user memory area for used as a Fixed DM Area and/or I/O Comment Area.
	Edit PC ID (CVM1 PCs only)	Used to create, edit, search for, or print PC IDs (names).
	Compare Programs (CVM1 PCs only)	Used to compare a program in a data disk with the program in the work file in the computer.
	Customization (CVM1 PCs only)	Used to change bit/word names, to define custom data areas, or to register HIS instructions.
	Network Support Table	Used to edit data link tables and routing tables for the SYSMAC NET and SYSMAC LINK Systems.
File Management	**Directory**	Displays a file list. Wildcard names can be used to display only desired files.
	Copy File	Copies files on the same floppy disk or between different disks.
	Change File Name	Changes the name of a specified file.
	Delete File	Deletes a specified file.
	LSS File Management	Used to change between LSS-style data files and DOS-style data files.

3-2-2 Online Operations

Group	Name	Description
Monitoring	**Monitor Data**	Uses the lower one third of the screen as a monitor area where bits, words, DM contents, and TIM/CNT SV/PV are monitored, forced-set/reset, and changed.
	Transfer Program	Transfers and compares the user program between the computer and PC.
	Change Display	C-series PCs Ladder W/Comments Ladder CVM1 PCs Ladder Ladder (2 rows of comments) Ladder (4 rows of comments)
	Online Edit	Simultaneously edits the PC program and the program in the system work area.
	Read Cycle Time	Reads and displays the scan time of the PC.
	Clear Area	Clears the PC data areas such as HR, CNT, AR, and DM (to zero).
	Search	Searches for instructions (including specified operands).
	I/O Comments	Searches for I/O comments.
	Block Comments	Searches for block comments.
	Memory Usage	Displays used program memory area, the number of comments used, and the available capacity of the internal memory.
	Monitor Interrupt Program (CVM1 PCs only)	Used to monitor I/O interrupt, scheduled interrupt, power off interrupt, and power on interrupt programs.
	Program Input Mode (CVM1 PCs only)	Used to change the ladder diagram input mode between symbols and text strings.
	Monitor Other Node (CVM1 PCs only)	Used to allow basic monitoring operations (I/O monitor, set/reset, PV changes, etc.) for other PCs connected to the the same network.

Group	Name	Description
DM	**Transfer PC —> Computer** (C-series PCs only)	Retrieves PC DM data to the system work area.
	Transfer Computer—>PC (C-series PCs only)	Writes system work area DM data to the PC.
	Transfer Verify (C-series PCs only)	Compares DM data between the system work area and PC.
	Monitor (C-series PCs only)	Used to monitor DM area contents in the PC.
	Go To Page (C-series PCs only)	Reads a specified page from the DM list of the DM area in the system work area or PC.
	Read DM Addr (CVM1 PCs only)	Reads the contents of the DM area, including the specified DM address, from the work disk and displays it in the DM table.
	Copy (CVM1 PCs only)	Copies multiple, consecutive words of DM data to a specified destination DM address.
	Fill (CVM1 PCs only)	Places a specified value into multiple, consecutive words of the DM area. Filling with 0000 clears the DM words.
	Print (CVM1 PCs only)	Prints multiple, consecutive words of DM data.
	HEX <-> ASCII (CVM1 PCs only)	Specified inputs using hexadecimal or ASCII. The mode set will be displayed in the top-right of the screen.
	Switch Bank Number (CVM1 PCs only)	Switches editing between the standard DM and EM banks.
	Save DM data (CVM1 PCs only)	Saves the DM data from the work disk to the data disk or hard disk.
	Retrieve DM data (CVM1 PCs only)	Retrieves the DM data on the data disk or hard disk to the work disk.
	Transfer DM (CVM1 PCs only)	Transfers and compares DM data between the SSS and the PC.
I/O Table	**Transfer I/O Table**	Transfers and compares the I/O table data between the computer and PC.
	Create I/O Table	Registers into the PC the I/O Units mounted on the PC and then assigns the words to the Units.
	Verify I/O Table	Compares the I/O table registered in the PC against the I/O Units actually mounted on the PC.
	Clear I/O Table (CVM1 PCs only)	Deletes the I/O tables (C200H and C200HS only)

Group	Name	Description
Utility	**File Memory/ Memory Card**	Displays a file memory list; transfers the file memory contents between the PC and computer or the PC and File Memory Unit; clears the file memory; saves or retrieves the file memory contents to or from a floppy disk; and edits file memory contents
	Time Chart Monitor (C-series PCs only)	Used to execute time chart monitoring and to display, save, or retrieve results.
	Instruction Trace (C-series PCs only)	Used to execute instruction traces and used to display, save, or retrieve results.
	Data Trace	Used to execute data traces and used to display, save, or retrieve results.
	Debug (C-series PCs only)	Used to display the execution status of the specified program section.
	Display/Set Clock	Used to read and set the internal clock in the PC. (CQM1, C200HS, or CVM1 only)
	Transfer Instr (C-series PCs only)	Used to transfer expansion instruction set from the PC to the SSS.
	Custom data (CVM1 PCs only)	Used to transfer customized settings from the SSS to the PC.
	CPU Bus Unit Setup (CVM1 PCs only)	Used to set parameters for SYSMAC NET, SYSMAC LINK, and SYSMAC BUS/2 communications.
	PC Setup	Changes the PC Setup in the PC and in the system work area and used to transfer the PC Setup between the PC the disk (save/retrieve).
	SYSMAC BUS/2 (CVM1 PCs only)	Used to manipulate SYSMAC BUS/2 Remote I/O Master Units.
	Read Error Log (CVM1 PCs only)	Used to read the current error and error logs. Also used to force-release the access right to a PC.
	Protect UM (CVM1 PCs only)	Used to protect all or part of the user program by creating passwords. Program access will not be possible to protected sections without the proper password.
	Network Support Tables	C-series PCs: Used to input data link tables for SYSMAC NET. CVM1 PCs: Used to transfer data link tables and routing tables between Link Units, the PC, and the SSS and to compare these tables. Also used to start and start data links.
	Network Diagnosis (CVM1 PCs only)	Used to run tests between nodes, to read node status, and to read error logs from Units for the SYSMAC NET and SYSMAC LINK Systems. Also used for SYSMAC LINK Systems to run broadcast tests and set network parameters.

3-2-3 Offline and Online Operations

Group	Name	Description
System Setup (see note)	**PC model**	Specifies the model of PC that is being programmed or that is connected to the computer.
	PC Interface	C-series PCs: Specifies whether communications with the PC are performed through a SYSMAC NET Link Unit, peripheral interface, or a Host Link (RS-232C) interface and the computer port (COM1 or COM2) to use. When a Host Link Unit is used, it also specifies the port number and baud rate. CVM1 PCs: Used to specify the communications protocol for communications with the PC, i.e., peripheral or Host Link (RS-232C) interface. The baud rate, PC unit number, parity, data length, and number of stop bits are designated.
	Network address	Specifies the network address, node number, and data code type of the SYSMAC NET Link Unit communicating with the SSS on the SYSMAC NET System. The address determines the PC to be connected to for online operations. With CVM1 PCs this setting is also used to specify the PC being communicated with through networks when connected via a peripheral or Host Link interface.
	Message No. (CVM1 PCs only)	Specifies which messages are to be displayed on the SSS from messages programmed in the PC with the MESSAGE instruction.
	I/O table - UM transfer (C-series PCs only)	Specifies whether the I/O table and data link tables are transferred to the user program area when the user program is transferred between the computer and PC or PROM Writer.
	EPROM interface (C-series PCs only)	Specifies the baud rate and port number of the PROM Writer connected to the computer
	Printer model	Specifies the printer model.
	Data disk drive	Specifies the data disk drive.
	Out Bit Comment Type (C-series PCs only)	Specifies whether I/O comments or instruction comments are displayed at the TIM/CNT, DIFU/DIFD, KEEP, and STEP/SNXT comment display positions.
	Exit to DOS	Terminates SSS operation and returns to DOS.

Note When the SSS is operating in online mode, the only functions available on the System Setup Menu are “I/O table - UM transfer,” “Data disk drive,” and “Exit to DOS.”

3-3 SYSMAC-CPT Precautions

The CQM1 does not contain an I/O table in the CPU Unit and is designed to operated according to the actual Units that configure the PC. I/O bits in the ladder program are displayed for the CQM1 on the SYSMAC-CPT using an I/O table setting display with “I” displayed for input words/bits and “Q” displayed for output words/bits.

The screen displays and printing functions of the SYSMAC-CPT, however, have not yet been upgraded to support the expanded I/O capacity of the CQM1-CPU4□-EV1 CPU Unit. The following restrictions thus apply to the current version of the SYSMAC-CPT.

3-3-1 I/O Table Display

The SYSMAC-CPT will display or print only 12 I/O words, i.e., IR 000 to IR 011. IR 012 to IR 015 will not be displayed for the CQM1-CPU4□-EV1 CPU Unit’s I/O

table, even though it has an I/O capacity of 256 pts (16 words). You will not be able to display or print IR 012 to IR 015.

I/O Table Display

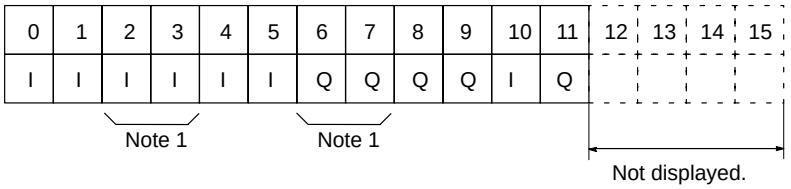

Note Two words are allocated to 32-pt I/O Units.

3-3-2 Inputting Ladder Diagrams

Only IR 000 to IR 011 are allowed as I/O words for the CQM1 on the SYSMAC-CPT. You will be able to input IR 012 to IR 015 for the CQM1-CPU4□-EV1 CPU Unit and the program will execute correctly for these bits, but "I" and "Q" will not be displayed to indicate input and output words/bits.

3-4 Compatible Programming Consoles

There are two Programming Consoles that can be used with the CQM1: the CQM1-PRO01-E and the C200H-PRO27-E. The key functions for these Programming Consoles are identical.

Press and hold the Shift Key to input a letter shown in the upper-left corner of the key or the upper function of a key that has two functions. For example, the CQM1-PRO01-E's AR/HR key can specify either the AR or HR Area; press and release the Shift Key and then press the AR/HR Key to specify the AR Area.

CQM1-PRO01-E
(A 2-m connecting cable is included.)

C200H-PRO27-E
(Use a C200H-CN222 (2 m) or C200H-CN422 (4 m) Connecting Cable.)

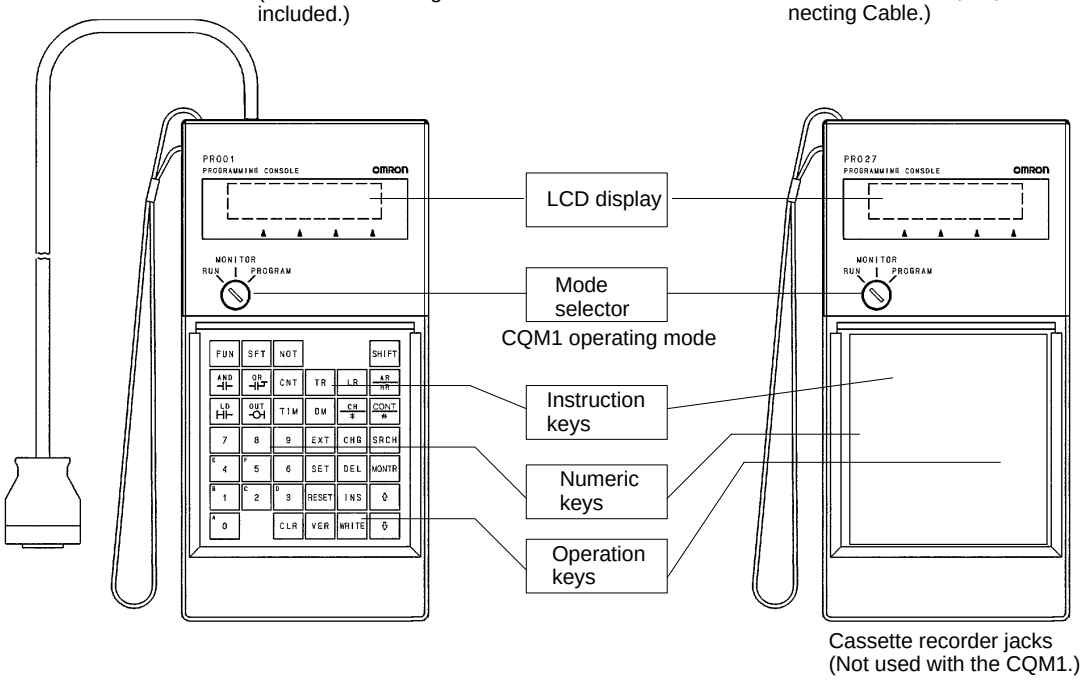

⚠ Caution When turning on the CQM1, set it to PROGRAM mode using the mode selector as described in *2-1-4 Operating Modes*. If the PC is set to RUN or MONITOR mode, the program will be executed when it is turned on, possibly causing a PC-controlled system to begin operation.

Note The following three sets of keys are labeled differently on the CQM1-PRO01-E and the C200H-PRO27-E. The operation of the two keys in each pair are identical.

CQM1-PRO01-E Keys	C200H-PRO27-E Keys
AR / HR	HR
SET	PLAY / SET
RESET	REC / RESET

3-5 Preparation for Operation

This section describes how to connect the CQM1 and Programming Console as well as the basic operations required to prepare for programming.

Connecting the Programming Console

Connect the Programming Console's connecting cable to the CQM1's peripheral port, as shown below.

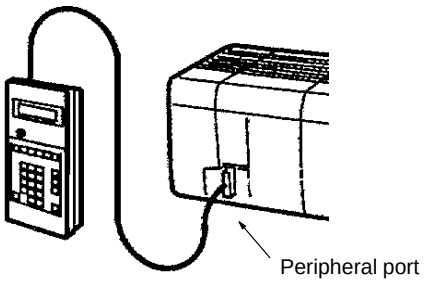

Preparatory Operations

The basic operations required to prepare for programming are listed below.

1, 2, 3...

1. Set the Programming Console's mode selector to PROGRAM mode.
2. Enter the password by pressing the CLR and then the MONTR Key.

   At this point, the SHIFT and then the 1 key can be pressed to turn on and off the Programming Console's buzzer. Refer to page 88.
3. Clear the CQM1's memory by pressing the CLR, SET, NOT, RESET, and then the MONTR Key. Refer to page 87.
4. Display and clear error messages by pressing the CLR, FUN, and then the MONTR Key. Continue pressing the MONTR Key until all error messages have been cleared. Refer to page 88.
5. Press the CLR Key to bring up the initial programming display (program address 00000).

Changing Displays

The following diagram shows which keys to press in order to change Programming Console displays.

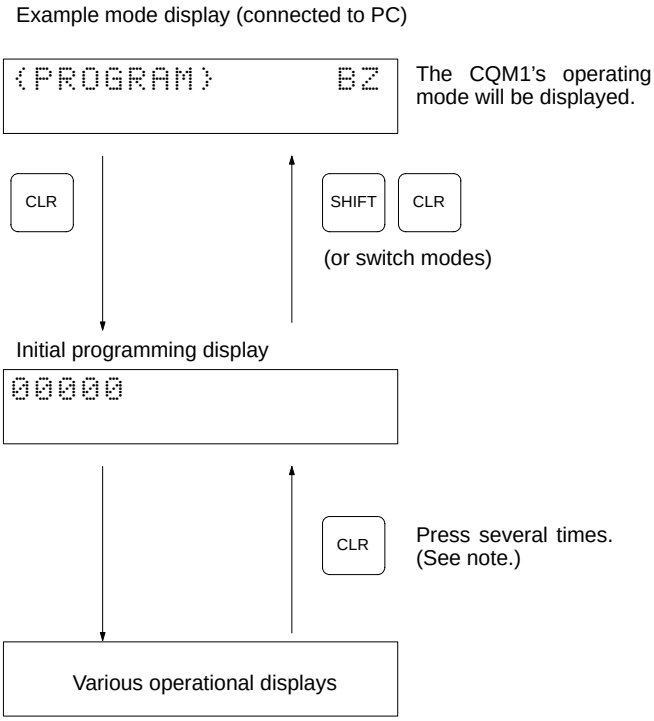

Note When cancelling an operation or beginning operation, press the CLR Key several times to return to the initial display.

After the SHIFT Key is pressed, changing the mode by means of the mode-change switch will cause the mode to change while retaining the current display.

When switching between RUN and PROGRAM, first go into MONITOR and press the SHIFT Key again.

3-6 Programming Console Operations

3-6-1 Designating Operands

The following key sequences can be used to designate data areas, addresses, and constants as operands for instructions or for searching/monitoring.

Input Method of Data Area and Address

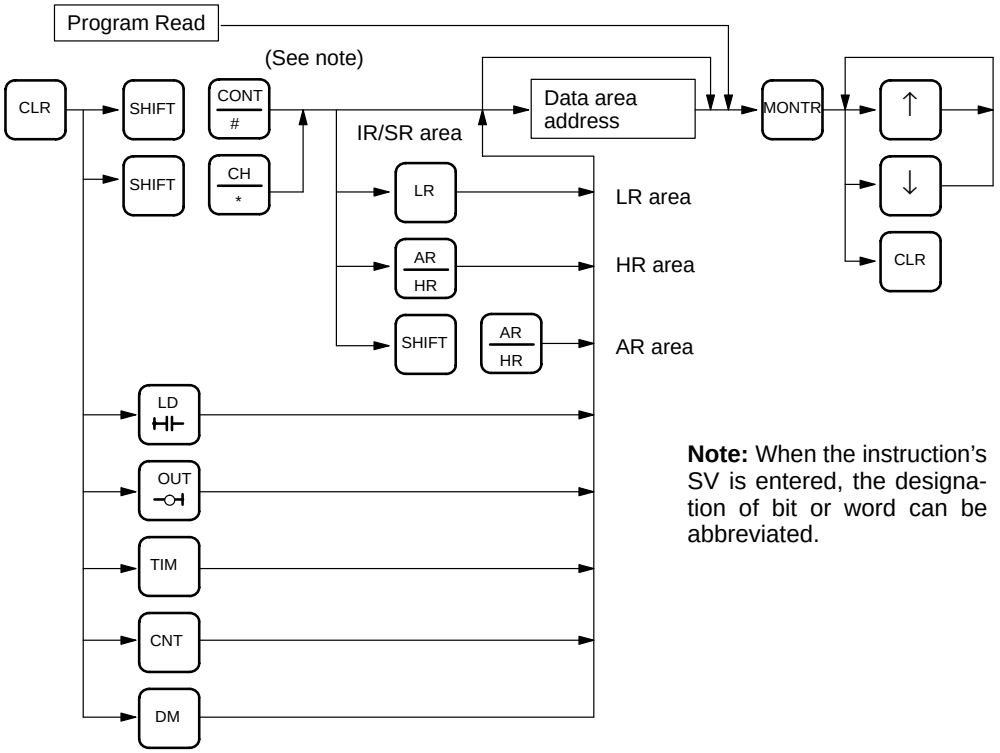

Input Method of Constants

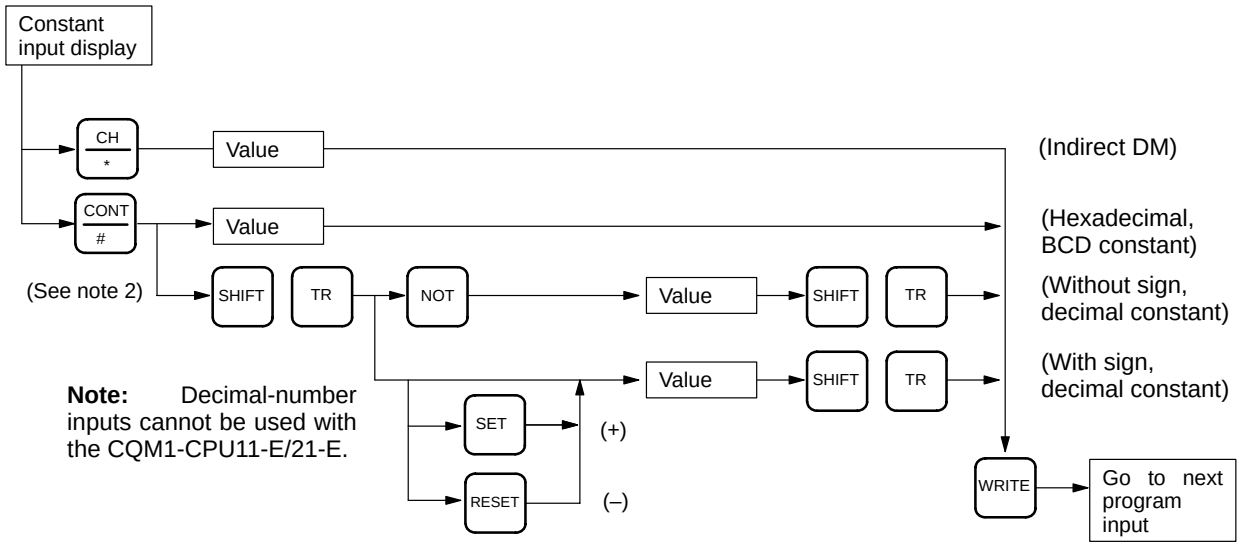

3-6-2 Clearing Memory

This operation is used to clear all or part of the Program Memory and any data areas that are not read-only, as well as the contents of the Programming Console's memory. This operation is possible in PROGRAM mode only.

RUN	MONITOR	PROGRAM
No	No	OK

Before beginning to program for the first time or when installing a new program, clear all areas.

All Clear

The following procedure is used to clear memory completely.

1, 2, 3...

1. Bring up the initial display by pressing the CLR key repeatedly.
2. Press the SET, NOT, and then the RESET Key to begin the operation.

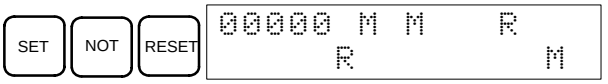

3. Press the MONTR Key to clear memory completely.

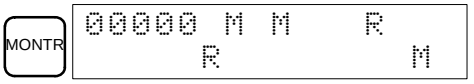

Partial Clear

It is possible to retain the data in specified areas or part of the Program Memory. To retain the data in the HR, TC, or DM Areas, press the appropriate key after pressing SET, NOT, and RESET. Any data area that still appears on the display will be cleared when the MONTR Key is pressed.

The HR Key is used to specify both the AR and HR Areas, the CNT Key is used to specify the entire timer/counter area, and the DM Key is used to specify the DM Area.

⚠ Caution

The PC Setup (DM 6600 through DM 6655) will be cleared along with the rest of the DM area if the DM area is specified for clearing. The error log, however, will not be cleared.

It is also possible to retain a portion of the Program Memory from the first memory address to a specified address. After designating the data areas to be retained, specify the first Program Memory address to be cleared. For example, input 030 to leave addresses 000 to 029 untouched, but to clear addresses from 030 to the end of Program Memory.

Example

As an example, follow the procedure below to retain the timer/counter area and Program Memory addresses 000 through 122:

1, 2, 3...

1. Bring up the initial display.
2. Press the SET, NOT, and then the RESET Key to begin the operation.
3. Press the CNT Key to remove the timer/counter area from the data areas shown on the display.

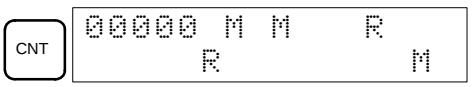

4. Press 123 to specify 123 as the starting program address.

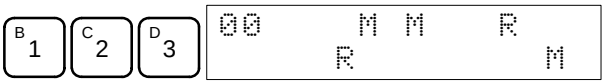

5. Press the MONTR Key to clear the specified regions of memory.

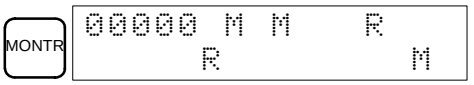

3-6-3 Reading/Clearing Error Messages

This operation is used to display and clear error messages. It is possible to display and clear non-fatal errors and MESSAGE instruction messages in any mode, but fatal errors can be displayed and cleared in PROGRAM mode only.

RUN	MONITOR	PROGRAM
OK	OK	OK

Before inputting a new program, any error messages recorded in memory should be cleared. It is assumed here that the causes of any of the errors for which error messages appear have already been taken care of. If the buzzer sounds when an attempt is made to clear an error message, eliminate the cause of the error, and then clear the error message (refer to the *CQM1 Programming Manual* for troubleshooting information).

Key Sequence

Follow the procedure below to display and clear messages.

1, 2, 3...

1. Bring up the initial display.
2. Press the FUN and then the MONTR Key to begin the operation. If there are no messages, the following display will appear:

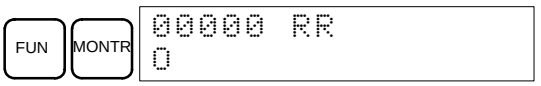

If there are messages, the most serious message will be displayed when the MONTR Key is pressed. Pressing MONTR again will clear the present message and display the next most serious error message. Continue pressing MONTR until all messages have been cleared. These are some examples of error messages:

A fatal error:

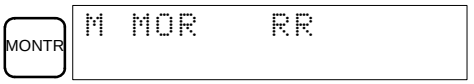

A non-fatal error:

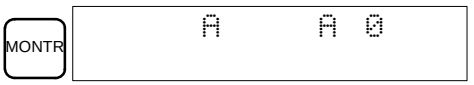

A message:

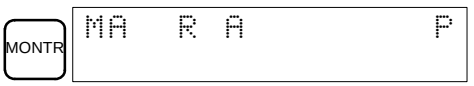

All messages cleared:

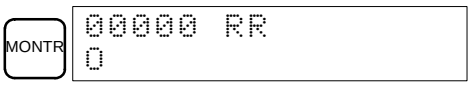

3-6-4 Buzzer Operation

This operation is used to turn on and off the buzzer that sounds when Programming Console keys are pressed. This buzzer will also sound whenever an error occurs during PC operation. Buzzer operation for errors is not affected by this setting.

This operation is possible in any mode.

RUN	MONITOR	PROGRAM
OK	OK	OK

Key Sequence Follow the procedure below to turn the key-input buzzer on and off.

1, 2, 3...

1. Press the CLR, SHIFT, and then the CLR Key to bring up the mode display. In this case the PC is in PROGRAM mode and the buzzer is on.

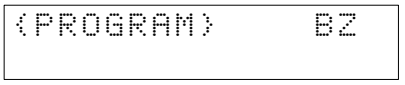

2. Press the SHIFT and then the 1 Key to turn off the buzzer.



3. Press the SHIFT and then the 1 Key again to turn the buzzer back on.



Note It is possible to adjust the buzzer volume on the C200H-PRO27-E using the volume control lever on the side of the Programming Console.

3-6-5 Reading and Changing Expansion Instructions

This operation is used to read and change the function codes assigned to certain instructions. It is possible to read the function code assignments in any mode, but the assignments can be changed in PROGRAM mode only.

RUN	MONITOR	PROGRAM
OK (reading only)	OK (reading only)	OK

Be sure to change function code assignments before inputting the program. The CQM1 will not operate properly if the function codes in the program are assigned incorrectly.

Note

1. Two function codes cannot be assigned to a single instruction.
2. Be sure that pin 4 of the CPU Unit's DIP switch is ON when changing function codes.

Reading Function Codes Follow the procedure below to read out function code assignments.

1, 2, 3...

1. Bring up the initial display.
2. Press the EXT Key.

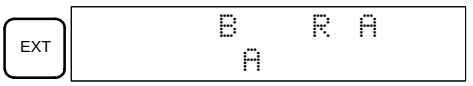

3. Use the Up and Down Arrow Keys to scroll through the function codes and read their corresponding instructions.

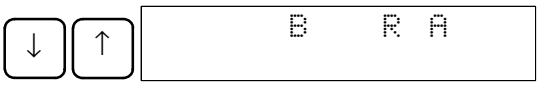

Changing Function Codes Follow the procedure below to change function code assignments. The assignments can be changed in PROGRAM mode only.

1, 2, 3...

1. Follow the procedure above to read out the function code which will be changed.
2. Press the CHG Key. The following display will appear.

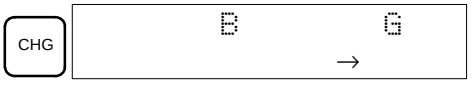

3. Use the Up and Down Arrow Keys to scroll through the available instructions.

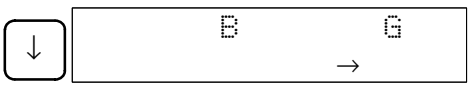

4. When the desired instruction is displayed, press the WRITE Key to change the function code assignment. The following display will appear if the selected instruction has not been assigned to another function code.

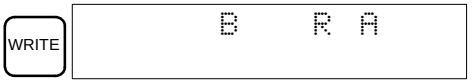

Note It is not possible to change to an instruction which is already assigned to a different function code.

3-6-6 Reading and Changing the Clock

This operation is used to read and change the clock in PCs that have a Memory Cassette equipped with a clock. It is possible to read the clock in any mode, but the clock can be changed in MONITOR or PROGRAM mode only.

RUN	MONITOR	PROGRAM
OK (reading only)	OK	OK

Reading the Clock

Follow the procedure below to read the clock.

1, 2, 3...

1. Bring up the initial display.
2. Press the FUN, SHIFT, and then the MONTR Key. The current clock setting will be displayed.

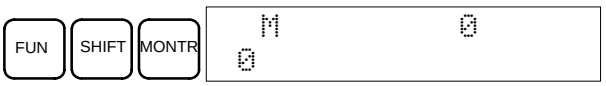

Changing the Clock

Follow the procedure below to change the clock setting. The clock setting cannot be changed in RUN mode.

1, 2, 3...

1. Follow the procedure above to display the current clock setting.
2. Press the CHG Key. The following display will appear.

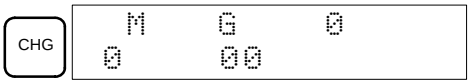

3. Use the Up and Down Arrow Keys to move the cursor to the unit that will be changed. In this case, the day of the week is being changed.

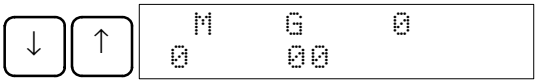

4. Input the new value and press the WRITE Key. The new setting will appear on the display.



Note The days of the week correspond to the following numbers: Sun.=0, Mon.=1, Tue.=2, Wed.=3, Thu.=4, Fri.=5, and Sat.=6.

3-6-7 Setting and Reading a Program Memory Address

This operation is used to display the specified program memory address and is possible in any mode.

RUN	MONITOR	PROGRAM
OK	OK	OK

When inputting a program for the first time, it is generally written to Program Memory starting from address 000. Because this address appears when the display is cleared, it is not necessary to specify it.

When inputting a program starting from other than 000 or to read or modify a program that already exists in memory, the desired address must be designated.

1, 2, 3...

1. Bring up the initial display.
2. Input the desired address. It is not necessary to input leading zeroes.

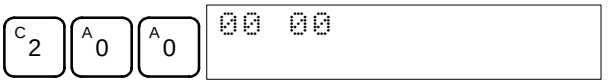

3. Press the Down Arrow Key.

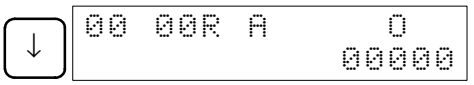

Note The ON/OFF status of any displayed bit will be shown if the PC is in RUN or MONITOR mode.

4. Press the Up and Down Arrow Keys to scroll through the program.

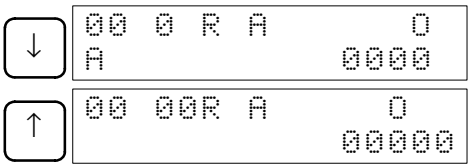

3-6-8 Instruction Search

This operation is used to find occurrences of the specified instruction in the program and is possible in any mode.

RUN	MONITOR	PROGRAM
OK	OK	OK

The ON/OFF status of any displayed bit will be shown if the PC is in RUN or MONITOR mode.

1, 2, 3...

1. Bring up the initial display.
2. Input the address from which the search will begin and press the Down Arrow Key. It is not necessary to input leading zeroes.

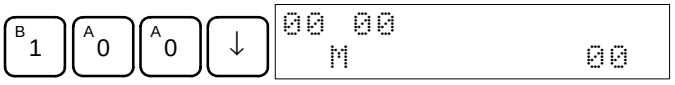

3. Input the instruction to be found and press the SRCH Key. In this case, the search is for LD instructions. (The LD Key and then the SRCH Key were pressed.)

   In this case, the next LD instruction is at address 200, as shown below.



4. Press the Down Arrow Key to display the instruction's operands or press the SRCH Key to search for the next occurrence of the instruction.
5. The search will continue until an END instruction or the end of Program Memory is reached. In this case, an END instruction was reached at address 6000.

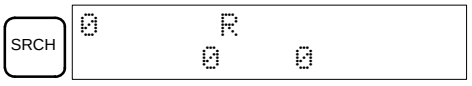

3-6-9 Bit Operand Search

This operation is used to find occurrences of the specified operand bit in the program and is possible in any mode.

RUN	MONITOR	PROGRAM
OK	OK	OK

The ON/OFF status of any displayed bit will be shown if the PC is in RUN or MONITOR mode.

1, 2, 3...

1. Bring up the initial display.
2. Input the operand address. It is not necessary to input leading zeroes.

SHIFT | CONT # | F 5

```
00000 O      R
 O           0000
```

3. Press the SRCH Key to begin the search.

SRCH

```
00 00 O      R
             0000
```

4. Press the SRCH Key to search for the next occurrence of the operand bit.
5. The search will continue until an END instruction or the end of Program Memory is reached. In this case, an END instruction was reached.

SRCH

```
0
        0
```

3-6-10 Inserting and Deleting Instructions

This operation is used to insert or delete instructions from the program. It is possible in PROGRAM mode only.

RUN	MONITOR	PROGRAM
No	No	OK

To demonstrate this operation, an IR 00105 NO condition will be inserted at program address 00206 and an IR 00103 NO condition deleted from address 00205, as shown in the following diagram.

Original Program

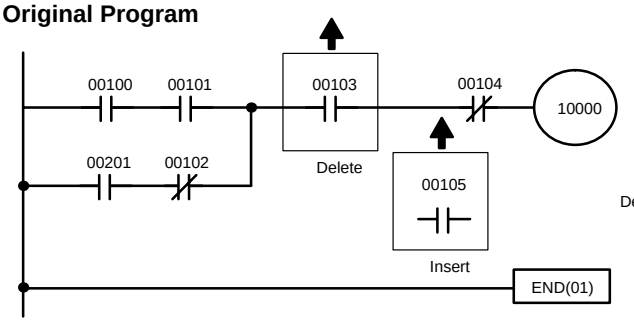

Address	Instruction	Operands
⋮	⋮	⋮
00205	AND	00103
00206	AND NOT	00104
00207	OUT	10000
00208	END(01)	-

Delete ← 00205; Insert ← 00103

Insertion

Follow the procedure below to insert the IR 00105 NO condition at address 00206.

1, 2, 3...

1. Bring up the initial display.
2. Input the address where the NO condition will be inserted and press the Down Arrow Key. It is not necessary to input leading zeroes.

C 2 | A 0 | 6 | ↓

```
00 0 R A
A    O      00 0
```

3. Input the new instruction and press the INS Key.

AND | B 1 | A 0 | F 5 | INS

```
00 0      R
A           00 0
```

4. Press the Down Arrow Key to insert the new instruction.

Note For instructions that require more operands, input the operands and then press the WRITE Key.

↓

```
00 0      R
A    O      00 0
```

Deletion

Follow the procedure below to delete the IR 00103 NO condition at address 00205.

1, 2, 3...

1. Bring up the initial display.

2. Input the address where the NO condition will be deleted and press the Down Arrow Key. It is not necessary to input leading zeroes.

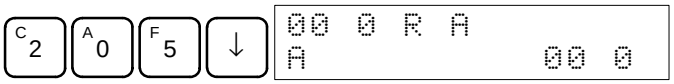

3. Press the DEL Key.



4. Press the Up Arrow Key to delete the specified instruction.

   If the instruction has more operands, the operands will be deleted automatically with the instruction.



After completing the insertion and deletion procedures, use the Up and Down Arrow Keys to scroll through the program and verify that it has been changed correctly, as shown in the following diagram.

Corrected Program

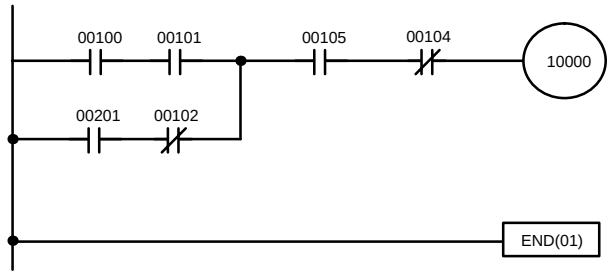

Address	Instruction	Operands
⋮	⋮	⋮
00205	AND	00105
00206	AND NOT	00104
00207	OUT	10000
00208	END(01)	-

3-6-11 Entering or Editing Programs

This operation is used enter or edit programs. It is possible in PROGRAM mode only.

RUN	MONITOR	PROGRAM
No	No	OK

The same procedure is used to either input a program for the first time or to change a program that already exists. In either case, the current contents of Program Memory is overwritten.

The program shown in the following diagram will be entered to demonstrate this operation.

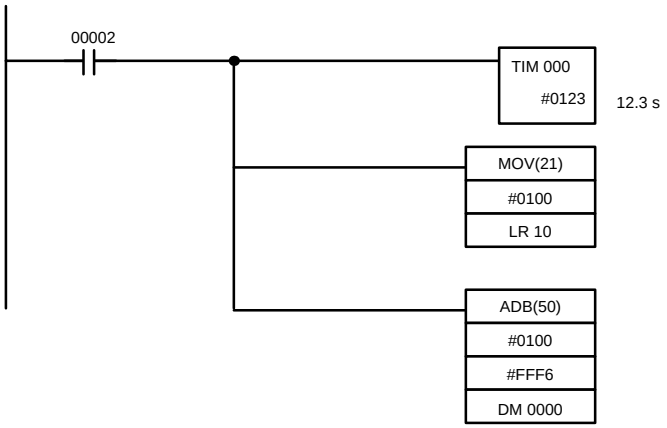

Address	Instruction	Operands
00200	LD	IR 00002
00201	TIM	000
		0123
00202	MOV(21)	
		#0100
		LR 10
00203	ADB(50)	
		#0100
		#FFF6
		DM 0000

1, 2, 3... 1. Bring up the initial display.

2. Input the address where the program will begin.

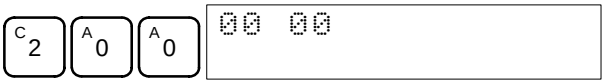

3. Input the first instruction and operand.

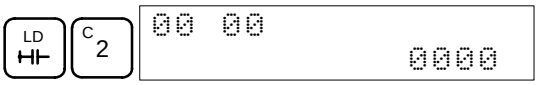

4. Press the WRITE Key to write the instruction to Program Memory. The next program address will be displayed.



If a mistake was made inputting the instruction, press the Up Arrow Key to return to the previous program address and input the instruction again. The mistaken instruction will be overwritten.

5. Input the second instruction and operand. (In this case it isn't necessary to enter the timer number, because it's 000.) Press the WRITE Key to write the instruction to Program Memory.

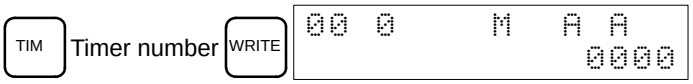

6. Input the second operand (123 to specify 12.3 seconds) and press the WRITE Key. The next program address will be displayed.

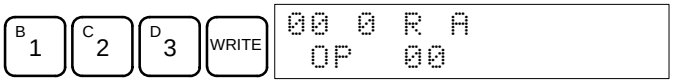

If a mistake was made inputting the operand, press the Up Arrow Key to return to display the mistaken operand, press the CONT/# Key and 123 again. The mistaken operand will be overwritten.

Note Counters are input in the same basic way as timers except the CNT Key is pressed instead of the TIM Key.

7. Input the third instruction and its operands. First input the instruction by pressing the FUN Key and then the function code (21 in this case).



Note To input a differentiated instruction, press the NOT Key after entering the function code. The "@" symbol will be displayed next to differentiated instructions. Press the NOT Key again to change back the instruction back to a non-differentiated instruction. The "@" symbol will disappear. To change an instruction after it has been entered, simply scroll through the program until the desired instruction is displayed and press the NOT Key. The "@" symbol should be displayed next to the instruction.

8. Press the WRITE Key to write the instruction to Program Memory. The input display for the first operand will be displayed.

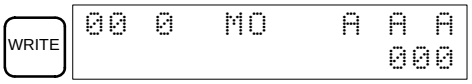

- **Writing Hexadecimal, BCD Constant**

9. Input the first operand and press the WRITE Key to write the instruction to Program Memory. The input display for the second operand will appear.

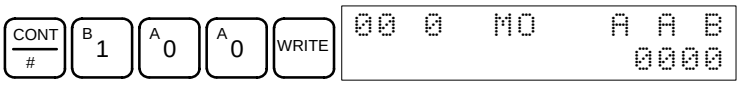

• Writing the Word Number

10. Input the second operand and press the WRITE Key to write the instruction to Program Memory. The next program address will be displayed.

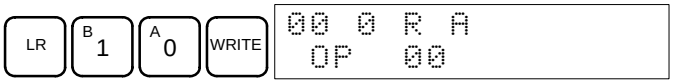

Note When an instruction operand is input, the designation of bit or word can be abbreviated.

11. Write the application instruction.

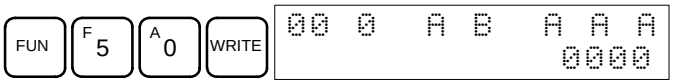

Note Decimal-number writing with or without sign cannot be executed by the CQM1-CPU11-E/21-E.

• Writing a Decimal Number Without Sign

12. It is possible to write the operand in decimal (without sign).

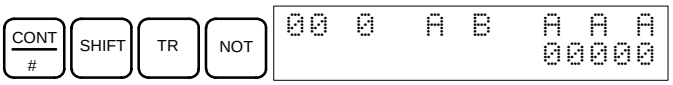

13. Write the operand from 0 to 65535.

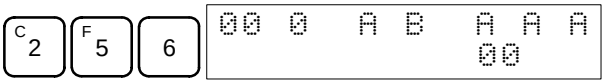

Note If an erroneous input is made, press the CLR Key to restore the status prior to the input. Then enter the correct input.

14. Restore the hexadecimal display.

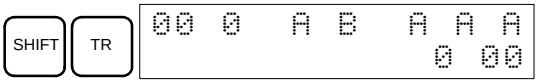

Note If an input is made outside of the permissible range, a buzzer will sound and the hexadecimal display will not be displayed.

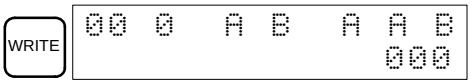

15. It is possible to write the operand in decimal (with sign).

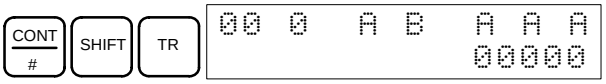

16. Write a value from –32,768 to 32,767. Use the SET Key to input a positive number, and use the RESET Key to input a negative number.

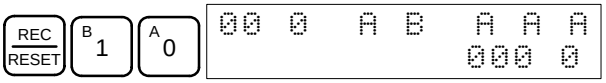

Note If an erroneous input is made, press the CLR Key to restore the status prior to the input. Then enter the correct input.

17. Restore the hexadecimal display.

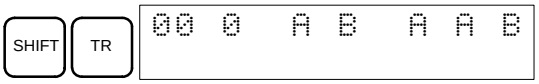

Note If an input is made outside of the permissible range, a buzzer will sound and the hexadecimal display will not be displayed.

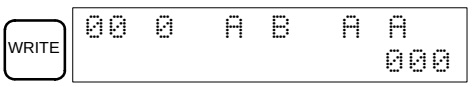

18. Input the final operand and then press the WRT Key.

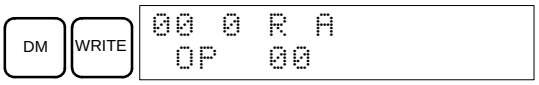

3-6-12 Checking the Program

Once a program has been entered or edited, its syntax should be checked to be sure that no programming rules have been violated.

This operation checks for programming errors and displays the program address and error when errors are found. It is possible in PROGRAM mode only.

RUN	MONITOR	PROGRAM
No	No	OK

1, 2, 3...

1. Bring up the initial display.
2. Press the SRCH Key. An input prompt will appear requesting the desired check level.

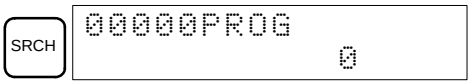

3. Input the desired check level (0, 1, or 2). The program check will begin when the check level is input, and the first error found will be displayed.

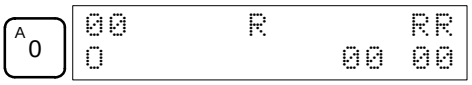

Note Refer to *4-3 Programming Errors* for details on check levels.

4. Press the SRCH Key to continue the search. The next error will be displayed. Continue pressing the SRCH Key to continue the search.

   The search will continue until an END instruction or the end of Program Memory is reached. A display like this will appear if the end of Program Memory is reached:

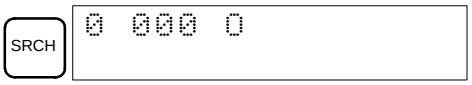

   A display like this will appear if an END instruction is reached:

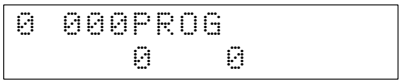

Note The search can be cancelled at any time by pressing the CLR Key.

3-6-13 Bit, Digit, Word Monitor

This operation is used to monitor the status of up to 16 bits and words, although only 3 can be shown on the display at any one time. Operation is possible in any mode.

RUN	MONITOR	PROGRAM
OK	OK	OK

Program Read then Monitor

When a program address is being displayed, the status of the bit or word in that address can be monitored by pressing the MONTR Key.

1, 2, 3...

1. Bring up the initial display.
2. Input the desired program address and press the Down Arrow Key.

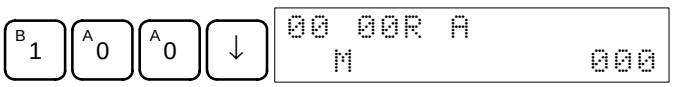

3. Press the MONTR Key to begin monitoring.



If the status of a bit is being monitored, that bit's status can be changed using the Force Set/Reset operation. Refer to page 106 for details.

If the status of a word is being monitored, that word's value can be changed using the Hexadecimal/BCD Data Modification operation. Refer to page 103 for details.

4. Press the CLR Key to end monitoring.

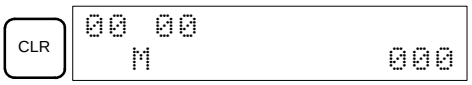

Bit Monitor

Follow the procedure below to monitor the status of a particular bit.

1, 2, 3...

1. Bring up the initial display.
2. Input the bit address of the desired bit and press the MONTR Key.

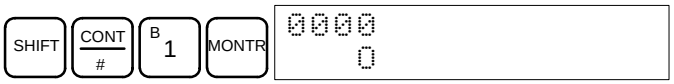

The Up or Down Arrow Key can be pressed to display the status of the previous or next bit.

Note a) If the PC is in PROGRAM or MONITOR mode, the displayed bit's status can be changed using the Force Set/Reset operation. Refer to page 106 for details.

b) Bit IR 00001 can also be specified by pressing the LD and 1 Keys, reducing the number of keystrokes.

3. Press the CLR Key to end monitoring.



Word Monitor

Follow the procedure below to monitor the status of a particular word.

1, 2, 3...

1. Bring up the initial display.
2. Input the word address of the desired word.



Note a) If the PC is in PROGRAM or MONITOR mode, the displayed word's status can be changed using the Hexadecimal/BCD Data Modification operation. Refer to page 103 for details.

b) The status of SR 25503 to SR 25507 and TR 00 to TR 07 cannot be monitored.

3. Press the MONTR Key to begin monitoring.



The Up or Down Arrow Key can be pressed to display the status of the previous or next word.

4. Press the CLR Key to end monitoring.

Multiple Address Monitoring

The status of up to six bits and words can be monitored simultaneously, although only three can be shown on the display at any one time.

1, 2, 3...

1. Bring up the initial display.
2. Input the address of the first bit or word and press the MONTR Key.

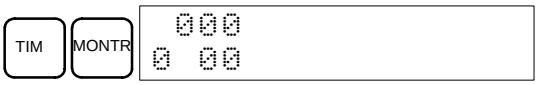

3. Repeat step 2 up to 6 times to display the next addresses to be monitored.

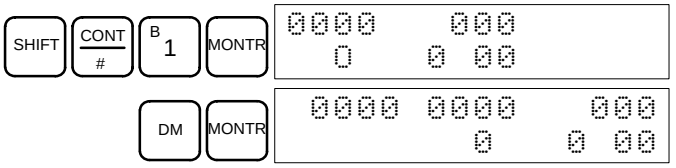

If 4 or more bits and words are being monitored, the bits and words that do not appear on the display can be displayed by pressing the MONTR Key. If the MONTR Key is pressed alone, the display will shift to the right.

If more than six bits and words are input, monitoring of the bit or word input first will be canceled.

4. Press the CLR Key to stop monitoring the leftmost bit or word and clear it from the display.

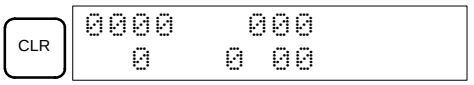

5. Press the SHIFT+CLR Keys to end monitoring altogether.

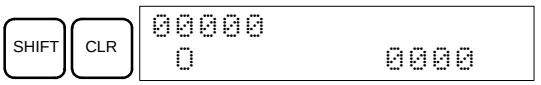

3-6-14 Differentiation Monitor

This operation is used to monitor the up or down differentiation status of a particular bit. It is possible in any mode.

RUN	MONITOR	PROGRAM
OK	OK	OK

1, 2, 3...

1. Monitor the status of the desired bit according to the procedure described in *3-6-13 Bit, Digit, Word Monitor*. If 2 or more bits are being monitored, the desired bit should be leftmost on the display.

   In this case the differentiation status of LR 00 will be monitored.

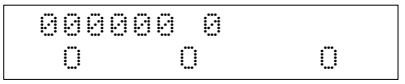

2. To specify up-differentiation monitoring, press the SHIFT and then the Up Arrow Key. The symbols “U@” will appear.

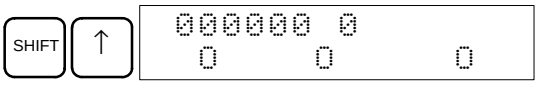

To specify down-differentiation monitoring, press the SHIFT and then the Down Arrow Key. The symbols “D@” will appear.

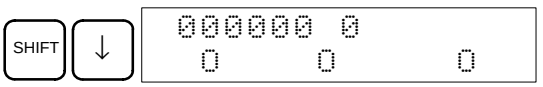

3. The buzzer will sound when the specified bit goes from off to on (for up-differentiation) or from on to off (for down-differentiation).

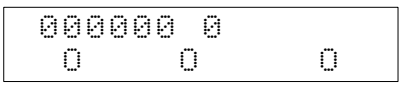

4. Press the CLR Key to end differentiation monitoring and return to the normal monitoring display.

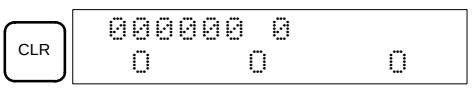

3-6-15 Binary Monitor

This operation is used to monitor the ON/OFF status of any word's 16 bits. It is possible in any mode.

RUN	MONITOR	PROGRAM
OK	OK	OK

1, 2, 3...

1. Monitor the status of the desired word according to the procedure described in *3-6-13 Bit, Digit, Word Monitor*. The desired word should be leftmost on the display if 2 or more words are being monitored.
2. Press the SHIFT and then the MONTR Key to begin binary monitoring. The ON/OFF status of the selected word's 16 bits will be shown along the bottom of the display. A 1 indicates a bit is on, and a 0 indicates it is off.



The status of force-set bits is indicated by "S", and the status of a force-reset bits is indicated by "R", as shown below.

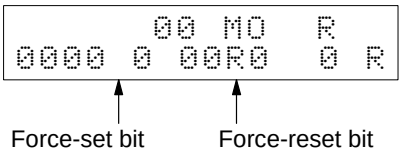

Note a) The status of displayed bits can be changed at this point. Refer to *3-6-22 Binary Data Modification* for details.

b) The Up or Down Arrow Key can be pressed to display the status of the previous or next word's bits.

3. Press the CLR Key to end binary monitoring and return to the normal monitoring display.

   Press the SHIFT+CLR Keys to end monitoring altogether.

3-6-16 3-Word Monitor

This operation is used to monitor the status of three consecutive words. It is possible in any mode.

RUN	MONITOR	PROGRAM
OK	OK	OK

1, 2, 3...

1. Monitor the status of the first of the three words according to the procedure described in *3-6-13 Bit, Digit, Word Monitor*.

   If 2 or more words are being monitored, the desired first word should be leftmost on the display.
2. Press the EXT Key to begin 3-word monitoring. The status of the selected word and the next two words will be displayed, as shown below. In this case, DM 0000 was selected.

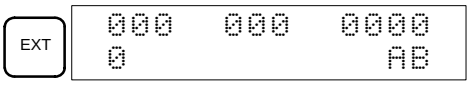

Note The status of the displayed words can be changed at this point. Refer to *3-6-19 3-word Data Modification*.

3. The Up and Down Arrow Keys can be used to shift one address up or down.

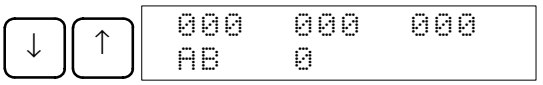

4. Press the CLR Key to end 3-word monitoring and return to the normal monitoring display. The rightmost word on the 3-word monitor display will be monitored.



Note Just one word will be monitored, even if 2 or more words were displayed when 3-word monitoring was initiated.

3-6-17 Decimal Monitor With Sign

With this operation, hexadecimal data in a word is regarded as hexadecimal expressed by two's complement, and is converted to decimal with sign for display. In addition, two consecutive words of data can be displayed in decimal as eight digits of hexadecimal (double-length display). I/O monitoring, multiple address monitoring, and 3-word data modification can be used during execution.

Caution This function cannot be used with CQM1-CPU11-E and CQM1-CPU21-E CPU Units.

Note In PROGRAM or MONITOR mode, it is possible to change word data by means of a decimal-with-sign input. Refer to *3-6-23 Decimal Data Modification (With Sign)*.

RUN	MONITOR	PROGRAM
OK	OK	OK

1, 2, 3... 1. Monitor the word that is to be used for decimal monitor with sign. During multiple address monitoring, the word on the left is the object.

Multiple address monitoring

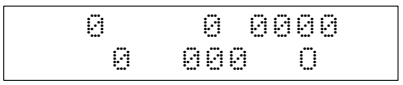

2. Decimal monitor with sign is executed. When the SHIFT and TR keys are pressed here, I/O monitor, multiple address monitoring, or 3-word data modification is restored.

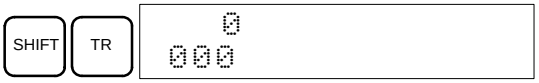

- **Double-length Display**

3. The word that was monitored is taken as the rightmost four digits of eight digits hexadecimal, and the next word as the leftmost four digits, and they are converted to a decimal number with sign for display.



4. When the decimal monitoring with sign has been completed, I/O monitor, multiple address monitoring, or 3-word data modification is restored.

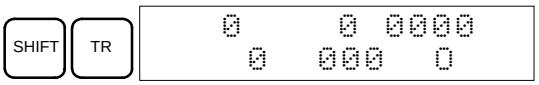

Note I/O monitor, multiple address monitoring, or 3-word data modification can also be restored by means of the CLR Key.

3-6-18 Decimal Monitor Without Sign

This operation is used to convert hexadecimal data in a word to decimal without sign for display. In addition, two consecutive words of data can be displayed in decimal as eight digits of hexadecimal (double-length display). I/O monitoring, multiple address monitoring and 3-word data modification can be used during execution.

⚠ Caution This function cannot be used with CQM1-CPU11-E and CQM1-CPU21-E CPU Units.

Note In PROGRAM or MONITOR mode, it is possible to change word data by means of a decimal-with-sign input. Refer to *3-6-24 Decimal Data Modification (Without Sign)*.

RUN	MONITOR	PROGRAM
OK	OK	OK

1, 2, 3... 1. Monitor the word that is to be used for decimal monitor without sign. During multiple address monitoring, the word on the left is the object.

Multiple address monitoring

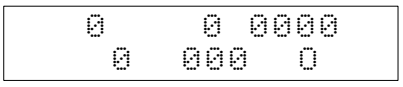

2. Decimal monitor without sign is executed. When the SHIFT and TR Keys are pressed here, the I/O monitor, multiple address monitoring, or 3-word data modification display is restored.

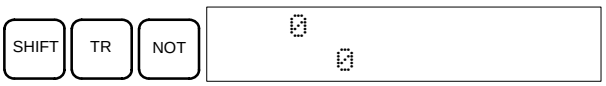

• Double-length Display

3. The word that was monitored is taken as the rightmost four digits of eight digits hexadecimal, and the next word as the leftmost four digits, and they are converted to a decimal number with sign for display.

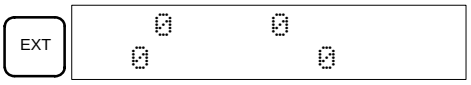

4. When the decimal monitoring without sign has been completed, the I/O monitor, multiple address monitoring, or 3-word data modification display is restored.

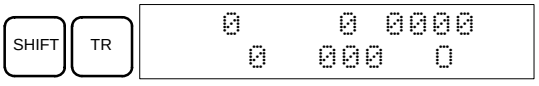

Note The I/O monitor, multiple address monitoring, or 3-word data modification display can also be restored by means of the CLR Key.

3-6-19 3-Word Data Modification

This operation is used to change the contents of one or more of the 3 consecutive words displayed in the 3-Word Monitor operation. It is possible in MONITOR or PROGRAM mode only.

RUN	MONITOR	PROGRAM
No	OK	OK

1, 2, 3... 1. Monitor the status of the desired words according to the procedure described *3-6-16 3-Word Monitor*.

2. Press the CHG Key to begin 3-word data modification. The cursor will appear next to the contents of the leftmost word.



3. Input the new value for the leftmost word on the display and press the CHG Key if more changes will be made. Input the new value and press the WRITE Key to write the changes in memory if no more changes will be made.

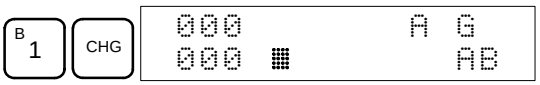

4. Input the new value for the middle word on the display and press the CHG Key if the rightmost word will be changed. Input the new value and press the WRITE Key to write the changes in memory if the rightmost word will not be changed. (In this case, it will not.)



Note If the CLR Key is pressed before the WRITE Key, the operation will be cancelled and the 3-word monitor display will return without any changes in data memory.

3-6-20 Changing Timer, Counter SV

There are two operations that can be used to change the SV of a timer or counter. They are possible in MONITOR or PROGRAM mode only. In MONITOR mode, the SV can be changed while the program is being executed.

RUN	MONITOR	PROGRAM
No	OK	OK

The timer or counter SV can be changed either by inputting a new value or by incrementing or decrementing the current SV.

Inputting a New SV Constant

This operation can be used to input a new SV constant, as well as to change an SV from a constant to a word address designation and visa verse. The following examples show how to input a new SV constant and how to change the SV from a constant to an address.

1, 2, 3...

1. Bring up the initial display.
2. Display the desired timer or counter.

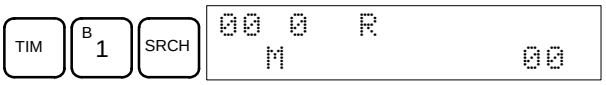

3. Press the Down Arrow Key and then the CHG Key.

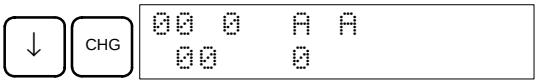

4. At this point a new SV constant can be input or the SV constant can be changed to a word address designation
   a) To input a new SV constant, input the constant and press the WRITE Key.

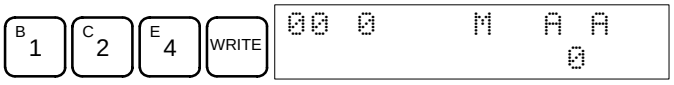

   b) To change to a word address designation, input the word address and press the WRITE Key.

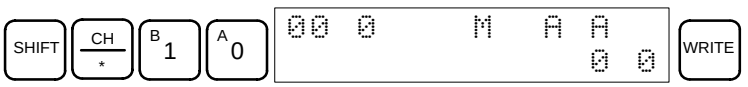

Incrementing and Decrementing a Constant

This operation can be used to increment and decrement an SV constant. It is possible only when the SV has been entered as a constant.

1, 2, 3...

1. Bring up the initial display.
2. Display the desired timer or counter.

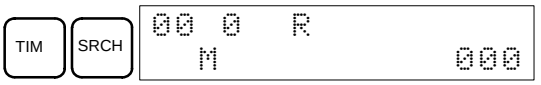

3. Press the Down Arrow, CHG, and then the EXT Key.

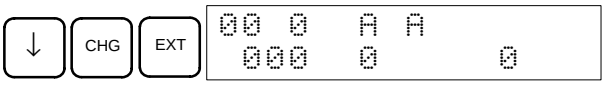

The constant on the left is the old SV and the constant on the right will become the new SV constant in step 5.

4. Press the Up and Down Arrow Keys to increment and decrement the constant on the right.
5. Press the CLR Key twice to change the timer's SV to the new value.

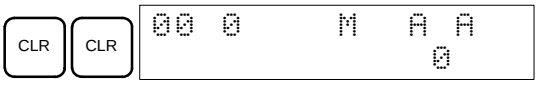

3-6-21 Hexadecimal, BCD Data Modification

This operation is used to change the BCD or hexadecimal value of a word being monitored using the procedure described in *3-6-13 Bit, Digit, Word Monitor*. It is possible in MONITOR or PROGRAM mode only.

RUN	MONITOR	PROGRAM
No	OK	OK

Words SR 253 to SR 255 cannot be changed.

1, 2, 3...

1. Monitor the status of the desired word according to the procedure described in *3-6-13 Bit, Digit, Word Monitor*. If two or more words are being monitored, the desired word should be leftmost on the display.
2. Press the CHG Key to begin hexadecimal, BCD data modification.

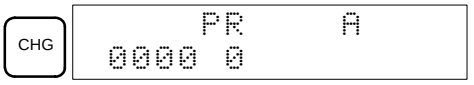

If a timer or counter is leftmost on the display, its PV will be displayed and will be the value changed. See 3-6-20 *Changing Timer, Counter SV* for the procedure to change SV.

In MONITOR mode, the timer's PV will be counting down if the timer is on.

3. Input the new PV and press the WRITE Key to change the PV. Be sure to input timer or counter PVs in BCD only.

The operation will end and the normal monitoring display will return when the WRITE Key is pressed.

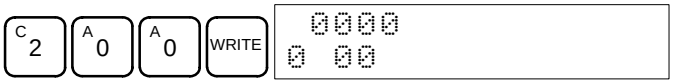

The timer's PV will continue counting down from the new PV if the timer is on.

3-6-22 Binary Data Modification

This operation is used to change the status of a word's bits when the word is monitored using the procedure described in *3-6-15 Binary Monitor*. It is possible in MONITOR or PROGRAM mode only.

RUN	MONITOR	PROGRAM
No	OK	OK

Bits SR 25300 to SR 25507 cannot be changed.

1, 2, 3... 1. Monitor the status of the desired word according to the procedure described *3-6-15 Binary Monitor*.

2. Press the CHG Key to begin binary data modification.

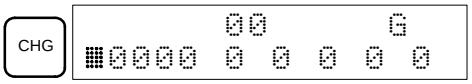

A flashing cursor will appear over bit 15. The cursor indicates which bit can be changed.

3. Three sets of keys are used to move the cursor and change bit status:

a) Use the Up and Down Arrow Keys to move the cursor to the left and right.

b) Use the 1 and 0 keys to change a bit's status to on or off. The cursor will move one bit to the right after one of these keys is pressed.

c) Use the SHIFT+SET and SHIFT+RESET Keys to force-set or force-reset a bit's status. The cursor will move one bit to the right after one of these keys is pressed. The NOT Key will clear force-set or force-reset status.

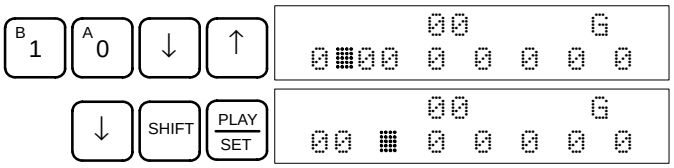

Note Bits in the DM Area cannot be force-set or force-reset.

4. Press the WRITE Key to write the changes in memory.

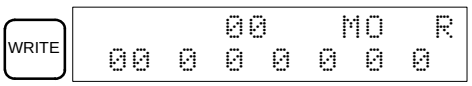

3-6-23 Decimal Data Modification With Sign

This operation is used to change the decimal value of a word, within a range of –32,768 to 32,767. It is converted automatically to hexadecimal expressed by two's complement. In addition, the data from 2 consecutive words can be changed all together (double-length change).

The operation can be used during decimal-with-sign monitoring.

Words SR 253 to SR 255 cannot be changed.

⚠ Caution This operation cannot be used with CQM1-CPU11-E and CQM1-CPU21-E CPU Units.

RUN	MONITOR	PROGRAM
No	OK	OK

1, 2, 3... 1. Monitor (decimal, with sign) the status of the word for which the present value is to be changed.



2. Press the CHG Key to begin decimal data modification.

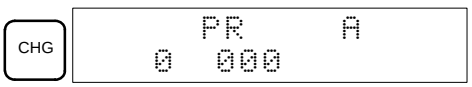

3. Input the new PV and press the WRITE Key to change the PV. The operation will end and the decimal-with-sign monitoring display will return when the WRITE Key is pressed.

The PV can be set within a range of –32,768 and 32,767. Use the SET Key to input a positive number, and use the RESET Key to input a negative number.

To return to the I/O monitor, multiple address monitor, or 3-word data modification display, either press the SHIFT and TR Keys, or else press the CLR Key.



Note If an erroneous input is made, press the CLR Key to restore the status prior to the input. Then enter the correct input. If an input is made outside of the permissible range, a buzzer will sound.

- **Double-length Change**

1. The PV is displayed in double length by decimal-with-sign monitoring.

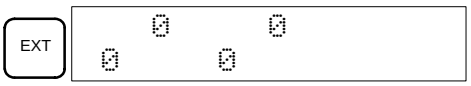

2. Press the CHG Key to begin decimal data modification.

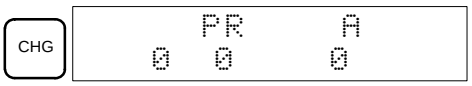

3. Input the new PV and press the WRITE Key to change the PV. The operation will end and the double length display will return when the WRITE Key is pressed. The PV can be set within a range from –2,147,483,648 to 2,147,483,647.

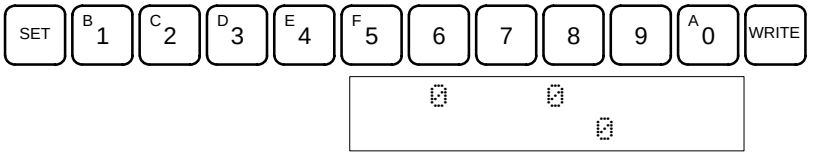

Note If an erroneous input is made, press the CLR Key to restore the status prior to the input. Then enter the correct input. If an input is made outside of the permissible range, a buzzer will sound.

4. When the decimal monitoring with sign has been completed, the I/O monitor, multiple address monitoring, or 3-word data modification display is restored.

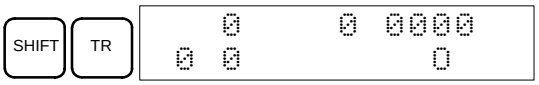

Note The I/O monitor, multiple address monitoring, or 3-word data modification display can also be restored by means of the CLR Key.

3-6-24 Decimal Data Modification Without Sign

This operation is used to change the decimal value of a word, within a range of 0 to 65,535 (without sign). It is converted automatically to hexadecimal. In addition, the data from 2 consecutive words can be changed all together (double-length change).

The operation can be used during decimal-without-sign monitoring.

Words SR 253 to SR 255 cannot be changed.

⚠ **Caution** This operation cannot be used with CQM1-CPU11-E and CQM1-CPU21-E CPU Units.

RUN	MONITOR	PROGRAM
No	OK	OK

1, 2, 3... 1. Monitor (decimal, without sign) the status of the word for which the present value is to be changed.



2. Press the CHG Key to begin decimal data modification.

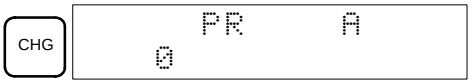

3. Input the new PV and press the WRITE Key to change the PV. The operation will end and the decimal-without-sign monitoring display will return when the WRITE Key is pressed.

   The PV can be set within a range of 0 to 65,535.

   To return to the I/O monitor, multiple address monitor, or 3-word data modification display, either press the SHIFT and TR Keys, or else press the CLR Key.

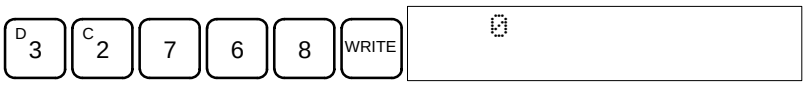

Note If an erroneous input is made, press the CLR Key to restore the status prior to the input. Then enter the correct input. If an input is made outside of the permissible range, a buzzer will sound.

- **Double-length Change**

1. The PV is displayed in double length by decimal-without-sign monitoring.



2. Press the CHG Key to begin decimal data modification.

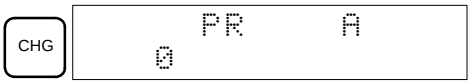

3. Input the new PV and press the WRITE Key to change the PV. The operation will end and the double length display will return when the WRITE Key is pressed. The PV can be set within a range of 0 to 4,294,967,295.

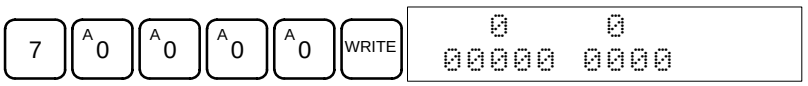

Note If an erroneous input is made, press the CLR Key to restore the status prior to the input. Then enter the correct input. If an input is made outside of the permissible range, a buzzer will sound.

4. When the decimal monitoring with sign has been completed, the I/O monitor, multiple address monitoring, or 3-word data modification display is restored.



Note The I/O monitor, multiple address monitoring, or 3-word data modification display can also be restored by means of the CLR Key.

3-6-25 Force Set, Reset

This operation is used to force bits ON (force set) or OFF (force reset) and is useful when debugging the program or checking output wiring. It is possible in MONITOR or PROGRAM mode only.

RUN	MONITOR	PROGRAM
No	OK	OK

1, 2, 3...

1. Monitor the status of the desired bit according to the procedure described in *3-6-13 Bit, Digit, Word Monitor*. If two or more words are being monitored, the desired bit should be leftmost on the display.
2. Press the SET Key to force the bit ON or press the RESET Key to turn the bit OFF.

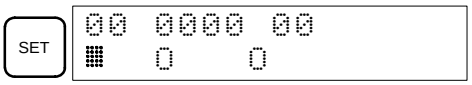

The cursor in the lower left corner of the display indicates that the force set/reset is in progress. Bit status will remain ON or OFF only as long as the key is held down; the original status will return one cycle after the key is released.

If a timer or counter is force reset in MONITOR mode, it will begin operation again after completion if its input is on and will stop when the time is up.

3. Press the SHIFT+SET or SHIFT+RESET Keys to maintain the status of the bit after the key is released. In this case, the force-set status is indicated by an "S" and the force-reset status is indicated by an "R".

To return the bit to its original status, press the NOT key or perform the Clear Force Set/Reset operation. (Refer to *3-6-26 Clear Force Set/Reset* for details.) Forced status will also be cleared when the PC's operating mode is changed (unless SR 25211 is ON, in which case forced status will not be cleared when changing from PROGRAM to MONITOR mode) or when operation stops as the result of an error or power interruption.

3-6-26 Clear Force Set/Reset

This operation is used to restore the status of all bits which have been force set or reset. It is possible in MONITOR or PROGRAM mode only.

RUN	MONITOR	PROGRAM
No	OK	OK

1, 2, 3...

1. Bring up the initial display.
2. Press the SET and then the RESET Key. A confirmation message will appear.

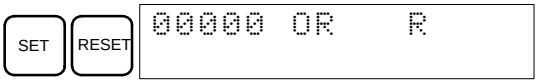

Note If you mistakenly press the wrong key, press CLR and start again from the beginning.

3. Press the NOT Key to clear the force-set/reset status of bits in all data areas.

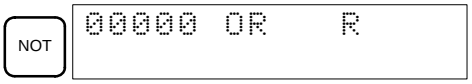

3-6-27 Hex-ASCII Display Change

This operation is used to convert word data displays back and forth between 4-digit hexadecimal data and ASCII. It is possible in any mode.

RUN	MONITOR	PROGRAM
OK	OK	OK

1, 2, 3...

1. Monitor the status of the desired word according to the procedure described in *3-6-13 Bit, Digit, Word Monitor*. If two or more words are being monitored, the desired word should be leftmost on the display.

2. Press the TR Key to switch to ASCII display. The display will toggle between hexadecimal and ASCII displays each time the TR Key is pressed.



3-6-28 Displaying the Cycle Time

This operation is used to display the current average cycle time (scan time). It is possible only in RUN or MONITOR mode while the program is being executed.

RUN	MONITOR	PROGRAM
OK	OK	No

1, 2, 3...

1. Bring up the initial display.
2. Press the MONTR Key to display the cycle time.

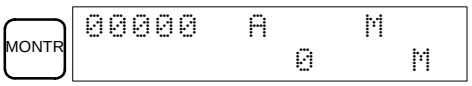

There might be differences in displayed values when the MONTR Key is pressed repeatedly. These differences are caused by changing execution conditions.

3-6-29 Inputting Signed Binary Data Using Decimal Values

Although calculations for signed binary data use hexadecimal expressions, inputs from the Programming Console or SSS can be done using decimal inputs and mnemonics for the instructions. Examples are shown below for the Programming Console. Refer to the *SSS Operation Manual: C-series PCs* for details on using the SSS.

Input Instructions

Only 16-bit operands can be input for the following instructions: NEG(—), ADB(50), SBB(51), MBS(—), and DBS(—).

Example 1: Adding 12345 to an Operand Using BIN(50)

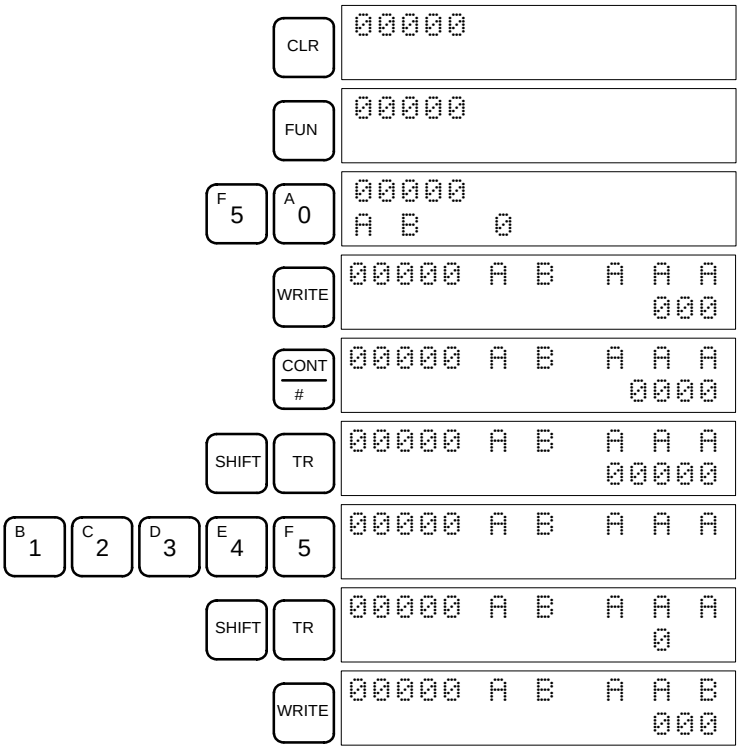

Inputting Word (DM) Data

Example 2: Setting DM 1000 to +22334

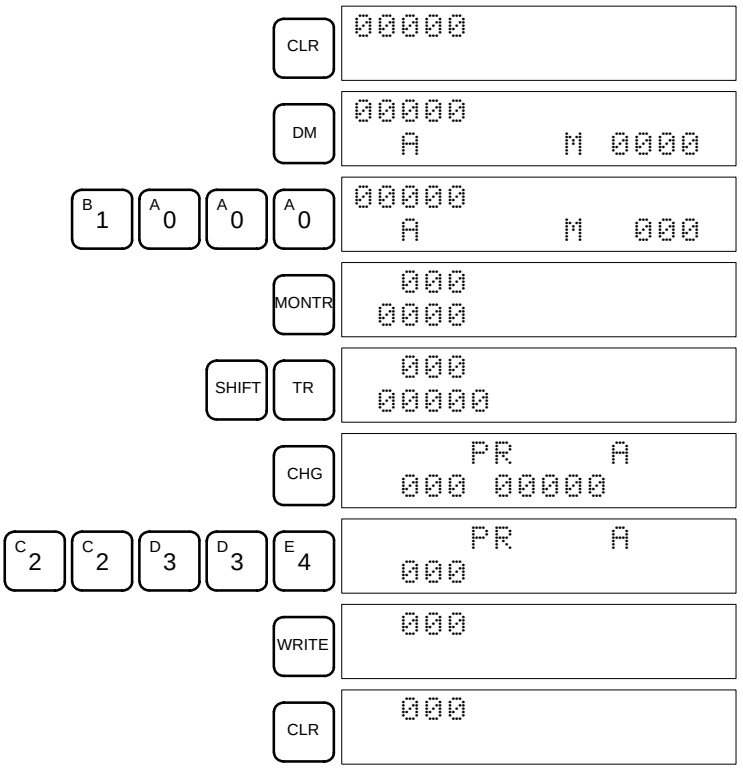

Example 3: Setting DM 1234 and DM 1235 to –1,234,567,890

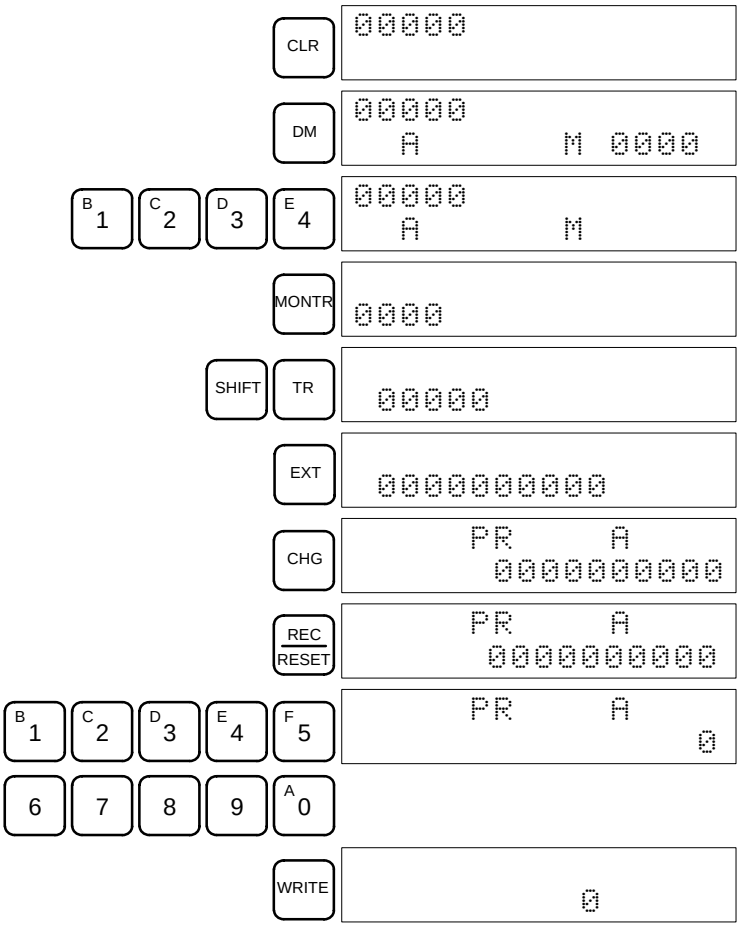

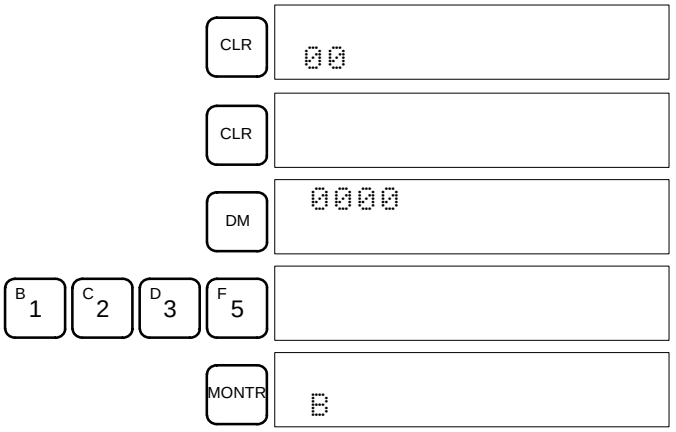

3-6-30 Using Signed Binary Instructions

The following instructions must be allocated function codes in the instructions table before they can be used.

- 2'S COMPLEMENT – NEG(—)
- DOUBLE 2'S COMPLEMENT – NEGL(—)
- DOUBLE BINARY ADD – ADBL(—)
- DOUBLE BINARY SUBTRACT – SBBL(—)
- SIGNED BINARY MULTIPLY – MBS(—)
- DOUBLE SIGNED BINARY MULTIPLY – MBSL(—)
- SIGNED BINARY DIVIDE – DBS(—)
- DOUBLE SIGNED BINARY DIVIDE – DBSL(—)

Allocating Function Codes

The procedure to using the Programming Console to allocate function codes is shown below. Be sure that pin 4 on the CQM1's DIP switch is turned ON to enable use of a user-set instruction table before performing this operation.

Example: Allocating Function Code 19 to ADBL

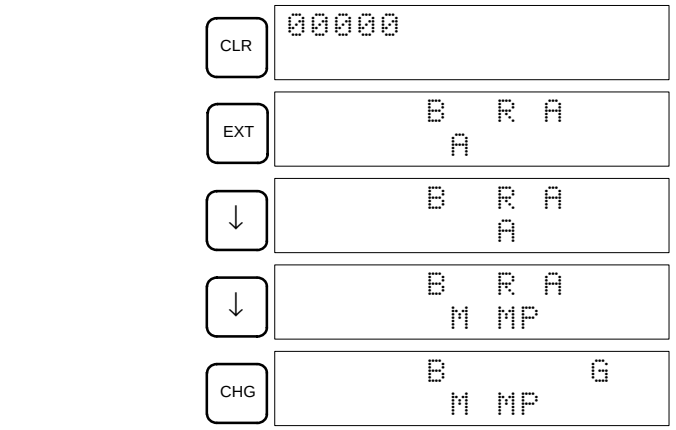

Press the Up or Down Cursor Key until ADBL is displayed.

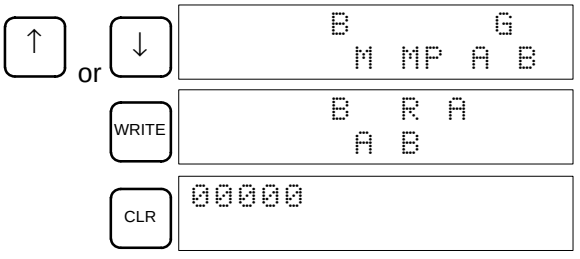

SECTION 4
Troubleshooting

This section describes how to diagnose and correct the hardware and software errors that can occur during PC operation.

4-1 Introduction . . . . .
4-2 Programming Console Operation Errors . . . . .
4-3 Programming Errors . . . . .
4-4 User-defined Errors . . . . .
4-5 Operating Errors . . . . .
4-5-1 Non-fatal Errors . . . . .
4-5-2 Fatal Errors . . . . .
4-6 Troubleshooting Flowcharts . . . . .

4-1 Introduction

PC errors can be divided broadly into the following four categories:

1, 2, 3...

1. Program Input Errors

   These errors occur when inputting a program or attempting an operation used to prepare the PC for operation.

2. Programming Errors

   These errors will occur when the program is checked using the Program Check operation.

3. User-defined Errors

   There are three instructions that the user can use to define his own errors or messages. The instructions will be executed when a particular condition (defined by the user) has occurred during operation.

4. Operating Errors

   These errors occur after self-diagnostic program execution has been started.

   a) Non-fatal Operating Errors
   PC operation and program execution will continue after one or more of these errors have occurred.

   b) Fatal Operating Errors
   PC operation and program execution will stop and all outputs from the PC will be turned OFF when any of these errors have occurred.

The PC's indicators will indicate when a PC error has occurred and an error message or code will be displayed on the Programming Console or host computer if one is connected. The error code is also contained in SR 25300 to SR 25307.

For the most recent errors, both the type of error and time of occurrence will be recorded in the PC's error log area (DM 6570 to DM 6599). Details are provided in the *CQM1 Programming Manual.*

There are flags and other information provided in the SR and AR areas that can be used in troubleshooting. Details are provided in the *CQM1 Programming Manual.*

Note In addition to the errors described above, communications errors can occur when the PC is part of a Host Link System. Refer to the *CQM1 Programming Manual* for details.

⚠ Caution Expansion instructions (those assigned to function codes 17, 18, 19, 47, 48, 60 to 69, 87, 88, and 89) are not subject to program checks. Program checks also do not cover DM 1024 to DM 6143 for PCs that do not support this part of the DM area (e.g., CQM1-CPU11-E and CQM1-CPU21-E). Data will not be written even if these areas are specified and data read from these areas will always be "0000."

4-2 Programming Console Operation Errors

The following error messages may appear when performing operations on the Programming Console. Correct the error as indicated and continue with the operation. The asterisks in the displays shown below will be replaced with numeric data, normally an address, in the actual display. Refer to the *Ladder Support Software Operation Manual*, *SYSMAC Support Software Operation Manual: C-series PCs*, and *Data Access Console Operation Manual* for errors that may appear when operating the LSS/SSS or a Data Access Console.

Message	Meaning and appropriate response
REPL ROM	An attempt was made to write to write-protected memory. Set the write-protect switch (pin 1 of the CPU Unit's DIP switch) to OFF.
PROG OVER	The instruction at the last address in memory is not NOP(00). Erase all unnecessary instructions at the end of the program.
ADDR OVER	An address was set that is larger than the highest memory address in Program Memory. Input a smaller address.
SETDATA ERR	FALS 00 has been input, and "00" cannot be input. Reinput the data.
I/O NO. ERR	A data area address has been designated that exceeds the limit of the data area, e.g., an address is too large. Confirm the requirements for the instruction and re-enter the address.

4-3 Programming Errors

These errors in program syntax will be detected when the program is checked using the Program Check operation.

Three levels of program checking are available. The desired level must be designated to indicate the type of errors that are to be detected. The following table provides the error types, displays, and explanations of all syntax errors. Check level 0 checks for type A, B, and C errors; check level 1, for type A and B errors; and check level 2, for type A errors only.

Level A Errors

Message	Meaning and appropriate response
?????	The program has been damaged, creating a non-existent function code. Re-enter the program.
CIRCUIT ERR	The number of logic blocks and logic block instructions does not agree, i.e., either LD or LD NOT has been used to start a logic block whose execution condition has not been used by another instruction, or a logic block instruction has been used that does not have the required number of logic blocks. Check your program.
OPERAND ERR	A constant entered for the instruction is not within defined values. Change the constant so that it lies within the proper range.
NO END INSTR	There is no END(01) in the program. Write END(01) at the final address in the program.
LOCN ERR	An instruction is in the wrong place in the program. Check instruction requirements and correct the program.
JME UNDEFD	A JME(04) instruction is missing for a JMP(05) instruction. Correct the jump number or insert the proper JME(04) instruction.
DUPL	The same jump number or subroutine number has been used twice. Correct the program so that the same number is only used once for each.
SBN UNDEFD	The SBS(91) instruction has been programmed for a subroutine number that does not exist. Correct the subroutine number or program the required subroutine.
STEP ERR	STEP(08) with a section number and STEP(08) without a section number have been used incorrectly. Check STEP(08) programming requirements and correct the program.

Level B Errors

Message	Meaning and appropriate response
IL-ILC ERR	IL(02) and ILC(03) are not used in pairs. Correct the program so that each IL(02) has a unique ILC(03). Although this error message will appear if more than one IL(02) is used with the same ILC(03), the program will executed as written. Make sure your program is written as desired before proceeding.
JMP-JME ERR	JMP(04) 00 and JME(05) 00 are not used in pairs. Although this error message will appear if more than one JMP(04) 00 is used with the same JME(05) 00, the program will be executed as written. Make sure your program is written as desired before proceeding.
SBN-RET ERR	If the displayed address is that of SBN(92), two different subroutines have been defined with the same subroutine number. Change one of the subroutine numbers or delete one of the subroutines. If the displayed address is that of RET(93), RET(93) has not been used properly. Check requirements for RET(93) and correct the program.

Level C Errors

Message	Meaning and appropriate response
COIL DUPL	The same bit is being controlled (i.e., turned ON and/or OFF) by more than one instruction (e.g., OUT, OUT NOT, DIFU(13), DIFD(14), KEEP(11), SFT(10)). Although this is allowed for certain instructions, check instruction requirements to confirm that the program is correct or rewrite the program so that each bit is controlled by only one instruction.
JMP UNDEFD	JME(05) has been used with no JMP(04) with the same jump number. Add a JMP(04) with the same number or delete the JME(05) that is not being used.
SBS UNDEFD	A subroutine exists that is not called by SBS(91). Program a subroutine call in the proper place, or delete the subroutine if it is not required.

4-4 User-defined Errors

There are three instructions that the user can use to define his own errors or messages. These instructions are used to send messages to the Programming Console connected to the PC, cause a non-fatal or a fatal error.

FAILURE ALARM - FAL(06)

FAL(06) is an instruction that causes a non-fatal error. The following will occur when an FAL(06) instruction is executed:

1, 2, 3...

1. The ERR/ALM indicator on the CPU Unit will flash. PC operation will continue.
2. The instruction's 2-digit BCD FAL number (01 to 99) will be written to SR 25300 to SR 25307.
3. The FAL number and time of occurrence will be recorded in the PC's error log area if a Memory Cassette with a clock (RTC) is used.

The FAL numbers can be set arbitrarily to indicate particular conditions. The same number cannot be used as both an FAL number and an FALS number.

To clear an FAL error, correct the cause of the error, execute FAL 00, and then clear the error using the Programming Console.

SEVERE FAILURE ALARM - FALS(07)

FALS(07) is an instruction that causes a fatal error. The following will occur when an FALS(07) instruction is executed:

1, 2, 3...

1. Program execution will be stopped and outputs will be turned OFF.
2. The ERR/ALM indicator on the CPU Unit will be lit.
3. The instruction's 2-digit BCD FALS number (01 to 99) will be written to SR 25300 to SR 25307.
4. The FALS number and time of occurrence will be recorded in the PC's error log area if a Memory Cassette with a clock (RTC) is used.

The FALS numbers can be set arbitrarily to indicate particular conditions. The same number cannot be used as both an FAL number and an FALS number.

To clear an FALS error, switch the PC to PROGRAM Mode, correct the cause of the error, and then clear the error using the Programming Console.

MESSAGE - MSG(46)

MSG(46) is used to display a message on the Programming Console. The message, which can be up to 16 characters long, is displayed when the instruction's execution condition is ON.

FAILURE POINT DETECT - FPD

FPD can be used to generate a non-fatal error (FAL) and to display any message at a peripheral device.

4-5 Operating Errors

There are two kinds of operating errors, non-fatal and fatal. PC operation will continue after a non-fatal error occurs, but operation will be stopped if a fatal error occurs.

4-5-1 Non-fatal Errors

PC operation and program execution will continue after one or more of these errors have occurred. Although PC operation will continue, the cause of the error should be corrected and the error cleared as soon as possible.

When one of these errors occurs, the POWER and RUN indicators will remain lit and the ERR/ALM indicator will flash.

Message	FAL No.	Meaning and appropriate response
SYS FAIL FAL** (see note)	01 to 99	An FAL(06) instruction has been executed in the program. Check the FAL number to determine conditions that would cause execution, correct the cause, and clear the error.
	9D	An error has occurred during data transmission between the CPU Unit and Memory Cassette. Check the status of flags AR 1412 to AR 1415, and correct as directed. AR 1412 ON: Switch to PROGRAM Mode, clear the error, and transfer again. AR 1413 ON: The transfer destination is write-protected. If the PC is the destination, turn off the power to the PC, be sure that pin 1 of the CPU Unit's DIP switch is OFF, clear the error, and transfer again. If an EEPROM Memory Cassette is the destination, check whether the power supply is on, clear the error, and transfer again. If an EPROM Memory Cassette is the destination, change to a writeable Memory Cassette. AR 1414 ON: The destination has insufficient capacity. Check the source's program size in AR 15 and consider using a different CPU Unit or Memory Cassette. AR 1415 ON: There is no program in the Memory Cassette or the program contains errors. Check the Memory Cassette.
	9C	An error has occurred in the pulse I/O function, in the absolute-type encoder interface function, or in the AD/DA board function. Check the contents of AR 0408 to AR 0415 (two digits BCD), and correct as directed. (This error code applies only to CQM1-CPU43-EV1 and CQM1-CPU44-EV1 CPU Units.) 01, 02: An error has occurred in the hardware. Turn the power off, and then power up again. If the error persists, replace the CPU Unit. 03: The PC Setup (DM 6611, DM 6612, DM 6643, DM 6644) settings are incorrect. Correct the settings. 04: CQM1 operation was interrupted during pulse output. Check to see whether the unit receiving the pulse output was affected.

Message	FAL No.	Meaning and appropriate response
SYS FAIL FAL** (see note)	9B	An error has been detected in the PC Setup. Check flags AR 2400 to AR 2402, and correct as directed. AR 2400 ON: An incorrect setting was detected in the PC Setup (DM 6600 to DM 6614) when power was turned on. Correct the settings in PROGRAM Mode and turn on the power again. AR 2401 ON: An incorrect setting was detected in the PC Setup (DM 6615 to DM 6644) when switching to RUN Mode. Correct the settings in PROGRAM Mode and switch to RUN Mode again. AR 2402 ON: An incorrect setting was detected in the PC Setup (DM 6645 to DM 6655) during operation. Correct the settings and clear the error.
SCAN TIME OVER	F8	Watchdog timer has exceeded 100 ms. (SR 25309 will be ON.) This indicates that the program cycle time is longer than recommended. Reduce cycle time if possible.
BATT LOW	F7	Backup battery is missing or its voltage has dropped. (SR 25308 will be ON.) Check the battery and replace if necessary. Check the PC Setup (DM 6655) to see whether a low battery will be detected.

Note ** is 01 to 99, 9D, 9C, or 9B.

Communication Errors

If an error occurs in communications through the peripheral port or RS-232C port the corresponding indicator (COM1 or COM2) will stop flashing. Check the connecting cables as well as the programs in the PC and host computer.

Reset the communications ports with the Port Reset Bits, SR 25208 and SR 25209.

Output Inhibit

When the OUT INH indicator is lit, the Output Inhibit Bit (SR 25215) is ON and all outputs from the CPU Unit will be turned off. If it is not necessary to have all outputs off, turn OFF SR 25215.

4-5-2 Fatal Errors

PC operation and program execution will stop and all outputs from the PC will be turned OFF when any of these errors have occurred.

All CPU Unit indicators will be OFF for the power interruption error. For all other fatal operating errors, the POWER and ERR/ALM indicators will be lit. The RUN indicator will be OFF.

Message	FALS No.	Meaning and appropriate response
Power interruption (no message)	None	Power has been interrupted for at least 10 ms. Check power supply voltage and power lines. Try to power-up again.
MEMORY ERR	F1	AR 1611 ON: A checksum error has occurred in the PC Setup (DM 6600 to DM 6655). Initialize all of the PC Setup and reinput.
		AR 1612 ON: A checksum error has occurred in the program, indicating an incorrect instruction. Check the program and correct any errors detected.
		AR 1613 ON: A checksum error has occurred in an expansion instruction's data. Initialize all of the expansion instruction settings and reinput.
		AR 1614 ON: Memory Cassette was installed or removed with the power on. Turn the power off, install the Memory Cassette, and turn the power on again.
		AR 1615 ON: The Memory Cassette contents could not be read at start-up. Check flags AR 1412 to AR 1415 to determine the problem, correct it, and turn on the power again.
NO END INST	F0	END(01) is not written anywhere in program. Write END(01) at the final address of the program.
I/O BUS ERR	C0	An error has occurred during data transfer between the CPU Unit and an I/O Unit. Determine the location of the problem using flags AR 2408 to AR 2415, turn the power off, check for loose I/O Units or end covers, and turn on the power again.
I/O UNIT OVER	E1	The number of I/O words on the installed I/O Units exceeds the maximum. Turn off the power, rearrange the system to reduce the number of I/O words, and turn on the power again.

Message	FALS No.	Meaning and appropriate response
SYS FAIL FALS** (see note)	01 to 99	An FALS(07) instruction has been executed in the program. Check the FALS number to determine the conditions that would cause execution, correct the cause, and clear the error.
	9F	The cycle time has exceeded the FALS 9F Cycle Time Monitoring Time (DM 6618). Check the cycle time and adjust the Cycle Time Monitoring Time if necessary.

Note ** is 01 to 99, or 9F.

4-6 Troubleshooting Flowcharts

Use the following flowcharts to troubleshoot errors that occur during operation.

Main Check

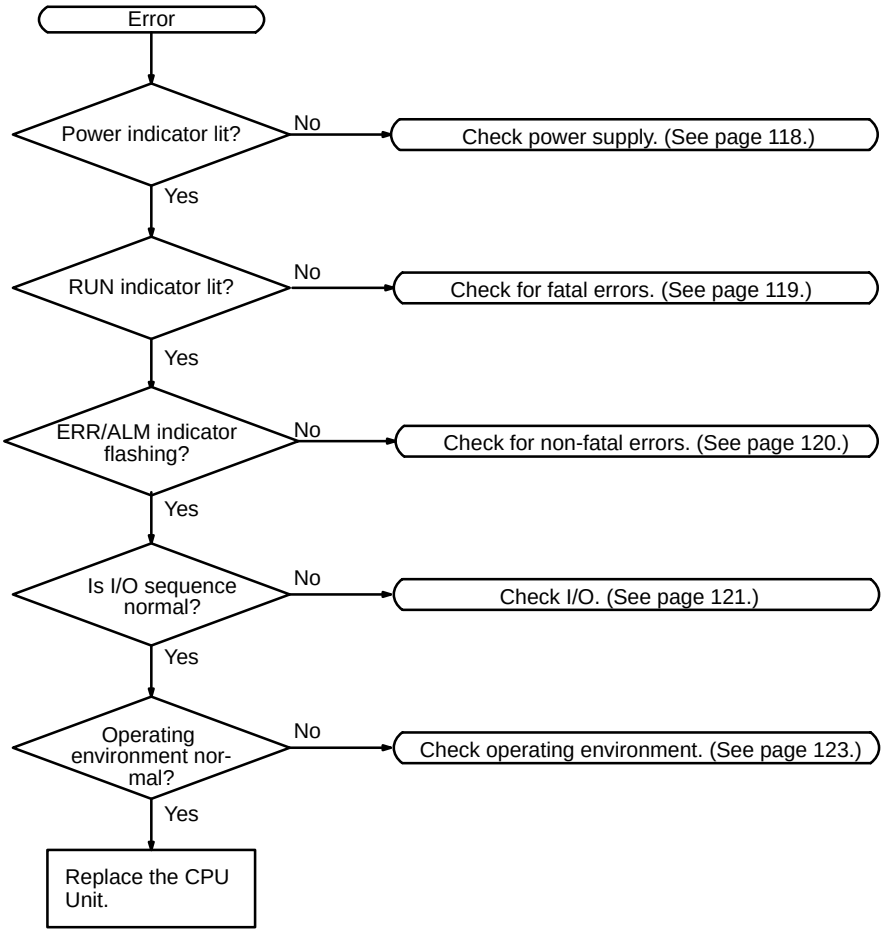

Note Always turn off the power to the PC before replacing Units, batteries, wiring, or cables.

Power Supply Check

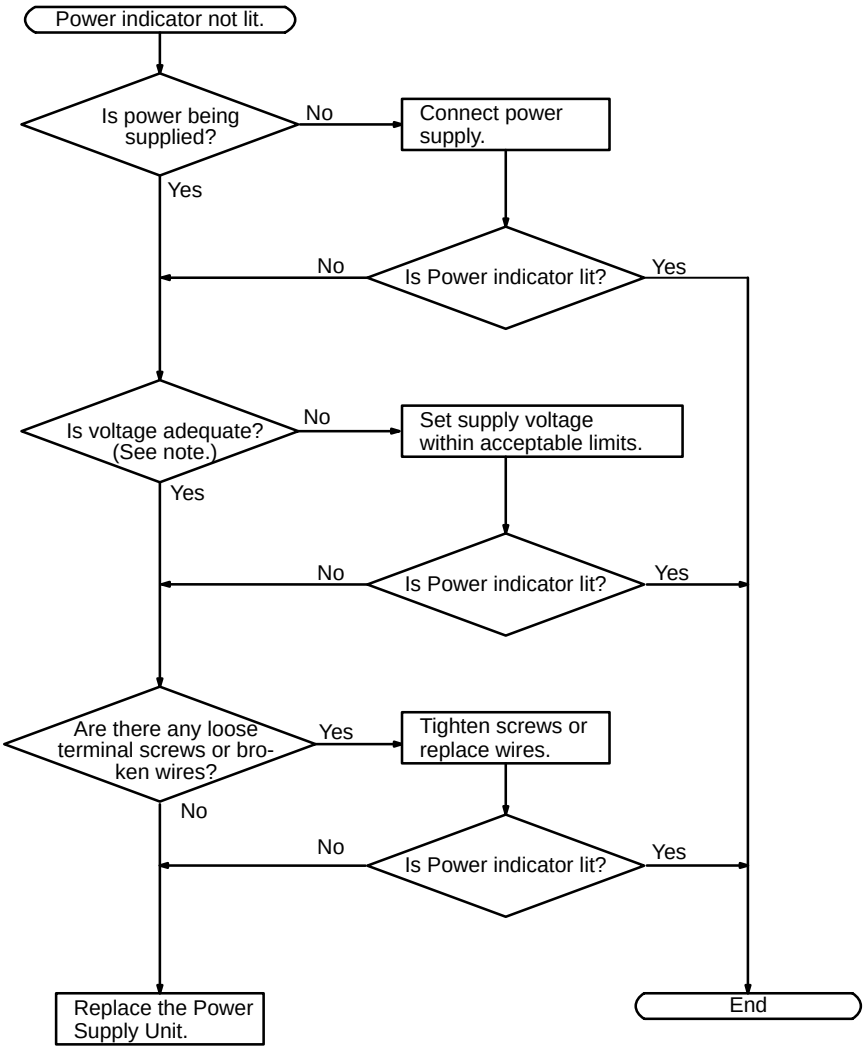

Note The allowable voltage ranges for the CQM1 are as follows.

CQM1-PA203/PA206: 85 to 264 VAC
CQM1-PD026: 20 to 28 VDC

Fatal Error Check

The following flowchart can be used to troubleshoot fatal errors that occur while the Power indicator is lit.

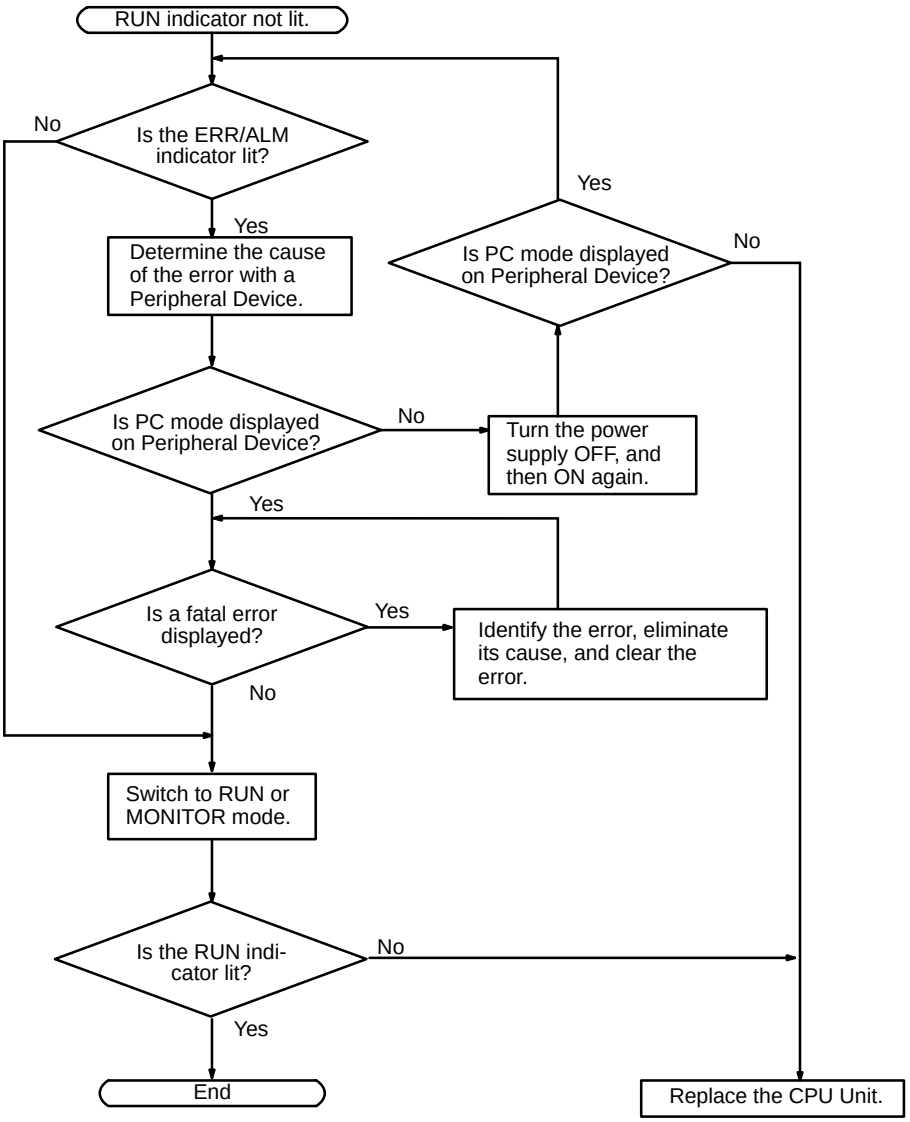

Non-fatal Error Check

Although the PC will continue operating during non-fatal errors, the cause of the error should be determined and removed as quickly as possible to ensure proper operation. It may to necessary to stop PC operation to remove certain non-fatal errors.

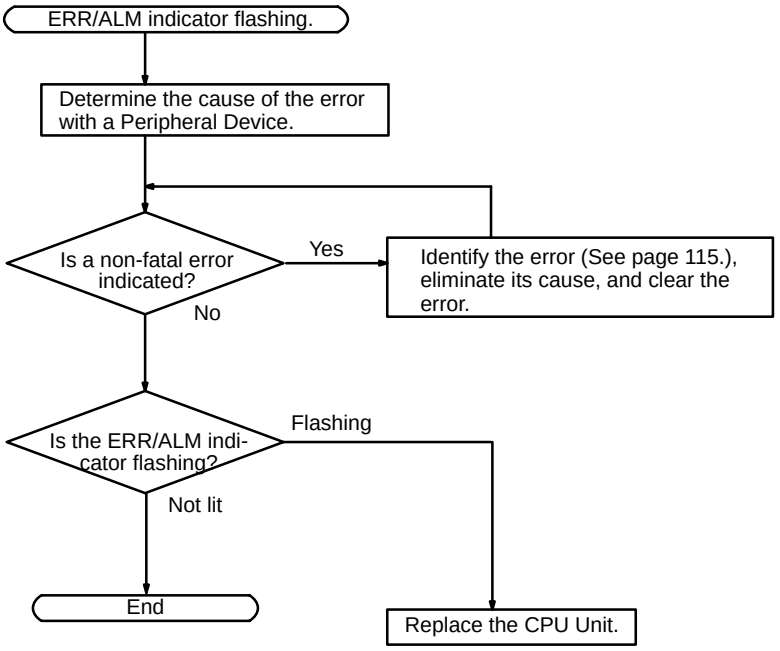

I/O Check The I/O check flowchart is based on the following ladder diagram section.

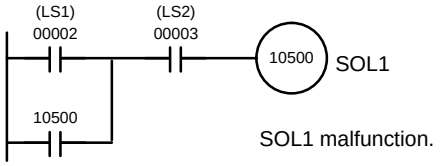

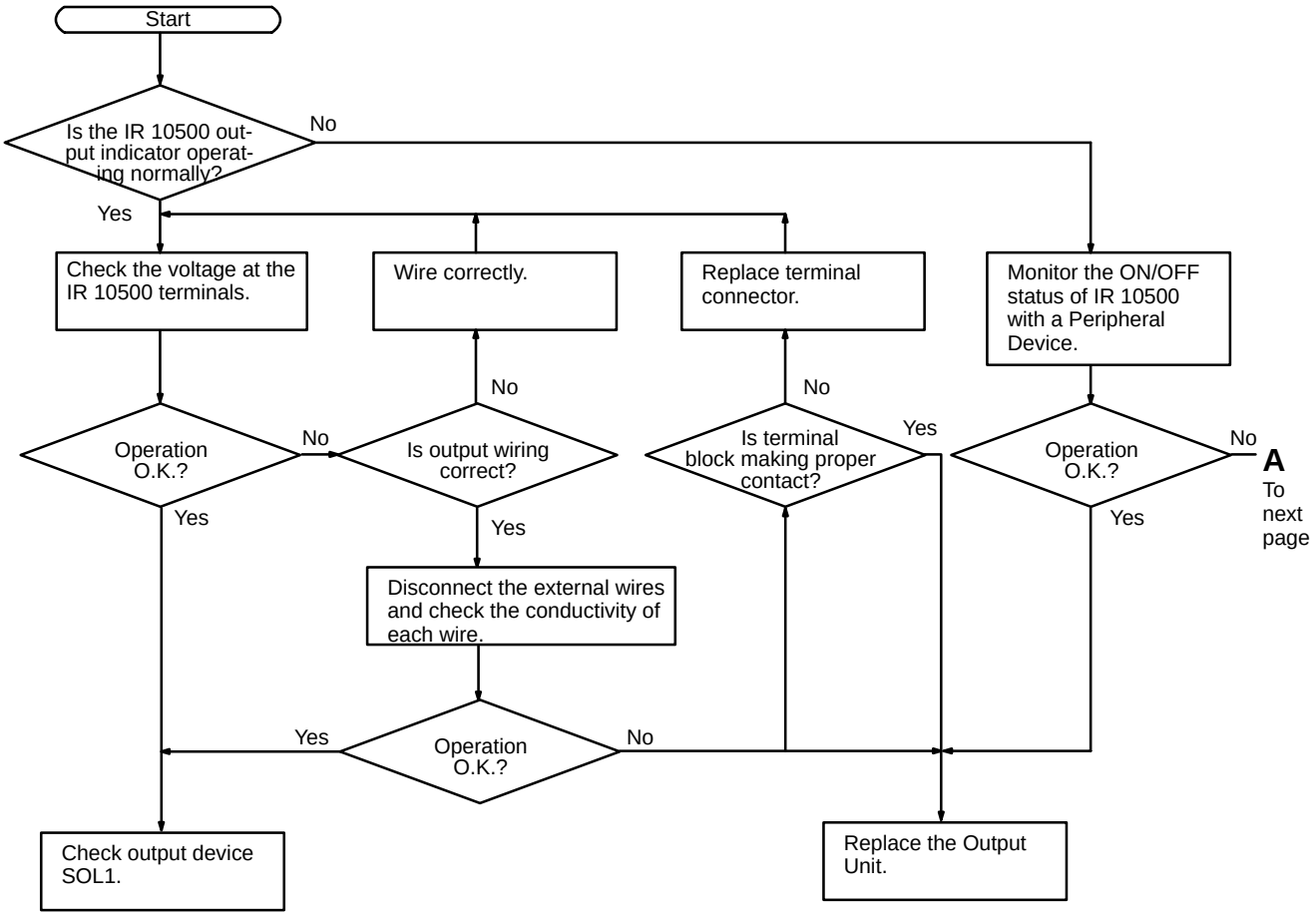

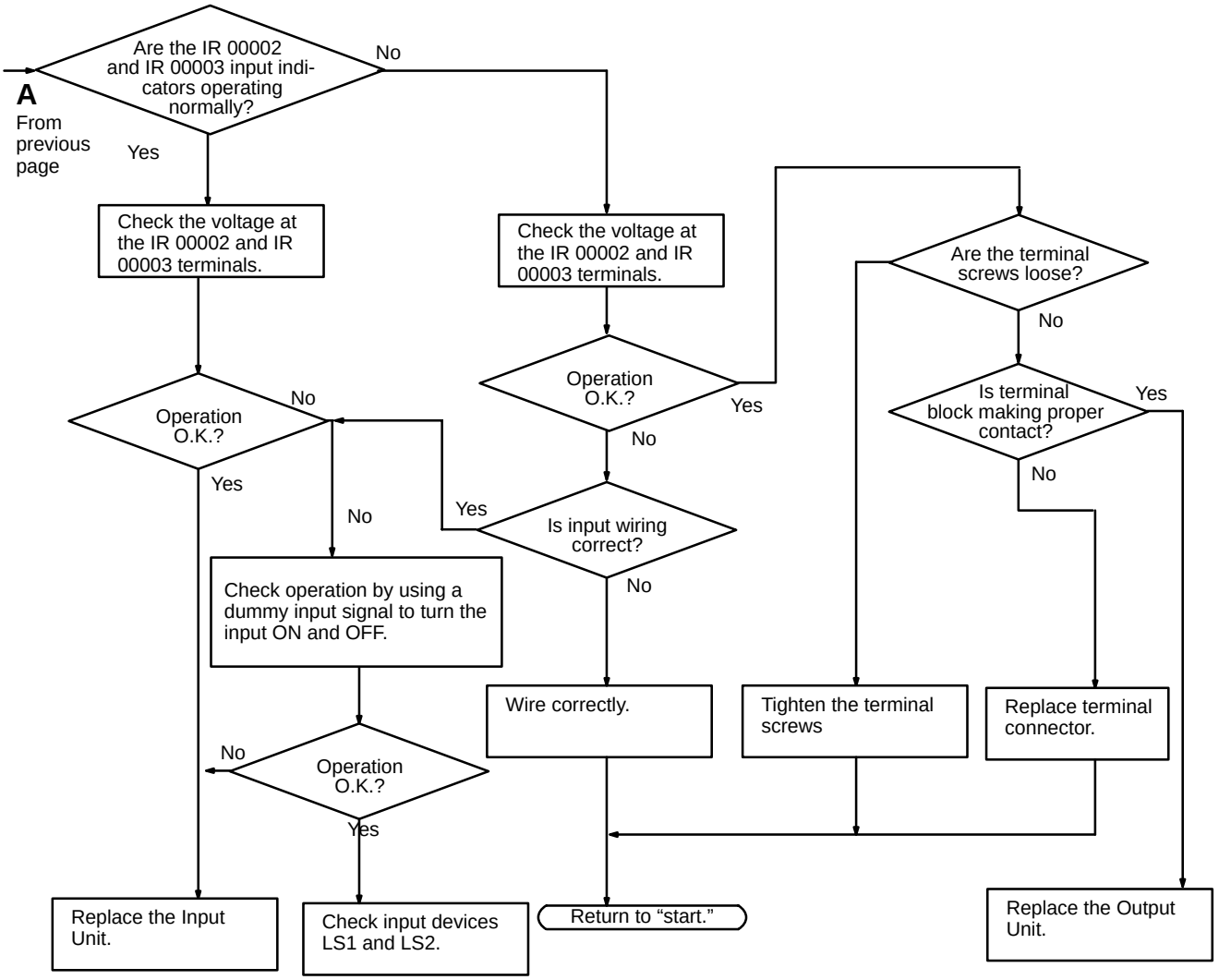
A
From previous page
Are the IR 00002 and IR 00003 input indicators operating normally?
No
Yes
Check the voltage at the IR 00002 and IR 00003 terminals.
Operation O.K.?
No
Yes
Check operation by using a dummy input signal to turn the input ON and OFF.
Operation O.K.?
No
Yes
Replace the Input Unit.
Check input devices LS1 and LS2.
Check the voltage at the IR 00002 and IR 00003 terminals.
Operation O.K.?
Yes
No
Is input wiring correct?
Yes
No
Wire correctly.
Return to “start.”
Are the terminal screws loose?
No
Tighten the terminal screws
Is terminal block making proper contact?
Yes
No
Replace terminal connector.
Replace the Output Unit.

Environmental Conditions Check

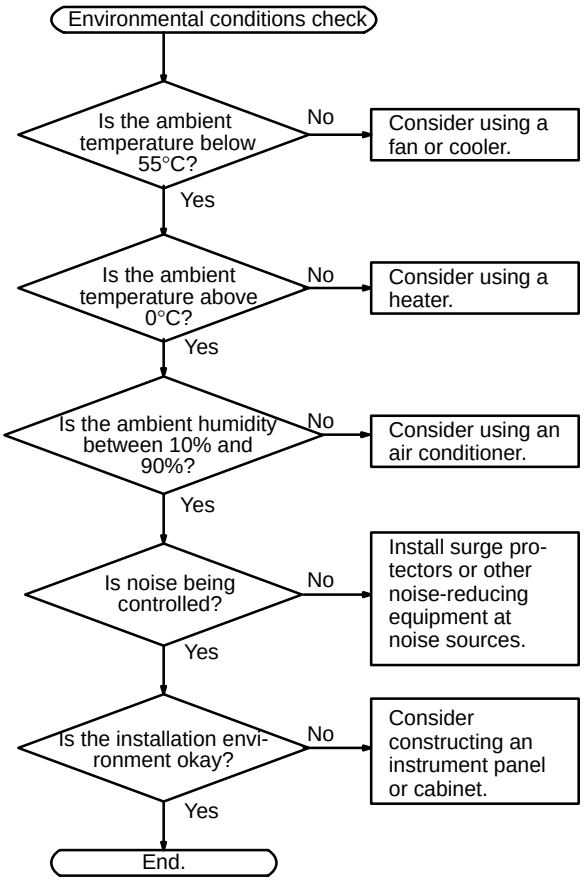

Appendix A
Standard Models

CPU Units

Model number	Appearance	Communications	Memory	I/O capacity
CQM1-CPU11-E	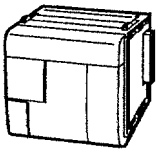	Peripheral only	3.2K-word Program Memory, 1K-word DM	128 points (8 words) Up to 7 Units can be connected.
CQM1-CPU21-E	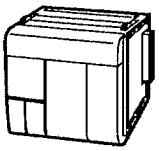	Peripheral and RS-232C		
CQM1-CPU41-EV1	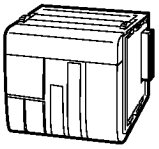	Peripheral and RS-232C	7.2K-word Program Memory, 6K-word DM	256 points (16 words) Up to 11 Units can be connected.
CQM1-CPU42-EV1	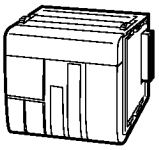	Peripheral, RS-232C, and analog settings		
CQM1-CPU43-EV1	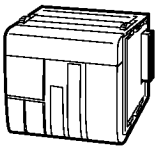	Peripheral, RS-232C, and pulse I/O		
CQM1-CPU44-EV1	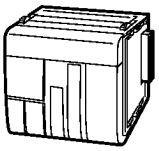	Peripheral, RS-232C, and ABS interface		

Power Supply Units

Model number	Appearance	Specifications
CQM1-PA203	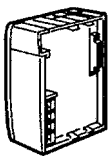	Power supply: 100 to 240 VAC Power supplied to I/O Units: 3.6 A at 5 VDC (18 W total)
CQM1-PA206	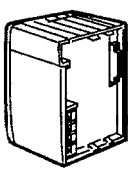	Power supply: 100 to 240 VAC; 24 VDC with output terminals, 0.5 A Power supplied to I/O Units: 6 A at 5 VDC, 0.5 A at 24 VDC (30 W total)
CQM1-PA216		Power supply: 100 or 230 VAC (selectable); 24 VDC with output terminals, 0.5 A Power supplied to I/O Units: 6 A at 5 VDC, 0.5 A at 24 VDC (30 W total)
CQM1-PD026		Power supply: 24 VDC Power supplied to I/O Units: 6 A at 5 VDC (30 W total)

Input Units

Name	Model number	Specifications
DC Input Units	CQM1-ID111	16 points, 12 VDC
	CQM1-ID112	32 points, 12 VDC
DC Input Units	CQM1-ID211	8 points, 12 to 24 VDC (independent commons)
	CQM1-ID212	16 points, 24 VDC
	CQM1-ID213	32 points, 24 VDC
	CQM1-ID214	32 points, 24 VDC
AC Input Units	CQM1-IA121	8 points, 100 to 120 VAC
	CQM1-IA221	8 points, 200 to 240 VAC

Output Units

Name	Model number	Specifications
Contact Output Units	CQM1-OC221	8 points, 250 VAC/24 VDC, 2 A (independent commons, 16 A per Unit)
	CQM1-OC222	16 points, 250 VAC/24 VDC, 2 A (8 A per Unit)
	CQM1-OC224	8 points, 250 VAC/24 VDC, 2 A (independent commons, 16 A per Unit)
Transistor Output Units	CQM1-OD211	8 points, 24 VDC, 2 A (5 A per Unit)
	CQM1-OD212	16 points, 4.5 to 26.4 V, 0.3 A
	CQM1-OD213	32 points, 4.5 to 26.4 V, 0.1 A
	CQM1-OD214	16 points, 4.5 to 26.4 V, 0.3 A, PNP output
	CQM1-OD215	8 points, 24 VDC, 1 A (4 A/Unit), PNP output, with short-circuit protection
	CQM1-OD216	32 points, 24 VDC, 0.5 A (5 A/Unit), PNP output, with short-circuit protection
Triac Output Unit	CQM1-OA221	8 points, 100 to 240 VAC, 0.4 A
	CQM1-OA222	6 points, 100 to 240 VAC, 0.4 A

Dedicated I/O Units

Name	Model number	Specifications
B7A Interface Units	CQM1-B7A02	16 output points
	CQM1-B7A03	32 output points
	CQM1-B7A12	16 input points
	CQM1-B7A13	32 input points
	CQM1-B7A21	16 input points and 16 output points
I/O Link Unit	CQM1-LK501	32 input points, 32 output points (SYSMAC BUS Wired Slave Unit)
Analog Input Unit	CQM1-AD041	4 analog input points
Analog Output Unit	CQM1-DA021	2 analog output points
Power Supply Units	CQM1-IPS01	Power supply for Analog Input or Output Unit (1-unit type)
	CQM1-IPS02	Power supply for Analog Input or Output Unit (2-unit type)
Sensor Unit	CQM1-SEN01	Sensor input points: 4 max. Used with Sensor Module(s). Up to four Sensor Modules can be mounted to a single Sensor Unit.
Linear Sensor Interface Units	CQM1-LSE01	Standard model
	CQM1-LSE02	With monitor output
Fiber Photoelectric Module	E3X-MA11	For E32 series Fiber Units. An automatic teaching function is incorporated.
Photoelectric Module with Separate Amplifier	E3C-MA11	For E3C-series Photoelectric Sensors. An automatic teaching function is incorporated.
Proximity Module with Separate Amplifier	E2C-MA11	For E2C-series Proximity Sensors. An automatic teaching function is incorporated.
Dummy Module	E39-M11	E39-M11 Dummy Modules are mounted as spacers to the open slots of the CQM1 when no Sensor Module is mounted to the CQM1.

Name	Model number	Specifications
Remote Console	CQM1-TU001	The Remote Console is connected to a Sensor Unit for the adjustment of the sensitivities of the modules incorporated by the Sensor Unit, reading and changing of the set value, and teaching. Cable length: 3 m
G730 Interface Units	CQM1-G7M21	Master: 32 inputs and 32 outputs
	CQM1-G7N01	Expansion Master: 32 outputs
	CQM1-G7N11	Expansion Master: 32 inputs
Temperature Control Units	CQM1-TC001	Thermocouple input, transistor (NPN) output, 2 loops
	CQM1-TC002	Thermocouple input, transistor (PNP) output, 2 loops
	CQM1-TC101	Platinum resistance thermometer, transistor (NPN) output, 2 loops
	CQM1-TC102	Platinum resistance thermometer, transistor (PNP) output, 2 loops
CompoBus/S Master Unit	CQM1-SRM21	128 points (64 inputs and 64 outputs); 64 points (32 inputs and 32 outputs); 32 points (16 inputs and 16 outputs) Switchable
CompoBus/D (DeviceNet) I/O Link Unit	CQM1-DRT21	16 inputs and 16 outputs (total: 32 points)

DIN Track and Accessories

Name	Model number	Specifications
DIN Track	PFP-50N	Track length: 50 cm; track height: 7.3 cm
	PFP-100N	Track length: 100 cm; track height: 7.3 cm
DIN Track Brackets	PFP-M	Two required for each PC mounted to DIN Track.

Peripheral Devices

Name	Model number	Specifications
Programming Console	CQM1-PRO01-E	2-m Connecting Cable attached
	C200H-PRO27-E	Hand-held, w/backlight; requires the C200H-CN222 or C200H-CN422, see below
Ladder Support Software (see note)	C500-SF312-EV3	3.5”, 2HD for IBM PC/AT compatible
	C500-SF711-EV3	5.25”, 2D for IBM PC/AT compatible
SYSMAC Support Software	C500-ZL3AT1-E	3.5”, 2HD for IBM PC/AT compatible
Connecting Cable	CQM1-CIF02	Connects IBM PC/AT or compatible computers to Peripheral Port
	C200H-CN222	Connects C200H Programming Console to Peripheral Port (2 m)
	C200H-CN422	Connects C200H Programming Console to Peripheral Port (4 m)

Note Use Version-3 LSS or a later version for CQM1 operation.

Memory Cassettes (Optional)

Model number	Clock function	Memory
CQM1-ME04K	No	4K-word EEPROM
CQM1-ME04R	Yes	
CQM1-ME08K	No	8K-word EEPROM
CQM1-ME08R	Yes	
CQM1-MP08K	No	EPROM IC socket only. EPROM chip not included. Refer to the following table for details on available EPROM ICs.
CQM1-MP08R	Yes	

EPROM ICs

Model number	EPROM version	Capacity	Access speed
ROM-ID-B	27128	16K bytes	150 ns
ROM-JD-B	27256	32K bytes	150 ns
ROM-KD-B	27512	64K bytes	150 ns

Appendix B
Battery Service Life

The built-in battery is used for retaining the status of the HR and DM areas, the user's program, and other specified status while power is not being supplied to the CQM1. The total number of hours that the battery can provide backup power will vary as shown below, depending on the ambient temperature and whether or not a Memory Cassette with a clock is installed.

Memory Cassette with clock	Total hours with no current supplied	
	Guaranteed time (see note 1)	Capacity (see note 2)
No	43,000 hrs (Approx. 5 years)	43,000 hrs (Approx. 5 years)
Yes	34,500 hrs (Approx. 4 years)	

Note 1. Total hours with no current supplied, at an ambient temperature of 55°C.
2. Total hours with no current supplied, at an ambient temperature of 25°C.

Total Time with No Current Supplied (in Years)

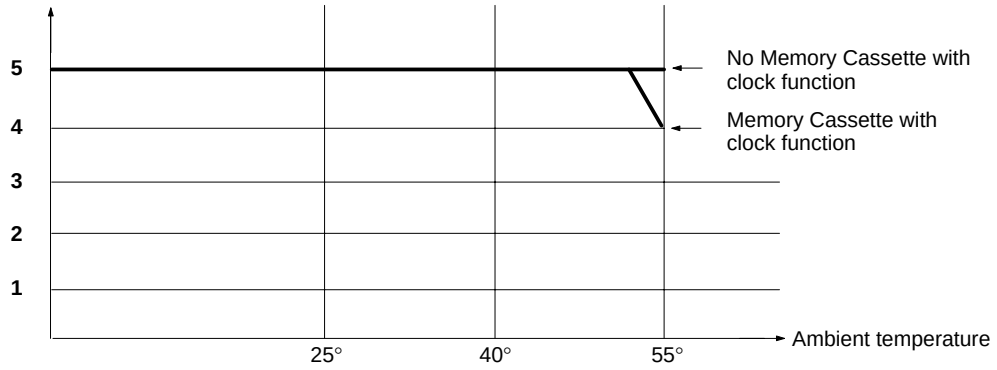

Note The effective life of the battery is five years. Replace the battery every five years even if it could be used longer.

Appendix C
SYSMAC-CPT Precautions

The SYSMAC-CPT Support Software (model number WS01-CPTB1-E) can be used for the CQM1. This appendix lists precautions when using the SYSMAC-CPT.

When displaying or printing ladder programs on the SYSMAC-CPT, symbols are displayed for I/O bits in the program according to the I/O table registered in the SYSMAC-CPT. “I” is displayed for input words/bits and “Q” is displayed for output words/bits. The SYSMAC-CPT, however, has not yet been upgraded to support the expanded I/O capacity of the CQM1-CPU4□-EV1 CPU Unit (words IR 012 to IR 015). The following restrictions thus apply when using the SYSMAC-CPT.

Note The CPU Unit of the CQM1 does not contain an I/O table. Therefore, even if the I/O table on the Support Software is incorrectly set, the system will still operate according to the Units that are actually connected.

I/O Table Displays

The SYSMAC-CPT I/O table will display or print only 12 I/O words, even for the CQM1-CPU4□-EV1, which has an I/O capacity of 256 pts (16 words).

I/O Table Display (Example)

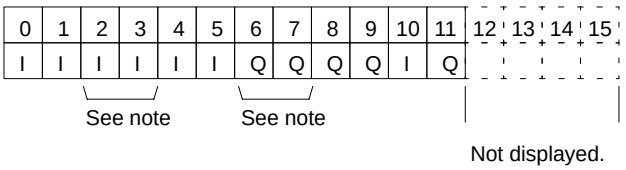

Note Two words are used for Units with 32 I/O points.

Displaying or printing will not be possible for more than the first 12 words (192 points).

Creating Ladder Programs

With the SYSMAC-CPT, up to 16 words can be used for I/O in the ladder program. However, the I/O symbols (I: input words/bits; Q: output words/bits) will not appear on the screen and will not be printed.

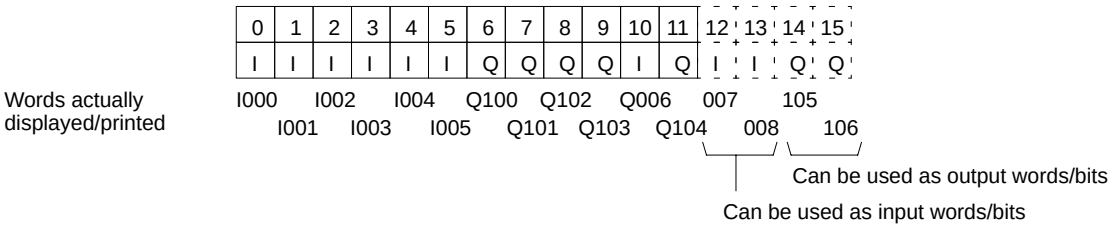

Glossary

***DM** Indirectly addressed DM area. See *indirect address* and *DM area*.

1:1 link A link created between two PCs to create *common data* in their LR areas.

ACP See *add count input*.

add count input An input signal used to increment a counter when the signal changes from OFF to ON.

address A number used to identify the location of data or programming instructions in memory.

AND A logic operation whereby the result is true if and only if both premises are true. In ladder-diagram programming the premises are usually ON/OFF states of bits or the logical combination of such states called execution conditions.

area See *data area* and *memory area*.

area prefix A one or two letter prefix used to identify a memory area in the PC. All memory areas except the IR and SR areas require prefixes to identify addresses in them.

arithmetic shift A shift operation wherein the carry flag is included in the shift.

ASCII Short for American Standard Code for Information Interchange. ASCII is used to code characters for output to printers and other external devices.

AR Area A PC data area allocated to flags and control bits.

AUTOEXEC.BAT An MS DOS file containing commands automatically executed at startup.

back-up A copy made of existing data to ensure that the data will not be lost even if the original data is corrupted or erased.

basic instruction A fundamental instruction used in a ladder diagram. See *advanced instruction*.

baud rate The data transmission speed between two devices in a system measured in bits per second.

BCD See *binary-coded decimal*.

BCD calculation An arithmetic calculation that uses numbers expressed in binary-coded decimal.

binary A number system where all numbers are expressed in base 2, i.e., numbers are written using only 0's and 1's. Each group of four binary bits is equivalent to one hexadecimal digit. Binary data in memory is thus often expressed in hexadecimal for convenience.

binary calculation An arithmetic calculation that uses numbers expressed in binary.

binary-coded decimal A system used to represent numbers so that every four binary bits is numerically equivalent to one decimal digit.

bit The smallest piece of information that can be represented on a computer. A bit has the value of either zero or one, corresponding to the electrical signals ON and OFF. A bit represents one binary digit. Some bits at particular addresses are allocated to special purposes, such as holding the status of input from external devices, while other bits are available for general use in programming.

bit address The location in memory where a bit of data is stored. A bit address specifies the data area and word that is being addressed as well as the number of the bit within the word.

bit designator An operand that is used to designate the bit or bits of a word to be used by an instruction.

bit number A number that indicates the location of a bit within a word. Bit 00 is the rightmost (least-significant) bit; bit 15 is the leftmost (most-significant) bit.

bit-control instruction An instruction that is used to control the status of an individual bit as opposed to the status of an entire word.

block See *logic block* and *instruction block*.

building-block PC A PC that is constructed from individual components, or "building blocks." With building-block PCs, there is no one Unit that is independently identifiable as a PC. The PC is rather a functional assembly of Units.

bus A communications path used to pass data between any of the Units connected to it.

bus bar The line leading down the left and sometimes right side of a ladder diagram. Instruction execution proceeds down the bus bar, which is the starting point for all instruction lines.

byte A unit of data equivalent to 8 bits, i.e., half a word.

call A process by which instruction execution shifts from the main program to a subroutine. The subroutine may be called by an instruction or by an interrupt.

Carry Flag A flag that is used with arithmetic operations to hold a carry from an addition or multiplication operation, or to indicate that the result is negative in a subtraction operation. The carry flag is also used with certain types of shift operations.

central processing unit A device that is capable of storing programs and data, and executing the instructions contained in the programs. In a PC System, the central processing unit executes the program, processes I/O signals, communicates with external devices, etc.

CH See *word*.

channel See *word*.

character code A numeric (usually binary) code used to represent an alphanumeric character.

checksum A sum transmitted with a data pack in communications. The checksum can be recalculated from the received data to confirm that the data in the transmission has not been corrupted.

clock pulse A pulse available at specific bits in memory for use in timing operations. Various clock pulses are available with different pulse widths, and therefore different frequencies.

clock pulse bit A bit in memory that supplies a pulse that can be used to time operations. Various clock pulse bits are available with different pulse widths, and therefore different frequencies.

common data Data that is stored in a memory of a PC and which is shared by other PCs in the same the same system. Each PC has a specified section(s) of the area allocated to it. Each PC writes to the section(s) allocated to it and reads the sections allocated to the other PCs with which it shares the common data.

communications cable Cable used to transfer data between components of a control system and conforming to the RS-232C or RS-422 standards.

comparison instruction An instruction used to compare data at different locations in memory to determine the relationship between the data.

Completion Flag A flag used with a timer or counter that turns ON when the timer has timed out or the counter has reached its set value.

condition A symbol placed on an instruction line to indicate an instruction that controls the execution condition for the terminal instruction. Each condition is assigned a bit in memory that determines its status. The status of the bit assigned to each condition determines the next execution condition. Conditions correspond to LOAD, LOAD NOT, AND, AND NOT, OR, or OR NOT instructions.

CONFIG.SYS An MS DOS file containing environment settings for a personal computer.

constant An input for an operand in which the actual numeric value is specified. Constants can be input for certain operands in place of memory area addresses. Some operands must be input as constants.

control bit A bit in a memory area that is set either through the program or via a Programming Device to achieve a specific purpose, e.g., a Restart Bit is turned ON and OFF to restart a Unit.

control data An operand that specifies how an instruction is to be executed. The control data may specify the part of a word is to be used as the operand, it may specify the destination for a data transfer instructions, it may specify the size of a data table used in an instruction, etc.

control signal A signal sent from the PC to effect the operation of the controlled system.

Control System All of the hardware and software components used to control other devices. A Control System includes the PC System, the PC programs, and all I/O devices that are used to control or obtain feedback from the controlled system.

controlled system The devices that are being controlled by a PC System.

count pulse The signal counted by a counter.

counter A dedicated group of digits or words in memory used to count the number of times a specific process has occurred, or a location in memory accessed through a TIM/CNT bit and used to count the number of times the status of a bit or an execution condition has changed from OFF to ON.

CPU Unit See *central processing unit*.

CTS An acronym for clear-to-send, a signal used in communications between electronic devices to indicate that the receiver is ready to accept incoming data.

CY See *Carry Flag*.

cycle One unit of processing performed by the CPU Unit, including ladder program execution, peripheral servicing, I/O refreshing, etc.

cycle time The time required to complete one cycle of CPU Unit processing.

cyclic interrupt See *scheduled interrupt.*

data area An area in the PC's memory that is designed to hold a specific type of data.

data area boundary The highest address available within a data area. When designating an operand that requires multiple words, it is necessary to ensure that the highest address in the data area is not exceeded.

data disk A floppy disk used to same user programs, DM area contents, comments, and other user data.

data length In communications, the number of bits that is to be treated as one unit in data transmissions.

data link An automatic data transmission operation that allows PCs or Units within PC to pass data back and forth via common data areas.

data link area A common data area established through a data link.

data movement instruction An instruction used to move data from one location in memory to another. The data in the original memory location is left unchanged.

data sharing The process in which common data areas or common data words are created between two or more PCs.

data trace A process in which changes in the contents of specific memory locations are recorded during program execution.

data transfer Moving data from one memory location to another, either within the same device or between different devices connected via a communications line or network.

debug A process by which a draft program is corrected until it operates as intended. Debugging includes both the removal of syntax errors, as well as the fine-tuning of timing and coordination of control operations.

decimal A number system where numbers are expressed to the base 10. In a PC all data is ultimately stored in binary form, four binary bits are often used to represent one decimal digit, via a system called binary-coded decimal.

decrement Decreasing a numeric value, usually by 1.

default A value automatically set by the PC when the user does not specifically set another value. Many devices will assume such default conditions upon the application of power.

definer A number used as an operand for an instruction but that serves to define the instruction itself, rather that the data on which the instruction is to operate. Definers include jump numbers, subroutine numbers, etc.

destination The location where an instruction places the data on which it is operating, as opposed to the location from which data is taken for use in the instruction. The location from which data is taken is called the source.

differentiated instruction An instruction that is executed only once each time its execution condition goes from OFF to ON. Non-differentiated instructions are executed for each scan as long as the execution condition stays ON.

differentiation instruction An instruction used to ensure that the operand bit is never turned ON for more than one scan after the execution condition goes either from OFF to ON for a Differentiate Up instruction or from ON to OFF for a Differentiate Down instruction.

digit A unit of storage in memory that consists of four bits.

digit designator An operand that is used to designate the digit or digits of a word to be used by an instruction.

DIN track A rail designed to fit into grooves on various devices to allow the devices to be quickly and easily mounted to it.

DIP switch Dual in-line package switch, an array of pins in a signal package that is mounted to a circuit board and is used to set operating parameters.

direct output A method in which program execution results are output immediately to eliminate the affects of the cycle time.

distributed control A automation concept in which control of each portion of an automated system is located near the devices actually being controlled, i.e., control is decentralized

	and ‘distributed’ over the system. Distributed control is a concept basic to PC Systems.
DM area	A data area used to hold only word data. Words in the DM area cannot be accessed bit by bit.
DM word	A word in the DM area.
downloading	The process of transferring a program or data from a higher-level or host computer to a lower-level or slave computer. If a Programming Device is involved, the Programming Device is considered the host computer.
EEPROM	Electrically erasable programmable read-only memory; a type of ROM in which stored data can be erased and reprogrammed. This is accomplished using a special control lead connected to the EEPROM chip and can be done without having to remove the EEPROM chip from the device in which it is mounted.
electrical noise	Random variations of one or more electrical characteristics such as voltage, current, and data, which might interfere with the normal operation of a device.
EPROM	Erasable programmable read-only memory; a type of ROM in which stored data can be erased, by ultraviolet light or other means, and reprogrammed.
error code	A numeric code generated to indicate that an error exists, and something about the nature of the error. Some error codes are generated by the system; others are defined in the program by the operator.
Error Log Area	An area used to store records indicating the time and nature of errors that have occurred in the system.
even parity	A communication setting that adjusts the number of ON bits so that it is always even. See *parity.*
event processing	Processing that is performed in response to an event, e.g., an interrupt signal.
exclusive NOR	A logic operation whereby the result is true if both of the premises are true or both of the premises are false. In ladder-diagram programming, the premises are usually the ON/OFF states of bits, or the logical combination of such states, called execution conditions.
exclusive OR	A logic operation whereby the result is true if one, and only one, of the premises is true. In ladder-diagram programming the premises are usually the ON/OFF states of bits, or the logical combination of such states, called execution conditions.
execution condition	The ON or OFF status under which an instruction is executed. The execution condition is determined by the logical combination of conditions on the same instruction line and up to the instruction currently being executed.
execution cycle	The cycle used to execute all processes required by the CPU Unit, including program execution, I/O refreshing, peripheral servicing, etc.
execution time	The time required for the CPU Unit to execute either an individual instruction or an entire program.
extended counter	A counter created in a program by using two or more count instructions in succession. Such a counter is capable of counting higher than any of the standard counters provided by the individual instructions.
extended timer	A timer created in a program by using two or more timers in succession. Such a timer is capable of timing longer than any of the standard timers provided by the individual instructions.

FA Factory automation.

factory computer A general-purpose computer, usually quite similar to a business computer, that is used in automated factory control.

FAL error An error generated from the user program by execution of an FAL(06) instruction.

FALS error An error generated from the user program by execution of an FALS(07) instruction or an error generated by the system.

fatal error An error that stops PC operation and requires correction before operation can continue.

FCS See *frame checksum*.

flag A dedicated bit in memory that is set by the system to indicate some type of operating status. Some flags, such as the carry flag, can also be set by the operator or via the program.

flicker bit A bit that is programmed to turn ON and OFF at a specific frequency.

floating-point decimal A decimal number expressed as a number (the mantissa) multiplied by a power of 10, e.g., 0.538×10^{-5}.

force reset The process of forcibly turning OFF a bit via a programming device. Bits are usually turned OFF as a result of program execution.

force set The process of forcibly turning ON a bit via a programming device. Bits are usually turned ON as a result of program execution.

forced status The status of bits that have been force reset or force set.

frame checksum The results of exclusive ORing all data within a specified calculation range. The frame checksum can be calculated on both the sending and receiving end of a data transfer to confirm that data was transmitted correctly.

function code A two-digit number used to input an instruction into the PC.

hardware error An error originating in the hardware structure (electronic components) of the PC, as opposed to a software error, which originates in software (i.e., programs).

header code A code in an instruction that specifies what the instruction is to do.

hexadecimal A number system where all numbers are expressed to the base 16. In a PC all data is ultimately stored in binary form, however, displays and inputs on Programming Devices are often expressed in hexadecimal to simplify operation. Each group of four binary bits is numerically equivalent to one hexadecimal digit.

host computer A computer that is used to transfer data to or receive data from a PC in a Host Link system. The host computer is used for data management and overall system control. Host computers are generally small personal or business computers.

host interface An interface that allows communications with a host computer.

host link An interface connecting a PC to a host computer to enable monitoring or program control from the host computer.

HR area A memory area that preserves bit status during power interrupts and used as work bits in programming.

I/O bit A bit in memory used to hold I/O status. Input bits reflect the status of input terminals; output bits hold the status for output terminals.

I/O capacity The number of inputs and outputs that a PC is able to handle. This number ranges from around one hundred for smaller PCs to two thousand for the largest ones.

I/O delay The delay in time from when a signal is sent to an output to when the status of the output is actually in effect or the delay in time from when the status of an input changes until the signal indicating the change in the status is received.

I/O device A device connected to the I/O terminals on I/O Units. I/O devices may be either part of the Control System, if they function to help control other devices, or they may be part of the controlled system.

I/O interrupt An interrupt generated by a signal from I/O.

I/O point The place at which an input signal enters the PC System, or at which an output signal leaves the PC System. In physical terms, I/O points correspond to terminals or connector pins on a Unit; in terms of programming, an I/O points correspond to I/O bits in the IR area.

I/O refreshing The process of updating output status sent to external devices so that it agrees with the status of output bits held in memory and of updating input bits in memory so that they agree with the status of inputs from external devices.

I/O response time The time required for an output signal to be sent from the PC in response to an input signal received from an external device.

I/O Unit The Units in a PC that are physically connected to I/O devices to input and output signals. I/O Units include Input Units and Output Units, each of which is available in a range of specifications.

I/O word A word in the IR area that is allocated to a Unit in the PC System and is used to hold I/O status for that Unit.

IBM PC/AT or compatible A computer that has similar architecture to, that is logically compatible with, and that can run software designed for an IBM PC/AT computer.

increment Increasing a numeric value, usually by 1.

indirect address An address whose contents indicates another address. The contents of the second address will be used as the actual operand.

initialization error An error that occurs either in hardware or software during the PC System startup, i.e., during initialization.

initialize Part of the startup process whereby some memory areas are cleared, system setup is checked, and default values are set.

input The signal coming from an external device into the PC. The term input is often used abstractly or collectively to refer to incoming signals.

input bit A bit in the IR area that is allocated to hold the status of an input.

input device An external device that sends signals into the PC System.

input point The point at which an input enters the PC System. Input points correspond physically to terminals or connector pins.

input signal A change in the status of a connection entering the PC. Generally an input signal is said to exist when, for example, a connection point goes from low to high voltage or from a nonconductive to a conductive state.

install The preparation necessary to use a program or software package, such as the LSS or SSS, on a computer.

instruction A direction given in the program that tells the PC of the action to be carried out, and the data to be used in carrying out the action. Instructions can be used to simply turn a bit ON or OFF, or they can perform much more complex actions, such as converting and/or transferring large blocks of data.

instruction block A group of instructions that is logically related in a ladder-diagram program. A logic block includes all of the instruction lines that interconnect with each other from one or more line connecting to the left bus bar to one or more right-hand instructions connecting to the right bus bar.

instruction execution time The time required to execute an instruction. The execution time for any one instruction can vary with the execution conditions for the instruction and the operands used in it.

instruction line A group of conditions that lie together on the same horizontal line of a ladder diagram. Instruction lines can branch apart or join together to form instruction blocks. Also called a rung.

interface An interface is the conceptual boundary between systems or devices and usually involves changes in the way the communicated data is represented. Interface devices perform operations like changing the coding, format, or speed of the data.

interlock A programming method used to treat a number of instructions as a group so that the entire group can be reset together when individual execution is not required. An interlocked program section is executed normally for an ON execution condition and partially reset for an OFF execution condition.

interrupt (signal) A signal that stops normal program execution and causes a subroutine to be run or other processing to take place.

interrupt program A program that is executed in response to an interrupt.

inverse condition See *normally closed condition*.

JIS An acronym for Japanese Industrial Standards.

jump A type of programming where execution moves directly from one point in a program to another, without sequentially executing any instructions in between.

jump number A definer used with a jump that defines the points from and to which a jump is to be made.

ladder diagram (program) A form of program arising out of relay-based control systems that uses circuit-type diagrams to represent the logic flow of programming instructions. The appearance of the program is similar to a ladder, and thus the name.

ladder diagram symbol A symbol used in drawing a ladder-diagram program.

ladder instruction An instruction that represents the conditions on a ladder-diagram program. The other instructions in a ladder diagram fall along the right side of the diagram and are called terminal instructions.

Ladder Support Software A software package installed on a IBM PC/AT or compatible computer to function as a Programming Device.

least-significant (bit/word) See *rightmost (bit/word)*.

LED Acronym for light-emitting diode; a device used as for indicators or displays.

leftmost (bit/word) The highest numbered bits of a group of bits, generally of an entire word, or the highest numbered words of a group of words. These bits/words are often called most-significant bits/words.

link A hardware or software connection formed between two Units. “Link” can refer either to a part of the physical connection between two Units or a software connection created to data existing at another location (i.e., data links).

load The processes of copying data either from an external device or from a storage area to an active portion of the system such as a display buffer. Also, an output device connected to the PC is called a load.

logic block A group of instructions that is logically related in a ladder-diagram program and that requires logic block instructions to relate it to other instructions or logic blocks.

logic block instruction An instruction used to locally combine the execution condition resulting from a logic block with a current execution condition. The current execution condition could be the result of a single condition, or of another logic block. AND Load and OR Load are the two logic block instructions.

logic instruction Instructions used to logically combine the content of two words and output the logical results to a specified result word. The logic instructions combine all the same-numbered bits in the two words and output the result to the bit of the same number in the specified result word.

LR area A data area that is used in data links.

LSS See *Ladder Support Software*.

main program All of a program except for subroutine and interrupt programs.

mark trace A process in which changes in the contents of specific memory locations are recorded during program execution.

masked bit A bit whose status has been temporarily made ineffective.

masking ‘Covering’ an interrupt signal so that the interrupt is not effective until the mask is removed.

megabyte A unit of storage equal to one million bytes.

memory area Any of the areas in the PC used to hold data or programs.

message number A number assigned to a message generated with the MESSAGE instruction.

mnemonic code A form of a ladder-diagram program that consists of a sequential list of the instructions without using a ladder diagram.

MONITOR mode A mode of PC operation in which normal program execution is possible, and which allows modification of data held in memory. Used for monitoring or debugging the PC.

most-significant (bit/word) See *leftmost (bit/word).*

NC input An input that is normally closed, i.e., the input signal is considered to be present when the circuit connected to the input opens.

negative delay A delay set for a data trace in which recording data begins before the trace signal by a specified amount.

nesting Programming one loop within another loop, programming a call to a subroutine within another subroutine, or programming one jump within another.

NO input An input that is normally open, i.e., the input signal is considered to be present when the circuit connected to the input closes.

noise interference Disturbances in signals caused by electrical noise.

nonfatal error A hardware or software error that produces a warning but does not stop the PC from operating.

normal condition See *normally open condition*.

normally closed condition A condition that produces an ON execution condition when the bit assigned to it is OFF, and an OFF execution condition when the bit assigned to it is ON.

normally open condition A condition that produces an ON execution condition when the bit assigned to it is ON, and an OFF execution condition when the bit assigned to it is OFF.

NOT A logic operation which inverts the status of the operand. For example, AND NOT indicates an AND operation with the opposite of the actual status of the operand bit.

OFF The status of an input or output when a signal is said not to be present. The OFF state is generally represented by a low voltage or by non-conductivity, but can be defined as the opposite of either.

OFF delay The delay between the time when a signal is switched OFF (e.g., by an input device or PC) and the time when the signal reaches a state readable as an OFF signal (i.e., as no signal) by a receiving party (e.g., output device or PC).

offset A positive or negative value added to a base value such as an address to specify a desired value.

ON The status of an input or output when a signal is said to be present. The ON state is generally represented by a high voltage or by conductivity, but can be defined as the opposite of either.

ON delay The delay between the time when an ON signal is initiated (e.g., by an input device or PC) and the time when the signal reaches a state readable as an ON signal by a receiving party (e.g., output device or PC).

one-shot bit A bit that is turned ON or OFF for a specified interval of time which is longer than one scan.

one-to-one link See *1:1 link*.

online edit The process of changed the program directly in the PC from a Programming Device. Online editing is possible in PROGRAM or MONITOR mode. In MONITOR mode, the program can actually be changed while it is being

operand The values designated as the data to be used for an instruction. An operand can be input as a constant expressing the actual numeric value to be used or as an address to express the location in memory of the data to be used.

operand bit A bit designated as an operand for an instruction.

operand word A word designated as an operand for an instruction.

operating modes One of three PC modes: *PROGRAM mode*, *MONITOR mode*, and *RUN mode*.

operating error An error that occurs during actual PC operation as opposed to an initialization error, which occurs before actual operations can begin.

OR A logic operation whereby the result is true if either of two premises is true, or if both are true. In ladder-diagram programming the premises are usually ON/OFF states of bits or the logical combination of such states called execution conditions.

output The signal sent from the PC to an external device. The term output is often used abstractly or collectively to refer to outgoing signals.

output bit A bit in the IR area that is allocated to hold the status to be sent to an output device.

output device An external device that receives signals from the PC System.

output point The point at which an output leaves the PC System. Output points correspond physically to terminals or connector pins.

output signal A signal being sent to an external device. Generally an output signal is said to exist when, for example, a connection point goes from low to high voltage or from a nonconductive to a conductive state.

overflow The state where the capacity of a data storage location has been exceeded.

overseeing Part of the processing performed by the CPU Unit that includes general tasks required to operate the PC.

overwrite Changing the content of a memory location so that the previous content is lost.

parity Adjustment of the number of ON bits in a word or other unit of data so that the total is always an even number or always an odd number. Parity is generally used to check the accuracy of data after being transmitted by confirming that the number of ON bits is still even or still odd.

parity check Checking parity to ensure that transmitted data has not been corrupted.

PC See *Programmable Controller*.

PC configuration The arrangement and interconnections of the Units that are put together to form a functional PC.

PC System With building-block PCs, all of the Units connected up to, but not including, the I/O devices. The boundaries of a PC System are the PC and the program in its CPU Unit at the upper end; and the I/O Units at the lower end.

PCB See *printed circuit board*.

PC Setup A group of operating parameters set in the PC from a Programming Device to control PC operation.

Peripheral Device Devices connected to a PC System to aid in system operation. Peripheral devices include printers, programming devices, external storage media, etc.

peripheral servicing Processing signals to and from peripheral devices, including refreshing, communications processing, interrupts, etc.

port A connector on a PC or computer that serves as a connection to an external device.

positive delay A delay set for a data trace in which recording data begins after the trace signal by a specified amount.

Power Supply Unit A Unit that connected to a PC that provides power at the voltage required by the other Units.

present value The current value registered in a device at any instant during its operation. Present value is abbreviated as PV. The use of this term is generally restricted to timers and counters.

printed circuit board A board onto which electrical circuits are printed for mounting into a computer or electrical device.

PROGRAM mode A mode of operation that allows inputting and debugging of programs to be carried out, but that does not permit normal execution of the program.

Programmable Controller A computerized device that can accept inputs from external devices and generate outputs to external devices according to a program held in memory. Programmable Controllers are used to automate control of external devices. Although single-unit Programmable Controllers are available, building-block Programmable Controllers are constructed from separate components. Such Programmable Controllers are formed only when enough of these separate components are assembled to form a functional assembly.

programmed alarm An alarm given as a result of execution of an instruction designed to generate the alarm in the program, as opposed to one generated by the system.

programmed error An error arising as a result of the execution of an instruction designed to generate the error in the program, as opposed to one generated by the system.

programmed message A message generated as a result of execution of an instruction designed to generate the message in the program, as opposed to one generated by the system.

Programming Console The portable form of Programming Device for a PC.

Programming Device A Peripheral Device used to input a program into a PC or to alter or monitor a program already held in the PC. There are dedicated programming devices, such as Programming Consoles, and there are non-dedicated devices, such as a host computer.

PROM Programmable read-only memory; a type of ROM into which the program or data may be written after manufacture, by a customer, but which is fixed from that time on.

prompt A message or symbol that appears on a display to request input from the operator.

protocol The parameters and procedures that are standardized to enable two devices to communicate or to enable a programmer or operator to communicate with a device.

PV See *present value*.

RAM Random access memory; a data storage media. RAM will not retain data when power is disconnected.

RAS An acronym for reliability, assurance, safety.

read-only area A memory area from which the user can read status but to which data cannot be written.

refresh The process of updating output status sent to external devices so that it agrees with the status of output bits held in memory and of updating input bits in memory so that they agree with the status of inputs from external devices.

relay-based control The forerunner of PCs. In relay-based control, groups of relays are interconnected to form control circuits. In a PC, these are replaced by programmable circuits.

reserved bit A bit that is not available for user application.

reserved word A word in memory that is reserved for a special purpose and cannot be accessed by the user.

reset The process of turning a bit or signal OFF or of changing the present value of a timer or counter to its set value or to zero.

response code A code sent with the response to a data transmission that specifies how the transmitted data was processed.

response format A format specifying the data required in a response to a data transmission.

response monitoring time The time a device will wait for a response to a data transmission before assuming that an error has occurred.

Restart Bit A bit used to restart part of a PC.

result word A word used to hold the results from the execution of an instruction.

retrieve The processes of copying data either from an external device or from a storage area to an active portion of the system such as a display buffer. Also, an output device connected to the PC is called a load.

retry The process whereby a device will re-transmit data which has resulted in an error message from the receiving device.

return The process by which instruction execution shifts from a subroutine back to the main program (usually the point from which the subroutine was called).

reversible counter A counter that can be both incremented and decremented depending on the specified conditions.

reversible shift register A shift register that can shift data in either direction depending on the specified conditions.

right-hand instruction See *terminal instruction*.

rightmost (bit/word) The lowest numbered bits of a group of bits, generally of an entire word, or the lowest numbered words of a group of words. These bits/words are often called least-significant bits/words.

rising edge The point where a signal actually changes from an OFF to an ON status.

ROM Read only memory; a type of digital storage that cannot be written to. A ROM chip is manufactured with its program or data already stored in it and can never be changed. However, the program or data can be read as many times as desired.

rotate register A shift register in which the data moved out from one end is placed back into the shift register at the other end.

RS-232C interface An industry standard for serial communications.

RUN mode The operating mode used by the PC for normal control operations.

rung See *instruction line*.

scan The process used to execute a ladder-diagram program. The program is examined sequentially from start to finish and each instruction is executed in turn based on execution conditions.

scan time See *cycle time*.

scheduled interrupt An interrupt that is automatically generated by the system at a specific time or program location specified by the operator. Scheduled interrupts result in the execution of specific subroutines that can be used for instructions that must be executed repeatedly at a specified interval of time.

SCP See *subtract count input.*

seal See *self-maintaining bit*.

self diagnosis A process whereby the system checks its own operation and generates a warning or error if an abnormality is discovered.

self-maintaining bit A bit that is programmed to maintain either an OFF or ON status until set or reset by specified conditions.

series A wiring method in which Units are wired consecutively in a string.

servicing The process whereby the PC checks a connector or Unit to see if special processing is required.

set The process of turning a bit or signal ON.

set value The value from which a decrementing counter starts counting down or to which an incrementing counter counts up (i.e., the maximum count), or the time from which or for which a timer starts timing. Set value is abbreviated SV.

shift input signal An input signal whose OFF to ON transition causes data to be shifted one bit.

shift register One or more words in which data is shifted a specified number of units to the right or left in bit, digit, or word units. In a rotate register, data shifted out one end is shifted back into the other end. In other shift registers, new data (either specified data, zero(s) or one(s)) is shifted into one end and the data shifted out at the other end is lost.

signed binary A binary value that is stored in memory along with a bit that indicates whether the value is positive or negative.

software error An error that originates in a software program.

software protect A means of protecting data from being changed that uses software as opposed to a physical switch or other hardware setting.

source (word) The location from which data is taken for use in an instruction, as opposed to the location to which the result of an instruction is to be written. The latter is called the destination.

special instruction An instruction input with a function code that handles data processing operations within ladder diagrams, as opposed to a basic instruction, which makes up the fundamental portion of a ladder diagram.

SR area A memory area containing flags and other bits/words with specific functions.

SSS See *SYSMAC Support Software*.

store The process of recording a program written into a display buffer permanently in memory.

subroutine A group of instructions placed separate from the main program and executed only when called from the main program or activated by an interrupt.

subroutine number A definer used to identify the subroutine that a subroutine call or interrupt activates.

subtract count input An input signal used to decrement a counter when the signal changes from OFF to ON.

SV See *set value*.

switching capacity The maximum voltage/current that a relay can safely switch on and off.

synchronous execution Execution of programs and servicing operations in which program execution and servicing are synchronized so that all servicing operations are executed each time the programs are executed.

syntax The form of a program statement (as opposed to its meaning).

syntax error An error in the way in which a program is written. Syntax errors can include 'spelling' mistakes (i.e., a function code that does not exist), mistakes in specifying operands within acceptable parameters (e.g., specifying read-only bits as a destination), and mistakes in actual application of instructions (e.g., a call to a subroutine that does not exist).

SYSMAC Support Software A software package installed on a IBM PC/AT or compatible computer to function as a Programming Device.

system configuration The arrangement in which Units in a System are connected. This term refers to the conceptual arrangement and wiring together of all the devices needed to comprise the System.

system error An error generated by the system, as opposed to one resulting from execution of an instruction designed to generate an error.

system error message An error message generated by the system, as opposed to one resulting from execution of an instruction designed to generate a message.

system setup Operating environment settings for a Programming Device, e.g., the LSS or SSS.

terminal instruction An instruction placed on the right side of a ladder diagram that uses the final execution conditions of an instruction line.

timer A location in memory accessed through a TIM/CNT bit and used to time down from the timer's set value. Timers are turned ON and reset according to their execution conditions.

TR area A data area used to store execution conditions so that they can be reloaded later for use with other instructions.

TR bit A bit in the TR area.

trace An operation whereby the program is executed and the resulting data is stored to enable step-by-step analysis and debugging.

trace memory A memory area used to store the results of trace operations.

transfer The process of moving data from one location to another within the PC, or between the PC and external devices. When data is transferred, generally a copy of the data is sent to the destination, i.e., the content of the source of the transfer is not changed.

transmission distance The distance that a signal can be transmitted.

trigger A signal used to activate some process, e.g., the execution of a trace operation.

trigger address An address in the program that defines the beginning point for tracing. The actual beginning point can be altered from the trigger by defining either a positive or negative delay.

UM area The memory area used to hold the active program, i.e., the program that is being currently executed.

Unit In OMRON PC terminology, the word Unit is capitalized to indicate any product sold for a PC System. Most of the names of these products end with the word Unit.

unit number A number assigned to some Units to facilitate identification when assigning words or other operating parameters.

unmasked bit A bit whose status is effective. See *masked bit*.

unsigned binary A binary value that is stored in memory without any indication of whether it is positive or negative.

uploading The process of transferring a program or data from a lower-level or slave computer to a higher-level or host computer. If a Programming Devices is involved, the Programming Device is considered the host computer.

watchdog timer A timer within the system that ensures that the scan time stays within specified limits. When limits are reached, either warnings are given or PC operation is stopped depending on the particular limit that is reached.

WDT See *watchdog timer*.

word A unit of data storage in memory that consists of 16 bits. All data areas consists of words. Some data areas can be accessed only by words; others, by either words or bits.

word address The location in memory where a word of data is stored. A word address must specify (sometimes by default) the data area and the number of the word that is being addressed.

work area A part of memory containing work words/bits.

work bit A bit in a work word.

work word A word that can be used for data calculation or other manipulation in programming, i.e., a ‘work space’ in memory. A large portion of the IR area is always reserved for work words. Parts of other areas not required for special purposes may also be used as work words.

write protect switch A switch used to write-protect the contents of a storage device, e.g., a floppy disk. If the hole on the upper left of a floppy disk is open, the information on this floppy disk cannot be altered.

write-protect A state in which the contents of a storage device can be read but cannot be altered.

Index

A

ABS, specifications,

ABS interface function, ,

absolute encoder interfaces. *See* ABS interface function

AC Input Units, specifications,

analog setting function, , ,

ASCII, converting displays, Programming Console,

assembly, PC,

B

battery, service life,

Battery Set, replacement,

binary data, modifying, Programming Console,

bit status, force-set/reset, Programming Console,

bits, searching, Programming Console,

buzzer operation, Programming Console,

C

check levels, program checks,

checking, program syntax, Programming Console,

clearing, memory areas, Programming Console,

clock,
  reading and changing, Programming Console,

communication errors,

configuration,

Contact Output Units, specifications,

counters, changing SV, Programming Console,

CPU Unit,
  components,
  dimensions,
  indicators,
  specifications,
  weight,

CPU Units, standard models,

CQM1-OC224, dimensions,

current consumption,

cycle time, displaying, Programming Console,

D

data, modifying, Programming Console, , , ,

date, reading and changing, Programming Console,

DC Input Units, specifications, , ,

decimal data with sign, modifying, Programming Console,

decimal data without sign, modifying, Programming Console,

Dedicated I/O Units, standard models,

differentiated instructions, entering,

dimensions
  assembled PC,
  CPU Unit,
  CQM1-OC224,
  End Plate,
  I/O Units,

DIN Track,

DIP switch,

displays
  converting between hex and ASCII, Programming Console,

  cycle time, Programming Console,

E

EC Directives, ,

EEPROM, write protection,

EMC,

encoder input indicators,

End Cover, dimensions,

EPROM chips,
  installation,

EPROM ICs,

error log area,

errors
  communications,
  fatal,
  general,
  non-fatal,
  programming,
  Programming Console operations,
  reading/clearing messages, Programming Console,
  types,
  user-defined errors,

expansion instructions, reading and changing, Programming Console,

F

FAL(06),

FALS(07),

features,

force resetting, Programming Console,

force setting, Programming Console,

force-set/reset
  clearing, Programming Console,
  Programming Console,

function codes, reading and changing, Programming Console,

G–H

ground, precautions, ,

grounding, during PC installation,

hexadecimal data, converting displays, Programming Console,

I

I/O line noise,

I/O Unit
  components,
  types,

I/O Units
  dimensions,
  models,
  terminal block removal,
  weight,

indicators
  CPU Unit. *See* CPU Unit indicators
  encoder input,
  pulse input,
  pulse output,

inductive loads,

input devices, wiring,

Input Units, standard models,

inrush current,

installation, DIN Track,

instructions
  inserting and deleting, Programming Console,
  searching, Programming Console,

interrupts,

L

Ladder Support Software. *See* LSS

leakage current,

LEDs. *See* CPU Unit, indicators

LSS,
  connecting,

M

maintenance, battery replacement,

memory areas
  clearing, Programming Console,
  partial clear,

Memory Cassette, installation,

Memory Cassettes, ,

mode selector, Programming Console,

modifying
  binary data, Programming Console,
  data, Programming Console,
  decimal data with sign, Programming Console,
  decimal data without sign, Programming Console,
  hexadecimal/BCD data, Programming Console,
  SV, Programming Console,

MONITOR mode, description,

monitoring
  3-word monitor, Programming Console,
  binary monitor, Programming Console,
  decimal monitor with sign, Programming Console,
  decimal monitor without sign, Programming Console,
  differentiation monitor, Programming Console,
  status, Programming Console,

MSG(46),

N–O

noise,

one-to-one link, wiring,

operating modes, PC,

Output Units, standard models,

outputs, turning OFF,

P

Peripheral Devices,

peripheral port,
  connecting devices,

power cables,

power interruptions, Programmable Controller,

power supply, wiring, precautions,

Power Supply Units
  components,
  dimensions,
  specifications,
  standard models,

precautions
2-wire sensors,
general,
ground, ,
SYSMAC-CPT, ,

program, automatic transfer,

Program Memory, setting address and reading content, Programming Console,

PROGRAM mode, description,

programming
checks for syntax, Programming Console,
errors,
inserting and deleting instructions, Programming Console,
searching, Programming Console,
setting and reading a memory address, Programming Console,

Programming Console
connecting,
connecting to PC,
designating operands,
displays,
keys,
mode selector,
models,

programs
checking, check levels,
entering and editing, Programming Console,

pulse I/O function, , ,

pulse input, specifications,

pulse input indicators,

pulse output indicators,

R

RS-232C port, ,
connecting devices,
one-to-one link,
specifications, ,
wiring example,

RUN mode, description,

S

search
instruction, Programming Console,
operands, Programming Console,

sensors, 2-wire sensors, precautions,

signed binary data, inputting using decimal values,

signed binary instructions, using,

specifications
ABS,
AC Input Units,
Contact Output Units,
CPU Unit,
CPU Unit inputs,
DC Input Units, , ,
Power Supply Units,
pulse input,
Units,

SSS,

status, monitoring, Programming Console,

SV, modifying, Programming Console,

switches, DIP. *See* DIP switch

syntax, checking the program, Programming Console,

SYSMAC Support Software. *See* SSS

SYSMAC-CPT, precautions, ,

system configuration,

T

time, reading and changing, Programming Console,

timers, changing SV, Programming Console,

Transistor Output Unit, specifications,

troubleshooting,

W

weight, CPU Unit,

wiring
AC Power Supply Units,
DC Power Supply Units,
I/O Units,
precautions
inductive load surge suppressor,
output surge current,

Revision History

A manual revision code appears as a suffix to the catalog number on the front cover of the manual.

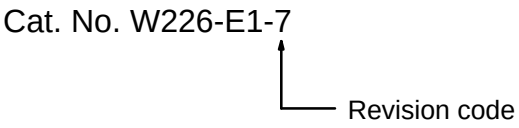

The following table outlines the changes made to the manual during each revision. Page numbers refer to the previous version.

Revision code	Date	Revised content
1	August 1993	Original production
1A	October 1993	The new LSS version which was "to be released soon" has been released. **Page 3:** Minor alteration to the Main Features. **Page 9:** MONITOR Mode and RUN Mode corrected. **Page 10:** Table comments corrected. **Page 18:** Diagrams and note corrected for Power Supply Unit Wiring. **Page 19:** Surge current changed to inrush current. Corrections made to the diagram text and to I/O Line Noise text. **Page 20:** Minor correction to middle diagram. **Page 21:** Circuit diagrams corrected. **Page 22:** Peripheral Device Connection rewritten. **Page 23:** Minor correction to diagram. **Page 25:** Output capacity and vibration resistance specifications clarified. **Page 26:** MACRO instruction words, Timers/Counters, and Data memory specifications clarified. **Page 28:** Internal current consumption clarified, CQM1-ID212 Terminal Connections corrected, and note added. **Page 29:** Internal current consumption clarified. **Page 30:** Internal current consumption and Service Power Supply clarified, and Circuit Configuration corrected. **Page 31:** Internal current consumption clarified, Service Power Supply and Circuit Configuration corrected. **Page 36:** Cable length for the CQM1-PRO01-E corrected. Keypad for the C200H-PRO27-E changed. **Page 38:** Minor change to the diagram. **Page 39:** Header changed to Reading/Clearing Error Messages. Step 2 display of the key sequence for Reading/Clearing Error Messages corrected. **Page 40:** Step 1 of the key sequence for Buzzer Operation corrected. **Pages 41, 42:** Displays for Reading and Changing Expansion Instructions and Reading and Changing the Clock have been corrected. **Page 43:** Steps 3 and 5 displays of the key sequence for Instruction Search corrected. **Page 45:** Step 5 display of the key sequence for Entering or Editing Programs corrected. **Pages 48, 49:** Steps 3 and 5 displays for Multiple Address Monitoring corrected. **Page 49:** Step 2 display for Binary Monitor corrected. **Page 51:** Steps 3 and 4b displays for Changing Timer, Counter SV corrected. **Page 52:** Steps 3 and 5 displays for Multiple Address Monitoring corrected. **Page 53:** Bits in SR words corrected. **Page 54:** Step 2 text addition for Force Set, Reset. **Page 58:** Text addition to Operating Errors. **Page 59:** REPL ROM Programming Console operation error rewritten. **Pages 61, 62:** Note added to the bottom of both pages. **Pages 63 to 65:** Minor corrections to the flowcharts.
2	December 1993	The manual was extensively rewritten to incorporate information on the new CPUs, I/O Units, and Dedicated I/O Units.
2A	October 1994	**Page 34:** Computational speed specifications corrected for the Pulse Input Port (CQM1-CPU43-E) table. **Page 35:** Output frequency row added to the table. **Page 47:** Terminal connections corrected.
2B	March 1995	**Pages 2, 3, 7, 29, 87:** SYSMAC Support Software (SSS) added. **Page 15:** The "1 kHz" corrected to "4 kHz" in the first sentence of *2-1-10 ABS Interface Function.* **Page 13:** A section on Programmable Controller Power Instructions added. **Page 17:** New Dedicated I/O Units added. **Page 33:** Data for Types of Instructions, Input Bits, Output Bits, and Work Bits corrected. **Page 40:** Computational speed changed from "1 kHz" corrected to "4 kHz" in the table. **Pages 43, 45, 46, 47, 48, 49, 50, 52, 53, 55:** Corrections made to the Terminal Connections. **Page 59:** *3-2 SSS Capabilities* added. **Pages 65, 74, 75:** SET Key corrected to SHIFT Key. **Page 66:** Text after the table deleted and SET Key corrected to SHIFT Key in *3-4-6 Reading and Changing the Clock.* **Page 73:** "6 bits" corrected to "16 bits" in the first sentence of *3-4-13 Bit, Digit, Word Monitor.* SET Key corrected to SHIFT Key for the Bit Monitor sequence. **Page 84:** "DM data" corrected to "word data" in *3-4-27 Hex-ASCII Display Change. 3-5-29 Inputting Signed Binary Data Using Decimal Values* and *3-5-30 Using Signed Binary Instructions* added. **Page 101:** Output Units specifications corrected. New Dedicated I/O Units and SSS added.
2C	July 1995	The following changes and additions were made. **Page 7:** Default communications settings modified and notes added to table. **Page 12:** Reference added to the top paragraph. **Pages 17 and 110:** DC Input Unit models and Linear Sensor Interface Units added. **Page 18:** DC Input Unit models added. **Pages 45 and 46 :** CQM1-ID111 and CQM1-ID112 added (new pages). **Page 102:** Note corrected. **Page 115:** *Appendix B Battery Service Life* added.
2D	July 1996	**Pages 16, 17, 20, 23, 32, 111:** CQM1-PA216 added. **Pages 17, 18, 59, 112:** CQM1-OA222 added. **Pages 17, 113:** DeviceBus/S Units added. **Pages 23, 24:** *Terminal Block* rewritten and *Wiring Precautions for Ground Wires* added. **Page 51:** Circuit configuration corrected for CQM1-OD211. **Page 56:** Circuit configuration corrected for CQM1-OD215. **Pages 77, 83:** Set Key corrected to Shift Key for the top display. **Page 80:** The program addresses corrected from 00202 to 00203. **Page 105:** ERR/ALM corrected to RUN at the bottom of the flowchart.
3	April 1997	**Pages 17, 18, 19, 52, 116:** CQM1-OC224 added. **Page 28:** *2-5-5 Compliance with EC Directives* added.
4	June 1997	CQM1-CPU4□-E CPU Unit model numbers changed to CQM1-CPU4□-EV1 throughout the manual. **Page 6:** Maximum I/O points for CQM1-CPU4□-EV1 CPU Units changed from 192 to 256.
5	February 1999	*PRECAUTIONS* section added before Section 1. *Appendix C SYSMAC-CPT Precautions* added. **Page 20:** Changes made to *2-3-1 Maximum No. of I/O Units and I/O Points.* **Page 30:** *Precautions in Connecting 2-wire DC Sensors* added. **Page 38:** Vibration resistance and shock resistance specifications corrected in *2-6-1 Power Supply Units.* **Pages 18, 19, 54, 120:** Information for the new C200H-ID214 added.
6	February 2000	**Page xiv:** Application precautions information added. **Page 7:** Information added to table. **Pages 18, 19, 122:** Information about CQM1-OD216 added to tables. **Page 62:** Changes made to circuit configuration diagrams. **Page 63:** Note added. **Page 67:** CQM1-OD216 specifications added.
7	September 2000	**Page xiii:** Wording of information on mounting and dismounting Units changed. **Page 23:** Description about PC orientation added. **Page 86:** Captions added in 2 places.

OMRON

Authorized Distributor:

Cat. No. W226-E1-7

Note: Specifications subject to change without notice.

Printed in Japan