19-2230; Rev 2; 2/05

Digitally Programmable Precision Voltage Divider for PGAs

General Description

The MAX5420 and MAX5421 are digitally programmable precision voltage dividers optimized for use in digitally programmable gain amplifier configurations. The MAX5420/MAX5421 operate from a single +5V supply or dual ±5V supply, and consume only 3µA supply current. These devices consist of a digitally selectable resistor array that provides four precision noninverting gains of 1, 2, 4, and 8 for PGAs. The MAX5420 and MAX5421 achieve a resistor ratio accuracy of 0.025% (MAX542_A), 0.09% (MAX542_B), and 0.5% (MAX542_C). The MAX5421 includes an on-chip matching resistor for op amp bias-current compensation.

The MAX5420 and MAX5421 are available in 8-pin and 10-pin µMAX packages. The devices are specified over the extended temperature range (-40°C to +85°C).

Applications

General-Purpose Programmable Noninverting Amplifiers

Programmable Instrumentation Amplifiers

Features

- **Four Precision Divider Ratios For Noninverting Gains of 1, 2, 4, and 8 in PGAs**
- **0.025%, 0.09%, or 0.5% Ratio Accuracy Guaranteed Over -40°C to +85°C**
- **On-Chip Matching Resistor for Op Amp Bias-Current Compensation (MAX5421)**
- **5V Single or ±5V Dual Supply Operation**
- **Low 3µA Supply Current**
- **CMOS/TTL Logic Compatible 2-Wire Parallel Interface**
- **Small 8-Pin and 10-Pin µMAX Packages**

Ordering Information

PART	TEMP. RANGE	PIN-PACKAGE	GAIN ACCURACY
MAX5420AEUA	-40°C to +85°C	8 µMAX	0.025%
MAX5420BEUA	-40°C to +85°C	8 µMAX	0.09%
MAX5420CEUA	-40°C to +85°C	8 µMAX	0.5%
MAX5421AEUB	-40°C to +85°C	10 µMAX	0.025%
MAX5421BEUB	-40°C to +85°C	10 µMAX	0.09%
MAX5421CEUB	-40°C to +85°C	10 µMAX	0.5%

Functional Diagram

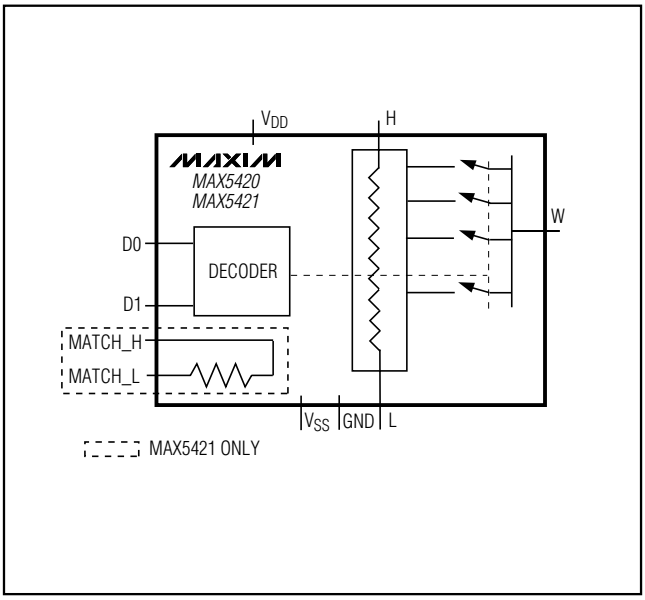

Pin Configurations

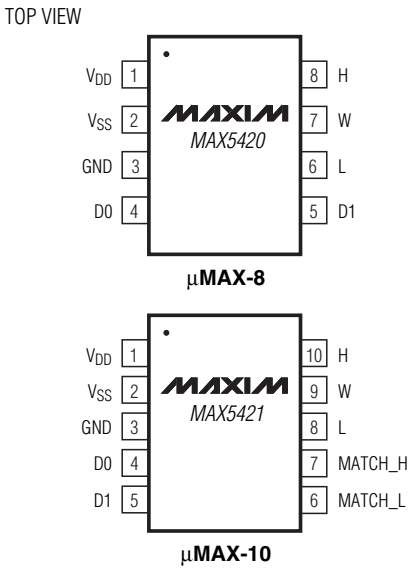

For pricing, delivery, and ordering information, please contact Maxim/Dallas Direct! at 1-888-629-4642, or visit Maxim's website at www.maxim-ic.com.

Downloaded from Arrow.com.

Digitally Programmable Precision Voltage Divider for PGAs

ABSOLUTE MAXIMUM RATINGS

V_{DD} to GND .....-0.3V to +6V
V_{SS} to GND.....+0.3V to -6V
D0, D1 to GND .....-0.3V to (V_{DD} + 0.3V)
H, L, W, MATCH_ to GND .....(V_{SS} - 0.3V) to (V_{DD} + 0.3V)
Input and Output Latchup Immunity.....±50mA

Continuous Power Dissipation (T_A = +70°C)
8-Pin µMAX (derate 4.1mW/°C above +70°C) 333mW
10-Pin µMAX (derate 5.6mW/°C above +70°C) 444mW
Operating Temperature Range .....-40°C to +85°C
Storage Temperature Range .....-60°C to +150°C
Lead Temperature (soldering, 10s) .....+300°C

Stresses beyond those listed under "Absolute Maximum Ratings" may cause permanent damage to the device. These are stress ratings only, and functional operation of the device at these or any other conditions beyond those indicated in the operational sections of the specifications is not implied. Exposure to absolute maximum rating conditions for extended periods may affect device reliability.

ELECTRICAL CHARACTERISTICS

(V_{DD} = +5V ±5%, V_{SS} = -5V ±5% or V_{SS} = GND, T_A = T_{MIN} to T_{MAX}, unless otherwise noted. Typical values are at T_A = +25°C.)

PARAMETER	SYMBOL	CONDITIONS			MIN	TYP	MAX	UNITS
Divider Ratio Accuracy		MAX542_A					±0.025	%
		MAX542_B					±0.09	
		MAX542_C					±0.5	
H-to-L Resistance	R_{HL}	(Figure 1)				15		kΩ
Input Resistance at H	R_H					15		kΩ
Input Resistance at W	R_W	Ratio = 1		V_{SS} = -5V		300		Ω
				V_{SS} = 0		500		
		Ratio = 2, 4, 8				8		kΩ
Capacitance at H, L, W, MATCH_H, MATCH_L	C_{ANALOG}					5		pF
Matching Resistor		MAX5421	Ratio = 1	V_{SS} = -5V		300		Ω
				V_{SS} = 0		500		
			Ratio = 2, 4, 8			8		kΩ
DYNAMIC PERFORMANCE								
Switching Time	t_S	V_{DD} = +5V, V_{SS} = -5V, digital input 0 to +3V, V_W settles to 0.02% of final value with 2pF capacitive load. Circuit of Figure 2.				0.5		µs
DIGITAL INPUTS								
Input High Voltage	V_{IH}				2.4			V
Input Low Voltage	V_{IL}						0.8	
Input Leakage Current		D1, D0 = V_{DD} or GND					±1	µA
Input Capacitance						5		pF

Downloaded from Arrow.com.

ELECTRICAL CHARACTERISTICS (continued)

(V_{DD} = +5V ±5%, V_{SS} = -5V ±5% or V_{SS} = GND, T_A = T_{MIN} to T_{MAX}, unless otherwise noted. Typical values are at T_A = +25°C.)

PARAMETER	SYMBOL	CONDITIONS	MIN	TYP	MAX	UNITS
POWER SUPPLIES						
Positive Supply Voltage	V_{DD}		4.75		5.25	V
Negative Supply Voltage	V_{SS}		0		-5.25	
Positive Supply Current	I_{DD}	D1, D0 = V_{DD} or GND		3	7	µA
		D1, D0 = 3V		15	25	
Negative Supply Current	I_{SS}	D1, D0 = V_{DD} or GND		3	7	µA
		D1, D0 = 3V		15	25	
W, H, L, MATCH_L, MATCH_H Voltage Range			V_{SS}		V_{DD}	V

Typical Operating Characteristics

(V_{DD} = +5V, V_{SS} = -5V, or V_{SS} = GND, T_A = +25°C, unless otherwise noted.) (Note 1)

MAX542_A DIVIDER RATIO ACCURACY vs. TEMPERATURE

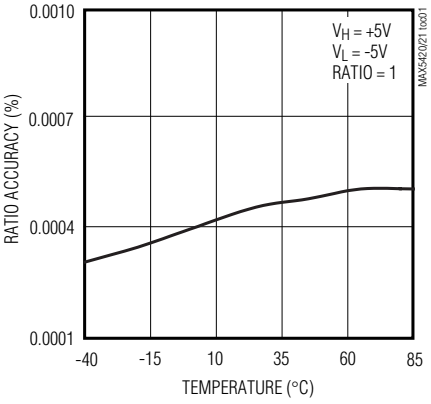

MAX542_A DIVIDER RATIO ACCURACY vs. TEMPERATURE

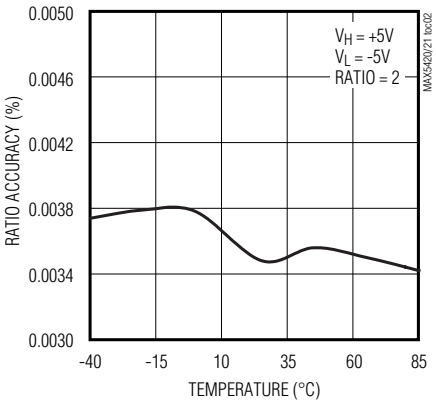

MAX542_A DIVIDER RATIO ACCURACY vs. TEMPERATURE

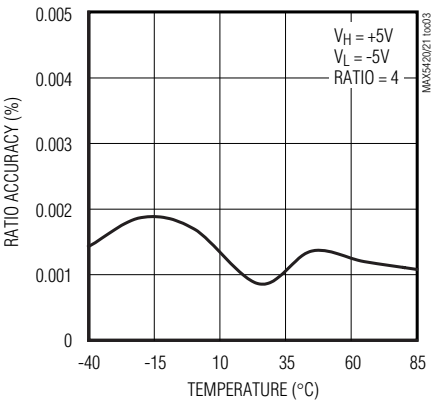

Downloaded from Arrow.com.

Digitally Programmable Precision Voltage Divider for PGAs

Typical Operating Characteristics (continued)

(V_{DD} = +5V, V_{SS} = -5V, or V_{SS} = GND, T_A = +25°C, unless otherwise noted.) (Note 1)

MAX542_A DIVIDER RATIO ACCURACY vs. TEMPERATURE

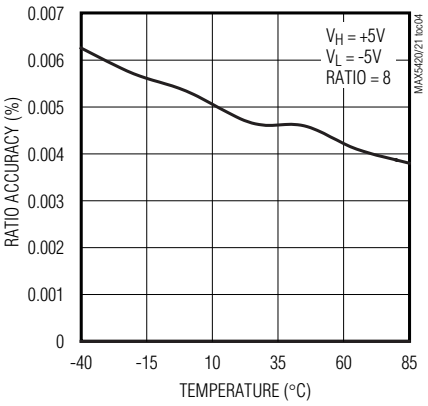

MAX542_B DIVIDER RATIO ACCURACY vs. TEMPERATURE

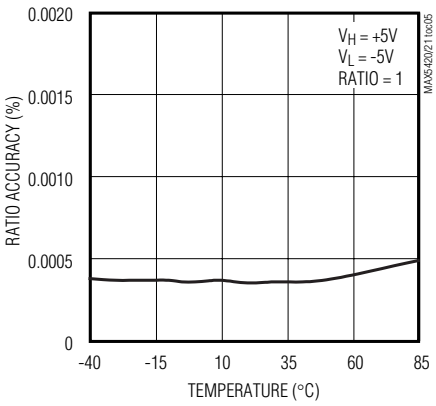

MAX542_B DIVIDER RATIO ACCURACY vs. TEMPERATURE

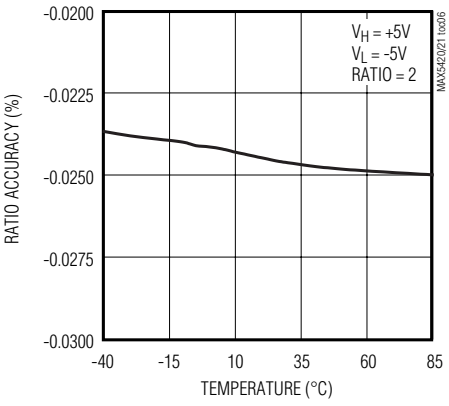

MAX542_B DIVIDER RATIO ACCURACY vs. TEMPERATURE

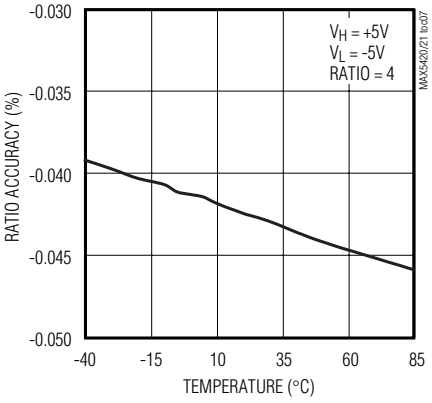

MAX542_B DIVIDER RATIO ACCURACY vs. TEMPERATURE

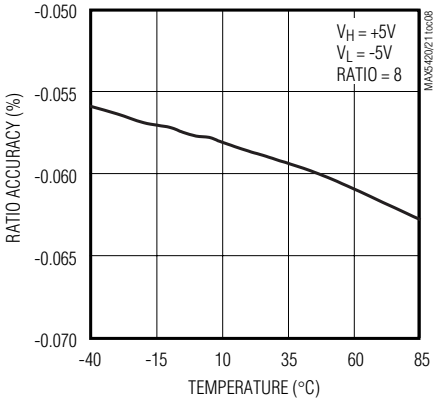

MAX542_A RATIO ACCURACY vs. POSITIVE SUPPLY VOLTAGE

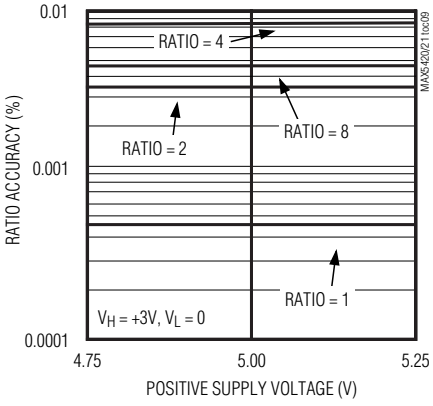

MAX542_B RATIO ACCURACY vs. POSITIVE SUPPLY VOLTAGE

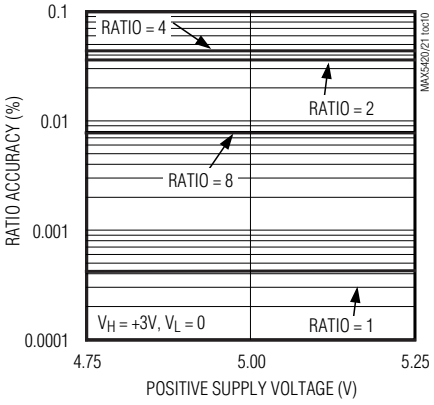

MAX542_A RATIO ACCURACY vs. NEGATIVE SUPPLY VOLTAGE

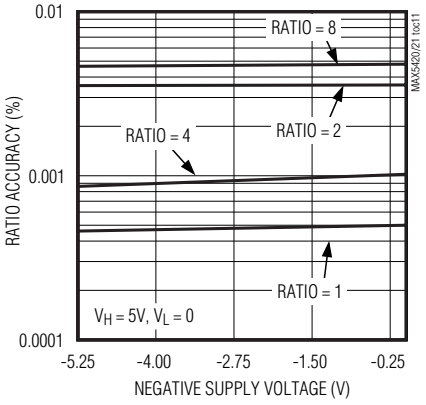

MAX542_B RATIO ACCURACY vs. NEGATIVE SUPPLY VOLTAGE

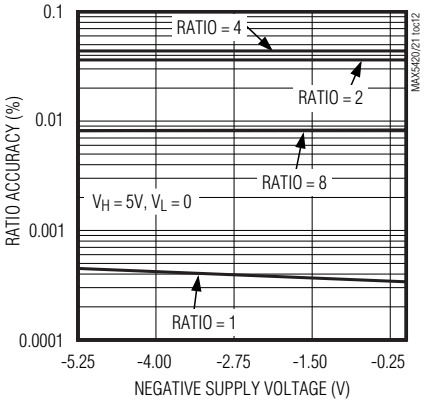

Downloaded from Arrow.com.

Typical Operating Characteristics (continued)

(V_{DD} = +5V, V_{SS} = -5V, or V_{SS} = GND, T_A = +25°C, unless otherwise noted.) (Note 1)

SWITCHING TIME (RATIO 1-TO-2)

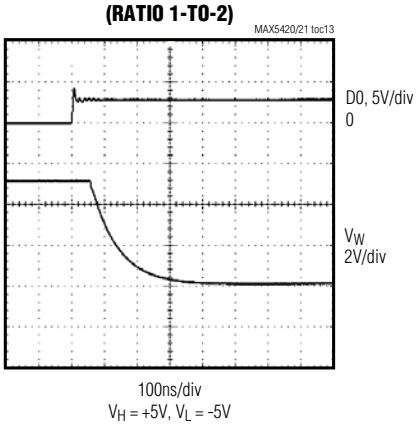

SWITCHING TIME (RATIO 2-TO-4)

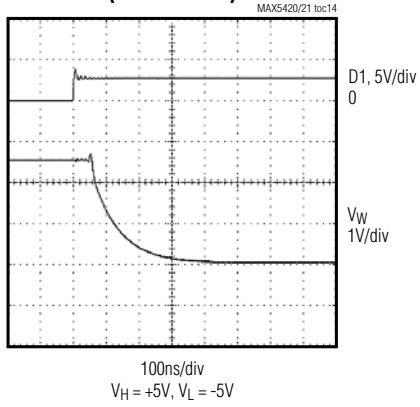

SWITCHING TIME (RATIO 4-TO-8)

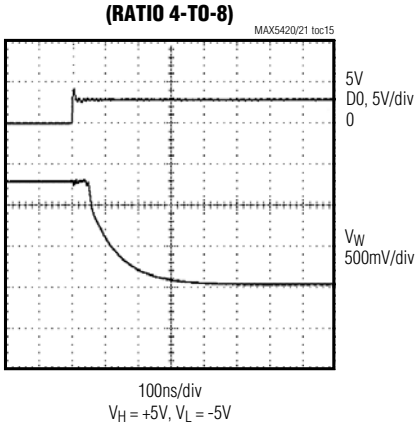

SUPPLY CURRENT vs. TEMPERATURE

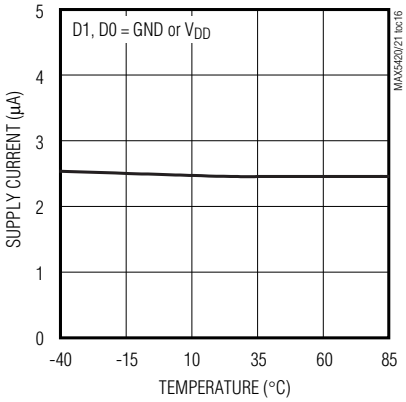

Note 1: For MAX542_C accuracy *Typical Operating Characteristics*, refer to MAX542_B accuracy *Typical Operating Characteristics*.

Downloaded from Arrow.com.

Digitally Programmable Precision Voltage Divider for PGAs

Pin Description

PIN		NAME	FUNCTION
MAX5420	MAX5421		
1	1	V_{DD}	Positive Supply Voltage
2	2	V_{SS}	Negative Supply Voltage
3	3	GND	Ground
4, 5	4, 5	D0, D1	Digital Control Inputs. Drive D0 and D1 logic high or logic low to set the divider ratio. See *Logic Control Truth Table*.
6	8	L	Low Terminal of Resistor-Divider
7	9	W	Resistor-Divider Output
8	10	H	High Terminal of Resistor-Divider
—	6	MATCH_L	Matching Resistor Low Terminal
—	7	MATCH_H	Matching Resistor High Terminal

Detailed Description

The MAX5420/MAX5421 are digitally programmable precision voltage dividers for programmable-gain amplifiers. Operationally, these devices consist of digitally selectable precision resistor-dividers providing noninverting gains of 1, 2, 4, and 8 for PGA applications (see *Functional Diagram* and *Figure 1*).

$$\text{Ratio} = 1 + \frac{R_B}{R_A}$$

The MAX5420/MAX5421 achieve divider ratio accuracy of 0.025% (MAX5420A/MAX5421A), 0.09% (MAX5420B/MAX5421B) or 0.5% (MAX5420C/MAX5421C).

The end-to-end resistance from H to L is 15kΩ. The impedance seen at W is designed to be the same 8kΩ for divider ratios 2, 4, and 8, ensuring excellent impedance matching and constant switching times. In gain of +1 configuration, H is internally connected to W with a typical resistance of 500Ω.

Matching Resistor (MAX5421)

The MAX5421 includes a matching resistor to compensate for offset voltage due to input bias current of the op amp. The resistance from MATCH_H to MATCH_L, equals the resistance seen at W for gains of 2, 4, and 8. In the gain of +1, an internal switch connects MATCH_H and MATCH_L. This internal switch matches the impedance of the switch between H and W.

Table 1. Logic Control Truth Table

DIGITAL INPUTS		DIVIDER RATIO
D1	D0	
0	0	1
0	1	2
1	0	4
1	1	8

Digital Interface Operation

The MAX5420/MAX5421 feature a simple two-bit parallel programming interface. D1 and D0 program the divider ratio setting according to the *Logic Control Truth Table* (Table 1). The digital interface is CMOS/TTL logic compatible.

Applications Information

Programmable-Gain Amplifier

The MAX5420/MAX5421 are ideally suited for high-precision PGA applications. The typical application circuit of Figure 3 uses the MAX5421 with matching resistor to compensate for voltage offset due to op amp input bias currents. Use the MAX5420 with an ultra-low input bias current op amp such as the MAX4237 (Figure 4).

Power Supplies and Bypassing

The MAX5420/MAX5421 operate from dual ±5V supplies, or a single +5V supply. For dual supplies, bypass V_{DD} and V_{SS} with 0.1µF ceramic capacitors to GND. For single supply, connect V_{SS} to GND and bypass V_{DD} with a 0.1µF ceramic capacitor to GND.

Downloaded from Arrow.com.

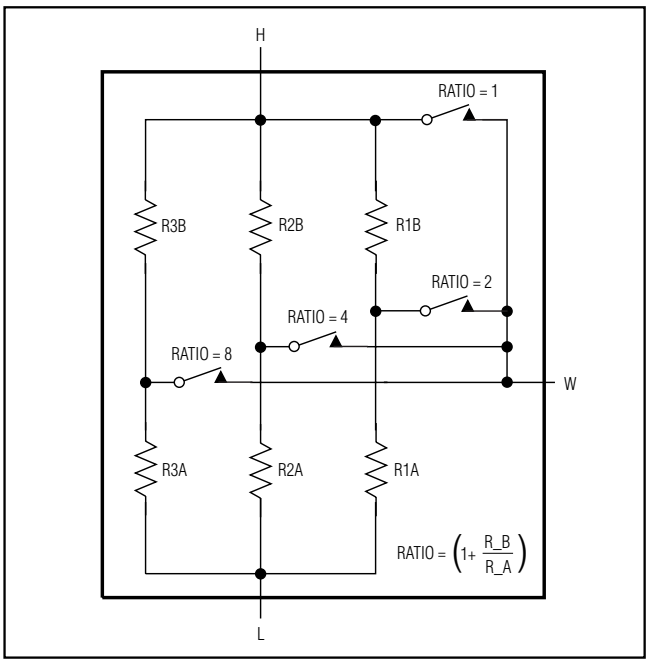

Figure 1. Simplified Functional Diagram

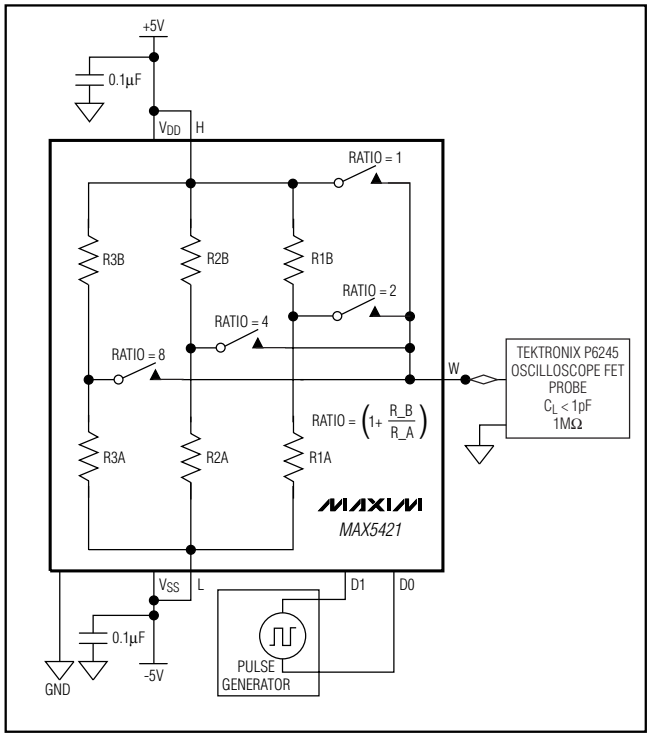

Figure 2. Switching Time Test Circuit

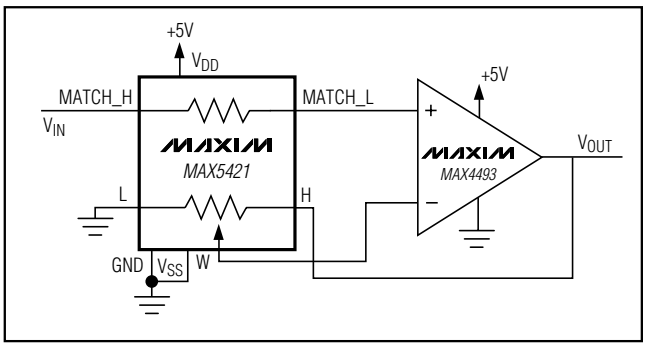

Figure 3. Programmable-Gain Amplifier with Op Amp Bias-Current Matching

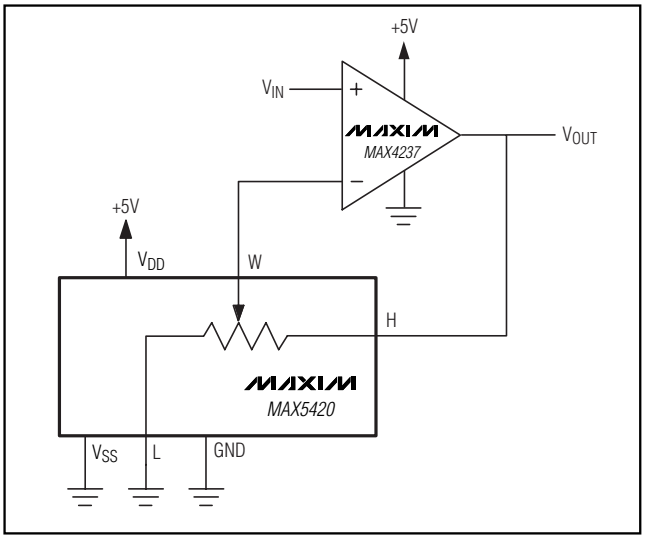

Figure 4. Programmable-Gain Amplifier

Switching Time and Layout Concerns

The switching time of the MAX5420/MAX5421 depends on the capacitive loading at W. For best performance, reduce parasitic board capacitance by minimizing the circuit board trace from W to the op amp inverting input, and choose an op amp with low input capacitance.

Chip Information

TRANSISTOR COUNT: 118

PROCESS: CMOS

Downloaded from Arrow.com.

Digitally Programmable Precision Voltage Divider for PGAs

Package Information

(The package drawing(s) in this data sheet may not reflect the most current specifications. For the latest package outline information go to **www.maxim-ic.com/packages**.)

8LUMAXD.EPS

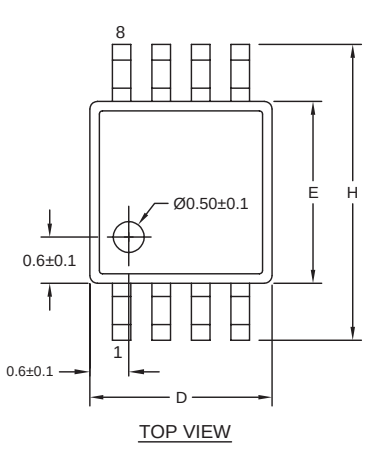

TOP VIEW

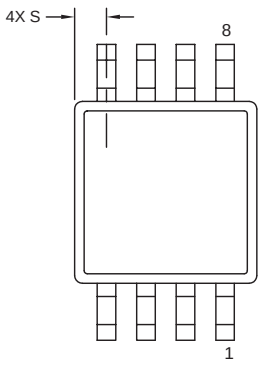

BOTTOM VIEW

	INCHES		MILLIMETERS	
DIM	MIN	MAX	MIN	MAX
A	-	0.043	-	1.10
A1	0.002	0.006	0.05	0.15
A2	0.030	0.037	0.75	0.95
b	0.010	0.014	0.25	0.36
c	0.005	0.007	0.13	0.18
D	0.116	0.120	2.95	3.05
e	0.0256 BSC		0.65 BSC	
E	0.116	0.120	2.95	3.05
H	0.188	0.198	4.78	5.03
L	0.016	0.026	0.41	0.66
α	0°	6°	0°	6°
S	0.0207 BSC		0.5250 BSC	

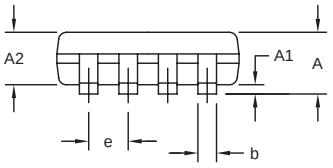

FRONT VIEW

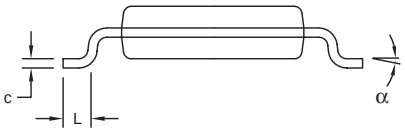

SIDE VIEW

NOTES:
1. D&E DO NOT INCLUDE MOLD FLASH.
2. MOLD FLASH OR PROTRUSIONS NOT TO EXCEED 0.15MM (.006").
3. CONTROLLING DIMENSION: MILLIMETERS.
4. MEETS JEDEC MO-187C-AA.

DALLAS SEMICONDUCTOR MAXIM

PROPRIETARY INFORMATION

TITLE: PACKAGE OUTLINE, 8L uMAX/uSOP

APPROVAL	DOCUMENT CONTROL NO.	REV.	
	21-0036	J	1/1

Downloaded from Arrow.com.

Package Information (continued)

(The package drawing(s) in this data sheet may not reflect the most current specifications. For the latest package outline information go to **www.maxim-ic.com/packages**.)

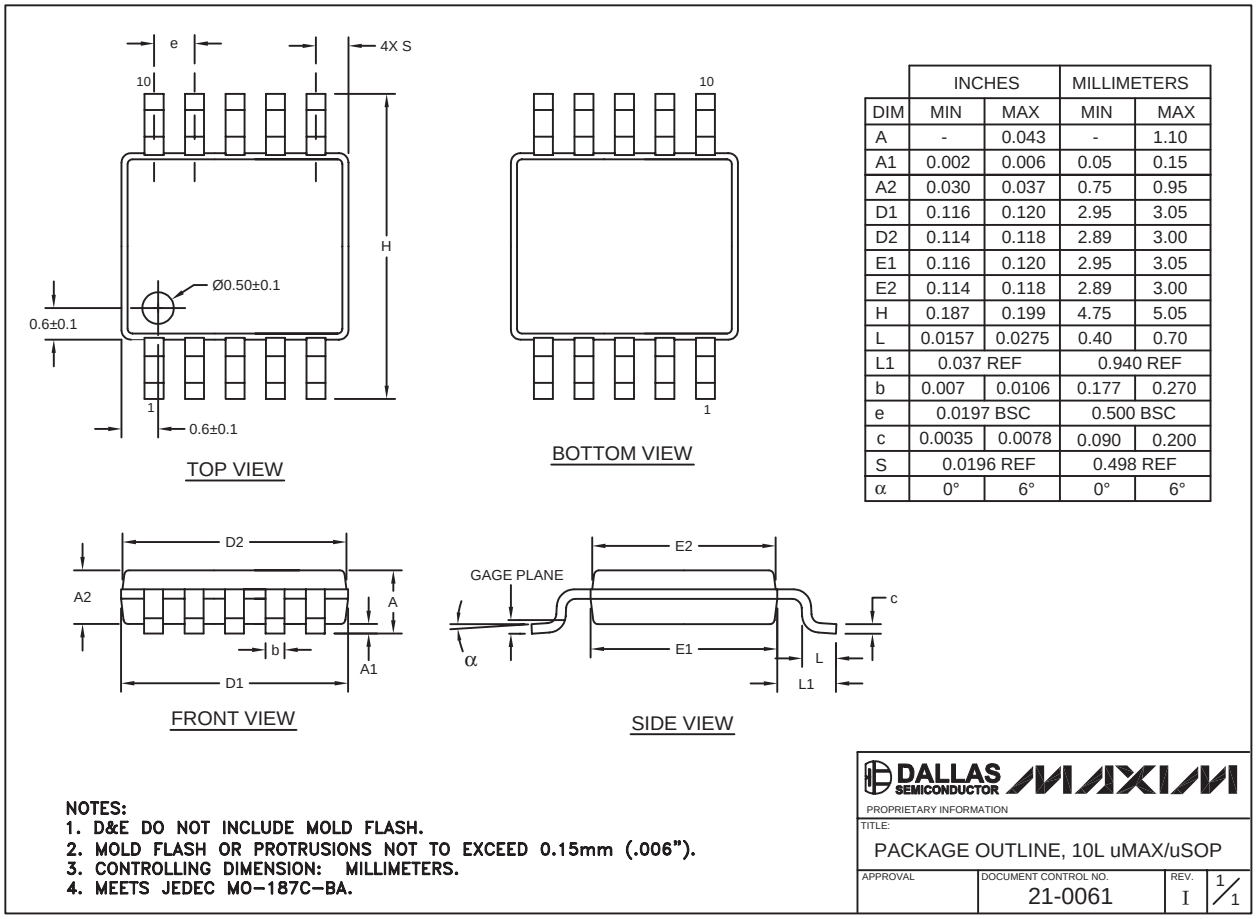

	INCHES		MILLIMETERS	
DIM	MIN	MAX	MIN	MAX
A	-	0.043	-	1.10
A1	0.002	0.006	0.05	0.15
A2	0.030	0.037	0.75	0.95
D1	0.116	0.120	2.95	3.05
D2	0.114	0.118	2.89	3.00
E1	0.116	0.120	2.95	3.05
E2	0.114	0.118	2.89	3.00
H	0.187	0.199	4.75	5.05
L	0.0157	0.0275	0.40	0.70
L1	0.037 REF		0.940 REF	
b	0.007	0.0106	0.177	0.270
e	0.0197 BSC		0.500 BSC	
c	0.0035	0.0078	0.090	0.200
S	0.0196 REF		0.498 REF	
α	0°	6°	0°	6°

NOTES:
1. D&E DO NOT INCLUDE MOLD FLASH.
2. MOLD FLASH OR PROTRUSIONS NOT TO EXCEED 0.15mm (.006").
3. CONTROLLING DIMENSION: MILLIMETERS.
4. MEETS JEDEC MO-187C-BA.

DALLAS SEMICONDUCTOR MAXIM

PROPRIETARY INFORMATION

TITLE: PACKAGE OUTLINE, 10L uMAX/uSOP

APPROVAL	DOCUMENT CONTROL NO.	REV.	
	21-0061	I	1/1

Maxim cannot assume responsibility for use of any circuitry other than circuitry entirely embodied in a Maxim product. No circuit patent licenses are implied. Maxim reserves the right to change the circuitry and specifications without notice at any time.

© 2005 Maxim Integrated Products Printed USA MAXIM is a registered trademark of Maxim Integrated Products.

Downloaded from Arrow.com.