Installation Manual

Universal Top-of-Pole Mount

UNI-TP/06LL



IRONRIDGE

Solar Mounting Solutions

© 2010 IronRidge, Inc. All Rights Reserved

Introduction

The Universal Top-of-Pole Mount UNI-TP/06LL is a very sturdy and straightforward pole mounting solution for small area solar photo voltaic (PV) needs. With its user-adjustable angle settings, it can support installations in a wide range of locations.

In addition, the UNI-TP/06LL supports:

- Up to six PV panels (three panels in each of the two channels, with a combined width of up to 70 inches per channel).
- A pole diameter of 6.0 inches (requires a properly anchored schedule 40 pipe).

1. Installer Responsibility

The installer is solely responsible for:

- Complying with all applicable local or national building codes, including any that may supersede this manual
- Ensuring that IronRidge and other products are appropriate for the particular installation and the installation environment
- Ensuring that the selected mount can support the array under live load conditions
- Using only IronRidge parts and installer-supplied parts as specified by IronRidge. Substitution parts may void the warranty
- Ensuring safe installation of all electrical aspects of the PV array.

2. Customer Support

IronRidge makes every effort to ensure your mounting kit is easy to install. If you need assistance at any point with your installation or have suggestions on how we can improve your experience, call IronRidge customer support: (800) 227-9523

3. Tools Required For Assembly

The following tools are required to assemble the Universal Top-of-Pole Mount:

Tool	Use for
Wrenches Open-end wrench, Box-end wrench, or 3/8" or greater socket drive with sockets to support the following size hex heads: ♦ 3/8" ♦ 5/16" ♦ 1/4"	♦ 3/8 cap-end screws, 3/8 bolts ♦ 5/16 cap-end screws, 5/16 bolts ♦ 1/4 cap-end screws, 1/4 bolts

4. Component List

The Universal Top-of-Pole Mount UNI-TP/06LL kit contains the following parts:

Brace Assembly (51-0626-400) x2

Attaches to the top of the 6-inch pole, providing the foundation for the mount

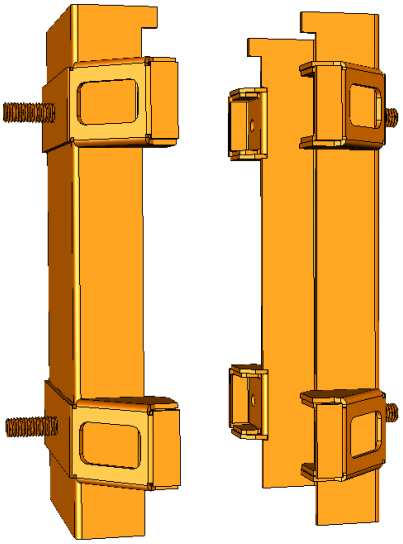

Tilt Plate, left (51-0627-027) and right (51-0627-027A)

Attaches to the brace, providing tilt adjustment for the panel assembly

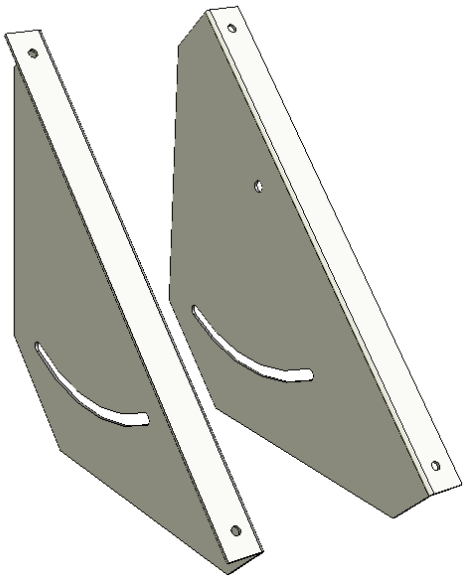

Cross Rail (51-0627-100) x2

Attaches to the tilt plates and support the channel rails



Channel rail (51-0570-001) x4

Attaches directly to the back of the PV modules

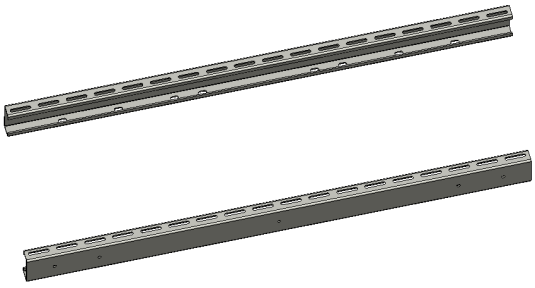

Component List continued...

Part	Qty	Part Number
3/8-16 x 1" Kit	1	29-5006-005
3/8-16 x 1" SS hex-cap bolt	12	23-3118-021
3/8 flat washer, SS	24	25-3102-000
3/8 split lock washer, SS	12	25-3101-000
3/8 hex nut, SS	12	25-3118-440
Large Pole Bracket Kit	1	29-5008-001
Stud, 3/8-16 x 5.5" Zinc	4	27-1037-016
3/8 flat washer, Zinc	8	27-3702-001
3/8 split lock washer, Zinc	8	27-3701-001
3/8 hex nut, Zinc	8	24-3716-441
Large Tilt Plate Kit	1	29-5007-001
1/2 flat washer, Zinc	4	25-5002-000
1/2 split lock washer, Zinc	4	25-5001-000
1/2-13 hex nut, Zinc	4	24-5013-440
Spare Pole Kit	1	29-5002-100
1/4-20 x 3/4" SS hex-cap bolt	1	23-2520-050
5/16-18 x 3/4" SS hex-cap bolt	1	23-3118-021
3/8-16 x 1" SS hex-cap bolt	1	23-3716-101
1/4-20 fin hex nut, SS	1	24-2520-440
1/4-20 x 3/4" SS hex-cap bolt	1	24-3118-440
5/16-18 x 3/4" SS hex-cap bolt	1	24-3716-441
3/8-16 x 1" SS hex-cap bolt	1	25-2501-000
1/4-20 fin hex nut, SS	1	25-3101-000
3/8 split lock washer, SS	1	25-3701-001
1/4 flat washer, SS	2	25-2502-000
5/16 flat washer, SS	2	25-3102-000
3/8 flat washer, SS	1	25-3702-001
1/4 x 3/4" Kit	6	29-5000-000
1/4-20 x 3/4" SS hex-cap bolt	24	23-2520-050
1/4 flat washer, SS	24	25-2502-000
1/4 split lock washer, SS	24	24-2501-000
1/4-20 fin hex nut, SS	24	24-2520-440

5. Assembly

Step 1 -attaching the channel rails to the PV modules

Parts Required	Qty	Part Number
PV Module	up to 6	User-supplied
Channel Rail	4	51-0570-001
1/4-20 x 3/4" SS hex-cap bolt	24	23-2520-050
1/4 flat washer, SS	24	25-2502-000
1/4 split lock washer, SS	24	24-2501-000
1/4-20 fin hex nut, SS	24	24-2520-440

1. Lay the modules face down on a protected surface in the appropriate orientation - up to three modules per set of rails. Leave an inch or two between the panels.
2. Lay the channel rails on the back of the modules with the evenly-spaced holes down, so the flat side of the rails are facing towards the outside edges of the panels.

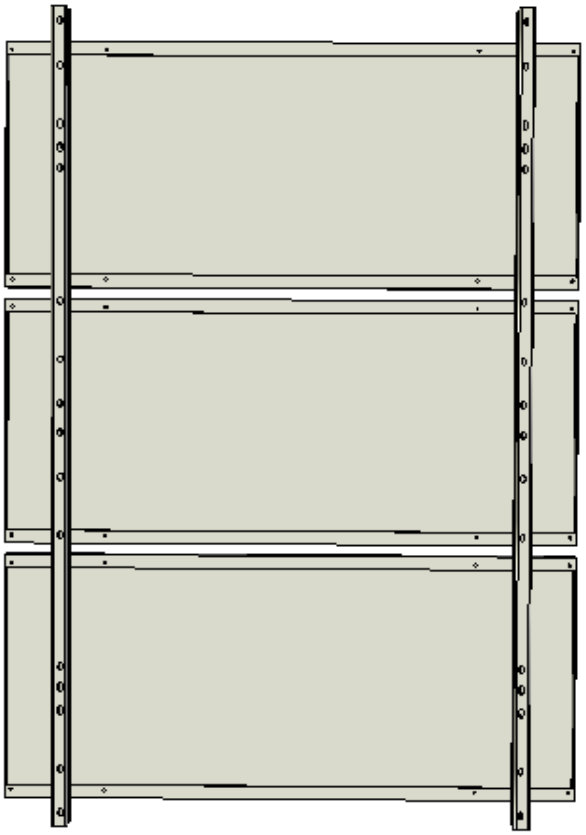

3. Secure the rails with a bolt, lock washer and hex nut in each of the PV mounting holes.

   Tighten the bolts to 7 ft-lbs.

4. Repeat, attaching the remaining PV modules to the two remaining channel rails.

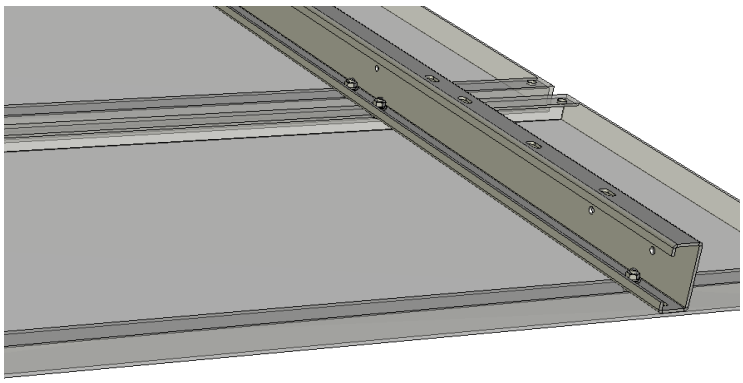

Step 2 - attaching the brace assembly to the pole

Parts Required	Qty	Part Number
Brace Assembly	2	51-0626-400
Bolt, 3/8-16 x 5.5" Zinc	4	23-3716-551
3/8 flat washer, Zinc	8	27-3702-001
3/8 split lock washer, Zinc	8	27-3701-001
3/8 hex nut, Zinc	8	24-3716-441

1. Place the brace assembly onto the pole so the "lip" catches the top of the pole.
2. Install the studs and hardware as shown, using a washer and lock washer under each nut.
3. Tighten the stud nuts evenly, making sure that all studs are tightened the same amount so the distance between braces is the same on the front and the back.

   Tighten the studs to 12 ft-lbs.

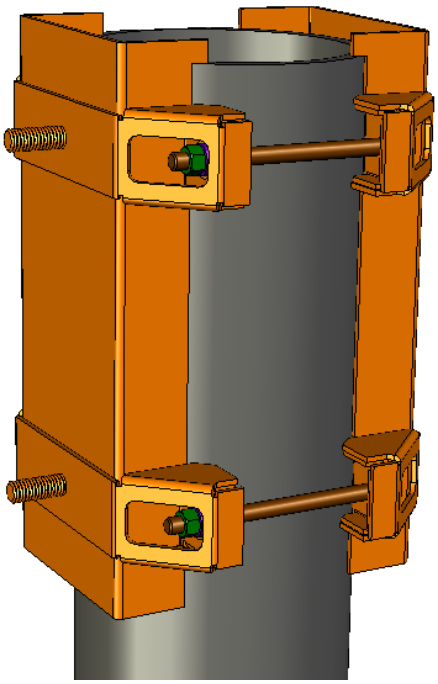

Step 3 - attaching the tilt plates to the brace

Parts Required	Qty	Part Number
Tilt Plate, left	1	51-0627-027
Tilt Plate, right	1	51-0627-027A
1/2 flat washer, Zinc	4	25-5002-000
1/2 split lock washer, Zinc	4	25-5001-000
1/2-13 hex nut, Zinc	4	24-5013-440

1. Place the tilt plates on the brace assembly as shown.
2. Use a washer, lock washer and nut on each screw, and finger-tighten.

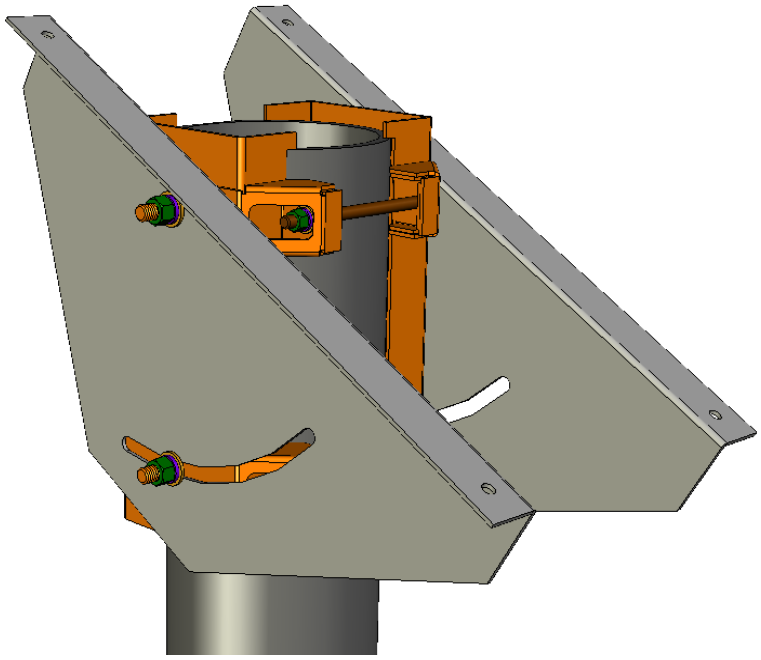

Step 4 - attaching the cross rails to the tilt plates

Parts Required	Qty	Part Number
Cross Rail	2	27-0627-100
3/8-16 x 1" hex-cap bolt, Zinc	4	23-3716-101
3/8 flat washer, Zinc	8	25-3702-001
3/8 med split lock washer, Zinc	4	25-3701-001
3/8-16 fin hex nut, Zinc	4	24-3716-441

1. Place the cross rails on the tilt plates with the open sides facing towards each other and attach using the specified hardware.
2. Tighten the bolts to 12 ft-lbs.

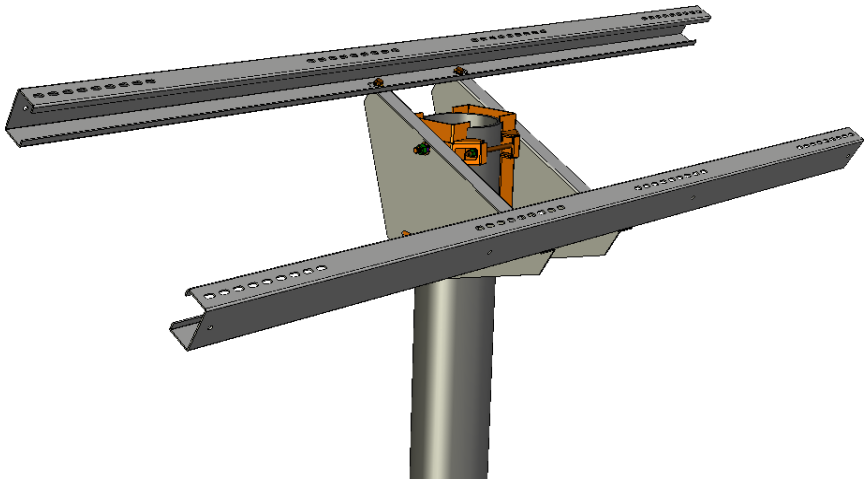

Step 5 - mounting the PV assembly

Parts Required	Qty	Part Number
3/8-16 x 1" hex-cap bolt, Zinc	8	23-3716-101
3/8 flat washer, Zinc	16	25-3702-001
3/8 med split lock washer, Zinc	8	25-3701-001
3/8-16 fin hex nut, Zinc	8	24-3716-441

1. Lift one of the the PV array assemblies onto the cross rails and attach using the supplied hardware.

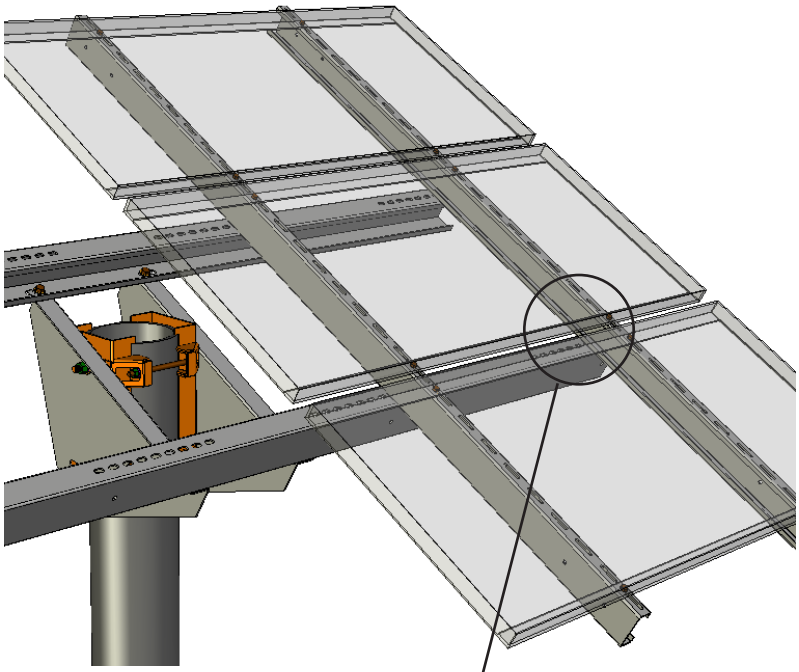

2. Tighten the bolts to 12 ft-lbs.

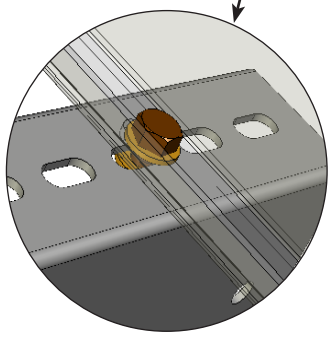

1. Lift the second PV array assembly onto the cross rails and attach using the supplied hardware.

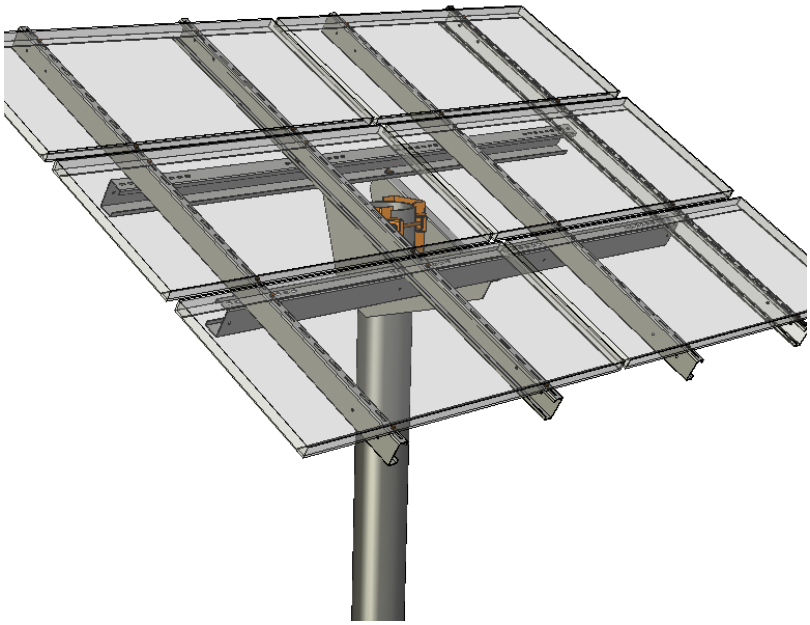

2. Adjust the tilt of the panel, then tighten the tilt plate nuts to 12 ft-lbs.

IronRidge 10-Year Warranty

Terms and Conditions

IronRidge warrants each Mounting Structure to be free from defects in materials and workmanship for ten (10) years from the date of first purchase ("Warranty Period"), when installed properly and used for the purpose for which it is designed, except for the finish, which shall be free from visible peeling, or cracking or chalking under normal atmospheric conditions for a period of three (3) years, from the earlier of 1) the date the installation of the Product is completed, or 2) 30 days after the purchase of the Product by the original Purchaser ("Finish Warranty"). The Finish Warranty does not apply to any foreign residue deposited on the finish. All installations in corrosive atmospheric conditions are excluded. The Finish Warranty is VOID if the practices specified by AAMA 609 & 610-02 – "Cleaning and Maintenance for Architecturally Finished Aluminum" (www.aamanet.org) are not followed by Purchaser for IronRidge's aluminum based products.

The warranty covers the replacement cost of parts to repair the product to proper working condition. Transportation and incidental costs associated with warranty items are not reimbursable. The warranty does not cover normal wear, or damage resulting from misuse, abuse, improper installation, negligence, or accident. The warranty does not cover any defect that has not been reported in writing to IronRidge within ten (10) days after discovery of such defect. Furthermore, it does not cover units that have been altered, modified or repaired without written authorization from the manufacturer or its authorized representative, or units used in a manner or for a purpose other than that specified by the manufacturer. IronRidge's entire liability and Purchaser exclusive remedy, whether in contract, tort or otherwise, for any claim related to or arising out of breach of the warranty covering the Mounting Structures shall be correction of defects by repair, replacement, or credit, at IronRidge's discretion. Refurbished Mounting Structures may be used to repair or replace the Mounting Structures.

IronRidge shall have no liability for any injuries or damages to persons or property resulting from any cause, whatsoever, or any claims or demands brought against IronRidge by Purchaser, any employee of Purchaser, client of Purchaser, end-user of the Product or other party, even if IronRidge has been advised of the possibility of such claims or demands (collectively, "Third Party Claims"). This limitation applies to all materials provided by IronRidge during and after the Warranty Period.