MARQUE: HARMAN-KARDON

REFERENCE: ONYX STUDIO 3 BLUE

CODIC: 4261542

NOTICE



ONYX STUDIO 3

What's in the box



x 1



x 1

Buttons

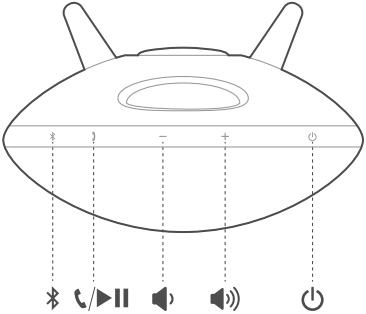

Quick Start Guide

Guide de demarrage rapide

Connections

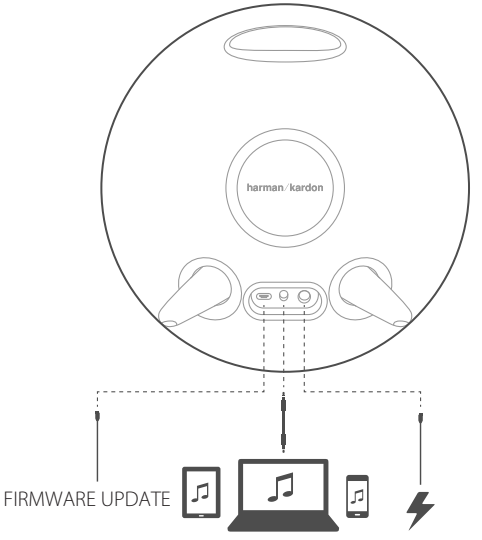

Bluetooth®

1. Bluetooth connection

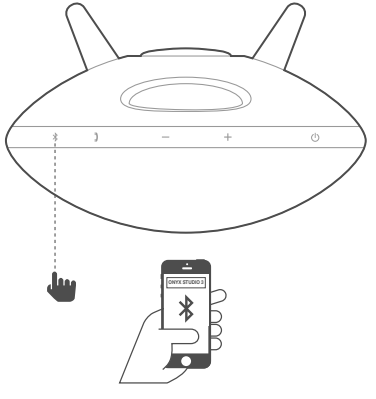

2. Music control

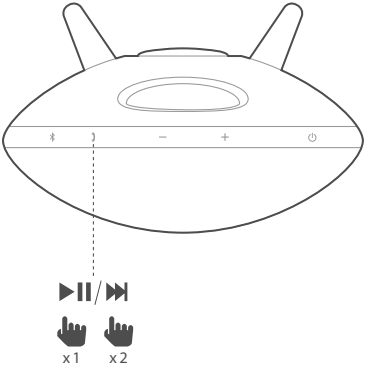

Speakerphone

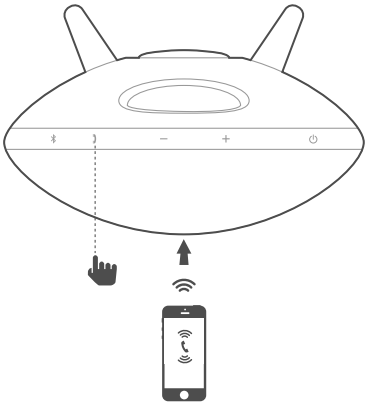

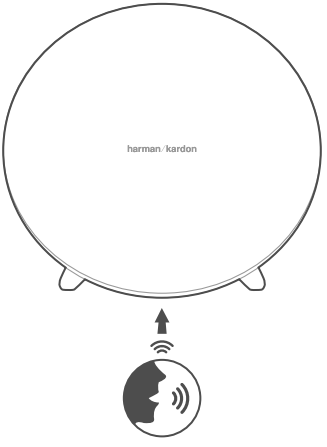

Wireless Dual Sound

Long press the Bluetooth button to connect another Onyx Studio 3 for louder sound. / Appuyez longtemps sur le bouton Bluetooth pour connecter une autre Onyx Studio 3 afin d'obtenir plus de puissance. / Mantenga pulsado el botón de Bluetooth para conectar otro Onyx Studio 3 y obtener un sonido más fuerte. / Pressione longamente o botão Bluetooth para conectar outra caixa Onyx Studio 3 e obter maior volume. / Halten Sie die Bluetooth-Taste länger gedrückt, um einen weiteren Onyx Studio 3 für noch mehr Klang zu verbinden. / Tieni premuto il pulsante Bluetooth per collegare un altro Onyx Studio 3 per un suono ancor più forte. / Houd de Bluetooth-toets ingedrukt om een andere Onyx Studio 3 aan te sluiten voor meer geluid. / Trykk og hold Bluetooth-knappen for å koble til enda en Onyx Studio 3 for høyere lyd. / Jos haluat voimakkaamman äänen, kytke toinen Onyx Studio 3 painamalla pitkään Bluetooth-painiketta. / Нажмите и удерживайте кнопку Bluetooth для подключения еще одного Onyx Studio 3 и увеличения громкости воспроизведения. / Håll inne Bluetooth-knappen när du vill ansluta till en andra Onyx Studio 3 och få högre ljud. / Hold Bluetooth-knappen inde, hvis du vil tilkoble en anden Onyx Studio 3 for at få højere lyd. / Bluetoothボタンを長押しして、もう一台のOnyx Studio 3(オニキス・スタジオ3)を接続しすることで、さらに大音量で楽しめます / Przytrzymaj przycisk Bluetooth, żeby podłączyć kolejny głośnik Onyx Studio 3 w celu zwiększenia głośności dźwięku. / 더 큰 사운드를 위해 다른 Onyx Studio 3을 연결하려면 Bluetooth 버튼을 길게 누르십시오. / 长按蓝牙按钮连接另一台 Onyx Studio 3 以提高音量。/ 長按 Bluetooth 按鈕連接另一個 Onyx Studio 3，從而獲得更大的聲音。/ Tekan lama tombol Bluetooth untuk menyambungkan Onyx Studio 3 lainnya demi suara yang lebih keras. / כדי לחבר התקן Onyx Studio 3 נוסף לקבלת צליל חזק יותר. לחץ לחיצה ממושכת על כפתור ה-Bluetooth

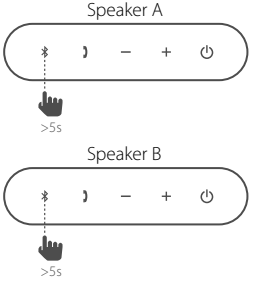

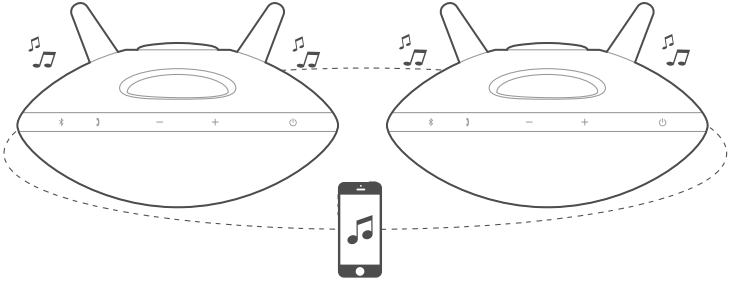

LED behaviour

	OFF	Blinking	ON
⏻	Speaker is OFF	White - Charging	Dim - Stand by
		Red - Low battery	Bright - ON
ᛒ	Not connected	Paring	Connected
📞	Call not active	Phone ringing	Call active

Please remove the front speaker grille to see the compliance information.
규정 준수 정보를 보려면 전면 스피커 그릴을 제거하십시오.

EN

- Bluetooth version: 4.1
- Support: A2DP 1.3 AVRCP 1.5 HFP 1.6
- Transducers: Woofer 2 x 75mm, Tweeter 2 x 20mm
- Rated Power: 4x15W(AC mode); 4x7.5W(Battery mode)
- Frequency response: 50Hz-20kHz(-6dB)
- Signal to noise ratio: 80dB A-weighted
- Power supply: 19V/2A
- Battery type: 3.7V/2600mAh Lithium-ion
- Battery charge time: 5hours
- Music playtime: up to 5hours (Varies by volume level and music content)
- Bluetooth® transmitter power: 0 - 9dBm
- Bluetooth® transmitter frequency range: 2402MHz - 2480MHz
- Bluetooth® transmitter modulation: GFSK,π /4 DQPSK, 8DPSK
- Dimension(H x W x D):278.0 x 162.8 x 258.0mm
- Weight:2071g

FR

- Version Bluetooth : 4.1
- Support : A2DP 1.3 AVRCP 1.5 HFP 1.6
- Haut-parleurs : Graves 2 x 75 mm, aigus 2 x 20 mm
- Puissance nominale : 4 x 15 W (mode secteur), 4 x 7,5 W (mode batterie)
- Réponse en fréquence : 50 Hz - 20 kHz (-6 dB)
- Rapport signal sur bruit : 80 dB pondération A
- Alimentation électrique : 19 V / 2 A
- Type de batterie : Lithium-ion 3,7 V / 2600 mAh
- Temps de charge de la batterie : 5 heures
- Autonomie : jusqu'à 5 heures (fonction du niveau du volume et du contenu audio)
- Puissance de l'émetteur Bluetooth® : 0 - 9 dBm
- Réponse en fréquence de l'émetteur Bluetooth® : 2402 MHz - 2480 MHz
- Modulation de l'émetteur Bluetooth® : GFSK,π /4 DQPSK, 8DPSK
- Dimensions (H x L x P): 278,0 x 162,8 x 258,0 mm
- Poids : 2071g

The Bluetooth® word mark and logos are registered trademarks owned by Bluetooth SIG, Inc. and any use of such marks by HARMAN International Industries, Incorporated is under license. Other trademarks and trade names are those of their respective owners.

Este equipamento opera em caráter secundário, isto é, não tem direito a proteção contra interferência prejudicial, mesmo de estações do mesmo tipo, e não pode causar interferência a sistemas operando em caráter primário"

Este produto está homologado pela ANATEL, de acordo com os procedimentos regulamentados pela Resolução 242/2000, e atende aos requisitos técnicos aplicados.

Para maiores informações, consulte o site da ANATEL – www.anatel.gov.br

ANATEL
Agência Nacional de Telecomunicações

XXXXXXXX

(01)07896359533671

CE 1856

TR01903_E