2579409-B EN 2211

HP SERIES

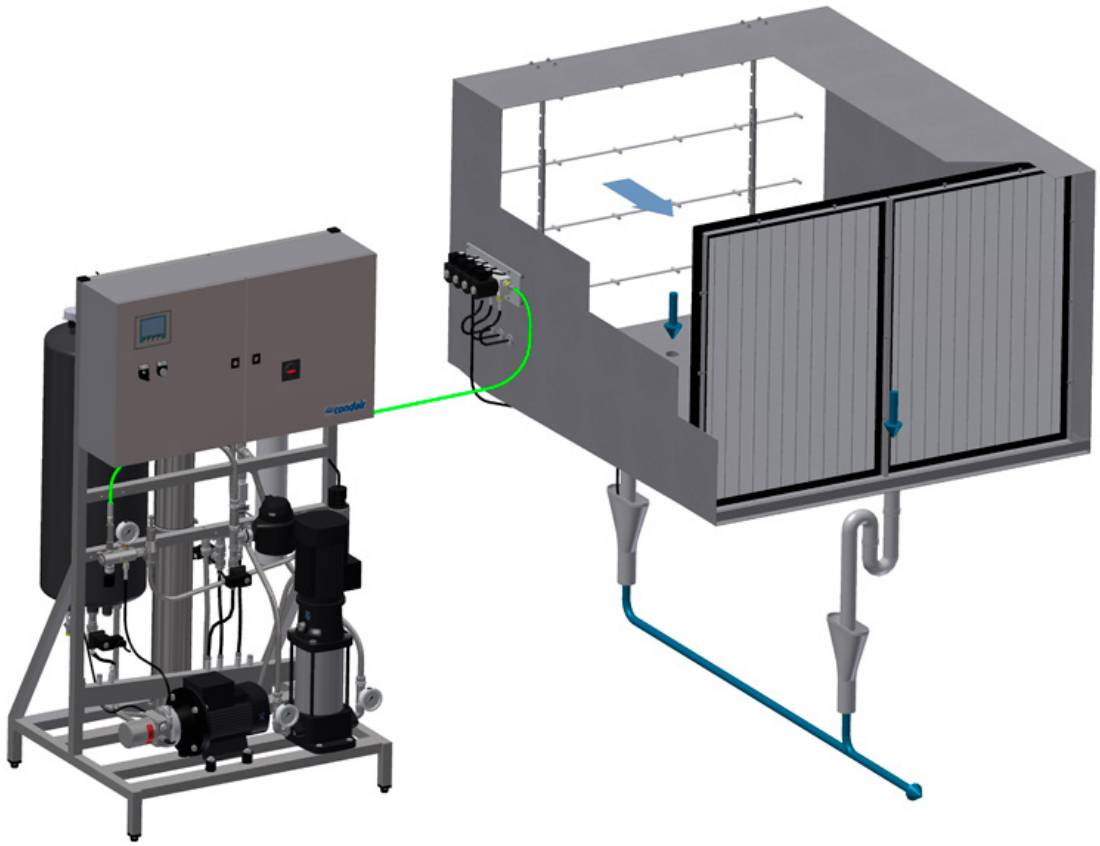

READ AND SAVE THESE INSTRUCTIONS

INSTALLATION AND OPERATION MANUAL

Adiabatic humidification system
Condair HP/HPRO
Valid from 2021

Humidification and Evaporative Cooling

condair

Thank you for choosing Condair

Installation date (MM/DD/YYYY):
Commissioning date (MM/DD/YYYY):
Site:
Model:
Serial number:

Manufacturer
Condair A/S
Parallelvej 2, DK-8680 Ry
phone +45 8788 2100
condair.dk@condair.com, www.condair.dk

Proprietary Notice

This document and the information disclosed herein are proprietary data of Condair A/S. Neither this document, nor the information contained herein shall be reproduced, used, or disclosed to others without the written authorization of Condair A/S, except to the extent required for installation or maintenance of recipient's equipment.

Liability Notice

Condair A/S does not accept any liability due to incorrect installation or operation of the equipment or due to the use of parts/components/equipment that are not authorized by Condair A/S.

Copyright Notice

Copyright 2021, Condair A/S All rights reserved.

Technical modifications reserved

Contents

1	**Introduction**	**6**
1.1	To the very beginning	6
1.2	Notes on the installation and operation manual	6
1.2.1	Symbols used in this manual	7
1.2.2	Safekeeping	7
1.2.3	Language versions	7
2	**Health and Safety**	**8**
2.1	General	8
2.2	Intended use	8
2.3	Danger that may arise from the Condair HP	9
2.4	Preventing unsafe operation	9
2.5	Prohibited modifications to the unit	10
2.6	Hygiene	10
2.7	Disinfection	12
3	**Overview of Condair HP and HPRO**	**13**
3.1	Model code	13
3.2	Condair HP system overview	13
3.2.1	Stand-alone system Condair HP (master configuration)	13
3.2.2	Compound system Condair HP (master-slave configuration)	14
3.2.3	Overview pump station Condair HP	15
3.2.4	Flow diagram pump station Condair HP 100 - 800	16
3.2.5	Part specification pump station Condair HP 100 - 800	16
3.2.6	Flow diagram pump station Condair HP 1300	17
3.2.7	Part specification pump station Condair HP 1300	17
3.2.8	Brief description of high-pressure pump station	18
3.3	Condair HPRO system overview	19
3.3.1	Stand-alone system Condair HPRO (master configuration)	19
3.3.2	Compound system Condair HPRO (master-slave configuration)	20
3.3.3	Overview pump station Condair HPRO 100, 200, 300	21
3.3.4	Flow diagram pump station Condair HPRO 100, 200, 300	21
3.3.5	Part specification pump station Condair HPRO 100, 200, 300	22
3.3.6	Overview pump station Condair HPRO 500	23
3.3.7	Flow diagram pump station Condair HPRO 500	24
3.3.8	Part specification pump station Condair HPRO 500	24
3.3.9	Overview pump station Condair HPRO 800	25
3.3.10	Flow diagram pump station Condair HPRO 800	26
3.3.11	Part specification pump station Condair HPRO 800	26
3.3.12	Brief description of pump station	27
3.4	Humidifier unit	28
3.4.1	Nozzle unit	29
3.4.2	Droplet separator	29
3.5	Functional description	29
3.5.1	General function	29
3.5.2	Control	30
3.5.3	Humidification	30
3.5.4	Monitoring of high-pressure pump	30
3.6	Scope of delivery	30

4	**Notes on planning**	**31**
4.1	Record of site-specific data	31
4.2	Options and Accessories	32
5	**Installation works**	**33**
5.1	Important notes on installation	33
5.2	System set-up	34
5.2.1	Stand-alone system (master configuration)	34
5.2.2	Compound system (master-slave configuration 1 or 2 slaves)	35
5.2.3	Compound system (master-slave configuration 3 slaves)	36
5.2.4	Compound system (slave configuration 4 slaves)	37
5.2.5	Compound system >800 l/h (master-slave configuration 3 slaves)	38
5.2.6	Compound system >800 l/h (slave configuration 4 slaves)	39
5.3	Mounting of the humidifier unit	40
5.3.1	Notes on positioning and mounting of the humidifier unit	40
5.3.2	Mounting the nozzle unit	41
5.3.3	Mounting the Condair droplet separator	49
5.3.4	Pressure loss over the droplet seperator	54
5.4	Mounting the pump station	55
5.4.1	Notes on positioning	55
5.4.2	Dimension and weights of pump station	56
5.4.3	Pump station installation	62
5.4.4	Water installation, Condair HP	63
5.4.5	Water installation, Condair HP RO	65
5.5	Electrical installation	68
5.5.1	How to connect to power supply	69
6	**Initial commissioning**	**70**
6.1	Cabinet layout	70
6.2	Insert inlet filter	71
6.3	Insert RO membrane (only for Condair HPRO models)	72
6.4	Mount sterile breathing filter (only for Condair HPRO models)	73
6.5	Set up the controller	73
6.6	Flushing procedure	74
6.6.1	Flushing the HPRO pump unit and RO membrane	75
6.6.2	Bleed air from the RO pump	76
6.6.3	Adjusting the reverse osmosis	77
6.6.3.1	Explanation of technical terminology	77
6.6.3.2	Water quality	78
6.6.3.3	Adjustment of outlet amount	79
6.6.3.4	Adjustment of permate amount	81
6.6.4	Manual operation	82
6.6.5	Flushing hoses and nozzle lines	83
6.7	Check list initial commissioning Condair HPRO	84
7	**Controller set-up**	**86**
7.1	Menu structure	87
7.2	Basic settings	88

8	**Operation**	**94**
8.1	Daily operation	94
8.2	Weekly inspection	95
8.3	Taking the HP/HPRO out of operation	96
8.4	Dismantling and disposal	97
9	**Maintenance**	**98**
9.1	Important notes on maintenance	98
9.2	Maintenance work	99
9.3	Part list for preventive maintenance	101
9.4	Maintenance indications	102
9.5	Disassembling and assembling of the mist eliminator for cleaning	102
10	**Troubleshooting**	**103**
10.1	Important notes on troubleshooting	103
10.2	Malfunction with error indication	103
10.3	Resetting the error indication	104
10.4	Malfunction without error indication	105
11	**Product data**	**106**
11.1	Technical data	106
11.1.1	Technical data Condair HP	106
11.1.2	Technical data Condair HPRO	107
11.2	Water quality requirements HP	108
11.3	Water quality requirements HPRO	108

1 Introduction

1.1 To the very beginning

We thank you for having purchased the **Condair HP or HPRO Adiabatic High Pressure Humidifier** (“Condair HP” for short).

The Condair HP incorporates the latest technical advances and meets all recognized safety standards. Nevertheless, improper use of the Condair HP may result in danger to the user or third parties and/or impairment of material assets.

To ensure a safe, proper, and economical operation of the Condair HP, please observe and comply with all information and safety instructions contained in the present documentation as well as in the separate documentations of the components installed in the humidification system.

If you have questions after reading this documentation, please contact your Condair representative. They will be glad to assist you.

1.2 Notes on the installation and operation manual

Limitation

The subject of this installation and operation manual is the Condair HP and HPRO Adiabatic High Pressure Humidifiers. The various options and accessories are only described insofar as this is necessary for proper operation of the equipment. Further information on options and accessories can be obtained in the respective instructions.

This operation manual is restricted to the **commissioning**, **operation**, **maintenance** and **troubleshooting** of the Condair HP and is meant for **well trained personnel being sufficiently qualified for their respective work**.

This installation and operation manual is supplemented by various separate items of documentation (installation drawings, technical specifications, etc.). Where necessary, appropriate cross-references are made to these publications in this installation and operation manual.

1.2.1 Symbols used in this manual

CAUTION!

The catchword “CAUTION” used in conjunction with the caution symbol in the circle designates notes in this installation and operation manual that, if neglected, may cause **damage and/or malfunction of the unit or other material assets**.

WARNING!

The catchword “WARNING” used in conjunction with the general caution symbol designates safety and danger notes in this installation and operation manual that, if neglected, may cause to **injury to persons**.

DANGER!

The catchword “DANGER” used in conjunction with the general caution symbol designates safety and danger notes in this installation and operation manual that, if neglected, may lead to **severe injury or even death of persons**.

1.2.2 Safekeeping

Please safeguard this installation and operation manual in a safe place, where it may be immediately accessed. If the equipment changes hands, the documentation must be passed on to the new operator.

If the documentation gets misplaced, please contact your Condair representative.

1.2.3 Language versions

This installation and operation manual is available in various languages. Please contact your Condair representative for information.

2 Health and Safety

2.1 General

This manual has been written to ensure the safe use, performance and longevity of the equipment and is intended for use by engineers and properly trained technical personnel. Please read this manual thoroughly before specifying, designing or installing a Condair HP system. Retain for reference.
Condair's policy is one of continuous research and development. Condair reserves the right to amend, without notice, the specifications provided in this document. Condair does not guarantee, or accept liability for, the accuracy of information in this document.

Installation, maintenance, repair work or de-commissioning should only be carried out by appropriately qualified and properly trained technical personnel. It is the customer's responsibility to ensure their suitability.

The customer is responsible for ensuring that the installation of the equipment complies with all local regulations and is in accordance with the local health and safety authorities' technical guidance on the control of bacteria in water systems.

It is the responsibility of the user to ensure that the water system complies with local regulations, byelaws and guidelines (such as the HSE ACoP L8, VDI 6022, ISO 22000, HACCP or equivalent). Any risks or hazards relating to the system, including during installation and maintenance, should be identified by a competent Health & Safety representative who shall be responsible for introducing effective control measures as needed.

All ideograms, signs and markings applied to the unit must be observed and kept in a readable state.

2.2 Intended use

The Condair HP is intended exclusively **for humidification in ventilation systems within the specified operating conditions.** Any other type of application without the express written consent of the manufacturer is considered as not conforming with the intended purpose and may lead to the Condair HP becoming dangerous.
Operation of the equipment in the intended manner requires **that all the information in this installation and operation manual be observed (in particular the safety instructions).**

2.3 Danger that may arise from the Condair HP

DANGER!
Risk of electric shock!

A person may come in contact with live parts when the pump station/control unit is open. Touching live parts may cause severe injury or danger to life.

Prevention: before carrying out any work on the Condair HP, take the unit out of operation as described in *Section 8.3* (switch off the unit, disconnect it from the mains and stop the water supply) and secure the unit against inadvertent power-up.

DANGER!
Health risk because of inadequate hygiene!

Poorly maintained humidification systems may endanger health. When insufficiently maintained, harmful germs can build up in the air duct and affect the duct air.

Prevention: read, understand and follow guidelines to ensure your system stays clean, in the Health and Safety section of this manual..

WARNING!

During operation the water system is at high pressure. Inappropriately fastened hoses can be torn out of the screw connections during operation due to the high pressure. There is danger of injury, in no circumstances loosen any hoses or screw connections during operation.

Prevention: always correctly tighten the high-pressure hoses and screw connections and do not loosen any hoses or screw connections during operation. Before carrying out any work on the Condair HP, take the unit out of operation as described in *Section 8.3* (switch off the unit, disconnect it from the mains and stop the water supply) and secure the unit against inadvertent power-up.

WARNING!

To prevent water stagnation and microbial contamination, the Condair HP power supply should be left switched on continuously. If the system is switched off for more than 48 hours the pipework and system should be disinfected as per the instructions and a full risk assessment undertaken to ensure safe operation

2.4 Preventing unsafe operation

If it is suspected that **safe operation is no longer possible**, the Condair HP should immediately **be shut down and secured against accidental power-up according to** *Section 8.3*. This can be the case under the following circumstances:

– if components of the Condair HP are damaged, worn or badly soiled.
– if the Condair HP does not work correctly.
– if connectors and lines are leaking.
– after long-time storage under unfavourable conditions.
– after transportation under unfavourable conditions.

All persons working with the Condair HP must report any alterations to the unit that may affect its safety to the owner without delay.

2.5 Prohibited modifications to the unit

No modifications may be undertaken on the Condair HP without the express written consent of the manufacturer.

For the replacement of defective components use exclusively **original accessories and spare parts** available from your Condair representative.

2.6 Hygiene

Clean water is important!

If the atomised water contains too many bacteria, these are carried along into the air. Once inhaled, they enter the lungs, where there is less resistance than in the stomach. By way of comparison, lung tissue provides a nice, warm environment for bacteria to live, where they have access to oxygen and nutrition so they can multiply quickly – and this can result in lung infections such as the dangerous Legionnaires' disease.

It is important that the feed water is of the same quality as drinking water and does not contain too many bacteria. If it is not possible to supply water of the same quality as drinking water, it is important to filter the water, as well as cleaning and disinfecting the system.

Your attention is drawn to the local Health & Safety Executive's technical guidance on the control of Legionellosis in water systems. If inadequately maintained, water systems, of which any humidifier is a part, can support the growth of micro-organisms, including the bacterium that causes Legionnaires' disease. The Condair HP is produced according to HACCP principles, which means that we have considered all aspects of this equipment to reduce as far as possible the risk of Legionnaires' disease and other similar conditions. However, keeping the system clean is the responsibility of the customer.

Guidelines to ensure your system stays clean and prevent the growth of Legionella

- Carry out a risk assessment of the water system using a competent person, and implement an appropriate monitoring and control programme.
- Initiate procedures for checking the UV system (if any), cleaning tanks, changing filters, disinfection, etc.
- The Condair HP & HPRO must be connected to a clean, potable mains water supply.
- Arrange a service contract to suit your company.
- Stop the system if polluted drinking water is found in your area.
- Avoid water temperatures which favour the growth of Legionella.
- Do not stop the system unless it is faulty or is leaking (Avoid water stagnation)
- Refrain from closing nozzles or sections, unless there is leakage or a fault (Avoid water stagnation)
- Disinfect the high-pressure system at least once a year and every time maintenance or repairs have been carried out. Always carry out a complete disinfection of the system if It has been turned off for more than 48 hours
- Have water samples taken and tested for harmful bacteria at least once a year.
- Have follow-up measurements done until the system is clean if bacteria have been detected in the system.

The Condair service team can help. Condair has specially trained technicians who can provide:

- Bacteriological troubleshooting relatively rapidly*
- Cleaning and disinfecting
- Preventive maintenance
- Repair and fault finding
- Problem-solving advice

* Condair uses a fast method for measuring bacterial activity in the water, the approved, patented BactiQuant. Once the water sample has been taken, we can read the bacteriological quality of the water within 30 minutes, and disinfect the system if this proves to be necessary.
Condair follows the guidelines in VDI 6022 for CFU counts in humidifiers. The CFU count in the humidification water must hence not exceed 200 CFU/ml, corresponding to a maximum BQ value of 57.

Not all Condair service centres can offer a bacteriological troubleshooting locally, please contact your local Condair representative for further information.

2.7 Disinfection

We recommend Sanosil as a disinfection agent in HP Systems. Disinfection should be carried out at least once a year, depending on the inlet water quality.

Calculation of mixing ratio between water and chemical - 5 % Sanosil S010 Ag to 0.1 %

Wanted concentration:		**0.1 %**		
Concentration of chemical:		**5 %**		
Mixed solution	**Water**	**Chemical**	**Chemical part**	
Liter	Liter	Liter	Liter	%
1	0.98	0.02	0.00	0.1
2	1.96	0.04	0.00	0.1
3	2.94	0.06	0.00	0.1
4	3.92	0.08	0.00	0.1
5	4.90	0.10	0.01	0.1
6	5.88	0.12	0.01	0.1
7	6.86	0.14	0.01	0.1
8	7.84	0.16	0.01	0.1
9	8.82	0.18	0.01	0.1
10	9.80	0.20	0.01	0.1
11	10.78	0.22	0.01	0.1
12	11.76	0.24	0.01	0.1
13	12.74	0.26	0.01	0.1
14	13.72	0.28	0.01	0.1
15	14.70	0.30	0.02	0.1
16	15.68	0.32	0.02	0.1
17	16.66	0.34	0.02	0.1
18	19.64	0.36	0.02	0.1
19	18.62	0.38	0.02	0.1
20	19.60	0.40	0.02	0.1
25	24.50	0.50	0.03	0.1
50	49.00	1.00	0.05	0.1
60	58.80	1.20	0.06	0.1
100	98.00	2.00	0.10	0.1
150	147.00	3.00	0.15	0.1
200	196.00	4.00	0.20	0.1
300	294.00	6.00	0.30	0.1
400	392.00	8.00	0.40	0.1
500	490.00	10.00	0.50	0.1
600	588.00	12.00	0.60	0.1
700	686.00	14.00	0.70	0.1
800	784.00	16.00	0.80	0.1
900	882.00	18.00	0.90	0.1
1000	980.00	20.00	1.00	0.1

3 Overview of Condair HP and HPRO

3.1 Model code

HPRO 100

High **P**ressure (Type)
Integrated **R**everse **O**smosis system
Nominal flow of high pressure pump l/h

3.2 Condair HP system overview

3.2.1 Stand-alone system Condair HP (master configuration)

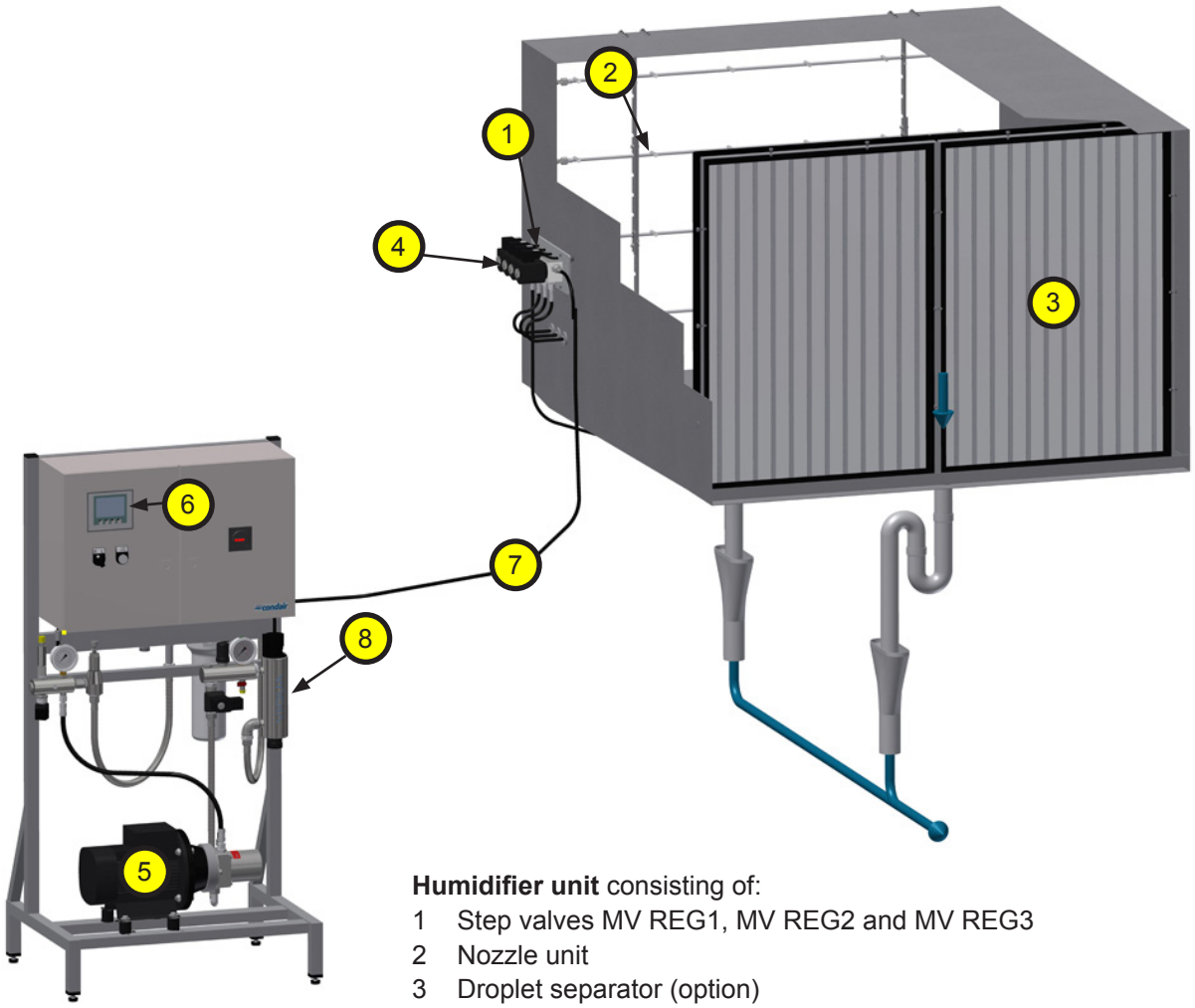

Humidifier unit consisting of:
1 Step valves MV REG1, MV REG2 and MV REG3
2 Nozzle unit
3 Droplet separator (option)
4 Flushing valve MV5 high-pressure system

Pump station consisting of:
5 High-pressure pump
6 Control unit, with touch screen
7 High-pressure flexible hose
8 UV-light system (option)

Fig. 1: Stand-alone system Condair HP (master configuration)

3.2.2 Compound system Condair HP (master-slave configuration)

Assuming the system data is within a defined range, the pump station of a stand-alone system may supply pressurized water to up to three further HP systems (slave systems). A so-called master-slave configuration is shown below.

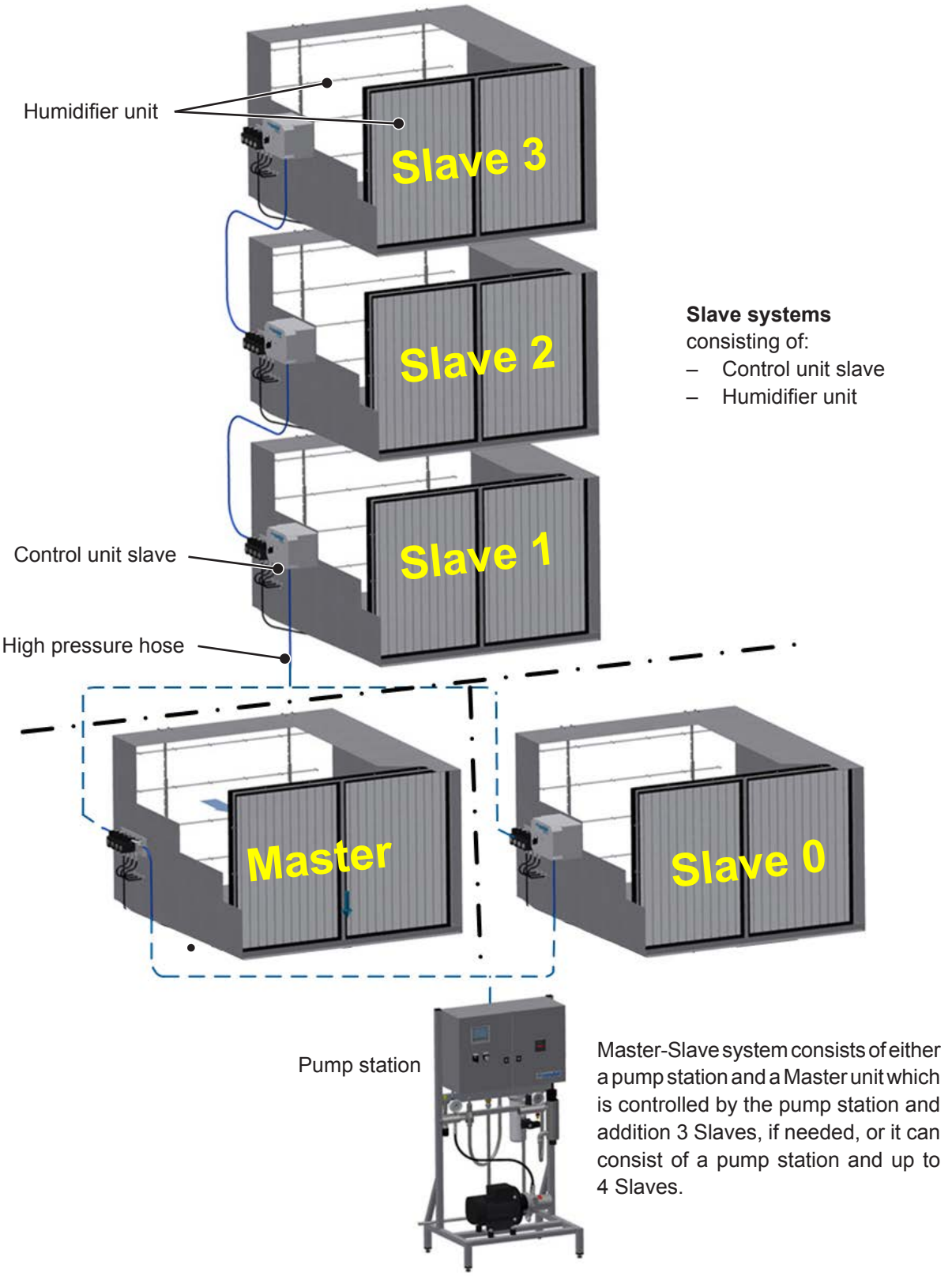

Fig. 2: Compound system Condair HP (master-slave configuration)

3.2.3 Overview pump station Condair HP



Fig. 3: Overview pump station Condair HP

3.2.4 Flow diagram pump station Condair HP 100 - 800

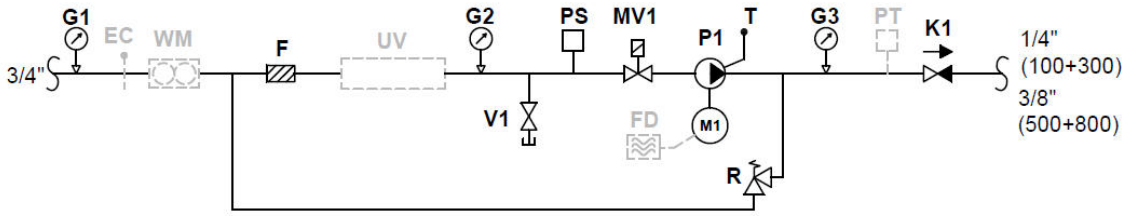

Fig. 4: Flow diagram pump stations Condair HP 100 - 800

3.2.5 Part specification pump station Condair HP 100 - 800

F		Inlet filter 20", 1µm
FD		Frequency drive VFD
G1		Pressure gauge 0-16 bar
G2		Pressure gauge 0-16 bar
G3		Pressure gauge 0-160 bar
K1		Check valve
M1		Motor for high pressure pump
MV1		Inlet solenoid valve
P1		PAHT high-pressure pump
PS		Inlet pressure switch 0.5 bar
PT		Pressure transmitter for VFD
R		Pressure regulator, 65 bar
T		PT1000 temperature transmitter
V1		Test water tap
Options:		
EC	(Option)	Inlet conductivity sensor
UV	(Option)	UV system
WM	(Option)	Water meter

3.2.6 Flow diagram pump station Condair HP 1300

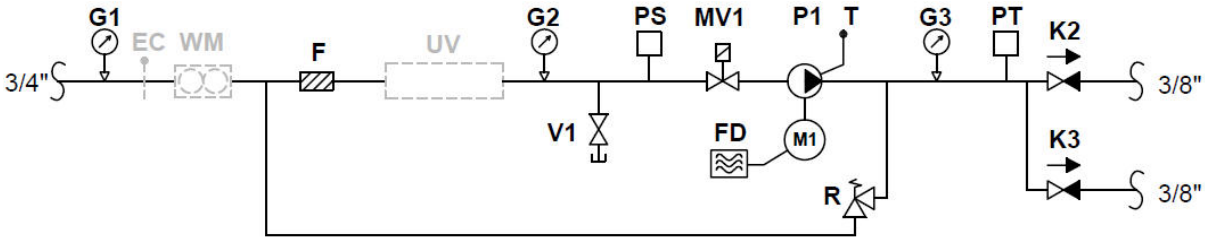

Fig. 5: Flow diagram pump station Condair HP 1300

3.2.7 Part specification pump station Condair HP 1300

F		Inlet filter 20", 1µm
FD		Frequency drive VFD
G1		Pressure gauge 0-16 bar
G2		Pressure gauge 0-16 bar
G3		Pressure gauge 0-160 bar
K2		Check valve
K3		Check valve
M1		Motor for high pressure pump
MV1		Inlet solenoid valve
P1		PAHT high-pressure pump
PS		Inlet pressure switch 0.5 bar
PT		Pressure transmitter for VFD
R		Pressure regulator, 65 bar
T		PT1000 temperature transmitter
V1		Test water tap
Options:		
EC	(Option)	Inlet conductivity sensor
UV	(Option)	UV system
WM	(Option)	Water meter

3.2.8 Brief description of high-pressure pump station

The hoses are drinking waterapproved high-pressure hoses, stainless braided or high-pressure hoses in dimension 1/4" or 3/8".The system is fitted on a frame and all components are assembled, tested and ready to use.

Pump unit: The water-lubricated high-pressure stainless steel pump is directly mounted on the electric motor.

The pump is protected against dry running by a pressure switch that stops the system if the water pressure drops. The high-pressure pump is protected against overheating by a temperature circuit that measures the current temperature in the pump.

Control unit: the control unit consists of the touch display and PLC. A power board, for control of the high-pressure pump and connection terminals for power supply (208...480V/3N~/50-60Hz).
The power board has an alarm switch (NC).

The pump station can be fitted with various options and extras described in *Section 4*.

The pump station is electrically wired at the factory. At the installation site, main power supply, the humidity signal or humidity sensor, external safety chain, step valves and chosen options must be electrically connected to the control unit.

3.3 Condair HPRO system overview

3.3.1 Stand-alone system Condair HPRO (master configuration)

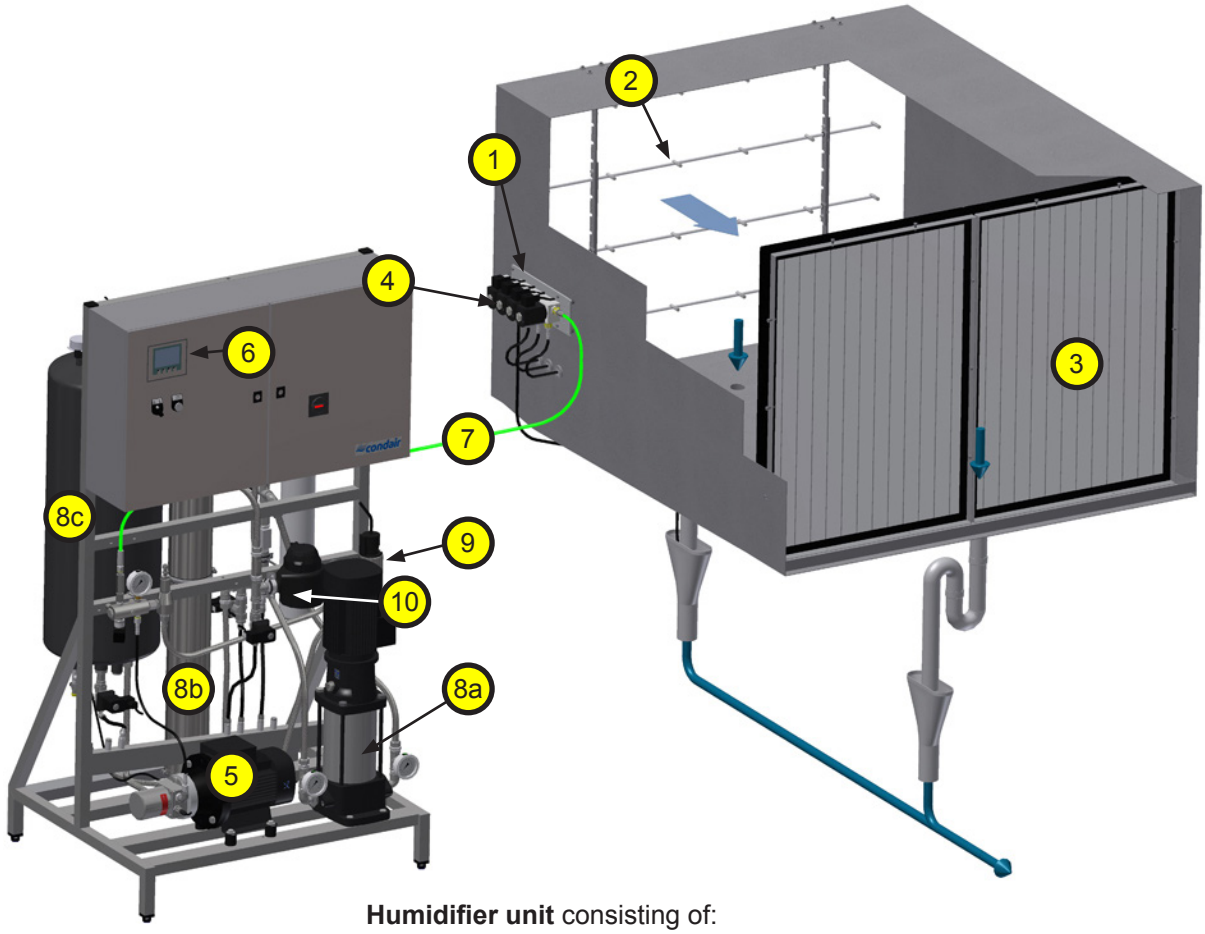

Humidifier unit consisting of:
1 Step valves MV REG1, MV REG2 and MV REG3
2 Nozzle unit
3 Droplet separator (option or product of other manufacturer)
4 Flushing valve MV5 high-pressure system

Pump station consisting of:
5 High-pressure pump
6 Control unit, with touch screen
7 High-pressure flexible hose
8 RO water treatment system (option)
a: RO pump
b: RO Membrane
c: RO water storage tank
9 UV-light system
10 Water meter

Fig. 6: Stand-alone system Condair HPRO (master configuration)

3.3.2 Compound system Condair HPRO (master-slave configuration)

It is possible to add up to three slave humidifiers to one master configuration. A so-called master-slave configuration as shown below.

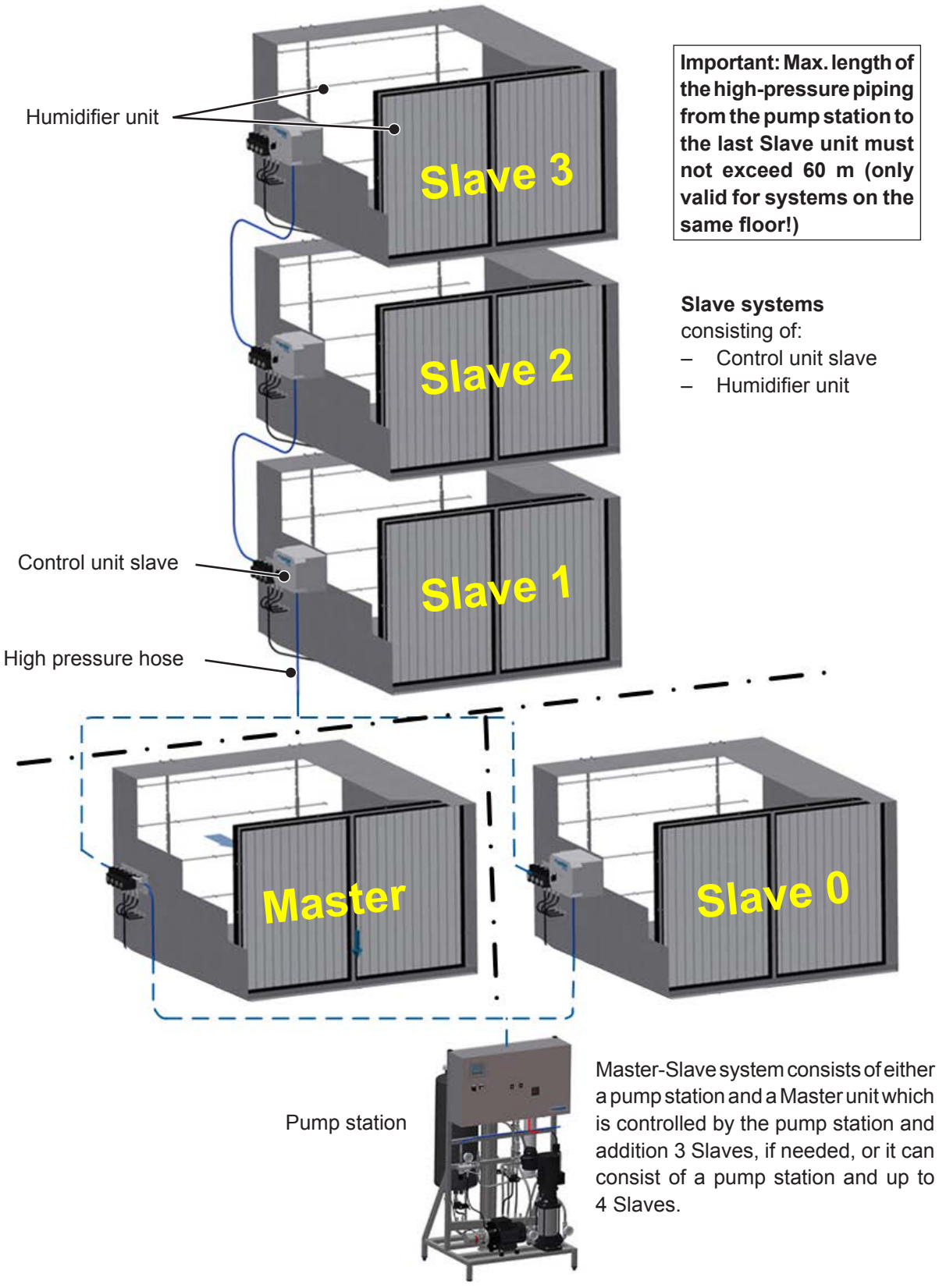

Important: Max. length of the high-pressure piping from the pump station to the last Slave unit must not exceed 60 m (only valid for systems on the same floor!)

Slave systems
consisting of:
– Control unit slave
– Humidifier unit

Master-Slave system consists of either a pump station and a Master unit which is controlled by the pump station and addition 3 Slaves, if needed, or it can consist of a pump station and up to 4 Slaves.

Fig. 7: Compound system Condair HPRO (master-slave configuration)

3.3.3 Overview pump station Condair HPRO 100, 200, 300

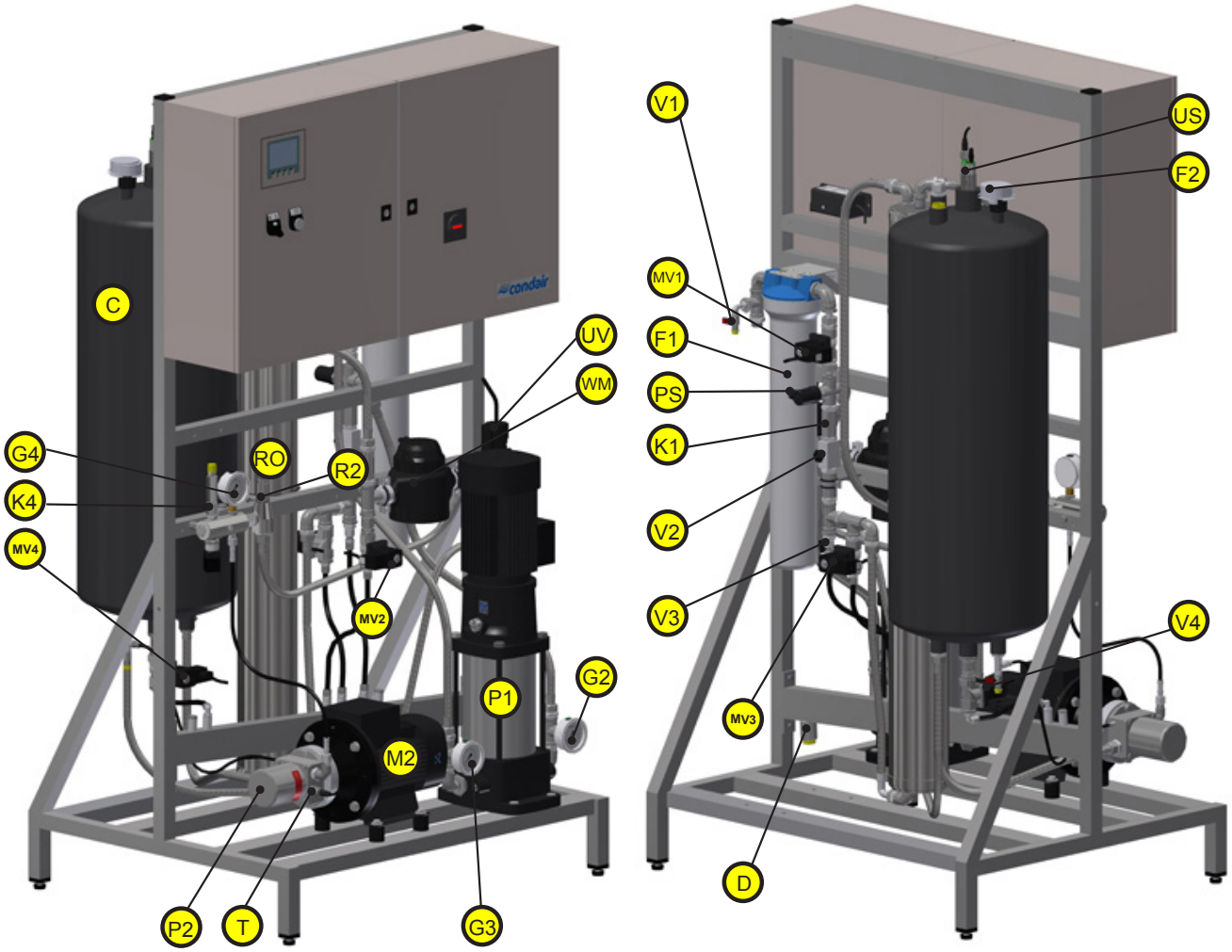

Fig. 8: Overview pump station Condair HPRO 100, 200, 300

3.3.4 Flow diagram pump station Condair HPRO 100, 200, 300

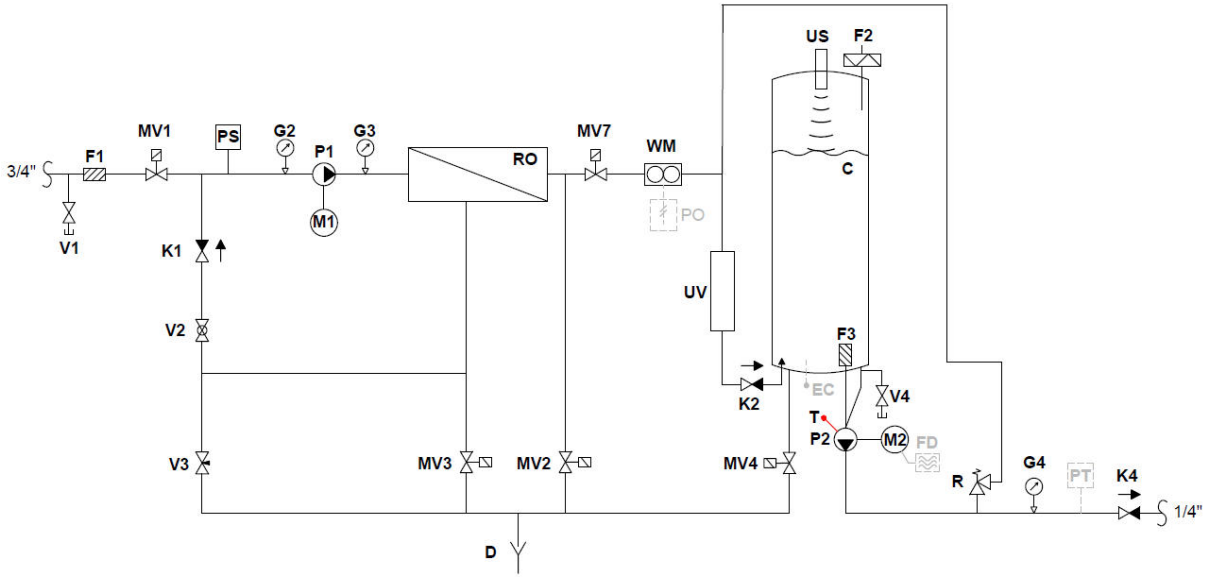

Fig. 9: Flow diagram pump station Condair HPRO 100, 200, 300

3.3.5 Part specification pump station Condair HPRO 100, 200, 300

C		Permeate container, 55 l
D		Drain pipe
F1		Inlet filter 20", 5 µm
F2		Sterile breathing filter 0.2 µm
F3		Suction filter
FD		Frequency drive VFD
G2		Pressure gauge 0-16 bar
G3		Pressure gauge 0-16 bar
G4		Pressure gauge 0-160 bar
K1		Check valve
K4		Check valve
M1/P1		RO pump
M2		Motor for high-pressure pump
MV1		Inlet solonoid valve
MV2		Solonoid valve for flushing at start-up
MV3		Solonoid valve for membrane flushing
MV4		Solonoid drain valve
MV7		Inlet solonoid valve
P2		PAHT high-pressure pump
PS		Inlet pressure switch, 0.5 bar
PT		Pressure transmitter for VFD
RO		RO membrane
R		Pressure regulator, 65 bar
T		PT1000 temperature transmitter
US		Ultra sound level sensor
UV		UV system
V1		Test water tap
V2		Adjustment valve for return flow
V3		Needle valve for concentrate flow
V4		Test water tap
WM		Water meter
Options:		
EC	(Option)	Conductivity sensor
PO	(Option)	Pulse output for water meter

3.3.6 Overview pump station Condair HPRO 500

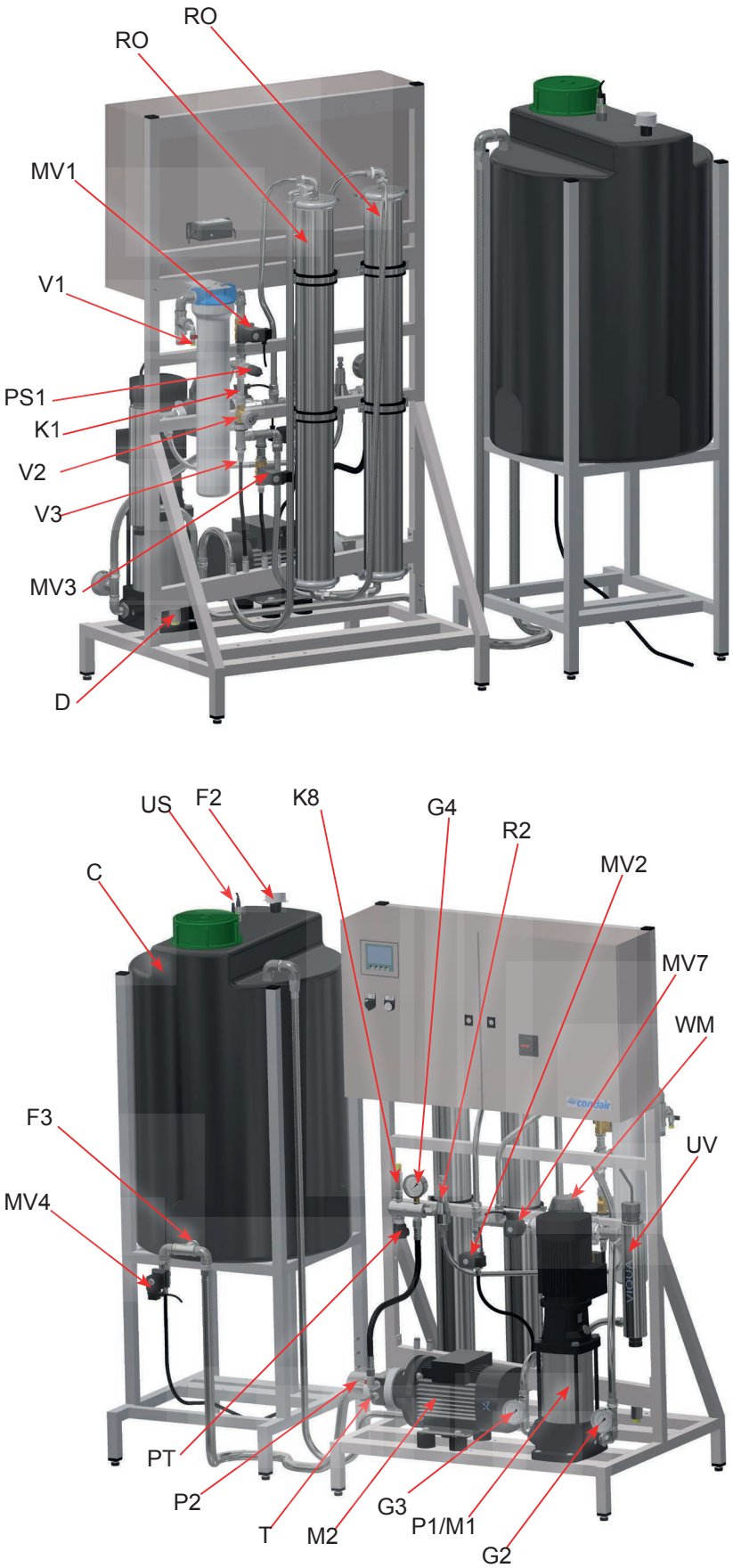

Fig. 10: Overview pump station Condair HPRO 500

3.3.7 Flow diagram pump station Condair HPRO 500

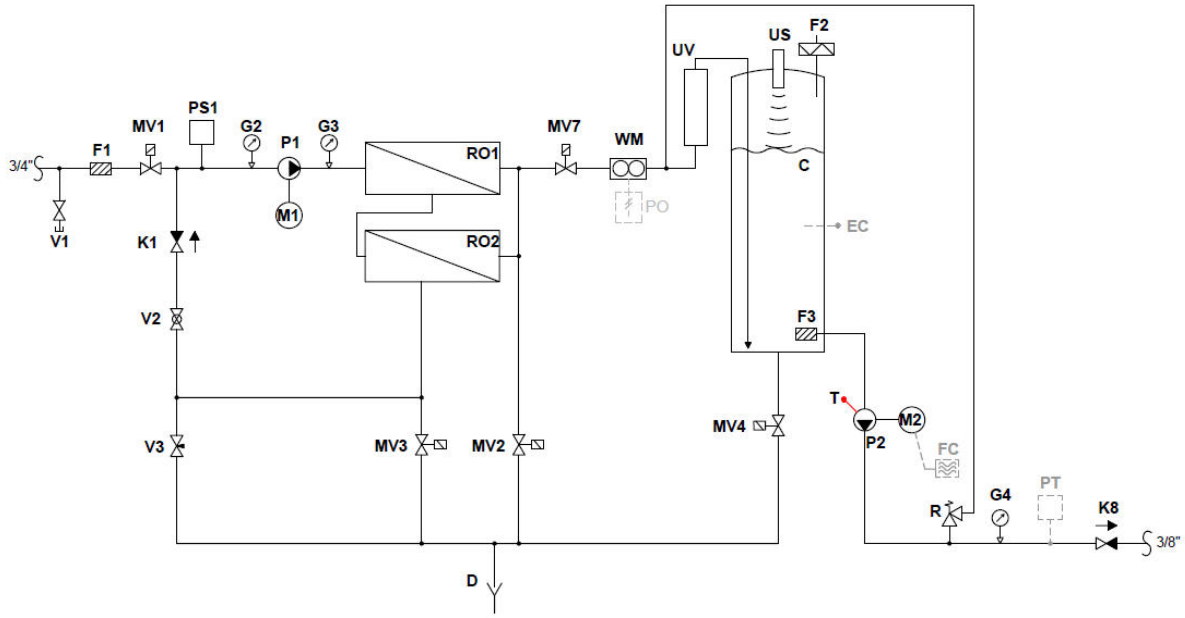

Fig. 11: Flow diagram pump station Condair HPRO 500

3.3.8 Part specification pump station Condair HPRO 500

C		Permeate container, 55 l
D		Drain pipe
F1		Inlet filter 20", 5 µm
F2		Sterile breathing filter 0.2 µm
F3		Suction filter
FD		Frequency drive VFD
G2		Pressure gauge 0-16 bar
G3		Pressure gauge 0-16 bar
G4		Pressure gauge 0-160 bar
K1		Check valve
K4		Check valve
M1/P1		RO pump
M2		Motor for high-pressure pump
MV1		Inlet solonoid valve
MV2		Solonoid valve for flushing at start-up
MV3		Solonoid valve for membrane flushing
MV4		Solonoid drain valve
MV7		Inlet solonoid valve
P2		PAHT high-pressure pump
PS		Inlet pressure switch, 0.5 bar
PT		Pressure transmitter for VFD
RO		RO membrane
R		Pressure regulator, 65 bar
T		PT1000 temperature transmitter
US		Ultra sound level sensor
UV		UV system
V1		Test water tap
V2		Adjustment valve for return flow
V3		Needle valve for concentrate flow
V4		Test water tap
WM		Water meter
Options:		
EC	(Option)	Conductivity sensor
PO	(Option)	Pulse output for water meter

3.3.9 Overview pump station Condair HPRO 800

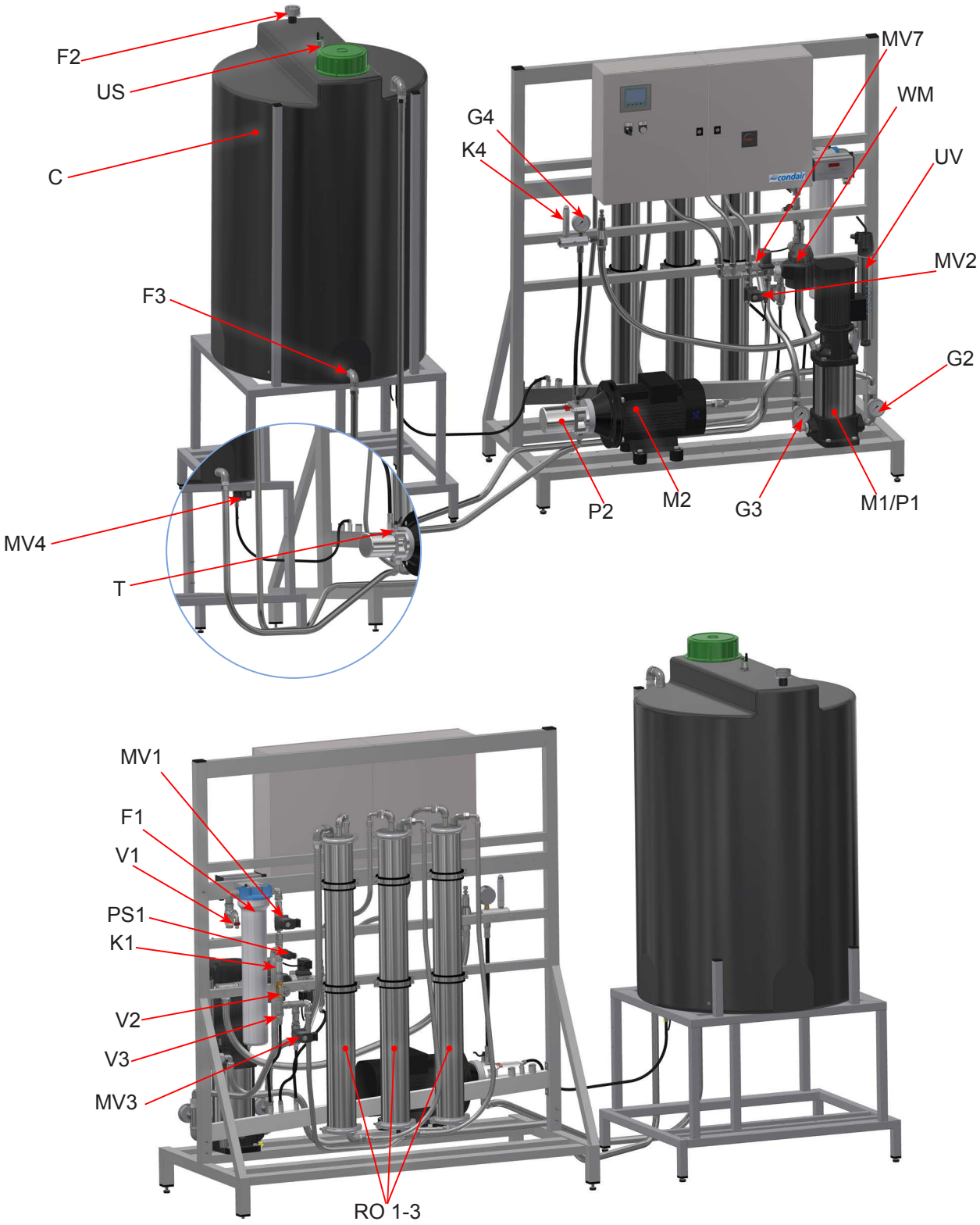

Fig. 12: Overview pump station Condair HPRO 800

3.3.10 Flow diagram pump station Condair HPRO 800

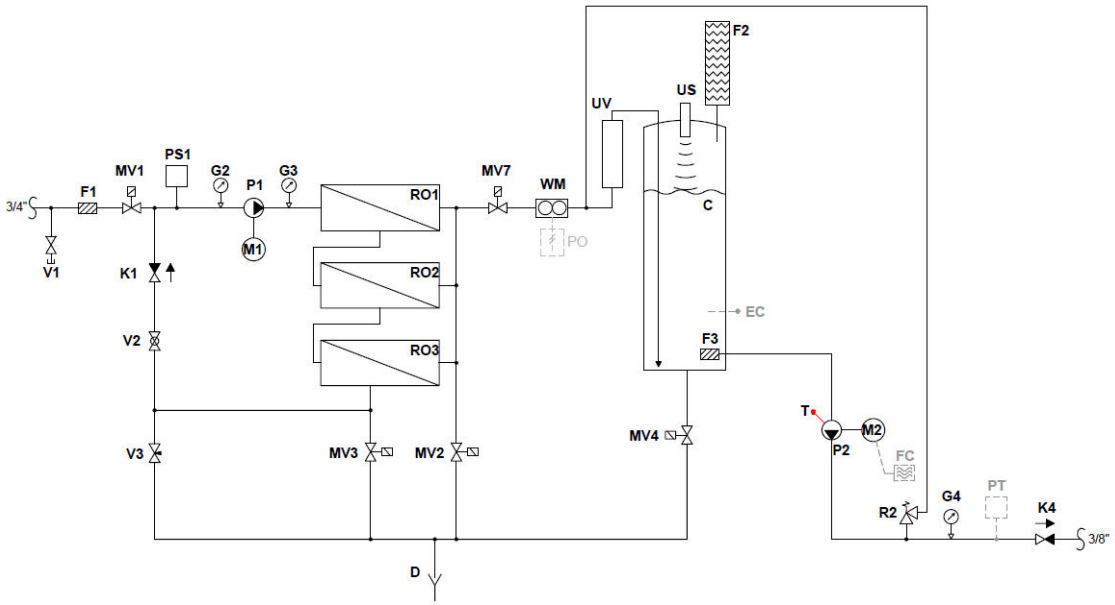

Fig. 13: Flow diagram pump station Condair HPRO 800

3.3.11 Part specification pump station Condair HPRO 800

C		Permeate container, 55 l
D		Drain pipe
F1		Inlet filter 20", 5 µm
F2		Sterile breathing filter 0.2 µm
F3		Suction filter
FD		Frequency drive VFD
G2		Pressure gauge 0-16 bar
G3		Pressure gauge 0-16 bar
G4		Pressure gauge 0-160 bar
K1		Check valve
K4		Check valve
M1/P1		RO pump
M2		Motor for high-pressure pump
MV1		Inlet solonoid valve
MV2		Solonoid valve for flushing at start-up
MV3		Solonoid valve for membrane flushing
MV4		Solonoid drain valve
MV7		Inlet solonoid valve
P2		PAHT high-pressure pump
PS		Inlet pressure switch, 0.5 bar
PT		Pressure transmitter for VFD
RO		RO membrane
R		Pressure regulator, 65 bar
T		PT1000 temperature transmitter
US		Ultra sound level sensor
UV		UV system
V1		Test water tap
V2		Adjustment valve for return flow
V3		Needle valve for concentrate flow
V4		Test water tap
WM		Water meter
Options:		
EC	(Option)	Conductivity sensor
PO	(Option)	Pulse output for water meter

3.3.12 Brief description of pump station

Combined high-pressure pump station and reverse osmosis system.

The hoses are drinking waterapproved hoses, steel braided or high-pressure hoses in dimension 1/4" or 3/8".The system is fitted on a frame and all components are assembled, tested and ready to use.

Pump unit: The water-lubricated high-pressure stainless steel pump is directly mounted to the electric motor.

In the water inlet a pressure switch protects the RO pump from dry running.
The high-pressure pump is protected against dry running by the level switch in the RO tank that stops the system if water level drops. The high-pressure pump is protected against overheating by a temperature sensor that measures temperature inside the pump.

Control unit: the control unit consists of the touch display and PLC. A power board, for control of the high-pressure pump and connection terminals for power supply (208...480 V/3N~/50-60 Hz).

The power board has an alarm switch (NC).

The pump station is electrically wired at the factory. At the installation site, main power supply, the humidity signal or humidity sensor, external safety chain, step valves and chosen options must be electrically connected to the control unit.

3.4 Humidifier unit

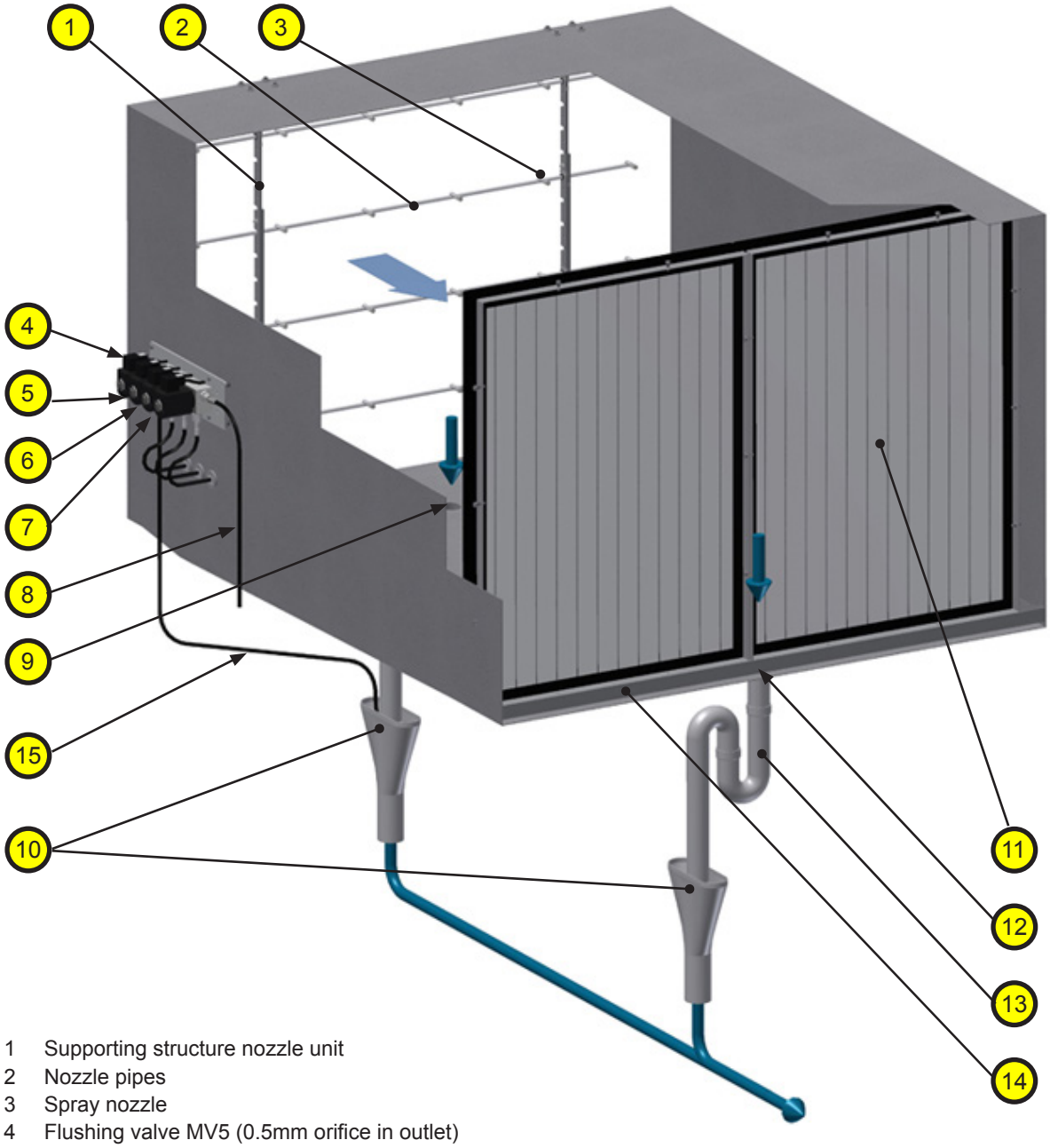

1 Supporting structure nozzle unit
2 Nozzle pipes
3 Spray nozzle
4 Flushing valve MV5 (0.5mm orifice in outlet)
5 Step valve MV REG3 (4/7)
6 Step valve MV REG2 (2/7)
7 Step valve MV REG1 (1/7)
8 High-pressure hose from pump station
9 Water drain after nozzles
10 Open drain funnel (by customers)
11 Droplet separator (option or product of other manufacturer)
12 Water drain after humidifier unit
13 Siphon (by customers, height adapted to duct pressure)
14 Separation element humidifier unit
(min. height: 3 cm, sealed towards the duct floor and the duct walls)
15 Drain hose from flush valve MV5

Fig. 14: Humidifier Unit

3.4.1 Nozzle unit

The nozzle unit consists of several nozzle pipes, which are equipped with the necessary number of nozzles (system-specific). The individual nozzle pipes are divided into three different spray circuits (1/7, 2/7 and 4/7). The spray circuits are connected via high-pressure hoses 1/8" or 1/4" and T-pieces to the valve block.

3.4.2 Droplet separator

The installation of a droplet separator is the customer's responsibility. An optional Condair droplet separator is available for the Condair HP.

Note regarding the Condair droplet separator: Due to the special surface finish of the separator profiles the Condair droplet separator unfolds its full effect not before 4-8 weeks after the initial commissioning (time depending on the water quality on site).

3.5 Functional description

3.5.1 General function

Pressurized water is feed to the nozzles, through hoses connected via a valve block to the nozzle pipes. The nozzles atomises the water to a fine mist witch is absorbed by the air inside the duct.

The Condair HP control system consists of a PLC (Programmable Logic Controller) which controls the valves and adjusts humidity in the duct. Adjustment is carried out by means of a special proportional regulator, which activates the necessary number of steps (valves) in relation to the current humidity requirement.

A flushing function is included, which protects against hygiene problems related to standing water. If one of the nozzle pipes has been inactive for half an hour, the control will trigger a rinse pulse lasting two seconds. This ensures that no standing water in pipes or hoses will be older than a few hours.

The control signal comes from an analogue 0-10 volt signal. It is possible to choose between two different modes for this signal:

– Humidity control, where humidity is measured against the relevant input and the control then calculates how many steps to activate in order to achieve the required level of humidity.
– Direct capacity, where the required capacity is transferred directly from a possible CTS/BMS.

Hour counters are incorporated into the control unit. One hour counter that indicates the pump's running time to be used for setting service intervals, one hour counter for the RO pump and one hour counter for each of the steps, which summarises the period of time where each step is active.

3.5.2 Control

With stand-alone systems (master configuration) the control unit is built into the pump station. The control unit features a separate power supply (208...480V/3N~/50-60Hz), a control/humidity signal input, connectors for the external safety chain and relay connectors for the remote operation and fault indication (option). In addition, the control unit incorporates the frequency converter for the control of the jetting pump.

With compound systems, each slave is equipped with a separate control unit. Each control unit features a separate power supply (110-240V/1N~/50-60Hz), a control/humidity signal input, connectors for the external safety chain and relay connectors for the remote operation and fault indication (option). A bus cable connects each slave control unit to the control unit of the master system that controls the high-pressure pump.

3.5.3 Humidification

The control of the humidification system is established via an external P/PI controller or the PID controller built into the control unit.

As standard, the humidification is effected with 7 stages in accordance with the following diagram. Finer gradations are possible with four Reg valves which gives a 15-stage regulation (option).

3.5.4 Monitoring of high-pressure pump

The supply pressure and pump temperature are permanently monitored. The HP pump automatically stops if one of these values is outside the admissible range. A respective error message appears in the display.

In addition, the control unit of the pump station and the slave control units can be equipped with a remote operating and fault indication print. The following operating conditions can be transferred by the relays: “Error”, “Humidification”, “Maintenance” and “Unit on”.

3.6 Scope of delivery

The delivery includes:

– Pump station complete with pre-filter and control unit.
– Nozzle unit(s) including hoses, step/flush valve block and mounting parts.
– High-pressure hose (3 m) for high-pressure piping between pump station and valve block.
– Hose feed through 6 pcs. for double -walled duct.
– Special cable to step valves REG1, REG2, REG3 (3 meters).
– Alarm switch (NC).
– Installation and operation manual (the document you are currently reading).
– Installation drawing with mounting dimensions.
– Piping diagram.

4 Notes on planning

Prior to designing and selecting a Condair HP humidification system the following preparatory steps must be carried out:

- Collecting site-specific data required for system design (see *Section 4.1*)
- Selecting the desired options (see *Section 4.2*)

4.1 Record of site-specific data

Your Condair representative needs the following data for proper system design:

Duct dimensions		
Width (inner)	mm	_____
Height (inner)	mm	_____
Length of evaporation distance, min. 800 mm, (from nozzle tip to front of mist eliminator)	mm	_____
Wall thickness of duct where the hoses will be passed through	mm	_____
Air velocity in duct	m/s	_____
Air volume to be humidified per hour	m^3/h	_____
Air pressure (absolute) in housing --> not mandatory necessarily	Pa	_____
State of supply air prior to humidification		
Temperature T1	°C	_____
Humidity x1	g/kg / %rh	_____
Desired state of air after humidification		
Temperature T2	°C	_____
Humidity x2	g/kg / %rh	_____

Important notes:

– If a particular site is to be equipped with several HP systems, determine the above data for each system separately. Your Condair representative will then evaluate whether the particular systems may be operated in a master-slave compound configuration.

– Evaporating aerosols cools down the air inside the duct (adiabatic cooling effect). To achieve the desired air temperature the supply air must be heated prior to humidification.

4.2 Options and Accessories

Option	Description
Master/slave configuration	Allows up to 4 individually controlled humidifiers to share a common pump.
UV Water Treatment Condair recommends always choosing this option**!**	Factory installed ultraviolet lamp inhibits bacterial growth in the humidification water enhancing hygienic operation and improving operational safety.
Droplet Separator	Easy to install droplet filter contains water to a given evaporation distance and improves water efficiency through post evaporation.
Conductivity sensor	Continuously monitors incoming water quality by measuring conductivity and triggers alarm if water values are out of range. Provides peace of mind and well as enhanced operational safety.
Water meter	Integrated water meter shows consumption. Ideal for building performance monitoring or claiming regional water and sewer tax credits.
High Precision System **15 step regulation**	Extra step valve which improves humidity regulation accuracy up to ±2 RH%
Digital Status relay	The pump station is fitted with four digital status relays: Alarm (pump stopped), On/off status, Humidifying and Maintenance
Communication Gateway	Communication gateway using the TCP/IP protocol, integrating the Condair HP/HPRO into a monitoring, automation or BAS system.
Integrated RO-system	Provides a high performance reverse osmosis water treatment system integrated directly into the high-pressure pump skid.

Accessory	Description
Water Softener	Self-regenerating ion exchange softener is ideal for systems with integrated RO system. Removes hardness prior to the RO system prolonging membrane life and saving water.
Carbon Filters	Activated carbon pre-filter removes free chlorine from supply water. Recommended for systems with integrated RO system when chlorine concentrations are above 0.05 – 0.1 mg/l.
Additional Hose	Provides additional high-pressure hose for connections between pump and valve blocks. Available in 3, 5 and 10 m lengths.

5 Installation works

5.1 Important notes on installation

Qualification of personnel

All installation work must be performed only by persons familiar with the Condair HP Adiabatic High Pressure Humidifier and sufficiently qualified for such work.

All work concerning the electric installation must be performed only by adequately qualified personnel (electrician or workman with equivalent training).

Safety

For all installation work the ventilation system in which the Condair HP will be installed is to be rendered inoperative and prevented from further inadvertent operation.

The pump station and possible Slave control units may be connected to electric mains only after all installation work has been completed.

General notes

All statements relating to the correct positioning and installation must be followed and complied with.

When installing components of the Condair HP use the fixing materials supplied with the unit. If fixing with the materials supplied is not possible in your particular case, select a method of fixing that is of similar stability. In case of doubt, please contact your Condair supplier.

Tools needed for installation work

– 32 mm locksaw (to drill the holes for hose bushings in duct)
– Power drill with steel drill bits set
– Screwdriver set (remember small screwdriver for terminals)
– Bubble level
– Polygrip pliers
– Wire cutters
– Spanner set
– Sealant gun with water resistant sealant (sealant must be approved by local regulations for materials in air ducts)
– Tape measure
– Marker
– Box cutter

Note! The Condair HP are delivered with all hoses cut into length and fitted with the hose connectors needed to do the installation. However sometimes it is desirable to shorten the hoses. In this case always use the special hose tool to avoid leaks:

Part No.	Description
160001000	Part no 160001000. Special tools for assembling of 1/8" hose
160005000	Part no 160005000. Special tools for assembling of 1/4" hose
160006000	Part no 160006000. Special tools for assembling of 3/8" hose
160002000	Part no 160002000. Circular cutter for high-pressure hose

5.2 System set-up

5.2.1 Stand-alone system (master configuration)

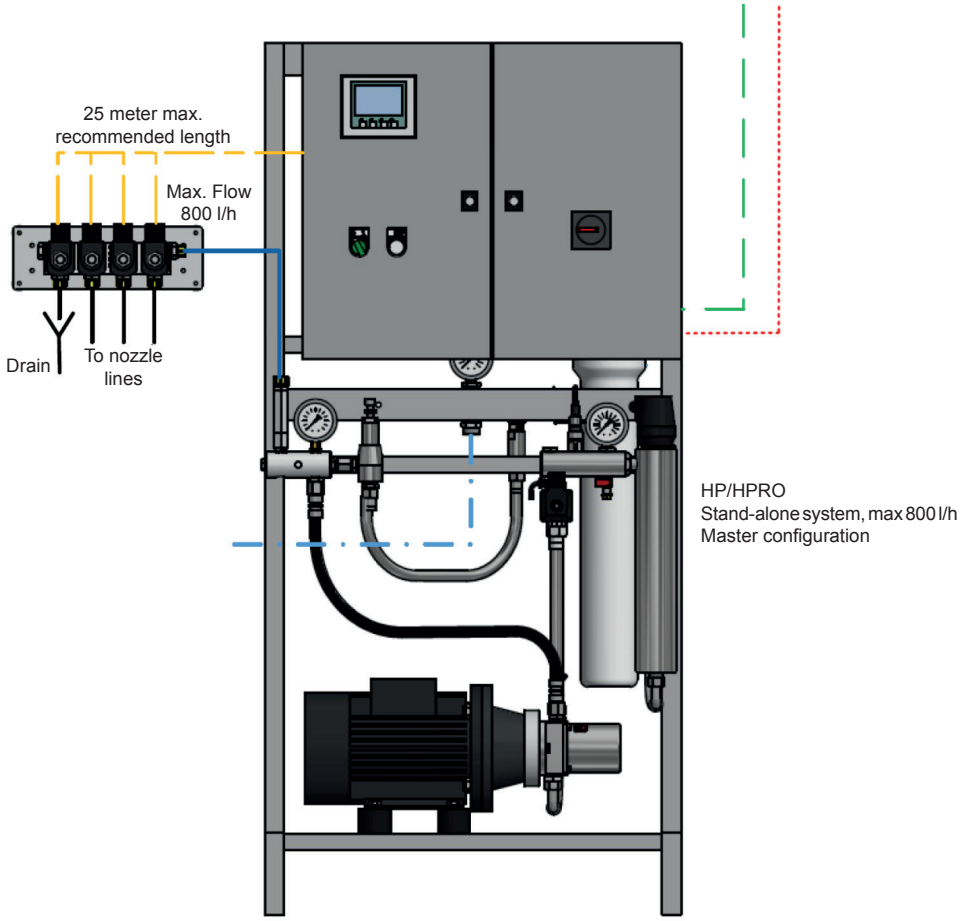

Power supply to pump station, 208 ... 480 V / 50/60 Hz

External power supply to slave control cabinet, 110-240 V / 50/60 Hz

On/Off supply solenoids, 24V DC

Control humidity signal, 0... 10 V or 4...20 mA control/humidity signal

Internal communication, RJ45 cable, LAN, TCP/IP protocol

Water supply (HP: 1 .. 4 bar, HPRO: 2.5 ... 7 bar)

High pressure water to valve block and nozzle lines, 60 ... 70 bar

Fig. 15: Stand-alone system (master configuration)

5.2.2 Compound system (master-slave configuration 1 or 2 slaves)

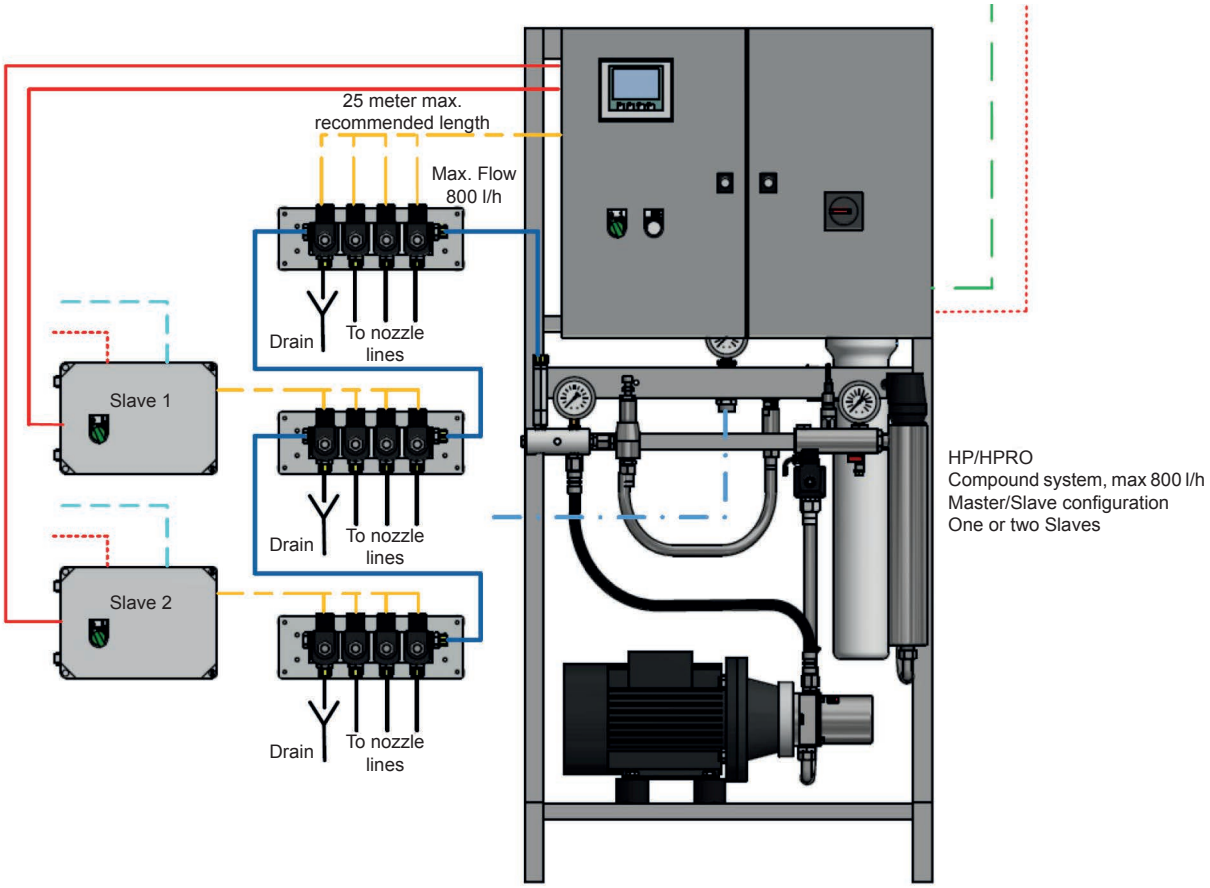

Power supply to pump station, 208 ... 480 V / 50/60 Hz

External power supply to slave control cabinet, 110-240 V / 50/60 Hz

On/Off supply solenoids, 24V DC

Control humidity signal, 0... 10 V or 4...20 mA control/humidity signal

Internal communication, RJ45 cable, LAN, TCP/IP protocol

Water supply (HP: 1 .. 4 bar, HPRO: 2.5 ... 7 bar)

High pressure water to valve block and nozzle lines, 60 ... 70 bar

Fig. 16: Compound system (master-slave configuration 1 or 2 slaves)

5.2.3 Compound system (master-slave configuration 3 slaves)

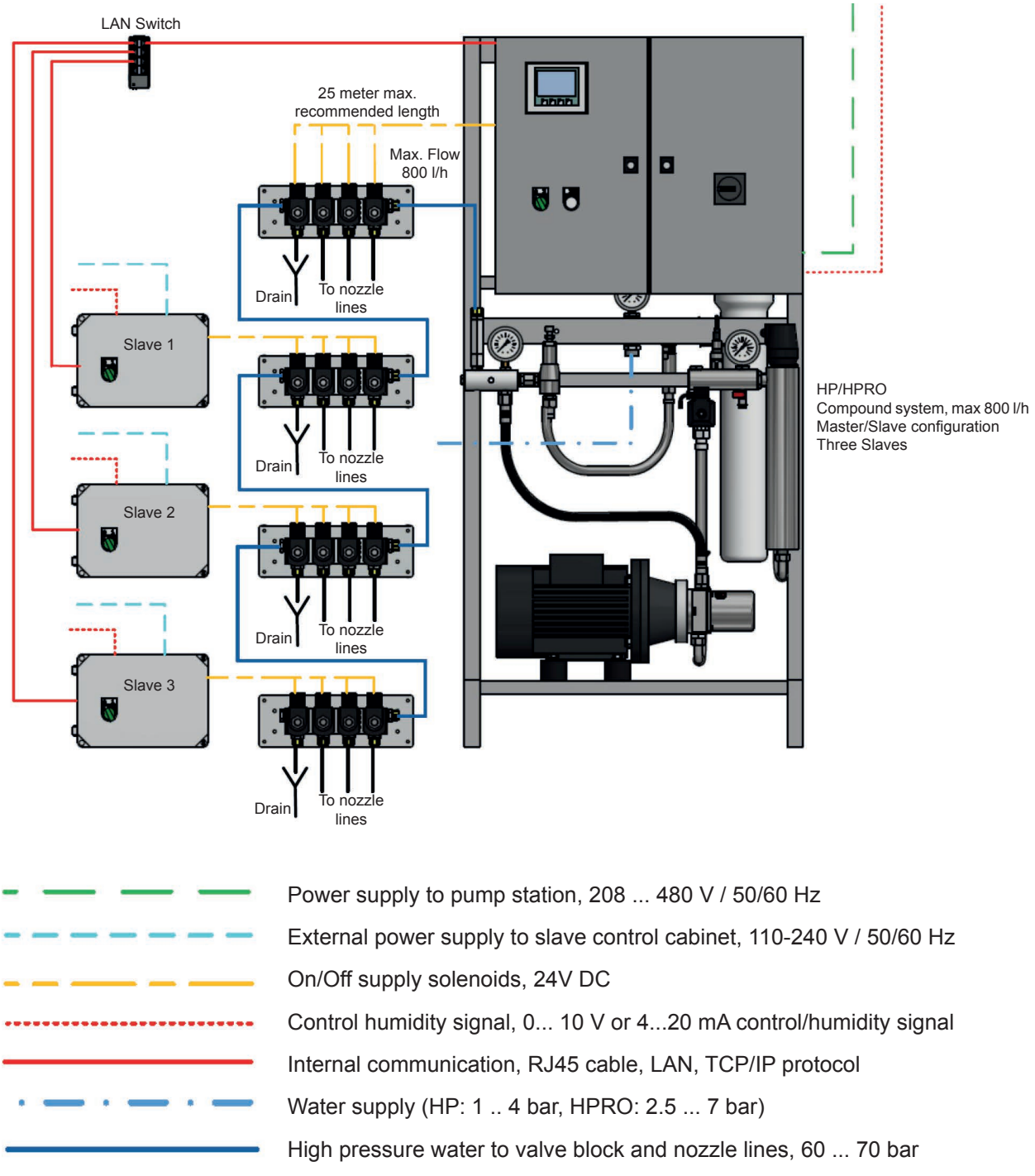

Fig. 17: Compound system (master-slave configuration 3 slaves)

Note: The data switch used when connecting 3-4 slaves are not supplied by Condair

5.2.4 Compound system (slave configuration 4 slaves)

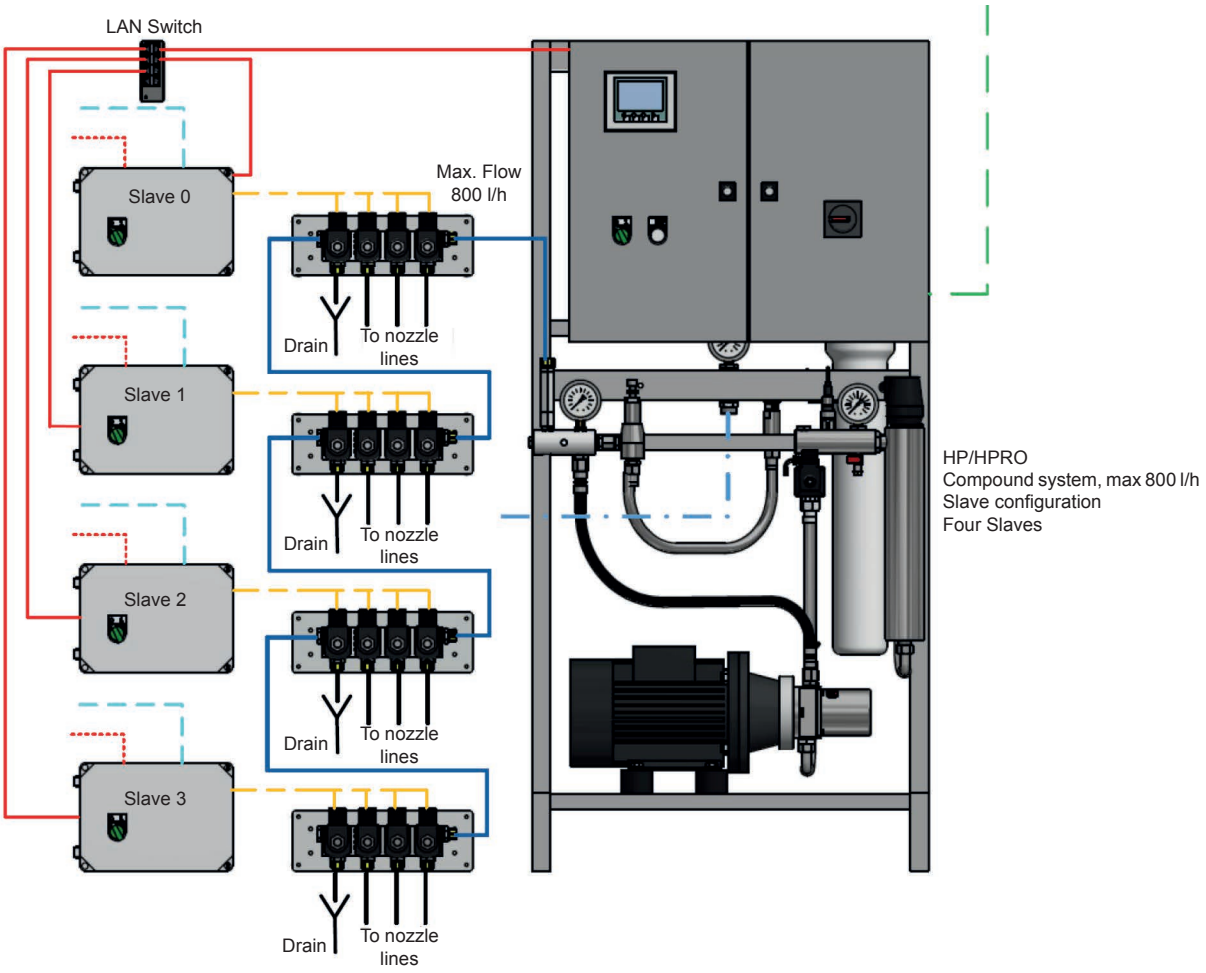

Power supply to pump station, 208 ... 480 V / 50/60 Hz

External power supply to slave control cabinet, 110-240 V / 50/60 Hz

On/Off supply solenoids, 24V DC

Control humidity signal, 0... 10 V or 4...20 mA control/humidity signal

Internal communication, RJ45 cable, LAN, TCP/IP protocol

Water supply (HP: 1 .. 4 bar, HPRO: 2.5 ... 7 bar)

High pressure water to valve block and nozzle lines, 60 ... 70 bar

Fig. 18: Compound system (slave configuration 4 slaves)

Note: The data switch used when connecting 3-4 slaves are not supplied by Condair

5.2.5 Compound system >800 l/h (master-slave configuration 3 slaves)

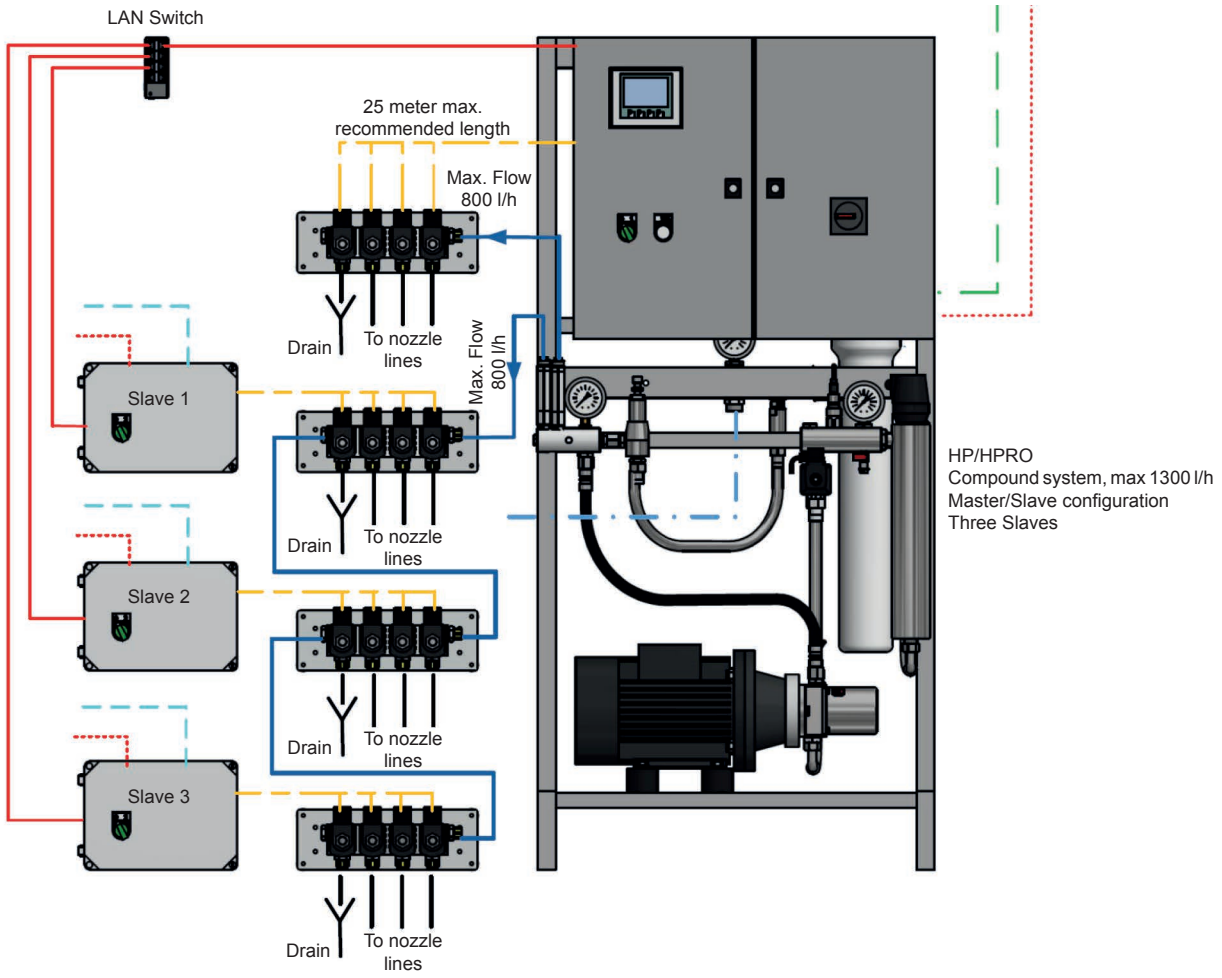

Power supply to pump station, 208 ... 480 V / 50/60 Hz

External power supply to slave control cabinet, 110-240 V / 50/60 Hz

On/Off supply solenoids, 24V DC

Control humidity signal, 0... 10 V or 4...20 mA control/humidity signal

Internal communication, RJ45 cable, LAN, TCP/IP protocol

Water supply (HP: 1 .. 4 bar, HPRO: 2.5 ... 7 bar)

High pressure water to valve block and nozzle lines, 60 ... 70 bar

Fig. 19: Compound system >800 l/h (master-slave configuration 3 slaves)

Note: The data switch used when connecting 3-4 slaves are not supplied by Condair

5.2.6 Compound system >800 l/h (slave configuration 4 slaves)

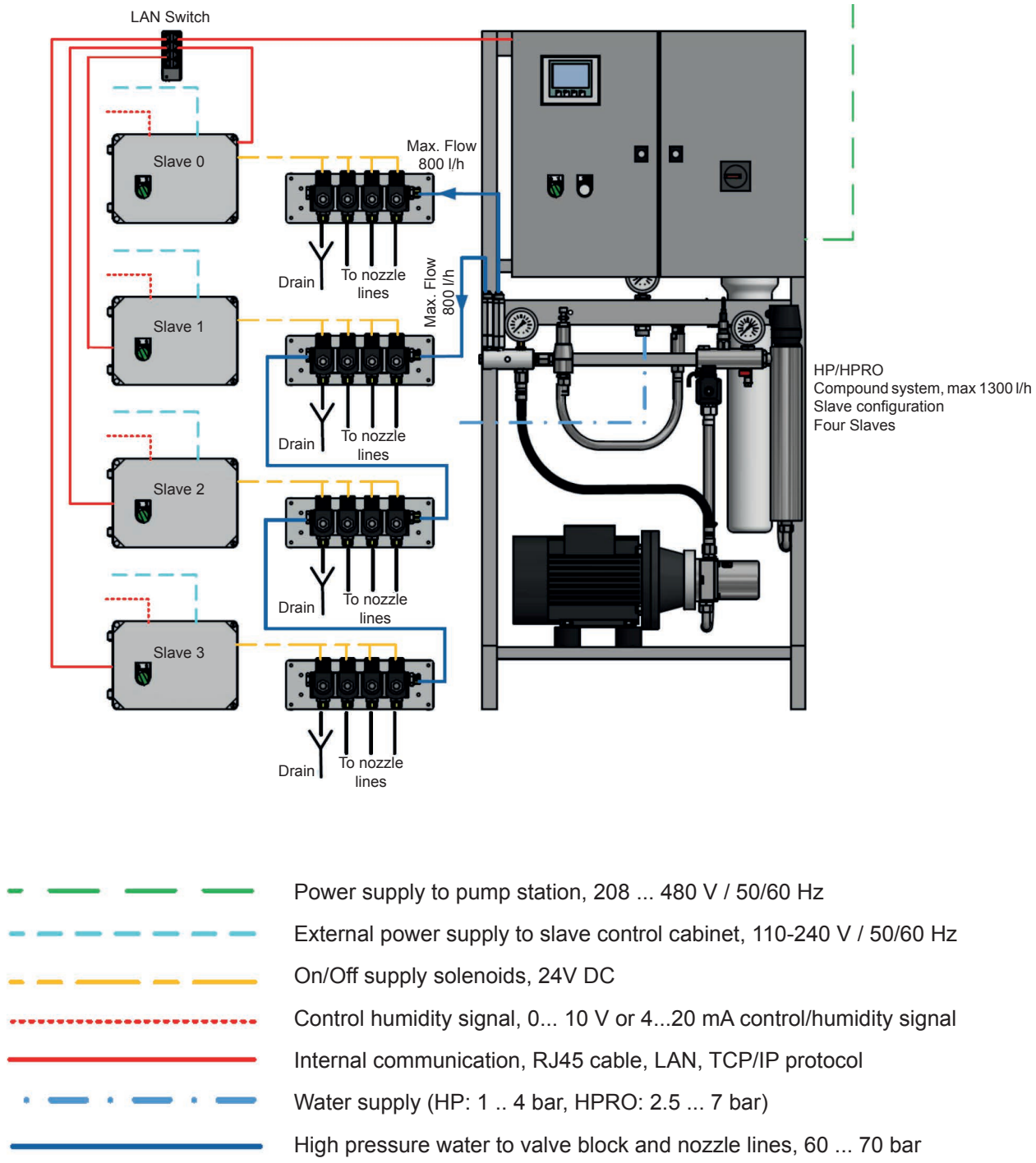

Fig. 20: Compound system >800 l/h (slave configuration 4 slaves)

Note: The data switch used when connecting 3-4 slaves are not supplied by Condair

5.3 Mounting of the humidifier unit

5.3.1 Notes on positioning and mounting of the humidifier unit

The system-specific dimensions for the positioning of the humidifier unit in the duct are to be found in the installation documents, which are provided with your system.

In addition to the installation instructions please observe the following complementary notes on mounting:

– **Caution**! Demineralised water is aggressive! The Condair HP system uses demineralised water. All components (duct/monoblock, mounting accessories, drain line, etc.) in the humidifier unit area must be made of stainless steel (DIN 1.4301/AISI 303 or better) or plastic resistant to deminer-alised water.

– For installation and maintenance of the humidifier unit, the ventilation duct/monoblock must be equipped with a viewing window and a sufficiently large maintenance access door.

– In the humidifier unit area, the ventilation duct/monoblock must be waterproof.

– If the ambient air is cold, the ventilation duct must be isolated to prevent the humidified air from condensing at the walls.

– **Important!** At the installation site, an air filter meeting the F7 quality specifications or better must be installed before the humidifier unit.

– The section of the duct holding the humidifier unit must be equipped with a tub having two water drains, one before and one after the droplet separator. Make sure the water in the tub has unhampered access to the drains. Each water drain must be connected to the sewage system separately, via a siphon. For hygienic reasons these should be open drains to the sewage line of the site.
Important: The effective height of the siphon depends on the duct pressure. The proper layout of the draining system is the customer's responsibility.

– The minimum **distance of 0.4 m between the humidifier unit and a possible heating unit** as well as the **mounting dimensions according to the system diagram must be complied with**.

– To prevent water drops from breaking away at the droplet separators the **air flow to the humidi-fier unit must be uniform with regard to the entire area**. Air rectifiers or perforated plates must be installed before the humidifier unit, as required.

– The admissible air velocity in the duct before the humidifier unit is 0.5 ... 4.0 m/s.

5.3.2 Mounting the nozzle unit

Example on principal drawing, provided with each humidifier unit

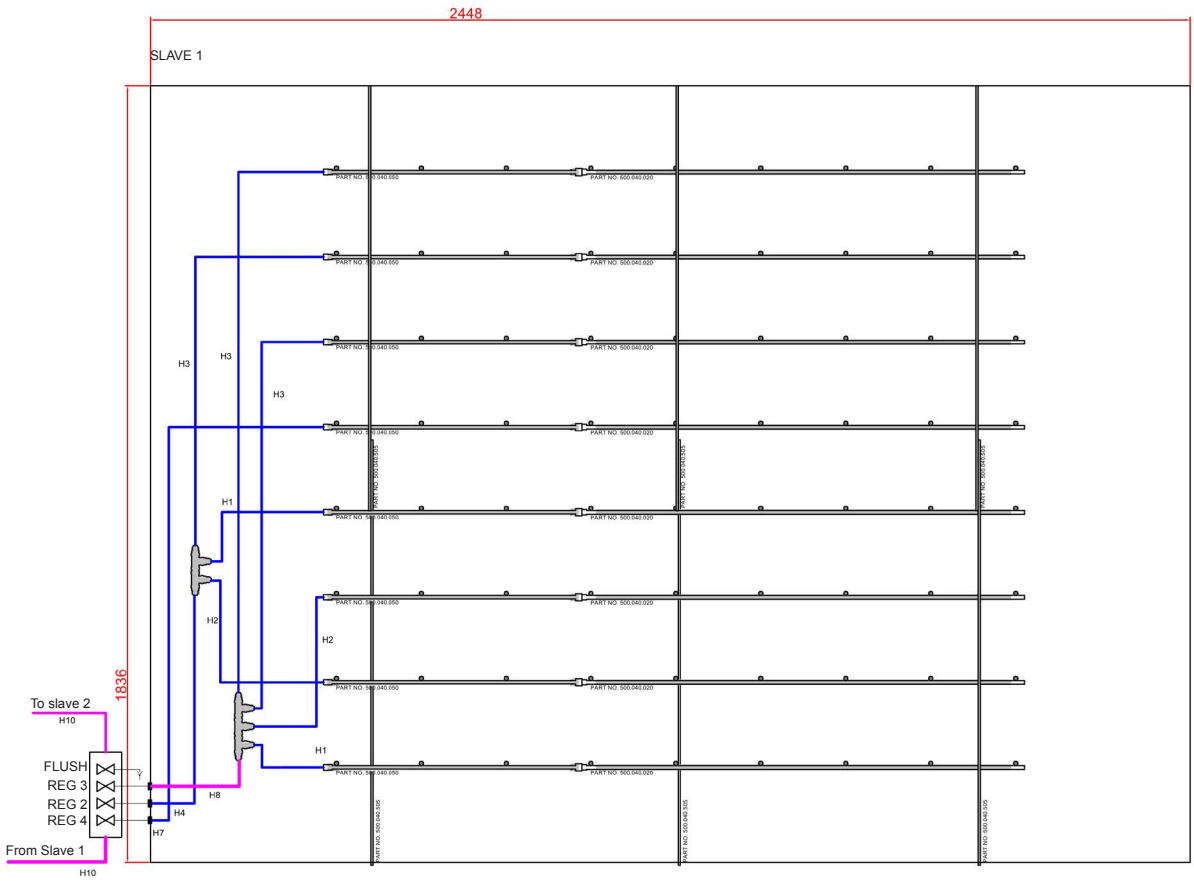

Fig. 21: Example on principal drawing, provided with each humidifier unit

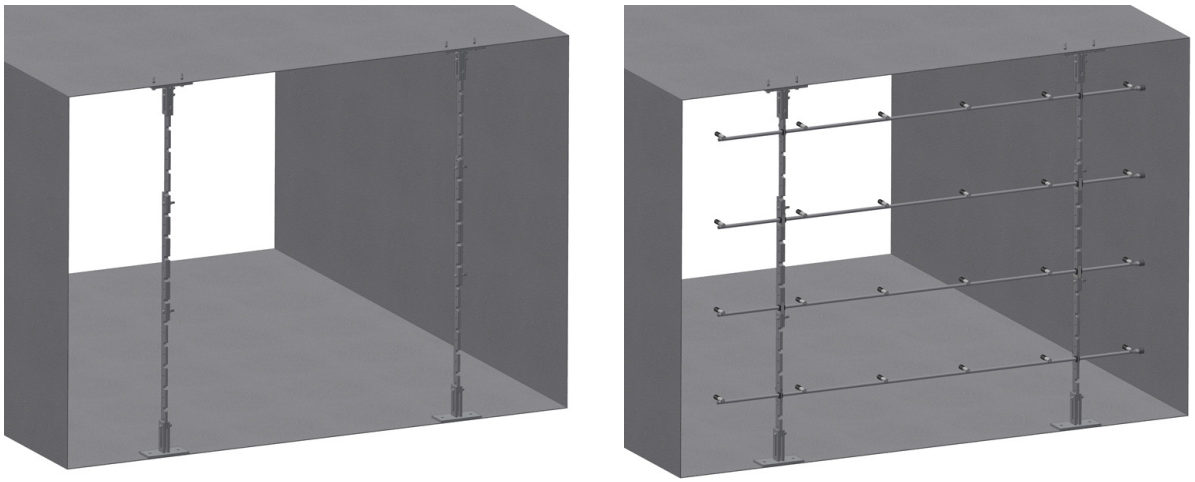

Fig. 22: Fixture assembly

1. **Installing the vertical mounting fixture (rails)**
   Mark the position of the top brackets at the duct ceiling, approx. 1/5 of the duct width in from each wall. Then, drill the ø3.3 mm fixing holes (screws) or ø6 mm (bolts and nuts).
   Important! Make sure that the **fixing holes** in the left and right of the duct ceiling are **exactly aligned**

   Fix the top brackets to the ceiling of the duct with screws or bolts provided.

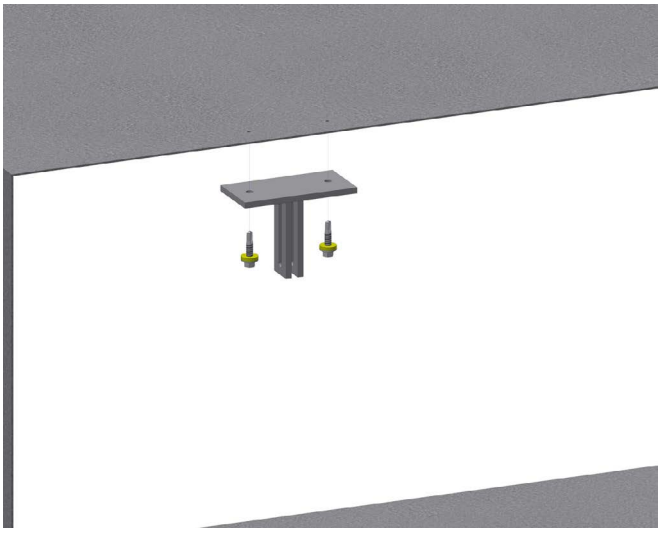

Fig. 23: Fixing top brackets

Fix the one piece of pipe fixture to the top brackets using the bolts and nuts provided, tighten loosely.



Fig. 24: Fixing pipe fixture

Bolt the bottom bracket to the pipe fixture tighten loosely.
Important! Do not remove the film from the adhesive pad underneath the bottom bracket.

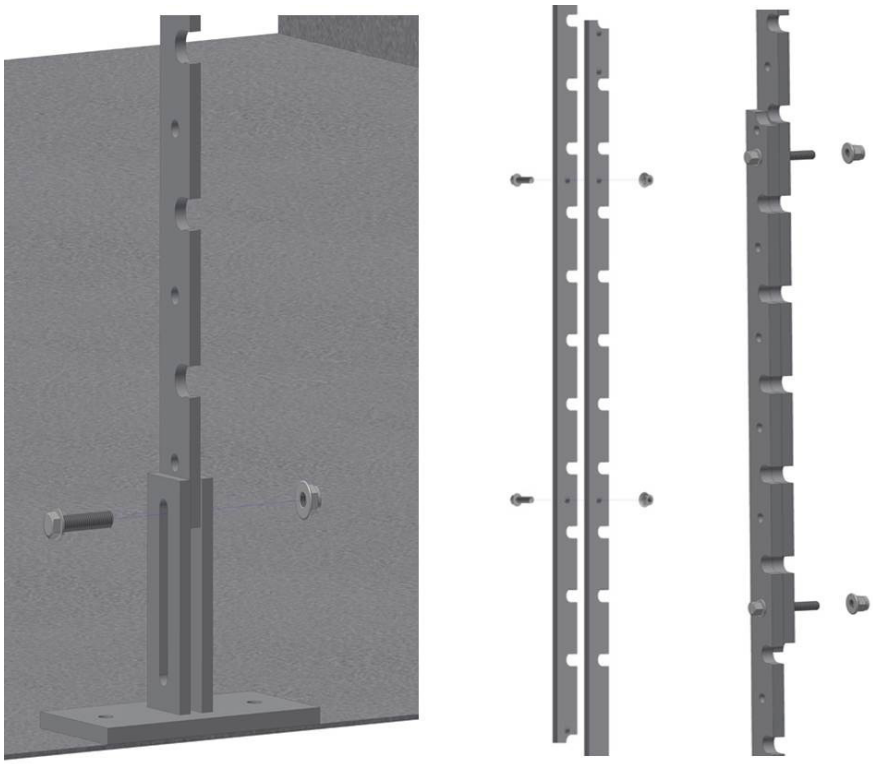

Fig. 25: Fixing bottom bracket to pipe fixture

Bolt the two pipe fixtures together, adjust the length such the bottom bracket can slide up and down, tighten the bolts

Use a spirit level to adjust the fixture both sideways and back/forth so that the pipe fixture is exactly vertical in all directions.

Now mark the position of the bottom bracket using a scratch pin or similar, to draw around it. Clean the bottom of the duct thoroughly underneath the bottom bracket, using a degreaser.

Remove the film from the adhesive pad, and press the bottom bracket in place.

Check that the fixture is still vertical in all directions.

Tighten all bolts. The pipe fixture is now in place.

2. Mounting the nozzle pipes

Fix the nozzle pipes to the pipe fixture using the clamps and rubber ferrules, provided (position the nozzle pipes according to the installation drawing). Make sure the outlet openings of the nozzles are aligned exactly horizontal in the flow direction.

WARNING!

The nozzle pipes must be installed with the nozzles upwards (as shown on the picture bellow)! Failing to do so can cause hammering and bacteria build-up in the pipes

The clamps and rubber ferrules both come in two different widths, the broad ones are used where the two pipe fixture rods overlap

First push the rubber ferrule on to the nozzle pipes, the flat side/opening facing away from the nozzles. Proceed by placing the tube and rubber insert in the cut-out. Observe that the nozzles are pointing in the right direction. The nozzle pipes must now be pushed firmly into the cut-out in the pipe fixture.

Mount the clamps firmly around nozzle pipe and fixture. This is done by pushing and turning the clamp into position.

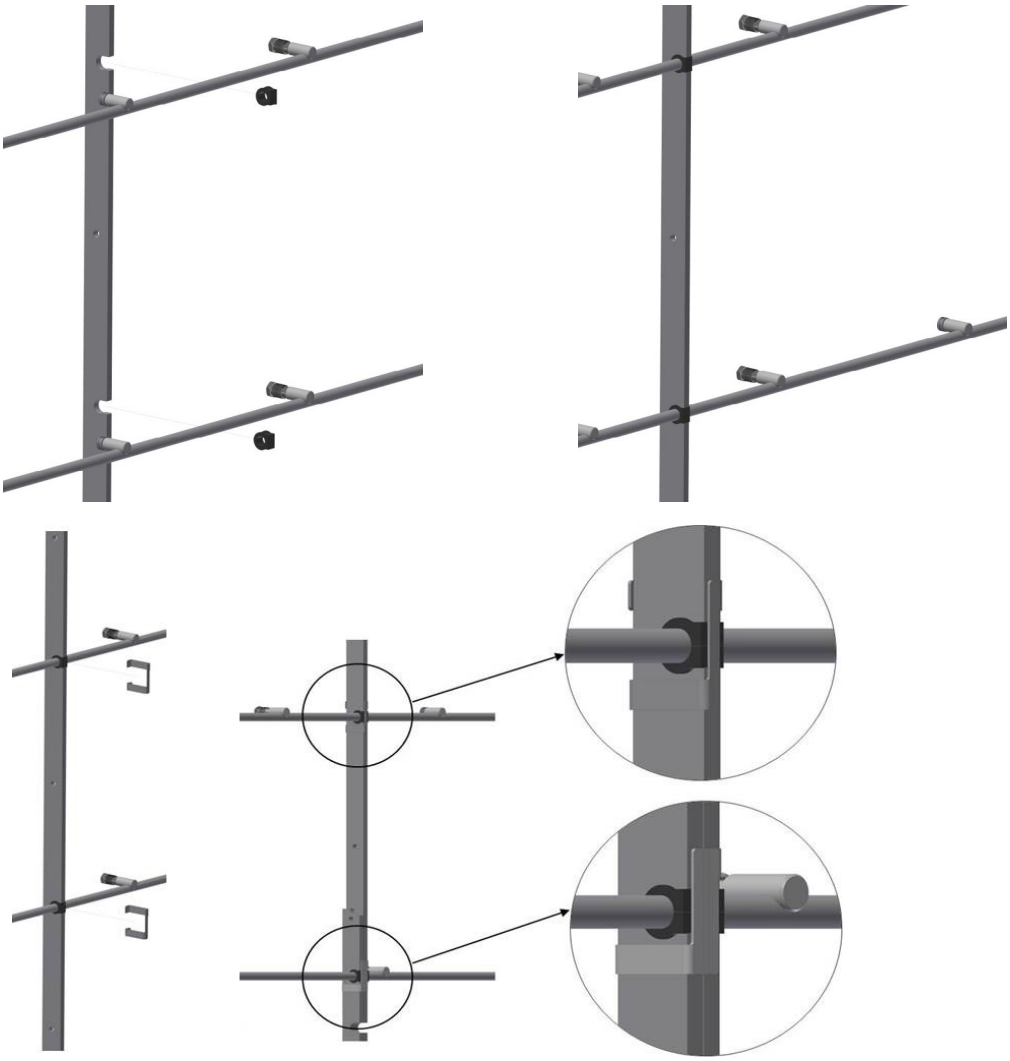

Fig. 26: Fixing and securing the nozzle pipes

3. Insertion of nozzles

It is important to follow the nozzle arrangement guide provided with the system, each step must have the correct number of active and blind nozzles in order for the system to regulate capacity effectively.

WARNING!

The last nozzle on a nozzle pipe can never be blind! This would result in stagnant water in the pipe, providing a habitat for bacteria

WARNING!

Never unscrew a nozzle on a pressurised pipe. Disconnect power to the pump station when working on high-pressure system.

- Before inserting the nozzle, check that its threads and O-ring are intact.
- Screw the nozzle in by hand, tighten.
- Use a set of polygrip pliers to tighten the nozzle (approx. 1/8 turn) (torque: 2.1 Nm ±0.1 Nm)
- Always tighten on the tip of the nozzle, to make sure it is also tight.

CAUTION!

Be careful! The threads on the nozzles break easily, the nozzle seals with an O-ring and hence does not need to be tightened very hard, just a little more than you can do by hand.



Fig. 27: Inserting the nozzles

4. Connecting nozzle pipes and plugging the ends

CAUTION!

Do not use oil, grease, glue, Teflon, silicon, O-ring lubrication or the like when assembling nozzle pipes or hose connections.

All of the above products can act as food for bacteria and hence are a potential health risk.

Furthermore, grease or the like can cause the nozzles to block up.

Only approved lubricant: Dish soap

Wash your hands before or wear clean gloves while assembling parts in direct contact with water.

Keep dust covers on pipes and hoses until just before they are assembled.

Tighten the O-ring connection by hand as much as possible, then use a spanner to turn the nut approx. 1/8 until you can feel the O-ring has been compressed.



Fig. 28: Connecting nozzle pipes



Fig. 29: Plugging pipe ends

5. Mounting the step valve block

Fix the step valve block at the appropriate position to the duct using the screws or the bolts provided.

Then, drill duct passages 3 x ø32 mm and close the holes inside and outside with the rubber sleeves provided.

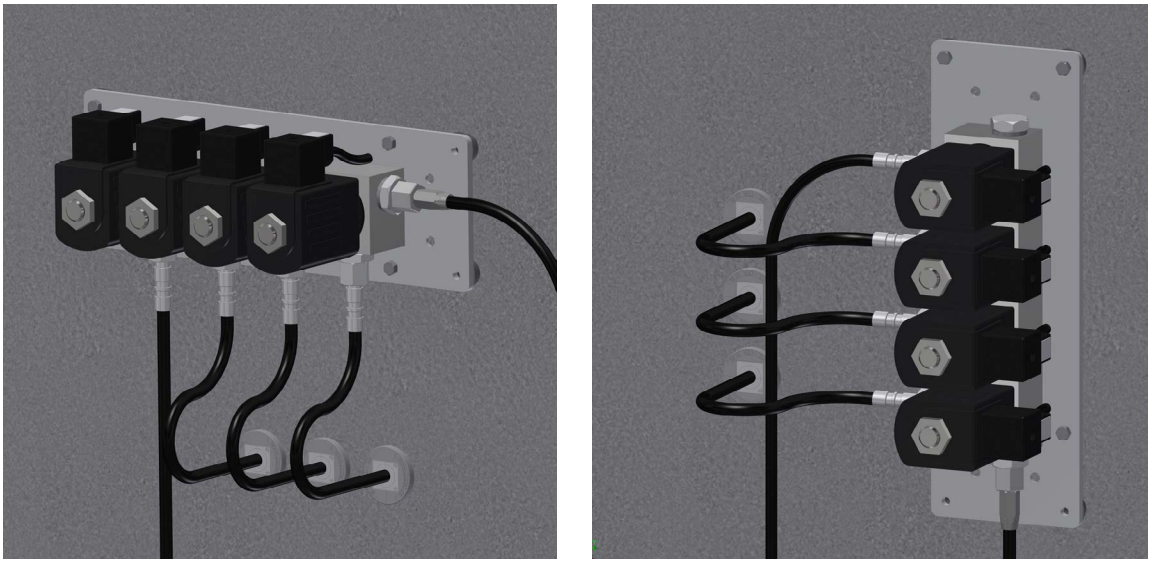

Fig. 30: Mounting step valve block

6. Connecting the high-pressure hoses

WARNING!

Do not retighten/unscrew hoses while the system is pressurised!

Connect the high-pressure hoses to the step valve block, and then guide the hoses through the rubber sleeves into the duct.

Important! Start tighten the hose connections by hand, then use an open-end wrench to tighten the screw connections (approximately 1 1/4 turn) using an open-end wrench. Check screw connections for leaks during operation. If the screw connections are leaking, moderately retighten them, however do not overtighten the screw connections.

Torque for cone connection (hose to hose, hose to T-piece and hose to valve block)

3/8" 70 Nm ±2 Nm

1/4" 42 Nm ±2 Nm

CAUTION!

Do not use oil, grease, glue, Teflon, silicon, O-ring lubrication or the like when assembling nozzle pipes or hose connections.

All of the above products can act as food for bacteria and hence are a potential health risk.

Furthermore, grease or the like can cause the nozzles to block up.

Only approved lubricant: Dish soap

Wash your hands before or wear clean gloves while assembling parts in direct contact with water.

Keep dust covers on pipes and hoses until just before they are assembled.

Connect the high-pressure hoses to the appropriate distribution blocks and nozzle pipes (position of the spray circuits according to the installation drawing).

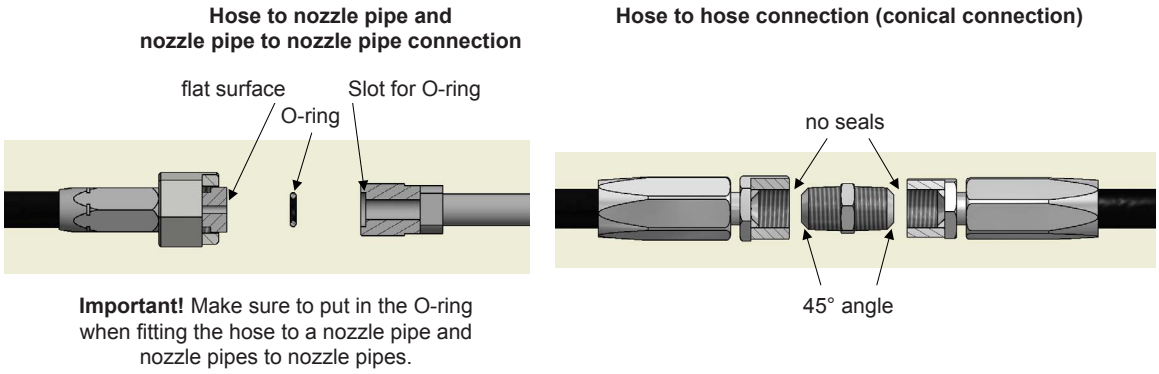

Fig. 31: Hose connections

Important! Make sure the hoses are not kinked (if necessary, run hoses in a bow to the connector). Maintain the following minimum bend radius:

- **for hoses DN6 = 100 mm**
- **for hoses DN8 = 130 mm**
- **for hoses DN10 = 180 mm**

5.3.3 Mounting the Condair droplet separator

1. **Mounting the wall supports**: mark the position of the fixing holes of the wall supports at the duct walls, then drill the ø3.3 mm holes (accurate position see supplied installation drawing).
   Important! Make sure that the **fixing holes** in the left and right duct wall are **exactly aligned opposite each other** and that the axes of the fixing holes of the **upper and lower wall support are at right angles to the ceiling of the duct**.

   Attach wall supports to the duct walls, using the self-tapping screws provided.

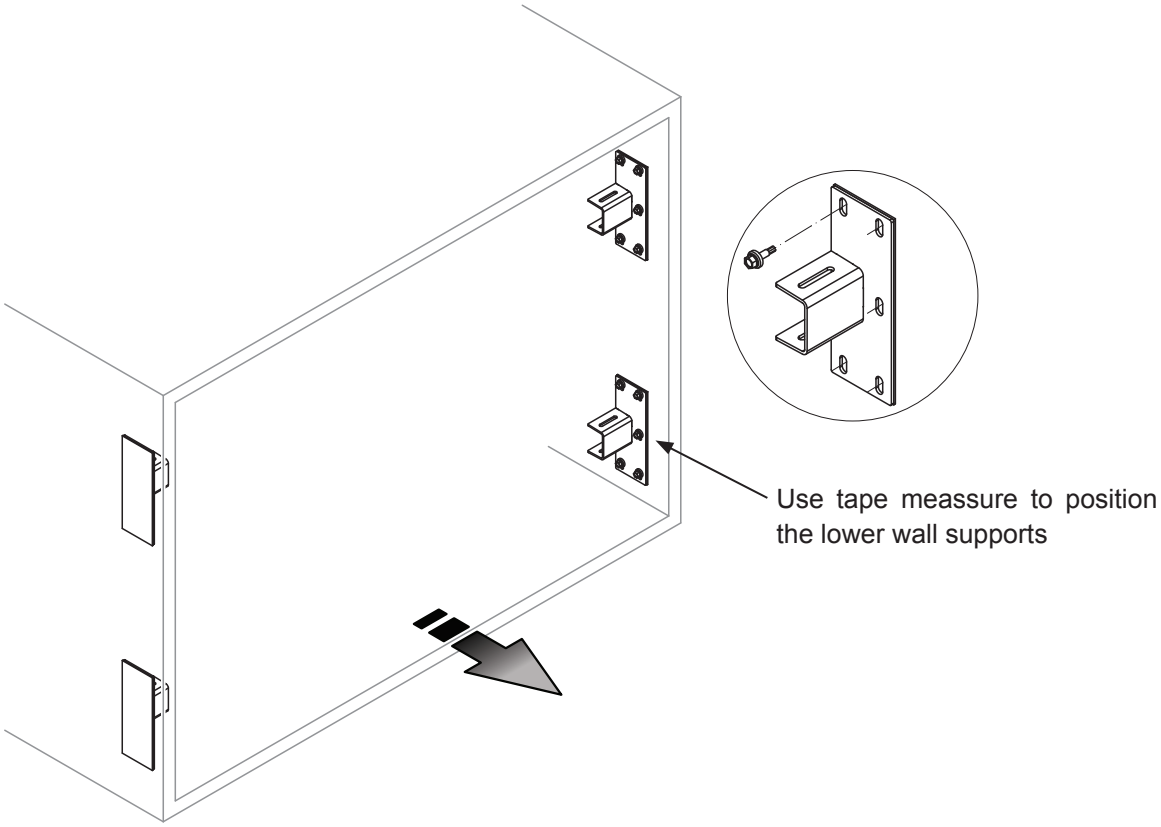

Fig. 32: Mounting the wall brackets

2. **Installing the bottom guard sheets**: apply sealant provided along the edges on the bottom side of the bottom guard sheets (see detail figure below). Align bottom guard sheets flush to the duct floor, to the duct walls and to the wall supports (as shown in the figure below), then fix them to the duct wall using the self-tapping screws provided (drill the ø3.3 mm holes first).
   Important: remove sealant from openings “A” if applicable.

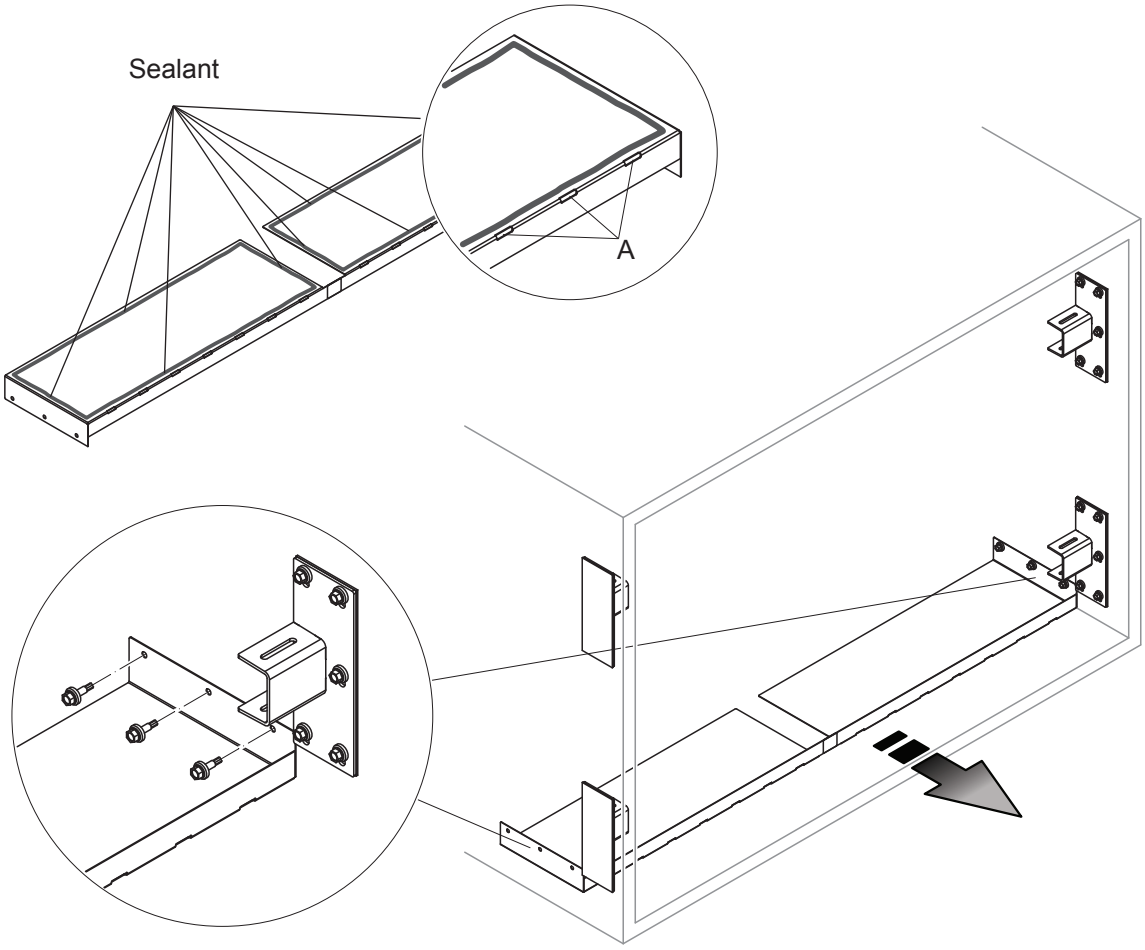

Fig. 33: Installing the bottom guard sheets

3. **Mounting the cross arms**: Fix the cross arms to the wall supports as shown in figure below using the screws, spring washers, washers and nuts provided. Before tightening the screws vertically align the cross arms.

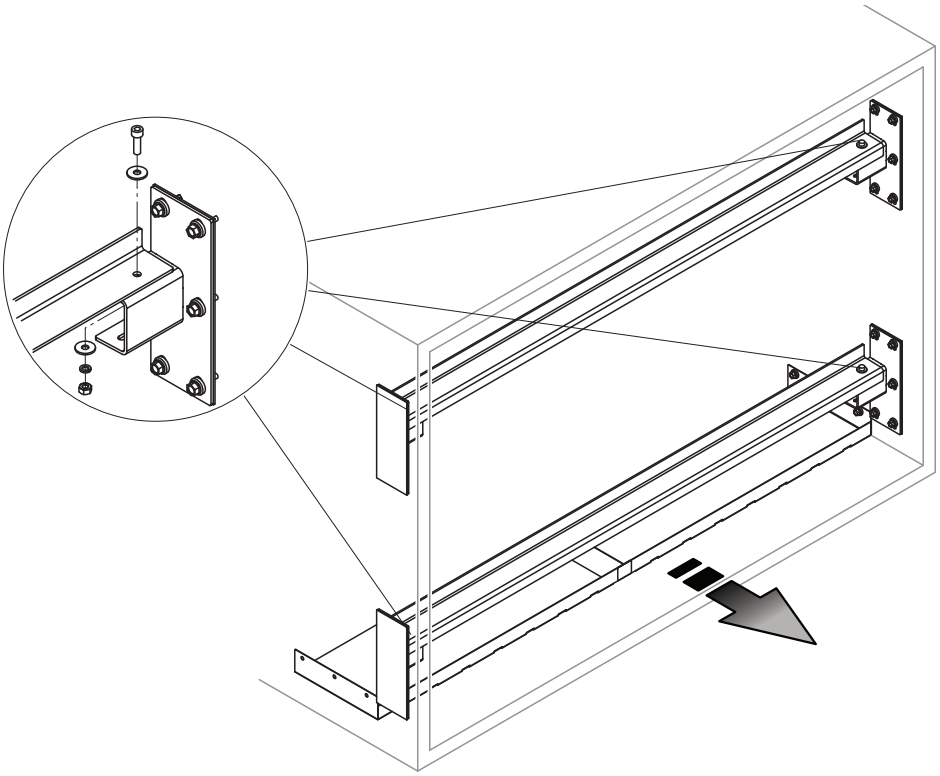

Fig. 34: Mounting the cross arms

4. **Mounting the droplet separator boxes**: Hang up the droplet separator boxes into the cross arms, then slide the boxes together and align them centric to the duct.

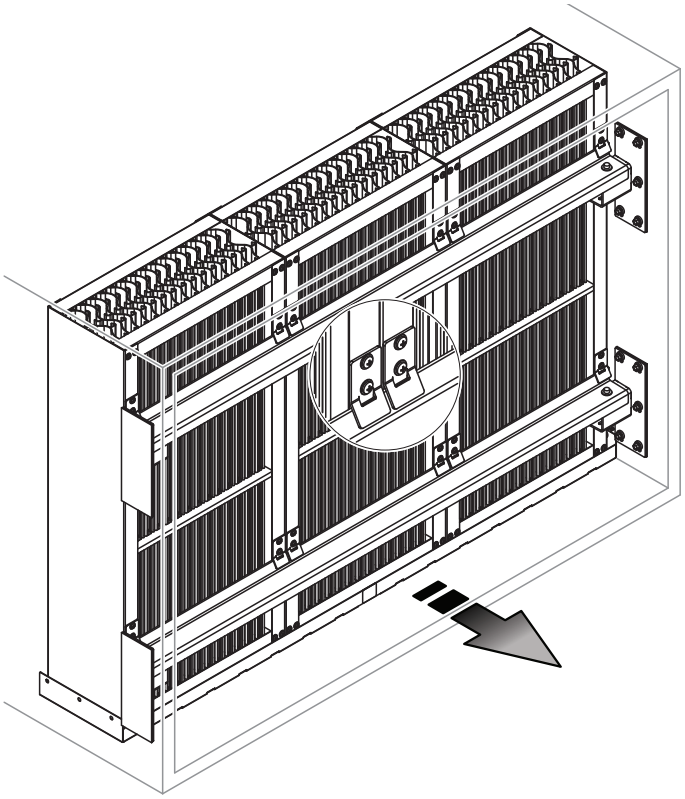

Fig. 35: Mounting the droplet separator boxes

5. **Connecting together the droplet separator boxes**: connect together the droplet separator boxes either on the bottom or the top side using the connecting plates provided. To do this: undo the appropriate screws on the separator boxes, attach the connecting plate (see detail figure), then tighten the screws again.

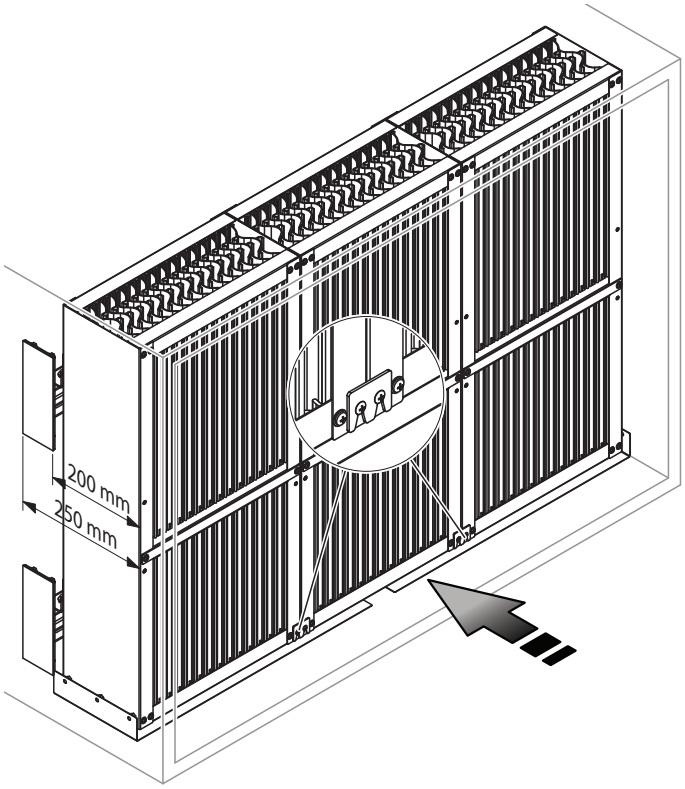

Fig. 36: Connecting together the droplet separator boxes

6. **Install rubber seals**: cut upper and lateral rubber seals to the necessary length (channel width or channel height), then fix the rubber seals to the droplet separator boxes using the retaining clips provided.

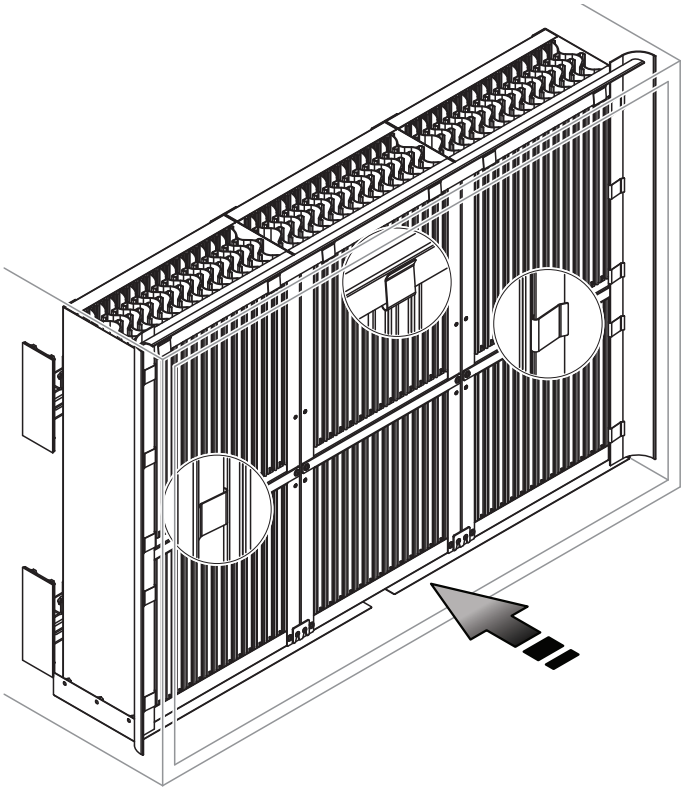

Fig. 37: Install rubber seals

5.3.4 Pressure loss over the droplet seperator

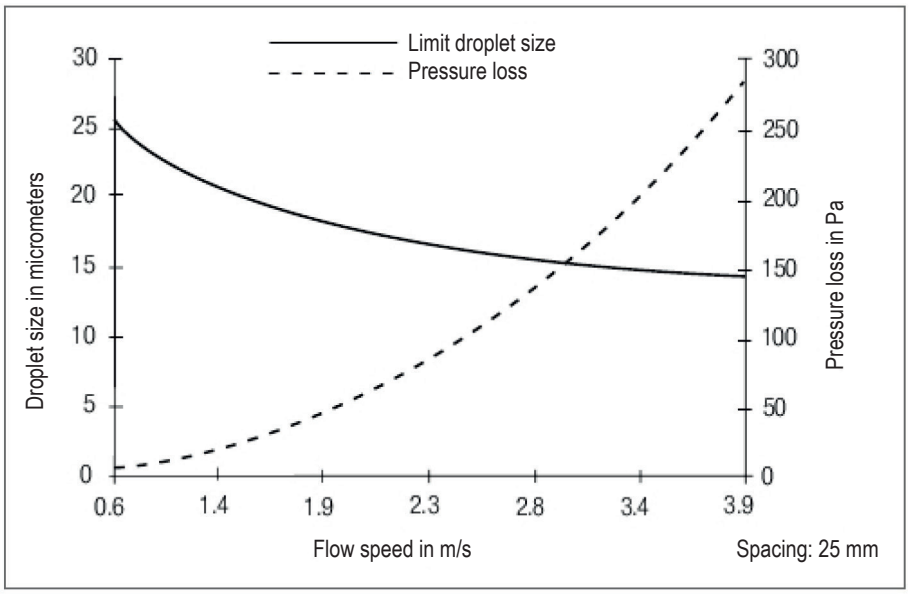

Fig. 38: Pressure loss over the droplet seperator

5.4 Mounting the pump station

5.4.1 Notes on positioning

Please observe the following notes on positioning and mounting:

- Place the pump station in a manner that:
  - the distance to the humidifier unit is as short as possible.
    Note: High-pressure hose (pump to step valve block) is 3 m as standard however 2, 3, 5, and 10 metre hoses are available from stock, special lengths can be ordered.
  - it is freely accessible and there is enough space for convenient operation and maintenance (**min. free space around pump station: laterally 0.5 m, front side/back side 0.8 m**).
- The pump station is designed for operation in protected and dry rooms and thus must not be installed outside.
- Do not install the pump station in exposed locations or locations with heavy dust loads.
- The **pump station** must be installed only in a **location with a water drain in the floor**. If this is not possible, it is mandatory that **water sensors** be provided to safely interrupt the water supply in event of leakage. Furthermore, choose a suitable location that prevents damage to material assets in event of leakage.
- The pump station is designed for installation on a load-bearing floor.

CAUTION!

Do not connect/fit the pump station on/to vibrating components.

5.4.2 Dimension and weights of pump station

all dimensions in mm

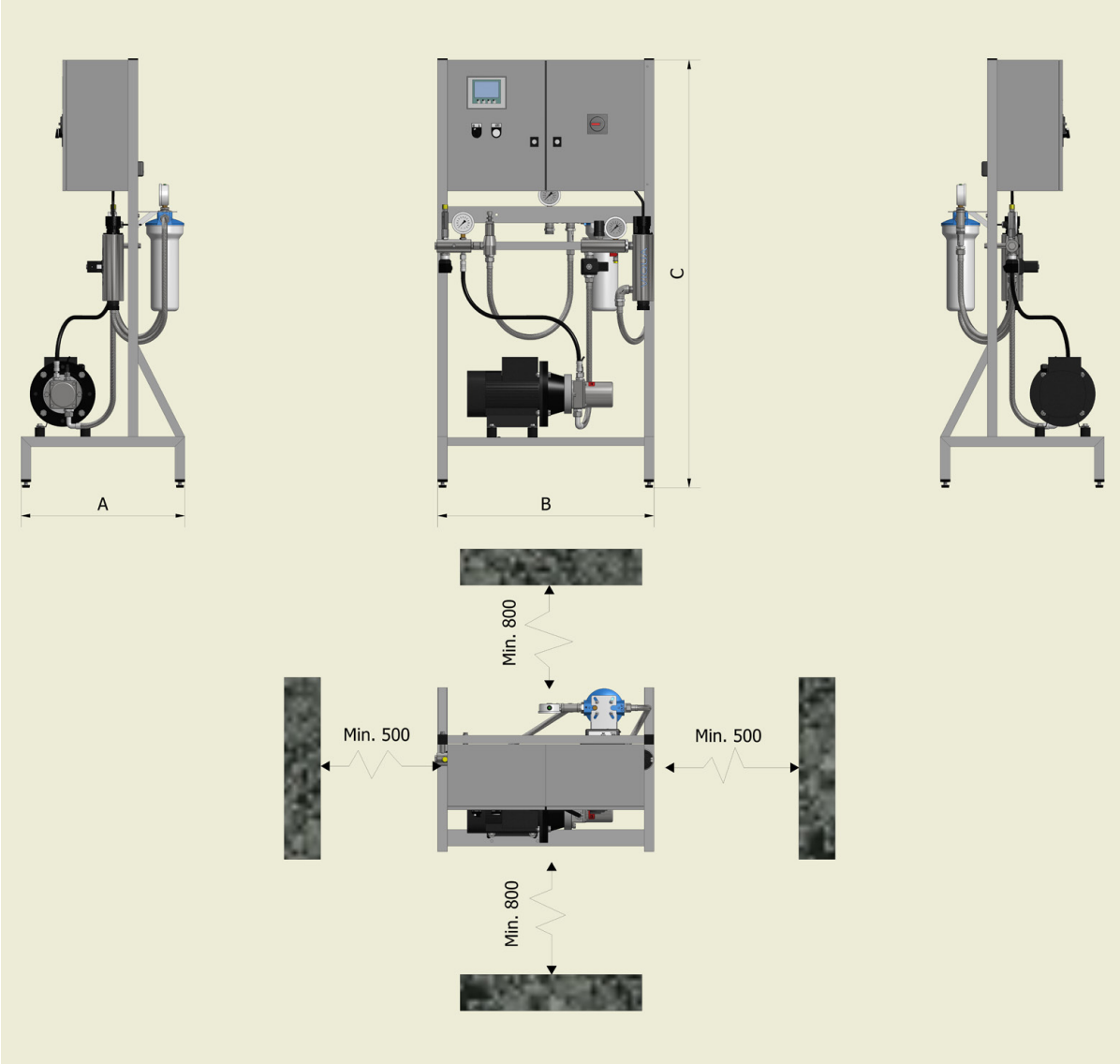

Fig. 39: Dimensions pump station

Pump station	Dimension [mm]			Weight [kg]
	A	B	C	
HP 100 and 200 VFD	500	660	1400	50 - 65
HP 300 and 500 VFD	500 (630)	660	1400	55 - 70
HP 500 and 800VFD	500 (630)	660	1400	65 - 80
HP 800 and 1300 VFD	500 (630)	660	1400	75 - 90

HPRO 100 (200 VFD)	700	860	1600	125 - 140
HPRO 300 (500 VFD)	700	860	1600	130 - 145
HPRO 500	700	860	1600	220
External RO tank for HPRO 500 (200 l)	600	600	1600	40
HPRO 800	700	860	1600	250
External RO tank for HPRO 800 (500 l)	800	800	2100	60

Valve block 3+1				6.5
Valve block 4+1				7
Valve block 5+1				7.5
Slave station				2

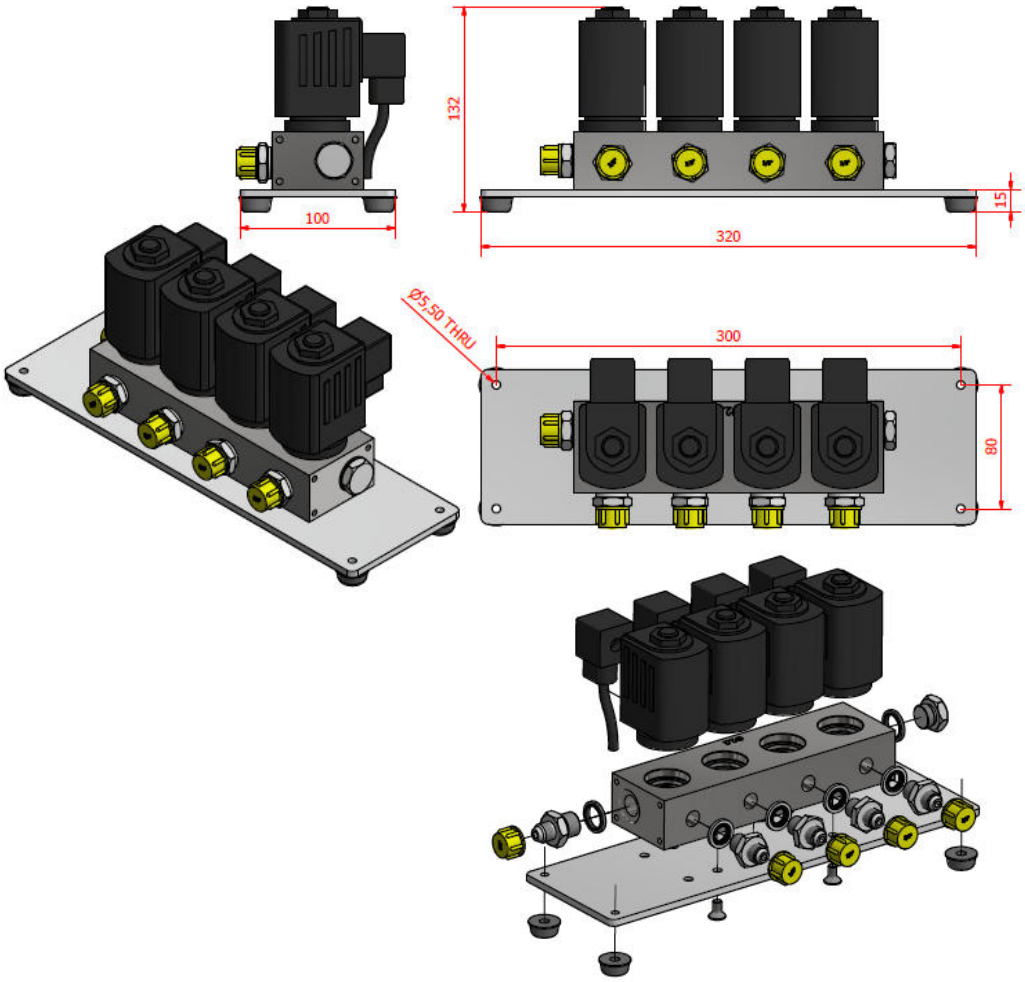

Fig. 40: Valve block 3+1 INDUCT dimensions (in mm)

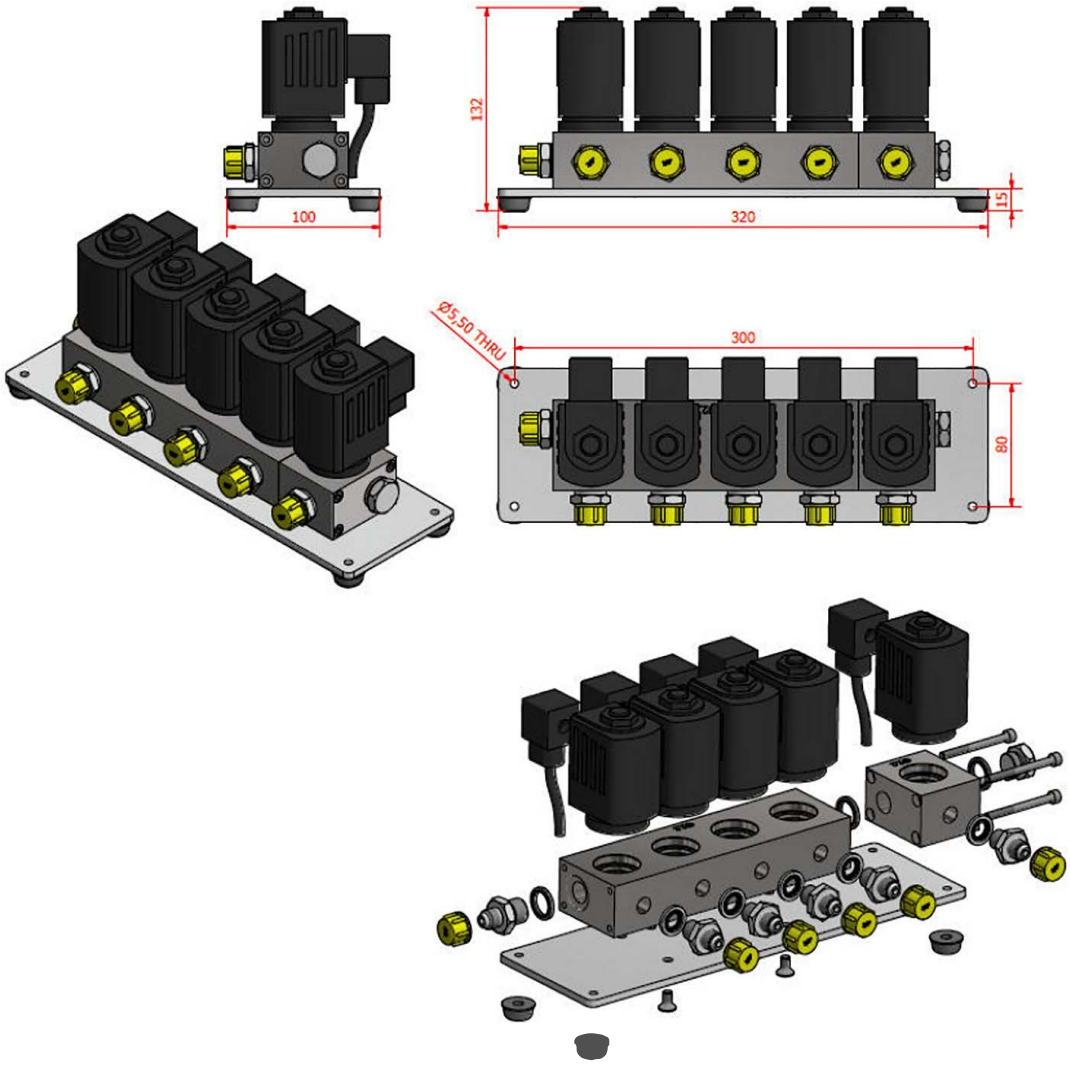

Fig. 41: Valve block 4+1 INDUCT dimensions (in mm)

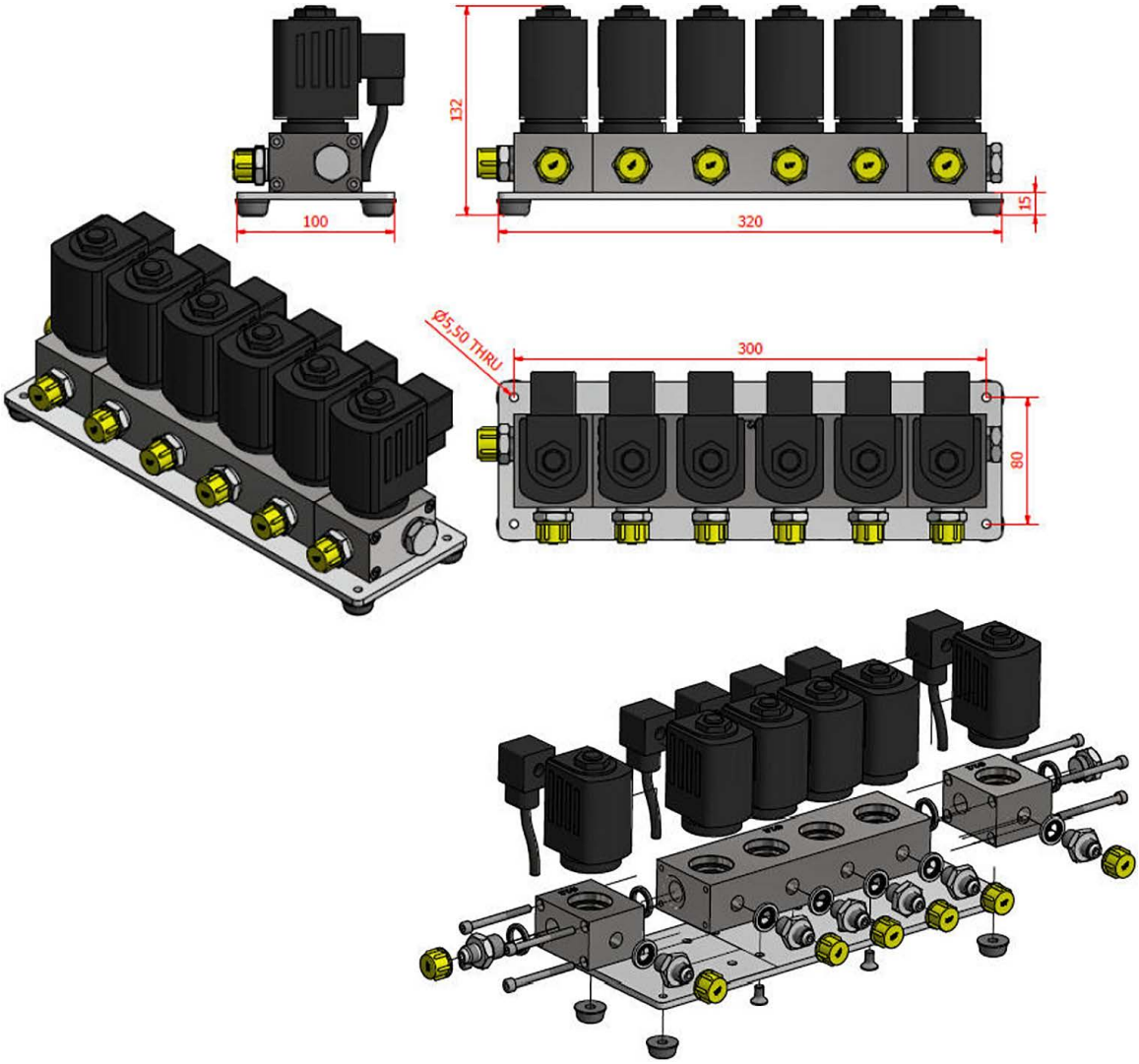

Fig. 42: Valve block 5+1 INDUCT dimensions (in mm)

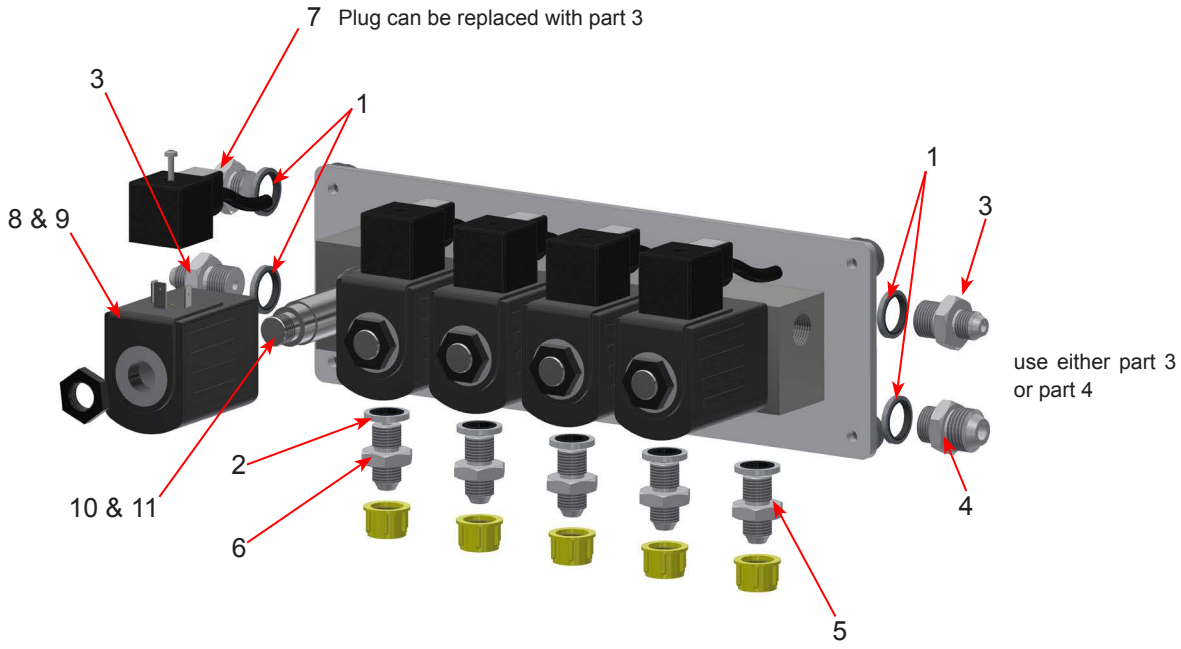

Fig. 43: Valve block 4+1 INDUCT, parts and spare parts

Item no.	Part no.	Item desription
1	391 020 005	Bonded seal 3/8"
2	391 020 000	Bonded seal 1/4"
3	730 020 288	Hose nipple 3/8"-1/4", used with hose coupling 1/8" or 1/4"
4	730 020 278	Hose nipple 3/8"-3/8", used with hose coupling 3/8"
5	730 020 248	Hose nipple 1/4"-1/4"
6	730 020 081	Nozzle adapter, 50 l/h
7	730 020 237	Plug 3/8" for bonded seals
8	2 578 820	Coil 24 VDC 16 W
9	190 020 030	Coil 230 V 50/60 Hz, for systems before 201x
10	190 021 030	Repair kit for 1 valve: core, spring and O-rings
11	190 021 031	Repair kit for 1 valve: guide tube, core, spring and O-rings

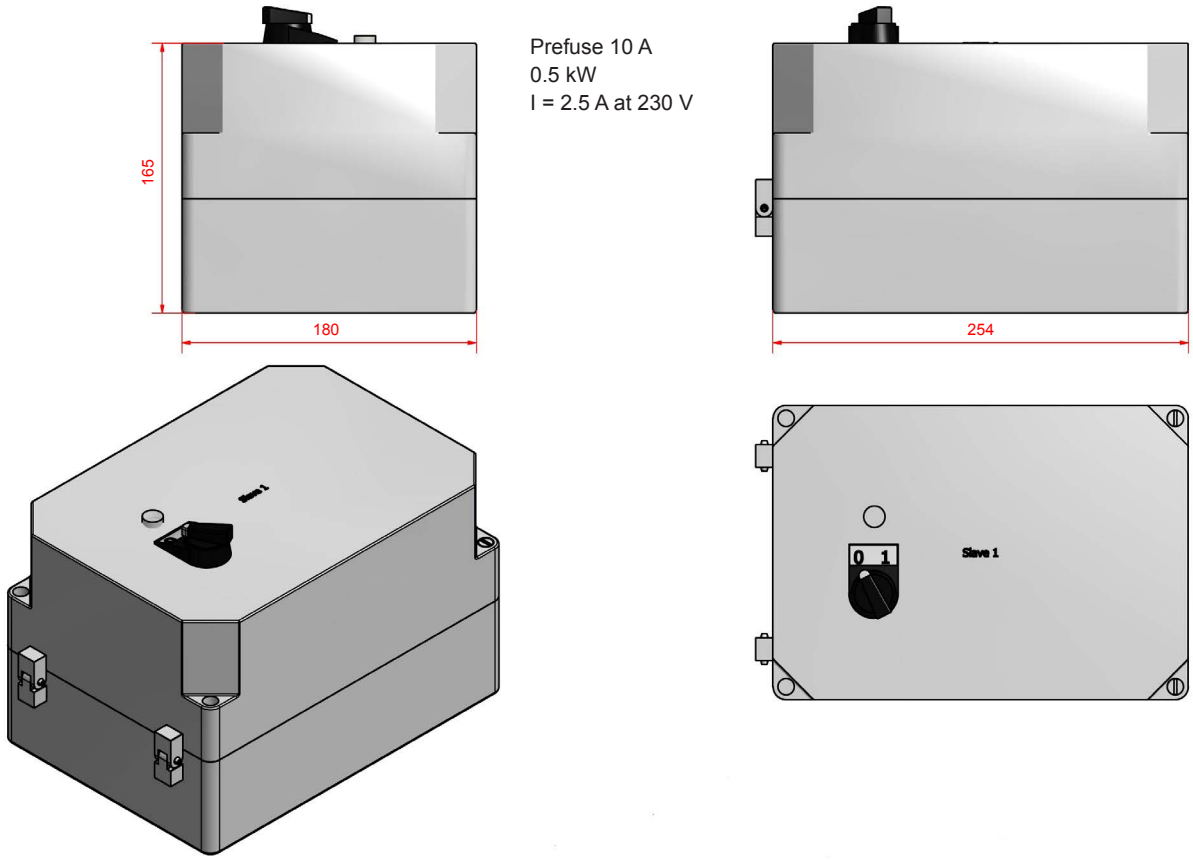

Fig. 44: Slave station dimensions (in mm)



Fig. 45: HPRO 500 tank (0,2 m³)



HPRO 800 tank (0,5 m³)

5.4.3 Pump station installation

Place the HP pump station in the desired location, directly on the floor or in a tray.

CAUTION!

The room where the pump station is placed must have a drain in the floor near the system to prevent flooding in case of a leakage

Once placed, level the pump station using the adjustable supports (see figure below).

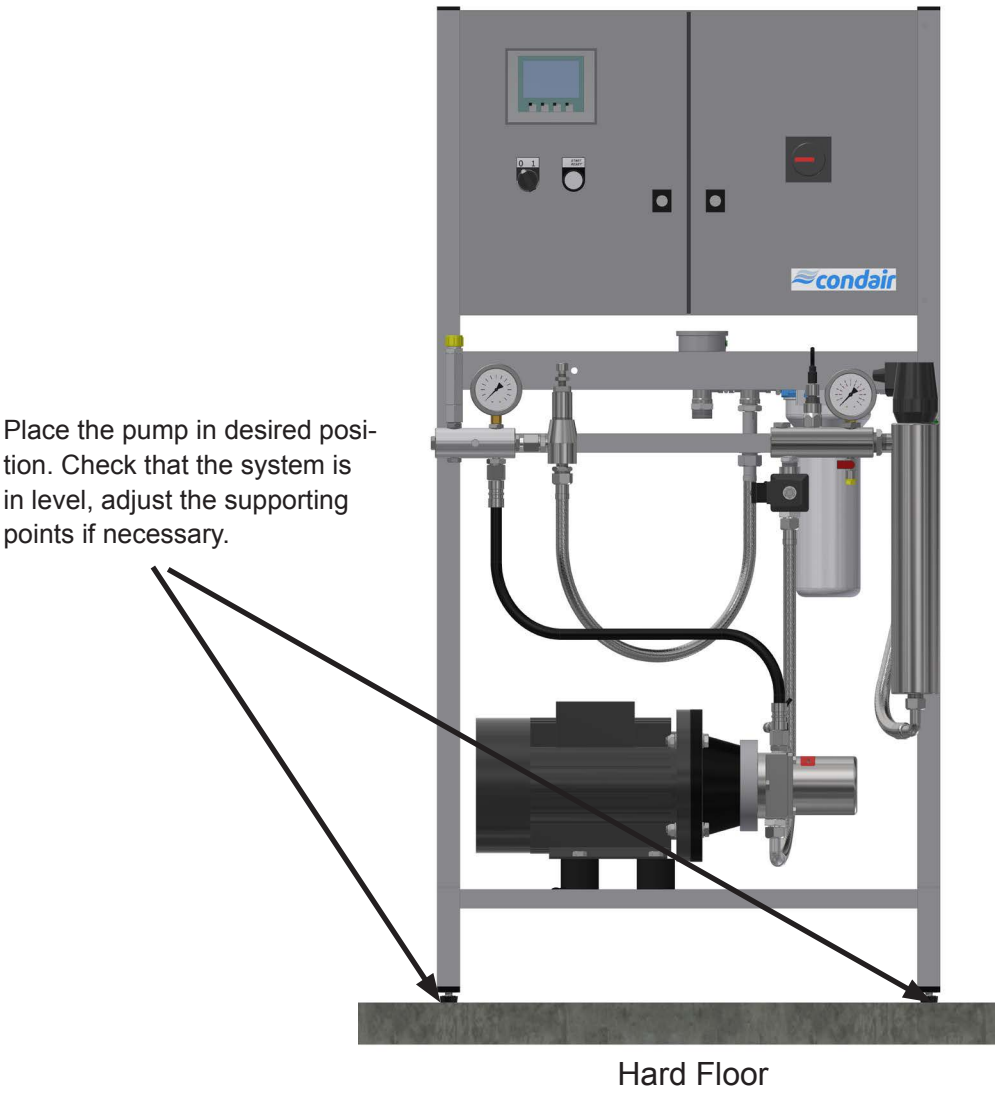

Fig. 46: Levelling pump station

5.4.4 Water installation, Condair HP

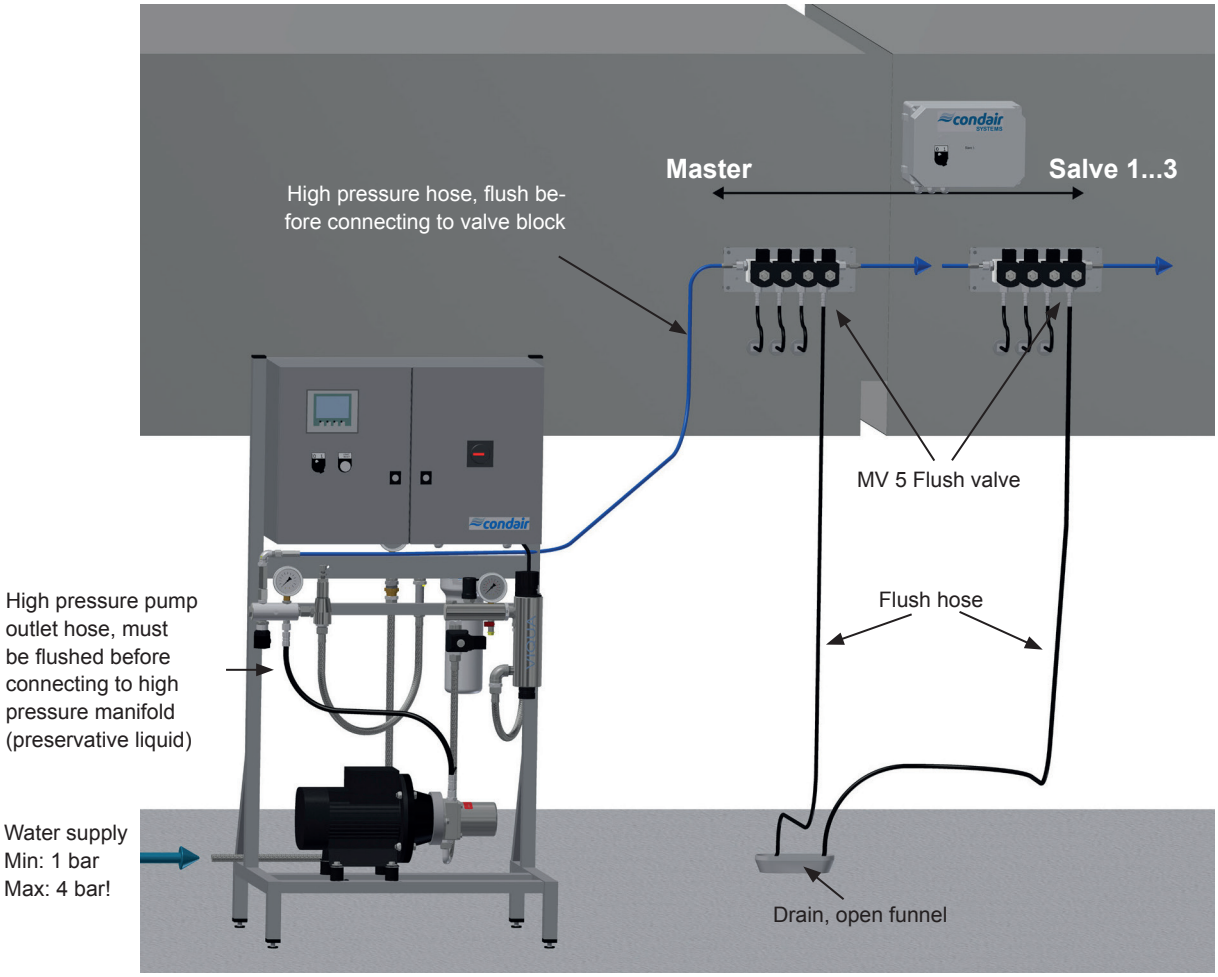

Fig. 47: Water installation, Condair HP

WARNING!

Before connecting the water supply, the piping must be flushed for at least 10 minutes, to make sure the first incoming water is as clean as possible.

CAUTION!

The high-pressure hose between the high-pressure pump and high-pressure manifold must not be installed before bleeding of the high-pressure pump has been done (see *Section 6.6*)

Connecting the water supply

- Connect water supply hose to the water inlet using the gasket provided.

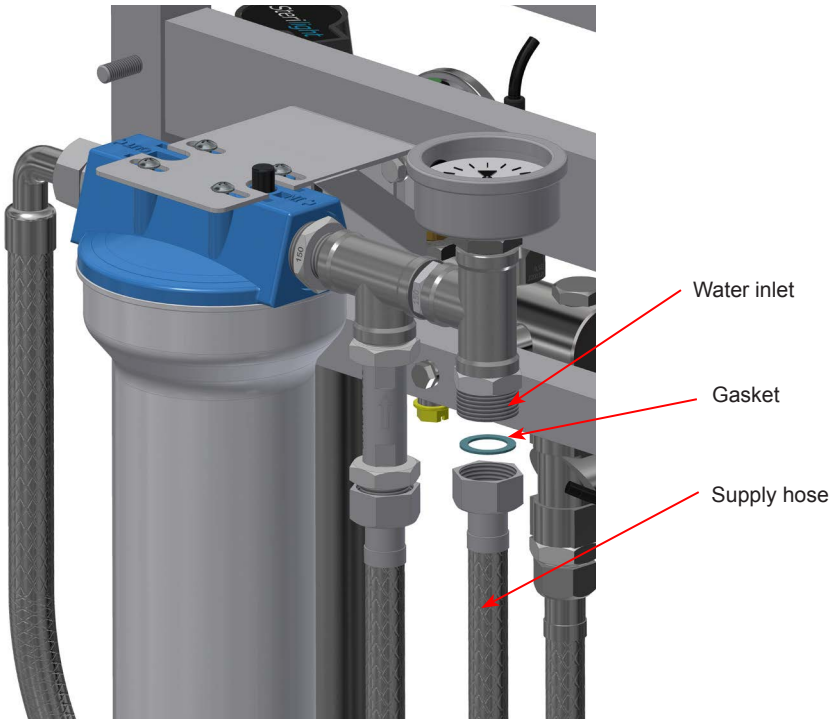

Fig. 48: Water installation, Condair HP

Connecting the high-pressure hoses

- Connect high-pressure hoses to the pump station; do not connect it to the valve block yet, as it needs to be flushed.
  - Use only the high-pressure hoses provided to connect the pump station, high-pressure manifold and the step valve block.
  - Install the high-pressure hoses in a way so they do not touch each other or other system components. Where it is not possible to prevent the high-pressure hoses touching each other or other system components, use anti-chafe spiral hose or similar to protect the hoses.

Connecting the drain line to the working pressure flushing valve MV5

Each valve block has a high-pressure flush valve MV5. In the outlet of the valve there is a 0.5 mm nozzle, allowing the system to flush without losing operating pressure in the entire system.

- Connect drain hose to the flushing valve connector using the drain hose supplied.
- Run the drain hose down to an open funnel with a constant downward slope.
- Fix drain hose in its position, so it cannot move during operation.

5.4.5 Water installation, Condair HP RO

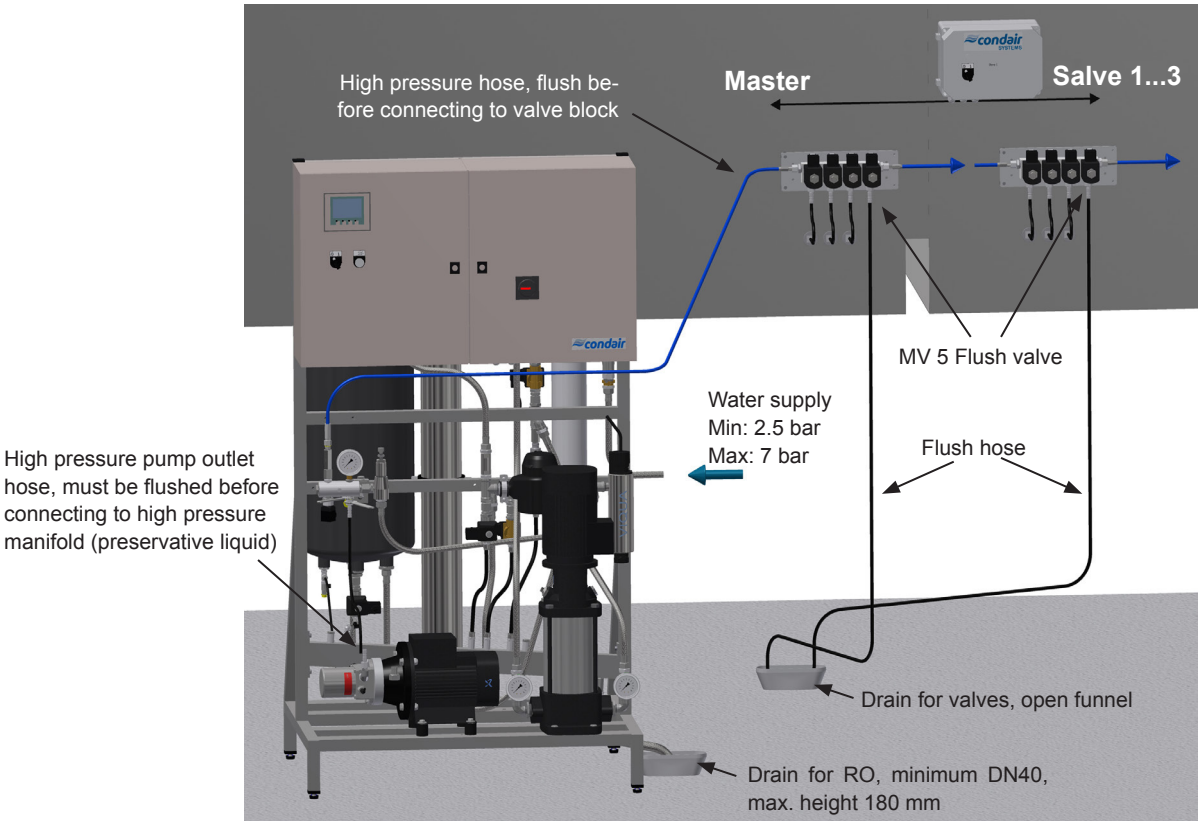

Fig. 49: Water installation, Condair HP RO

WARNING!

Before connecting water supply, the piping must be flushed for at least 10 minutes, to make sure the first incoming water is as clean as possible.

CAUTION!

The high-pressure hose between high-pressure pump and high-pressure manifold must not be installed before bleeding of high-pressure pump has been done (see *Section 6.6*).

Connecting RO drain

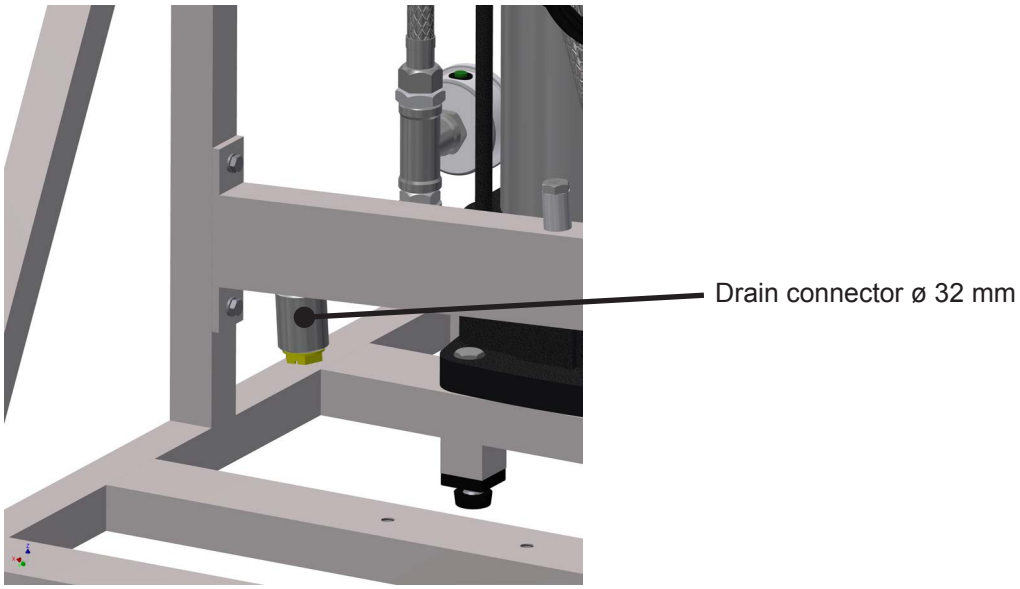

Fig. 50: RO Drain connector

- Remove protecting plug from drain connector.
- Connect drain hose to water outlet connector (ø32 mm) and lead the drain hose down to an open funnel with a constant down-slope.
  - min. diameter of the drain hose: ø40 mm
  - max. drain height: 180 mm.
- Fix drain hose in its position, so it cannot move during operation.

Connecting the water supply

Water supply: 2.5–7 bar, water volume > nozzle capacity x 2. Requirements for water quality can be found in Product Data.

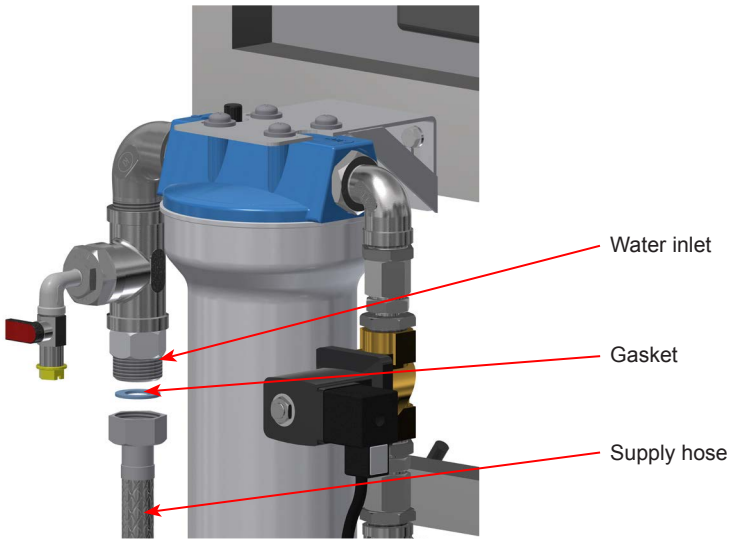

Fig. 51: Connecting water supply Condair HPRO

- Connect water supply hose to the water inlet using the gasket provided.

Connecting the high-pressure hoses

- Connect high-pressure hoses to the pump station; do not connect it to the valve block yet, as it needs to be flushed.
  - Use only the high-pressure hoses provided to connect the pump station, high-pressure manifold and the step valve block.
  - Install the high-pressure hoses in a way so they do not touch each other or other system components. Where it is not possible to prevent the high-pressure hoses touching each other or other system components, use anti-chafe spiral hose or similar to protect the hoses.

Connecting the drain line to the working pressure flushing valve MV5

Each valve block has a high-pressure flush valve MV5, In the outlet of the valve it has a 0.5 mm nozzle allowing the system to flush without losing operating pressure in the entire system.

- Connect drain hose to the flushing valve connector using the drain hose supplied.
- Run the drain hose down to an open funnel with a constant downward slope.
- Fix drain hose in its position, so it cannot move during operation.

5.5 Electrical installation

DANGER!
Danger of electric shock!

High voltages, Danger of electric shock! Electrical installation should only be carried out by a certified electrician. Touching live parts may cause severe injury or even death.

CAUTION!

The electronic components inside the control unit are very sensitive to electrostatic discharge. When carrying out work on the open unit, appropriate measures must be taken to protect these components against damage caused by electrostatic discharge (ESD protection).

Notes on electrical installation

- **The pump station must be connected via an approved lockable safety switch according to local regulation.**
- The wiring diagram can be found inside the control unit of the electrical cabinet / main box.
- Installation must be carried out according to local laws and regulations
- The electrical installation (power supply, humidity control) must be carried out according to the wiring diagram supplied with the unit and the applicable local regulations. All information given in the wiring diagrams must be followed and observed.
- All cables must be run into the control unit via the cable openings and the use of cable glands.
- Make sure the cables do not rub against vibrating parts.
- The supply voltage must comply with the voltage in the wiring diagram.
- Study the system set-up part to get an overview.
- The pump station comes with a 3 m rubber coated power cable.
- Power consumption and size of pre-fuse can be found in *Section 11*.

5.5.1 How to connect to power supply

- Make sure that electrical supply corresponds to the specifications on the humidification system rating plate.
- Unlock the enclosure door with the intended key.
- Insert the power supply cable through a suitable free cable gland and lead the cable to the field terminal block, as shown on the picture of the enclosure below.
- Follow the appropriate electrical wiring diagram for the actual humidification system and connect the power supply leads to the field terminal block in the bottom accordingly.

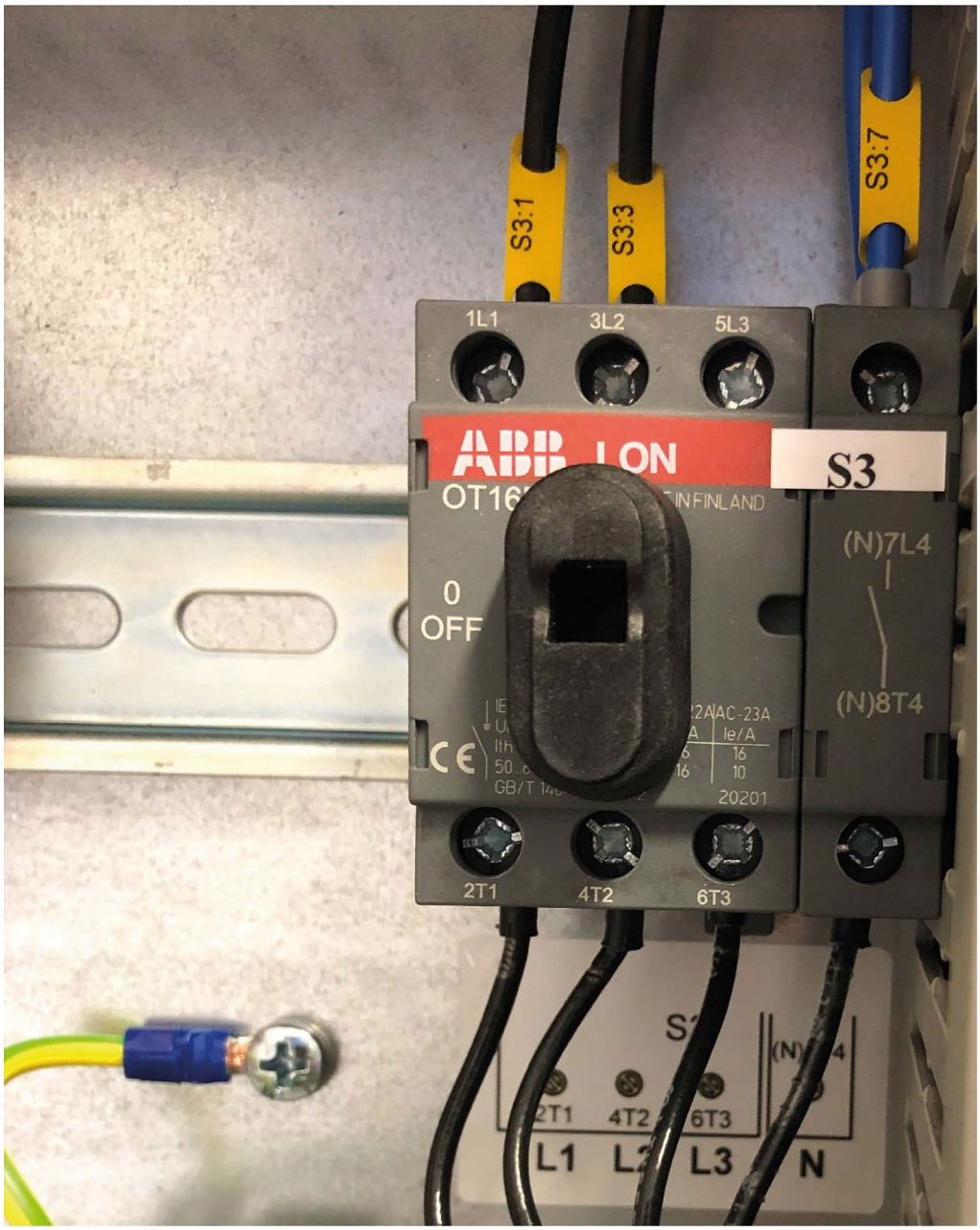

Fig. 52: Connecting the power supply

6 Initial commissioning

This section describes the initial commissioning step-by-step. The procedure described hereafter assumes that the system has been installed correctly in accordance with guidelines in *Section 5*.

CAUTION!

It is mandatory that the initial commissioning be carried out by an authorised Condair service technician appointed by your local Condair supplier

When fitting water filters, RO membranes, hoses and other components in direct contact with water please wear sterile gloves or touch only packing paper to keep the filter bacteria-free.

6.1 Cabinet layout

Important: make sure that S1 and main power switch S3 are both set to the off position

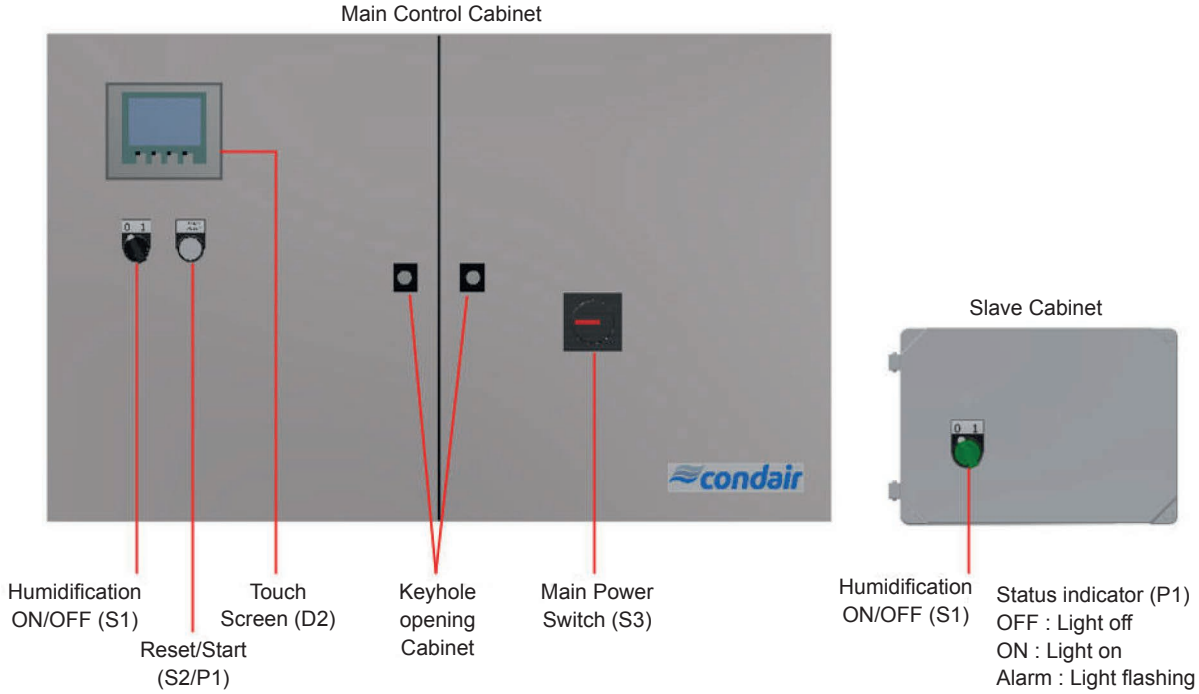

Fig. 53: Overview cabinet

6.2 Insert inlet filter

- Unscrew the filter housing using a filter wrench.
- Insert filter, and make sure that it is centred on the guide knob in the bottom of the white filter vessel.
- Tighten the filter as much as possible by hand and then use the filter wrench to tighten approx. 1/4 turn (make sure the O-ring is correctly placed).
- Slowly open water supply.
- If the filter is hard to tighten or leaks, unscrew it and check that it is centred, the O-ring is undamaged and the sealing surface is smooth.

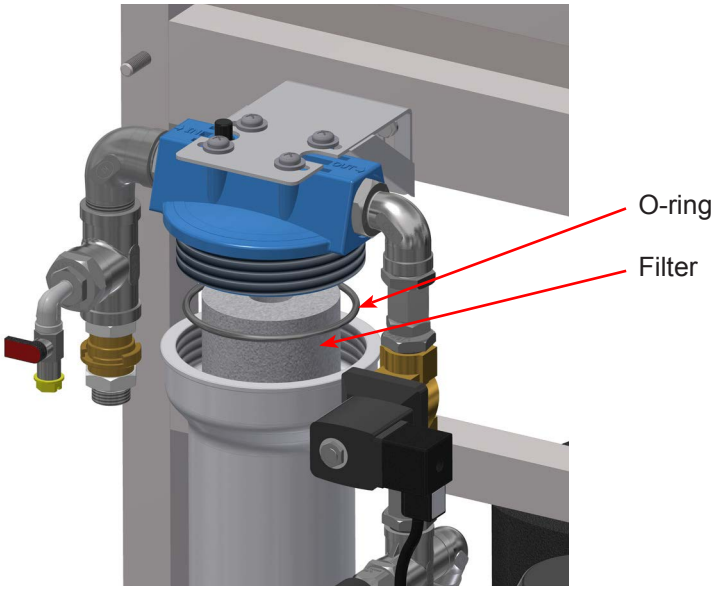

Fig. 54: Installation of inlet filter (F1)

- Bleed the filter by pressing the air button on the filter until water leaks. Release the button.

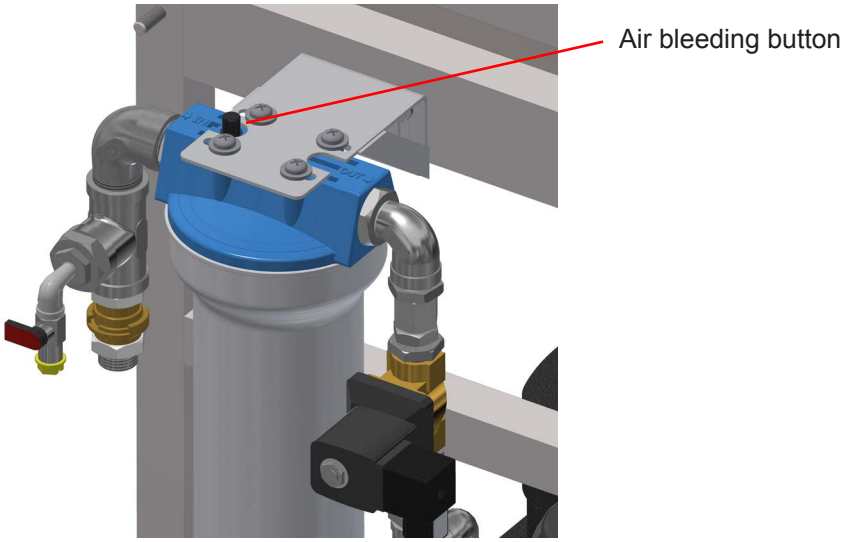

Fig. 55: Air bleeding

6.3 Insert RO membrane (only for Condair HPRO models)

- Remove the top part of the membrane housing
- Carefully cut open the protective bag of the RO membrane in the bottom end (the flat end)
- Lower the membrane into the membrane housing, O-ring up!

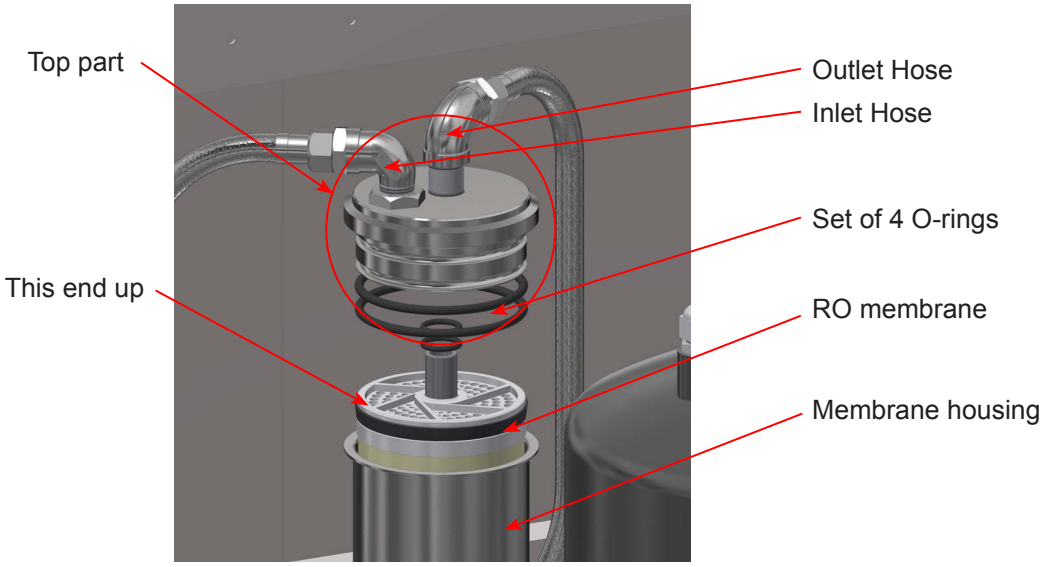

Fig. 56: Inserting membrane

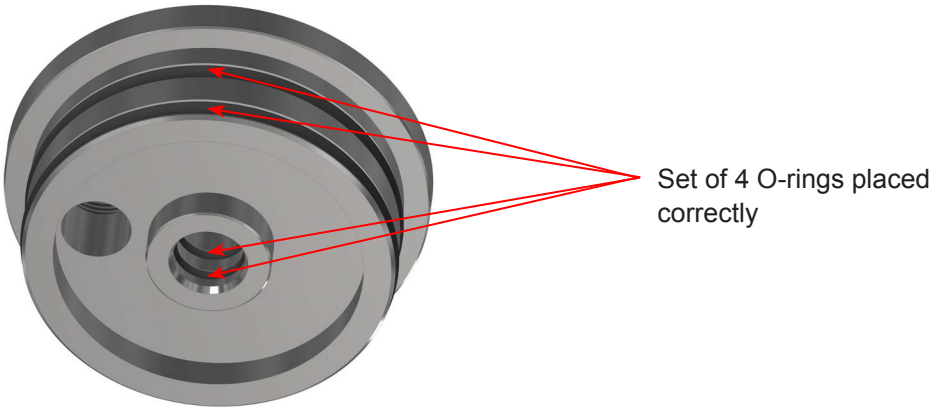

Fig. 57: Placing the O-rings

- Press the top part back in position and secure it with the clamp, do not use any lubricant for the O-rings, moisten them with water if it is a tight fit.
- Retighten the inlet and outlet hoses.

6.4 Mount sterile breathing filter (only for Condair HPRO models)

- Unpack the filter and moisten the O-ring with running water, avoid touching nipple and O-ring with your bare hands.
- Remove protective yellow cap
- Press the sterile breathing filter in place on top of the permeate vessel (RO tank).

Note: If the sterile breathing filter has been wet, it must be replaced.

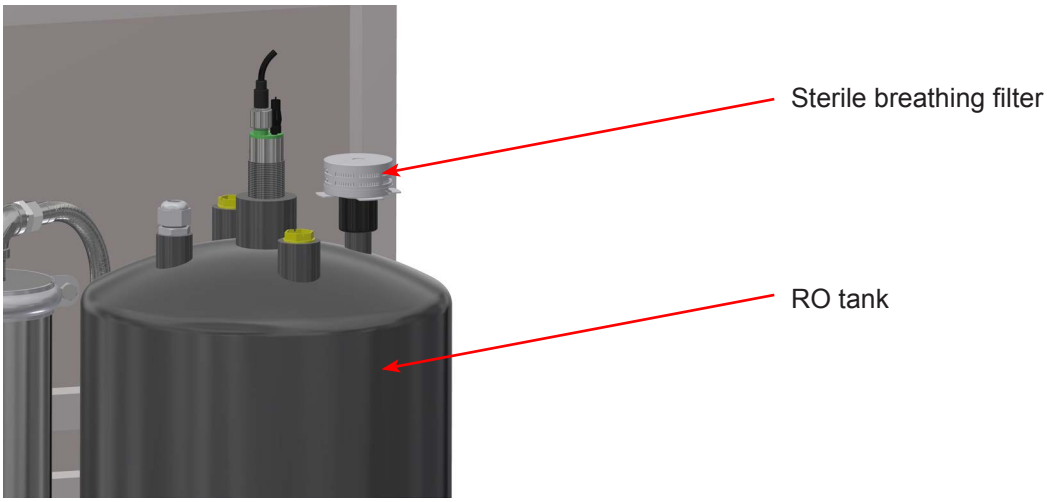

Fig. 58: Mounting sterile breathing filter

6.5 Set up the controller

See *Section 7*.

6.6 Flushing procedure

In order to get the conservation / anti-freeze fluid out of the system and avoid damaged valves and clogged nozzles, it is important to flush the system.

- Remove yellow cap from high-pressure hose and lead hose to drain.
- Now the pump is ready for start-up and flush sequence.

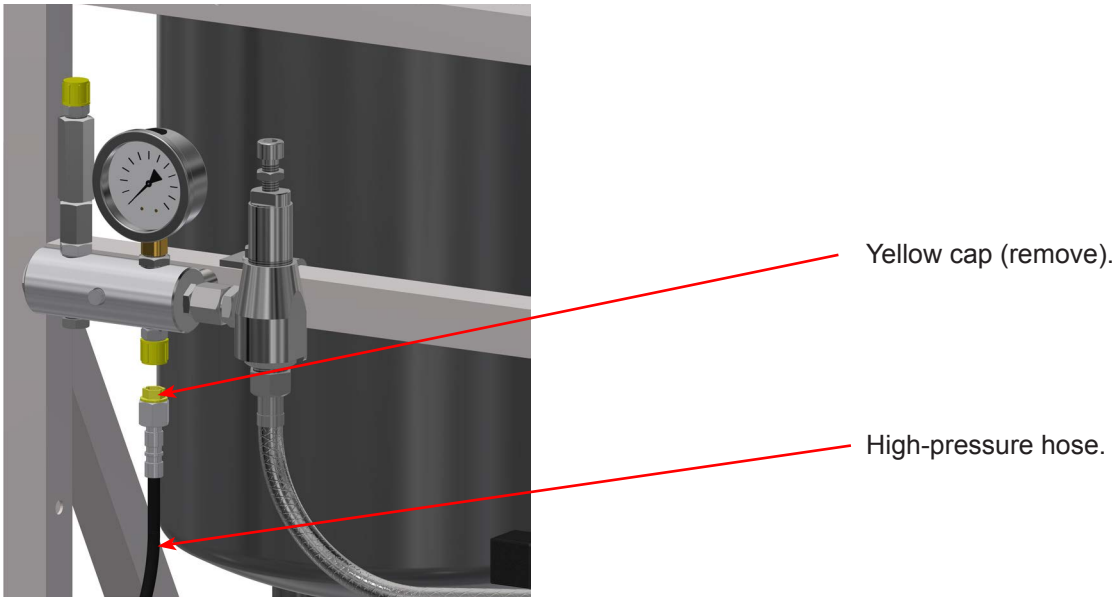

Fig. 59: Lead high-pressure hose to drain

6.6.1 Flushing the HPRO pump unit and RO membrane

- Make sure the water supply is fully open.
- Turn the main power switch S3 to ON position (keep S1 in off).
- If hygienic flush starts, skip it.
- Go to 3.15 Select membrane flush.

3.15 - Select membrane flush screen	
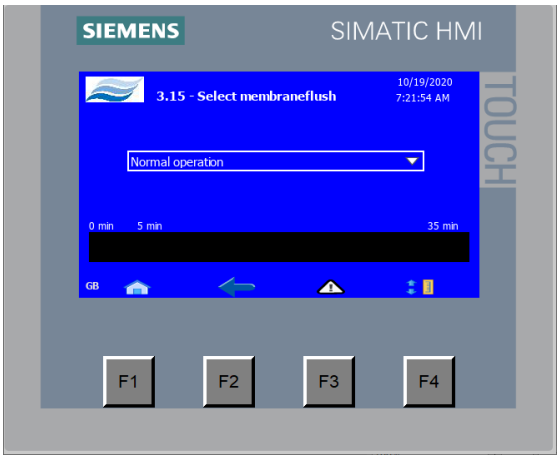	Always perform a membrane flush in the following situations: – First time the RO system is placed into operation. – After changing RO membrane(s). – If RO has been shut off for a longer period. • Select <membrane flush> from the dropdown menu. • Turn S1 to on, membrane flush starts. • Bleed the RO pump. • After the membrane flush program is finished (35 minutes) select <normal mode> from the dropdown menu and go to home screen.

- Now the RO system produces water and fills the RO tank, wait until the tank is full (RO pump stops).
- Now follow the "Flushing the HP pump unit" procedure (see *Section 6.6.5*).
- High-pressure pump might start immediately after termination of the flush procedure: please monitor the system during the flush procedure.

6.6.2 Bleed air from the RO pump

If the RO pump does not build up pressure or is noisy, bleed it.

- Open the air screw until all air is out, while the pump is running.

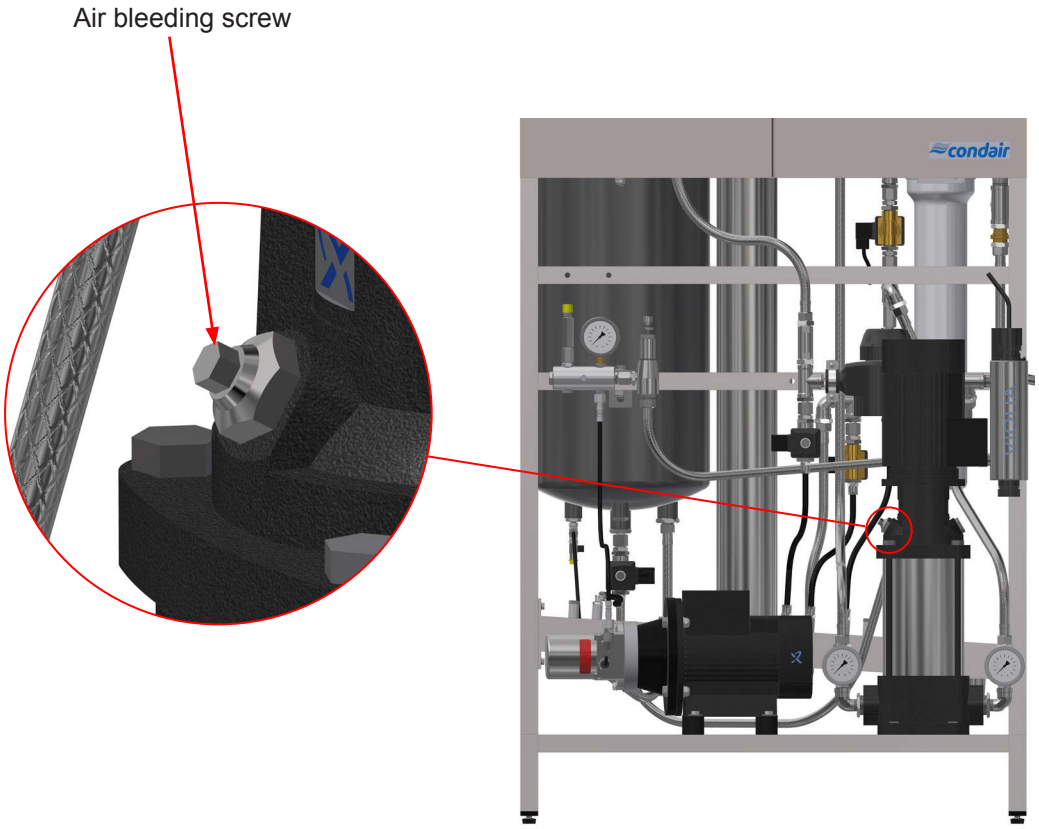

Fig. 60: Bleeding RO pump

6.6.3 Adjusting the reverse osmosis

6.6.3.1 Explanation of technical terminology

***Permeate**:*
Processed, desalinated water which is produced by the HPRO system and supplied to the reservoir tank.

***Concentrate**:*
The water led to the outlet. This water contains salts and minerals that have been removed from the water.

***Feed water**:*
The water which is led directly to the HPRO.

***TDS**:*
The amount of dissolved salts, measured in mg/l.

***Conductivity**:*
The designation of the water's salt concentration measured in (µS/cm). The lower the value, the higher the water quality.

***Membranes**:*
Is the system filter which desalinates the feed water.

***RO**:*
The abbreviation for reverse osmosis.

***Softening**:*
A pre-filter which softens the water, i.e. it removes hardness from the water.

6.6.3.2 Water quality

The feed water, which is to be treated in the HPRO system, must be of drinking water quality. Please read requirements for inlet water in *Section 2.6* and in *Section 11*.

If there are doubts about the raw water composition, a water analysis must be made. The HPRO must be connected to a water pressure of minimum 2.5 bar and maximum 7 bar. The quality of the treated water will be less than 20 µS/cm at 10°C.

The HPRO will be adjusted from the factory to the following parameters :

HPRO 100 & 300	20 °dH / 10°C	Permeate/concentrate ratio: Approx. 50/50
HPRO 500 & 800	1 °dH / 10°C	Permeate/concentrate ratio: Approx. 75/25

Water quality (contact Condair for technical advice)		
Content	**Symptom**	**Preventive action**
TOC, BOC and COD	Can cause slimy as well as firm hard film.	Can in some cases be micro-filtrated or removed by means of a carbon filter.
Iron, Manganese (ocher)	Precipitation of iron gives a reddish-brown film and precipitation of manganese gives a black deposit.	Sand filter – oxidation, softening, greensand.
Calcium, magnesium (hard water)	The membrane scales.	Softening, antiscalant
Silica	The membrane scales.	Antiscalant.
SDI (silt)	The membranes gets clogged.	Microfiltration (absolute), ultra-filtration, flocculation.
Oil	The membrane is greasy from oil.	Carbon filter.
Particles	The membrane gets clogged due to hard deposits.	Microfiltration.
Chlorine, pesticides, organic solvents	Membrane deformed. Permeate capacity and quality changed and cannot be CIP-cleaned back to the original capacity. The deformation is not visible.	Free chlorine shall be removed by active carbon filter and chemical cleaning, either with thiosulphate or sulphite.
Bacteria	Membrane is clogged by slime.	Chlorination + de-chlorination, UV, micro-filtration 0.2 µS/cm and ultra- filtration.

6.6.3.3 Adjustment of outlet amount

Important! Read the entire section before adjustment is started.



Disconnect drain hose from drain manifold and put into bucket.



Open both the recirculation valve (V2) and the outlet valve (V3).

Note: Outlet valve could be a nozzle depending on configuration, if so just leave it in.

V2

V3
(In the outlet is a nozzle placed with approx. 50 l/h)

The outlet (concentrate) amount must be adjusted. Which amount is suitable on your system depends on the feed-water quality. Too high water recovery will damage the system membranes. On condition that the raw water complies with the water quality requirements, it can operate at a recovery rate of 70-80% with softening depending on the amount of organic material in the water.

HPRO type	Max Permeate capacity (l/h) [1]	Outlet amount (l/h) (with softened water)		Outlet amount (l/h) (with tap water)	
		Surface water (75% recovery)	Groundwater (80% recovery)	Surface water (50% recovery)	Groundwater (55% recovery)
100	100	33	25	100	82
300	275	92	69	275	225
500	500	167	125	- [2]	- [2]
800	750	250	188	- [2]	- [2]

[1] For every degree the inlet water is below 10°C, the permeate capacity (l/h) must be adjusted down with 3%.

[2] We recommend always using softening for HPRO 500 and 800, as the water consumption and wear on membranes will be relatively high. However, local water conditions may in some cases justify running without. Please ask Condair for advice.

Ex.: HPRO 500 with 80% recovery

$$\textit{Outlet amount l/h} = \frac{\textit{100 x Permeate capacity l/h}}{\textit{Recovery\%}} - \textit{Permeate capacity l/h}$$

$$\textit{Outlet amount} = \frac{\textit{100 x 500}}{\textit{80}} - \textit{500} = \textit{167 l/h}$$

Start the RO system and adjust the outlet so the desired amount of outlet water has been obtained.

6.6.3.4 Adjustment of permate amount

- Adjust the permeate amount with the recirculation valve. Adjust the amount of permeate produced to Max Permeate capacity (l/h) of the specific system remember to temperature withdraw 3% from max permeate capacity (l/h) for every degree the inlet water is below 10°C.
  E.g. if the feed water temperature is 8°C, for an HPRO 300 it means that the permeate capacity will be 6% below the normal 275 l/h, i.e. 258 l/h.
- When the requested pressure and permeate capacities have been obtained, check again if the outlet amount has been adjusted correctly.
  Note: The system must be started and stopped two times, and then the flow must be re-checked. The valves can then be readjusted if necessary.
- Check on the RO pump outlet manometer that it shows the correct operating pressure, 6-10 bar. Please note that the operating pressure may vary by different temperatures and capacities.
- Now check the quality of the processed water on the permeate hose; the conductivity must be below 20 µS/cm (conductivity meter is available as optional equipment).
- Check that the outlet water is below 1000 µS/cm.
- Check that the HPRO automatically starts and produces treated water.
- Check if the HPRO automatically shuts down by too low feed water pressure or lacking feed water supply. This is done by slowly closing the feed water supply while the HPRO is in operation. When the water supply has been interrupted, the HPRO must stop automatically within 10 sec. In order to put the HPRO back into operation, the water supply must be re-established and the reset button pushed once. The HPRO will automatically revert back to normal operation! The system is now commissioned and ready for use.

6.6.4 Manual operation

- Make sure the water supply is fully open.
- Turn the main power switch S3 to ON position (keep S1 in off).
- If hygienic flush starts, skip it.
- Go to 4.11 test screen.

4.11 - Test Screen

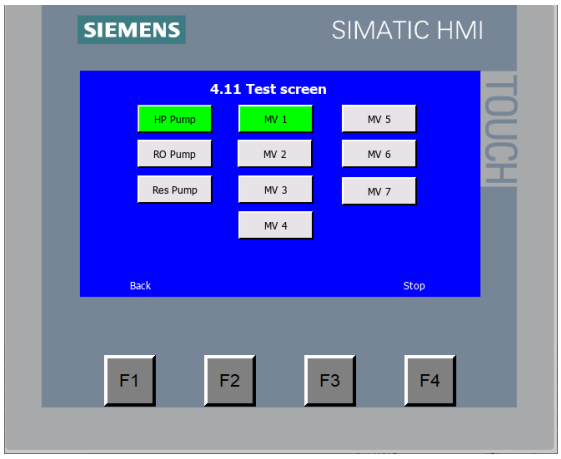

From this screen you can operate valves and start pumps manually.
WARNING: All safety features are now deactivated.

To Start the high-pressure pump and flush the pump to get air out:

- Turn <S1> to ON position (1).
- Press <MV1> button to open inlet valve.
- Press <HP pump> to start high-pressure pump.
- After a few seconds the pump should run smoothly without any rattling, hammering or vibrations, if not turn off immediately! Air out the system, make sure MV1 is opening and check water supply before turning on again.
- Repeat procedure to get the air out. Don't let the pump run for more the 3 minutes or the water will get hot.
- Set <S1> to OFF.
- Return to home screen F1.

Password: ML System

6.6.5 Flushing hoses and nozzle lines

To prevent any dust and particles in the hoses and pipelines from clogging up the nozzles during start-up, it is necessary to flush thoroughly.

- **Very important: remove the last nozzle on each nozzle pipe!**
- Go-to 4.1 Manual operation page.

CAUTION!

Never let a solenoid valve be activated without running the pump. The solenoid valve will overheat if it does not have water running though.

4.1 - Manual Operation

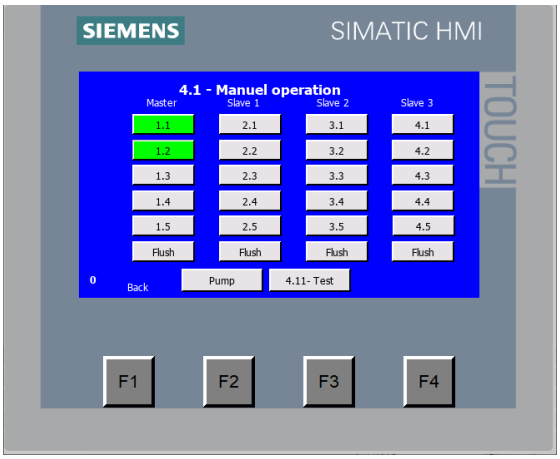

- Operate valves on master and each slave unit
- The <Pump> button starts the high-pressure pump.

x.1: Valve 1 on each Slave or at Master
x.2: Valve 2 on each Slave or at Master
x.3: Valve 3 on each Slave or at Master
x.4: Valve 4 on each Slave or at Master
x.5: Valve 5 on each Slave or at Master
Flush: Flush valve on each Slave and Master

- Start the pump and open Flush valve(s) on all valve blocks.
- Check that water is coming out of all the flush valves, keep flushing for 10 minutes.
- Close Flush valve(s) and open/close valve x.1, x.2, x.3, x.4 and x.5 on master and every slave in order to flush nozzle pipes.
  Note: Depending on the system size you could flush more than one step at the time. Be careful since the high-pressure pump can cavitate if output pressure gets too low.
- Flush each pipeline for minimum 10 minutes.
- Return to home screen F1.
- After end of flushing put in the nozzles removed.

The system is now ready for operation.

6.7 Check list initial commissioning Condair HPRO

The check list below must be filled out during the first commissioning and signed by the corresponding service technician.

Agency: _____ Client: _____

Location: _____ Date: _____

Pump: _____ Serial number: _____

Nozzle type: _____ Humidification capacity: _____

Demand signal: _____ Software version: _____

1. Visual inspection

Hoses properly fixed and wear protection spiral hose mounted, where necessary?	☐
Connections high-pressure piping pump station - step valve block	☐
Hose connections in the duct	☐
Connection MV REG1 to spray circuit 1/7	☐
Connection MV REG2 to spray circuit 2/7	☐
Connection MV REG3 to spray circuit 4/7	☐
Connection MV REG4 to spray circuit 8/15 (option)	
Connection MV5 flush valve to drain	☐

2. Control/Configuration

Are the electric installations of the Master and the Slaves (if available) correctly done in accordance with the appropriate wiring diagram? Specially observe: – Are the cables of the step valves correctly connected? – Is the control signal correctly connected? – Is the external safety chain connected (Master and Slaves) or is a cable bridge connected instead? – Is the power supply correctly connected and correctly fused?	☐
Are the control units (Master and Slave) correctly configured (switch on control units and check configuration). Specially observe: – Is the control signal correctly configured (is the internal controller deactivated, if an external controller is connected) ? – Is the number of Slave units correctly configured in the control unit of the Master? – Test the inlet pressure switch by closing inlet valve and letting out water from V1 (while pump is off) wait until the alarm "low pressure" appears in the display?	☐

3. Pump station

Flush supply line for at least for 5...10 minutes --> then connect	☐
Flush high-pressure piping for 5...10 minutes	☐
Room equipped with floor drain?	☐
Flushing line and housing drain connected and hoses secured?	☐
Flow pressure 2...10 bar?	☐
Stop valve open?	☐
No leakages at the pump?	☐

4. Nozzle unit

Nozzle pipes tight?	☐
Drain within the humidification distance present and connected via a siphon? Does the height of the siphon comply with the expected duct pressure?	☐
Spray angle of the nozzles (min. 50°, optimal 70°)	☐
Minimum distance from the first nozzle to the duct wall accurate (no drop formation on the duct wall)?	☐
Step 1/7	☐
Step 2/7	☐
Step 3/7	☐
Step 4/7	☐
Step 5/7	☐
Step 6/7	☐
Step 7/7	☐

5. Droplet separator

Droplet separator correctly installed, according to the regulations of the manufacturer?	☐
Drain after the droplet separator present and connected via a siphon? Does the height of the siphon comply with the expected duct pressure?	☐
No drop throw after at least 1 hour of full load (fan and humidifier)	☐

Remarks: _____

_____

_____

_____

_____

_____

Date: _____ Signature: _____

7 Controller set-up

The Condair HP & HPRO are controlled by a Siemens PLC with a Siemens touch panel. Many settings are already pre-set from the factory based on the info given when the unit was ordered. It is nevertheless important to go through all the basic settings before the unit is commissioned. Please go to all set-up parameters in this section.

1.1 - HP Controller

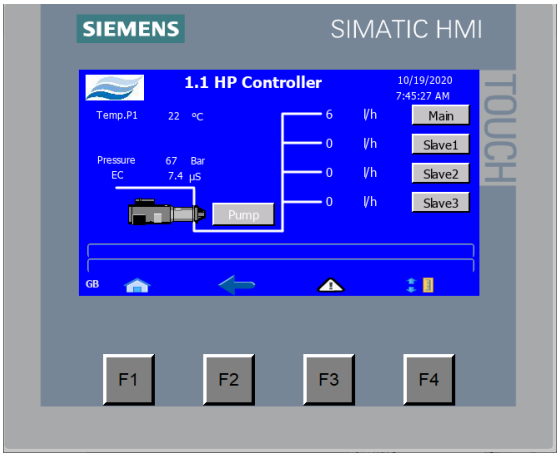

The interface panel, has a touch sensitive screen and four fixed buttons F1, F2, F3, F4

F1: Home, go to home screen.

F2: Back step, go to previous screen

F3: History, go to list of alarm and warning messages

F4: Settings, go to settings and maintenance menu

Pressing the Condair Logo in the upper right corner changes menu language and units (Metric / US)

Tip! Use the tip of a pen or similar when typing numbers on the touch screen.

1.1.1 - Rotation check

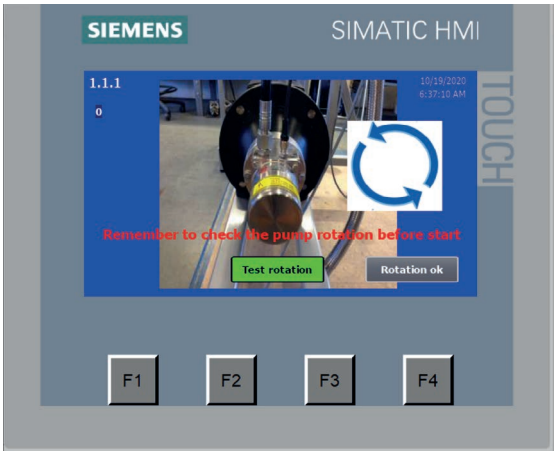

Before you will be able to start the pump for the first time, a rotation check of the high-pressure pump must be preformed.

Press "Test rotation" and check that the highpressure pump is running the correct way.

If not, a change of the phases on the incoming cable must be done.

When rotaion is correct, press "Rotation ok".

7.1 Menu structure

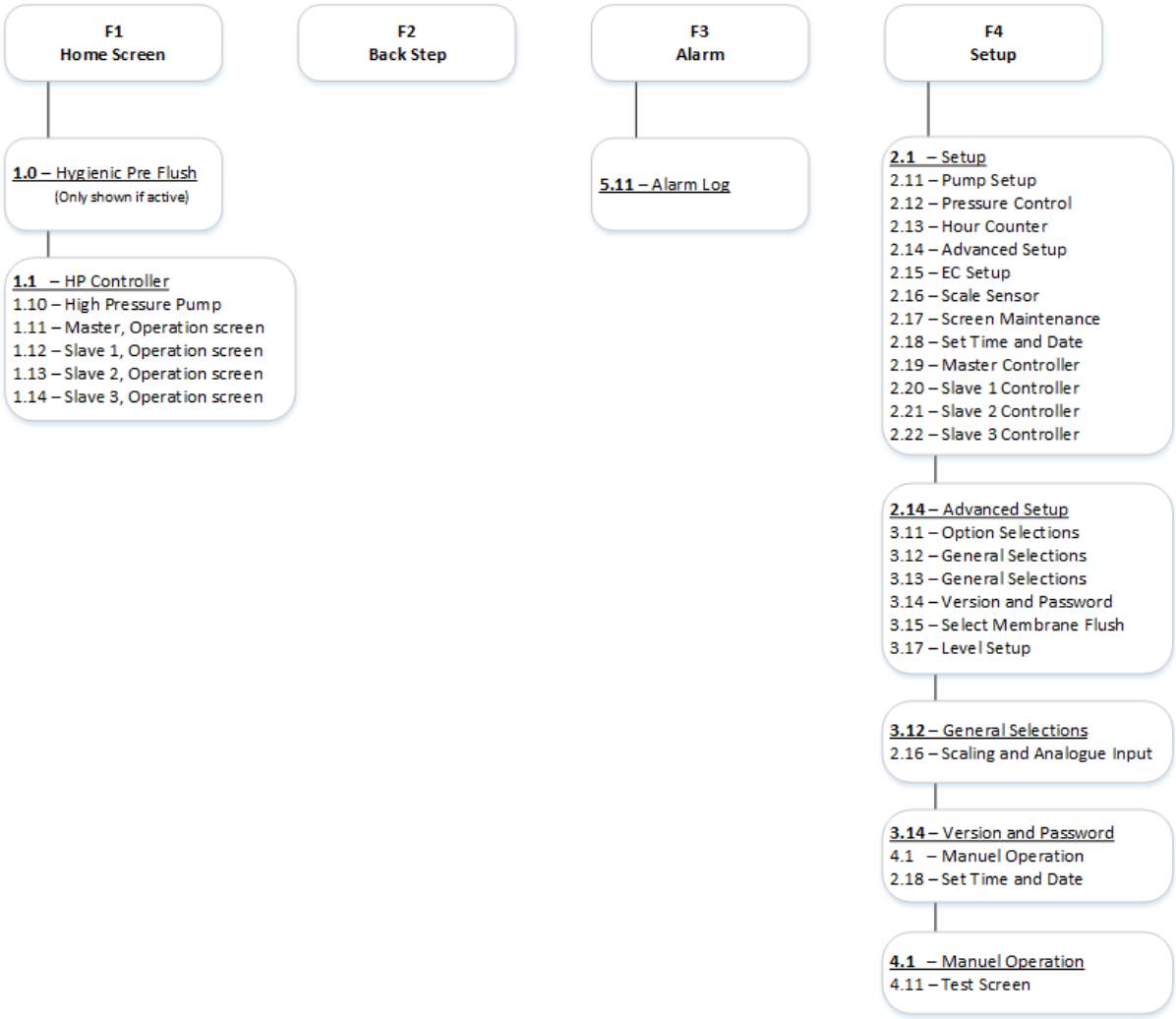

Fig. 61: Menu structure

7.2 Basic settings

WARNING!

It is possible to deactivate or change hygienic precautions / settings. Intentional or unintentional changes in the menu may cause unintended health risk for people or animals. Only trained Condair personnel should change basic settings

CAUTION!

It is possible to change or deactivate settings that can lead to malfunctions or damage the equipment.

1.0 - Startup information	
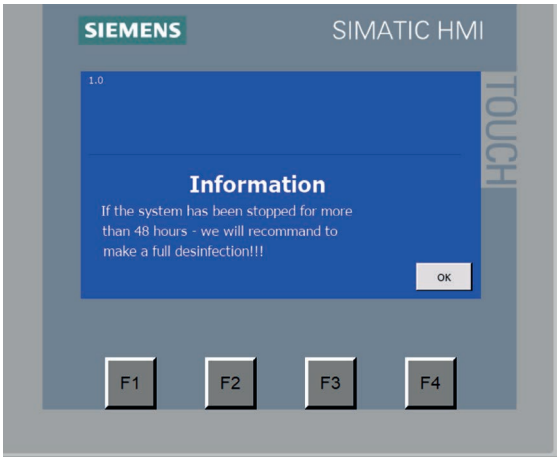	If pumpstation have been stopped for 48 hours or more, this screen will appear to inform that the system should be disinfected to ensure the system is clean.

1.0 - Hygienic pre flush	
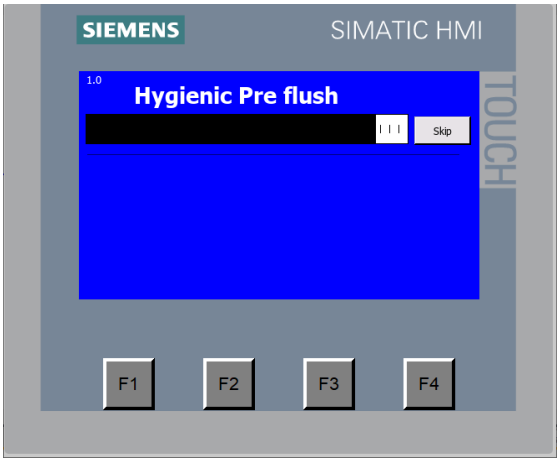	The HP has a safety feature that performs a hygienic pre flush if the system has been switched off for more than 48 hours. This is done to ensure that the water in the pipe leading to the unit is filled with fresh water before humidification starts. Default is 10 minutes flush. Press <Skip> if you already flushed the pipes leading to the pump. **After pre flush, you will come to the home screen 1.1 or 1.11.**

2.1 - Setup menu

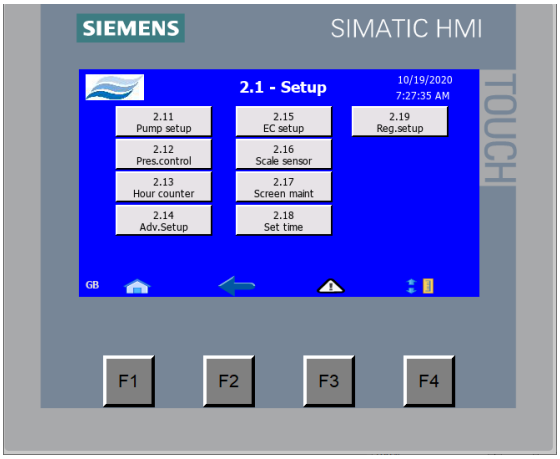

From the setup menu, it is possible to enter submenus and change settings.

2.18 - Set time and date

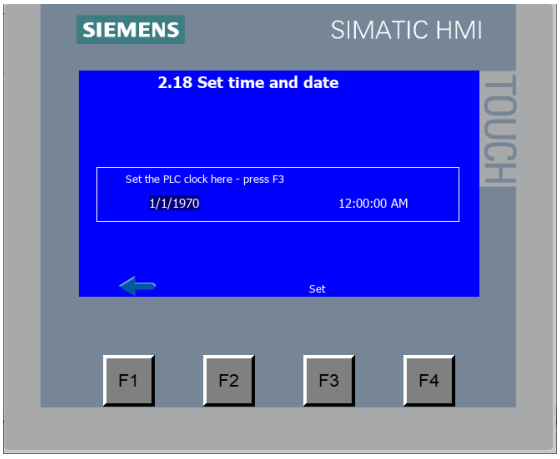

Tap the date or time in order to set.
Enter the date/time exactly as shown.

Clock: 10:59:59
Date: dd/mm/yyyy

AM/PM
Date: mm/dd/yyyy

2.14 - Adv. Setup

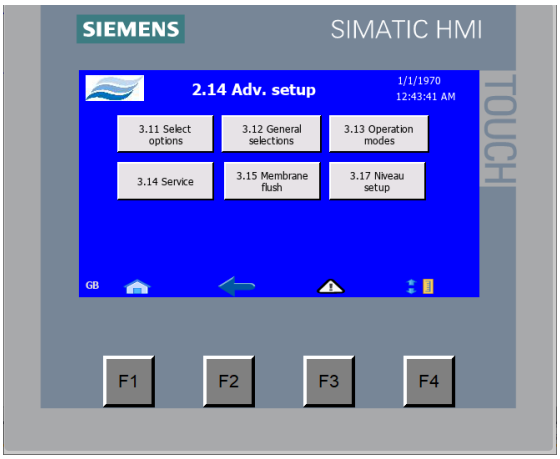

Password: Master Code

Settings in this menu should only be changed by trained personnel!

3.11 - Option selections



Check that the options are correctly selected for the pump. Only options already mounted from the factory can be selected.

- UV select (Ultra Violet lamp)
  - No UV lamp
  - UV Monitoring
- FD select (frequency drive)
  - Without FD
  - With FD
- RO select (Reverse Osmosis)
  - Without RO function
  - With RO function (100-500 l)
  - With RO function (800 l)
- EC select (Conductivity monitoring)
  - No EC monitoring
  - EC monitoring + alarms (option)
- Units
  - liter/hour
  - lb/hour
- Communication
  - None
  - Modbus
  - BACnet

- EC monitoring + al + RV/CO2 (not selectable)
- EC monitoring + al + MB + RV/CO2 (not selectable)

al=	Alarms
RV/CO2=	Raw water mixer / CO2 for conductivity control
MB=	Mix Bed filtration (ultra.pure water)

3.12 - General selections

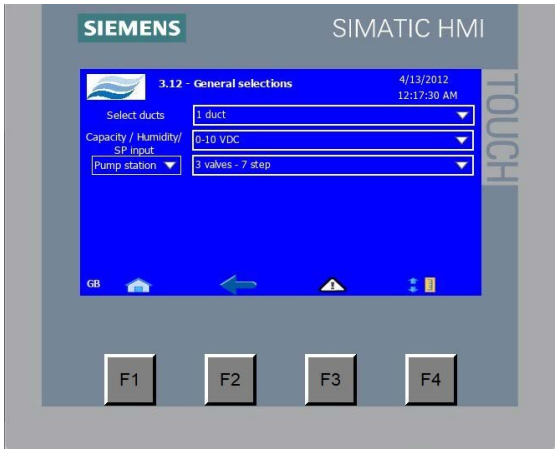

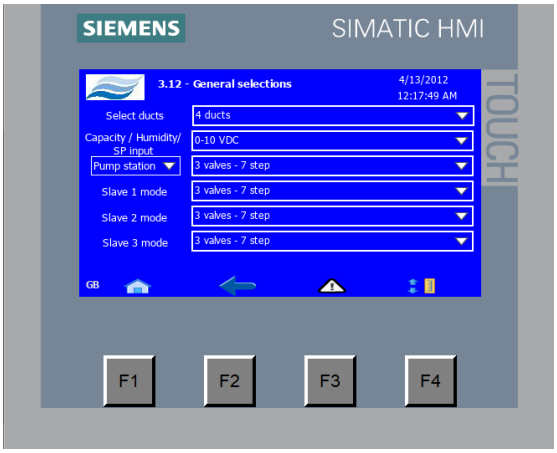

- Select Ducts (select number of ducts in the system)
  - 1 duct
  - 2 ducts
  - 3 ducts
  - 4 ducts
- Capacity / Humidity / SP intput
  - 0-10 VDC
  - 0-10 VDC - humidity sensor scaled 20-80%RH
  - 0-20 mA (remember resistor)
  - 4-20 mA (humidity sensor scaled 20-80%RH, remember resistor)
  - 4-20 mA (remember resistor)
  - Manuel Setup
  - Mb/Bn Extern SP / 0-10V humidity scaled 20-80%RH
  - Mb/Bn Extern SP and 0-10V humidity scaled 20-80%RH
  - Mb/Bn Extern SP and 4-20 mA humidity scaled 20-80%RH
  - Modbus/BacNet 0-100
  - Modbus/BacNet 0-100 humidity scaled 20-80%RH
- HP duct mode / Slave mode
  Choose number of step valves on each valve block (without flush valve)
  - 3 valves – 7 steps
  - 4 valves – 15 steps
  - 5 valves – 31 steps

3.13 - General selections

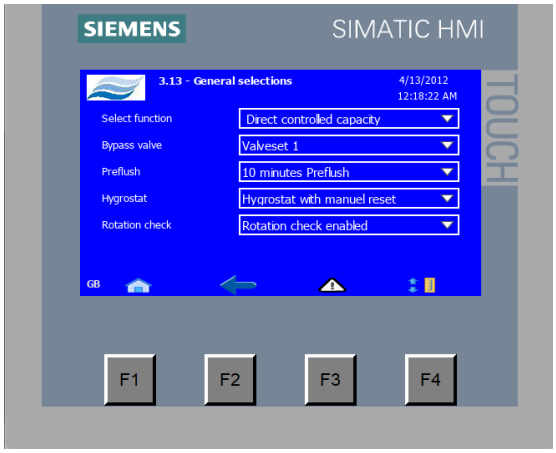

- Select function (duct humidity control)
  - Direct controlled capacity (default)
  - Humidity controlled capacity
- Bypass valve MV5, chose which valve is set to work as bypass valve. Choose the valve farthest away from the pump station, to secure the most effective flushing of the system.
  - Valve set 1
  - Valve set 2 (slave 1)
  - Valve set 3 (slave 2)
  - Valve set 4 (slave 3)
- Pre flush (the length of the pre flush period should be long enough to ensure that all stagnant water in the pipeline to the pump station has been drained out).
  - No pre flush (not recommended)
  - 1 minute preflush
  - 5 minutes preflush
  - 10 minutes preflush (default)
  - 20 minutes preflush
- Hygrostat
  - Hygrostat manuel reset
  - Hygrostat auto reset
- Rotation check
  - Rotation check enabled
  - Rotation check disabled (not recommended)

Display 2.19 - HP Controller/Slave 2.19 ... 2.22 (Humidity controlled)



– Flow settings, Enter value in l/h for each step valve, this will allow the controller to show correct water volume being sprayed into the duct.

  e.g.
  flow 1: 6*4,5 l/h nozzles = 27 l/h
  flow 2: 12*4,5 l/h nozzles = 54 l/h
  flow 3: 24*4,5 l/h nozzles = 108 l/h

– Controller settings
  – PRO: proportional band standard 20%. For more aggressive regulation lower PRO e.g. 15%
  – Reg.up: delay time for step jumps up
  – Reg.down: delay time for step jumps down

Display 2.19 - HP Controller/Slave 2.19 ... 2.22 (Direct controlled)



• Controller settings
  – Change input delay
  – Reg.up/down speed (Sec./%)

8 Operation

8.1 Daily operation

Important! The procedure described hereafter assumes that the system has been installed correctly and initial commissioning has been carried out by a service technician from the manufacturer/distributor.

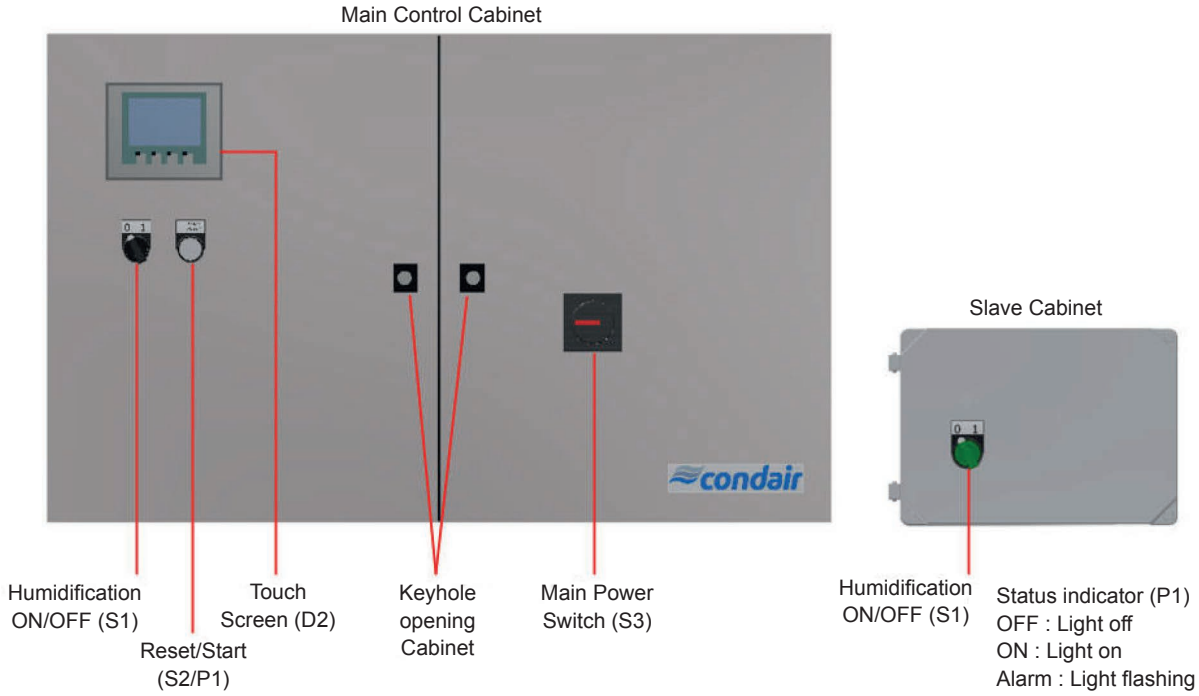

Fig. 62: Overview cabinet

– Check all system components and installations for possible damage.
– Open the stop valve of the water supply line
– Switch on the main power switch (S3), and on/off (S1) of the Slave control unit.
– If the system has integrated RO, the RO pump will start flushing and producing RO water to the tank
– Turn the humidification on/off button (S1) to 1
– If it is more than 48 hours since the system has been powered down, an automatic hygienic flush sequence should start, progress will be shown on the screen. Let the pump complete the flush sequence (It's recommended to disinfect the system if It has been switch off for more than 48 Hours)
– The touch screen will show the home screen.
– If a humidity demand/signal is present, high pressure pump starts. A number of regulation valves open corresponding to the incoming signal.
  Note: HPRO pumps with integrated RO might need time to fill the RO tank before humidification starts.

8.2 Weekly inspection

During operation the Condair HP and the humidification system have to be inspected weekly.
On this occasion check the following:

- Entire humidification system for leakage.
- Electric installation for damage.
- Operating display for warning or error messages
- UV filters
- Pressure drop over filters
- Water treatment systems such as carbon filter, softener, RO

If the inspection reveals any irregularities (e.g. leakage, error indication) or any damaged components take the Condair HP out of operation. Let the damage or malfunction be resolved by a qualified specialist or service technician.

Fill in the "Service form for weekly monitoring of humidifying systems" provided in the Appendix of this manual, failing to do so might affect you warranty.

8.3 Taking the HP/HPRO out of operation

WARNING!

For hygienic reasons we strongly recommend to leave the Condair HP on all the time, even in periods when no humidification is required. This way the water circuit is flushed on a regular schedule and the UV filtration is active, thus preventing the formation of unwanted microorganisms

CAUTION!

If the system is turned off for a longer period it could damage components, such as RO-membranes, valves, filters and UV filter. If taking the system our for a longer period, please contact Condair service for advice regarding preservation.

Proceed a follows to put the Condair HP out of service, e.g. for maintenance work:

1. Switch off the pump station and/or all Slave control units (if present).
2. Close the stop valve of the supply line and secure it to prevent inadvertent opening.
3. Open the test tab on the discharge manifold to relive pressure.
4. Turn off the service switch in the mains supply lines to the pump station and to the Slave control units (if present), then secure the service switches against inadvertent switching on.
5. **Hygiene!** Let the fan of the ventilation system run until the humidifier unit is dry.
6. In case you need to carry out maintenance work, switch the ventilation unit off and secure it to prevent in-advertent power up (see instruction manual of the ventilation system).

8.4 Dismantling and disposal

Dismantling

1. Take the Condair HP out of operation as described in *Section 8.3*.
2. Have the system components dismantled by a qualified service technician.

Disposal/Recycling



Components not used any more must not be disposed of in the domestic waste. Please dispose of the unit or the individual components in accordance with local regulations at the authorised collecting point.
If you have any questions, please contact the responsible authority or your local Condair representative.
Thank you for your contribution to environmental protection.

9 Maintenance

9.1 Important notes on maintenance

Qualification of personnel

All maintenance work must be carried out only by well-qualified and trained personnel authorised by the owner.

Maintenance and repair of the electrical installation of the Condair HP/HPRO must be carried out only by qualified personnel (e.g. electrician) who are aware of possible dangers and implications.
It is the owner's responsibility to verify proper qualifications of the personnel.

General note

The instructions and details for maintenance work must be followed and upheld.

Only the maintenance work described in this documentation may be carried out.

Only use original Condair spare parts to maintain the warranty on the system.

Safety

Before maintenance is initiated, the Condair HP/HPRO must be taken out of operation in accordance with instructions in *Section 8.3* and protect against unintentional switching on. Before servicing the humidification unit, the ventilation system must be set out of operation (consult the documentation of the ventilation system).

The Condair HP/HPRO must be cleaned and disinfected at the intervals, described in *Section 9.2* and the cleaning work has to be carried out correctly.

WARNING!

Poorly maintained humidification systems may endanger health. Therefore it is mandatory to **observe the specified maintenance intervals** and to **carry out maintenance work in strict accordance with the instructions**.

9.2 Maintenance work

To ensure safe, hygienic and economic operation of the Condair HP, its components must be checked and maintained periodically according to the table below. The maintenance intervals and maintenance work stated below are guideline values. Local conditions (quality of the supply air, the water, etc.) could influence the maintenance intervals. After having carried out the maintenance work, fill in the maintenance checklist and sign it and reset possible maintenance indications. The relevant personnel are fully liable for any maintenance work not carried out.

Checklist for planned service

To be performed	Half-year	Each year	Every 2 years	Every 4 years
Review of the system				
Testing of the system's overall function	X	X	X	X
Meter reading of water consumption (if present)	X	X	X	X
Reading of pump running hours	X	X	X	X
Logbook registration	X	X	X	X
Control weekly monitoring checklist is filled out	X	X	X	X
Water treatment system / incoming water				
Analysis of water hardness (in case of water softening)	X	X	X	X
Pump unit				
Replacement of filters	X	X	X	X
Check the condition of the pump (pressure & noise)	X	X	X	X
Testing of solenoid valves and replacement if necessary	X	X	X	X
Change gasket kit in high-pressure relive/reduction valve		X	X	X
Functional testing of max humidifier and duct release safety loops	X	X	X	X
Functional testing of high-pressure gauge and high-pressure transmitter (on VFD models)	X	X	X	X
Functional testing of pressure switch (pressostat)	X	X	X	X
Service inspection of PAHT pump (age 2 years or 8000 running hours)			X	X
Testing of ON/OFF valve and replacement if necessary		X	X	X
Reverse osmosis systems/RO (if Present)				
Measurement of conductivity	X	X	X	X
Replacement of pre-filter	X	X	X	X
Testing of overall function and settings for the RO system	X	X	X	X
Look for leaks	X	X	X	X
Disinfection / cleaning of tank	X	X	X	X
Performance test (produced water, drain water)	X	X	X	X
Testing of valves	X	X	X	X
Replacement of sterile breather filter		X	X	X
Testing of membrane and replacement if necessary	X	X	X	X

To be performed	Half-year	Each year	Every 2 years	Every 4 years
If UV system is present (also applicable for UV integrated in RO systems)				
Functional testing of UV systems	X	X	X	X
Cleaning of quartz glass on UV systems	X	X	X	
Replacement of UV-lamp		X	X	X
Replacement of quartz glass				X

To be performed	Half-year	Each year	Every 2 years	Every 4 years
Solenoid valve block(s)				
Functional test of solenoid valves and replacement of wear parts if needed	X	X	X	X
Humidification units / Nozzle arrangement				
Functional testing and airing if necessary	X	X	X	X
Testing of atomization quality and replacement of nozzles if necessary	X	X	X	X
Droplet separator, cleaning or replacement if necessary	X	X	X	X
Check drain(s) in humidifier section of the duct, clean drip tray.	X	X	X	X
Humidity sensors				
Testing and adjusting of humidity sensors. Replace by +/- 10% deviation	X	X	X	X
Checking of max humidity controller (maximum humidistat)	X	X	X	X
Control units				
Transfer relay replacement		X	X	X
Testing of contact K1 and replacement if necessary		X	X	X
Extraction of water sample from pump and nozzle				
Extraction of water sample from pump and nozzle	X	X	X	X
Disinfection of the system				
Disinfection of the system	X	X	X	X

Condair HP & HPRO recommended preventive/critical spare parts list, 4 year maintanace cycle

Description	Part number	HP100	HP200 VFD	HP300	HP500	HP500 VFD	HP800	HP800 VFD	HP1300 VFD	HPRO100	HPRO200 VFD	HPRO300	HPRO500	HPRO500 VFD	HPRO800	HPRO800 VFD	Technical lifetime	6 month	First year	6 month	second year	6 month	Third year	6 month	Fourth year
		Pieces needed for one service																							
Water filter																									
Filter 1 micron 20"	104550000				1	1	1	1	1								6 months	Change	Change	Change	Change	Change	Change	Change	Change
Filter 5 micron 20"	104551000									1	1	1	1	1	1	1	6 months	Change	Change	Change	Change	Change	Change	Change	Change
Filter 1 micron 9 7/8"	104560000	1	1	1													6 months	Change	Change	Change	Change	Change	Change	Change	Change
O-ring for water filter	430020050	1	1	1	1	1	1	1	1	1	1	1	1	1	1	1	24 months	Check	Check	Check	Change	Check	Check	Check	Change
Air Filter for RO tank																									
Sterile breather filter 0.2 my	104581000									1	1	1	1	1	1	1	12 months	Check	Change	Check	Change	Check	Change	Check	Change
UV Filter (not on all Pump stations), 30 mJ/cm²																									
S212 bulb (option), UV SC1	104594000	1															12 months	Check	Change	Check	Change	Check	Change	Check	Change
S287 bulb (option), UV SC2,5	104594500		1	1						1	1	1					12 months	Check	Change	Check	Change	Check	Change	Check	Change
S287 bulb (option), UV SC4	104595000				1	1							1	1			12 months	Check	Change	Check	Change	Check	Change	Check	Change
S463 bulb (option), S5Q-PA/SSM-24	104596000						1	1							1	1	12 months	Check	Change	Check	Change	Check	Change	Check	Change
S810 bulb (option), S8Q-PA/SSM-37	104597000								1								12 months	Check	Change	Check	Change	Check	Change	Check	Change
Quartz UV System (not on all Pump stations)																									
Quartz Sleeves for UV SC1	104582001	1															48 months	Check	Check	Check	Check	Check	Check	Check	Change
Quartz Sleeves for UV SC2,5	104582501		1	1						1	1	1					48 months	Check	Check	Check	Check	Check	Check	Check	Change
Quartz Sleeves for UV SC4	104583001				1	1							1	1			48 months	Check	Check	Check	Check	Check	Check	Check	Change
Quartz sleeve for S5Q-PA/SSM-24	104584000						1	1							1	1	48 months	Check	Check	Check	Check	Check	Check	Check	Change
Quartz sleeve for S8Q-PA/SSM-37	104586000								1								48 months	Check	Check	Check	Check	Check	Check	Check	Change
RO membrane																									
4" for MLPRO: **water quality 250 µS and higher**	150460000										1	1	2	2	3	3	95% salt removal	Check	Check	Check	Check	Check	Check	Check	Change
2.5" for MLPRO: **water quality 250 µS and higher**	150465000									1							95% salt removal	Check	Check	Check	Check	Check	Check	Check	Change
4" for MLPRO: **water quality 250 µS and lower**	686020010										1	1	1	2	3	3	95% salt removal	Check	Check	Check	Check	Check	Check	Check	Change
2.5" for MLPRO: **water quality 250 µS and lower**	686020005									1							95% salt removal	Check	Check	Check	Check	Check	Check	Check	Change
Electrical control system																									
Print frame relay Pump and On/Off valve	680010177	2	2	2	2	2	2	2	2	3	3	3	3	3	3	3	12 months		Change		Change		Change		Change
Print frame relays (**use 4 pcs per valve block**)	680010177	4	4	4	4	4	4	4	4	4	4	4	4	4	4	4	12 months		Change		Change		Change		Change
Contactor Siemens 24V (Q1+Q2)	349010218	1	1	1	1	1	1	1	1	2	2	2	2	2	2	2	48 months		Check		Check		Check		Change
High pressure pump																									
Service kit for PAHT 2	104466001	1	1							1	1						8000h/24 months				Overhaul				Overhaul
Service kit for PAHT 4/6.3	104466002			1	1	1			1			1	1	1		1	8000h/24 months				Overhaul				Overhaul
Service kit for PAHT 10/12.5	104466003						1	1							1		8000h/24 months				Overhaul				Overhaul
High pressure pump motor coupling																									
Service kit coupling PAHT 2/4	240020072	1	1							1	1						-				Check				Check
Service kit coupling PAHT 6.3	240020072				1	1							1	1			48 months				Check				Change
Service kit coupling PAHT 10/12.5	240020073						1	1	1						1	1	48 months				Change				Change
Valve block (highpressure)																									
Repair kit for one valve; core, spring, O-rings (24V)	190021030	4xVB	4xVB	4xVB	4xVB	4xVB	4xVB	4xVB	4xVB	4xVB	4xVB	4xVB	4xVB	4xVB	4xVB	4xVB	36 months		Check		Check		Overhaul		Check
Repair kit for one valve; guide tube, core, spring, O-rings (24V)	190021031	4xVB	4xVB	4xVB	4xVB	4xVB	4xVB	4xVB	4xVB	4xVB	4xVB	4xVB	4xVB	4xVB	4xVB	4xVB	36 months		Check		Check		Check		Check
Solenoid coil for valve block (230V)	190020030																-	Check	Check	Check	Check	Check	Check	Check	Check
Solenoid coil for valve block (24V)	2578820																-	Check	Check	Check	Check	Check	Check	Check	Check
Pressure regulator																									
Service kit	104481000	1	1	1	1	1	1	1	1	1	1	1	1	1	1	1	12 months	Check	Overhaul	Check	Overhaul	Check	Overhaul	Check	Overhaul
On/off valve																									
On/off valve	106521000	1	1	1	1	1	1	1	1	1	1	1	1	1	1	1	48 months	Check	Check	Check	Check	Check	Check	Check	Change
Check valve at manifold																									
Check valve 1/4"	510020000	1	1	1						1	1	1					24 months	Check	Check	Check	Change	Check	Check	Check	Change
Check valve 3/8"	510020005				1	1	1	1	1				1	1	1	1	24 months	Check	Check	Check	Change	Check	Check	Check	Change
Nozzles																									
Nozzle ML 4.5 Stainless	103150000	0,1xN	0,1xN	0,1xN	0,1xN	0,1xN	0,1xN	0,1xN	0,1xN	0,1xN	0,1xN	0,1xN	0,1xN	0,1xN	0,1xN	0,1xN	5-10 % yearly	Check	Check	Check	Check	Check	Check	Check	Check
Nozzle ML 2,5 Stainless	103160000	0,1xN	0,1xN	0,1xN	0,1xN	0,1xN	0,1xN	0,1xN	0,1xN	0,1xN	0,1xN	0,1xN	0,1xN	0,1xN	0,1xN	0,1xN	5-10 % yearly	Check	Check	Check	Check	Check	Check	Check	Check
Disinfection																									
Sanosil S010 Ag (1 liter bottle)	155404000	1	1	1	2	2	2	2	2	1	1	1	1	2	2	2		Change	Change	Change	Change	Change	Change	Change	Change
Water softener (not on all Pump stations)																									
Service kit Kinetico 30/2030 - 60/2060	150110002									1	1	1	1	1	1	1	24 months	Check	Check	Check	Change	Check	Check	Check	Change
Test set of softness	150400000									1	1	1	1	1	1	1	12 months	Check	Change	Check	Change	Check	Change	Check	Change
Additional water filter (not on all Pump stations)																									
Filter 20 micron 20"	104553000	1	1	1	1	1	1	1	1	1	1	1	1	1	1	1	6 months	Change	Change	Change	Change	Change	Change	Change	Change

9.4 Maintenance indications

The HP / HPRO have the possibility to give a warning when it is time for maintenance, the message is shown on the touch screen. If the system has a remote fault indication relay this will also give a signal.

For detailed information regarding settings and reset of the maintenance indicator please read the information given in the operating manual.

9.5 Disassembling and assembling of the mist eliminator for cleaning

1. Set system out of operation as described in *Section 8.3* and secure the system against inadvertent switching on.
2. Undo retaining clips, then remove rubber seals.
3. Remove connecting plates on the lower or upper side of the separator boxes and then unhinge the separator boxes.
4. Undo the screws of the box frame and remove the separator profiles assembly to the top.
5. Remove the profile retainers from the separator profiles.

The assembly of the separator boxes follows the reverse sequence. When assembling the separator profiles and the profile retainers make sure the recess in the profile retainers point to the bottom when the separator box is installed and the separator profiles are correctly mounted (consider air flow direction, see detail figure below).

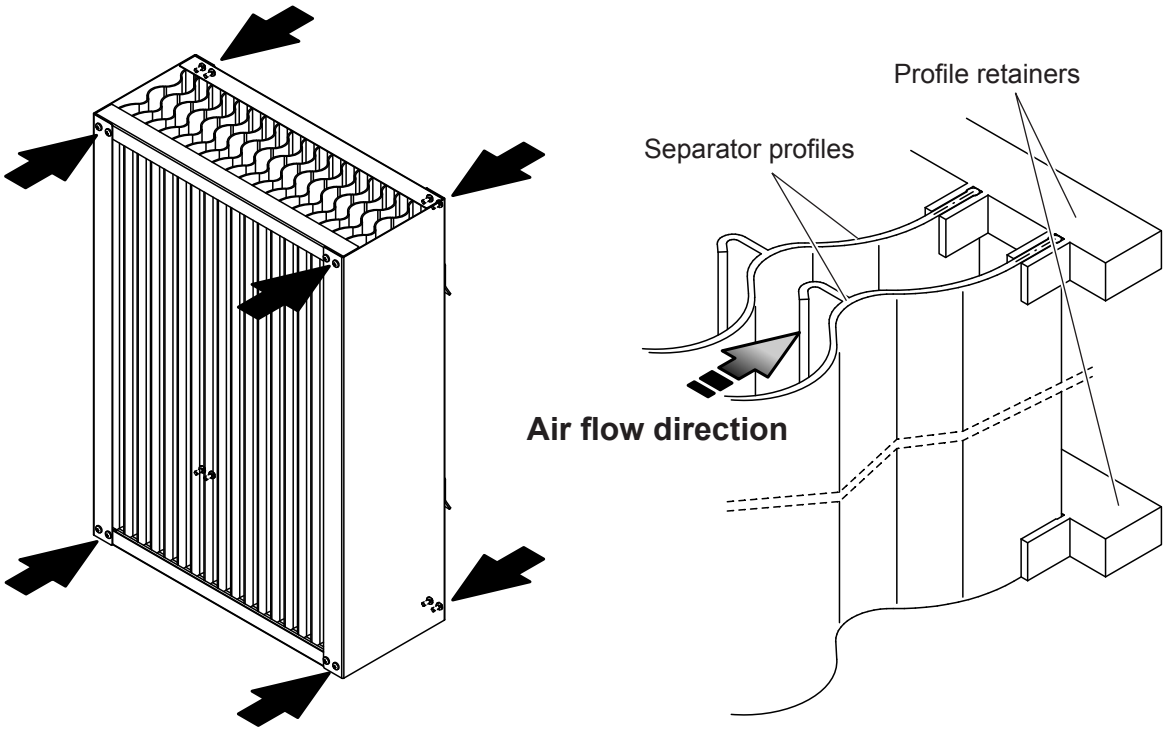

10 Troubleshooting

10.1 Important notes on troubleshooting

Qualification of personnel

Have faults eliminated by qualified and trained personnel only. Malfunctions caused by the electrical installation must be repaired by authorized personnel (e.g. electrician) only.

Repair work on the high pressure pump may only be carried out by your Condair representative's service technician.

Safety

When eliminating faults, the Condair HP/HPRO must be taken out of operation, as described in *Section 8.3*, and prevented from further inadvertent operation.

Make sure the power supply to the pump station /Slave control units is cut off (test with voltage tester) and that the stop valve in the water supply line is closed.

10.2 Malfunction with error indication

Malfunctions during operation are indicated by a corresponding warning message in the display of the pump station or the Slave control unit. Detailed information can be found in the separate operating instructions for HP/HPRO control unit.

Error message	Cause	Remedy
Max. humidistat	Maximum humidistat has been tripped, due to high humidity	Check that ventilation is on Set point is correct Incoming set point signal OK
	Max. humidistat defect or incorrectly set	Change max humidistat Set correct, e.g. 85 % rh
	Max. humidistat circuit damaged or not installed correctly	Check circuit for faults Check settings for max. humidistat in controller are correct If no max. humidistat, a jumper must be installed over terminals (4 & 4+)
Inlet water pressure too low	The inlet water pressure is too low	Check the inlet pressure at maximum flow for pump station according to product data
	The Inlet water pressure is too low for short periods (if inlet pressure and flow seems ok when measured)	Check the water installation for periodically high consumption e.g. cleaning, tank filling and maintenance work
	Defect Inlet pressure switch [PS]	Replace pressure switch
Sensor error	Humidity sensor missing or defect	Install humidity sensor
	Wiring to humidity sensor damaged or incorrectly installed	Replace wiring according to electrical diagram
	Humidity outside range (under 20 % rh or above 80 % rh)	Check the humidity at sensor and reset if below 20 % rh
	Sensor scaling is wrong	Scale the sensor correctly in the controller
Emptying tank - water too hot (only for HPRO systems)	Ambient temperature too high at pump location (max 25 ºC)	Lower ambient temperature in pump room (max 25 ºC)

Error message	Cause	Remedy
Stop - Pump too hot	Water flow through high pressure pump too low.	Check flush valve MV5 at step valve block opens and nozzle are not clogged
	Ambient temperature too high at pump location (max 25 ºC)	Lower ambient temperature in pump room (max 25 ºC)
	Incoming water to warm	Lower Inlet water temperature (max 15 ºC)
	Inlet pressure / flow missing	Defect inlet valve [MV1] Water supply blocked / closed
	Damaged thermostat or cable [T]	Change thermostat and cable
	High pressure pump defect	Locate cause of failure e.g. running hours exceeded 8000, particles / dirt in the system, missing water pressure, defect inlet valve. Change pump when cause of failure has been established and corrected
Tank full (only HPRO)	Top float switch on RO tank level stick has been activated	RO pump does not stop, check motor start relay Inlet valve [MV1] leaks, change / overhaul valve
Thermo relay error	RO or high pressure pump motor overheated	Check the pump is not jammed Check electrical motor for defects
FD error	Frequency converter error	Turn of the main power to pump station, wait 15 seconds then restart the system Check the settings on the Frequency converter according to the electrical diagram Check if pressure in high pressure system is too high/low
High pressure low/high	Outlet high pressure side outside pre-set value in 40-70 bar	Check high pressure at pressure gauge Check pre-set value in the controller, if pressure seems ok at pressure gauge Check pressure regulating valve functions correctly and is set to 65 bar Low pressure can be caused by leaks, defect valves, missing nozzles on the high pressure line. Check high pressure pump Check pressure sensor functions correctly Check pressure sensor relay functions correctly

10.3 Resetting the error indication

To reset the error indication:
Press the reset button underneath the touch screen.

Note: If the fault has not been eliminated, the error indication reappears after a short while.

10.4 Malfunction without error indication

The following table provides malfunctions that do not issue messages, notes on the cause of malfunction and information on how to eliminate the source of trouble.

Malfunction	Cause	Remedy
Water deposits in the duct section outside of the water tub	Droplet separator defective.	Check/Replace droplet separator
	Excess air velocity (>4 m/s) in duct.	Reduce air velocity in duct (<4 m/s).
	Faulty location of spray nozzles or spraying circuits not connected to appropriate nozzles.	Check location of nozzles and piping of spraying circuits according to the nozzle diagram. Relocate nozzles and/or connect hoses correctly, as required.
Condair HP humidifies permanently.	Nominal humidity value too high.	Reduce nominal humidity value.
	Ambient humidity very low.	No measures to be taken, just wait.
	The internal controller is activated, although an external controller is connected	Deactivate internal controller.
Maximum humidification capacity not reached.	Wrong system design (capacity too low).	Contact your Condair supplier.
	Step valve(s) REG1, REG2 or REG3 defective.	Check the function of the step valves by increasing the nominal humidity value.
Important! Reset the nominal humidity to the correct value after checking.	Spray nozzles clogged.	Remove nozzles and replace them
	Hoses to nozzle pipes are leaking or disconnected, or nozzle pipes are leaking.	Check hoses/nozzle pipes and seal, as required
Control unit is switched on but the display of the control unit does not show anything.	Service switch in power supply line is off.	Set service switch in power supply line to On position.
	Fuses of the power supply line blown	Have an electrician replace fuses of the power supply line.
	Fuse of control unit blown	Have an electrician replace fuse of the control unit.
	Display or control board defective	Have a Condair service technician replace the display or the control board.
Excessive fluctuations of humidity control.	Faulty electrical connection of spray valves REG1, REG2 and REG3 or spraying circuits not connected to appropriate nozzles.	Have an electrician connect spray valves REG1, REG2 and REG3 correctly (see wiring diagram). Check piping of spraying circuits and rectify, as required

11 Product data

11.1 Technical data

11.1.1 Technical data Condair HP

	HP 100	HP 200 VFD	HP 300	HP 500	HP 500 VFD	HP 800	HP 800 VFD	HP 1300 VFD
Outlet Capacity [l/h] at 50 Hz	100	200	265	440	500	790	800	1300
Outlet Capacity [l/h] at 60 Hz	120	200	315	525	500	945	800	1300
Weight [kg]	50-65	50-65	55-70	65-80	65-80	75-90	75-90	75-90
Dimensions - W x D x H [mm]	660x500x1400	660x500x1400	660x500x1400	660x500x1400	660x500x1400	660x500x1400	660x500x1400	660x500x1400
Water Supply Dynamic Pressure [bar]	1.0-4.0	1.0-4.0	1.0-4.0	1.0-4.0	1.0-4.0	1.0-4.0	1.0-4.0	1.0-4.0
Inlet Pipe Connection ["BSPT]	1 x 3/4"	1 x 3/4"	1 x 3/4"	1 x 3/4"	1 x 3/4"	1 x 3/4"	1 x 3/4"	1 x 3/4"
Outlet Pipe Connection ["BSPT]	1 x 1/4"	1 x 1/4"	1 x 1/4"	1 x 3/8"	1 x 3/8"	1 x 3/8"	1 x 3/8"	2 x 3/8"
Approx. Sound Level [dB(A)]	<80	<80	<80	<80	<80	<80	<80	<80
IP Class	IP54	IP54	IP54	IP54	IP54	IP54	IP54	IP54
50 Hz Frequency								
Electrical Connection 3-phased	Un = 230 V							
Absorbed Power [kW]	1.8	2.0	3.0	3.0	3.0	3.7	3.7	6.4
Absorbed Current [A]	6.9	7.4	10.1	10.1	10.1	12.1	12.1	19.8
Electrical Connection 3-phased	Un = 400 V							
Absorbed Power [kW]	1.8	2.0	3.0	3.0	3.0	3.7	3.7	6.4
Absorbed Current [A]	4.0	4.3	5.8	5.8	5.8	7.0	7.0	11.5
60 Hz Frequency								
Electrical Connection 3-phased	Un = 208 V							
Absorbed Power [kW]	1.9	2.7	2.7	3.3	3.3	4.1	4.1	7.1
Absorbed Current [A]	7.8	10.2	10.2	12.1	12.1	14.4	14.4	23.9
Electrical Connection 3-phased	Un = 480 V							
Absorbed Power [kW]	2.1	2.1	3.1	3.9	3.9	3.9	3.9	6.7
Absorbed Current [A]	3.6	3.6	4.9	5.9	5.9	5.9	5.9	9.7
60 Hz Frequency (UL)								
Electrical Connection 3-phased	Un = 208 V							
Absorbed Power [kW]	1.9	2.7	2.7	3.3	3.3	4.1	4.1	7.1
Absorbed Current [A]	7.8	10.2	10.2	12.1	12.1	14.4	14.4	23.9
Electrical Connection 3-phased	Un = 480 V							
Absorbed Power [kW]	2.1	2.1	3.1	3.9	3.9	3.9	3.9	6.7
Absorbed Current [A]	3.6	3.6	4.9	5.9	5.9	5.9	5.9	9.7

11.1.2 Technical data Condair HPRO

	HPRO 100	HPRO 200 VFD	HPRO 300	HPRO 500	HPRO 500 VFD	HPRO 800	HPRO 800 VFD
Outlet Capacity [l/h] at 50 Hz	100	200	265	440	500	790	800
Outlet Capacity [l/h] at 60 Hz	120	200	315	525	500	945	800
Water Consumption ([l/h]	200	600	600	700	700	1100	1100
Water Supply Dynamic Pressure [bar]	2.5-7.0	2.5-7.0	2.5-7.0	2.5-7.0	2.5-7.0	2.5-7.0	2.5-7.0
Softened Water Recommended	No	No	No	Yes	Yes	Yes	Yes
Water Outlet [µS/cm]	5<EC<30	5<EC<30	5<EC<30	5<EC<30	5<EC<30	5<EC<30	5<EC<30
Water Utilization [%]	40-60	40-60	40-60	70-80	70-80	70-80	70-80
Saline Retention [%]	>95	>95	>95	>95	>95	>95	>95
Weight Pump + Tank, Empty/Full [kg]	125/175	140/190	140/190	220/420	220/420	300/800	300/800
Dimensions Pump - W x D x H [mm]	900x700x1650	900x700x1650	900x700x1650	900x700x1650	900x700x1650	1400x700x1650	1400x700x1650
RO Tank Size [Liter]	50	50	50	200	200	500	500
Dimensions RO Tank - W x D x H [mm]	Integrated	Integrated	Integrated	600x600x1000	600x600x1000	800x800x1250	800x800x1250
Inlet Pipe Connection ["BSPT]	1 x 3/4"	1 x 3/4"	1 x 3/4"	1 x 3/4"	1 x 3/4"	1 x 3/4"	1 x 3/4"
Outlet Pipe Connection ["BSPT]	1 x 1/4"	1 x 1/4"	1 x 1/4"	1 x 3/8"	1 x 3/8"	1 x 3/8"	1 x 3/8"
Approx. Sound Level [dB(A)]	<80	<80	<80	<80	<80	<80	<80
IP Class	IP54	IP54	IP54	IP54	IP54	IP54	IP54
50 Hz Frequency							
Electrical Connection 3-phased	Un = 230 V						
Absorbed Power [kW]	2.3	3.0	3.9	3.9	3.9	4.7	4.7
Absorbed Current [A]	8.6	10.7	13.4	13.4	13.4	15.4	15.4
Electrical Connection 3-phased	Un = 400 V						
Absorbed Power [kW]	2.3	3.0	3.9	3.9	3.9	4.7	4.7
Absorbed Current [A]	5.0	6.2	7.7	7.7	7.7	8.9	8.9
60 Hz Frequency							
Electrical Connection 3-phased	Un = 208 V						
Absorbed Power [kW]	2.9	3.7	3.7	4.3	4.3	5.1	5.1
Absorbed Current [A]	11.0	13.4	13.4	15.3	15.3	17.6	17.6
Electrical Connection 3-phased	Un = 480 V						
Absorbed Power [kW]	3.1	3.1	4.1	4.8	4.8	4.8	4.8
Absorbed Current [A]	5.3	5.3	6.6	7.6	7.6	7.6	7.6
60 Hz Frequency (UL)							
Electrical Connection 3-phased	Un = 208 V						
Absorbed Power [kW]	2.9	3.7	3.7	4.3	4.3	5.1	5.1
Absorbed Current [A]	11.0	13.4	13.4	15.3	15.3	17.6	17.6
Electrical Connection 3-phased	Un = 480 V						
Absorbed Power [kW]	3.1	3.1	4.1	4.8	4.8	4.8	4.8
Absorbed Current [A]	5.3	5.3	6.6	7.6	7.6	7.6	7.6

11.2 Water quality requirements HP

Water supply	Reverse Osmosis or Demineralized Water
Conductivity	5-50 µS/cm
Silt Index (SDI)	max. 1
TDS	max. 35 mg/l
KMnO4	max. 10 mg/l
NTU	max. 1
Temperature	max. 15 °C
Fe	max. 0.2 mg/l
Mn	max. 0.05 mg/l
Max. Hardness	max. 1º dH
free chlorine	max. 0.1 mg/l

11.3 Water quality requirements HPRO

Water supply	Drinking water quality
Conductivity	250-1000 µS/cm (with standard membrane)
Silt index (SDI)	max. 3
KMnO4	max. 10 mg/l
NTU	max. 1
Temperature	max. 15 °C
Fe	max. 0.2 mg/l
Mn	max. 0.05 mg/l
Max. Hardness	max. 20º dH
free chlorine	max. 0.1 mg/l

Notes

Notes

CONSULTING, SALES AND SERVICE:

Condair A/S
Parallelvej 2, DK-8680 Ry
phone +45 8788 2100
condair.dk@condair.com, www.condair.dk