COMPAQ

Fibre Channel Tape Controller II

User Guide

First Edition (August 1999)
Part Number 153799-001
Compaq Computer Corporation

Notice

The information in this publication is subject to change without notice.

COMPAQ COMPUTER CORPORATION SHALL NOT BE LIABLE FOR TECHNICAL OR EDITORIAL ERRORS OR OMISSIONS CONTAINED HEREIN, NOR FOR INCIDENTAL OR CONSEQUENTIAL DAMAGES RESULTING FROM THE FURNISHING, PERFORMANCE, OR USE OF THIS MATERIAL. THIS INFORMATION IS PROVIDED “AS IS” AND COMPAQ COMPUTER CORPORATION DISCLAIMS ANY WARRANTIES, EXPRESS, IMPLIED OR STATUTORY AND EXPRESSLY DISCLAIMS THE IMPLIED WARRANTIES OF MERCHANTABILITY, FITNESS FOR PARTICULAR PURPOSE, GOOD TITLE AND AGAINST INFRINGEMENT.

This publication contains information protected by copyright. No part of this publication may be photocopied or reproduced in any form without prior written consent from Compaq Computer Corporation.

© 1999 Compaq Computer Corporation.

All rights reserved. Printed in the U.S.A.

The software described in this guide is furnished under a license agreement or nondisclosure agreement. The software may be used or copied only in accordance with the terms of the agreement.

Compaq, Deskpro, Fastart, Compaq Insight Manager, Systempro, Systempro/LT, ProLiant, ROMPaq, QVision, SmartStart, NetFlex, QuickFind, PaqFax, ProSignia, registered United States Patent and Trademark Office.

Netelligent, StorageWorks, Systempro/XL, SoftPaq, QuickBlank, QuickLock are trademarks and/or service marks of Compaq Computer Corporation.

Neoserver is a trademark of Compaq Information Technologies Group

Microsoft, MS-DOS, Windows, and Windows NT are registered trademarks of Microsoft Corporation.

Pentium is a registered trademark and Xeon is a trademark of Intel Corporation.

Other product names mentioned herein may be trademarks and/or registered trademarks of their respective companies.

Compaq StorageWorks Fibre Channel Tape Controller II User Guide
First Edition (August 1999)
Part Number 153799-001

Contents

About This Guide

Text Conventions vii
Symbols in Text viii
Symbols on Equipment viii
Rack Stability ix
Getting Help x
Compaq Technical Support x
Compaq Website xi
Compaq Authorized Reseller xi

Chapter 1

Introduction

Features 1-3
Fibre Channel Features 1-3
SCSI Bus Features 1-4
Configuration and Management Features 1-4
Functions 1-5
Rear Panel Connectors 1-6
Rear Panel Status Lights 1-8

Chapter 2

Installation and Setup

Unpacking the Box 2-1
Minimum System Requirements 2-1
Installation Sequence 2-2
Warnings and Precautions 2-3
Rack Warnings and Precautions 2-4

Installation and Setup

continued

The Optimum Environment 2-5
Space Requirements 2-5
Power Requirements 2-6
Grounding 2-6
Temperature Requirements 2-7
Airflow Requirements 2-8
Installing the Tape Controller into a Rack 2-8
Materials Needed 2-9
Installation Procedure 2-10
Installing the Tape Controller on a Desktop 2-15
Connecting the Unit to the Enterprise Backup Solution 2-16
Connection Procedure 2-17

Chapter 3

User Interface

Device Management 3-1
Serial Port 3-2
Ethernet Port 3-2
Fibre Channel Port 3-2
Working with the Serial Port Interface 3-3
Communicating with the FCTC-II 3-3
Power Up Menu 3-4
Main Menu 3-5
Maintenance Menu 3-8
Working with the Ethernet Port Interface 3-13
Telnet 3-13
Web Browser 3-13
Simple Network Management Protocol 3-16
Working with Fibre Channel Port Interface 3-18
Compaq Insight Manager 3-18
Compaq Diagnostics 3-19

Chapter 4

Troubleshooting

Troubleshooting with the Status Lights 4-2
Troubleshooting Serial Port Communication Problems 4-6
Verifying Power-On Self-Test Status 4-6
Verifying Tape Controller Initialization 4-7
Verifying SCSI Bus Configuration 4-7
Verifying Fibre Channel Connection 4-8
Verifying SCSI Devices in Windows NT 4-8

Troubleshooting

continued

Verify a SCSI Device in NetWare 4-9
Verifying Configuration 4-9
Verifying Devices 4-9
Verifying Host Configuration 4-9
Verifying HBA Device Driver Information 4-10
Additional Troubleshooting Tips 4-10

Appendix A

Regulatory Compliance Notices

Regulatory Compliance Identification Numbers A-1
Federal Communications Commission Notice A-2
Class A Equipment A-2
Class B Equipment A-3
Modifications A-4
Cables A-4
Canadian Notice (Avis Canadien) A-4
Class A Equipment A-4
Class B Equipment A-4
European Union Notice A-5
Japanese Notice A-5
Taiwanese Notice A-5
Laser Compliance A-6
Battery Replacement Notice A-7

Appendix B

Electrostatic Discharge

Grounding Methods B-2

Appendix C

Power Cord Set Requirements

Appendix D
Specifications
Fibre Channel Tape Controller II D-1
GBIC-SW Module D-2

Appendix E
Pin Assignments
RJ-11 Serial Connector E-1
RJ-45 Ethernet Connector E-3

Index

About This Guide

This guide is designed to be used as step-by-step instructions for installing the Compaq StorageWorks Fibre Channel Tape Controller II and as a reference for operation, troubleshooting, and future upgrades.

Text Conventions

This document uses the following conventions to distinguish elements of text:

Keys	Keys appear in boldface. A plus sign (+) between two keys indicates that they should be pressed simultaneously.
USER INPUT	User input appears in a different typeface and in uppercase.
FILENAMES	File names appear in uppercase italics.
Menu Options, Command Names, Dialog Box Names	These elements appear in initial capital letters.
COMMANDS, DIRECTORY NAMES, and DRIVE NAMES	These elements appear in uppercase.
Type	When you are instructed to *type* information, type the information **without** pressing the **Enter** key.
Enter	When you are instructed to *enter* information, type the information and then press the **Enter** key.

Symbols in Text

These symbols may be found in the text of this guide. They have the following meanings.



WARNING: Text set off in this manner indicates that failure to follow directions in the warning could result in bodily harm or loss of life.



CAUTION: Text set off in this manner indicates that failure to follow directions could result in damage to equipment or loss of information.

IMPORTANT: Text set off in this manner presents clarifying information or specific instructions.

NOTE: Text set off in this manner presents commentary, sidelights, or interesting points of information.

Symbols on Equipment

These icons may be located on equipment in areas where hazardous conditions may exist.



Any surface or area of the equipment marked with these symbols indicates the presence of electric shock hazards. The enclosed area contains no operator-serviceable parts.

WARNING: To reduce the risk of injury from electric shock hazards, do not open this enclosure.



Any RJ-45 receptacle marked with these symbols indicates a Network Interface Connection.

WARNING: To reduce the risk of electric shock, fire, or damage to the equipment, do not plug telephone or telecommunications connectors into this receptacle.



Any surface or area of the equipment marked with these symbols indicates the presence of a hot surface or hot component. If this surface is contacted, the potential for injury exists.

WARNING: To reduce the risk of injury from a hot component, allow the surface to cool before touching.



Power Supplies or Systems marked with these symbols indicate the equipment is supplied by multiple sources of power.

WARNING: To reduce the risk of injury from electric shock, remove all power cords to completely disconnect power from the system.

Rack Stability



WARNING: To reduce the risk of personal injury or damage to the equipment, be sure that:

- The leveling jacks are extended to the floor.
- The full weight of the rack rests on the leveling jacks.
- The stabilizing feet are attached to the rack if it is a single rack installation.
- The racks are coupled together in multiple rack installations.
- A rack may become unstable if more than one component is extended for any reason. Extend only one component at a time.

Getting Help

If you have a problem and have exhausted the information in this guide, you can get further information and other help in the following locations.

Compaq Technical Support

You are entitled to free hardware technical telephone support for your product for as long as you own the product. A technical support specialist will help you diagnose the problem or guide you to the next step in the warranty process.

In North America, call the Compaq Technical Phone Support Center at 1-800-OK-COMPAQ[1]. This service is available 24 hours a day, 7 days a week.

Outside North America, call the nearest Compaq Technical Support Phone Center. Telephone numbers for worldwide Technical Support Centers are listed on the Compaq website. Access the Compaq website at

http://www.compaq.com

Be sure to have the following information available before you call Compaq:

- Technical support registration number (if applicable)
- Product serial numbers
- Product model names and numbers
- Applicable error messages
- Add-on boards or hardware
- Third-party hardware or software
- Operating system type and revision level
- Detailed, specific questions

[1] For continuous quality improvement, calls may be recorded or monitored.

Compaq Website

The Compaq website has information on this product as well as the latest drivers and Flash ROM images. You can access the Compaq website by logging on to the Internet at

http://www.compaq.com

Compaq Authorized Reseller

For the name of your nearest Compaq authorized reseller:

- In the United States, call 1-800-345-1518.
- In Canada, call 1-800-263-5868.
- Elsewhere, see the Compaq website for locations and telephone numbers.

Chapter 1

Introduction

The Compaq StorageWorks Fibre Channel Tape Controller II (FCTC-II) is a 1U (1.7-inch tall) Fibre Channel-to-SCSI bridge that allows a differential SCSI tape device to communicate with other devices over a Fibre Channel. The tape controller is designed to work as part of an Enterprise Backup Solution. Figure 1-1 shows The Compaq StorageWorks Fibre Channel Tape Controller II.

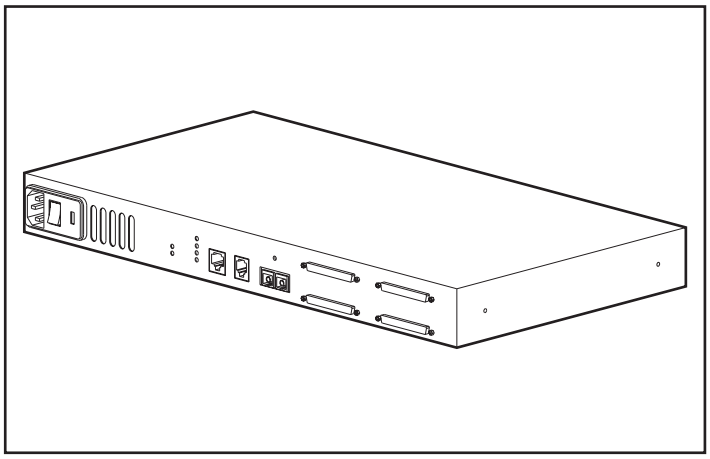

Figure 1-1. Compaq StorageWorks Fibre Channel Tape Controller II

The Compaq StorageWorks Fibre Channel Tape Controller II connects a Fibre Channel link to a SCSI bus. The tape controller connects to a Fibre Channel Storage Hub through a fiber cable, and also connects to a SCSI bus device (a secondary tape storage system) using the conventional SCSI interface and cables. After the tape controller has been installed and connected to the other components in the Enterprise Backup Solution, its operations are transparent to the application clients.

Figure 1-2 shows a sample system configuration using the Fibre Channel Tape Controller II.

NOTE: This illustration depicts a minimal system configuration. The Compaq StorageWorks Fibre Channel Tape Controller II is designed to work with multiple servers, Fibre Channel Storage Hubs, and tape storage devices. For additional information on system configurations, search the Compaq website for the white paper on this subject at www.compaq.com.

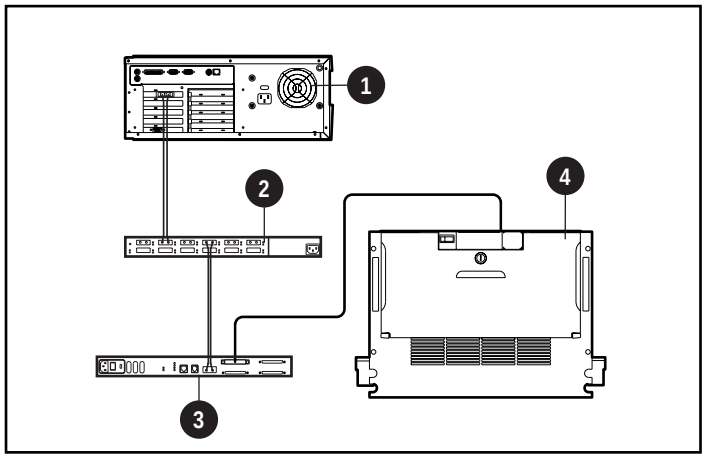

Figure 1-2. Sample system configuration using the Fibre Channel Tape Controller II

❶ Server

❷ Compaq Fibre Channel Storage Hub 7 or Hub 12

❸ Compaq StorageWorks Fibre Channel Tape Controller II

❹ Differential SCSI tape storage device

Features

The Compaq StorageWorks Fibre Channel Tape Controller II provides a connection between a single Giga Bit per second Fibre Channel Interface and Dual SCSI Channels. Features of the Fibre Channel Tape Controller II include:

- Easy mounting in a rack or on a desktop with little physical configuration required.
- Detection of any connected SCSI devices during the power-on process (or by an option on the Power-On Menu).

Fibre Channel Features

- One 1.0625 Gbps Fibre Channel port (removable GBIC interface)
- Fibre Channel Arbitrated Loop (FC-AL) and Fibre Channel Switched Fabric (FCSW) topologies
- Private Loop Direct Attach (PLDA) profile compliance
- Class 3 connection with SCSI-FCP protocol
- Optical GBIC

SCSI Bus Features

- A dual-connector SCSI channel that supports the following differential SCSI formats:
  - Fast SCSI
  - Wide SCSI
  - Wide-Ultra SCSI
- SCSI initiator mode
- Middle of bus configuration with external termination
- SCSI-2 and SCSI-3 protocols
- 68-pin D shell, P type connectors
- Differential SCSI connections

Configuration and Management Features

- Serial RJ-11 connector for terminal access
- Ethernet RJ-45 connector for Compaq Insight Manager, FTP, Telnet, and Web browser access
- Easy field-upgradable firmware via Compaq Server Diagnostics

Functions

The Compaq StorageWorks Fibre Channel Tape Controller II processes SCSI protocol information internally as it receives the information through the Fibre Channel port and sends it out through the SCSI port. Data flows from the Fibre Channel port to the SCSI port through memory in the tape controller.

Figure 1-3 illustrates how information is processed using the Fibre Channel Tape Controller II.

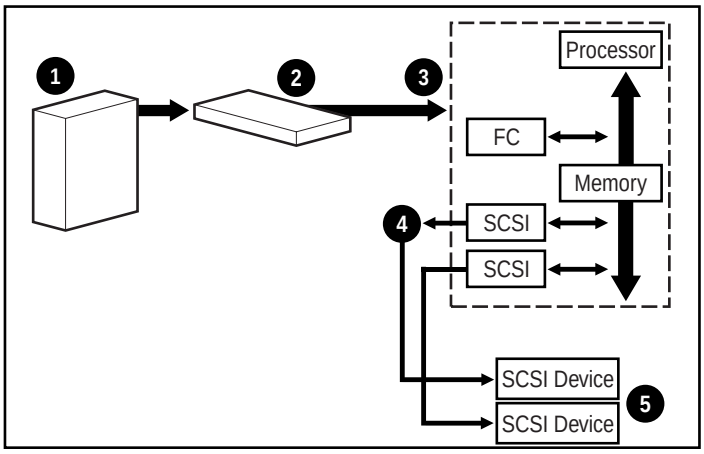

Figure 1-3. Information processing

❶ The server sends embedded SCSI commands and data over the fiber cable through the Fibre Channel Host Controller to the Compaq Fibre Channel Storage Hub 7 or Hub 12.

❷ The Fibre Channel Storage Hub processes and sends information packets to the Fibre Channel port on the Fibre Channel Tape Controller II.

❸ The tape controller receives the packets, processes the information, and places it in memory.

❹ The tape controller sends the information to the SCSI tape storage device by means of the SCSI channels.

❺ The SCSI tape storage device interprets the information and performs the requested tasks.

Rear Panel Connectors

Figure 1-4 shows the location of the rear panel connectors and power switch on the Compaq StorageWorks Fibre Channel Tape Controller II. Table 1-1 provides a description of each connector.

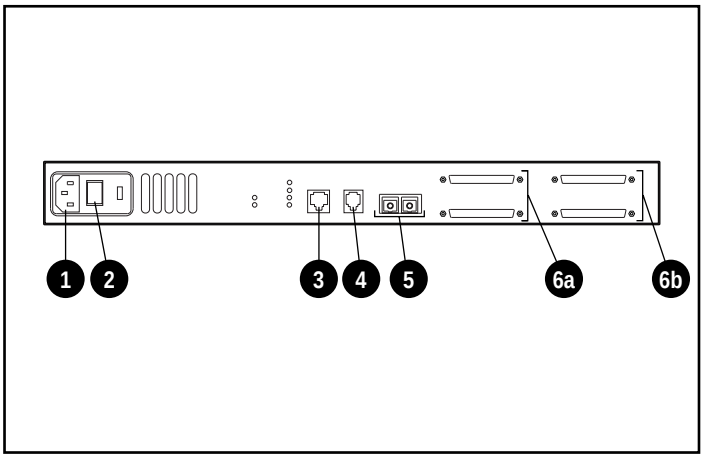

Figure 1-4. Rear panel connectors and power switch

Table 1-1
Rear Panel Connectors

Item	Connector	Description
❶	AC power connector	Connects the unit to electric power when installation is complete. Use the AC power cord provided with your kit.
❷	Power switch	Turns the unit on and off. For information about powering on for the first time, see Chapter 3, "User Interface."
❸	Ethernet port	10-Megabit connection.

continued

Table 1-1
Rear Panel Connectors *continued*

Item	Connector	Description
❹	Serial port	Preset at Autobaud. Performs administrative tasks such as: ■ Monitoring diagnostics ■ Downloading firmware upgrades ■ Rebooting the Compaq Fibre Channel Tape Controller II ■ Fibre Channel-to-SCSI mapping To perform these tasks, use the serial cable provided with your unit. For more information on performing tasks using the serial port, see Chapter 3, "User Interface."
❺	Fibre Channel port	Conducts Fibre Channel data to and from the tape controller. Connect the fiber cable to this port after installation is complete.
❻a	SCSI connectors 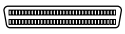	Conduct SCSI data to and from the tape controller. The two 68-pin D-type SCSI connectors (first pair) support a single Fast-20 (Wide-Fast) differential SCSI bus. In this pair, if the cable is on the top connector, the terminator cap must be on the bottom connector, and vice versa. **IMPORTANT:** The provided differential terminator cap bearing the differential SCSI symbol  must always cover one SCSI connector when the other SCSI connector is being used. This symbol also appears between the connectors to indicate that only differential SCSI terminator caps should cover these connectors.
❻b	SCSI connectors 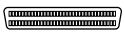	Conduct SCSI data to and from the tape controller. The two 68-pin D-type SCSI connectors (second pair) also support a single Fast-20 (Wide-Fast) differential SCSI bus. In this pair, if the cable is on the top connector, the terminator cap must be on the bottom connector, and vice versa. **IMPORTANT:** The provided differential terminator cap bearing the differential SCSI symbol  must always cover one SCSI connector when the other SCSI connector is being used. This symbol also appears between the connectors to indicate that only differential SCSI terminator caps should cover these connectors.

Rear Panel Status Lights

The following illustration shows the location of the status lights (LED indicators) that monitor the operating status of the Compaq StorageWorks Fibre Channel Tape Controller II.

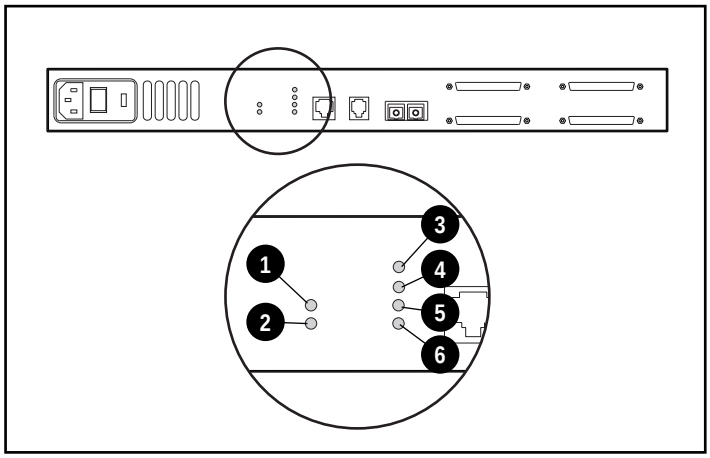

Figure 1-5. Rear panel status lights

Table 1-2
Rear Panel Status Lights

Item	Indicator	Description
❶	Power	Green LED is lit when power is on.
❷	Fault	Amber LED is lit when an internal fault condition is detected.
❸	SCSI Bus-0	Green LED indicates SCSI activity when flickering.
❹	SCSI Bus-1	Green LED indicates SCSI activity when flickering.
❺	Ethernet	Green LED indicates Ethernet activity when flickering.
❻	Fibre Channel	Green LED indicates Fibre Channel activity when flickering.

Chapter **2**

Installation and Setup

This chapter provides information on preparing the Compaq StorageWorks Fibre Channel Tape Controller II (FCTC-II) for a rack or desktop installation. It also provides information on connecting the tape controller to the other components in the Fibre Channel Arbitrated Loop (FC-AL).

Unpacking the Box

1. Remove all items from the shipping container. Check each item for damage. Keep the FCTC-II in the protective bag until you are ready to install it.
2. Select a location that ensures the front intake vents and rear fan are clear of obstructions so air flows freely through the FCTC-II.
3. Do not connect any devices or cables to the FCTC-II until the device is secured in a rack or placed securely on a flat, level surface.

Minimum System Requirements

For the tape controller to work properly, set up the following equipment first:

- One or more servers with a Compaq Fibre Channel Host Controller/PCI installed in each server
- One Compaq Fibre Channel Storage Hub 7 or Hub 12
- One Compaq differential SCSI tape storage device

IMPORTANT: The Fibre Channel Storage Hubs you are planning to use with the Compaq StorageWorks Fibre Channel Tape Controller II should already be connected to the host controllers by means of Giga Bit Interface Converter (GBIC) modules and fiber cables. For complete instructions on this, see the *Compaq Fibre Channel Storage Hub 12 Installation Guide.*

NOTE: These are minimum system requirements only. The Compaq StorageWorks Fibre Channel Tape Controller II is designed to work with multiple servers, Fibre Channel Storage Hubs, and tape storage devices. For information on possible system configurations, search the Compaq website for the white paper on this subject at http://www.compaq.com.

Installation Sequence

The tape controller can be installed in a rack or on a desktop. Rack-mounting installations require an industry-standard 19-inch electronic enclosure rack or a Compaq 19-inch (48.26 centimeter) electronic rack. The rack installation procedures provided in this guide are for the Compaq rack only. Desktop installations require a flat, level surface and the attachment of four rubber feet on the bottom of the controller chassis.

The basic steps to install the tape controller are:

1. Unpack the option kit and verify the contents.
2. Install the tape controller by either:
   - Placing the tape controller in a storage rack for a rack configuration. (See “Installing the Tape Controller into a Rack” later in this chapter for details.)
   - Attaching the four rubber feet to the bottom of the tape controller for a desktop configuration. (See “Installing the Tape Controller on a Desktop” later in this chapter for details.)
3. Connect the tape controller to the other components in the Enterprise Backup Solution. (See “Connecting the Unit to the Enterprise Backup Solution” later in this chapter for more details.)

Warnings and Precautions



WARNING: To reduce the risk of electric shock or damage to the equipment:

- Do not disable the power cord grounding plug. The grounding plug is an important safety feature.
- Plug the power cord into a grounded (earthed) electric outlet that is easily accessible at all times.
- To disconnect power from the tape controller, unplug the power cord from the electric outlet or from the AC power connector on the unit.



WARNING: To reduce the risk of electric shock, do not open the controller enclosure. There are no user-serviceable parts inside. Refer servicing to qualified service personnel.



CAUTION: Protect the device from power fluctuations and temporary interruptions by using a regulating uninterruptible power supply (UPS). The UPS protects the hardware from damage caused by power surges and voltage spikes and keeps the system operating during a power failure.

Rack Warnings and Precautions

Before beginning installation procedures, make sure that you understand the following warnings and cautions:

WARNING: To reduce the risk of personal injury or damage to the equipment, be sure that:

- The full weight of the rack rests on the leveling jacks.
- The stabilizing feet are attached to the rack if it is a single rack installation.
- The racks are coupled together in multiple rack installations.
- A rack may become unstable if more than one component is extended for any reason. Extend only one component at a time.

WARNING: To reduce the risk of personal injury, always ensure that the rack is adequately stabilized before extending a component outside the rack. A rack may become unstable if more than one component is extended for any reason. Extend only one component at a time.

WARNING: To reduce the risk of personal injury or damage to the equipment, at least two people are needed to safely unload the rack from the pallet. An empty 42U rack weighs 253 lb (115 kg), is over seven ft (2.1m) tall, and may become unstable when being moved on its casters. Do not stand in front of the rack as it rolls down the ramp from the pallet, but handle it from the sides.

WARNING: Before beginning to work on the rack, be sure that the leveling jacks are extended to the floor, that the full weight of the rack rests on the level floor, and that either stabilizers are installed or multiple racks are coupled together for stability.

The Optimum Environment

For a tape controller installed in a rack, certain space, power, and temperature requirements must be met.

Space Requirements

Consider the following spatial needs when deciding where to install your rack:

- Clearance in the front of the rack should be a minimum of 25 inches (63.5 centimeters) for the front door to open all the way and for adequate airflow.
- Clearance in the back of the rack should be a minimum of 30 inches (76.2 centimeters) to allow for servicing and for adequate airflow. See Figure 2-1.

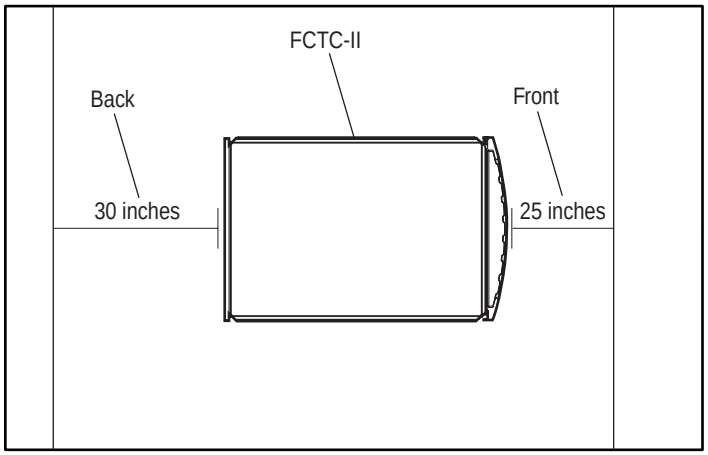

Figure 2-1. Space requirements for the FCTC-II

Power Requirements

WARNING: To reduce the risk of personal injury, fire, or damage to the equipment, do not overload the AC supply branch circuit that provides power to the rack. Consult the electric authority having jurisdiction over wiring and installation requirements for your facility.

- The power load needs to be balanced between available AC supply branch circuits.
- The overall system AC current load must not exceed 80 percent of the branch circuit AC current rating.
- If power strips are used, the load should not exceed 80 percent of the marked electric current rating.

The installation of this equipment shall be in accordance with Local/Regional electric regulations governing the installation of Information Technology Equipment by licensed electricians. This equipment is designed to operate in installations covered by the National Electric Code (ANSI/NFPA 70, 1993) and the code for Protection of Electronic Computer/Data Processing Equipment (NFPA-75, 1992).

For electric power ratings on options, refer to the product rating label or the user documentation supplied with that option.

Grounding

For proper operation and safety, this equipment must be properly grounded in accordance with NFPA 70-1993, Article 250. All power distribution devices, branch wiring, and receptacles must be Listed grounding type devices.

When using power strips for electric distribution, ensure that ground integrity is maintained for each connection made. Plug each component into a reliably grounded outlet.

Temperature Requirements

To ensure continued safe and reliable operation of the equipment, locate the system in a well-ventilated, climate-controlled environment.

The Compaq Maximum Recommended Ambient Operating Temperature (TMRA) for most server products is 35°C (95°F). Therefore, the temperature in the room where the rack is located should not exceed 35°C (95°F).

The operating temperature inside the rack will always be higher than the room temperature and is dependent on the configuration of the equipment in your rack.

The maximum internal rack temperature for your configuration should not exceed the values shown in Table 2-1.

Table 2-1
Maximum Internal Rack Temperatures

Equipment	Maximum Temperature
Compaq rack servers	50°C/122°F
Compaq rack options	40°C/104°F
Other manufacturers' options	See other manufacturers' specifications



CAUTION: To reduce the risk of damage to the equipment when installing third-party options:

- Ensure that the option equipment does not impede airflow to the Compaq rack server or increase the internal rack temperature beyond the Compaq specified maximum rating.
- Ensure that the manufacturer maximum recommended ambient operating temperature of the optional equipment is not exceeded when installed in the rack.

Airflow Requirements

Compaq rack model servers draw cool air in through the front door and expel warm air out through the rear. Therefore, the front door of the rack must be adequately ventilated to allow ambient room air to enter the cabinet, and the rear door must be adequately ventilated to allow the warm air to escape from the cabinet. Do not block the ventilation apertures.

CAUTION: If a third-party rack is used, the following minimum requirements should be observed to ensure adequate airflow and to prevent damage to the equipment:

- Side: The clearance between the installed module and the side panels of the rack should be a minimum of 2.75 inches (6.86 centimeters).
- Rear: The clearance between the back of the rack and the wall should be a minimum of 30 inches (76.2 centimeters). The equipment should be operating without a rear door.

Blanking Panels

If all of the vertical space in the rack is not filled by components, the gaps that are left will cause a change in airflow through the rack and across the components. These gaps need to be covered with blanking panels.

Installing the Tape Controller into a Rack

This installation procedure assumes that the rack you are installing the tape controller into has already been set up. Refer to your rack installation documentation for instructions on correctly setting up the rack.

Materials Needed

To install the tape controller into a rack, you will need the hardware shown in Figure 2-2.

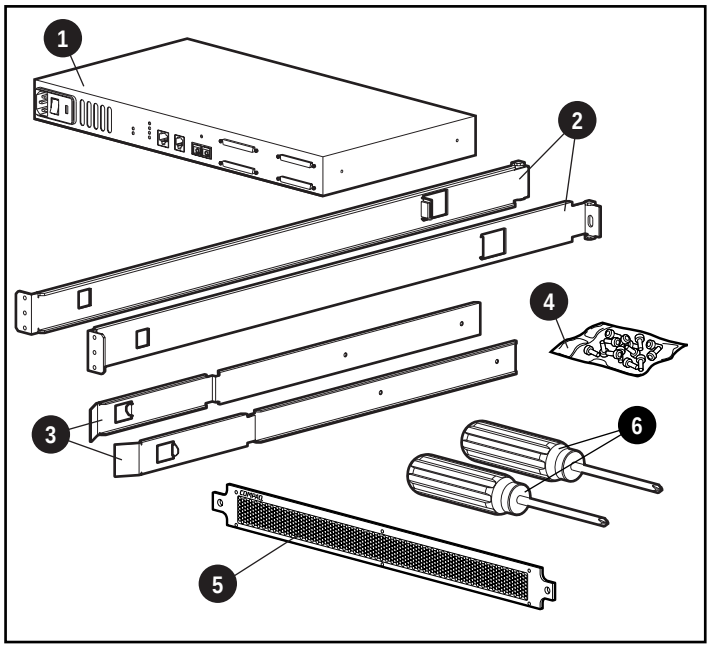

Figure 2-2. Rack mounting hardware

❶ Tape controller

❷ Left and right mounting rails

❸ Left and right slide rails

❹ Mounting screws, cage nuts, and adhesive rubber feet

- Eight - M6 x 1.0-12L (large)
- Four - 6-32 x 5/16-inch (small)
- Two - cagenuts
- Four - adhesive rubber feet

❺ Front cover panel

❻ #1 and #2 Phillips screw drivers (not included with kit)

Installation Procedure

Before beginning the installation, be sure that a grounded electric outlet is easily accessible and located as close to the storage system as possible.

IMPORTANT: Place the FCTC-II so the rear fan vent and the front intake vents remain clear of obstructions to ensure proper airflow.

NOTE: For additional help placing the device into the correct location in a 19-inch (48.26-centimeter) rack, refer to the Rack Builder software installation utility available from your local Compaq reseller or authorized service provider.

To install the tape controller into a standard 19-inch rack:

1. Remove the FCTC-II from the protective bag.
2. Remove any blanking panels and other equipment from the chosen rack location.
3. Install the cage nuts on the vertical mounting rails in the rear of the rack cabinet.

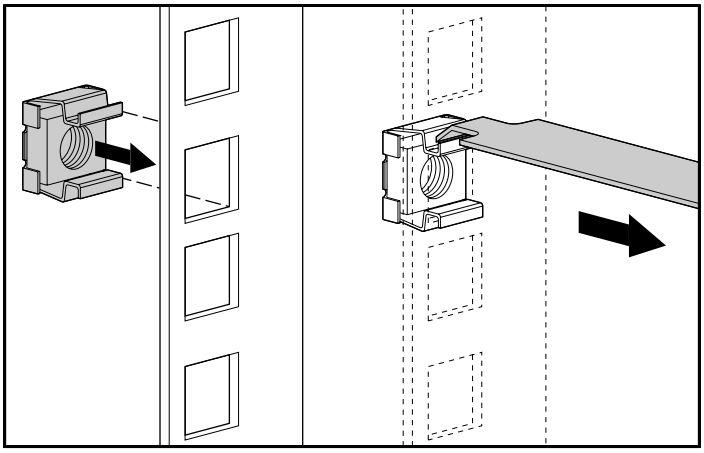

Figure 2-3. Installing the cage nuts

4. Locate the front of the mounting brackets.

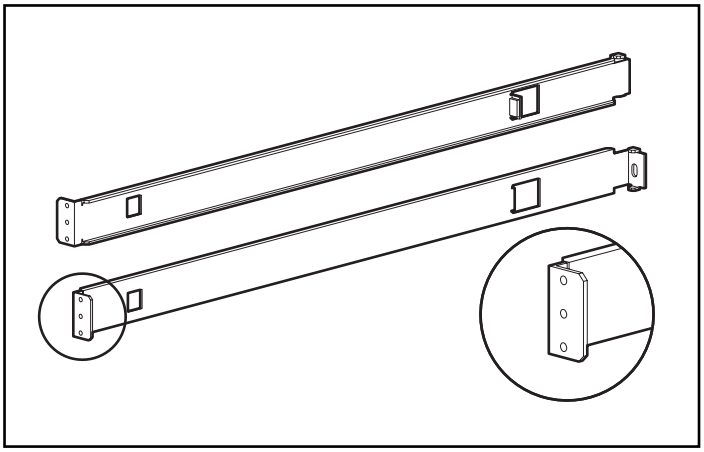

Figure 2-4. Mounting bracket front ends

5. Attach each bracket to a rear-mounting rail using one (M6 x 1.0-12L) screw on each side. Tighten the screws securely.

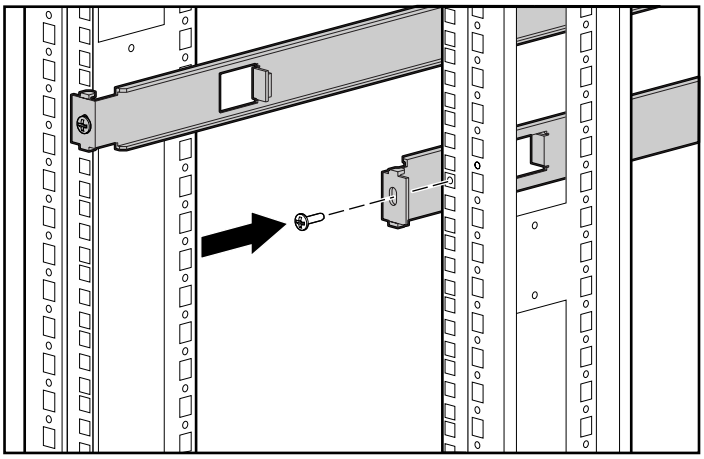

Figure 2-5. Attaching the brackets to the rear mounting rails

6. Attach the brackets to the front mounting rails using two (M6 x 1.0-12L) screws on each side. Be sure to use only the top and bottom holes in each bracket. (The middle hole will be used to attach the front cover panel after the unit is installed.) Tighten the screws securely.

WARNING: To reduce injury or equipment damage, the mounting brackets must be level. If the brackets are not level, the Compaq StorageWorks Fibre Channel Tape Controller II cannot be installed correctly.

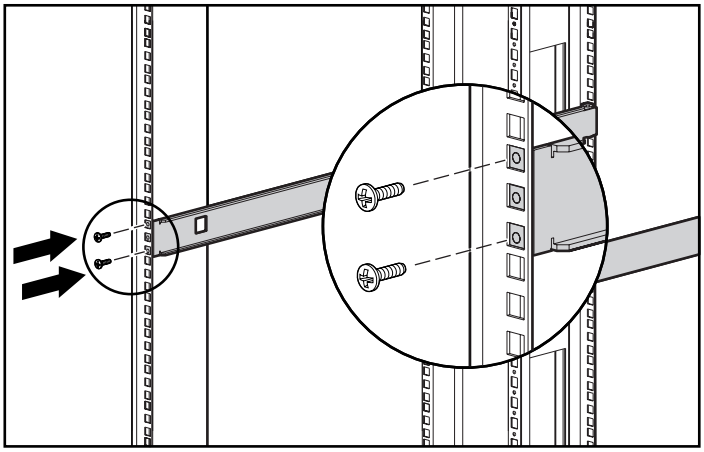

Figure 2-6. Attaching the brackets to the front mounting rails

7. Attach the slide rails to the tape controller using two (6-32 x 5/16-inch) screws on each side. Make sure the front ends of the rails angle in toward the unit.

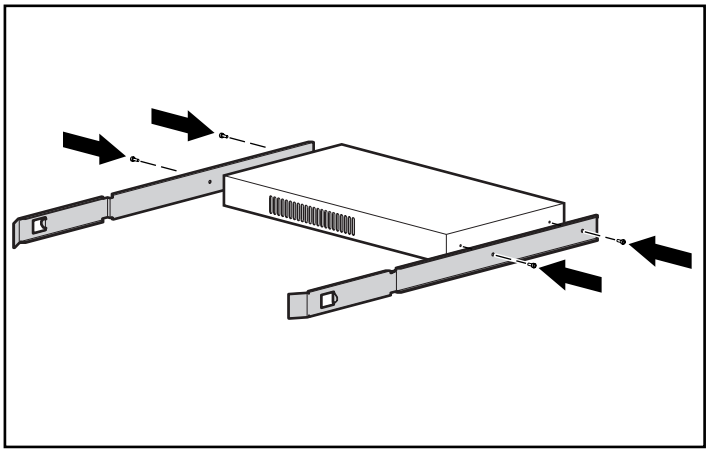

Figure 2-7. Attaching the slide rails

8. Slide the unit into the rack ❶ and push in on the front tabs of the rails ❷ until the rails snap into place ❸.

CAUTION: Keep the unit parallel to the floor when sliding the unit rails into the rack mounting rails. Tilting the unit up or down can damage the rails.

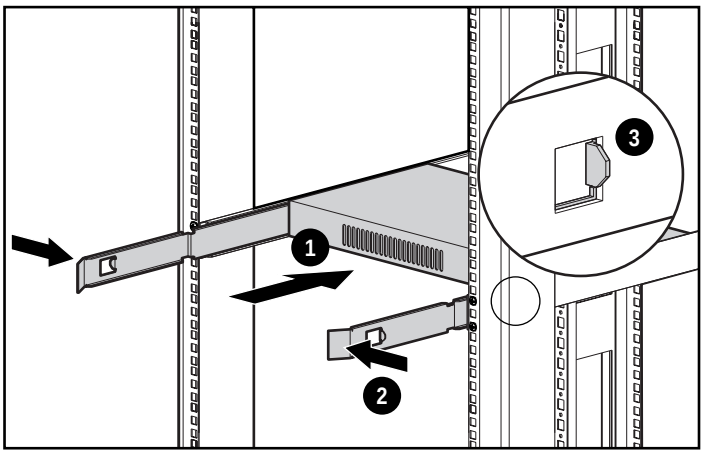

Figure 2-8. Installing the tape controller into the rack

9. Secure the front cover panel to the middle holes in the rack using one (M6 x 1.0-12L) screw on each side.

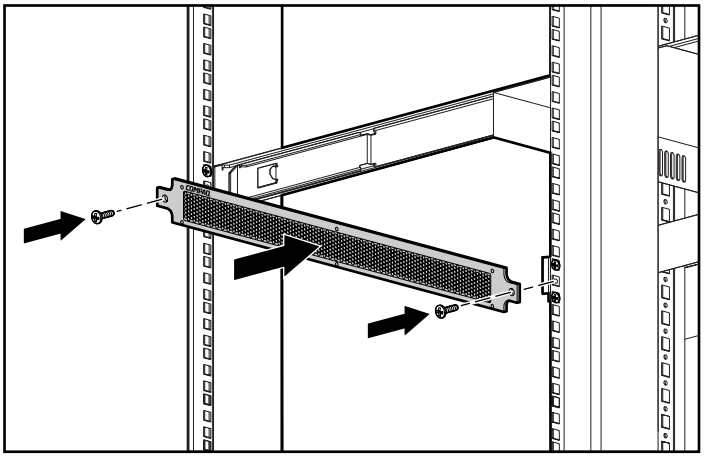

Figure 2-9. Securing the front cover panel

The installation is complete.

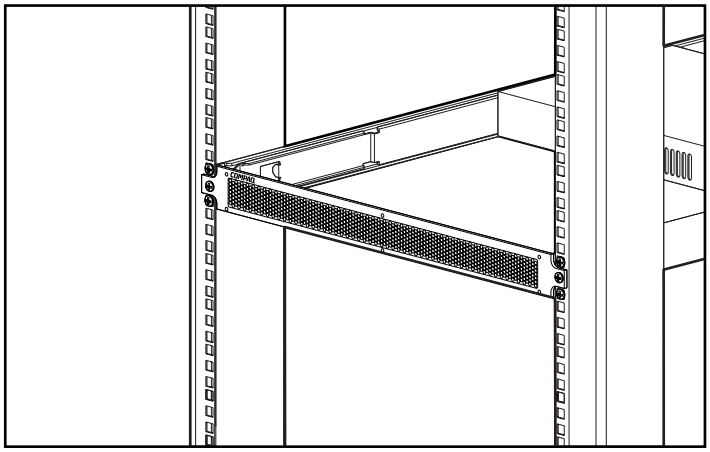

Figure 2-10. Compaq StorageWorks Fibre Channel Tape Controller II installed in a rack

After the tape controller is installed, you are ready to connect it to the other components in the Enterprise Backup Solution. For cabling and connection procedures, see the “Connecting the Unit to the Enterprise Backup Solution” section in this chapter.

Installing the Tape Controller on a Desktop

If the tape controller will not be installed in a rack, attach the four adhesive rubber feet provided in the shipping box to the bottom of the unit. These feet stabilize the base of the unit and minimize damage to any surface on which the unit rests.

To attach the rubber feet:

1. Turn the unit upside down and attach one rubber foot to each corner of the unit.

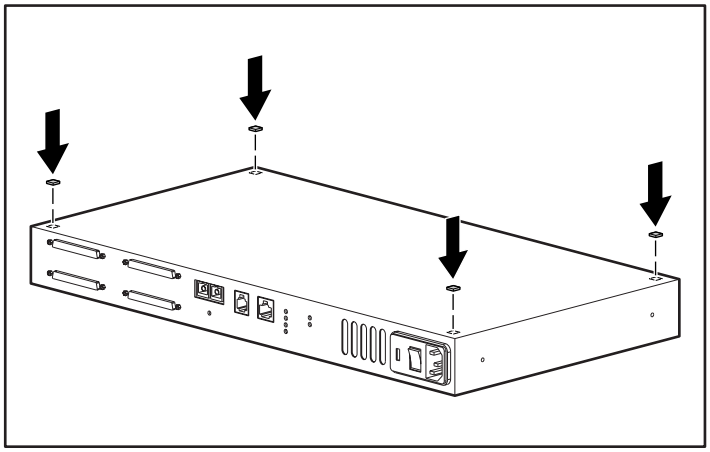

Figure 2-11. Attaching the adhesive rubber feet

2. Turn the unit upright, place it on a flat, level surface, and connect the cables.

Read the following section for cabling and connection procedures.

Connecting the Unit to the Enterprise Backup Solution

To connect the Compaq StorageWorks Fibre Channel Tape Controller II to the other system components, you will need the cabling materials shown in Figure 2-12.

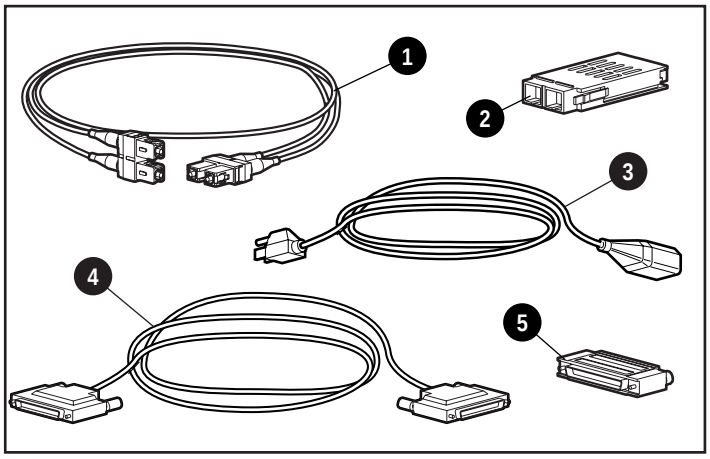

Figure 2-12. Cabling materials

❶ One 5-Meter Multi-Mode Fiber Cable (50 µm)

❷ Two GBIC-SW modules (one preinstalled in unit; one ready to plug into the Hub)

❸ One AC power cord

❹ Two External Wide 68-pin SCSI cables (not supplied in kit)

❺ Two Differential SCSI terminator caps

Connection Procedure

To connect the tape controller to the other components of the Enterprise Backup Solution:

1. Turn off power to the tape storage device you plan to use with the tape controller.
2. Locate the Fibre Channel Port on the back of the FCTC-II.
3. Remove the rubber protector from the provided Giga Bit Interface Converter-Short Wave (GBIC-SW) module.
4. Attach one end of the fiber cable to the Fibre Channel Port on the tape controller.

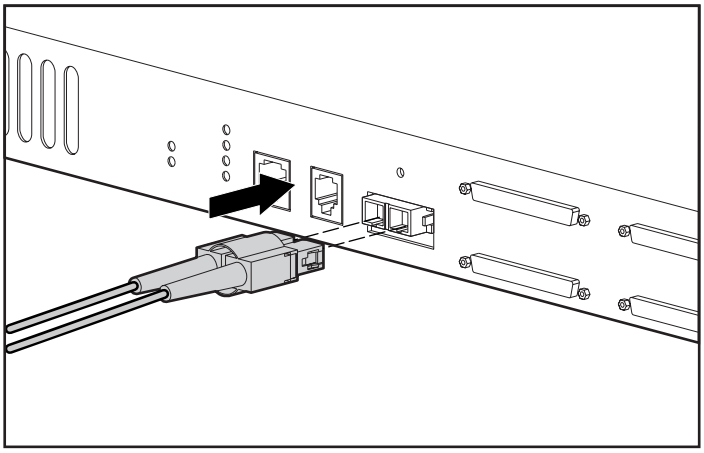

Figure 2-13. Attaching the fiber cable to the tape controller

IMPORTANT: Route the fiber cable so that it is not damaged by sharp edges or crushed by other equipment. Provide support for the cable so that it does not have a bend radius of less than 3 inches (7.62 centimeters).

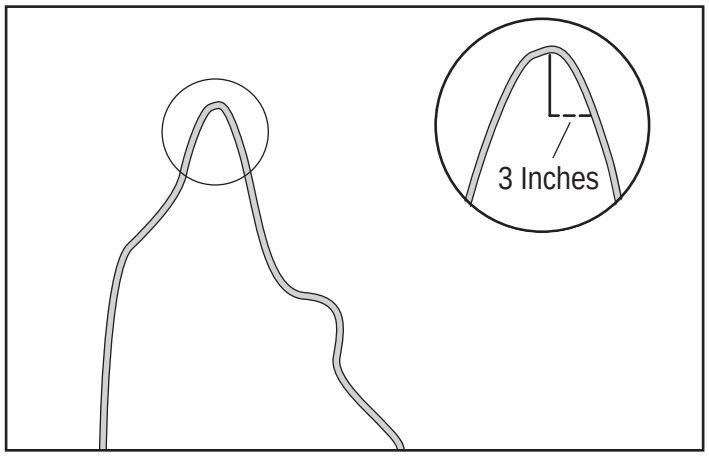

Figure 2-14. Bend radius of less than 3 inches (7.62 centimeters)

5. Install the provided GBIC-SW ❶ into a port on the rear of the Compaq Fibre Channel Storage Hub 7 or Hub 12, then attach one end of the fiber cable ❷ to the GBIC-SW module.

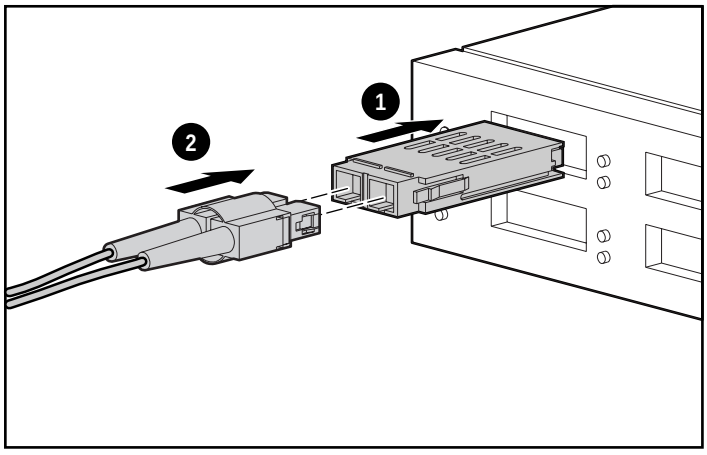

Figure 2-15. Attaching the GBIC-SW module and fiber cable to the Fibre Channel Storage Hub

6. Install SCSI Bus-0 by connecting one end of the External Wide 68-pin SCSI cable to a SCSI connector located on the rear of the tape controller.

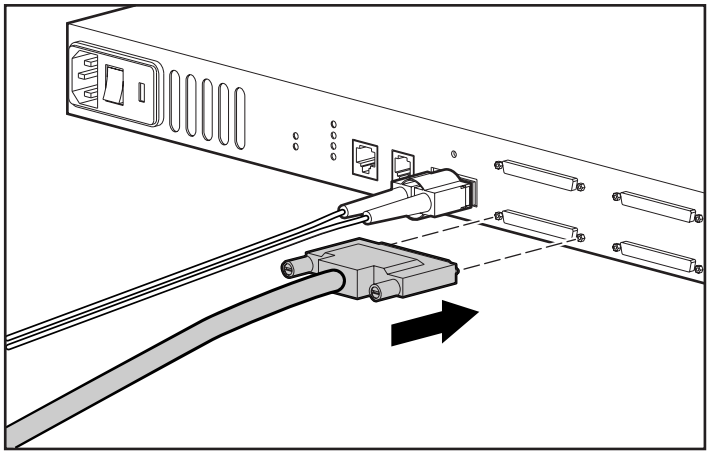

Figure 2-16. Attaching the SCSI cable to the tape controller

7. Attach the differential SCSI terminator cap to the unused SCSI connector on the tape controller.

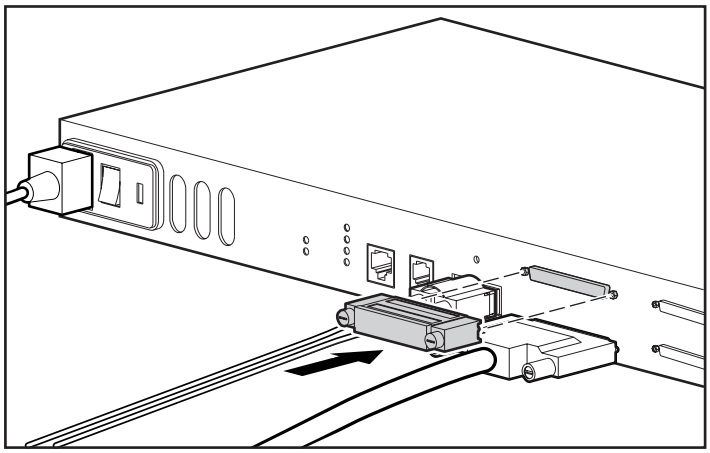

Figure 2-17. Attaching the differential SCSI terminator cap

IMPORTANT: Be sure each pair of connectors contains one cable and one terminator.

8. Connect the other end of the SCSI cable to the SCSI connector on the tape storage device.
9. Repeat steps 6, 7, and 8 to install SCSI Bus-1 and the terminator, if needed.

10. Connect the AC power cord to the tape controller and then to an electric outlet.

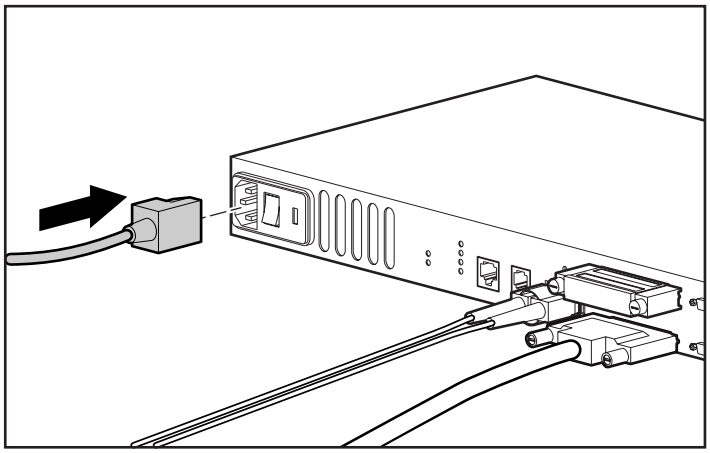

Figure 2-18. Attaching the AC power cord to the tape controller

11. Power on the tape storage device.
12. Turn on the Compaq StorageWorks Fibre Channel Tape Controller II.
13. Reboot your server, if necessary, to see the tape storage device through Fibre Channel.

For instructions on configuring and operating the tape controller for the first time, see the “User Interface” section in Chapter 3.

Chapter **3**

User Interface

The Compaq StorageWorks Fibre Channel Tape Controller II (FCTC-II) can be configured and managed using several options:

- Serial Port Interface
- Ethernet Port Interface
  - Telnet
  - Web Browser Interface
  - Standard SNMP management tool
- Fibre Channel Port Interface
  - Compaq Insight Manager
  - Compaq Diagnostics
  - Tape Options ROMPaq

Device Management

The Compaq Fibre Channel Tape Controller is designed to function directly out of its shipping container with no special configuration required. However, you have the ability to manage various aspects of the tape controller.

The FCTC-II can be managed through the serial port, through the Ethernet port, or through the Fibre Channel Port.

Serial Port

The serial port allows for the configuration of all device characteristics.

Ethernet Port

The Ethernet port is used to configure the FCTC-II through Telnet, through a Web browser or through any standard Simple Network Management Protocol (SNMP) management tool.

Fibre Channel Port

The Fibre channel port is used to configure the FCTC-II, through Compaq Insight Manager, through Compaq Diagnostics, or through Tape Options ROMPaq. The Fibre Channel Port is also used for receiving and transmitting storage data.

Working with the Serial Port Interface

Communicating with the FCTC-II

The FCTC-II is designed to function directly out of the shipping container with no special configuration required. However, you can monitor various aspects of FCTC-II performance by connecting a terminal or terminal emulator to the serial port on the rear of the FCTC-II.

The FCTC-II is designed to communicate with any operating system that uses a terminal emulator. For example, you can use Hyperterminal on Microsoft Windows NT 4.0. No madder which operating system your computer uses, be sure the baud rate, data bits, stop bits, parity, and terminal emulation are set as specified in Table 3-1.

Table 3-1
Connection Properties

Type	Connection
Baud rate*	9600, 19200, 38400, 57600, or 115200
Data bits	8
Parity	None
Stop bits	1
Flow control	None

***** For more information on the Autobaud feature, see Chapter 2.

NOTE: Before powering on the FCTC-II, make sure all the devices on each SCSI bus are powered on and have finished performing their self tests. The devices on your Fibre channel Storage Area Network should be powered on also.

If the FCTC-II is already powered on when you connect your terminal emulator, you will not see the Power up information. You may need to press the Enter key several times to establish communication. This will take you to the Main Menu.

Power Up Menu

When you turn on the FCTC-II power switch, a series of messages similar to the following appears on your terminal emulator:

```
Performing Power-On Self-Test ...
        Monitor-flash Check-sum.....passed
        Program-store Main RAM .....passed
        Trace Buffer in Main RAM .....passed
        PCI Protocol RAM (16Mb) .....passed
        SCSI Script RAM (I).....passed
        SCSI Script RAM (II).....passed

Initializing Ports ...
        Fibre-channel Port Single-frame Sequence Loopback.....passed
        Fibre-channel Port Multi-frame Sequence Loopback .....passed
        Ethernet Port Loopback.....passed
        SCSI Port (I) Loopback.....passed
        SCSI Port (II) Loopback. .....passed

Self-test completed successfully
11
Verifying firmware checksum ...
Target Name:
Attaching network interface lnPci0… done.
Attaching network interface lo0… done.
Httpinit calling httpDynPwdConfInit
Httpconf: numscsi devices=1
Initializing soic…
tSnmpd: Waiting for input…
SCRIPTS start @ 0x88002000 (XXXX)
SCRIPTS start @ 0x88004000 (XXXX)
Initialized Successfully
Build Level: XXXXX
```

NOTE: If you do not see messages on your screen, recheck the computer serial port settings and press **Enter** five or six times. Make sure the baud rate is set to one of the values listed in Table 3-1.

Main Menu

The main menu displays after the system Power Up menu:

```
Compaq StorageWorks Fibre Channel Tape Controller
Build Level: XXXXX

1) Display Currently Attached SCSI Devices
2) Display Status of Power-On Self-Test
3) Display Fibre Channel Tape Controller Configuration
4) Ethernet Configuration
5) Reboot Fibre Channel Tape Controller

Command >
```

The main menu allows for various operations to be performed on the FCTC-II. These operations are described in the following sections.

Display Currently Attached SCSI Devices

The Display Currently Attached SCSI Devices screen appears when you select the first option from the main menu. It displays SCSI devices currently attached to the system.

```
Currently Attached Devices
Build Level: XXXXX

BUS     TGT     LUN     DEVICE  DESCRIPTION
0       5       0       XXX     XXXX    XXXXXXX
0       6       0       XXX     XXXX    XXXXXXX
1       1       0       XXX     XXXX    XXXXXXX

Enter X to return, <enter> for more >
```

Display Status of Power-On Self-Test

This option displays the results of the most recent Power-On Self-Test (POST). The POST test results are shown below.

Status of Power-On Self-Test
Build Level: XXXXX

Serial Port Loopback	passed
Monitor-flash Checksum	passed
Program-store Main RAM	passed
Trace Buffer in Main RAM	passed
PCI Protocol RAM	passed
SCSI Script RAM (I)	passed
SCSI Script RAM (II)	passed
Fibre-channel Port Single-frame Sequence Loopback	passed
Fibre-channel Port Multi-frame Sequence Loopback	passed
Ethernet Port Loopback	passed
SCSI Port (I) Loopback	passed
SCSI Port (II) Loopback	passed

Press any Key to Continue...

Display Fibre Channel Tape Controller Configuration

The Display Fibre Channel Tape Controller Configuration screen displays the FCTC-II configuration features.

Compaq StorageWorks Fibre Channel Tape Controller Configuration
Build Level: XXXXX

Baud Rate	:	9600,8,N,1 (Autobaud)
World Wide Name High	:	0xXXXXXXXX
World Wide Name Low	:	0xXXXXXXX
Initiator SCSI ID	:	7
Discovery Delay Time	:	2000
Ethernet	:	ENABLED
Physical Address	:	00:E0:02:02:D0:9F
IP Address	:	1.1.1.1
Subnet mask	:	255.255.255.0
SNMP	:	ENABLED
Community Name for GETs	:	public
Community Name for SETS	:	private
Manager IP Address for Traps	:	

Traps are disabled.

Press any Key to Continue…

Ethernet Configuration

Use this option to set the network IP address and mask. On the Main menu, perform the following:

1. Select *Ethernet Configuration*. The Current Ethernet Configuration screen appears.

```
                                Ethernet Configuration Menu
                                    Build Level: XXXXX
Current Ethernet Configuration:

  Ethernet Physical Address:  00:E0:02:XX:XX:XX
  IP Address                : 1.1.1.1
  Subnet Mask               : 255.255.255.0
  IP Gateway                :
  Hostname                  : FCTC

        1) Change Ethernet Physical Address
        2) Change IP Address
        3) Change IP Subnet Mask
        4) Change IP Gateway
        5) Change Hostname
        6) Change SNMP Settings
        7) Change Security Settings

        A) Save Configuration
        X) Return to previous menu

Command >
```

2. Select your choices to perform any of the configurations.
3. Save your configuration.

Reboot Fibre Channel Tape Controller

IMPORTANT: Changes to the configuration must be saved before the changes will take effect.

The reboot function restarts the FCTC-II. This causes selected configuration options to take effect.



CAUTION: The Reboot Fibre Channel Tape Controller selection will result in all current operations being interrupted. Do not reboot the unit during normal operations.

Maintenance Menu

From the command console, enter the MAINT command. The Maintenance menu screen appears.

```
                Compaq StorageWorks Fibre Channel Tape Controller Maintenance Menu
                                        Build Level: XXXXX
        1) Trace Settings Configuration
        2) Display Trace and Assertion History
        3) Display FC to SCSI Mapping
        4) Download a New Revision of The Firmware
        5) Baud Rate Configuration
        6) SCSI Configuration

        A) Save Configuration
        B) Restore Last Saved Configuration
        C) Reset Configuration to Factory Defaults

        X) Return to main menu

    Command >
```

IMPORTANT: To access the Maintenance menu, enter the command "MAINT" at the Main Menu Command line.

Trace Settings Configuration

This option allows trace levels to be set. This option should not be modified in normal operation because performance degradation can result. On the Maintenance menu, perform the following:

1. Select *Trace Settings Configuration*. The Trace Settings screen appears.

```
                    Trace Settings
                  Build Level: XXXXX

Level 0    :    ON        Level 1    :    OFF
Level 2    :    OFF       Level 3    :    OFF
Level 4    :    OFF       Level 5    :    OFF
Level 6    :    OFF       Level 7    :    OFF

        U) Update Current Operating Trace Levels
        X) Return to previous menu

Enter Trace level to change >
```

2. Select *U* to update the current operating trace levels or *X* to return to the previous menu.

NOTE: There is no reboot required to save changes.

Display Trace and Assertion History

The Display Trace and Assertion History option allows for internal trace status information to be dumped to the serial port and captured.

```
                    Trace Dump Menu
                  Build Level: XXXXX

        1) Display trace for current boot cycle
        2) Display trace from previous boot cycle
        3) Display trace from last assertion failure
        4) Display history of assertion failures
        5) Clear current trace buffer

        X) Return to previous menu

Command >
```

Display FC to SCSI Mapping

On the Maintenance menu perform the following to display the Fibre Channel to SCSI Display screen:

1. Select *Display FC to SCSI Mapping*. The Fibre Channel to SCSI Display screen appears.

Fibre Channel to SCSI Display
Build Level: XXXXX

FC_LUN		BUS	TGT	LUN
0x00	→	-	-	-
0x01	→	-	-	-
0x02	→	-	-	-
0x03	→	-	-	-
0x04	→	-	-	-
0x05	→	-	-	-
0x06	→	-	-	-
0x07	→	-	-	-
0x08	→	-	-	-
0x09	→	-	-	-
0x0A	→	-	-	-
0x0B	→	-	-	-
0x0C	→	-	-	-
0x0D	→	-	-	-
0x0E	→	-	-	-
0x0F	→	-	-	-

Enter X to return, <enter> for more >

2. Enter *X* to return to the main menu or press **Enter** to view additional entries.

Download a New Revision of the Firmware

To download a new revision of the firmware:

1. From the Maintenance menu, select *Download a new Revision of the Firmware*. The Download Firmware menu screen appears.

```
                    Download Firmware Menu
                      Build Level: XXXXX

This will replace the current revision of the firmware. A reboot will also be performed
as part of this process.

Are you sure (y/n)?
```

2. Press **Y** to continue the process or **N** to end the process.

NOTE: Tape Options ROMPaq is the preferred method of firmware upgrades.

Baud Rate Configuration

The Baud Rate Configuration option changes the baud rate used on the serial port. To perform the Baud Rate configuration:

1. From the Maintenance menu, select *Baud Rate Configuration*. The Baud Rate Configuration menu screen appears.

```
                    Baud Rate Configuration Menu
                      Build Level: XXXXX

1)      9600            2)      19200
3)      38400           4)      57600
5)      115200

x)      Return to previous menu
```

2. Select the appropriate baud rate setting.

Autobaud Feature

The Autobaud feature automatically configures the baud rate on the FCTC-II. After you set the baud rate in the terminal emulation program, wait until the FCTC-II completes the (POST) and the firmware initialization process.

When the FCTC-II senses the baud rate of the terminal emulator, the FCTC-II automatically sets its own baud rate to match that of the terminal emulator and saves the new baud rate into the FCTC-II configuration. Reboot is not required.

The baud rate in the terminal emulator program must be set at 9600, 19200, 38400, 57600, or 115200 for the Autobaud feature to recognize it. The FCTC-II will not function properly at any other baud rate.

SCSI Configuration

Use the SCSI Configuration option to set SCSI Initiator ID, set the SCSI bus reset behavior, and change the discovery delay. To perform the SCSI configuration:

1. From the Maintenance menu, select *SCSI Configuration*. The SCSI Configuration Menu screen appears.

```
                    SCSI Configuration Menu
                       Version: X.X XXXX

Bus 0, Current SCSI Configuration:
        Initiator SCSI ID: 7
        Reset SCSI Bus on Boot: Yes
                1) Change Initiator SCSI ID
                2) Toggle SCSI Reset Operation
                3) Change Discovery Delay
                X) Return to Previous Menu
```

2. Press the **Enter** key to toggle between SCSI Bus 0 and SCSI Bus 1.

```
                    SCSI Configuration Menu
                       Version: X.X XXXX

Bus 1, Current SCSI Configuration:
        Initiator SCSI ID: 7
        Reset SCSI Bus on Boot: Yes
                1) Change Initiator SCSI ID
                2) Toggle SCSI Reset Operation
                3) Change Discovery Delay
                X) Return to Previous Menu
```

Working with the Ethernet Port Interface

The 10BaseT Ethernet port must first be configured through the serial port with an appropriate IP address and Subnet mask prior to use. Default values are IP address 1.1.1.1, and a Subnet mask of 255.255.255.0.

To change the Ethernet physical address, IP address, or IP Subnet mask, select *Ethernet Configuration* from the Main Menu.

The FCTC-II provides an Ethernet port for connection to a standard 10BaseT Ethernet network. You can use Ethernet to perform the following activities:

NOTE: If you plan to use Ethernet to connect to the FCTC-II, you must first set up serial communications with the FCTC-II to configure the Ethernet port address.

Telnet

Configure the FCTC-II *through Telnet.* The configuration menus accessed through the serial port will be disabled when a telnet session is connected. When logging in for a telnet session, use “root” as the user name and “password” as the password.

Web Browser

The FCTC-II allows any standard web browser to view and change the FCTC-II current configuration and operating status. Information is presented in HTML format in accordance with the W3C specification for HTML 3.2. Current W3C Recommendations and other technical documents can be found at http://www.compaq.com.

Accessing the Interface

1. Connect a 10baseT Ethernet cable to the back of the FCTC-II.
2. Boot up all connected SCSI and Fibre Channel devices.
3. After all the devices have gone through their power up routines, boot up the FCTC-II.
4. Turn on the host computer.

5. If you know the IP address for the FCTC-II, open the host computer web browser and enter the IP address into the Address field of the Web browser. The factory default for the IP address of the FCTC-II is 1.1.1.1 and must be changed.

   If you do not know the FCTC-II IP address (or need to change the IP address), connect to the FCTC-II using the serial connection. Current information can be seen and changed from the Ethernet Configuration menu.

   NOTE: To access the Web Management Interface, the FCTC-II must be assigned an IP address.

6. Select the appropriate menu item. When selecting a menu item for the first time (except for the Display SCSI Devices option), the user will be prompted to log in with a user name and password. The defaults are "root" for user name and "password" for password. This information is required only once per session.

7. Enter the user name and password. Full access is gained to the configuration menus for as long as a session lasts. A session ends when the user exits the Web browser or navigates the browser to a new web address. Log-in will be required again the next time a session is opened.

Menu Overview

The menu structure of the Web interface is different than in the serial and Telnet interfaces but the functionality is essentially the same regardless of which interface is used. In many cases, the Web interface replaces the menu screens of the serial and Telnet interfaces with drop-down menus. Other differences include the following:

- The Ethernet menu from the serial interface is combined into the general Configuration menu.
- Firmware can not be upgraded from the Web interface.

Making Changes

To make changes to settings, use a standard keyboard and mouse to enter new information.

Select the Submit button to send changes from the web browser to the FCTC-II.

Changes must be saved in the configuration menu and will not take effect until the next time the FCTC-II reboots. The unit can be forced to reboot right away by selecting the Reboot option from the Diagnostics menu.

NOTE: It is recommended not to bookmark Web interface pages with a Web browser. Because configuration information is transmitted through URLs, there is the possibility of the FCTC-II being configured with information present at the time a page was bookmarked.

For similar reasons, it is also recommended not to use navigation features of the Web browser (such as the BACK button) to navigate the Web interface.

It is recommended to navigate only using the Web page links contained in the Web interface itself. Depending on the Web browser used, these links will often appear as highlighted text. By clicking on the text links, the Web interface can be safely navigated.

Simple Network Management Protocol

The FCTC-II includes the Simple Network Management Protocol (SNMP) management support. SNMP is transported through the Ethernet connection (10BaseT port). SNMP support allows configuration and management using any standard SNMP management tool.

SNMP Configuration

The SNMP Configuration menu allows for various SNMP options to be configured, including identifying and changing community names.

SNMP Configuration
Version: X.X XXXX

Current SNMP Configuration:

Community Name for GET: pub
Community Name for SET: priv

Traps are disabled

1) Change Community Name for GET
2) Change Community Name for SET
3) Toggle Trap
X) Return to Previous Menu

Toggle Trap

SNMP Trap Enable allows Trap reporting to be turned on and off. If SNMP Traps are disabled, no Trap events are sent. Select Toggle Trap to enable Trap events.

SNMP Configuration with Traps Enabled

The SNMP Configuration with Traps Enabled menu allows for various SNMP options to be configured. This includes Trap manager IP address, community names, and Trap priority.

SNMP Configuration
Version: X.X XXXX

Current SNMP Configuration:

Community Name for GET: public
Community Name for SET: private
Manager IP Address for Traps: 1.1.1.1

Traps are enabled for events of any priority
1) Change Community Name for GET
2) Change Community Name for SET
3) Toggle Trap
4) Change Manager IP Address for Traps
5) Decrease Trap Priority
6) Increase Trap Priority
X) Return to previous menu

GET and SET Community Names

The SNMP GET community name is checked for each GET request received by the FCTC-II. The community name in the SNMP packet must match the community name configured here for the SNMP GET request to be successfully completed. Configure your SNMP manager to have the same GET and SET community names as the FCTC-II.

IP Address for Traps

The Trap Manager IP address is the address used for sending Traps. Typically, this is the IP address of the machine using the Network Management Program and/or an MIB browser.

Trap Priority

The SNMP Trap Priority determines which traps will be sent to the specified Trap IP address. Events having a priority equal to or higher than the configured priority will be sent first.

Working with Fibre Channel Port Interface

Compaq Insight Manager

Compaq Insight Manager is a diagnostic tool that lets the user view the server and units connected to the server, and determine if errors exist.

To determine and view errors on the tape controller:

1. Access the Compaq Insight Manager.
2. On the Compaq Insight Manager screen, click the *IP Discovery* icon. The IP Discover – Select Address range appears.
3. Click *New*. The IP Address range screen appears.
4. Enter the range of the IP Address you want view, then click *Add*.
5. Enter the next range if needed.
6. When done click *Close*, then click *Final Devices*. The IP Discovery screen appears showing the name, IP Address, and status of each IP Address entered in step 4.
7. Select the IP Address you want to view, or click *Add/Update All Devices*. The Device List screen appears. The color code next to each entry determines the status of the device. See Table 3-2.

Table 3-2
IP Address Status Lights

Light	Status
Green	Server is okay
Yellow	Server has a warning
Red	Server has a critical error
Black	Server is off or inaccessible*

***** If a server is inaccessible, it could be an indication of Ethernet problems.

8. Double click the line with the error light to view the errors. The device screen appears. This screen shows icons indicating which subsystem has errors.

9. Click the appropriate subsystem icon. The subsystem screen appears displaying devices with a color-coded arrow. These color codes are the same as the color-coded lights in Table 3-2.
10. Click any tape controller device. The system shows the tape controller and the libraries attached to it.
11. Click any library to view the error.
12. To view the tape controller information, click the *Tape Controller* option. This option displays the controller status, firmware version, and worldwide name.

Compaq Diagnostics

Compaq Diagnostics utility allows the user to view and test information about computer hardware and software configuration.

Compaq Diagnostics is available on the SmartStart CD. You can also download Compaq Diagnostics from the Compaq website at

http://www.compaq.com

To run Compaq Diagnostics:

1. Insert the utility into the server.
2. Go to the control panel and click *Compaq Diagnostics*. The Compaq Diagnostics for Windows NT screen appears.

   A description of each of the features is described in Table 3-3.

Table 3-3
Compaq Diagnostics Features

Tab	Description
Overview	Displays properties inside the server.
Test	Used to test the server and items attached to the server.
Status	Displays current status of test.
Log	Displays test results.
Error	Displays any current or past errors.

3. Select the desired tab to continue with Compaq Diagnostics.

Tape Options ROMPaq

The Tape Options ROMPaq diskette allows a user to upgrade the ROM Firmware images on Compaq tape product options. The Tape Options ROMPaq consists of two diskettes:

- Disk 1 – Tape Options ROMPaq Firmware Upgrade Diskette for:
  - Compaq 12/24-GB DAT drive
  - Compaq 35/70-GB DLT drive
- Disk 2 – Tape Options ROMPaq Firmware Upgrade Diskette for:
  - Compaq 35/70-GB DLT Library drive
  - Compaq DLT Library Model 3570-1 and 3570-2 controllers

Tape Options ROMPaq is available on the Compaq website at

http://www.compaq.com/support

Once on the Web page, select *Support* to begin locating ROMPaq. To run Tape Options ROMPaq:

1. Obtain two formatted 1.44-MB diskettes.

   NOTE: Be sure to view Read Me First before beginning the following procedure.

2. Insert the appropriate diskette into the server and boot up.
3. Click *OK* when the Welcome screen appears. The Select a Device screen appears listing programmable devices.
4. Select *All Compaq FCTC* and click *OK*. The upgrade begins.

   

   WARNING: All Fibre Channel Tape Controllers and Fibre Channel Tape Controller-IIs connected to the same Fibre Channel loop will be upgraded.

   If the following message appears, “There are no ROM files in the diskette for the device you have selected,” click *OK*. This message will appear only if the FCTC firmware already installed is newer than the version you are trying to download.

5. After the upgrade is complete, reboot the system and restart the upgraded components.

Chapter 4

Troubleshooting

When there is a problem with the Enterprise Backup Solution, the source of the problem can be the tape controller, the hub, the host, the tape storage device, or any of the connections between these components. The following sections in this chapter will help you troubleshoot problems with the tape controller.

- Troubleshooting with the status lights (LED indicators)
- Troubleshooting serial port communication problems
- Verifying Power-On Self-Test status
- Verifying tape controller initialization
- Verifying SCSI bus configuration
- Verifying Fibre Channel connection
- Verifying SCSI devices in Windows NT
- Verifying a SCSI device in NetWare
- Verifying configuration
- Verifying devices
- Verifying host configuration
- Verifying Host Bus Adapter (HBA) device driver information
- Additional troubleshooting tips (for problems outside the tape controller)

Troubleshooting with the Status Lights

During normal operation, the lights on the rear panel of the Fibre Channel Tape Controller II (FCTC-II) appear as follows:

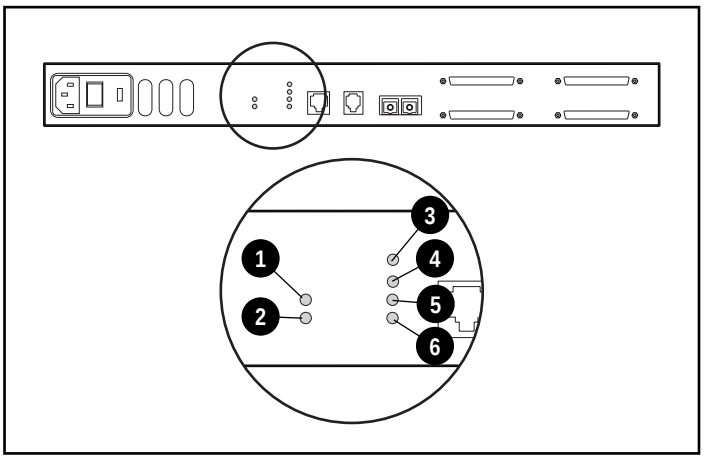

Figure 4-1. Rear panel status lights

Table 4-1
Status Lights

Item	Light	Description
❶	Green power light	On
❷	Amber fault light	Off
❸	Green SCSI light-0	Flickers during SCSI activity
❹	Green SCSI light-1	Flickers during SCSI activity
❺	Green Ethernet light	Flickers during Ethernet activity
❻	Green Fibre Channel light	Flickers during Fibre Channel activity

Table 4-2
Status Light Problems

Problem	Possible Cause	Solution
Power light is off when it should be on.	Unit is not getting voltage.	1. Check or replace the AC power cord. 2. Check the line voltage. 3. Turn the unit off, then on.
	Unit is faulty.	Replace unit.
Fault light is on when it should be off (for example, after Power-On Self-Test).	Temperature fault.	1. Make sure the airflow path is not obstructed. 2. Check that the ambient temperature is not too high. (See Appendix D, "Specifications," for operating temperatures.)
	Unit has failed.	Replace unit.
Fault light momentarily flashes during power up or rest.	Normal Operation	Indicates normal activity.

continued

Table 4-2
Status Light Problems *continued*

Problem	Possible Cause	Solution
SCSI light is off or continually lit without corresponding activity on the SCSI tape storage device.	Problems with the SCSI cable, an attached SCSI tape storage device, or the FCTC-II.	1. Check SCSI cables and connections. 2. Diagnose the attached tape storage device. (Consult the applicable tape storage user guide for more information.) 3. Diagnose the tape controller using the Serial Port Interface. (See "Troubleshooting Serial Port Communication Problems" later in this chapter.)
SCSI light is flickering.	Normal operation.	Indicates SCSI activity.
Fibre Channel light is off or continually lit with no corresponding SCSI Bus activity.	Problems in the Fibre Channel Loop or the FCTC-II.	1. Check all cables. 2. Turn the tape controller off, then on. 3. Diagnose the Fibre Channel Loop. (See the *Compaq Fibre Channel Troubleshooting Guide* for more information.)
Fibre Channel light is flickering.	Normal operation.	Indicates Fibre Channel activity.
Ethernet off or continually lit.	Problem with network connection.	1. Verify network connection. 2. Verify that the port is connected to a 10BaseT Ethernet network.
Ethernet light is flickering.	Normal operation	Indicates Ethernet activity.

continued

Table 4-2
Status Light Problems *continued*

Problem	Possible Cause	Solution
Any light is not working properly.	Light failure.	Call Compaq Customer Support.
	Unidentified error.	1. Turn power to the unit off, then on. 2. Diagnose the tape controller using the Serial Port Interface. (See the "Troubleshooting Serial Port Communication Problems" section in this chapter)

Troubleshooting Serial Port Communication Problems

If you experience trouble communicating with the serial port, verify the host terminal emulation configuration. The FCTC-II requires the baud rate to be set correctly, 8 data bits, 1 stop bit, and no parity. Flow control should be disabled, and may cause problems if set to “hardware” or XON/XOFF. Some hosts may not support baud rates higher than 19200, so a lower baud rate may be required. If problems persist, check the cabling or try a different host. If a valid Ethernet IP address is configured, serial configuration settings can be set through SNMP and Telnet.

Verifying Power-On Self-Test Status

The Power-On Self-Test (POST) provides pass/fail indications for the following subsystems:

- Serial port loopback
- Monitor-flash checksum
- Program-store in main RAM
- Trace buffer in main RAM
- PCI protocol RAM
- SCSI script RAM
- Fibre Channel Port single-frame sequence loopback
- Fibre Channel Port multi-frame sequence loopback
- Ethernet port loopback
- SCSI port loopback

To see the current POST status, connect a terminal or terminal emulator to the tape controller serial port. The POST status will appear on the screen when the tape controller is powered on, or you can view POST status at any time through the Serial Port Interface Menu options. For more on displaying the POST status after initial power-on, see “Display Status of Power-On Self-Test” in Chapter 3.

Verifying Tape Controller Initialization

Following POST, the tape controller initializes external interfaces, identifies the type of attached the SCSI bus, and loads the tape controller real-time operating system. Errors detected in any of these phases appear on the screen as status messages when a terminal or terminal emulator is connected.

To see initialization status messages after the initial power-on, reboot the controller through the Serial Port Interface. POST is not executed during this warm-boot, but controller initialization occurs and the initialization status messages are displayed on the screen.

IMPORTANT: Rebooting the controller cancels all current and pending tape controller activities. Be sure all tape controller activities are complete before rebooting the unit.

NOTE: It is possible for the Serial Port Interface to report errors during initialization without stopping the power-on process. SCSI bus errors, for example, may be reported during initialization without affecting other aspects of controller initialization.

Verifying SCSI Bus Configuration

Problems with SCSI bus configuration are common. Basic operation of a SCSI bus can be checked by using the configuration menu to view attached SCSI devices. Other conditions to look for include:

- Termination—Problems with termination can cause intermittent or hard failure. A SCSI bus must be terminated on both ends, and only both ends. Termination issues when both narrow and wide devices are on the same bus are common.
- Bus Type—Single-ended devices cannot be mixed with Differential devices on the same bus. Similarly, Single-ended terminators cannot be used on Differential buses, and Differential terminators cannot be used on a Single-ended bus. The FCTC-II is a Differential SCSI device.
- Device ID—Each device on a SCSI bus must have a unique ID. Also check the configured IDs for the FCTC-II to verify these are not in use by other devices on the same SCSI bus. The FCTC-II appears on each SCSI bus as a single initiator. The default initiator ID is 7, and can be set through configuration to any valid SCSI address.

- Cabling—Check SCSI cables to verify they are functional. SCSI rules for total length, distance between devices, and stub length must be adhered to. Connections should also be checked and reseated, if necessary.
- SCSI Device—Verify that the SCSI devices can be seen in the configuration menu of the FCTC-II. Select "Perform Configuration" from the first menu. If the FCTC-II can not see the devices, check the SCSI configuration and cabling.

Verifying Fibre Channel Connection

If SCSI devices are recognized on the SCSI buses but do not appear to the Fibre Channel host, the Fibre Channel link may not be established. Most hubs and switches have link indicator lights showing link status. When the FCTC-II is connected and powered on, this link indicator light should show a good link. If it does not, check the cabling or connections. To verify link integrity when connected to a functional host, disconnecting then reconnecting the Fibre Channel cable should cause momentary activity on this indicator light as the link reinitializes. Also verify that the node-to-node connection uses corresponding media types (that is, shortwave-to-shortwave GBICs).

Verifying SCSI Devices in Windows NT

1. Open the Windows NT Control Panel.
2. Select *SCSI Adapters*, then double click *Fibre Channel Host Bus Adapter (FC HBA)*. The SCSI devices should be listed.
3. If no devices are listed, verify the FCTC-II configuration, FC HBA configuration, and cabling.

NOTE: Occasionally, Windows NT may need to be rebooted with all SCSI devices and the FCTC-II left on before it will recognize the devices.

Verify a SCSI Device in NetWare

The following procedure applies to NetWare 4.11 and NetWare 5.0.

1. From the console screen, enter Load Monitor and press **Enter.** The Console Monitor screen appears.
2. Under Available Options, select *Storage Devices* and press **Enter.** A list of registered storage objects appears.
3. Scroll through the list to locate the appropriate device. The appropriate device is verified when it has been located on the list.

   If the appropriate device is not listed, verify the FCTC-II configuration, FC HBA configuration, and cabling.

Verifying Configuration

A number of configuration changes may result in an invalid configuration. If you are uncertain about the configuration, restore the FCTC-II to the factory default configuration using the Serial Port Interface. Proceed to configure the unit one step at a time, verifying the functionality of the configuration as changes are made. See the “User Interface” section in Chapter 3 for more information.

Verifying Devices

Connect the target devices you are attempting to use to the native interface to verify that the devices are functional. SCSI target devices can be connected to a host SCSI bus to verify they are functional. For example, does the Digital Linear Tape (DLT) Library work in a single server SCSI connection?

Verifying Host Configuration

In some cases, it may be that the Host Bus Adapter (HBA) or driver may not be working properly. Check the configuration of these elements or check the release notes for the driver provided to see if there are any specific issues or required configuration. Verify that you are using a current version of the HBA driver.

Verifying HBA Device Driver Information

Refer to the Host Bus Adapter (HBA) device driver documentation for configuration specifics. An HBA may require a different configuration, depending on whether it is connected to a loop or a switch.

Additional Troubleshooting Tips

If you cannot locate the problem in the tape controller, follow the steps below to investigate the areas outside of the controller:

1. Inspect SCSI cabling between the tape controller and the attached SCSI devices. Check for loose, dirty, broken, or bent cabling and connectors.
2. Inspect all fiber cables between the tape controller and the hub. Fiber cables should latch into position with an audible click. Verify that the fiber cables are not damaged or bent with a radius of less than 3 inches (7.62 centimeters).
3. Check the Giga Bit Interface Converter-Short Wave (GBIC-SW) modules in the Fibre Channel Storage Hub to ensure they are properly inserted.
4. Check that all cables are connected to active, powered-on devices.

Refer to the *Compaq Fibre Channel Troubleshooting Guide* for solutions to problems related to the Fibre Channel Arbitrated Loop.

Appendix ***A***

Regulatory Compliance Notices

Regulatory Compliance Identification Numbers

For the purpose of regulatory compliance certifications and identification, your Compaq StorageWorks Fibre Channel Tape Controller II is assigned a Compaq Series Number. The Compaq Series Number for this product is: Series EO1000. The Compaq StorageWorks Fibre Channel Tape Controller II Series Number can be found on the product label, along with the required approval markings and information. When requesting certification information for this product, always refer to this Series Number. Do not confuse this Series Number with the marketing name or model number for your Compaq StorageWorks Fibre Channel Tape Controller II.

Federal Communications Commission Notice

Part 15 of the Federal Communications Commission (FCC) Rules and Regulations has established Radio Frequency (RF) emission limits to provide an interference-free radio frequency spectrum. Many electronic devices, including computers, generate RF energy incidental to their intended function and are, therefore, covered by these rules. These rules place computers and related peripheral devices into two classes, A and B, depending upon their intended installation. Class A devices are those that may reasonably be expected to be installed in a business or commercial environment. Class B devices are those that may reasonably be expected to be installed in a residential environment (that is, personal computers). The FCC requires devices in both classes to bear a label indicating the interference potential of the device as well as additional operating instructions for the user.

The rating label on the device shows which class (A or B) the equipment falls into. Class B devices have an FCC logo or FCC ID on the label. Class A devices do not have an FCC ID on the label. Once the class of the device is determined, refer to the following corresponding statement.

Class A Equipment

This equipment has been tested and found to comply with the limits for a Class A digital device, pursuant to Part 15 of the FCC Rules. These limits are designed to provide reasonable protection against harmful interference when the equipment is operated in a commercial environment. This equipment generates, uses, and can radiate radio frequency energy and, if not installed and used in accordance with the instructions, may cause harmful interference to radio communications. Operation of this equipment in a residential area is likely to cause harmful interference, in which case the user will be required to correct the interference at personal expense.

Class B Equipment

This equipment has been tested and found to comply with the limits for a Class B digital device, pursuant to Part 15 of the FCC Rules. These limits are designed to provide reasonable protection against harmful interference in a residential installation. This equipment generates, uses, and can radiate radio frequency energy and, if not installed and used in accordance with the instructions, may cause harmful interference to radio communications. However, there is no guarantee that interference will not occur in a particular installation. If this equipment does cause harmful interference to radio or television reception, which can be determined by turning the equipment off and on, the user is encouraged to try to correct the interference by one or more of the following measures:

- Reorient or relocate the receiving antenna.
- Increase the separation between the equipment and receiver.
- Connect the equipment into an outlet on a circuit different from that to which the receiver is connected.
- Consult the dealer or an experienced radio or television technician for help.

Declaration of Conformity for Products Marked with the FCC logo – United States Only

This device complies with Part 15 of the FCC Rules. Operation is subject to the following two conditions: (1) this device may not cause harmful interference, and (2) this device must accept any interference received, including interference that may cause undesired operation.

For questions regarding your product, contact:

Compaq Computer Corporation
P. O. Box 692000, Mail Stop 530113
Houston, Texas 77269-2000

or call 1-800-652-6672 (1-800-OK COMPAQ). For continuous quality improvement, calls may be recorded or monitored.

For questions regarding this FCC declaration, contact:

Compaq Computer Corporation
P. O. Box 692000, Mail Stop 510101
Houston, Texas 77269-2000

or call 281-514-3333.

To identify this product, refer to the part, series, or model number found on the product.

Modifications

The FCC requires the user to be notified that any changes or modifications made to this device that are not expressly approved by Compaq Computer Corporation may void the user's authority to operate the equipment.

Cables

Connections to this device must be made with shielded cables with metallic RFI/EMI connector hoods in order to maintain compliance with FCC Rules and Regulations.

Canadian Notice (Avis Canadien)

Class A Equipment

This Class A digital apparatus meets all requirements of the Canadian Interference-Causing Equipment Regulations.

Cet appareil numérique de la classe A respecte toutes les exigences du Règlement sur le matériel brouilleur du Canada.

Class B Equipment

This Class B digital apparatus meets all requirements of the Canadian Interference-Causing Equipment Regulations.

Cet appareil numérique de la classe B respecte toutes les exigences du Règlement sur le matériel brouilleur du Canada.

European Union Notice

Products with the CE Marking comply with both the EMC Directive (89/336/EEC) and the Low Voltage Directive (73/23/EEC) issued by the Commission of the European Community.

Compliance with these directives implies conformity to the following European Norms (in brackets are the equivalent international standards):

- EN55022 (CISPR 22) - Electromagnetic Interference
- EN50082-1 (IEC801-2, IEC801-3, IEC801-4) - Electromagnetic Immunity
- EN60950 (IEC950) - Product Safety

Japanese Notice

ご使用になっている装置にVCCIマークが付いていましたら、次の説明文をお読み下さい。

この装置は、情報処理装置等電波障害自主規制協議会（VCCI）の基準に基づくクラスB情報技術装置です。この装置は、家庭環境で使用することを目的としていますが、この装置がラジオやテレビジョン受信機に近接して使用されると、受信障害を引き起こすことがあります。
取扱説明書に従って正しい取り扱いをして下さい。

VCCIマークが付いていない場合には、次の点にご注意下さい。

この装置は、情報処理装置等電波障害自主規制協議会（VCCI）の基準に基づくクラスA情報技術装置です　この装置を家庭環境で使用すると電波妨害を引き起こすことがあります。この場合には使用者が適切な対策を講ずるよう要求されることがあります。

Taiwanese Notice

警告使用者：

這是甲類的資訊產品，在居住的環境中使用時，可能會造成射頻干擾，在這種情況下，使用者會被要求採取某些適當的對策。

Laser Compliance

The Giga Bit Interface Converter-Short Wave (GBIC) Module contains a laser diode of either gallium alumimum arsenide (GaALAs) emitting in the wavelength range of 770-860 nm, or indium gallium arsenide phosphide (InGaAsP) emitting in the wavelength range of 1270-1355 nm. All Compaq systems equipped with a laser device comply with safety standards, including International Electrotechnical Commission (IEC) 825. With specific regard to the laser, the equipment complies with laser product performance standards set by government agencies as a Class 1 laser product. The product does not emit hazardous laser radiation.



WARNING: Use of controls or adjustments or performance of procedures other than those specified herein or in the laser product's installation guide may result in hazardous radiation exposure. To reduce the risk of exposure to hazardous radiation:

- Do not try to open the unit enclosure. There are no user-serviceable components inside.
- Do not operate controls, make adjustments, or perform procedures to the laser device other than those specified herein.
- Allow only Compaq authorized service technicians to repair the unit.

The Center for Devices and Radiological Health (CDRH) of the U.S. Food and Drug Administration implemented regulations for laser products on August 2, 1976. These regulations apply to laser products manufactured from August 1, 1976. Compliance is mandatory for products marketed in the United States. This device is classified as a Class 1 laser product as defined by IEC 825.

Battery Replacement Notice

Your computer contains an internal Lithium battery or battery pack. There is a danger of explosion and risk of personal injury if the battery is incorrectly replaced or mistreated. Replacement is to be done by a Compaq authorized service provider using the Compaq spare designated for this product. For more information about battery replacement or proper disposal, contact your Compaq authorized reseller or your authorized service provider.

WARNING: Your computer contains an internal Lithium Manganese Dioxide, a Vanadium Pentoxide, or an alkaline battery pack. There is risk of fire and burns if the battery pack is not handled properly. To reduce the risk of personal injury:

- Do not attempt to recharge the battery.
- Do not expose the battery or equipment to temperatures higher than 60°C.
- Do not disassemble, crush, puncture, short external contacts, or dispose of the battery in fire or water.
- Replace only with the Compaq spare battery designated for this product.

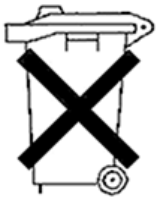

Batteries, battery packs, and accumulators should not be disposed of together with the general household waste. To forward them to recycling or proper disposal, please use the public collection system or return them to Compaq, your authorized Compaq partners, or their agents.

Appendix ***B***

Electrostatic Discharge

To prevent damage to the system, be aware of the precautions you need to follow when setting up the system or handling parts. A discharge of static electricity from a finger or other conductor can damage system boards or other static-sensitive devices. This type of damage can reduce the life expectancy of the device.

To prevent electrostatic damage, observe the following precautions:

- Avoid hand contact by transporting and storing products in static-safe containers.
- Keep electrostatic-sensitive parts in their containers until they arrive at static-free workstations.
- Place parts on a grounded surface before removing them from their containers.
- Avoid touching pins, leads, or circuitry.
- Always be properly grounded when touching a static-sensitive component or assembly.

Grounding Methods

There are several methods for grounding. Use one or more of the following methods when handling or installing electrostatic-sensitive parts:

- Use a wrist strap connected by a ground cord to a grounded workstation or computer chassis. Wrist straps are flexible straps with a minimum of 1 megohm ± 10 percent resistance in the ground cords. To provide proper ground, wear the strap snug against the skin.
- Use heel straps, toe straps, or boot straps at standing workstations. Wear the straps on both feet when standing on conductive floors or dissipating floor mats.
- Use conductive field service tools.
- Use a portable field service kit with a folding static-dissipating work mat.

If you do not have any of the suggested equipment for proper grounding, have a Compaq authorized reseller install the part.

NOTE: For more information on static electricity, or for assistance with product installation, contact your Compaq authorized reseller.

Appendix **C**

Power Cord Set Requirements

The power cord set included with your tape controller meets the requirements for use in the country where you purchased your tape controller. To use this tape controller in another country, purchase a power cord that is approved for use in that country.

The power cord must be rated for the product and for the voltage and current marked on the product's electrical ratings label. The voltage and current rating of the cord should be greater than the voltage and current rating marked on the product. In addition, the diameter of the wire must be a minimum of 1.00 mm^2 or 18AWG, and the length of the cord must be between 6 feet (1.8 meters) and 12 feet (3.6 meters). If you have questions about the type of power cord to use, contact your Compaq authorized service provider.

Route the power cord so that it is not likely to be walked on or pinched by items placed upon it or against it. Pay particular attention to the plug, electrical outlet, and the point where the cord exits from the product.

Appendix D

Specifications

This appendix provides electrical and mechanical specifications for the Compaq Fibre Channel Tape Controller II and electrical specifications for the GBIC-SW module.

Fibre Channel Tape Controller II

Table D-1
Specifications-Electrical

Bit Rate	1,062.5 Mbit/sec
Giga Bit Connector Type	SC Duplex
Input Requirements	
Rated Input Voltage	100-240 VAC
Rated Input Frequency	50-60 Hz
Rated Input Current	1.0 Amp
Temperature Range	
Operating	5°C (41°F) to 40°C (104°F)
Shipping/Storage	-40°C (-40°F) to 70°C (158°F)
Operating	5% to 80%
Nonoperating	95%

Table D-2
Specifications-Mechanical

Dimensions	U.S.	Metric
Height	1.70 in.	4.32 cm
Depth	8.94 in.	22.71 cm
Width	17.0 in.	43.18 cm
Weight	8.00 lb	3.62 kg

GBIC-SW Module

Table D-3
Specifications

Compliance	Fibre Channel FC-PH-2 physical layer option 100-M5-SN-1
Baud Rate	1062.5 Mbaud
Fibre Distance-2 to 500 meters	50 μm diameter (Preferred)
Fibre Distance-2 to 300 meters	62.5 μm diameter
Laser	780 nm (non-OFC)
Optical Connector Interface	Dual SC

Appendix ***E***

Pin Assignments

RJ-11 Serial Connector

Figure E-1 shows the location of each pin number, while Table E-1 identifies the function of each pin number for the RJ-11 serial connector.

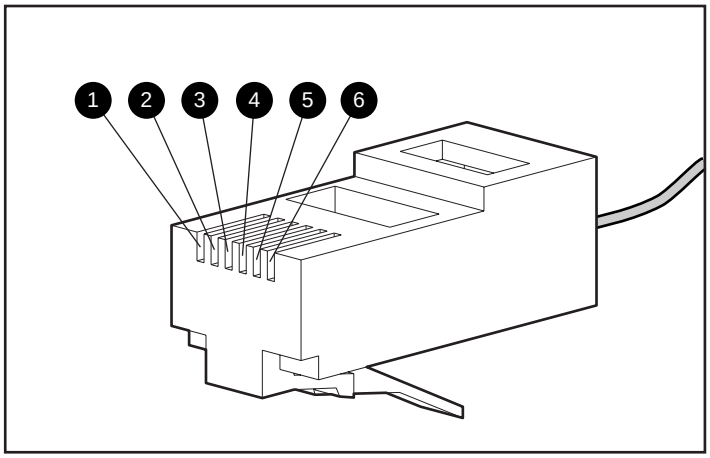

Figure E-1. RJ-11 pin assignments

Table E-1
RJ-11 Pin Assignments

Pin Number	Function
Pin 1	No Connection
Pin 2	Ground
Pin 3	Transmit Data from FCTC-II
Pin 4	Receive Data to FCTC-II
Pin 5	RTS (Report to Send)
Pin 6	CTS (Clear to Send)

RJ-45 Ethernet Connector

Figure E-2 shows the location of each pin number, while Table E-2 identifies the function of each pin number for the RJ-45 Ethernet connector.

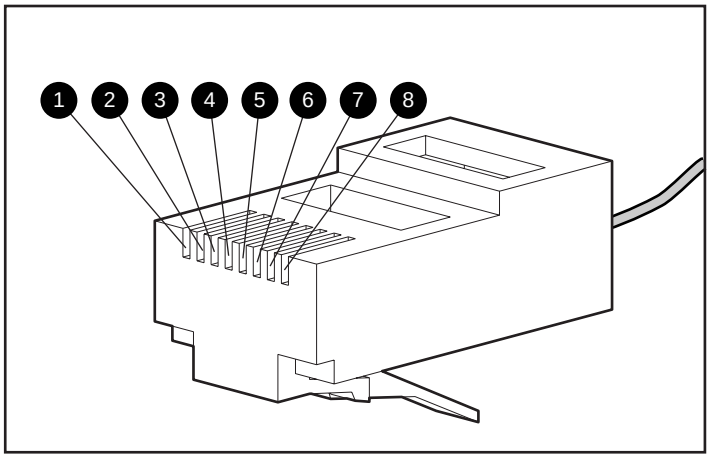

Figure E-2. RJ-45 pin assignments

Table E-2
RJ-45 Pin Assignments

Pin Number	Function
Pin 1	Transmit Out +
Pin 2	Transmit Out -
Pin 3	Receive In +
Pin 4	No Connection
Pin 5	No Connection
Pin 6	Receive In -
Pin 7	No Connection
Pin 8	No Connection

Index

Symbols and Numbers

10baseT Ethernet cable 3-13
10BaseT Ethernet port 3-13
10BaseT port 3-16, 3-17

A

AC current rating 2-6
AC power connector 1-6
AC power cord
  attaching 2-20
  status light problem 4-3
  unpacking 2-16
adhesive rubber feet 2-9, 2-15
airflow requirements for racks 2-8
alkaline battery pack A-7
amber fault status light 4-2
assertion failures 3-9
assertion history 3-8
attaching the GBIC-SW module 2-18
attaching the rubber feet 2-15
Autobaud feature 3-12

B

battery pack
  recycling or disposal A-7
  replacement warnings A-7
  type A-7
baud rate 3-3, 3-4, 3-6, 3-8, D-2
  configuration 3-11
  settings 3-12
Bit Rate D-1
blanking panels 2-8
boot cycle 3-9
bridge 1-1
bus type
  SCSI Bus configuration problems 4-7

C

cables
  bend radius 2-18
  connections 2-17
  FCC compliance statement A-4
  materials 2-16
cabling
  SCSI Bus configuration problems 4-8
cage nuts 2-9, 2-10
Canadian Notice (Avis Canadien) A-4
CE Marking A-5
Clear to Send E-2
clearance requirements 2-5
community name 3-6, 3-16, 3-17
Compaq authorized reseller xi
Compaq Diagnostics
  features 3-19

Compaq Fibre Channel Storage Hub 7 or Hub 12, configuring as part of the Enterprise Backup Solution 1-2
Compaq Fibre Channel Tape Controller 1-2
Compaq Insight Manager
IP address status lights 3-18
IP Discover – Select Address range 3-18
IP Discovery icon 3-18
RJ-45 connector 1-4
using 3-18
Compaq Maximum Recommended Ambient Operating Temperature (TMRA) 2-7
Compaq Series Number A-1
Compaq Technical Phone Support Center x
Compaq website x, xi, 1-2, 2-2, 3-13, 3-19, 3-20
configuration
multiple servers 1-2
configured ID 4-7
connectors 1-4, 1-6
controller initialization 4-7
CTS (Clear to Send) E-2
current load requirements 2-6
current ratings 2-6

D

DAT drive 3-20
data bits 3-3
data flow 1-5
Declaration of Conformity A-3
default initiator ID 4-7
desktop installation 2-1
procedure 2-15
device driver information 4-10
device ID
SCSI Bus configuration problems 4-7
device management 3-1
diameter of wire, power cord C-1
differential device vs. single-ended device 4-7
differential terminator cap 1-7
differential terminators vs. single-ended bus 4-7
Digital Linear Tape (DLT) Library
verify devices 4-9
dimensions
tape controller D-2
Display Currently Attached SCSI Devices 3-5
Display Fibre Channel Tape Controller Configuration 3-5, 3-6
Display Status of Power-On Self-Test 3-5, 3-6
DLT Library 3-20

E

electrical
specifications D-2
electrical current 2-6
electrical ratings label C-1
electrical specifications D-1
Electromagnetic Immunity A-5
Electromagnetic Interference A-5
electrostatic damage, prevention B-1
Enterprise Backup Solution
configuration 1-2
connecting tape controller 2-16
Ethernet E-3
Ethernet configuration 3-5, 3-7
Ethernet connection 3-16
Ethernet light 4-2
Ethernet port 1-6, 3-2, 3-13
Ethernet port loopback 3-6, 4-6
Ethernet RJ-45 connector 1-4
Ethernet status light 1-8
European Union Notice A-5
external controller 4-7

F

factory default settings 3-14
Fast SCSI 1-4
fault light
problems 4-3
status light 1-8, 4-2
faulty unit 4-3
FC to SCSI mapping 3-8, 3-10
FCC Class A compliance
notice A-2
FCC Class B compliance
notice A-3
features, tape controller 1-3
Federal Communications
Commission (FCC) notice A-2
fiber cable
attaching 2-17
connecting the unit 2-16
proper routing 2-18
troubleshooting 4-10
Fibre Channel Arbitrated
Loop 1-3, 2-1
Fibre Channel Host Bus Adapter
(FC HBA)
verify configuration and
cabling 4-9
verify SCSI Devices in
Netware 4-9
verify SCSI Devices in
Windows NT 4-8
Fibre Channel light
problems 4-4
Fibre Channel link 4-8
Fibre Channel Loop problem 4-4
Fibre Channel Port 1-7, 2-17, 3-2
Fibre Channel Port Interface
Compaq diagnostics 3-19
Tape Options ROMPaq 3-20
Fibre Channel Port multi-frame
sequence loopback 4-6
Fibre Channel Port single-frame
sequence loopback 4-6
Fibre Channel status light 4-2
rear panel 1-8
Fibre Channel Storage Hub
troubleshooting 4-10
Fibre Channel Switched Fabric
(FCSW) 1-3
Fibre Distance D-2
firmware 3-8, 3-11
flickering SCSI light 4-2
front cover panel 2-9, 2-12, 2-14
FTP access
RJ-45 connector 1-4
functions 1-5

G

GBIC-SW module
attach fiber cable 2-18
cabling 2-16
compliance D-2
install into port 2-18
laser compliance A-6
rubber protector 2-17
specifications D-2
troubleshooting 4-10
verify fibre channel
connection 4-8
getting help x
Giga Bit Connector Type D-1
Giga Bit Interface Converter-Short
Wave module *See* GBIC-SW
green power light 4-2
grounded workstation B-2
grounding
methods B-2
plug 2-3
requirements 2-6

H

hard failure 4-7
HBA *See* Host Bus Adapter
help
  additional sources x
  Compaq authorized resellers, telephone numbers xi
  Compaq website xi
  technical support telephone numbers x
Host Bus Adapter
  verify device driver information 4-10
  verify host configuration 4-9
host terminal emulation configuration 4-6
HTTP Interface
  accessing 3-13
  IP address 3-14
hub link indicators 4-8

I

icons, symbols on equipment viii
identification number A-1
indicators *See* status lights
information processing 1-5
initialization status messages 4-7
initializing the tape controller 4-7
Initiator ID 3-12
installation
  desktop 2-15
  rack 2-10
  sequence 2-2
  tape controller minimum requirements 2-1
  third party options 2-7
installing the tape controller 2-1
International Electrotechnical Commission (IEC) A-6
IP address 3-6, 3-7, 3-13, 3-14, 3-17, 3-18
  status lights 3-18
  web browser interface 3-14
IP Discovery 3-18
IP Gateway 3-7

L

Laser D-2
LED indicator 1-8, 4-2
length, power cord C-1
leveling jacks 2-4
light failure 4-5
link indicator lights 4-8
link status light 4-8
Lithium battery A-7

M

MAINT command 3-8
mask 3-7, 3-13
maximum internal temperature
  servers 2-7
maximum internal temperatures
  other manufacturers' options 2-7
  rack options 2-7
mechanical specifications D-1
modifications
  FCC compliance statement A-4
monitor-flash checksum 3-6, 4-6
mounting brackets 2-11
mounting rails 2-9
mounting screws 2-9
multiple rack installation 2-4

N

Netware 4.11 4-9
Netware 5.0 4-9
network connection problem 4-4
Non-operation, FCTC-II Temperature Range D-1
normal operation 4-3, 4-4

O

operating temperature 2-7
Operating Temperature Range D-1
Optical Connector Interface, GBIC-SW module D-2

P

parity 3-3
PCI protocol RAM 4-6
pin location
  CTS (Clear to Send) E-2
  Receive Data to FCTC-II E-2
  Receive In- E-3
  Receive In+ E-3
  RTS (Report to Send) E-2
  Transmit Data from FCTC-II E-2
  Transmit Out- E-3
  Transmit Out+ pin assignment E-3
pin number E-1
PLDA 1-3
ports 1-6
POST
  current status 4-6
  display 3-6
  troubleshooting with 4-6
power cord, ratings and requirements C-1
power light
  problems 4-3
power load requirements 2-6
power requirements for rack 2-6
power status light 1-8, 4-2
power strip grounding requirements 2-6
power strips 2-6
power switch 1-6
Power-On Self-Test *See* POST
precautions, installation 2-3
Private Loop Direct Attach 1-3
problem-solving 4-1
procedure
  connecting the tape controller to the Enterprise Backup Solution 2-17
  installing the tape controller into a rack 2-10
  installing the tape controller on a desktop 2-15
processing information 1-5
program store in main RAM 4-6

Q

questions
  FCC declaration A-4
  product x, A-3
  technical support x

R

rack
  airflow requirements 2-8
  blanking panels 2-8
  clearances 2-5
  grounding requirements 2-6
  installation procedure 2-10
  power requirements 2-6
  safety 2-4
  space requirements 2-5
  temperature requirements 2-7
rack installation 2-1, 2-8
rated input current D-1
rated input frequency D-1
rated input voltage D-1
ratings power cord C-1
rear panel
  connectors 1-6
  status lights 1-8, 4-2
Receive In- pin assignment E-3
Receive In+ pin assignment E-3
regulatory compliance
  identification number A-1
replacing internal battery A-7
restore configuration 4-9
RJ-11 connector 1-4
RJ-11 Pin Assignments E-2
RJ-45 connector 1-4
RJ-45 Ethernet pin assignments E-3
RJ-45 Pin Assignments E-3
RJ-45 receptacle viii
ROMPaq 3-20
routing cable 2-17, 2-18
RTS (Report to Send) E-2
rubber feet 2-9, 2-15
rubber feet, attaching 2-15

S

safety
  rack mounting 2-4
safety information 2-3
screw nuts 2-9
SCSI
  cable 2-16
  configuring as part of the Enterprise Backup Solution 1-2
  connectors 1-7
  light problems 4-4
  status light 1-8
  tape storage device 1-2
SCSI Bus
  configuration problems 4-7
  connection problems 4-8
  termination 2-19, 4-7
  verifying device 4-8
SCSI cable problem 4-4
SCSI cabling
  troubleshooting 4-10
SCSI Initiator ID 3-12
SCSI port loopback 4-6
SCSI script RAM 4-6
SCSI status light 4-2
SCSI target ID 3-12
SCSI target mode 1-4
SCSI-FCP protocol 1-3
security settings 3-7
serial port 3-2
serial port interface
  communicating FCTC-II 3-3
  community names 3-17
  connection properties 3-3
  IP address for traps 3-17
  POST status 3-6
  SNMP configuration 3-16
  terminal emulator 3-3
  toggle trap 3-16
  trap priority 3-17
Serial Port Interface 1-7, 4-4, 4-5, 4-7, 4-9
serial port loopback 3-6, 4-6
serial port problems
  baud rates 4-6
serial port settings 3-4
series number A-1
server, configuring as part of the Enterprise Backup Solution 1-2
shipping container 2-1
Shipping Storage Temperature Range D-1
Simple Network Management Protocol (SNMP) 3-16
single-ended terminators vs. single-ended bus 4-7
slide rails 2-9, 2-13
SmartStart CD 3-19
SNMP 3-2, 3-4
SNMP configuration 3-16
SNMP GET/SET 3-17
SNMP settings 3-7
SNMP toggle Enable 3-16
solving problems 4-1
space requirements 2-5
specifications
  electrical D-1
  GBIC-SW model D-2
  mechanical D-2
stabilizing feet 2-4
static electricity B-1
status lights
  failure 4-5
  location 1-8
  using to troubleshoot 4-2
stop bits 3-3
straps, heel, toe, or boot B-2
subnet mask 3-7, 3-13
supported SCSI formats 1-4
switch link indicators 4-8
symbols in text viii
symbols on equipment viii
system configuration 1-2
system requirements 2-1

T

tape controller
configuring as part of the Enterprise Backup Solution 1-2
connecting to the Enterprise Backup Solution 2-16
description 1-1
features 1-3
functions 1-5
illustrated 1-1
initializing 4-7
external interfaces 4-7
installation and setup 2-1
rear panel connectors 1-6
rear panel status lights 1-8
tape options 3-20
target ID 3-12
technical support x
telephone numbers x, xi, A-4
Telnet access
RJ-45 connector 1-4
Telnet configuration 3-13
temperature for rack 2-7
temperature range, electrical D-1
temperature requirements for rack 2-7
termination
SCSI Bus configuration problems 4-7
terminator caps 2-16, 2-19
using 1-7
text conventions vii
TMRA 2-7
Toggle SCSI Reset Operation 3-12
toggle trap 3-16
tools for installation 2-8
trace and assertion history 3-7, 3-8
trace buffer in main RAM 4-6
trace dump 3-9
trace settings 3-8
Transmit Out- pin assignment E-3
Transmit Out+ E-3
Trap priority 3-17
trap reporting 3-16
traps 3-16, 3-17
Traps Enabled menu 3-17
troubleshooting
problems outside the controller 4-10
with the status lights 4-2

U

U1 Fibre Channel-to-SCSI bridge 1-1
uninterruptible power supply (UPS) 2-3
unit failure 4-3

V

ventilation requirements 2-8
voltage 4-3, D-1

W

warm-boot 4-7
warnings
electrical shock ix
rack stability ix
warnings and cautions
FCTC 2-3
rack 2-4
Web browser access
RJ-45 connector 1-4
Web browser interface
changes 3-15
current configuration 3-13
Ethernet menu 3-14
firmware 3-14
Web interface 3-14
Web Management Interface 3-14
Wide SCSI 1-4
Wide-Ultra SCSI 1-4
Windows NT Control Panel 4-8
World Wide Name 3-6
wrist strap B-2
www.compaq.com x, xi, 1-2, 2-2, 3-13, 3-19, 3-20