Parts Manual

Model Sideshifter

Serial Number 100E-SSS-208

cascade®

For Technical Assistance and to Order Parts . . .
Call: 1-800-CASCADE or 503-669-6300
OR
Write: Cascade Corporation, P.O. Box 20187, Portland, OR 97220

Publications

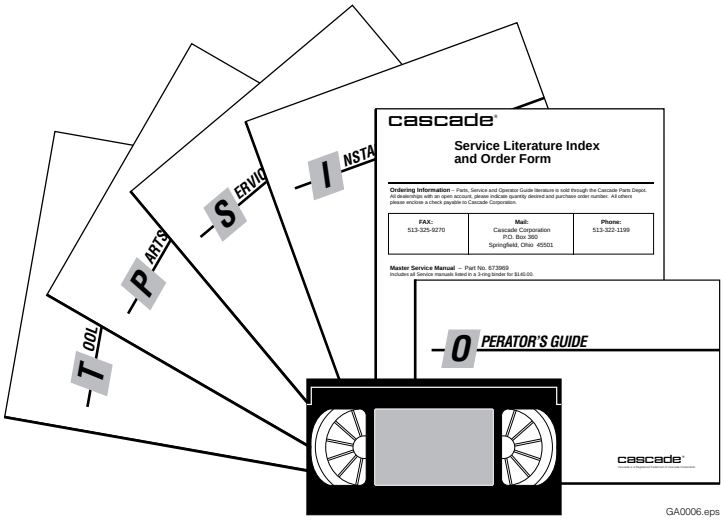

100E Sideshifter	
PART NO.	**DESCRIPTION**
	Parts Manual
205849	Service Manual
205124	Operator Guide
205125	Installation Instruction
679929	Tool Catalog
673964	Literature Index Order Form

Sideshift Group

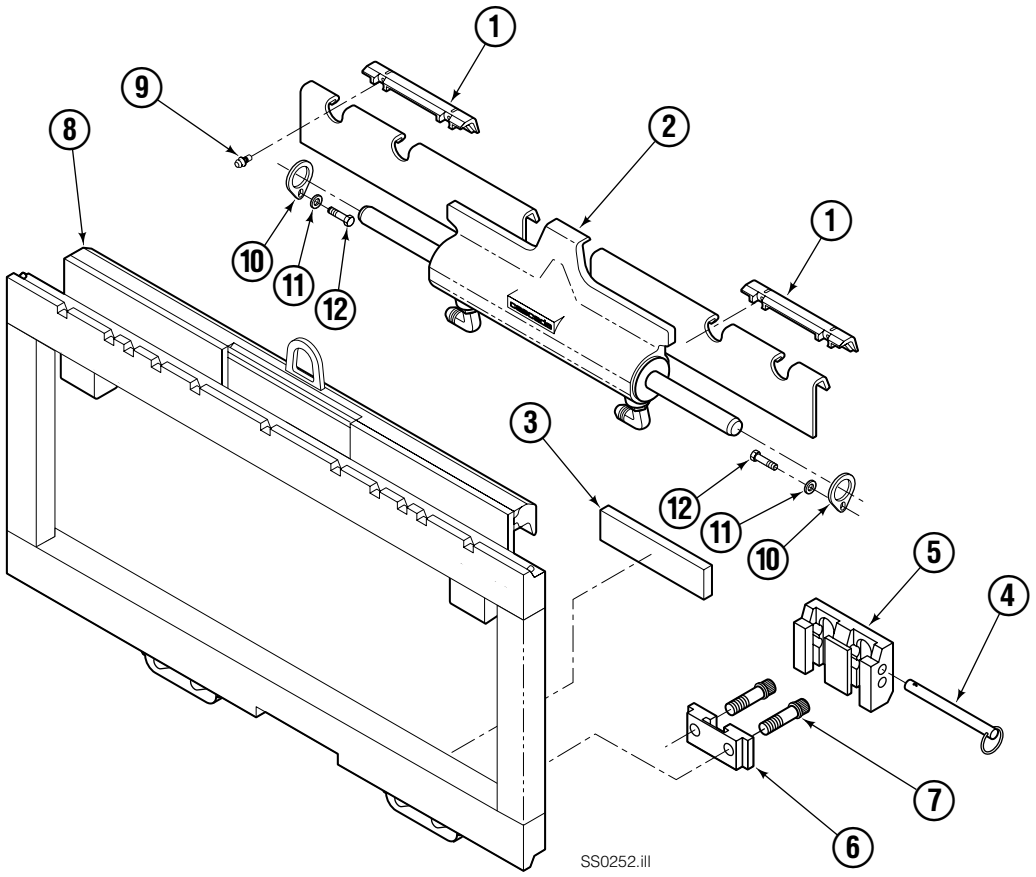

Reference:
S-4062 Frame Group
208374 Common Parts Group
683181 Lower Hook Group

100E			
REF	**QTY**	**PART NO.**	**DESCRIPTION**
1	2	672018	Upper Bearing
2	1	■	Cylinder
3	2	208350	Lower Bearing
4	2	678832	Pin
5	2	675957	Lower Hook
6	2	675958	Guide
7	4	779019	Capscrew, M16x2.0x35L
8	1	●	Frame
9	2	7403	Zerk Fitting
10	2	208355	Retainer
11	2	202346	Washer, M6
12	2	763169	Capscrew, M6x1x20L

● If the Frame needs replacing, your best value is to order the complete sideshift assembly.

■ See Cylinder page for parts breakdown.

Cylinder

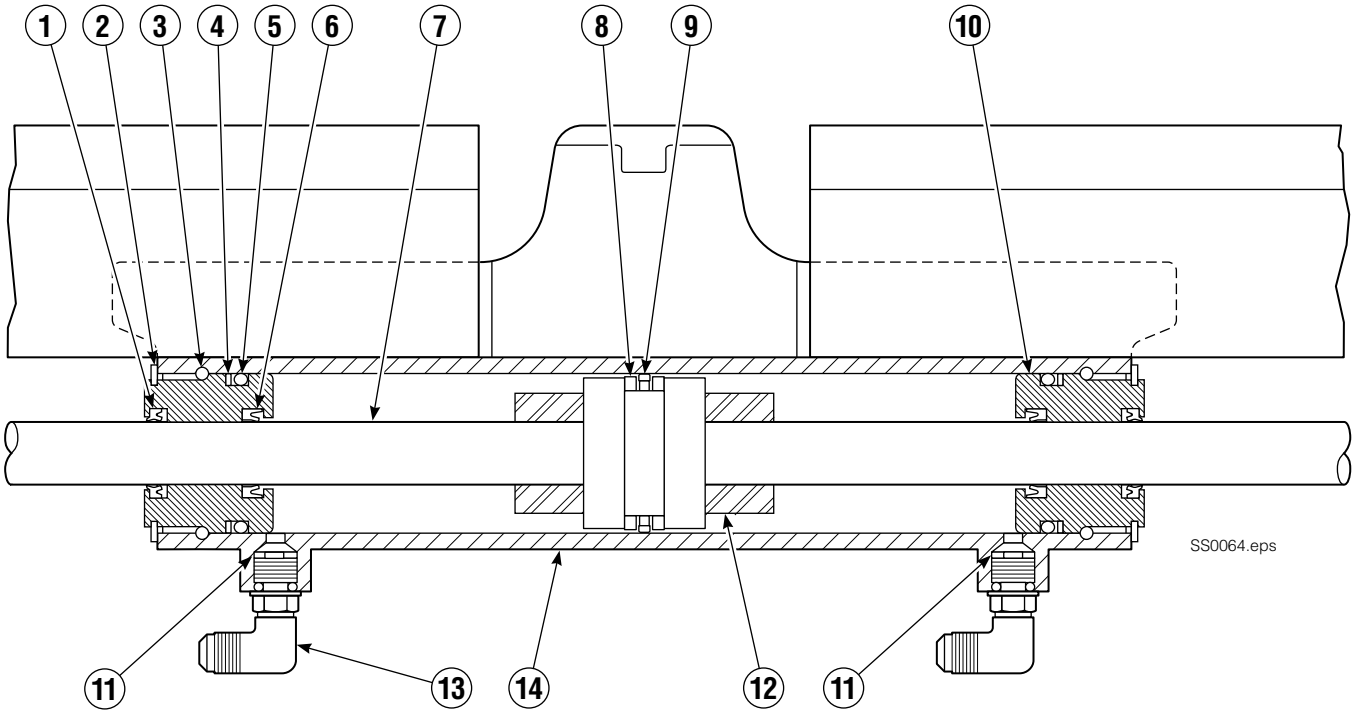

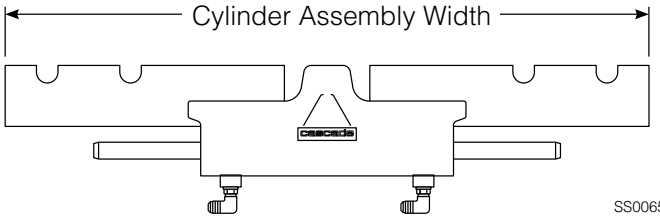

100E							
REF	**QTY**	**PART NO.**	**DESCRIPTION**	**REF**	**QTY**	**PART NO.**	**DESCRIPTION**
		584001	Cylinder Assembly, 47.0 in. (1195 mm)	● 8	2	564404	Bearing Ring
● 1	2	564408	Wiper Seal	● 9	1	564407	Piston Seal
2	2	7210	Snap Ring	10	2	564402	Retainer
3	2	564403	Retaining Ring	11	1	205369	Speed Control Washer
● 4	2	615131	Back-Up Ring	12	2	–	Spacer
● 5	2	2789	O-Ring	13	2	601676	Fitting, JIC 6-6
● 6	2	564406	Rod Seal	14	–	■	Cylinder Shell
7	1	564401	Rod			564409	Service Kit

● Included in Service Kit 564409.
■ Not serviceable, order new cylinder assembly.

Do you have questions you need answered right now? Call your nearest Cascade Parts Department.

Cascade Corporation
2501 Sheridan Avenue
Springfield, OH 45505
Tel: 888-CASCADE (227-2233)
FAX: 888-329-0234

Cascade Canada Inc.
5570 Timberlea Blvd.
Mississauga, Ontario
Canada L4W-4M6
Tel: 905-629-7777
FAX: 905-629-7785

Cascade GmbH
D-41199 Monchengladbach
Klosterhofweg 52
Germany
Tel: 21-66-602091
FAX: 21-66-680947

Cascade Finland
01370 Vantas
Finland
Tel: 358-0-836-1925
FAX: 358-0-836-1935

Cascade N.V.
European Headquarters
P.O. Box 3009
1300 El Almere
Damsluisweg 56
1332 ED Almere
The Netherlands
Tel: 31-36-5492911
FAX: 31-36-5492964

Cascade N.V.
Benelux Sales and Service
P.O. Box 3009
1300 El Almere
Damsluisweg 56
1332 ED Almere
The Netherlands
Tel: 31-36-5492950
FAX: 31-36-5492974

Cascade (UK) Ltd.
15, Orgreave Crescent
Dore House Industrial Estate
Handsworth
Sheffield S13 9NQ
England
Tel: 742-697524
FAX: 742-695121

Cascade Scandinavia
Hydraulik A.B.
Muskötgatan 19, E8-9
S25466 Helsingborg
Sweden
Tel: 42-151135
FAX: 42-152997

Cascade Norway
Østerliveien 37A
1153 Oslo
Norway
Tel: 47-22-743160
FAX: 47-22-743157

Cascade France S.A.R.L.
11, Rue Jean Charcot
Zone Industrielle Sud or
B.P. 22
91421 Morangis Cedex
France
Tel: 1- 64547501
FAX: 1-9790584

Cascade Hispania S.A.
Avenida De La Fabregada, 7
Hospitalet De Llobregat
Barcelona
Spain
Tel: 3-335-5158
FAX: 3-335-4756

Cascade Japan Ltd.
5-5-41,
Torikai Kami
Settsu, Osaka
Japan, 566
Tel: 81-726-53-3490
FAX: 81-726-53-3497

Cascade Korea
Room 508, Pum Yang Bldg.
750-14, Bang Bac-Dong
Se-Cho Ku, Seoul
Korea
Tel: 2599-7131 ext. 512
FAX: 2533-8089

HYCO-Cascade Pty. Ltd.
1445 Ipswich Road
Rocklea,
Queensland 4107
Australia
Tel: 3-274-2722
FAX: 3-274-3456

HYCO-Cascade (NZ) Ltd.
15 Ra Ora Drive, East Tamaki
P.O. Box 38-440
Howick, Auckland
New Zealand
Tel: 9-273-9136
FAX: 9-273-9137

Cascade (Africa) Pty. Ltd.
P.O. Box 625, Isando 1600
60A Steel Road
Sparton, Kempton Park
South Africa
Tel: 975-9240
FAX: 394-1147

Cascade-Xiamen
Wanshan No. 1 Workshop
Huli Road
Xiamen 361006
Fujian, PRC
Tel: 592-562-4600
FAX: 592-562-4671

Cascade (Singapore)
Trading Co.
Four Seasons Park
Autumn Block - Apt. 1802
12 Cascaden Walk
Singapore
Tel: 65-834-1935
FAX: 65-834-1936

© Cascade Corporation 1998