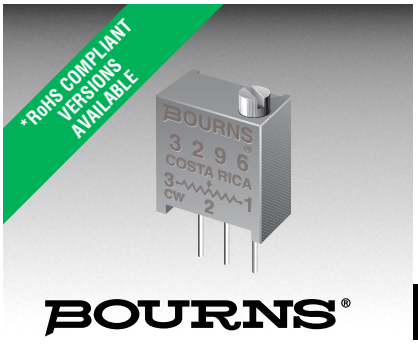

BOURNS®

Features

- Multiturn / Cermet / Industrial / Sealed
- 5 terminal styles
- Tape and reel packaging available
- Chevron seal design
- Listed on the QPL for style RJ24 per MIL-R-22097 and RJR24 per High-Rel Mil-R-39035
- Mounting hardware available (H-117P)
- RoHS compliant* version available
- For trimmer applications/processing guidelines, click here

3296 - 3/8 ” Square Trimpot® Trimming Potentiometer

Electrical Characteristics

Standard Resistance Range
.....10 ohms to 2 megohms
(see standard resistance table)
Resistance Tolerance ..... ±10 % std.
(tighter tolerance available)
Absolute Minimum Resistance
..... 1 % or 2 ohms max.
(whichever is greater)
Contact Resistance Variation
..... 1.0 % or 3 ohms max.
(whichever is greater)
Adjustability
Voltage ..... ±0.01 %
Resistance ..... ±0.05 %
Resolution ..... Infinite
Insulation Resistance ..... 500 vdc.
1,000 megohms min.
Dielectric Strength
Sea Level..... 900 vac
70,000 Feet ..... 350 vac
Effective Travel .....25 turns nom.

Environmental Characteristics

Power Rating (300 volts max.)
70 °C .....0.5 watt
125 °C .....0 watt
Temperature Range ... -55 °C to +125 °C
Temperature Coefficient ... ±100 ppm/°C
Seal Test .....85 °C Fluorinert†
Humidity .....MIL-STD-202 Method 103
96 hours
(2 % ΔTR, 10 Megohms IR)
Vibration ..... 20 G (1 % ΔTR; 1 % ΔVR)
Shock ..... 100 G (1 % ΔTR; 1 % ΔVR)
Load Life..1,000 hours 0.5 watt @ 70 °C
(3 % ΔTR; 3 % or 3 ohms,
whichever is greater, CRV)
Rotational Life .....200 cycles
(4 % ΔTR; 3 % or 3 ohms,
whichever is greater, CRV)

Physical Characteristics

Torque.....3.0 oz-in. max.
Mechanical Stops.....Wiper idles
Terminals .....Solderable pins
Weight .....0.03 oz.
Marking.....Manufacturer’s
trademark, resistance code,
wiring diagram, date code,
manufacturer’s model
number and style
Wiper .....50 % (Actual TR) ±10 %
Flammability .....U.L. 94V-0
Standard Packaging.....50 pcs. per tube
Adjustment Tool.....H-90

Product Dimensions

Common Dimensions

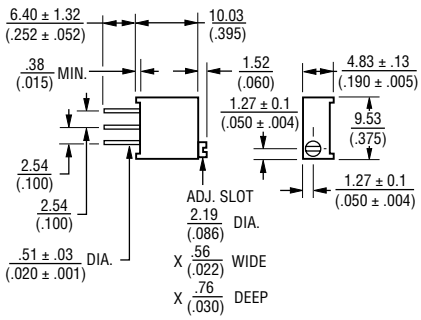

3296P

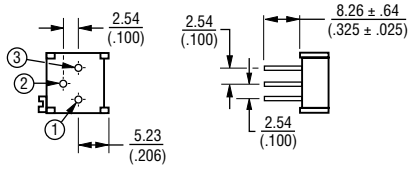

3296W

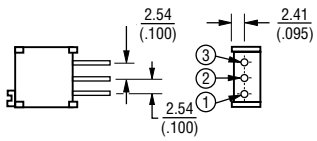

3296X

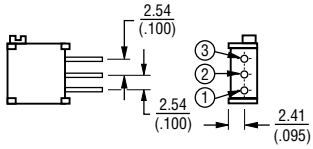

3296Y

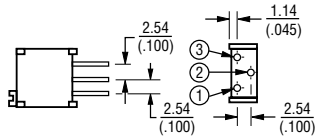

3296Z

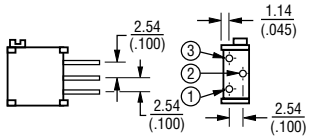

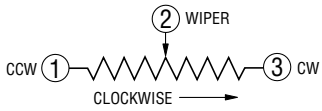

DIMENSIONS: MM / (INCHES)

TOLERANCES: ± 0.25 / (.010) EXCEPT WHERE NOTED

Standard Resistance Table

Resistance (Ohms)	Resistance Code
10	**100**
20	**200**
50	**500**
100	**101**
200	**201**
500	**501**
1,000	**102**
2,000	**202**
5,000	**502**
10,000	**103**
20,000	**203**
25,000	**253**
50,000	**503**
100,000	**104**
200,000	**204**
250,000	**254**
500,000	**504**
1,000,000	**105**
2,000,000	**205**

Popular values listed in boldface. Special resistances available.

How To Order

3296 W - 1 - 103 __ LF

Model
Style
Standard or Modified Product Indicator
-1 = Standard Product
Resistance Code
Packaging Designator
Blank = Tube (Standard)
R = Tape and Reel (X and W Pin Styles Only)
A = Ammo Pack (X and W Pin Styles Only)
Terminations
LF = 100 % Tin-plated (RoHS compliant)
Blank = 90 % Tin / 10 % Lead-plated (Standard)

Consult factory for other available options.

*RoHS Directive 2002/95/EC Jan 27 2003 including Annex.
†“Fluorinert” is a registered trademark of 3M Co.
Specifications are subject to change without notice.
Customers should verify actual device performance in their specific applications.

Packaging Specifications

SIDE ADJUST
3296X-1

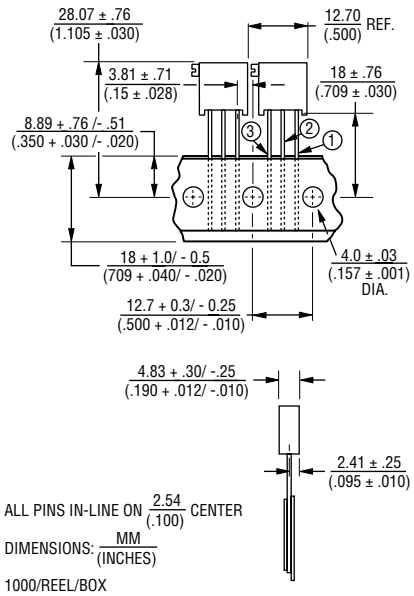

TOP ADJUST
3296W-1

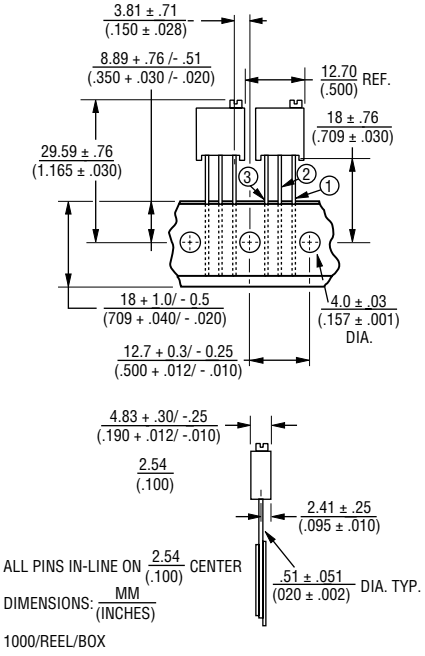

Meets EIA Specification 468.

REV. 08/10

“Trimpot” is a registered trademark of Bourns, Inc.
Specifications are subject to change without notice.
Customers should verify actual device performance in their specific applications.