# Basic Configuration – Overview

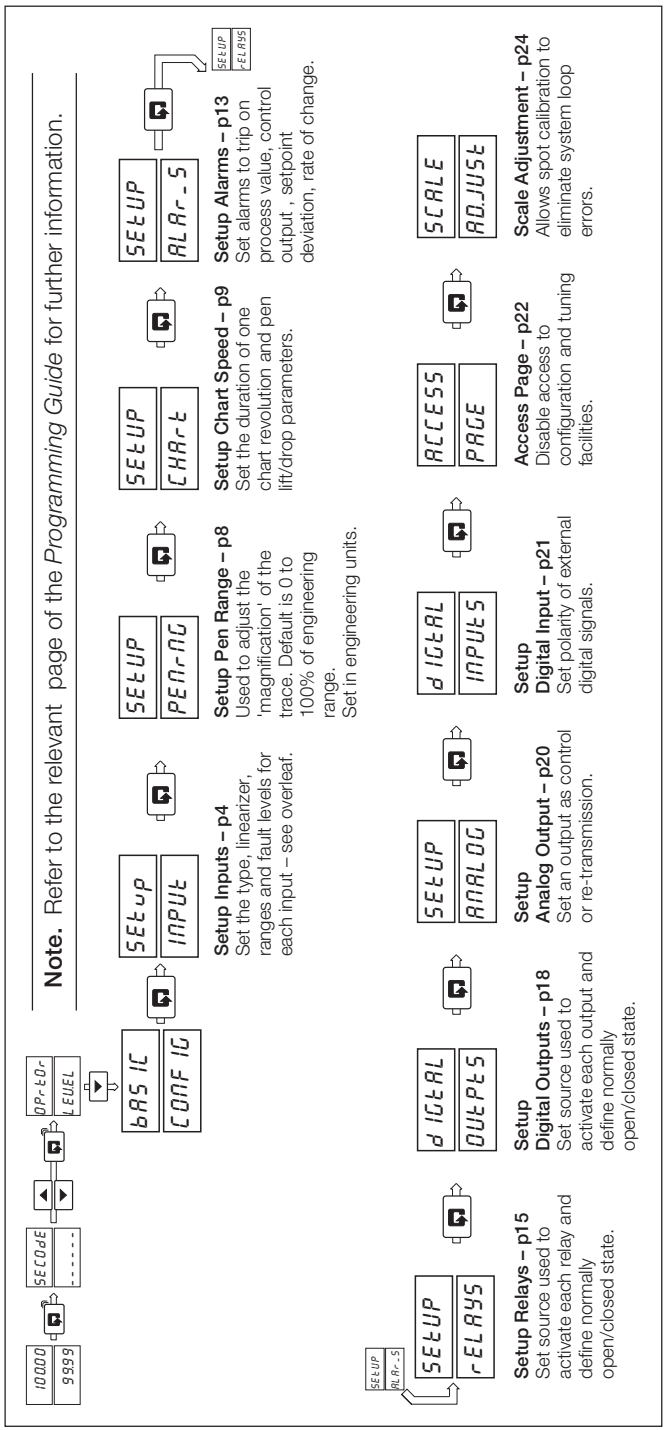


# Displays and Controls

**Recorder Faceplate**

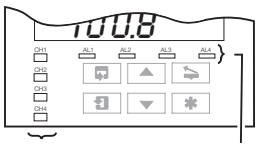


**Controller Faceplate**

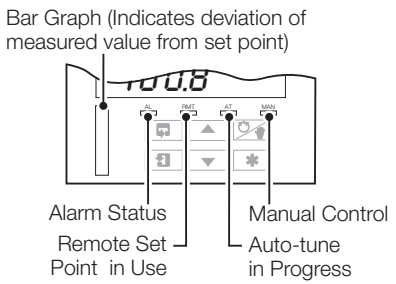


**Sideways Scroll**



**Down Scroll**



**Raise and Lower**



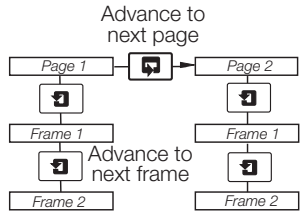


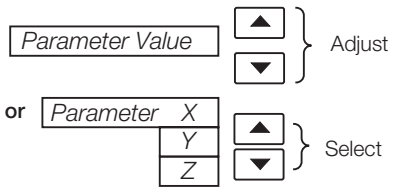


**Function Key**



Alarm acknowledge; Auto-tune; Pen lift/ lower; Profile Control; Local/Remote or 'Home' – See *Programming Guide, 'Advanced Configuration'*

**Pen Lift**



(Recorder Only) Raises and lowers the chart pen.

**Auto/Manual**



(Controller Only) Switches between automatic and manual control modes.

**Note.** All programming is carried out using the faceplate keys and displays.

The Company's policy is one of continuous product improvement and the right is reserved to modify the information contained herein without notice.

© ABB 2005

Printed in UK (07.05)

**ABB Limited**
Howard Road, St. Neots
Cambridgeshire, PE19 8EU
UK
Tel: +44 (0)1480 475321
Fax: +44 (0)1480 217948

**ABB Inc.**
125 E. County Line Road
Warminster, PA 18974
USA
Tel: +1 215 674 6000
Fax: +1 215 674 7183

IM/C1900–QC
Issue 3

# COMMANDER 1900 Controller – Quick Reference Guide

OGC

## Operating Guide

Alarms
Acknowledge ..... 16, 36
LED status ..... 16, 36
Auto-tune ..... 21
Enable/disable ..... 23
Setup ..... 21
Status ..... 23
Auto/manual select ..... 12
Chart ..... 4
Control
Cascade ..... 12
Heat/cool ..... 11, 12
On/off ..... 26, 30
Output adjust ..... 13
Standard ..... 10, 26
Displays & controls ... 5, 6, 34, 35
Fault-finding ..... 2, 9, 24, 38
Auto-tune diagnostics ..... 24
Input error messages ..... 9
Power up error codes ..... 2
Manual tuning ..... 28
Pen – fitting ..... 4
Process variable ..... 13
Profile control ..... 12
Program select ..... 19
Reset ..... 19
Skip segment ..... 19
Status ..... 15
Security Access
Configuration level ..... 18
Password ..... 18
Tune level – access ..... 18
Self-test ..... 2
Set point
Bias ..... 14
Ratio ..... 14
Type selection ..... 14
Time/date ..... 15
Totalizer ..... 17, 37

PGC

## Programming Guide

Alarms ..... 10
Analog outputs ..... 21
Auto/manual select enable ..... 45
Bargraph increment ..... 45
Chart set up ..... 9
Configuration
Basic ..... 3
Control ..... 29
Advanced ..... 48
Control ..... 37
Action on input fail ..... 43
Action on power fail ..... 39
Digital outputs ..... 19
Function keys ..... 49
Inputs (PV, RSP, P-FB) ..... 4
Assign ..... 53
Logic equations ..... 50
Logic inputs ..... 23, 46, 47
Passwords ..... 24
Pen ..... 8, 9
Functions ..... 52
Scale adjust ..... 26, 27
Position feedback – *see Inputs*
Process variable – *see Inputs*
Relays ..... 16, 17
Remote set point – see input .....
Retransmission outputs – *see Analog Outputs*
Scale Adjust (span/offset) ..... 26
Set point ..... 30–33, 45
Spot calibration – *see Scale Adjust*

INS

## Installation Guide

Accessories ..... 2
Electrical Installation ..... 6
Siting ..... 3
Mounting/Dimensions ..... 4
Power Supplies ..... 12
Inputs/Outputs ..... 7

# Setting Analog Input Links

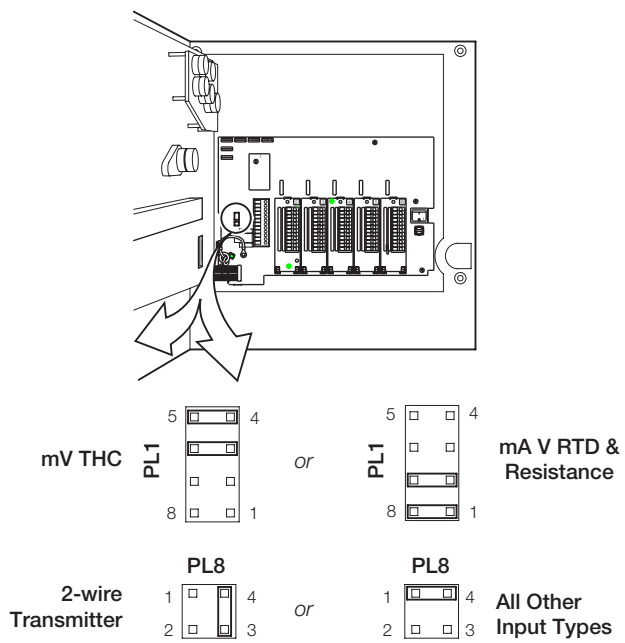


**Fig. 1 Input Links – Channel 1**

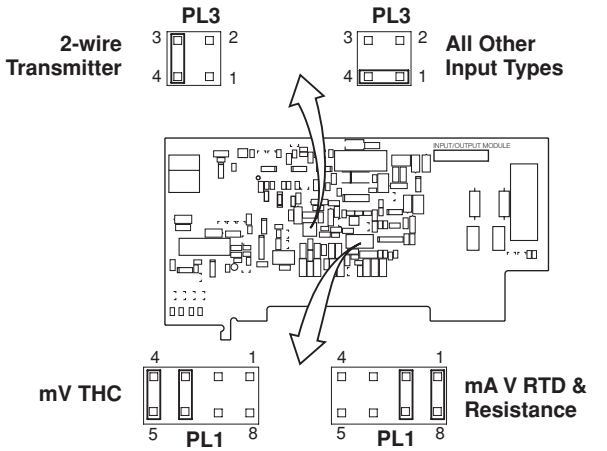


**Warning.** Ensure that the unit is isolated from all power supplies before removing I/O boards.

**Fig. 2 Input Links – Channels 2 to 4 (If fitted)**

# Configuring Analog Inputs

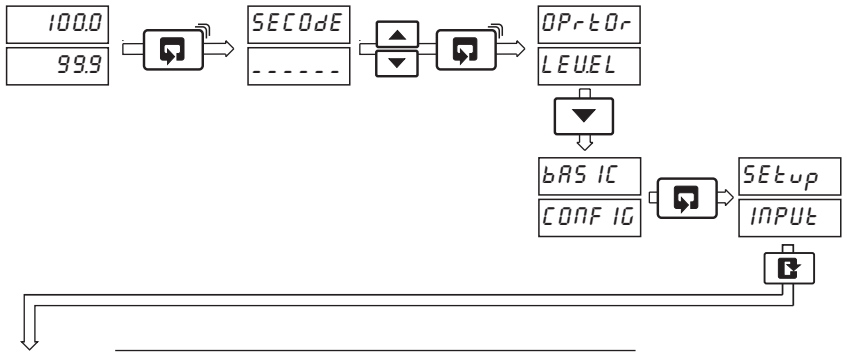


**Information.** The alphabet used to display page and parameter titles is as follows:

| | |
|---|---|
| A – A | M – _ |
| B – b | N – n or n |
| C – C or c | O – O or o |
| D – d | P – P |
| E – E | Q – Q |
| F – F | R – r |
| G – G | S – S |
| H – H or h | T – t |
| I – I | U – U |
| J – J | V – U |
| K – K | Y – Y |
| L – L | |

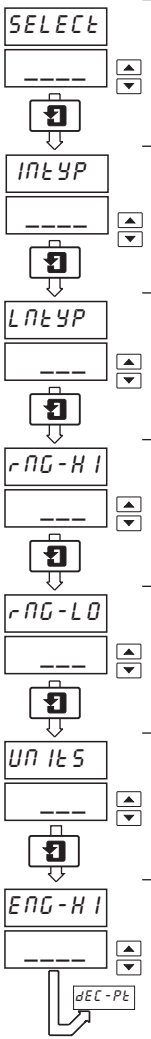


**Select Channel –** Choose the input channel to be configured

**Input type** – _A_P (mA), U.OLt (V), _U.Lt (mV), tCPL (Thermocouple), rtd (RTD) and LO OH (< 750 Ohms) HI OH (> 750 Ohms).

**Linearizer:** If using a thermocouple set to J, K, B, N, E, F, S, A. Other options are 5/2, 3/2, SQ.rt, rtd or NONE.

**Range High:** For a 4 to 20mA current input, set this to 20.00, or for 0 to 5V, set to 5.0. The frame does not appear if tCPL or rtd are used.

**Range Low:** Set the low end of the electrical input range, e.g. 4.00, for 4 to 20mA, or 0.0 for 0 to 5V.

**Units:** Select NONE if the input is not temperature, otherwise select dEG F or dEG C.

**Engineering Range High:** Select the highest engineering value that will be displayed when the input is at its maximum value – e.g. for an engineering range of 0 to 300.0 °F set to 3000.

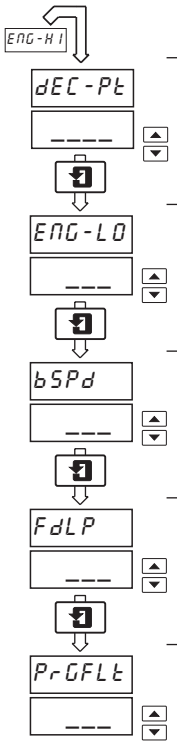


**Decimal Point:** Select the decimal point position for the process variable, e.g. 300.0.

**Engineering Range Low:** Select the lowest engineering value that will be displayed when the input is at its minimum value – e.g. for an engineering range of 0 to 300.0 °F set to 0.0.

**Broken Sensor Drive:** Determine pen action when the input signal fails: NONE – pen follows failed input; UP – pen driven to full scale; dN – pen driven to zero scale.

**Fault Detection Drive:** Determine maximum input travel outside engineering range before an error is detected. E.g. for a 0 to 300°F range, a 10% fault level will trigger at 330°F.

**Input Filter:** Adjust the instrument response time from 0 to 60 seconds in one second increments to reduce pen jump & dampen out noisy signals.