Introduction

This operating and service manual has been prepared to ensure that your Sola/Hevi-Duty Constant Voltage Transformer can be operated and serviced with minimal effort and involvement. This manual covers Sola/Hevi-Duty Constant Voltage Sinusoidal (CVS) Transformers.

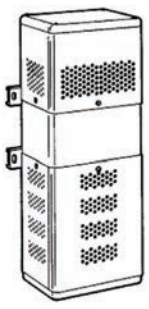

Installation - Mechanical Position

All stock sizes with end housings are intended to be mounted with the silk-screened this side up legend facing upwards. This will place the ventilated capacitor compartment downward, thus providing cooler operation of the capacitor(s). However, all units will give satisfactory performance if mounted in a horizontal position. In either case, the unit should be mounted in an area where it is unlikely that anyone will come into contact with the core surface of the unit.

Mounting Considerations

If a unit is to be wall mounted, the mounting hardware should be sized as in Table 1 below. All mounting holes provided must be used.

Table 1: Mounting Screw/Bolt Sizing

Rated VA of Regulator	Min. Diameter of Steel Mounting Screw
30-120	#10 Machine Screws
250	1/4" bolts
500 to 1000	5/16" bolts
1500 to 10000	3/8" bolts
15000	1/2" bolts

All ratings depend on natural draft air circulation for cooling. They should not be mounted in confined or enclosed spaces unless special provisions have been made for ventilation. Technical Services is available for assistance in doubtful situations (see note on Operating Temperature). Table 2 and Figure 1 show model number with their weight and physical dimensions.

Table 2: CVS Weights and Physical Dimensions, 60 Hz Single Phase

VA	Catalog Number	Outline Drawing	Dimensions								Approx. Shipping Weight (lbs)
			A (in)	B (in)	C (in)	D (in)	E (in)	F (in)	G (in)	H (in)	
30	23-13-030-2	A	6.12	5.19	3.47	4.00	3.50	3.00	1.75	.22 x .59	7
60	23-13-060-2	A	6.94	5.19	3.47	4.00	3.50	3.00	1.75	.22 x .59	9
120	23-22-112-2	A	8.12	5.19	3.47	4.00	3.50	3.00	2.44	.22 x .59	13
250	23-23-125-8	A	10.50	7.56	4.75	5.63	4.75	4.12	3.03	.39 x .69	28
500	23-23-150-8	A	13.00	6.50	8.12	9.00	8.12	5.62	3.06	.38 x .81	37
1000	23-23-210-8	A	17.25	6.81	8.12	9.00	8.12	5.62	5.25	.38 x .81	63
2000	23-23-220-8	B	17.58	9.44	10.56	12.75	11.75	3.88	5.19	.44 x .69	109
3000	23-23-230-8	B	18.96	9.44	10.56	12.75	11.75	5.25	5.19	.44 x .69	142
5000	23-23-250-8	B	28.53	9.44	10.56	12.75	11.75	8.25	8.88	.44 x .69	222
7500	23-28-275-6	C	26.91	9.27	23.55	25.81	24.81	6.62	8.88	.44 x .69	365

Figure 1: Mounting Holes and Dimensions

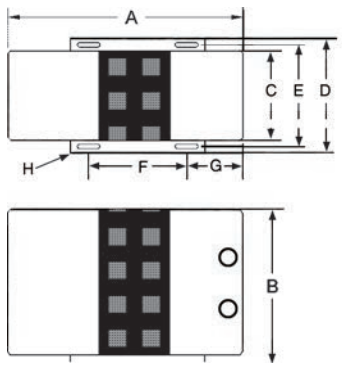

Outline A

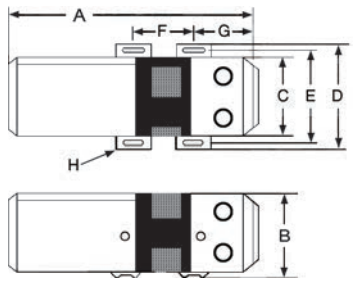

Outline B

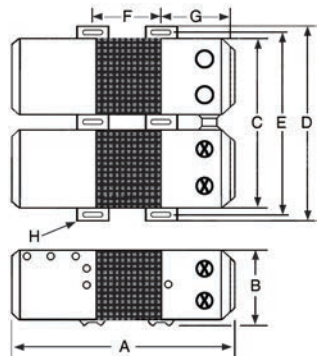

Outline C

Installation – Electrical

On 60VA or smaller units, screw-type lugs in the outlet box are marked "input" and "output", and no connection diagram is necessary. Units rated 120 to 15000 VA are provided with multiple inputs for any one, two, three, or four different line voltages, and some have provision for three-wire output. With all units, a connection diagram is attached to the inside lid of the box cover, or inserted in the outlet box. Figure 2 shows typical connections for –8 models, and Figure 3 shows multiple input connections for all other models. Figure 4 shows the output connections for all models.

Figure 2: Electrical Connections for -8 models

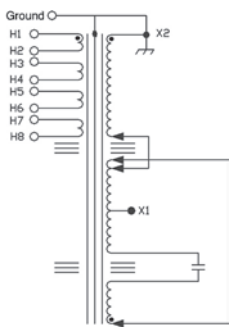

250 VA only

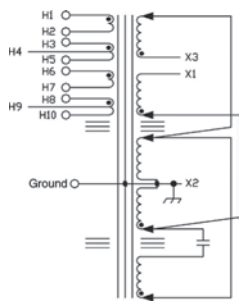

All Except 250 VA

Figure 3: Electrical Connections for Non-8 models

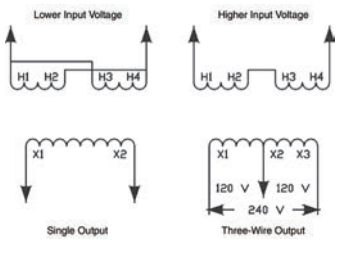

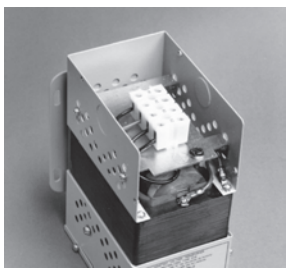

Note: *Secondaries are not grounded. Ground X2 per Code.*

Three-Phase Power Wiring

If operation from a three-phase source is required, three hardwired regulators may be wired in delta as shown in Figure 4.

Other Considerations

It is desirable to have a switch in the input circuitry for turning off power to the unit when it is not in use. While all CVS transformers are designed for continuous duty, they draw appreciable current regardless of output loading.

The outputs of all Sola/Hevi-Duty standard CVS transformers are isolated from the input lines. Voltage generated by internal leakage currents will occur with respect to ground. This can have undesirable effects in many pieces of electronic equipment. Therefore, if Figure 4 circuit "B" is used, it is suggested that the installer remove X2 grounding on –8 units, then connect all X2 from each phase to one location and ground at that location only. This is not required for circuit "A". This will not affect regulation or the ability to reject power line noise or transients.

Any three stock units having a tap for 190-260 input connections may be connected in delta to a 240-volt, three-phase power supply. Those units equipped with primary tap for 175-235 volts may also be connected in delta to a 208-volt supply. (Terminals to be used are identified on the connection diagram located on the inside face of the outlet box cover.)

All stock production, harmonic-free units now have uniform terminal polarity. This eliminates the need for "phasing out" either input or output connections.

Output must serve three, independent, single-phase loads of the same total volt-ampere rating. Connections should be made in one of two ways shown in Figure 4.

Input & Output Connections – All except 250 VA

Volts	Input	Jumper	Volts	Output
95-130	H1-H2	(H1 + H3 + H6 + H8) (H2 + H5 + H7 + H10)	120	X1 – X2 or X2 – X3
175-235	H1-H4	(H2 + H3) (H7 + H8) (H1 + H6) (H4 + H9)	240	X1 – X3
190-260	H1-H5	(H2 + H3) (H7 + H8) (H1 + H6) (H5 + H10)		
380-520	H1-H10	(H2 + H3) (H5 + H6) (H7 + H8)		

*Note: *The entire load up to the rated capacity of the unit can be drawn from either half of the 240 volt winding. It is not necessary to divide or balance the load.*

Input Connections - 250 VA Only

Volts	Input	Jumper	Volts	Output
95-130	H1-H2	(H1 + H3 + H5 + H7) (H2 + H4 + H6 + H8)	120	X1 – X2
190-260	H1-H4	(H2 + H3) (H6 + H7) (H1 + H5) (H4 + H8)		
380-520	H1-H8	(H2 + H3) (H4 + H5) (H6 + H7)		

Primary Voltage			Interconnect	Connect Lines To
30 & 60 VA	120 VA	7500 VA		
120	N/A	N/A	Note: H3 & H4 are not used	H1 & H2
N/A	120	240	H1 to H3 H2 to H4	H1 & H4
N/A	240	480	H2 to H3	H1 & H4
Secondary Voltage			**Interconnect**	**Connect Lines To**
30 & 60 VA	**120 VA**	**7500 VA**		
120	120	N/A		X1 & X2
N/A	N/A	120		X1 & X2 or H3 & X2
N/A	N/A	240		X1 & X3

Use With Switchmode Power Supplies

If a CVS transformer is used as a source for a switchmode power supply, a slight amount of ringing may be noticed on the sinewave output of the CVS at half cycle intervals for a short duration. This ringing occurs at the point when the switchmode power supply current demand drops to zero. The ringing should not be a cause for concern since it is of relatively low magnitude and frequency. The CVS has been tested with a variety of switchmode power supplies and it has been determined that the ringing never affects the D outputs, nor has it been found to degrade the components of any switchmode power supply.

Figure 4. Three Phase Connections

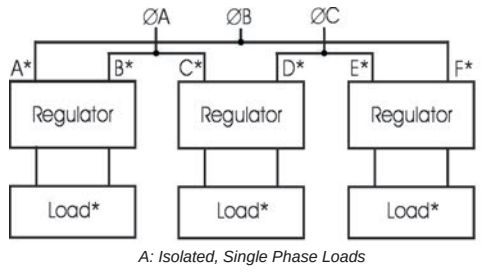

A: Isolated, Single Phase Loads

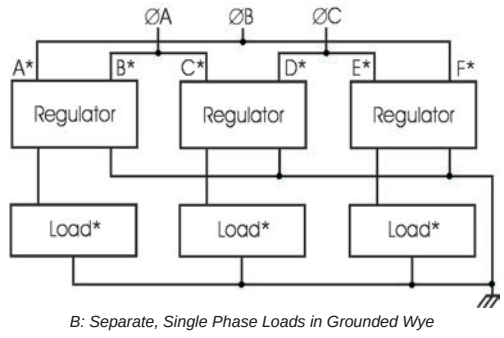

B: Separate, Single Phase Loads in Grounded Wye

Table 3: Recommended Wire Sizes and Fusing

CVS	Input			Output	
VA Rating	Rated Volts	Req. Circuit Protection (In Amps,)	Min. Gauge 90°C Wire	Rated Volts	Min. Gauge 90°C Wire
30	95-130	1	14	120	14
60		2			
120	95-130	3	14	120	14
	190-260				
250	95-130	6	14	120	14
	190-260	3			
	380-520	1			
500	95-130	10	14	120 208 240	14
	175-235	6			
	190-260	6			
	380-520	3			
1000	95-130	15	14	120 208 240	14
	175-235	10			
	190-260	10			
	380-520	6			
2000	95-130	30	10	120 208 240	10 14 14
	175-235	20	12		
	190-260	15	14		
	380-520	10	14		
3000	95-130	45	8	120 208 240	8 12 12
	175-235	25	10		
	190-260	25	10		
	380-520	15	14		
5000	95-130	80	4	120 208 240	8* 10 10
	175-235	40	8		
	190-260	40	8		
	380-520	20	12		
7500	190-260	60	6	120 208 240	4
	380-520	30	10		8

** Leads in the wiring department must be sleeved with 105℃ sleeving.*

Multiple Operation

Two CVS transformers with the same rating may be connected with their inputs and outputs in parallel. The regulating action will usually be excellent although the standard ±1% cannot be guaranteed. Series connection of either input or output is not recommended.

Use With Rectifier Loads

The ratio of crest to rms values is approximately 1.3 at rated load, and slightly lower at fractional loads. This factor must be considered when all or a portion of the voltage is rectified. The rectified voltage will now be 10 – 15% lower than if connected directly to a sinewave source.

Operation With Motor Loads

Because of the current limiting effect described later, special attention should be given to motor applications. In general, the CVS must have a load rating nearly equal to the maximum power drawn during the starting cycle. This may run from two to eight times the normal running rating of the motor. In doubtful cases, it is advisable to measure the actual starting current.

Cascade Operation

For applications requiring close regulation, two CVS transformers may be operated in "cascade". The output of the combination will show little or no detectable change arising from supply line variations of up to ±15%. However, the combined units will still be frequency sensitive (as discussed under Effect of Frequency, page 15). Since even good power systems may vary in frequency by 0.1% or more, the output of a Sola/Hevi-Duty cascade combination may vary by up to 0.25% from this cause alone. In actual practice, then, a cascade combination is highly recommended for special applications requiring regulation in the general region of ±0.25%. If the tandem setup is to be operated at near full rating, then the Type CVS "driver" unit should be one standard size larger than the driven unit, in order to overcome the losses in the latter.

Buy: www.ValinOnline.com | Phone 844-385-3099 | Email: CustomerService@valin.com

Physical Characteristics of Operation

Operating Temperature

Standard units are designed to operate in ambient temperatures of minus 20°C to plus 50°C. In operation, a temperature rise will occur whether or not the transformer is serving load. Normally, this rise may fall anywhere in the range of 45°C to 110°C, depending on the type and rating. In any case, the maximum operating temperature at an ambient of 50°C is always within safe operating limits for the class of insulating material used. (Special units can be designed for lower heat rise or wider ambient temperature range.)

External Magnetic Fields

In almost all applications, this effect may be disregarded. On critical applications, care should be exercised in the orientation of the core with respect to critical circuits, in order to minimize the effect of the field.

In certain rare cases in which the transformer is connected to, or mounted near, high gain audio frequency circuits, special attention may need to be given to adequate physical spacing and/or orientation of the CVS transformer to avoid interaction with the audio circuits. Sola/Hevi-Duty's Technical Service Department (800-377-4384) may be able to offer suggestions for such problems.

Electrical Characteristics of Operation

Checking With Voltmeters

All checks on output voltages should be made with a true RMS voltmeter such as a Fluke model 8020 A. Rectifier-type voltmeters will not give accurate readings due to the small amount of harmonics present in CVS output.

Load Regulation

Changes in output voltage resulting from changes in resistive loads are usually small - running one percent or less in the larger units. Table 4 shows average values for output voltages.

Table 4: Output Voltage Changes – 20% Load to Full Load (100% Power Factor – Nominal Input Voltage)

Transformer VA	%Change - Output Voltage
31-120	approximately 3%
121-150	approximately 2%
151-over	approximately 1%

Phase Shift

The phase difference that exists between input voltage and output voltage is in the range of about 120° to 140° at full load. This phase difference varies with the magnitude of the load and, to a lesser extent, with changes in line voltage.

Output Wave Shape

The CVS transformers all include harmonic-neutralizing circuitry. These units typically have less than 3% total harmonic distortion at full load and less than 4.5% at no load.

Response Time

An important advantage of the Sola/Hevi-Duty principle of static magnetic regulation is its exceedingly fast response time compared with other types of AC regulators. Transient changes in supply voltage are usually corrected with a Sola/Hevi-Duty CVS with 1 1/2 cycles or less, the output voltage will not fluctuate more than a few percent during this interval.

Isolation

Since the input and output are separated not only electrically, but also physically, by a magnetic shunt, the Sola/Hevi-Duty CVS has a stronger isolating effect than a conventional transformer. This may often eliminate the need for static shields.

Factors Affecting Operation

Input Characteristics

As the Sola/Hevi-Duty CVS transformer includes a resonant circuit that is fully energized whether or not a load is present, the input current at no load or light loads may run 50% or more of the full-load primary current. As a result, the temperature of the unit may rise to near full-load levels, even at light or nonexistent loads. Input power factor will average 90-100% at full load, but may drop to approximately 75% at half load and 25% at no load. In any case, it is always leading.

Effect of Load Power Factor

The median value of output voltage will vary from the nameplate rating of the load if a power factor other than that for which the unit was designed is used. Load regulation will also be relatively greater as the inductive load power factor is decreased (see Figure 5). However, the resulting median values of the output voltage will be regulated against supply line changes at any reasonable load or power factor.

Figure 5: Median Output Voltage vs. Load Power Factor

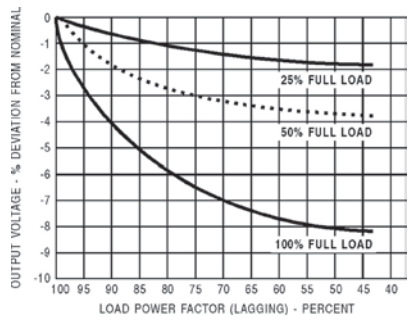

Change in "Median" Output Voltage vs. Load Power Factor at various loads

Effect of Frequency

Changes in the frequency of the supply voltage will be directly reflected in the output voltage. A change of approximately 1.8% in the output voltage will occur for every 1% change in input frequency in the same direction as the frequency change.

Effect of Temperature

The output voltage will show a small change as the unit warms up to stable operating temperatures at a constant ambient temperature. This change may be about 1 or 2% depending on the unit's VA rating. At a stable operating temperature, the output voltage will change slightly with varying ambient temperature. This shift is approximately 1% for each 40°C of temperature change.

Current Limitation

When the load is increased beyond the transformer's rated value, a point is reached where the output voltage suddenly collapses and will not regain its normal value until the load is at least partially released. Under a direct short circuit, the load current is limited to approximately 150-200% of the rated full load value and the input wattage to less than 10% of normal. A CVS will protect both itself and its load against damage from excessive fault currents. Fusing of load circuits is not necessary.

Manufacturing Tolerance

The nominal output voltage of each stock Constant Voltage Transformer is adjusted at the factory to within plus 2%, minus 0% of rated (nameplate) value with rated, nominal voltage at rated frequency applied to the input, and with full rated load at 100% power factor applied to the output. This adjustment is made with the unit at substantially the same temperature as room ambient temperature (25°C).

Servicing

Routine Maintenance

As the Sola/Hevi-Duty CV Transformer is a simple rugged device without moving parts or manual adjustments, no servicing or maintenance is needed in the ordinary sense. The percentage of possible poor performance or failure is exceedingly low. In any case of apparent poor performance, the user is urged to check the following points immediately:

Checklist on Factors Affecting Performance

A. Nominal Voltage Too High
   1. The load may be considerable less than full rating. (See "Load Regulation").
   2. The load may have a leading power factor.

B. Nominal Voltage Too Low
   1. Load power factor may be lagging. (See Load Regulation).
   2. Unit may be slightly overloaded. (See Current Limitation).

C. Does Not Regulate Closely
   1. Unit may be slightly overloaded. (See Current Limitation).
   2. Actual line voltage swings may be outside the rated coverage of unit, particularly on the low side.
   3. On varying loads, a certain amount of load regulation may be mixed with the line voltage regulating action. (See Load Regulation).

D. Output Voltage Very Low (20-60V)
   1. Unsuspected or unplanned overloads of substantial size may occur intermittently (motor-starting currents, solenoid inrush currents, etc.). (See Current Limitation).
   2. One or more capacitor units in the CVS transformer may be defective. (See Field Replacement of Capacitors)

Checklist on Factors Affecting Performance - continued

E. No Output Voltage At All
   1. Check power source breakers or fuses.
   2. Check continuity between input terminals, and also between output terminals.

G. Transformer Operating Temperature
   1. These transformers are designed to operate at high flux density, and hence, relatively high temperatures (see Operating Temperature). After connection to line for a half hour or so, the exposed core structure may be too hot to touch with bare hand, but this is normal and need give no concern. However, if there is any indication of oil or compound leakage, unit should be returned to factory (see below).

Note

In case the transformer is operating but does not appear to have the correct output, it is very helpful to apply the following test:

1. Disconnect the working load.
2. Connect a dummy load of lamps, heaters, or other resistive load substantially equal to the full load rating of transformers, directly across its output terminals.
3. Measure the output voltage of the CVS using a true RMS type voltmeter directly across its output terminals.

This test will usually establish whether the apparent poor performance is due to a fault in the CVS transformer or to some peculiarity of the working load. Sola/Hevi-Duty's Technical Service Department will then be in far better position to give helpful service advice or suggest factory test or service as indicated.

Factory Test and Inspection

If the field test suggested earlier indicated that the CVS transformer itself may be faulty, a full report of the difficulty should be communicated to the place of purchase, with a request for permission for return. The Authorized Sola/Hevi-Duty Distributor may then suggest further helpful field tests, or authorize return for inspection at once. A Return Authorization Number will be issued. This number must appear on the outside of the shipping container. Otherwise the shipment will not be accepted.

Field Replacement of Capacitors

Capacitors used in all CVS transformers are of the highest commercial grade available. Nevertheless, there is a certain small percentage of failure. Sola/Hevi-Duty's guarantee includes free replacement at the factory of any capacitor unit that fails within one year from date of purchase. Older units can be replaced at moderate charge.

It may be possible to test and identify defective capacitors in the field, and to make field replacement with new units shipped from the factory. In all such cases, factory advice and cooperation should be requested in advance.

Warranties

Sola/Hevi-Duty warrants its standard catalog products to be free from defects in materials and workmanship and agrees to correct by repair or replacement, at the option of Sola/Hevi-Duty, products that may fail in service provided the product has been installed, operated and maintained in accordance with accepted industry practice.

Warranty begins at the date of manufacture and is according to the following schedule:

1. Standard catalog transformer and single phase power conditioning products – 10 years plus an additional 2 years if online registration is completed within 14 days after installation.
2. Products manufactured to a purchaser's specifications – 1 year.

Return Policy

Most instances of initial failure to operate properly can be remedied through a telephone conversation between the user and Technical Service. If it is determined that a product must be returned, contact your local Sola/Hevi-Duty distributor for a Return Authorization. If the distributor is unknown, contact Customer Service by e-mail at ReturnGoods.

All returns to the Sola/Hevi-Duty factory must have a Return Authorization (R.A.#). The following information required for a Return Authorization (R.A.#):

1. Sola catalog number and/or model number.
2. Serial number.
3. Company name, address, phone number and contact person.
4. Proof of purchase from Distributor.
5. Description of problem.

For proper handling upon receipt at Sola/Hevi-Duty, the R.A.# must be clearly placed in several locations on the outside of the package. Sola/Hevi-Duty is not responsible for damage on returned goods not packaged properly or customer-abused units.

P/N 299-35206-01
Rev. 05 (Nov 2014)

Buy: www.ValinOnline.com | Phone 844-385-3099 | Email: CustomerService@valin.com