Manual of Operation and Maintenance

Model 4140
Gyratory Compactor

NOTE

Before using the Model 4140 Gyratory Compactor, carefully read this manual. It is especially important that the user understand the *Safety Warnings* on Page 2-2. Keep this manual in a safe place that is always easily accessible during the use of the Model 4140.

Troxler Electronic Laboratories, Inc.
3008 Cornwallis Rd. • P.O. Box 12057
Research Triangle Park, NC 27709
Phone: 1.877.TROXLER
Outside the USA: +1.919.549.8661
Fax: +1.919.549.0761
www.troxlerlabs.com

Troxler products are protected by U.S. and foreign patents.

Copyright © 1994 – 2006

Troxler Electronic Laboratories, Inc.

All Rights Reserved

No part of this manual may be reproduced or transmitted in any form or by any means, electronic or mechanical, including photocopying, recording, or information storage and retrieval systems, for any purpose without the express written permission of Troxler Electronic Laboratories, Inc.

GyroPave is a trademark of Troxler Electronic Laboratories, Inc.
IBM is a registered trademark of International Business Machines, Inc.
Magnalube-G is a registered trademark of Carleton-Stuart Corporation.
Mobilith is a registered trademark of Carleton-Stuart Corporation.
Slick 50 is a registered trademark and *One Lube* is a trademark of Petrolon, Inc.
SUPERPAVE is a trademark of the Strategic Highway Research Program.
WD-40 is a registered trademark of the WD-40 Company.
Windows, *Windows 95*, and *Windows 98* are registered trademarks of Microsoft Corporation

PN 106748
November 2006
Edition 6.3

TROXLER SERVICE CENTERS

Troxler Corporate Headquarters
3008 Cornwallis Road
P.O. Box 12057
Research Triangle Park, NC 27709
Phone: 1.877.TROXLER (1.877.876.9537)
Outside the U.S.A.: +1.919.549.8661
Fax: +1.919.549.0761
Web: www.troxlerlabs.com

Technical Support
Phone: 1.877.TROXLER (1.877.876.9537)
E-mail: TroxTechSupport@troxlerlabs.com

Midwestern Branch Office
1430 Brook Drive
Downers Grove, IL 60515
Fax: 630.261.9341

Western Regional Branch Office
11300 Sanders Drive, Suite 7
Rancho Cordova, CA 95742
Fax: 916.631.0541

Southwestern Branch Office
2016 East Randol Mill Road
Suite 406
Arlington, TX 76011
Fax: 817.275.8562

Florida Service Center
2376 Forsyth Road
Orlando, FL 32807
Fax: 407.681.3188

Troxler European Subsidiary
Troxler Electronics GmbH
Gilchinger Strasse 33
D.82239 Alling nr. Munich, Germany
Phone: ++49.8141.71063
Fax: ++49.8141.80731
E-mail: troxler@t-online.de

NOTE

To locate an independent, Troxler-authorized service center near you, call 1.877.TROXLER (1.877.876.9537).

HOW TO USE THIS MANUAL

Congratulations on the purchase of the **Model 4140 Gyratory Compactor**.

The **Model 4140** *Manual of Operation and Maintenance* contains information on safely using this unit. Also included in this manual are safety warnings, basic parameter setup, system troubleshooting, and general maintenance.

Do not attempt to operate the Model 4140 before reading this manual and the safety warnings posted on the unit. Troxler stresses that *the user is solely responsible* for ensuring the safe use of the Model 4140. Neither the manufacturer, its subsidiary, representatives, or distributors can assume responsibility for any mishaps, damage, or personal injury that may occur from failure to observe the safety warnings in this manual and posted on the unit.

CONVENTIONS USED IN THIS MANUAL

Throughout this manual, symbols and special formatting are used to reveal the purpose of the text as follows:

WARNING
Indicates conditions or procedures that, if not followed correctly, may cause personal injury.

CAUTION
Indicates conditions or procedures that, if not followed correctly, may cause equipment damage.

NOTE
Indicates important information that must be read to ensure proper operation.

⟨KEY⟩ Angle brackets and a different typestyle indicate a key or character (number or letter) to press on the furnace keypad. For example, "Press **⟨START⟩**" means to press the key labeled *START*.

DISPLAY A different typestyle is used in text to indicate information or messages displayed on the furnace.

```
DISPLAY - Typestyle
and shading used to
simulate the 4140
display
```

♦ Diamonds indicate a list of things needed (such as equipment) or things to know.

✓ Check marks indicate the performance of an action. With lists of check marks, follow the instructions in the order of the check marks.

▶ Triangles indicate that more than one option is available. Carefully select the option that applies.

NOTES

TABLE OF CONTENTS

CHAPTER 1. INTRODUCTION TO THE MODEL 4140
Introduction 1-2
Parts and Accessories 1-5
Unpacking and Inspection 1-8

CHAPTER 2. GETTING STARTED AND PRINTING
Safety Warnings 2-2
Assembly 2-3
The Keypad 2-5
Turning the System On 2-7
Setup 2-9
Printing 2-18

CHAPTER 3. CALIBRATION AND ADJUSTMENTS
Calibration Schedule 3-2
Calibrating the Unit 3-3
Adjusting the Angle of Gyration 3-16
Converting the Unit for Small Angles 3-18
Changing the Mold Size 3-21

CHAPTER 4. MAKING A SPECIMEN
Safety Warnings 4-2
Compacting a Specimen 4-3
Extruding a Specimen 4-9

APPENDIX A. TROUBLESHOOTING AND SERVICE
Troubleshooting A-2
General Maintenance A-7
Replacement Parts A-16
Returning Parts for Service A-18
Troxler Service Centers A-19

APPENDIX B. SPECIFICATIONS
Electrical Specifications B-2
Mechanical Specifications B-4

INDEX

WARRANTY

LIST OF FIGURES

Figure	Title	Page
1-1	Model 4140 Gyratory Compactor	1-3
1-2	Model 4140 Parts and Accessories	1-5
2-1	Sample Calc %Gmm Table	2-23
2-2	Sample Calc %Gmm Graph	2-24
3-1	Load Cell and PIM-3 Connections	3-4
3-2	Angle Excursion Indicator	3-8
3-3	View from Front Access Panel	3-10
3-4	Setting the Adjustable Angle Stop	3-17
3-5	Converting the Unit for Small Angles	3-18
3-6	Changing the Mold Size	3-21
4-1	Loading the Mold	4-5
4-2	Mold in the Extruder	4-10
A-1	Cleaning and Greasing the Bearing and Related Parts	A-12

ATTENTION COMPACTOR OWNER

This unit contains functions that require an ACCESS CODE. This code must be entered before using these functions.

The ACCESS CODE for this unit is:

5388

This page should be removed if the access code is <u>not</u> to be distributed to other parties or users of this unit.

NOTES

CHAPTER 1

INTRODUCTION TO THE MODEL 4140

This chapter provides an introduction to the Model 4140 Gyratory Compactor. Also included are a list of parts and accessories, and instructions for unpacking and inspecting the system.

CONTENTS

Introduction..... 1-2

Parts and Accessories..... 1-5

Unpacking and Inspection 1-8

INTRODUCTION

The engineering properties of an asphalt mix relate directly to the compaction method. Thus, the method of specimen compaction is crucial to creating asphalt specimens that behave like asphalt used in construction and in obtaining meaningful test results. Studies show that gyratory compacted asphalt specimens possess engineering properties similar to those achieved under actual paving conditions.

The Model 4140 Gyratory Compactor (Figure 1-1) meets or exceeds all Federal Highway Administration (FHWA) SUPERPAVE™ specifications. The unit provides safe, reliable gyratory compaction of asphalt specimens at a given consolidation pressure and angle of gyration. The Model 4140 provides significant improvements over other gyratory compactors in user safety, machine durability, noise levels, heat output, and energy consumption.

For user safety, all rotating parts are covered and cannot be physically accessed during compaction. The gyratory compactor will not compact a specimen with either the shrouds improperly positioned or the specimen chamber door open. The red ⟨**EMERGENCY**⟩ safety button found in the lower right corner of the control unit stops all moving parts and releases all forces that could pose a threat to the user.

Two access doors, one on the front and one on the left side of the compactor, provide easy access for angle verification and adjustment. The shrouds allow access to the rotating parts and machine control electronics for maintenance.

The Model 4140 requires little maintenance. To reduce the effects of gyration on moving parts, the gyratory compactor requires some lubrication. If necessary, the user may easily replace the turntable insert. For a schedule of machine maintenance see page A-8.

To offer more flexible laboratory use, the Model 4140 provides two compaction modes: *automatic* and *manual*. The automatic compaction mode compacts the asphalt specimen with the touch of a single key. The manual compaction mode allows the user to control each phase of specimen compaction.

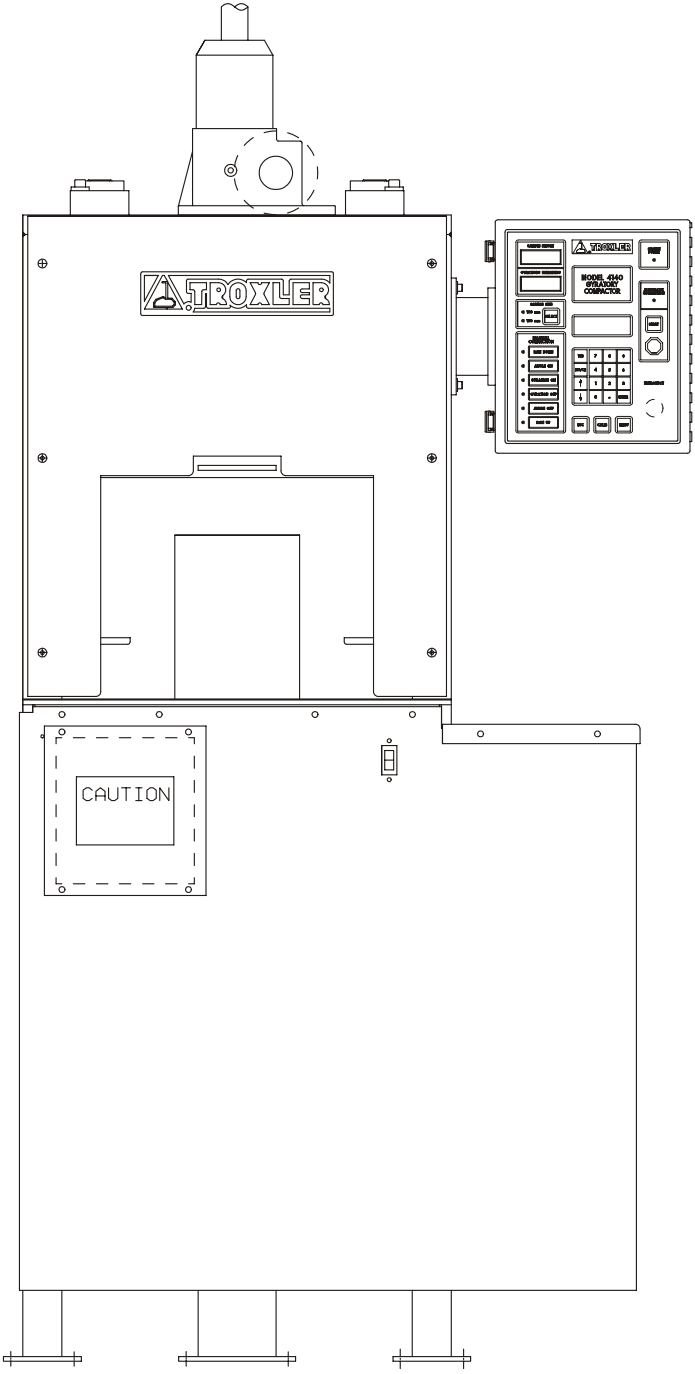

Figure 1-1. Model 4140 Gyratory Compactor

The Model 4140 allows the user to produce either 150-mm diameter or 100-mm diameter asphalt specimens. The user specifies the number of gyrations (or end specimen height) and consolidation pressure. The user can adjust the angle of gyration from 0.5 to 2.0°; the default angle is 1.25°. When using the automatic compaction option, the user may also choose to automatically send the gyration versus height and/or pressure versus height data to a computer or a printer. The unit also allows manual printing of the last six compacted specimens. All output is in SI units as described in ASTM E380-90A *Standard for Metric Practice*.

Before compaction the user heats both the loose asphalt and the mold/puck assembly. The user then loads the mold with a predetermined amount of hot mix asphalt (HMA) and places it on the turntable. The initial angle is 0°. The specimen is now ready for gyratory compaction.

After compacting the asphalt, the user removes the asphalt specimen from the mold using the extruder furnished. Once removed from the mold, the specimen is ready for testing.

NOTE

***Do not* attempt to operate the Model 4140 before reading this manual and the safety warnings posted on the unit. Troxler stresses that *the user is solely responsible* for ensuring the safe use of the Model 4140. Neither the manufacturer, its subsidiary, representatives, or distributors can assume responsibility for any mishaps, damage, or personal injury which may occur from failure to observe the safety warnings in this manual and posted on the unit.**

PARTS AND ACCESSORIES

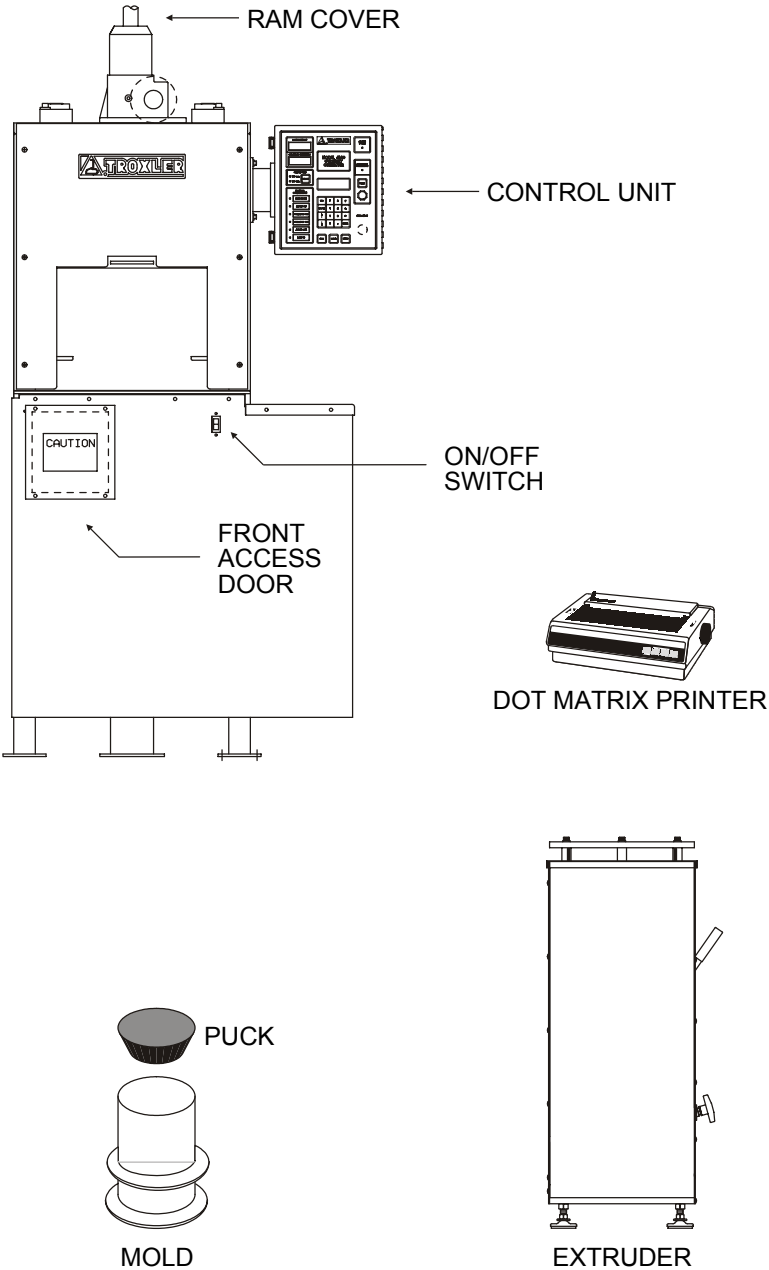

Figure 1-2. Model 4140 Parts and Accessories

The Model 4140 Gyratory Compactor includes the electrical and mechanical parts necessary to continuously compact hot mix asphalt. Use Figure 1-2 to locate and identify the following parts:

1. The **power switch** is located under the worktable.

2. The **control unit**, located on the right side of the compactor, contains the control electronics for the gyratory compactor. It provides the user interface with the Model 4140 and the interface for optional equipment.

3. The **mold**, with a puck inserted, receives the asphalt for making specimens. The molds are manufactured from hardened steel to resist wear and pitting, while limiting weight. Sizes: 150 mm and 100 mm.

4. The **puck** inserts in the mold. The puck is also made of hardened steel to resist wear and pitting. Sizes: 150 mm and 100 mm.

5. The **extruder** removes the compacted asphalt specimen from the mold.

6. The **dot matrix printer** allows the user to print data.

7. The **parallel printer cable** (not shown) connects the control unit to the dot matrix printer.

8. The **serial cable** (not shown) connects the control unit to a serial device, like a computer.

9. The **height calibration standard** (not shown), used in conjunction with a puck, aids in calibrating the specimen height after setting the target pressure.

10. The **Model 4140 Manual of Operation and Maintenance** (not shown) provides the operating instructions for the compactor.

11. The **specimen papers** (not shown) prevent the asphalt specimen from sticking to either the puck or the loading head. Sizes: 150 mm or 100 mm.

12. The optional **Performance Verification Kit** (not shown) allows the user to verify the pressure and angle calibrations. The pressure and angle are initially calibrated at the factory.

13. The optional **temperature probe** (not shown) allows the user to test the initial temperature of a HMA specimen.

14. The optional **mold lifter** (not shown) enables any user to easily lift the mold in or out of the specimen chamber.

UNPACKING AND INSPECTION

Upon receipt of the Model 4140 Gyratory Compactor from the factory, a complete inspection and inventory should be performed. If any parts or accessories appear damaged, notify the carrier and your Troxler Representative immediately.

Check to see that the following are included:

- Model 4140 Gyratory Compactor
- Extruder
- Printer
- Parallel printer cable
- Serial cable
- Height calibration spacer
- Specimen papers (500 per package)
- Manual of Operation and Maintenance

Inspect each part for damage.

See page 2-3 for a guide to assembly.

CHAPTER 2

GETTING STARTED AND PRINTING

This chapter includes safety warnings, a brief description of the control unit keypad, and instructions for turning the Model 4140 Gyratory Compactor on, setting it up, and printing.

CONTENTS

Safety Warnings 2-2

Assembly 2-3

The Keypad 2-5

Turning the System On 2-7

Setup 2-9
- Number of Gyrations 2-10
- Pressure 2-11
- Auto Output 2-12
- Mode 2-13
- Height 2-14
- Clock/Calendar 2-14
- Pressure Printout 2-17

Printing 2-18
- Auto Output 2-18
- Output 2-18

SAFETY WARNINGS

The Troxler Model 4140 is a safe, durable gyratory compactor. To alert the user of compactor motion, the control unit beeps twice before starting any movement. Not every example of improper or unauthorized use of this unit which may lead to malfunction or accident can be anticipated. Thus, if a particular use is not specifically mentioned in this manual as authorized, then consult Troxler about the alternate use. Otherwise, it is assumed that the use is unauthorized and improper.

To ensure minimum user risk, Troxler recommends the following safety precautions:

- Wear safety glasses when preparing an asphalt specimen.
- Always wear heat-resistant gloves when handling any hot substance.
- When moving the mold, grasp it firmly on either side using the handle.
- Remove all objects, except the mold and asphalt specimen, from the specimen chamber before pressing the manual compaction keys or the automatic compaction key.
- Do not operate without the guards (shrouds) in place or the door closed.
- Do not wear loose clothing or jewelry when operating the compactor.
- Keep hands away from the gyratory compactor when the unit is in motion.
- With the shrouds off, the gyratory compactor poses an electrical hazard. Unplug the gyratory compactor before removing the shrouds.

ASSEMBLY

✓ Unbolt the unit from the shipping palette.

✓ Remove the compactor from the shipping palette.

✓ Place the unit in its permanent site. The holes in the base allow the user to bolt the gyratory compactor to the floor. Troxler recommends the user allow at least 45.7 cm (18 in) between the right side of the gyratory compactor and any obstacle.

✓ Plug the unit into a standard wall socket.

✓ Remove the shipping cover from the top of the unit.

✓ Screw the ram cover onto the top of the unit.

✓ Raise the loading head by pressing ⟨**RAM UP**⟩.

✓ Rotate the control unit for viewing comfort. To adjust the control unit, pull down the black handled lever on the left side of the control unit. Rotate the control unit to a comfortable position, then lock it in place by pulling the lever up again.

✓ If using the Model 4140 with a printer, connect the printer to the back of the control unit, using the parallel printer cable provided. Plug the printer into a standard wall socket. See the printer *Operating Instructions* for further details on using the printer supplied by Troxler.

✓ If using the compactor with a computer, use a serial cable to connect the back of the control unit to a computer.

✓ If you purchased the optional temperature probe, plug the probe into the two-prong outlet in the control unit.

- ✓ Attach one half of the extruder slide to the gyratory compactor using the top two screws that attach the front and left shrouds to the compactor. To attach the extruder to the compactor,

  - ✓ Lift the extruder;

  - ✓ Align the slide on the extruder with the slide on the compactor; and

  - ✓ Slide the extruder onto the unit.

- ✓ Use the extruder feet to level it with the compactor tabletop. To adjust the feet, loosen the nuts on the feet. Rotate the feet until the extruder is level with the tabletop. Then, tighten the nuts.

CAUTION

Securely fasten the extruder to the floor if it is not attached to the compactor.

THE KEYPAD

In this manual, all references to *keys* refer to control unit keys. Table 2-1 lists the functions for each key and button.

Table 2-1. Control Unit Keys and Button

KEY	FUNCTION
⟨**EMERGENCY**⟩	Stops gyrations and releases all forces that pose a threat to the user. To release the button and return to the Idle screen, rotate it clockwise.
⟨**ESC**⟩	Returns the control unit to the Ready screen without storing or updating the data.
⟨**CALIB**⟩	Press to access the Calibration menu. The user can calibrate the pressure, specimen height, angle of gyration, and rotation speed.
⟨**MENU**⟩	Press to access the Menu options. Menu options include setting up the compactor, printing, and viewing the number of hours of operation and number of hours since last service.
⟨**SELECT**⟩	Toggles between the 150-mm and 100-mm specimen size options.
⟨**START**⟩	Press to begin automatic compaction of an asphalt specimen.
⟨**STOP**⟩	Pauses the compaction cycle. Press ⟨**START**⟩ to start the cycle again.
⟨**RAM DOWN**⟩	Lowers the ram into the asphalt specimen.
⟨**ANGLE ON**⟩	Press to induce the angle of gyration.

Table 2-1. Control Unit Keys and Button (Continued)

KEY	FUNCTION
⟨**GYRATION ON**⟩	Begins the gyration of the asphalt specimen.
⟨**GYRATION OFF**⟩	Press to stop gyrating the specimen before completing the set number of gyrations.
⟨**ANGLE OFF**⟩	Removes the angle of gyration and performs the dwell rotations.
⟨**RAM UP**⟩	Press to raise the ram.
⟨**YES**⟩	Press to respond *Yes* to *Yes/No* questions.
⟨**NO/CE**⟩	Press to respond *No* to *Yes/No* questions. The key also clears an incorrect entry and allows for reentry.
⟨**1**⟩ .. ⟨**9**⟩	Press to enter numeric values, or to access menu options.
⟨↑⟩, ⟨↓⟩	Press to scroll through menu options or view screens.
⟨**.**⟩	Press to enter a decimal point.
⟨**ENTER**⟩	Press after entering data.

TURNING THE SYSTEM ON

NOTE

Control unit screens in this manual are intended as examples. Values on your displays may differ from the manual.

References to the control unit display or screen, imply the 4 x 20 display in the center of the control unit unless otherwise noted.

The ⟨**ON/OFF**⟩ switch is on the front of the compactor below the work table. After switching the gyratory compactor on, the control unit displays the model number, the model name, and the software version number.

After a brief self-test, the compactor checks the ram position. The control unit will beep twice before slowly moving the loading head to the "home" position. The screen is:

```
Verifying Ram
  Position.

 Please Wait.
```

With the loading head in the home position, the unit performs a 300-second (5-min) warmup of the system electronics. The control unit displays the warmup progress in seconds remaining.

The control unit displays the sample height and number of gyrations remaining (*0* in *Machine Idle*) on the two LED displays in the upper left corner of the control unit.

The user may access the compactor software when the control unit displays the *Machine Idle* screen:

```
    MACHINE IDLE
# of Gyrations: XXX
Pressure: XXX kPa
Gyration Rate: 30.0
```

With the optional temperature probe attached, the control unit alternately displays the gyration rate and the probe temperature on the last line. All output is displayed in SI units.

SETUP

The user can adjust the control unit on the Troxler Model 4140 for viewing comfort. To adjust the control unit, pull down the black handled lever on the left side of the control unit. Rotate the control unit to a comfortable position, then lock it in place by pulling the lever up again.

Before compacting an asphalt specimen in the Model 4140 Gyratory Compactor, the user must define several parameters. The user sets the angle of gyration, total number of gyrations, and compaction pressure. The user may download data either automatically or manually in three formats. The Model 4140 can transmit the specimen height for each gyration to a printer or to a computer. A graphic printing option is also available. The user can also set the time in a twelve or a twenty-four hour format and date in a month/day/year or a day/month/year format.

The procedure for changing the angle of gyration (α) is the same as that for performing large calibration adjustments (see page 3-16).

The unit must be in the *Machine Idle* mode to access the menu options. To set the other parameters, access the menu options by pressing ⟨**MENU**⟩ on the control unit.

```
Press # To Select
1 - # Of Gyrations
2 - Pressure
  ESC To Exit or ↕
```

The first menu screen displays the options for entering the number of gyrations or the pressure. To view the other menu options, use the arrow keys. To select a menu option, press the number key that matches the option number. The following text details each set up menu option.

NUMBER OF GYRATIONS

To change the number of gyrations for a compaction cycle, press ⟨**1**⟩ at the *Menu* screen (see page 2-9), the screen is:

```
Input Total Number
Of Gyrations
        230
    Press ENTER
```

The total number of gyrations is the number of times the compactor rotates the specimen during compaction. The default number of gyrations is *230*. If the number displayed is correct, press ⟨**ENTER**⟩. To change the number of gyrations, use the number keys to enter the new total number of gyrations (from *1* to *999*). After entering the number of gyrations, press ⟨**ENTER**⟩.

Number of Dwell Rotations

```
 Input Total Number
 of Dwell Gyrations
        10
    Press ENTER
```

After the user enters the total number of gyrations, the control unit prompts for the total number of dwell gyrations. The compactor rotates the asphalt specimen a set number of dwell gyrations at the target pressure and 0° angle of gyration to square the ends of the specimen. The default total number of dwell gyrations is ten. If the number displayed is correct, press ⟨**ENTER**⟩. To change the total number of dwell gyrations (from *0* to *99*), use the number keys and press ⟨**ENTER**⟩.

The control unit returns to the *Menu* screen. To return to the *Machine Idle* screen, press ⟨**ESC**⟩.

PRESSURE

NOTE

If the user changes the pressure value, recalibrate the specimen height.

To set the consolidation pressure, press ⟨**2**⟩ at the *Menu* screen (see page 2-9).

```
Input Maximum
Compaction Pressure:
600 kPa
Press ENTER
```

The maximum compaction pressure is the pressure applied to the asphalt specimen during the gyratory compaction process. The default pressure is 600 kPa. If the number displayed is correct, press ⟨**ENTER**⟩. To change the pressure, use the number keys and enter the new maximum compaction pressure (between 200 and 1000 kPa). Press ⟨**ENTER**⟩.

The control unit returns to the *Menu* screen. To return to the *Machine Idle* screen, press ⟨**ESC**⟩.

Remember to calibrate the specimen height after changing the pressure (see page 3-6).

AUTO OUTPUT

NOTE

Before producing a specimen using the *Auto Output* feature, connect the compactor to the output device.

Several automatic output options are available for automatic compaction. The user may automatically print pressure-versus-height data using the *Pressure Printout* feature (see page 2-18). The compactor can also automatically download gyration-versus-height data in either gyratory compactor software format for use with FHWA software or in table format for use with GyroPave. The Model 4140 can download data to either the printer port or serial port. The "formatted" data option is usually only used with a computer.

For information on manually printing data, see page 2-19. The *Auto Output* feature is not available when manually compacting a specimen.

The control unit displays the *Auto Output* status beside menu option *4*. To view the status of the *Auto Output* option, press ⟨↓⟩ at the *Menu* screen (see page 2-9).

```
Press # To Select
3 - Output
4 - Auto Output OFF
  ESC To Exit or ↕
```

To change either the status (enable or disable) or the format (formatted, table, or graph) of the *Auto Output* feature, press ⟨**4**⟩.

At the *Auto Output Select* screen, the user can turn on and off the *Auto Output* feature. If the user wants to turn off the *Auto Output* feature, press ⟨**2**⟩. If the user wants to turn on the *Auto Output* feature, press ⟨**1**⟩. Select the output type by pressing the number key matching the desired format.

The control unit requests the output port, either the printer port or serial port. To send the data to the printer port, press ⟨**1**⟩. To send the data to the serial port, press ⟨**2**⟩.

The control unit displays that the *Auto Output* option is on and returns to the *Menu* screen. To return to the *Machine Idle* screen, press ⟨**ESC**⟩.

MODE

The Model 4140 provides the user with two modes of gyration. The user may either compact the specimen for a set number of gyrations (gyration mode #1) or to a specified height (gyration mode #2). The default mode of gyration is mode #1, number of gyrations.

Enter the number of gyrations with menu option *1* and the specimen height with menu option *6*.

Access the *Mode* feature at the *Menu* option screen (see page 2-9) by pressing ⟨**5**⟩.

```
Selecting Gyrating
        Mode
  1 - # Gyrations
  2 - Height
```

To compact the specimen a set number of gyrations, press ⟨**1**⟩. To compact the specimen to a given specimen height, press ⟨**2**⟩.

The control unit returns to the *Menu* screen. To return to the *Machine Idle* screen, press ⟨**ESC**⟩.

HEIGHT

This feature allows the user to set the height of the specimen. The entered height defines the final specimen height when operating the compactor in gyration mode #2. If the specified number of gyrations is reached before the specimen is compacted to the entered height, the unit will end gyration. The default (and minimum) specimen height is 50 mm. The final specimen height may vary slightly from the value entered. Differences in specimen height are mix-dependent. If the height is not acceptable, modify the height set on the unit.

Access the *Height* feature at the *Menu* option screen (see page 2-9) by pressing ⟨**6**⟩.

```
Input Gyration
    Height
      _      mm
Then Press ENTER
```

Using the number keys, enter the desired finished specimen height (from 50 to 150 mm). Press ⟨**ENTER**⟩.

The control unit returns to the *Menu* screen. To return to the *Machine Idle* screen, press ⟨**ESC**⟩.

CLOCK/CALENDAR

The compactor stores the height-versus-gyration data for the last six specimens using the date and time. With the table or Calc % Gmm output options, the time and date of compaction are downloaded with the data. The data for the last three specimens is stored with the time and date of compaction for use with the *Output* feature. Access the *Clock/Calendar* feature at the *Menu* option screen (see page 2-9) by pressing ⟨**7**⟩.

```
Enter Code
    _
```

To prevent access by unauthorized personnel, this function requires the input of a code (see page vii). Enter the access code and press ⟨**ENTER**⟩.

```
mm/dd/yy hh:mm pm
 1 - Change Time
 2 - Change Date
 3 - Change Format
```

From this screen, the user may change either the time, date, or display format by pressing the numeric key corresponding to the desired option.

Time

Change the time by pressing ⟨**1**⟩. If displaying the time in the *AM/PM* format, the display is:

```
Time: _ _:_ _ am
      1 - AM
      2 - PM
```

Choose the correct time period by pressing either ⟨**1**⟩ for a.m. or ⟨**2**⟩ for p.m.

With either format option, the control unit requests the current time. Enter the correct hour and press ⟨**ENTER**⟩. Then, enter the minutes and press ⟨**ENTER**⟩.

The control unit returns to the *Clock/Calendar* screen. To return to the *Machine Idle* screen, press ⟨**ESC**⟩.

Date

From the *Clock/Calendar* screen at the top of the previous page change the date by pressing ⟨**2**⟩.

```
Date: MM/DD/YY
Enter New Date:
   mm/dd/yy
Press ENTER To Set
```

The third line displays the current date format. Enter the new date and press ⟨**ENTER**⟩.

The control unit returns to the *Clock/Calendar* screen. To return to the *Machine Idle* screen, press ⟨**ESC**⟩.

Format

From the *Clock/Calendar* screen shown at the top of the previous page, access the *Change Format* option by pressing ⟨**3**⟩.

```
mm/dd/yy  hh:mm pm

1-Change Time Format
2-Change Date Format
```

The control unit displays the current date and time on the top line. Change the time format (a.m./p.m. or 24 hours) by pressing ⟨**1**⟩ or the date format (mm/dd/yy or dd/mm/yy) by pressing ⟨**2**⟩.

The control unit returns to the *Clock/Calendar* screen. To return to the *Machine Idle* screen, press ⟨**ESC**⟩.

PRESSURE PRINTOUT

The *Pressure Printout* feature prints the pressure-versus-height data after automatic compaction of a specimen. If the user also activates the *Auto Output* feature, the compactor first downloads the gyrations-versus-height data, then prints the pressure-versus-height data. Neither automatic download features are available when manually compacting a specimen.

To change the status of the *Pressure Printout* feature (enable or disable), press ⟨**9**⟩ at the *Menu* screen (see page 2-9). The control unit indicates that *Pressure Data Collection* is enabled and returns to the *Menu* screen. To return to the *Machine Idle* screen, press ⟨**ESC**⟩.

PRINTING

The Model 4140 provides the user with several automatic output options. The user may automatically print pressure-versus-height data using the *Pressure Printout* feature (see page 2-17). The compactor can automatically or manually download gyration-versus-height data in either gyratory compactor software format for use with FHWA software or table format for use with GyroPave. The control unit can manually download the data in Calc %Gmm format, where the results are %Gmm versus number of gyrations (N). The Model 4140 can download data to either the printer port or serial port. The "formatted" data option is usually only used with a computer.

AUTO OUTPUT

For a discussion of the *Auto Output* feature see page 2-12.

OUTPUT

The *Output* feature allows you to manually download data stored in the control unit. The control unit stores data in data sets. Data sets include the sample height (HT in mm) versus number of gyrations (rev) for a given gyrated specimen, the date and time of compaction, the consolidation pressure, and the number of revolutions. Printed table format data sets also include a blank for the Sample ID.

To access the *Output* feature, press ⟨**3**⟩ at the *Menu* screen (see page 2-9). The display is:

```
 Select Output Type
1 - Formatted
2 - Table
3 - Calc %Gmm
```

Select the output type by pressing the number key matching the desired format. If you select *Formatted* or *Table*, see the *Formatted or Table* section below. If you select *Calc %Gmm*, then see the *Calc %Gmm* section on page 2-20.

Formatted or Table

The control unit requests the output port (either the printer port or serial port). To send the data to the printer port, press ⟨**1**⟩. To send the data to the serial port, press ⟨**2**⟩.

After choosing the output type and port (if needed), the control unit displays the data and time of the last six data sets.

```
        Select      ↕
1-mm/dd/yy hh:mm am
2-mm/dd/yy hh:mm am
3-mm/dd/yy hh:mm pm
```

Using the numerical keys, select the data set for outputting. The first data set displayed is the most recent specimen.

The control unit displays **Outputting Data Please Wait** while downloading or printing the data. When finished outputting, the control unit returns to the *Menu* screen. To return to the *Machine Idle* screen, press ⟨**ESC**⟩.

Calc %Gmm

The control unit prompts for a project number:

```
Do You Want To
Input Project
Number?
```

To continue without entering a project number, press ⟨**NO/CE**⟩. To enter a project number, press ⟨**YES**⟩. To enter numbers, use the number keys. To enter alpha characters, scroll using the arrow keys and accept the letter by pressing ⟨**ENTER**⟩. After entering the project number, press ⟨**ENTER**⟩.

```
Do You Want To
Input Mix Design
Number?
```

To continue without entering a mix design number, press ⟨**NO/CE**⟩. To enter a mix design number, press ⟨**YES**⟩. To enter numbers, use the number keys. To enter alpha characters, scroll using the arrow keys and accept the letter by pressing ⟨**ENTER**⟩. After entering the mix design number, press ⟨**ENTER**⟩.

The control unit prompts for the number of samples to average. Enter the number of samples to average (1 – 6) using the number keys.

```
Enter Gmm
_.
Press ENTER
```

The control unit prompts for the mixture Gmm. Gmm is the maximum theoretical specific gravity.

Enter the Gmm value using the number keys. Press ⟨**ENTER**⟩.

The control unit displays the date and time of the last six data sets stored in memory locations 1 through 6. Select the first data set by pressing the number key that corresponds to the number of the memory location. The control unit prompts for the weight of the first sample. Enter the weight of the specimen using the number keys. Press ⟨**ENTER**⟩. The control unit prompts for the Gmb for the first specimen Gmb is the bulk specific gravity of the compacted specimen. Enter the Gmb for the sample using the number keys. Press ⟨**ENTER**⟩.

If the user chooses to average more than one data set, then the control unit again displays the date and time of the last six data sets. Repeat the selection for each data set you want to include in the average. If the user chooses a data set with a different number of gyrations, then the control unit will display an error. Select each data set and enter the weight and actual Gmb entry for each set.

NOTE

When averaging data sets, all selected data sets must have the same number of gyrations.

After entering the weight and Gmb for each data set, the control unit displays the output options:

```
    Output %Gmm
1 - Print Table
2 - Graph & Table
3 - Exit
```

The control unit can print or download a table of the %Gmm vs. N data. It can also print a graph and table for this data (see Figures 2-1 and 2-2). Note that the time and date in the header refers to the time you printed the data. The time and date given above the sample data in the tables refers to the time and date that the sample was completed. The graph has a logarithmic x-axis. Select the output type by pressing the number key that matches the desired format.

If the user selects the Print Table option, then the control unit requests the output port (either the printer port or the serial port). To send the data to the printer port, press ⟨**1**⟩. To send the data to the serial port, press ⟨**2**⟩. The control unit outputs the table and returns to the *Output %Gmm* screen.

If the user selects the *Graph & Table* option, then the control unit prints the graph and table. After printing, the control unit returns to the *Output %Gmm* screen.

The %Gmm vs. N graph includes three reference lines: *Nini*, *Ndesign*, and *Nmax*. The default positions for the reference lines are set by SUPERPAVE volumetric mix design properties at 89%Gmm, 96%Gmm, and 98%Gmm, respectively. To change the positions for the reference lines, press ⟨**MENU**⟩. Select the *Edit Specs* option by pressing ⟨**.**⟩ then ⟨**0**⟩. Follow the control unit prompts to enter the new %Gmm positions.

```
*************************************************
          TROXLER 4140 Gyratory Compactor
                      SN:  107
     Date:   5/24/96          Time:   2:13PM
*************************************************
       GYRATORY COMPACTOR SAMPLE INFORMATION
*************************************************
Project Number 11166677C
Maximum Specific Gravity, Gmm  2.200
Gyrations: N initial = 6     N Design = 54     N Maximum = 80
Mix Design Number  44444

Actual Asphalt Content _______________
Vertical Consolidation Pressure  200 KPa

Sample Weight  5075g.   Gmb 2.550   Date:  2/15/96   Time:
3:45 pm
```

Sample 1	Height	Gmb(est)	Gmb(corr)	%Gmm
N ini	128.1	2.242	2.263	86.9
N des	115.2	2.493	2.517	96.7
N max	113.7	2.526	2.550	97.9

```
Sample Weight  5021g.   Gmb 2.548   Date:  2/15/96   Time:
3:07 pm
```

Sample 2	Height	Gmb(est)	Gmb(corr)	%Gmm
N ini	125.1	2.271	2.283	87.7
N des	113.5	2.503	2.517	96.7
N max	112.1	2.534	2.548	97.8

```
Sample Weight  4986g.   Gmb 2.553   Date:  2/15/96   Time:
4:45 pm
```

Sample 3	Height	Gmb(est)	Gmb(corr)	%Gmm
N ini	124.0	2.275	2.287	87.8
N des	112.4	2.510	2.523	96.9
N max	111.1	2.539	2.553	98.0

```
Sample Weight  5027g.   Gmb 2.550   Date:  2/22/96   Time:
8:27 am
```

Average	Height	Gmb(est)	Gmb(corr)	%Gmm
N ini	125.7	2.263	2.278	87.4
N des	113.7	2.502	2.519	96.7
N max	112.3	2.533	2.550	97.9

Figure 2-1. Sample Calc %Gmm Table

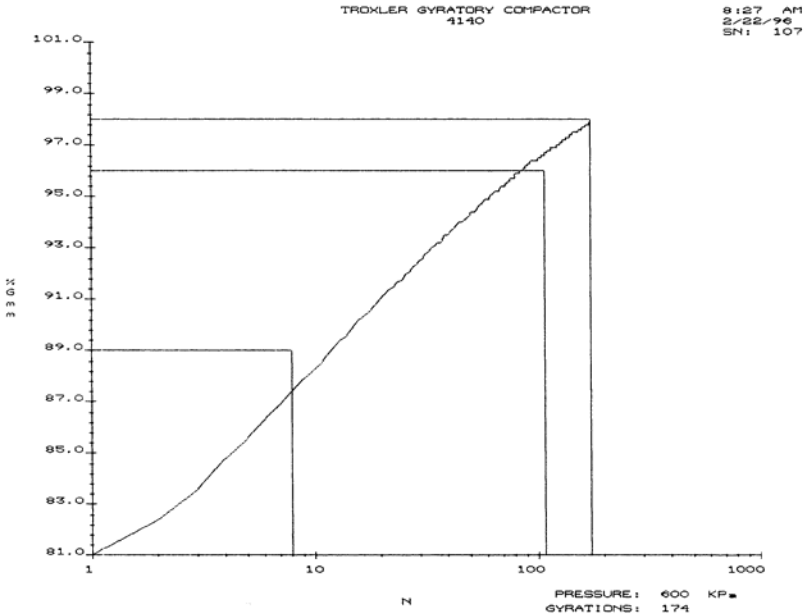

Figure 2-2. Sample Calc %Gmm Graph

CHAPTER 3

CALIBRATION AND ADJUSTMENTS

This chapter discusses calibrating the Model 4140 Gyratory Compactor and adjusting the angle of gyration.

CONTENTS

Calibration Schedule 3-2

Calibrating the Unit 3-3
- Pressure 3-3
- Specimen Height 3-6
- Angle of Gyration 3-8
- Rotation Speed 3-14
- Print Calibration 3-15

Adjusting the Angle of Gyration 3-16

Converting the Unit for Small Angles 3-18

Changing the Mold Size 3-21

CALIBRATION SCHEDULE

The Troxler Model 4140 Gyratory Compactor is calibrated at the factory. The compactor requires no initial angle or pressure calibration upon receipt.

Troxler recommends the following user verification/calibration schedule for the Model 4140. If calibrating the height, angle, and pressure, calibrate the pressure first. Then, calibrate the angle of gyration. Calibrate the specimen height last.

HEIGHT CALIBRATION (see page 3-6)

✓ Calibrate the specimen height daily.

✓ Calibrate the specimen height after changing the consolidation pressure.

ANGLE VERIFICATION/CALIBRATION (see page 3-8)

✓ Verify the angle every 480 hours or every 6 months. If the angle of calibration is not within specifications, recalibrate the angle.

✓ Verify the angle after changing the pressure. If the angle of calibration is not within user specifications, recalibrate the angle.

✓ Verify the angle after moving the adjustable angle stop.

PRESSURE VERIFICATION/CALIBRATION (see page 3-3)

After calibrating the pressure, calibrate the specimen height and angle of gyration.

✓ Verify the consolidation pressure every 480 hours or every 6 months. If the pressure is not within user specifications, recalibrate the pressure.

CALIBRATING THE UNIT

See page 2-2 for safety warnings.

The Model 4140 allows for simple calibration of the pressure, the specimen height, and the angle of gyration, and the speed of rotation.

Access the Calibration menu by pressing ⟨**CALIB**⟩.

```
   CALIBRATION
1-Pressure Calib
2-Height Calib
ESC To Exit Or ↕
```

To view the angle calibration, rotation calibration, and print calibration options, press the down arrow key. Use the number keys to select a calibration option.

PRESSURE

The optional performance verification kit includes all the equipment needed to verify and calibrate the pressure and angle, including a calibration load cell.

NOTE

Two versions of the calibration load cell are available. The original *two-piece* calibration load cell included both a load cell and a PIM-3 Digital Inline Amplifier; the *one-piece* calibration load cell (available Spring 1999) does not require a PIM amplifier.

To verify the pressure calibration:

✓ Turn the compactor off.

✓ To remove any grease or asphalt, clean the loading head and turntable.

✓ Connect the load cell as follows:

- ▶ If using the one-piece calibration load cell:
  - ✓ Using the supplied serial cable, connect the load cell to the control unit's serial port.
  - ✓ Connect the dc charger to the load cell, and plug the charger into an electrical outlet.

- ▶ If using the two-piece calibration load cell, connect the PIM-3 and load cell as follows (see Figure 3-1):
  - ✓ Using the supplied serial cable, connect the PIM-3 to the control unit's serial port.
  - ✓ Using the load cell cable, connect the load cell to the PIM-3.
  - ✓ Connect the dc charger to the PIM-3, and plug the charger into an electrical outlet.

✓ Place the calibration load cell in the center of the turntable.

✓ Turn the compactor on.

✓ Ensure that the pressure is set to the desired value. To set the consolidation pressure, see page 2-11.

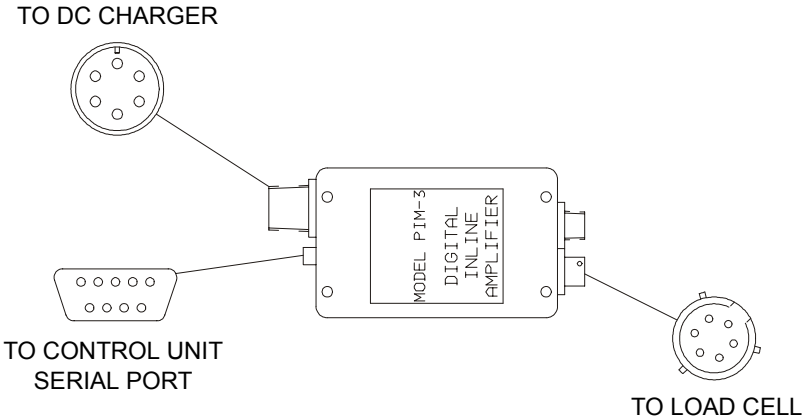

Figure 3-1. Load Cell and PIM-3 Connections

After installing the calibration load cell and setting the pressure, the pressure calibration takes about three minutes to complete.

To access the *Pressure Calib* option, press ⟨**1**⟩ at the *Calibration* menu. The screen is:

```
PRESSURE CALIBRATION
  Insert Pressure
  Calib. Load Cell
  Then Press ENTER
```

Ensure that the calibration load cell is properly positioned in the center of the turntable. Check all connections. After closing the chamber door, press ⟨**ENTER**⟩.

After lowering the loading head onto the load cell, the Model 4140 calculates the system forces. The compactor performs a five-point linear pressure calibration and verifies the target pressure.

After calibrating the pressure, the control unit displays both the gyratory cell pressure and the calibration cell pressure. After verifying the gyratory cell pressure, press ⟨**ENTER**⟩. If the displayed gyratory cell pressure is greater than ± 6 kPa of the calibration cell pressure, check cable connections and repeat the calibration. If the gyratory cell pressure is still more than ± 6 kPa of the calibration cell pressure, call your Troxler representative.

The control unit updates the calibration on the EEPROM and raises the ram. To print the calibration results, press ⟨**YES**⟩ at the print calibration prompt. The control unit returns to the *Calibration* menu. To return to the *Machine Idle* screen, press ⟨**ESC**⟩.

Open the chamber door and remove the calibration load cell. Unplug the dc charger from the electrical outlet, and disconnect the load cell from the dc charger and control unit. (Or, if using the two-piece calibration load cell, disconnect the PIM–3 from the load cell, dc charger, and control unit.) Return all parts to the performance verification kit case.

SPECIMEN HEIGHT

The specimen height is displayed on the LED at the top left corner of the control unit. Always calibrate the specimen height after changing the target pressure. If calibrating the height, angle, and pressure, calibrate the pressure first. Then, calibrate the angle of gyration. Calibrate the specimen height last.

Clean the turntable and loading head before calibrating the specimen height.

After pressing ⟨**2**⟩ at the *Calibration* menu (see page 3-3), the control unit prompts for height of the height calibration standard. The height and serial number are stamped on the side of the standard. Enter the standard height to the nearest hundredths and press ⟨**ENTER**⟩.

NOTE

Cleaning and centering the puck and standard is very important when calibrating the specimen height.

Place a clean puck, with the small side down, in the center of the turntable. Put two specimen papers on the puck. Place the height standard on the puck. Close the chamber door. To start the height calibration, press ⟨**RAM DOWN**⟩.

After lowering the loading head onto the standard, the compactor raises the loading head slightly. The compactor calculates the system pressures, then lowers the loading head back onto the standard. After lowering the loading head, the compactor calculates the standard height. This calibration takes about 75 seconds. After calibration, the system will verify the height of the standard and display the result. The difference should be less than 0.05 mm.

The compactor raises the loading head to the “home” position. The screen is:

```
HEIGHT CALIBRATION
  Do You Want To
  Verify Another
      Height
```

If you do not want to verify the calibration, press ⟨**NO**⟩. To print the calibration results, press ⟨**YES**⟩ at the print calibration prompt.

Open the chamber door and remove the standard. The control unit returns to the *Calibration* menu. To return to the *Machine Idle* screen, press ⟨**ESC**⟩.

To verify the height calibration, press ⟨**YES**⟩. The control unit again requests the standard height. Enter the standard height to the nearest hundredths and press ⟨**ENTER**⟩. Press ⟨**RAM DOWN**⟩.

The compactor lowers the loading head to the standard. Check the compactor measured height displayed on the control unit, then press ⟨**ENTER**⟩.

The compactor raises the loading head to the “home” position and allows the user to verify the sample height again. To verify the sample height again, press ⟨**YES**⟩ at the prompt and repeat the above procedure.

To exit the height calibration, press ⟨**NO**⟩ at the verify prompt. The control unit returns to the *Calibration* screen. To return to the *Machine Idle* screen, press ⟨**ESC**⟩.

Open the chamber door. Remove the standard, specimen papers, and puck.

ANGLE OF GYRATION

NOTE

Do not get grease or dirt on the brake disk located inside the compactor! The brake disk is directly above the angle scale (see Figure 3-3).

Calibrate the height after calibrating or changing the angle of gyration.

The angle excursion indicator (see Figure 3-2) is included in the optional Performance Verification Kit.

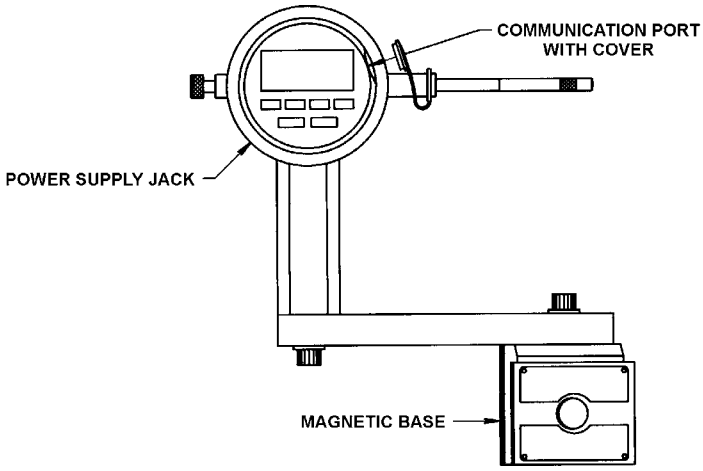

Figure 3-2. Angle Excursion Indicator

To calibrate the angle, complete the following steps:

✓ On the control unit, from the *Machine Idle* display, press the ⟨**CALIB**⟩ button, then press ⟨**3**⟩ at the *Calibration* menu. The control unit prompts the user to attach the indicator to the compactor.

✓ Remove both access panels (located beneath the worktable) from the shrouds by removing the four screws on each panel. One access panel is in the upper left corner on the front of the unit. The second access panel is in the upper right corner on the left side of the unit.

✓ Remove the rubber port cover from the indicator to allow access to the communication port.

✓ Very carefully, connect the remote clear cable to the communication port on the indicator.

✓ Plug the ac adapter into the angle excursion indicator. Plug the ac adapter into a wall socket.

CAUTION

Handle the angle excursion indicator with care. DO NOT DROP OR BANG the indicator.

NOTE

While batteries may be used to power the indicator, they last for only a short period of time. Troxler recommends that an ac adapter be used except in an emergency.

✓ Press the ⟨**ON/CLR**⟩ (green) button to turn the indicator on.

✓ Verify the bottom right side of the display reads *MM*, indicating units of measure.

✓ Verify that the diamond at the top right of the display is under *TIR* indicating measure mode.

NOTE

If the measure mode or measure units are incorrect, refer to the CDI manual for configuring the indicator.

✓ Insert the indicator into the left access hatch.

✓ Slide the magnetic base of the indicator into the base beneath the angle scale inside the compactor (see Figure 3-3).

✓ To fix the indicator in place, push the button from the back side so it pushes out through the label to turn the magnet on.

✓ From the control panel display, press ⟨**ENTER**⟩ on the compactor. The compactor prompts the user to place a heated mold and specimen in the machine.

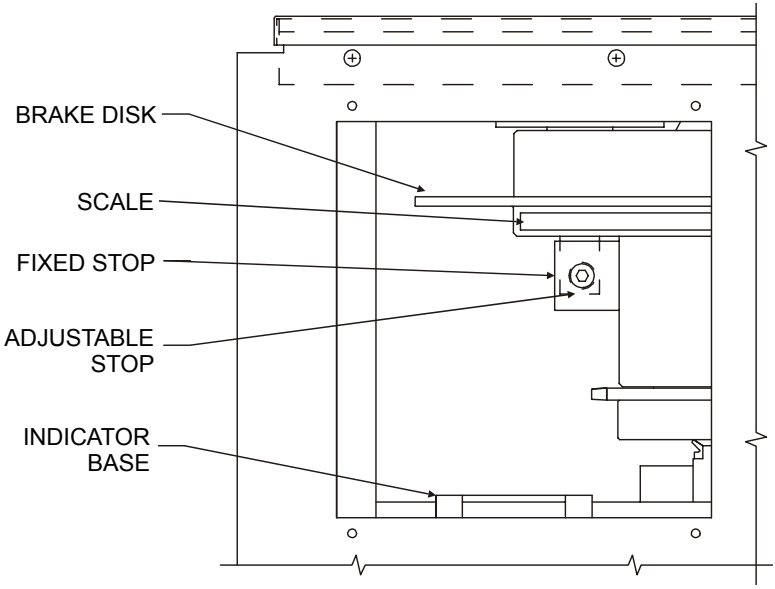

Figure 3-3. View from Front Access Panel

✓ Prepare an asphalt specimen (see page 4-4). The weight of the asphalt specimen should equal the expected weight of future test specimens.

✓ Insert the loaded mold in the chamber and close the door.

✓ From the control panel display, press ⟨**ENTER**⟩ on the compactor. The compactor lowers the loading head. The control unit prompts the user to reset the indicator.

WARNING

Removing the access doors exposes moving parts. Remove all tools, except the indicator, from the unit.

Step away from the unit while it calibrates the angle.

✓ Reset the indicator by pressing the button on the end of the remote clear cable. The digital indicator should display all zeros.

✓ Press ⟨**ENTER**⟩ on the compactor. The compactor induces the angle. After gyrating several times, the screen is:

```
INPUT VALUE
From Indicator
_ _ _ _ _
And Press ENTER
```

✓ Read the value displayed on the indicator and input the number in millimeters into the control unit.

✓ Press ⟨**ENTER**⟩. The compactor removes the angle and slightly raises the loading head. The display is:

```
Angle Is: #.###
 1-Readjust Angle
 2-Accept Angle
    Select (1-2)
```

✓ The compactor offers the option of readjusting the angle.

- ▶ To accept the angle, press ⟨**2**⟩. To print the calibration results, press ⟨**YES**⟩ at the print calibration prompt. The control unit returns to the *Calibration* menu.
- ▶ To return to the *Machine Idle* screen press ⟨**ESC**⟩. Turn the indicator magnet off by pushing the button away from the label. Remove and unplug the indicator. **Handle the indicator with extreme CAUTION.** Reinstall the access doors.

⚠

WARNING

Do not operate the unit with the access doors off!

✓ To readjust the angle, press ⟨**1**⟩.

✓ The user adjusts the angle using the angle stops visible through the front access hatch (see Figure 3-3).

- ▶ Only use the fixed angle stop for fine angle changes (less than 0.05°). Access the fixed angle stop through the side access door. Remove the indicator. **Handle the indicator with care. DO NOT DROP OR BANG the indicator.** Use the provided Allen head wrench to turn the screw on the back of the fixed angle stop.

NOTE

Do not turn the screw in the fixed angle stop more than four times in either direction (the screw should not extend more than 3/8" from the fixed angle stop).

Turn the screw clockwise to increase the angle or counterclockwise to decrease the angle. At an angle of 1.25°, turn the screw one and a half turns to adjust the angle about one hundredth of a degree.

- ▶ To make a large angle change (greater than 0.05°), use the adjustable angle stop. First, remove the indicator. **Handle the indicator with care. DO NOT DROP OR BANG the indicator.** Loosen the two screws (about ¼ turn) with the provided Allen wrench. Move the adjustable angle stop to the desired angle (from 0.5° to 2.0°). Access the adjustable angle screw by grasping the stop and turning the turntable towards the access door. **DO NOT** rotate the turntable by grasping the brake disk! Move the adjustable angle stop to the desired angle (from 0.5° to 2.0°). The scale above the stops provides a rough means of positioning the adjustable angle stop.

WARNING

Removing the access doors exposes moving parts. Remove all tools, except the indicator, from the unit.

Step away from the unit while it calibrates the angle.

✓ Reinstall the indicator.

✓ Press ⟨**ENTER**⟩. The compactor lowers the loading head. When prompted, re-zero the indicator by pressing the button at the end of the remote control cable. From the control panel display, press ⟨**ENTER**⟩.

✓ After gyrating several times, the screen is:

```
INPUT VALUE
From Indicator
_ _ _ _ _
And Press ENTER
```

✓ Read the value displayed on the digital indicator and input the number in millimeters into the control unit.

✓ Press ⟨**ENTER**⟩. The compactor removes the angle and slightly raises the loading head. The display is:

```
Angle Is: #.###
 1-Readjust Angle
 2-Accept Angle
    Select (1-2)
```

✓ Repeat the angle readjustment until the desired angle is obtained. When the angle is correct, accept it by pressing ⟨**2**⟩. To print the calibration results, press ⟨**YES**⟩ at the print calibration prompt. The control unit returns to the *Calibration* menu. To return to the *Machine Idle* screen press ⟨**ESC**⟩.

✓ Turn the indicator magnet off by pushing the button so it is flush with the label.

✓ Remove and unplug the indicator. **Handle the indicator with care. DO NOT DROP OR BANG the indicator.** Return the indicator to the Performance Verification Kit.

✓ Reinstall the access doors.

WARNING
Do not operate the unit with the access doors off!

✓ Extrude the compacted sample.

ROTATION SPEED

Normally, the unit does not require calibration of the rotation speed. Calibrate the rotation speed after replacing the dc motor, gear box, or dc motor controller. Also, if the turntable appears to rotate at speeds other than 30 rpm, calibrate the rotation speed.

To calibrate the rotation speed, press ⟨**4**⟩ at the *Calibration* menu on the control unit (see page 3-3).

```
ROTATION CALIBRATION
 Press GYRATION ON
   For Slow Speed
    Measurement
```

Begin the calibration by pressing ⟨**GYRATION ON**⟩. The unit will rotate the turntable.

After calibrating the rotation speed, the display is:

```
ROTATION CALIBRATION
 Target = 30.0 RPM
 Actual = 30.0 RPM
    Press ENTER
```

Press ⟨**ENTER**⟩ to return the angle to 0°.

Return to the *Calibration* menu by pressing ⟨**ENTER**⟩ again. To return to the *Machine Idle* screen press ⟨**ESC**⟩.

PRINT CALIBRATION

To print the last calibration set, press ⟨**5**⟩ at the *Calibration* menu on the control unit (see page 3-3). A calibration set includes the results of the pressure, height, angle, and rotation calibrations.

The control unit allows the user to send the results to either the printer (printer port) or a computer (serial port). After the user selects the correct port, the unit outputs the results and returns to the *Calibration* menu. To return to the *Machine Idle* screen, press ⟨**ESC**⟩.

ADJUSTING THE ANGLE OF GYRATION

The user can set the angle of gyration (α) from 0.5° to 2.0°, with the default angle at 1.25°.

NOTE

Calibrate the angle after making any angle adjustments (see page 3-8).

Remove the two access doors. The user adjusts the angle using the angle stops visible through the front access hatch (see Figure 3-3, page 3-10).

Only use the fixed angle stop for fine angle changes (less than 0.05°). Access the fixed angle stop through the side access door. Use the provided Allen head wrench to turn the screw on the back of the fixed angle stop.

NOTE

Do not turn the screw in the fixed angle stop more than four times in either direction (the screw should not extend more than 3/8" from the fixed angle stop).

Turn the screw toward you to increase the angle or toward the compactor to decrease the angle. At an angle of 1.25°, turn the screw one and a half turns to adjust the angle about one hundredth of a degree.

To make a large angle change (greater than 0.05°), use the adjustable angle stop. Loosen the two screws (about 1/4 turn) with the provided Allen wrench. Access the adjustable angle screw by grasping the stop and turning the turntable towards the access door. **DO NOT** rotate the turntable by grasping the brake disk! Move the adjustable angle stop to the desired angle (from 0.5° to 2.0°). The scale above the stops provides a rough means of positioning the adjustable angle stop. Align the curved portion (left side) of the fixed angle stop with the desired angle on the scale (see Figure 3-4).

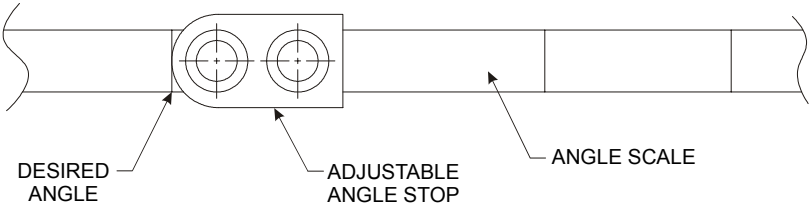

Figure 3-4. Setting the Adjustable Angle Stop

CONVERTING THE UNIT FOR SMALL ANGLES

For compacting samples at an angle less than 0.7°, the user must convert the unit as follows:

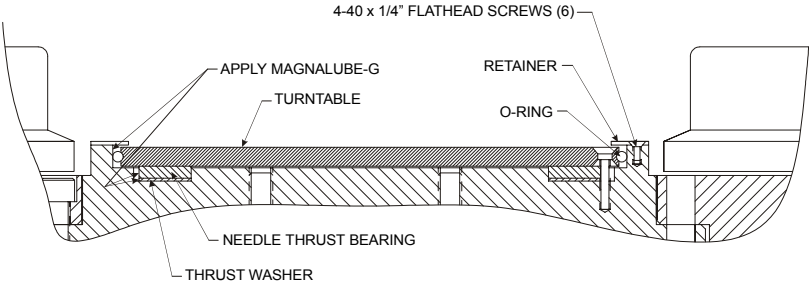

Figure 3-5. Converting the Unit for Small Angles

- ✓ Remove the six 4-40 x 1/4" flathead screws that attach the retaining ring to the unit (see Figure 3-5).
- ✓ Clean the retaining ring with a degreasing cleaner and clean rag.
- ✓ Remove the turntable by inserting a small screwdriver into one of the three holes in the turntable and lifting it up. When the turntable is removed, the bearing may also come out.
- ✓ If the bearing came out with the turntable, then detach them.
- ✓ Remove the o-ring that is around the turntable.
- ✓ Clean the o-ring with isopropyl alcohol and a clean rag.
- ✓ Set the o-ring aside.
- ✓ Clean both the turntable and the bearing with a degreasing cleaner and a clean rag.
- ✓ Set the bearing aside.
- ✓ Using a small screwdriver, remove the washer.

- ✓ Clean the washer with a degreasing cleaner and clean rag.
- ✓ Set the washer aside.
- ✓ With a degreasing cleaner and a clean rag, clean the area inside the unit that contained the turntable, bearing, and washer.
- ✓ Carefully insert the turntable into the cavity.
- ✓ Using three 8/32 x 3/4" flathead screws, screw the turntable to the unit.
- ✓ Reinstall the clean retainer. Tighten the six 4-40 x 1/4" flathead screws in a crisscross pattern.

NOTE

When compacting at angles less than 0.7°, apply a light lubricant such as Slick 50® One Lube™ to the turntable before compacting each specimen.

If the user wants to compact specimens at an angle greater than 0.7° after the unit is set up for an angle less than 0.7°, then perform the following:

- ✓ Remove the six 4-40 x 1/4" flathead screws that attach the retaining ring to the unit.
- ✓ Clean the retaining ring with a degreasing cleaner and clean rag.
- ✓ Remove the three 8/32 x 3/4" flathead screws that attach the turntable to the unit.
- ✓ Insert a small screwdriver into one of the three holes in the turntable and lift it up.
- ✓ Clean the turntable with a degreasing cleaner and a clean rag.
- ✓ Install a clean washer.
- ✓ Generously coat the top of the washer with Magnalube®-G.

- ✓ Install a clean bearing.
- ✓ Generously coat the top of the bearing with Magnalube-G.
- ✓ Apply Magnalube-G to the inside diameter of the cavity.
- ✓ Install a clean o-ring in the groove around the clean turntable. Ensure the o-ring is fully seated in the groove.
- ✓ Carefully insert the turntable into the cavity.
- ✓ Ensure that the plate is fully seated and the o-ring is still properly installed around the turntable.
- ✓ Reinstall the clean retainer. Tighten the six 4-40 x 1/4" flathead screws in a crisscross pattern.

NOTE

When compacting specimens at an angle greater than 0.7°, do not lubricate the turntable.

CHANGING THE MOLD SIZE

With the 100-mm mold option, the user can create 100-mm specimens with the Model 4140. Before making 100-mm specimens, install the 100-mm loading head, change the mold size stored in the control unit, and recalibrate the height and the angle of gyration.

To install the 100-mm loading head, refer to Figure 3-6, and follow the steps below:

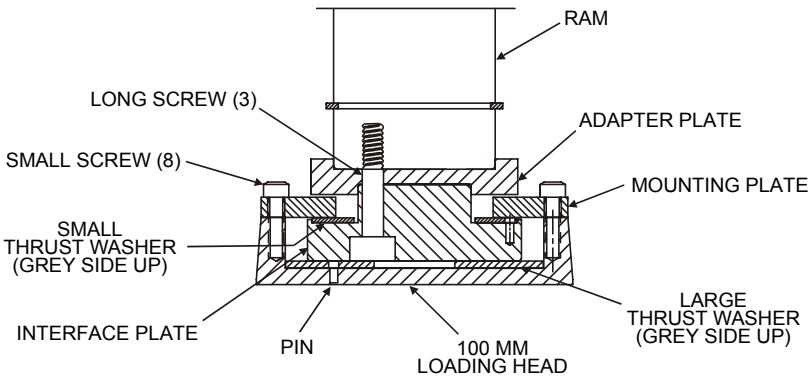

Figure 3-6. Changing the Mold Size

✓ With the chamber door closed, lower the loading head until you can see the eight hex head screws on the loading head.

✓ Open the chamber door.

✓ Holding the 150-mm loading head, use a 3/16" Allen wrench to remove the eight screws and the washers under the screws.

✓ Carefully lower the loading head.

✓ Set the 150-mm loading head aside.

✓ Using a 3/16" Allen wrench, remove the three screws and washers that secure the interface plate to the ram.

- ✓ Remove the interface plate from the ram.
- ✓ Lower the mounting plate.
- ✓ Place the interface plate into the 150-mm loading head.
- ✓ Install the mounting plate on the 150-mm loading head with the eight screws removed earlier.
- ✓ Set this 150-mm assembly aside.
- ✓ The 100-mm loading head kit contains two thrust washers. Install the large thrust washer, with the grey side up, into the 100-mm loading head. The pin in the loading head should engage the hole in the thrust washer.
- ✓ Use Magnalube-G to generously grease the grey surface of the larger thrust washer. Be careful not to disengage the pin from the thrust washer.
- ✓ Set the greased 100-mm assembly aside.
- ✓ Install the small thrust washer (supplied with the 100-mm kit), with the grey side up, into the shallow recess of the interface plate. The pin in the interface plate should engage the hole in the thrust washer.
- ✓ Use Magnalube-G to generously grease the grey surface of the small thrust washer. Be careful not to disengage the pin from the thrust washer.
- ✓ Install the mounting plate over the interface plate. The mounting plate should contact the greased surface.
- ✓ Install the adapter (supplied with the 100-mm kit) onto the interface plate, with the three holes on each part aligned.
- ✓ Install this assembly onto the ram. Secure it with the three long screws and the washers (supplied with the 100-mm kit). Tighten the screws with a 3/16" Allen wrench.

- ✓ Install the greased 100-mm loading head onto the interface plate. Secure the 100-mm loading head to the mounting plate with the eight small screws without washers (supplied with the 100-mm kit).

- ✓ Ensure that the 100-mm loading head slides freely from side to side.

- ✓ To change the mold size stored in the control unit, press ⟨**SELECT**⟩.

- ✓ Recalibrate the specimen height (see page 3-6).

- ✓ If desired, recalibrate the angle of gyration (see page 3-8). If you do not recalibrate the angle of gyration, it will be about 0.6° higher than the angle set for the 150-mm mold.

The compactor can now be used to produce 100-mm asphalt specimens. To use the 150-mm mold again, repeat the procedure above, but replace the 100-mm loading head with the 150-mm loading head and set the mold size to 150-mm. Note that the 150-mm loading head has washers under the eight small screws that secure the loading head. Remember to recalibrate the angle of gyration and the height after changing the mold size.

NOTES

CHAPTER 4

MAKING A SPECIMEN

From preparing the hot mix asphalt to extruding the specimen from the mold, this chapter provides step-by-step guidelines for creating an asphalt specimen with the Model 4140 Gyratory Compactor.

CONTENTS

Safety Warnings 4-2

Compacting the Specimen 4-3
- Setting Up 4-3
- Preparing a Specimen 4-4
- Compacting the Specimen 4-5

Extruding a Specimen 4-9

SAFETY WARNINGS

The Troxler Model 4140 is a safe, durable gyratory compactor. To alert the user of compactor motion, the control unit beeps twice before starting any movement. Not every example of improper or unauthorized use of this unit which may lead to malfunction or accident can be anticipated. Thus, if a particular use is not specifically mentioned in this manual as authorized, then consult Troxler about the alternate use. Otherwise, it is assumed that the use is unauthorized and improper.

Troxler recommends the following safety precautions:

- Wear safety glasses when preparing an asphalt specimen.
- Always wear heat resistant gloves when handling any hot substance.
- When moving the mold, grasp it firmly on either side using the handle.
- Remove all objects, except the mold and asphalt specimen, from the specimen chamber before pressing the manual compaction keys or the automatic compaction key.
- Do not operate without the guards (shrouds) in place or the door closed.
- Do not wear loose clothing or jewelry when operating the compactor.
- Keep hands away from the gyratory compactor when the unit is in motion.
- With the shrouds off, the gyratory compactor poses an electrical hazard. Unplug the gyratory compactor before removing the shrouds.

COMPACTING THE SPECIMEN

The following is a checklist for compacting an asphalt specimen with the Model 4140. Each step is discussed in detail in the following text.

✓ Set up the gyratory compactor.

✓ Prepare the specimen.

✓ Clean the turntable and loading head with a degreasing cleaner.

✓ If compacting at angles less than 0.7°, then convert the unit for small angle compaction (see page 3-18) and before each compaction cycle, apply a light lubricant such as Slick 50 One Lube to the turntable.

✓ Compact the asphalt specimen.

✓ Remove the mold containing the compacted specimen from the compactor.

✓ Extrude the asphalt specimen from the mold.

SETTING UP

The Model 4140 requires some set up before compacting a specimen (see page 2-9). Check the number of gyrations and pressure (see page 2-10). If the user wants to automatically output gyration versus height data, connect the control unit to the computer or printer and turn on the *Auto Output* option (see page 2-12). To print the pressure-versus-height data, turn on the *Pressure Printout* feature (see page 2-17).

PREPARING A SPECIMEN

Slowly insert the puck, with the small face down, in the mold. The bottom of the puck will hang just below the mold bottom. For the rest of the chapter, the mold with the puck inserted will simply be called the mold.

NOTE

Always wear heat resistant gloves when handling any hot substance.

When moving the mold, firmly grasp it on either side using the handle.

Mix and heat the asphalt to consolidation temperature. Also, heat the mold with the puck inserted.

CAUTION

Do not heat molds above 175 °C (350 °F). Heating above this temperature may warp the mold and create errors in the angle of gyration.

Remove the asphalt from the oven. Place it on your work surface. Remove the heated mold from the oven. Place it next to the hot mix asphalt.

To prevent the asphalt from sticking to the puck, place a specimen paper in the heated mold (see Figure 4-1). Load the hot mix asphalt into the mold. If using the optional temperature probe, measure the asphalt temperature before inserting the top specimen paper. To prevent the asphalt from sticking to the loading head, place another specimen paper on top of the asphalt.

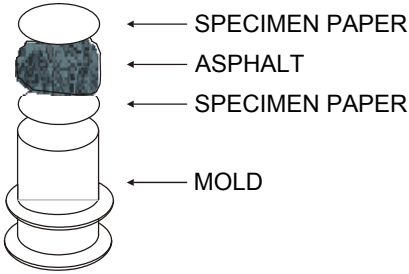

Figure 4-1. Loading the Mold

Before each compaction cycle, clean the turntable and loading head with a degreasing cleaner. If compacting at angles less than 0.7°, remember to convert the unit (see page 3-18). For small angles apply a light lubricant such as Slick 50 One Lube to the turntable before each compaction cycle.

NOTE

Before placing the mold in the chamber, ensure that the angle has been removed and that the loading head is centered.

Wearing heat-resistant gloves and safety glasses, put the hot mold loaded with hot mix asphalt in the specimen chamber.

Rotate the mold so that the notch on the mold handle is at 6 o'clock. This aligns the mold notch with the ram pin. Close the chamber door.

COMPACTING THE SPECIMEN

The Model 4140 Gyratory Compactor offers two compaction modes: automatic compaction and manual compaction. With automatic mode the user compacts the specimen with a single keypress. With this mode the user can also automatically output data. With the manual mode the user can guide the compactor through each step of compaction with a single, specific keypress.

The automatic mode is helpful for general use. The manual mode provides the user with greater flexibility (see page 4-7).

Automatic Compaction

Check that the black mark on the mold handle is at 6 o'clock. With a loaded mold properly in the chamber and the chamber door closed, press ⟨**START**⟩.

After beeping twice, the unit lowers the loading head. If the mold notch is not aligned with the pin after the unit begins lowering the loading head, then press ⟨**STOP**⟩, open the chamber door, align the mold with the pin, close the door, and press ⟨**START**⟩. If the loading head hits the top of the mold, the control unit displays the error and the loading head will retract. Open the chamber door, center the loading head, close the chamber door, and press ⟨**START**⟩ to resume compaction.

Step away from the unit as the Model 4140 compacts the specimen. The unit will beep twice before starting any movement. The two LED displays show the specimen height (updated each revolution) and number of gyrations remaining. The lights beside the manual compaction keys and the control unit screen show the compaction progress.

With the *Auto Output* feature, the compactor automatically outputs the gyration-versus-height data during compaction. To manually output data, see page 2-18. With the *Pressure Printout* feature on, the compactor prints the pressure-versus-number of gyrations data at the end of the compaction cycle.

After the unit raises the ram, open the chamber door. Wearing heat-resistant gloves, remove the mold from the compactor.

If desired, allow the specimen to cool before extruding it from the mold. For more information on extruding the specimen see page 4-9. After extruding it from the mold, remove the specimen papers from the top and bottom of the specimen.

Clean the turntable and the loading head with a degreasing cleaner.

Manual Compaction

The manual compaction keys allow the user increased flexibility. With manual compaction, the user can start each phase of the compaction process with a single, specific keypress. The control unit beeps twice before starting any motion.

The two LED displays show the specimen height (updated each revolution) and number of gyrations remaining. The lights beside the manual compaction keys and the control unit screen show the compaction progress. After each phase, the light beside the next logical manual compaction key blinks.

Check that the notch on the mold handle is at 6 o'clock. With a loaded mold properly in the chamber, close the chamber door.

The first phase is lowering the ram. Press ⟨**RAM DOWN**⟩.

After beeping twice, the unit lowers the ram. If the mold notch is not aligned with the pin after the unit begins lowering the loading head, then press ⟨**STOP**⟩, open the chamber door, align the mold, close the door, and press ⟨**RAM DOWN**⟩. If the loading head hits the top of the mold, the control unit will display the error and the loading head will retract. Open the chamber door, center the loading head, close the chamber door, and press ⟨**RAM DOWN**⟩ to resume compaction.

Remember that after completing each compaction phase, the light beside the next typical compaction key blinks.

When the **ANGLE ON** light flashes, induce the angle of gyration by pressing ⟨**ANGLE ON**⟩. The unit beeps twice and induces the angle of gyration.

When the **GYRATION ON** light flashes, begin gyration by pressing ⟨**GYRATION ON**⟩. The unit will beep twice and begin gyratory compaction.

After the unit completes the full number of gyrations, the **ANGLE OFF** light flashes. Remove the angle of gyration by pressing ⟨**ANGLE OFF**⟩. The unit will beep twice before moving.

With the angle of gyration removed, the **RAM UP** light flashes. Raise the ram by pressing ⟨**RAM UP**⟩.

To manually output data, see page 2-18.

After raising the ram, open the chamber door. Wearing heat-resistant gloves, remove the mold from the compactor.

Allow the specimen to cool before extruding it from the mold. For more information on extruding the specimen see page 4-9. After extruding it from the mold, remove the specimen papers from the top and bottom of the specimen.

Clean the turntable and the loading head with a degreasing cleaner.

EXTRUDING A SPECIMEN

Allow the specimen to cool before extrusion.

To extrude a specimen,

- ✓ Slide the bottom of the mold into the top of the extruder (see Figure 4-2).
- ✓ Turn the black knob on the extruder clockwise until it stops.
- ✓ Slide the extruder handle onto the shaft on the front of the extruder.
- ✓ Use the handle to pump the extruder until the top of the puck is flush with the top of the mold.
- ✓ Slide the asphalt specimen off the puck.
- ✓ Lower the extruder by turning the black knob on the extruder about 1/2-turn counterclockwise.
- ✓ Slide the mold out of the extruder.
- ✓ Remove the specimen papers from the specimen.
- ✓ Clean the mold, puck, and loading head with a degreasing cleaner.
- ✓ Remove the handle.

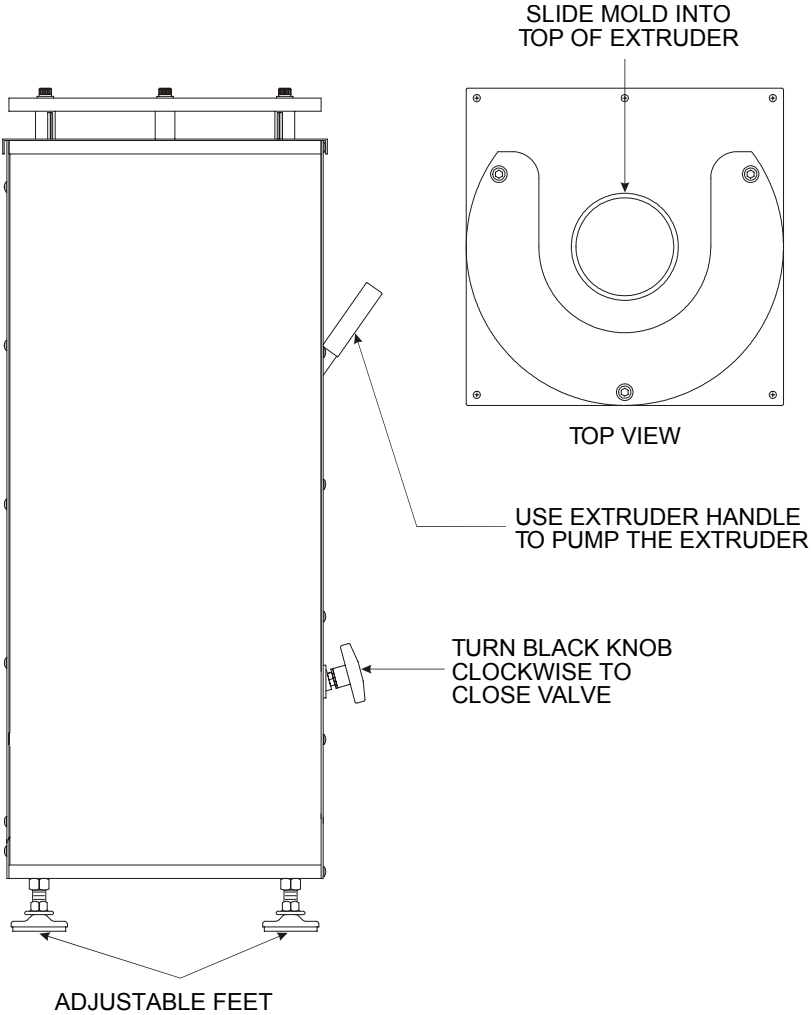

Figure 4-2. Mold in the Extruder

APPENDIX A

TROUBLESHOOTING AND SERVICE

This appendix contains information on servicing and maintaining the Model 4140 Gyratory Compactor.

CONTENTS

Troubleshooting A-2

General Maintenance A-7
Service Information A-7
Schedule of Maintenance A-8

Replacement Parts A-16
Accessories A-16
Options A-17

Returning Parts for Service A-18

Troxler Service Centers A-19

TROUBLESHOOTING

See safety warnings on page 2-2.

GYRATORY COMPACTOR DOES NOT TURN ON

✓ Ensure that the unit is plugged in.

✓ Check that the power switch is in the *ON* position.

✓ Check that the fuse for the wall outlet is not blown.

✓ Check the power to the wall outlet.

CONTROL UNIT DISPLAYS KEYPAD ERROR

✓ A key is stuck. Check the keypad. To replace, call a Troxler Service Center.

MOVING PARTS ARE NOT MOVING

✓ Check that all shrouds are in place.

✓ Ensure the unit is turned on.

✓ A switch may be broken. Check the shroud and emergency switches.

CONTROL UNIT DISPLAYS: **A Panel Interlock Switch is Open**

✓ Check that all the shrouds are properly mounted and secured.

CONTROL UNIT DISPLAYS: **Emergency Switch Is Closed. Rotate To Open**

✓ The emergency stop feature is active. To deactivate, rotate the ⟨**EMERGENCY**⟩ stop button clockwise. The control unit returns to the *Machine Idle* screen.

RAM PIN ALIGNED BUT DOES NOT ENTER MOLD NOTCH

- ✓ Ensure that the angle is removed.
- ✓ Clean support ring and mold. The support ring enters the mold after the loading head prior to compaction. Clean both with a degreasing cleaner and clean rag.

CONTROL UNIT DISPLAYS: Ram Too Low

- ✓ There is not enough asphalt in the mold. Add more asphalt. (The minimum specimen height is 50 mm.)
- ✓ Check the height calibration (see page 3-6).

CONTROL UNIT DISPLAYS: DC Motor ERROR!

- ✓ If you made the changes needed for compacting specimens at angles less than 0.7°, always apply a light lubricant such as Slick 50 One Lube to the turntable before each compaction cycle.
- ✓ Clean and grease the needle thrust bearings (see page A-12).

THE CONTROL UNIT DISPLAYS: Printer Error Press ENTER To Continue Or ESC To Abort

- ✓ Check that the printer is plugged in.
- ✓ Check that the printer is connected to the control unit.
- ✓ Ensure that the printer is on.

DATA DOES NOT PRINT AUTOMATICALLY AFTER COMPACTION

- ✓ For printing gyrations-versus-height data, ensure that the *Auto Output* feature is enabled (see page 2-12).
- ✓ If printing gyrations-versus-height data, check that the printer port is specified for the *Auto Output* feature (see page 2-12).
- ✓ For printing pressure-versus-height data, ensure that the *Pressure Printout* feature is enabled (see page 2-17).

CONTROL UNIT DISPLAYS: Printer Out of Paper Press ENTER To Continue Or ESC To Abort

✓ See the printer *Operating Instructions* for details on installing paper.

CONTROL UNIT DISPLAYS: Printer Offline Press ENTER To Continue Or ESC To Abort

✓ Press ⟨**ON LINE**⟩ on the printer. See the printer *Operating Instructions* for details on the printer control panel.

CONTROL UNIT DISPLAYS: No Data to Plot

✓ Compact a specimen before attempting to plot.

CONTROL UNIT DISPLAYS: Serial Printer Not Ready

✓ Check the serial cable and serial connection.

✓ When using GyroPave software, select *Start* from the *Load Data From Compactor* screen before trying to load data either automatically or manually.

HEIGHT-VERSUS-GYRATIONS DATA DOES NOT DOWNLOAD TO THE COMPUTER

✓ Check that the *Auto Output* feature is turned on (see page 2-12).

✓ Check that the serial port is specified for the *Auto Output* feature (see page 2-12).

✓ Check serial parameters: 9600 baud rate, 8 data bits, 2 stop bits, and no parity.

✓ When using the GyroPave software, select *Start* from the *Load Data From Compactor* screen before trying to load data either automatically or manually.

HEIGHT-VERSUS-GYRATIONS DATA DOES NOT PRINT

Ensure the *Auto Output* feature is turned on (see page 2-12).

PRESSURE-VERSUS-GYRATIONS DATA DOES NOT PRINT

Check that the *Pressure Printout* feature is enabled (see page 2-17).

OTHER PRINTER PROBLEMS

✓ See the printer *Operating Instructions* for further printer troubleshooting hints.

TURNTABLE DOES NOT APPEAR TO ROTATE AT 30 RPM

✓ Calibrate the rotation speed (see page 3-14).

✓ Call your Troxler representative.

GENERAL CALIBRATION PROBLEMS

✓ Check the calibration equipment power connection.

✓ Check all cable connections.

✓ For the height calibration, ensure that the puck and spacer are centered on the turntable.

✓ For the pressure calibration, ensure that the load cell is centered on the turntable.

✓ Repeat the calibration once. If you still have problems with the calibration, call your Troxler representative.

CONTROL UNIT DISPLAYS: No Communication With Cal Load Cell. Press ENTER To Reentry

- ✓ Check all connections between the control unit, PIM-3, and the external load cell (especially check between the PIM-3 and the load cell.
- ✓ Check the power connection.

ALL OTHER CONTROL UNIT ERROR MESSAGES

- ✓ Record the error message.
- ✓ Call the factory for further information (919) 549-8661.

GENERAL MAINTENANCE

The following sections provide general service information for the Model 4140, as well as a recommended schedule for performing regular maintenance on the unit.

SERVICE INFORMATION

WARNING

To prevent personal injury or equipment damage, unplug the gyratory compactor before attempting to service the unit.

The Model 4140 records the total hours of operation, and the time since its last service.

To view the service information, access the *Menu* options by pressing ⟨**MENU**⟩.

```
 Press # To Select:
1 - # of Gyrations
2 - Pressure
  ESC To Exit or ↕
```

Access the *Service* feature by pressing ⟨**8**⟩. The screen is:

```
 Hours of Operation
     XXXX Hours
 Since Last Service
     XXXX Hours
```

To return to the *Machine Idle* screen, press ⟨**ENTER**⟩.

SCHEDULE OF MAINTENANCE

For printer maintenance, see the printer *Operating Instructions*.

NOTE

The user can use any degreasing cleaner and a clean rag to clean metal parts.

Use only isopropyl alcohol and a clean rag to clean the o-ring.

See safety warnings on page 2-2.

Before Each Cycle

✓ Clean the turntable and loading head with a degreasing cleaner.

✓ If compacting a specimen at an angle less than 0.7°, apply a light lubricant such as Slick 50 One Lube to the turntable before each compaction cycle.

Daily

✓ Clean the mold, the puck, the loading head, the support ring, and the cam followers (that is, the three rotating parts around the turntable) with a degreasing cleaner.

✓ Apply a light coat of Magnalube-G to the cam followers and support ring.

Every 80 Hours of Operation

✓ Vacuum the entire turntable area.

✓ After cleaning the turntable and vacuuming the area, wipe the turntable with a clean, dry cloth.

✓ Clean the brake disk (located under the work table and above the angle scale) with a degreasing cleaner.

✓ Remove the front access panel.

✓ Clean the first quarter of the brake disk with a degreasing cleaner.

WARNING
Stay away from all moving parts.

✓ With hands away from the access door, press ⟨**ANGLE OFF**⟩. Allow the turntable to rotate a quarter turn, then press ⟨**ESC**⟩.

✓ Clean the next quarter of the brake disk with a degreasing cleaner.

✓ Repeat the above two steps until the entire brake disk is clean.

✓ Check the following for excessive wear (damage beyond the point of operation) or damage:

- Turntable – Ensure that surface is reasonably flat. Replace if necessary;
- Cam followers – Polishing on the surface is fine. Check for deep grooves, cocking, or bending. Rotate the cam followers. If they are grooved, cocked, or bent or will not rotate, call your Troxler representative;
- Mold – Check for pitting or chipping. Check flange on bottom for wear (flat area wider than 0.2"). Replace if necessary;
- Retaining ring (inside the bottom of the mold) – Ensure that the ring is in place. If necessary, replace the mold.

- ♦ Puck – Ensure that the surface is reasonably flat. Check for pitting or chipping. Replace if necessary;

- ♦ Loading head – Ensure that the surface is reasonably flat. Check for pitting or chipping. Replace if necessary;

- ♦ Engagement pin (on ram) – Check that the pin is engaging the notch in the mold. If not, call your Troxler representative.

✓ After the first 80 hours check the tension on the dc motor chain located inside the lower shrouds. (After the initial tension check, check the tension every 960 hours.) Move the chain from side to side. If the total horizontal displacement is greater than 1/2", then tighten the chain. To tighten the chain:

- ✓ Using a 9/16" box wrench, loosen the four screws connecting the gearbox (which has the chain around it) to the unit.

- ✓ Move the gearbox to adjust the chain tension.

- ✓ With the tension adjusted, tighten the four bolts with a 9/16" box wrench.

- ✓ Move the chain from side to side. If the horizontal displacement is greater than 1/2", then repeat the tightening procedure.

✓ Using Magnalube-G, lubricate the two shafts inside the specimen chamber.

✓ Following the steps below disassemble, clean, and grease the loading head. Recalibrate the specimen height after regreasing the loading head.

- ✓ With the chamber door closed, lower the loading head until you can access the eight hex head screws on the loading head.

- ✓ Open the chamber door.

WARNING

To prevent injury, exercise caution when removing or installing the eight loading head screws.

- ✓ Holding the loading head, use a 3/16" Allen wrench to remove the eight screws and the washers under the screws.
- ✓ Lift the plate on the ram and thoroughly clean underneath with a degreasing cleaner.
- ✓ Thoroughly clean the loading head with a degreasing cleaner.
- ✓ Inspect the washer under the plate and the washer inside the loading head for excessive wear. Replace if necessary.
- ✓ Using Magnalube-G, generously grease under the plate and inside the loading head.
- ✓ Reinstall the loading head. Remember to install the washers. Finger tighten the screws, then tighten them in a crisscross pattern with the 3/16" Allen wrench.
- ✓ Wipe away any excess lubricant with a clean, dry cloth.

✓ Check the tightness of the eight bolts under the upper sliding plate that connect the plate to the load shaft (part of the ram assembly).

✓ Check the tightness of the eight bolts under the lower sliding plate that connect the plate to the upper mold support (part of the ram assembly).

✓ Following the steps below, clean the thrust bearing and related parts and grease specified parts (see Figure A-1). During cleaning, visually inspect all parts for wear. Replace parts if necessary.

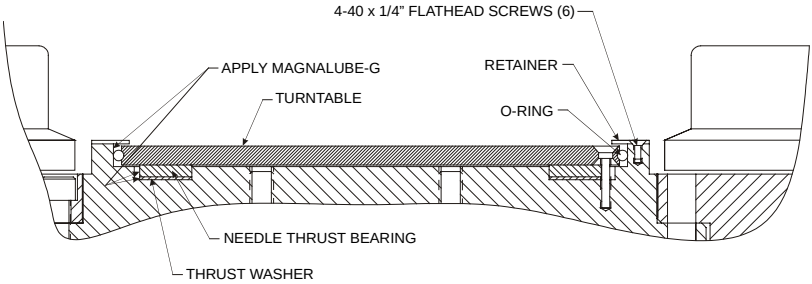

Figure A-1. Cleaning and Greasing the Bearing and Related Parts

- ✓ Remove the six 4-40 x 1/4" flathead screws that attach the retaining ring to the unit.
- ✓ Clean the retaining ring with a degreasing cleaner and clean rag.
- ✓ Remove the turntable by inserting a small screwdriver into one of the three holes in the turntable and lifting it up. When the turntable is removed, the bearing may also come out.
- ✓ If the bearing came out with the turntable, then detach them.
- ✓ Remove the o-ring that is around the turntable.
- ✓ Clean the o-ring with isopropyl alcohol and a clean rag.
- ✓ Clean both the turntable and the bearing with a degreasing cleaner and a clean rag.
- ✓ Using a small screwdriver, remove the washer.
- ✓ Clean the washer with a degreasing cleaner and clean rag.
- ✓ With a degreasing cleaner and a clean rag, clean the area inside the unit that contained the turntable, bearing, and washer.

- ✓ Reinstall the clean washer.
- ✓ Generously coat the top of the washer with Magnalube-G.
- ✓ Reinstall the clean bearing.
- ✓ Generously coat the top of the bearing with Magnalube-G.
- ✓ Apply Magnalube-G to the inside diameter of the cavity (see Figure A-1).
- ✓ Reinstall the clean o-ring in the groove around the clean turntable. Ensure the o-ring is fully seated in the groove.
- ✓ Carefully insert the turntable into the cavity.
- ✓ Ensure that the plate is fully seated and the o-ring is still properly installed around the turntable.
- ✓ Reinstall the clean retainer. Tighten the six 4-40 x 1/4" flathead screws in a crisscross pattern.

Every 500 Hours of Operation or Once a Year

✓ Add grease to the ram as follows:

- ✓ Remove the cover from the lower grease fitting.
- ✓ Add three to four pumps of Mobilith® AW-1 to the lower grease fitting.
- ✓ Replace the lower grease fitting cover.
- ✓ Remove the upper grease fitting cover.
- ✓ Add one to two pumps of Mobilith AW-1 to the upper grease fitting.
- ✓ Replace the upper grease fitting.

- ✓ After the first 500 hours change the initial oil in the rotation gearbox attached to the dc motor chain (after the initial change, change the oil every 2500 hours).

  - ✓ Remove the right shroud. **DO NOT** get anything in the electronic components!

  - ✓ Place a pan under the drain plug located on the bottom.

  - ✓ Using a 1/4" hex wrench, remove the drain plug.

  - ✓ Allow the oil to drain.

  - ✓ Using a 1/4" hex wrench, replace the drain plug.

  - ✓ Using the vent plug opposite the motor, fill the gearbox with an AGMA #7C lubricant.

Every 960 Hours of Operation

- ✓ Move the dc motor chain from side to side. If the horizontal displacement is greater than 1/2", then tighten the chain. To tighten the chain:

  - ✓ Using a 9/16" box wrench, loosen the four screws connecting the gearbox (which has the chain around it) to the unit.

  - ✓ Move the gearbox to adjust the chain tension.

  - ✓ With the tension adjusted, tighten the four bolts with a 9/16" box wrench.

  - ✓ Move the chain from side to side. If the horizontal displacement is greater than 1/2", then repeat the tightening procedure.

- ✓ Check the brake pads for wear. The brake pads are above the dc motor. To check the pads, remove the back shroud. If needed, replace the pads.

Every 1000 Hours of Operation

✓ Contact Troxler for a system overhaul.

Every 2500 Hours of Operation

✓ Change the oil in the rotation gearbox.

- ✓ Remove the right shroud. **DO NOT** get anything in the electronic components!
- ✓ Place a pan under the drain plug located on the bottom.
- ✓ Using a 1/4" hex wrench, remove the drain plug.
- ✓ Allow the oil to drain.
- ✓ Using a 1/4" hex screw, replace the drain plug.
- ✓ Using the vent plug opposite the motor, fill the gearbox with an AGMA #7C lubricant.

REPLACEMENT PARTS

Part Number	Description
106737	Insert, (Turntable) Wear Plate
012816	Bearing, Thrust Needle, 4140 (4 required)
012817	Bearing, Thrust Washer, 4140 (4 required)
107059	Retainer, Wear Plate (Turntable Retainer)
007118	O-ring, 6-3/4 O.D. x 1/8
106652.0200	(Loading Head) Puck, 6" Mold (Upper)
106726.0200	Washer (for Loading Head), Lower Thrust (6" Puck)
106727	Washer (for Under Plate), Upper Thrust (6" Puck)
004422	Switch, Panel Interlock
106885	Panel (Shroud), Front
106886	Panel (Shroud), Rear
106887	Panel (Shroud), Right Side
106888	Panel (Shroud), Left Side
106938	Access Door

ACCESSORIES

Part Number	Description
012786	Lubricant, Magnalube-G, 1-lb can
012784.1000	Lubricant, Magnalube-G, 0.75-oz tube
106989	Height Standard SN _ _ _ _
106958	Printer, Data Panasonic KX-P-1150
106514.0001	Cable Assembly, Serial 16 ft
107026	Cable, Parallel Printer 6 ft
106748	Model 4140 *Manual of Operation and Maintenance*
107406.1000	GyroPave for Windows® 3.11, Windows 95®, and Windows 98®, 3.5" Disk
108543	GyroPave for Windows *Manual of Operation and Instruction*
107314	Assembly, Gyratory Extractor (Extruder)

OPTIONS

Part Number	Description
107171.1000	Software, FHWA 4140 3.5" Diskette
107044	Mold Assembly w/ Package (Optional Accessory) 4140 (150 mm)
106648	Puck, 6" Mold (Bottom)
106952	Specimen Paper, 100-mm Diameter 1 Pack (Quantity 500)
106953	Specimen Paper, 150-mm Diameter 1 Pack (Quantity 500)
106995	Performance Verification Kit (Available Spring 1999)
108870	Calibration Load Cell
108675	Assembly, Logic Gauge Mount
107043.0001	1/4" Hex Tool, Modified
106598	AC Charger, 16 V dc, 250 mA
106995	Performance Verification Kit (Before Spring 1999)
106999	Load Cell (Pressure) Calibration Kit Modified
107000	Assembly, Travel Indicator Mount (Angle Excursion Indicator)
107036	Remote Control, Travel Indicator
107043.0001	1/4" Hex Tool, Modified
107077.0312	Probe, T/C Ungrounded (Temperature Probe)
107248	Assembly, 100-mm Puck (Adapter Kit)
107238	Assembly Lifter
107247	Mold Assembly, 100-mm w/ Packaging
106647	Puck, 4.0 Diameter Mold - Bottom
107346	Transformer Gyro, 240/120 VAC

RETURNING PARTS FOR SERVICE

Items returned for service must be accompanied by an RGA (Returned Goods Authorization) number, and a description of the instrument and its problem. This information is used by Troxler shipping and service personnel to expedite the repair work.

To obtain an RGA number, please call or fax Troxler headquarters at Research Triangle Park, or one of the branch offices with your request.

Please have the following information available when requesting an RGA number:

- Unit (or part) model and serial number.
- Part number/serial number (if applicable).
- Is the unit (part) still under warranty?
- Problem or difficulty you are having with the unit.
- Shipment method to Troxler and for return shipment.
- Shipping and billing address (not P.O. Box) – street address and zip.
- Phone number/contact (for questions from Troxler).
- Will estimate be required prior to performing any work on the part?
- Payment method: credit card, account number, or purchase order number. **All government agencies (city, county, state, and federal) <u>must</u> send purchase order numbers.**

NOTE

To prevent order duplication, if an order has been placed by telephone, please write "Confirming Order" on any follow-up written requests.

TROXLER SERVICE CENTERS

Troxler Corporate Headquarters
3008 Cornwallis Road
P.O. Box 12057
Research Triangle Park, NC 27709
Phone: 1.877.TROXLER (1.877.876.9537)
Outside the U.S.A.: +1.919.549.8661
Fax: +1.919.549.0761
Web: www.troxlerlabs.com

Technical Support
Phone: 1.877.TROXLER (1.877.876.9537)
E-mail: TroxTechSupport@troxlerlabs.com

Midwestern Branch Office
1430 Brook Drive
Downers Grove, IL 60515
Fax: 630.261.9341

Western Regional Branch Office
11300 Sanders Drive, Suite 7
Rancho Cordova, CA 95742
Fax: 916.631.0541

Southwestern Branch Office
2016 East Randol Mill Road
Suite 406
Arlington, TX 76011
Fax: 817.275.8562

Florida Service Center
2376 Forsyth Road
Orlando, FL 32807
Fax: 407.681.3188

Troxler European Subsidiary
Troxler Electronics GmbH
Gilchinger Strasse 33
D.82239 Alling nr. Munich,
Germany
Phone: ++49.8141.71063
Fax: ++49.8141.80731
E-mail: troxler@t-online.de

NOTE

To locate an independent, Troxler-authorized service center near you, call 1.877.TROXLER (1.877.876.9537).

NOTES

APPENDIX B

SPECIFICATIONS

This appendix contains specifications for the Model 4140 Gyratory Compactor.

CONTENTS

Electrical Specifications B-2

Mechanical Specifications B-4

ELECTRICAL SPECIFICATIONS

Main Power	120 V ac, 60 Hz, 15 A (230 V ac, 50 Hz option available)
Electronics Power Supply	±15 V dc at 0.5 A and + 5 V dc at 3 A
Two Microprocessors	128 K RAM, 64 K PROM (each)
Two LED Displays	4 Character Numeric
LCD Display	4 x 20 Character Alphanumeric
Baud Rate	9600
Serial Data Format	8 Data Bits 2 Stop Bits No Parity
RS232 Configuration	Data Terminal Equipment (DTE)
Connector Type	9 pin Male D-Subminiature
4140 Printer Cable	Standard Parallel Printer Cable
Printer	See Printer *Operating Instructions*

<u>4140 Serial Pin Description</u> (* wires used):

1	DCD	INPUT
*2	RX	INPUT
*3	TX	OUTPUT
*4	DTR	OUTPUT
*5	GND	COM
*6	DSR	INPUT
*7	RTS	OUTPUT
*8	CTS	INPUT
9	RI	INPUT

4140 to IBM® Compatible Computer Cable:

9 pin FEMALE	9 pin FEMALE
Rx (pin 2)	Tx (pin 3)
Tx (pin 3)	Rx (pin 2)
DTR (pin 4)	DSR (pin 6)
DSR (pin 6)	DTR (pin 4)
RTS (pin 7)	CTS (pin 8)
CTS (pin 8)	RTS (pin 7)
GND (pin 5)	GND (pin 5)

MECHANICAL SPECIFICATIONS

Size (with ram cover on)	214H x 89W x 94D cm 84H x 35W x 37D in
Size of Extruder Base (without handle)	12W x 14D in
Height (with ram cover off)	188 cm (74 in)
Weight	363 kg (800 lb)
Shipping Weight	408 kg (900 lb)
Mold Weight	10.2 kg (22.5 lb)
Puck Weight	3.2 kg (7.0 lb)
Consolidation Pressure Range	200 to 1000 kPa (29 to 145 psi)
Pressure Accuracy	200 to 600 kPa ± 30 kPa for gyrations 1 – 5 ± 18 kPa for gyrations 6 and up 600 to 1000 kPa ± 5% for gyrations 1 – 5 ± 3% for gyrations 6 and up
Number of Gyrations	0 – 999
Angle of Gyration Range	0.5° to 2.0° ± 0.02 , in 0.02 Increments (Factory calibrated at 1.25)
Rotation Speed	30 ± 0.5 rpm
DC Motor	1 hp
DC Motor Nominal Speed	1800 rpm

Maximum Specimen Temperature	162 °C (324 °F)
Maximum Mold Temperature	175 °C (350 °F)
Ambient Operating Temperature	10 to 70 °C (50 to 158 °F)
Ambient Storage Temperature	–55 to 85 °C (–67 to 185 °F)
Printer	See Printer *Operating Instructions*

NOTES

INDEX

A

Access Code ix
Access Panels 3-8
    Part Number A-16
Accessories 1-5
Adjusting the Angle 3-16
Angle
    Access Panels 3-8
    Calibration 3-2, 3-8
    Calibration Remote Control 3-11
    Changing 3-16
    Excursion Indicator 3-8
    Small Angle 3-18
    Verify 3-2
ANGLE OFF Key 2-6
ANGLE ON Key 2-5
Arrow Keys 2-6
Assembly 2-3
    Mold/Puck 4-4
ASTM 1-4
Auto Output 2-12, 4-6, A-3, A-4, A-5
Automatic Compaction 4-6

B

Baud Rate B-2
Brake
    Disk A-9
    Pads A-14

C

Cable
    Computer B-3
    Description, Serial B-2
CALIB Key 2-5
Calibrating
    Rotation Speed 3-14

Calibration 3-3
Angle 3-2, 3-8
Angle Remote Control 3-11
Height 3-2, 3-6
Load Cell ..... 3-3 – 3-5
Menu 3-3
Pressure 3-2, 3-3
Printing 3-15
Problems A-5
Schedule 3-2
Standard 1-6, 3-6
Cam Followers A-8, A-9
Chain Tension A-10, A-14
Chamber, Specimen 4-5
Changing
Angle 3-16
Date 2-16
Mold Size 3-21
Time 2-15
Clock/Calendar 2-14
Format 2-16
Compacting the Specimen 4-5
Compaction
Automatic 4-6
Manual 4-7
Control Unit 1-6
Convert for Small Angles 3-18

D

Date 2-16
DC Motor A-10, A-14, B-4
Decimal Key 2-6
Degreasing A-8
Downloading
Automatic A-3, A-4, 2-12
Format 2-18
Manual 2-18
Dwell Rotations 2-10

E

Electrical Specifications B-2
EMERGENCY Button..... 2-5
ENTER Key..... 2-6
ESC Key 2-5
Extrude..... 4-9
Extruder 1-6, 4-9
Extruding a Specimen..... 4-9

F

FHWA..... 1-2
Format
    Date or Time 2-16
    Downloading 2-18
    Printing..... 2-18
    Serial Data B-2

G

Gearbox..... A-15
GYRATION OFF Key 2-6
GYRATION ON Key 2-6
Gyration, Mode of 2-13
Gyrations
    Dwell 2-10
    Maximum B-4
    Number of 2-10

H

Height 2-14
    Calibration..... 3-2, 3-6
    Calibration Standard..... 1-6
Home Position 2-7
Hours
    Operation..... A-7
    Service..... A-7

I

Idle, Machine 2-8
Indicator, Angle Excursion 3-8
Inspection..... 1-8

K

Keypad 2-5
    Error A-2
Kit
    Part Numbers A-17
    Performance Verification 3-3

L

Load Cell, Calibration ..... 3-3 – 3-5
Loading Head A-10
    Part Number A-16
Loading Specimen 4-4
Lubricant ..... A-8, A-10, A-11, A-13 – A-15

M

Machine Idle 2-8
Maintenance A-7
    Schedule A-8
Making a Specimen 4-1
Manual
    Compaction 4-7
    Output 2-18
    Part Number A-16
Mechanical Specifications B-4
Menu
    Key 2-5
    Options 2-9
Mode of Gyration 2-13
Mold 1-6, A-9, A-17
    Changing the Size 3-21
    Notch ..... 4-5 – 4-7
    Weight B-4
Mold/Puck Assembly 4-4
Motor, Error Message A-3

N

NO/CE Key 2-6
Notch, Mold ..... 4-5 – 4-7
Number Keys 2-6
Number of Gyrations 2-10

O

Output
- Automatic 2-12
- Manual 2-18

P

Papers
- Specimen 1-6, 4-4
- Specimen, Number of 1-6

Parameters 2-9
Parts 1-5
- Replacement A-16
- Returning A-18

PIM-3 ..... 3-4, 3-5
Pin, Engagement A-10
Pressure 2-11, 3-3
- Calibration 3-2, 3-3
- Calibration Kit 3-3
- Range B-4
- Verify 3-2

Printer 1-6
- Part Number A-16
- Serial Not Ready A-4

Printing 2-18
- Automatic 2-12, A-3
- Calibrations 3-15
- Format 2-18
- Manual 2-18

Puck 1-6, A-16
- Weight B-4

R

RAM DOWN Key 2-5
Ram Too Low A-3
RAM UP Key 2-5
Remote Control 3-11
Replacement Parts A-16
Retaining Ring A-9
Returning Parts A-18
Rotation Speed B-4
- Calibrating 3-14

S

Safety 1-2, 2-2
Schedule
    Calibration 3-2
    Maintenance A-8
SELECT Key 2-5
Self-test 2-7
Service Information A-7
Setup 2-9
Shroud, Part Number A-16
Size B-4
    Changing the Mold 3-21
Small Angles 3-18
Specifications B-1
    Electrical B-2
    Mechanical B-4
Specimen
    Automatic Compaction 4-6
    Chamber 4-5
    Compacting 4-5
    Extruding 4-9
    Loading 4-4
    Making 4-1
    Manual Compaction 4-7
    Papers 1-6, 4-4
    Papers, Number of 1-6
    Preparing 4-4
Speed, Rotation B-4
    Calibrating 3-14
Standard
    Height Calibration 1-6, 3-6
    Part Number A-16
START Key 2-5
STOP Key 2-5

T

Temperature B-5
Tension, Chain A-10, A-14
Time 2-15
    Since Last Service A-7
Time/Date Format 2-16
Troubleshooting A-2
Turntable 4-5, A-3, A-9
    Part Number A-16

U

Units 2-8
Unpacking 1-8

V

Vacuum A-8
Verify
    Angle 3-2
    Pressure 3-2

W

Warmup 2-7
Washer, Part Number A-16
Weight B-4
    Mold B-4
    Puck B-4

Y

YES Key 2-6

NOTES

NOTES

TROXLER ELECTRONIC LABORATORIES, INC.

LIMITED WARRANTY

TROXLER ELECTRONIC LABORATORIES, INC., and subsidiary, TROXLER INTERNATIONAL, LTD., hereinafter referred to as "TROXLER," warrants this instrument, Model 4140, Serial Number _____, against defects in material and workmanship for a period of six (6) months from date of shipment. For products sold through authorized TROXLER representatives, the date of shipment will be as of the transfer from representative to purchaser. During the applicable warranty period, TROXLER's obligation under this warranty shall be limited exclusively to the repair at a TROXLER facility, at no charge except for shipping to and from TROXLER'S plant, of any instrument which may prove defective under normal use and which TROXLER's examination shall disclose to its satisfaction to be thus defective. Normal use is defined for the purpose of this warranty as operation under normal load, usage, and conditions with proper care and maintenance and competent supervision. In no event shall TROXLER be held liable for damages, delays, or losses consequential, incidental, or otherwise attributable to the failure of this instrument. TROXLER's liability being specifically limited to repair as stated hereinabove. This warranty is automatically initiated except where modified by contractual or other written and signed agreement.

THERE ARE NO WARRANTIES WHICH EXTEND BEYOND THE DESCRIPTION ON THE FACE HEREOF, AND THIS WARRANTY IS EXPRESSLY IN LIEU OF ALL OTHER WARRANTIES, EXPRESSED OR IMPLIED, AND TROXLER NEITHER ASSUMES, NOR AUTHORIZES ANYONE TO ASSUME FOR IT ANY OTHER LIABILITY IN CONNECTION WITH THE SALE OF THE INSTRUMENT. THIS WARRANTY SHALL NOT APPLY TO THE INSTRUMENT OR ANY PART THEREOF, WHICH HAS BEEN SUBJECTED TO DAMAGE BY ACCIDENT, NEGLIGENCE, ALTERATION, ABUSE, MISUSE, OR SERVICE NOT AUTHORIZED IN WRITING BY TROXLER. SUCH DAMAGE TO INCLUDE BUT NOT BE LIMITED TO BURNING OF CIRCUIT BOARDS AND HARNESS FROM IMPROPER SOLDERING TECHNIQUES AND DAMAGE TO THE INSTRUMENT DUE TO PURCHASER'S FAILURE TO PERFORM MAINTENANCE AS OUTLINED IN THE AUTHORIZED OPERATOR'S MANUAL. DUE TO THE NATURE OF THEIR USE, MECHANICAL ACCESSORY PARTS AND BATTERIES ARE WARRANTED FOR 90 DAYS ONLY FROM DATE OF SHIPMENT.

TROXLER ELECTRONIC LABORATORIES, INC.
Troxler International, Ltd.
Troxler Electronics (Canada), Ltd.
3008 Cornwallis Road
Post Office Box 12057
Research Triangle Park, NC 27709 USA

NOTICE TO CONSUMERS

Any disclaimer or limitation on the remedies expressed above shall not be effective to the extent prohibited by state or federal law.

NOTE: THIS WARRANTY EXCLUDES DAMAGE INCURRED IN SHIPMENT. IF THIS INSTRUMENT IS RECEIVED IN DAMAGED CONDITION, THE CARRIER SHOULD BE CONTACTED IMMEDIATELY. ALL CLAIMS FOR DAMAGE IN TRANSIT SHOULD BE FILED WITH THE CARRIER. IF REQUESTED, TROXLER WILL AID IN FILING OF CLAIMS AND/OR LOCATING PRODUCTS LOST IN TRANSIT.