O.S. ENGINE

FOUR CYCLE ENGINE FOR PUMP SYSTEM

FSα-81-P

OWNER'S INSTRUCTION MANUAL

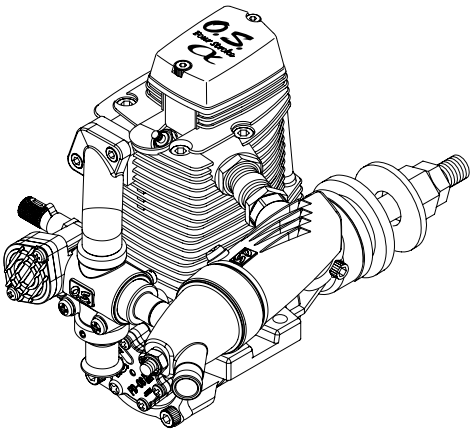

It is of vital importance, before attempting to operate your engine, to read the general '**SAFETY INSTRUCTIONS AND WARNINGS**' section on pages 2-6 of this booklet and to strictly adhere to the advice contained therein.

- Also, please study the entire contents of this instruction manual, so as to familiarize yourself with the controls and other features of the engine.
- Keep these instructions in a safe place so that you may readily refer to them whenever necessary.
- It is suggested that any instructions supplied with the aircraft, radio control equipment, etc., are accessible for checking at the same time.

O.S. ENGINE

CONTENTS

SAFETY INSTRUCTIONS AND WARNINGS ABOUT YOUR O.S. ENGINE ---------- 2-6

NOTES WHEN APPLYING AN ELECTTRIC STARTER ---- 7

ABOUT THE ENGINE ---------- 8

ENGINE PARTS NAME ---------- 9

BEFORE STARTING ---------- 10-13

INSTALLATION ---------- 14-16

INSTALLING SILENCER ---------- 17-18

FUEL TANK & LINES ---------- 19

PROPELLER ---------- 20

GLOWPLUG ---------- 21

MIXTURE CONTROLS ---------- 22

CARE OF FUEL PUMP & REGULATOR -------- 23

STARTING ---------- 24-26

RUNNING -IN ("Breaking-in") ---------- 27-28

IDLE MIXTURE ADJUSTMENT ---------- 29-30

CARE AND MAINTENANCE ---------- 31-33

ENGINE EXPLODED VIEW & PARTS LIST ------ 34-35

CARBURETOR EXPLODED VIEWS & PARTS LIST ---------- 36-37

GENUINE PARTS & ACCESSORIES ---------- 38

THREE VIEW DRAWING ---------- 39

MEMO ---------- 40

SAFETY INSTRUCTIONS AND WARNINGS ABOUT YOUR O.S. ENGINE

Remember that your engine is not a "toy", but a highly efficient internal-combustion machine whose power is capable of harming you, or others, if it is misused.
As owner, you, alone, are responsible for the safe operation of your engine, so act with discretion and care at all times.
If at some future date, your O.S. engine is acquired by another person, we would respectfully request that these instructions are also passed on to its new owner.

■ **The advice which follows is grouped under two headings according to the degree of damage or danger which might arise through misuse or neglect.**

⚠ WARNINGS

These cover events which might involve serious (in extreme circumstances, even fatal) injury.

⚠ NOTES

These cover the many other possibilities, generally less obvious sources of danger, but which, under certain circumstances, may also cause damage or injury.

⚠ WARNINGS

- **Never touch, or allow any object to come into contact with, the rotating propeller and do not crouch over the engine when it is running.**

- **A weakened or loose propeller may disintegrate or be thrown off and, since propeller tip speeds with powerful engines may exceed 600 feet(180 metres) per second, it will be understood that such a failure could result in serious injury, (see 'NOTES' section relating to propeller safety).**
- **Model engine fuel is poisonous. Do not allow it to come into contact with the eyes or mouth. Always store it in a clearly marked container and out of the reach of children.**

- **Model engine fuel is also highly flammable. Keep it away from open flame, excessive heat, sources of sparks, or anything else which might ignite it. Do not smoke or allow anyone else to smoke, near to it.**

- **Never operate your engine in an enclosed space. Model engines, like automobile engines, exhaust deadly carbon-monoxide. Run your engine only in an open area.**
- **Model engines generate considerable heat. Do not touch any part of your engine until it has cooled. Contact with the muffler (silencer), cylinder head or exhaust header pipe, in particular, may result in a serious burn.**

⚠ NOTES

- This engine was designed for model aircraft. Do not attempt to use it for any other purpose.
- Mount the engine in your model securely, following the manufacturers' recommendations, using appropriate screws and lock-nuts.
- Be sure to use the silencer (muffler) supplied with the engine. Frequent exposure to an open exhaust may eventually impair your hearing.
  Such noise is also likely to cause annoyance to others over a wide area.
- If you remove the glowplug from the engine and check its condition by connecting the battery leads to it, do not hold the plug with bare fingers.Use an appropriate tool or a folded piece of cloth.
- Install a top-quality propeller of the diameter and pitch specified for the engine and aircraft. Locate the propeller on the shaft so that the curved face of the blades faces forward-i.e. in the direction of flight. Firmly tighten the propeller nut, using the correct size wrench.

⚠ NOTES

- Always check the tightness of the propeller nut and retighten it, if necessary, before restarting the engine. Also, check the tightness of all the screws and nuts before restarting the engine.
- If you install a spinner, make sure that it is a precision made product and that the slots for the propeller blades do not cut into the blade roots and weaken them.
- Preferably, use an electric starter. The wearing of safety glasses is also strongly recommended.
- Discard any propeller which has become split, cracked, nicked or otherwise rendered unsafe. Never attempt to repair such a propeller: destroy it. Do not modify a propeller in any way, unless you are highly experienced in tuning propellers for specialized competition work such as pylon-racing.
- Take care that the glow plug clip or battery leads do not come into contact with the propeller. Also check the linkage to the throttle arm. A disconnected linkage could also foul the propeller.
- After starting the engine, carry out any needle-valve readjustments from a safe position behind the rotating propeller. Stop the engine before attempting to make other adjustments to the carburetor.

NOTES

- Adjust the throttle linkage so that the engine stops when the throttle stick and trim lever on the transmitter are fully retarded. Alternatively, the engine may be stopped by cutting off the fuel supply. Never try to stop the engine physically.
- Take care that loose clothing (ties, shirt sleeves, scarves, etc.)do not come into contact with the propeller.Do not carry loose objects (such as pencils, screwdrivers, etc.) in a shirt pocket from where they could fall through the propeller arc.
- Do not start your engine in an area containing loose gravel or sand.
  The propeller may throw such material in your face and eyes and cause injury.
- For their safety, keep all onlookers (especially small children) well back (at least 20 feet or 6 meters) when preparing your model for flight. If you have to carry the model to the take-off point with the engine running, be especially cautious. Keep the propeller pointed away from you and walk well clear of spectators.
- Warning! Immediately after a glowplug-ignition engine has been run and is still warm, conditions sometimes exist whereby it is just possible for the engine to abruptly restart if the propeller is casually flipped over compression WITHOUT the glowplug battery being reconnected. Remember this if you wish to avoid the risk of a painfully rapped knuckle!

NOTES WHEN APPLYING AN ELECTRIC STARTER

Do not over-prime. This could cause a hydraulic lock and damage the engine on application of the electric starter.

If over-primed, remove glowplug, close needle-valve and apply starter to pump out surplus fuel. Cover the head with a rag to prevent pumped out fuel from getting into your eyes.

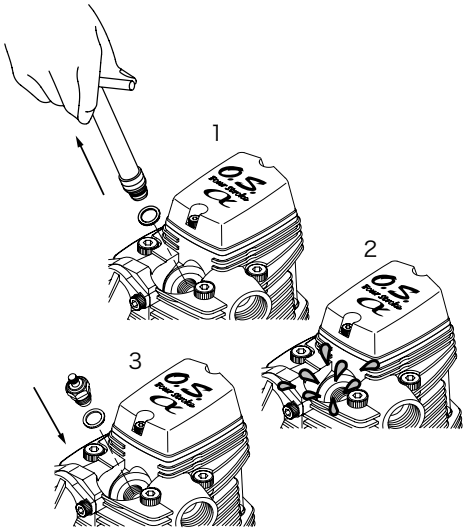

ABOUT THE ENGINE

This is a FSα(Alpha) series of the single cylinder overhead valve four cycle engine equipped with a fuel pump system. It offers broad power band to suite a variety models types. The PD-08 pump designed for bigger models and the 61R carburetor integrated with regulator ensures stable fuel delivery irrespective of model attitude and fuel level change. It is suitable not only for 70 size scale and sport models but also for aerobatic models which require stable power and linear throttle response. O.S. pump system is easy to handle because it supplies fuel direct to the carburetor without pressurizing the fuel tank. (Be sure to vent the fuel tank). New lubricating system eliminates the need for breather tubing from the crankcase. The F-5030 silencer and Type F plug are supplied as standard.

STANDARD ACCESSORIES

- Glowplug TypeF
- F-5030 Silencer Assembly
  Silencer Body
  Exhaust Header Pipe
  (W/M11 Lock Nuts)

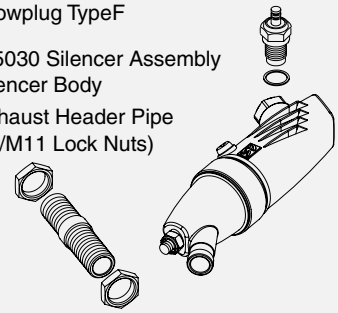

Note: Since the 61R carburetor is integrated with the regulator, it cannot be turned 180 degrees to reverse needle position.

Please note that this engine is not supplied with any tools (e.g. Allen keys, wrenches, etc.)

ENGINE PARTS NAME

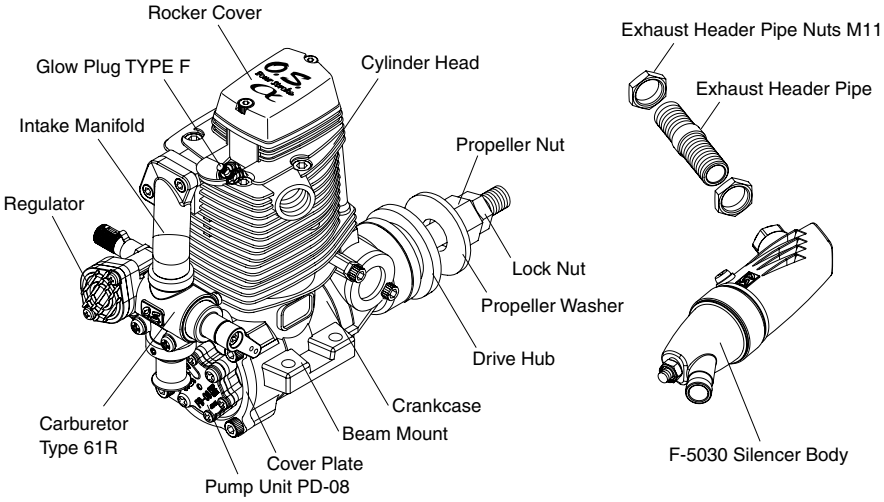

Tools, accessories, etc. The following items are necessary for operating the engine.

Propellers

The choice of propeller depends on the design and weight of the aircraft and the type of flying in which you will be engaged.
Determine the best size and type after practical experimentation. As a starting point, refer to the props listed in the accompanying table. Slightly larger, or even slightly smaller, props than those shown in the table may be used, but remember that the propeller noise will increase, due to higher rpm or if a larger-diameter/lower-pitched prop is used.

Type	Size(DxP)
Sport & Aerobatic Scale	13x7-9, 14x6-7

Warning:
Make sure that the propeller is well balanced. An unbalanced propeller and/or spinner can cause serious vibration which may weaken parts of the airframe or affect the safety of the radio-controlled system.
DO NOT forget the WARNINGS and NOTES on propeller and spinner safety given on front pages.

Reminder!

⚠ **Never touch, or allow any object to come into contact with, the rotating propeller and do not crouch over the engine when it is running.**

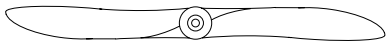

Spinner

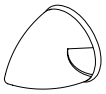

Since the FSα-81-P is intended to be started with an electric starter, the addition of a spinner assembly for centering the starter sleeve is desirable. Use a heavy-duty, well balanced spinner either of metal or plastic.

FUEL

The FSα-81-P should be operated on a methanol based fuel containing not less than 18% (volumetric) castor oil, or a top quality synthetic lubricant (or a mixture of both), plus a small percentage (5-20%) of nitromethane for improved flexibility and power. (The carburetor is adjusted a little on the rich side at the factory for a fuel containing 20% lubricant and 15% nitromethane.) Some commercial fuels also contain coloring additives as an aid to fuel level visibility. In some cases, these additives have indicated slightly negative effects on the performance.

We would suggest that you use such fuels only if you are satisfied that they do not adversely affect running qualities when compared with familiar standard fuels. When changing to a fuel brand or formula that is different from the one to which you are accustomed, it is a wise precaution to temporarily revert to in-flight running-in procedures, until you are sure that the engine is running entirely satisfactorily.

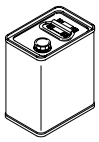

Reminder!

⚠ **Model engine fuel is poisonous. Do not allow it to come into contact with the eyes or mouth. Always store it in a clearly marked container and out of the reach of children.**

⚠ **Model engine fuel is also highly flammable. Keep it away from open flame, excessive heat, sources of sparks, or anything else which might ignite it. Do not smoke, or allow anyone else to smoke, near to it.**

Fuel Tank

A fuel tank of approximately 320cc capacity is suggested. This allows around 14 minutes flying time, dependent upon the type of fuel used, the size of propeller and on the amount of full-throttle to part-throttle operation throughout the flight.

GLOW PLUG

O.S. Type F glowplug is supplied with the engine.

GLOWPLUG IGNITER

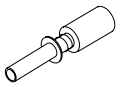

Commercialy available handy glowplug heater in which the glowplug battery and battery leads are integrated.

FUEL PUMP

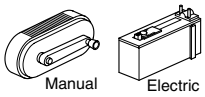

Alternatively, one of the purpose-made manual or electric fuel pumps may be used to transfer fuel directly from your fuel container to the fuel tank.

Electric Starter and Starter Battery

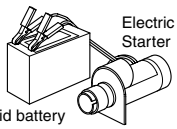

Required when starting the engine.

O.S. Super Filter (Fuel Can Filter)

Install a filter on the outlet tube of your refueling container to prevent entry of foreign matter into fuel tank. O.S. 'Super Filters' (large and small) are available as optional extras.

O.S. Non-Bubble Weight

To prevent the pickup from adhering to the tank wall under suction and restricting fuel flow, slots may be filed in the end of the weight. Alternatively, an O.S. Non-Bubble Weight is available as an optional extra.

Fuel Filter

It is recommended to install a good in-line filter between the fuel tank and carburetor to prevent entry of foreign matter into the carburetor.

SILICONE FUEL LINE

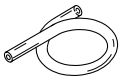

Heatproof silicone tubing of approx. 5mm o.d. and 2mm i.d. is required for the connection between the fuel tank and engine.

■ TOOLS

LONG SOCKET WRENCH WITH PLUG GRIP

Recommended for easy removal and replacement of the angled and recessed glowplug, the O.S.Long Socket Wrench incorporates a special grip.

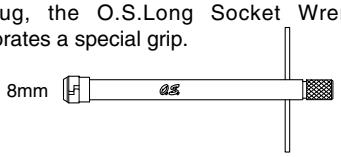

HEX Screwdriver

Necessary for engine installation.
1.5mm, 2.5mm

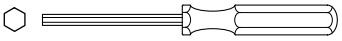

Phillips Screwdriver

No.2, etc.

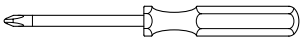

SCREWDRIVER

Necessary for carburetor adjustments.

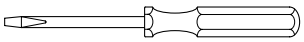

Socket Screwdriver

5mm, 5.5mm, 7mm

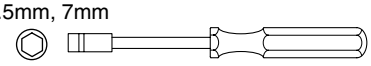

End Wrenches

12-14mm, etc.

Needle Nose Pliers

It is suggested to use as heavy and rigid as possible engine mounting for highest performance and safe running. Conventional wooden mounting beams should be of rigid hardwood and of at least 15mm or 5/8-in square section. Use at least 3.5mm steel screws, such as Allen type, with locknuts, for bolting the engine to the bearers..

Make sure that the mounting beams are parallel and that their top surfaces are in the same plane.

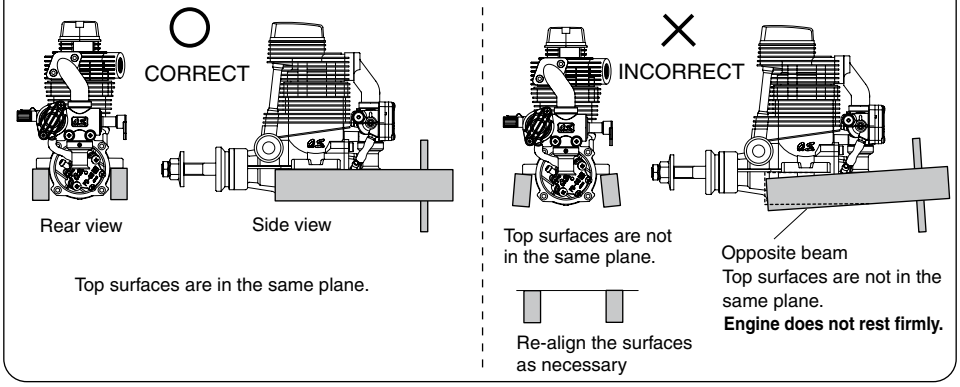

How to fasten the mounting screws.

Hardwood mounting beams

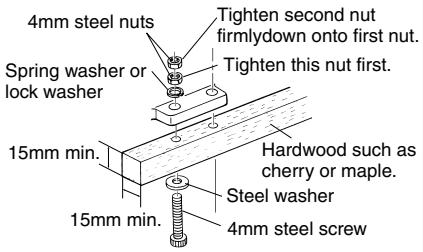

Radial motor mount (cast aluminum)

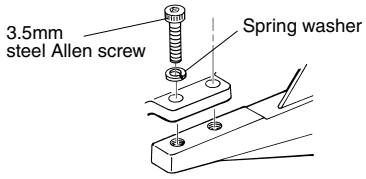

- Make sure that these mounting beams are accurately aligned and firmly integrated with the airframe, reinforcing the adjacent structure to absorb vibration. Use 3.5mm or larger steel screws, preferably Allen type hexagon socket head cap screws, with washers and locknuts, for bolting the engine to the bearers.

O.S. Radial Motor Mount

A special O.S. radial motor mount (Code No.71905030) is available, as an optional extra, for use where firewall type mounting is required.

■ THROTTLE LINKAGE

Before connecting the throttle to its servo, make sure that the throttle arm and linkage safely clear any adjacent part of the airframe structure, etc., as the throttle is opened and closed. Connect the linkage so that the throttle is fully closed when the transmitter throttle stick and its trim lever are at their lowest settings and fully open when the throttle stick is in its fully-open position. Carefully align the appropriate holes in the throttle arm and servo horn so that they move symmetrically and smoothly through their full travel.

■ NEEDLE-VALVE EXTENSION

The needle-valve supplied with this engine is designed to incorporate an extension so that, when the engine is enclosed within the fuselage, the needle-valve may be adjusted from the outside. Cut a commercially available rod to the required length, bend one end to an L shape, insert it into needle's center hole and secure it by tightening the set-screw in the needle-valve knob with 1.5mm Allen key.
Needle Valve Extension Cable Set (Code No. 72200080) is available from O.S. as an optional part.

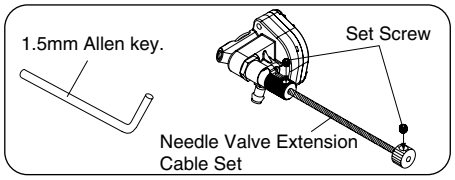

INSTALLING SILENCER

1. Screw the exhaust header pipe in the cylinder head to the bottom and secure it with the nut. (A short screw in depth may damage the threads of the cylinder head due to vibration.)

2. Screw the silencer on the exhaust header pipe more than 8mm (10 turns) and secure it with the nut. (A short screw in depth may break the silencer or header pipe due to vibration.) The distance between silencer and cylinder head can be adjusted by approximately 7mm by screwing the silencer on or out the header pipe. Adjust the silencer position by rotating the silencer.

3. Apply silicone sealant to the threads to prevent the silencer and header pipe from loosening and leaking oil.

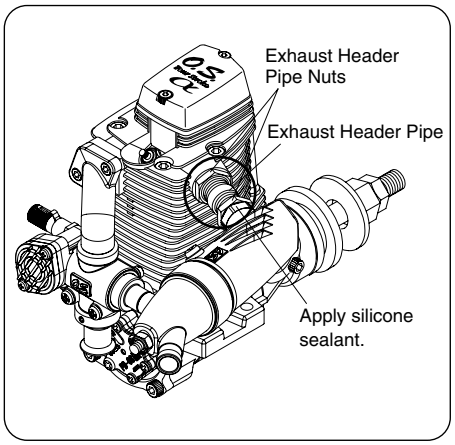

The exhaust outlet of the silencer can be rotated to any desired position in the following manner:

1) Loosen the locknut and assembly screw.
2) Set the exhaust outlet at the required position by rotating the rear part of the silencer.
3) Re-tighten the assembly screw, followed by the locknut.

Reminder!

Model engines generate considerable heat. Do not touch any part of your engine until it has cooled. Contact with the muffler (silencer), cylinder head or exhaust header pipe, in particular, may result in a serious burn. Keep your hands and face away from exhaust gas or you will suffer a burn.

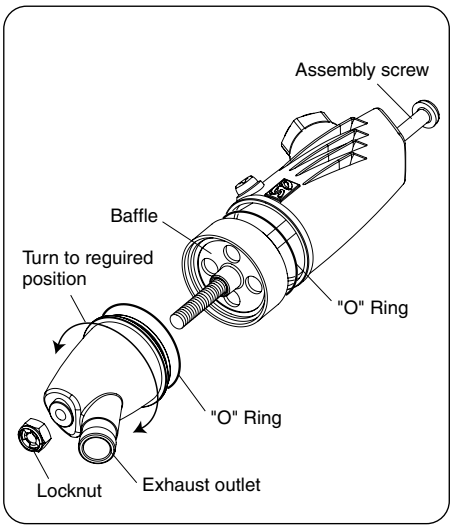

FUEL TANK & LINES

- Suggested fuel tank capacity is approx 320cc. This will allow 14minute flights.
- Make sure that the tank is well rinsed out with methanol or glow fuel before installation and that the pickup weight is well clear of the bottom of the tank when held vertically.
- Use a suitable length of best quality 5mm OD x 2mm ID silicone tubing for fuel tubing.
- The Fuel line pickup weight should be 10mm away from the back of the tank.

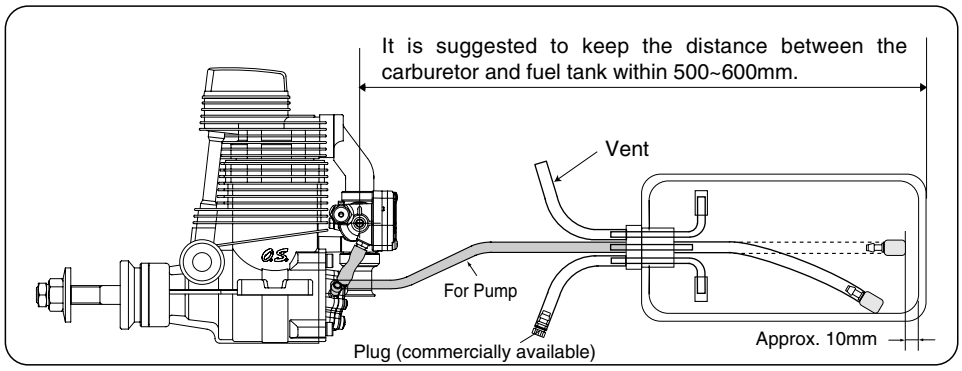

PROPELLER

There is a risk, particularly with powerful four-stroke engines, of the propeller flying off if the prop nut loosens due to detonation ("knocking") in the combustion chamber when the engine is operated too lean, or under an excessively heavy load.

Obviously, this can be very hazardous. To eliminate such dangers, the O.S. Safety Locknut Assembly was devised.
Install this as follows:

1. Install the prop to the engine shaft, followed by the retaining washer and prop nut and tighten firmly with a 14mm wrench. (not supplied).
2. Add the special tapered and slotted locknut and secure with a 12mm wrench (not supplied) while holding the prop nut with the 14mm wrench.

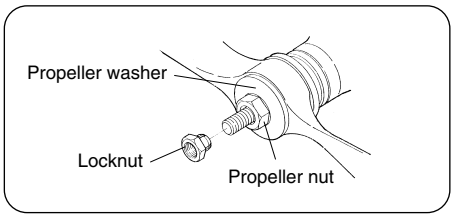

NOTE:

Make a habit of always checking the tightness of the propeller before starting the engine. Remember that, especially with wooden propellers, there is a tendency for the material to shrink, or for it to be reduced by the serrated face of the drive hub. Retighten the propeller nut if necessary after loosening the Safety Propeller Locknut. The locknut should be tightened firmly after retightening the propeller nut.

GLOWPLUG

Since the compatibility of the glowplug and fuel may have a marked effect on performance and reliability, it is suggested to use the O.S. Type F plug when it is necessary to replace.
Carefully install plug finger-tight, before final tightening with the correct size plug wrench.

The role of the glowplug

With a glowplug engine, ignition is initiated by the application of a 1.5-volt power source. When the battery is disconnected, the heat retained within the combustion chamber remains sufficient to keep the plug filament glowing, thereby continuing to keep the engine running. Ignition timing is 'automatic' : under reduced load, allowing higher rpm, the plug becomes hotter and, appropriately, fires the fuel/air charge earlier; conversely, at reduced rpm, the plug becomes cooler and ignition is retarded.

Glowplug life

Particularly in the case of very high performance engines, glowplugs must be regarded as expendable items. However, plug life can be extended and engine performance maintained by careful use, i.e.:

- Install a plug suitable for the engine.
- Use fuel containing a moderate percentage of nitromethane unless more is essential for racing events.
- Do not run the engine too lean and do not leave the battery connected while adjusting the needle.

When to replace the glowplug

Apart from when actually burned out, a plug may need to be replaced because it no longer delivers its best performance, such as when:

- Filament surface has roughened and turned white.
- Filament coil has become distorted.
- Foreign matter has adhered to filament or plug body has corroded.
- Engine tends to cut out when idling.
- Starting qualities deteriorate.

MIXTURE CONTROLS

■ **TYPE 61R CARBURETTOR**

Two mixture controls are provided on this Carburetor.

- **The Needle Valve**
  When set to produce maximum power at full throttle, this establishes the basic fuel/air mixture strength. The correct mixture is then maintained by the carburetor's built-in automatic mixture control system to cover the engine's requirements at reduced throttle settings.
- **The Mixture Control Valve**
  This meters fuel flow at part-throttle and idle speeds to ensure reliable operation as the throttle is opened and closed. The Mixture Control Valve is factory set for the approximate best result. First run the engine as received and readjust the Mixture Control Valve only if necessary.

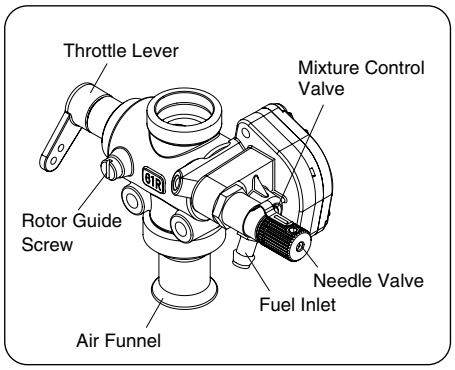

The sequence in which these controls are adjusted is explained in the succeeding sections, under Starting, Running-in and Idle Adjustment.

CARE OF FUEL PUMP & REGULATOR

When new, 2~3 minutes of running time will be required for the pump and regulator to begin functioning properly, During this period you may not be able to get the full throttle mixture rich enough. In this case, just run the engine at approx, 3/4 throttle a little longer.

■ NEVER disassemble the fuel pump or pressure regulator. Their original performance may not be restored after reassembly.

■ DO NOT allow foreign matter to enter the fuel system. Dirt inside the pump or regulator, no matter how small, may obstruct the flow of fuel and prevent these components from working properly.

■ NEVER insert anything into the inlet or outlet nipples in an attempt to clear a suspected obstruction. (See CARE & MAINTENANCE section at the back of this booklet.)

■ DO NOT obstruct the small rectangular hole at the bottom of the regulator, nor the regulator will not function correctly.

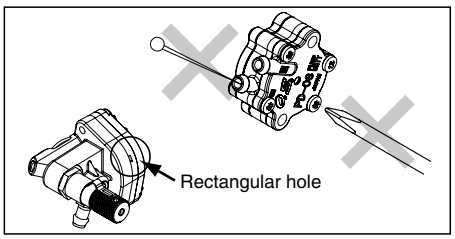

■ ALWAYS use fuel filters. Keep the fuel tank scrupulously clean and filter all fuel as it enters the tank (e.g.via an O.S.'Super-Filter' Code No.72403050) and use a good quality in-line filter between the tank and pump. Remember to inspect filter screens at regular intervals and rinse clean as necessary.

■ NEVER use gasoline, kerosene, diesel fuel or other petroleum products for cleaning the pump, regulator or fuel lines. Silicone-rubber parts will be ruined by these materials. Use only alcohol (methanol) or glow fuel for cleansing these items.

The FSα-81-P is not equipped with manual choke controls, as it is intended for use with an electric starter only.
A high-torque electric starter not only makes starting the engine easier, it dispenses with the need for a choke valve by turning the engine over fast enough to draw fuel to the cylinder automatically.
Starting procedure is as follows:

1. Fill the fuel tank with fuel. When filled, prevent fuel flowing into the carburetor with a commercially available fuel stopper, etc. Release the stopper before starting the engine.

NOTE

Make sure that the plug element glows red, and install the plug in the cylinder head.

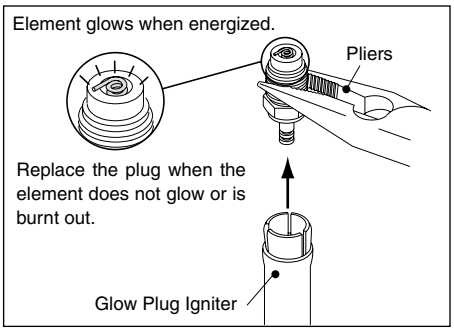

WARNING !
When checking the plug element hold the plug with tools, such as pliers, etc.
Do not hold near your face or the fuel remaining in the filament may burn you.

2. Check that the current to the glowplug is switched off.

3. To close the needle-valve, turn it clockwise, while to open the needle-valve, turn it counter-clockwise. Turn the needle-valve clockwise slowly until it stops. This is the fully closed position.

4. Open the needle-valve 1.5-2 turns from the fully closed position and set the throttle in the fully open position.

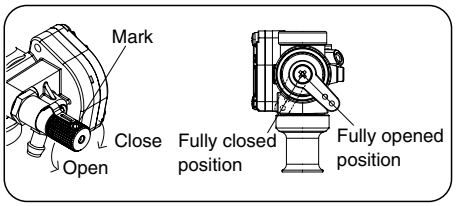

5. Apply the starter and press the starter switch for 5-6 seconds, or until fuel is seen to emerge from the exhaust outlet, indicating that the cylinder is now primed.

6. Turn the prop "backwards" (clockwise) by hand until it is against compression. This is to enable the kinetic energy of the prop to subsequently assist the starter through the compression stroke to start the engine.

7. Set the throttle in the 1/4 open position.

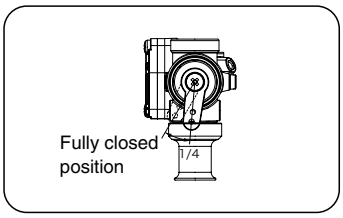

8. Energize the glowplug and apply the starter. If the starter fails to rotate the engine completely, this may be due to the cylinder being over-primed, or to the starter battery being insufficiently charged.

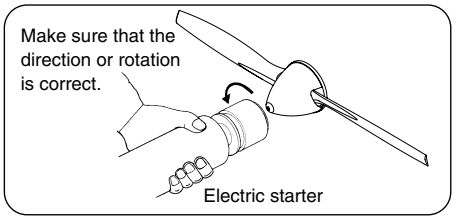

9. Check these conditions and, instead of pressing the starter button after applying the starter, have the starter spinning before applying it to the engine, to give it a "running start".
   When the engine starts, slowly open the throttle, leaving the needle-valve at its rich starting setting to promote cool running conditions. However, if the engine slows down because the mixture is excessively rich, the needle-valve may be closed a little to speed it up until it runs evenly.
10. Now disconnect current to the glowplug and gradually close the needle-valve so that the rpm increases.
    Make adjustments to the needle in small steps.
    Abrupt changes at this stage are likely to cause the engine to stall. Restart the engine by simply applying the starter with the glowplug re-energized and the throttle at its starting setting.

■ How to stop the engine

Pull down the throttle lever and trim lever on the transmitter fully.

Note:
Make sure that the throttle linkage is made so that the throttle is fully closed when the throttle lever as well as trim lever on the transmitter are fully pulled down.

RUNNING-IN ("Breaking-in")

All internal-combustion engines benefit from extra care when they are run for the first few timesknown as running-in or breaking-in. This allows the working parts to mate together under load at operating temperature. Therefore, it is vitally important to complete the break-in before allowing the engine to run continuously at high speed and before finalizing carburetor adjustments. However, because O.S. engines are produced with the aid of the finest modern precision machinery and from the best and most suitable materials, only a short and simple running-in procedure is called for and can be carried out with the engine installed in the model.

The recommended procedure is as follows:

1. Use the same fuel and prop as you intend for flying your model.
2. Open the needle-valve 1.5-2 turns from the fully closed position and start the engine.
3. Open the throttle slowly to the mid speed position, and disconnect the current to the glowplug.
4. Now open the throttle slowly to the fully opened position and run the engine for no more than 5 seconds with the needle-valve tuned to produced near maximum r.p.m., then, immediately, slow the engine down again by opening the needle-valve approximately one turn. The rich mixture, so induced, will cool the engine, at the same time providing increased lubrication.
5. Repeat this process, alternately running the engine fast and slow by means of the needle-valve, while keeping the throttle fully open, then begin to extend the short periods of high-speed operation until one tanks of fuel have been consumed.

WARNING:
When ground running the engine, avoid dusty or sandy locations. If dust or grit is drawn into the engine, this can have a ruinous effect, drastically shortening engine life in a matter of minutes.

6. Following the initial running-in session, check for any looseness in the installation due to vibration, then allow the engine a period of moderately rich operation in flight.
7. For the first flight, have the needle-valve set on the rich side and adjust the throttle trim on the transmitter so that the engine does not stop when the throttle is closed to the idle setting.
8. With each successive flight, close the needle-valve very slightly until, at the end of about 10 flights, the needle is set for full power. Do not "over-lean" the mixture in an attempt to extract more power.

If overheating should be suspected at any time during flight (i.e.if the engine begins to "labor") reduce power by partially closing the throttle and land the aircraft to enable the needle-valve to be readjusted to a richer setting.

IDLE MIXTURE ADJUSTMENT

1. Start the engine, open the throttle fully and set the needle-valve slightly rich (30-45°) from the highest r.p.m. setting.
2. Close the throttle to the idle position. Allow the engine to idle for about 5 seconds, then reopen the throttle. The engine should accelerate smoothly back to full speed.
3. If, instead, the engine responds sluggishly and emits an excess of white smoke from the exhaust, the idle mixture is too rich. Turn the mixture control valve approx. 45° clockwise to lean the idle mixture.
4. On the other hand, if the engine hesitates before picking up speed or even ceases firing completely, the idle mixture is likely to be too lean. Turn the mixture control valve 90° counter-clockwise to substantially enrich the mixture, then back again 45° clockwise.
5. In paragraphs 3 and 4 above, the 45° total movements are, of course, approximate. It will be necessary to fine-tune the mixture control valve 10-15° at a time to reach the best setting for optimum throttle response.
6. Continue re-checking the idle mixture setting until the engine responds smoothly and positively to operation of the throttle at all times.

■ REALIGNMENT OF MIXTURE CONTROL VALVE

In the course of making carburetor adjustments, it is just possible that the Mixture Control Valve may be inadvertently screwed in or out too far and thereby moved beyond its effective adjustment range.

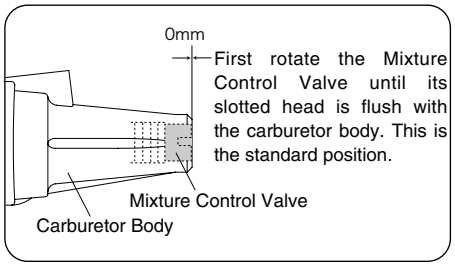

■ CARBURETOR CARE & MAINTENANCE

If you experience difficulty in obtaining a consistent mixture setting it could be due to foreign debris in the carburetor. Carefully disassemble the carburetor and wash in methanol. Do not use gasoline or kerosene that can effect the silicone rubber "O" rings.

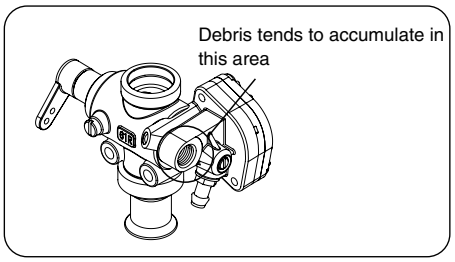

■ VALVE ADJUSTING

Valve clearances are correctly set before any O.S. engine leaves the factory and, in normal use, will seldom require adjustment. However, if, after a considerable amount of running time, a loss of power is detected, or if he engine has been disassembled for repair, these clearances should be checked and reset as necessary.
For checking and adjusting the valve clearances, a VALVE ADJUSTING TOOL KIT is available as an optional accessory.

The kit comes in a plastic case and includes: (Code No.72200060)

- Feeler gauge 0.04mm
- Feeler gauge 0.1mm
- Hex. key 1.5mm
- Wrench 5mm

Please pay attention to the matters described below to ensure that your engine serves you well in regard to performance, reliability and long life.

- As previously mentioned, it is vitally important to avoid operating the engine in conditions where dust, disturbed by the propeller, may be deposited on the engine and enter its working parts.
- Remember to keep your fuel container closed to prevent foreign matter from contaminating the fuel.
- Install a fuel filter to prevent dirt and foreign matter in the fuel container from entering the fuel tank. O.S. Super Filters (L) and (S) are available as optional extras.

- Install an in-line fuel filter between the tank and carburetor to prevent dirt and foreign in the tank from entering the carburetor.
- Clean these filters periodically.
- If these precautions are neglected, restriction of fuel flow may cause the engine to cut out, or the fuel/air mixture to become too lean causing the engine to overheat.
- The use of modern high-performance alcohol based model engine fuels, while promoting cooler running, improved anti-detonation combustion and increased power, have the disadvantage of causing corrosion due to the acid by-products of combustion.
  The use of nitromethane in the fuel can also contribute to the problem.
- Do not close the needle-valve and mixture control valve too far as this will cause a lean setting and over heating of the engine. This can, in turn, create nitromethane oxide leading to internal rusting of the engine.
  Always adjust the needlevalve slightly on the rich side of peak rpm.
- Do not leave unused fuel in the engine at the conclusion of a day's flying. Accepted practice is to cut off the fuel supply while the engine is still running at full throttle, then expel as much fuel residue as possible by turning the engine over 5-10 seconds with the electric starter.
  Finally, inject some after-run oil through the glowplug hole and turn the engine over several times by hand.

- When the engine is not to be used for some months (for example, as between flying seasons), a worthwhile precaution is to remove it from the airframe and, after washing off the exterior with alcohol (not gasoline nor kerosene), remove carefully the carburetor with intake pipe, glow plug and all silicone tubing and put them safely aside. Then, immerse the engine in a container of alcohol. Rotate the crankshaft while the engine is immersed. If foreign matter is visible in the alcohol, rinse the engine again in clean alcohol. Finally, shake off and dry the alcohol ,and inject some after-run oil in the glowplug hole and rotate the crankshaft several times by hand. Reinstall the carburetor with intake pipe and glowplug on the engine and keep it in a dry place after putting in a vinyl bag.

ENGINE EXPLODED VIEW & PARTS LIST

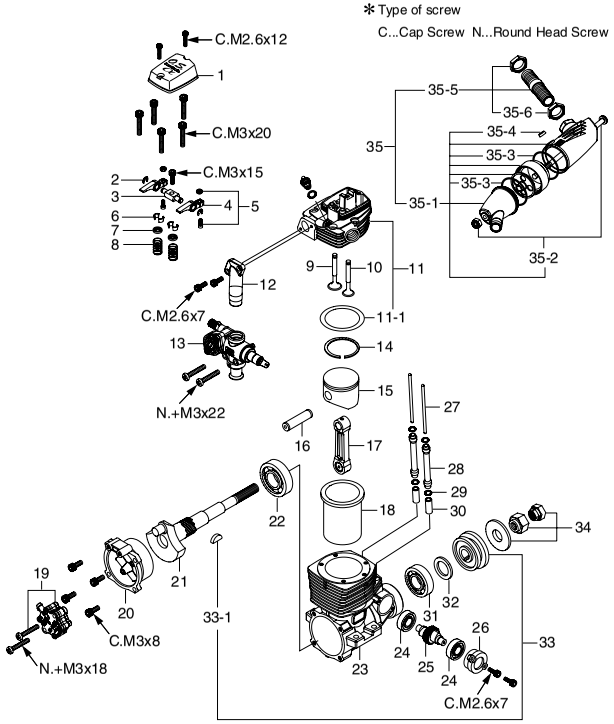

CAP SCREW SETS (10pcs./sets)

Code No.	Size	Pcs. used in an engine
79871020	M2.6x7	Cam Cover Retaining Screw (2pcs.) Intake Manifold Retaining Screw (2pcs.)
79871040	M2.6x12	Rocker Cover Retaining Screw (2pcs.)
79871110	M3x8	Cover Plate Retaining Screw (4pcs.)
79871150	M3x15	Rocker Support Retaining Screw (1pc.)
79871200	M3x20	Cylinder Head Retaining Screw (5pcs.)

No.	Code No.	Description
1	44804200	Rocker Cover
2	45761600	Rocker Arm Retainer (2pcs.)
3	45961410	Rocker Support (1pc.)
4	47161100	Rocker Arm (1pc.)
5	45061202	Tappet Adjusting Screw (1pair)
6	45960400	Split Cotter (2pcs.)
7	45960310	Valve Spring Retainer (1pc.)
8	45960210	Valve Spring (1pc.)
9	44850000	Intake Valve (1pc.)
10	44851000	Exhaust Valve (1pc.)
11	44804100	Cylinder Head (W/Gasket)
11-1	44714100	Cylinder Head Gasket (1pc.)
12	44868000	Intake Manifold (1pc.)
13	44882000	Carburetor Complete (Type 61R)
14	45903400	Piston Ring
15	45903200	Piston
16	45906000	Piston Pin
17	44805000	Connecting Rod
18	46103100	Cylinder Liner
19	72508100	Pump Unit PD-08
20	44807030	Cover Plate
21	44802000	Crankshaft
22	45630000	Crankshaft Ball Bearing (Rear)
23	44801000	Crankcase
24	45231100	Camshaft Ball Bearing (1pc.)
25	45962000	Camshaft
26	44801100	Cam Cover
27	44066000	Push Rod (2pcs.)
28	44866100	Push Rod Cover (1pc.)
29	24881824	Push Rod Cover "O" Ring (2pcs.)
30	45564000	Cam Follower (2pcs.)
31	26731002	Crankshaft Ball Bearing (Front)
32	46120000	Thrust Washer
33	44808000	Drive Hub (W/woodruff key)
33-1	29008219	Woodruff Key
34	45910100	Lock Nut Set
35	44825000	F-5030 Silencer Assembly
35-1	44825100	Silencer Body
35-2	44825400	Assembly Screw
35-3	44625410	Silencer Gasket (1pc.)
35-4	23081706	Plug Screw
35-5	44825200	Exhaust Header Pipe Assembly
35-6	45626030	Exhaust Header Pipe Nut M11 (1pc.)
	71615009	Glow Plug Type F

The specifications are subject to alteration for improvement without notice.

CARBURETOR EXPLODED VIEW

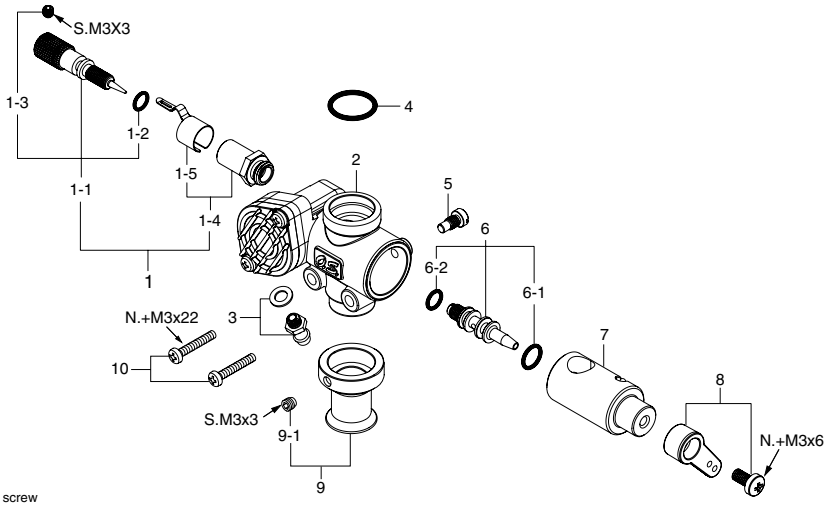

✻Type of screw
C...Cap Screw M...Oval Fillister-Head Screw
F...Flat Head Screw N...Round Head Screw S...Set Screw

CARBURETOR PARTS LIST

No.	Code No.	Description
1	29481900	Needle Valve Assembly
1-1	29481970	Needle Assembly
1-2	24981837	"O" Ring (2pcs.)
1-3	26381501	Set Screw
1-4	27381940	Needle Valve Holder Assembly
1-5	26711305	Ratchet Spring
2	44882100	Carburetor Body
3	22681953	Fuel Inlet (No.1)
4	46115000	Carburetor Rubber Gasket (1pc.)
5	45581820	Rotor Guide Screw
6	45582300	Mixture Control Valve Assembly
6-1	46066319	"O" Ring (L) (2pcs.)
6-2	24881824	"O" Ring (S) (2pcs.)
7	44882200	Carburetor Rotor
8	22081408	Throttle Lever Assembly
9	44381300	Air Funnel
9-1	26381501	Set Screw
10	45581700	Carburetor Retaining Screw (2pcs.)

Specifications are subject to alteration for improvement without notice.

O.S. GENUINE PARTS & ACCESSORIES

■ **RADIAL MOTOR MOUNT**
(71905030)

■ **PROPELLER LOCKNUT SET FOR SPINNER**

5/16"-M4 (45910200)

5/16"-M5 (45910300)

■ **BOOSTER TERMINAL KIT**
(72200130)

■ **IN-COWL EXHAUST HEADER PIPE**

M11 IN-COWL HEADER PIPE SIDE 60D (72109680)

M11 IN-COWL HEADER PIPE INVERTED 80D (72109690)

■ **Needle Valve Extension Cable Set**
(72200080)

■ **NON-BUBBLE WEIGHT**
(71531000)

■ **VALVE ADJUSTING TOOL KIT**
(72200060)

■ **LONG SOCKET WRENCH WITH PLUG GRIP**
(71521000)

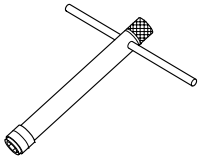

■ **SUPER FILTER (L)** (72403050)

■ **NON-BUBBLE WEIGHT (S)**
(71531010)

The specifications are subject to alteration for improvement without notice.

THREE VIEW DRAWING

SPECIFICATIONS

■ Displacement	13.26 cc / 0.809 cu.in.
■ Bore	27.7 mm / 1.091 in.
■ Stroke	22.0 mm / 0.866 in.
■ Practical R.P.M.	2.200-10.000 r.p.m.
■ Power output	1.28 hp / 10.000r.p.m.
■ Weight	570 g / 20.11 oz.
	F-5030 Silencer Assembly 54 g / 1.9 oz.

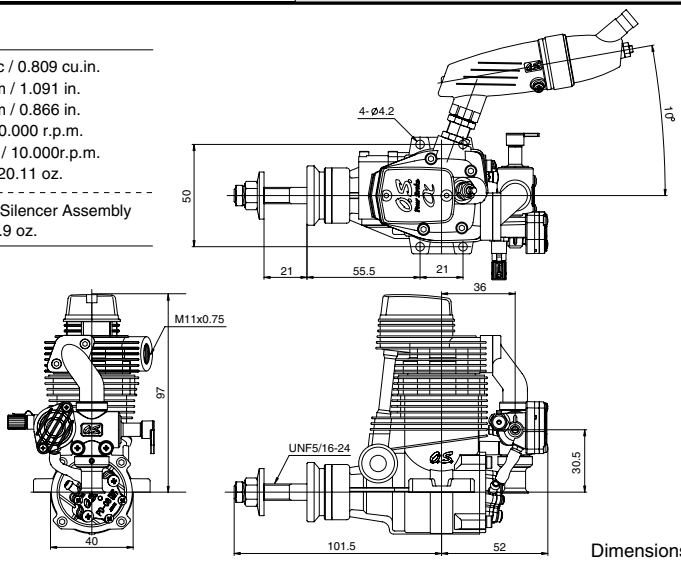

Dimensions(mm)

O.S.ENGINES MFG.CO.,LTD.
URL : http://www.os-engines.co.jp

6-15 3-Chome Imagawa Higashisumiyoshi-ku
Osaka 546-0003, Japan TEL. (06) 6702-0225
FAX. (06) 6704-2722

© Copyright 2009 by O.S.Engines Mfg. Co., Ltd. All rights reserved. Printed in Japan.

60092240 110902