NEC

Preliminary User's Manual

V850ES/HE2

32-Bit Single-Chip Microcontrollers

Hardware

μPD70F3700
μPD70F3701

Document No. U17720EJ1V0UD00 (1st edition)
Date Published January 2006 N CP(K)

© NEC Electronics Corporation 2005
Printed in Japan

[MEMO]

NOTES FOR CMOS DEVICES

① **VOLTAGE APPLICATION WAVEFORM AT INPUT PIN**

Waveform distortion due to input noise or a reflected wave may cause malfunction. If the input of the CMOS device stays in the area between V_{IL} (MAX) and V_{IH} (MIN) due to noise, etc., the device may malfunction. Take care to prevent chattering noise from entering the device when the input level is fixed, and also in the transition period when the input level passes through the area between V_{IL} (MAX) and V_{IH} (MIN).

② **HANDLING OF UNUSED INPUT PINS**

Unconnected CMOS device inputs can be cause of malfunction. If an input pin is unconnected, it is possible that an internal input level may be generated due to noise, etc., causing malfunction. CMOS devices behave differently than Bipolar or NMOS devices. Input levels of CMOS devices must be fixed high or low by using pull-up or pull-down circuitry. Each unused pin should be connected to V_{DD} or GND via a resistor if there is a possibility that it will be an output pin. All handling related to unused pins must be judged separately for each device and according to related specifications governing the device.

③ **PRECAUTION AGAINST ESD**

A strong electric field, when exposed to a MOS device, can cause destruction of the gate oxide and ultimately degrade the device operation. Steps must be taken to stop generation of static electricity as much as possible, and quickly dissipate it when it has occurred. Environmental control must be adequate. When it is dry, a humidifier should be used. It is recommended to avoid using insulators that easily build up static electricity. Semiconductor devices must be stored and transported in an anti-static container, static shielding bag or conductive material. All test and measurement tools including work benches and floors should be grounded. The operator should be grounded using a wrist strap. Semiconductor devices must not be touched with bare hands. Similar precautions need to be taken for PW boards with mounted semiconductor devices.

④ **STATUS BEFORE INITIALIZATION**

Power-on does not necessarily define the initial status of a MOS device. Immediately after the power source is turned ON, devices with reset functions have not yet been initialized. Hence, power-on does not guarantee output pin levels, I/O settings or contents of registers. A device is not initialized until the reset signal is received. A reset operation must be executed immediately after power-on for devices with reset functions.

⑤ **POWER ON/OFF SEQUENCE**

In the case of a device that uses different power supplies for the internal operation and external interface, as a rule, switch on the external power supply after switching on the internal power supply. When switching the power supply off, as a rule, switch off the external power supply and then the internal power supply. Use of the reverse power on/off sequences may result in the application of an overvoltage to the internal elements of the device, causing malfunction and degradation of internal elements due to the passage of an abnormal current.

The correct power on/off sequence must be judged separately for each device and according to related specifications governing the device.

⑥ **INPUT OF SIGNAL DURING POWER OFF STATE**

Do not input signals or an I/O pull-up power supply while the device is not powered. The current injection that results from input of such a signal or I/O pull-up power supply may cause malfunction and the abnormal current that passes in the device at this time may cause degradation of internal elements.

Input of signals during the power off state must be judged separately for each device and according to related specifications governing the device.

MINICUBE is a registered trademark of NEC Electronics Corporation in Japan and Germany.

- **The information contained in this document is being issued in advance of the production cycle for the product. The parameters for the product may change before final production or NEC Electronics Corporation, at its own discretion, may withdraw the product prior to its production.**
- **Not all products and/or types are available in every country. Please check with an NEC Electronics sales representative for availability and additional information.**
- No part of this document may be copied or reproduced in any form or by any means without the prior written consent of NEC Electronics. NEC Electronics assumes no responsibility for any errors that may appear in this document.
- NEC Electronics does not assume any liability for infringement of patents, copyrights or other intellectual property rights of third parties by or arising from the use of NEC Electronics products listed in this document or any other liability arising from the use of such products. No license, express, implied or otherwise, is granted under any patents, copyrights or other intellectual property rights of NEC Electronics or others.
- Descriptions of circuits, software and other related information in this document are provided for illustrative purposes in semiconductor product operation and application examples. The incorporation of these circuits, software and information in the design of a customer's equipment shall be done under the full responsibility of the customer. NEC Electronics assumes no responsibility for any losses incurred by customers or third parties arising from the use of these circuits, software and information.
- While NEC Electronics endeavors to enhance the quality, reliability and safety of NEC Electronics products, customers agree and acknowledge that the possibility of defects thereof cannot be eliminated entirely. To minimize risks of damage to property or injury (including death) to persons arising from defects in NEC Electronics products, customers must incorporate sufficient safety measures in their design, such as redundancy, fire-containment and anti-failure features.
- NEC Electronics products are classified into the following three quality grades: "Standard", "Special" and "Specific". The "Specific" quality grade applies only to NEC Electronics products developed based on a customer-designated "quality assurance program" for a specific application. The recommended applications of an NEC Electronics products depend on its quality grade, as indicated below. Customers must check the quality grade of each NEC Electronics product before using it in a particular application.

  "Standard": Computers, office equipment, communications equipment, test and measurement equipment, audio and visual equipment, home electronic appliances, machine tools, personal electronic equipment and industrial robots.

  "Special": Transportation equipment (automobiles, trains, ships, etc.), traffic control systems, anti-disaster systems, anti-crime systems, safety equipment and medical equipment (not specifically designed for life support).

  "Specific": Aircraft, aerospace equipment, submersible repeaters, nuclear reactor control systems, life support systems and medical equipment for life support, etc.

The quality grade of NEC Electronics products is "Standard" unless otherwise expressly specified in NEC Electronics data sheets or data books, etc. If customers wish to use NEC Electronics products in applications not intended by NEC Electronics, they must contact an NEC Electronics sales representative in advance to determine NEC Electronics' willingness to support a given application.

(Note)

(1) "NEC Electronics" as used in this statement means NEC Electronics Corporation and also includes its majority-owned subsidiaries.

(2) "NEC Electronics products" means any product developed or manufactured by or for NEC Electronics (as defined above).

M5D 02. 11-1

PREFACE

Readers

This manual is intended for users who wish to understand the functions of the V850ES/HE2 and design application systems using the V850ES/HE2.

Purpose

This manual is intended to give users an understanding of the hardware functions of the V850ES/HE2 shown in the **Organization** below.

Organization

This manual is divided into two parts: Hardware (this manual) and Architecture (**V850ES Architecture User's Manual**).

Hardware	Architecture
• Pin functions	• Data types
• CPU function	• Register set
• On-chip peripheral functions	• Instruction format and instruction set
• Flash memory programming	• Interrupts and exceptions
• Electrical specifications (target)	• Pipeline operation

How to Read This Manual

It is assumed that the readers of this manual have general knowledge in the fields of electrical engineering, logic circuits, and microcontrollers.

To understand the overall functions of the V850ES/HE2
→Read this manual according to the **CONTENTS**.

To find the details of a register where the name is known
→Use **APPENDIX A REGISTER INDEX**.

To understand the details of an instruction function
→Refer to the **V850ES Architecture User's Manual** available separately.

To know the electrical specifications of the V850ES/HE2
→See **CHAPTER 25 ELECTRICAL SPECIFICATIONS (TARGET)**.

Register format
→The name of the bit whose number is in angle brackets (<>) in the figure of the register format of each register is defined as a reserved word in the device file.

The "yyy bit of the xxx register" is described as the "xxx.yyy bit" in this manual. Note with caution that if "xxx.yyy" is described as is in a program, however, the compiler/assembler cannot recognize it correctly.

Conventions

Data significance:	Higher digits on the left and lower digits on the right
Active low representation:	$\overline{xxx}$ (overscore over pin or signal name)
Memory map address:	Higher addresses on the top and lower addresses on the bottom
Note:	Footnote for item marked with **Note** in the text
Caution:	Information requiring particular attention
Remark:	Supplementary information
Numeric representation:	Binary ... xxxx or xxxxB Decimal ... xxxx Hexadecimal ... xxxxH
Prefix indicating power of 2 (address space, memory capacity):	K (kilo): 2^{10} = 1,024 M (mega): 2^{20} = $1{,}024^2$ G (giga): 2^{30} = $1{,}024^3$

Related Documents

The related documents indicated in this publication may include preliminary versions. However, preliminary versions are not marked as such.

Documents related to V850ES/HE2

Document Name	Document No.
V850ES Architecture User's Manual	U15943E
V850ES/HE2 Hardware User's Manual	This manual

Documents related to development tools

Document Name		Document No.
CA850 Ver. 3.00 C Compiler Package	Operation	U17293E
	C Language	U17291E
	Assembly Language	U17292E
	Link Directives	U17294E
PM+ Ver. 6.00 Project Manager		U17178E
ID850QB Ver. 3.10 Integrated Debugger	Operation	U17435E
SM850 Ver. 2.50 System Simulator	Operation	U16218E
SM850 Ver. 2.00 or Later System Simulator	External Part User Open Interface Specification	U14873E
RX850 Ver. 3.20 or Later Real-Time OS	Basics	U13430E
	Installation	U17419E
	Technical	U13431E
	Task Debugger	U17420E
RX850 Pro Ver. 3.20 Real-Time OS	Basics	U13773E
	Installation	U17421E
	Technical	U13772E
	Task Debugger	U17422E
AZ850 Ver. 3.30 System Performance Analyzer		U17423E
PG-FP4 Flash Memory Programmer		U15260E

CONTENTS

CHAPTER 1 INTRODUCTION 16

1.1 General 16
1.2 Features 18
1.3 Application Fields 18
1.4 Ordering Information 19
1.5 Pin Configuration (Top View) 20
1.6 Function Block Configuration 22
1.6.1 Internal block diagram 22
1.6.2 Internal units 23

CHAPTER 2 PIN FUNCTIONS 25

2.1 Pin Function List 25
2.2 Description of Pin Functions 30
2.3 Pin I/O Circuit Types and Recommended Connection of Unused Pins 36
2.4 Pin I/O Circuits 38

CHAPTER 3 CPU FUNCTION 40

3.1 Features 40
3.2 CPU Register Set 41
3.2.1 Program register set 42
3.2.2 System register set 43
3.3 Operation Modes 49
3.3.1 Specifying operation mode 49
3.4 Address Space 50
3.4.1 CPU address space 50
3.4.2 Wraparound of CPU address space 51
3.4.3 Memory map 52
3.4.4 Areas 54
3.4.5 Recommended use of address space 57
3.4.6 Peripheral I/O registers 59
3.4.7 Special registers 66
3.4.8 Cautions 70

CHAPTER 4 PORT FUNCTIONS 73

4.1 Features 73
4.2 Basic Configuration of Ports 73
4.3 Port Functions 75
4.3.1 Operation of port function 75
4.3.2 Notes on setting port pins 76
4.3.3 Port 0 77
4.3.4 Port 3 83
4.3.5 Port 4 89

4.3.6 Port 5 92
4.3.7 Port 7 98
4.3.8 Port 9 101
4.3.9 Port CM 111
4.3.10 Port DL 114
4.3.11 Port pins that function alternately as on-chip debug function 116
4.3.12 Register settings to use port pins as alternate-function pins 117
4.4 Block Diagrams of Port 122
4.5 Cautions 146
4.5.1 Cautions on setting port pins 146

CHAPTER 5 CLOCK GENERATION FUNCTION 147
5.1 Overview 147
5.2 Configuration 148
5.3 Registers 150
5.4 Operation 155
5.4.1 Operation of each clock 155
5.4.2 Clock output function 155
5.5 PLL Function 156
5.5.1 Overview 156
5.5.2 Registers 156
5.5.3 Usage 160

CHAPTER 6 16-BIT TIMER/EVENT COUNTER P (TMP) 161
6.1 Overview 161
6.2 Functions 161
6.3 Configuration 162
6.4 Registers 164
6.5 Operation 178
6.5.1 Interval timer mode (TPnMD2 to TPnMD0 bits = 000) 179
6.5.2 External event count mode (TPnMD2 to TPnMD0 bits = 001) 189
6.5.3 External trigger pulse output mode (TPnMD2 to TPnMD0 bits = 010) 197
6.5.4 One-shot pulse output mode (TPnMD2 to TPnMD0 bits = 011) 209
6.5.5 PWM output mode (TPnMD2 to TPnMD0 bits = 100) 216
6.5.6 Free-running timer mode (TPnMD2 to TPnMD0 bits = 101) 225
6.5.7 Pulse width measurement mode (TPnMD2 to TPnMD0 bits = 110) 242
6.5.8 Timer output operations 248
6.6 Timer Tuned Operation Function 249
6.7 Selector Function 253
6.8 Cautions 255

CHAPTER 7 16-BIT TIMER/EVENT COUNTER Q (TMQ) 256
7.1 Overview 256
7.2 Functions 256
7.3 Configuration 257

7.4 Registers **260**
7.5 Operation **278**
7.5.1 Interval timer mode (TQ0MD2 to TQ0MD0 bits = 000) 279
7.5.2 External event count mode (TQ0MD2 to TQ0MD0 bits = 001) 288
7.5.3 External trigger pulse output mode (TQ0MD2 to TQ0MD0 bits = 010) 297
7.5.4 One-shot pulse output mode (TQ0MD2 to TQ0MD0 bits = 011) 310
7.5.5 PWM output mode (TQ0MD2 to TQ0MD0 bits = 100) 319
7.5.6 Free-running timer mode (TQ0MD2 to TQ0MD0 bits = 101) 330
7.5.7 Pulse width measurement mode (TQ0MD2 to TQ0MD0 bits = 110) 350
7.5.8 Triangular wave PWM mode (TQ0MD2 to TQ0MD0 = 111) 356
7.5.9 Timer output operations 357
7.6 Timer Tuned Operation Function **358**
7.7 Cautions **362**

CHAPTER 8 16-BIT INTERVAL TIMER M (TMM) **363**
8.1 Overview **363**
8.2 Configuration **364**
8.3 Register **365**
8.4 Operation **366**
8.4.1 Interval timer mode 366
8.4.2 Cautions 370

CHAPTER 9 WATCH TIMER FUNCTIONS **371**
9.1 Functions **371**
9.2 Configuration **372**
9.3 Registers **374**
9.4 Operation **378**
9.4.1 Operation as watch timer 378
9.4.2 Operation as interval timer 379
9.4.3 Cautions 380

CHAPTER 10 FUNCTIONS OF WATCHDOG TIMER 2 ..... **381**
10.1 Functions **381**
10.2 Configuration **382**
10.3 Registers **383**
10.4 Operation **386**

CHAPTER 11 A/D CONVERTER **387**
11.1 Overview **387**
11.2 Functions **387**
11.3 Configuration **388**
11.4 Registers **391**
11.5 Operation **399**
11.5.1 Basic operation 399
11.5.2 Trigger mode 400

11.5.3 Operation mode 402
11.5.4 Power-fail compare mode 406
11.6 Cautions 411
11.7 How to Read A/D Converter Characteristics Table 415

CHAPTER 12 ASYNCHRONOUS SERIAL INTERFACE A (UARTA) 419
12.1 Features 419
12.2 Configuration 420
12.3 Registers 422
12.4 Interrupt Request Signals 428
12.5 Operation 429
12.5.1 Data format 429
12.5.2 SBF transmission/reception format 431
12.5.3 SBF transmission 433
12.5.4 SBF reception 434
12.5.5 UART transmission 435
12.5.6 Continuous transmission procedure 436
12.5.7 UART reception 438
12.5.8 Reception errors 439
12.5.9 Parity types and operations 441
12.5.10 Receive data noise filter 442
12.6 Dedicated Baud Rate Generator 443
12.7 Cautions 451

CHAPTER 13 3-WIRE VARIABLE-LENGTH SERIAL I/O (CSIB) 452
13.1 Features 452
13.2 Configuration 453
13.3 Registers 455
13.4 Interrupt Request Signals 462
13.5 Operation 463
13.5.1 Single transfer mode (master mode, transmission/reception mode) 463
13.5.2 Single transfer mode (master mode, reception mode) 464
13.5.3 Continuous mode (master mode, transmission/reception mode) 465
13.5.4 Continuous mode (master mode, reception mode) 466
13.5.5 Continuous reception mode (error) 467
13.5.6 Continuous mode (slave mode, transmission/reception mode) 468
13.5.7 Continuous mode (slave mode, reception mode) 469
13.5.8 Clock timing 470
13.6 Output Pin Status with Operation Disabled 472
13.7 Operation Flow 473
13.8 Baud Rate Generator 479
13.8.1 Baud rate generation 480
13.9 Cautions 481

CHAPTER 14 INTERRUPT/EXCEPTION PROCESSING FUNCTION 482

14.1 Features **482**
14.2 Non-Maskable Interrupts **485**
14.2.1 Operation 487
14.2.2 Restore 488
14.2.3 NP flag 489
14.3 Maskable Interrupts **490**
14.3.1 Operation 490
14.3.2 Restore 492
14.3.3 Priorities of maskable interrupts 493
14.3.4 Interrupt control register (xxICn) 497
14.3.5 Interrupt mask registers 0 to 2 (IMR0 to IMR2) 499
14.3.6 In-service priority register (ISPR) 500
14.3.7 ID flag 501
14.3.8 Watchdog timer mode register 2 (WDTM2) 501
14.4 Software Exception **502**
14.4.1 Operation 502
14.4.2 Restore 503
14.4.3 EP flag 504
14.5 Exception Trap **505**
14.5.1 Illegal opcode definition 505
14.5.2 Debug trap 507
14.6 External Interrupt Request Input Pins (NMI and INTP0 to INTP7) **509**
14.6.1 Noise elimination 509
14.6.2 Edge detection 509
14.7 Interrupt Acknowledge Time of CPU **515**
14.8 Periods in Which Interrupts Are Not Acknowledged by CPU **516**
14.9 Cautions **516**

CHAPTER 15 KEY INTERRUPT FUNCTION **517**
15.1 Function **517**
15.2 Register **518**
15.3 Cautions **518**

CHAPTER 16 STANDBY FUNCTION **519**
16.1 Overview **519**
16.2 Registers **521**
16.3 HALT Mode **524**
16.3.1 Setting and operation status 524
16.3.2 Releasing HALT mode 524
16.4 IDLE1 Mode **526**
16.4.1 Setting and operation status 526
16.4.2 Releasing IDLE1 mode 526
16.5 IDLE2 Mode **528**
16.5.1 Setting and operation status 528
16.5.2 Releasing IDLE2 mode 528

16.5.3 Securing setup time when releasing IDLE2 mode 530
16.6 STOP Mode 531
16.6.1 Setting and operation status 531
16.6.2 Releasing STOP mode 531
16.6.3 Securing oscillation stabilization time when releasing STOP mode 533
16.7 Subclock Operation Mode 534
16.7.1 Setting and operation status 534
16.7.2 Releasing subclock operation mode 534
16.8 Sub-IDLE Mode 536
16.8.1 Setting and operation status 536
16.8.2 Releasing sub-IDLE mode 537

CHAPTER 17 RESET FUNCTIONS 539
17.1 Overview 539
17.2 Registers to Check Reset Source 540
17.3 Operation 541
17.3.1 Reset operation via $\overline{\text{RESET}}$ pin 541
17.3.2 Reset operation by watchdog timer 2 543
17.3.3 Reset operation by power-on-clear circuit 544
17.3.4 Reset operation by low-voltage detector 544
17.3.5 Reset operation by clock monitor 544

CHAPTER 18 CLOCK MONITOR 545
18.1 Functions 545
18.2 Configuration 545
18.3 Register 546
18.4 Operation 547

CHAPTER 19 POWER-ON-CLEAR CIRCUIT 550
19.1 Function 550
19.2 Configuration 550
19.3 Operation 551

CHAPTER 20 LOW-VOLTAGE DETECTOR 552
20.1 Functions 552
20.2 Configuration 552
20.3 Registers 553
20.4 Operation 555
20.4.1 To use for internal reset signal 555
20.4.2 To use for interrupt 557
20.5 RAM Retention Voltage Detection Operation 558
20.6 Emulation Function 559

CHAPTER 21 REGULATOR 560
21.1 Overview 560

21.2 Operation **561**

CHAPTER 22 FLASH MEMORY **562**

22.1 Features **562**

22.1.1 Erasure unit 563

22.2 Rewriting by Dedicated Flash Programmer **564**

22.2.1 Programming environment 564

22.2.2 Communication mode 565

22.2.3 Flash memory control 570

22.2.4 Selection of communication mode 571

22.2.5 Communication commands 572

22.2.6 Pin connection 573

22.2.7 Recommended circuit example for writing 577

22.3 Rewriting by Self Programming **578**

22.3.1 Overview 578

22.3.2 Features 579

22.3.3 Standard self programming flow 580

22.3.4 Flash functions 581

22.3.5 Pin processing 581

22.3.6 Internal resources used 582

CHAPTER 23 OPTION BYTE FUNCTION **583**

CHAPTER 24 ON-CHIP DEBUG FUNCTION **584**

24.1 Features **584**

24.2 Connection Circuit Example **585**

24.3 Interface Signals **586**

24.4 Register **588**

24.5 Operation **589**

24.6 ROM Security Function **590**

24.6.1 Security ID 590

24.6.2 Setting 591

24.7 Cautions **592**

CHAPTER 25 ELECTRICAL SPECIFICATIONS (TARGET) **593**

25.1 Electrical Specifications **593**

25.2 Capacitance **595**

25.3 Operating Conditions **595**

25.4 Oscillator Characteristics **596**

25.4.1 Main clock oscillator characteristics 596

25.4.2 Subclock oscillator characteristics 597

25.4.3 PLL characteristics 598

25.4.4 Internal oscillator characteristics 598

25.5 Voltage Regulator Characteristics **598**

25.6 DC Characteristics **599**

25.6.1 I/O level 599
25.6.2 Pin leakage current 600
25.6.3 Supply current 601
25.7 Data Retention Characteristics 602
25.8 AC Characteristics 603
25.8.1 CLKOUT output timing 604
25.9 Basic Operation 605
25.10 Flash Memory Programming Characteristics 612

CHAPTER 26 PACKAGE DRAWING 613

APPENDIX A REGISTER INDEX 614

APPENDIX B INSTRUCTION SET LIST 620
B.1 Conventions 620
B.2 Instruction Set (in Alphabetical Order) 623

CHAPTER 1 INTRODUCTION

The V850ES/HE2 is one of the products in the NEC Electronics V850 Series of single-chip microcontrollers designed for low-power operation for real-time control applications.

1.1 General

The V850ES/HE2 is a 32-bit single-chip microcontroller that includes the V850ES CPU core and peripheral functions such as ROM/RAM, a timer/counter, serial interfaces, and an A/D converter.

In addition to high real-time response characteristics and 1-clock-pitch basic instructions, the V850ES/HE2 features multiply instructions, saturated operation instructions, bit manipulation instructions, etc., realized by a hardware multiplier, as optimum instructions for digital servo control applications.

Table 1-1 lists the products of the V850ES/HE2.

Table 1-1. V850ES/HE2 Product List

Part Number		μPD70F3700	μPD70F3701
Internal memory	Flash memory	64 KB	128 KB
	RAM	6 KB	
Memory space	Logical space	64 MB	
General-purpose register		32 bits × 32 registers	
Main clock (oscillation frequency)		Ceramic/crystal/external clock • In PLL mode: f_X = 4 to 5 MHz • In clock through mode: f_X = 4 to 5 MHz	
Subclock (oscillation frequency)		Crystal/external clock: f_{XT} = 32.768 kHz RC oscillation: 20 kHz	
Internal oscillator		f_R = 200 kHz (TYP.)	
Minimum instruction execution time		50 ns (main clock (f_{XX}) = 20 MHz operation)	
DSP function		32 × 32 = 64: 200 to 250 ns (at 20 MHz) 32 × 32 + 32 = 32: 300 ns (at 20 MHz) 16 × 16 = 32: 50 to 100 ns (at 20 MHz) 16 × 16 + 32 = 32: 150 ns (at 20 MHz)	
I/O port		I/O: 51	
Timer		16-bit timer/event counter P: 4 channels 16-bit timer/event counter Q: 1 channel 16-bit interval timer M: 1 channel Watchdog timer 2: 1 channel Watch timer: 1 channel	
A/D converter		10-bit resolution × 10 channels	
Serial interface		CSIB: 2 channels UARTA (for LIN): 2 channels	
Interrupt source		External: 9 (9)[Note], internal: 32	
Power save function		HALT/IDLE1/IDLE2/STOP/subclock/sub-IDLE mode	
Reset		$\overline{\text{RESET}}$ pin input, watchdog timer 2 (WDT2), clock monitor (CLM), POC circuit, low-voltage detector (LVI)	
On-chip debug function		Provided (RUN/break)	
Operating power supply voltage		3.5 to 5.5 V (A/D converter: 4.0 to 5.5 V)	
Operating ambient temperature		–40 to +85°C	
Package		64-pin plastic LQFP (fine pitch) (10 × 10 mm)	

Note The figure in parentheses indicates the number of external interrupts that can release STOP mode.

1.2 Features

- ○ Minimum instruction execution time: 50 ns (operating with main clock (f_{XX}) of 20 MHz)
- ○ General-purpose registers: 32 bits × 32 registers
- ○ CPU features:
  - Signed multiplication (16 × 16 → 32): 1 to 2 clocks
  - Signed multiplication (32 × 32 → 64): 1 to 5 clocks
  - Saturated operations (overflow and underflow detection functions included)
  - 32-bit shift instruction: 1 clock
  - Bit manipulation instructions
  - Load/store instructions with long/short format
- ○ Memory space: 64 MB of linear address space (for programs and data)
  - • Internal memory:
    - RAM: 6 KB
    - Flash memory: 64 KB/128 KB (see **Table 1-1**)
- ○ Interrupts and exceptions:
  - Non-maskable interrupts: 2 sources
  - Maskable interrupts: 39 sources
  - Software exceptions: 32 sources
  - Exception trap: 2 sources
- ○ I/O lines: I/O ports: 51
- ○ Timer function:
  - 16-bit interval timer M (TMM): 1 channel
  - 16-bit timer/event counter P (TMP): 4 channels
  - 16-bit timer/event counter Q (TMQ): 1 channel
  - Watch timer: 1 channel
  - Watchdog timer 2: 1 channel
- ○ Serial interface:
  - Asynchronous serial interface A (UARTA)
  - 3-wire variable-length serial interface B (CSIB)
    - UARTA (supporting LIN): 2 channels
    - CSIB: 2 channels
- ○ A/D converter: 10-bit resolution: 10 channels
- ○ On-chip debug function: JTAG interface
- ○ Clock generator:
  - During main clock or subclock operation
  - 7-level CPU clock (f_{XX}, $f_{XX}/2$, $f_{XX}/4$, $f_{XX}/8$, $f_{XX}/16$, $f_{XX}/32$, f_{XT})
  - Clock-through mode/PLL mode selectable
- ○ Internal oscillation clock: 200 kHz (TYP.)
- ○ Power-save functions: HALT/IDLE1/IDLE2/STOP/subclock/sub-IDLE mode
- ○ Package: 64-pin plastic LQFP (fine pitch) (10 × 10)

1.3 Application Fields

Consumer devices

1.4 Ordering Information

Part Number	Package	On-Chip Flash Memory
μPD70F3700GB-8EU-A	64-pin plastic LQFP (fine pitch) (10 × 10)	64 KB
μPD70F3701GB-8EU-A	64-pin plastic LQFP (fine pitch) (10 × 10)	128 KB

Remark Products with -A at the end of the part number are lead-free products.

1.5 Pin Configuration (Top View)

64-pin plastic LQFP (fine pitch) (10 × 10)

μPD70F3700GB-8EU-A μPD70F3701GB-8EU-A

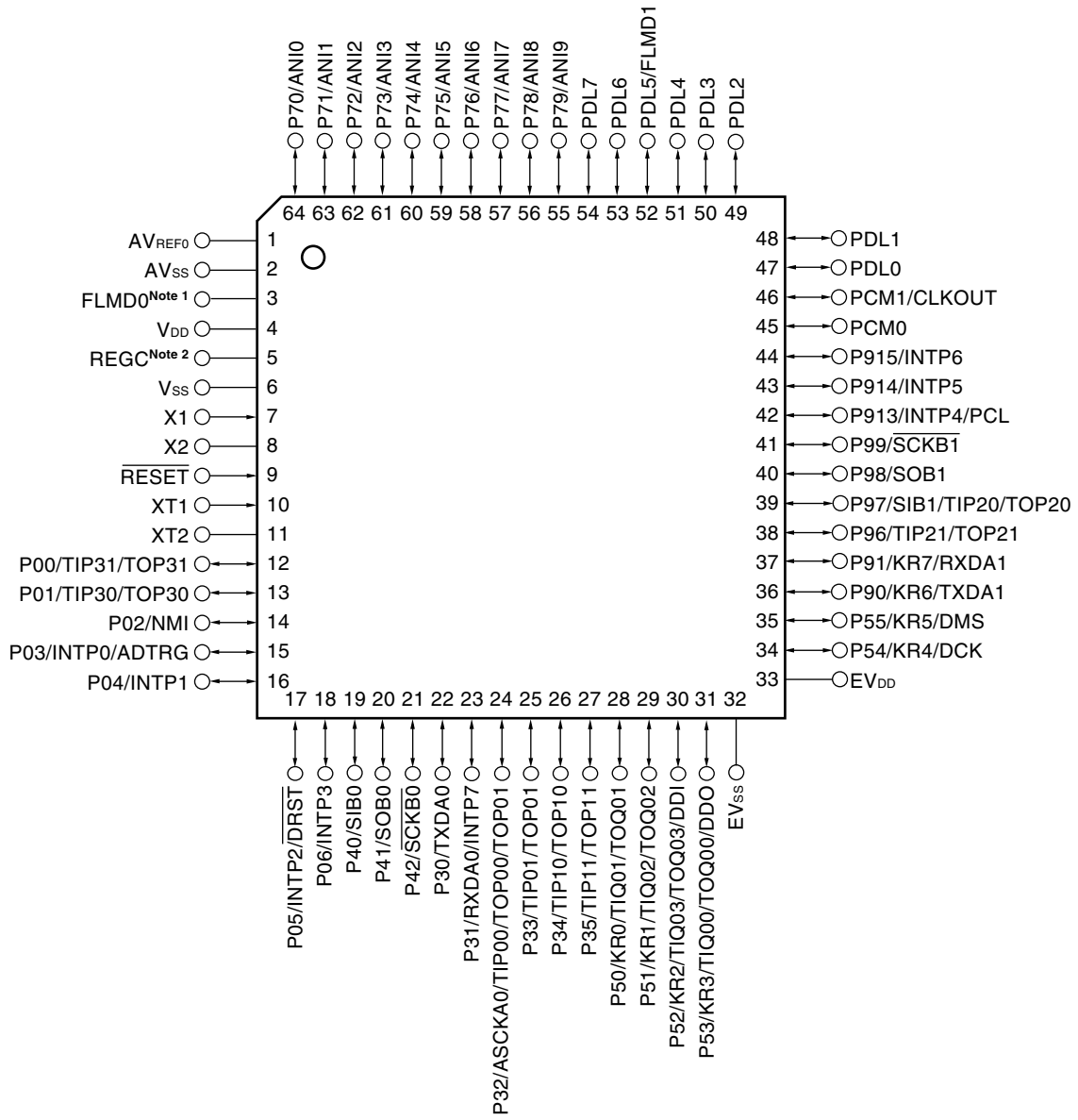

Notes 1. Connect this pin to V_{SS} in the normal mode.

2. Connect the REGC pin to V_{SS} via a 4.7 μF (preliminary value) capacitor.

Pin identification

ADTRG:	A/D trigger input
ANI0 to ANI9:	Analog input
ASCKA0:	Asynchronous serial clock
AV_{REF0}:	Analog reference voltage
AV_{SS}:	Analog V_{SS}
CLKOUT:	Clock output
DCK:	Debug clock
DDI:	Debug data input
DDO:	Debug data output
DMS:	Debug mode select
$\overline{DRST}$:	Debug reset
EV_{DD}:	Power supply for port
EV_{SS}:	Ground for port
FLMD0, FLMD1:	Flash programming mode
INTP0 to INTP7:	External interrupt request
KR0 to KR7:	Key return
NMI:	Non-maskable interrupt request
P00 to P06:	Port 0
P30 to P35:	Port 3
P40 to P42:	Port 4
P50 to P55:	Port 5
P70 to P79:	Port 7
P90, P91,	
P96 to P99,	
P913 to P915:	Port 9

PCL:	Programmable clock output
PCM0, PCM1:	Port CM
PDL0 to PDL7:	Port DL
REGC:	Regulator control
$\overline{RESET}$:	Reset
RXDA0, RXDA1:	Receive data
$\overline{SCKB0}$, $\overline{SCKB1}$:	Serial clock
SIB0, SIB1:	Serial input
SOB0, SOB1:	Serial output
TIP00, TIP01,	
TIP10, TIP11,	
TIP20, TIP21,	
TIP30, TIP31,	
TIQ00 to TIQ03:	Timer input
TOP00, TOP01,	
TOP10, TOP11,	
TOP20, TOP21,	
TOP30, TOP31,	
TOQ00 to TOQ03:	Timer output
TXDA0, TXDA1:	Transmit data
V_{DD}:	Power supply
V_{SS}:	Ground
X1, X2:	Crystal for main clock
XT1, XT2:	Crystal for subclock

1.6 Function Block Configuration

1.6.1 Internal block diagram

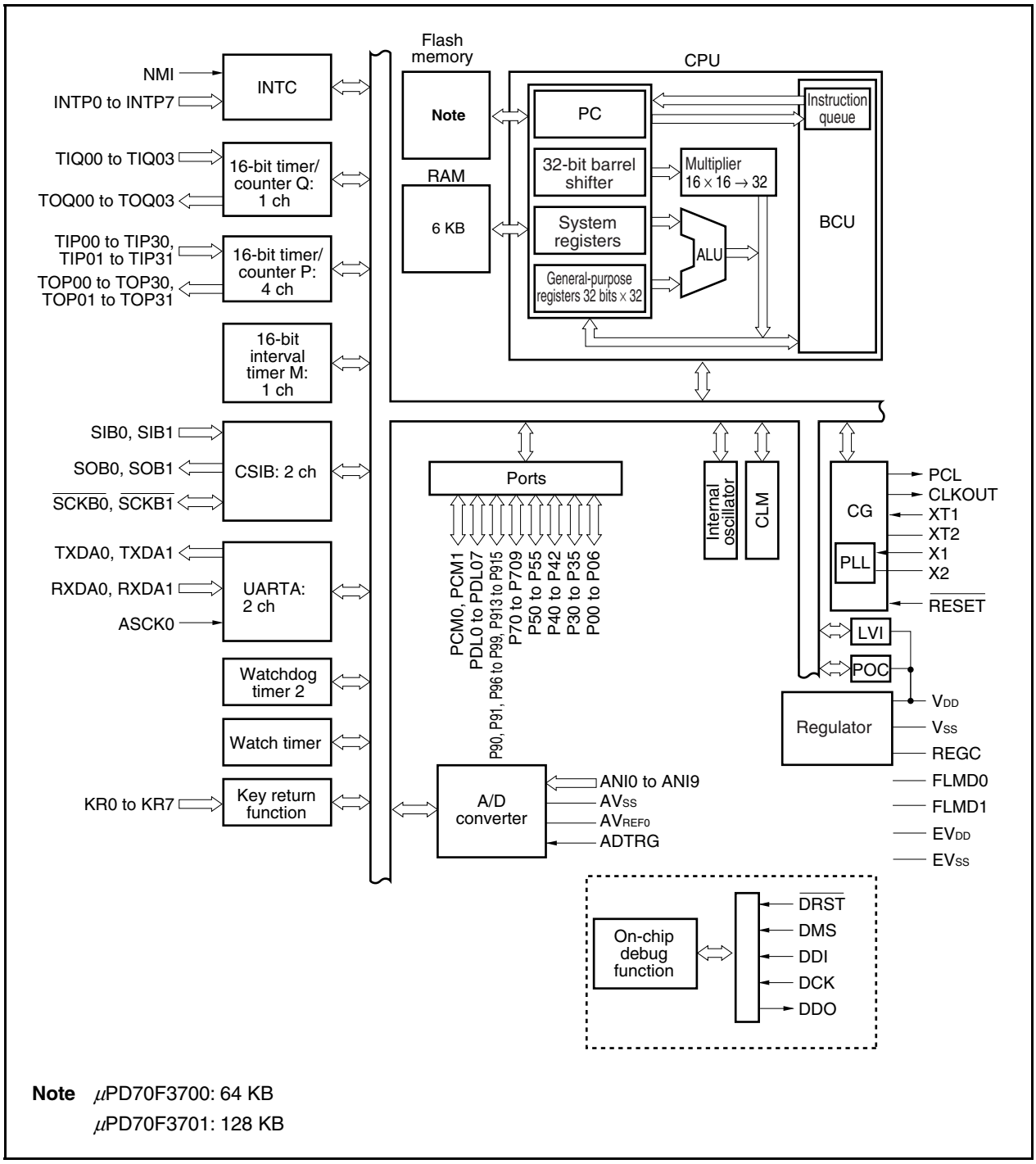

Note μPD70F3700: 64 KB
μPD70F3701: 128 KB

1.6.2 Internal units

(1) CPU

The CPU uses five-stage pipeline control to enable single-clock execution of address calculations, arithmetic logic operations, data transfers, and almost all other instruction processing.

Other dedicated on-chip hardware, such as a multiplier (16 bits × 16 bits → 32 bits) and a barrel shifter (32 bits) contribute to faster complex processing.

(2) Bus control unit (BCU)

The BCU controls the internal buses.

(3) ROM

This is a 64 KB/128 KB flash memory mapped to addresses 0000000H to 000FFFFH/0000000H to 001FFFFH. It can be accessed from the CPU in one clock during instruction fetch.

(4) RAM

This is a 6 KB RAM mapped to addresses 3FFD800H to 3FFEFFFH. It can be accessed from the CPU in one clock during data access.

(5) Interrupt controller (INTC)

This controller handles hardware interrupt requests (NMI, INTP0 to INTP7) from on-chip peripheral hardware and external hardware. Eight levels of interrupt priorities can be specified for these interrupt requests, and multiple servicing control can be performed.

(6) Clock generator (CG)

A main clock oscillator that generates the main clock oscillation frequency (f_X) and a subclock oscillator that generates the subclock oscillation frequency (f_{XT}) are available. As the main clock frequency (f_{XX}), f_X is used as is in the clock-through mode and is multiplied by four in the PLL mode.

The CPU clock frequency (f_{CPU}) can be selected from seven types: f_{XX}, $f_{XX}/2$, $f_{XX}/4$, $f_{XX}/8$, $f_{XX}/16$, $f_{XX}/32$, and f_{XT}.

(7) Internal oscillator

An internal oscillator is provided on chip. The oscillation frequency is 200 kHz (TYP.). An internal oscillator supplies the clock for watchdog timer 2 and timer M.

(8) Timer/counter

Four-channel 16-bit timer/event counter P (TMP), one-channel 16-bit timer/event counter Q (TMQ), and one-channel 16-bit interval timer M (TMM) are provided on chip.

(9) Watch timer

This timer counts the reference time period (0.5 s) for counting the clock (the 32.768 kHz from the subclock or the 32.768 kHz f_{BRG} from prescaler 3). The watch timer can also be used as an interval timer for the main clock.

(10) Watchdog timer 2

A watchdog timer is provided on chip to detect inadvertent program loops, system abnormalities, etc.
Either the internal oscillation clock or the main clock can be selected as the source clock.
Watchdog timer 2 generates a non-maskable interrupt request signal (INTWDT2) or a system reset signal (WDT2RES) after an overflow occurs.

(11) Serial interface

The V850ES/HE2 includes three kinds of serial interfaces: asynchronous serial interface A (UARTA) and 3-wire variable-length serial interface B (CSIB).
In the case of UARTA, data is transferred via the TXDAn and RXDAn pins (n = 0, 1).
In the case of CSIB, data is transferred via the SOBn, SIBn, and $\overline{\text{SCKBn}}$ pins (n = 0, 1).

(12) A/D converter

This 10-bit A/D converter includes 10 analog input pins. Conversion is performed using the successive approximation method.

(13) Key interrupt function

A key interrupt request signal (INTKR) can be generated by inputting a falling edge to key input pins (8 channels).

(14) On-chip debug function

An on-chip debug function that uses the JTAG (Joint Test Action Group) communication specifications is provided. Switching between the normal port function and on-chip debugging function is done with the control pin input level and the on-chip debug mode register (OCDM).

(15) Ports

The general-purpose port functions and control pin functions are provided. For details, see **CHAPTER 4 PORT FUNCTIONS**.

CHAPTER 2 PIN FUNCTIONS

This section explains the names and functions of the pins of the V850ES/HE2.

2.1 Pin Function List

Two I/O buffer power supplies, AV_{REF0} and EV_{DD}, are available. The relationship between the power supplies and the pins is shown below.

Table 2-1. Pin I/O Buffer Power Supplies

Power Supply	Corresponding Pin
AV_{REF0}	Port 7
EV_{DD}	Ports 0, 3 to 5, 7, 9, DL, CM, $\overline{RESET}$

(1) Port pins

Table 2-2. List of Pins (Port Pins) (1/2)

Pin Name	I/O	Function	Alternate Function
P00	I/O	Port 0 7-bit I/O port Input/output can be specified in 1-bit units.	TIP31/TOP31
P01			TIP30/TOP30
P02			NMI
P03			INTP0/ADTRG
P04			INTP1
P05			INTP2/$\overline{DRST}$
P06			INTP3
P30	I/O	Port 3 6-bit I/O port Input/output can be specified in 1-bit units.	TXDA0
P31			RXDA0/INTP7
P32			ASCKA0/TIP00/TOP00/TOP01
P33			TIP01/TOP01
P34			TIP10/TOP10
P35			TIP11/TOP11
P40	I/O	Port 4 3-bit I/O port Input/output can be specified in 1-bit units.	SIB0
P41			SOB0
P42			$\overline{SCKB0}$
P50	I/O	Port 5 6-bit I/O port Input/output can be specified in 1-bit units.	KR0/TIQ01/TOQ01
P51			KR1/TIQ02/TOQ02
P52			KR2/TIQ03/TOQ03/DDI
P53			KR3/TIQ00/TOQ00/DDO
P54			KR4/DCK
P55			KR5/DMS

Table 2-2. List of Pins (Port Pins) (2/2)

Pin Name	I/O	Function	Alternate Function
P70 to P79	I/O	Port 7 10-bit I/O port Input/output can be specified in 1-bit units.	ANI0 to ANI9
P90	I/O	Port 9 9-bit I/O port Input/output can be specified in 1-bit units.	KR6/TXDA1
P91			KR7/RXDA1
P96			TIP21/TOP21
P97			SIB1/TIP20/TOP20
P98			SOB1
P99			$\overline{\text{SCKB1}}$
P913			INTP4/PCL
P914			INTP5
P915			INTP6
PCM0	I/O	Port CM 2-bit I/O port Input/output can be specified in 1-bit units.	–
PCM1			CLKOUT
PDL0 to PDL4	I/O	Port DL 8-bit I/O port Input/output can be specified in 1-bit units.	–
PDL5			FLMD1
PDL6, PDL7			–

(2) Non-port pins

Table 2-3. List of Pins (Non-Port Pins) (1/3)

Pin Name	I/O	Function	Alternate Function
NMI[Note]	Input	External interrupt input (non-maskable, with analog noise eliminated)	P02
INTP0	Input	External interrupt request input (maskable, with analog noise eliminated)	P03/ADTRG
INTP1			P04
INTP2			P05/$\overline{\text{DRST}}$
INTP3			P06
INTP4			P913/PCL
INTP5			P914
INTP6			P915
INTP7			P31/RXDA0
TIP00	Input	External event/clock input (TMP00)	P32/ASCKA0/TOP00/TOP01
TIP01		External event input (TMP01)	P33/TOP01
TIP10		External event/clock input (TMP10)	P34/TOP10
TIP11		External event input (TMP11)	P35/TOP11
TIP20		External event/clock input (TMP20)	P97/SIB1/TOP20
TIP21		External event input (TMP21)	P96/TOP21
TIP30		External event/clock input (TMP30)	P01/TOP30
TIP31		External event input (TMP31)	P00/TOP31
TOP00	Output	Timer output (TMP00)	P32/ASCKA0/TIP00/TOP01
TOP01		Timer output (TMP01)	P32/ASCKA0/TIP00/TOP00
			P33/TIP01
TOP10		Timer output (TMP10)	P34/TIP10
TOP11		Timer output (TMP11)	P35/TIP11
TOP20		Timer output (TMP20)	P97/SIB1/TIP20
TOP21		Timer output (TMP21)	P96/TIP21
TOP30		Timer output (TMP30)	P01/TIP30
TOP31		Timer output (TMP31)	P00/TIP31
TIQ00	Input	External event/clock input (TMQ00)	P53/KR3/TOQ00/DDO
TIQ01		External event input (TMQ01)	P50/KR0/TOQ01
TIQ02		External event input (TMQ02)	P51/KR1/TOQ02
TIQ03		External event input (TMQ03)	P52/KR2/TOQ03/DDI

Note The NMI pin alternately functions as the P02 pin. It functions as the P02 pin after reset. To enable the NMI pin, set the PMC0.PMC02 bit to 1. The initial setting of the NMI pin is “No edge detected”. Select the NMI pin valid edge using INTF0 and INTR0 registers.

Table 2-3. List of Pins (Non-Port Pins) (2/3)

Pin Name	I/O	Function	Alternate Function
TOQ00	Output	Timer output (TMQ00)	P53/KR3/TIQ00/DDO
TOQ01		Timer output (TMQ01)	P50/KR0/TIQ01
TOQ02		Timer output (TMQ02)	P51/KR1/TIQ02
TOQ03		Timer output (TMQ03)	P52/KR2/TIQ03/DDI
SIB0	Input	Serial receive data input (CSIB0)	P40
SIB1		Serial receive data input (CSIB1)	P97/TIP20/TOP20
SOB0	Output	Serial transmit data output (CSIB0)	P41
SOB1		Serial transmit data output (CSIB1)	P98
$\overline{\text{SCKB0}}$	I/O	Serial clock I/O (CSIB0)	P42
$\overline{\text{SCKB1}}$		Serial clock I/O (CSIB1)	P99
RXDA0	Input	Serial receive data input (UARTA0)	P31/INTP7
RXDA1		Serial receive data input (UARTA1)	P91/KR7
TXDA0	Output	Serial transmit data output (UARTA0)	P30
TXDA1		Serial transmit data output (UARTA1)	P90/KR6
ASCKA0	Input	Baud rate clock input to UARTA0	P32/TIP00/TOP00/TOP01
ANI0 to ANI9	Input	Analog voltage input to A/D converter	P70 to P79
AV_{REF0}	Input	Reference voltage input to A/D converter, positive power supply for alternate-function port 7	–
AV_{SS}	–	Ground potential for A/D and D/A converters (same potential as V_{SS})	–
ADTRG	Input	A/D converter external trigger input	P03/INTP0
KR0	Input	Key interrupt input	P50/TIQ01/TOQ01
KR1			P51/TIQ02/TOQ02
KR2			P52/TIQ03/TOQ03/DDI
KR3			P53/TIQ00/TOQ00/DDO
KR4			P54/DCK
KR5			P55/DMS
KR6			P90/TXDA1
KR7			P91/RXDA1
DMS	Input	Debug mode select	P55/KR5
DDI	Input	Debug data input	P52/KR2/TIQ03/TOQ03
DDO	Output	Debug data output	P53/KR3/TIQ00/TOQ00
DCK	Input	Debug clock input	P54/KR4
$\overline{\text{DRST}}$	Input	Debug reset input	P05/INTP2
FLMD0	Input	Flash programming mode setting pins	–
FLMD1			PDL5
CLKOUT	Output	Internal system clock output	PCM1

Table 2-3. List of Pins (Non-Port Pins) (3/3)

Pin Name	I/O	Function	Alternate Function
PCL	Output	Clock output (timing output of X1 input clock and subclock)	P913/INTP4
REGC	–	Regulator output stabilizing capacitor connection	–
$\overline{\text{RESET}}$	Input	System reset input	–
X1	Input	Main clock resonator connection	–
X2	–		–
XT1	Input	Subclock resonator connection	–
XT2	–		–
V_{DD}	–	Positive power supply pin for internal circuitry	–
V_{SS}	–	Ground potential for internal circuitry	–
EV_{DD}	–	Positive power supply pin for external circuitry (same potential as V_{DD})	–
EV_{SS}	–	Ground potential for external circuitry (same potential as V_{SS})	–

2.2 Description of Pin Functions

(1) P00 to P06 (port 0) … 3-state I/O

P00 to P06 function as a 7-bit I/O port that can be set to input or output in 1-bit units.

Besides functioning as an I/O port, these pins operate as NMI input, external interrupt request signal input, timer/counter I/O, external trigger of the A/D converter, and debug reset input.

This port can be set in the port mode or control mode in 1-bit units. The valid edge of each pin is specified by the INTR0 and INTF0 registers.

An on-chip pull-up resistor can be connected to P00 to P06 by using pull-up resistor option register 0 (PU0).

(a) Port mode

P00 to P06 can be set in the input or output mode in 1-bit units, by using port mode register 0 (PM0).

(b) Control mode

(i) NMI (Non-maskable interrupt request) … input

This pin inputs a non-maskable interrupt request signal.

(ii) INTP0 to INTP3 (External interrupt request) … input

These pins input external interrupt request signals.

(iii) TIP30, TIP31 (Timer input) … input

These pins input an external count clock to timer P3 (TMP3).

(iv) TOP30, TOP31 (Timer output) … output

These pins output a pulse signal from timer P3 (TMP3).

(v) ADTRG (A/D trigger input) … input

This pin inputs an external trigger to the A/D converter. It is controlled by using A/D converter mode register 0 (ADA0M0).

(vi) $\overline{\text{DRST}}$ (Debug reset) … input

This pin inputs a debug reset signal, a negative-logic signal that asynchronously initializes the on-chip debug circuit. To deassert this signal, reset or invalidate the on-chip debug circuit. Deassert this signal when the debug function is not used.

For details, see **CHAPTER 24 ON-CHIP DEBUG FUNCTION**.

(2) P30 to P35 (port 3) … 3-state I/O

P30 to P35 function as a 6-bit I/O port that can be set to input or output in 1-bit units.

Besides functioning as an I/O port, these pins operate as external interrupt request signal input, serial interface I/O, and timer/counter I/O. This port can be set in the port mode or control mode in 1-bit units. The valid edge of each pin is specified by the INTR3L and INTF3L registers.

An on-chip pull-up resistor can be connected to P30 to P35 by using pull-up resistor option register 3 (PU3).

(a) Port mode

P30 to P35 can be set in the input or output mode in 1-bit units, by using port mode register 3 (PM3).

(b) Control mode

(i) RXDA0 (Receive data) … input

This pin inputs the serial receive data of UARTA0.

(ii) TXDA0 (Transmit data) … output

This pin outputs the serial transmit data of UARTA0.

(iii) ASCKA0 (Asynchronous serial clock) … input

This is an input pin for UARTA0.

(iv) INTP7 (External interrupt request) … input

This pin inputs an external interrupt request signal.

(v) TIP00, TIP01, TIP10, TIP11 (Timer input) … input

These are input pins for timers P0 and P1 (TMP0 and TMP1).

(vi) TOP00, TOP01, TOP10, TOP11 (Timer output) … output

These are output pins for timers P0 and P1 (TMP0 and TMP1).

(3) P40 to P42 (port 4) … 3-state I/O

P40 to P42 function as a 3-bit I/O port that can be set to input or output in 1-bit units.

Besides functioning as an I/O port, these pins operate as serial interface I/O. This port can be set in the port mode or control mode in 1-bit units.

An on-chip pull-up resistor can be connected to P40 to P42 by using pull-up resistor option register 4 (PU4).

(a) Port mode

P40 to P42 can be set in the input or output mode in 1-bit units, by using port mode register 4 (PM4).

(b) Control mode

(i) SIB0 (Serial input) … input

This pin inputs the serial receive data of CSIB0.

(ii) SOB0 (Serial output) … output

This pin outputs the serial transmit data of CSIB0.

(iii) $\overline{\text{SCKB0}}$ (serial clock) … 3-state I/O

This pin inputs/outputs the serial clock of CSIB0.

(4) P50 to P55 (Port 5) … 3-state I/O

P50 to P55 function as a 6-bit I/O port that can be set to input or output in 1-bit units.

Besides functioning as an I/O port, these pins operate as timer/counter I/O, debug function I/O, and key interrupt input. This port can be set in the port mode or control mode in 1-bit units.

An on-chip pull-up resistor can be connected to P50 to P55 by using pull-up resistor option register 5 (PU5).

(a) Port mode

P50 to P55 can be set in the input or output mode in 1-bit units, by using port mode register 5 (PM5).

(b) Control mode

(i) KR0 to KR5 (Key return) … input

These pins input a key interrupt. Their operation is specified by using the key return mode register (KRM) in the input port mode.

(ii) TIQ00, TIQ01, TIQ02, TIQ03 (Timer input) … input

These are input pins for timer Q0 (TMQ0).

(iii) TOQ00, TOQ01, TOQ02, TOQ03 (Timer output) … output

These are output pins for timer Q0 (TMQ0).

(iv) DDI (Debug data input) … input

This pin inputs debug data to the on-chip debug circuit.

For details, see **CHAPTER 24 ON-CHIP DEBUG FUNCTION**.

(v) DDO (Debug data output) … output

This pin outputs debug data from the on-chip debug circuit.

For details, see **CHAPTER 24 ON-CHIP DEBUG FUNCTION**.

(iv) DCK (Debug clock input) … input

This pin inputs a debug clock to the on-chip debug circuit.

For details, see **CHAPTER 24 ON-CHIP DEBUG FUNCTION**.

(vii) DMS (Debug mode select) … input

This pin selects the debug mode of the on-chip debug circuit.

For details, see **CHAPTER 24 ON-CHIP DEBUG FUNCTION**.

(5) P70 to P79 (port 7) … 3-state I/O

P70 to P79 function as a 10-bit I/O port that can be set to input or output in 1-bit units.

Besides functioning as an I/O port, these pins operate as analog input to the A/D converter in the control mode. When using the analog input pins, however, set this port in the input mode. At this time, do not read the port.

(a) Port mode

P70 to P79 can be set in the input or output mode in 1-bit units, by using port mode registers 7L and 7H (PM7L and PM7H).

(b) Control mode

P70 to P79 function alternately as the ANI0 to ANI9 pins.

(i) ANI0 to ANI9 (Analog input 0 to 9) … input

These pins input an analog signal to the A/D converter.

(6) P90, P91, P96 to P99, P913 to P915 (port 9) … 3-state I/O

P90, P91, P96 to P99 and P913 to P915 function as a 9-bit I/O port that can be set to input or output in 1-bit units.

Besides functioning as an I/O port, these pins operate as serial interface I/O, timer/counter I/O, clock output, external interrupt request signal input, and key interrupt input. This port can be set in the port mode or control mode in 1-bit units. The valid edge of P90, P91, P96 to P99 and P913 to P915 is specified by INTR9H and INTF9H registers.

An on-chip pull-up resistor can be connected to P90, P91, P96 to P99, and P913 to P915 by using pull-up resistor option register 9 (PU9).

(a) Port mode

P90, P91, P96 to P99, and P913 to P915 can be set in the input or output mode in 1-bit units, by using port mode register 9 (PM9).

(b) Control mode

(i) SIB1 (Serial input) … input

This pin inputs the serial receive data of CSIB1.

(ii) SOB1 (Serial output) … output

This pin outputs the serial transmit data of CSIB1.

(iii) $\overline{\text{SCKB1}}$ (Serial clock) … 3-state I/O

This pin inputs/outputs the serial clock of CSIB1.

(iv) RXDA1 (Receive data) … input

This pin inputs the serial receive data of UARTA1.

(v) TXDA1 (Transmit data) … output

This pin outputs the serial transmit data of UARTA1.

(vi) TIP20, TIP21 (Timer input) … input

These are input pins for timer P2 (TMP2).

(vii) TOP20, TOP21 (Timer output) … output

These are output pins for timer P2 (TMP2).

(viii) PCL (Clock output) … output

This pin outputs a clock.

(ix) INTP4 to INTP6 (External interrupt request) … input

These pins input an external interrupt request signal.

(x) KR6, KR7 (Key return) … input

These pins input a key interrupt. Their operation is specified by the key return mode register (KRM) in the input port mode.

(7) PCM0, PCM1 (port CM) … 3-state I/O

PCM0 and PCM1 function as a 2-bit I/O port that can be set to input or output in 1-bit units.
Besides functioning as an I/O port, these pins operate as bus clock output in the control mode.

(a) Port mode

PCM0 and PCM1 can be set in the input or output mode in 1-bit units, by using port mode register CM (PMCM).

(b) Control mode

(i) CLKOUT (Clock output) … output

This pin outputs an internally generated bus clock.

(8) PDL0 to PDL7 (port DL) … 3-state I/O

PDL0 to PDL7 function as an 8-bit I/O port that can be set to input or output in 1-bit units.
PDL5 also functions as the FLMD1 pin when the flash memory is programmed (when a high level is input to FLMD0). At this time, be sure to input a low level to the FLMD1 pin.

(a) Port mode

PDL0 to PDL7 can be set in the input or output mode in 1-bit units, by using port mode register DL (PMDL).

(9) $\overline{\text{RESET}}$ (Reset) … input

$\overline{\text{RESET}}$ input is asynchronous input. When a signal with a fixed low level width is input to the $\overline{\text{RESET}}$ pin regardless of the operating clock, the system is reset, taking precedence over all the other operations.
This pin is used to release the standby mode (HALT, IDLE, or STOP), as well as for normal initialization/start.

(10) X1, X2 (Crystal for main clock)

These pins are used to connect the resonator that generates the system clock.

(11) XT1, XT2 (Crystal for subclock)

These pins are used to connect the resonator that generates the subclock.

(12) AV_{SS} (Ground for analog)

This is a ground pin for the A/D converter and alternate-function ports.

(13) AV_{REF0} (Analog reference voltage) … input

This pin supplies positive analog power to the A/D converter and alternate-function ports.

It also supplies a reference voltage to the A/D converter.

(14) EV_{DD} (Power supply for port)

This pin supplies positive power to the I/O ports and alternate-function pins.

(15) EV_{SS} (Ground for port)

This is a ground pin for the I/O ports and alternate-function pins.

(16) V_{DD} (Power supply)

This pin supplies positive power. Connect all the V_{DD} pins to a positive power supply.

(17) V_{SS} (Ground)

This is a ground pin. Connect all the V_{SS} pins to ground.

(18) FLMD0 (Flash programming mode) … input

This is a signal input pin for flash memory programming mode.

Connect this pin to V_{SS} in the normal operation mode.

(19) REGC (Regulator control) … input

This pin connects a capacitor for the regulator.

2.3 Pin I/O Circuit Types and Recommended Connection of Unused Pins

(1/2)

Pin	I/O Circuit Type	Recommended Connection
P00/TIP31/TOP31	5-W	Input: Independently connect to EV_{DD} or EV_{SS} via a resistor Output: Leave open
P01/TIP30/TOP30		
P02/NMI		
P03/INTP0/ADTRG		
P04/INTP1		
P05/INTP2/$\overline{\text{DRST}}$	5-AF	Input: Independently connect to EV_{SS} Output: Leave open
P06/INTP3	5-W	Input: Independently connect to EV_{DD} or EV_{SS} via a resistor Output: Leave open
P30/TXDA0	5-A	Input: Independently connect to EV_{DD} or EV_{SS} via a resistor Output: Leave open
P31/RXDA0/INTP7	5-W	
P32/ASCKA0/TIP00/TOP00/TOP01		
P33/TIP01/TOP01		
P34/TIP10/TOP10		
P35/TIP11/TOP11		
P40/SIB0	5-W	Input: Independently connect to EV_{DD} or EV_{SS} via a resistor Output: Leave open
P41/SOB0	5-A	
P42/$\overline{\text{SCKB0}}$	5-W	
P50/KR0/TIQ01/TOQ01	5-W	Input: Independently connect to EV_{DD} or EV_{SS} via a resistor Output: Leave open
P51/KR1/TIQ02/TOQ02		
P52/KR2/TIQ03/TOQ03/DDI		
P53/KR3/TIQ00/TOQ00/DDO		
P54/KR4/DCK		
P55/KR5/DMS		

(2/2)

Pin	I/O Circuit Type	Recommended Connection
P70/ANI0 to P79/ANI9	11-G	Input: Independently connect to AV_{REF0} or AV_{SS} via a resistor Output: Leave open
P90/KR6/TXDA1	5-W	Input: Independently connect to EV_{DD} or EV_{SS} via a resistor Output: Leave open
P91/KR7/RXDA1		
P96/TIP21/TOP21		
P97/SIB1/TIP20/TOP20		
P98/SOB1	5-A	
P99/$\overline{\text{SCKB1}}$	5-W	
P913/INTP4/PCL		
P914/INTP5		
P915/INTP6		
PCM0	5	Input: Independently connect to EV_{DD} or EV_{SS} via a resistor Output: Leave open
PCM1/CLKOUT		
PDL0 to PDL4	5	Input: Independently connect to EV_{DD} or EV_{SS} via a resistor Output: Leave open
PDL5/FLMD1		
PDL6, PDL7		
AV_{REF0}	–	Directly connect to V_{DD}
AV_{SS}	–	–
FLMD0[Note]	–	Directly connect to V_{SS}
REGC	–	–
$\overline{\text{RESET}}$	2	–
X1	–	–
X2	–	–
XT1	16	Connect to V_{SS} via a resistor
XT2	16	Leave open
V_{DD}	–	–
V_{SS}	–	–
EV_{DD}	–	–
EV_{SS}	–	–

Note If noise that exceeds the noise elimination width is input to the $\overline{\text{RESET}}$ pin during self programming, the flash on-board mode may be entered depending on the capacitance charge end timing when a capacitor is connected to the FLMD0 pin. Therefore, do not connect a capacitor to the FLMD0 pin.

2.4 Pin I/O Circuits

Figure 2-1. Pin I/O Circuit Types (1/2)

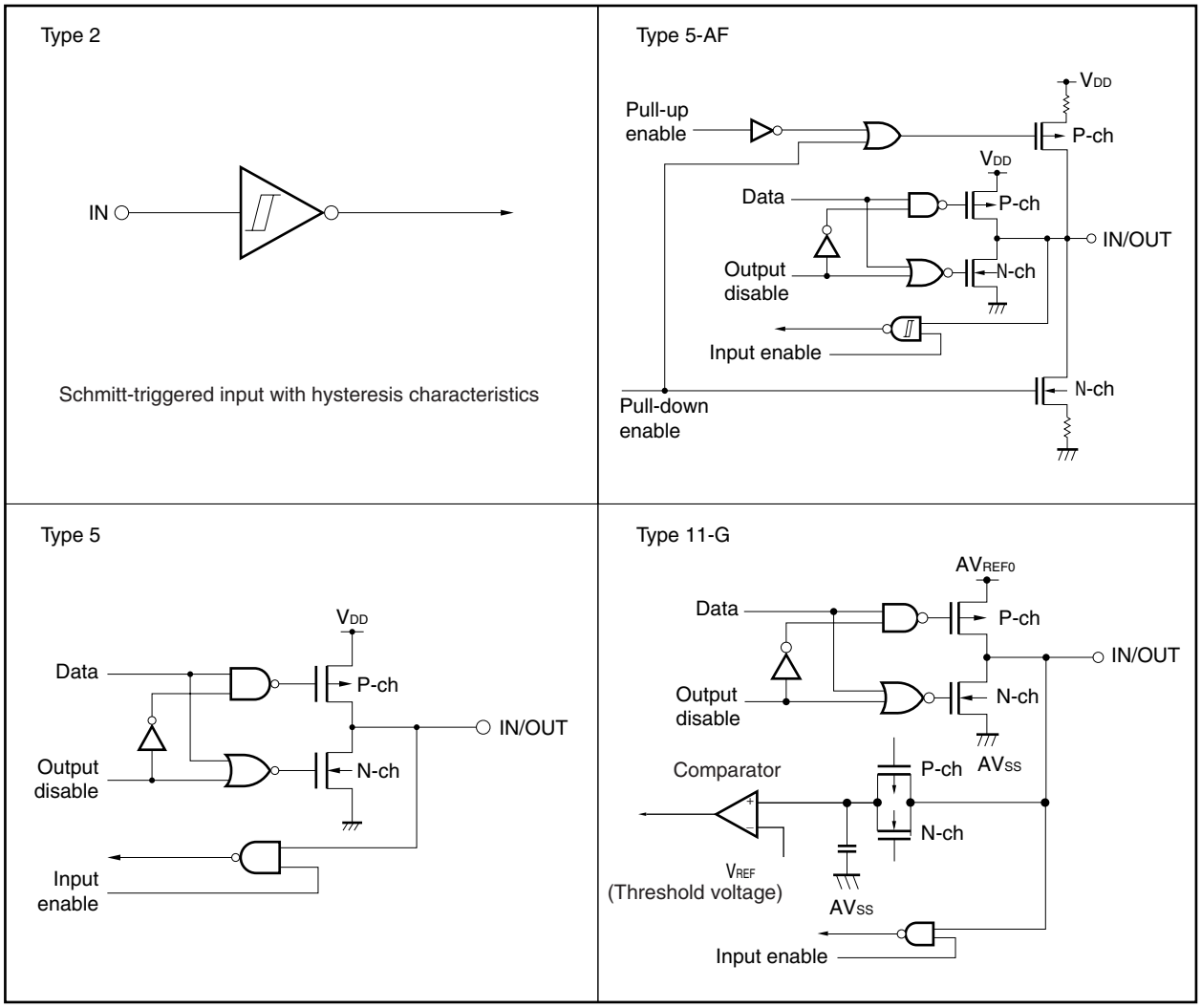

Figure 2-1. Pin I/O Circuit Types (2/2)

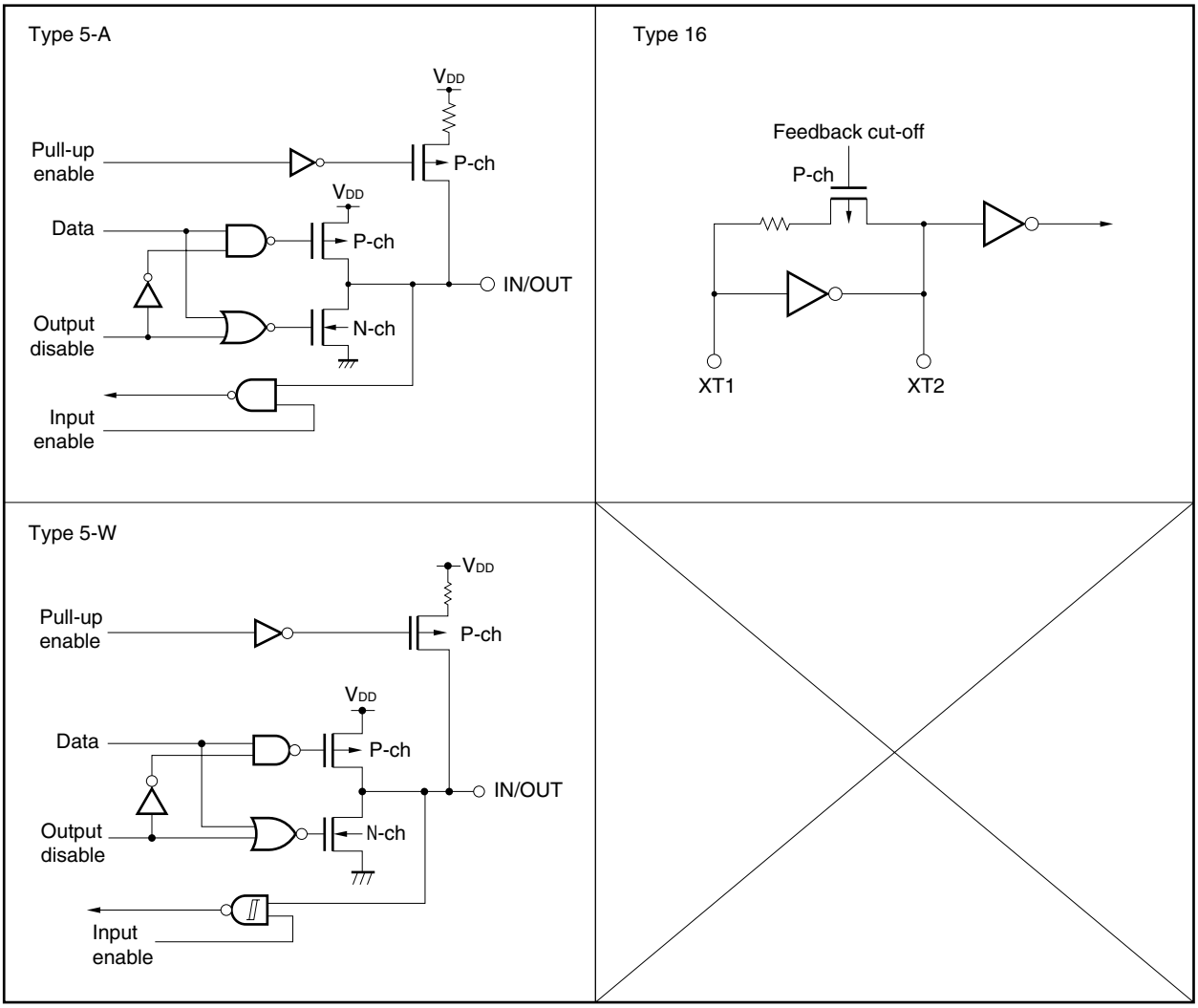

CHAPTER 3 CPU FUNCTION

The CPU of the V850ES/HE2 is based on RISC architecture and executes almost all instructions with one clock by using a 5-stage pipeline.

3.1 Features

○ Minimum instruction execution time: 50 ns (at 20 MHz operation)
○ Memory space Program (physical address) space: 64 MB linear
Data (logical address) space: 4 GB linear
○ General-purpose registers: 32 bits × 32 registers
○ Internal 32-bit architecture
○ 5-stage pipeline control
○ Multiplication/division instruction
○ Saturation operation instruction
○ 32-bit shift instruction: 1 clock
○ Load/store instruction with long/short format
○ Four types of bit manipulation instructions
- SET1
- CLR1
- NOT1
- TST1

3.2 CPU Register Set

The registers of the V850ES/HE2 can be classified into two types: general-purpose program registers and dedicated system registers. All the registers are 32 bits wide.

For details, refer to the **V850ES Architecture User's Manual**.

(1) Program register set

31 — 0

r0	(Zero register)
r1	(Assembler-reserved register)
r2	
r3	(Stack pointer (SP))
r4	(Global pointer (GP))
r5	(Text pointer (TP))
r6	
r7	
r8	
r9	
r10	
r11	
r12	
r13	
r14	
r15	
r16	
r17	
r18	
r19	
r20	
r21	
r22	
r23	
r24	
r25	
r26	
r27	
r28	
r29	
r30	(Element pointer (EP))
r31	(Link pointer (LP))

31 — 0

PC	(Program counter)

(2) System register set

31 — 0

EIPC	(Interrupt status saving register)
EIPSW	(Interrupt status saving register)

FEPC	(NMI status saving register)
FEPSW	(NMI status saving register)

ECR	(Interrupt source register)

PSW	(Program status word)

CTPC	(CALLT execution status saving register)
CTPSW	(CALLT execution status saving register)

DBPC	(Exception/debug trap status saving register)
DBPSW	(Exception/debug trap status saving register)

CTBP	(CALLT base pointer)

3.2.1 Program register set

The program registers include general-purpose registers and a program counter.

(1) General-purpose registers (r0 to r31)

Thirty-two general-purpose registers, r0 to r31, are available. Any of these registers can be used to store a data variable or an address variable.

However, r0 and r30 are implicitly used by instructions and care must be exercised when these registers are used. r0 always holds 0 and is used for an operation that uses 0 or addressing of offset 0. r30 is used by the SLD and SST instructions as a base pointer when these instructions access the memory. r1, r3 to r5, and r31 are implicitly used by the assembler and C compiler. When using these registers, save their contents for protection, and then restore the contents after using the registers. r2 is sometimes used by the real-time OS. If the real-time OS does not use r2, it can be used as a register for variables.

Table 3-1. Program Registers

Name	Usage	Operation
r0	Zero register	Always holds 0.
r1	Assembler-reserved register	Used as working register to create 32-bit immediate data
r2	Register for address/data variable (if real-time OS does not use r2)	
r3	Stack pointer	Used to create a stack frame when a function is called
r4	Global pointer	Used to access a global variable in the data area
r5	Text pointer	Used as register that indicates the beginning of a text area (area where program codes are located)
r6 to r29	Register for address/data variable	
r30	Element pointer	Used as base pointer to access memory
r31	Link pointer	Used when the compiler calls a function
PC	Program counter	Holds the instruction address during program execution

Remark For furthers details on the r1, r3 to r5, and r31 that are used in the assembler and C compiler, refer to the **CA850 (C Compiler Package) Assembly Language User's Manual**.

(2) Program counter (PC)

The program counter holds the instruction address during program execution. The lower 26 bits of this register are valid. Bits 31 to 26 are fixed to 0. A carry from bit 25 to 26 is ignored even if it occurs.

Bit 0 is fixed to 0. This means that execution cannot branch to an odd address.

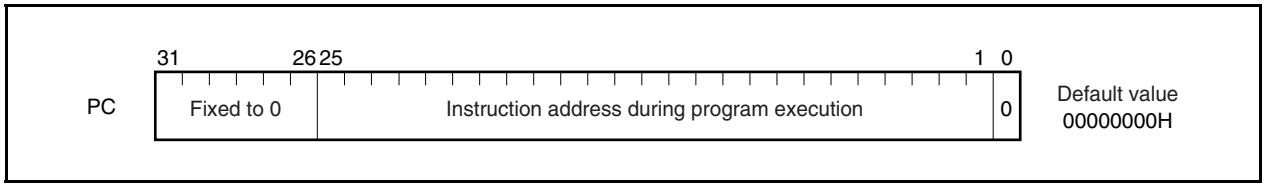

3.2.2 System register set

The system registers control the status of the CPU and hold interrupt information.

These registers can be read or written by using system register load/store instructions (LDSR and STSR), using the system register numbers listed below.

Table 3-2. System Register Numbers

System Register Number	System Register Name	Operand Specification	
		LDSR Instruction	STSR Instruction
0	Interrupt status saving register (EIPC)[Note 1]	√	√
1	Interrupt status saving register (EIPSW)[Note 1]	√	√
2	NMI status saving register (FEPC)[Note 1]	√	√
3	NMI status saving register (FEPSW)[Note 1]	√	√
4	Interrupt source register (ECR)	×	√
5	Program status word (PSW)	√	√
6 to 15	Reserved for future function expansion (operation is not guaranteed if these registers are accessed)	×	×
16	CALLT execution status saving register (CTPC)	√	√
17	CALLT execution status saving register (CTPSW)	√	√
18	Exception/debug trap status saving register (DBPC)	√[Note 2]	√[Note 2]
19	Exception/debug trap status saving register (DBPSW)	√[Note 2]	√[Note 2]
20	CALLT base pointer (CTBP)	√	√
21 to 31	Reserved for future function expansion (operation is not guaranteed if these registers are accessed)	×	×

Notes 1. Because only one set of these registers is available, the contents of these registers must be saved by program if multiple interrupts are enabled.

2. These registers can be accessed only during the interval between the execution of the DBTRAP instruction or illegal opcode and the DBRET instruction.

Caution **Even if EIPC or FEPC, or bit 0 of CTPC is set to 1 by the LDSR instruction, bit 0 is ignored when execution is returned to the main routine by the RETI instruction after interrupt servicing (this is because bit 0 of the PC is fixed to 0). Set an even value to EIPC, FEPC, and CTPC (bit 0 = 0).**

Remark √: Can be accessed
×: Access prohibited

(1) Interrupt status saving registers (EIPC and EIPSW)

EIPC and EIPSW are used to save the status when an interrupt occurs.

If a software exception or a maskable interrupt occurs, the contents of the program counter (PC) are saved to EIPC, and the contents of the program status word (PSW) are saved to EIPSW (these contents are saved to the NMI status saving registers (FEPC and FEPSW) if a non-maskable interrupt occurs).

The address of the instruction next to the instruction under execution, except some instructions (see **14.8 Periods in Which Interrupts Are Not Acknowledged by CPU**), is saved to EIPC when a software exception or a maskable interrupt occurs.

The current contents of the PSW are saved to EIPSW.

Because only one set of interrupt status saving registers is available, the contents of these registers must be saved by program when multiple interrupts are enabled.

Bits 31 to 26 of EIPC and bits 31 to 8 of EIPSW are reserved for future function expansion (these bits are always fixed to 0).

The value of EIPC is restored to the PC and the value of EIPSW to the PSW by the RETI instruction.

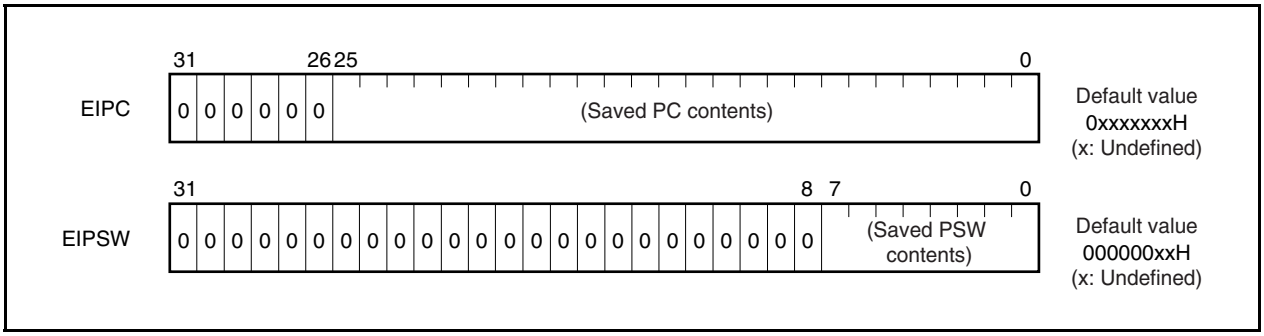

(2) NMI status saving registers (FEPC and FEPSW)

FEPC and FEPSW are used to save the status when a non-maskable interrupt (NMI) occurs.

If an NMI occurs, the contents of the program counter (PC) are saved to FEPC, and those of the program status word (PSW) are saved to FEPSW.

The address of the instruction next to the one of the instruction under execution, except some instructions, is saved to FEPC when an NMI occurs.

The current contents of the PSW are saved to FEPSW.

Because only one set of NMI status saving registers is available, the contents of these registers must be saved by program when multiple interrupts are enabled.

Bits 31 to 26 of FEPC and bits 31 to 8 of FEPSW are reserved for future function expansion (these bits are always fixed to 0).

The value of FEPC is restored to the PC and the value of FEPSW to the PSW by the RETI instruction.

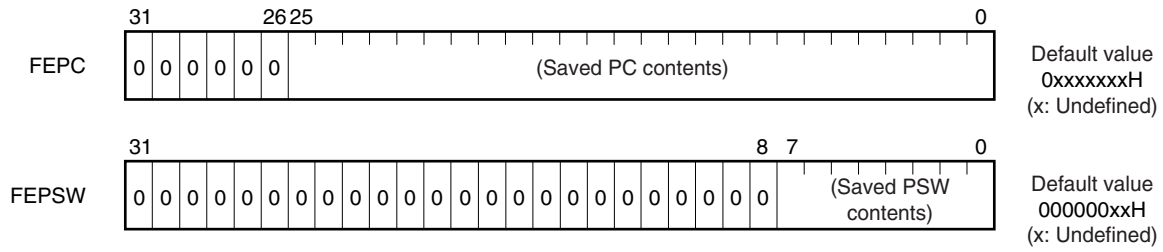

(3) Interrupt source register (ECR)

The interrupt source register (ECR) holds the source of an exception or interrupt if an exception or interrupt occurs. This register holds the exception code of each interrupt source. Because this register is a read-only register, data cannot be written to this register using the LDSR instruction.

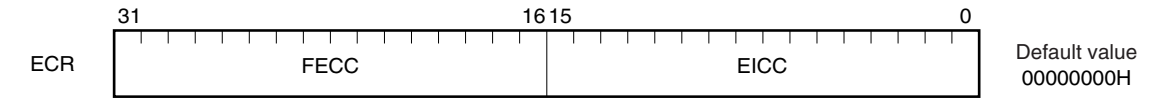

Bit position	Bit name	Meaning
31 to 16	FECC	Exception code of non-maskable interrupt (NMI)
15 to 0	EICC	Exception code of exception or maskable interrupt

(4) Program status word (PSW)

The program status word (PSW) is a collection of flags that indicate the status of the program (result of instruction execution) and the status of the CPU.

If the contents of a bit of this register are changed by using the LDSR instruction, the new contents are validated immediately after completion of LDSR instruction execution. However if the ID flag is set to 1, interrupt requests will not be acknowledged while the LDSR instruction is being executed.

Bits 31 to 8 of this register are reserved for future function expansion (these bits are fixed to 0).

(1/2)

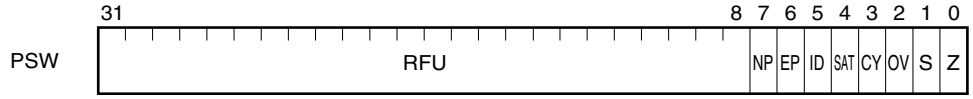

Default value
00000020H

Bit position	Flag name	Meaning
31 to 8	RFU	Reserved field. Fixed to 0.
7	NP	Indicates that a non-maskable interrupt (NMI) is being serviced. This bit is set to 1 when an NMI request is acknowledged, disabling multiple interrupts. 0: NMI is not being serviced. 1: NMI is being serviced.
6	EP	Indicates that an exception is being processed. This bit is set to 1 when an exception occurs. Even if this bit is set, interrupt requests are acknowledged. 0: Exception is not being processed. 1: Exception is being processed.
5	ID	Indicates whether a maskable interrupt can be acknowledged. 0: Interrupt enabled 1: Interrupt disabled
4	SAT[Note]	Indicates that the result of a saturation operation has overflowed and is saturated. Because this is a cumulative flag, it is set to 1 when the result of a saturation operation instruction is saturated, and is not cleared to 0 even if the subsequent operation result is not saturated. Use the LDSR instruction to clear this bit. This flag is neither set to 1 nor cleared to 0 by execution of an arithmetic operation instruction. 0: Not saturated 1: Saturated
3	CY	Indicates whether a carry or a borrow occurs as a result of an operation. 0: Carry or borrow does not occur. 1: Carry or borrow occurs.
2	OV[Note]	Indicates whether an overflow occurs during operation. 0: Overflow does not occur. 1: Overflow occurs.
1	S[Note]	Indicates whether the result of an operation is negative. 0: The result is positive or 0. 1: The result is negative.
0	Z	Indicates whether the result of an operation is 0. 0: The result is not 0. 1: The result is 0.

Remark Also read **Note** on the next page.

(2/2)

Note The result of the operation that has performed saturation processing is determined by the contents of the OV and S flags. The SAT flag is set to 1 only when the OV flag is set to 1 when a saturation operation is performed.

Status of operation result	Flag status			Result of operation of saturation processing
	SAT	OV	S	
Maximum positive value is exceeded	1	1	0	7FFFFFFFH
Maximum negative value is exceeded	1	1	1	80000000H
Positive (maximum value is not exceeded)	Holds value before operation	0	0	Operation result itself
Negative (maximum value is not exceeded)			1	

(5) CALLT execution status saving registers (CTPC and CTPSW)

CTPC and CTPSW are CALLT execution status saving registers.

When the CALLT instruction is executed, the contents of the program counter (PC) are saved to CTPC, and those of the program status word (PSW) are saved to CTPSW.

The contents saved to CTPC are the address of the instruction next to CALLT.

The current contents of the PSW are saved to CTPSW.

Bits 31 to 26 of CTPC and bits 31 to 8 of CTPSW are reserved for future function expansion (fixed to 0).

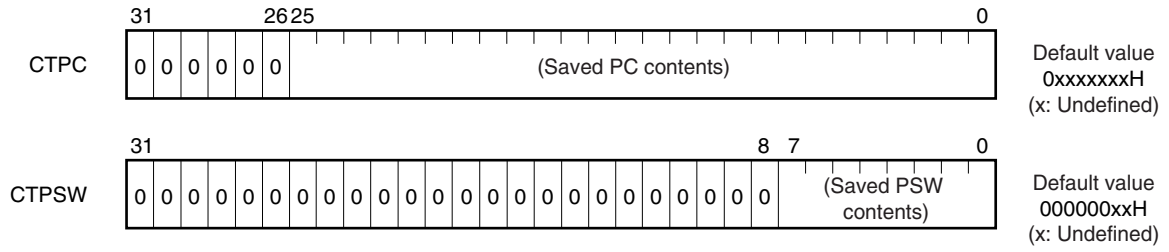

(6) Exception/debug trap status saving registers (DBPC and DBPSW)

DBPC and DBPSW are exception/debug trap status registers.

If an exception trap or debug trap occurs, the contents of the program counter (PC) are saved to DBPC, and those of the program status word (PSW) are saved to DBPSW.

The contents to be saved to DBPC are the address of the instruction next to the one that is being executed when an exception trap or debug trap occurs.

The current contents of the PSW are saved to DBPSW.

This register can be read or written only during the interval between the execution of the DBTRAP instruction or illegal opcode and the DBRET instruction.

Bits 31 to 26 of DBPC and bits 31 to 8 of DBPSW are reserved for future function expansion (fixed to 0).

The value of DBPC is restored to the PC and the value of DBPSW to the PSW by the DBRET instruction.

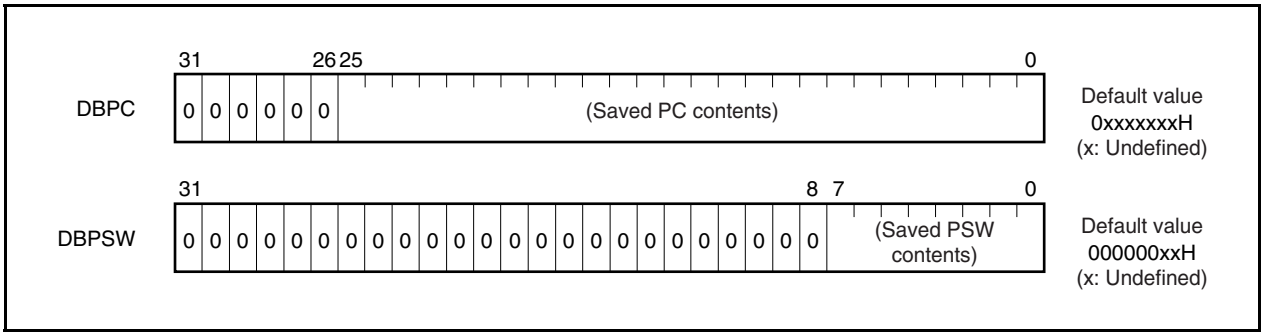

(7) CALLT base pointer (CTBP)

The CALLT base pointer (CTBP) is used to specify a table address or generate a target address (bit 0 is fixed to 0).

Bits 31 to 26 of this register are reserved for future function expansion (fixed to 0).

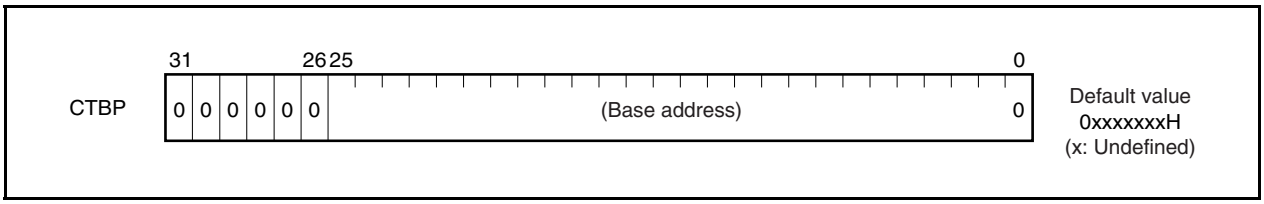

3.3 Operation Modes

The V850ES/HE2 has the following operation modes.

(1) Normal operation mode

In this mode, after system reset has been released, execution branches to the reset entry address of the internal ROM and then instruction processing is started.

(2) Flash memory programming mode

In this mode, the internal flash memory can be programmed by using a flash programmer.

(3) On-chip debug mode

The V850ES/HE2 is provided with an on-chip debug function that employs the JTAG (Joint Test Action Group) communication specifications and that is executed via an on-chip debug emulator.

For details, see **CHAPTER 24 ON-CHIP DEBUG FUNCTION**.

3.3.1 Specifying operation mode

Specify the operation mode by using the FLMD0 and FLMD1 pins.

In the normal mode, input a low level to the FLMD0 pin when reset is released.

In the flash memory programming mode, a high level is input to the FLMD0 pin from the flash programmer if a flash programmer is connected, but it must be input from an external circuit in the self-programming mode.

Operation When Reset Is Released		Operation Mode After Reset
FLMD0	FLMD1	
L	×	Normal operation mode
H	L	Flash memory programming mode
H	H	Setting prohibited

Remark L: Low-level input
H: High-level input
×: Don't care

3.4 Address Space

3.4.1 CPU address space

For instruction addressing, an internal ROM area of up to 1 MB, and an internal RAM area are supported in a linear address space (program space) of up to 64 MB. For operand addressing (data access), up to 4 GB of a linear address space (data space) is supported. The 4 GB address space, however, is viewed as 64 images of a 64 MB physical address space. This means that the same 64 MB physical address space is accessed regardless of the value of bits 31 to 26.

Figure 3-1. Image on Address Space

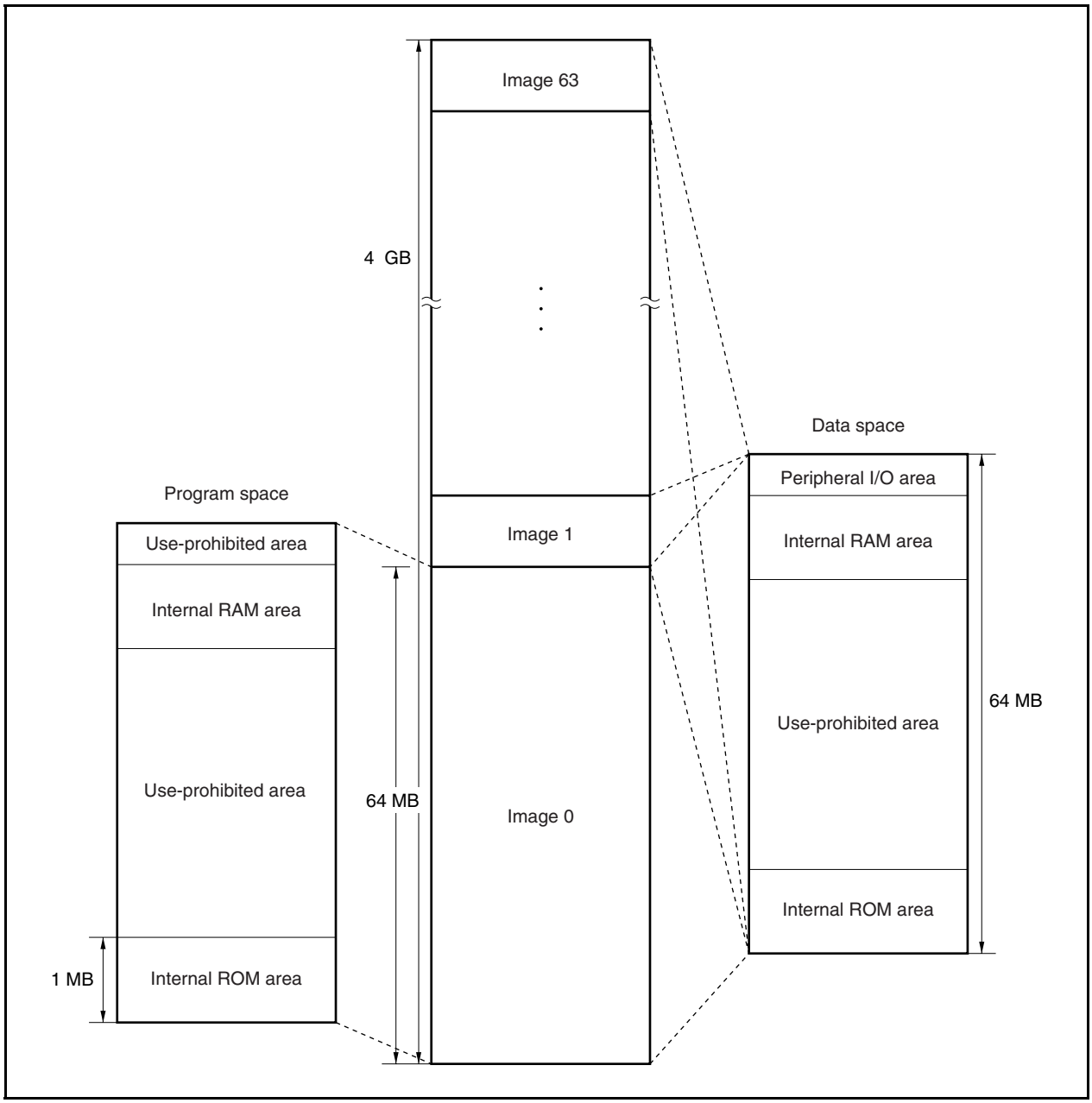

3.4.2 Wraparound of CPU address space

(1) Program space

Of the 32 bits of the PC (program counter), the higher 6 bits are fixed to 0 and only the lower 26 bits are valid. The higher 6 bits ignore a carry or borrow from bit 25 to 26 during branch address calculation.

Therefore, the highest address of the program space, 03FFFFFFH, and the lowest address, 00000000H, are contiguous addresses. That the highest address and the lowest address of the program space are contiguous in this way is called wraparound.

Caution Because the 4 KB area of addresses 03FFF000H to 03FFFFFFH is an on-chip peripheral I/O area, instructions cannot be fetched from this area. Therefore, do not execute an operation in which the result of a branch address calculation affects this area.

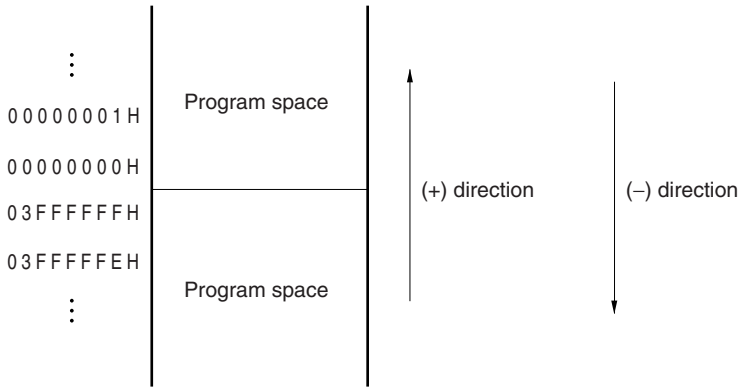

(2) Data space

The result of an operand address calculation operation that exceeds 32 bits is ignored.

Therefore, the highest address of the data space, FFFFFFFFH, and the lowest address, 00000000H, are contiguous, and wraparound occurs at the boundary of these addresses.

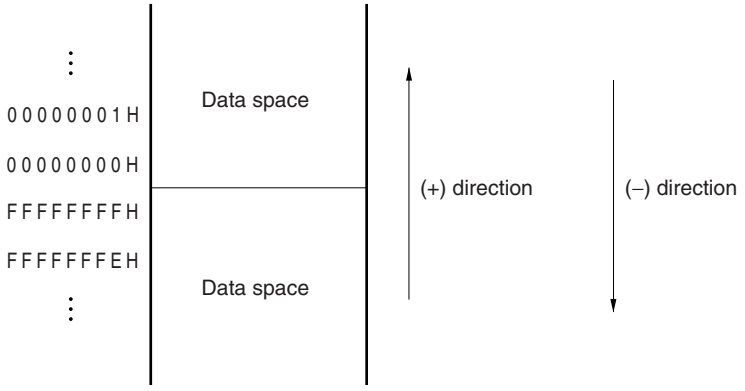

3.4.3 Memory map

The areas shown below are reserved in the V850ES/HE2.

Figure 3-2. Data Memory Map (Physical Addresses)

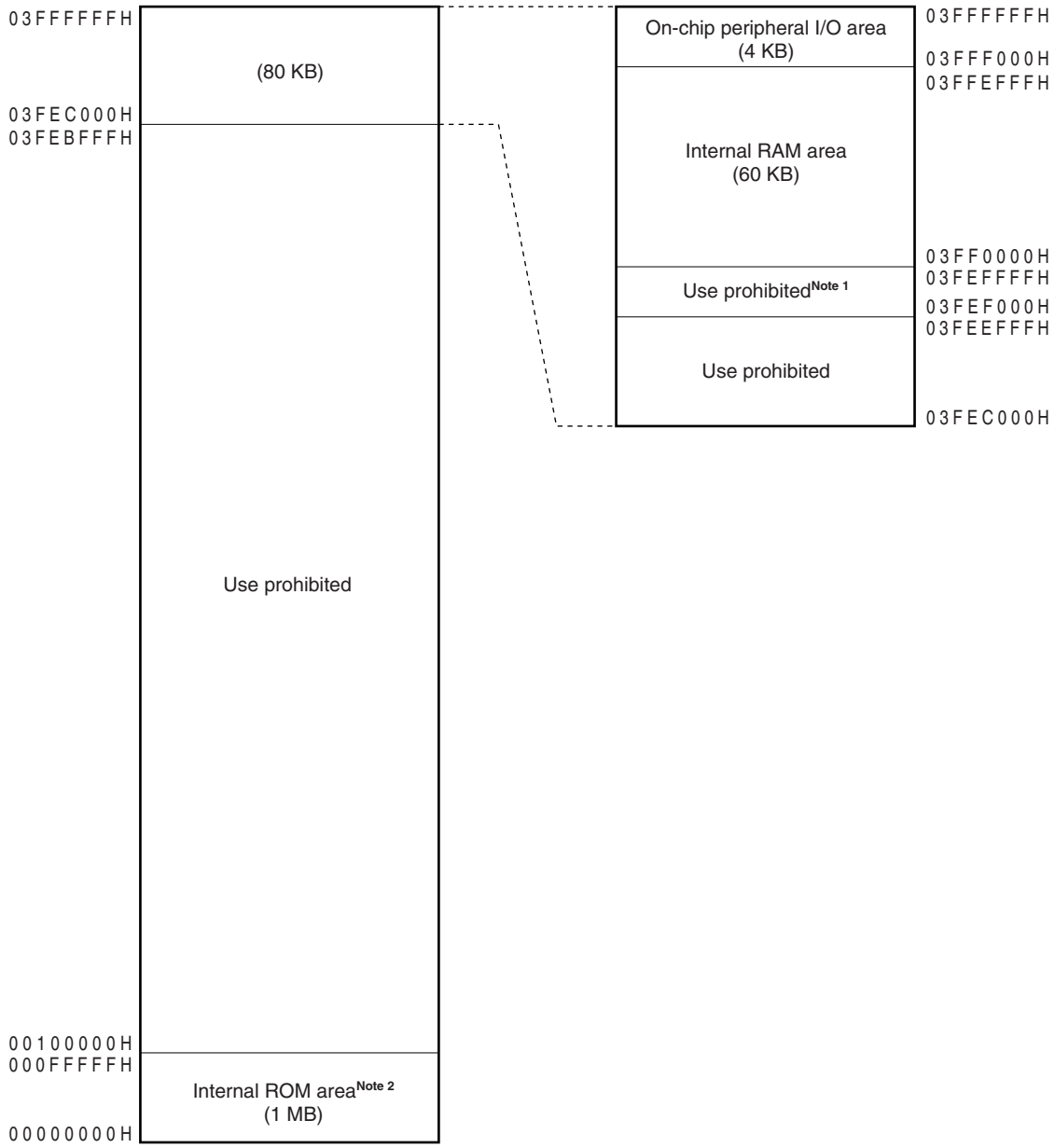

Notes 1. Use of addresses 03FEF000H to 03FEFFFFH is prohibited because these addresses are in the same area as the on-chip peripheral I/O area.

2. Fetch access and read access to addresses 00000000H to 000FFFFFH is made to the internal ROM area.

Figure 3-3. Program Memory Map

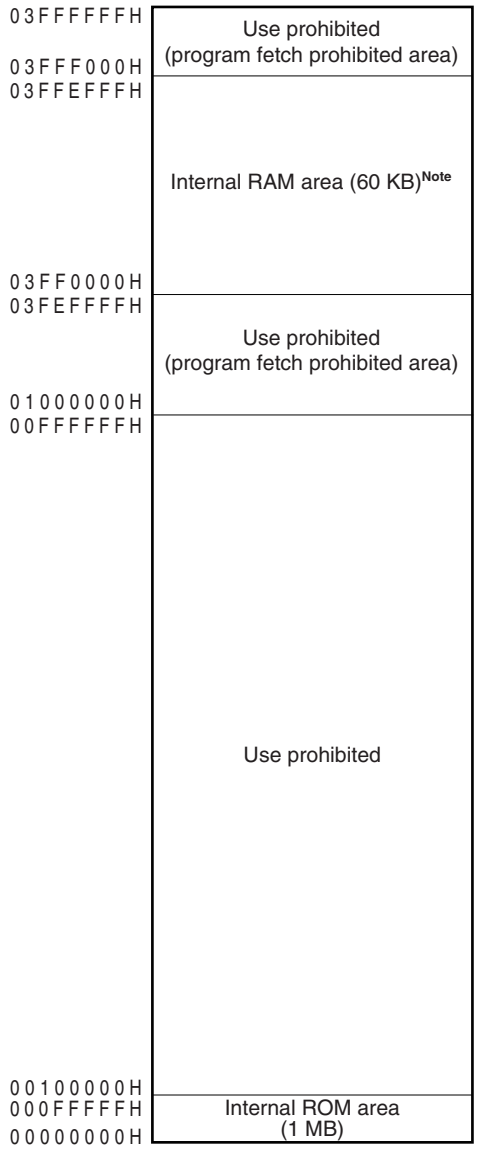

Note For details, see **3.4.4 (2) Internal RAM area**.

3.4.4 Areas

(1) Internal ROM area

Up to 1 MB is reserved as an internal ROM area.

(a) Internal ROM (64 KB)

64 KB are allocated to addresses 0000000H to 000FFFFH in the μPD70F3700.
Accessing addresses 0010000H to 00FFFFFH is prohibited.

Figure 3-4. Internal ROM Area (64 KB)

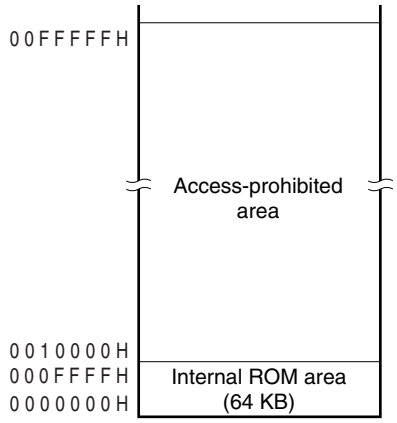

(b) Internal ROM (128 KB)

128 KB are allocated to addresses 0000000H to 001FFFFH in the μPD70F3701.
Accessing addresses 0020000H to 00FFFFFH is prohibited.

Figure 3-5. Internal ROM Area (128 KB)

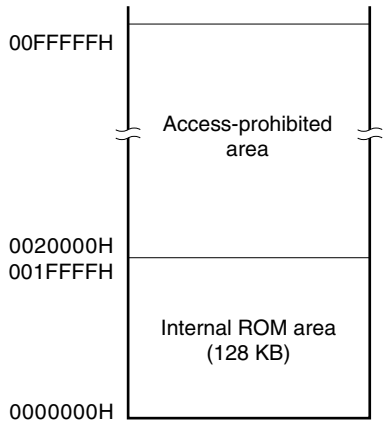

(2) Internal RAM area

Up to 60 KB of address 03FF0000H to 03FFEFFFH are reserved as the internal RAM area.

(a) Internal RAM (6 KB)

6 KB are allocated to addresses 03FFD800H to 03FFEFFFH in the μPD70F3700 and 70F3701. Accessing addresses 03FF0000H to 03FFD7FFH is prohibited.

- μPD70F3709, 70F3710

Figure 3-6. Internal RAM Area (6 KB)

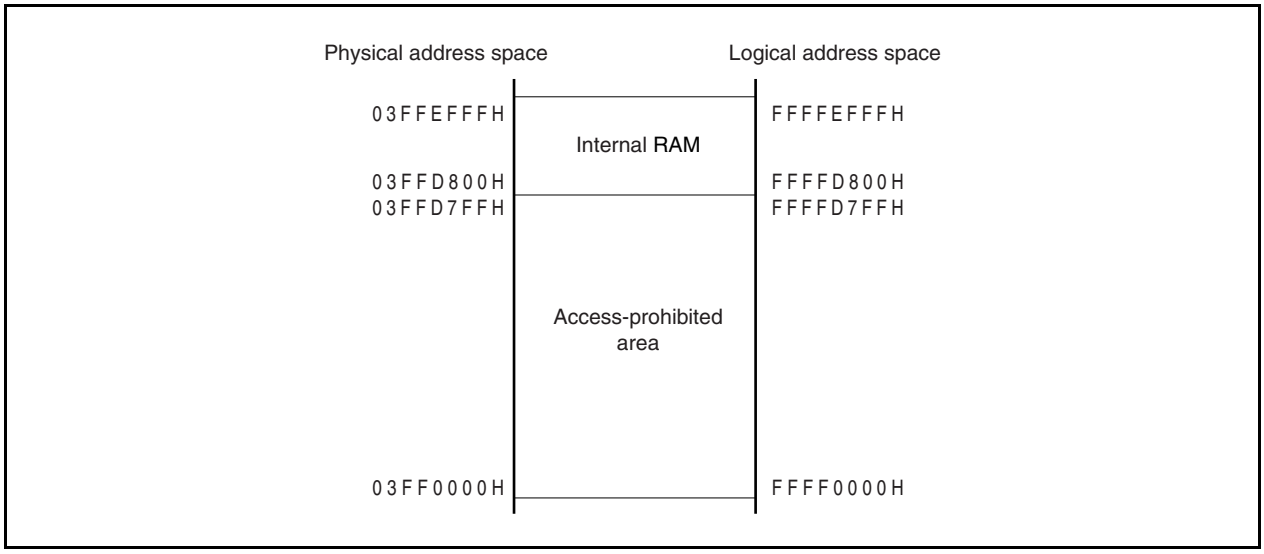

(3) On-chip peripheral I/O area

4 KB of addresses 03FFF000H to 03FFFFFFH are reserved as the on-chip peripheral I/O area.

Figure 3-7. On-Chip Peripheral I/O Area

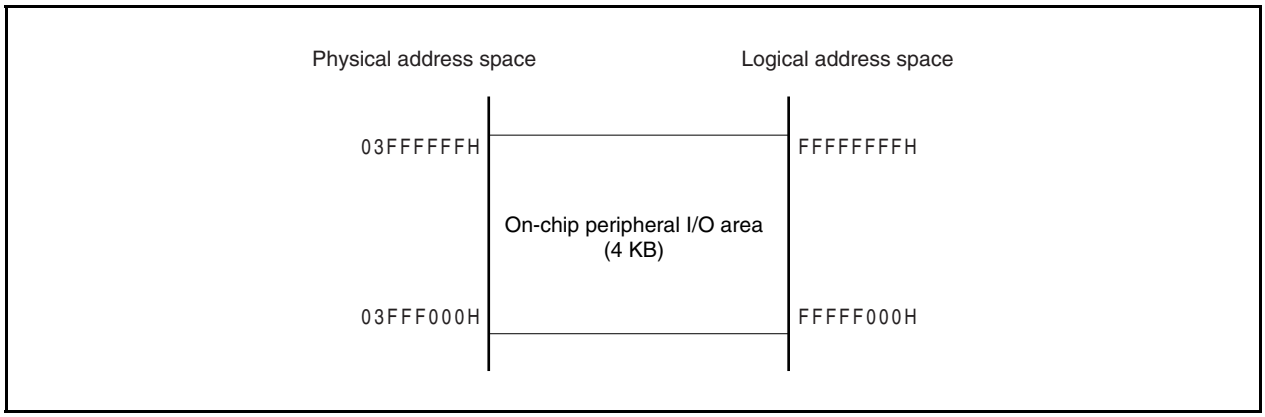

Peripheral I/O registers that have functions to specify the operation mode for and monitor the status of the on-chip peripheral I/O are mapped to the on-chip peripheral I/O area. Program cannot be fetched from this area.

Cautions 1. When a register is accessed in word units, a word area is accessed twice in halfword units in the order of lower area and higher area, with the lower 2 bits of the address ignored.

2. If a register that can be accessed in byte units is accessed in halfword units, the higher 8 bits are undefined when the register is read, and data is written to the lower 8 bits.

3. Addresses not defined as registers are reserved for future expansion. The operation is undefined and not guaranteed when these addresses are accessed.

3.4.5 Recommended use of address space

The architecture of the V850ES/HE2 requires that a register that serves as a pointer be secured for address generation when operand data in the data space is accessed. The address stored in this pointer ±32 KB can be directly accessed by an instruction for operand data. Because the number of general-purpose registers that can be used as a pointer is limited, however, by keeping the performance from dropping during address calculation when a pointer value is changed, as many general-purpose registers as possible can be secured for variables, and the program size can be reduced.

(1) Program space

Of the 32 bits of the PC (program counter), the higher 6 bits are fixed to 0, and only the lower 26 bits are valid. Regarding the program space, therefore, a 64 MB space of contiguous addresses starting from 00000000H unconditionally corresponds to the memory map.

To use the internal RAM area as the program space, access addresses 03FFD800H to 03FFEFFFH (6 KB).

(2) Data space

With the V850ES/HE2, it seems that there are sixty-four 64 MB address spaces on the 4 GB CPU address space. Therefore, the least significant bit (bit 25) of a 26-bit address is sign-extended to 32 bits and allocated as an address.

(a) Application example of wraparound

If R = r0 (zero register) is specified for the LD/ST disp16 [R] instruction, a range of addresses 00000000H ±32 KB can be addressed by sign-extended disp16. All the resources, including the internal hardware, can be addressed by one pointer.

The zero register (r0) is a register fixed to 0 by hardware, and practically eliminates the need for registers dedicated to pointers.

Figure 3-8. Wraparound

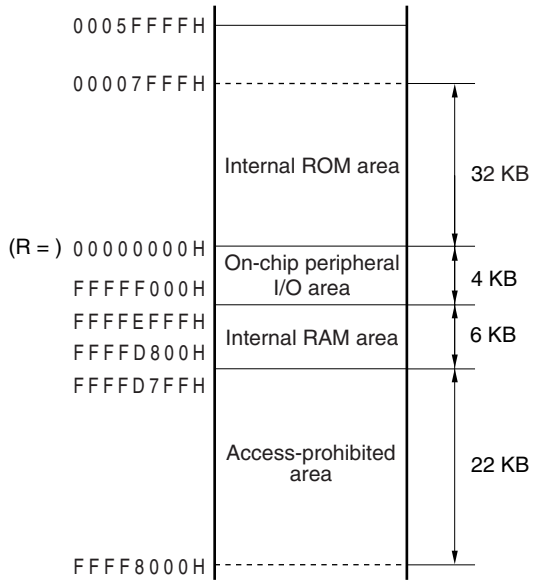

Figure 3-9. Recommended Memory Map

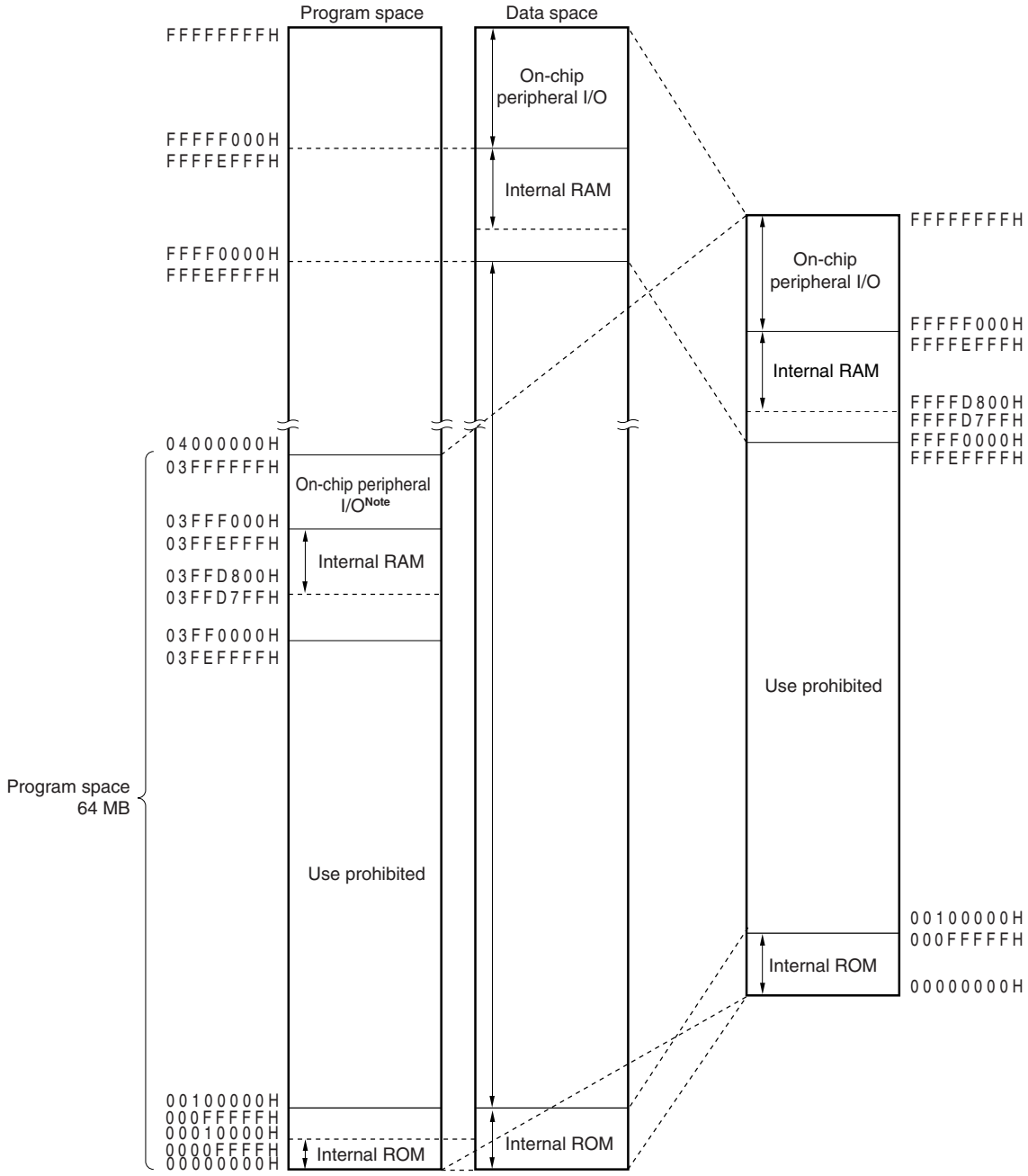

Note Accessing this area is prohibited. To access the on-chip peripheral I/O of this area, specify addresses FFFFF000H to FFFFFFFFH.

Remarks 1. ↕ indicates the recommended area.

2. This figure is the recommended memory map of the μPD70F3700.

3.4.6 Peripheral I/O registers

(1/7)

Address	Function Register Name	Symbol	R/W	Manipulatable Bits			Default Value
				1	8	16	
FFFFF004H	Port DLL	PDLL	R/W	√	√		Undefined
FFFFF00CH	Port CM	PCM		√	√		Undefined
FFFFF024H	Port mode register DLL	PMDLL		√	√		FFH
FFFFF02CH	Port mode register CM	PMCM		√	√		FFH
FFFFF04CH	Port mode control register CM	PMCCM		√	√		00H
FFFFF06EH	System wait control register	VSWC			√		77H
FFFFF100H	Interrupt mask register 0	IMR0				√	FFFFH
FFFFF100H	Interrupt mask register 0L	IMR0L		√	√		FFH
FFFFF101H	Interrupt mask register 0H	IMR0H		√	√		FFH
FFFFF102H	Interrupt mask register 1	IMR1				√	FFFFH
FFFFF102H	Interrupt mask register 1L	IMR1L		√	√		FFH
FFFFF103H	Interrupt mask register 1H	IMR1H		√	√		FFH
FFFFF104H	Interrupt mask register 2	IMR2				√	FFFFH
FFFFF104H	Interrupt mask register 2L	IMR2L		√	√		FFH
FFFFF105H	Interrupt mask register 2H	IMR2H		√	√		FFH
FFFFF110H	Interrupt control register	LVIIC		√	√		47H
FFFFF112H	Interrupt control register	PIC0		√	√		47H
FFFFF114H	Interrupt control register	PIC1		√	√		47H
FFFFF116H	Interrupt control register	PIC2		√	√		47H
FFFFF118H	Interrupt control register	PIC3		√	√		47H
FFFFF11AH	Interrupt control register	PIC4		√	√		47H
FFFFF11CH	Interrupt control register	PIC5		√	√		47H
FFFFF11EH	Interrupt control register	PIC6		√	√		47H
FFFFF120H	Interrupt control register	PIC7		√	√		47H
FFFFF122H	Interrupt control register	TQ0OVIC		√	√		47H
FFFFF124H	Interrupt control register	TQ0CCIC0		√	√		47H
FFFFF126H	Interrupt control register	TQ0CCIC1		√	√		47H
FFFFF128H	Interrupt control register	TQ0CCIC2		√	√		47H
FFFFF12AH	Interrupt control register	TQ0CCIC3		√	√		47H
FFFFF12CH	Interrupt control register	TP0OVIC		√	√		47H
FFFFF12EH	Interrupt control register	TP0CCIC0		√	√		47H
FFFFF130H	Interrupt control register	TP0CCIC1		√	√		47H
FFFFF132H	Interrupt control register	TP1OVIC		√	√		47H
FFFFF134H	Interrupt control register	TP1CCIC0		√	√		47H
FFFFF136H	Interrupt control register	TP1CCIC1		√	√		47H
FFFFF138H	Interrupt control register	TP2OVIC		√	√		47H
FFFFF13AH	Interrupt control register	TP2CCIC0		√	√		47H
FFFFF13CH	Interrupt control register	TP2CCIC1		√	√		47H
FFFFF13EH	Interrupt control register	TP3OVIC		√	√		47H

(2/7)

Address	Function Register Name	Symbol	R/W	Manipulatable Bits			Default Value
				1	8	16	
FFFFF140H	Interrupt control register	TP3CCIC0	R/W	√	√		47H
FFFFF142H	Interrupt control register	TP3CCIC1		√	√		47H
FFFFF144H	Interrupt control register	TM0EQIC0		√	√		47H
FFFFF146H	Interrupt control register	CB0RIC		√	√		47H
FFFFF148H	Interrupt control register	CB0TIC		√	√		47H
FFFFF14AH	Interrupt control register	CB1RIC		√	√		47H
FFFFF14CH	Interrupt control register	CB1TIC		√	√		47H
FFFFF14EH	Interrupt control register	UA0RIC		√	√		47H
FFFFF150H	Interrupt control register	UA0TIC		√	√		47H
FFFFF152H	Interrupt control register	UA1RIC		√	√		47H
FFFFF154H	Interrupt control register	UA1TIC		√	√		47H
FFFFF156H	Interrupt control register	ADIC		√	√		47H
FFFFF160H	Interrupt control register	KRIC		√	√		47H
FFFFF162H	Interrupt control register	WTIIC		√	√		47H
FFFFF164H	Interrupt control register	WTIC		√	√		47H
FFFFF1FAH	In-service priority register	ISPR	R	√	√		00H
FFFFF1FCH	Command register	PRCMD	W		√		Undefined
FFFFF1FEH	Power save control register	PSC	R/W	√	√		00H
FFFFF200H	A/D converter mode register 0	ADA0M0		√	√		00H
FFFFF201H	A/D converter mode register 1	ADA0M1		√	√		00H
FFFFF202H	A/D converter channel specification register 0	ADA0S		√	√		00H
FFFFF203H	A/D converter mode register 2	ADA0M2		√	√		00H
FFFFF204H	Power-fail compare mode register	ADA0PFM		√	√		00H
FFFFF205H	Power-fail compare threshold value register	ADA0PFT		√	√		00H
FFFFF210H	A/D conversion result register 0	ADA0CR0	R			√	Undefined
FFFFF211H	A/D conversion result register 0H	ADA0CR0H			√		Undefined
FFFFF212H	A/D conversion result register 1	ADA0CR1				√	Undefined
FFFFF213H	A/D conversion result register 1H	ADA0CR1H			√		Undefined
FFFFF214H	A/D conversion result register 2	ADA0CR2				√	Undefined
FFFFF215H	A/D conversion result register 2H	ADA0CR2H			√		Undefined
FFFFF216H	A/D conversion result register 3	ADA0CR3				√	Undefined
FFFFF217H	A/D conversion result register 3H	ADA0CR3H			√		Undefined
FFFFF218H	A/D conversion result register 4	ADA0CR4				√	Undefined
FFFFF219H	A/D conversion result register 4H	ADA0CR4H			√		Undefined
FFFFF21AH	A/D conversion result register 5	ADA0CR5				√	Undefined
FFFFF21BH	A/D conversion result register 5H	ADA0CR5H			√		Undefined
FFFFF21CH	A/D conversion result register 6	ADA0CR6				√	Undefined
FFFFF21DH	A/D conversion result register 6H	ADA0CR6H			√		Undefined
FFFFF21EH	A/D conversion result register 7	ADA0CR7				√	Undefined
FFFFF21FH	A/D conversion result register 7H	ADA0CR7H			√		Undefined

(3/7)

Address	Function Register Name	Symbol	R/W	Manipulatable Bits			Default Value
				1	8	16	
FFFFF220H	A/D conversion result register 8	ADA0CR8	R			√	Undefined
FFFFF221H	A/D conversion result register 8H	ADA0CR8H			√		Undefined
FFFFF222H	A/D conversion result register 9	ADA0CR9				√	Undefined
FFFFF223H	A/D conversion result register 9H	ADA0CR9H			√		Undefined
FFFFF300H	Key return mode register	KRM	R/W	√	√		00H
FFFFF308H	Selector operation control register 0	SELCNT0		√	√		00H
FFFFF318H	Noise elimination control register	NFC		√	√		00H
FFFFF400H	Port 0	P0		√	√		Undefined
FFFFF406H	Port 3L	P3L		√	√		Undefined
FFFFF408H	Port 4	P4		√	√		Undefined
FFFFF40AH	Port 5	P5		√	√		Undefined
FFFFF40EH	Port 7L	P7L		√	√		Undefined
FFFFF40FH	Port 7H	P7H		√	√		Undefined
FFFFF412H	Port 9	P9				√	Undefined
FFFFF412H	Port 9L	P9L		√	√		Undefined
FFFFF413H	Port 9H	P9H		√	√		Undefined
FFFFF420H	Port mode register 0	PM0		√	√		FFH
FFFFF426H	Port mode register 3L	PM3L		√	√		FFH
FFFFF428H	Port mode register 4	PM4		√	√		FFH
FFFFF42AH	Port mode register 5	PM5		√	√		FFH
FFFFF42EH	Port mode register 7L	PM7L		√	√		FFH
FFFFF42FH	Port mode register 7H	PM7H		√	√		FFH
FFFFF432H	Port mode register 9	PM9				√	FFFFH
FFFFF432H	Port mode register 9L	PM9L		√	√		FFH
FFFFF433H	Port mode register 9H	PM9H		√	√		FFH
FFFFF440H	Port mode control register 0	PMC0		√	√		00H
FFFFF446H	Port mode control register 3L	PMC3L		√	√		00H
FFFFF448H	Port mode control register 4	PMC4		√	√		00H
FFFFF44AH	Port mode control register 5	PMC5		√	√		00H
FFFFF452H	Port mode control register 9	PMC9				√	0000H
FFFFF452H	Port mode control register 9L	PMC9L		√	√		00H
FFFFF453H	Port mode control register 9H	PMC9H		√	√		00H
FFFFF460H	Port function control register 0	PFC0		√	√		00H
FFFFF466H	Port function control register 3L	PFC3L		√	√		00H
FFFFF46AH	Port function control register 5	PFC5		√	√		00H
FFFFF472H	Port function control register 9	PFC9				√	0000H
FFFFF472H	Port function control register 9L	PFC9L		√	√		00H
FFFFF473H	Port function control register 9H	PFC9H		√	√		00H
FFFFF540H	TMQ0 control register 0	TQ0CTL0		√	√		00H
FFFFF541H	TMQ0 control register 1	TQ0CTL1		√	√		00H

(4/7)

Address	Function Register Name	Symbol	R/W	Manipulatable Bits			Default Value
				1	8	16	
FFFFF542H	TMQ0 I/O control register 0	TQ0IOC0	R/W	√	√		00H
FFFFF543H	TMQ0 I/O control register 1	TQ0IOC1		√	√		00H
FFFFF544H	TMQ0 I/O control register 2	TQ0IOC2		√	√		00H
FFFFF545H	TMQ0 option register 0	TQ0OPT0		√	√		00H
FFFFF546H	TMQ0 capture/compare register 0	TQ0CCR0				√	0000H
FFFFF548H	TMQ0 capture/compare register 1	TQ0CCR1				√	0000H
FFFFF54AH	TMQ0 capture/compare register 2	TQ0CCR2				√	0000H
FFFFF54CH	TMQ0 capture/compare register 3	TQ0CCR3				√	0000H
FFFFF54EH	TMQ0 counter read buffer register	TQ0CNT	R			√	0000H
FFFFF590H	TMP0 control register 0	TP0CTL0	R/W	√	√		00H
FFFFF591H	TMP0 control register 1	TP0CTL1		√	√		00H
FFFFF592H	TMP0 I/O control register 0	TP0IOC0		√	√		00H
FFFFF593H	TMP0 I/O control register 1	TP0IOC1		√	√		00H
FFFFF594H	TMP0 I/O control register 2	TP0IOC2		√	√		00H
FFFFF595H	TMP0 option register 0	TP0OPT0		√	√		00H
FFFFF596H	TMP0 capture/compare register 0	TP0CCR0				√	0000H
FFFFF598H	TMP0 capture/compare register 1	TP0CCR1				√	0000H
FFFFF59AH	TMP0 counter read buffer register	TP0CNT	R			√	0000H
FFFFF5A0H	TMP1 control register 0	TP1CTL0	R/W	√	√		00H
FFFFF5A1H	TMP1 control register 1	TP1CTL1		√	√		00H
FFFFF5A2H	TMP1 I/O control register 0	TP1IOC0		√	√		00H
FFFFF5A3H	TMP1 I/O control register 1	TP1IOC1		√	√		00H
FFFFF5A4H	TMP1 I/O control register 2	TP1IOC2		√	√		00H
FFFFF5A5H	TMP1 option register 0	TP1OPT0		√	√		00H
FFFFF5A6H	TMP1 capture/compare register 0	TP1CCR0				√	0000H
FFFFF5A8H	TMP1 capture/compare register 1	TP1CCR1				√	0000H
FFFFF5AAH	TMP1 counter read buffer register	TP1CNT	R			√	0000H
FFFFF5B0H	TMP2 control register 0	TP2CTL0	R/W	√	√		00H
FFFFF5B1H	TMP2 control register 1	TP2CTL1		√	√		00H
FFFFF5B2H	TMP2 I/O control register 0	TP2IOC0		√	√		00H
FFFFF5B3H	TMP2 I/O control register 1	TP2IOC1		√	√		00H
FFFFF5B4H	TMP2 I/O control register 2	TP2IOC2		√	√		00H
FFFFF5B5H	TMP2 option register 0	TP2OPT0		√	√		00H
FFFFF5B6H	TMP2 capture/compare register 0	TP2CCR0				√	0000H
FFFFF5B8H	TMP2 capture/compare register 1	TP2CCR1				√	0000H
FFFFF5BAH	TMP2 counter read buffer register	TP2CNT	R			√	0000H
FFFFF5C0H	TMP3 control register 0	TP3CTL0	R/W	√	√		00H
FFFFF5C1H	TMP3 control register 1	TP3CTL1		√	√		00H
FFFFF5C2H	TMP3 I/O control register 0	TP3IOC0		√	√		00H
FFFFF5C3H	TMP3 I/O control register 1	TP3IOC1		√	√		00H

(5/7)

Address	Function Register Name	Symbol	R/W	Manipulatable Bits			Default Value
				1	8	16	
FFFFF5C4H	TMP3 I/O control register 2	TP3IOC2	R/W	√	√		00H
FFFFF5C5H	TMP3 option register 0	TP3OPT0		√	√		00H
FFFFF5C6H	TMP3 capture/compare register 0	TP3CCR0				√	0000H
FFFFF5C8H	TMP3 capture/compare register 1	TP3CCR1				√	0000H
FFFFF5CAH	TMP3 counter read buffer register	TP3CNT	R			√	0000H
FFFFF680H	Watch timer operation mode register	WTM	R/W	√	√		00H
FFFFF690H	TMM0 control register 0	TM0CTL0		√	√		00H
FFFFF694H	TMM0 compare register 0	TM0CMP0				√	0000H
FFFFF6C0H	Oscillation stabilization time select register	OSTS			√		06H
FFFFF6C1H	PLL lockup time specification register	PLLS			√		03H
FFFFF6D0H	Watchdog timer mode register 2	WDTM2			√		67H
FFFFF6D1H	Watchdog timer enable register	WDTE			√		9AH
FFFFF706H	Port function control expansion register 3L	PFCE3L		√	√		00H
FFFFF70AH	Port function control expansion register 5	PFCE5		√	√		00H
FFFFF712H	Port function control expansion register 9	PFCE9				√	0000H
FFFFF712H	Port function control expansion register 9L	PFCE9L		√	√		00H
FFFFF713H	Port function control expansion register 9H	PFCE9H		√	√		00H
FFFFF802H	System status register	SYS		√	√		00H
FFFFF80CH	Internal oscillation mode register	RCM		√	√		00H
FFFFF820H	Power save mode register	PSMR		√	√		00H
FFFFF824H	Lock register	LOCKR	R	√	√		00H
FFFFF828H	Processor clock control register	PCC	R/W	√	√		03H
FFFFF82CH	PLL control register	PLLCTL		√	√		01H
FFFFF82EH	CPU operating clock status register	CCLS	R	√	√		00H
FFFFF82FH	Programmable clock mode register	PCLM	R/W	√	√		00H
FFFFF870H	Clock monitor mode register	CLM		√	√		00H
FFFFF888H	Reset source flag register	RESF		√	√		00H
FFFFF890H	Low-voltage detection register	LVIM		√	√		00H
FFFFF891H	Low-voltage detection level select register	LVIS			√		00H
FFFFF892H	Internal RAM data status register	RAMS		√	√		01H
FFFFF8B0H	Prescaler mode register 0	PRSM0		√	√		00H
FFFFF8B1H	Prescaler compare register 0	PRSCM0			√		00H
FFFFF9FCH	On-chip debug mode register	OCDM		√	√		01H
FFFFF9FEH	Peripheral emulation register 1	PEMU1		√	√		00H
FFFFFA00H	UARTA0 control register 0	UA0CTL0		√	√		10H
FFFFFA01H	UARTA0 control register 1	UA0CTL1			√		00H
FFFFFA02H	UARTA0 control register 2	UA0CTL2			√		FFH
FFFFFA03H	UARTA0 option control register 0	UA0OPT0		√	√		14H
FFFFFA04H	UARTA0 status register	UA0STR		√	√		00H

Caution For details of the OCDM register, see CHAPTER 24 ON-CHIP DEBUG FUNCTION.

(6/7)

Address	Function Register Name	Symbol	R/W	Manipulatable Bits			Default Value
				1	8	16	
FFFFFA06H	UARTA0 receive data register	UA0RX	R/W		√		FFH
FFFFFA07H	UARTA0 transmit data register	UA0TX			√		FFH
FFFFFA10H	UARTA1 control register 0	UA1CTL0		√	√		10H
FFFFFA11H	UARTA1 control register 1	UA1CTL1			√		00H
FFFFFA12H	UARTA1 control register 2	UA1CTL2			√		FFH
FFFFFA13H	UARTA1 option control register 0	UA1OPT0		√	√		14H
FFFFFA14H	UARTA1 status register	UA1STR		√	√		00H
FFFFFA16H	UARTA1 receive data register	UA1RX	R		√		FFH
FFFFFA17H	UARTA1 transmit data register	UA1TX	R/W		√		FFH
FFFFFB00H	TIP00 pin noise elimination control register	P00NFC		√	√		00H
FFFFFB04H	TIP01 pin noise elimination control register	P01NFC		√	√		00H
FFFFFB08H	TIP10 pin noise elimination control register	P10NFC		√	√		00H
FFFFFB0CH	TIP11 pin noise elimination control register	P11NFC		√	√		00H
FFFFFB10H	TIP20 pin noise elimination control register	P20NFC		√	√		00H
FFFFFB14H	TIP21 pin noise elimination control register	P21NFC		√	√		00H
FFFFFB18H	TIP30 pin noise elimination control register	P30NFC		√	√		00H
FFFFFB1CH	TIP31 pin noise elimination control register	P31NFC		√	√		00H
FFFFFB50H	TIQ00 pin noise elimination control register	Q00NFC		√	√		00H
FFFFFB54H	TIQ01 pin noise elimination control register	Q01NFC		√	√		00H
FFFFFB58H	TIQ02 pin noise elimination control register	Q02NFC		√	√		00H
FFFFFB5CH	TIQ03 pin noise elimination control register	Q03NFC		√	√		00H
FFFFFC00H	External interrupt falling edge specification register 0	INTF0		√	√		00H
FFFFFC06H	External interrupt falling edge specification register 3L	INTF3L		√	√		00H
FFFFFC13H	External interrupt falling edge specification register 9H	INTF9H		√	√		00H
FFFFFC20H	External interrupt rising edge specification register 0	INTR0		√	√		00H
FFFFFC26H	External interrupt rising edge specification register 3L	INTR3L		√	√		00H
FFFFFC33H	External interrupt rising edge specification register 9H	INTR9H		√	√		00H
FFFFFC40H	Pull-up resistor option register 0	PU0		√	√		00H
FFFFFC42H	Pull-up resistor option register 1	PU1		√	√		00H
FFFFFC46H	Pull-up resistor option register 3L	PU3L		√	√		00H
FFFFFC48H	Pull-up resistor option register 4	PU4		√	√		00H
FFFFFC4AH	Pull-up resistor option register 5	PU5		√	√		00H
FFFFFC52H	Pull-up resistor option register 9	PU9				√	0000H
FFFFFC52H	Pull-up resistor option register 9L	PU9L		√	√		00H
FFFFFC53H	Pull-up resistor option register 9H	PU9H		√	√		00H
FFFFFD00H	CSIB0 control register 0	CB0CTL0		√	√		01H
FFFFFD01H	CSIB0 control register 1	CB0CTL1		√	√		00H
FFFFFD02H	CSIB0 control register 2	CB0CTL2			√		00H
FFFFFD03H	CSIB0 status register	CB0STR	R/W	√	√		00H

(7/7)

Address	Function Register Name	Symbol	R/W	Manipulatable Bits			Default Value
				1	8	16	
FFFFFD04H	CSIB0 receive data register	CB0RX	R			√	0000H
FFFFFD04H	CSIB0 receive data register L	CB0RXL			√		00H
FFFFFD06H	CSIB0 transmit data register	CB0TX	R/W			√	0000H
FFFFFD06H	CSIB0 transmit data register L	CB0TXL			√		00H
FFFFFD10H	CSIB1 control register 0	CB1CTL0		√	√		01H
FFFFFD11H	CSIB1 control register 1	CB1CTL1		√	√		00H
FFFFFD12H	CSIB1 control register 2	CB1CTL2			√		00H
FFFFFD13H	CSIB1 status register	CB1STR		√	√		00H
FFFFFD14H	CSIB1 receive data register	CB1RX	R			√	0000H
FFFFFD14H	CSIB1 receive data register L	CB1RXL			√		00H
FFFFFD16H	CSIB1 transmit data register	CB1TX	R/W			√	0000H
FFFFFD16H	CSIB1 transmit data register L	CB1TXL			√		00H

3.4.7 Special registers

Special registers are registers that are protected from being written with illegal data due to an inadvertent program loop. The V850ES/HE2 has the following seven special registers.

- Power save control register (PSC)
- Processor clock control register (PCC)
- Clock monitor mode register (CLM)
- Reset source flag register (RESF)
- Low-voltage detection register (LVIM)
- Internal RAM data status register (RAMS)
- On-chip debug mode register (OCDM)

In addition, the PRCDM register is provided to protect against a write access to the special registers so that the application system does not inadvertently stop due to an inadvertent program loop. A write access to the special registers is made in a specific sequence, and an illegal store operation is reported to the SYS register.

(1) Setting data to special registers

Setting data to special registers is done in the following sequence.

<1> Prepare the data to be set to the special register in a general-purpose register.
<2> Write the data prepared in step <1> to the PRCMD register.
<3> Write the setting data to the special register (using following instructions).
- Store instruction (ST/SST instruction)
- Bit manipulation instruction (SET1/CLR1/NOT1 instruction)

<4> to <8> Insert NOP instructions (5 instructions)[Note].

[Description Example] When using PSC register (standby mode setting)

```
    ST.B r11,PSMR[r0]    ; PSMR register setting (IDLE, STOP mode setting)
<1> MOV 0x02,r10
<2> ST.B r10,PRCMD[r0]   ; PRCMD register write
<3> ST.B r10,PSC[r0]     ; PSC register setting
<4> NOP[Note]            ; Dummy instruction
<5> NOP[Note]            ; Dummy instruction
<6> NOP[Note]            ; Dummy instruction
<7> NOP[Note]            ; Dummy instruction
<8> NOP[Note]            ; Dummy instruction
(next instruction)
```

No special sequence is required to read special registers.

Note When switching to the IDLE mode or the STOP mode (PSC.STP bit = 1), 5 NOP instructions must be inserted immediately after switching is performed.

Cautions 1. When a store instruction is executed to store data in the command register, interrupts are not acknowledged. This is because it is assumed that steps <2> and <3> above are performed by successive store instructions. If another instruction is placed between <2> and <3>, and if an interrupt is acknowledged by that instruction, the above sequence may not be established, causing malfunction.

2. Although dummy data is written to the PRCMD register, use the same general-purpose register used to set the special register (<3> in Example) to write data to the PRCMD register (<2> in Example). The same applies when a general-purpose register is used for addressing.

(2) Command register (PRCMD)

The PRCMD register is an 8-bit register that protects the registers that may seriously affect the application system from being written, so that the system does not inadvertently stop due to an inadvertent program loop. The first write access to a special register is valid after data has been written in advance to the PRCMD register. In this way, the value of the special register can be rewritten only in a specific sequence, so as to protect the register from an illegal write access.

The PRCMD register is write-only, in 8-bit units (undefined data is read when this register is read).

After reset: Undefined W Address: FFFFF1FCH

	7	6	5	4	3	2	1	0
PRCMD	REG7	REG6	REG5	REG4	REG3	REG2	REG1	REG0

(3) System status register (SYS)

Status flags that indicate the operation status of the overall system are allocated to this register.
This register can be read or written in 8-bit or 1-bit units.
Reset sets this register to 00H.

After reset: 00H R/W Address: FFFFF802H

	7	6	5	4	3	2	1	0
SYS	0	0	0	0	0	0	0	PRERR

PRERR	Detects protection error
0	Protection error did not occur
1	Protection error occurred

The PRERR flag operates under the following conditions.

(a) Set condition (PRERR flag = 1)

(i) When data is written to a special register without writing anything to the PRCMD register (when <3> is executed without executing <2> in **3.4.7 (1) Setting data to special registers**)

(ii) When data is written to an on-chip peripheral I/O register other than a special register (including execution of a bit manipulation instruction) after writing data to the PRCMD register (if <3> in **3.4.7 (1) Setting data to special registers** is not the setting of a special register)

Remark Even if an on-chip peripheral I/O register is read (except by a bit manipulation instruction) between an operation to write the PRCMD register and an operation to write a special register, the PRERR flag is not set, and the set data can be written to the special register.

(b) Clear condition (PRERR flag = 0)

(i) When 0 is written to the PRERR flag

(ii) When the system is reset

Cautions 1. If 0 is written to the PRERR bit of the SYS register, which is not a special register, immediately after a write access to the PRCMD register, the PRERR bit is cleared to 0 (the write access takes precedence).

2. If data is written to the PRCMD register, which is not a special register, immediately after a write access to the PRCMD register, the PRERR bit is set to 1.

3.4.8 Cautions

(1) Registers to be set first

Be sure to set the following registers first when using the V850ES/HE2.

- System wait control register (VSWC)
- On-chip debug mode register (OCDM)
- Watchdog timer mode register 2 (WDTM2)

After setting the VSWC, OCDM, and WDTM2 registers, set the other registers as necessary.
When using the external bus, set each pin to the alternate-function bus control pin mode by using the port-related registers after setting the above registers.

(a) System wait control register (VSWC)

The VSWC register controls wait of bus access to the on-chip peripheral I/O registers.
Three clocks are required to access an on-chip peripheral I/O register (without a wait cycle). The V850ES/HE2 requires wait cycles according to the operating frequency. Set the following value to the VSWC register in accordance with the frequency used.
The VSWC register can be read or written in 8-bit units (address: FFFFF06EH, default value: 77H).

Operating Frequency (f_{CLK})	Set Value of VSWC	Number of Waits
32 kHz ≤ f_{CLK} < 16.6 MHz	00H	0 (no waits)
16.6 MHz ≤ f_{CLK} ≤ 20 MHz	01H	1

(b) On-chip debug mode register (OCDM)

For details, see **CHAPTER 24 ON-CHIP DEBUG FUNCTION**.

(c) Watchdog timer mode register 2 (WDTM2)

The WDTM2 register sets the overflow time and the operation clock of watchdog timer 2.
Watchdog timer 2 automatically starts in the reset mode after reset is released. Write the WDTM2 register to activate this operation.
For details, see **CHAPTER 10 FUNCTIONS OF WATCHDOG TIMER 2**.

(2) Accessing specific on-chip peripheral I/O registers

This product has two types of internal system buses.

One is a CPU bus and the other is a peripheral bus that interfaces with low-speed peripheral hardware.

The clock of the CPU bus and the clock of the peripheral bus are asynchronous. If an access to the CPU and an access to the peripheral hardware conflict, therefore, unexpected illegal data may be transferred. If there is a possibility of a conflict, the number of cycles for accessing the CPU changes when the peripheral hardware is accessed, so that correct data is transferred. As a result, the CPU does not start processing of the next instruction but enters the wait state. If this wait state occurs, the number of clocks required to execute an instruction increases by the number of wait clocks shown below.

This must be taken into consideration if real-time processing is required.

When specific on-chip peripheral I/O registers are accessed, more wait states may be required in addition to the wait states set by the VSWC register.

The access conditions and how to calculate the number of wait states to be inserted (number of CPU clocks) at this time are shown below.

Peripheral Function	Register Name	Access	k
16-bit timer/event counter P (TMP) (n = 0 to 3)	TPnCNT	Read	1 or 2
	TPnCCR0, TPnCCR1	Write	• 1st access: No wait • Continuous write: 3 or 4
		Read	1 or 2
16-bit timer/event counter Q (TMQ)	TQ0CNT	Read	1 or 2
	TQ0CCR0 to TQ0CCR3	Write	• 1st access: No wait • Continuous write: 3 or 4
		Read	1 or 2
Watchdog timer 2 (WDT2)	WDTM2	Write (when WDT2 operating)	3
A/D converter	ADA0M0	Read	1 or 2
	ADA0CR0 to ADA0CR9	Read	1 or 2
	ADA0CR0H to ADA0CR9H	Read	1 or 2

Number of clocks necessary for access = $3 + i + j + (2 + j) \times k$

Caution Accessing the above registers is prohibited in the following statuses. If a wait cycle is generated, it can only be cleared by a reset.

- **When the CPU operates with the subclock and the main clock oscillation is stopped**
- **When the CPU operates with the internal oscillation clock**

Remark i: Values (0 or 1) of higher 4 bits of VSWC register

j: Values (0 or 1) of lower 4 bits of VSWC register

(3) Restriction on conflict between sld instruction and interrupt request

(a) Description

If a conflict occurs between the decode operation of an instruction in <2> immediately before the sld instruction following an instruction in <1> and an interrupt request before the instruction in <1> is complete, the execution result of the instruction in <1> may not be stored in a register.

Instruction <1>

- ld instruction: ld.b, ld.h, ld.w, ld.bu, ld.hu
- sld instruction: sld.b, sld.h, sld.w, sld.bu, sld.hu
- Multiplication instruction: mul, mulh, mulhi, mulu

Instruction <2>

mov reg1, reg2	not reg1, reg2	satsubr reg1, reg2	satsub reg1, reg2
satadd reg1, reg2	satadd imm5, reg2	or reg1, reg2	xor reg1, reg2
and reg1, reg2	tst reg1, reg2	subr reg1, reg2	sub reg1, reg2
add reg1, reg2	add imm5, reg2	cmp reg1, reg2	cmp imm5, reg2
mulh reg1, reg2	shr imm5, reg2	sar imm5, reg2	shl imm5, reg2

<Example>

```
<i>   ld.w   [r11], r10
            •
            •
            •
<ii>  mov   r10, r28
<iii> sld.w 0x28, r10
```

If the decode operation of the mov instruction <ii> immediately before the sld instruction <iii> and an interrupt request conflict before execution of the ld instruction <i> is complete, the execution result of instruction <i> may not be stored in a register.

(b) Countermeasure

<1> When compiler (CA850) is used
Use CA850 Ver. 2.61 or later because generation of the corresponding instruction sequence can be automatically suppressed.

<2> Countermeasure by assembler
When executing the sld instruction immediately after instruction <ii>, avoid the above operation using either of the following methods.

- Insert a nop instruction immediately before the sld instruction.
- Do not use the same register as the sld instruction destination register in the above instruction <ii> executed immediately before the sld instruction.

CHAPTER 4 PORT FUNCTIONS

4.1 Features

- O I/O ports: 51
- O Port pins function alternately as other peripheral-function I/O pins
- O Can be set in input or output mode in 1-bit units.

4.2 Basic Configuration of Ports

The V850ES/HE2 has a total of 51 I/O ports, ports 0, 3 to 5, 7, 9, CM, and DL. The port configuration is shown below.

Figure 4-1. Port Configuration

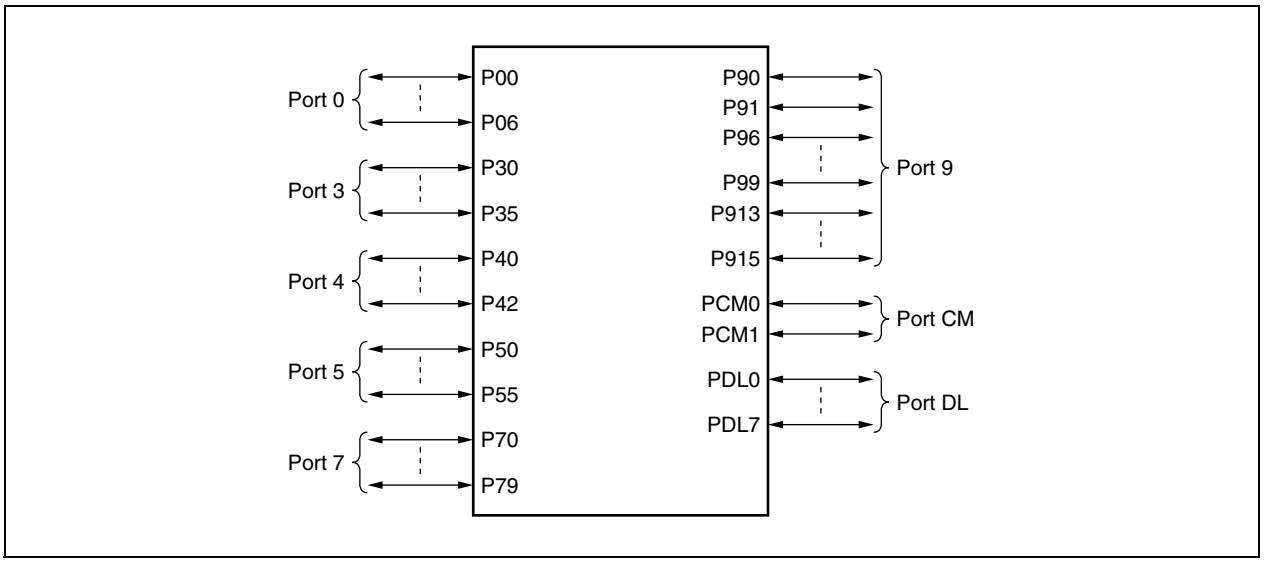

Table 4-1. Configuration of Ports

Item	Configuration
Control registers	Port mode register (PMn: n = 0, 3L, 4, 5, 7L, 7H, 9, CM, or DLL)
	Port mode control register (PMCn: n = 0, 3L, 4, 5, 9, or CM)
	Port function control register (PFCn: n = 0, 3L, 5, or 9)
	Port function control expansion register (PFCEn: n = 3L, 5, or 9)
	Pull-up resistor option register (PUn: n = 0, 3L, 4, 5, or 9)
Ports	51

Table 4-2. Pin I/O Buffer Power Supplies

Power Supply	Corresponding Pin
AV_{REF0}	Port 7
EV_{DD}	Port 0, 3 to 5, 9, CM, DL, $\overline{RESET}$

4.3 Port Functions

4.3.1 Operation of port function

The operation of a port differs depending on setting of the input or output mode, as follows.

(1) Writing to I/O port

(a) In output mode

A value can be written to the output latch by using a transfer instruction. The contents of the output latch are output from the pin. Once data has been written to the output latch, it is retained until new data is written to the output latch.

(b) In input mode

A value can be written to the output latch by using a transfer instruction. Because the output buffer is off, however, the status of the pin remains unchanged.
Once data has been written to the output latch, it is retained until new data is written to the output latch.

Caution Although a 1-bit memory manipulation instruction manipulates 1 bit, it accesses a port in 8-bit units. If a port has a mixture of input and output pins, therefore, the contents of the output latch of a pin set in the input mode become undefined, even if the pin is not subject to manipulation.

(2) Reading from I/O port

(a) In output mode

The contents of the output latch can be read by using a transfer instruction. The contents of the output latch are not changed.

(b) In input mode

The status of the pin can be read by using a transfer instruction. The contents of the output latch are not changed.

(3) Operation of I/O port

(a) In output mode

An operation is performed on the contents of the output latch and the result is written to the output latch. The contents of the output latch are output from the pin.
Once data has been written to the output latch, it is retained until new data is written to the output latch.

(b) In input mode

The contents of the output latch become undefined. Because the output buffer is off, however, the status of the pin remains unchanged.

Caution Although a 1-bit memory manipulation instruction manipulates 1 bit, it accesses a port in 8-bit units. If a port has a mixture of input and output pins, therefore, the contents of the output latch of a pin set in the input mode become undefined, even if the pin is not subject to manipulation.

4.3.2 Notes on setting port pins

(1) The number of ports and alternate functions differs depending on the product. Set the registers related to the unavailable ports and alternate functions to the value after reset.

(2) Set the registers of the ports using the following procedure.

<1> Set port function control register n (PFCn) and port function control expansion register n (PFCEn).
<2> Set port mode control register n (PMCn).
<3> Set external interrupt falling edge specification register n (INTFn) and external interrupt rising edge specification register n (INTRn).

If the PFCn and PFCEn registers are set after the PMCn register was set, an unexpected peripheral function pin may be set while the PFCn and PFCEn registers are being set.

(3) The PUnm bit (which connects an on-chip pull-up resistor) of the PUn register is valid only in the input mode (PMnm bit of PMn register = 1). In the output mode (PMnm bit of PMn register = 0), the on-chip pull-up register is disconnected by hardware.

(4) Reading the pin level and port latch is controlled by the port mode register (PMn). The same applies when an alternate function is used.

(5) The Schmitt (SHMT)-trigger input buffer does not operate as an SHMT buffer when it is read in the port mode.

4.3.3 Port 0

Port 0 is a 7-bit port (P00 to P06) for which I/O settings can be controlled in 1-bit units.

(1) Functions of port 0

- The input/output data of the port can be specified in 1-bit units.
  Specified by port register 0 (P0)
- The input/output mode of the port can be specified in 1-bit units.
  Specified by port mode register 0 (PM0)
- Port mode or control mode (alternate function) can be specified in 1-bit units.
  Specified by port mode control register 0 (PMC0)
- Control mode 1 or control mode 2 can be specified in 1-bit units.
  Specified by port function control register 0 (PFC0)
- An on-chip pull-up resistor can be connected in 1-bit units.
  Specified by pull-up resistor option register 0 (PU0)
- The valid edge of the external interrupt (alternate function) can be specified in 1-bit units.
  Specified by external interrupt falling edge specification register 0 (INTF0) and external interrupt rising edge specification register 0 (INTR0)

Port 0 functions alternately as the following pins.

Table 4-3. Alternate-Function Pins of Port 0

Pin Name		Alternate-Function Pin Name	I/O	Remark	Block Type
Port 0	P00	TP31/TOP31	I/O	–	G-1
	P01	TP30/TOP30			G-1
	P02	NMI[Note 1]			L-1
	P03	INTP0/ADTRG			N-1
	P04	INTP1			L-1
	P05	INTP2/$\overline{\text{DRST}}$[Note 2]			AA-1
	P06	INTP3			L-2

Notes 1. The NMI pin alternately functions as the P02 pin. It functions as the P02 pin after reset.
To enable the NMI pin, set the PMC0.PMC02 bit to 1. The initial setting of the NMI pin is “No edge detected”. Select the NMI pin valid edge using INTF0 and INTR0 registers.

2. The alternate function of the P05 pin is the on-chip debug function. After external reset, the P05/INTP2/$\overline{\text{DRST}}$ pin is initialized as the on-chip debug pin ($\overline{\text{DRST}}$). To use the P05 pin as a port pin, not as an on-chip debug pin, the following actions must be taken.

<1> Clear the OCDM.OCDM0 bit (special register) to 0.
<2> Fix the P05/INTP2/$\overline{\text{DRST}}$ pin to the low level until the above action has been taken.

When the on-chip debug function is not used, inputting a high level to the $\overline{\text{DRST}}$ pin before the above actions are taken may cause a malfunction (CPU deadlock). Exercise utmost care in handling the P05 pin.
When a high level is not input to the P05/INTP2/$\overline{\text{DRST}}$ pin (when this pin is fixed to low level), it is not necessary to manipulate the OCDM.OCDM0 bit.

Because a pull-down resistor (30 kΩ TYP.) is connected to the buffer of the P05/INTP2/$\overline{\text{DRST}}$ pin, the pin does not have to be fixed to the low level by an external source. The pull-down resistor is disconnected by clearing the OCDM0 bit to 0.

Caution The P00 to P06 pins have hysteresis characteristics in the input mode of the alternate function, but do not have hysteresis characteristics in the port mode.

(2) Registers

(a) Port register 0 (P0)

Port register 0 (P0) is an 8-bit register that controls reading the pin level and writing the output level. This register can be read or written in 8-bit or 1-bit units.

After reset: Undefined R/W Address: FFFFF400H

	7	6	5	4	3	2	1	0
P0	0	P06	P05	P04	P03	P02	P01	P00

P0n	Control of output data (in output mode) (n = 0 to 6)
0	Output 0.
1	Output 1.

Remarks 1. Input mode: When port 0 (P0) is read, the pin levels at this time are read. During write, the data written to P0 is written. This does not affect the input pins.

Output mode: When port 0 (P0) is read, the value of P0 is read. During write, a value is written to P0 and the written value is immediately output.

2. An undefined value (pin input level) is read for the value after reset when P0 is read in the input mode. When P0 is read in the output mode, 00H (output latch value) is output.

(b) Port mode register 0 (PM0)

This is an 8-bit register that specifies the input or output mode. It can be read or written in 8-bit or 1-bit units.

After reset: FFH R/W Address: FFFFF420H

	7	6	5	4	3	2	1	0
PM0	1	PM06	PM05	PM04	PM03	PM02	PM01	PM00

PM0n	Control of input/output mode (n = 0 to 6)
0	Output mode
1	Input mode

(c) Port mode control register 0 (PMC0)

This is an 8-bit register that specifies the port mode or control mode. It can be read or written in 8-bit or 1-bit units.

After reset: 00H R/W Address: FFFFF440H

	7	6	5	4	3	2	1	0
PMC0	0	PMC06	PMC05	PMC04	PMC03	PMC02	PMC01	PMC00

PMC06	Specification of operation mode of P06 pin
0	I/O port
1	INTP3 input

PMC05	Specification of operation mode of P05 pin
0	I/O port
1	INTP2/$\overline{\text{DRST}}$ input

PMC04	Specification of operation mode of P04 pin
0	I/O port
1	INTP1 input

PMC03	Specification of operation mode of P03 pin
0	I/O port
1	INTP0/ADTRG input

PMC02	Specification of operation mode of P02 pin
0	I/O port
1	NMI input

PMC01	Specification of operation mode of P01 pin
0	I/O port
1	TIP30/TOP30 I/O

PMC00	Specification of operation mode of P00 pin
0	I/O port
1	TIP31/TOP31 I/O

Caution The P05/INTP2/$\overline{\text{DRST}}$ pin functions as the $\overline{\text{DRST}}$ pin when the OCDM.OCDM0 bit is 1, regardless of the value of the PMC05 bit.

(d) Port function control register 0 (PFC0)

This is an 8-bit register that specifies control mode 1 or control mode 2. It can be read or written in 8-bit or 1-bit units.

After reset: 00H R/W Address: FFFFF460H

	7	6	5	4	3	2	1	0
PFC0	0	0	0	0	PFC03	0	PFC01	PFC00

PFC03	Specification of operation mode when P03 pin is in control mode
0	INTP0 input
1	ADTRG input

PFC01	Specification of operation mode when P01 pin is in control mode
0	TIP30 input
1	TOP30 output

PFC00	Specification of operation mode when P00 pin is in control mode
0	TIP31 input
1	TOP31 output

(e) Pull-up resistor option register 0 (PU0)

This is an 8-bit register that specifies connection of an on-chip pull-up resistor. It can be read or written in 8-bit or 1-bit units.

After reset: 00H R/W Address: FFFFFC40H

	7	6	5	4	3	2	1	0
PU0	0	PU06	PU05	PU04	PU03	PU02	PU01	PU00

PU0n	Control of on-chip pull-up resistor connection (n = 0 to 6)
0	Not connected
1	Connected

(f) External interrupt falling edge specification register 0 (INTF0)

This is an 8-bit register that specifies detection of the falling edge of the external interrupt pin. It can be read or written in 8-bit or 1-bit units.

Cautions 1. When the external interrupt function (alternate function) is switched to the port function, an edge may be detected. Set the port mode after clearing the INTF0n and INTR0n bits to 0.

2. An analog-delay-based noise eliminator is connected to the external interrupt input pin.

3. For how to set the internal noise filter (analog delay/digital delay) of INTP3, see CHAPTER 14 INTERRUPT/EXCEPTION PROCESSING FUNCTION.

After reset: 00H R/W Address: FFFFFC00H

	7	6	5	4	3	2	1	0
INTF0	0	INTF06	INTF05	INTF04	INTF03	INTF02	0	0

Remark See **Table 4-4** for how to specify a valid edge.

(g) External interrupt rising edge specification register 0 (INTR0)

This is an 8-bit register that specifies detection of the rising edge of the external interrupt pin. It can be read or written in 8-bit or 1-bit units.

Cautions 1. When the external interrupt function (alternate function) is switched to the port function, an edge may be detected. Set the port mode after clearing the INTF0n and INTR0n bits to 0.

2. An analog-delay-based noise eliminator is connected to the external interrupt input pin.

3. For how to set the internal noise filter (analog delay/digital delay) of INTP3, see CHAPTER 14 INTERRUPT/EXCEPTION PROCESSING FUNCTION.

After reset: 00H R/W Address: FFFFFC20H

	7	6	5	4	3	2	1	0
INTR0	0	INTR06	INTR05	INTR04	INTR03	INTR02	0	0

Remark See **Table 4-4** for how to specify a valid edge.

Table 4-4. Valid Edge Specification

INTF0n Bit	INTR0n Bit	Valid Edge Specification (n = 2 to 6)
0	0	No edge detected
0	1	Rising edge
1	0	Falling edge
1	1	Both edges

Remark n = 2: Control of NMI pin
n = 3: Control of INTP0 pin
n = 4: Control of INTP1 pin
n = 5: Control of INTP2 pin
n = 6: Control of INTP3 pin

4.3.4 Port 3

Port 3 is a 6-bit port (P30 to P35) for which I/O settings can be controlled in 1-bit units.

(1) Function of port 3

- The input/output data of the port can be specified in 1-bit units.
  Specified by port register 3L (P3L)
- The input/output mode of the port can be specified in 1-bit units.
  Specified by port mode register 3L (PM3L)
- Port mode or control mode (alternate function) can be specified in 1-bit units.
  Specified by port mode control register 3L (PMC3L)
- Control mode can be specified in 1-bit units.
  Specified by port function control register 3L (PFC3L) and port function control expansion register 3L (PFCE3L)
- An on-chip pull-up resistor can be connected in 1-bit units.
  Specified by pull-up resistor option register 3L (PU3L)
- The valid edge of the external interrupt (alternate function) can be specified in 1-bit units.
  Specified by external interrupt falling edge specification register 3L (INTF3L) and external interrupt rising edge specification register 3L (INTR3L)

Port 3 functions alternately as the following pins.

Table 4-7. Alternate-Function Pins of Port 3

Pin Name		Alternate-Function Pin Name	I/O	Remark	Block Type
Port 3	P30	TXDA0	I/O	–	E-2
	P31	RXDA0/INTP7			L-2
	P32	ASCKA0/TIP00/TOP00/TOP01			U-13
	P33	TIP01/TOP01			G-1
	P34	TIP10/TOP10			G-1
	P35	TIP11/TOP11			G-1

Caution The P31 to P35 pins have hysteresis characteristics in the input mode of the alternate function, but do not have hysteresis characteristics in the port mode.

(2) Registers

(a) Port register 3L (P3L)

Port register 3L (P3L) is an 8-bit register that controls reading the pin level and writing the output level. This register can be read or written in 8-bit or 1-bit units.

After reset: Undefined R/W Address: FFFFF407H

	7	6	5	4	3	2	1	0
P3L	0	0	P35	P34	P33	P32	P31	P30

P3n	Control of output data (in output mode) (n = 0 to 5)
0	Output 0.
1	Output 1.

Remarks 1. Input mode: When port 3L (P3L) is read, the pin levels at this time are read. During write, the data written to P3L is written. This does not affect the input pins.

Output mode: When port 3L (P3L) is read, the value of P3L is read. During write, a value is written to P3L and the written value is immediately output.

2. An undefined value (pin input level) is read for the value after reset when P3L is read in the input mode. When P3L is read in the output mode, 00H (output latch value) is output.

(b) Port mode register 3L (PM3L)

This is an 8-bit register that specifies the input or output mode. It can be read or written in 8-bit or 1-bit units.

After reset: FFH R/W Address: FFFFF427H

	7	6	5	4	3	2	1	0
PM3L	1	1	PM35	PM34	PM33	PM32	PM31	PM30

PM3n	Control of I/O mode (n = 0 to 5)
0	Output mode
1	Input mode

(c) Port mode control register 3L (PMC3L)

This is an 8-bit register that specifies the port mode or control mode. It can be read or written in 8-bit or 1-bit units.

After reset: 00H R/W Address: FFFFF447H

	7	6	5	4	3	2	1	0
PMC3L	0	0	PMC35	PMC34	PMC33	PMC32	PMC31	PMC30

PMC35	Specification of operation mode of P35 pin
0	I/O port
1	TIP11/TOP11 I/O

PMC34	Specification of operation mode of P34 pin
0	I/O port
1	TIP10/TOP10 I/O

PMC33	Specification of operation mode of P33 pin
0	I/O port
1	TIP01/TOP01 I/O

PMC32	Specification of operation mode of P32 pin
0	I/O port
1	ASCKA0/TIP00/TOP00/TOP01 I/O

PMC31	Specification of operation mode of P31 pin
0	I/O port
1	RXDA0/INTP7 input[Note]

PMC30	Specification of operation mode of P30 pin
0	I/O port
1	TXDA0 output

Note The INTP7 pin functions alternately as the RXDA0 pin. To use as the RXDA0 pin, invalidate the edge detection function of the alternate-function INTP7 pin (by fixing the INTF3L.INTF31 bit to 0 and the INTR3L.INTR31 bit to 0). To use as the INTP7 pin, stop the reception operation of UARTA0 (by clearing the UA0CTL0.UA0RXE bit to 0).

(d) Port function control register 3L (PFC3L)

This is an 8-bit register that specifies control mode 1, 2, 3, or 4. It can be read or written in 8-bit or 1-bit units.

After reset: 00H R/W Address: FFFFF466H

	7	6	5	4	3	2	1	0
PFC3L	0	0	PFC35	PFC34	PFC33	PFC32	0	0

Remark For how to specify a control mode, see **4.3.4 (2) (f) Setting of control mode of P3 pin**.

(e) Port function control expansion register 3L (PFCE3L)

This is an 8-bit register that specifies control mode 1, 2, 3, or 4. It can be read or written in 8-bit or 1-bit units.

After reset: 00H R/W Address: FFFFF706H

	7	6	5	4	3	2	1	0
PFCE3L	0	0	0	0	0	PFCE32	0	0

Remark For how to specify a control mode, see **4.3.4 (2) (f) Setting of control mode of P3 pin**.

(f) Setting of control mode of P3 pin

PFC35	Specification of control mode of P35 pin
0	TIP11 input
1	TOP11 output

PFC34	Specification of control mode of P34 pin
0	TIP10 input
1	TOP10 output

PFC33	Specification of control mode of P33 pin
0	TIP01 input
1	TOP01 output

PFCE32	PFC32	Specification of control mode of P32 pin
0	0	ASCKA0 input
0	1	TOP01 output
1	0	TIP00 input
1	1	TOP00 output

(g) Pull-up resistor option register 3L (PU3L)

This is an 8-bit register that specifies connection of an on-chip pull-up resistor. It can be read or written in 8-bit or 1-bit units.

After reset: 00H R/W Address: FFFFFC47H

	7	6	5	4	3	2	1	0
PU3L	0	0	PU35	PU34	PU33	PU32	PU31	PU30

PU3n	Control of on-chip pull-up resistor connection (n = 0 to 5)
0	Not connected
1	Connected

(h) External interrupt falling edge specification register 3L (INTF3L)

This is a 16-bit register that specifies detection of the falling edge of the external interrupt pin. It can be read or written in 8-bit or 1-bit units.

Cautions 1. When the external interrupt function (alternate function) is switched to the port function, an edge may be detected. Set the port mode after clearing the INTF31 and INTR31 bits to 0.

2. An analog-delay-based noise eliminator is connected to the external interrupt input pin.

After reset: 00H R/W Address: FFFFFC07H

	7	6	5	4	3	2	1	0
INTF3L	0	0	0	0	0	0	INTF31	0

Remark See **Table 4-6** for how to specify a valid edge.

(i) External interrupt rising edge specification register 3L (INTR3L)

This is an 8-bit register that specifies detection of the rising edge of the external interrupt pin (INTP7 pin). It can be read or written in 8-bit or 1-bit units.

Cautions 1. When the external interrupt function (alternate function) is switched to the port function, an edge may be detected. Set the port mode after clearing the INTF31 and INTR31 bits to 0.

2. An analog-delay-based noise eliminator is connected to the external interrupt input pin.

After reset: 00H R/W Address: FFFFFC27H

	7	6	5	4	3	2	1	0
INTR3L	0	0	0	0	0	0	INTR31	0

Remark See **Table 4-6** for how to specify a valid edge.

Table 4-6. Valid Edge Specification (INTP7 Pin)

INTF31 Bit	INTR31 Bit	Valid Edge Specification
0	0	No edge detected
0	1	Rising edge
1	0	Falling edge
1	1	Both edges

4.3.5 Port 4

Port 4 is a 3-bit port (P40 to P42) for which I/O settings can be controlled in 1-bit units.

(1) Functions of port 4

- The input/output data of the port can be specified in 1-bit units.
  Specified by port register 4 (P4)
- The input/output mode of the port can be specified in 1-bit units.
  Specified by port mode register 4 (PM4)
- Port mode or control mode (alternate function) can be specified in 1-bit units.
  Specified by port mode control register 4 (PMC4)
- An on-chip pull-up resistor can be connected in 1-bit units.
  Specified by pull-up resistor option register 4 (PU4)

Port 4 functions alternately as the following pins.

Table 4-7. Alternate-Function Pins of Port 4

Pin Name		Alternate-Function Pin Name	I/O	Remark	Block Type
Port 4	P40	SIB0	I/O	–	E-1
	P41	SOB0			E-2
	P42	$\overline{\text{SCKB0}}$			E-3

Caution The P40 and P42 pins have hysteresis characteristics in the input mode of the alternate function, but do not have hysteresis characteristics in the port mode.

(2) Registers

(a) Port register 4 (P4)

Port register 4 (P4) is an 8-bit register that controls reading the pin level and writing the output level. This register can be read or written in 8-bit or 1-bit units.

After reset: Undefined R/W Address: FFFFF408H

	7	6	5	4	3	2	1	0
P4	0	0	0	0	0	P42	P41	P40

P4n	Control of output data (in output mode) (n = 0 to 2)
0	Output 0.
1	Output 1.

Remarks 1. Input mode: When port 4 (P4) is read, the pin levels at this time are read. During write, the data written to P4 is written. This does not affect the input pins.

Output mode: When port 4 (P4) is read, the value of P4 is read. During write, a value is written to P4 and the written value is immediately output.

2. An undefined value (pin input level) is read for the value after reset when P4 is read in the input mode. When P4 is read in the output mode, 00H (output latch value) is output.

(b) Port mode register 4 (PM4)

This is an 8-bit register that specifies the input or output mode. It can be read or written in 8-bit or 1-bit units.

After reset: FFH R/W Address: FFFFF428H

	7	6	5	4	3	2	1	0
PM4	1	1	1	1	1	PM42	PM41	PM40

PM4n	Control of input/output mode (n = 0 to 2)
0	Output mode
1	Input mode

(c) Port mode control register 4 (PMC4)

This is an 8-bit register that specifies the port mode or control mode. It can be read or written in 8-bit or 1-bit units.

After reset: 00H R/W Address: FFFFF448H

	7	6	5	4	3	2	1	0
PMC4	0	0	0	0	0	PMC42	PMC41	PMC40

PMC42	Specification of operation mode of P42 pin
0	I/O port
1	$\overline{\text{SCKB0}}$ I/O

PMC41	Specification of operation mode of P41 pin
0	I/O port
1	SOB0 output

PMC40	Specification of operation mode of P40 pin
0	I/O port
1	SIB0 input

(d) Pull-up resistor option register 4 (PU4)

This is an 8-bit register that specifies connection of an on-chip pull-up resistor. It can be read or written in 8-bit or 1-bit units.

After reset: 00H R/W Address: FFFFFC48H

	7	6	5	4	3	2	1	0
PU4	0	0	0	0	0	PU42	PU41	PU40

PU4n	Control of on-chip pull-up resistor connection (n = 0 to 2)
0	Not connected
1	Connected

4.3.6 Port 5

Port 5 is a 6-bit port (P50 to P55) for which I/O settings can be controlled in 1-bit units.

(1) Functions of port 5

- The input/output data of the port can be specified in 1-bit units.
  Specified by port register 5 (P5)
- The input/output mode of the port can be specified in 1-bit units.
  Specified by port mode register 5 (PM5)
- Port mode or control mode (alternate function) can be specified in 1-bit units.
  Specified by port mode control register 5 (PMC5)
- Control mode can be specified in 1-bit units.
  Specified by port function control register 5 (PFC5) or port function control expansion register 5 (PFCE5)
- An on-chip pull-up resistor can be connected in 1-bit units.
  Specified by pull-up resistor option register 5 (PU5)

Port 5 functions alternately as the following pins.

Table 4-8. Alternate-Function Pins of Port 5

Pin Name		Alternate-Function Pin Name	I/O	Remark	Block Type
Port 5	P50	KR0/TIQ01/TOQ01	I/O	–	U-4
	P51	KR1/TIQ02/TOQ02			U-4
	P52	KR2/TIQ03/TOQ03/DDI[Note]			U-5
	P53	KR3/TIQ00/TOQ00/DDO[Note]			U-6
	P54	KR4/DCK[Note]			G-2
	P55	KR5/DMS[Note]			G-2

Note The DDI, DDO, DCK, and DMS pins are for the on-chip debug function. To use the DDI, DDO, DCK, and DMS pins as port pins, not as on-chip debug pins, the following actions must be taken.

<1> Clear the OCDM0 bit of the OCDM register (special register) to 0.
<2> Fix the P05/INTP2/$\overline{\text{DRST}}$ pin to the low level until the above action has been taken.

When the on-chip debug function is not used, inputting a high level to the $\overline{\text{DRST}}$ pin before the above actions are taken may cause a malfunction (CPU deadlock). Exercise utmost care in handling the P05 pin.
When a high level is not input to the P05/INTP2/$\overline{\text{DRST}}$ pin (when this pin is fixed to low level), it is not necessary to manipulate the OCDM.OCDM0 bit.
Because a pull-down resistor (30 kΩ TYP.) is connected to the buffer of the P05/INTP2/$\overline{\text{DRST}}$ pin, the pin does not have to be fixed to the low level by an external source. The pull-down resistor is disconnected by clearing the OCDM0 bit to 0.

Caution The P50 to P55 pins have hysteresis characteristics in the input mode of the alternate function, but do not have hysteresis characteristics in the port mode.

(2) Registers

(a) Port register 5 (P5)

Port register 5 (P5) is an 8-bit register that controls reading the pin level and writing the output level. This register can be read or written in 8-bit or 1-bit units.

After reset: Undefined R/W Address: FFFFF40AH

	7	6	5	4	3	2	1	0
P5	0	0	P55	P54	P53	P52	P51	P50

P5n	Control of output data (in output mode) (n = 0 to 5)
0	Output 0.
1	Output 1.

Remarks 1. Input mode: When port 5 (P5) is read, the pin levels at this time are read. During write, the data written to P5 is written. This does not affect the input pins.

Output mode: When port 5 (P5) is read, the value of P5 is read. During write, a value is written to P5 and the written value is immediately output.

2. An undefined value (pin input level) is read for the value after reset when P5 is read in the input mode. When P5 is read in the output mode, 00H (output latch value) is output.

(b) Port mode register 5 (PM5)

This is an 8-bit register that specifies the input or output mode. It can be read or written in 8-bit or 1-bit units.

After reset: FFH R/W Address: FFFFF42AH

	7	6	5	4	3	2	1	0
PM5	1	1	PM55	PM54	PM53	PM52	PM51	PM50

PM5n	Control of I/O mode (n = 0 to 5)
0	Output mode
1	Input mode

(c) Port mode control register 5 (PMC5)

This is an 8-bit register that specifies the port mode or control mode. It can be read or written in 8-bit or 1-bit units.

Caution If the control mode is specified by using the PMC5 register when the PFC5.PFC5n and PFCE5.PFCE5n bits are the default values (0), the output becomes undefined.
For this reason, first set the PFC5.PFC5n and PFCE5.PFCE5n bits, and then set the PMC5n bit to 1 to set the control mode.

After reset: 00H R/W Address: FFFFF44AH

	7	6	5	4	3	2	1	0
PMC5	0	0	PMC55	PMC54	PMC53	PMC52	PMC51	PMC50

PMC55	Specification of operation mode of P55 pin
0	I/O port
1	KR5 input

PMC54	Specification of operation mode of P54 pin
0	I/O port
1	KR4 input

PMC53	Specification of operation mode of P53 pin
0	I/O port
1	KR3/TIQ00/TOQ00 I/O

PMC52	Specification of operation mode of P52 pin
0	I/O port
1	KR2/TIQ03/TOQ03 I/O

PMC51	Specification of operation mode of P51 pin
0	I/O port
1	KR1/TIQ02/TOQ02 I/O

PMC50	Specification of operation mode of P50 pin
0	I/O port
1	KR0/TIQ01/TOQ01 I/O

(d) Port function control register 5 (PFC5)

This is an 8-bit register that specifies control mode 1, 2, 3, or 4. It can be read or written in 8-bit or 1-bit units.

After reset: 00H R/W Address: FFFFF46AH

	7	6	5	4	3	2	1	0
PFC5	0	0	PFC55	PFC54	PFC53	PFC52	PFC51	PFC50

Remark For how to specify a control mode, see **4.3.6 (2) (f) Setting of control mode of P5 pin**.

(e) Port function control expansion register 5 (PFCE5)

This is an 8-bit register that specifies control mode 1, 2, 3, or 4. It can be read or written in 8-bit or 1-bit units.

After reset: 00H R/W Address: FFFFF70AH

	7	6	5	4	3	2	1	0
PFCE5	0	0	0	0	PFCE53	PFCE52	PFCE51	PFCE50

Remark For how to specify a control mode, see **4.3.6 (2) (f) Setting of control mode of P5 pin**.

(f) Setting of control mode of P5 pin

Caution If the control mode is specified by using the PMC5 register when the PFC5.PFC5n and PFCE5.PFCE5n bits are the default values (0), the output becomes undefined.
For this reason, first set the PFC5.PFC5n and PFCE5.PFCE5n bits, and then set the PMC5n bit to 1 to set the control mode.

PFC55	Specification of control mode of P55 pin
0	Setting prohibited
1	KR5 input

PFC54	Specification of control mode of P54 pin
0	Setting prohibited
1	KR4 input

PFCE53	PFC53	Specification of control mode of P53 pin
0	0	Setting prohibited
0	1	TIQ00/KR3[Note] input
1	0	TOQ00 output
1	1	Setting prohibited

PFCE52	PFC52	Specification of control mode of P52 pin
0	0	Setting prohibited
0	1	TIQ03/KR2[Note] input
1	0	TOQ03 output
1	1	Setting prohibited

PFCE51	PFC51	Specification of control mode of P51 pin
0	0	Setting prohibited
0	1	TIQ02/KR1[Note] input
1	0	TOQ02 output
1	1	Setting prohibited

PFCE50	PFC50	Specification of control mode of P50 pin
0	0	Setting prohibited
0	1	TIQ01/KR0[Note] input
1	0	TOQ01 output
1	1	Setting prohibited

Note The KRn pin functions alternately as the TIQ0m pin. To use this pin as the TIQ0m pin, invalidate the key return detection function of the alternate-function KRn pin (by clearing the KRM.KRMn bit to 0). To use this pin as the KRn pin, invalidate the edge detection function of the alternate-function TIQ0m pin (n = 0 to 3, m = 0 to 3).

Pin Name	Use as TIQ0m Pin	Use as KRn Pin
KR0/TIQ01	KRM.KRM0 bit = 0	TQ0IOC1.TQ0TIG2, TQ0IOC1.TQ0TIG3 bits = 0
KR1/TIQ02	KRM.KRM1 bit = 0	TQ0IOC1.TQ0TIG4, TQ0IOC1.TQ0TIG5 bits = 0
KR2/TIQ03	KRM.KRM2 bit = 0	TQ0IOC1.TQ0TIG6, TQ0IOC1.TQ0TIG7 bits = 0
KR3/TIQ00	KRM.KRM3 bit = 0	TQ0IOC1.TQ0TIG0, TQ0IOC1.TQ0TIG1 bits = 0 TQ0IOC2.TQ0EES0, TQ0IOC2.TQ0EES1 bits = 0 TQ0IOC2.TQ0ETS0, TQ0IOC2.TQ0ETS1 bits = 0

(g) Pull-up resistor option register 5 (PU5)

This is an 8-bit register that specifies connection of an on-chip pull-up resistor. It can be read or written in 8-bit or 1-bit units.

After reset: 00H R/W Address: FFFFFC4AH

	7	6	5	4	3	2	1	0
PU5	0	0	PU55	PU54	PU53	PU52	PU51	PU50

PU5n	Control of on-chip pull-up resistor connection (n = 0 to 5)
0	Not connected
1	Connected

4.3.7 Port 7

Port 7 is a 16-bit port (P70 to P79) for which I/O settings can be controlled in 1-bit units.

(1) Functions of port 7

- The input/output data of the port can be specified in 1-bit units.
  Specified by port registers 7H, 7L (P7H, P7L)
- The input/output mode of the port can be specified in 1-bit units.
  Specified by port mode registers 7H, 7L (PM7H, PM7L)

Port 7 functions alternately as the following pins.

Table 4-9. Alternate-Function Pins of Port 7

Pin Name		Alternate-Function Pin Name	I/O	Remark	Block Type
Port 7	P70	ANI0	I/O	–	A-1
	P71	ANI1			A-1
	P72	ANI2			A-1
	P73	ANI3			A-1
	P74	ANI4			A-1
	P75	ANI5			A-1
	P76	ANI6			A-1
	P77	ANI7			A-1
	P78	ANI8			A-1
	P79	ANI9			A-1

(2) Registers

(a) Port register 7H, port register 7L (P7H, P7L)

Port registers 7H and 7L (P7H and P7L) are 8-bit registers that control reading the pin level and writing the output level. These registers can be read or written in 8-bit or 1-bit units.
They cannot be accessed in 16-bit units.

After reset: Undefined R/W Address: FFFFF40FH, FFFFF40EH

	7	6	5	4	3	2	1	0
P7H	0	0	0	0	0	0	P79	P78
	7	6	5	4	3	2	1	0
P7L	P77	P76	P75	P74	P73	P72	P71	P70

P7n	Control of output data (in output mode) (n = 0 to 9)
0	Output 0.
1	Output 1.

Caution Do not read the P7H and P7L registers during A/D conversion.

Remarks 1. Input mode: When ports 7H and 7L (P7H, P7L) are read, the pin levels at this time are read. During write, the data written to P7H and P7L is written. This does not affect the input pins.
Output mode: When ports 7H and 7L (P7H, P7L) are read, the values of P7H and P7L are read. During write, values are written to P7H and P7L and the written values are immediately output.

2. An undefined value (pin input level) is read for the value after reset when P7H and P7L are read in the input mode. When P7H and P7L are read in the output mode, 00H (output latch value) is output.

(b) Port mode registers 7H, 7L (PM7H, PM7L)

These are 8-bit registers that specify an input or output mode. They can be read or written in 8-bit or 1-bit units.

These registers cannot be accessed in 16-bit units.

After reset: FFH R/W Address: FFFFF42FH, FFFFF42EH

	7	6	5	4	3	2	1	0
PM7H	1	1	1	1	1	1	PM79	PM78
	7	6	5	4	3	2	1	0
PM7L	PM77	PM76	PM75	PM74	PM73	PM72	PM71	PM70

PM7n	Control of I/O mode (n = 0 to 9)
0	Output mode
1	Input mode

Caution To use the alternate function of P7n (ANIn), set PM7n to 1.

4.3.8 Port 9

Port 9 is a 9-bit port (P90, P91, P96 to P99, P913 to P915) for which I/O settings can be controlled in 1-bit units.

(1) Functions of port 9

- The input/output data of the port can be specified in 1-bit units.
  Specified by port register 9 (P9)
- The input/output mode of the port can be specified in 1-bit units.
  Specified by port mode register 9 (PM9)
- Port mode or control mode (alternate function) can be specified in 1-bit units.
  Specified by port mode control register 9 (PMC9)
- Control mode can be specified in 1-bit units.
  Specified by port function control register 9 (PFC9) and port function control expansion register 9 (PFCE9)
- An on-chip pull-up resistor can be connected in 1-bit units.
  Specified by pull-up resistor option register 9 (PU9)
- The valid edge of the external interrupt (alternate function) can be specified in 1-bit units.
  Specified by external interrupt falling edge specification register 9H (INTF9H) and external interrupt rising edge specification register 9H (INTR9H)

Port 9 functions alternately as the following pins.

Table 4-10. Alternate-Function Pins of Port 9

Pin Name		Alternate-Function Pin Name	I/O	Remark	Block Type
Port 9	P90	KR6/TXDA1	I/O	–	U-12
	P91	KR7/RXDA1			U-7
	P96	TIP21/TOP21			U-9
	P97	SIB1/TIP20/TOP20			U-8
	P98	SOB1			G-3
	P99	$\overline{\text{SCKB1}}$			G-5
	P913	INTP4/PCL			W-1
	P914	INTP5			N-2
	P915	INTP6			N-2

Caution The P90, P91, P96, P97, P99, and P913 to P915 pins have hysteresis characteristics in the input mode of the alternate function, but do not have hysteresis characteristics in the port mode.

(2) Registers

(a) Port register 9 (P9)

Port register 9 (P9) is a 16-bit register that controls reading the pin level and writing the output level. This register can be read or written in 16-bit units.

If the higher 8 bits of the P9 register are used as the P9H register, and the lower 8 bits as the P9L register, however, these registers can be read or written in 8-bit or 1-bit units.

After reset: Undefined R/W Address: FFFFF412H, FFFFF413H

	15	14	13	12	11	10	9	8
P9 (P9H[Note])	P915	P914	P913	0	0	0	P99	P98
	7	6	5	4	3	2	1	0
(P9L)	P97	P96	0	0	0	0	P91	P90

P9n	Control of output data (in output mode) (n = 0, 1, 6 to 9, 13 to 15)
0	Output 0.
1	Output 1.

Note To read or write bits 8 to 15 of the P9 register in 8-bit or 1-bit units, specify these bits as bits 0 to 7 of the P9H register.

Remarks 1. Input mode: When port 9 (P9) is read, the pin levels at this time are read. During write, the data written to P9 is written. This does not affect the input pins.

Output mode: When port 9 (P9) is read, the value of P9 is read. During write, a value is written to P9 and the written value is immediately output.

2. An undefined value (pin input level) is read for the value after reset when P9 is read in the input mode. When P9 is read in the output mode, 0000H (output latch value) is output.

(b) Port mode register 9 (PM9)

This is a 16-bit register that specifies the input or output mode. It can be read or written in 16-bit units.

If the higher 8 bits of the PM9 register are used as the PM9H register, and the lower 8 bits as the PM9L register, however, these registers can be read or written in 8-bit or 1-bit units.

After reset: FFFFH R/W Address: FFFFF432H, FFFFF433H

	15	14	13	12	11	10	9	8
PM9 (PM9H[Note])	PM915	PM914	PM913	0	0	0	PM99	PM98
	7	6	5	4	3	2	1	0
(PM9L)	PM97	PM96	0	0	0	0	PM91	PM90

PM9n	Control of I/O mode (n = 0, 1, 6 to 9, 13 to 15)
0	Output mode
1	Input mode

Note To read or write bits 8 to 15 of the PM9 register in 8-bit or 1-bit units, specify these bits as bits 0 to 7 of the PM9H register.

(c) Port mode control register 9 (PMC9)

This is a 16-bit register that specifies the port mode or control mode. It can be read or written in 16-bit units.

If the higher 8 bits of the PMC9 register are used as the PMC9H register, and the lower 8 bits as the PMC9L register, however, these registers can be read or written in 8-bit or 1-bit units.

Caution If the control mode is specified by using the PMC9 register when the PFC9.PFC9n bit and the PFCE9.PFCE9n bit are the default values (0), the output becomes undefined. For this reason, first set the PFC9.PFC9n bit and the PFCE9.PFCE9n bit to 1, and then set the PMC9n bit to 1 to set the control mode.

(1/2)

After reset: 0000H R/W Address: FFFFF452H, FFFFF453H

	15	14	13	12	11	10	9	8
PMC9 (PMC9H[Note])	PMC915	PMC914	PMC913	0	0	0	PMC99	PMC98
	7	6	5	4	3	2	1	0
(PMC9L)	PMC97	PMC96	0	0	0	0	PMC91	PMC90

PMC915	Specification of operation mode of P915 pin
0	I/O port
1	INTP6 input

PMC914	Specification of operation mode of P914 pin
0	I/O port
1	INTP5 input

PMC913	Specification of operation mode of P913 pin
0	I/O port
1	INTP4/PCL I/O

Note To read or write bits 8 to 15 of the PMC9 register in 8-bit or 1-bit units, specify these bits as bits 0 to 7 of the PMC9H register.

(2/2)

PMC99	Specification of operation mode of P99 pin
0	I/O port
1	$\overline{\text{SCKB1}}$ I/O

PMC98	Specification of operation mode of P98 pin
0	I/O port
1	SOB1 output

PMC97	Specification of operation mode of P97 pin
0	I/O port
1	SIB1/TIP20/TOP20 I/O

PMC96	Specification of operation mode of P96 pin
0	I/O port
1	TIP21/TOP21 I/O

PMC91	Specification of operation mode of P91 pin
0	I/O port
1	KR7/RXDA1 input

PMC90	Specification of operation mode of P90 pin
0	I/O port
1	KR6/TXDA1 I/O

(d) Port function control register 9 (PFC9)

This is a 16-bit register that specifies control mode 1, 2, 3, or 4. It can be read or written in 16-bit units. If the higher 8 bits of the PFC9 register are used as the PFC9H register, and the lower 8 bits as the PFC9L register, however, these registers can be read or written in 8-bit or 1-bit units.

After reset: 0000H R/W Address: FFFFF472H, FFFFF473H

	15	14	13	12	11	10	9	8
PFC9 (PFC9H[Note])	PFC915	PFC914	PFC913	0	0	0	PFC99	PFC98
	7	6	5	4	3	2	1	0
(PFC9L)	PFC97	PFC96	0	0	0	0	PFC91	PFC90

Note To read or write bits 8 to 15 of the PFC9 register in 8-bit or 1-bit units, specify these bits as bits 0 to 7 of the PFC9H register.

Remark For how to specify a control mode, see **4.3.8 (2) (f) Setting of control mode of P9 pin**.

(e) Port function control expansion register 9 (PFCE9)

This is a 16-bit register that specifies control mode 1, 2, 3, or 4. It can be read or written in 16-bit units. If the higher 8 bits of the PFC9 register are used as the PFC9H register, and the lower 8 bits as the PFC9L register, however, these registers can be read or written in 8-bit or 1-bit units.

After reset: 0000H R/W Address: FFFFF712H, FFFFF713H

	15	14	13	12	11	10	9	8
PFCE9 (PFCE9H[Note])	0	0	PFCE913	0	0	0	0	0
	7	6	5	4	3	2	1	0
(PFCE9L)	PFCE97	PFCE96	0	0	0	0	PFCE91	PFCE90

Note To read or write bits 8 to 15 of the PFCE9 register in 8-bit or 1-bit units, specify these bits as bits 0 to 7 of the PFCE9H register.

Remark For how to specify a control mode, see **4.3.8 (2) (f) Setting of control mode of P9 pin**.

(f) Setting of control mode of P9 pin

Caution If the control mode is specified by using the PMC9 register when the PFC9.PFC9n and PFCE9.PFCE9n bits are the default values (0), the output becomes undefined.
For this reason, first set the PFC9.PFC9n and PFCE9.PFCE9n bits, and then set the PMC9n bit to 1 to set the control mode.

PFC915	Specification of control mode of P915 pin
0	Setting prohibited
1	INTP6 input

PFC914	Specification of control mode of P914 pin
0	Setting prohibited
1	INTP5 input

PFCE913	PFC913	Specification of control mode of P913 pin
0	0	Setting prohibited
0	1	INTP4 input
1	0	PCL output
1	1	Setting prohibited

PFC99	Specification of control mode of P99 pin
0	Setting prohibited
1	$\overline{\text{SCKB1}}$ I/O

PFC98	Specification of control mode of P98 pin
0	Setting prohibited
1	SOB1 output

PFCE97	PFC97	Specification of control mode of P97 pin
0	0	Setting prohibited
0	1	SIB1 input
1	0	TIP20 input
1	1	TOP20 output

PFCE96	PFC96	Specification of control mode of P96 pin
0	0	Setting prohibited
0	1	Setting prohibited
1	0	TIP21 input
1	1	TOP21 output

PFCE91	PFC91	Specification of control mode of P91 pin
0	0	Setting prohibited
0	1	KR7 input
1	0	KR7/RXDA1 input[Note]
1	1	Setting prohibited

PFCE90	PFC90	Specification of control mode of P90 pin
0	0	Setting prohibited
0	1	KR6 input
1	0	TXDA1 output
1	1	Setting prohibited

Note The KR7 pin and RXDA1 pin are alternate-function pins.
When using the pin as the RXDA1 pin, disable KR7 pin key return detection. (Clear the KRM7 bit of the KRM register to 0.) Also, when using the pin as the KR7 pin, it is recommended to set the PFC91 bit to 1 and clear the PFCE91 bit to 0.

(g) Pull-up resistor option register 9 (PU9)

This is a 16-bit register that specifies connection of an on-chip pull-up resistor. It can be read or written in 16-bit units.

If the higher 8 bits of the PU9 register are used as the PU9H register, and the lower 8 bits as the PU9L register, however, these registers can be read or written in 8-bit or 1-bit units.

After reset: 0000H R/W Address: FFFFFC52H, FFFFFC53H

	15	14	13	12	11	10	9	8
PU9 (PU9H[Note])	PU915	PU914	PU913	0	0	0	PU99	PU98
	7	6	5	4	3	2	1	0
(PU9L)	PU97	PU96	0	0	0	0	PU91	PU90

PU9n	Control of on-chip pull-up resistor connection (n = 0, 1, 6 to 9, 13 to 15)
0	Not connected
1	Connected

Note To read/write bits 8 to 15 of the PU9 register in 8-bit or 1-bit units, specify these bits as bits 0 to 7 of the PU9H register.

(h) External interrupt falling edge specification register 9H (INTF9H)

This is an 8-bit register that specifies detection of the falling edge of the external interrupt pin. It can be read or written in 8-bit or 1-bit units.

Cautions 1. When the external interrupt function (alternate function) is switched to the port function, an edge may be detected. Set the port mode after clearing the INTF9n and INTR9n bits to 0.

2. An analog-delay-based noise eliminator is connected to the external interrupt input pin.

After reset: 00H R/W Address: FFFFFC13H

	7	6	5	4	3	2	1	0
INTF9H	INTF915	INTF914	INTF913	0	0	0	0	0

Remark See **Table 4-11** for how to specify a valid edge.

(i) External interrupt rising edge specification register 9H (INTR9H)

This is an 8-bit register that specifies detection of the rising edge of the external interrupt pin. It can be read or written in 8-bit or 1-bit units.

Cautions 1. When the external interrupt function (alternate function) is switched to the port function, an edge may be detected. Set the port mode after clearing the INTF9n and INTR9n bits to 0.

2. An analog-delay-based noise eliminator is connected to the external interrupt input pin.

After reset: 00H R/W Address: FFFFFC33H

	7	6	5	4	3	2	1	0
INTR9H	INTR915	INTR914	INTR913	0	0	0	0	0

Remark See **Table 4-11** for how to specify a valid edge.

Table 4-11. Valid Edge Specification

INTF9n Bit	INTR9n Bit	Valid Edge Specification (n = 13 to 15)
0	0	No edge detected
0	1	Rising edge
1	0	Falling edge
1	1	Both edges

Remark n = 13: Control of INTP4 pin
n = 14: Control of INTP5 pin
n = 15: Control of INTP6 pin

4.3.9 Port CM

Port CM is a 2-bit port (PCM0, PCM1) for which I/O settings can be controlled in 1-bit units.

(1) Functions of port CM

- The input/output data of the port can be specified in 1-bit units.
  Specified by port register CM (PCM)
- The input/output mode of the port can be specified in 1-bit units.
  Specified by port mode register CM (PMCM)
- Port mode or control mode (alternate function) can be specified in 1-bit units.
  Specified by port mode control register CM (PMCCM)

Port CM functions alternately as the following pins.

Table 4-12. Alternate-Function Pins of Port CM

Pin Name		Alternate-Function Pin Name	I/O	Remark	Block Type
Port CM	PCM0	–	I/O	–	B-1
	PCM1	CLKOUT			D-2

(2) Registers

(a) Port register CM (PCM)

Port register CM (PCM) is an 8-bit register that controls reading the pin level and writing the output level. This register can be read or written in 8-bit or 1-bit units.

After reset: Undefined R/W Address: FFFFF00CH

	7	6	5	4	3	2	1	0
PCM	0	0	0	0	0	0	PCM1	PCM0

PCMn	Control of output data (in output mode) (n = 0, 1)
0	Output 0.
1	Output 1.

Remarks 1. Input mode: When port CM (PCM) is read, the pin levels at this time are read. During write, the data written to PCM is written. This does not affect the input pins.

Output mode: When port CM (PCM) is read, the value of PCM is read. During write, a value is written to PCM and the written value is immediately output.

2. An undefined value (pin input level) is read for the value after reset when PCM is read in the input mode. When PCM is read in the output mode, 00H (output latch value) is output.

(b) Port mode register CM (PMCM)

This is an 8-bit register that specifies the input or output mode. It can be read or written in 8-bit or 1-bit units.

After reset: FFH R/W Address: FFFFF02CH

	7	6	5	4	3	2	1	0
PMCM	1	1	1	1	1	1	PMCM1	PMCM0

PMCMn	Control of I/O mode (n = 0, 1)
0	Output mode
1	Input mode

(c) Port mode control register CM (PMCCM)

This is an 8-bit register that specifies the port mode or control mode. It can be read or written in 8-bit or 1-bit units.

After reset: 00H R/W Address: FFFFF04CH

	7	6	5	4	3	2	1	0
PMCCM	0	0	0	0	0	0	PMCCM1	0

PMCCM1	Specification of operation mode of PCM1 pin
0	I/O port
1	CLKOUT output

4.3.10 Port DL

Port DL is an 8-bit port (PDL0 to PDL7) for which I/O settings can be controlled in 1-bit units.

(1) Function of port DL

- The input/output data of the port can be specified in 1-bit units.
  Specified by port register DL (PDL)
- The input/output mode of the port can be specified in 1-bit units.
  Specified by port mode register DL (PMDL)

Port DL functions alternately as the following pins.

Table 4-13. Alternate-Function Pins of Port DL

Pin Name		Alternate-Function Pin Name	I/O	Remark	Block Type
Port DL	PDL0		I/O	–	B-1
	PDL1				B-1
	PDL2				B-1
	PDL3				B-1
	PDL4				B-1
	PDL5	FLMD1[Note]			B-1
	PDL6				B-1
	PDL7				B-1

Note Because the FLMD1 pin is used in the flash programming mode, it does not have to be manipulated by using a port control register. For details, see **CHAPTER 22 FLASH MEMORY**.

(2) Registers

(a) Port register DLL (PDLL)

Port register DLL (PDLL) is an 8-bit register that controls reading the pin level and writing the output level. This register can be read or written in 8-bit or 1 bit units.

After reset: Undefined R/W Address: FFFFF005H

	7	6	5	4	3	2	1	0
PDLL	PDL7	PDL6	PDL5	PDL4	PDL3	PDL2	PDL1	PDL0

PDLn	Control of output data (in output mode) (n = 0 to 7)
0	Output 0.
1	Output 1.

Remarks 1. Input mode: When port DLL (PDLL) is read, the pin levels at this time are read. During write, the data written to PDLL is written. This does not affect the input pins.

Output mode: When port DLL (PDLL) is read, the value of PDLL is read. During write, the value is written to PDLL and the written value is immediately output.

2. An undefined value (pin input level) is read for the value after reset when PDLL is read in the input mode. When PDLL is read in the output mode, 00H (output latch value) is output.

(b) Port mode register DLL (PMDLL)

This is an 8-bit register that specifies the input or output mode. It can be read or written in 8-bit or 1-bit units.

After reset: FFH R/W Address: FFFFF025H

	7	6	5	4	3	2	1	0
PMDLL	PMDL7	PMDL6	PMDL5	PMDL4	PMDL3	PMDL2	PMDL1	PMDL0

PMDLn	Control of I/O mode (n = 0 to 7)
0	Output mode
1	Input mode

4.3.11 Port pins that function alternately as on-chip debug function

The pins shown in Table 4-14 function alternately as on-chip debug pins. After an external reset, these pins are initialized as on-chip debug pins ($\overline{\text{DRST}}$, DDI, DDO, DCK, and DMS).

Table 4-14. On-Chip Debug Pins

Pin Name	Alternate Function Pin
P05	INTP2/$\overline{\text{DRST}}$
P52	KR2/TIQ03/TOQ03/DDI
P53	KR3/TIQ00/TOQ00/DDO
P54	KR4/DCK
P55	KR5/DMS

To use these pins as port pins, not as on-chip debug pins, the following actions must be taken after an external reset.

<1> Clear the OCDM0 bit of the OCDM register (special register) to 0.
<2> Fix the P05/INTP2/$\overline{\text{DRST}}$ pin to the low level until the above action has been taken.

When the on-chip debug function is not used, inputting a high level to the $\overline{\text{DRST}}$ pin before the above actions are taken may cause a malfunction (CPU deadlock). Exercise utmost care in handling the P05 pin.

When a high level is not input to the P05/INTP2/$\overline{\text{DRST}}$ pin (when this pin is fixed to low level), it is not necessary to manipulate the OCDM.OCDM0 bit.

Because a pull-down resistor (30 kΩ TYP.) is connected to the buffer of the P05/INTP2/$\overline{\text{DRST}}$ pin, the pin does not have to be fixed to the low level by an external source. The pull-down resistor is disconnected by clearing the OCDM0 bit to 0.

For details, see **CHAPTER 24 ON-CHIP DEBUG FUNCTION**.

4.3.12 Register settings to use port pins as alternate-function pins

Table 4-15. Using Port Pin as Alternate-Function Pin (1/5)

Pin Name	Alternate-Function Pin		PMn Register	PMCn Register	PFCm Register	PFCEm Register	Other Bits (Register)
	Name	I/O					
P00	TIP31	Input	Setting not required	PMC00 = 1	PFC00 = 0	–	
	TOP31	Output	Setting not required	PMC00 = 1	PFC00 = 1	–	
P01	TIP30	Input	Setting not required	PMC01 = 1	PFC01 = 0	–	
	TOP30	Output	Setting not required	PMC01 = 1	PFC01 = 1	–	
P02	NMI	Input	Setting not required	PMC02 = 1	–	–	
P03	INTP0	Input	Setting not required	PMC03 = 1	PFC03 = 0	–	INTx03 (INTx0)
	ADTRG	Output	Setting not required	PMC03 = 1	PFC03 = 1	–	
P04	INTP1	Input	Setting not required	PMC04 = 1	–	–	INTx04 (INTx0)
P05[Note]	INTP2	Input	Setting not required	PMC05 = 1	–	–	INTx05 (INTx0)
	$\overline{\text{DRST}}$	Input	Setting not required	Setting not required	–	–	OCDM0 (OCDM) = 1
P06	INTP3	Input	Setting not required	PMC06 = 1	–	–	INTx06 (INTx0)

Note After an external reset, the P05/INTP2/$\overline{\text{DRST}}$ pin is initialized as an on-chip debug pin ($\overline{\text{DRST}}$). To not use the P05/INTP2/$\overline{\text{DRST}}$ pin as an on-chip debug pin, see **CHAPTER 24 ON-CHIP DEBUG FUNCTION**.

Remarks 1. The port register (Pn) does not have to be set when the alternate function is used.

2. INTxn = INTFn, INTRn

Table 4-15. Using Port Pin as Alternate-Function Pin (2/5)

Pin Name	Alternate-Function Pin		PMn Register	PMCn Register	PFCm Register	PFCEm Register	Other Bits (Register)
	Name	I/O					
P30	TXDA0	Output	Setting not required	PMC30 = 1	–	–	
P31	RXDA0	Input	Setting not required	PMC31 = 1	–	–	**Note**
	INTP7	Input	Setting not required	PMC31 = 1	–	–	**Note**, INTx31 (INTx3)
P32	ASCKA0	Input	Setting not required	PMC32 = 1	PFC32 = 0	PFCE32 = 0	
	TOP01	Output	Setting not required	PMC32 = 1	PFC32 = 1	PFCE32 = 0	
	TIP00	Input	Setting not required	PMC32 = 1	PFC32 = 0	PFCE32 = 1	
	TOP00	Output	Setting not required	PMC32 = 1	PFC32 = 1	PFCE32 = 1	
P33	TIP01	Input	Setting not required	PMC33 = 1	PFC33 = 0	–	
	TOP01	Output	Setting not required	PMC33 = 1	PFC33 = 1	–	
P34	TIP10	Input	Setting not required	PMC34 = 1	PFC34 = 0	–	
	TOP10	Output	Setting not required	PMC34 = 1	PFC34 = 1	–	
P35	TIP11	Input	Setting not required	PMC35 = 1	PFC35 = 0	–	
	TOP11	Output	Setting not required	PMC35 = 1	PFC35 = 1	–	
P40	SIB0	Input	Setting not required	PMC40 = 1	–	–	
P41	SOB0	Output	Setting not required	PMC41 = 1	–	–	
P42	$\overline{\text{SCKB0}}$	I/O	Setting not required	PMC42 = 1	–	–	

Note The INTP7 pin functions alternately as the RXDA0 pin. To use this pin as the RXDA0 pin, invalidate the edge detection function of the alternate-function INTP7 pin (by clearing the INTF3.INTF31 bit to 0 and the INTR3.INTR31 bit to 0). To use this pin as the INTP7 pin, stop the reception operation of UARTA0 (by clearing the UA0CTL0.UA0RXE bit to 0).

Remarks 1. The port register (Pn) does not have to be set when the alternate function is used.

2. INTxn = INTFn, INTRn

Table 4-15. Using Port Pin as Alternate-Function Pin (3/5)

Pin Name	Alternate-Function Pin		PMn Register	PMCn Register	PFCm Register	PFCEm Register	Other Bits (Register)
	Name	I/O					
P50	KR0	Input	Setting not required	PMC50 = 1	PFC50 = 1	PFCE50 = 0	**Note 1**
	TIQ01	Input	Setting not required	PMC50 = 1	PFC50 = 1	PFCE50 = 0	**Note 1**
	TOQ01	Output	Setting not required	PMC50 = 1	PFC50 = 0	PFCE50 = 1	
P51	KR1	Input	Setting not required	PMC51 = 1	PFC51 = 1	PFCE54 = 0	**Note 1**
	TIQ02	Input	Setting not required	PMC51 = 1	PFC51 = 1	PFCE51 = 0	**Note 1**
	TOQ02	Output	Setting not required	PMC51 = 1	PFC51 = 0	PFCE51 = 1	
P52	KR2	Input	Setting not required	PMC52 = 1	PFC52 = 1	PFCE52 = 0	**Note 1**
	TIQ03	Input	Setting not required	PMC52 = 1	PFC52 = 1	PFCE52 = 0	**Note 1**
	TOQ03	Output	Setting not required	PMC52 = 1	PFC52 = 0	PFCE52 = 1	
	DDI[Note 2]	Input	Setting not required	Setting not required	Setting not required	Setting not required	OCDM0 (OCDM) = 1
P53	KR3	Input	Setting not required	PMC53 = 1	PFC53 = 1	PFCE53 = 0	**Note 1**
	TIQ00	Input	Setting not required	PMC53 = 1	PFC53 = 1	PFCE53 = 0	**Note 1**
	TOQ00	Output	Setting not required	PMC53 = 1	PFC53 = 0	PFCE53 = 1	
	DDO[Note 2]	Output	Setting not required	Setting not required	Setting not required	Setting not required	OCDM0 (OCDM) = 1
P54	KR4	Input	Setting not required	PMC54 = 1	PFC54 = 1	–	
	DCK[Note 2]	Output	Setting not required	Setting not required	Setting not required	–	OCDM0 (OCDM) = 1
P55	KR5	Input	Setting not required	PMC55 = 1	PFC55 = 1	–	
	DMS[Note 2]	Output	Setting not required	Setting not required	Setting not required	–	OCDM0 (OCDM) = 1

Notes 1. The KRn pin functions alternately as the TIQ0m pin. To use this pin as the TIQ0m pin, invalidate the key return detection function of the alternate-function KRn pin (by clearing the KRM.KRMn bit to 0). To use this pin as the KRn pin, invalidate the edge detection function of the alternate-function TIQ0m pin (n = 0 to 3, m = 0 to 3).

Pin Name	When Used as TIQ0m Pin	When Used as KRn Pin
KR0/TIQ01	KRM.KRM0 bit = 0	TQ0IOC1.TQ0TIG2, TQ0IOC1.TQ0TIG3 bits = 0
KR1/TIQ02	KRM.KRM1 bit = 0	TQ0IOC1.TQ0TIG4, TQ0IOC1.TQ0TIG5 bits = 0
KR2/TIQ03	KRM.KRM2 bit = 0	TQ0IOC1.TQ0TIG6, TQ0IOC1.TQ0TIG7 bits = 0
KR3/TIQ00	KRM.KRM3 bit = 0	TQ0IOC1.TQ0TIG0, TQ0IOC1.TQ0TIG1 bits = 0 TQ0IOC2.TQ0EES0, TQ0IOC2.TQ0EES1 bits = 0 TQ0IOC2.TQ0ETS0, TQ0IOC2.TQ0ETS1 bits = 0

2. The DDI, DDO, DCK, and DMS pins are on-chip debug pins. To not use these pins as on-chip debug pins after an external reset, see **CHAPTER 24 ON-CHIP DEBUG FUNCTION**.

Caution If the control mode is specified by using the PMC5 register when the PFC5.PFC5n bit and the PFCE5.PFCE5n bit are the default values (0), the output becomes undefined.
For this reason, first set the PFC5.PFC5n bit and the PFCE5.PFCE5n bit, and then set the PMC5n bit to 1 to set the control mode.

Remarks 1. The port register (Pn) does not have to be set when the alternate function is used.
2. INTxn = INTFn, INTRn

Table 4-15. Using Port Pin as Alternate-Function Pin (4/5)

Pin Name	Alternate-Function Pin		PMn Register	PMCn Register	PFCm Register	PFCEm Register	Other Bits (Register)
	Name	I/O					
P70	ANI0	Input	PM70 = 1 Note	–	–	–	
P71	ANI1	Input	PM71 = 1 Note	–	–	–	
P72	ANI2	Input	PM72 = 1 Note	–	–	–	
P73	ANI3	Input	PM73 = 1 Note	–	–	–	
P74	ANI4	Input	PM74 = 1 Note	–	–	–	
P75	ANI5	Input	PM75 = 1 Note	–	–	–	
P76	ANI6	Input	PM76 = 1 Note	–	–	–	
P77	ANI7	Input	PM77 = 1 Note	–	–	–	
P78	ANI8	Input	PM78 = 1 Note	–	–	—	
P79	ANI9	Input	PM79 = 1 Note	–	–	–	

Note Set PM7n to 1 to use the alternate function of P7n (ANIn).

Remarks 1. The port register (Pn) does not have to be set when the alternate function is used.

2. INTxn = INTFn, INTRn

Table 4-15. Using Port Pin as Alternate-Function Pin (5/5)

Pin Name	Alternate-Function Pin		PMn Register	PMCn Register	PFCm Register	PFCEm Register	Other Bits (Register)
	Name	I/O					
P90	KR6	Input	Setting not required	PMC90 = 1	PFC90 = 1	PFCE90 = 0	
	TXDA1	Output	Setting not required	PMC90 = 1	PFC90 = 0	PFCE90 = 1	
P91	KR7[Note 1]	Input	Setting not required	PMC91 = 1	PFC91 = 1	PFCE91 = 0	
					PFC91 = 0	PFCE91 = 1	
	RXDA1[Note 1]	Input	Setting not required	PMC91 = 1	PFC91 = 0	PFCE91 = 1	
P96	TIP21	Input	Setting not required	PMC96 = 1	PFC96 = 0	PFCE96 = 1	
	TOP21	Output	Setting not required	PMC96 = 1	PFC96 = 1	PFCE96 = 1	
P97	SIB1	Input	Setting not required	PMC97 = 1	PFC97 = 1	PFCE97 = 0	
	TIP20	Input	Setting not required	PMC97 = 1	PFC97 = 0	PFCE97 = 1	
	TOP20	Output	Setting not required	PMC97 = 1	PFC97 = 1	PFCE97 = 1	
P98	SOB1	Output	Setting not required	PMC98 = 1	PFC98 = 1	–	
P99	$\overline{\text{SCKB1}}$	I/O	Setting not required	PMC99 = 1	PFC99 = 1	–	
P913	INTP4	Input	Setting not required	PMC913 = 1	PFC913 = 1	PFCE913 = 0	INTx913 (INTx9H)
	PCL	Output	Setting not required	PMC913 = 1	PFC913 = 0	PFCE913 = 1	
P914	INTP5	Input	Setting not required	PMC914 = 1	PFC914 = 1	–	INTx914 (INTx9H)
P915	INTP6	Input	Setting not required	PMC915 = 1	PFC915 = 1	–	INTx915 (INTx9H)
PCM1	CLKOUT	Output	Setting not required	PMCCM1 = 1	–	–	
PDL5	FLMD1	Input	Setting not required	Setting not required	–	–	**Note 2**

Notes 1. The KR7 pin and RXDA1 pin are alternate-function pins.
When using the pin as the RXDA1 pin, disable KR7 pin key return detection. (Clear the KRM.KRM7 bit to 0.) Also, when using the pin as the KR7 pin, it is recommended to set the PFC91 bit to 1 and clear the PFCE91 bit to 0.

2. The FLMD1 pin does not have to be manipulated by using a port control register because it is used in the flash programming mode. For details, see **CHAPTER 22 FLASH MEMORY**.

Caution If the control mode is specified by using the PMC9 register when the PFC9.PFC9n bit and the PFCE9.PFCE9n bit are the default values (0), the output becomes undefined.
For this reason, first set the PFC9.PFC9n bit and the PFCE9.PFCE9n bit, and then set the PMC9n bit to 1 to set the control mode.

Remarks 1. The port register (Pn) does not have to be set when the alternate function is used.

2. INTxn = INTFn, INTRn

4.4 Block Diagrams of Port

Figure 4-2. Block Diagram of Type A-1

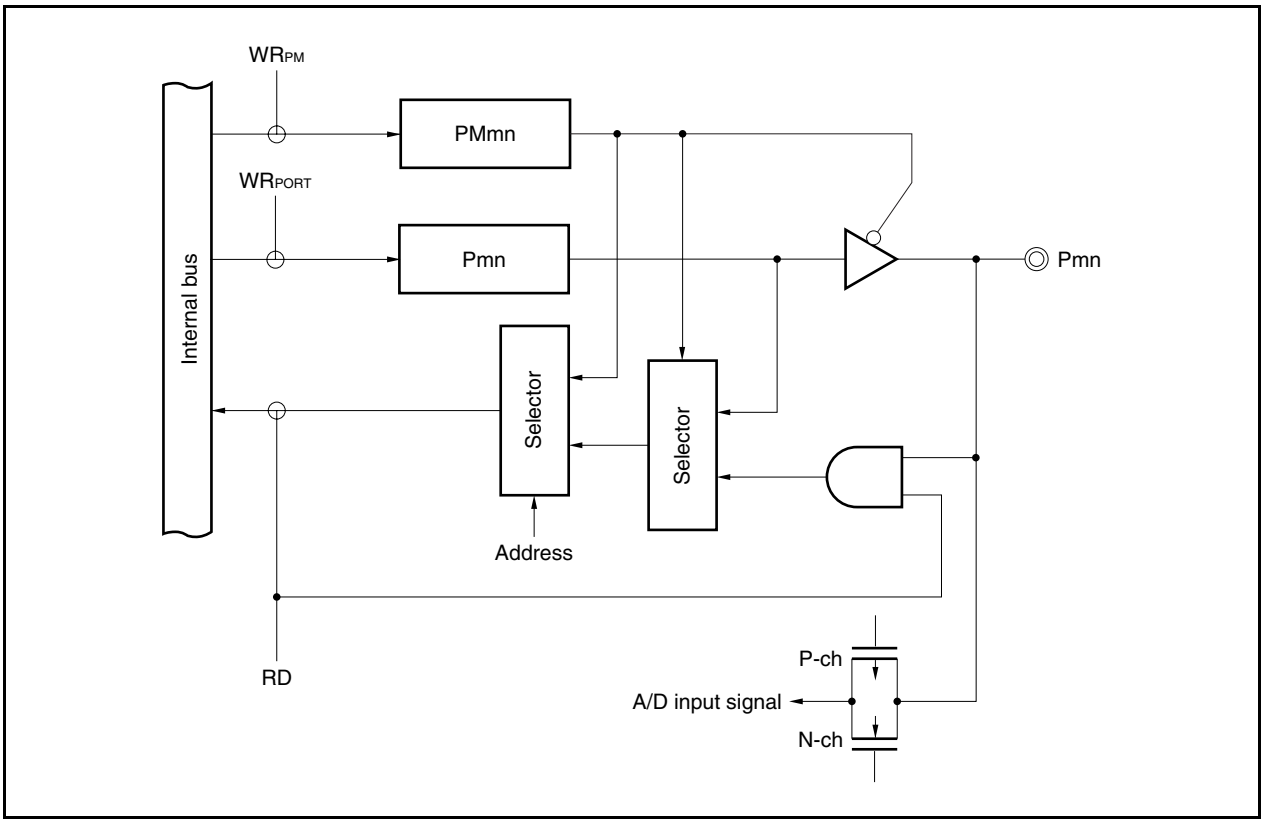

Figure 4-3. Block Diagram of Type B-1

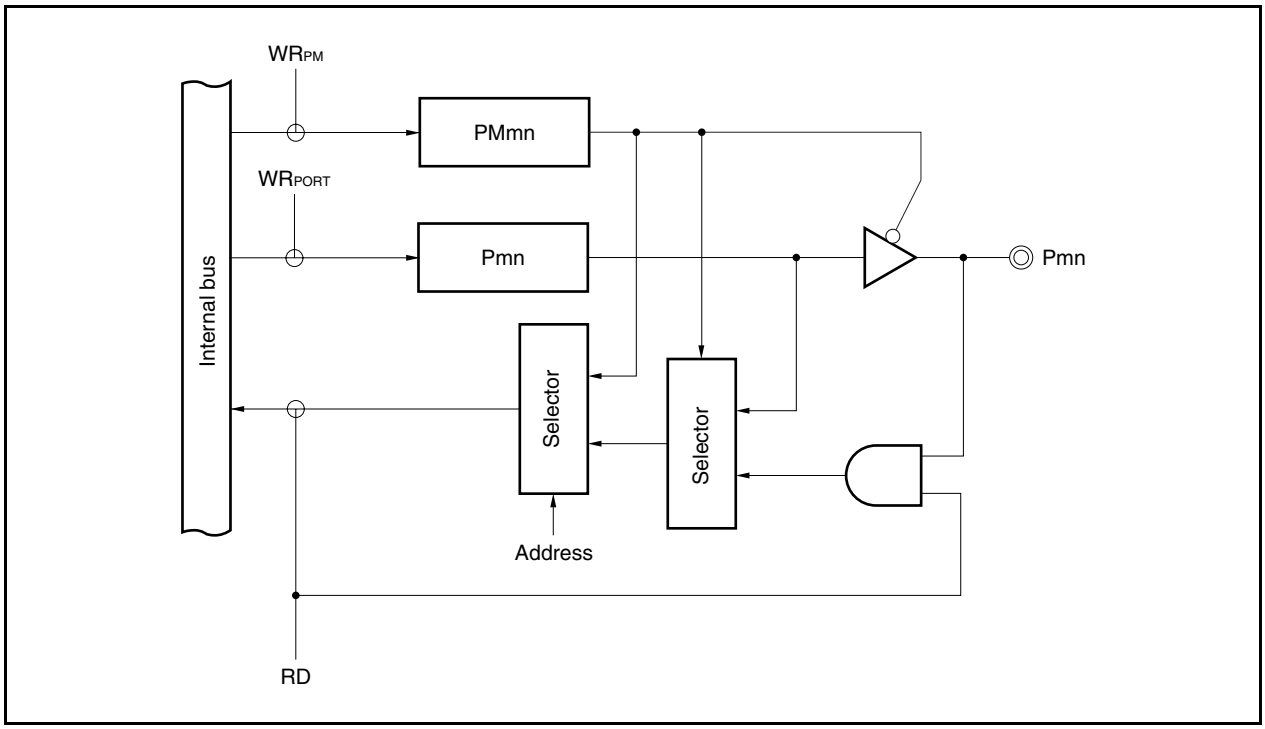

Figure 4-4. Block Diagram of Type D-2

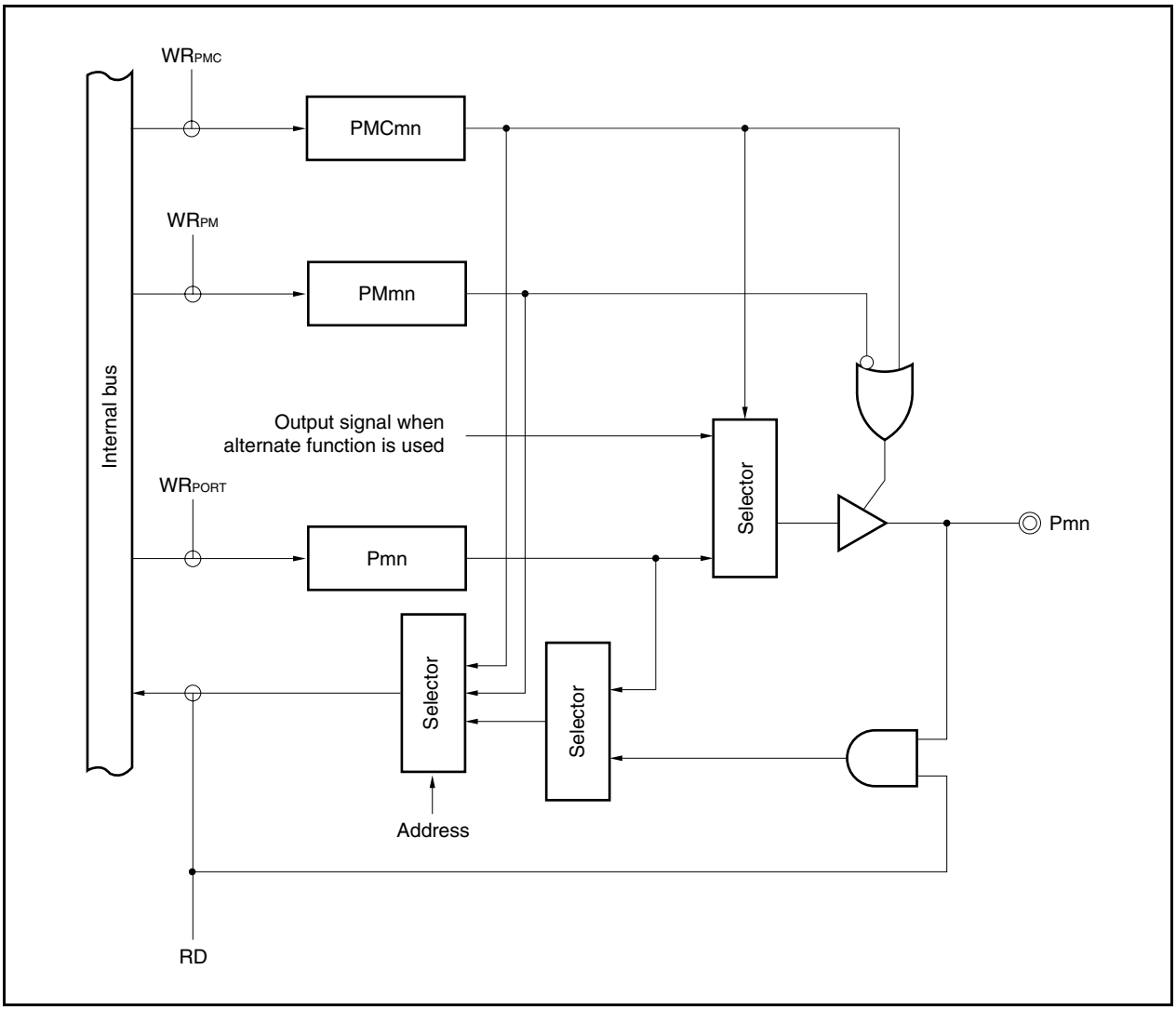

Figure 4-5. Block Diagram of Type E-1

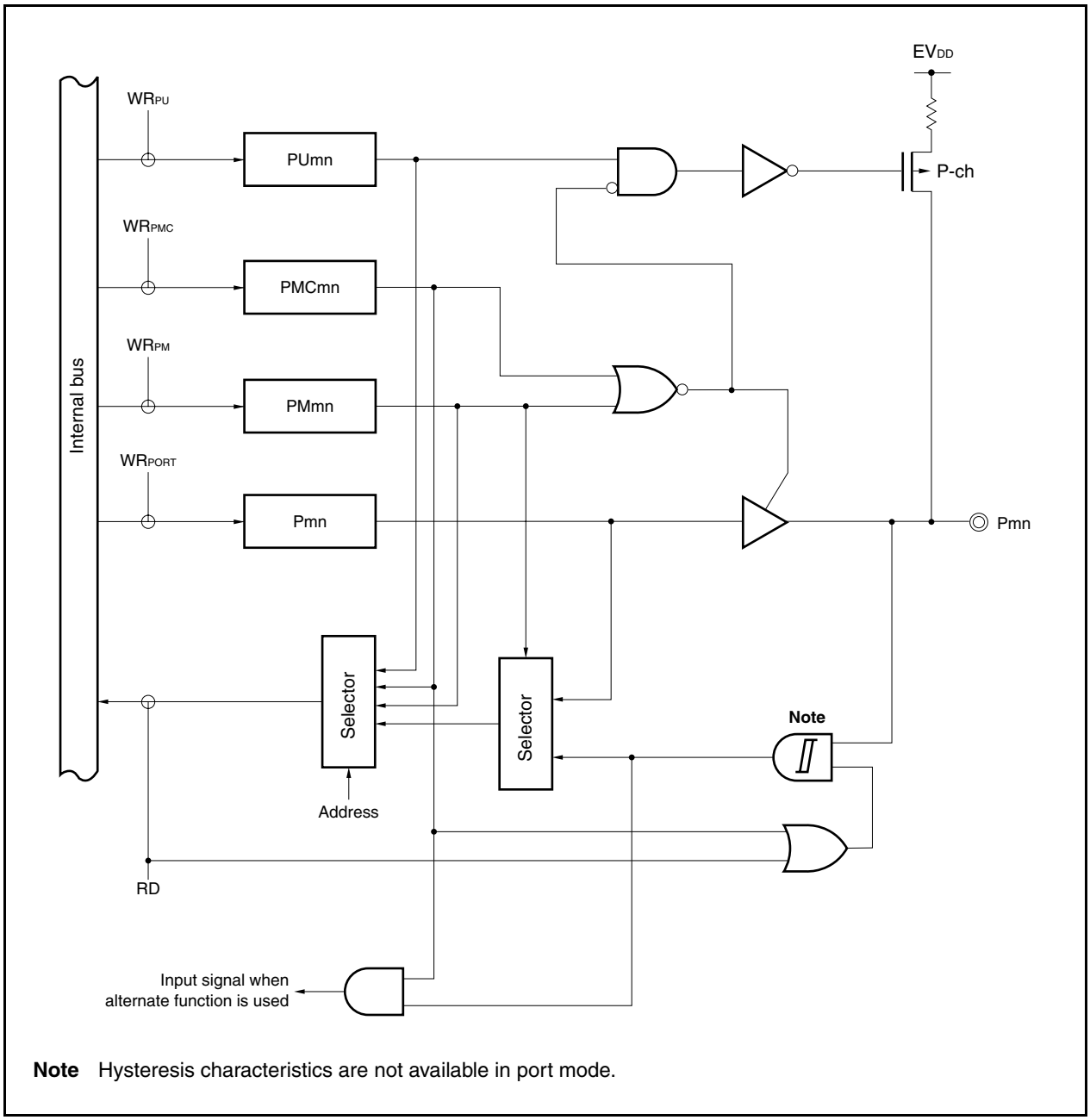

Note Hysteresis characteristics are not available in port mode.

Figure 4-6. Block Diagram of Type E-2

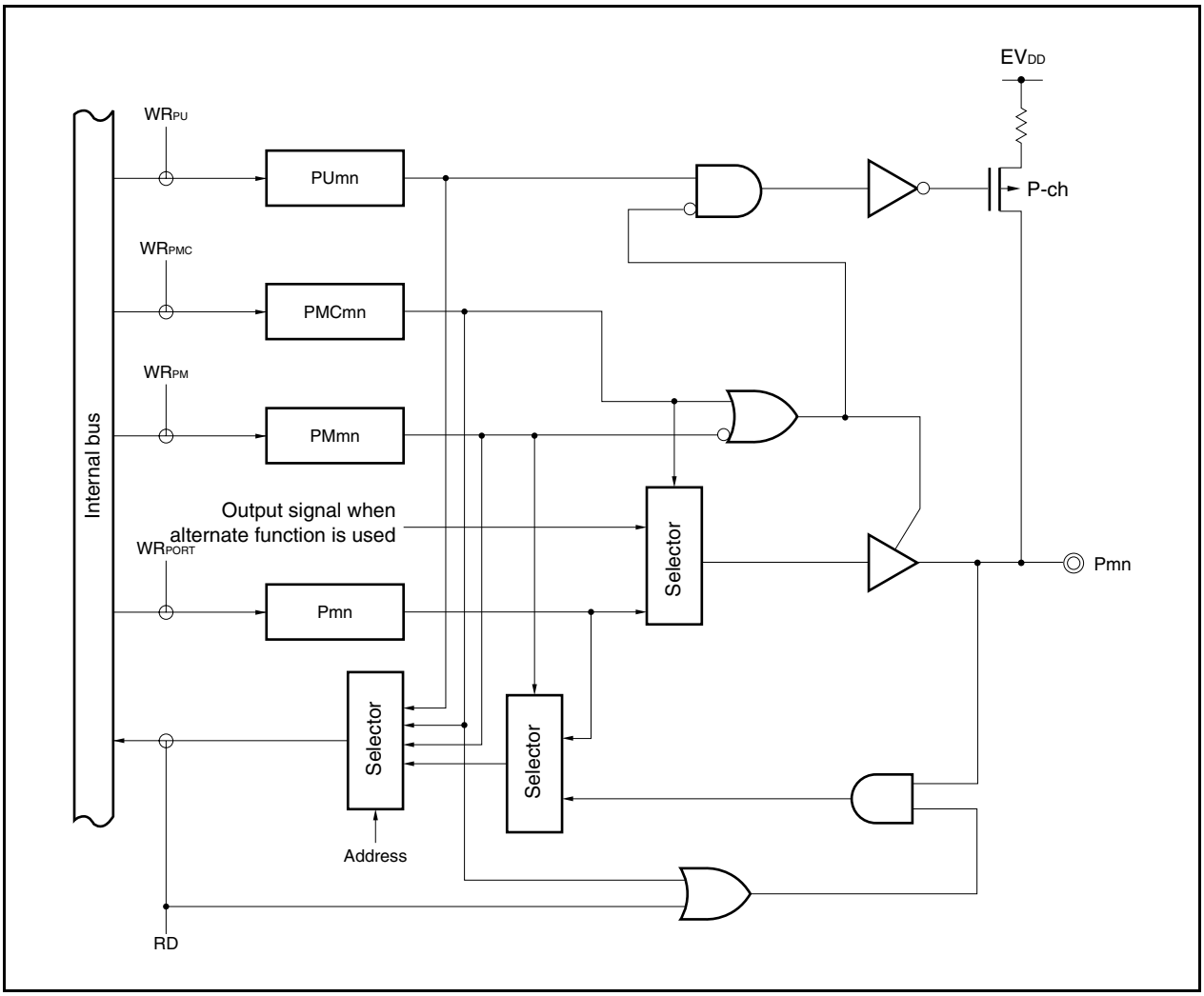

Figure 4-7. Block Diagram of Type E-3

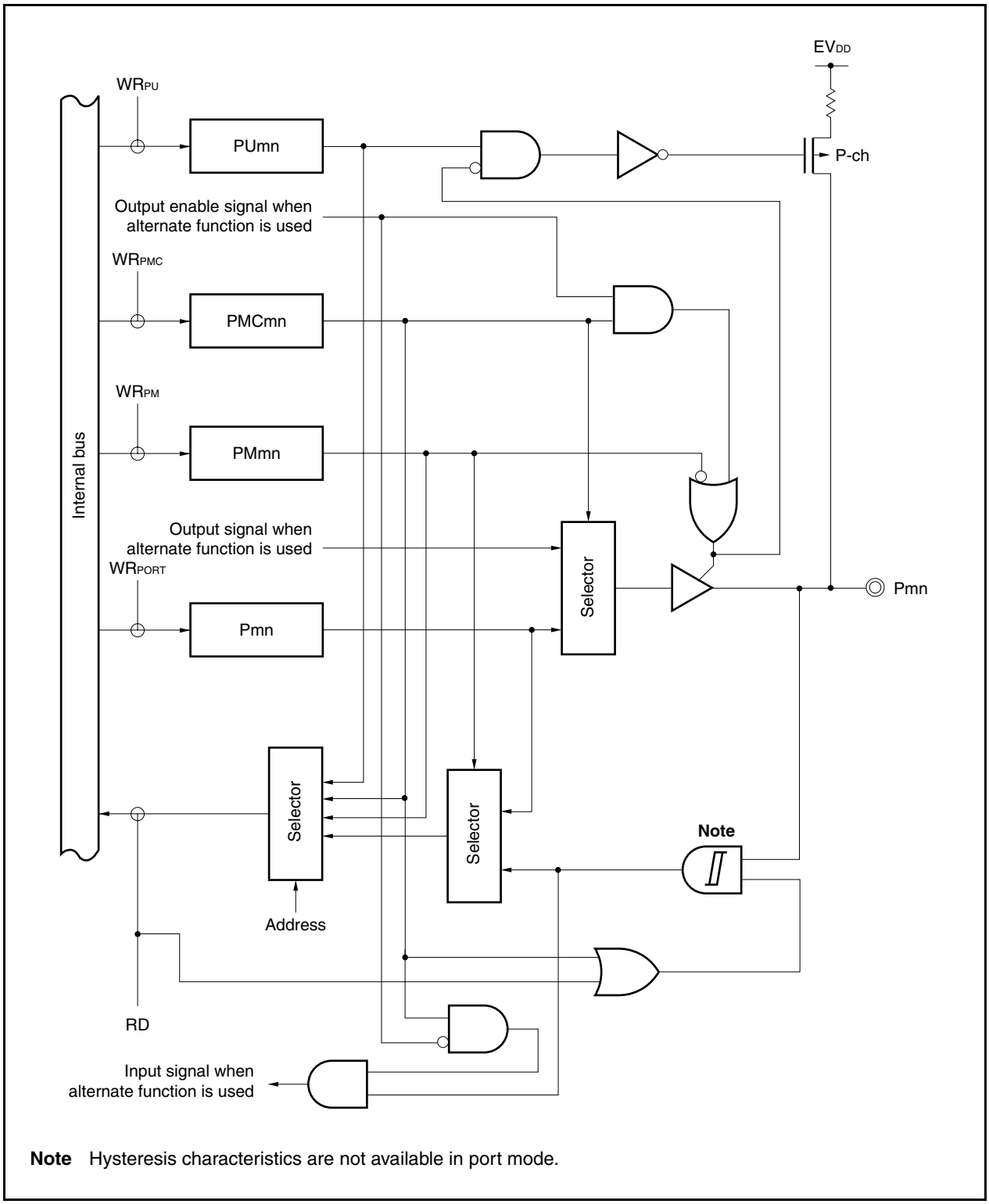

Note Hysteresis characteristics are not available in port mode.

Figure 4-8. Block Diagram of Type G-1

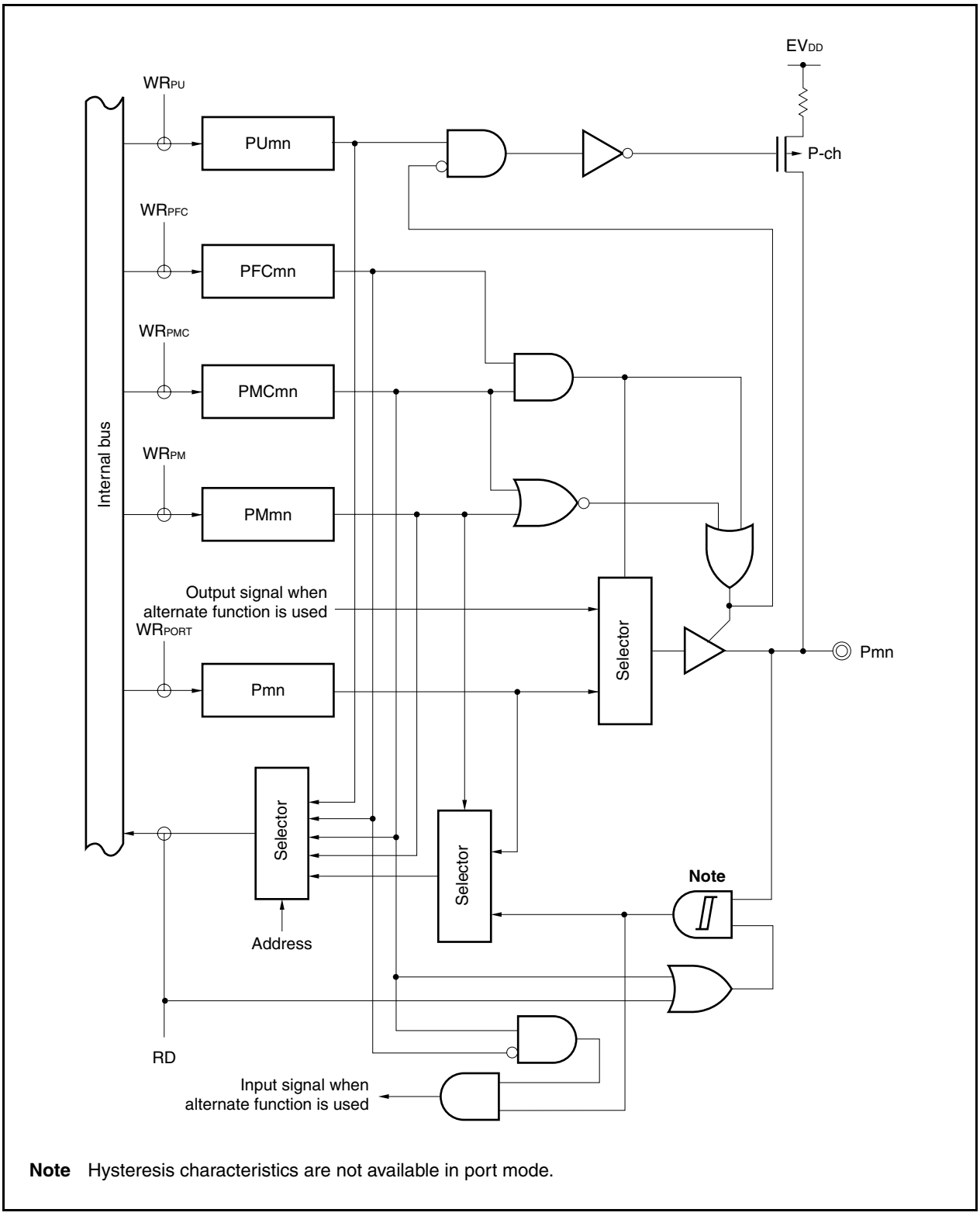

Note Hysteresis characteristics are not available in port mode.

Figure 4-9. Block Diagram of Type G-2

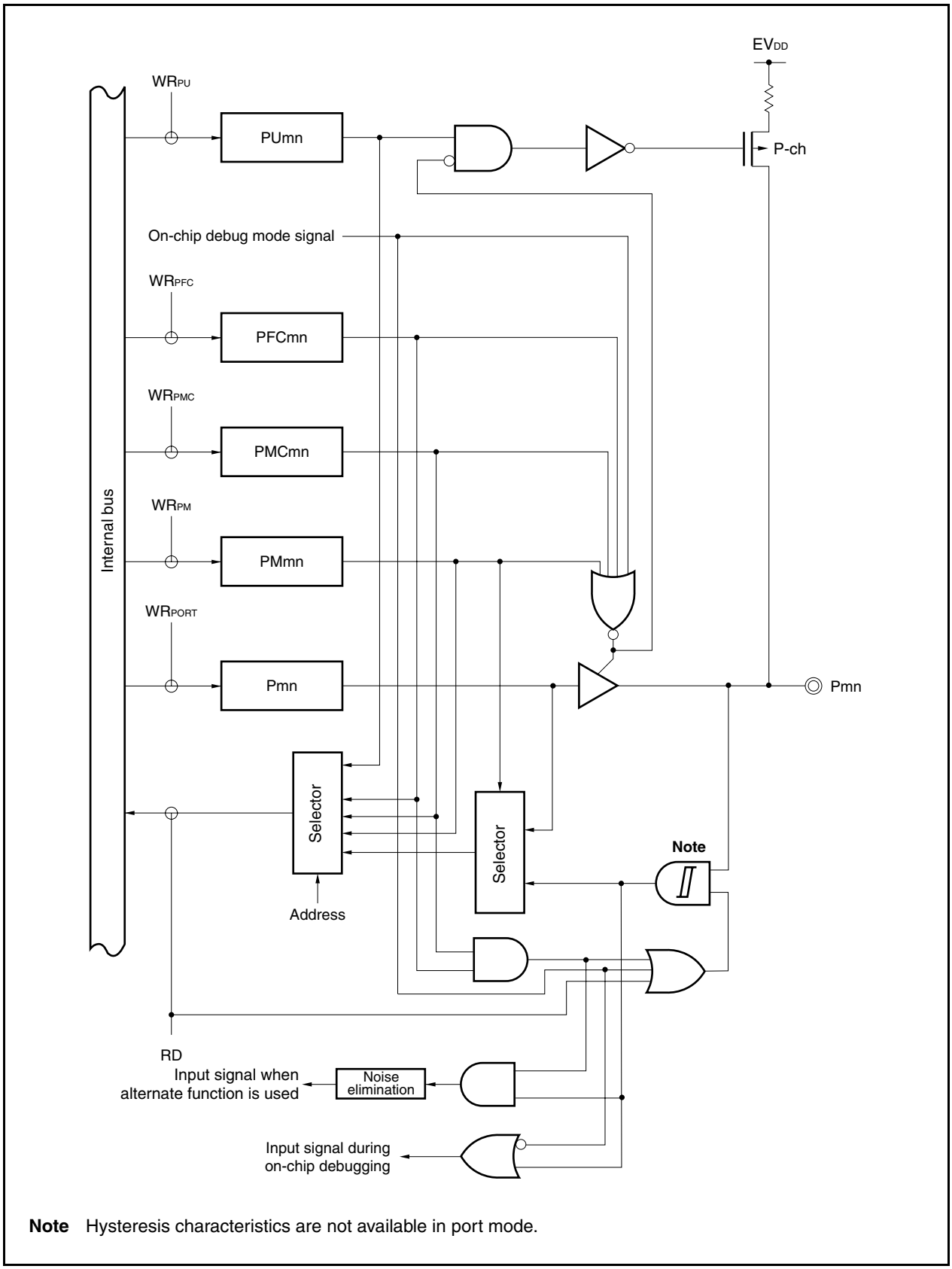

Note Hysteresis characteristics are not available in port mode.

Figure 4-10. Block Diagram of Type G-3

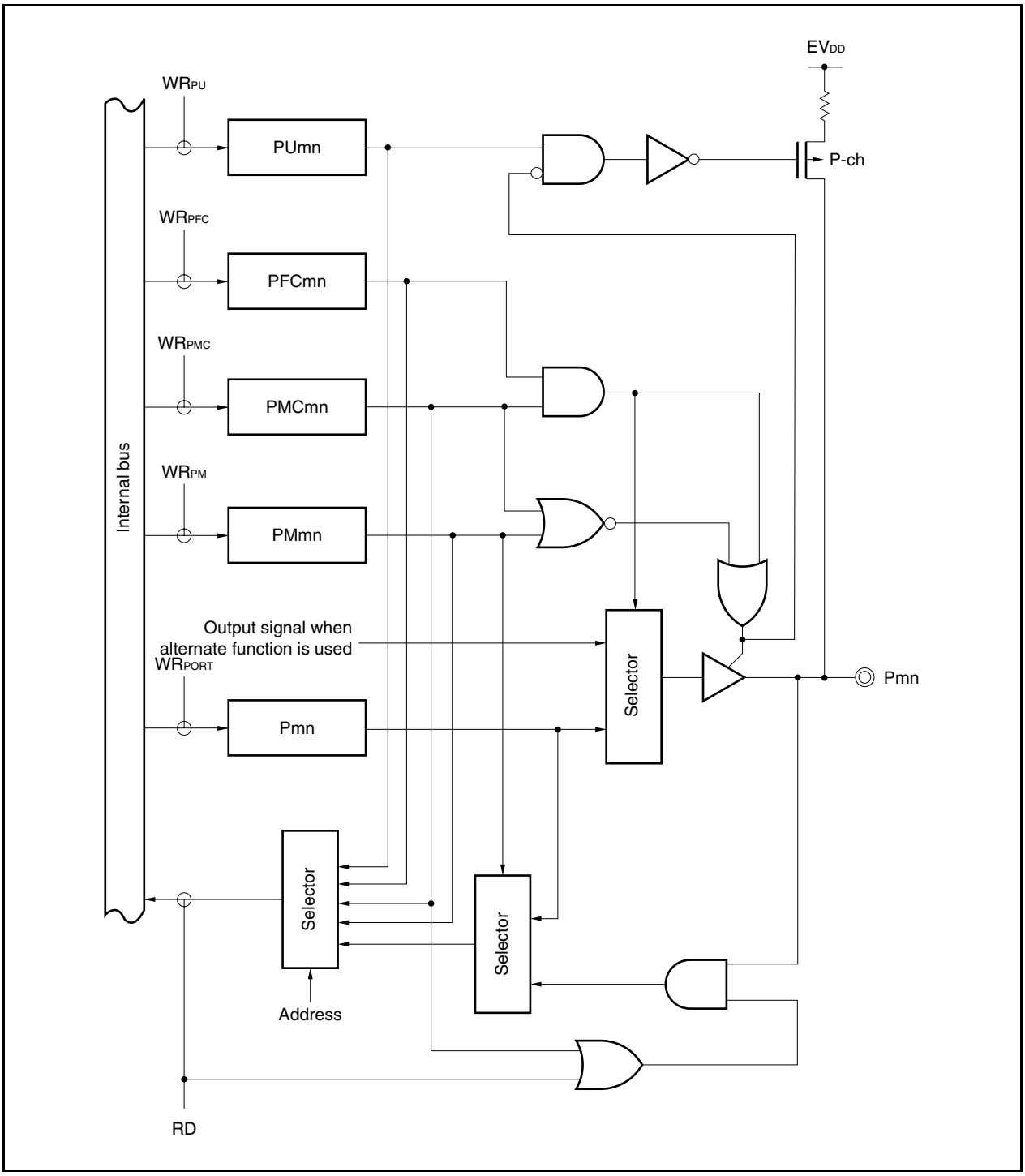

Figure 4-11. Block Diagram of Type G-5

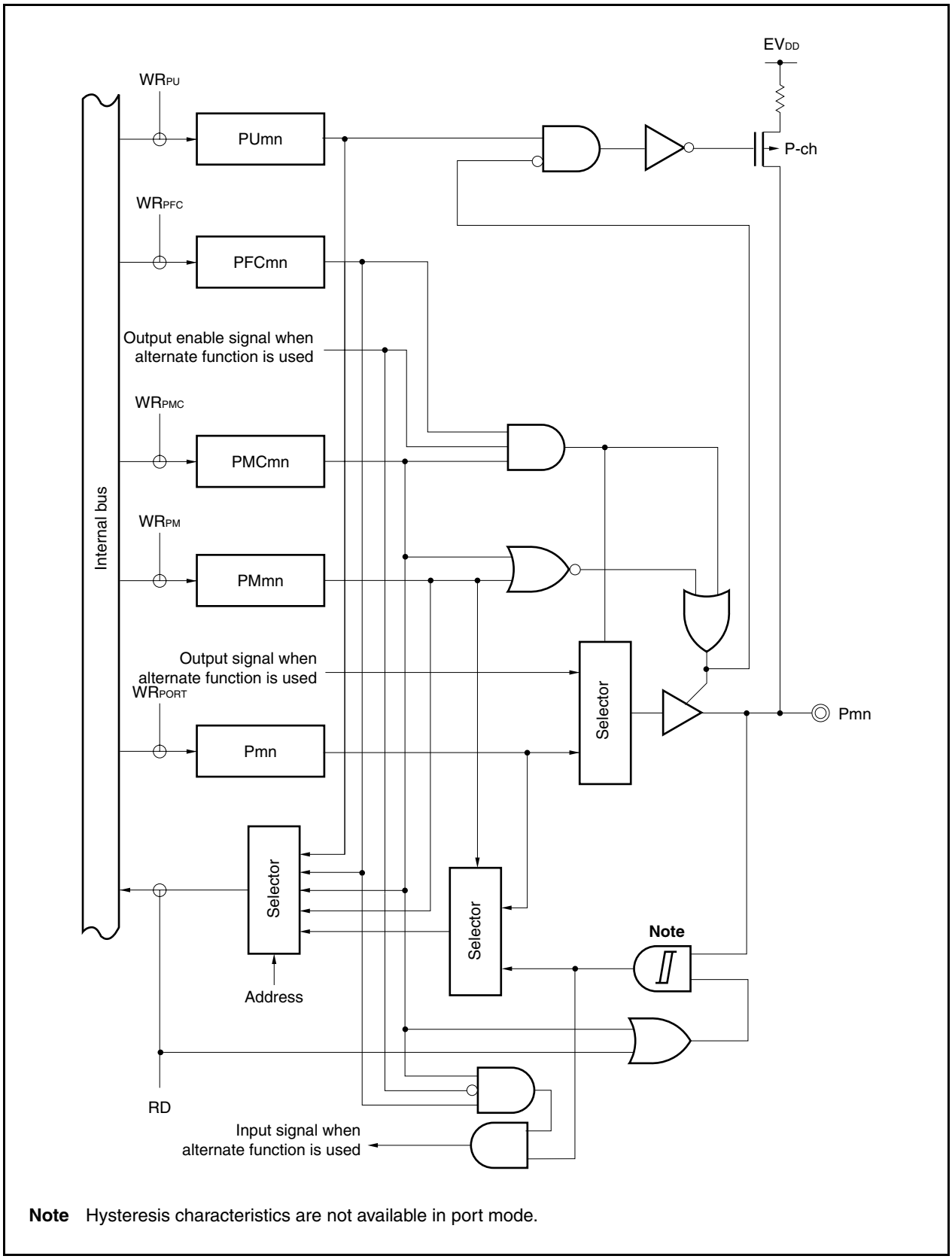

Note Hysteresis characteristics are not available in port mode.

Figure 4-12. Block Diagram of Type L-1

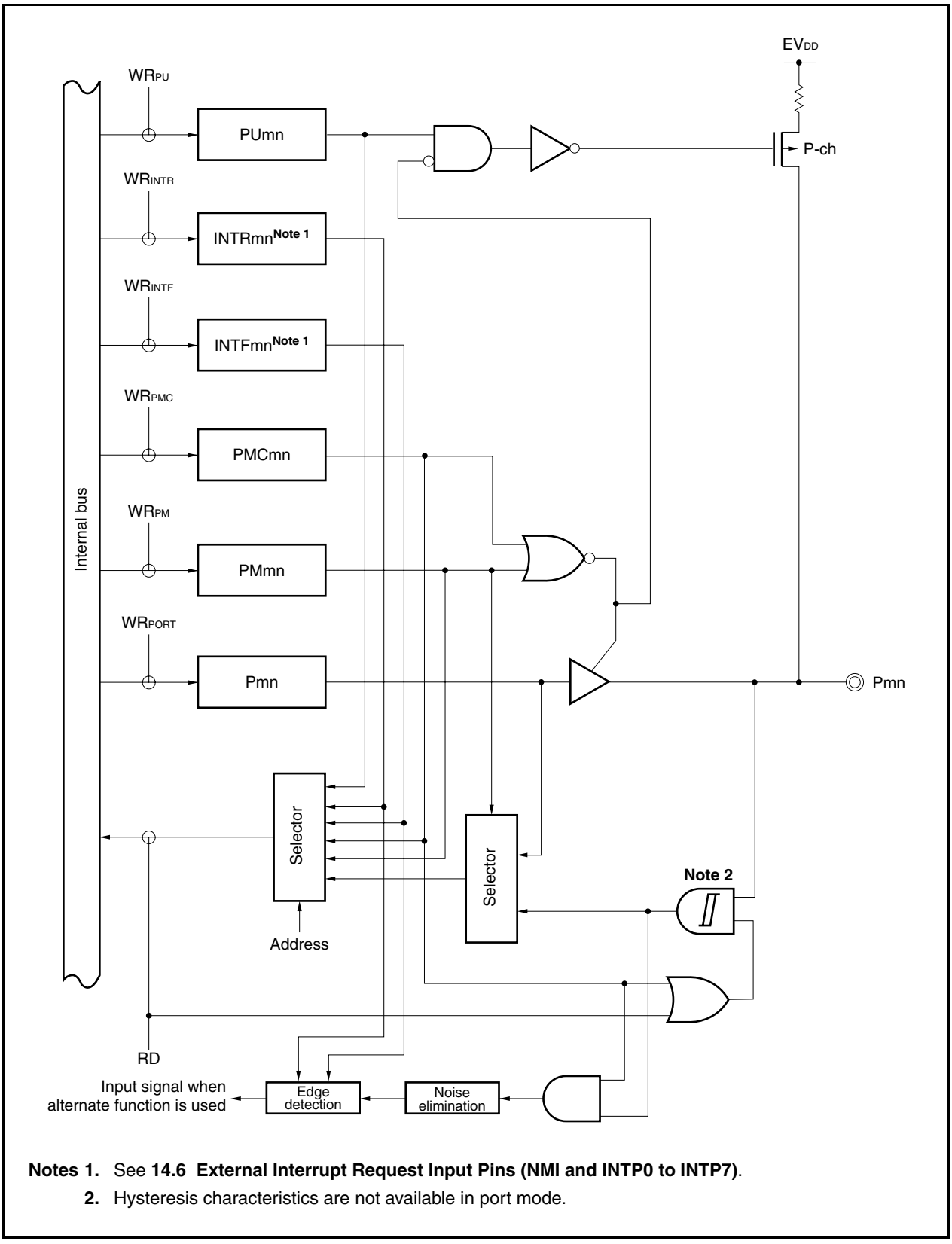

Notes 1. See **14.6 External Interrupt Request Input Pins (NMI and INTP0 to INTP7)**.

2. Hysteresis characteristics are not available in port mode.

Figure 4-13. Block Diagram of Type L-2

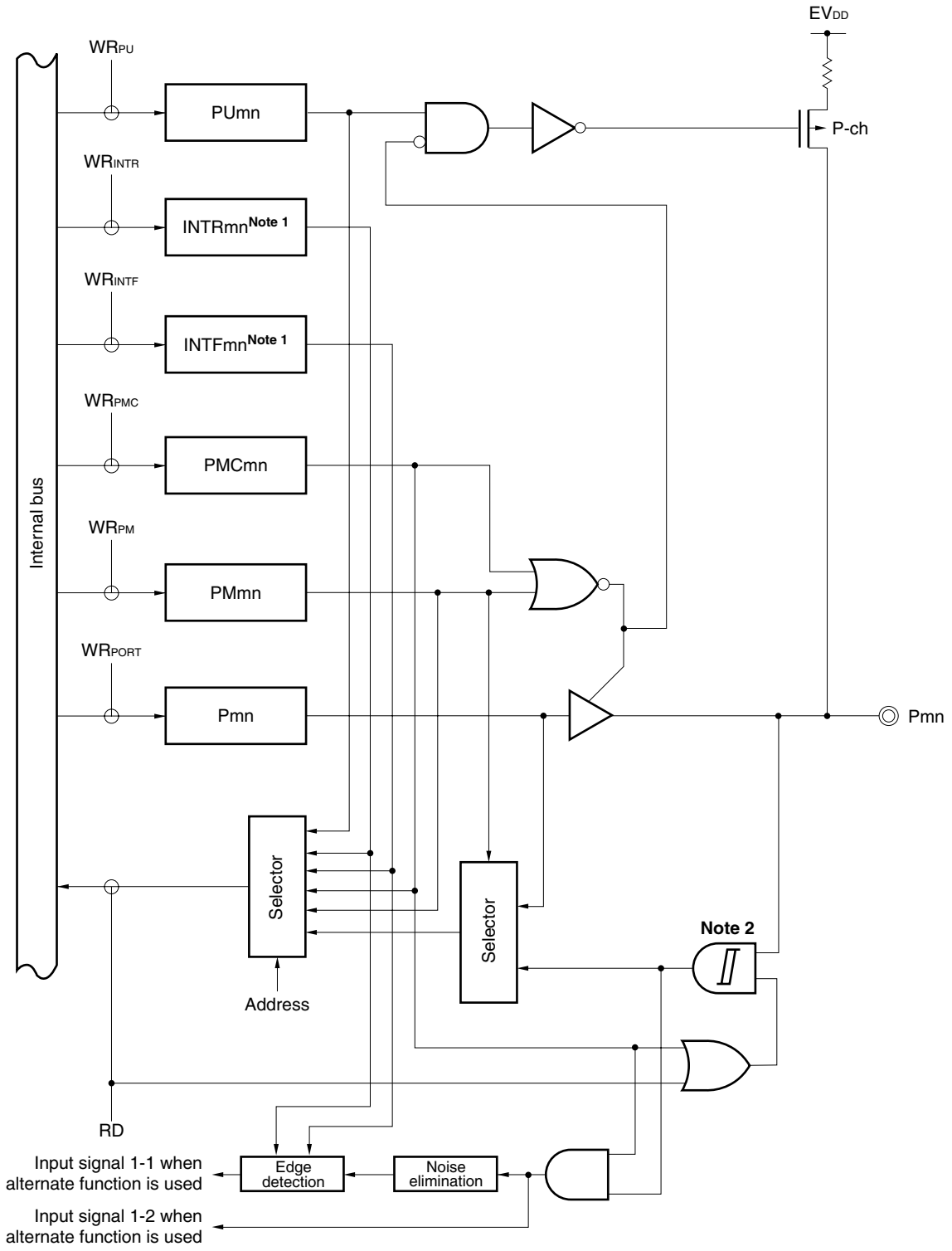

Notes 1. See **14.6 External Interrupt Request Input Pins (NMI and INTP0 to INTP7)**.

2. Hysteresis characteristics are not available in port mode.

Figure 4-14. Block Diagram of Type N-1

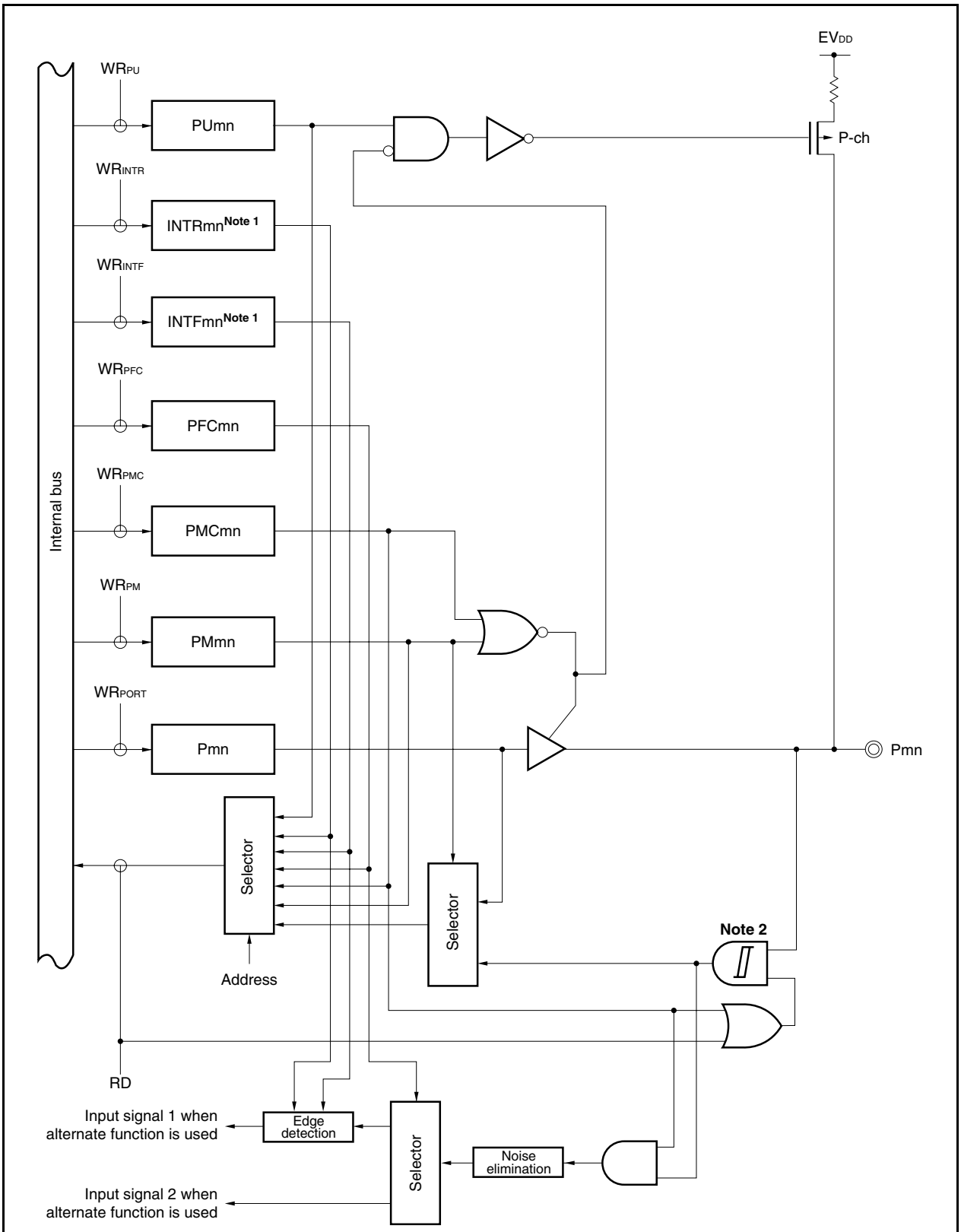

Notes 1. See **14.6 External Interrupt Request Input Pins (NMI and INTP0 to INTP7)**.

2. Hysteresis characteristics are not available in port mode.

Figure 4-15. Block Diagram of Type N-2

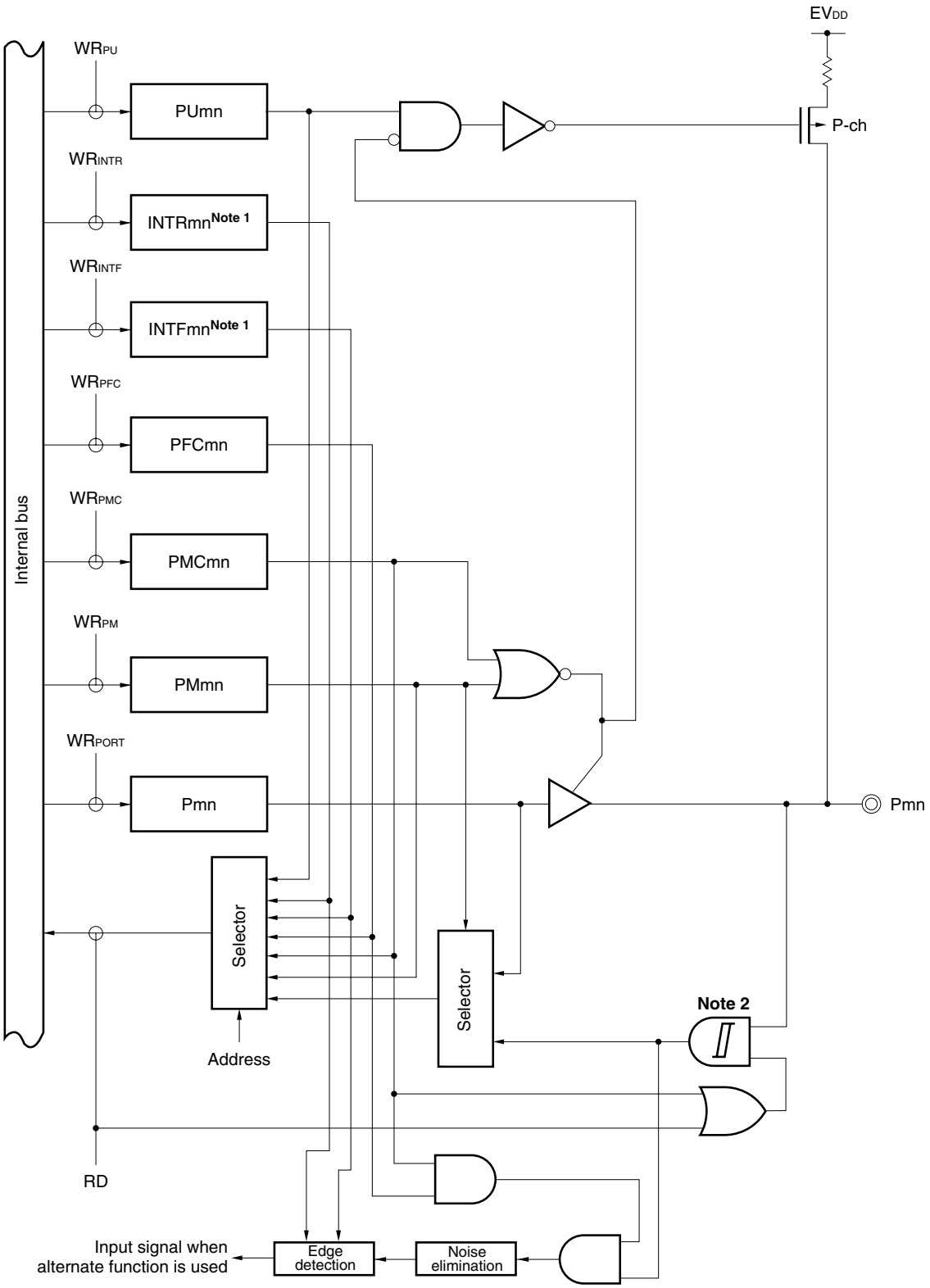

Notes 1. See **14.6 External Interrupt Request Input Pins (NMI and INTP0 to INTP7)**.

2. Hysteresis characteristics are not available in port mode.

Figure 4-16. Block Diagram of Type U-4

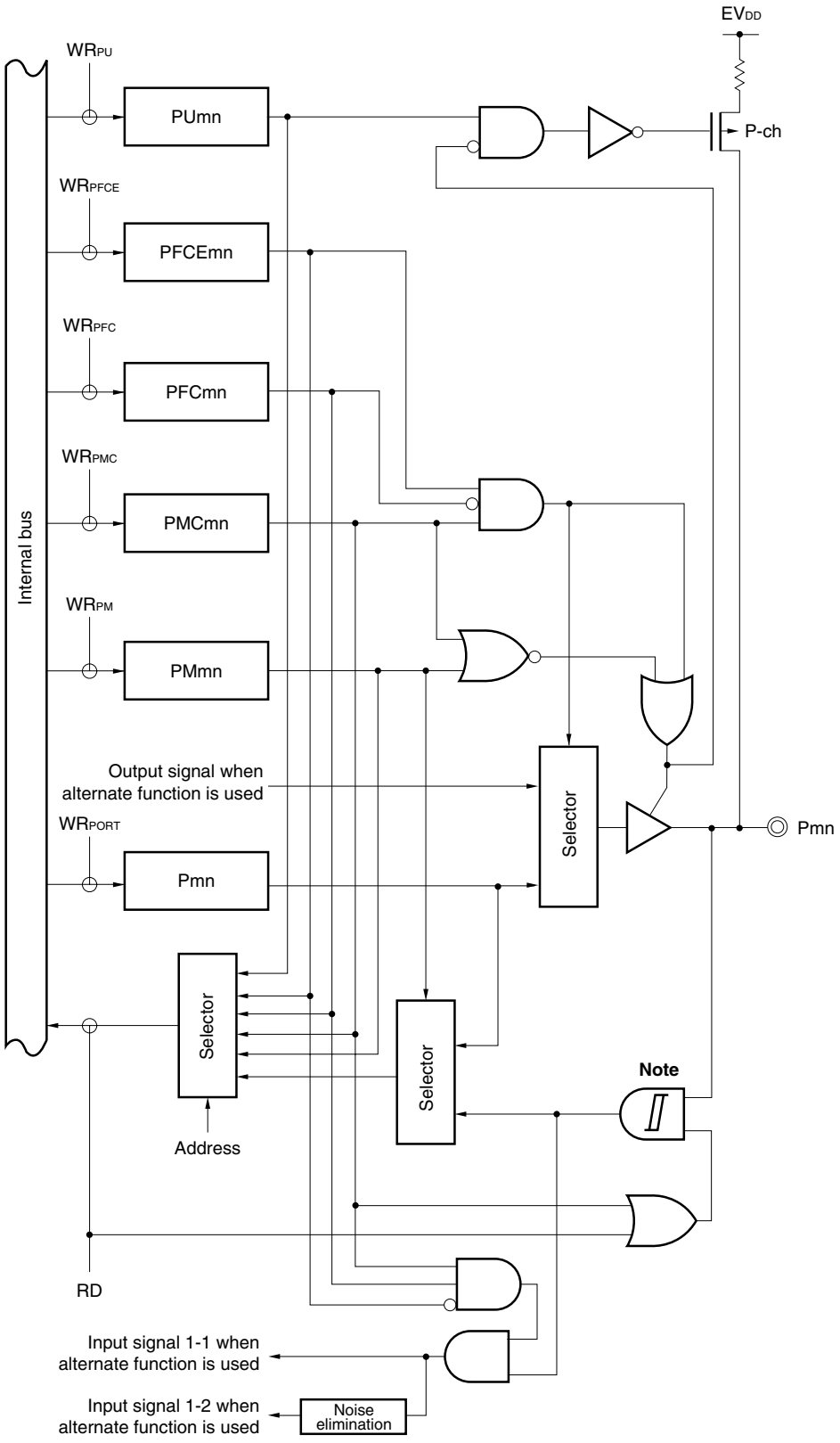

Note Hysteresis characteristics are not available in port mode.

Figure 4-17. Block Diagram of Type U-5

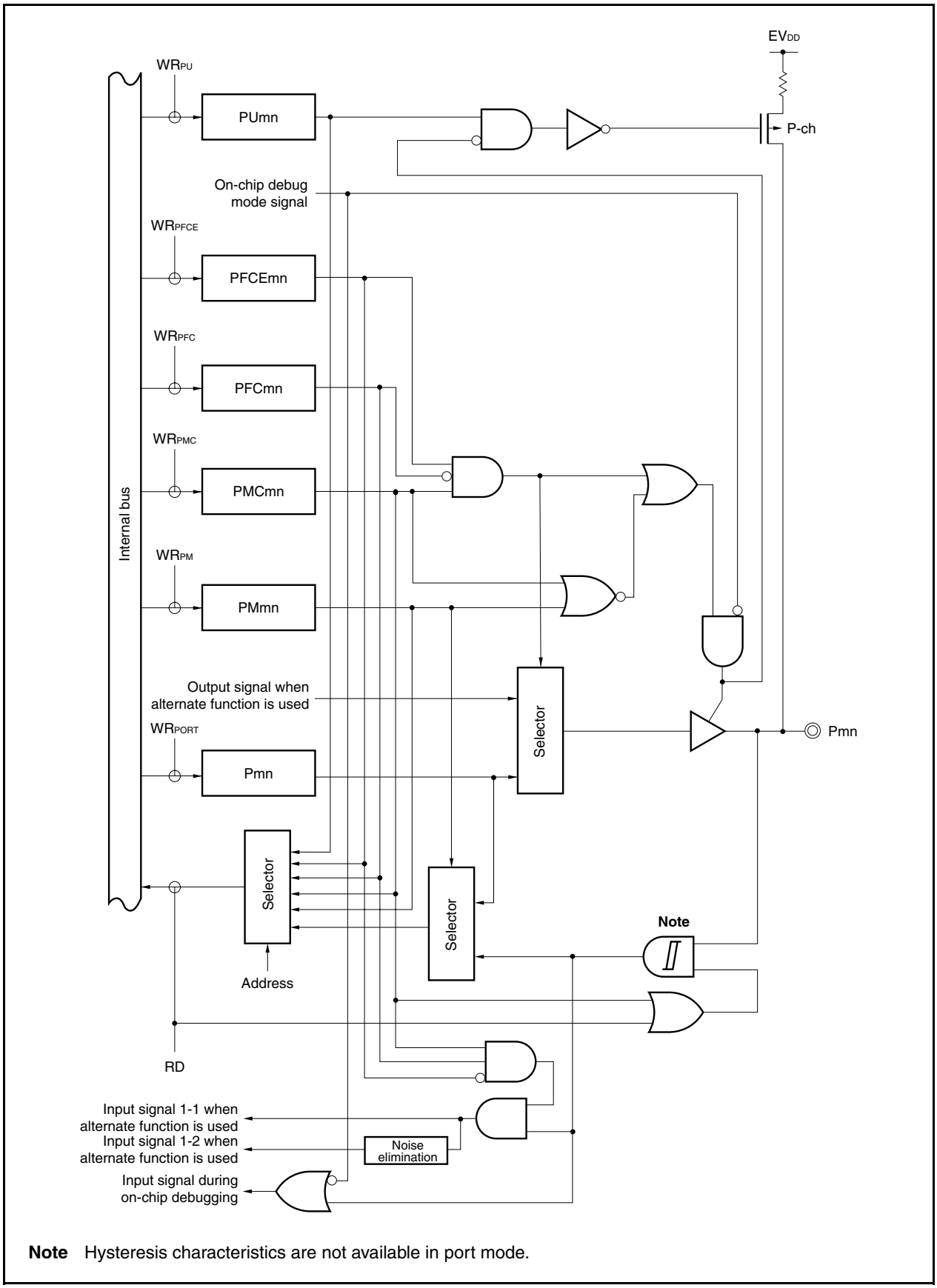

Note Hysteresis characteristics are not available in port mode.

Figure 4-18. Block Diagram of Type U-6

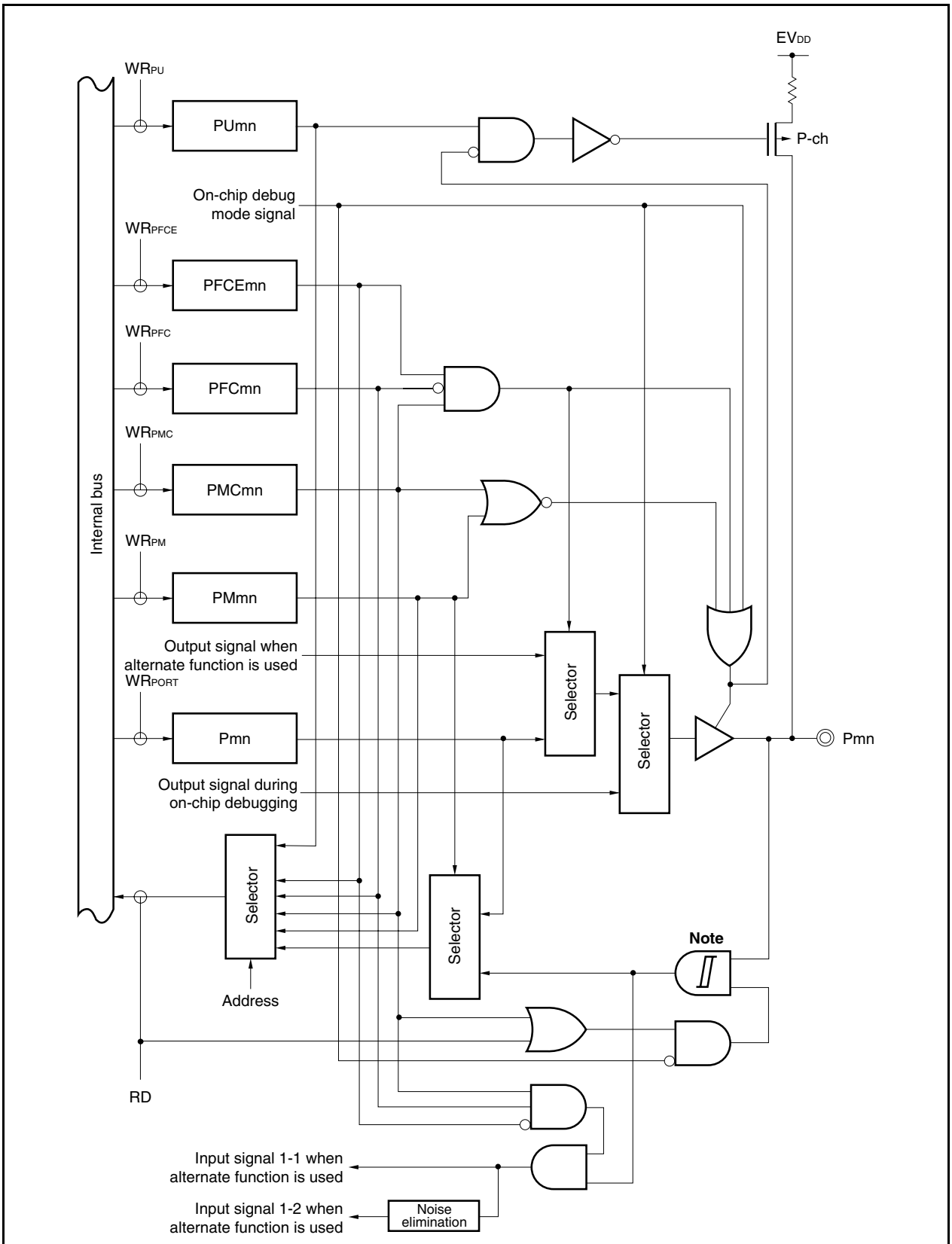

Note Hysteresis characteristics are not available in port mode.

Figure 4-19. Block Diagram of Type U-7

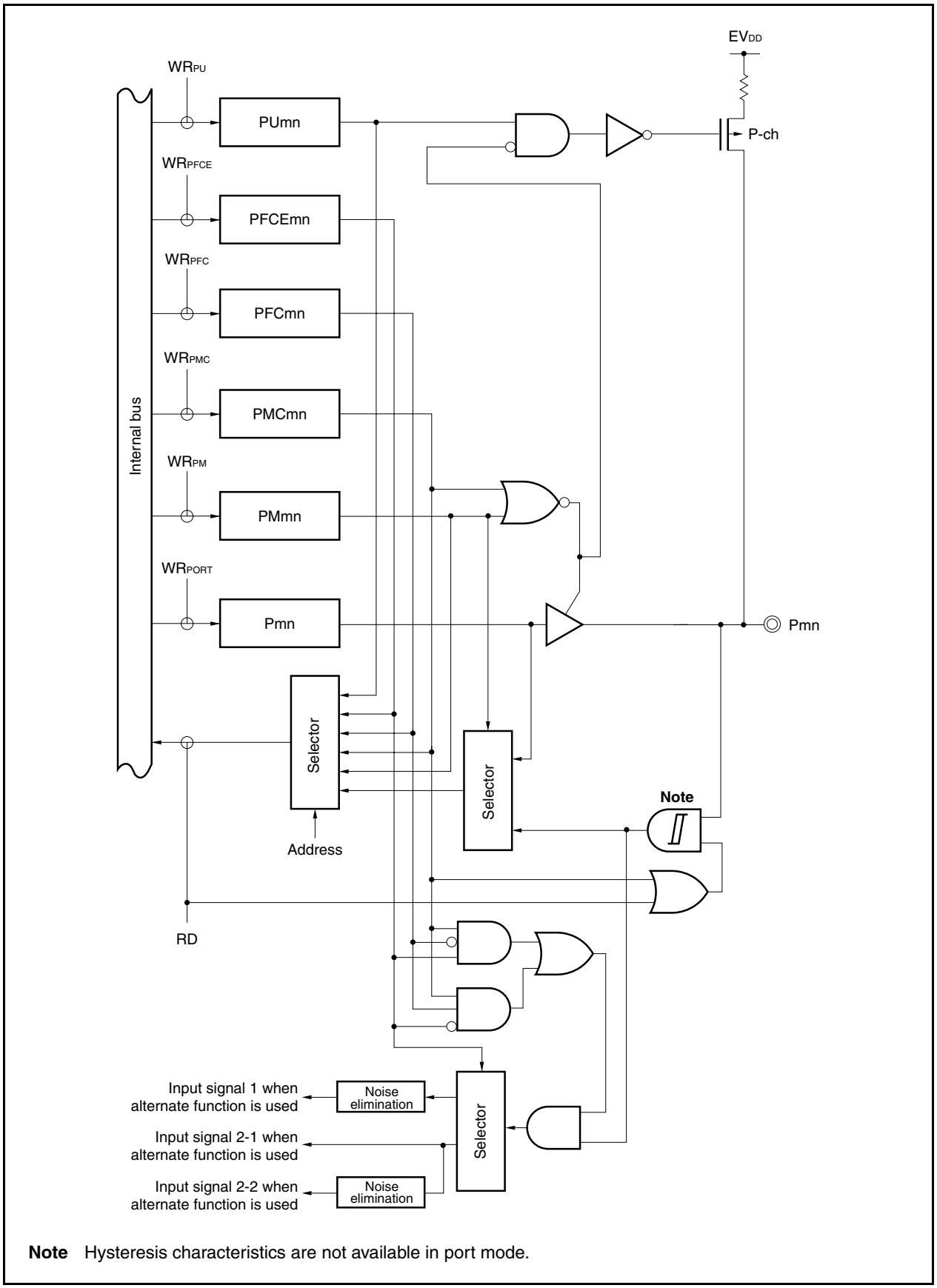

Note Hysteresis characteristics are not available in port mode.

Figure 4-20. Block Diagram of Type U-8

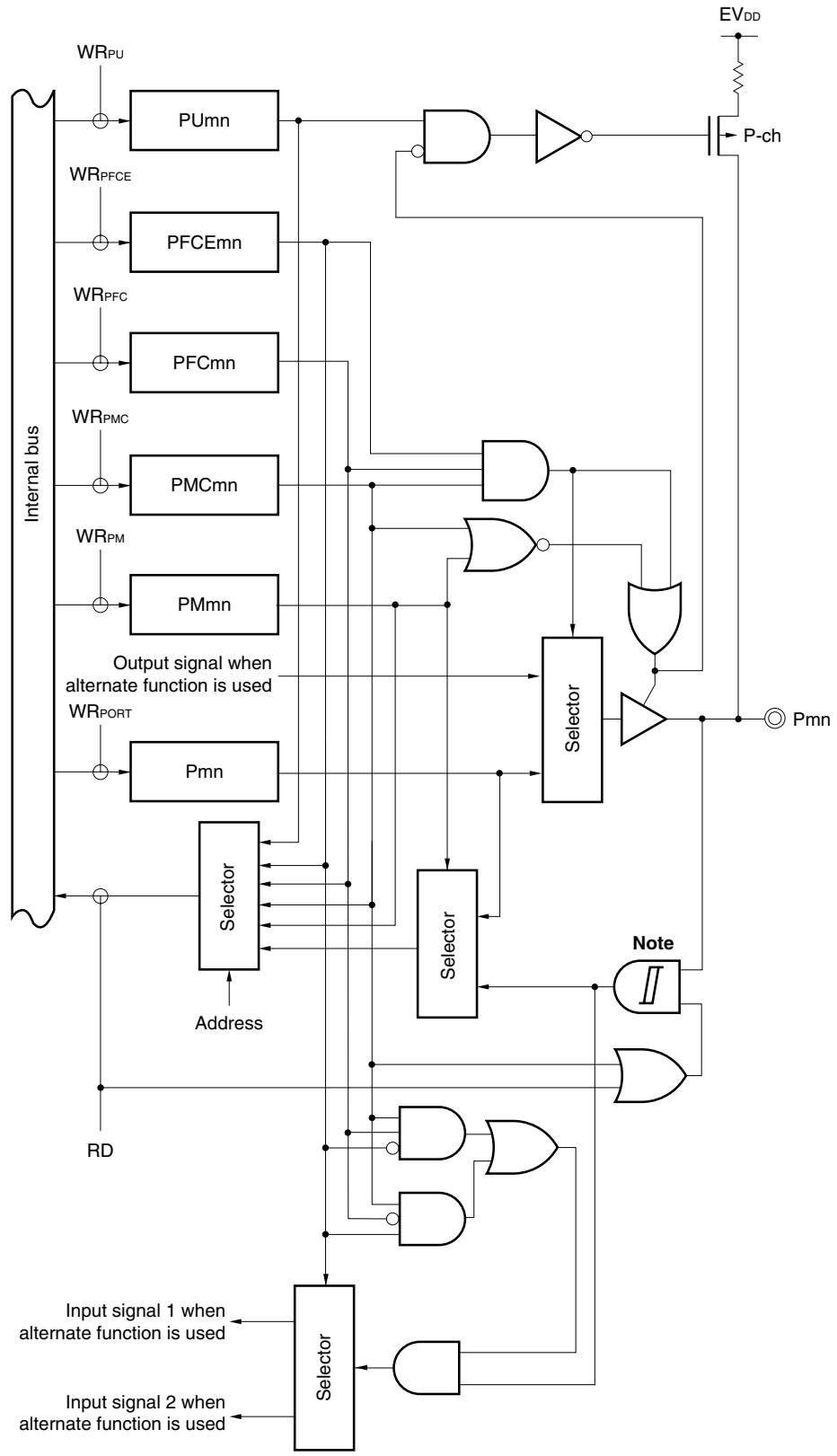

Note Hysteresis characteristics are not available in port mode.

Figure 4-21. Block Diagram of Type U-9

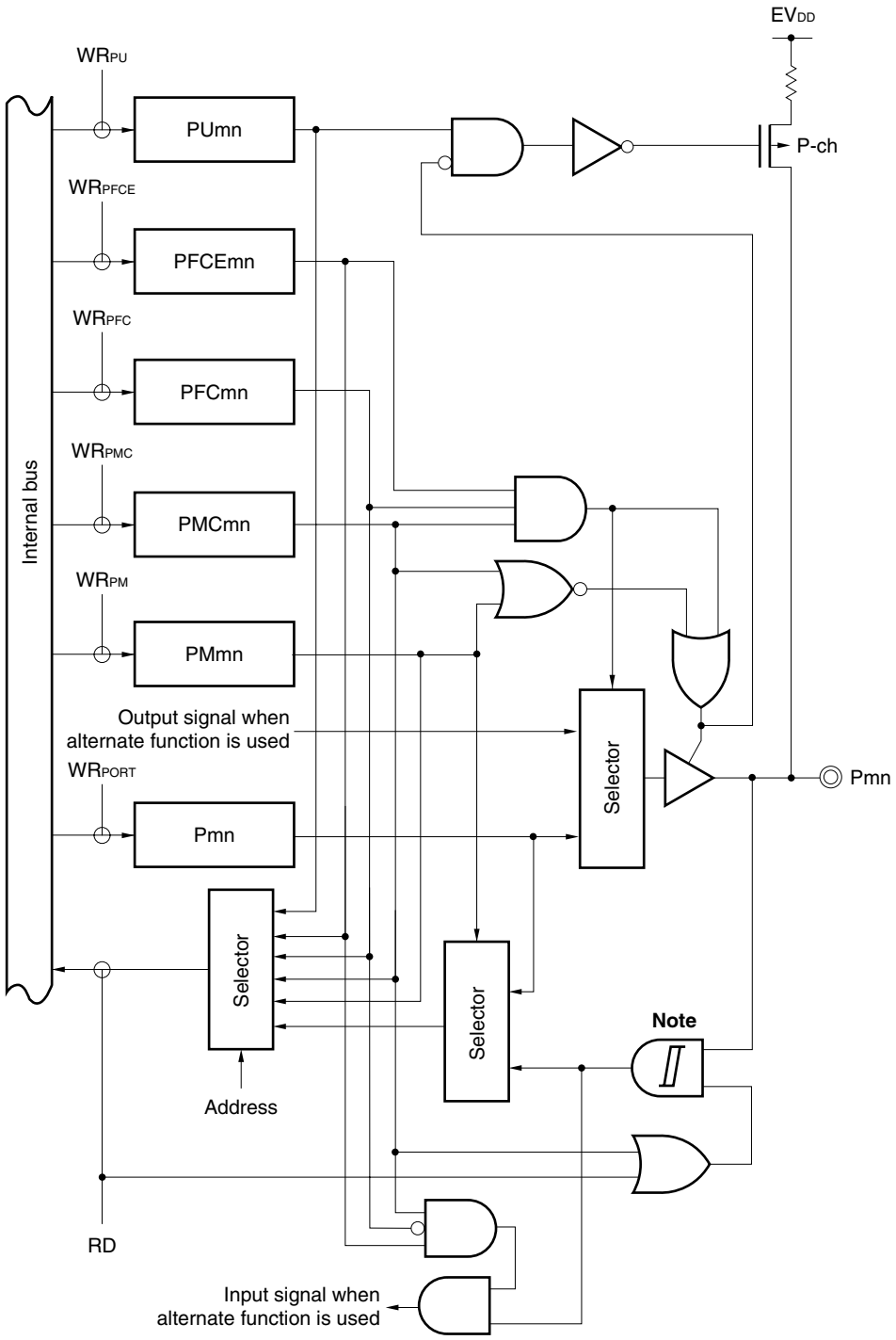

Note Hysteresis characteristics are not available in port mode.

Figure 4-22. Block Diagram of Type U-12

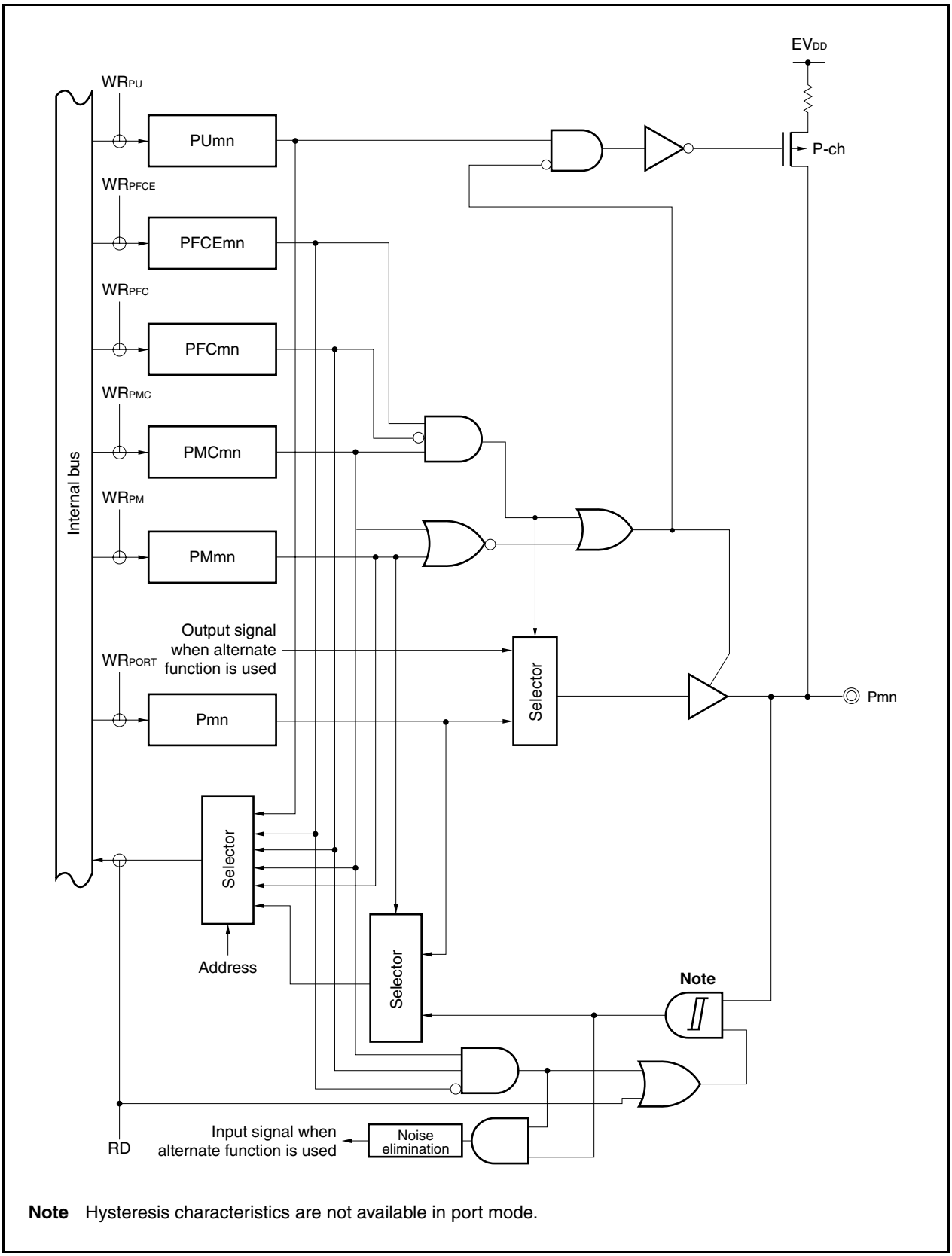

Note Hysteresis characteristics are not available in port mode.

Figure 4-23. Block Diagram of Type U-13

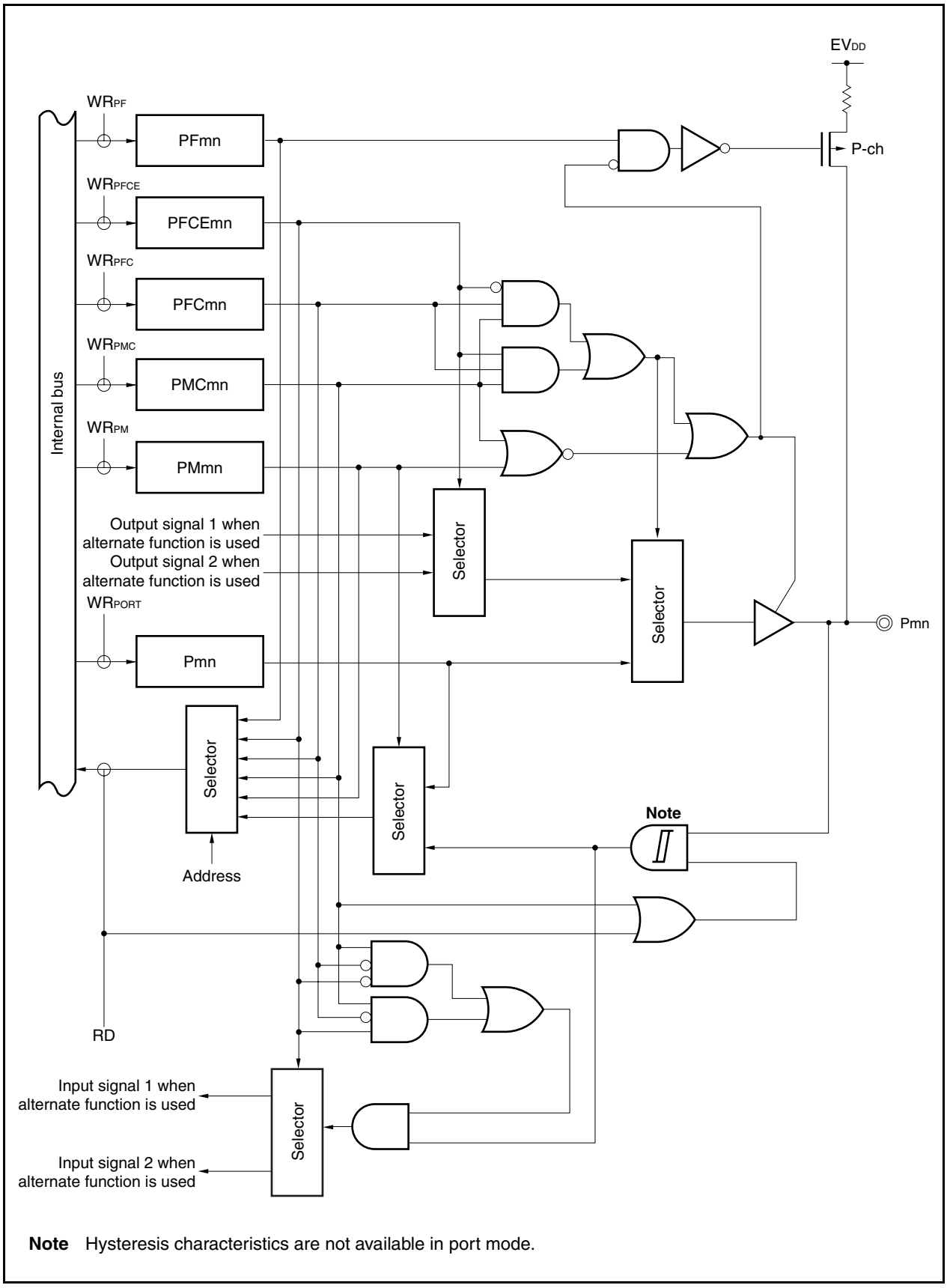

Note Hysteresis characteristics are not available in port mode.

Figure 4-24. Block Diagram of Type W-1

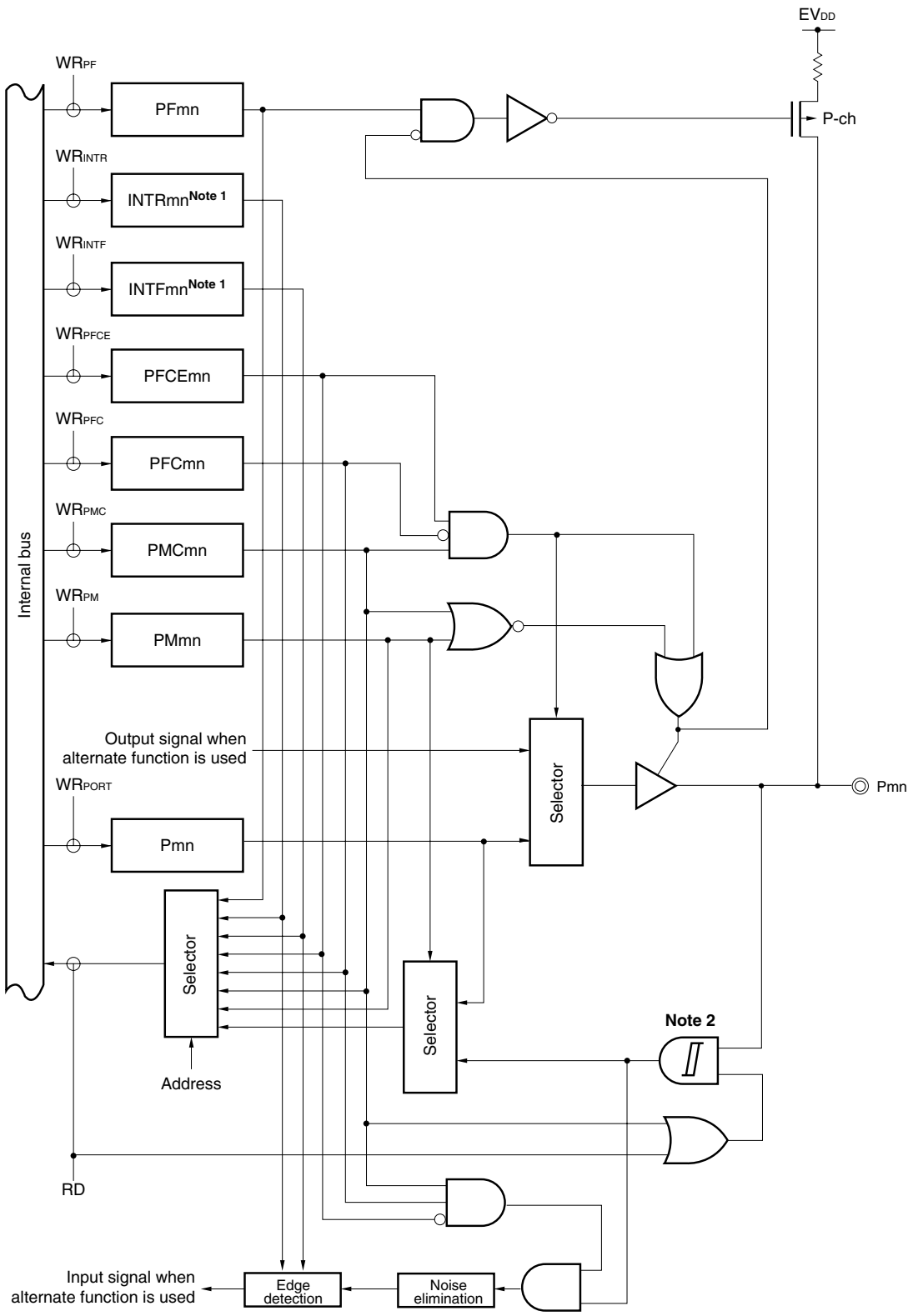

Notes 1. See **14.6 External Interrupt Request Input Pins (NMI and INTP0 to INTP7)**.

2. Hysteresis characteristics are not available in port mode.

Figure 4-25. Block Diagram of Type AA-1

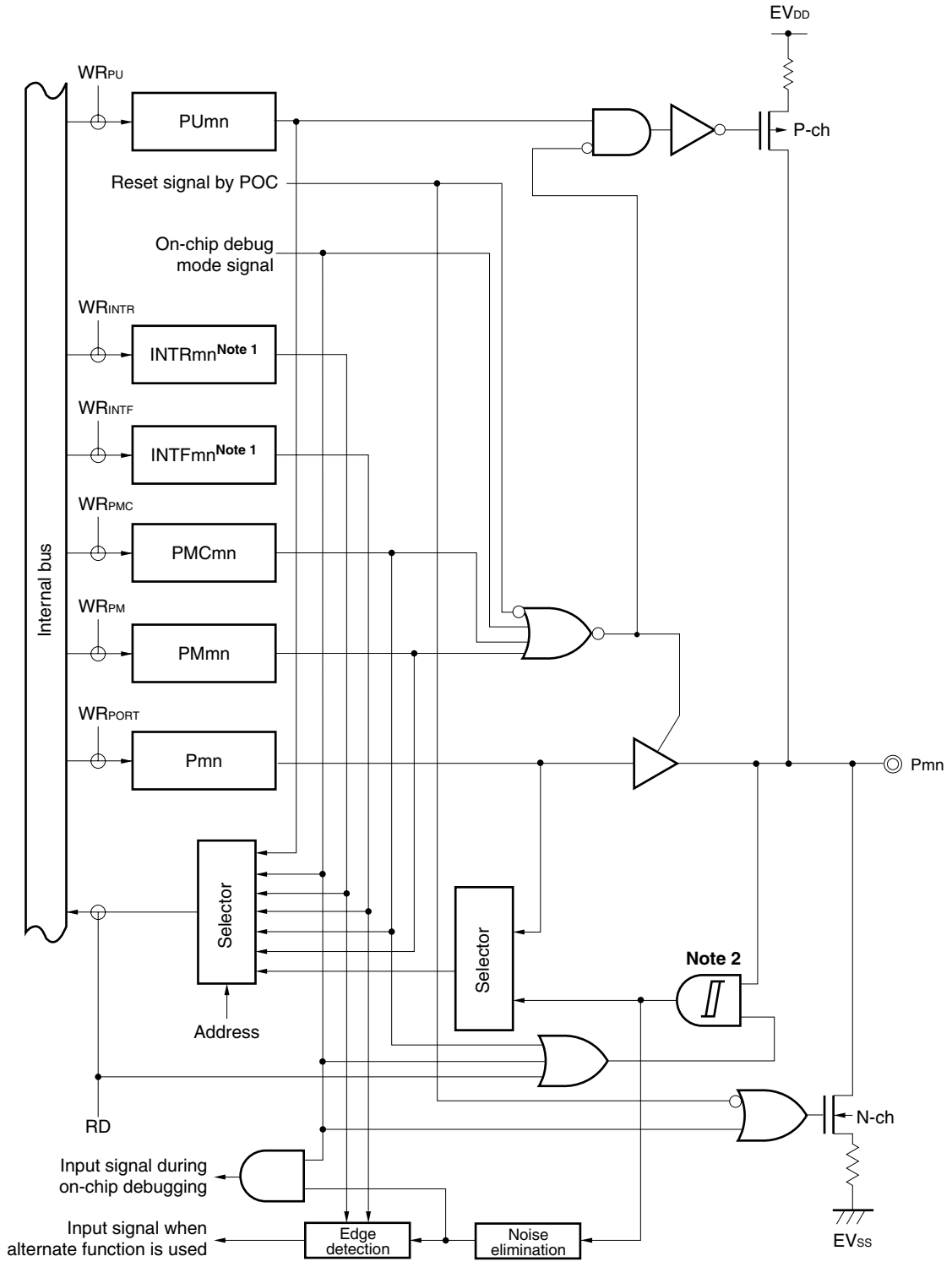

Notes 1. See **14.6 External Interrupt Request Input Pins (NMI and INTP0 to INTP7)**.

2. Hysteresis characteristics are not available in port mode.

4.5 Cautions

4.5.1 Cautions on setting port pins

(1) In the V850ES/HE2, the general-purpose port function and several peripheral function I/O pin share a pin. To switch between the general-purpose port (port mode) and the peripheral function I/O pin (alternate-function mode), set by the PMCn register. In regards to this register setting sequence, note with caution the following.

(a) Cautions on switching from port mode to alternate-function mode
To switch from the port mode to alternate-function mode in the following order.

<1> Set the PFn register[Note]:	N-ch open-drain setting
<2> Set the PFCn and PFCEn registers:	Alternate-function selection
<3> Set the corresponding bit of the PMCn register to 1:	Switch to alternate-function mode

If the PMCn register is set first, note with caution that, at that moment or depending on the change of the pin states in accordance with the setting of the PFn, PFCn, and PFCEn registers, unexpected operations may occur.

Note N-ch open-drain output pin only

Caution Regardless of the port mode/alternate-function mode, the Pn register is read and written as follows.

- **Pn register read: Read the port output latch value (when PMn.PMnm bit = 0), or read the pin states (PMn.PMnm bit = 1).**
- **Pn register write: Write to the port output latch**

CHAPTER 5 CLOCK GENERATION FUNCTION

5.1 Overview

The following clock generation functions are available.

○ Main clock oscillator
- In clock-through mode
  f_X = 4 to 5 MHz (f_{XX} = 4 to 5 MHz)
- In PLL mode
  f_X = 4 to 5 MHz (f_{XX} = 16 to 20 MHz)

○ Subclock oscillator (crystal oscillation or RC oscillation selectable by option byte function)
- 32.768 kHz (crystal resonator)
- 20 kHz (RC oscillator)

○ Multiply (×4) function by PLL (Phase Locked Loop)
- Clock-through mode/PLL mode selectable

○ Internal oscillator
- f_R = 200 kHz (TYP.)

○ Internal system clock generation
- 7 steps (f_{XX}, $f_{XX}/2$, $f_{XX}/4$, $f_{XX}/8$, $f_{XX}/16$, $f_{XX}/32$, f_{XT})

○ Peripheral clock generation

○ Clock output function

○ Programmable clock (PCL) output function

Remark f_X: Main clock oscillation frequency
f_{XX}: Main clock frequency
f_R: Internal oscillation clock frequency
f_{XT}: Subclock frequency

5.2 Configuration

Figure 5-1. Clock Generator

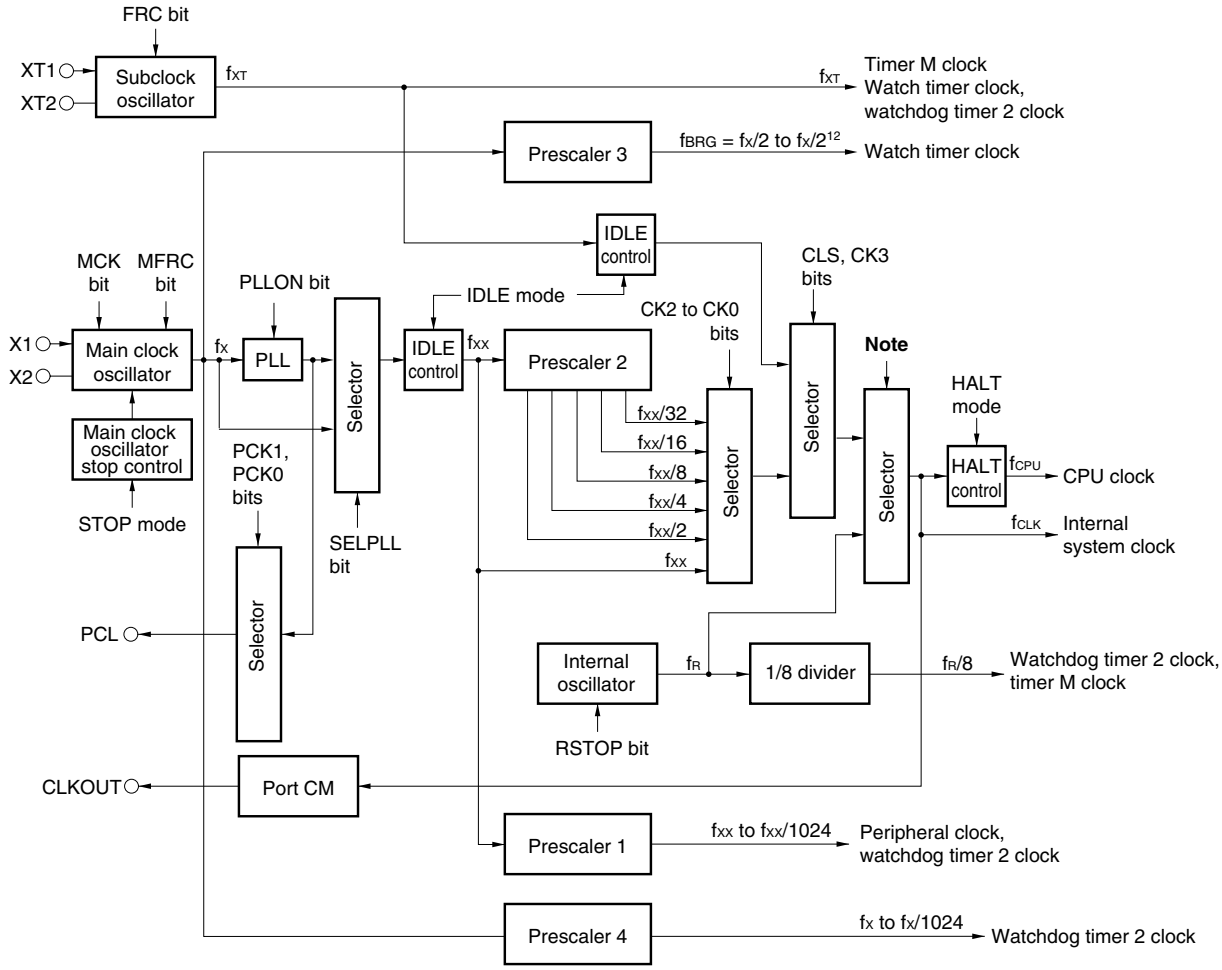

Note The internal oscillation clock is selected when watchdog timer 2 overflows during the oscillation stabilization time.

Remark f_X: Main clock oscillation frequency
f_{XX}: Main clock frequency
f_{CLK}: Internal system clock frequency
f_{XT}: Subclock frequency
f_{CPU}: CPU clock frequency
f_{BRG}: Watch timer clock frequency
f_R: Internal oscillation clock frequency

(1) Main clock oscillator

The main resonator oscillates the following frequencies (f_X).

- In clock-through mode
  f_X = 4 to 5 MHz
- In PLL mode
  f_X = 4 to 5 MHz (f_{XX} = 16 to 20 MHz)

(2) Subclock oscillator

The sub-resonator oscillates a frequency (f_{XT}) of 32.768 kHz or 20 kHz.

(3) Main clock oscillator stop control

This circuit generates a control signal that stops oscillation of the main clock oscillator.
Oscillation of the main clock oscillator is stopped in the STOP mode or when the PCC.MCK bit = 1 (valid only when the PCC.CLS bit = 1).

(4) Internal oscillator

Oscillates a frequency (f_R) of 200 kHz (TYP.).

(5) Prescaler 1

This circuit generates the clock (f_{XX} to f_{XX}/1,024) to be supplied to the following on-chip peripheral functions: TMP0 to TMP3, TMQ0, TMM0, CSIB0, CSIB1, UARTA0, UARTA1, ADC, and WDT2

(6) Prescaler 2

This circuit divides the main clock (f_{XX}).
The clock generated by prescaler 2 (f_{XX} to f_{XX}/32) is supplied to the selector that generates the CPU clock (f_{CPU}) and internal system clock (f_{CLK}).
f_{CLK} is the clock supplied to the INTC, ROM, and RAM blocks, and can be output from the CLKOUT pin.

(7) Prescaler 3

This circuit divides the clock generated by the main clock oscillator (f_X) to a specific frequency (32.768 kHz) and supplies that clock to the watch timer block.
For details, see **CHAPTER 9 WATCH TIMER FUNCTIONS**.

(8) Prescaler 4

This circuit generates the clock (f_X to f_X/1,024) to be supplied to on-chip peripheral function.
The block to be supplied is WDT2 only.

(9) PLL

This circuit multiplies the clock generated by the main clock oscillator (f_X) by 4.
It operates in two modes: clock-through mode in which f_X is output as is, and PLL mode in which a multiplied clock is output. These modes can be selected by using the PLLCTL.SELPLL bit.
Whether the clock is multiplied by 4 is selected by the CKC.CKDIV0 bit, and PLL is started or stopped by the PLLCTL.PLLON bit.

5.3 Registers

(1) Processor clock control register (PCC)

The PCC register is a special register. Data can be written to this register only in combination of specific sequences (see **3.4.7 Special registers**).

This register can be read or written in 8-bit or 1-bit units.

Reset sets this register to 03H.

After reset: 03H R/W Address: FFFFF828H

	7	6	5	4	3	2	1	0
PCC	FRC	MCK	MFRC	CLS[Note]	CK3	CK2	CK1	CK0

FRC	Use of subclock on-chip feedback resistor
0	Used
1	Not used

MCK	Main clock oscillator control
0	Oscillation enabled
1	Oscillation stopped

- Even if the MCK bit is set (1) while the system is operating with the main clock as the CPU clock, the operation of the main clock does not stop. It stops after the CPU clock has been changed to the subclock.
- Before setting the MCK bit from 0 to 1, stop the on-chip peripheral functions operating with the main clock.
- When the main clock is stopped and the device is operating with the subclock, clear (0) the MCK bit and secure the oscillation stabilization time by software before switching the CPU clock to the main clock or operating the on-chip peripheral functions.

MFRC	Use of main clock on-chip feedback resistor
0	Used
1	Not used

CLS[Note]	Status of CPU clock (f_{CPU})
0	Main clock operation
1	Subclock operation

CK3	CK2	CK1	CK0	Clock selection (f_{CLK}/f_{CPU})
0	0	0	0	f_{XX}
0	0	0	1	$f_{XX}/2$
0	0	1	0	$f_{XX}/4$
0	0	1	1	$f_{XX}/8$
0	1	0	0	$f_{XX}/16$
0	1	0	1	$f_{XX}/32$
0	1	1	×	Setting prohibited
1	×	×	×	f_{XT}

Note The CLS bit is a read-only bit.

Cautions 1. Do not change the CPU clock (by using the CK3 to CK0 bits) while CLKOUT is being output.

2. Use a bit manipulation instruction to manipulate the CK3 bit. When using an 8-bit manipulation instruction, do not change the set values of the CK2 to CK0 bits.

Remark ×: don't care

(a) Example of setting main clock operation → subclock operation

<1> CK3 bit ← 1: Use of a bit manipulation instruction is recommended. Do not change the CK2 to CK0 bits.

<2> Subclock operation: Read the CLS bit to check if subclock operation has started. It takes the following time after the CK3 bit is set until subclock operation is started.

Max.: $1/f_{XT}$ (1/subclock frequency)

<3> MCK bit ← 1: Set the MCK bit to 1 only when stopping the main clock.

Cautions 1. When stopping the main clock, stop the PLL.

2. If the following conditions are not satisfied, change the CK2 to CK0 bits so that the conditions are satisfied, then change to the subclock operation mode.

Internal system clock (f_{CLK}) > Subclock (f_{XT}: 32.768 kHz) × 4

Remark Internal system clock (f_{CLK}): Clock generated from the main clock (f_{XX}) by setting bits CK2 to CK0

[Description example]

```
<1> _SET_SUB_RUN :
    st.b        r0, PRCMD[r0]
    set1        3, PCC[r0]          -- CK3 bit ← 1
<2> _CHECK_CLS :
    tst1        4, PCC[r0]          -- Wait until subclock operation starts.
    bz          _CHECK_CLS
<3> _STOP_MAIN_CLOCK :
    st.b        r0, PRCMD[r0]
    set1        6, PCC[r0]          -- MCK bit ← 1, main clock is stopped
```

Remark The above description is an example. Note with caution that the CLS bit is read in a closed loop in <2>.

(b) Example of setting subclock operation → main clock operation

<1> MCK bit ← 0: Main clock starts oscillating

<2> Insert waits by the program and wait until the oscillation stabilization time of the main clock elapses.

<3> CK3 bit ← 0: Use of a bit manipulation instruction is recommended. Do not change the CK2 to CK0 bits.

<4> Main clock operation: It takes the following time after the CK3 bit is set until main clock operation is started.

Max.: 1/f_{XT} (1/subclock frequency)

Therefore, insert one NOP instruction immediately after setting the CK3 bit to 0 or read the CLS bit to check if main clock operation has started.

[Description example]

```
<1> _START_MAIN_OSC :
    st.b      r0, PRCMD[r0]       -- Release of protection of special registers
    clr1      6, PCC[r0]          -- Main clock starts oscillating
<2> movea     0x55, r0, r11       -- Wait for oscillation stabilization time
    _WAIT_OST :
    nop
    nop
    nop
    addi      -1, r11, r11
    mp        r0, r11
    bne       _PROGRAM_WAIT
<3> st.b      r0, PRCMD[r0]
    clr1      3, PCC[r0]          -- CK3 ← 0
<4> _CHECK_CLS :
    tst1      4, PCC[r0]          -- Wait until main clock operation starts
    bnz       _CHECK_CLS
```

Remark The above description is an example. Note with caution that the CLS bit is read in a closed loop in <4>.

(2) Internal oscillation mode register (RCM)

The RCM register is an 8-bit register that sets the operation mode of the internal oscillator.

This register can be read or written in 8-bit or 1-bit units.

Reset sets this register to 00H.

After reset: 00H R/W Address: FFFFF80CH

	7	6	5	4	3	2	1	0
RCM	0	0	0	0	0	0	0	RSTOP

RSTOP	Oscillation/stop of internal oscillator
0	Internal oscillator oscillation
1	Internal oscillator stopped

Cautions 1. The settings of the RCM register are valid by setting the option byte. For details, see CHAPTER 23 OPTION BYTE FUNCTION.

2. The internal oscillator cannot be stopped while the CPU is operating on the internal oscillation clock (CCLS.CCLSF bit = 1). Do not set the RSTOP bit to 1.

3. The internal oscillator oscillates if the CCLS.CCLSF bit is set to 1 (when WDT overflow occurs during oscillation stabilization) even when the RSTOP bit is set to 1. At this time, the RSTOP bit remains being set to 1.

(3) CPU operation clock status register (CCLS)

The CCLS register indicates the status of the CPU operation clock.

This register is read-only, in 8-bit or 1-bit units.

Reset sets this register to 00H.

After reset: 00H[Note] R Address: FFFFF82EH

	7	6	5	4	3	2	1	0
CCLS	0	0	0	0	0	0	0	CCLSF

CCLSF	CPU operation clock status
0	Operating on main clock (f_X) or subclock (f_{XT}).
1	Operating on internal oscillation clock (f_R).

Note If WDT overflow occurs during oscillation stabilization after a reset is released, the CCLSF bit is set to 1 and the reset value is 01H.

5.4 Operation

5.4.1 Operation of each clock

The following table shows the operation status of each clock.

Table 5-1. Operation Status of Each Clock

Register Setting and Operation Status / Target Clock	PCC Register								
	CLK Bit = 0, MCK Bit = 0					CLS Bit = 1, MCK Bit = 0		CLS Bit = 1, MCK Bit = 1	
	During Reset	During Oscillation Stabilization Time Count	HALT Mode	IDLE1, IDLE2 Mode	STOP Mode	Subclock Mode	Sub-IDLE Mode	Subclock Mode	Sub-IDLE Mode
Main clock oscillator (f_X)	×	○	○	○	×	○	○	×	×
Subclock oscillator (f_{XT})	○	○	○	○	○	○	○	○	○
CPU clock (f_{CPU})	×	×	×	×	×	○	×	○	×
Internal system clock (f_{CLK})	×	×	○	×	×	○	×	○	×
Main clock (in PLL mode, f_{XX})	×	**Note 1**	○	**Note 2**	×	○	○	×	×
Peripheral clock (f_{XX} to f_{XX}/1,024)	×	×	○	×	×	○	×	×	×
WT clock (main)	×	×	○	○	×	○	○	×	×
WT clock (sub)	○	○	○	○	○	○	○	○	○
WDT2 clock (internal oscillation)	×	○	○	○	○	○	○	○	○
WDT2 clock (main)	×	×	○	×	×	○	×	×	×

Notes 1. Oscillation starts after time 1/2 of the oscillation stabilization time, and the stable clock is supplied after lockup time.

2. Operable in the IDLE1 mode. Stopped in the IDLE2 mode.

Remark ○: Operable
×: Stopped

5.4.2 Clock output function

The clock output function is used to output the internal system clock (f_{CLK}) from the CLKOUT pin.

The internal system clock (f_{CLK}) is selected by using the PCC.CK3 to PCC.CK0 bits.

The CLKOUT pin functions alternately as the PCM1 pin and functions as a clock output pin if so specified by the control register of port CM.

The status of the CLKOUT pin is the same as the internal system clock in Table 5-1 and the pin can output the clock when it is in the operable status. It outputs a low level in the stopped status. However, the CLKOUT pin is in the port mode (PCM1 pin: input mode) after reset and until it is set in the output mode. Therefore, the status of the pin is Hi-Z.

5.5 PLL Function

5.5.1 Overview

In the V850ES/HE2, an operating clock that is 4 times higher than the oscillation frequency output by the PLL function or the clock-through mode can be selected as the operating clock of the CPU and on-chip peripheral functions.

When PLL function is used: Input clock = 4 to 5 MHz (output: 16 to 20 MHz)
Clock-through mode: Input clock = 4 to 5 MHz (output: 4 to 5 MHz)

5.5.2 Registers

(1) PLL control register (PLLCTL)

The PLLCTL register is an 8-bit register that controls the PLL function.
This register can be read or written in 8-bit or 1-bit units.
Reset sets this register to 01H.

After reset: 01H R/W Address: FFFFF82CH

	7	6	5	4	3	2	1	0
PLLCTL	0	0	0	0	0	0	SELPLL	PLLON

PLLON	PLL operation stop register
0	PLL stopped
1	PLL operating (After PLL operation starts, a lockup time is required for frequency stabilization)

SELPLL	CPU operation clock selection register
0	Clock-through mode
1	PLL mode

Cautions 1. When the PLLON bit is cleared to 0, the SELPLL bit is automatically cleared to 0 (clock-through mode).
2. The SELPLL bit can be set to 1 only when the PLL clock frequency is stabilized. If not (unlocked), “0” is written to the SELPLL bit if data is written to it.

(2) Lock register (LOCKR)

Phase lock occurs at a given frequency following power application or immediately after the STOP mode is released, and the time required for stabilization is the lockup time (frequency stabilization time). This state until stabilization is called the lockup status, and the stabilized state is called the locked status.

The LOCKR register includes a LOCK bit that reflects the PLL frequency stabilization status.

This register is read-only, in 8-bit or 1-bit units.

Reset sets this register to 00H.

After reset: 00H R Address: FFFFF824H

	7	6	5	4	3	2	1	0
LOCKR	0	0	0	0	0	0	0	LOCK

LOCK	PLL lock status check
0	Locked status
1	Unlocked status

Caution The LOCK register does not reflect the lock status of the PLL in real time. The set/clear conditions are as follows.

[Set conditions]

- Upon system reset[Note]
- In IDLE2 or STOP mode
- Upon setting of PLL stop (clearing of PLLCTL.PLLON bit to 0)
- Upon stopping main clock and using CPU with subclock (setting of PCC.CK3 bit to 1 and setting of PCC.MCK bit to 1)

Note This register is set to 01H by reset and cleared to 00H after the reset has been released and the oscillation stabilization time has elapsed.

[Clear conditions]

- Upon overflow of oscillation stabilization time following reset release (OSTS register default time (see **16.2 (3) Oscillation stabilization time select register (OSTS)**))
- Upon oscillation stabilization timer overflow (time set by OSTS register) following STOP mode release, when the STOP mode was set in the PLL operating status
- Upon PLL lockup time timer overflow (time set by PLLS register) when the PLLCTL.PLLON bit is changed from 0 to 1
- After the setup time inserted upon release of the IDLE2 mode is released (time set by the OSTS register) when the IDLE2 mode is set during PLL operation.

(3) PLL lockup time specification register (PLLS)

The PLLS register is an 8-bit register used to select the PLL lockup time when the PLLCTL.PLLON bit is changed from 0 to 1.

This register can be read or written in 8-bit units.

Reset sets this register to 03H.

After reset: 03H R/W Address: FFFFF6C1H

	7	6	5	4	3	2	1	0
PLLS	0	0	0	0	0	0	PLLS1	PLLS0

PLLS1	PLLS0	Selection of PLL lockup time
0	0	$2^{10}/f_X$
0	1	$2^{11}f_X$
1	0	$2^{12}/f_X$
1	1	$2^{13}/f_X$ (default value)

Cautions 1. Set so that the lockup time is 800 μs or longer.

2. Do not change the PLLS register setting during the lockup period.

(4) Programmable clock mode register (PCLM)

The PCLM register is an 8-bit register used to control the PCL output.

This register can be read or written in 8-bit or 1-bit units.

After reset: 00H R/W Address: FFFFF82FH

	7	6	5	4	3	2	1	0
PCLM	0	0	0	PCLE	0	0	PCK1	PCK0

PCLE	Selection of PCL pin output operation
0	PCL pin output disabled (PCL pin is fixed to low level)
1	PCL pin output enabled

Caution Set the port-related control registers (PM, PMC, PFC, and PFCE registers, etc.) first, and then set the PCLE bit to 1.

PCK1	PCK0	Selection of PLL output clock
0	0	$f_{XX}/2$
0	1	$f_{XX}/4$
1	0	$f_{XX}/8$
1	1	$f_{XX}/16$

Caution Set the PCLE bit to 1 only during PLL operation. To stop the PLL, clear the PCLE bit to 0.

5.5.3 Usage

(1) When PLL is used

- After the reset signal has been released, the PLL operates (PLLCTL.PLLON bit = 1), but because the default mode is the clock-through mode (PLLCTL.SELPLL bit = 0), select the PLL mode (SELPLL bit = 1).
- To enable PLL operation, first set the PLLON bit to 1, and then set the SELPLL bit to 1 after the LOCKR.LOCK bit = 0. To stop the PLL, first select the clock-through mode (SELPLL bit = 0), wait for 8 clocks or more, and then stop the PLL (PLLON bit = 0).
- The PLL stops during transition to IDLE2 or STOP mode regardless of the setting and is restored from IDLE2 or STOP mode to the status before transition. The time required for restoration is as follows.

(a) When transiting to IDLE2 or STOP mode from the clock through mode
- STOP mode: Set the OSTS register so that the oscillation stabilization time is 1 ms (min.) or longer.
- IDLE2 mode: Set the OSTS register so that the setup time is 350 μs (min.) or longer.

(b) When shifting to the IDLE 2 or STOP mode while remaining in the PLL operation mode
- STOP mode: Set the OSTS register so that the oscillation stabilization time is 1 ms (min.) or longer.
- IDLE2 mode: Set the OSTS register so that the setup time is 800 μs (min.) or longer.

When shifting to the IDLE1 mode, the PLL does not stop. Stop the PLL if necessary.

(2) When PLL is not used

- The clock-through mode (SELPLL bit = 0) is selected after the reset signal has been released, but the PLL is operating (PLLON bit = 1) and must therefore be stopped (PLLON bit = 0).

CHAPTER 6 16-BIT TIMER/EVENT COUNTER P (TMP)

Timer P (TMP) is a 16-bit timer/event counter.
The V850ES/HE2 has four timer/event counter channels, TMP0 to TMP3.

6.1 Overview

An outline of TMPn is shown below.

- Clock selection: 8 ways
- Capture/trigger input pins: 2
- External event count input pins: 1
- External trigger input pins: 1
- Timer/counters: 1
- Capture/compare registers: 2
- Capture/compare match interrupt request signals: 2
- Timer output pins: 2

Remark n = 0 to 3

6.2 Functions

TMPn has the following functions.

- Interval timer
- External event counter
- External trigger pulse output
- One-shot pulse output
- PWM output
- Free-running timer
- Pulse width measurement

Remark n = 0 to 3

6.3 Configuration

TMPn includes the following hardware.

Table 6-1. Configuration of TMPn

Item	Configuration
Timer register	16-bit counter
Registers	TMPn capture/compare registers 0, 1 (TPnCCR0, TPnCCR1) TMPn counter read buffer register (TPnCNT) CCR0, CCR1 buffer registers
Timer inputs	2 (TIPn0[Note 1], TIPn1 pins)
Timer outputs	2 (TOPn0, TOPn1 pins)
Control registers[Note 2]	TMPn control registers 0, 1 (TPnCTL0, TPnCTL1) TMPn I/O control registers 0 to 2 (TPnIOC0 to TPnIOC2) TMPn option register 0 (TPnOPT0)

Notes 1. The TIPn0 pin functions alternately as a capture trigger input signal, external event count input signal, and external trigger input signal.

2. When using the functions of the TIPn0, TIPn1, TOPn0, and TOPn1 pins, see **Table 4-15 Using Port Pin as Alternate-Function Pin**.

Remark n = 0 to 3

Figure 6-1. Block Diagram of TMPn

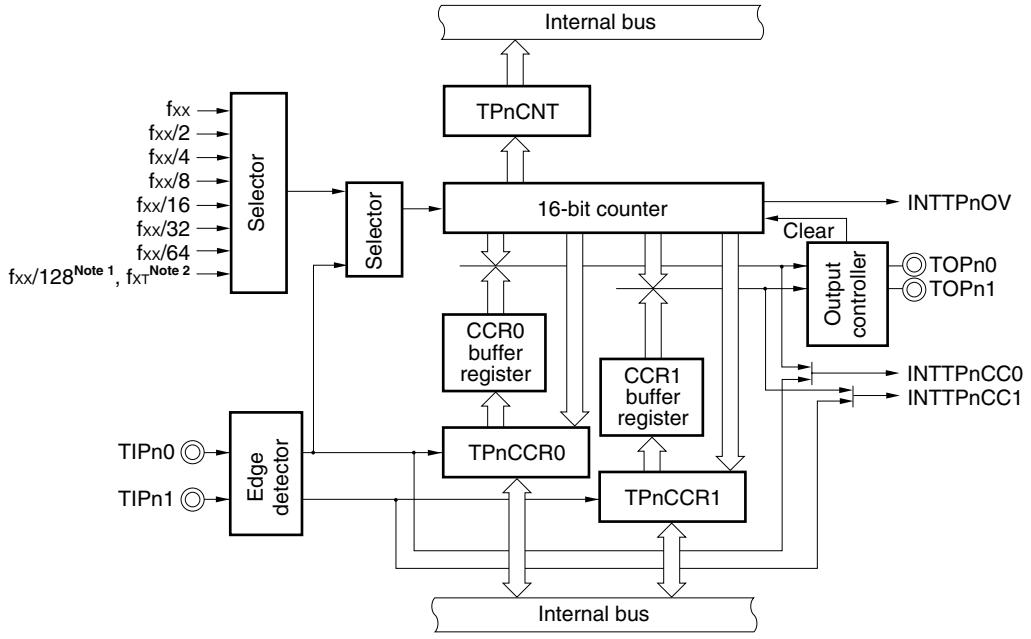

Notes 1. TMP0, TMP2

2. TMP1, TMP3 (Counting operation cannot be performed with the subclock when the main clock is stopped.)

Remark f_{XX}: Main clock frequency

f_{XT}: Subclock frequency

(1) 16-bit counter

This 16-bit counter can count internal clocks or external events.

The count value of this counter can be read by using the TPnCNT register.

When the TPnCTL0.TPnCE bit = 0, the value of the 16-bit counter is FFFFH. If the TPnCNT register is read at this time, 0000H is read.

Reset sets the TPnCE bit to 0. Therefore, the 16-bit counter is set to FFFFH.

(2) CCR0 buffer register

This is a 16-bit compare register that compares the count value of the 16-bit counter.

When the TPnCCR0 register is used as a compare register, the value written to the TPnCCR0 register is transferred to the CCR0 buffer register. When the count value of the 16-bit counter matches the value of the CCR0 buffer register, a compare match interrupt request signal (INTTPnCC0) is generated.

The CCR0 buffer register cannot be read or written directly.

The CCR0 buffer register is cleared to 0000H after reset, as the TPnCCR0 register is cleared to 0000H.

(3) CCR1 buffer register

This is a 16-bit compare register that compares the count value of the 16-bit counter.

When the TPnCCR1 register is used as a compare register, the value written to the TPnCCR1 register is transferred to the CCR1 buffer register. When the count value of the 16-bit counter matches the value of the CCR1 buffer register, a compare match interrupt request signal (INTTPnCC1) is generated.

The CCR1 buffer register cannot be read or written directly.

The CCR1 buffer register is cleared to 0000H after reset, as the TPnCCR1 register is cleared to 0000H.

(4) Edge detector

This circuit detects the valid edges input to the TIPn0 and TIPn1 pins. No edge, rising edge, falling edge, or both the rising and falling edges can be selected as the valid edge by using the TPnIOC1 and TPnIOC2 registers.

(5) Output controller

This circuit controls the output of the TOPn0 and TOPn1 pins. The output controller is controlled by the TPnIOC0 register.

(6) Selector

This selector selects the count clock for the 16-bit counter. Eight types of internal clocks or an external event can be selected as the count clock.

6.4 Registers

The registers that control TMPn are as follows.

- TMPn control register 0 (TPnCTL0)
- TMPn control register 1 (TPnCTL1)
- TMPn I/O control register 0 (TPnIOC0)
- TMPn I/O control register 1 (TPnIOC1)
- TMPn I/O control register 2 (TPnIOC2)
- TMPn option register 0 (TPnOPT0)
- TMPn capture/compare register 0 (TPnCCR0)
- TMPn capture/compare register 1 (TPnCCR1)
- TMPn counter read buffer register (TPnCNT)

Remarks 1. When using the functions of the TIPn0, TIPn1, TOPn0, and TOPn1 pins, see **Table 4-15 Using Port Pin as Alternate-Function Pin**.

2. n = 0 to 3

(1) TMPn control register 0 (TPnCTL0)

The TPnCTL0 register is an 8-bit register that controls the operation of TMPn.

This register can be read or written in 8-bit or 1-bit units.

Reset sets this register to 00H.

The same value can always be written to the TPnCTL0 register by software.

After reset: 00H R/W Address: TP0CTL0 FFFFF590H, TP1CTL0 FFFFF5A0H, TP2CTL0 FFFFF5B0H, TP3CTL0 FFFFF5C0H

	7	6	5	4	3	2	1	0
TPnCTL0 (n = 0 to 3)	TPnCE	0	0	0	0	TPnCKS2	TPnCKS1	TPnCKS0

TPnCE	TMPn operation control
0	TMPn operation disabled (TMPn reset asynchronously[Note 1]).
1	TMPn operation enabled. TMPn operation started.

TPnCKS2	TPnCKS1	TPnCKS0	Internal count clock selection	
			n = 0, 2	n = 1, 3
0	0	0	f_{XX}	
0	0	1	$f_{XX}/2$	
0	1	0	$f_{XX}/4$	
0	1	1	$f_{XX}/8$	
1	0	0	$f_{XX}/16$	
1	0	1	$f_{XX}/32$	
1	1	0	$f_{XX}/64$	
1	1	1	$f_{XX}/128$	f_{XT}[Note 2]

Notes 1. TPn0PT0.TPnOVF bit, 16-bit counter, timer output (TOPn0, TOPn1 pins)

2. Counting operation cannot be performed with the subclock when the main clock is stopped.

Cautions 1. Set the TPnCKS2 to TPnCKS0 bits when the TPnCE bit = 0. When the value of the TPnCE bit is changed from 0 to 1, the TPnCKS2 to TPnCKS0 bits can be set simultaneously.

2. Be sure to clear bits 3 to 6 to "0".

Remark f_{XX}: Main clock frequency

f_{XT}: Subclock frequency

(2) TMPn control register 1 (TPnCTL1)

The TPnCTL1 register is an 8-bit register that controls the operation of TMPn.

This register can be read or written in 8-bit or 1-bit units.

Reset sets this register to 00H.

(1/2)

After reset: 00H R/W Address: TP0CTL1 FFFFF591H, TP1CTL1 FFFFF5A1H, TP2CTL1 FFFFF5B1H, TP3CTL1 FFFFF5C1H

	7	6	5	4	3	2	1	0
TPnCTL1 (n = 0 to 3)	TPnSYE	TPnEST	TPnEEE	0	0	TPnMD2	TPnMD1	TPnMD0

TPnSYE	Tuned operation mode enable control
0	Independent operation mode (asynchronous operation mode)
1	Tuned operation mode (specification of slave operation) In this mode, timer P can operate in synchronization with a master timer. Master timer: TMP0 — Slave timer: TMP1, – Master timer: TMP2 — Slave timer: TMP3, TMQ0 For the tuned operation mode, see **6.6 Timer Tuned Operation Function**. **Caution Be sure to clear the TP0SYE and TP2SYE bits to 0.**

TPnEST	Software trigger control
0	–
1	Generate a valid signal for external trigger input. • In one-shot pulse output mode: A one-shot pulse is output with writing 1 to the TPnEST bit as the trigger. • In external trigger pulse output mode: A PWM waveform is output with writing 1 to the TPnEST bit as the trigger.

Cautions 1. The TPnEST bit is valid only in the external trigger pulse output mode or one-shot pulse output mode. In any other mode, writing 1 to this bit is ignored.

2. Be sure to clear bits 3 and 4 to "0".

(2/2)

TPnEEE	Count clock selection
0	Disable operation with external event count input. (Perform counting with the count clock selected by the TPnCTL0.TPnCK0 to TPnCK2 bits.)
1	Enable operation with external event count input. (Perform counting at the valid edge of the external event count input signal.)
The TPnEEE bit selects whether counting is performed with the internal count clock or the valid edge of the external event count input.	

TPnMD2	TPnMD1	TPnMD0	Timer mode selection
0	0	0	Interval timer mode
0	0	1	External event count mode
0	1	0	External trigger pulse output mode
0	1	1	One-shot pulse output mode
1	0	0	PWM output mode
1	0	1	Free-running timer mode
1	1	0	Pulse width measurement mode
1	1	1	Setting prohibited

Cautions 1. External event count input is selected in the external event count mode regardless of the value of the TPnEEE bit.

2. Set the TPnEEE and TPnMD2 to TPnMD0 bits when the TPnCTL0.TPnCE bit = 0. (The same value can be written when the TPnCE bit = 1.) The operation is not guaranteed when rewriting is performed with the TPnCE bit = 1. If rewriting was mistakenly performed, clear the TPnCE bit to 0 and then set the bits again.

(3) TMPn I/O control register 0 (TPnIOC0)

The TPnIOC0 register is an 8-bit register that controls the timer output (TOPn0, TOPn1 pins).

This register can be read or written in 8-bit or 1-bit units.

Reset sets this register to 00H.

After reset: 00H R/W Address: TP0IOC0 FFFFF592H, TP1IOC0 FFFFF5A2H, TP2IOC0 FFFFF5B2H, TP3IOC0 FFFFF5C2H

	7	6	5	4	3	2	1	0
TPnIOC0	0	0	0	0	TPnOL1	TPnOE1	TPnOL0	TPnOE0

(n = 0 to 3)

TPnOL1	TOPn1 pin output level setting
0	TOPn1 pin output inversion disabled
1	TOPn1 pin output inversion enabled

TPnOE1	TOPn1 pin output setting
0	Timer output disabled • When TPnOL1 bit = 0: Low level is output from the TOPn1 pin • When TPnOL1 bit = 1: High level is output from the TOPn1 pin
1	Timer output enabled (a square wave is output from the TOPn1 pin).

TPnOL0	TOPn0 pin output level setting
0	TOPn0 pin output inversion disabled
1	TOPn0 pin output inversion enabled

TPnOE0	TOPn0 pin output setting
0	Timer output disabled • When TPnOL0 bit = 0: Low level is output from the TOPn0 pin • When TPnOL0 bit = 1: High level is output from the TOPn0 pin
1	Timer output enabled (a square wave is output from the TOPn0 pin).

Cautions 1. Rewrite the TPnOL1, TPnOE1, TPnOL0, and TPnOE0 bits when the TPnCTL0.TPnCE bit = 0. (The same value can be written when the TPnCE bit = 1.) If rewriting was mistakenly performed, clear the TPnCE bit to 0 and then set the bits again.

2. Even if the TPnOLm bit is manipulated when the TPnCE and TPnOEm bits are 0, the TOPnm pin output level varies (m = 0, 1).

(4) TMPn I/O control register 1 (TPnIOC1)

The TPnIOC1 register is an 8-bit register that controls the valid edge of the capture trigger input signals (TIPn0, TIPn1 pins).

This register can be read or written in 8-bit or 1-bit units.

Reset sets this register to 00H.

After reset: 00H R/W Address: TP0IOC1 FFFFF593H, TP1IOC1 FFFFF5A3H, TP2IOC1 FFFFF5B3H, TP3IOC1 FFFFF5C3H

	7	6	5	4	3	2	1	0
TPnIOC1	0	0	0	0	TPnIS3	TPnIS2	TPnIS1	TPnIS0

(n = 0 to 3)

TPnIS3	TPnIS2	Capture trigger input signal (TIPn1 pin) valid edge setting
0	0	No edge detection (capture operation invalid)
0	1	Detection of rising edge
1	0	Detection of falling edge
1	1	Detection of both edges

TPnIS1	TPnIS0	Capture trigger input signal (TIPn0 pin) valid edge setting
0	0	No edge detection (capture operation invalid)
0	1	Detection of rising edge
1	0	Detection of falling edge
1	1	Detection of both edges

Cautions 1. Rewrite the TPnIS3 to TPnIS0 bits when the TPnCTL0.TPnCE bit = 0. (The same value can be written when the TPnCE bit = 1.) If rewriting was mistakenly performed, clear the TPnCE bit to 0 and then set the bits again.

2. The TPnIS3 to TPnIS0 bits are valid only in the free-running timer mode and the pulse width measurement mode. In all other modes, a capture operation is not possible.

(5) TMPn I/O control register 2 (TPnIOC2)

The TPnIOC2 register is an 8-bit register that controls the valid edge of the external event count input signal (TIPn0 pin) and external trigger input signal (TIPn0 pin).

This register can be read or written in 8-bit or 1-bit units.

Reset sets this register to 00H.

After reset: 00H R/W Address: TP0IOC2 FFFFF594H, TP1IOC2 FFFFF5A4H, TP2IOC2 FFFFF5B4H, TP3IOC2 FFFFF5C4H

	7	6	5	4	3	2	1	0
TPnIOC2	0	0	0	0	TPnEES1	TPnEES0	TPnETS1	TPnETS0

(n = 0 to 3)

TPnEES1	TPnEES0	External event count input signal (TIPn0 pin) valid edge setting
0	0	No edge detection (external event count invalid)
0	1	Detection of rising edge
1	0	Detection of falling edge
1	1	Detection of both edges

TPnETS1	TPnETS0	External trigger input signal (TIPn0 pin) valid edge setting
0	0	No edge detection (external trigger invalid)
0	1	Detection of rising edge
1	0	Detection of falling edge
1	1	Detection of both edges

Cautions 1. Rewrite the TPnEES1, TPnEES0, TPnETS1, and TPnETS0 bits when the TPnCTL0.TPnCE bit = 0. (The same value can be written when the TPnCE bit = 1.) If rewriting was mistakenly performed, clear the TPnCE bit to 0 and then set the bits again.

2. The TPnEES1 and TPnEES0 bits are valid only when the TPnCTL1.TPnEEE bit = 1 or when the external event count mode (TPnCTL1.TPnMD2 to TPnCTL1.TPnMD0 bits = 001) has been set.

3. The TPnETS1 and TPnETS0 bits are valid only when the external trigger pulse output mode (TPnCTL1.TPnMD2 to TPnCTL1.TPnMD0 bits = 010) or the one-shot pulse output mode (TPnCTL1.TPnMD2 to TPnCTL1.TPnMD0 = 011) is set.

(6) TMPn option register 0 (TPnOPT0)

The TPnOPT0 register is an 8-bit register used to set the capture/compare operation and detect an overflow.

This register can be read or written in 8-bit or 1-bit units.

Reset sets this register to 00H.

After reset: 00H R/W Address: TP0OPT0 FFFFF595H, TP1OPT0 FFFFF5A5H, TP2OPT0 FFFFF5B5H, TP3OPT0 FFFFF5C5H

	7	6	5	4	3	2	1	0
TPnOPT0 (n = 0 to 3)	0	0	TPnCCS1	TPnCCS0	0	0	0	TPnOVF

TPnCCS1	TPnCCR1 register capture/compare selection
0	Compare register selected
1	Capture register selected
The TPnCCS1 bit setting is valid only in the free-running timer mode.	

TPnCCS0	TPnCCR0 register capture/compare selection
0	Compare register selected
1	Capture register selected
The TPnCCS0 bit setting is valid only in the free-running timer mode.	

TPnOVF	TMPn overflow detection flag
Set (1)	Overflow occurred
Reset (0)	TPnOVF bit 0 written or TPnCTL0.TPnCE bit = 0

- The TPnOVF bit is set to 1 when the 16-bit counter count value overflows from FFFFH to 0000H in the free-running timer mode or the pulse width measurement mode.
- An interrupt request signal (INTTPnOV) is generated at the same time that the TPnOVF bit is set to 1. The INTTPnOV signal is not generated in modes other than the free-running timer mode and the pulse width measurement mode.
- The TPnOVF bit is not cleared even when the TPnOVF bit or the TPnOPT0 register are read when the TPnOVF bit = 1.
- The TPnOVF bit can be both read and written, but the TPnOVF bit cannot be set to 1 by software. Writing 1 has no influence on the operation of TMPn.

Cautions 1. Rewrite the TPnCCS1 and TPnCCS0 bits when the TPnCE bit = 0. (The same value can be written when the TPnCE bit = 1.) If rewriting was mistakenly performed, clear the TPnCE bit to 0 and then set the bits again.

2. Be sure to clear bits 1 to 3, 6, and 7 to “0”.

(7) TMPn capture/compare register 0 (TPnCCR0)

The TPnCCR0 register can be used as a capture register or a compare register depending on the mode.

This register can be used as a capture register or a compare register only in the free-running timer mode, depending on the setting of the TPnOPT0.TPnCCS0 bit. In the pulse width measurement mode, the TPnCCR0 register can be used only as a capture register. In any other mode, this register can be used only as a compare register.

The TPnCCR0 register can be read or written during operation.

This register can be read or written in 16-bit units.

Reset sets this register to 0000H.

Caution Accessing the TPnCCR0 register is prohibited in the following statuses. For details, see 3.4.8 (2) Accessing specific on-chip peripheral I/O registers.

- **When the CPU operates with the subclock and the main clock oscillation is stopped**
- **When the CPU operates with the internal oscillation clock**

After reset: 0000H R/W Address: TP0CCR0 FFFFF596H, TP1CCR0 FFFFF5A6H, TP2CCR0 FFFFF5B6H, TP3CCR0 FFFFF5C6H

	15	14	13	12	11	10	9	8	7	6	5	4	3	2	1	0
TPnCCR0 (n = 0 to 3)																

(a) Function as compare register

The TPnCCR0 register can be rewritten even when the TPnCTL0.TPnCE bit = 1.

The set value of the TPnCCR0 register is transferred to the CCR0 buffer register. When the value of the 16-bit counter matches the value of the CCR0 buffer register, a compare match interrupt request signal (INTTPnCC0) is generated. If TOPn0 pin output is enabled at this time, the output of the TOPn0 pin is inverted.

When the TPnCCR0 register is used as a cycle register in the interval timer mode, external event count mode, external trigger pulse output mode, one-shot pulse output mode, or PWM output mode, the value of the 16-bit counter is cleared (0000H) if its count value matches the value of the CCR0 buffer register.

(b) Function as capture register

When the TPnCCR0 register is used as a capture register in the free-running timer mode, the count value of the 16-bit counter is stored in the TPnCCR0 register if the valid edge of the capture trigger input pin (TIPn0 pin) is detected. In the pulse-width measurement mode, the count value of the 16-bit counter is stored in the TPnCCR0 register and the 16-bit counter is cleared (0000H) if the valid edge of the capture trigger input pin (TIPn0) is detected.

Even if the capture operation and reading the TPnCCR0 register conflict, the correct value of the TPnCCR0 register can be read.

The following table shows the functions of the capture/compare register in each mode, and how to write data to the compare register.

Table 6-2. Function of Capture/Compare Register in Each Mode and How to Write Compare Register

Operation Mode	Capture/Compare Register	How to Write Compare Register
Interval timer	Compare register	Anytime write
External event counter	Compare register	Anytime write
External trigger pulse output	Compare register	Batch write
One-shot pulse output	Compare register	Anytime write
PWM output	Compare register	Batch write
Free-running timer	Capture/compare register	Anytime write
Pulse width measurement	Capture register	–

(8) TMPn capture/compare register 1 (TPnCCR1)

The TPnCCR1 register can be used as a capture register or a compare register depending on the mode.

This register can be used as a capture register or a compare register only in the free-running timer mode, depending on the setting of the TPnOPT0.TPnCCS1 bit. In the pulse width measurement mode, the TPnCCR1 register can be used only as a capture register. In any other mode, this register can be used only as a compare register.

The TPnCCR1 register can be read or written during operation.

This register can be read or written in 16-bit units.

Reset sets this register to 0000H.

Caution Accessing the TPnCCR1 register is prohibited in the following statuses. For details, see 3.4.8 (2) Accessing specific on-chip peripheral I/O registers.

- **When the CPU operates with the subclock and the main clock oscillation is stopped**
- **When the CPU operates with the internal oscillation clock**

After reset: 0000H R/W Address: TP0CCR1 FFFFF598H, TP1CCR1 FFFFF5A8H, TP2CCR1 FFFFF5B8H, TP3CCR1 FFFFF5C8H

	15	14	13	12	11	10	9	8	7	6	5	4	3	2	1	0
TPnCCR1 (n = 0 to 3)																

(a) Function as compare register

The TPnCCR1 register can be rewritten even when the TPnCTL0.TPnCE bit = 1.

The set value of the TPnCCR1 register is transferred to the CCR1 buffer register. When the value of the 16-bit counter matches the value of the CCR1 buffer register, a compare match interrupt request signal (INTTPnCC1) is generated. If TOPn1 pin output is enabled at this time, the output of the TOPn1 pin is inverted.

(b) Function as capture register

When the TPnCCR1 register is used as a capture register in the free-running timer mode, the count value of the 16-bit counter is stored in the TPnCCR1 register if the valid edge of the capture trigger input pin (TIPn1 pin) is detected. In the pulse-width measurement mode, the count value of the 16-bit counter is stored in the TPnCCR1 register and the 16-bit counter is cleared (0000H) if the valid edge of the capture trigger input pin (TIPn1) is detected.

Even if the capture operation and reading the TPnCCR1 register conflict, the correct value of the TPnCCR1 register can be read.

The following table shows the functions of the capture/compare register in each mode, and how to write data to the compare register.

Table 6-3. Function of Capture/Compare Register in Each Mode and How to Write Compare Register

Operation Mode	Capture/Compare Register	How to Write Compare Register
Interval timer	Compare register	Anytime write
External event counter	Compare register	Anytime write
External trigger pulse output	Compare register	Batch write
One-shot pulse output	Compare register	Anytime write
PWM output	Compare register	Batch write
Free-running timer	Capture/compare register	Anytime write
Pulse width measurement	Capture register	–

(9) TMPn counter read buffer register (TPnCNT)

The TPnCNT register is a read buffer register that can read the count value of the 16-bit counter.

If this register is read when the TPnCTL0.TPnCE bit = 1, the count value of the 16-bit timer can be read.

This register is read-only, in 16-bit units.

The value of the TPnCNT register is cleared to 0000H when the TPnCE bit = 0. If the TPnCNT register is read at this time, the value of the 16-bit counter (FFFFH) is not read, but 0000H is read.

The value of the TPnCNT register is cleared to 0000H after reset, as the TPnCE bit is cleared to 0.

Caution Accessing the TPnCNT register is prohibited in the following statuses. For details, see 3.4.8 (2) Accessing specific on-chip peripheral I/O registers.

- **When the CPU operates with the subclock and the main clock oscillation is stopped**
- **When the CPU operates with the internal oscillation clock**

After reset: 0000H R Address: TP0CNT FFFFF59AH, TP1CNT FFFFF5AAH, TP2CNT FFFFF5BAH, TP3CNT FFFFF5CAH

	15	14	13	12	11	10	9	8	7	6	5	4	3	2	1	0
TPnCNT (n = 0 to 3)																

(10) TIPnm pin noise elimination control register (PnmNFC)

The PnmNFC register is an 8-bit register that sets the digital noise filter of the timer P input pin for noise elimination.

This register can be read or written in 8-bit or 1-bit units.

Reset sets this register to 00H.

After reset: 00H R/W Address: P00NFC : FFFFFB00H (TIP00 pin)
P01NFC : FFFFFB04H (TIP01 pin)
P10NFC : FFFFFB08H (TIP10 pin)
P11NFC : FFFFFB0CH (TIP11 pin)
P20NFC : FFFFFB10H (TIP20 pin)
P21NFC : FFFFFB14H (TIP21 pin)
P30NFC : FFFFFB18H (TIP30 pin)
P31NFC : FFFFFB1CH (TIP31 pin)

	7	6	5	4	3	2	1	0
PnmNFC	0	NFSTS	0	0	0	NFC2	NFC1	NFC0

(n = 0 to 3, m = 0, 1)

NFSTS	Setting of number of times of sampling by digital noise filter
0	3 times
1	2 times

NFC2	NFC1	NFC0	Sampling clock	
			n = 0, 2	n = 1, 3
0	0	0	f_{XX}	
0	0	1	$f_{XX}/2$	
0	1	0	$f_{XX}/4$	
0	1	1	$f_{XX}/16$	$f_{XX}/8$
1	0	0	$f_{XX}/32$	$f_{XX}/16$
1	0	1	$f_{XX}/64$	f_{XT}
Other than above			Setting prohibited	

Cautions 1. Be sure to clear bits 3 to 5 and 7 to "0".

2. A signal input to the timer input pin (TIPnm) before the PnmNFC register is set is output with digital noise eliminated.
Therefore, set the sampling clock (NFC2 to NFC0) and the number of times of sampling (NFSTS) by using the PnmNFC register, wait for initialization time = (Sampling clock) × (Number of times of sampling), and enable the timer operation.

Remark The width of the noise that can be accurately eliminated is (Sampling clock) × (Number of times of sampling – 1). Even noise with a width narrower than this may cause a miscount if it is synchronized with the sampling clock.

6.5 Operation

TMPn can perform the following operations.

Operation	TPnCTL1.TPnEST Bit (Software Trigger Bit)	TIPn0 Pin (External Trigger Input)	Capture/Compare Register Setting	Compare Register Write
Interval timer mode	Invalid	Invalid	Compare only	Anytime write
External event count mode[Note 1]	Invalid	Invalid	Compare only	Anytime write
External trigger pulse output mode[Note 2]	Valid	Valid	Compare only	Batch write
One-shot pulse output mode[Note 2]	Valid	Valid	Compare only	Anytime write
PWM output mode	Invalid	Invalid	Compare only	Batch write
Free-running timer mode	Invalid	Invalid	Switching enabled	Anytime write
Pulse width measurement mode[Note 2]	Invalid	Invalid	Capture only	Not applicable

Notes 1. To use the external event count mode, specify that the valid edge of the TIPn0 pin capture trigger input is not detected (by clearing the TPnIOC1.TPnIS1 and TPnIOC1.TPnIS0 bits to “00”).

2. When using the external trigger pulse output mode, one-shot pulse output mode, and pulse width measurement mode, select the internal clock as the count clock (by clearing the TPnCTL1.TPnEEE bit to 0).

Remark n = 0 to 3

6.5.1 Interval timer mode (TPnMD2 to TPnMD0 bits = 000)

In the interval timer mode, an interrupt request signal (INTTPnCC0) is generated at the specified interval if the TPnCTL0.TPnCE bit is set to 1. A square wave whose half cycle is equal to the interval can be output from the TOPn0 pin.

Usually, the TPnCCR1 register is not used in the interval timer mode.

Figure 6-2. Configuration of Interval Timer

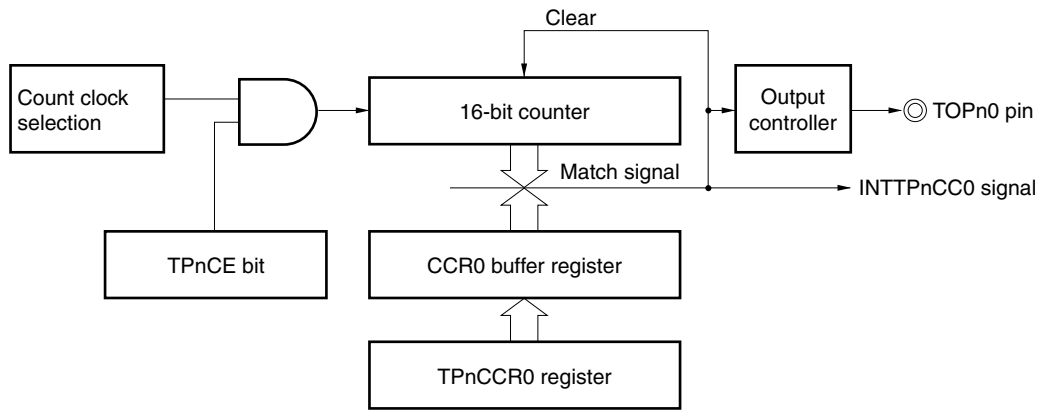

Remark n = 0 to 3

Figure 6-3. Basic Timing of Operation in Interval Timer Mode

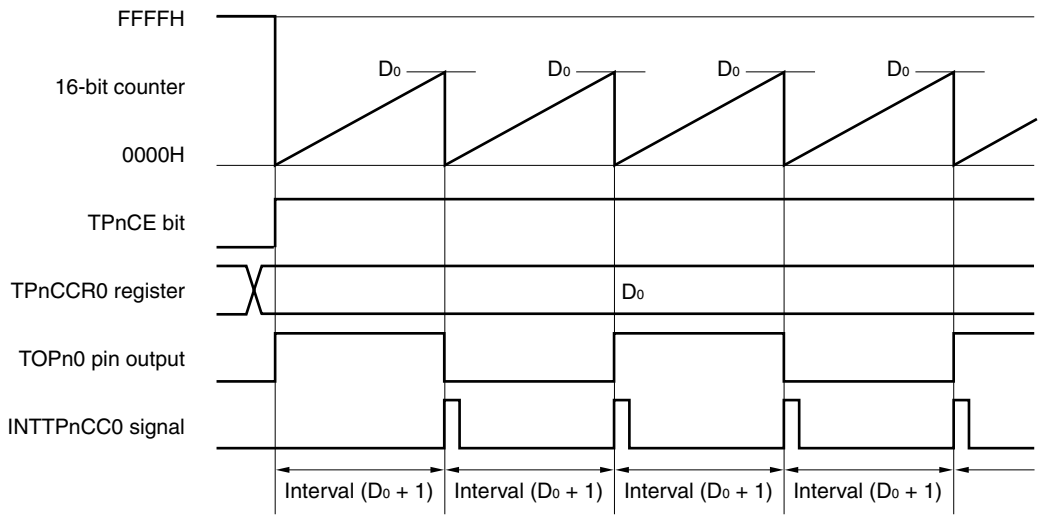

Remark n = 0 to 3

When the TPnCE bit is set to 1, the value of the 16-bit counter is cleared from FFFFH to 0000H in synchronization with the count clock, and the counter starts counting. At this time, the output of the TOPn0 pin is inverted. Additionally, the set value of the TPnCCR0 register is transferred to the CCR0 buffer register.

When the count value of the 16-bit counter matches the value of the CCR0 buffer register, the 16-bit counter is cleared to 0000H, the output of the TOPn0 pin is inverted, and a compare match interrupt request signal (INTTPnCC0) is generated.

The interval can be calculated by the following expression.

Interval = (Set value of TPnCCR0 register + 1) × Count clock cycle

Remark n = 0 to 3

Figure 6-4. Register Setting for Interval Timer Mode Operation (1/2)

(a) TMPn control register 0 (TPnCTL0)

	TPnCE					TPnCKS2	TPnCKS1	TPnCKS0
TPnCTL0	0/1	0	0	0	0	0/1	0/1	0/1

Select count clock

0: Stop counting
1: Enable counting

(b) TMPn control register 1 (TPnCTL1)

	TPnSYE	TPnEST	TPnEEE			TPnMD2	TPnMD1	TPnMD0
TPnCTL1	0	0	0/1 Note	0	0	0	0	0

0, 0, 0:
Interval timer mode

0: Operate on count clock selected by TPnCKS0 to TPnCKS2 bits
1: Count with external event count input signal

Note This bit can be set to 1 only when the interrupt request signals (INTTPnCC0 and INTTPnCC1) are masked by the interrupt mask flags (TPnCCMK0 and TPnCCMK1) and timer output (TOPn1) is performed at the same time. However, set the TPnCCR0 and TPnCCR1 registers to the same value (see **6.5.1 (2) (d) Operation of TPnCCR1 register**).

Figure 6-4. Register Setting for Interval Timer Mode Operation (2/2)

(c) TMPn I/O control register 0 (TPnIOC0)

					TPnOL1	TPnOE1	TPnOL0	TPnOE0
TPnIOC0	0	0	0	0	0/1	0/1	0/1	0/1

0: Disable TOPn0 pin output
1: Enable TOPn0 pin output

Setting of output level with operation of TOPn0 pin disabled
0: Low level
1: High level

0: Disable TOPn1 pin output
1: Enable TOPn1 pin output

Setting of output level with operation of TOPn1 pin disabled
0: Low level
1: High level

(d) TMPn counter read buffer register (TPnCNT)

By reading the TPnCNT register, the count value of the 16-bit counter can be read.

(e) TMPn capture/compare register 0 (TPnCCR0)

If the TPnCCR0 register is set to D_0, the interval is as follows.

Interval = $(D_0 + 1) \times$ Count clock cycle

(f) TMPn capture/compare register 1 (TPnCCR1)

Usually, the TPnCCR1 register is not used in the interval timer mode. However, the set value of the TPnCCR1 register is transferred to the CCR1 buffer register. A compare match interrupt request signal (INTTPnCC1) is generated when the count value of the 16-bit counter matches the value of the CCR1 buffer register.

Therefore, mask the interrupt request by using the corresponding interrupt mask flag (TPnCCMK1).

Remarks 1. TMPn I/O control register 1 (TPnIOC1), TMPn I/O control register 2 (TPnIOC2), and TMPn option register 0 (TPnOPT0) are not used in the interval timer mode.

2. n = 0 to 3

(1) Interval timer mode operation flow

Figure 6-5. Software Processing Flow in Interval Timer Mode

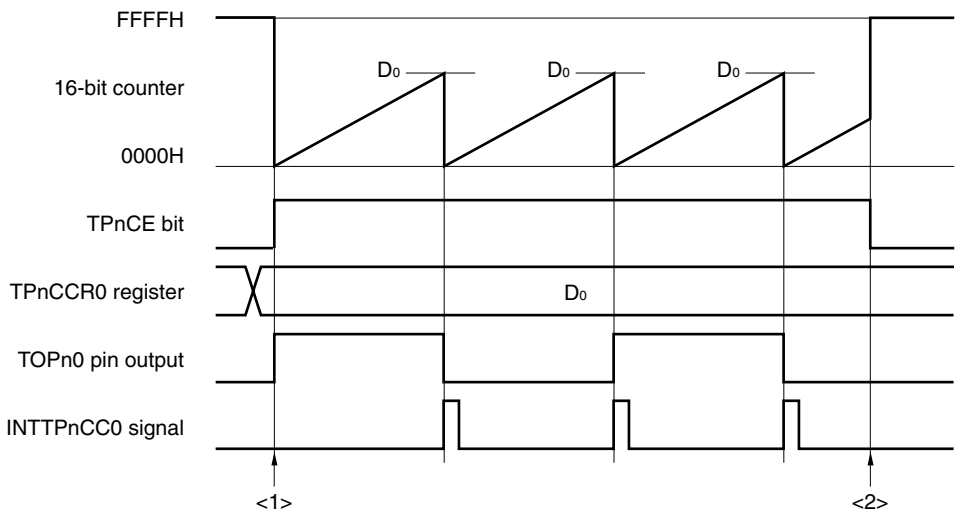

<1> Count operation start flow

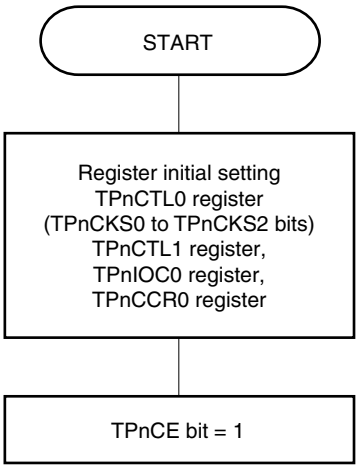

Initial setting of these registers is performed before setting the TPnCE bit to 1.

The TPnCKS0 to TPnCKS2 bits can be set at the same time when counting has been started (TPnCE bit = 1).

<2> Count operation stop flow

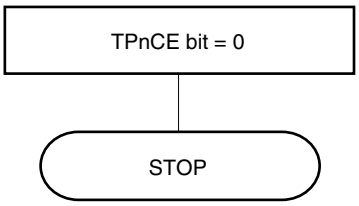

The counter is initialized and counting is stopped by clearing the TPnCE bit to 0.

Remark n = 0 to 3

(2) Interval timer mode operation timing

(a) Operation if TPnCCR0 register is set to 0000H

If the TPnCCR0 register is set to 0000H, the INTTPnCC0 signal is generated at each count clock subsequent to the first count clock, and the output of the TOPn0 pin is inverted.

The value of the 16-bit counter is always 0000H.

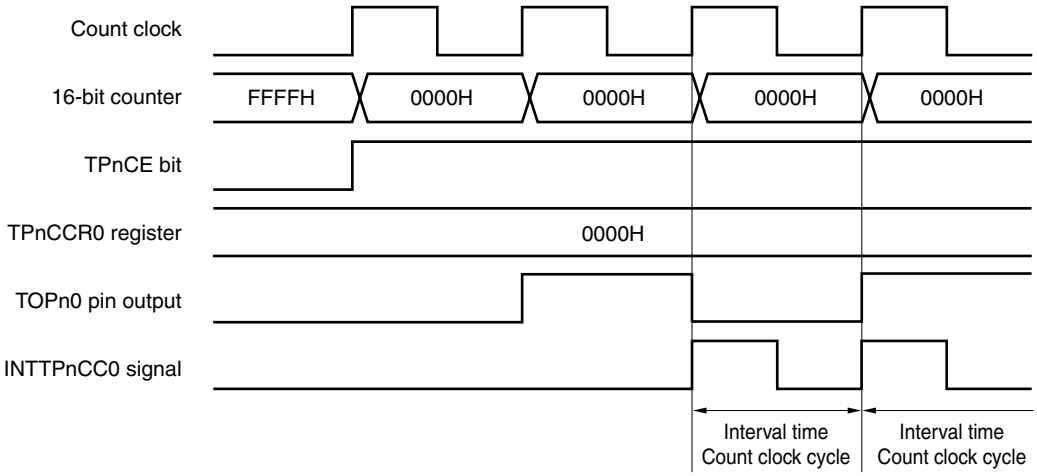

Remark n = 0 to 3

(b) Operation if TPnCCR0 register is set to FFFFH

If the TPnCCR0 register is set to FFFFH, the 16-bit counter counts up to FFFFH. The counter is cleared to 0000H in synchronization with the next count-up timing. The INTTPnCC0 signal is generated and the output of the TOPn0 pin is inverted. At this time, an overflow interrupt request signal (INTTPnOV) is not generated, nor is the overflow flag (TPnOPT0.TPnOVF bit) set to 1.

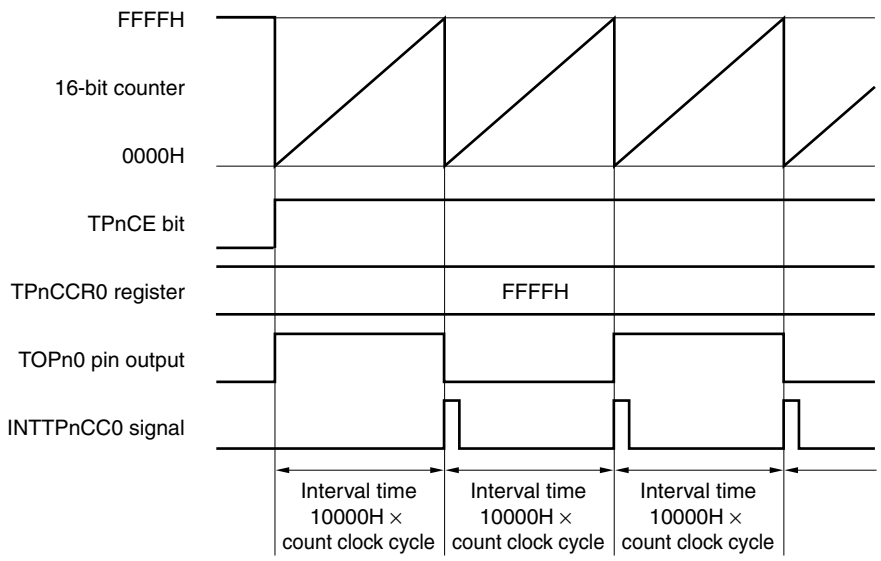

Remark n = 0 to 3

(c) Notes on rewriting TPnCCR0 register

To change the value of the TPnCCR0 register to a smaller value, stop counting once and then change the set value.

If the value of the TPnCCR0 register is rewritten to a smaller value during counting, the 16-bit counter may overflow.

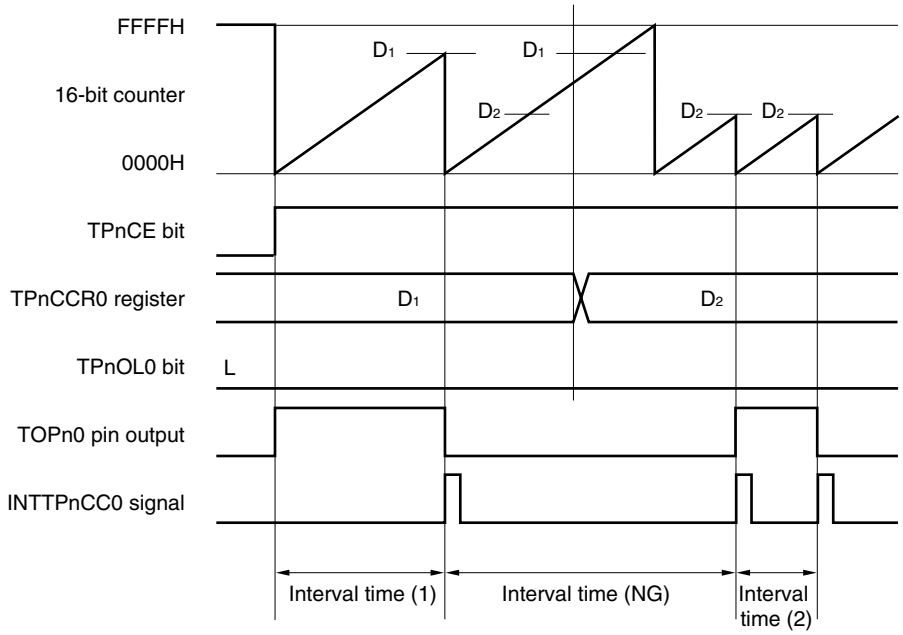

Remarks 1. Interval time (1): $(D_1 + 1) \times$ Count clock cycle

Interval time (NG): $(10000H + D_2 + 1) \times$ Count clock cycle

Interval time (2): $(D_2 + 1) \times$ Count clock cycle

2. n = 0 to 3

If the value of the TPnCCR0 register is changed from D_1 to D_2 while the count value is greater than D_2 but less than D_1, the count value is transferred to the CCR0 buffer register as soon as the TPnCCR0 register has been rewritten. Consequently, the value of the 16-bit counter that is compared is D_2.

Because the count value has already exceeded D_2, however, the 16-bit counter counts up to FFFFH, overflows, and then counts up again from 0000H. When the count value matches D_2, the INTTPnCC0 signal is generated and the output of the TOPn0 pin is inverted.

Therefore, the INTTPnCC0 signal may not be generated at the interval time "$(D_1 + 1) \times$ Count clock cycle" or "$(D_2 + 1) \times$ Count clock cycle" originally expected, but may be generated at an interval of "$(10000H + D_2 + 1) \times$ Count clock period".

(d) Operation of TPnCCR1 register

Figure 6-6. Configuration of TPnCCR1 Register

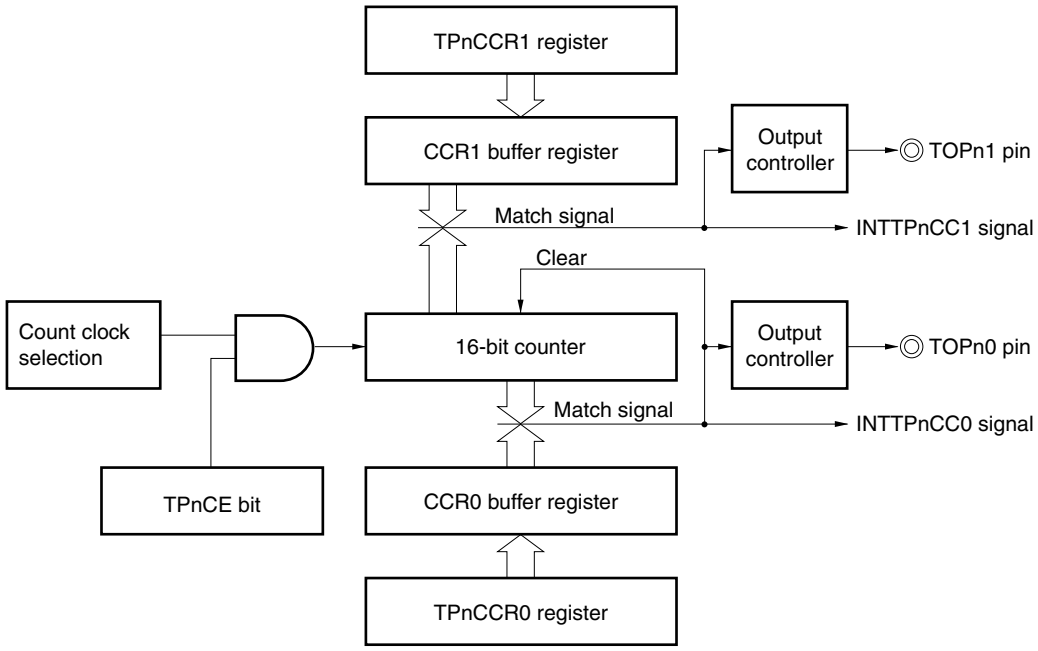

Remark n = 0 to 3

If the set value of the TPnCCR1 register is less than the set value of the TPnCCR0 register, the INTTPnCC1 signal is generated once per cycle. At the same time, the output of the TOPn1 pin is inverted. The TOPn1 pin outputs a square wave with the same cycle as that output by the TOPn0 pin.

Figure 6-7. Timing Chart When $D_{01} \geq D_{11}$

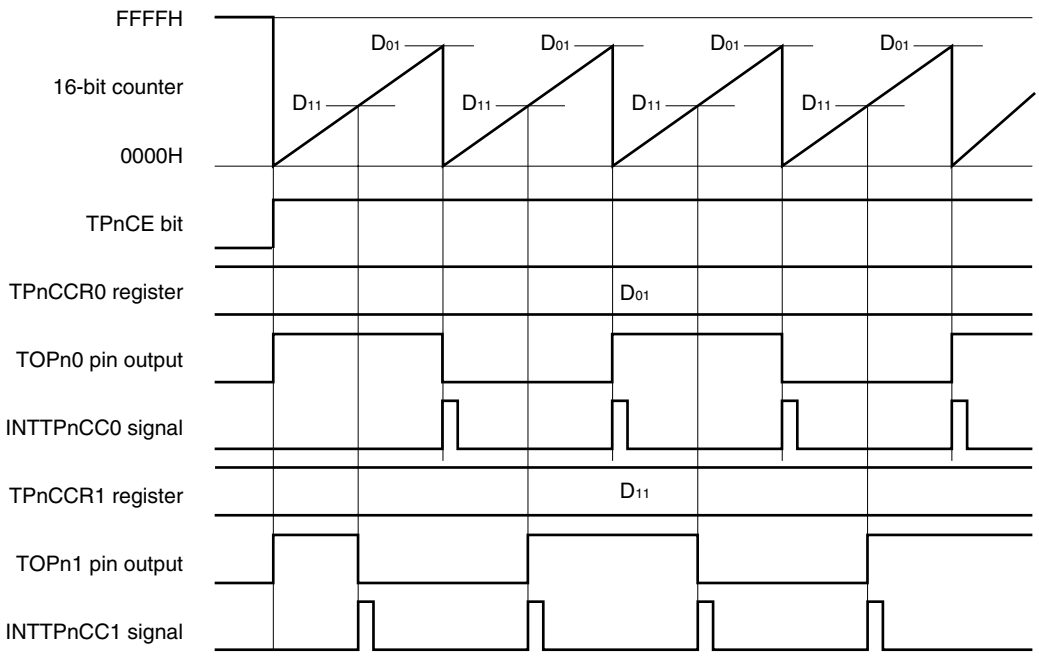

Remark n = 0 to 3

If the set value of the TPnCCR1 register is greater than the set value of the TPnCCR0 register, the count value of the 16-bit counter does not match the value of the TPnCCR1 register. Consequently, the INTTPnCC1 signal is not generated, nor is the output of the TOPn1 pin changed.

Figure 6-8. Timing Chart When $D_{01} < D_{11}$

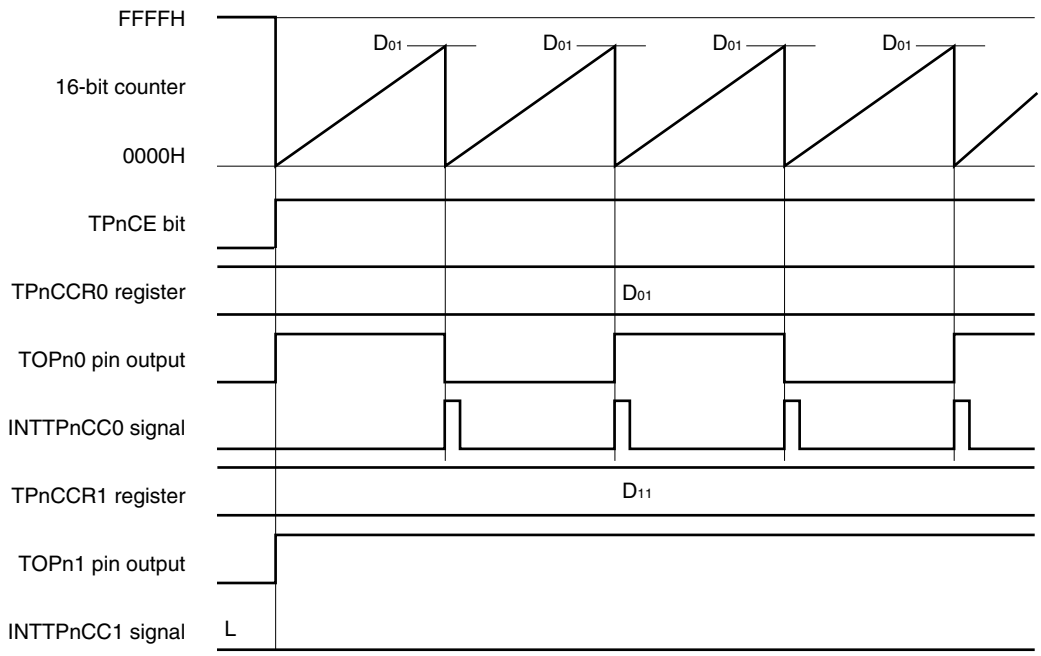

Remark n = 0 to 3

6.5.2 External event count mode (TPnMD2 to TPnMD0 bits = 001)

In the external event count mode, the valid edge of the external event count input is counted when the TPnCTL0.TPnCE bit is set to 1, and an interrupt request signal (INTTPnCC0) is generated each time the specified number of edges have been counted. The TOPn0 pin cannot be used.

Usually, the TPnCCR1 register is not used in the external event count mode.

Figure 6-9. Configuration in External Event Count Mode

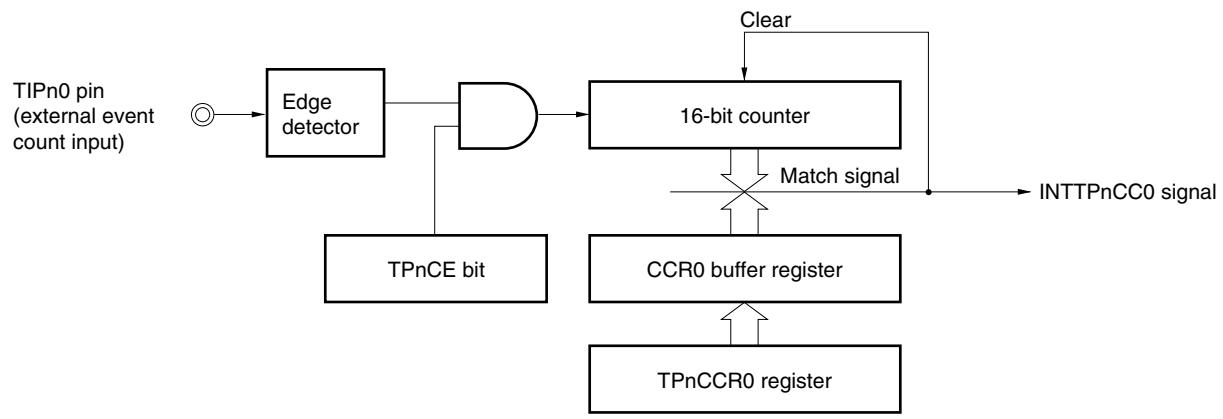

Remark n = 0 to 3

Figure 6-10. Basic Timing in External Event Count Mode

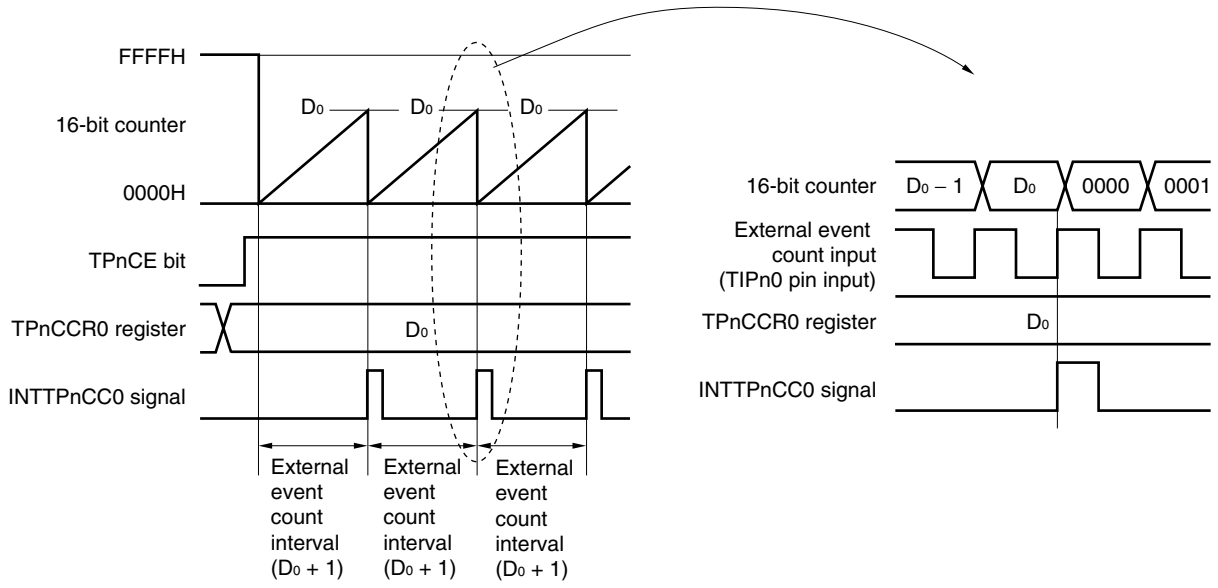

Remarks 1. This figure shows the basic timing when the rising edge is specified as the valid edge of the external event count input.

2. n = 0 to 3

When the TPnCE bit is set to 1, the value of the 16-bit counter is cleared from FFFFH to 0000H. The counter counts each time the valid edge of external event count input is detected. Additionally, the set value of the TPnCCR0 register is transferred to the CCR0 buffer register.

When the count value of the 16-bit counter matches the value of the CCR0 buffer register, the 16-bit counter is cleared to 0000H, and a compare match interrupt request signal (INTTPnCC0) is generated.

The INTTPnCC0 signal is generated each time the valid edge of the external event count input has been detected (set value of TPnCCR0 register + 1) times.

Figure 6-11. Register Setting for Operation in External Event Count Mode (1/2)

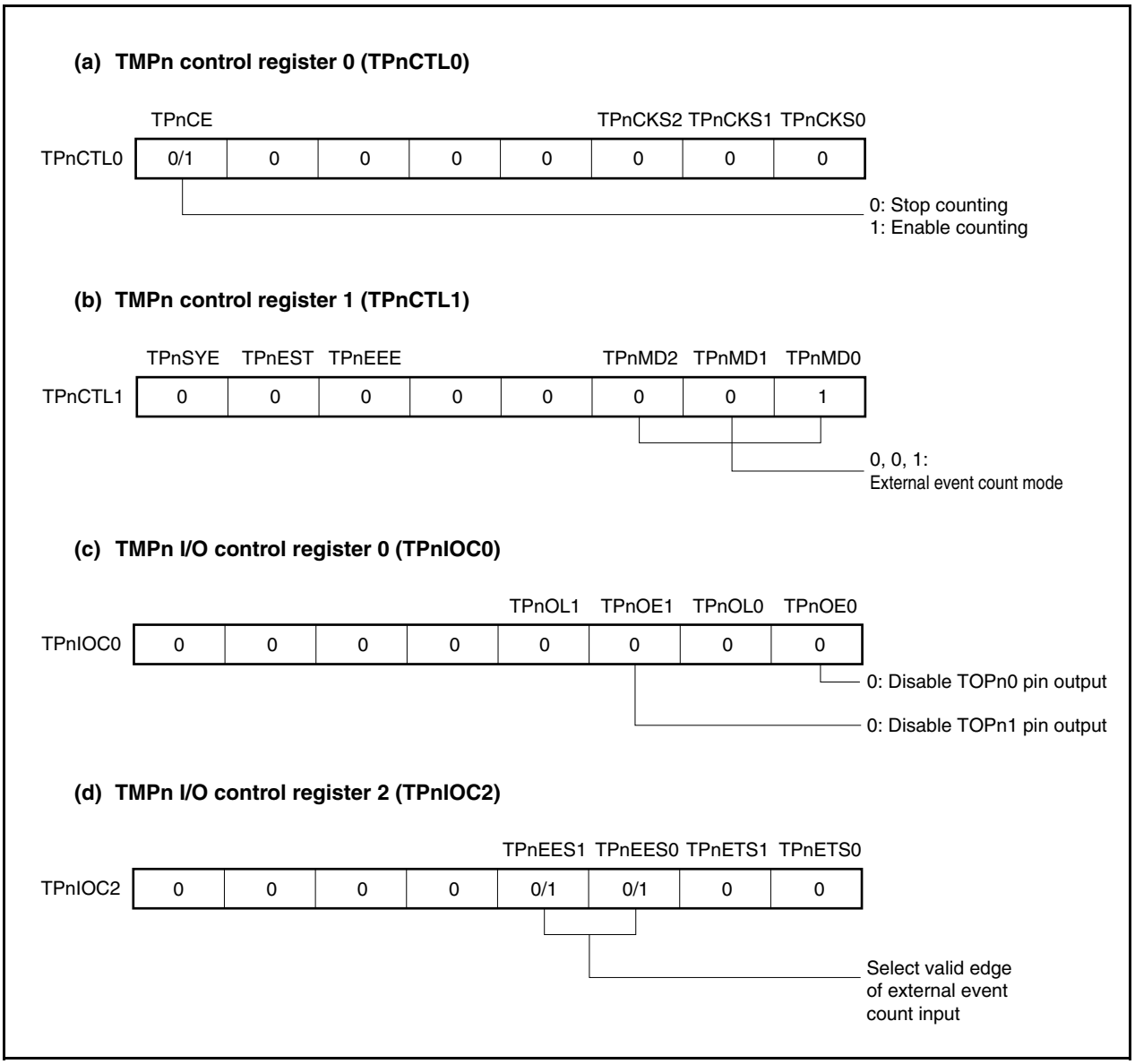

Figure 6-11. Register Setting for Operation in External Event Count Mode (2/2)

(e) TMPn counter read buffer register (TPnCNT)

The count value of the 16-bit counter can be read by reading the TPnCNT register.

(f) TMPn capture/compare register 0 (TPnCCR0)

If D_0 is set to the TPnCCR0 register, the counter is cleared and a compare match interrupt request signal (INTTPnCC0) is generated when the number of external event counts reaches (D_0 + 1).

(g) TMPn capture/compare register 1 (TPnCCR1)

Usually, the TPnCCR1 register is not used in the external event count mode. However, the set value of the TPnCCR1 register is transferred to the CCR1 buffer register. When the count value of the 16-bit counter matches the value of the CCR1 buffer register, a compare match interrupt request signal (INTTPnCC1) is generated.

Therefore, mask the interrupt signal by using the interrupt mask flag (TPnCCMK1).

Remarks 1. TMPn I/O control register 1 (TPnIOC1) and TMPn option register 0 (TPnOPT0) are not used in the external event count mode.

2. n = 0 to 3

(1) External event count mode operation flow

Figure 6-12. Flow of Software Processing in External Event Count Mode

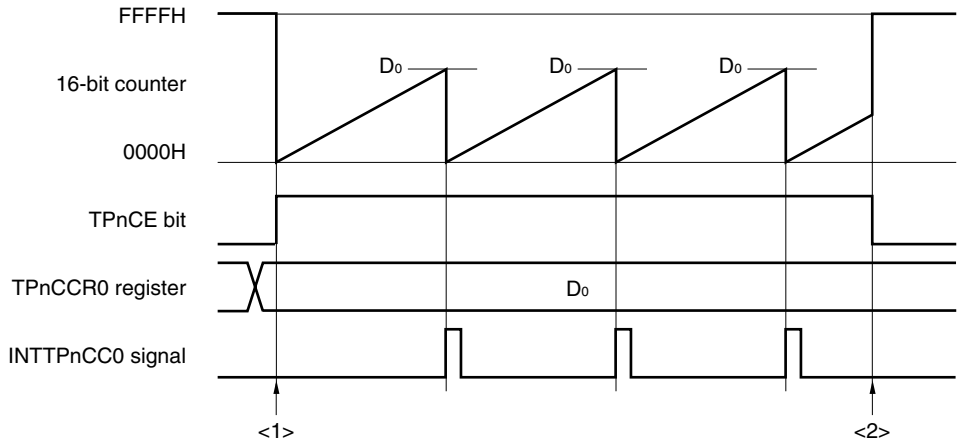

<1> Count operation start flow

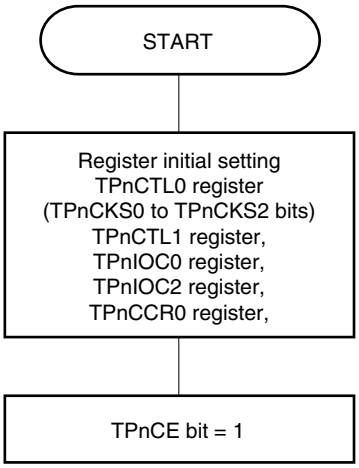

Initial setting of these registers is performed before setting the TPnCE bit to 1.

The TPnCKS0 to TPnCKS2 bits can be set at the same time when counting has been started (TPnCE bit = 1).

<2> Count operation stop flow

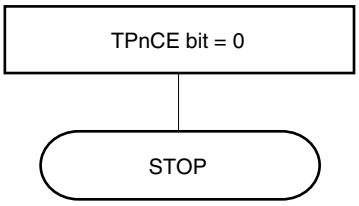

The counter is initialized and counting is stopped by clearing the TPnCE bit to 0.

Remark n = 0 to 3

(2) Operation timing in external event count mode

Cautions 1. In the external event count mode, do not set the TPnCCR0 register to 0000H.

2. In the external event count mode, use of the timer output is disabled. If performing timer output using external event count input, set the interval timer mode, and select the operation enabled by the external event count input for the count clock (TPnCTL1.TPnMD2 to TPnCTL1.TPnMD0 bits = 000, TPnCTL1.TPnEEE bit = 1).

(a) Operation if TPnCCR0 register is set to FFFFH

If the TPnCCR0 register is set to FFFFH, the 16-bit counter counts to FFFFH each time the valid edge of the external event count signal has been detected. The 16-bit counter is cleared to 0000H in synchronization with the next count-up timing, and the INTTPnCC0 signal is generated. At this time, the TPnOPT0.TPnOVF bit is not set.

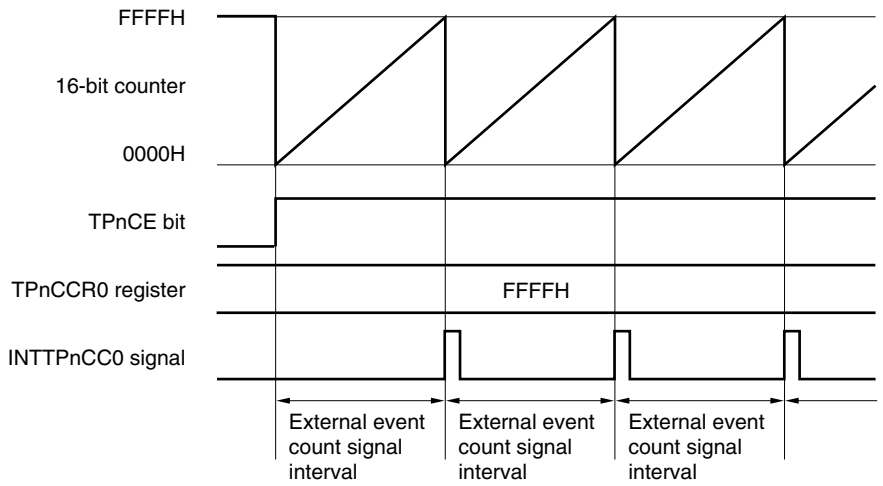

Remark n = 0 to 3

(b) Notes on rewriting the TPnCCR0 register

To change the value of the TPnCCR0 register to a smaller value, stop counting once and then change the set value.

If the value of the TPnCCR0 register is rewritten to a smaller value during counting, the 16-bit counter may overflow.

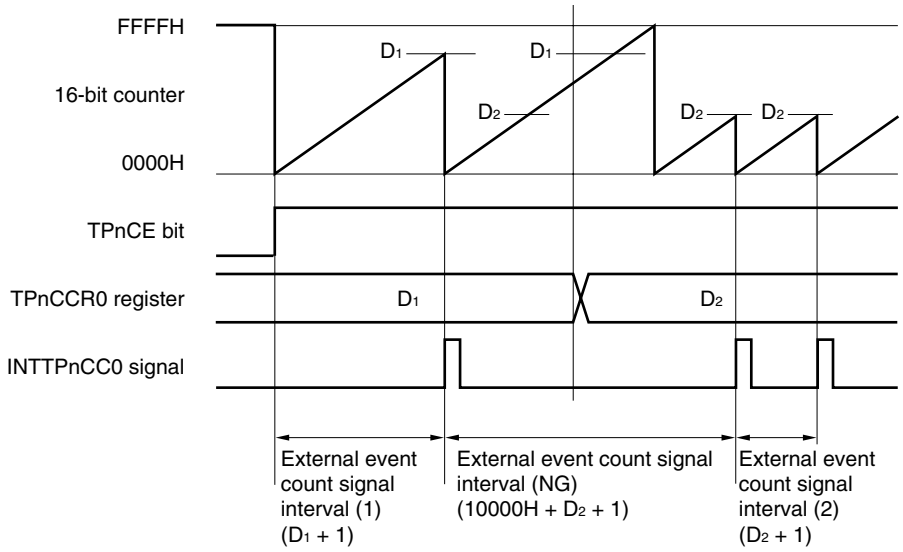

Remark n = 0 to 3

If the value of the TPnCCR0 register is changed from D_1 to D_2 while the count value is greater than D_2 but less than D_1, the count value is transferred to the CCR0 buffer register as soon as the TPnCCR0 register has been rewritten. Consequently, the value that is compared with the 16-bit counter is D_2.

Because the count value has already exceeded D_2, however, the 16-bit counter counts up to FFFFH, overflows, and then counts up again from 0000H. When the count value matches D_2, the INTTPnCC0 signal is generated.

Therefore, the INTTPnCC0 signal may not be generated at the valid edge count of "(D_1 + 1) times" or "(D_2 + 1) times" originally expected, but may be generated at the valid edge count of "(10000H + D_2 + 1) times".

(c) Operation of TPnCCR1 register

Figure 6-13. Configuration of TPnCCR1 Register

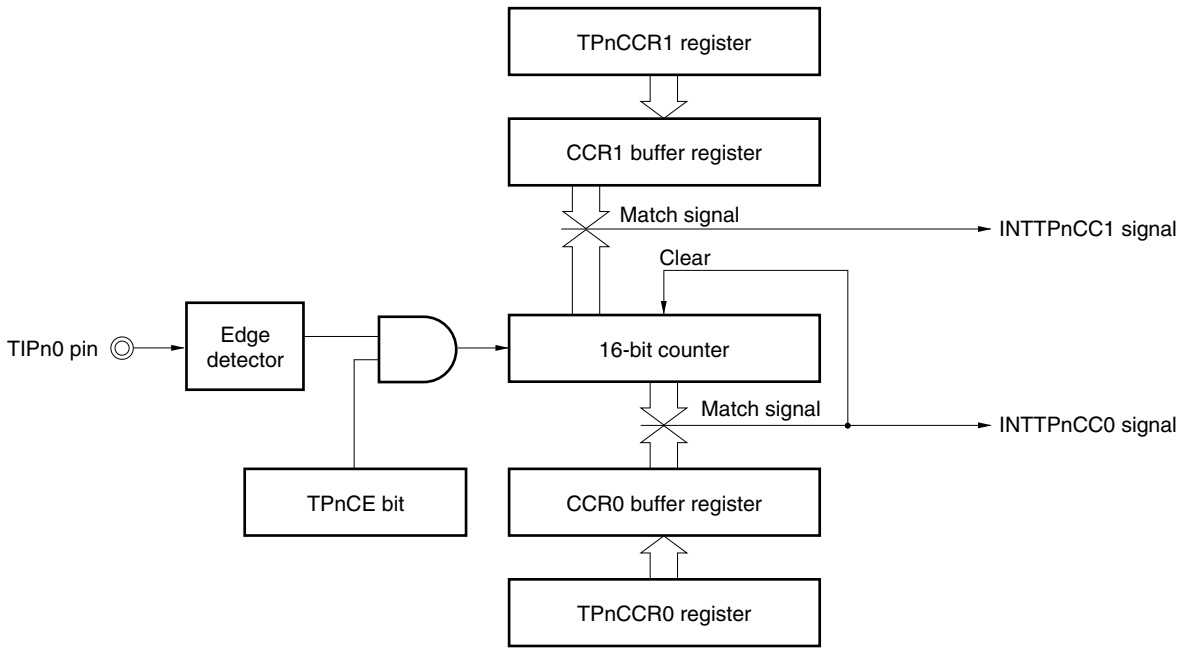

Remark n = 0 to 3

If the set value of the TPnCCR1 register is smaller than the set value of the TPnCCR0 register, the INTTPnCC1 signal is generated once per cycle.

Figure 6-14. Timing Chart When $D_{01} \geq D_{11}$

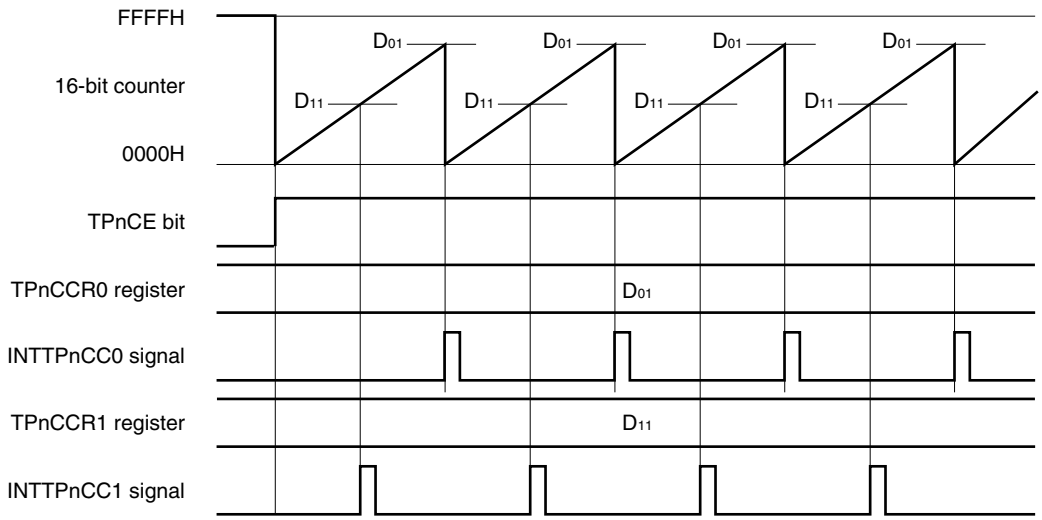

Remark n = 0 to 3

If the set value of the TPnCCR1 register is greater than the set value of the TPnCCR0 register, the INTTPnCC1 signal is not generated because the count value of the 16-bit counter and the value of the TPnCCR1 register do not match.

Figure 6-15. Timing Chart When $D_{01} < D_{11}$

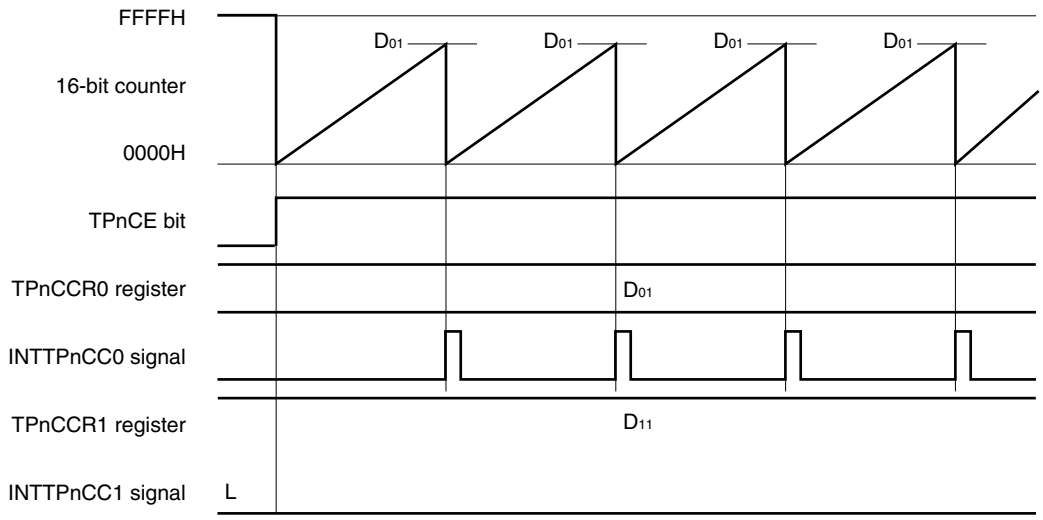

Remark n = 0 to 3

6.5.3 External trigger pulse output mode (TPnMD2 to TPnMD0 bits = 010)

In the external trigger pulse output mode, 16-bit timer/event counter P waits for a trigger when the TPnCTL0.TPnCE bit is set to 1. When the valid edge of an external trigger input signal is detected, 16-bit timer/event counter P starts counting, and outputs a PWM waveform from the TOPn1 pin.

Pulses can also be output by generating a software trigger instead of using the external trigger. When using a software trigger, a square wave that has one cycle of the PWM waveform as half its cycle can also be output from the TOPn0 pin.

Figure 6-16. Configuration in External Trigger Pulse Output Mode

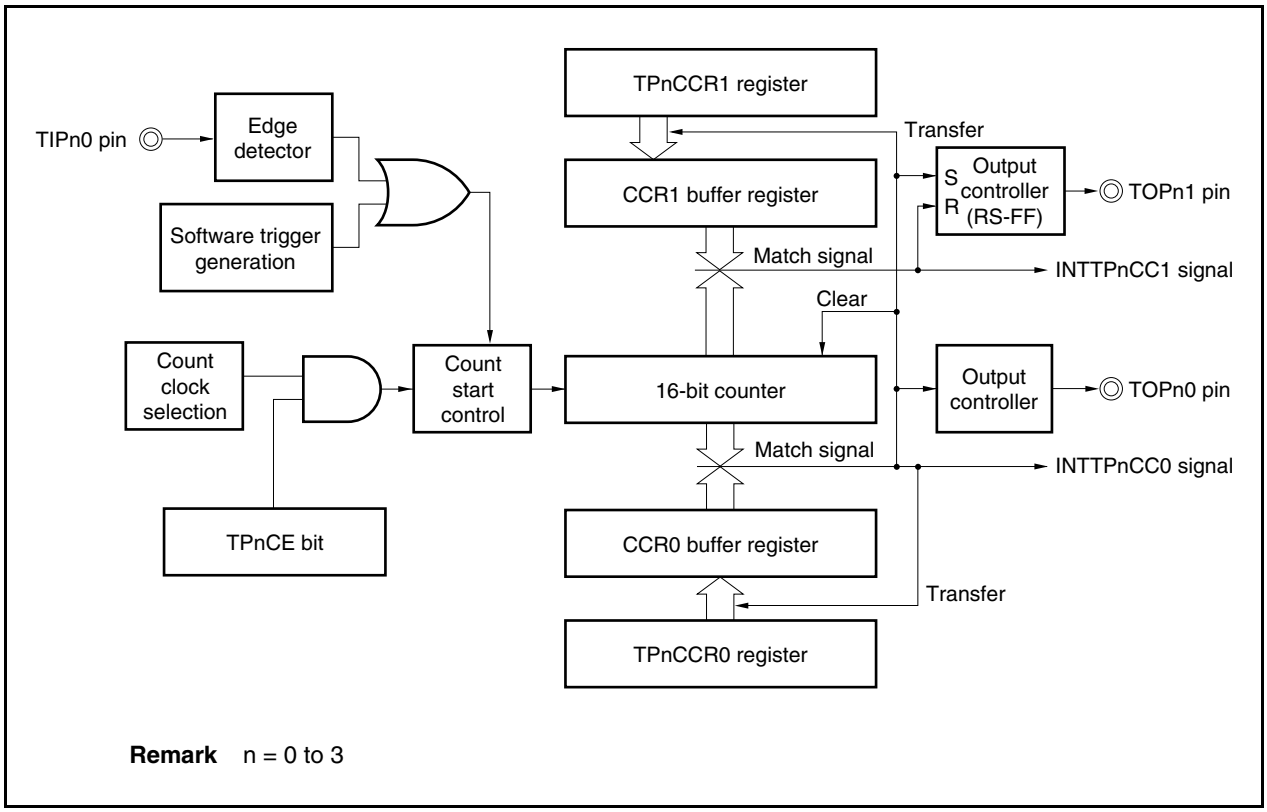

Remark n = 0 to 3

Figure 6-17. Basic Timing in External Trigger Pulse Output Mode

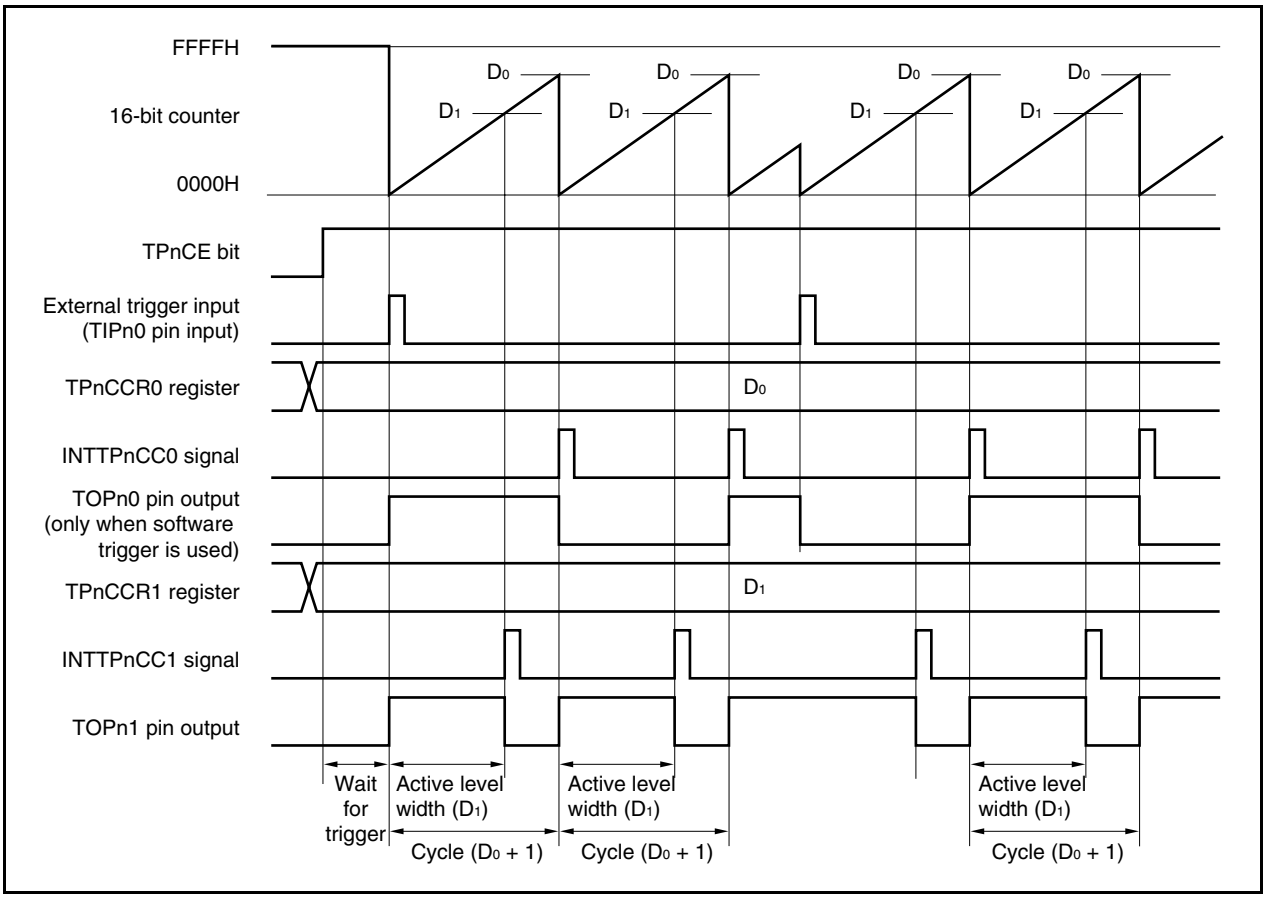

16-bit timer/event counter P waits for a trigger when the TPnCE bit is set to 1. When the trigger is generated, the 16-bit counter is cleared from FFFFH to 0000H, starts counting at the same time, and outputs a PWM waveform from the TOPn1 pin. If the trigger is generated again while the counter is operating, the counter is cleared to 0000H and restarted. (The output of the TOPn0 pin is inverted. The TOPn1 pin outputs a high level regardless of the status (high/low) when a trigger occurs.)

The active level width, cycle, and duty factor of the PWM waveform can be calculated as follows.

Active level width = (Set value of TPnCCR1 register) × Count clock cycle
Cycle = (Set value of TPnCCR0 register + 1) × Count clock cycle
Duty factor = (Set value of TPnCCR1 register)/(Set value of TPnCCR0 register + 1)

The compare match request signal INTTPnCC0 is generated when the 16-bit counter counts next time after its count value matches the value of the CCR0 buffer register, and the 16-bit counter is cleared to 0000H. The compare match interrupt request signal INTTPnCC1 is generated when the count value of the 16-bit counter matches the value of the CCR1 buffer register.

The value set to the TPnCCRm register is transferred to the CCRm buffer register when the count value of the 16-bit counter matches the value of the CCRm buffer register and the 16-bit counter is cleared to 0000H.

The valid edge of an external trigger input signal, or setting the software trigger (TPnCTL1.TPnEST bit) to 1 is used as the trigger.

Remark n = 0 to 3, m = 0, 1

Figure 6-18. Setting of Registers in External Trigger Pulse Output Mode (1/2)

(a) TMPn control register 0 (TPnCTL0)

	TPnCE					TPnCKS2	TPnCKS1	TPnCKS0
TPnCTL0	0/1	0	0	0	0	0/1	0/1	0/1

Select count clock[Note 1]

0: Stop counting
1: Enable counting

(b) TMPn control register 1 (TPnCTL1)

	TPnSYE	TPnEST	TPnEEE			TPnMD2	TPnMD1	TPnMD0
TPnCTL1	0	0/1	0/1	0	0	0	1	0

0, 1, 0:
External trigger pulse output mode

0: Operate on count clock selected by TPnCKS0 to TPnCKS2 bits
1: Count with external event input signal

Generate software trigger when 1 is written

(c) TMPn I/O control register 0 (TPnIOC0)

					TPnOL1	TPnOE1	TPnOL0	TPnOE0
TPnIOC0	0	0	0	0	0/1	0/1	0/1	0/1[Note 2]

0: Disable TOPn0 pin output
1: Enable TOPn0 pin output

Settings of output level while operation of TOPn0 pin is disabled
0: Low level
1: High level

0: Disable TOPn1 pin output
1: Enable TOPn1 pin output

Specifies active level of TOPn1 pin output
0: Active-high
1: Active-low

- When TPnOL1 bit = 0

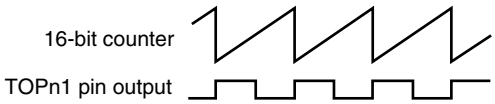

- When TPnOL1 bit = 1

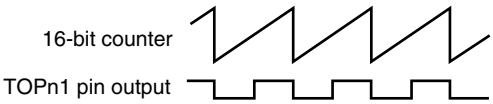

Notes 1. The setting is invalid when the TPnCTL1.TPnEEE bit = 1.

2. Clear this bit to 0 when the TOPn0 pin is not used in the external trigger pulse output mode.

Figure 6-18. Setting of Registers in External Trigger Pulse Output Mode (2/2)

(d) TMPn I/O control register 2 (TPnIOC2)

					TPnEES1	TPnEES0	TPnETS1	TPnETS0
TPnIOC2	0	0	0	0	0/1	0/1	0/1	0/1

Select valid edge of external trigger input

Select valid edge of external event count input

(e) TMPn counter read buffer register (TPnCNT)

The value of the 16-bit counter can be read by reading the TPnCNT register.

(f) TMPn capture/compare registers 0 and 1 (TPnCCR0 and TPnCCR1)

If D_0 is set to the TPnCCR0 register and D_1 to the TPnCCR1 register, the cycle and active level of the PWM waveform are as follows.

Cycle = $(D_0 + 1) \times$ Count clock cycle

Active level width = $D_1 \times$ Count clock cycle

Remarks 1. TMPn I/O control register 1 (TPnIOC1) and TMPn option register 0 (TPnOPT0) are not used in the external trigger pulse output mode.

2. n = 0 to 3

(1) Operation flow in external trigger pulse output mode

Figure 6-19. Software Processing Flow in External Trigger Pulse Output Mode (1/2)

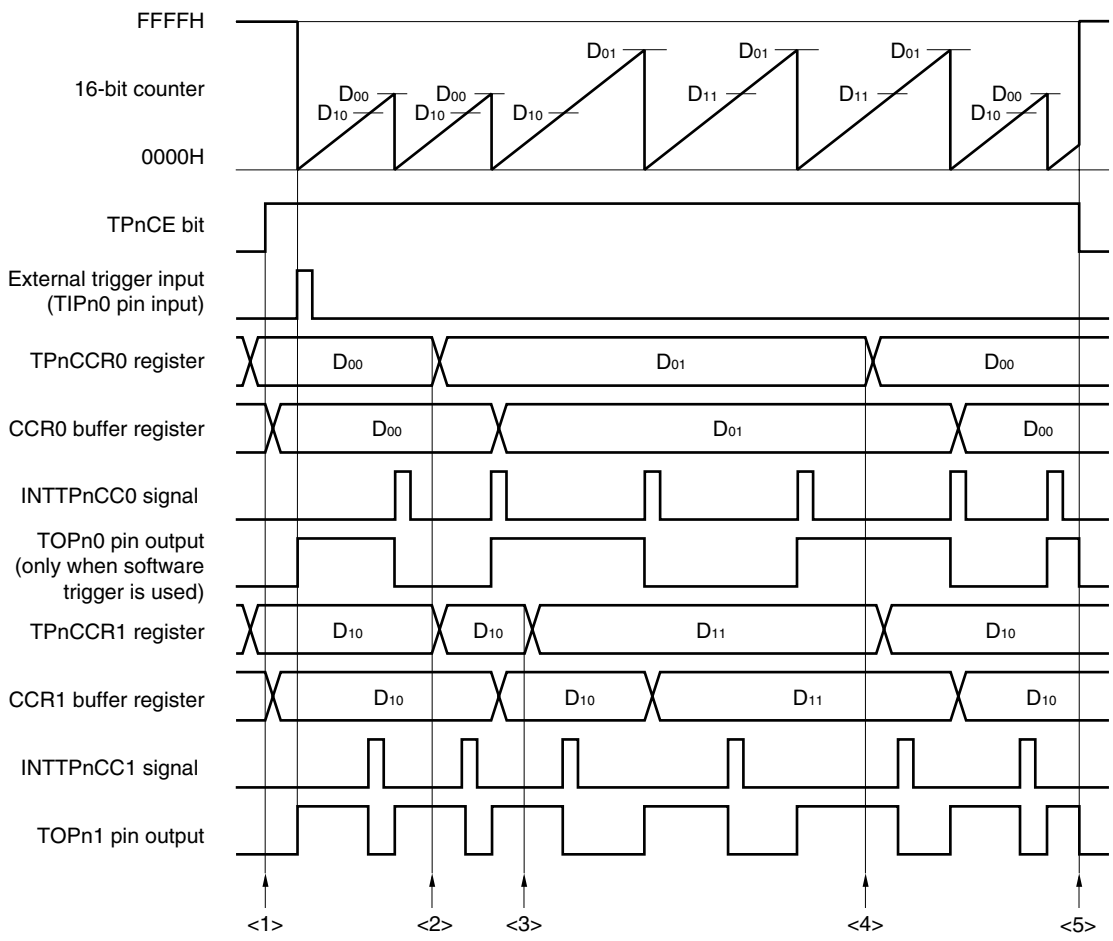

Remark n = 0 to 3

Figure 6-19. Software Processing Flow in External Trigger Pulse Output Mode (2/2)

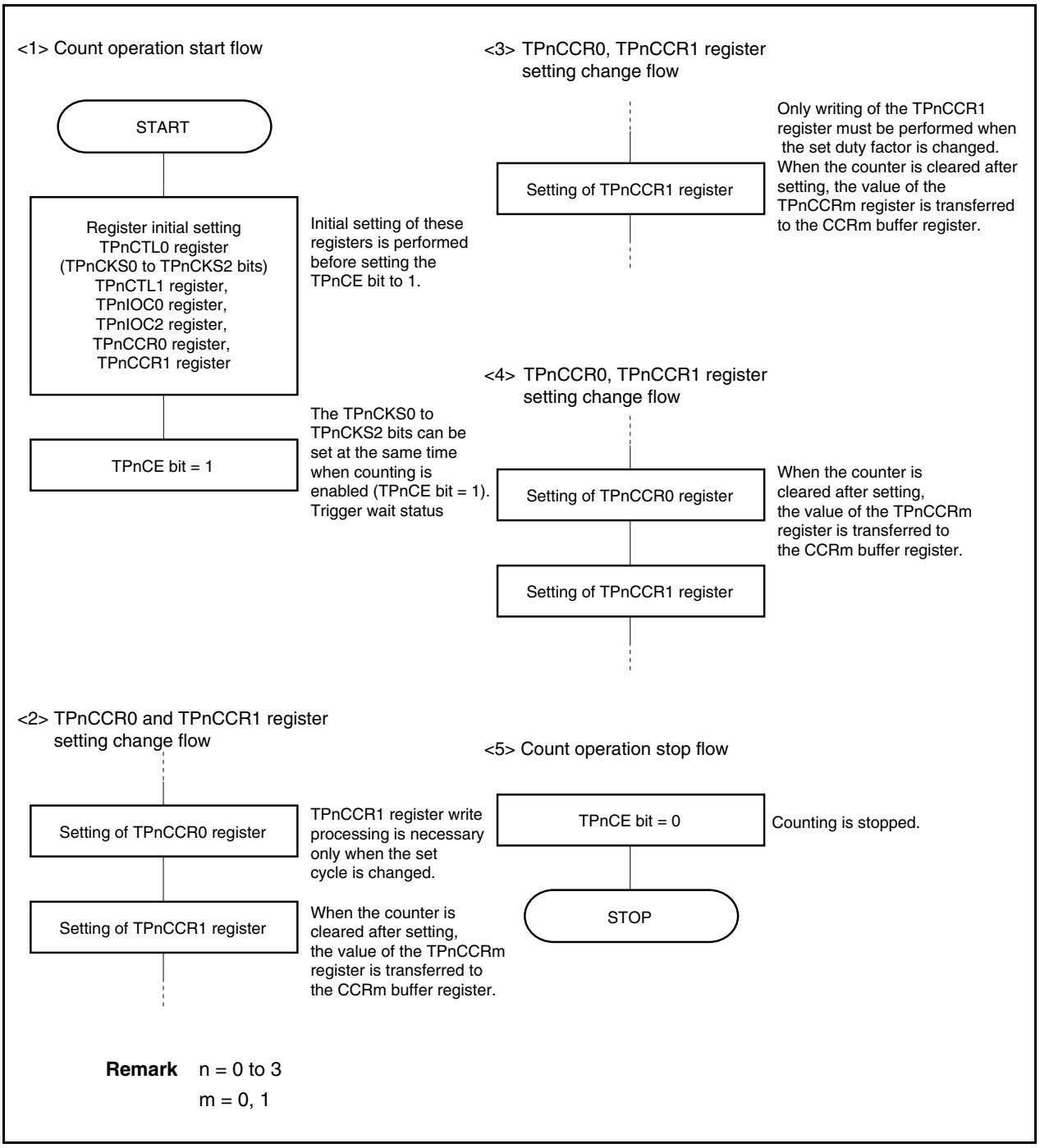

Remark n = 0 to 3
m = 0, 1

(2) External trigger pulse output mode operation timing

(a) Note on changing pulse width during operation

To change the PWM waveform while the counter is operating, write the TPnCCR1 register last.

Rewrite the TPnCCRm register after writing the TPnCCR1 register after the INTTPnCC0 signal is detected.

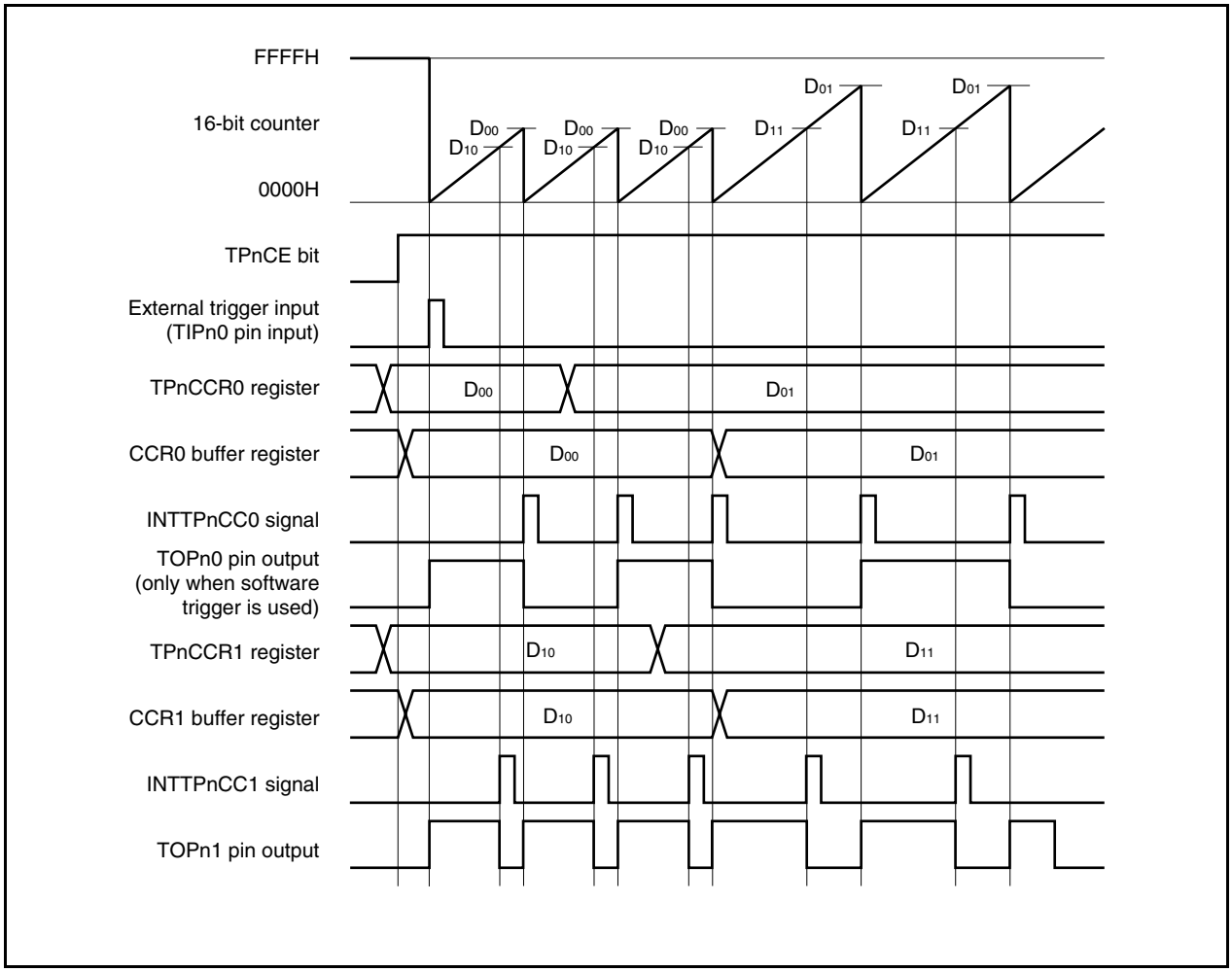

In order to transfer data from the TPnCCRm register to the CCRm buffer register, the TPnCCR1 register must be written.

To change both the cycle and active level width of the PWM waveform at this time, first set the cycle to the TPnCCR0 register and then set the active level width to the TPnCCR1 register.

To change only the cycle of the PWM waveform, first set the cycle to the TPnCCR0 register, and then write the same value to the TPnCCR1 register.

To change only the active level width (duty factor) of the PWM waveform, only the TPnCCR1 register has to be set.

After data is written to the TPnCCR1 register, the value written to the TPnCCRm register is transferred to the CCRm buffer register in synchronization with clearing of the 16-bit counter, and is used as the value compared with the 16-bit counter.

To write the TPnCCR0 or TPnCCR1 register again after writing the TPnCCR1 register once, do so after the INTTPnCC0 signal is generated. Otherwise, the value of the CCRm buffer register may become undefined because the timing of transferring data from the TPnCCRm register to the CCRm buffer register conflicts with writing the TPnCCRm register.

Remark n = 0 to 3
m = 0, 1

(b) 0%/100% output of PWM waveform

To output a 0% waveform, set the TPnCCR1 register to 0000H. If the set value of the TPnCCR0 register is FFFFH, the INTTPnCC1 signal is generated periodically.

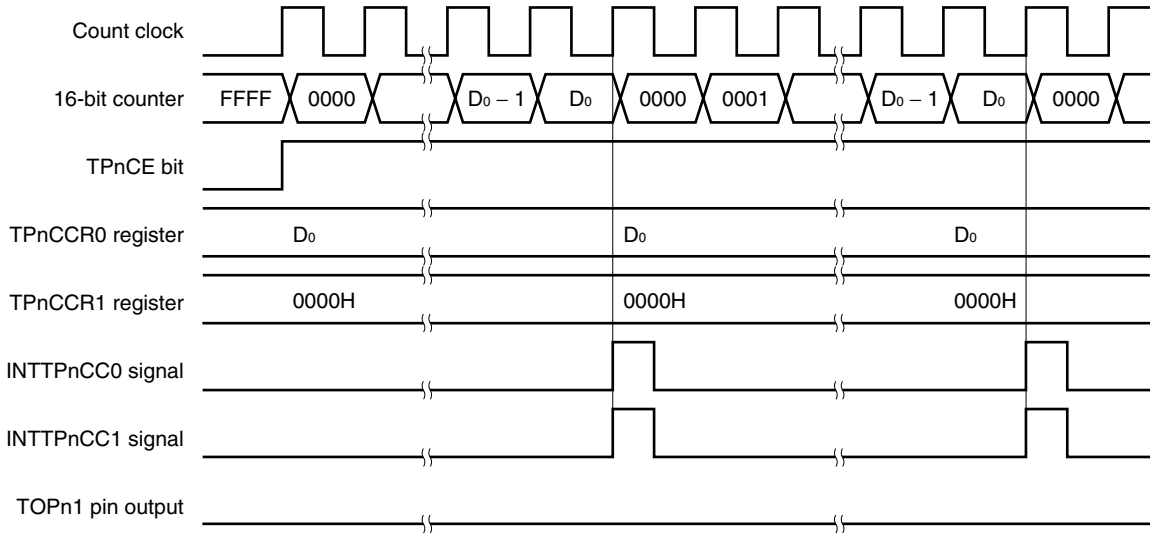

Remark n = 0 to 3

To output a 100% waveform, set a value of (set value of TPnCCR0 register + 1) to the TPnCCR1 register. If the set value of the TPnCCR0 register is FFFFH, 100% output cannot be produced.

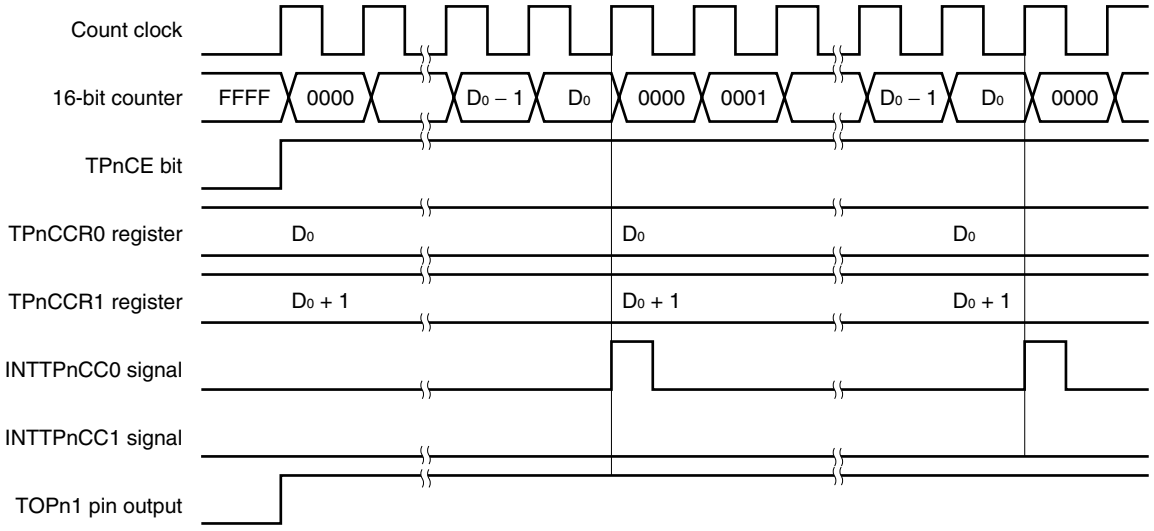

Remark n = 0 to 3

(c) Conflict between trigger detection and match with TPnCCR1 register

If the trigger is detected immediately after the INTTPnCC1 signal is generated, the 16-bit counter is immediately cleared to 0000H, the output signal of the TOPn1 pin is asserted, and the counter continues counting. Consequently, the inactive period of the PWM waveform is shortened.

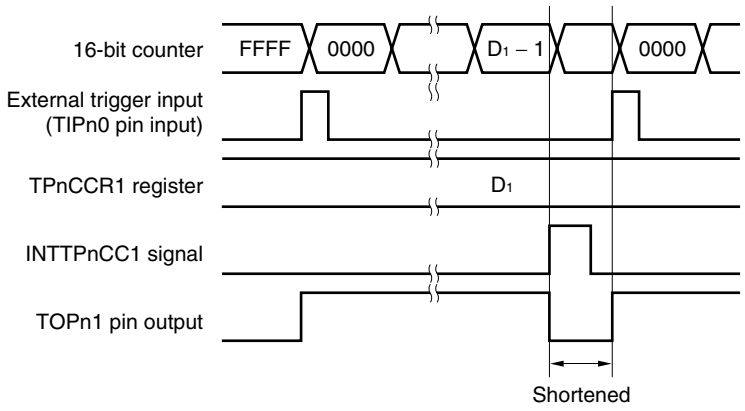

Remark n = 0 to 3

If the trigger is detected immediately before the INTTPnCC1 signal is generated, the INTTPnCC1 signal is not generated, and the 16-bit counter is cleared to 0000H and continues counting. The output signal of the TOPn1 pin remains active. Consequently, the active period of the PWM waveform is extended.

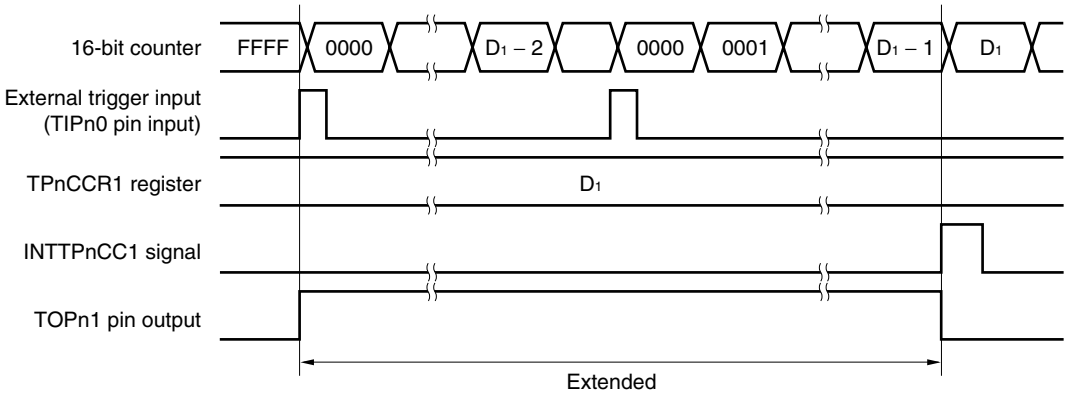

Remark n = 0 to 3

(d) Conflict between trigger detection and match with TPnCCR0 register

If the trigger is detected immediately after the INTTPnCC0 signal is generated, the 16-bit counter is cleared to 0000H and continues counting up. Therefore, the active period of the TOPn1 pin is extended by time from generation of the INTTPnCC0 signal to trigger detection.

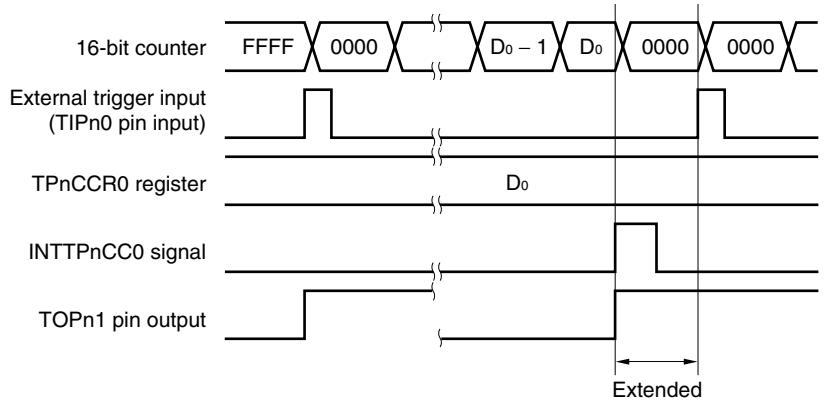

Remark n = 0 to 3

If the trigger is detected immediately before the INTTPnCC0 signal is generated, the INTTPnCC0 signal is not generated. The 16-bit counter is cleared to 0000H, the TOPn1 pin is asserted, and the counter continues counting. Consequently, the inactive period of the PWM waveform is shortened.

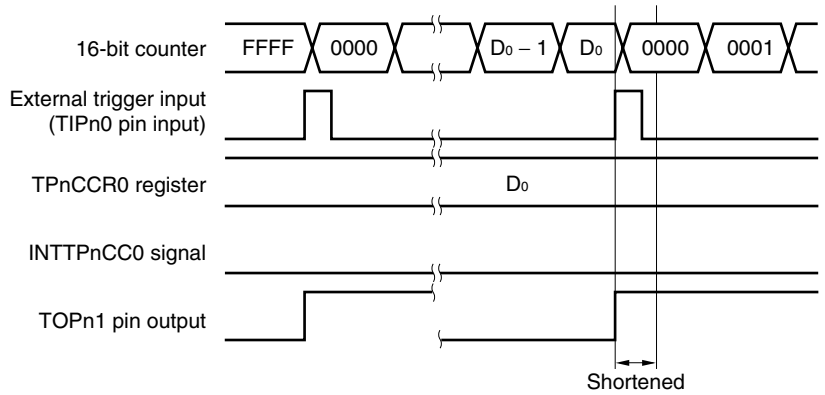

Remark n = 0 to 3

(e) Generation timing of compare match interrupt request signal (INTTPnCC1)

The timing of generation of the INTTPnCC1 signal in the external trigger pulse output mode differs from the timing of other INTTPnCC1 signals; the INTTPnCC1 signal is generated when the count value of the 16-bit counter matches the value of the TPnCCR1 register.

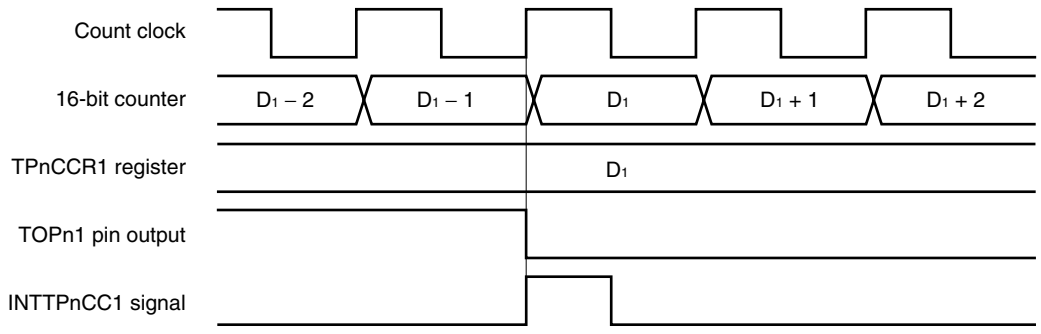

Remark n = 0 to 3

Usually, the INTTPnCC1 signal is generated in synchronization with the next count up, after the count value of the 16-bit counter matches the value of the TPnCCR1 register.

In the external trigger pulse output mode, however, it is generated one clock earlier. This is because the timing is changed to match the timing of changing the output signal of the TOPn1 pin.

6.5.4 One-shot pulse output mode (TPnMD2 to TPnMD0 bits = 011)

In the one-shot pulse output mode, 16-bit timer/event counter P waits for a trigger when the TPnCTL0.TPnCE bit is set to 1. When the valid edge of an external trigger input is detected, 16-bit timer/event counter P starts counting, and outputs a one-shot pulse from the TOPn1 pin.

Instead of the external trigger, a software trigger can also be generated to output the pulse. When the software trigger is used, the TOPn0 pin outputs the active level while the 16-bit counter is counting, and the inactive level when the counter is stopped (waiting for a trigger).

Figure 6-20. Configuration in One-Shot Pulse Output Mode

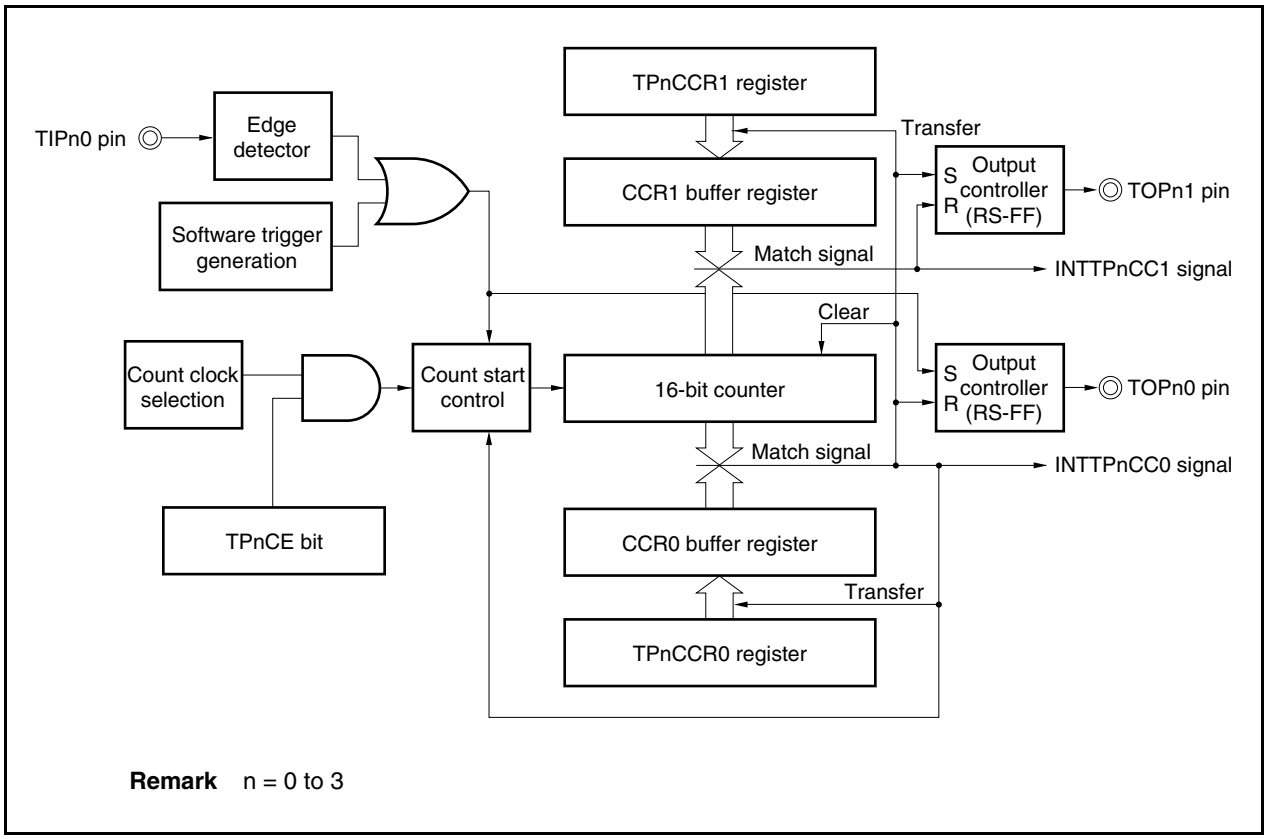

Remark n = 0 to 3

Figure 6-21. Basic Timing in One-Shot Pulse Output Mode

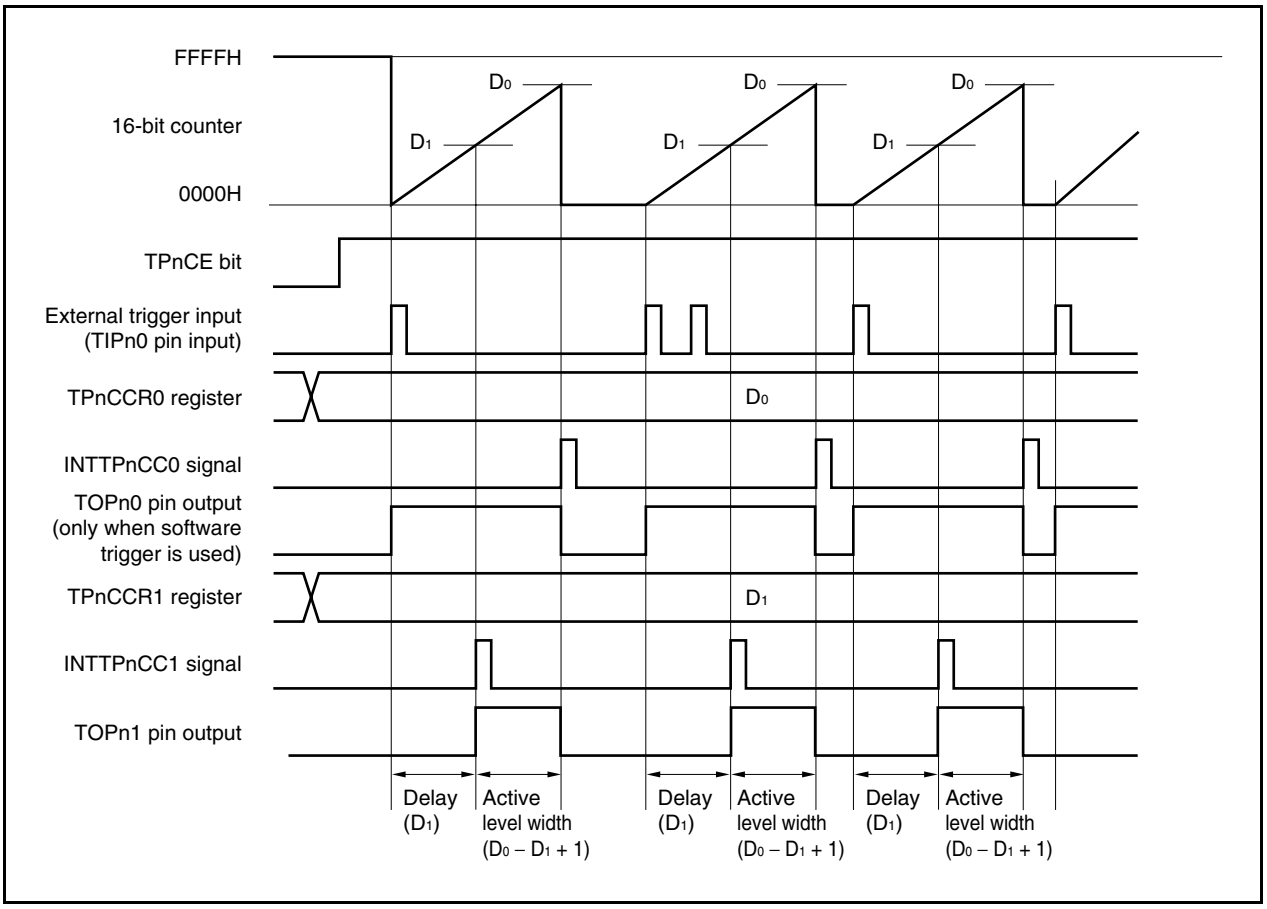

When the TPnCE bit is set to 1, 16-bit timer/event counter P waits for a trigger. When the trigger is generated, the 16-bit counter is cleared from FFFFH to 0000H, starts counting, and outputs a one-shot pulse from the TOPn1 pin. After the one-shot pulse is output, the 16-bit counter is set to FFFFH, stops counting, and waits for a trigger. If a trigger is generated again while the one-shot pulse is being output, it is ignored.

The output delay period and active level width of the one-shot pulse can be calculated as follows.

Output delay period = (Set value of TPnCCR1 register) × Count clock cycle
Active level width = (Set value of TPnCCR0 register − Set value of TPnCCR1 register + 1) × Count clock cycle

The compare match interrupt request signal INTTPnCC0 is generated when the 16-bit counter counts after its count value matches the value of the CCR0 buffer register. The compare match interrupt request signal INTTPnCC1 is generated when the count value of the 16-bit counter matches the value of the CCR1 buffer register.

The valid edge of an external trigger input or setting the software trigger (TPnCTL1.TPnEST bit) to 1 is used as the trigger.

Remark n = 0 to 3
m = 0, 1

Figure 6-22. Setting of Registers in One-Shot Pulse Output Mode (1/2)

(a) TMPn control register 0 (TPnCTL0)

	TPnCE					TPnCKS2	TPnCKS1	TPnCKS0
TPnCTL0	0/1	0	0	0	0	0/1	0/1	0/1

Select count clock[Note 1]

0: Stop counting
1: Enable counting

(b) TMPn control register 1 (TPnCTL1)

	TPnSYE	TPnEST	TPnEEE			TPnMD2	TPnMD1	TPnMD0
TPnCTL1	0	0/1	0/1	0	0	0	1	1

0, 1, 1:
One-shot pulse output mode

0: Operate on count clock selected by TPnCKS0 to TPnCKS2 bits
1: Count external event input signal

Generate software trigger when 1 is written

(c) TMPn I/O control register 0 (TPnIOC0)

					TPnOL1	TPnOE1	TPnOL0	TPnOE0
TPnIOC0	0	0	0	0	0/1	0/1	0/1	0/1[Note 2]

0: Disable TOPn0 pin output
1: Enable TOPn0 pin output

Setting of output level while operation of TOPn0 pin is disabled
0: Low level
1: High level

0: Disable TOPn1 pin output
1: Enable TOPn1 pin output

Specifies active level of TOPn1 pin output
0: Active-high
1: Active-low

• When TPnOL1 bit = 0

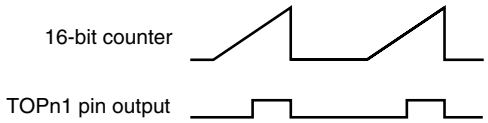

• When TPnOL1 bit = 1

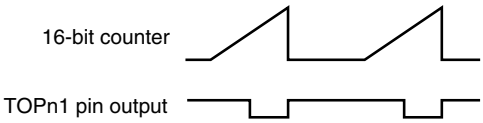

Notes 1. The setting is invalid when the TPnCTL1.TPnEEE bit = 1.

2. Clear this bit to 0 when the TOPn0 pin is not used in the one-shot pulse output mode.

Figure 6-22. Setting of Registers in One-Shot Pulse Output Mode (2/2)

(d) TMPn I/O control register 2 (TPnIOC2)

					TPnEES1	TPnEES0	TPnETS1	TPnETS0
TPnIOC2	0	0	0	0	0/1	0/1	0/1	0/1

Select valid edge of external trigger input

Select valid edge of external event count input

(e) TMPn counter read buffer register (TPnCNT)

The value of the 16-bit counter can be read by reading the TPnCNT register.

(f) TMPn capture/compare registers 0 and 1 (TPnCCR0 and TPnCCR1)

If D_0 is set to the TPnCCR0 register and D_1 to the TPnCCR1 register, the active level width and output delay period of the one-shot pulse are as follows.

Active level width = $(D_1 - D_0 + 1) \times$ Count clock cycle

Output delay period = $(D_1) \times$ Count clock cycle

Remarks 1. TMPn I/O control register 1 (TPnIOC1) and TMPn option register 0 (TPnOPT0) are not used in the one-shot pulse output mode.

2. n = 0 to 3

(1) Operation flow in one-shot pulse output mode

Figure 6-23. Software Processing Flow in One-Shot Pulse Output Mode

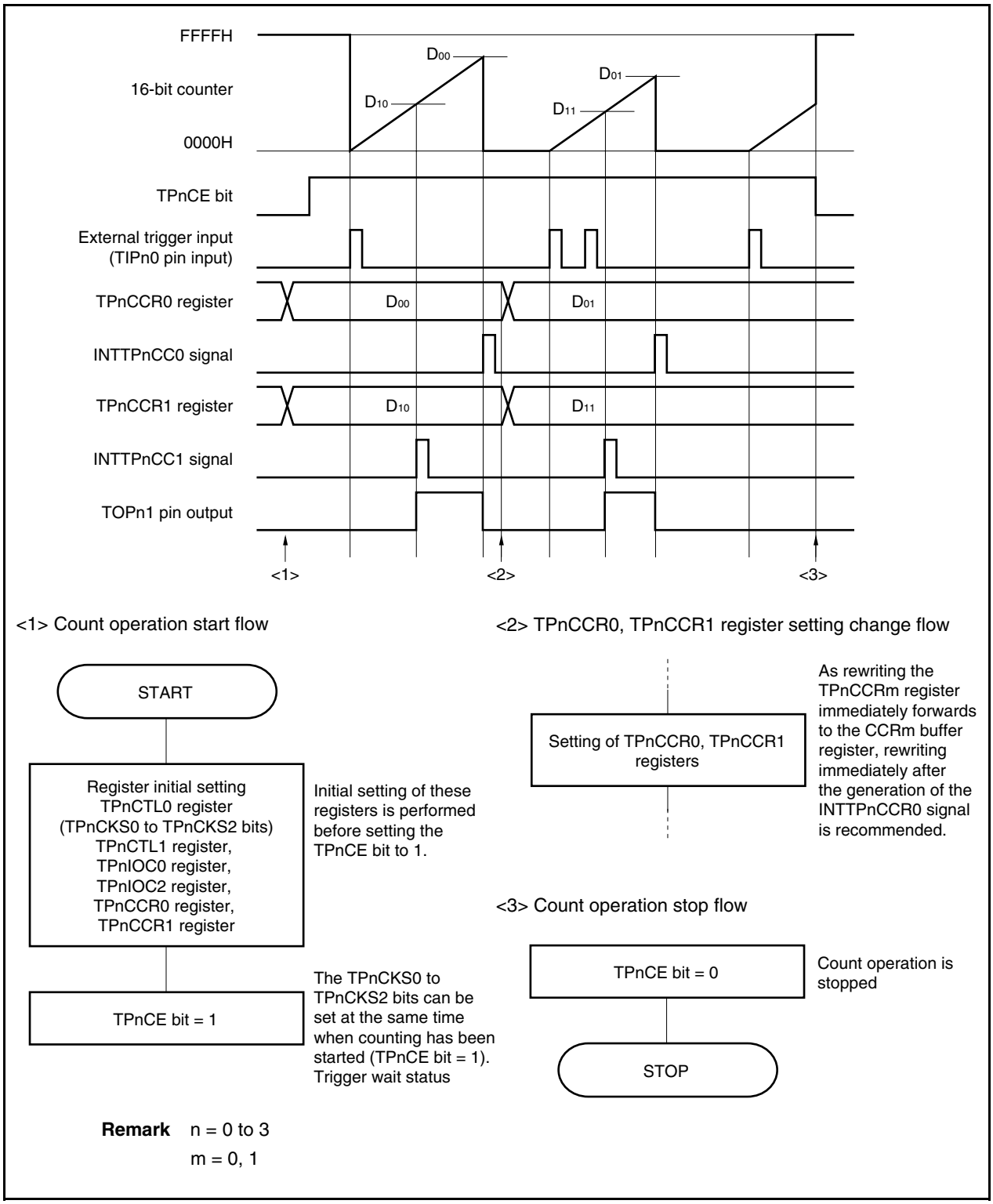

Remark n = 0 to 3
m = 0, 1

(2) Operation timing in one-shot pulse output mode

(a) Note on rewriting TPnCCRm register

To change the set value of the TPnCCRm register to a smaller value, stop counting once, and then change the set value.

If the value of the TPnCCRm register is rewritten to a smaller value during counting, the 16-bit counter may overflow.

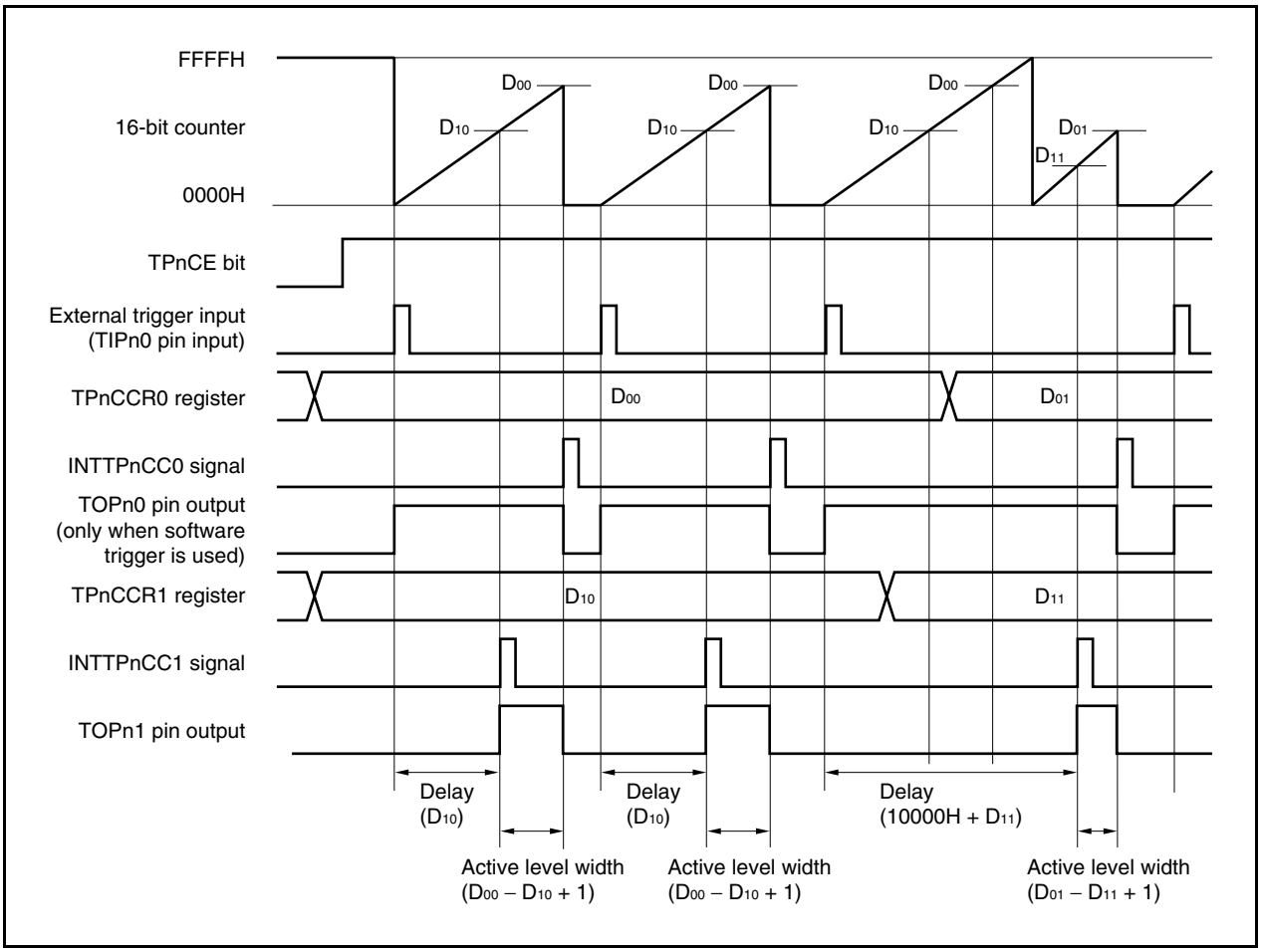

When the TPnCCR0 register is rewritten from D_{00} to D_{01} and the TPnCCR1 register from D_{10} to D_{11} where $D_{00} > D_{01}$ and $D_{10} > D_{11}$, if the TPnCCR1 register is rewritten when the count value of the 16-bit counter is greater than D_{11} and less than D_{10} and if the TPnCCR0 register is rewritten when the count value is greater than D_{01} and less than D_{00}, each set value is reflected as soon as the register has been rewritten and compared with the count value. The counter counts up to FFFFH and then counts up again from 0000H. When the count value matches D_{11}, the counter generates the INTTPnCC1 signal and asserts the TOPn1 pin. When the count value matches D_{01}, the counter generates the INTTPnCC0 signal, deasserts the TOPn1 pin, and stops counting.

Therefore, the counter may output a pulse with a delay period or active period different from that of the one-shot pulse that is originally expected.

Remark n = 0 to 3
m = 0, 1

(b) Generation timing of compare match interrupt request signal (INTTPnCC1)

The generation timing of the INTTPnCC1 signal in the one-shot pulse output mode is different from other INTTPnCC1 signals; the INTTPnCC1 signal is generated when the count value of the 16-bit counter matches the value of the TPnCCR1 register.

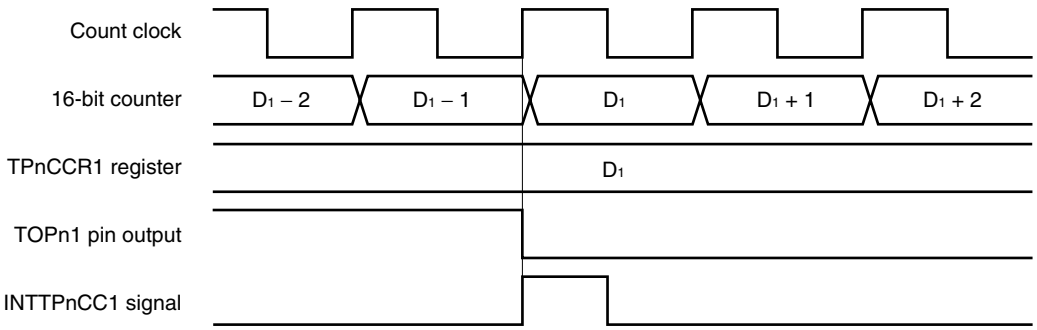

Remark n = 0 to 3

Usually, the INTTPnCC1 signal is generated when the 16-bit counter counts up next time after its count value matches the value of the TPnCCR1 register.

In the one-shot pulse output mode, however, it is generated one clock earlier. This is because the timing is changed to match the change timing of the TOPn1 pin.

Remark n = 0 to 3

6.5.5 PWM output mode (TPnMD2 to TPnMD0 bits = 100)

In the PWM output mode, a PWM waveform is output from the TOPn1 pin when the TPnCTL0.TPnCE bit is set to 1. In addition, a pulse with one cycle of the PWM waveform as half its cycle is output from the TOPn0 pin.

Figure 6-24. Configuration in PWM Output Mode

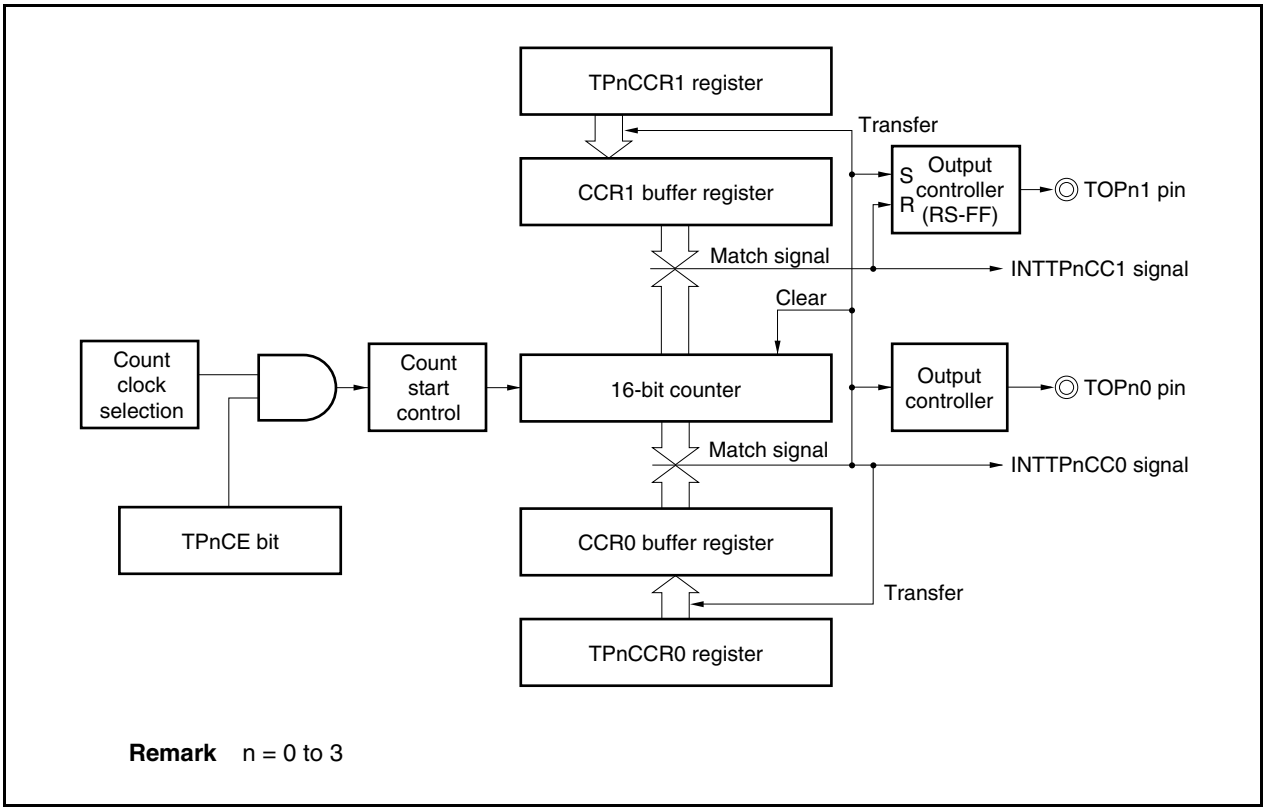

Remark n = 0 to 3

Figure 6-25. Basic Timing in PWM Output Mode

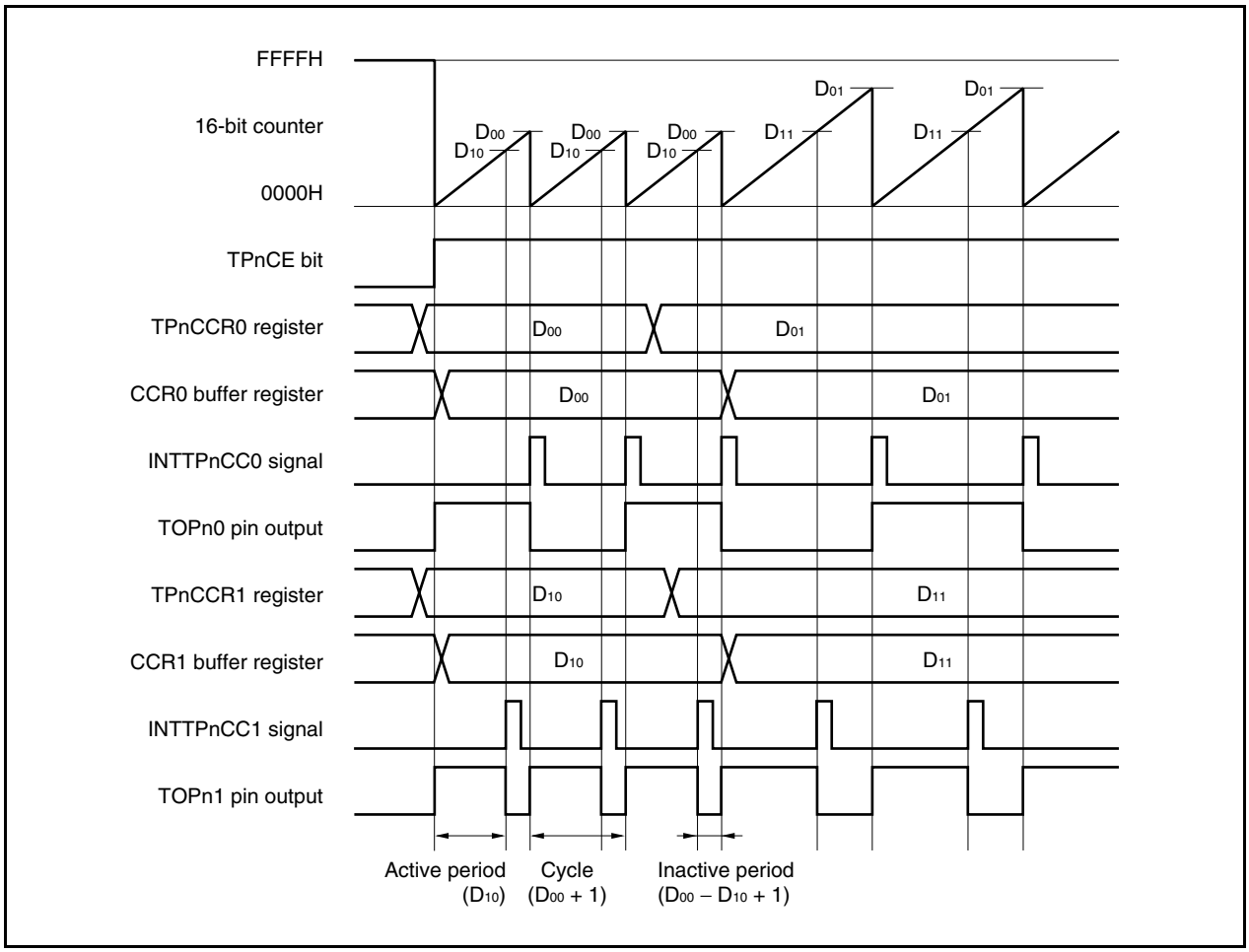

When the TPnCE bit is set to 1, the 16-bit counter is cleared from FFFFH to 0000H, starts counting, and outputs a PWM waveform from the TOPn1 pin.

The active level width, cycle, and duty factor of the PWM waveform can be calculated as follows.

Active level width = (Set value of TPnCCR1 register) × Count clock cycle
Cycle = (Set value of TPnCCR0 register + 1) × Count clock cycle
Duty factor = (Set value of TPnCCR1 register)/(Set value of TPnCCR0 register + 1)

The PWM waveform can be changed by rewriting the TPnCCRm register while the counter is operating. The newly written value is reflected when the count value of the 16-bit counter matches the value of the CCR0 buffer register and the 16-bit counter is cleared to 0000H.

The compare match interrupt request signal INTTPnCC0 is generated when the 16-bit counter counts next time after its count value matches the value of the CCR0 buffer register, and the 16-bit counter is cleared to 0000H. The compare match interrupt request signal INTTPnCC1 is generated when the count value of the 16-bit counter matches the value of the CCR1 buffer register.

The value set to the TPnCCRm register is transferred to the CCRm buffer register when the count value of the 16-bit counter matches the value of the CCRm buffer register and the 16-bit counter is cleared to 0000H.

Remark n = 0 to 3, m = 0, 1

Figure 6-26. Setting of Registers in PWM Output Mode (1/2)

(a) TMPn control register 0 (TPnCTL0)

	TPnCE					TPnCKS2	TPnCKS1	TPnCKS0
TPnCTL0	0/1	0	0	0	0	0/1	0/1	0/1

Select count clock[Note 1]

0: Stop counting
1: Enable counting

(b) TMPn control register 1 (TPnCTL1)

	TPnSYE	TPnEST	TPnEEE			TPnMD2	TPnMD1	TPnMD0
TPnCTL1	0	0	0/1	0	0	1	0	0

1, 0, 0:
PWM output mode

0: Operate on count clock selected by TPnCKS0 to TPnCKS2 bits
1: Count external event input signal

(c) TMPn I/O control register 0 (TPnIOC0)

					TPnOL1	TPnOE1	TPnOL0	TPnOE0
TPnIOC0	0	0	0	0	0/1	0/1	0/1	0/1[Note 2]

0: Disable TOPn0 pin output
1: Enable TOPn0 pin output

Setting of output level while operation of TOPn0 pin is disabled
0: Low level
1: High level

0: Disable TOPn1 pin output
1: Enable TOPn1 pin output

Specifies active level of TOPn1 pin output
0: Active-high
1: Active-low

- When TPnOL1 bit = 0

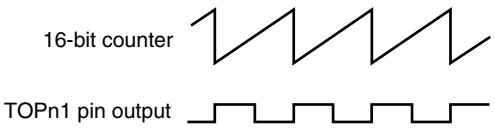

- When TPnOL1 bit = 1

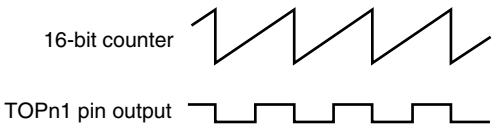

Notes 1. The setting is invalid when the TPnCTL1.TPnEEE bit = 1.
2. Clear this bit to 0 when the TOPn0 pin is not used in the PWM output mode.

Figure 6-26. Register Setting in PWM Output Mode (2/2)

(d) TMPn I/O control register 2 (TPnIOC2)

					TPnEES1	TPnEES0	TPnETS1	TPnETS0
TPnIOC2	0	0	0	0	0/1	0/1	0	0

Select valid edge of external event count input.

(e) TMPn counter read buffer register (TPnCNT)

The value of the 16-bit counter can be read by reading the TPnCNT register.

(f) TMPn capture/compare registers 0 and 1 (TPnCCR0 and TPnCCR1)

If D_0 is set to the TPnCCR0 register and D_1 to the TPnCCR1 register, the cycle and active level of the PWM waveform are as follows.

Cycle = $(D_0 + 1) \times$ Count clock cycle

Active level width = $D_1 \times$ Count clock cycle

Remarks 1. TMPn I/O control register 1 (TPnIOC1) and TMPn option register 0 (TPnOPT0) are not used in the PWM output mode.

2. n = 0 to 3

(1) Operation flow in PWM output mode

Figure 6-27. Software Processing Flow in PWM Output Mode (1/2)

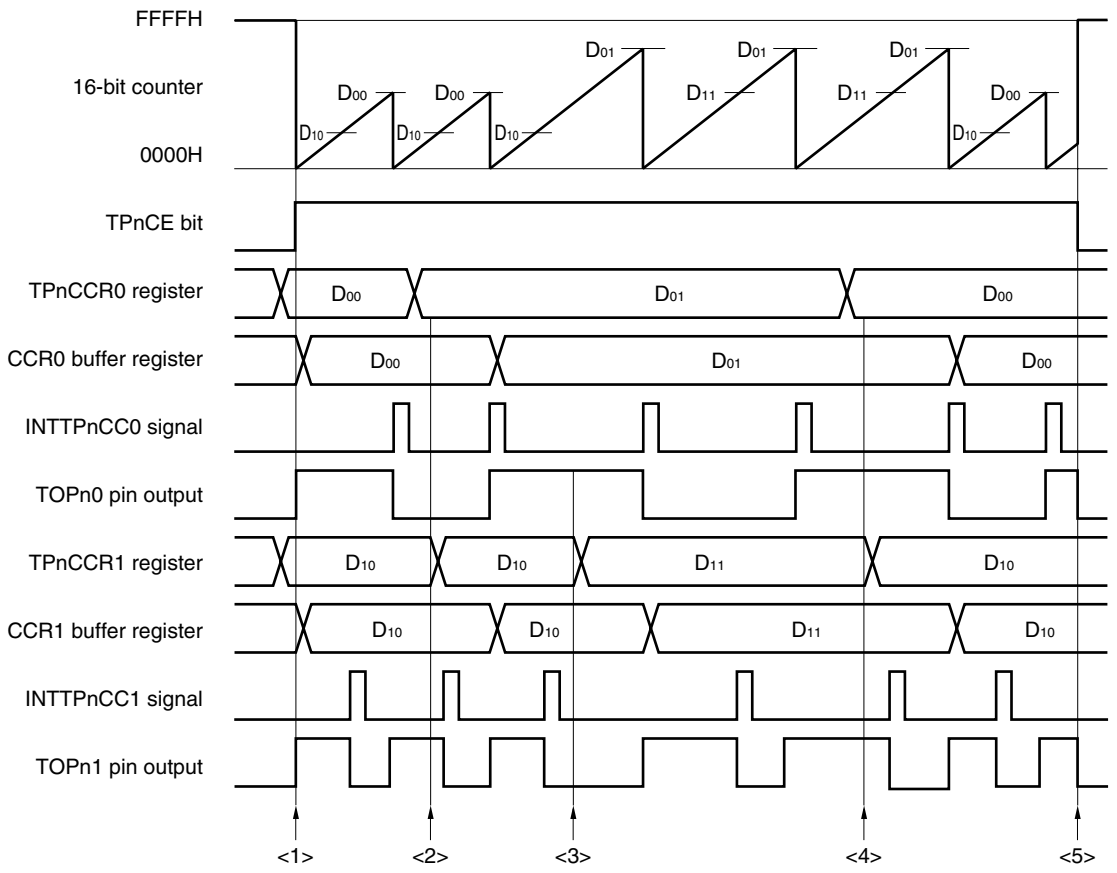

Remark n = 0 to 3
m = 0, 1

Figure 6-27. Software Processing Flow in PWM Output Mode (2/2)

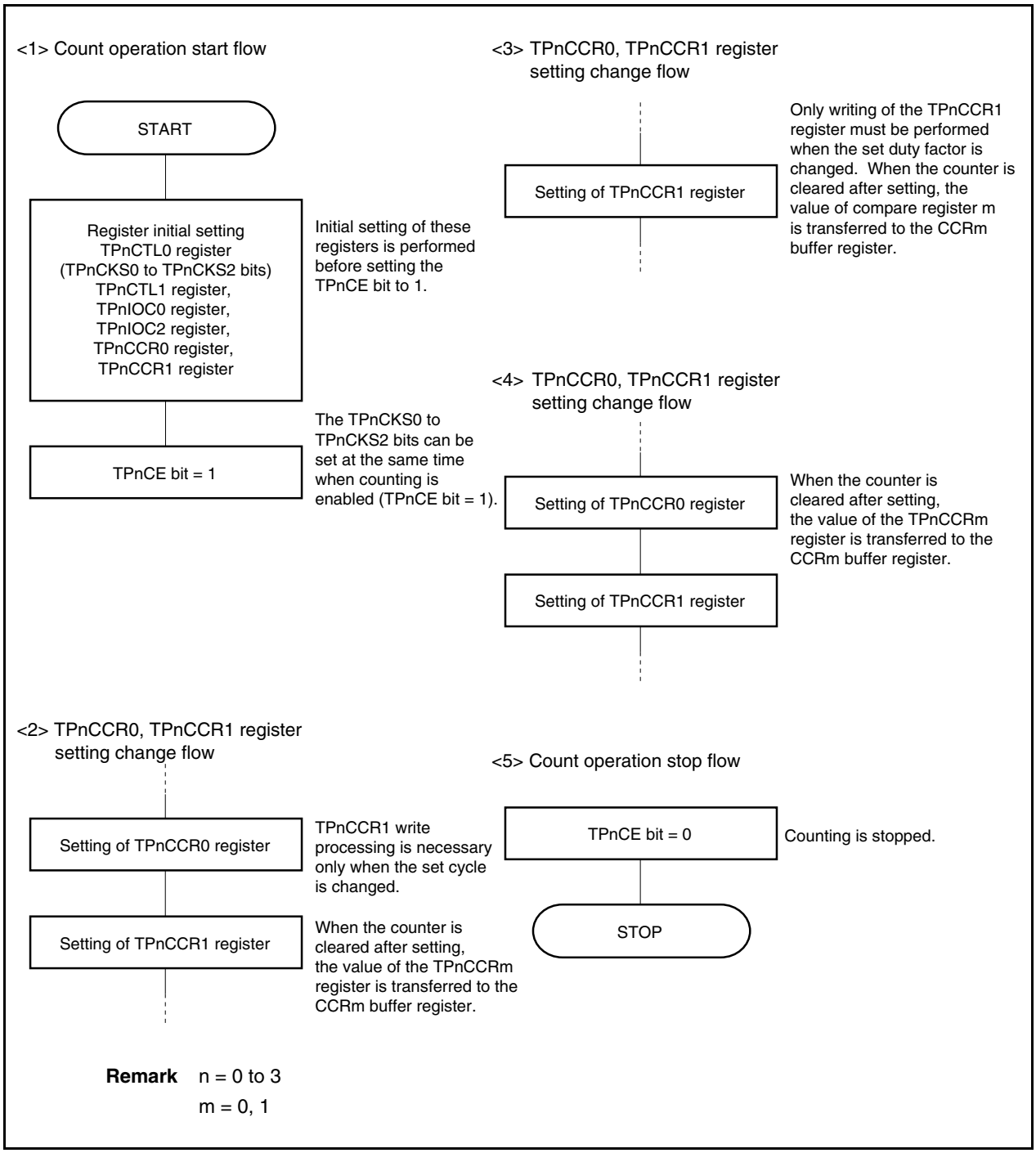

Remark n = 0 to 3
m = 0, 1

(2) PWM output mode operation timing

(a) Changing pulse width during operation

To change the PWM waveform while the counter is operating, write the TPnCCR1 register last.

Rewrite the TPnCCRm register after writing the TPnCCR1 register after the INTTPnCC1 signal is detected.

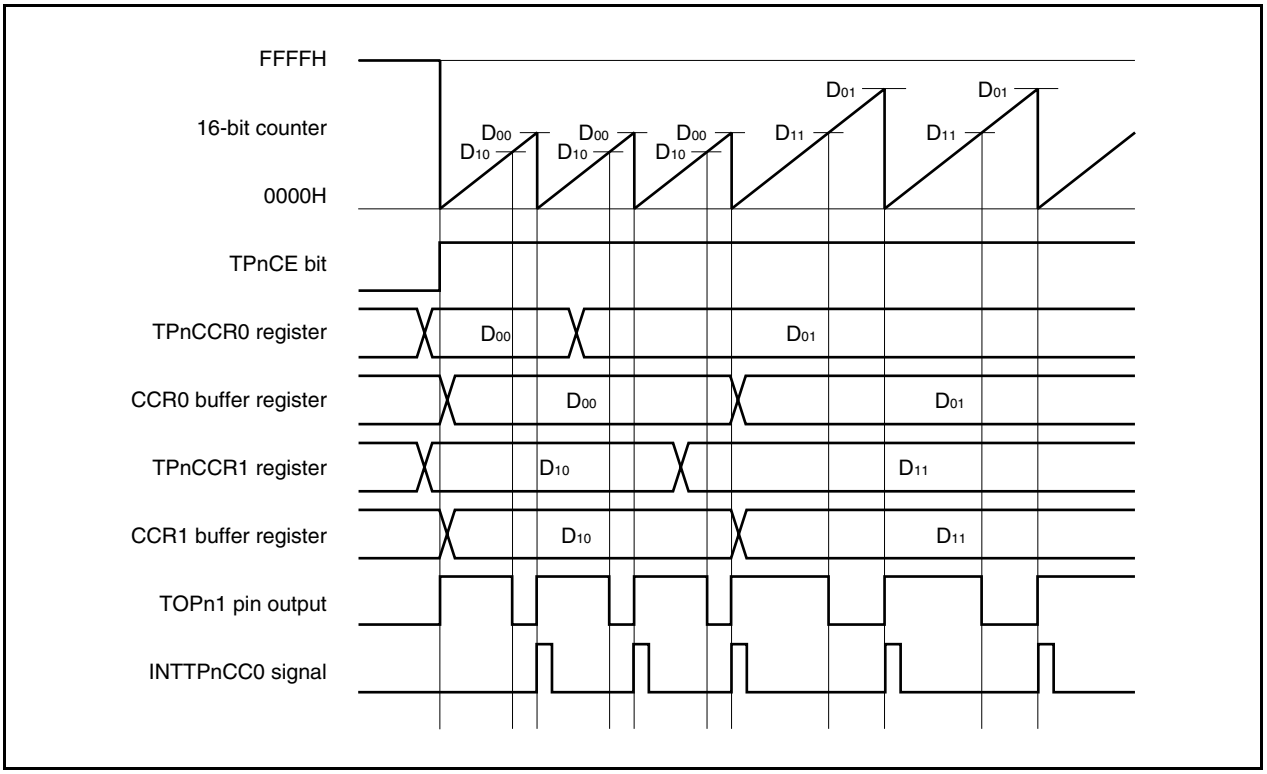

To transfer data from the TPnCCRm register to the CCRm buffer register, the TPnCCR1 register must be written.

To change both the cycle and active level of the PWM waveform at this time, first set the cycle to the TPnCCR0 register and then set the active level to the TPnCCR1 register.

To change only the cycle of the PWM waveform, first set the cycle to the TPnCCR0 register, and then write the same value to the TPnCCR1 register.

To change only the active level width (duty factor) of the PWM waveform, only the TPnCCR1 register has to be set.

After data is written to the TPnCCR1 register, the value written to the TPnCCRm register is transferred to the CCRm buffer register in synchronization with clearing of the 16-bit counter, and is used as the value compared with the 16-bit counter.

To write the TPnCCR0 or TPnCCR1 register again after writing the TPnCCR1 register once, do so after the INTTPnCC0 signal is generated. Otherwise, the value of the CCRm buffer register may become undefined because the timing of transferring data from the TPnCCRm register to the CCRm buffer register conflicts with writing the TPnCCRm register.

Remark n = 0 to 3, m = 0, 1

(b) 0%/100% output of PWM waveform

To output a 0% waveform, set the TPnCCR1 register to 0000H. If the set value of the TPnCCR0 register is FFFFH, the INTTPnCC1 signal is generated periodically.

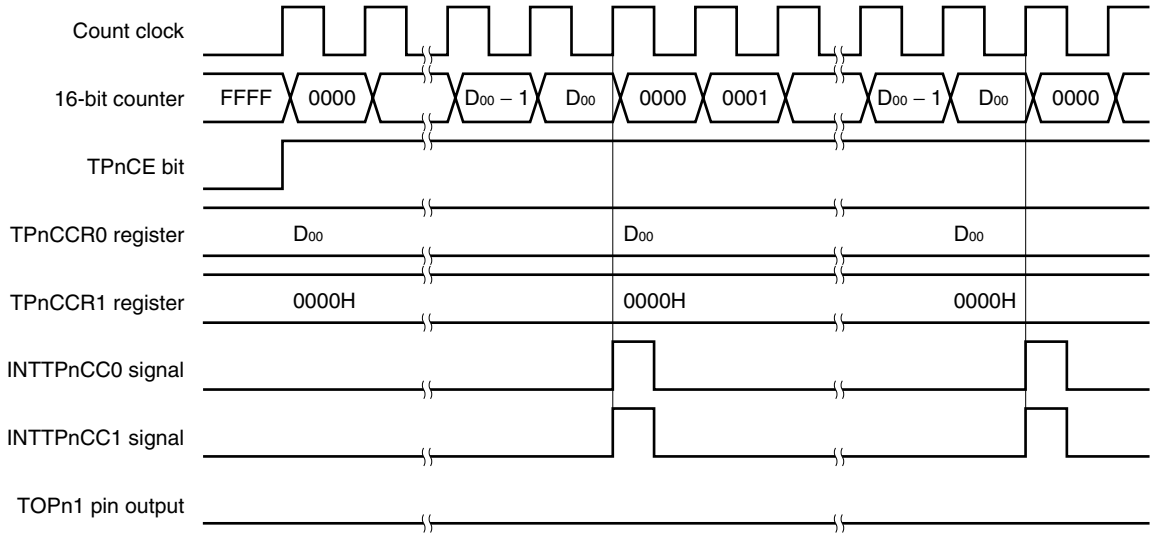

Remark n = 0 to 3

To output a 100% waveform, set a value of (set value of TPnCCR0 register + 1) to the TPnCCR1 register. If the set value of the TPnCCR0 register is FFFFH, 100% output cannot be produced.

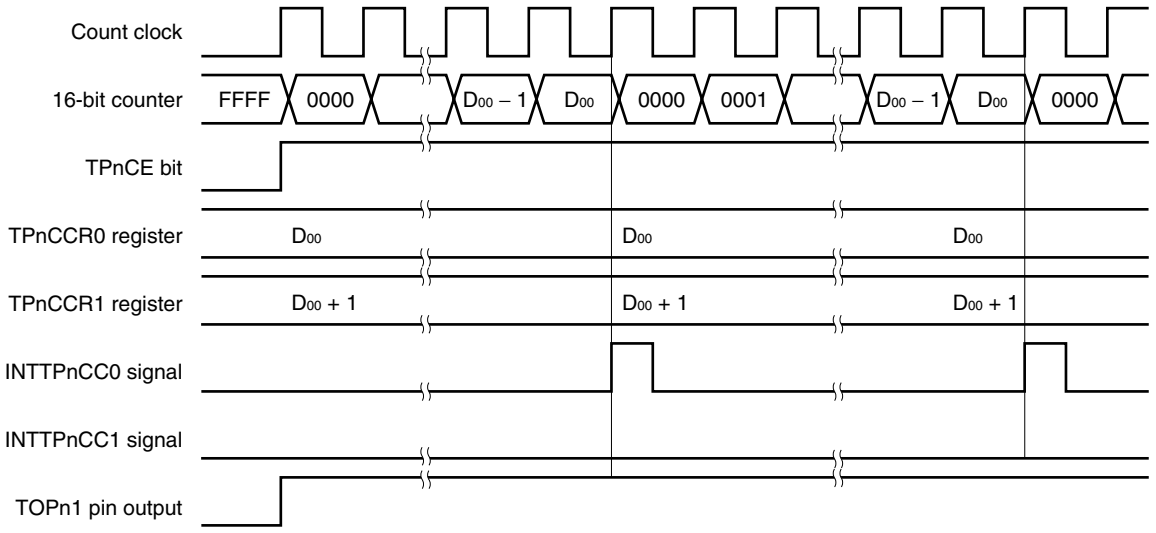

Remark n = 0 to 3

(c) Generation timing of compare match interrupt request signal (INTTPnCC1)

The timing of generation of the INTTPnCC1 signal in the PWM output mode differs from the timing of other INTTPnCC1 signals; the INTTPnCC1 signal is generated when the count value of the 16-bit counter matches the value of the TPnCCR1 register.

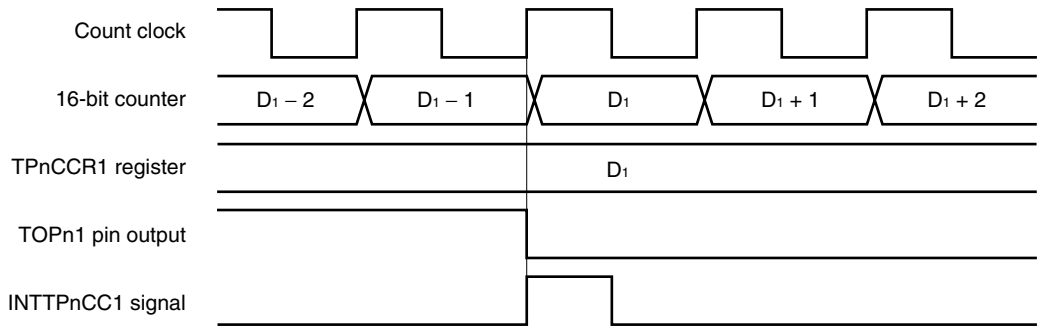

Remark n = 0 to 3

Usually, the INTTPnCC1 signal is generated in synchronization with the next counting up after the count value of the 16-bit counter matches the value of the TPnCCR1 register.

In the PWM output mode, however, it is generated one clock earlier. This is because the timing is changed to match the change timing of the output signal of the TOPn1 pin.

6.5.6 Free-running timer mode (TPnMD2 to TPnMD0 bits = 101)

In the free-running timer mode, 16-bit timer/event counter P starts counting when the TPnCTL0.TPnCE bit is set to 1. At this time, the TPnCCRm register can be used as a compare register or a capture register, depending on the setting of the TPnOPT0.TPnCCS0 and TPnOPT0.TPnCCS1 bits.

Figure 6-28. Configuration in Free-Running Timer Mode

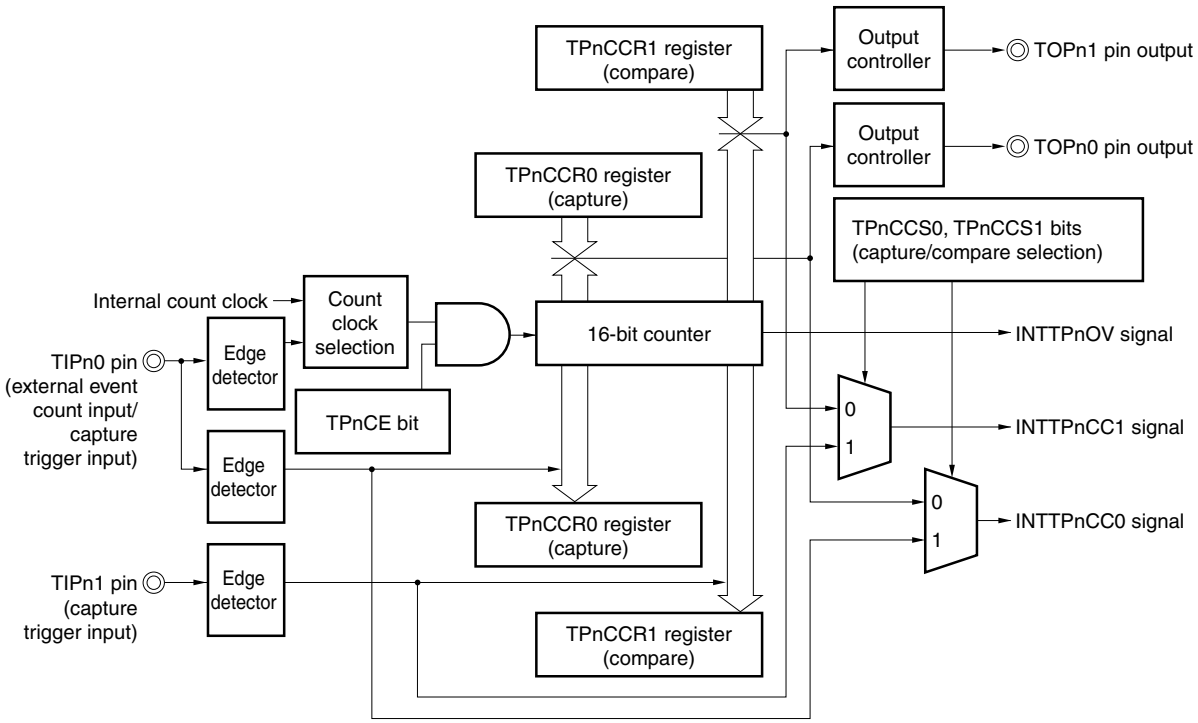

Remark n = 0 to 3
m = 0, 1

When the TPnCE bit is set to 1, 16-bit timer/event counter P starts counting, and the output signals of the TOPn0 and TOPn1 pins are inverted. When the count value of the 16-bit counter later matches the set value of the TPnCCRm register, a compare match interrupt request signal (INTTPnCCm) is generated, and the output signal of the TOPnm pin is inverted.

The 16-bit counter continues counting in synchronization with the count clock. When it counts up to FFFFH, it generates an overflow interrupt request signal (INTTPnOV) at the next clock, is cleared to 0000H, and continues counting. At this time, the overflow flag (TPnOPT0.TPnOVF bit) is also set to 1. Clear the overflow flag to 0 by executing the CLR instruction by software.

The TPnCCRm register can be rewritten while the counter is operating. If it is rewritten, the new value is reflected at that time, and compared with the count value.

Figure 6-29. Basic Timing in Free-Running Timer Mode (Compare Function)

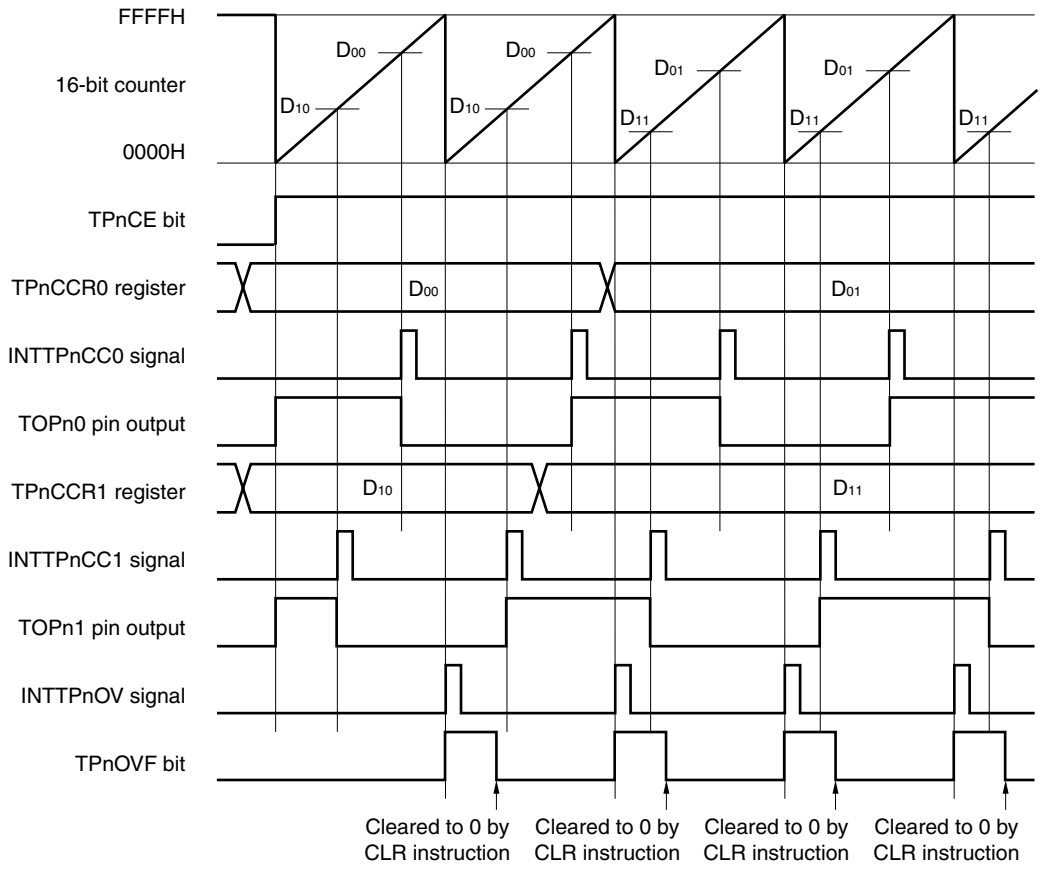

Remark n = 0 to 3
m = 0, 1

When the TPnCE bit is set to 1, the 16-bit counter starts counting. When the valid edge input to the TIPnm pin is detected, the count value of the 16-bit counter is stored in the TPnCCRm register, and a capture interrupt request signal (INTTPnCCm) is generated.

The 16-bit counter continues counting in synchronization with the count clock. When it counts up to FFFFH, it generates an overflow interrupt request signal (INTTPnOV) at the next clock, is cleared to 0000H, and continues counting. At this time, the overflow flag (TPnOPT0.TPnOVF bit) is also set to 1. Clear the overflow flag to 0 by executing the CLR instruction by software.

Figure 6-30. Basic Timing in Free-Running Timer Mode (Capture Function)

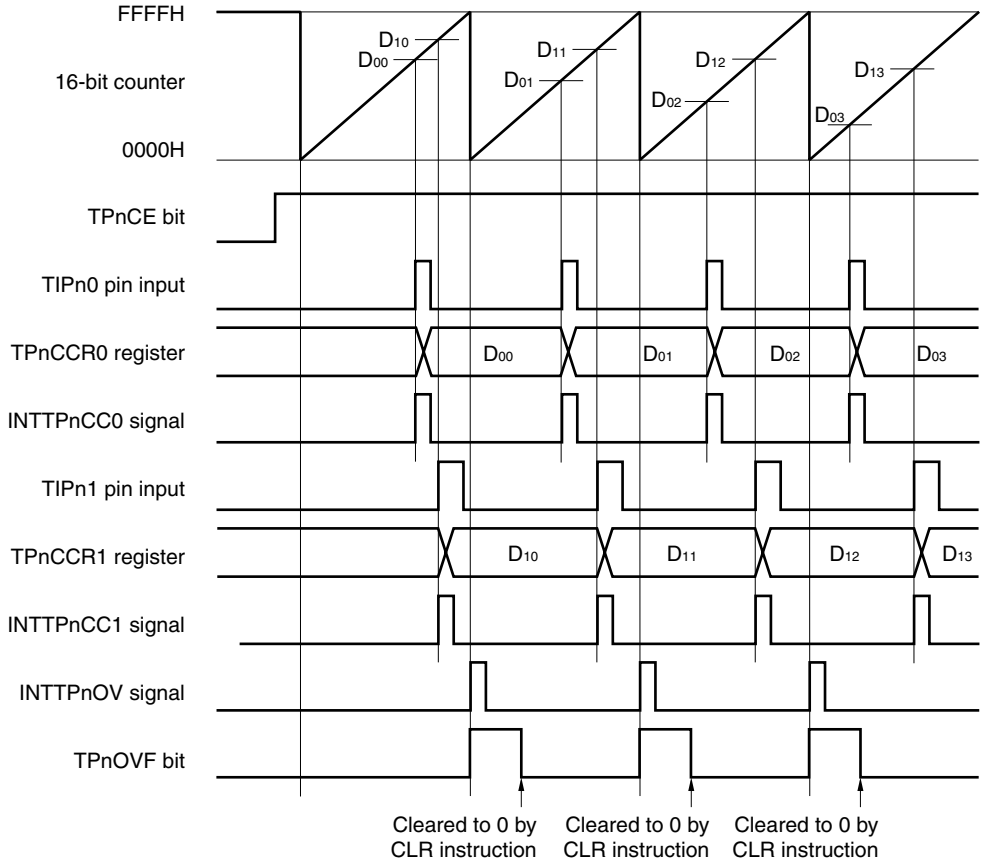

Remark n = 0 to 3

Figure 6-31. Register Setting in Free-Running Timer Mode (1/2)

(a) TMPn control register 0 (TPnCTL0)

	TPnCE					TPnCKS2	TPnCKS1	TPnCKS0
TPnCTL0	0/1	0	0	0	0	0/1	0/1	0/1

Select count clock[Note]

0: Stop counting
1: Enable counting

Note The setting is invalid when the TPnCTL1.TPnEEE bit = 1

(b) TMPn control register 1 (TPnCTL1)

	TPnSYE	TPnEST	TPnEEE			TPnMD2	TPnMD1	TPnMD0
TPnCTL1	0	0	0/1	0	0	1	0	1

1, 0, 1:
Free-running mode

0: Operate with count clock selected by TPnCKS0 to TPnCKS2 bits
1: Count on external event count input signal

(c) TMPn I/O control register 0 (TPnIOC0)

					TPnOL1	TPnOE1	TPnOL0	TPnOE0
TPnIOC0	0	0	0	0	0/1	0/1	0/1	0/1

0: Disable TOPn0 pin output
1: Enable TOPn0 pin output

Setting of output level with operation of TOPn0 pin disabled
0: Low level
1: High level

0: Disable TOPn1 pin output
1: Enable TOPn1 pin output

Setting of output level with operation of TOPn1 pin disabled
0: Low level
1: High level

Figure 6-31. Register Setting in Free-Running Timer Mode (2/2)

(d) TMPn I/O control register 1 (TPnIOC1)

					TPnIS3	TPnIS2	TPnIS1	TPnIS0
TPnIOC1	0	0	0	0	0/1	0/1	0/1	0/1

Select valid edge of TIPn0 pin input

Select valid edge of TIPn1 pin input

(e) TMPn I/O control register 2 (TPnIOC2)

					TPnEES1	TPnEES0	TPnETS1	TPnETS0
TPnIOC2	0	0	0	0	0/1	0/1	0	0

Select valid edge of external event count input

(f) TMPn option register 0 (TPnOPT0)

			TPnCCS1	TPnCCS0				TPnOVF
TPnOPT0	0	0	0/1	0/1	0	0	0	0/1

Overflow flag

Specifies if TPnCCR0 register functions as capture or compare register

Specifies if TPnCCR1 register functions as capture or compare register

(g) TMPn counter read buffer register (TPnCNT)

The value of the 16-bit counter can be read by reading the TPnCNT register.

(h) TMPn capture/compare registers 0 and 1 (TPnCCR0 and TPnCCR1)

These registers function as capture registers or compare registers depending on the setting of the TPnOPT0.TPnCCSm bit.

When the registers function as capture registers, they store the count value of the 16-bit counter when the valid edge input to the TIPnm pin is detected.

When the registers function as compare registers and when D_m is set to the TPnCCRm register, the INTTPnCCm signal is generated when the counter reaches (D_m + 1), and the output signal of the TOPnm pin is inverted.

Remark n = 0 to 3
m = 0, 1

(1) Operation flow in free-running timer mode

(a) When using capture/compare register as compare register

Figure 6-32. Software Processing Flow in Free-Running Timer Mode (Compare Function) (1/2)

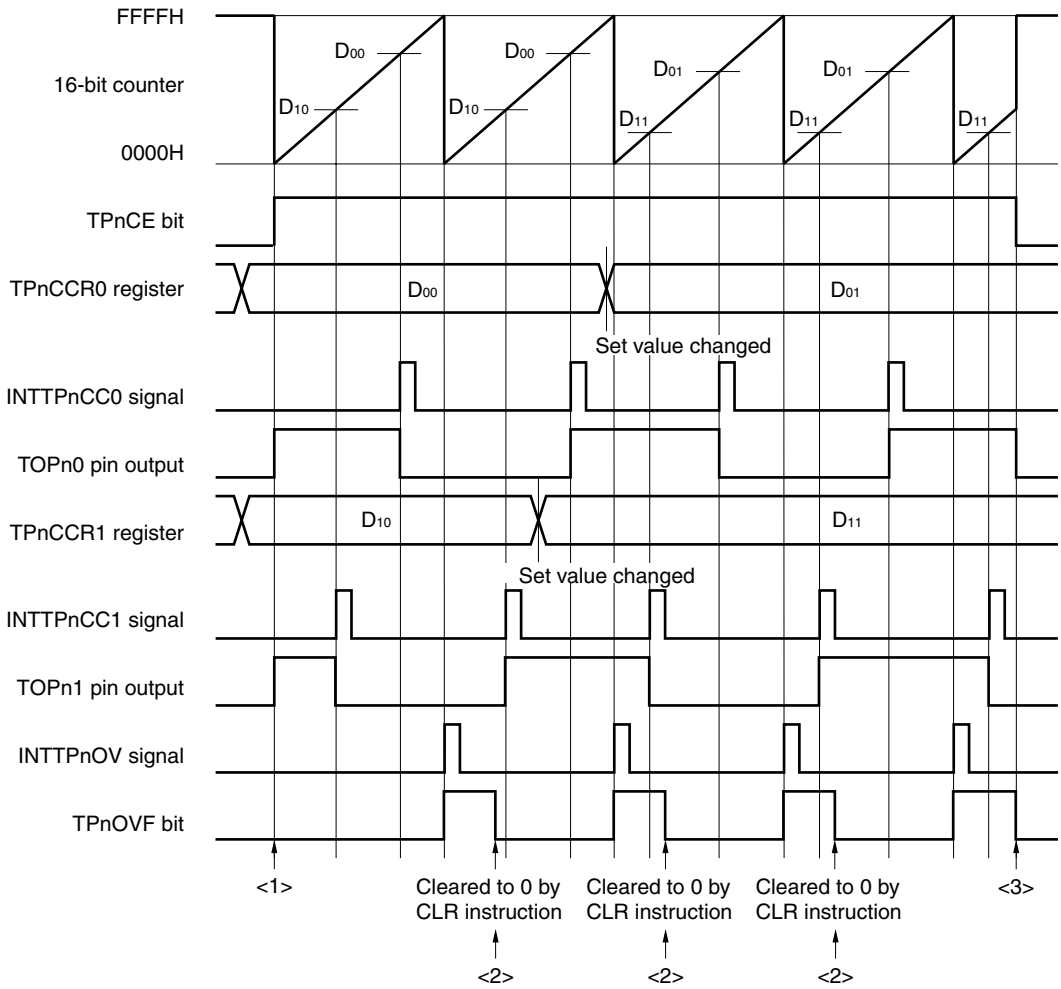

Remark n = 0 to 3

Figure 6-32. Software Processing Flow in Free-Running Timer Mode (Compare Function) (2/2)

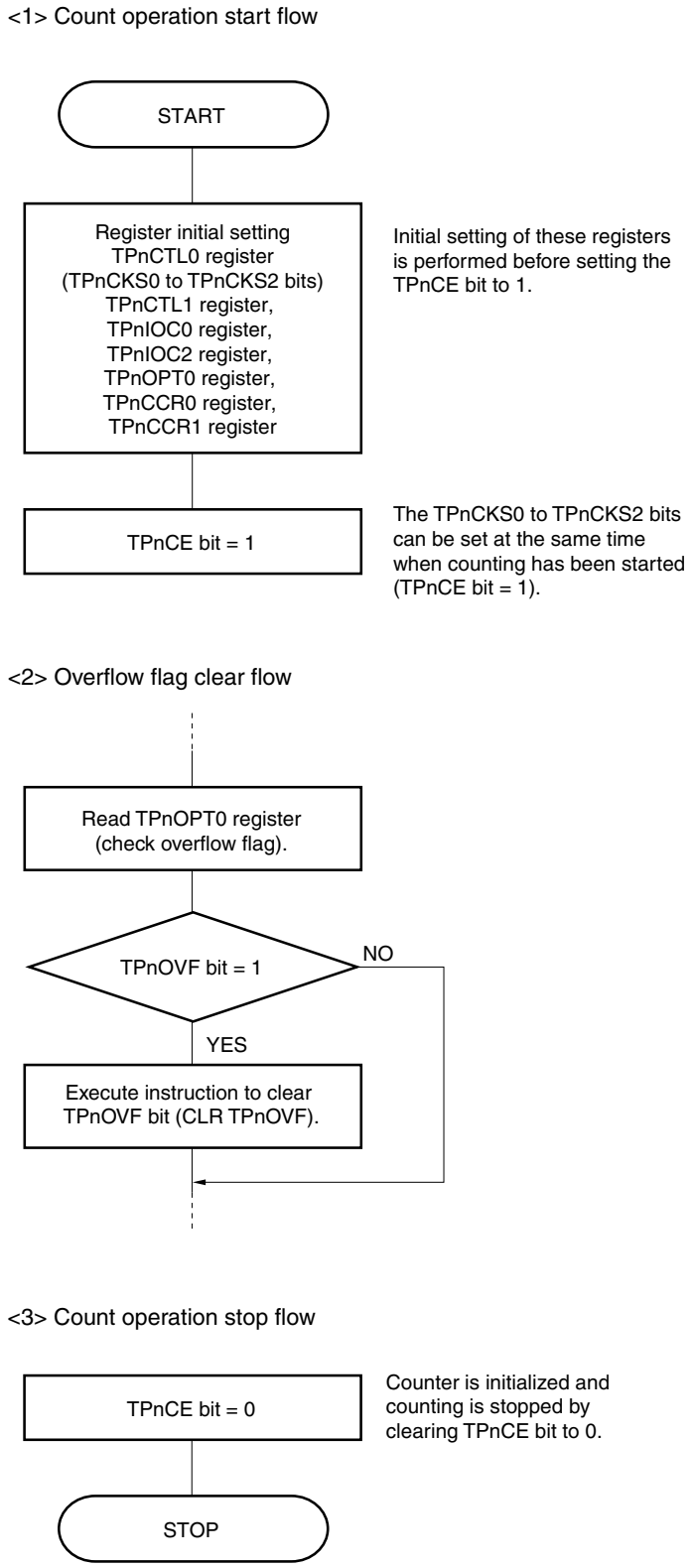

Remark n = 0 to 3

(b) When using capture/compare register as capture register

Figure 6-33. Software Processing Flow in Free-Running Timer Mode (Capture Function) (1/2)

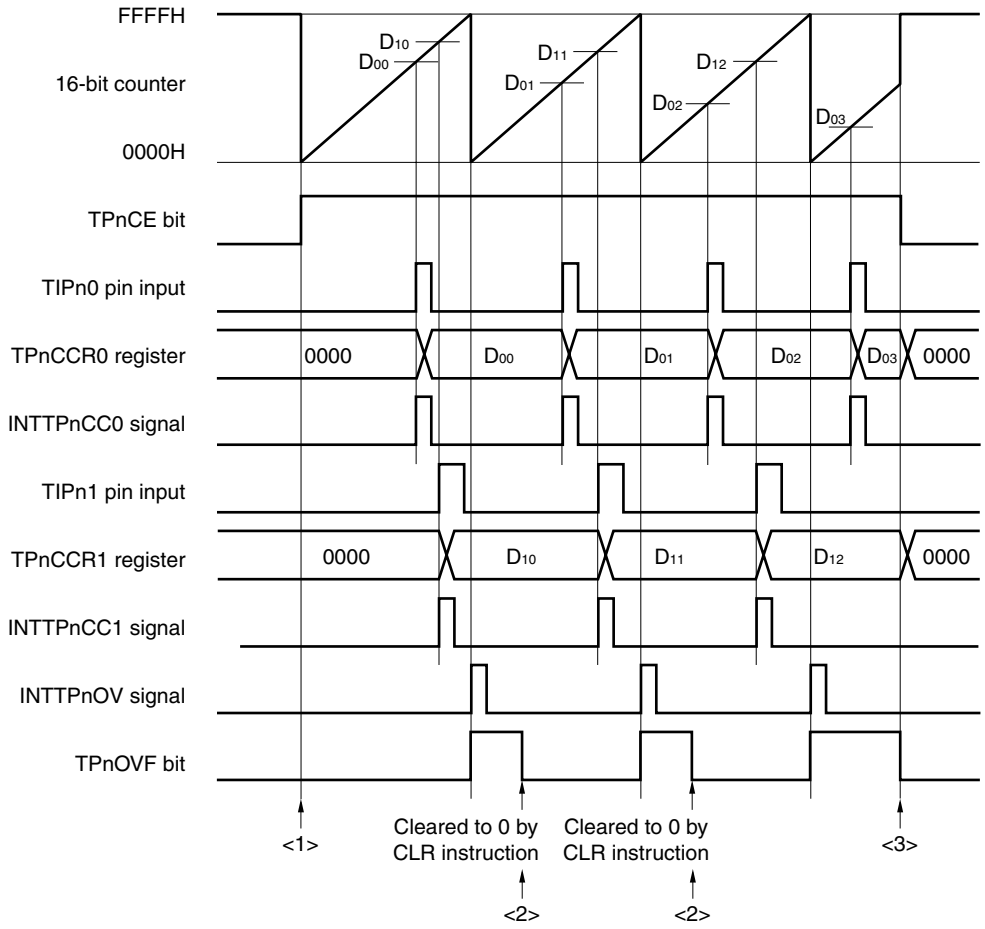

Remark n = 0 to 3

Figure 6-33. Software Processing Flow in Free-Running Timer Mode (Capture Function) (2/2)

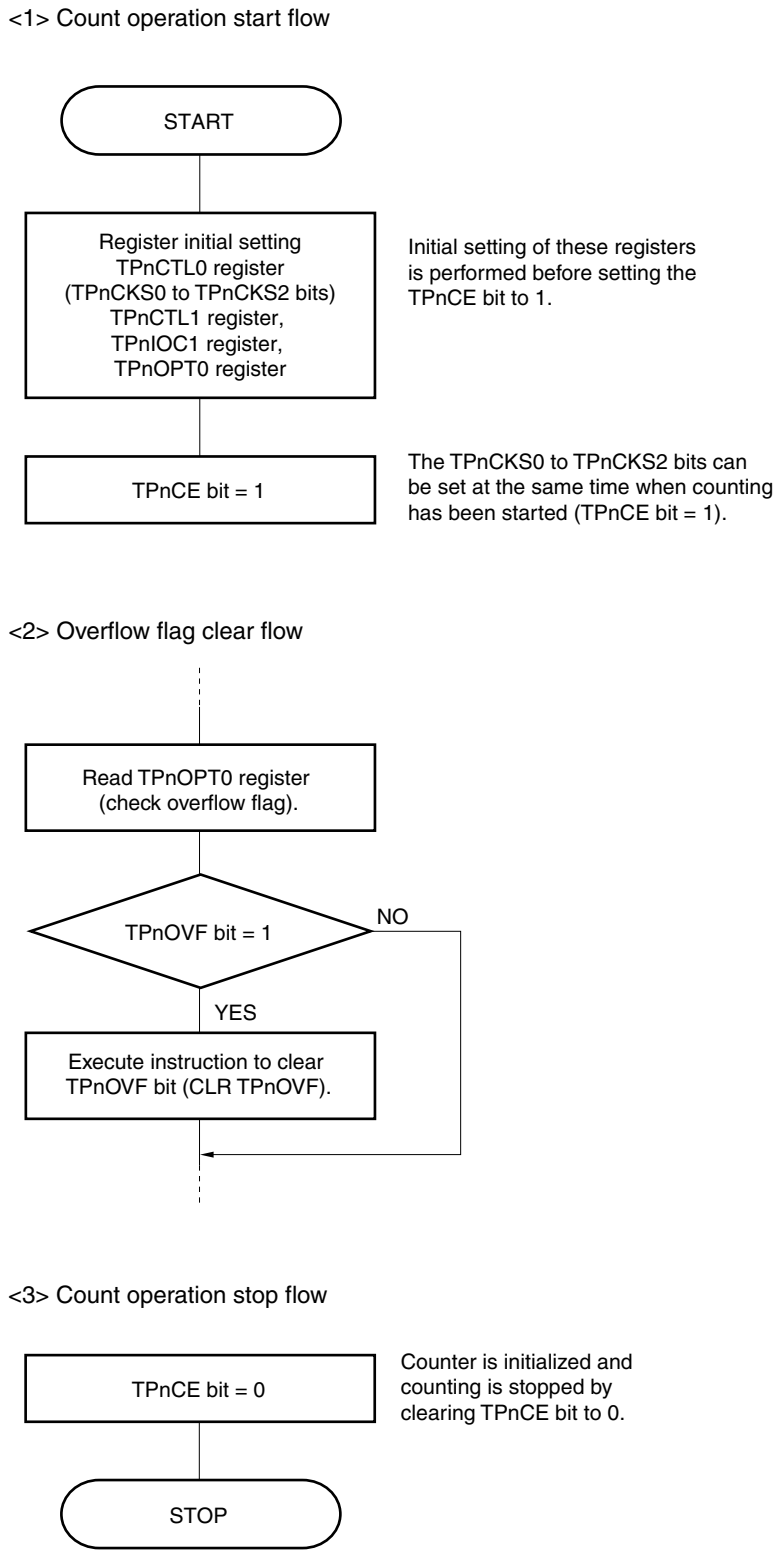

Remark n = 0 to 3

(2) Operation timing in free-running timer mode

(a) Interval operation with compare register

When 16-bit timer/event counter P is used as an interval timer with the TPnCCRm register used as a compare register, software processing is necessary for setting a comparison value to generate the next interrupt request signal each time the INTTPnCCm signal has been detected.

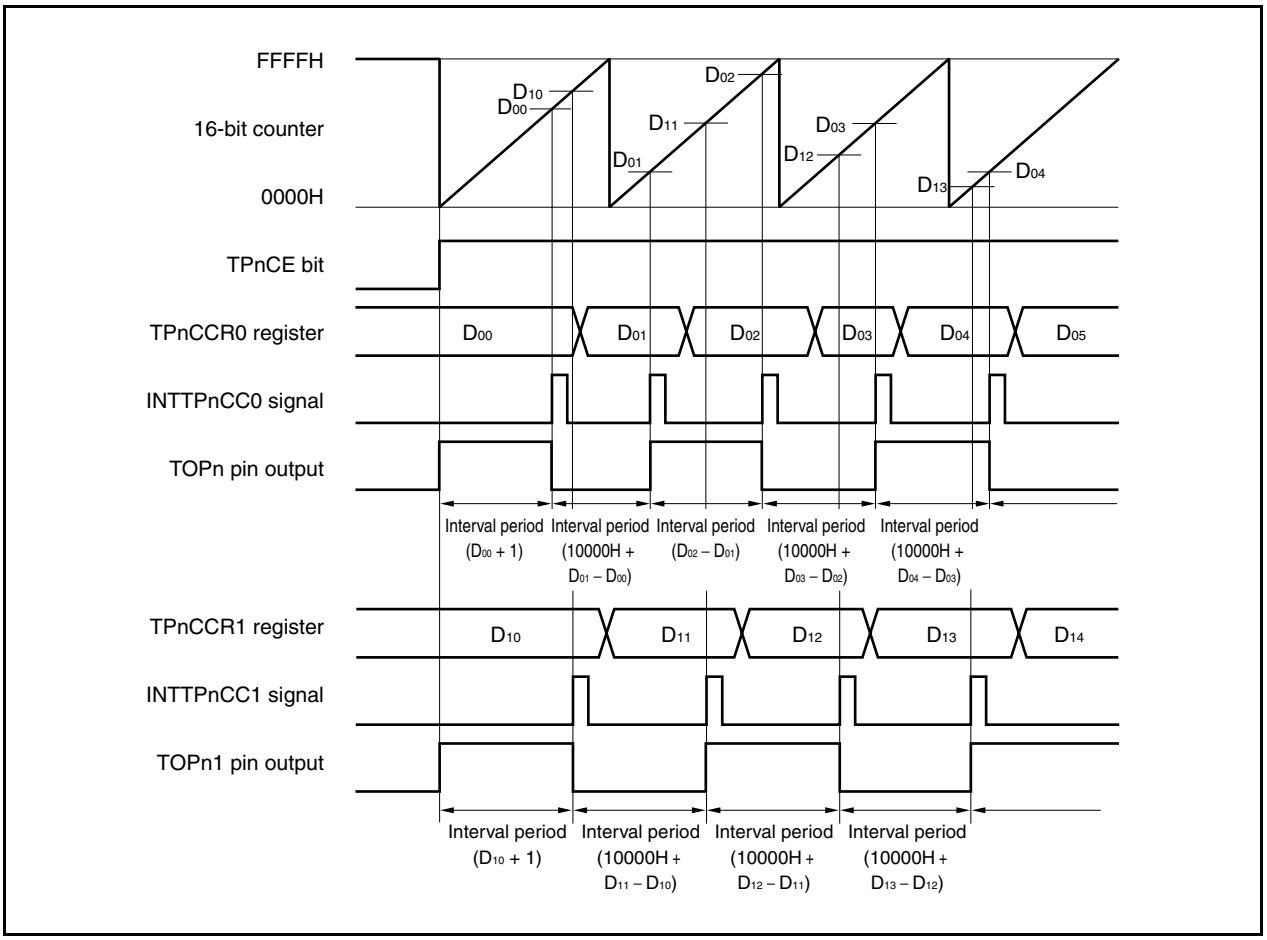

When performing an interval operation in the free-running timer mode, two intervals can be set with one channel.

To perform the interval operation, the value of the corresponding TPnCCRm register must be re-set in the interrupt servicing that is executed when the INTTPnCCm signal is detected.

The set value for re-setting the TPnCCRm register can be calculated by the following expression, where "D_m" is the interval period.

Compare register default value: $D_m - 1$

Value set to compare register second and subsequent time: Previous set value + D_m

(If the calculation result is greater than FFFFH, subtract 10000H from the result and set this value to the register.)

Remark n = 0 to 3

m = 0, 1

(b) Pulse width measurement with capture register

When pulse width measurement is performed with the TPnCCRm register used as a capture register, software processing is necessary for reading the capture register each time the INTTPnCCm signal has been detected and for calculating an interval.

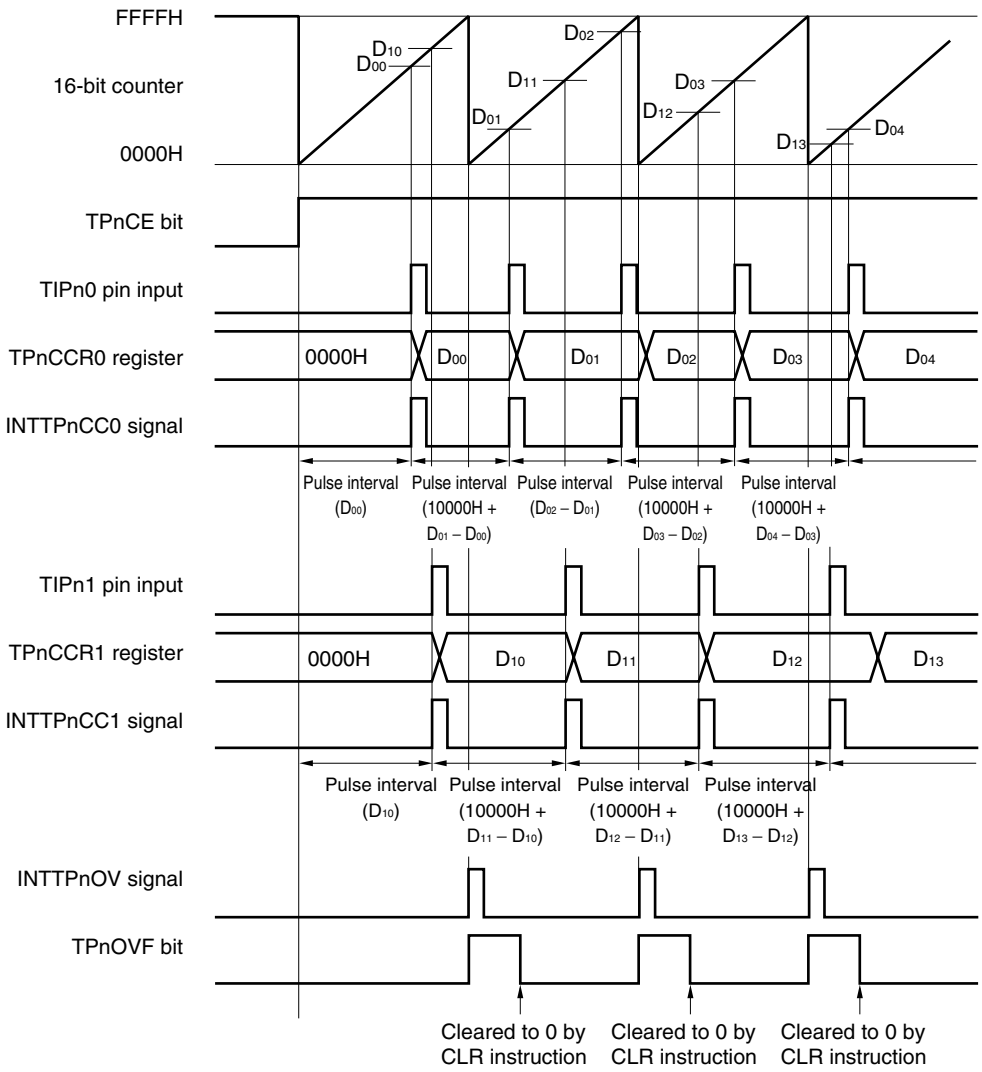

When executing pulse width measurement in the free-running timer mode, two pulse widths can be measured with one channel.

To measure a pulse width, the pulse width can be calculated by reading the value of the TPnCCRm register in synchronization with the INTTPnCCm signal, and calculating the difference between the read value and the previously read value.

Remark n = 0 to 3
m = 0, 1

(c) Processing of overflow when two capture registers are used

Care must be exercised in processing the overflow flag when two capture registers are used. First, an example of incorrect processing is shown below.

Example of incorrect processing when two capture registers are used

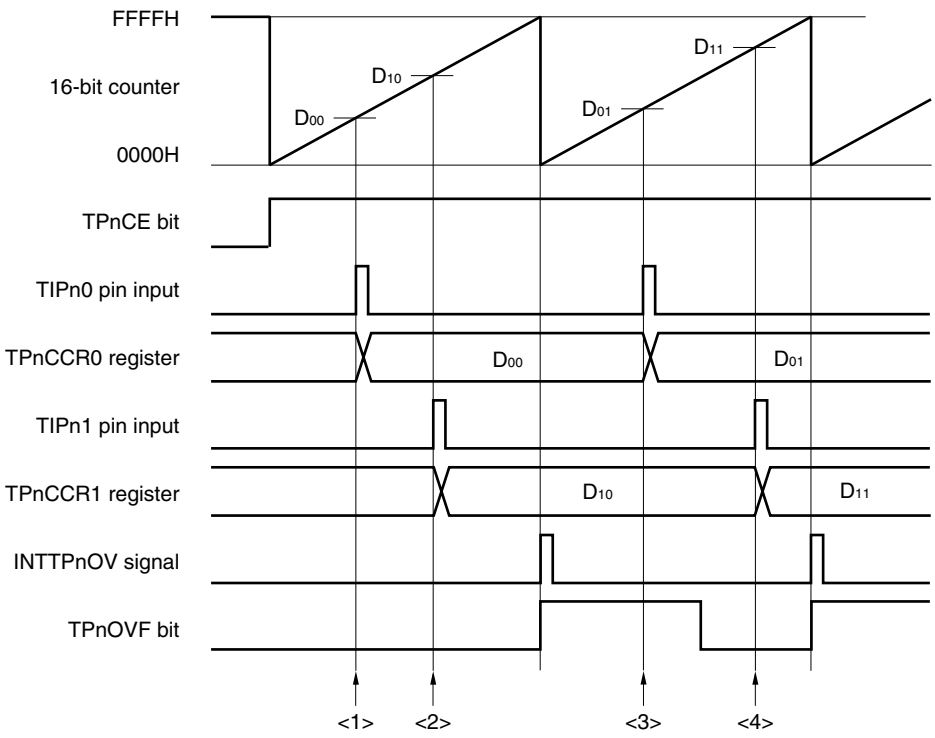

The following problem may occur when two pulse widths are measured in the free-running timer mode.

<1> Read the TPnCCR0 register (setting of the default value of the TIPn0 pin input).
<2> Read the TPnCCR1 register (setting of the default value of the TIPn1 pin input).
<3> Read the TPnCCR0 register.
Read the overflow flag. If the overflow flag is 1, clear it to 0.
Because the overflow flag is 1, the pulse width can be calculated by (10000H + D_{01} – D_{00}).
<4> Read the TPnCCR1 register.
Read the overflow flag. Because the flag is cleared in <3>, 0 is read.
Because the overflow flag is 0, the pulse width can be calculated by (D_{11} – D_{10}) (incorrect).

When two capture registers are used, and if the overflow flag is cleared to 0 by one capture register, the other capture register may not obtain the correct pulse width.
Use software when using two capture registers. An example of how to use software is shown below.

(1/2)

Example when two capture registers are used (using overflow interrupt)

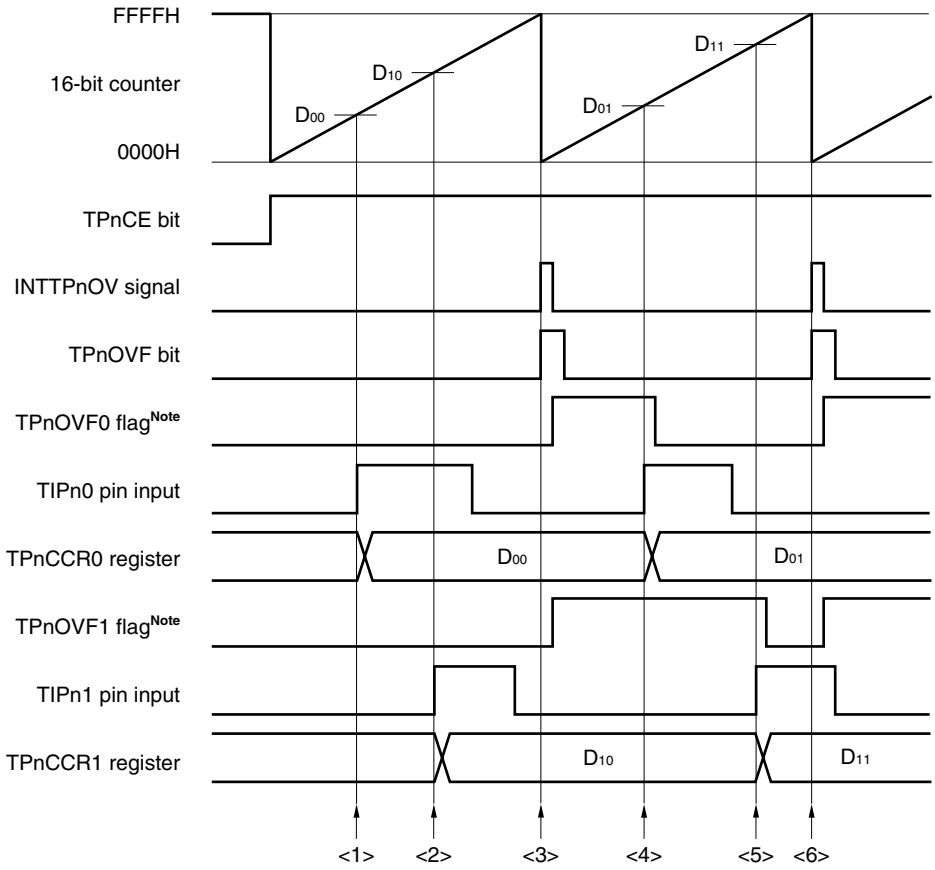

Note The TPnOVF0 and TPnOVF1 flags are set on the internal RAM by software.

<1> Read the TPnCCR0 register (setting of the default value of the TIPn0 pin input).

<2> Read the TPnCCR1 register (setting of the default value of the TIPn1 pin input).

<3> An overflow occurs. Set the TPnOVF0 and TPnOVF1 flags to 1 in the overflow interrupt servicing, and clear the overflow flag to 0.

<4> Read the TPnCCR0 register.
Read the TPnOVF0 flag. If the TPnOVF0 flag is 1, clear it to 0.
Because the TPnOVF0 flag is 1, the pulse width can be calculated by (10000H + D_{01} – D_{00}).

<5> Read the TPnCCR1 register.
Read the TPnOVF1 flag. If the TPnOVF1 flag is 1, clear it to 0 (the TPnOVF0 flag is cleared in <4>, and the TPnOVF1 flag remains 1).
Because the TPnOVF1 flag is 1, the pulse width can be calculated by (10000H + D_{11} – D_{10}) (correct).

<6> Same as <3>

(2/2)

Example when two capture registers are used (without using overflow interrupt)

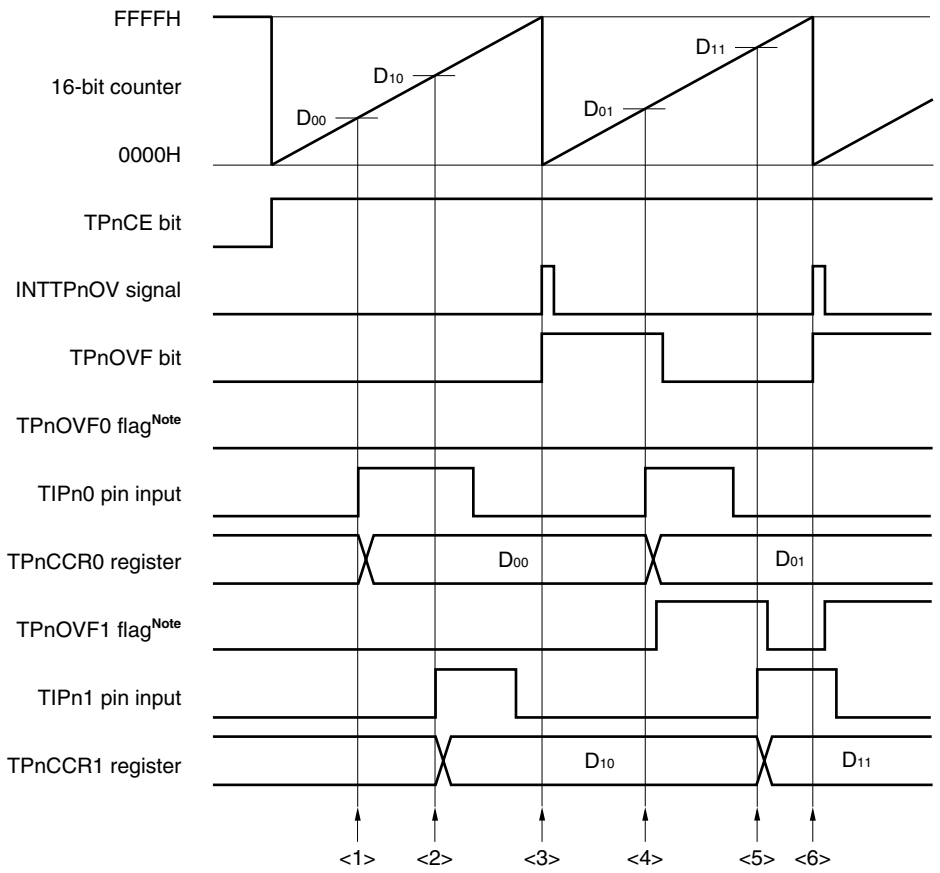

Note The TPnOVF0 and TPnOVF1 flags are set on the internal RAM by software.

<1> Read the TPnCCR0 register (setting of the default value of the TIPn0 pin input).

<2> Read the TPnCCR1 register (setting of the default value of the TIPn1 pin input).

<3> An overflow occurs. Nothing is done by software.

<4> Read the TPnCCR0 register.

Read the overflow flag. If the overflow flag is 1, set only the TPnOVF1 flag to 1, and clear the overflow flag to 0.

Because the overflow flag is 1, the pulse width can be calculated by (10000H + D_{01} – D_{00}).

<5> Read the TPnCCR1 register.

Read the overflow flag. Because the overflow flag is cleared in <4>, 0 is read.

Read the TPnOVF1 flag. If the TPnOVF1 flag is 1, clear it to 0.

Because the TPnOVF1 flag is 1, the pulse width can be calculated by (10000H + D_{11} – D_{10}) (correct).

<6> Same as <3>

(d) Processing of overflow if capture trigger interval is long

If the pulse width is greater than one cycle of the 16-bit counter, care must be exercised because an overflow may occur more than once from the first capture trigger to the next. First, an example of incorrect processing is shown below.

Example of incorrect processing when capture trigger interval is long

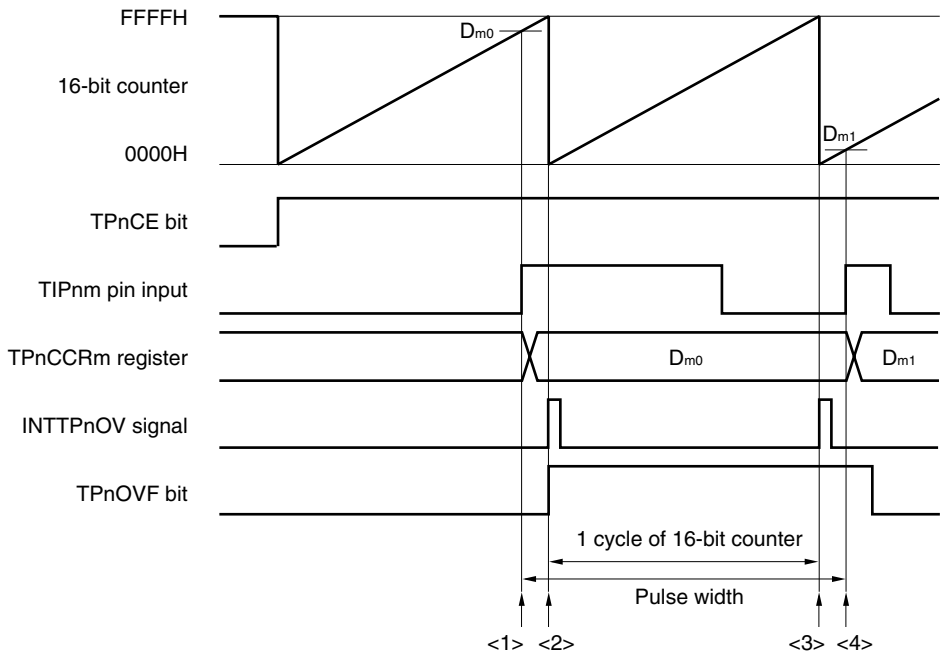

The following problem may occur when long pulse width is measured in the free-running timer mode.

<1> Read the TPnCCRm register (setting of the default value of the TIPnm pin input).
<2> An overflow occurs. Nothing is done by software.
<3> An overflow occurs a second time. Nothing is done by software.
<4> Read the TPnCCRm register.
Read the overflow flag. If the overflow flag is 1, clear it to 0.
Because the overflow flag is 1, the pulse width can be calculated by (10000H + D_{m1} – D_{m0}) (incorrect).
Actually, the pulse width must be (20000H + D_{m1} – D_{m0}) because an overflow occurs twice.

If an overflow occurs twice or more when the capture trigger interval is long, the correct pulse width may not be obtained.

If the capture trigger interval is long, slow the count clock to lengthen one cycle of the 16-bit counter, or use software. An example of how to use software is shown next.

Example when capture trigger interval is long

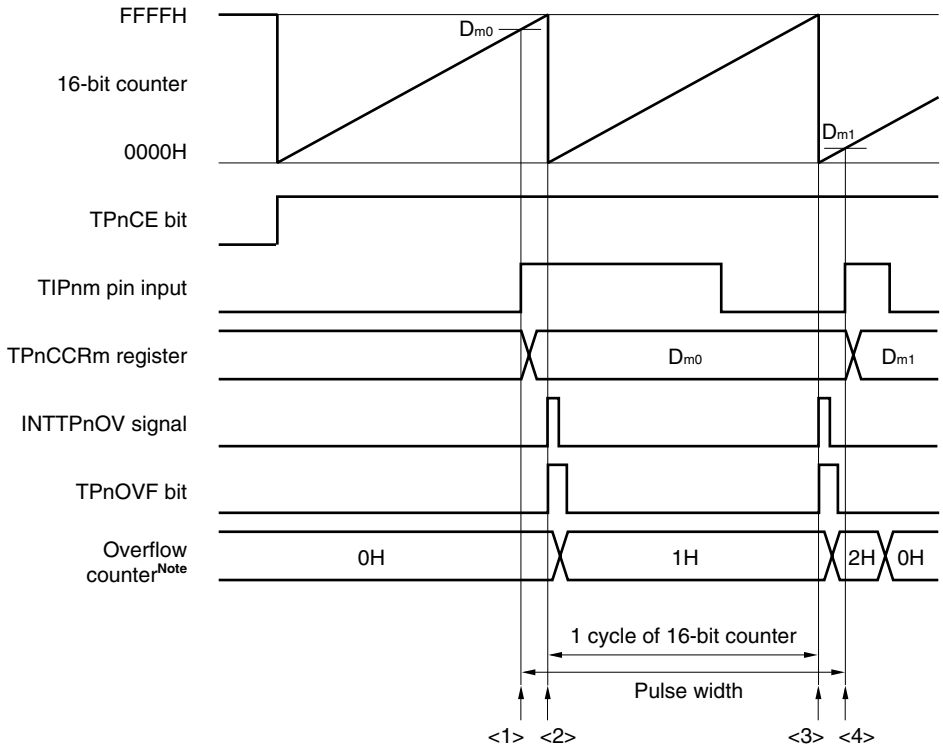

Note The overflow counter is set arbitrarily by software on the internal RAM.

<1> Read the TPnCCRm register (setting of the default value of the TIPnm pin input).

<2> An overflow occurs. Increment the overflow counter and clear the overflow flag to 0 in the overflow interrupt servicing.

<3> An overflow occurs a second time. Increment (+1) the overflow counter and clear the overflow flag to 0 in the overflow interrupt servicing.

<4> Read the TPnCCRm register.

Read the overflow counter.

→ When the overflow counter is “N”, the pulse width can be calculated by ($N \times 10000H + D_{m1} - D_{m0}$).

In this example, the pulse width is ($20000H + D_{m1} - D_{m0}$) because an overflow occurs twice.

Clear the overflow counter (0H).

(e) Clearing overflow flag

The overflow flag can be cleared to 0 by clearing the TPnOVF bit to 0 with the CLR instruction and by writing 8-bit data (bit 0 is 0) to the TPnOPT0 register. To accurately detect an overflow, read the TPnOVF bit when it is 1, and then clear the overflow flag by using a bit manipulation instruction.

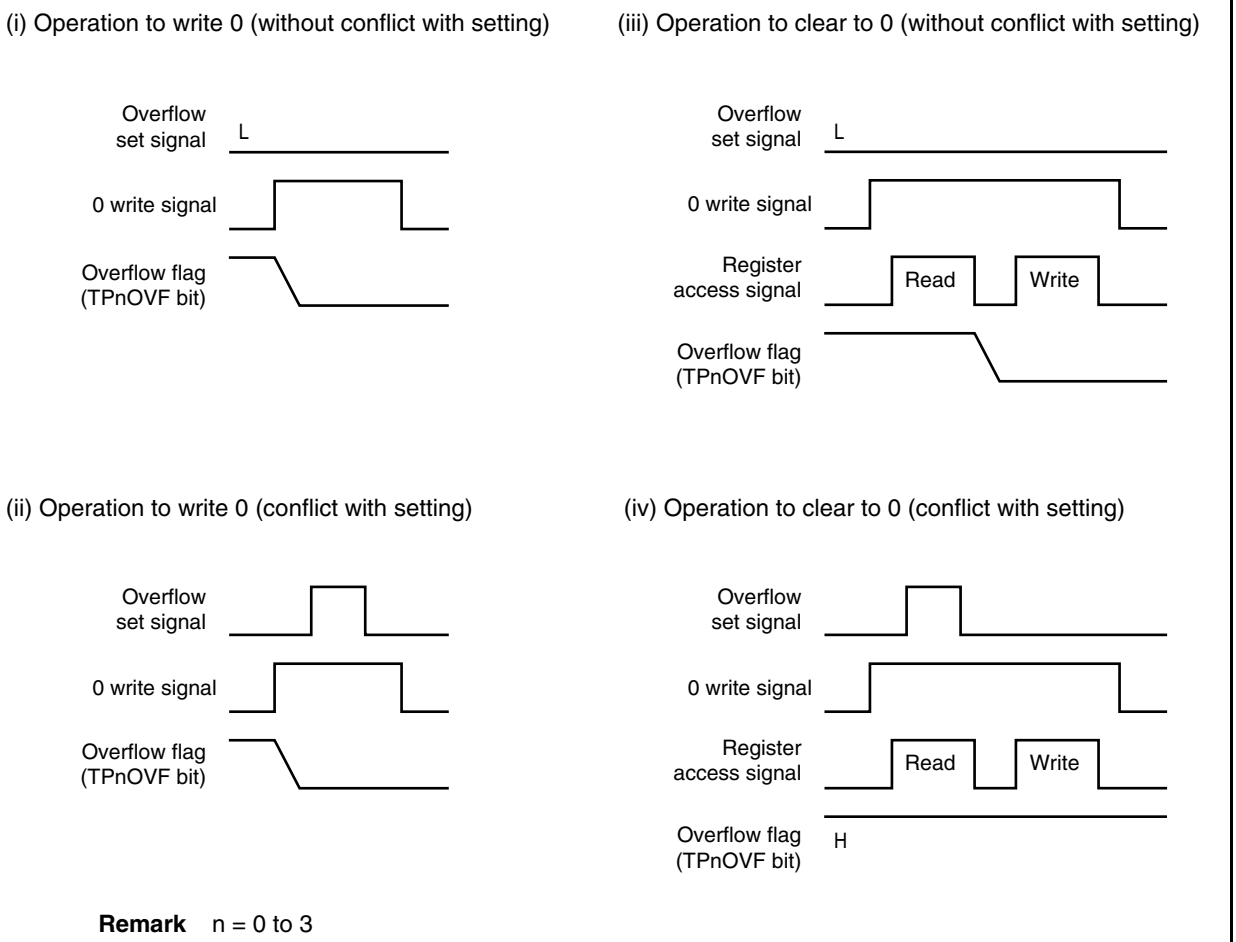

Remark n = 0 to 3

To clear the overflow flag to 0, read the overflow flag to check if it is set to 1, and clear it with the CLR instruction. If 0 is written to the overflow flag without checking if the flag is 1, the set information of overflow may be erased by writing 0 ((ii) in the above chart). Therefore, software may judge that no overflow has occurred even when an overflow actually has occurred.

If execution of the CLR instruction conflicts with occurrence of an overflow when the overflow flag is cleared to 0 with the CLR instruction, the overflow flag remains set even after execution of the clear instruction.

6.5.7 Pulse width measurement mode (TPnMD2 to TPnMD0 bits = 110)

In the pulse width measurement mode, 16-bit timer/event counter P starts counting when the TPnCTL0.TPnCE bit is set to 1. Each time the valid edge input to the TIPnm pin has been detected, the count value of the 16-bit counter is stored in the TPnCCRm register, and the 16-bit counter is cleared to 0000H.

The interval of the valid edge can be measured by reading the TPnCCRm register after a capture interrupt request signal (INTTPnCCm) occurs.

Select either the TIPn0 or TIPn1 pin as the capture trigger input pin. Specify “No edge detected” by using the TPnIOC1 register for the unused pins.

When an external clock is used as the count clock, measure the pulse width of the TIPn1 pin because the external clock is fixed to the TIPn0 pin. At this time, clear the TPnIOC1.TPnIS1 and TPnIOC1.TPnIS0 bits to 00 (capture trigger input (TIPn0 pin): No edge detected).

Figure 6-34. Configuration in Pulse Width Measurement Mode

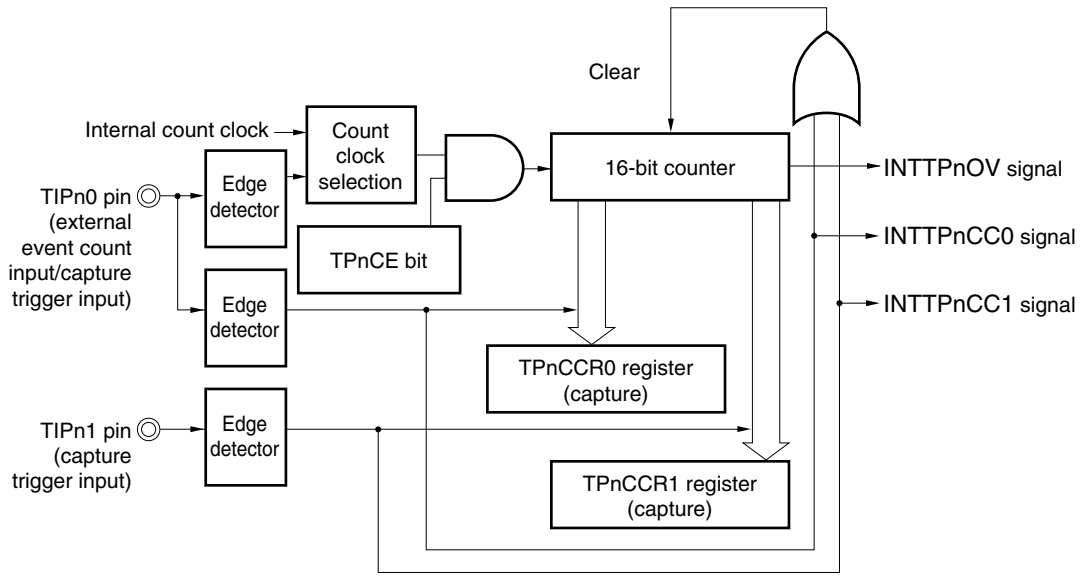

Remark n = 0 to 3
m = 0, 1

Figure 6-35. Basic Timing in Pulse Width Measurement Mode

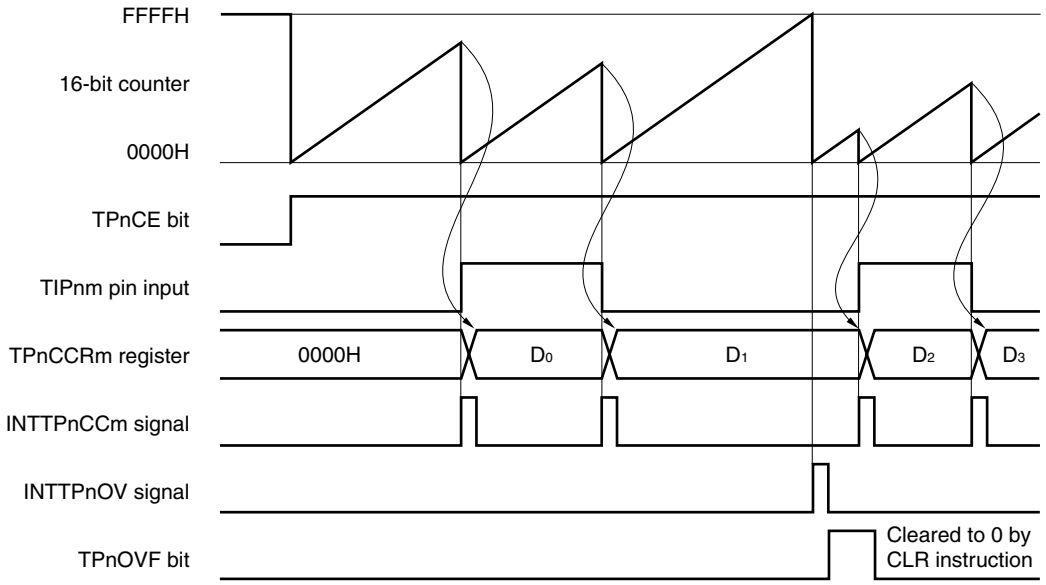

Remark n = 0 to 3
m = 0, 1

When the TPnCE bit is set to 1, the 16-bit counter starts counting. When the valid edge input to the TIPnm pin is later detected, the count value of the 16-bit counter is stored in the TPnCCRm register, the 16-bit counter is cleared to 0000H, and a capture interrupt request signal (INTTPnCCm) is generated.

The pulse width is calculated as follows.

Pulse width = Captured value × Count clock cycle

If the valid edge is not input to the TIPnm pin even when the 16-bit counter counted up to FFFFH, an overflow interrupt request signal (INTTPnOV) is generated at the next count clock, and the counter is cleared to 0000H and continues counting. At this time, the overflow flag (TPnOPT0.TPnOVF bit) is also set to 1. Clear the overflow flag to 0 by executing the CLR instruction via software.

If the overflow flag is set to 1, the pulse width can be calculated as follows.

Pulse width = (10000H × TPnOVF bit set (1) count + Captured value) × Count clock cycle

Remark n = 0 to 3
m = 0, 1

Figure 6-36. Register Setting in Pulse Width Measurement Mode (1/2)

(a) TMPn control register 0 (TPnCTL0)

	TPnCE					TPnCKS2	TPnCKS1	TPnCKS0
TPnCTL0	0/1	0	0	0	0	0/1	0/1	0/1

Select count clock[Note]

0: Stop counting
1: Enable counting

Note Setting is invalid when the TPnEEE bit = 1.

(b) TMPn control register 1 (TPnCTL1)

	TPnSYE	TPnEST	TPnEEE			TPnMD2	TPnMD1	TPnMD0
TPnCTL1	0	0	0/1	0	0	1	1	0

1, 1, 0:
Pulse width measurement mode

0: Operate with count clock selected by TPnCKS0 to TPnCKS2 bits
1: Count external event count input signal

(c) TMPn I/O control register 1 (TPnIOC1)

					TPnIS3	TPnIS2	TPnIS1	TPnIS0
TPnIOC1	0	0	0	0	0/1	0/1	0/1	0/1

Select valid edge of TIPn0 pin input

Select valid edge of TIPn1 pin input

(d) TMPn I/O control register 2 (TPnIOC2)

					TPnEES1	TPnEES0	TPnETS1	TPnETS0
TPnIOC2	0	0	0	0	0/1	0/1	0	0

Select valid edge of external event count input

Figure 6-36. Register Setting in Pulse Width Measurement Mode (2/2)

(e) TMPn option register 0 (TPnOPT0)

			TPnCCS1	TPnCCS0				TPnOVF
TPnOPT0	0	0	0	0	0	0	0	0/1

Overflow flag

(f) TMPn counter read buffer register (TPnCNT)

The value of the 16-bit counter can be read by reading the TPnCNT register.

(g) TMPn capture/compare registers 0 and 1 (TPnCCR0 and TPnCCR1)

These registers store the count value of the 16-bit counter when the valid edge input to the TIPnm pin is detected.

Remarks 1. TMPn I/O control register 0 (TPnIOC0) is not used in the pulse width measurement mode.

2. n = 0 to 3
m = 0, 1

(1) Operation flow in pulse width measurement mode

Figure 6-37. Software Processing Flow in Pulse Width Measurement Mode

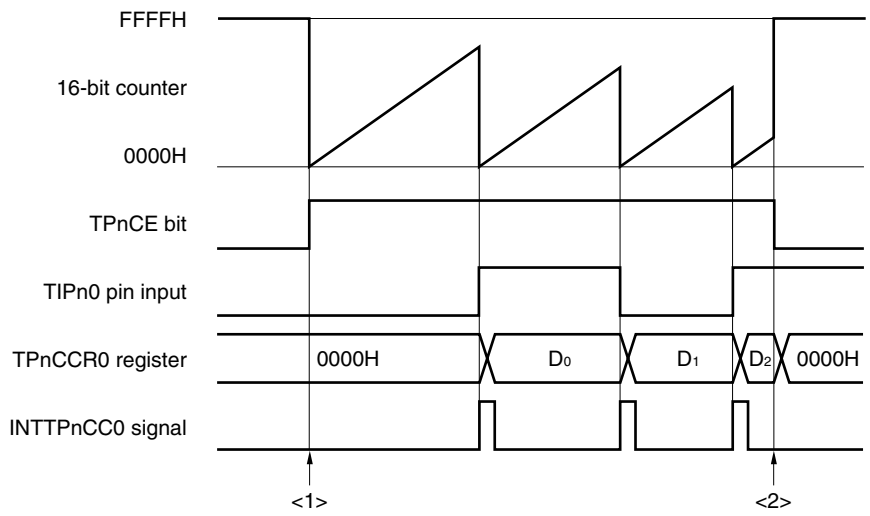

<1> Count operation start flow

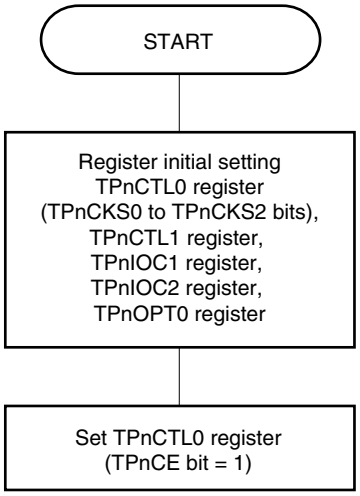

Initial setting of these registers is performed before setting the TPnCE bit to 1.

The TPnCKS0 to TPnCKS2 bits can be set at the same time when counting has been started (TPnCE bit = 1).

<2> Count operation stop flow

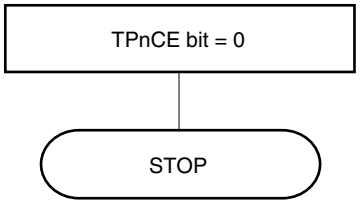

The counter is initialized and counting is stopped by clearing the TPnCE bit to 0.

Remark n = 0 to 3

(2) Operation timing in pulse width measurement mode

(a) Clearing overflow flag

The overflow flag can be cleared to 0 by clearing the TPnOVF bit to 0 with the CLR instruction and by writing 8-bit data (bit 0 is 0) to the TPnOPT0 register. To accurately detect an overflow, read the TPnOVF bit when it is 1, and then clear the overflow flag by using a bit manipulation instruction.

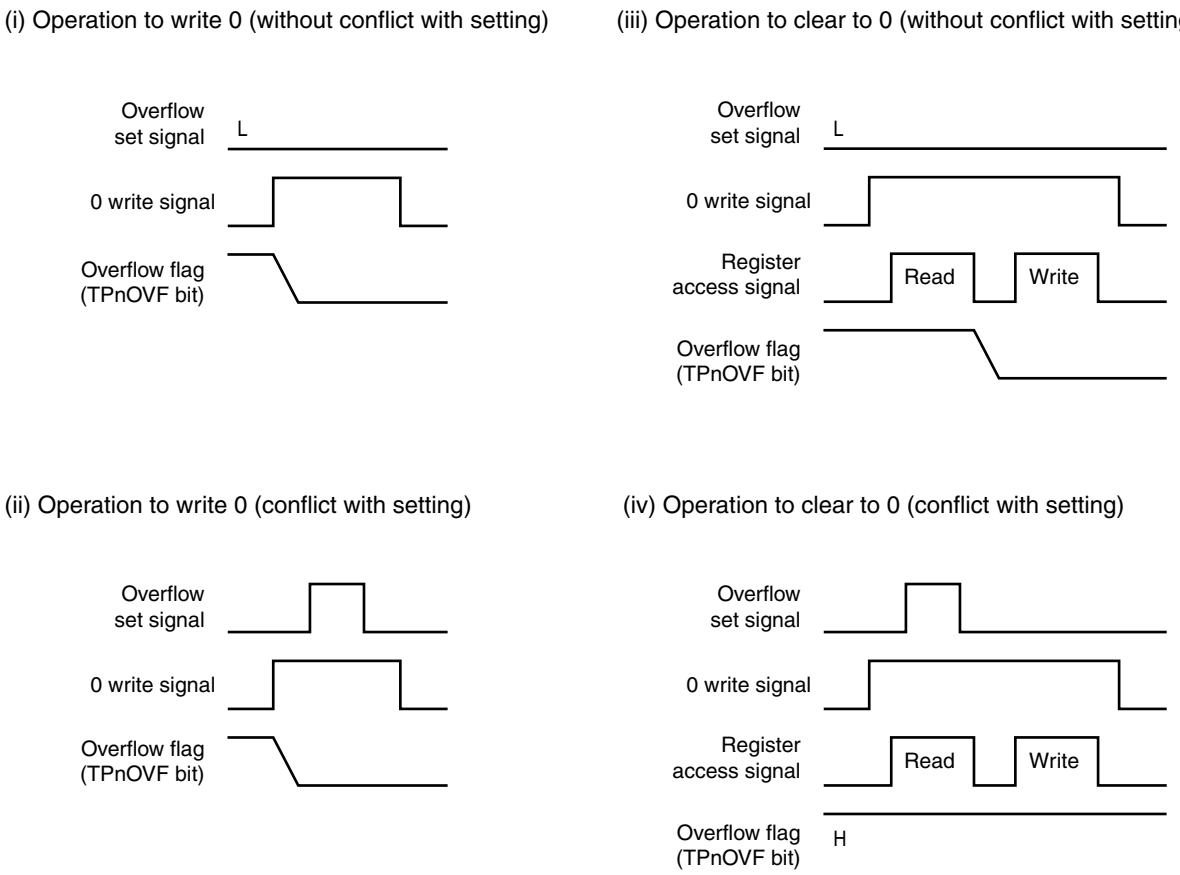

Remark n = 0 to 3

To clear the overflow flag to 0, read the overflow flag to check if it is set to 1, and clear it with the CLR instruction. If 0 is written to the overflow flag without checking if the flag is 1, the set information of overflow may be erased by writing 0 ((ii) in the above chart). Therefore, software may judge that no overflow has occurred even when an overflow actually has occurred.

If execution of the CLR instruction conflicts with occurrence of an overflow when the overflow flag is cleared to 0 with the CLR instruction, the overflow flag remains set even after execution of the clear instruction.

6.5.8 Timer output operations

The following table shows the operations and output levels of the TOPn0 and TOPn1 pins.

Table 6-4. Timer Output Control in Each Mode

Operation Mode	TOPn1 Pin	TOPn0 Pin
Interval timer mode	Square wave output	
External event count mode	Square wave output	–
External trigger pulse output mode	External trigger pulse output	Square wave output
One-shot pulse output mode	One-shot pulse output	
PWM output mode	PWM output	
Free-running timer mode	Square wave output (only when compare function is used)	
Pulse width measurement mode	–	

Remark n = 0 to 3

Table 6-5. Truth Table of TOPn0 and TOPn1 Pins Under Control of Timer Output Control Bits

TPnIOC0.TPnOLm Bit	TPnIOC0.TPnOEm Bit	TPnCTL0.TPnCE Bit	Level of TOPnm Pin
0	0	×	Low-level output
	1	0	Low-level output
		1	Low level immediately before counting, high level after counting is started
1	0	×	High-level output
	1	0	High-level output
		1	High level immediately before counting, low level after counting is started

Remark n = 0 to 3
m = 0, 1

6.6 Timer Tuned Operation Function

Timer P and timer Q have a timer tuned operation function.
The timers that can be synchronized are listed in Table 6-6.

Table 6-6. Tuned Operation Mode of Timers

Master Timer	Slave Timer	
TMP0	TMP1	–
TMP2	TMP3	TMQ0

Cautions 1. The tuned operation mode is enabled or disabled by the TPmCTL1.TPmSYE and TQ0CTL1.TQ0SYE bits. For TMP2, either or both TMP3 and TMQ0 can be specified as slaves.

2. Set the tuned operation mode using the following procedure.

<1> Set the TPmCTL1.TPmSYE and TQ0CTL1.TQ0SYE bits of the slave timer to enable the tuned operation.
Set the TPmCTL1.TPmMD2 to TPmCTL1.TPmMD0 and TQ0CTL1.TQ0MD2 to TQ0CTL1.TQ0MD0 bits of the slave timer to the free-running mode.

<2> Set the timer mode by using the TPnCTL1.TPnMD2 to TPnCTL1.TPnMD0 bits.
At this time, do not set the TPnCTL1.TPnSYE bit of the master timer.

<3> Set the compare register value of the master and slave timers.

<4> Set the TPmCTL0.TPmCE and TQ0CTL0.TQ0CE bits of the slave timer to enable operation on the internal operating clock.

<5> Set the TPnCTL0.TPnCE bit of the master timer to enable operation on the internal operating clock.

Remark m = 1, 3
n = 0, 2

Tables 6-7 and 6-8 show the timer modes that can be used in the tuned operation mode (√: Settable, ×: Not settable).

Table 6-7. Timer Modes Usable in Tuned Operation Mode

Master Timer	Free-Running Mode	PWM Mode	Triangular Wave PWM Mode
TMP0	√	√	×
TMP2	√	√	×

Table 6-8. Timer Output Functions

Tuned Channel	Timer	Pin	Free-Running Mode		PWM Mode		Triangular Wave PWM Mode	
			Tuning OFF	Tuning ON	Tuning OFF	Tuning ON	Tuning OFF	Tuning ON
Ch0	TMP0 (master)	TOP00	PPG	←	Toggle	←	N/A	←
		TOP01	PPG	←	PWM	←	N/A	←
	TMP1 (slave)	TOP10	PGP	←	Toggle	PWM	N/A	←
		TOP11	PPG	←	PWM	←	N/A	←
Ch1	TMP2 (master)	TOP20	PPG	←	Toggle	PWM	N/A	←
		TOP21	PPG	←	PWM	←	N/A	←
	TMP3 (slave)	TOP30	PPG	←	Toggle	PWM	N/A	←
		TOP31	PPG	←	PWM	←	N/A	←
	TMQ0 (slave)	TOQ00	PPG	←	Toggle	PWM	Toggle	N/A
		TOQ01 to TOQ03	PPG	←	PWM	←	Triangular wave PWM	N/A

Remark The timing of transmitting data from the compare register of the master timer to the compare register of the slave timer is as follows.

PPG: CPU write timing

Toggle, PWM, triangular wave PWM: Timing at which timer counter and compare register match TOPn0 and TOQ00 (n = 0 to 3)

Figure 6-38. Tuned Operation Image (TMP2, TMP3, TMQ0)

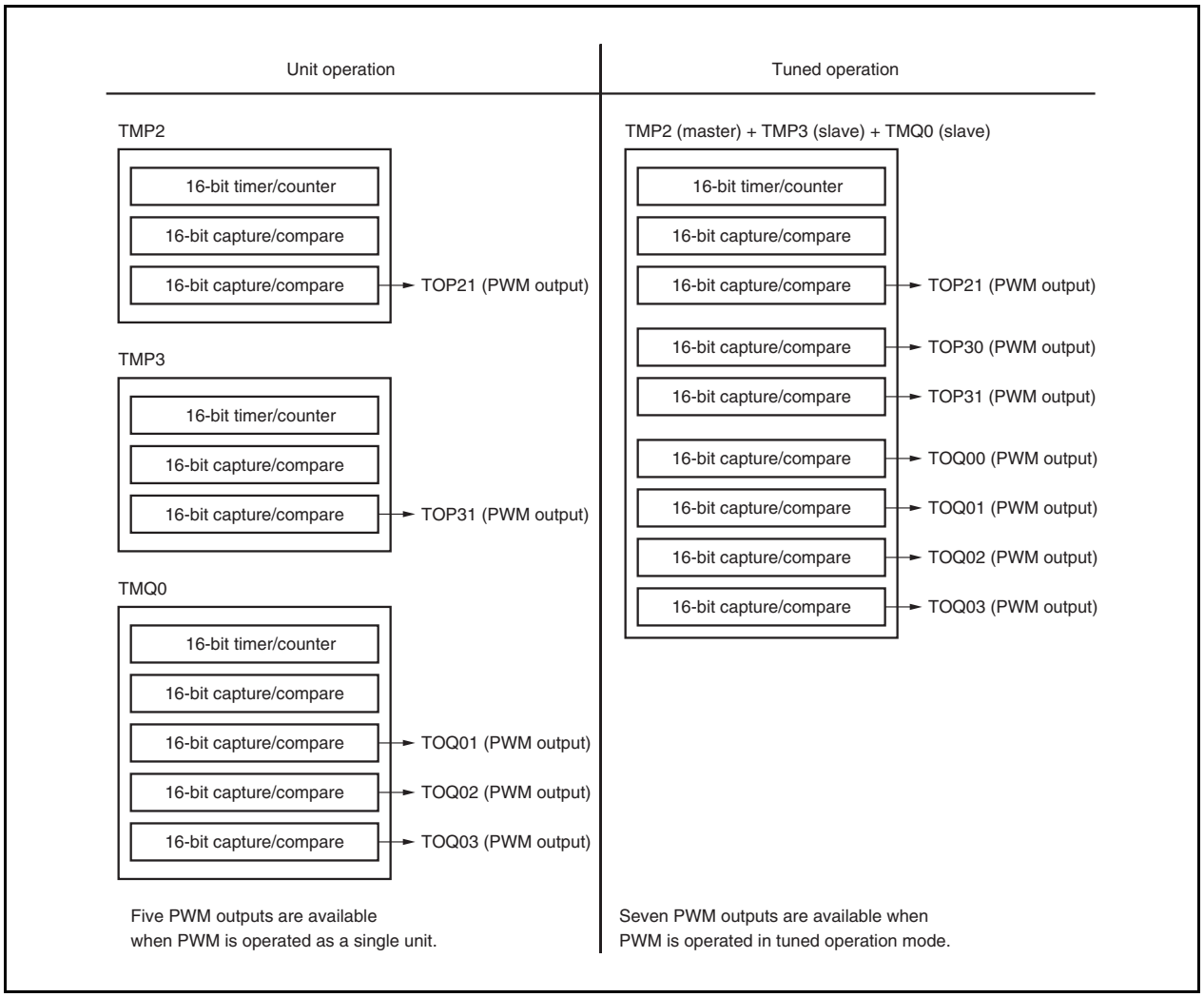

Figure 6-39. Basic Operation Timing of Tuned PWM Function (TMP2, TMP3, TMQ0)

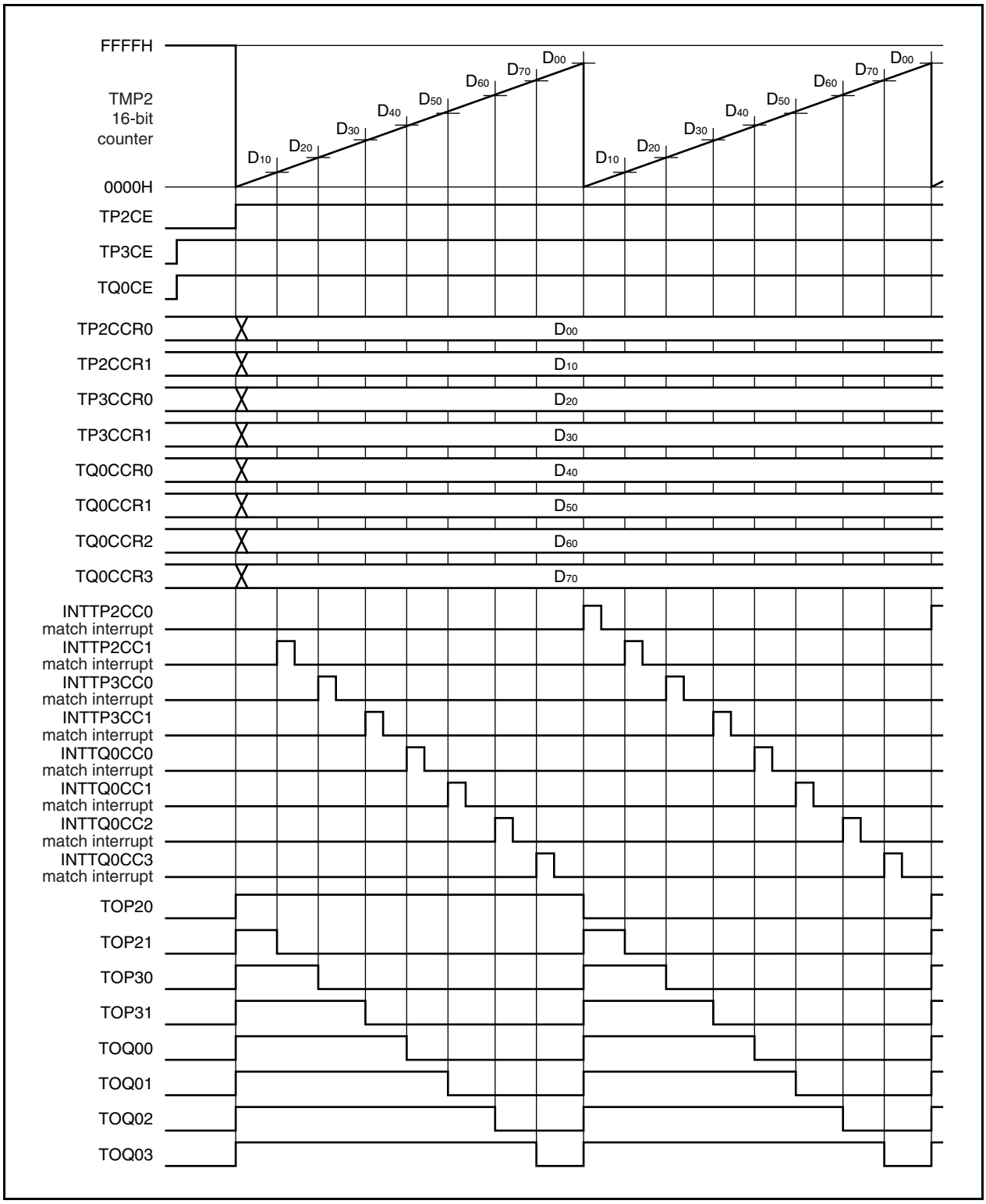

6.7 Selector Function

In the V850ES/HE2, the alternate-function pins of port and peripheral I/O (TMP, TMM0, or UARTA) can be used to select the capture trigger input of TMP.

By using this function, the following is possible.

- The TIP10 and TIP11 input signals of TMP1 can be selected from the port/timer alternate-function pins (TIP10 and TIP11 pins) and the UARTA reception alternate-function pins (RXDA0 and RXDA1).
  → When the RXDA0 or RXDA1 signal of UARTA0 or UARTA1 is selected, the baud rate error of the UARTA LIN reception transfer can be calculated.
- The TIP01 input signal of TMP0 can be selected from the port/timer alternate-function pin (TIP01 pin) and the INTTM0EQ0 signal of TMM0.

Cautions 1. When using the selector function, set the capture trigger input of TMP before connecting the timer.

2. When setting the selector function, first disable the peripheral I/O to be connected (TMP, TMM0, or UARTA).

The capture input for the selector function is specified by the following register.

(1) Selector operation control register 0 (SELCNT0)

The SELCNT0 register is an 8-bit register that selects the capture trigger for TMP0, TMP1, and TMP3.
This register can be read or written in 8-bit or 1-bit units.
Reset sets this register to 00H.

After reset: 00H R/W Address: FFFFF308H

	7	6	5	4	3	2	1	0
SELCNT0	0	0	0	ISEL04	ISEL03	ISEL02	0	0

ISEL04	Selection of TIP11 input signal (TMP1)
0	TIP11 pin input
1	RXDA1 pin input

ISEL03	Selection of TIP10 input signal (TMP1)
0	TIP10 pin input
1	RXDA0 pin input

ISEL02[Note]	Selection of TIP01 input signal (TMP0)
0	TIP01 pin input
1	INTTM0EQ0 interrupt of TMM0

Note Use the INTTM0EQ0 interrupt signal as the TIP01 input signal under the following condition.
TMM operation clock ≥ TMP operation clock × 4

Caution To set the ISEL02 to ISEL04 bits to 1, set the corresponding pin in the capture input mode.

6.8 Cautions

(1) Capture operation

When the capture operation is used and a slow clock is selected as the count clock, FFFFH, not 0000H, may be captured in the TPnCCR0 and TPnCCR1 registers if the capture trigger is input immediately after the TPnCE bit is set to 1.

(a) Free-running timer mode

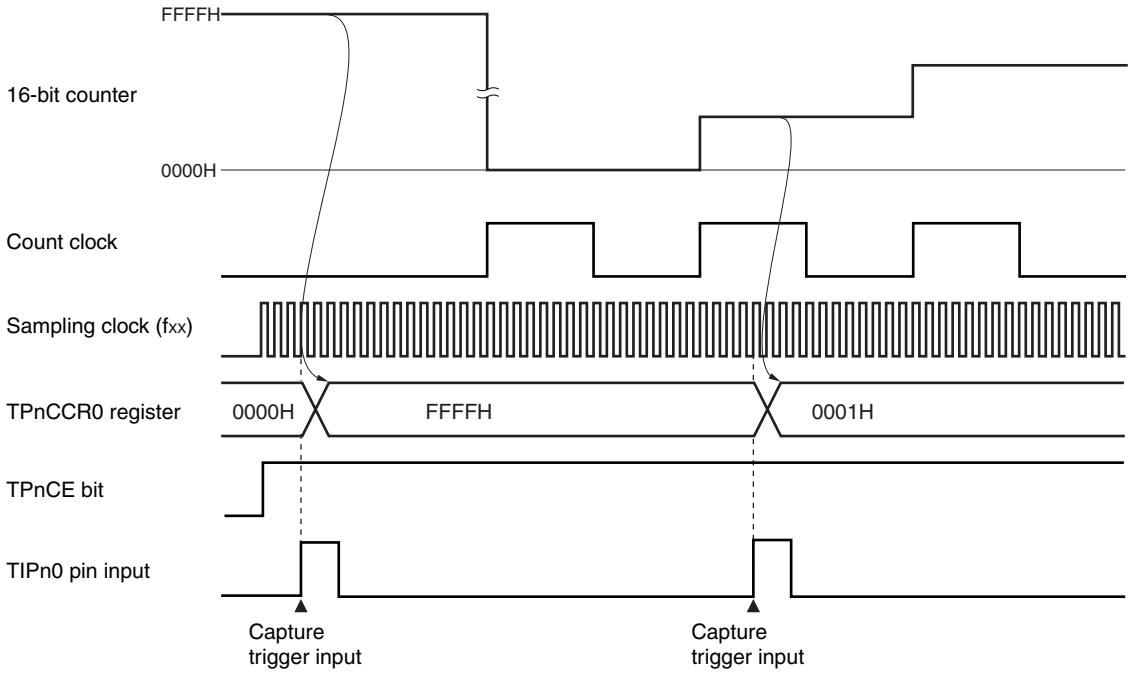

(b) Pulse width measurement mode

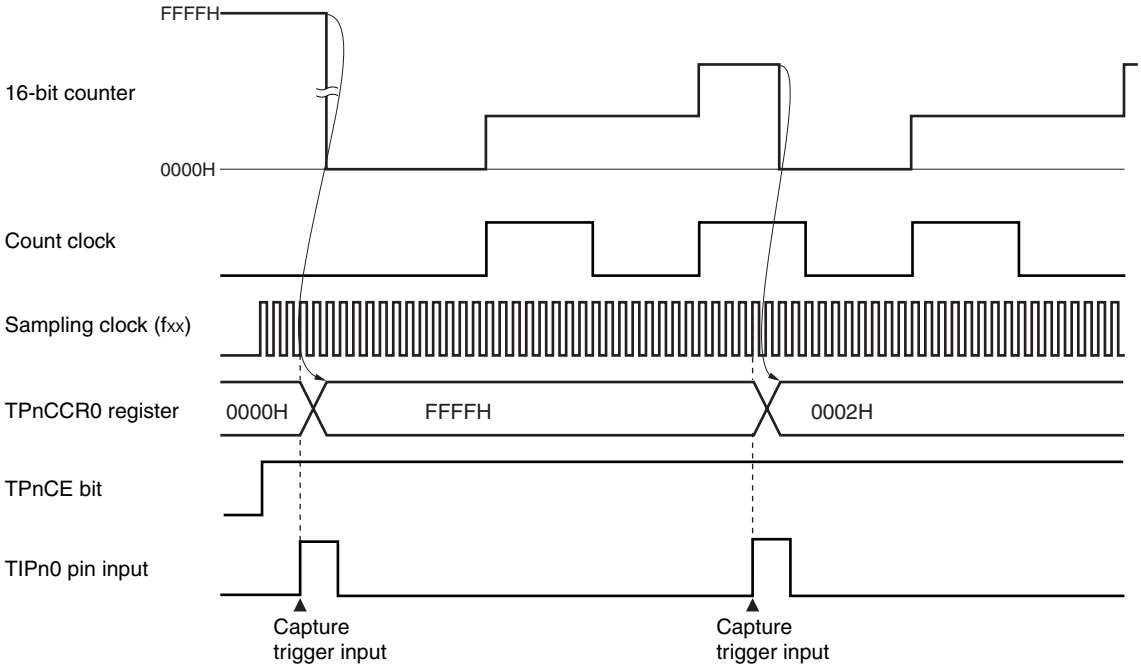

CHAPTER 7 16-BIT TIMER/EVENT COUNTER Q (TMQ)

Timer Q (TMQ) is a 16-bit timer/event counter.
The V850ES/HE2 incorporates TMQ0.

7.1 Overview

An outline of TMQ0 is shown below.

- Clock selection: 8 ways
- Capture/trigger input pins: 4
- External event count input pins: 1
- External trigger input pins: 1
- Timer/counters: 1
- Capture/compare registers: 4
- Capture/compare match interrupt request signals: 4
- Timer output pins: 4

7.2 Functions

TMQ0 has the following functions.

- Interval timer
- External event counter
- External trigger pulse output
- One-shot pulse output
- PWM output
- Free-running timer
- Pulse width measurement
- Triangular wave PWM output
- Timer tuned operation function

7.3 Configuration

TMQ0 includes the following hardware.

Table 7-1. Configuration of TMQ0

Item	Configuration
Timer register	16-bit counter
Registers	TMQ0 capture/compare registers 0 to 3 (TQ0CCR0 to TQ0CCR3) TMQ0 counter read buffer register (TQ0CNT) CCR0 to CCR3 buffer registers
Timer inputs	4 (TIQ00[Note 1] to TIQ03 pins)
Timer outputs	4 (TOQ00 to TOQ03 pins)
Control registers[Note 2]	TMQ0 control registers 0, 1 (TQ0CTL0, TQ0CTL1) TMQ0 I/O control registers 0 to 2 (TQ0IOC0 to TQ0IOC2) TMQ0 option register 0 (TQ0OPT0)

Notes 1. The TIQ00 pin functions alternately as a capture trigger input signal, external event count input signal, and external trigger input signal.

2. When using the functions of the TIQ00 to TIQ03 and TOQ00 to TOQ03 pins, refer to **Table 4-15 Using Port Pin as Alternate-Function Pin**.

Figure 7-1. Block Diagram of TMQ0

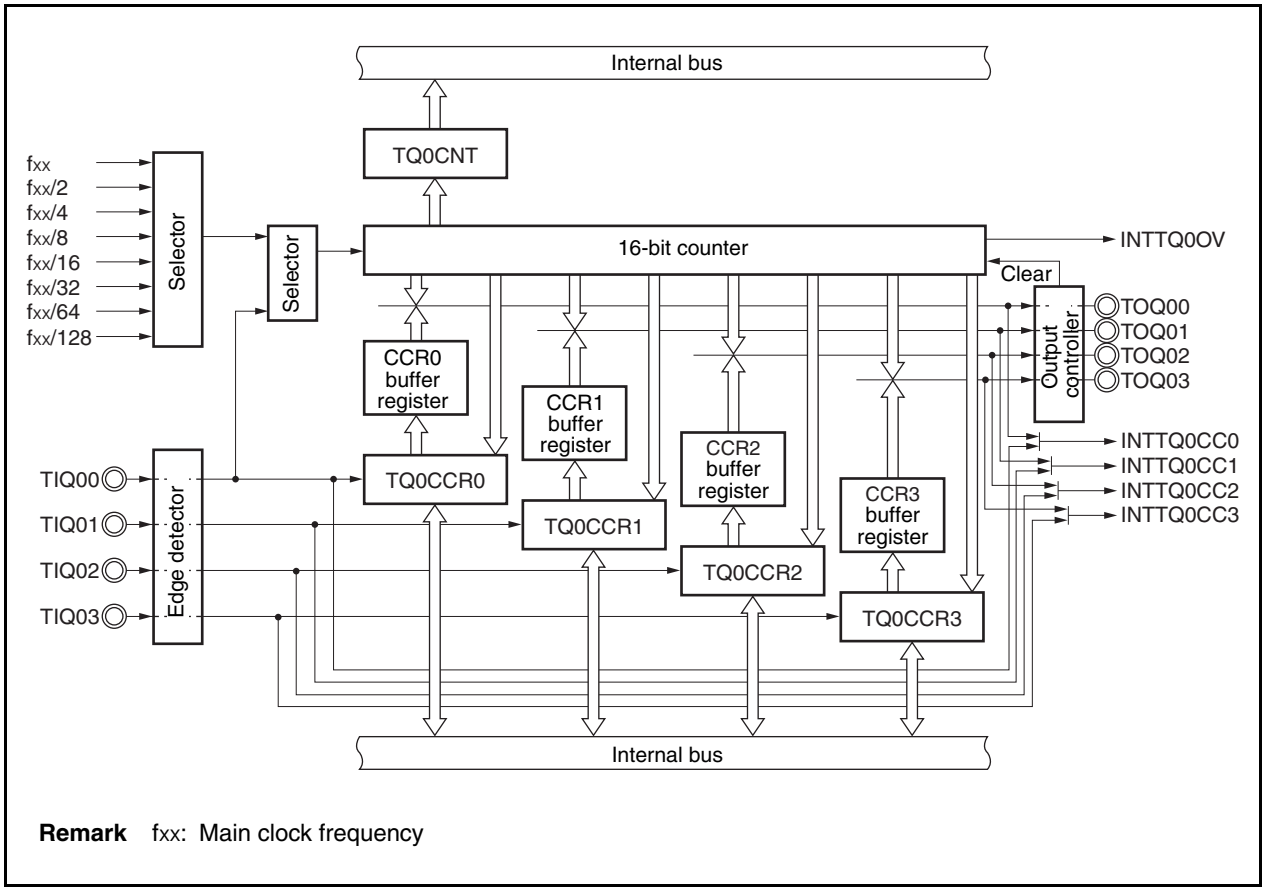

Remark fxx: Main clock frequency

(1) 16-bit counter

This 16-bit counter can count internal clocks or external events.

The count value of this counter can be read by using the TQ0CNT register.

When the TQ0CTL0.TQ0CE bit = 0, the value of the 16-bit counter is FFFFH. If the TQ0CNT register is read at this time, 0000H is read.

Reset sets the TQ0CE bit to 0. Therefore, the 16-bit counter is set to FFFFH.

(2) CCR0 buffer register

This is a 16-bit compare register that compares the count value of the 16-bit counter.

When the TQ0CCR0 register is used as a compare register, the value written to the TQ0CCR0 register is transferred to the CCR0 buffer register. When the count value of the 16-bit counter matches the value of the CCR0 buffer register, a compare match interrupt request signal (INTTQ0CC0) is generated.

The CCR0 buffer register cannot be read or written directly.

The CCR0 buffer register is cleared to 0000H after reset, as the TQ0CCR0 register is cleared to 0000H.

(3) CCR1 buffer register

This is a 16-bit compare register that compares the count value of the 16-bit counter.

When the TQ0CCR1 register is used as a compare register, the value written to the TQ0CCR1 register is transferred to the CCR1 buffer register. When the count value of the 16-bit counter matches the value of the CCR1 buffer register, a compare match interrupt request signal (INTTQ0CC1) is generated.

The CCR1 buffer register cannot be read or written directly.

The CCR1 buffer register is cleared to 0000H after reset, as the TQ0CCR1 register is cleared to 0000H.

(4) CCR2 buffer register

This is a 16-bit compare register that compares the count value of the 16-bit counter.

When the TQ0CCR2 register is used as a compare register, the value written to the TQ0CCR2 register is transferred to the CCR2 buffer register. When the count value of the 16-bit counter matches the value of the CCR2 buffer register, a compare match interrupt request signal (INTTQ0CC2) is generated.

The CCR2 buffer register cannot be read or written directly.

The CCR2 buffer register is cleared to 0000H after reset, as the TQ0CCR2 register is cleared to 0000H.

(5) CCR3 buffer register

This is a 16-bit compare register that compares the count value of the 16-bit counter.

When the TQ0CCR3 register is used as a compare register, the value written to the TQ0CCR3 register is transferred to the CCR3 buffer register. When the count value of the 16-bit counter matches the value of the CCR3 buffer register, a compare match interrupt request signal (INTTQ0CC3) is generated.

The CCR3 buffer register cannot be read or written directly.

The CCR3 buffer register is cleared to 0000H after reset, as the TQ0CCR3 register is cleared to 0000H.

(6) Edge detector

This circuit detects the valid edges input to the TIQ00 and TIQ03 pins. No edge, rising edge, falling edge, or both the rising and falling edges can be selected as the valid edge by using the TQ0IOC1 and TQ0IOC2 registers.

(7) Output controller

This circuit controls the output of the TOQ00 to TOQ03 pins. The output controller is controlled by the TQ0IOC0 register.

(8) Selector

This selector selects the count clock for the 16-bit counter. Eight types of internal clocks or an external event can be selected as the count clock.

7.4 Registers

The registers that control TMQ0 are as follows.

- TMQ0 control register 0 (TQ0CTL0)
- TMQ0 control register 1 (TQ0CTL1)
- TMQ0 I/O control register 0 (TQ0IOC0)
- TMQ0 I/O control register 1 (TQ0IOC1)
- TMQ0 I/O control register 2 (TQ0IOC2)
- TMQ0 option register 0 (TQ0OPT0)
- TMQ0 capture/compare register 0 (TQ0CCR0)
- TMQ0 capture/compare register 1 (TQ0CCR1)
- TMQ0 capture/compare register 2 (TQ0CCR2)
- TMQ0 capture/compare register 3 (TQ0CCR3)
- TMQ0 counter read buffer register (TQ0CNT)

Remark When using the functions of the TIQ00 to TIQ03 and TOQ00 to TOQ03 pins, refer to **Table 4-15 Using Port Pin as Alternate-Function Pin**.

(1) TMQ0 control register 0 (TQ0CTL0)

The TQ0CTL0 register is an 8-bit register that controls the operation of TMQ0.

This register can be read or written in 8-bit or 1-bit units.

Reset sets this register to 00H.

The same value can always be written to the TQ0CTL0 register by software.

After reset: 00H R/W Address: FFFFF540H

	7	6	5	4	3	2	1	0
TQ0CTL0	TQ0CE	0	0	0	0	TQ0CKS2	TQ0CKS1	TQ0CKS0

TQ0CE	TMQ0 operation control
0	TMQ0 operation disabled (TMQ0 reset asynchronously[Note]).
1	TMQ0 operation enabled. TMQ0 operation started.

TQ0CKS2	TQ0CKS1	TQ0CKS0	Internal count clock selection
0	0	0	f_{XX}
0	0	1	$f_{XX}/2$
0	1	0	$f_{XX}/4$
0	1	1	$f_{XX}/8$
1	0	0	$f_{XX}/16$
1	0	1	$f_{XX}/32$
1	1	0	$f_{XX}/64$
1	1	1	$f_{XX}/128$

Note TQ0OPT0.TQ0OVF bit, 16-bit counter, timer output (TOQ00 to TOQ03 pins)

Cautions 1. Set the TQ0CKS2 to TQ0CKS0 bits when the TQ0CE bit = 0. When the value of the TQ0CE bit is changed from 0 to 1, the TQ0CKS2 to TQ0CKS0 bits can be set simultaneously.

2. Be sure to clear bits 3 to 6 to "0".

Remark f_{XX}: Main clock frequency

(2) TMQ0 control register 1 (TQ0CTL1)

The TQ0CTL1 register is an 8-bit register that controls the operation of TMQ0.

This register can be read or written in 8-bit or 1-bit units.

Reset sets this register to 00H.

(1/2)

After reset: 00H R/W Address: FFFFF541H

	7	6	5	4	3	2	1	0
TQ0CTL1	TQ0SYE	TQ0EST	TQ0EEE	0	0	TQ0MD2	TQ0MD1	TQ0MD0

TQ0SYE	Tuned operation mode enable control
0	Independent operation mode (asynchronous operation mode)
1	Tuned operation mode (specification of slave operation) In this mode, timer P can operate in synchronization with a master timer. Master timer: TMP2; Slave timer: TMP3, TMQ0 For the tuned operation mode, see **7.6 Timer Tuned Operation Function**.

TQ0EST	Software trigger control
0	–
1	Generate a valid signal for external trigger input. • In one-shot pulse output mode: A one-shot pulse is output with writing 1 to the TQ0EST bit as the trigger. • In external trigger pulse output mode: A PWM waveform is output with writing 1 to the TQ0EST bit as the trigger.

Cautions 1. The TQ0EST bit is valid only in the external trigger pulse output mode or one-shot pulse output mode. In any other mode, writing 1 to this bit is ignored.

2. Be sure to clear bits 3 and 4 to "0".

(2/2)

TQ0EEE	Count clock selection
0	Disable operation with external event count input. (Perform counting with the count clock selected by the TQ0CTL0.TQ0CK0 to TQ0CK2 bits.)
1	Enable operation with external event count input. (Perform counting at the valid edge of the external event count input signal.)
The TQ0EEE bit selects whether counting is performed with the internal count clock or the valid edge of the external event count input.	

TQ0MD2	TQ0MD1	TQ0MD0	Timer mode selection
0	0	0	Interval timer mode
0	0	1	External event count mode
0	1	0	External trigger pulse output mode
0	1	1	One-shot pulse output mode
1	0	0	PWM output mode
1	0	1	Free-running timer mode
1	1	0	Pulse width measurement mode
1	1	1	Triangular wave PWM mode

Cautions 1. External event count input is selected in the external event count mode regardless of the value of the TQ0EEE bit.

2. Set the TQ0EEE and TQ0MD2 to TQ0MD0 bits when the TQ0CTL0.TQ0CE bit = 0. (The same value can be written when the TQ0CE bit = 1.) The operation is not guaranteed when rewriting is performed with the TQ0CE bit = 1. If rewriting was mistakenly performed, clear the TQ0CE bit to 0 and then set the bits again.

(3) TMQ0 I/O control register 0 (TQ0IOC0)

The TQ0IOC0 register is an 8-bit register that controls the timer output (TOQ00 to TOQ03 pins).

This register can be read or written in 8-bit or 1-bit units.

Reset sets this register to 00H.

After reset: 00H R/W Address: FFFFF542H

	7	6	5	4	3	2	1	0
TQ0IOC0	TQ0OL3	TQ0OE3	TQ0OL2	TQ0OE2	TQ0OL1	TQ0OE1	TQ0OL0	TQ0OE0

TQ0OLm	TOQ0m pin output level setting (m = 0 to 3)
0	TOQ0m pin output inversion disabled
1	TOQ0m pin output inversion enabled

TQ0OEm	TOQ0m pin output setting (m = 0 to 3)
0	Timer output disabled • When TQ0OLm bit = 0: Low level is output from the TOQ0m pin • When TQ0OLm bit = 1: High level is output from the TOQ0m pin
1	Timer output enabled (A square wave is output from the TOQ0m pin).

Cautions 1. Rewrite the TQ0OLm and TQ0OEm bits when the TQ0CTL0.TQ0CE bit = 0. (The same value can be written when the TQ0CE bit = 1.) If rewriting was mistakenly performed, clear the TQ0CE bit to 0 and then set the bits again.

2. Even if the TQ0OLm bit is manipulated when the TQ0CE and TQ0OEm bits are 0, the TOQ0m pin output level varies.

Remark m = 0 to 3

(4) TMQ0 I/O control register 1 (TQ0IOC1)

The TQ0IOC1 register is an 8-bit register that controls the valid edge of the capture trigger input signals (TIQ00 to TIQ03 pins).

This register can be read or written in 8-bit or 1-bit units.

Reset sets this register to 00H.

After reset: 00H R/W Address: FFFFF543H

	7	6	5	4	3	2	1	0
TQ0IOC1	TQ0IS7	TQ0IS6	TQ0IS5	TQ0IS4	TQ0IS3	TQ0IS2	TQ0IS1	TQ0IS0

TQ0IS7	TQ0IS6	Capture trigger input signal (TIQ03 pin) valid edge setting
0	0	No edge detection (capture operation invalid)
0	1	Detection of rising edge
1	0	Detection of falling edge
1	1	Detection of both edges

TQ0IS5	TQ0IS4	Capture trigger input signal (TIQ02 pin) valid edge detection
0	0	No edge detection (capture operation invalid)
0	1	Detection of rising edge
1	0	Detection of falling edge
1	1	Detection of both edges

TQ0IS3	TQ0IS2	Capture trigger input signal (TIQ01 pin) valid edge setting
0	0	No edge detection (capture operation invalid)
0	1	Detection of rising edge
1	0	Detection of falling edge
1	1	Detection of both edges

TQ0IS1	TQ0IS0	Capture trigger input signal (TIQ00 pin) valid edge setting
0	0	No edge detection (capture operation invalid)
0	1	Detection of rising edge
1	0	Detection of falling edge
1	1	Detection of both edges

Cautions 1. Rewrite the TQ0IS7 to TQ0IS0 bits when the TQ0CTL0.TQ0CE bit = 0. (The same value can be written when the TQ0CE bit = 1.) If rewriting was mistakenly performed, clear the TQ0CE bit to 0 and then set the bits again.

2. The TQ0IS7 to TQ0IS0 bits are valid only in the free-running timer mode and the pulse width measurement mode. In all other modes, a capture operation is not possible.

(5) TMQ0 I/O control register 2 (TQ0IOC2)

The TQ0IOC2 register is an 8-bit register that controls the valid edge of the external event count input signal (TIQ00 pin) and external trigger input signal (TIQ00 pin).

This register can be read or written in 8-bit or 1-bit units.

Reset sets this register to 00H.

After reset: 00H R/W Address: FFFFF544H

	7	6	5	4	3	2	1	0
TQ0IOC2	0	0	0	0	TQ0EES1	TQ0EES0	TQ0ETS1	TQ0ETS0

TQ0EES1	TQ0EES0	External event count input signal (TIQ00 pin) valid edge setting
0	0	No edge detection (external event count invalid)
0	1	Detection of rising edge
1	0	Detection of falling edge
1	1	Detection of both edges

TQ0ETS1	TQ0ETS0	External trigger input signal (TIQ00 pin) valid edge setting
0	0	No edge detection (external trigger invalid)
0	1	Detection of rising edge
1	0	Detection of falling edge
1	1	Detection of both edges

Cautions 1. Rewrite the TQ0EES1, TQ0EES0, TQ0ETS1, and TQ0ETS0 bits when the TQ0CTL0.TQ0CE bit = 0. (The same value can be written when the TQ0CE bit = 1.) If rewriting was mistakenly performed, clear the TQ0CE bit to 0 and then set the bits again.

2. The TQ0EES1 and TQ0EES0 bits are valid only when the TQ0CTL1.TQ0EEE bit = 1 or when the external event count mode (TQ0CTL1.TQ0MD2 to TQ0CTL1.TQ0MD0 bits = 001) has been set.

3. The TQ0ETS1 and TQ0ETS0 bits are valid only when the external trigger pulse output mode (TQ0CTL1.TQ0MD2 to TQ0CTL1.TQ0MD0 bits = 010) or the one-shot pulse output mode (TQ0CTL1.TQ0MD2 to TQ0CTL1.TQ0MD0 = 011) is set.

(6) TMQ0 option register 0 (TQ0OPT0)

The TQ0OPT0 register is an 8-bit register used to set the capture/compare operation and detect an overflow.

This register can be read or written in 8-bit or 1-bit units.

Reset sets this register to 00H.

After reset: 00H R/W Address: FFFFF545H

	7	6	5	4	3	2	1	0
TQ0OPT0	TQ0CCS3	TQ0CCS2	TQ0CCS1	TQ0CCS0	0	0	0	TQ0OVF

TQ0CCSm	TQ0CCRm register capture/compare selection
0	Compare register selected
1	Capture register selected
The TQ0CCSm bit setting is valid only in the free-running timer mode.	

TQ0OVF	TMQ0 overflow detection
Set (1)	Overflow occurred
Reset (0)	TQ0OVF bit 0 written or TQ0CTL0.TQ0CE bit = 0

- The TQ0OVF bit is set to 1 when the 16-bit counter count value overflows from FFFFH to 0000H in the free-running timer mode or the pulse width measurement mode.
- An interrupt request signal (INTTQ0OV) is generated at the same time that the TQ0OVF bit is set to 1. The INTTQ0OV signal is not generated in modes other than the free-running timer mode and the pulse width measurement mode.
- The TQ0OVF bit is not cleared even when the TQ0OVF bit or the TQ0OPT0 register are read when the TQ0OVF bit = 1.
- The TQ0OVF bit can be both read and written, but the TQ0OVF bit cannot be set to 1 by software. Writing 1 has no influence on the operation of TMQ0.

Cautions 1. Rewrite the TQ0CCS3 to TQ0CCS0 bits when the TQ0CTL0.TQ0CE bit = 0. (The same value can be written when the TQ0CE bit = 1.) If rewriting was mistakenly performed, clear the TQ0CE bit to 0 and then set the bits again.

2. Be sure to clear bits 1 to 3 to "0".

Remark m = 0 to 3

(7) TMQ0 capture/compare register 0 (TQ0CCR0)

The TQ0CCR0 register can be used as a capture register or a compare register depending on the mode.

This register can be used as a capture register or a compare register only in the free-running timer mode, depending on the setting of the TQ0OPT0.TQ0CCS0 bit. In the pulse width measurement mode, the TQ0CCR0 register can be used only as a capture register. In any other mode, this register can be used only as a compare register.

The TQ0CCR0 register can be read or written during operation.

This register can be read or written in 16-bit units.

Reset sets this register to 0000H.

Caution Accessing the TQ0CCR0 register is prohibited in the following statuses. For details, refer to 3.4.8 (2) Accessing specific on-chip peripheral I/O registers.

- **When the CPU operates with the subclock and the main clock oscillation is stopped**
- **When the CPU operates with the internal oscillation clock**

After reset: 0000H R/W Address: FFFFF546H

	15	14	13	12	11	10	9	8	7	6	5	4	3	2	1	0
TQ0CCR0																

(a) Function as compare register

The TQ0CCR0 register can be rewritten even when the TQ0CTL0.TQ0CE bit = 1.

The set value of the TQ0CCR0 register is transferred to the CCR0 buffer register. When the value of the 16-bit counter matches the value of the CCR0 buffer register, a compare match interrupt request signal (INTTQ0CC0) is generated. If TOQ00 pin output is enabled at this time, the output of the TOQ00 pin is inverted.

When the TQ0CCR0 register is used as a cycle register in the interval timer mode, external event count mode, external trigger pulse output mode, one-shot pulse output mode, PWM output mode, or triangular wave PWM mode, the value of the 16-bit counter is cleared (0000H) if its count value matches the value of the CCR0 buffer register.

(b) Function as capture register

When the TQ0CCR0 register is used as a capture register in the free-running timer mode, the count value of the 16-bit counter is stored in the TQ0CCR0 register if the valid edge of the capture trigger input pin (TIQ00 pin) is detected. In the pulse-width measurement mode, the count value of the 16-bit counter is stored in the TQ0CCR0 register and the 16-bit counter is cleared (0000H) if the valid edge of the capture trigger input pin (TIQ00 pin) is detected.

Even if the capture operation and reading the TQ0CCR0 register conflict, the correct value of the TQ0CCR0 register can be read.

The following table shows the functions of the capture/compare register in each mode, and how to write data to the compare register.

Table 7-2. Function of Capture/Compare Register in Each Mode and How to Write Compare Register

Operation Mode	Capture/Compare Register	How to Write Compare Register
Interval timer	Compare register	Anytime write
External event counter	Compare register	Anytime write
External trigger pulse output	Compare register	Batch write
One-shot pulse output	Compare register	Anytime write
PWM output	Compare register	Batch write
Free-running timer	Capture/compare register	Anytime write
Pulse width measurement	Capture register	–
Triangular wave PWM mode	Compare register	Batch write

(8) TMQ0 capture/compare register 1 (TQ0CCR1)

The TQ0CCR1 register can be used as a capture register or a compare register depending on the mode.

This register can be used as a capture register or a compare register only in the free-running timer mode, depending on the setting of the TQ0OPT0.TQ0CCS1 bit. In the pulse width measurement mode, the TQ0CCR1 register can be used only as a capture register. In any other mode, this register can be used only as a compare register.

The TQ0CCR1 register can be read or written during operation.

This register can be read or written in 16-bit units.

Reset sets this register to 0000H.

Caution Accessing the TQ0CCR1 register is prohibited in the following statuses. For details, refer to 3.4.8 (2) Accessing specific on-chip peripheral I/O registers.

- **When the CPU operates with the subclock and the main clock oscillation is stopped**
- **When the CPU operates with the internal oscillation clock**

After reset: 0000H R/W Address: FFFFF548H

	15	14	13	12	11	10	9	8	7	6	5	4	3	2	1	0
TQ0CCR1																

(a) Function as compare register

The TQ0CCR1 register can be rewritten even when the TQ0CTL0.TQ0CE bit = 1.

The set value of the TQ0CCR1 register is transferred to the CCR1 buffer register. When the value of the 16-bit counter matches the value of the CCR1 buffer register, a compare match interrupt request signal (INTTQ0CC1) is generated. If TOQ01 pin output is enabled at this time, the output of the TOQ01 pin is inverted.

(b) Function as capture register

When the TQ0CCR1 register is used as a capture register in the free-running timer mode, the count value of the 16-bit counter is stored in the TQ0CCR1 register if the valid edge of the capture trigger input pin (TIQ01 pin) is detected. In the pulse-width measurement mode, the count value of the 16-bit counter is stored in the TQ0CCR1 register and the 16-bit counter is cleared (0000H) if the valid edge of the capture trigger input pin (TIQ01 pin) is detected.

Even if the capture operation and reading the TQ0CCR1 register conflict, the correct value of the TQ0CCR1 register can be read.

The following table shows the functions of the capture/compare register in each mode, and how to write data to the compare register.

Table 7-3. Function of Capture/Compare Register in Each Mode and How to Write Compare Register

Operation Mode	Capture/Compare Register	How to Write Compare Register
Interval timer	Compare register	Anytime write
External event counter	Compare register	Anytime write
External trigger pulse output	Compare register	Batch write
One-shot pulse output	Compare register	Anytime write
PWM output	Compare register	Batch write
Free-running timer	Capture/compare register	Anytime write
Pulse width measurement	Capture register	–
Triangular wave PWM mode	Compare register	Batch write

(9) TMQ0 capture/compare register 2 (TQ0CCR2)

The TQ0CCR2 register can be used as a capture register or a compare register depending on the mode.

This register can be used as a capture register or a compare register only in the free-running timer mode, depending on the setting of the TQ0OPT0.TQ0CCS2 bit. In the pulse width measurement mode, the TQ0CCR2 register can be used only as a capture register. In any other mode, this register can be used only as a compare register.

The TQ0CCR2 register can be read or written during operation.

This register can be read or written in 16-bit units.

Reset sets this register to 0000H.

Caution Accessing the TQ0CCR2 register is prohibited in the following statuses. For details, refer to 3.4.8 (2) Accessing specific on-chip peripheral I/O registers.

- **When the CPU operates with the subclock and the main clock oscillation is stopped**
- **When the CPU operates with the internal oscillation clock**

After reset: 0000H R/W Address: FFFFF54AH

	15	14	13	12	11	10	9	8	7	6	5	4	3	2	1	0
TQ0CCR2																

(a) Function as compare register

The TQ0CCR2 register can be rewritten even when the TQ0CTL0.TQ0CE bit = 1.

The set value of the TQ0CCR2 register is transferred to the CCR2 buffer register. When the value of the 16-bit counter matches the value of the CCR2 buffer register, a compare match interrupt request signal (INTTQ0CC2) is generated. If TOQ02 pin output is enabled at this time, the output of the TOQ02 pin is inverted.

(b) Function as capture register

When the TQ0CCR2 register is used as a capture register in the free-running timer mode, the count value of the 16-bit counter is stored in the TQ0CCR2 register if the valid edge of the capture trigger input pin (TIQ02 pin) is detected. In the pulse-width measurement mode, the count value of the 16-bit counter is stored in the TQ0CCR2 register and the 16-bit counter is cleared (0000H) if the valid edge of the capture trigger input pin (TIQ02 pin) is detected.

Even if the capture operation and reading the TQ0CCR2 register conflict, the correct value of the TQ0CCR2 register can be read.

The following table shows the functions of the capture/compare register in each mode, and how to write data to the compare register.

Table 7-4. Function of Capture/Compare Register in Each Mode and How to Write Compare Register

Operation Mode	Capture/Compare Register	How to Write Compare Register
Interval timer	Compare register	Anytime write
External event counter	Compare register	Anytime write
External trigger pulse output	Compare register	Batch write
One-shot pulse output	Compare register	Anytime write
PWM output	Compare register	Batch write
Free-running timer	Capture/compare register	Anytime write
Pulse width measurement	Capture register	–
Triangular wave PWM mode	Compare register	Batch write

(10) TMQ0 capture/compare register 3 (TQ0CCR3)

The TQ0CCR3 register can be used as a capture register or a compare register depending on the mode.

This register can be used as a capture register or a compare register only in the free-running timer mode, depending on the setting of the TQ0OPT0.TQ0CCS3 bit. In the pulse width measurement mode, the TQ0CCR3 register can be used only as a capture register. In any other mode, this register can be used only as a compare register.

The TQ0CCR3 register can be read or written during operation.

This register can be read or written in 16-bit units.

Reset sets this register to 0000H.

Caution Accessing the TQ0CCR3 register is prohibited in the following statuses. For details, refer to 3.4.8 (2) Accessing specific on-chip peripheral I/O registers.

- **When the CPU operates with the subclock and the main clock oscillation is stopped**
- **When the CPU operates with the internal oscillation clock**

After reset: 0000H R/W Address: FFFFF54CH

	15	14	13	12	11	10	9	8	7	6	5	4	3	2	1	0
TQ0CCR3																

(a) Function as compare register

The TQ0CCR3 register can be rewritten even when the TQ0CTL0.TQ0CE bit = 1.

The set value of the TQ0CCR3 register is transferred to the CCR3 buffer register. When the value of the 16-bit counter matches the value of the CCR3 buffer register, a compare match interrupt request signal (INTTQ0CC3) is generated. If TOQ03 pin output is enabled at this time, the output of the TOQ03 pin is inverted.

(b) Function as capture register

When the TQ0CCR3 register is used as a capture register in the free-running timer mode, the count value of the 16-bit counter is stored in the TQ0CCR3 register if the valid edge of the capture trigger input pin (TIQ03 pin) is detected. In the pulse-width measurement mode, the count value of the 16-bit counter is stored in the TQ0CCR3 register and the 16-bit counter is cleared (0000H) if the valid edge of the capture trigger input pin (TIQ03 pin) is detected.

Even if the capture operation and reading the TQ0CCR3 register conflict, the correct value of the TQ0CCR3 register can be read.

The following table shows the functions of the capture/compare register in each mode, and how to write data to the compare register.

Table 7-5. Function of Capture/Compare Register in Each Mode and How to Write Compare Register

Operation Mode	Capture/Compare Register	How to Write Compare Register
Interval timer	Compare register	Anytime write
External event counter	Compare register	Anytime write
External trigger pulse output	Compare register	Batch write
One-shot pulse output	Compare register	Anytime write
PWM output	Compare register	Batch write
Free-running timer	Capture/compare register	Anytime write
Pulse width measurement	Capture register	–
Triangular wave PWM mode	Compare register	Batch write

(11) TMQ0 counter read buffer register (TQ0CNT)

The TQ0CNT register is a read buffer register that can read the count value of the 16-bit counter.

If this register is read when the TQ0CTL0.TQ0CE bit = 1, the count value of the 16-bit timer can be read.

This register is read-only, in 16-bit units.

The value of the TQ0CNT register is cleared to 0000H when the TQ0CE bit = 0. If the TQ0CNT register is read at this time, the value of the 16-bit counter (FFFFH) is not read, but 0000H is read.

The value of the TQ0CNT register is cleared to 0000H after reset, as the TQ0CE bit is cleared to 0.

Caution Accessing the TQ0CNT register is prohibited in the following statuses. For details, refer to 3.4.8 (2) Accessing specific on-chip peripheral I/O registers.

- **When the CPU operates with the subclock and the main clock oscillation is stopped**
- **When the CPU operates with the internal oscillation clock**

After reset: 0000H R Address: FFFFF54EH

	15	14	13	12	11	10	9	8	7	6	5	4	3	2	1	0
TQ0CNT																

(12) TIQ0m pin noise elimination control register (Q0mNFC)

The Q0mNFC register is an 8-bit register that sets the digital noise filter of the timer Q input pin for noise elimination.

This register can be read or written in 8-bit or 1-bit units.

Reset sets this register to 00H.

After reset: 00H R/W Address: Q00NFC: FFFFFB50H (TIQ00 pin)
Q01NFC: FFFFFB54H (TIQ01 pin)
Q02NFC: FFFFFB58H (TIQ02 pin)
Q03NFC: FFFFFB5CH (TIQ03 pin)

	7	6	5	4	3	2	1	0
Q0mNFC	0	NFSTS	0	0	0	NFC2	NFC1	NFC0

(m = 0 to 3)

NFSTS	Setting of number of times of sampling by digital noise filter
0	3 times
1	2 times

NFC2	NFC1	NFC0	Sampling clock
0	0	0	f_{XX}
0	0	1	$f_{XX}/2$
0	1	0	$f_{XX}/4$
0	1	1	$f_{XX}/16$
1	0	0	$f_{XX}/32$
1	0	1	$f_{XX}/64$
Other than above			Setting prohibited

Cautions 1. Be sure to clear bits 3 to 5 and 7 to "0".

2. A signal input to the timer input pin (TIQ0m) before the Q0mNFC register is set is output with digital noise eliminated.
Therefore, set the sampling clock (NFC2 to NFC0) and the number of times of sampling (NFSTS) by using the Q0mNFC register, wait for initialization time = (Sampling clock) × (Number of times of sampling), and enable the timer operation.

Remark The width of the noise that can be accurately eliminated is (Sampling clock) × (Number of times of sampling – 1). Even noise with a width narrower than this may cause a miscount if it is synchronized with the sampling clock.

7.5 Operation

TMQ0 can perform the following operations.

Operation	TQ0CTL1.TQ0EST Bit (Software Trigger Bit)	TIQ00 Pin (External Trigger Input)	Capture/Compare Register Setting	Compare Register Write
Interval timer mode	Invalid	Invalid	Compare only	Anytime write
External event count mode[Note 1]	Invalid	Invalid	Compare only	Anytime write
External trigger pulse output mode[Note 2]	Valid	Valid	Compare only	Batch write
One-shot pulse output mode[Note 2]	Valid	Valid	Compare only	Anytime write
PWM output mode	Invalid	Invalid	Compare only	Batch write
Free-running timer mode	Invalid	Invalid	Switching enabled	Anytime write
Pulse width measurement mode[Note 2]	Invalid	Invalid	Capture only	Not applicable
Triangular wave PWM mode	Invalid	Invalid	Compare only	Batch write

Notes 1. To use the external event count mode, specify that the valid edge of the TIQ00 pin capture trigger input is not detected (by clearing the TQ0IOC1.TQ0IS1 and TQ0IOC1.TQ0IS0 bits to “00”).

2. When using the external trigger pulse output mode, one-shot pulse output mode, and pulse width measurement mode, select the internal clock as the count clock (by clearing the TQ0CTL1.TQ0EEE bit to 0).

7.5.1 Interval timer mode (TQ0MD2 to TQ0MD0 bits = 000)

In the interval timer mode, an interrupt request signal (INTTQ0CC0) is generated at the specified interval if the TQ0CTL0.TQ0CE bit is set to 1. A square wave whose half cycle is equal to the interval can be output from the TOQ00 pin.

Usually, the TQ0CCR1 to TQ0CCR3 registers are not used in the interval timer mode.

Figure 7-2. Configuration of Interval Timer

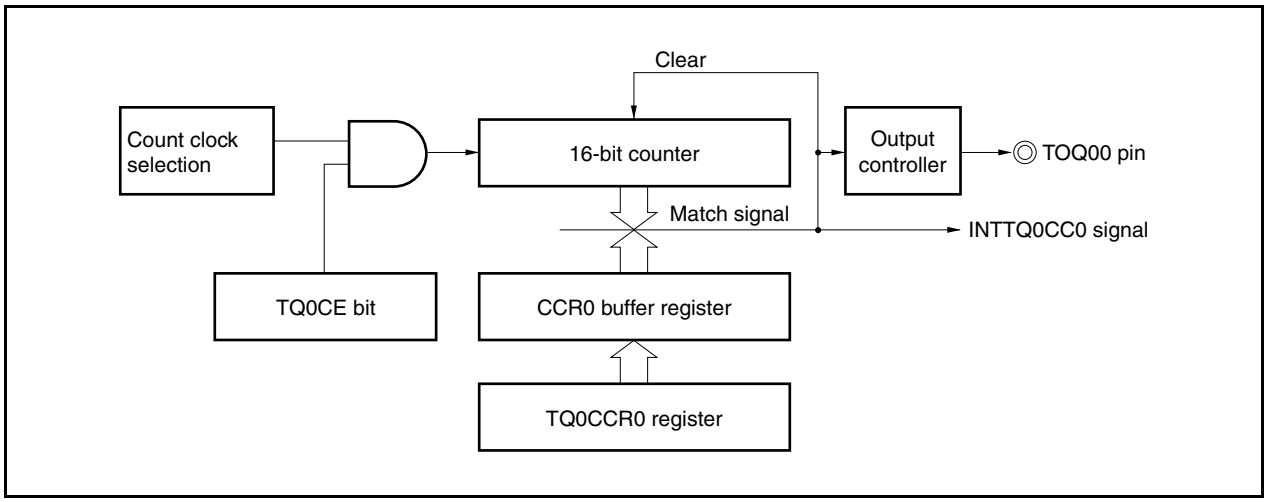

Figure 7-3. Basic Timing of Operation in Interval Timer Mode

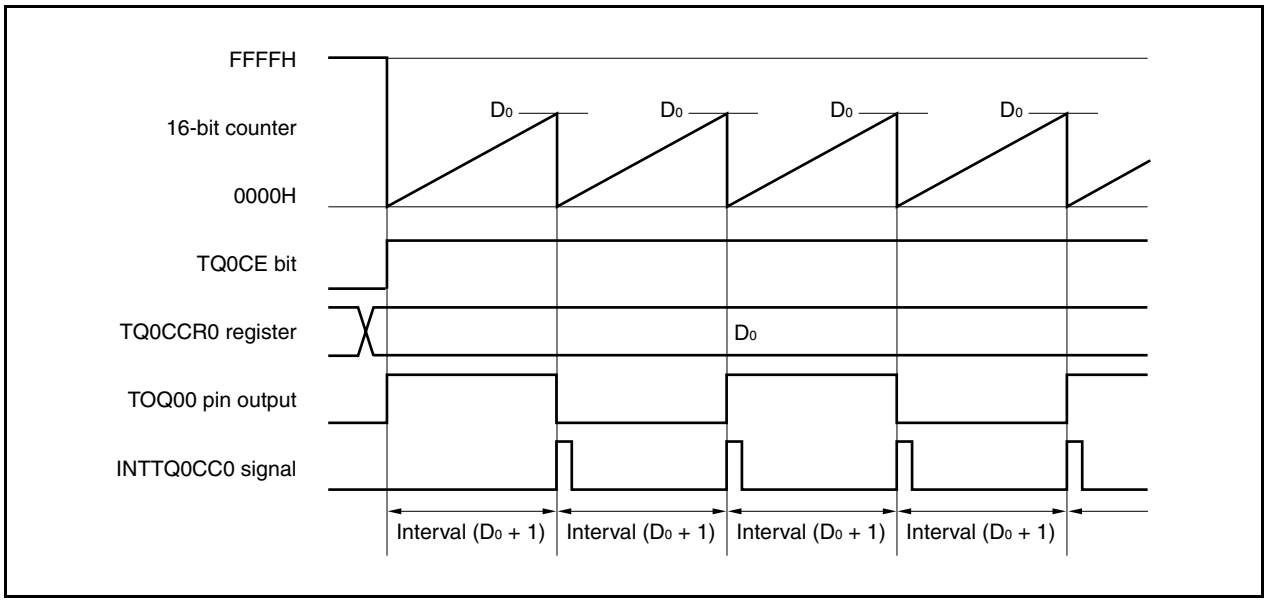

When the TQ0CE bit is set to 1, the value of the 16-bit counter is cleared from FFFFH to 0000H in synchronization with the count clock, and the counter starts counting. At this time, the output of the TOQ00 pin is inverted. Additionally, the set value of the TQ0CCR0 register is transferred to the CCR0 buffer register.

When the count value of the 16-bit counter matches the value of the CCR0 buffer register, the 16-bit counter is cleared to 0000H, the output of the TOQ00 pin is inverted, and a compare match interrupt request signal (INTTQ0CC0) is generated.

The interval can be calculated by the following expression.

Interval = (Set value of TQ0CCR0 register + 1) × Count clock cycle

Figure 7-4. Register Setting for Interval Timer Mode Operation (1/2)

(a) TMQ0 control register 0 (TQ0CTL0)

	TQ0CE					TQ0CKS2	TQ0CKS1	TQ0CKS0
TQ0CTL0	0/1	0	0	0	0	0/1	0/1	0/1

Select count clock

0: Stop counting
1: Enable counting

(b) TMQ0 control register 1 (TQ0CTL1)

	TQ0SYE	TQ0EST	TQ0EEE			TQ0MD2	TQ0MD1	TQ0MD0
TQ0CTL1	0	0	0/1 Note	0	0	0	0	0

0, 0, 0:
Interval timer mode

0: Operate on count clock selected by bits TQ0CKS0 to TQ0CKS2
1: Count with external event count input signal

Note This bit can be set to 1 only when the interrupt request signals (INTTQ0CC0 and INTTQ0CCk) are masked by the interrupt mask flags (TQ0CCMK0 to TQ0CCMKk) and the timer output (TOQ0k) is performed at the same time. However, the TQ0CCR0 and TQ0CCRk registers must be set to the same value (refer to **7.5.1 (2) (d) Operation of TQ0CCR1 to TQ0CCR3 registers**) (k = 1 to 3).

Figure 7-4. Register Setting for Interval Timer Mode Operation (2/2)

(c) TMQ0 I/O control register 0 (TQ0IOC0)

	TQ0OL3	TQ0OE3	TQ0OL2	TQ0OE2	TQ0OL1	TQ0OE1	TQ0OL0	TQ0OE0
TQ0IOC0	0/1	0/1	0/1	0/1	0/1	0/1	0/1	0/1

0: Disable TOQ00 pin output
1: Enable TOQ00 pin output

Setting of output level with operation of TOQ00 pin disabled
0: Low level
1: High level

0: Disable TOQ01 pin output
1: Enable TOQ01 pin output

Setting of output level with operation of TOQ01 pin disabled
0: Low level
1: High level

0: Disable TOQ02 pin output
1: Enable TOQ02 pin output

Setting of output level with operation of TOQ02 pin disabled
0: Low level
1: High level

0: Disable TOQ03 pin output
1: Enable TOQ03 pin output

Setting of output level with operation of TOQ03 pin disabled
0: Low level
1: High level

(d) TMQ0 counter read buffer register (TQ0CNT)

By reading the TQ0CNT register, the count value of the 16-bit counter can be read.

(e) TMQ0 capture/compare register 0 (TQ0CCR0)

If the TQ0CCR0 register is set to D_0, the interval is as follows.

Interval = $(D_0 + 1) \times$ Count clock cycle

(f) TMQ0 capture/compare registers 1 to 3 (TQ0CCR1 to TQ0CCR3)

Usually, the TQ0CCR1 to TQ0CCR3 registers are not used in the interval timer mode. However, the set value of the TQ0CCR1 to TQ0CCR3 registers are transferred to the CCR1 to CCR3 buffer registers. The compare match interrupt request signals (INTTQ0CC1 to INTTQ0CCR3) is generated when the count value of the 16-bit counter matches the value of the CCR1 to CCR3 buffer registers.

Therefore, mask the interrupt request by using the corresponding interrupt mask flags (TQ0CCMK1 to TQ0CCMK3).

Remark TMQ0 I/O control register 1 (TQ0IOC1), TMQ0 I/O control register 2 (TQ0IOC2), and TMQ0 option register 0 (TQ0OPT0) are not used in the interval timer mode.

(1) Interval timer mode operation flow

Figure 7-5. Software Processing Flow in Interval Timer Mode

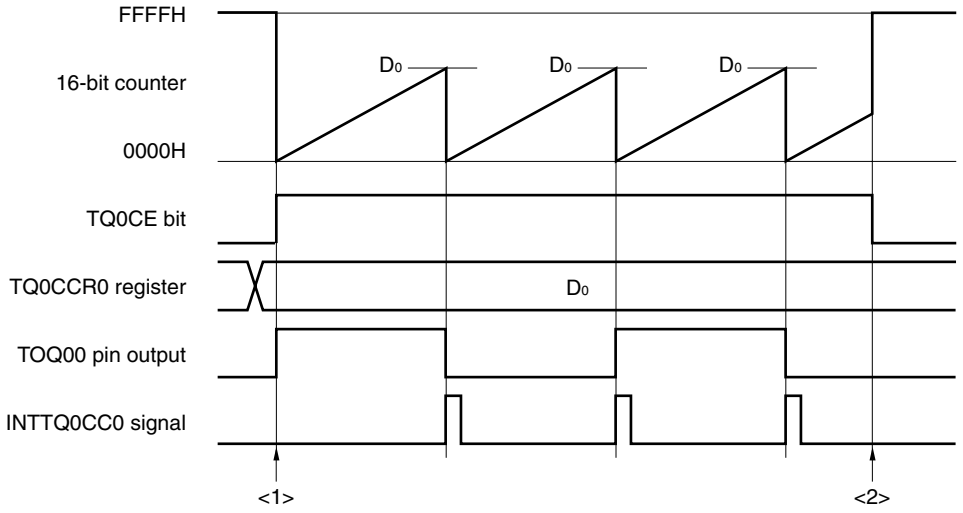

<1> Count operation start flow

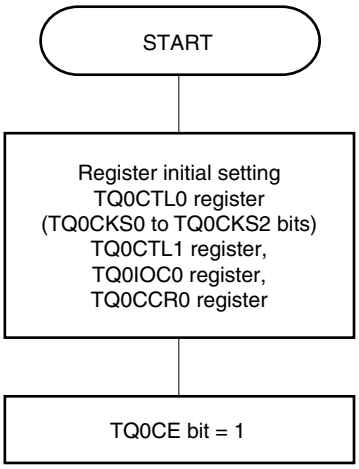

Initial setting of these registers is performed before setting the TQ0CE bit to 1.

The TQ0CKS0 to TQ0CKS2 bits can be set at the same time when counting has been started (TQ0CE bit = 1).

<2> Count operation stop flow

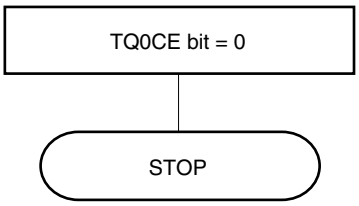

The counter is initialized and counting is stopped by clearing the TQ0CE bit to 0.

(2) Interval timer mode operation timing

(a) Operation if TQ0CCR0 register is set to 0000H

If the TQ0CCR0 register is set to 0000H, the INTTQ0CC0 signal is generated at each count clock subsequent to the first count clock, and the output of the TOQ00 pin is inverted.

The value of the 16-bit counter is always 0000H.

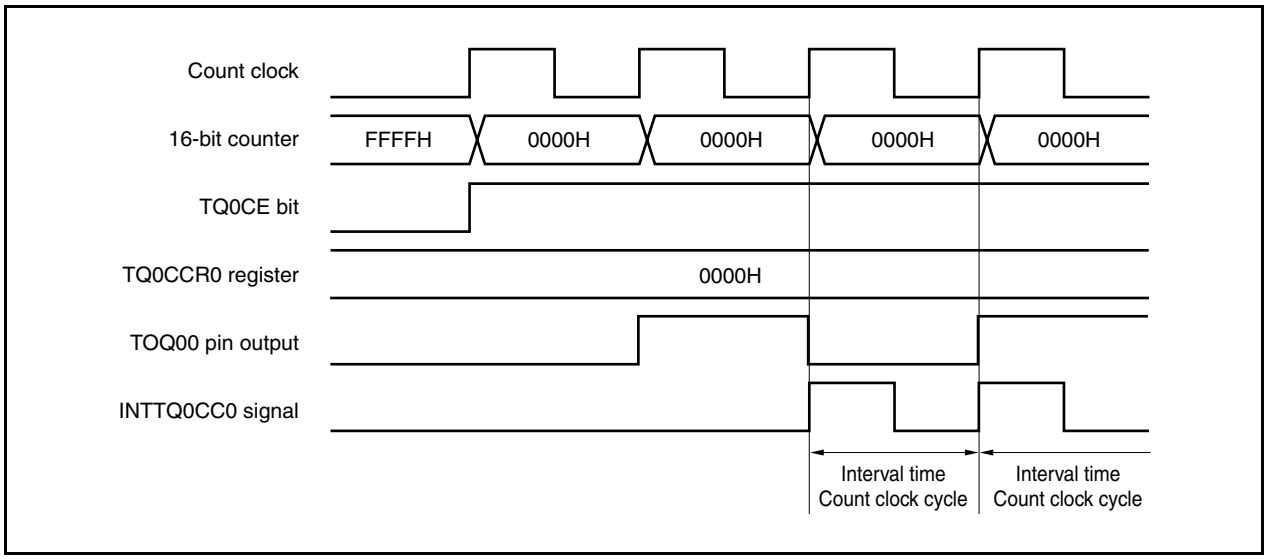

(b) Operation if TQ0CCR0 register is set to FFFFH

If the TQ0CCR0 register is set to FFFFH, the 16-bit counter counts up to FFFFH. The counter is cleared to 0000H in synchronization with the next count-up timing. The INTTQ0CC0 signal is generated and the output of the TOQ00 pin is inverted. At this time, an overflow interrupt request signal (INTTQ0OV) is not generated, nor is the overflow flag (TQ0OPT0.TQ0OVF bit) set to 1.

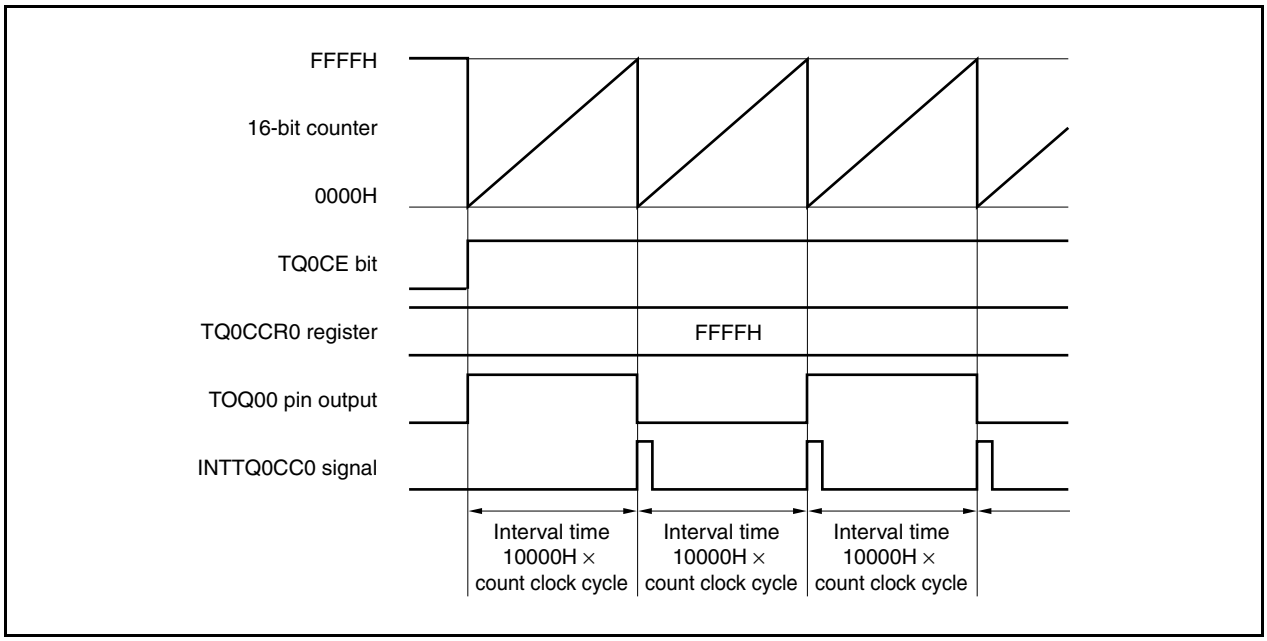

(c) Notes on rewriting TQ0CCR0 register

To change the value of the TQ0CCR0 register to a smaller value, stop counting once and then change the set value.

If the value of the TQ0CCR0 register is rewritten to a smaller value during counting, the 16-bit counter may overflow.

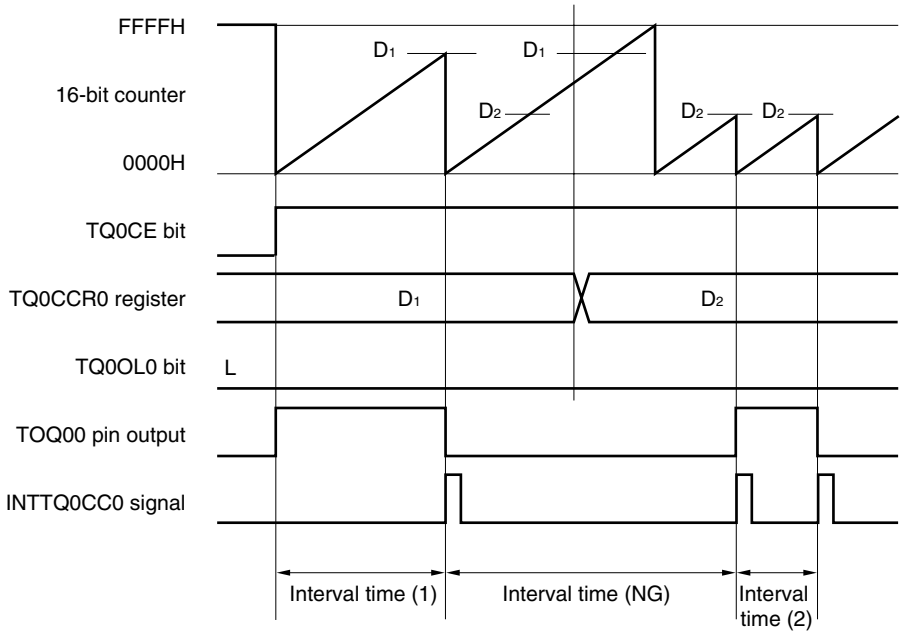

Remark Interval time (1): $(D_1 + 1) \times$ Count clock cycle
Interval time (NG): $(10000H + D_2 + 1) \times$ Count clock cycle
Interval time (2): $(D_2 + 1) \times$ Count clock cycle

If the value of the TQ0CCR0 register is changed from D_1 to D_2 while the count value is greater than D_2 but less than D_1, the count value is transferred to the CCR0 buffer register as soon as the TQ0CCR0 register has been rewritten. Consequently, the value of the 16-bit counter that is compared is D_2.

Because the count value has already exceeded D_2, however, the 16-bit counter counts up to FFFFH, overflows, and then counts up again from 0000H. When the count value matches D_2, the INTTQ0CC0 signal is generated and the output of the TOQ00 pin is inverted.

Therefore, the INTTQ0CC0 signal may not be generated at the interval time "$(D_1 + 1) \times$ Count clock cycle" or "$(D_2 + 1) \times$ Count clock cycle" originally expected, but may be generated at an interval of "$(10000H + D_2 + 1) \times$ Count clock period".

(d) Operation of TQ0CCR1 to TQ0CCR3 registers

Figure 7-6. Configuration of TQ0CCR1 to TQ0CCR3 Registers

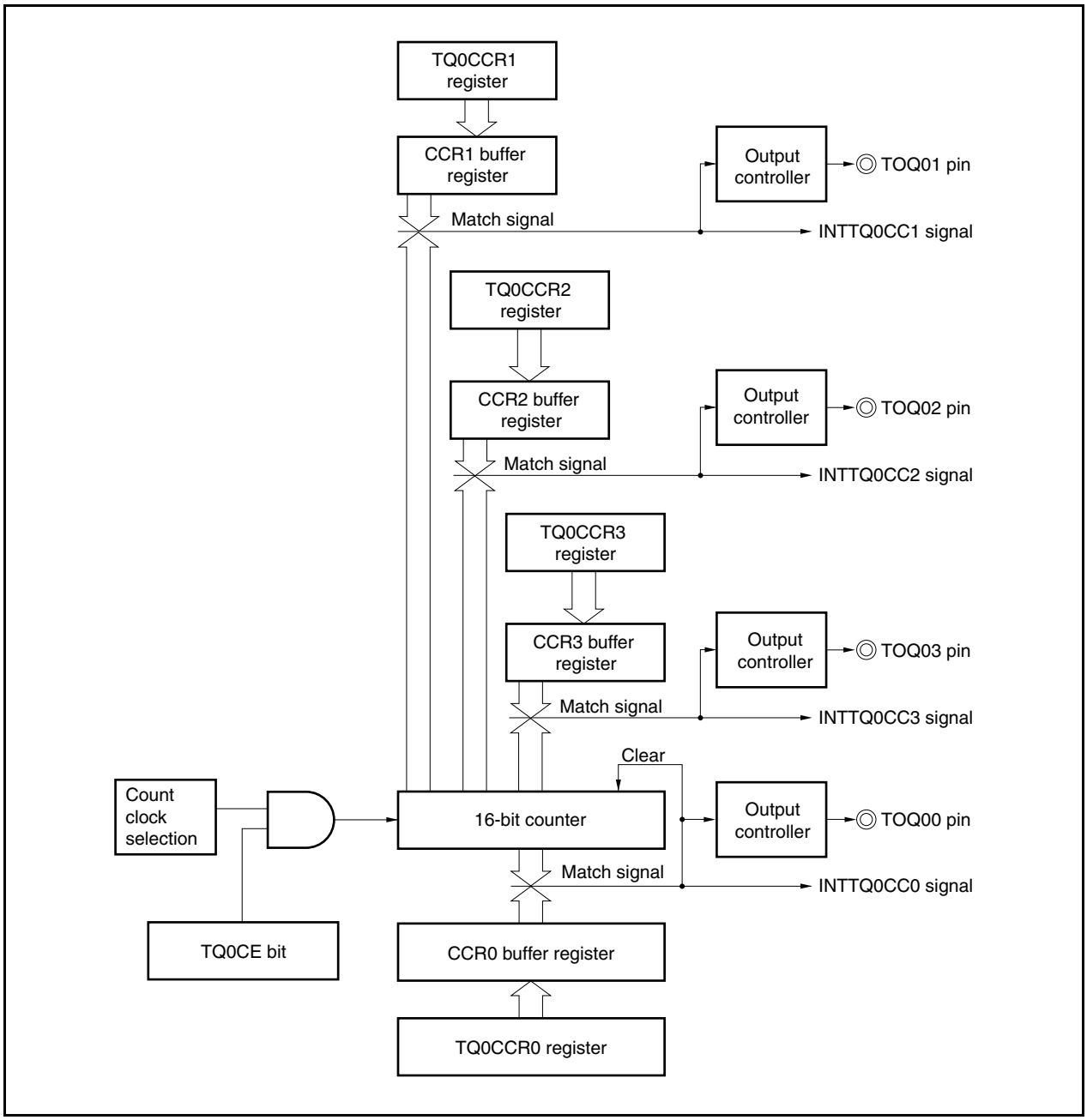

If the set value of the TQ0CCRk register is less than the set value of the TQ0CCR0 register, the INTTQ0CCk signal is generated once per cycle. At the same time, the output of the TOPQ0k pin is inverted.

The TOQ0k pin outputs a square wave with the same cycle as that output by the TOQ00 pin.

Remark k = 1 to 3

Figure 7-7. Timing Chart When $D_{01} \geq D_{k1}$

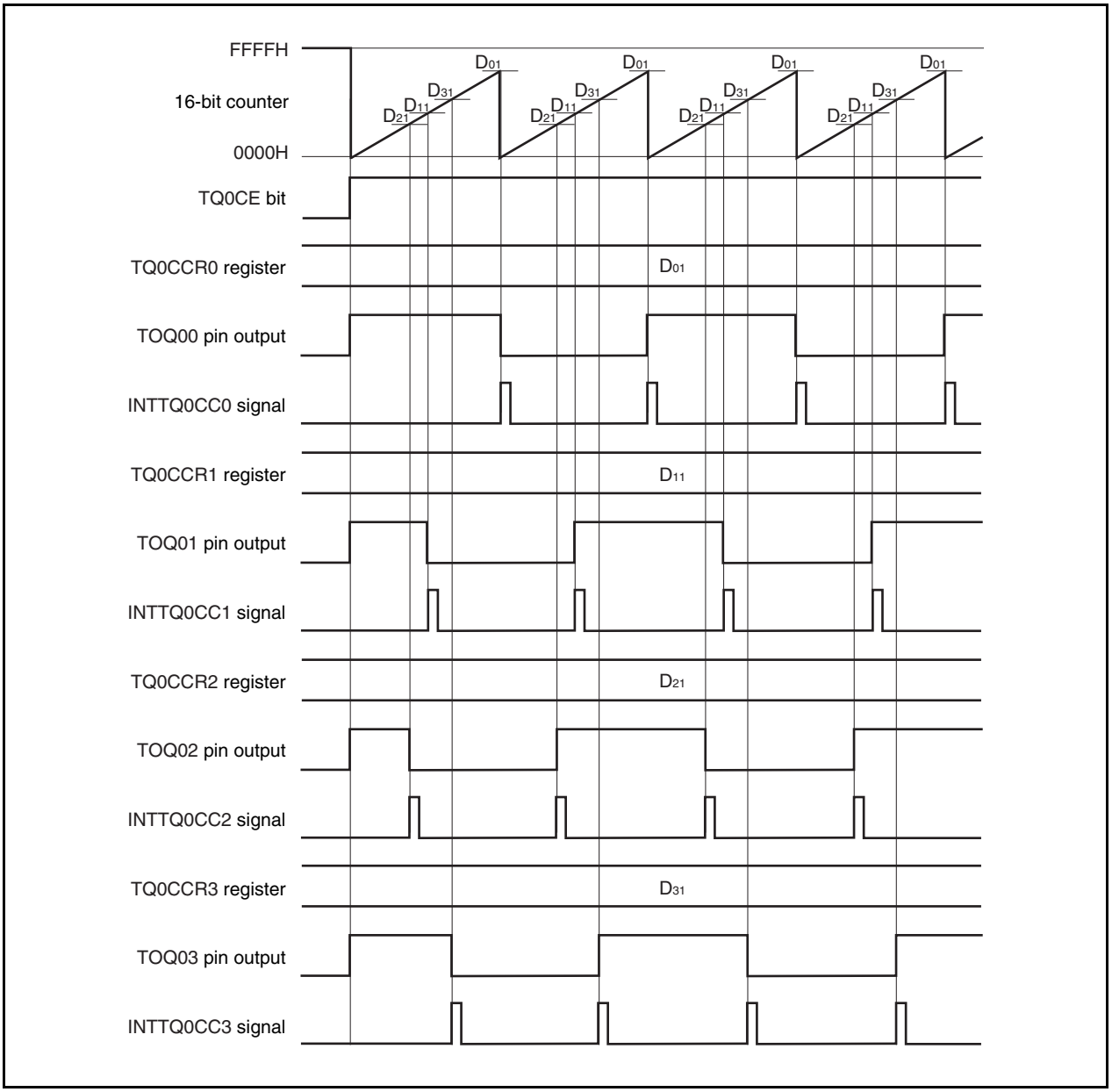

If the set value of the TQ0CCRk register is greater than the set value of the TQ0CCR0 register, the count value of the 16-bit counter does not match the value of the TQ0CCRk register. Consequently, the INTTQ0CCk signal is not generated, nor is the output of the TOQ0k pin changed.

Remark k = 1 to 3

Figure 7-8. Timing Chart When $D_{01} < D_{k1}$

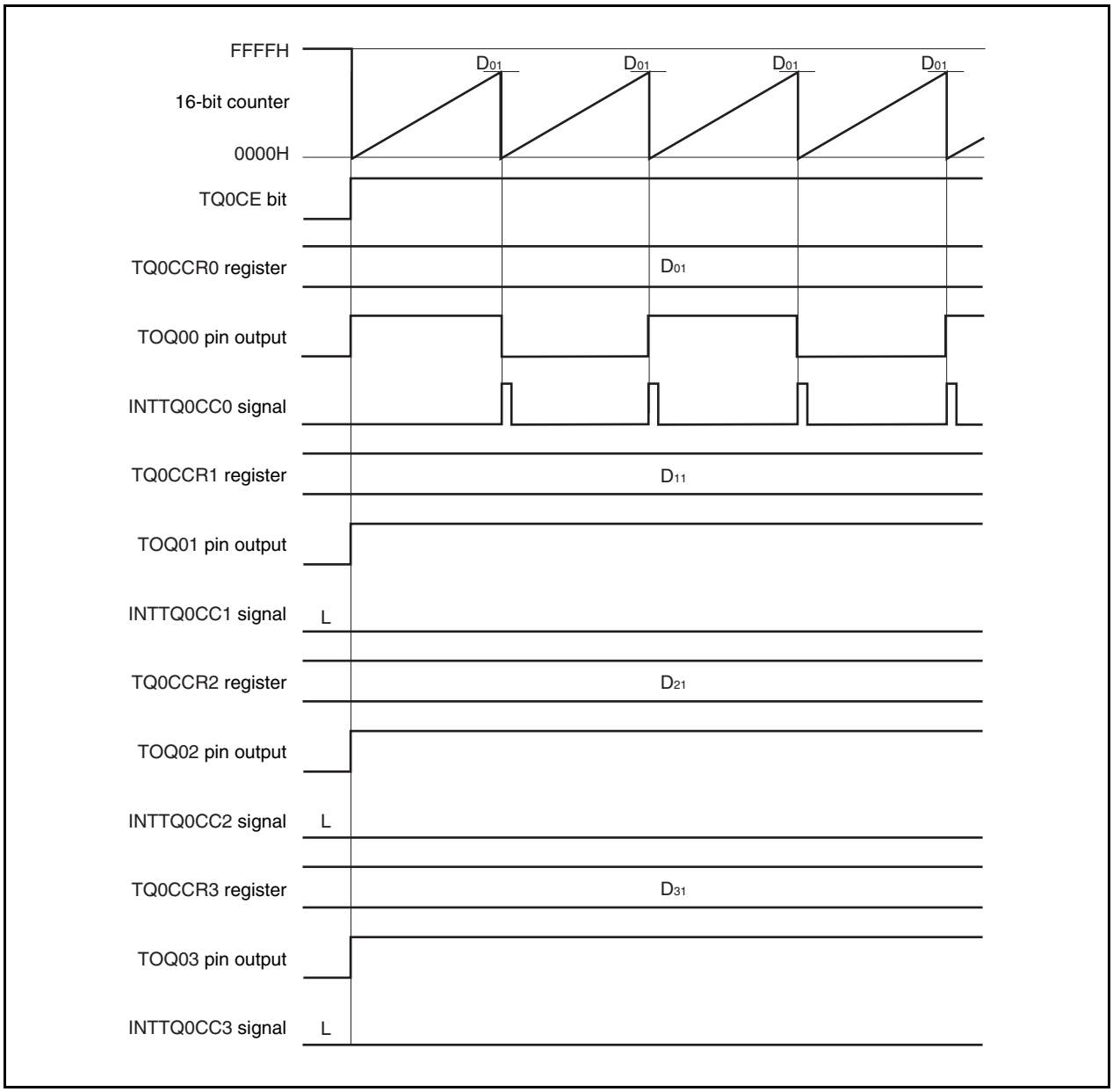

7.5.2 External event count mode (TQ0MD2 to TQ0MD0 bits = 001)

In the external event count mode, the valid edge of the external event count input is counted when the TQ0CTL0.TQ0CE bit is set to 1, and an interrupt request signal (INTTQ0CC0) is generated each time the specified number of edges have been counted. The TOQ00 pin cannot be used.

Usually, the TQ0CCR1 to TQ0CCR3 registers are not used in the external event count mode.

Figure 7-9. Configuration in External Event Count Mode

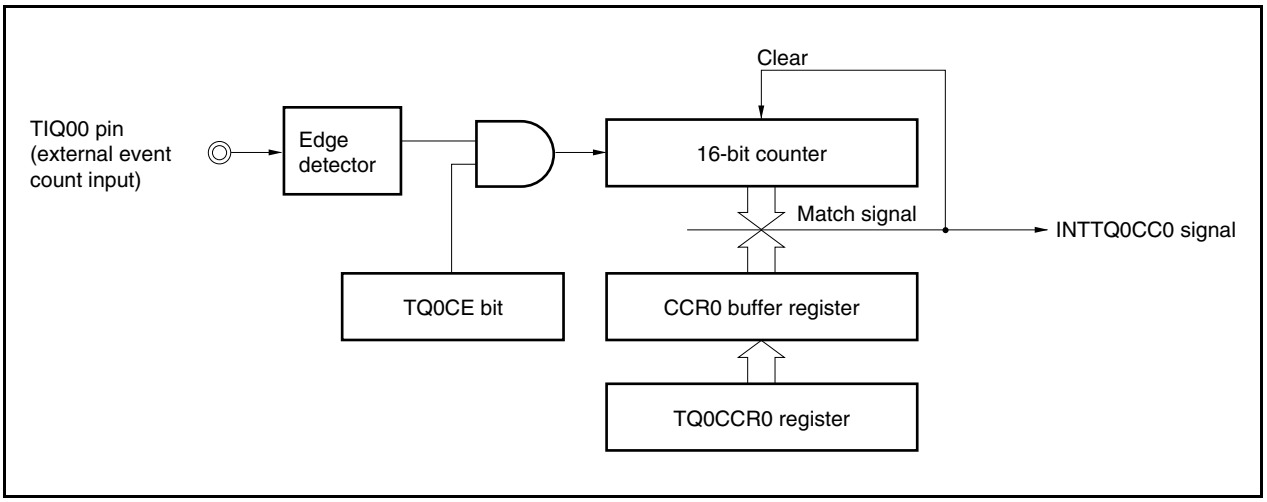

Figure 7-10. Basic Timing in External Event Count Mode

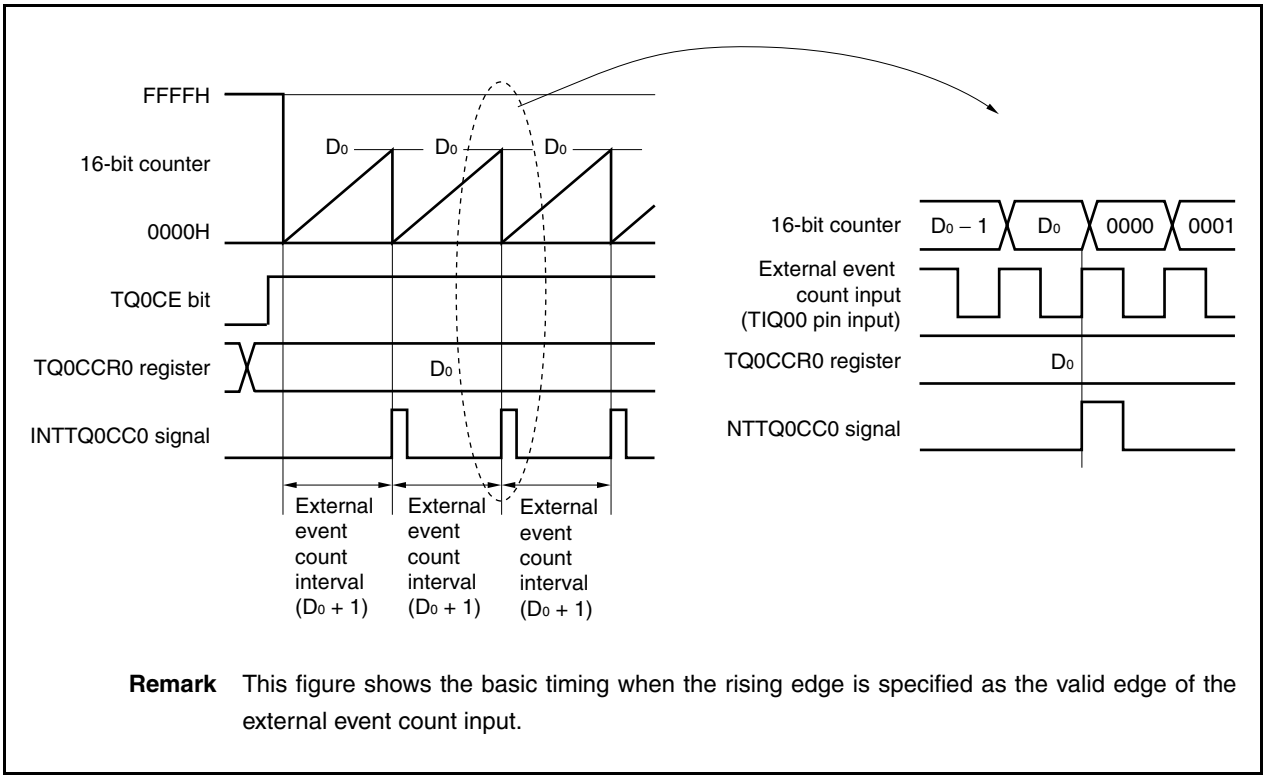

Remark This figure shows the basic timing when the rising edge is specified as the valid edge of the external event count input.

When the TQ0CE bit is set to 1, the value of the 16-bit counter is cleared from FFFFH to 0000H. The counter counts each time the valid edge of external event count input is detected. Additionally, the set value of the TQ0CCR0 register is transferred to the CCR0 buffer register.

When the count value of the 16-bit counter matches the value of the CCR0 buffer register, the 16-bit counter is cleared to 0000H, and a compare match interrupt request signal (INTTQ0CC0) is generated.

The INTTQ0CC0 signal is generated each time the valid edge of the external event count input has been detected (set value of TQ0CCR0 register + 1) times.

Figure 7-11. Register Setting for Operation in External Event Count Mode (1/2)

(a) TMQ0 control register 0 (TQ0CTL0)

	TQ0CE					TQ0CKS2	TQ0CKS1	TQ0CKS0
TQ0CTL0	0/1	0	0	0	0	0	0	0

0: Stop counting
1: Enable counting

(b) TMQ0 control register 1 (TQ0CTL1)

	TQ0SYE	TQ0EST	TQ0EEE			TQ0MD2	TQ0MD1	TQ0MD0
TQ0CTL1	0	0	0	0	0	0	0	1

0, 0, 1:
External event count mode

(c) TMQ0 I/O control register 0 (TQ0IOC0)

	TQ0OL3	TQ0OE3	TQ0OL2	TQ0OE2	TQ0OL1	TQ0OE1	TQ0OL0	TQ0OE0
TQ0IOC0	0	0	0	0	0	0	0	0

0: Disable TOQ00 pin output
0: Disable TOQ01 pin output
0: Disable TOQ02 pin output
0: Disable TOQ03 pin output

(d) TMQ0 I/O control register 2 (TQ0IOC2)

					TQ0EES1	TQ0EES0	TQ0ETS1	TQ0ETS0
TQ0IOC2	0	0	0	0	0/1	0/1	0	0

Select valid edge
of external event
count input

(e) TMQ0 counter read buffer register (TQ0CNT)

The count value of the 16-bit counter can be read by reading the TQ0CNT register.

Figure 7-11. Register Setting for Operation in External Event Count Mode (2/2)

(f) TMQ0 capture/compare register 0 (TQ0CCR0)

If D_0 is set to the TQ0CCR0 register, the counter is cleared and a compare match interrupt request signal (INTTQ0CC0) is generated when the number of external event counts reaches (D_0 + 1).

(g) TMQ0 capture/compare registers 1 to 3 (TQ0CCR1 to TQ0CCR3)

Usually, the TQ0CCR1 to TQ0CCR3 registers are not used in the external event count mode. However, the set value of the TQ0CCR1 to TQ0CCR3 registers are transferred to the CCR1 to CCR3 buffer registers. When the count value of the 16-bit counter matches the value of the CCR1 to CCR3 buffer registers, compare match interrupt request signals (INTTQ0CC1 to INTTQ0CC3) are generated.
Therefore, mask the interrupt signal by using the interrupt mask flags (TQ0CCMK1 to TQ0CCMK3).

Remark The TMQ0 I/O control register 1 (TQ0IOC1) and TMQ0 option register 0 (TQ0OPT0) are not used in the external event count mode.

(1) External event count mode operation flow

Figure 7-12. Flow of Software Processing in External Event Count Mode

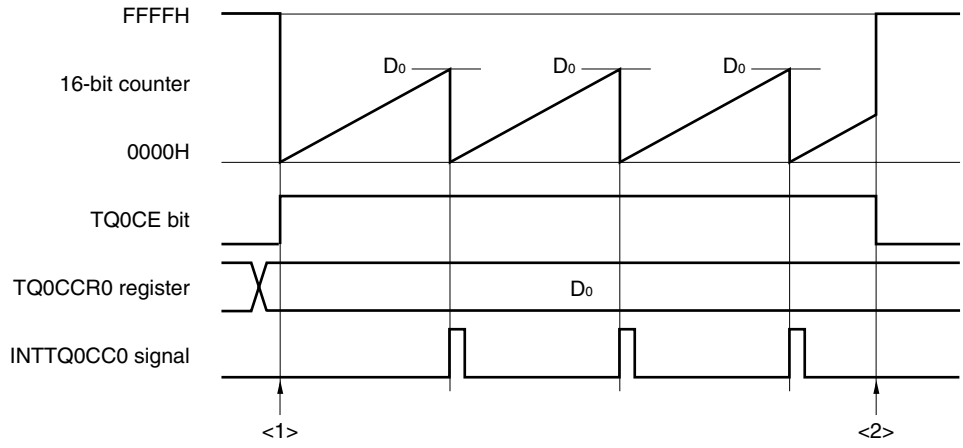

<1> Count operation start flow

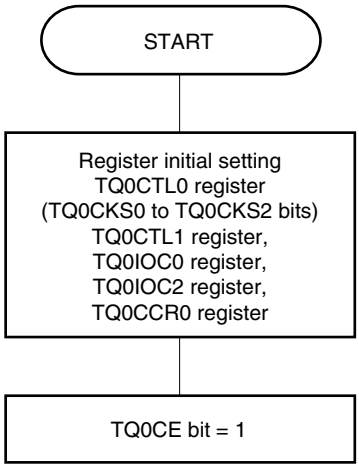

Initial setting of these registers is performed before setting the TQ0CE bit to 1.

The TQ0CKS0 to TQ0CKS2 bits can be set at the same time when counting has been started (TQ0CE bit = 1).

<2> Count operation stop flow

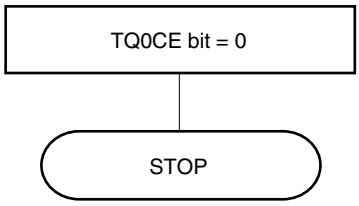

The counter is initialized and counting is stopped by clearing the TQ0CE bit to 0.

(2) Operation timing in external event count mode

Cautions 1. In the external event count mode, do not set the TQ0CCR0 register to 0000H.

2. In the external event count mode, use of the timer output is disabled. If performing timer output using external event count input, set the interval timer mode, and select the operation enabled by the external event count input for the count clock (TQ0CTL1.TQ0MD2 to TQ0CTL1.TQ0MD0 bits = 000, TQ0CTL1.TQ0EEE bit = 1).

(a) Operation if TQ0CCR0 register is set to FFFFH

If the TQ0CCR0 register is set to FFFFH, the 16-bit counter counts to FFFFH each time the valid edge of the external event count signal has been detected. The 16-bit counter is cleared to 0000H in synchronization with the next count-up timing, and the INTTQ0CC0 signal is generated. At this time, the TQ0OPT0.TQ0OVF bit is not set.

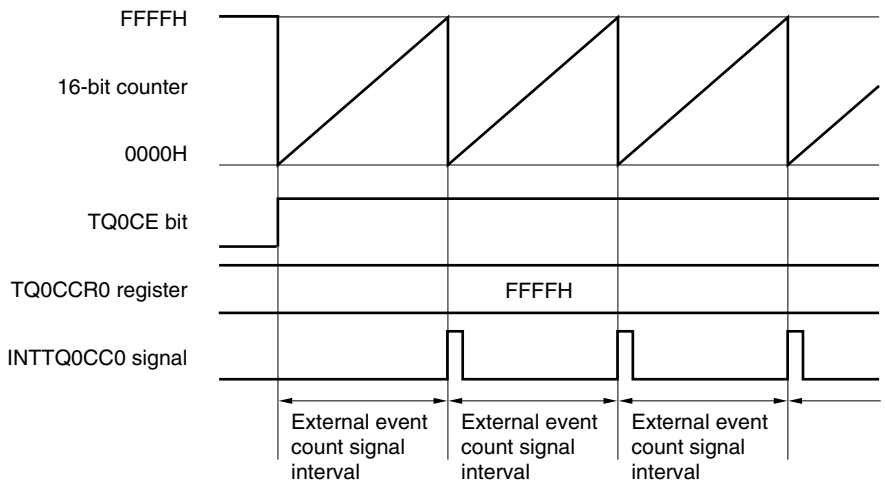

(b) Notes on rewriting the TQ0CCR0 register

To change the value of the TQ0CCR0 register to a smaller value, stop counting once and then change the set value.

If the value of the TQ0CCR0 register is rewritten to a smaller value during counting, the 16-bit counter may overflow.

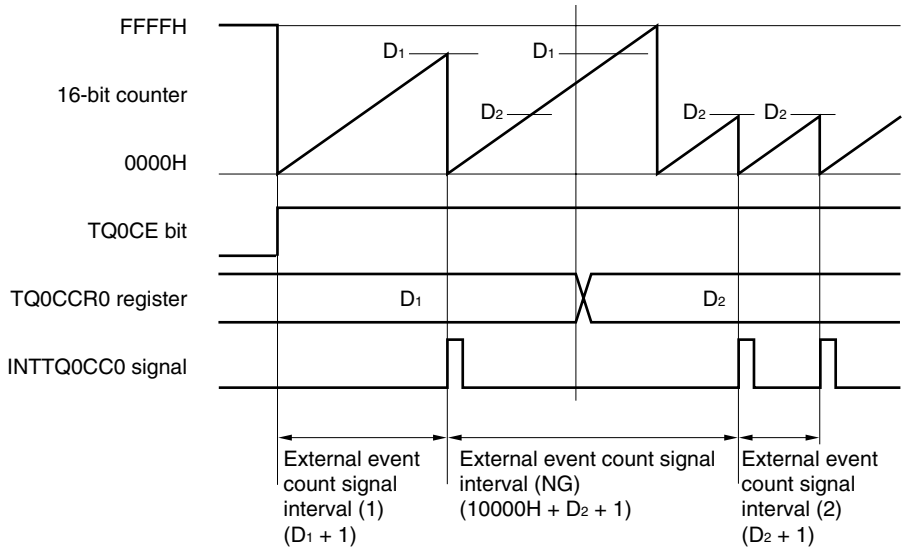

If the value of the TQ0CCR0 register is changed from D_1 to D_2 while the count value is greater than D_2 but less than D_1, the count value is transferred to the CCR0 buffer register as soon as the TQ0CCR0 register has been rewritten. Consequently, the value that is compared with the 16-bit counter is D_2.

Because the count value has already exceeded D_2, however, the 16-bit counter counts up to FFFFH, overflows, and then counts up again from 0000H. When the count value matches D_2, the INTTQ0CC0 signal is generated.

Therefore, the INTTQ0CC0 signal may not be generated at the valid edge count of "(D_1 + 1) times" or "(D_2 + 1) times" originally expected, but may be generated at the valid edge count of "(10000H + D_2 + 1) times".

(c) Operation of TQ0CCR1 to TQ0CCR3 registers

Figure 7-13. Configuration of TQ0CCR1 to TQ0CCR3 Registers

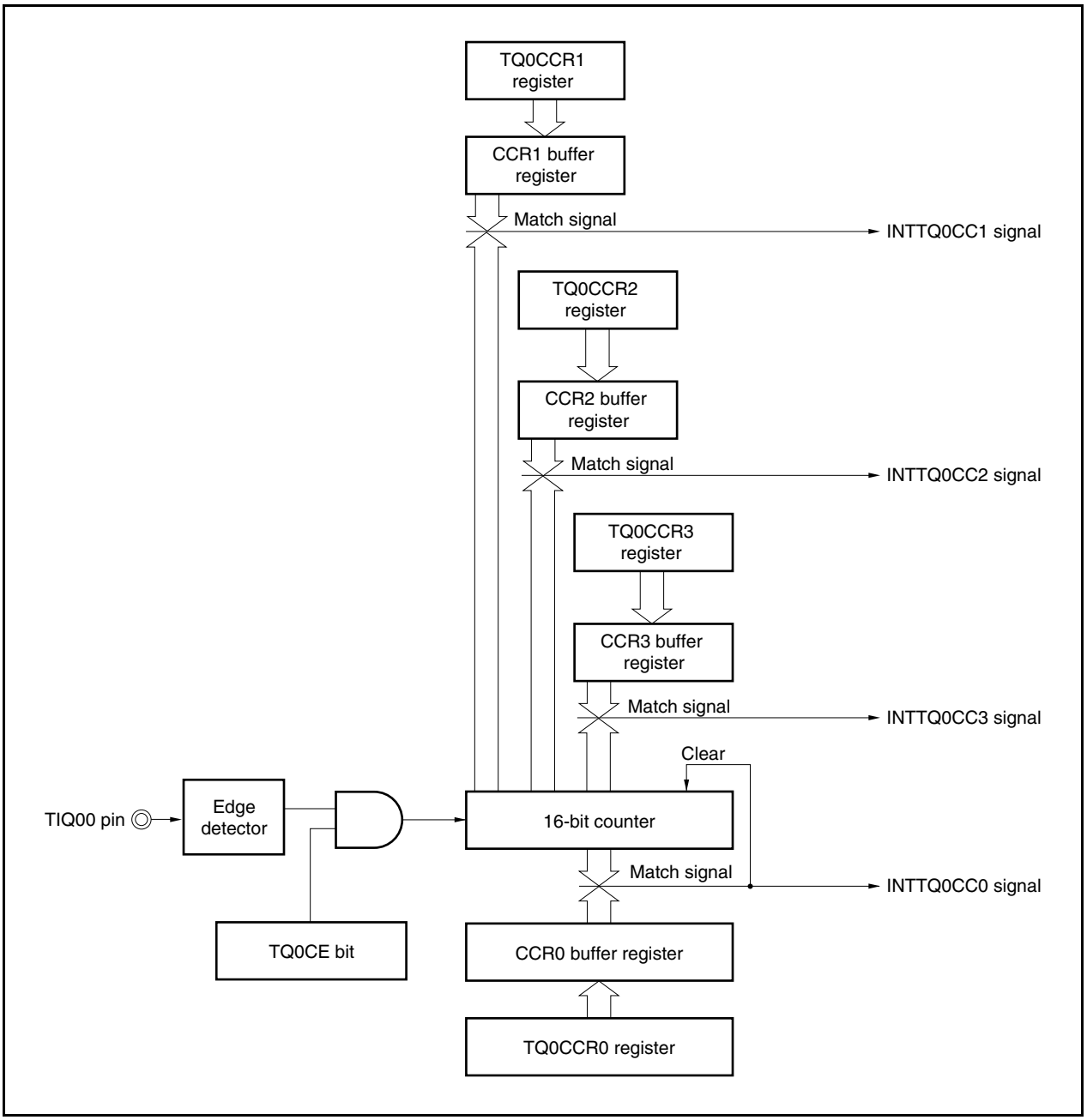

If the set value of the TQ0CCRk register is smaller than the set value of the TQ0CCR0 register, the INTTQ0CCk signal is generated once per cycle.

Remark k = 1 to 3

Figure 7-14. Timing Chart When $D_{01} \geq D_{k1}$

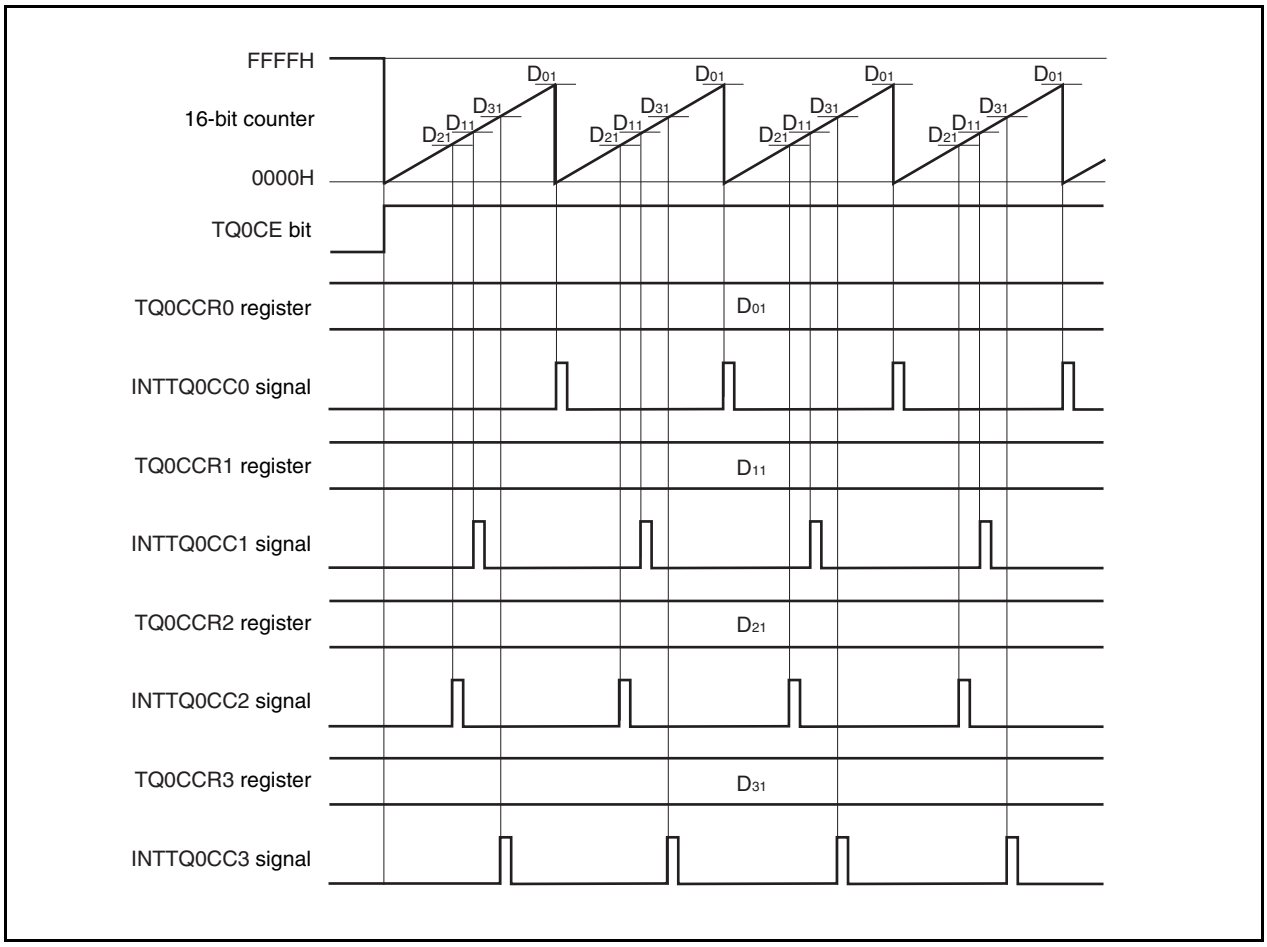

If the set value of the TQ0CCRk register is greater than the set value of the TQ0CCR0 register, the INTTQ0CCk signal is not generated because the count value of the 16-bit counter and the value of the TQ0CCRk register do not match.

Remark k = 1 to 3

Figure 7-15. Timing Chart When $D_{01} < D_{k1}$

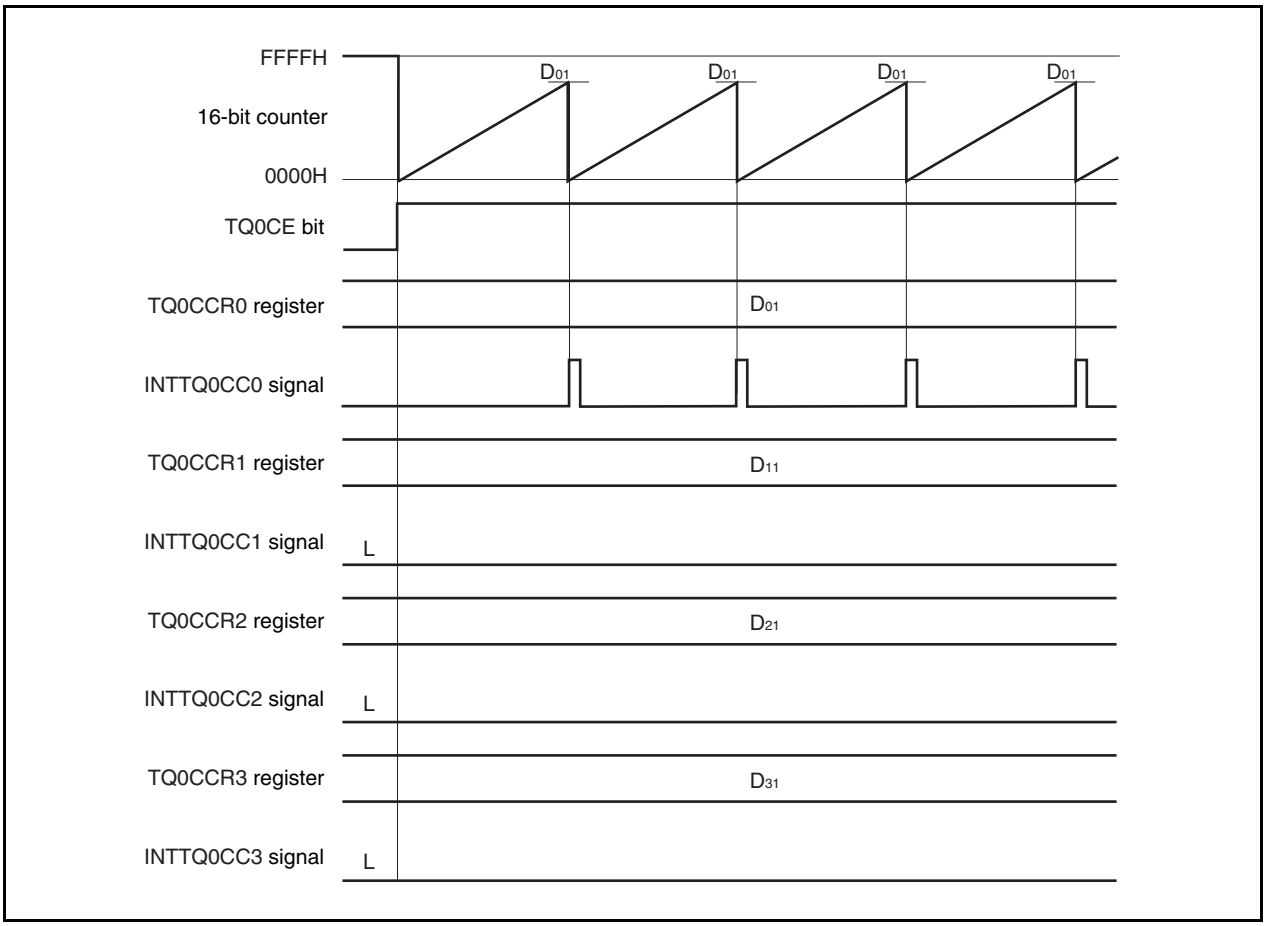

7.5.3 External trigger pulse output mode (TQ0MD2 to TQ0MD0 bits = 010)

In the external trigger pulse output mode, 16-bit timer/event counter Q waits for a trigger when the TQ0CTL0.TQ0CE bit is set to 1. When the valid edge of an external trigger input signal is detected, 16-bit timer/event counter Q starts counting, and outputs a PWM waveform from the TOQ01 to TOQ03 pins.

Pulses can also be output by generating a software trigger instead of using the external trigger. When using a software trigger, a square wave that has one cycle of the PWM waveform as half its cycle can also be output from the TOQ00 pin.

Figure 7-16. Configuration in External Trigger Pulse Output Mode

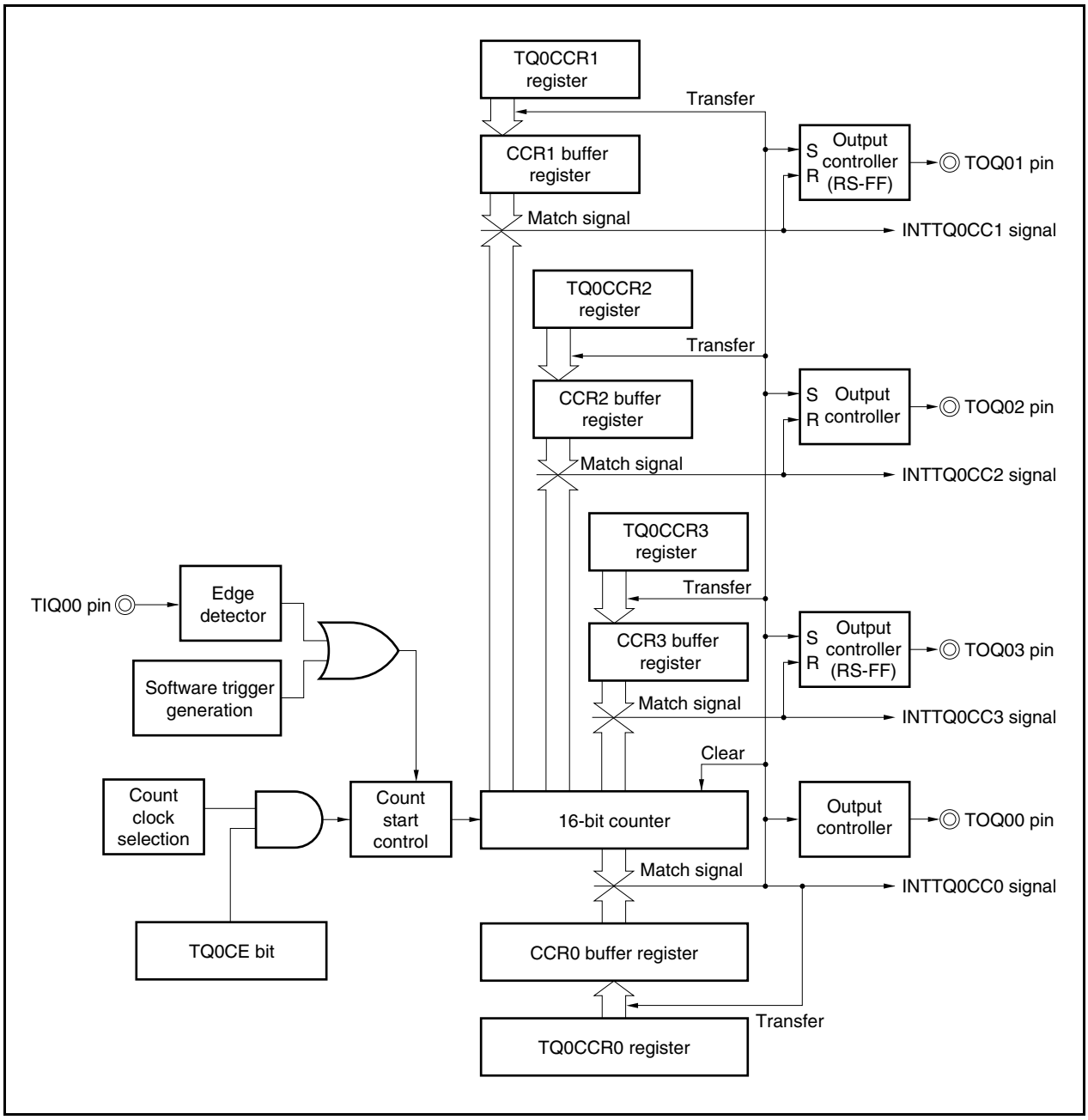

Figure 7-17. Basic Timing in External Trigger Pulse Output Mode

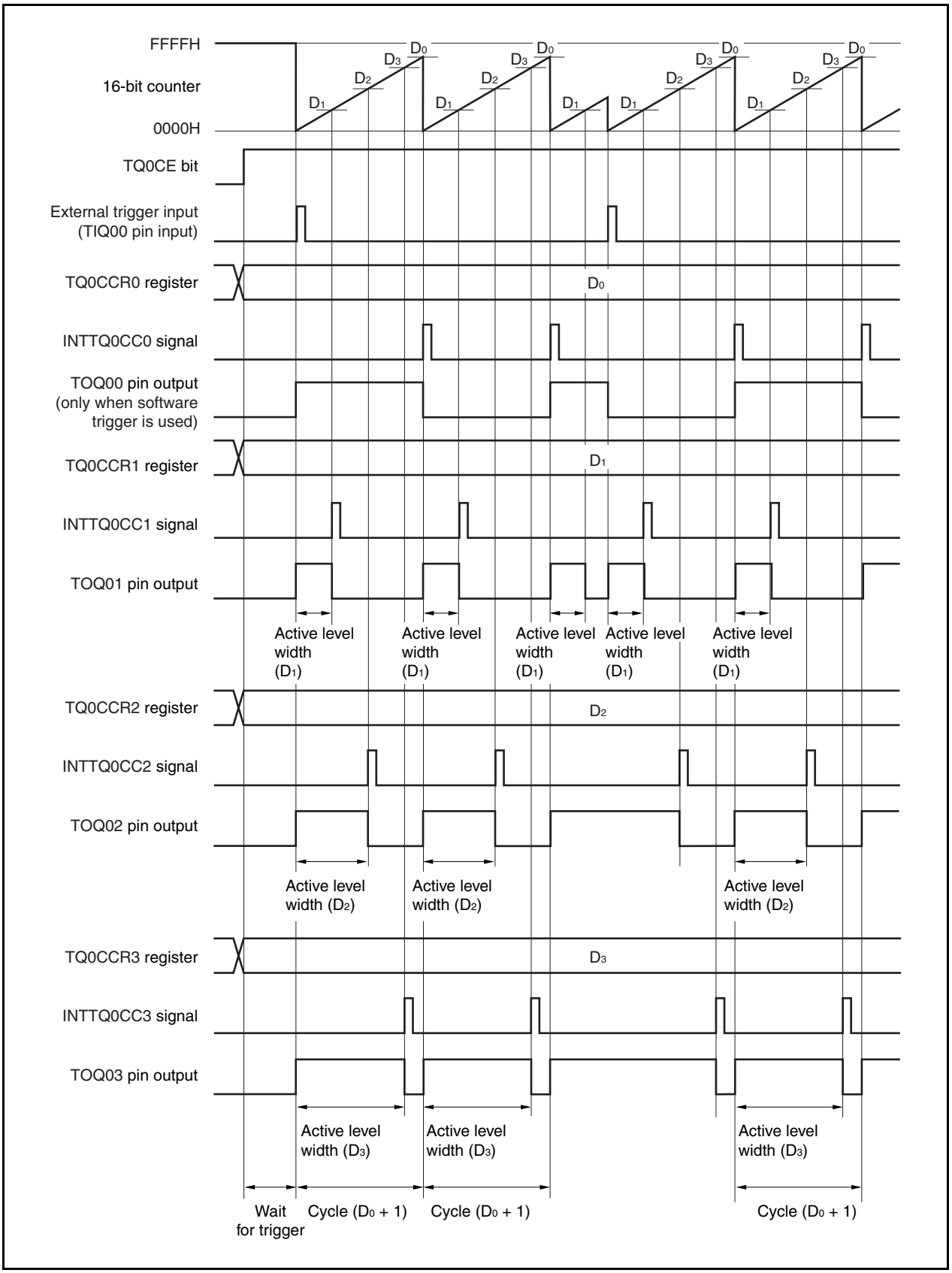

16-bit timer/event counter Q waits for a trigger when the TQ0CE bit is set to 1. When the trigger is generated, the 16-bit counter is cleared from FFFFH to 0000H, starts counting at the same time, and outputs a PWM waveform from the TOQ0k pin. If the trigger is generated again while the counter is operating, the counter is cleared to 0000H and restarted. (The output of the TOQ00 pin is inverted. The TOQ0k pin outputs a high-level regardless of the status (high/low) when a trigger is generated.)

The active level width, cycle, and duty factor of the PWM waveform can be calculated as follows.

Active level width = (Set value of TQ0CCRk register) × Count clock cycle
Cycle = (Set value of TQ0CCR0 register + 1) × Count clock cycle
Duty factor = (Set value of TQ0CCRk register)/(Set value of TQ0CCR0 register + 1)

The compare match request signal INTTQ0CC0 is generated when the 16-bit counter counts next time after its count value matches the value of the CCR0 buffer register, and the 16-bit counter is cleared to 0000H. The compare match interrupt request signal INTTQ0CCk is generated when the count value of the 16-bit counter matches the value of the CCRk buffer register.

The value set to the TQ0CCRm register is transferred to the CCRm buffer register when the count value of the 16-bit counter matches the value of the CCR0 buffer register and the 16-bit counter is cleared to 0000H.

The valid edge of an external trigger input signal, or setting the software trigger (TQ0CTL1.TQ0EST bit) to 1 is used as the trigger.

Remark k = 1 to 3, m = 0 to 3

Figure 7-18. Setting of Registers in External Trigger Pulse Output Mode (1/3)

(a) TMQ0 control register 0 (TQ0CTL0)

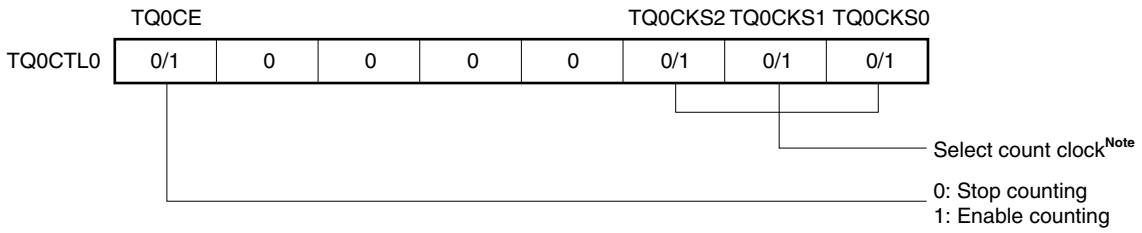

Note The setting is invalid when the TQ0CTL1.TQ0EEE bit = 1.

Figure 7-18. Setting of Registers in External Trigger Pulse Output Mode (2/3)

(b) TMQ0 control register 1 (TQ0CTL1)

	TQ0SYE	TQ0EST	TQ0EEE			TQ0MD2	TQ0MD1	TQ0MD0
TQ0CTL1	0	0/1	0/1	0	0	0	1	0

0, 1, 0:
External trigger pulse output mode

0: Operate on count clock selected by TQ0CKS0 to TQ0CKS2 bits
1: Count with external event input signal

Generate software trigger when 1 is written

(c) TMQ0 I/O control register 0 (TQ0IOC0)

	TQ0OL3	TQ0OE3	TQ0OL2	TQ0OE2	TQ0OL1	TQ0OE1	TQ0OL0	TQ0OE0
TQ0IOC0	0/1	0/1	0/1	0/1	0/1	0/1	0/1	0/1 Note

0: Disable TOQ00 pin output
1: Enable TOQ00 pin output

Setting of output level while operation of TOQ00 pin is disabled
0: Low level
1: High level

0: Disable TOQ01 pin output
1: Enable TOQ01 pin output

Specification of active level of TOQ01 pin output
0: Active-high
1: Active-low

0: Disable TOQ02 pin output
1: Enable TOQ02 pin output

Specification of active level of TOQ02 pin output
0: Active-high
1: Active-low

0: Disable TOQ03 pin output
1: Enable TOQ03 pin output

Specification of active level of TOQ03 pin output
0: Active-high
1: Active-low

- When TQ0OLk bit = 0

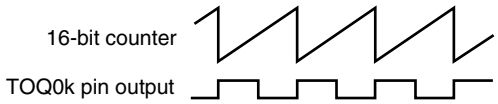

- When TQ0OLk bit = 1

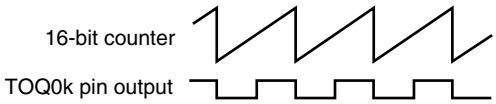

Note Clear this bit to 0 when the TOQ00 pin is not used in the external trigger pulse output mode.

Figure 7-18. Setting of Registers in External Trigger Pulse Output Mode (3/3)

(d) TMQ0 I/O control register 2 (TQ0IOC2)

					TQ0EES1	TQ0EES0	TQ0ETS1	TQ0ETS0
TQ0IOC2	0	0	0	0	0/1	0/1	0/1	0/1

Select valid edge of external trigger input

Select valid edge of external event count input

(e) TMQ0 counter read buffer register (TQ0CNT)

The value of the 16-bit counter can be read by reading the TQ0CNT register.

(f) TMQ0 capture/compare registers 0 to 3 (TQ0CCR0 to TQ0CCR3)

If D_0 is set to the TQ0CCR0 register, D_1 to the TQ0CCR1 register, D_2 to the TQ0CCR2 register, and D_3, to the TQ0CCR3 register, the cycle and active level of the PWM waveform are as follows.

Cycle = $(D_0 + 1) \times$ Count clock cycle
TOQ01 pin PWM waveform active level width = $D_1 \times$ Count clock cycle
TOQ02 pin PWM waveform active level width = $D_2 \times$ Count clock cycle
TOQ03 pin PWM waveform active level width = $D_3 \times$ Count clock cycle

Remarks 1. TMQ0 I/O control register 1 (TQ0IOC1) and TMQ0 option register 0 (TQ0OPT0) are not used in the external trigger pulse output mode.

2. Updating TMQ0 capture/compare register 2 (TQ0CCR2) and TMQ0 capture/compare register 3 (TQ0CCR3) is validated by writing TMQ0 capture/compare register 1 (TQ0CCR1).

(1) Operation flow in external trigger pulse output mode

Figure 7-19. Software Processing Flow in External Trigger Pulse Output Mode (1/2)

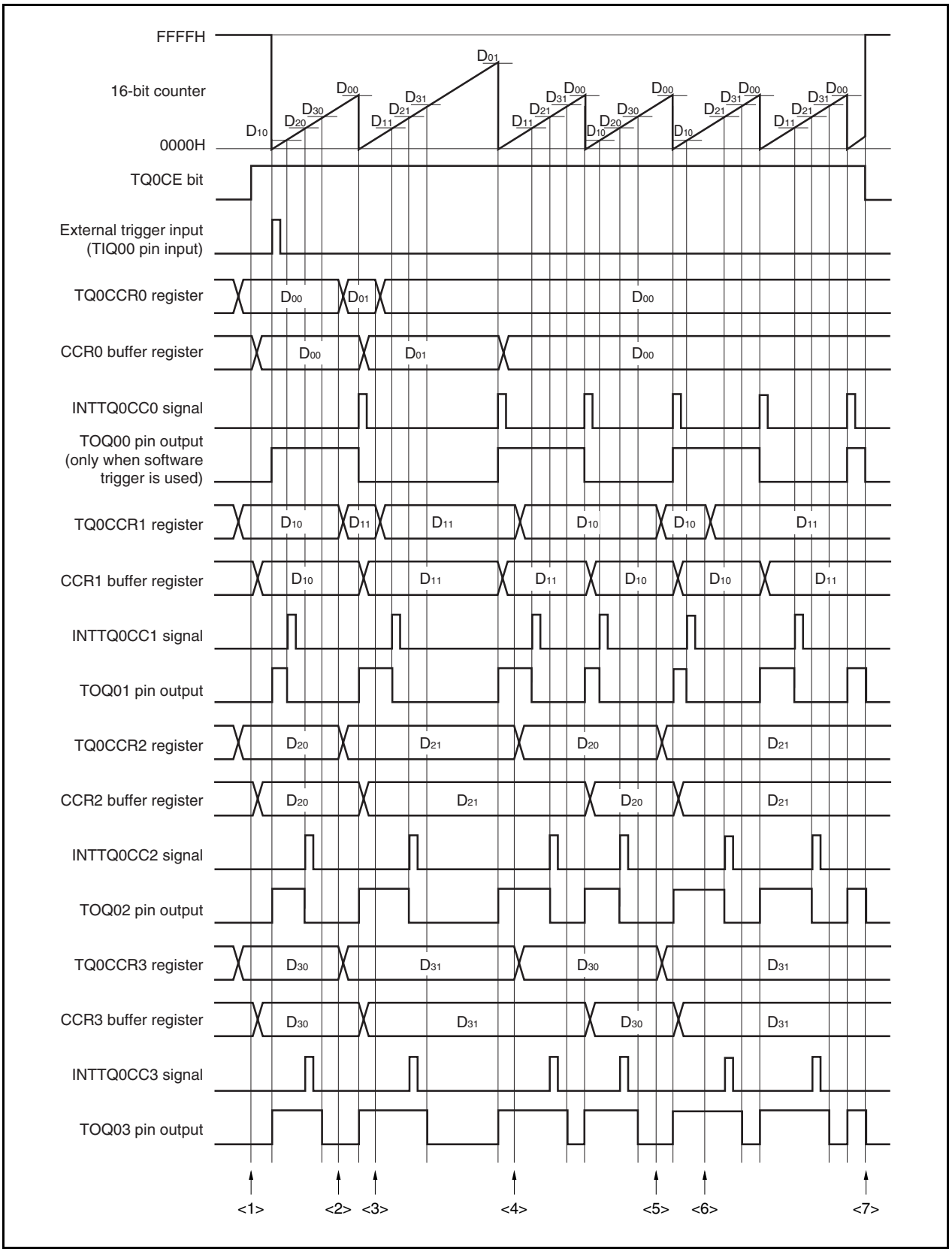

Figure 7-19. Software Processing Flow in External Trigger Pulse Output Mode (2/2)

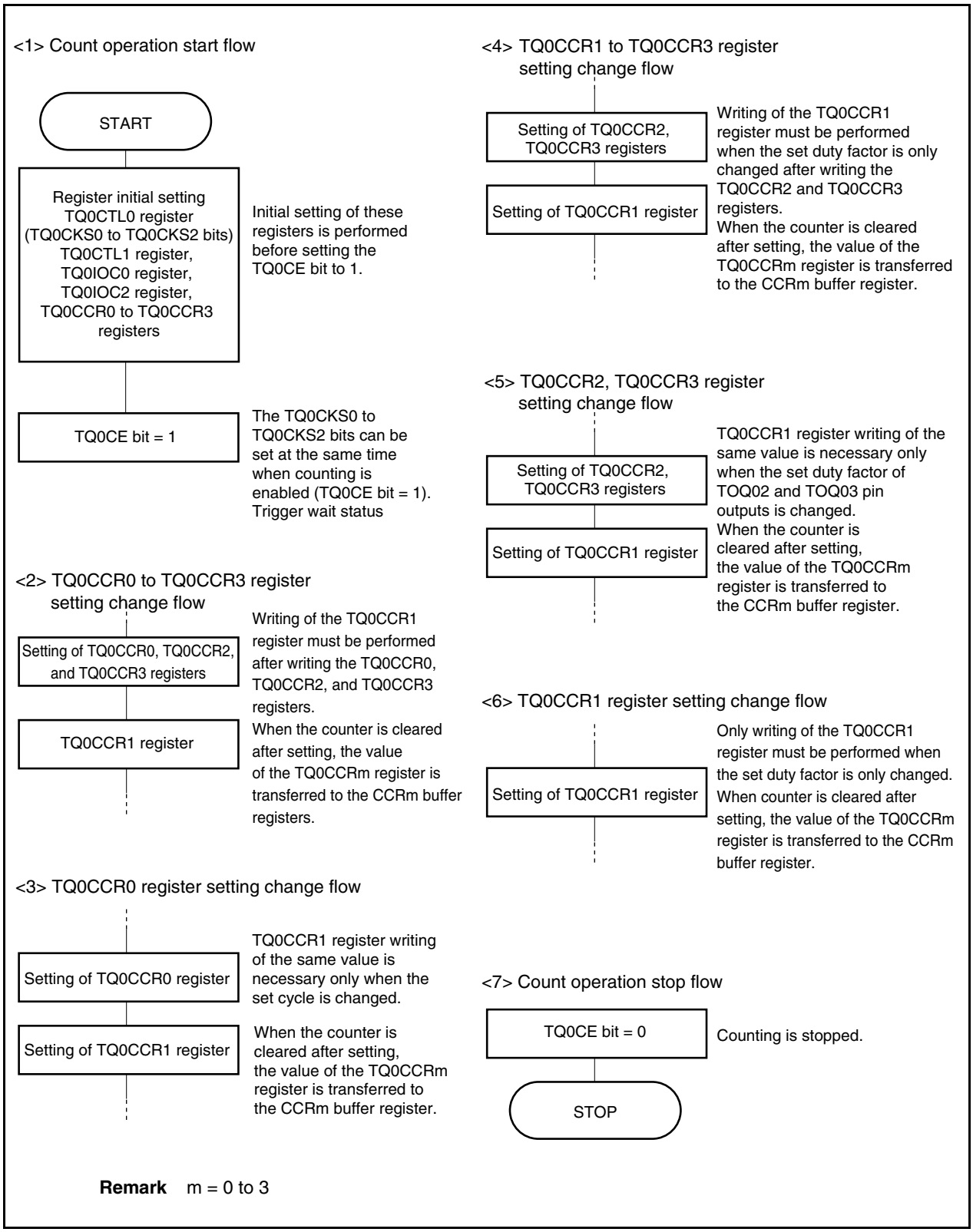

Remark m = 0 to 3

(2) External trigger pulse output mode operation timing

(a) Note on changing pulse width during operation

To change the PWM waveform while the counter is operating, write the TQ0CCR1 register last.

Rewrite the TQ0CCRk register after writing the TQ0CCR1 register after the INTTQ0CC0 signal is detected.

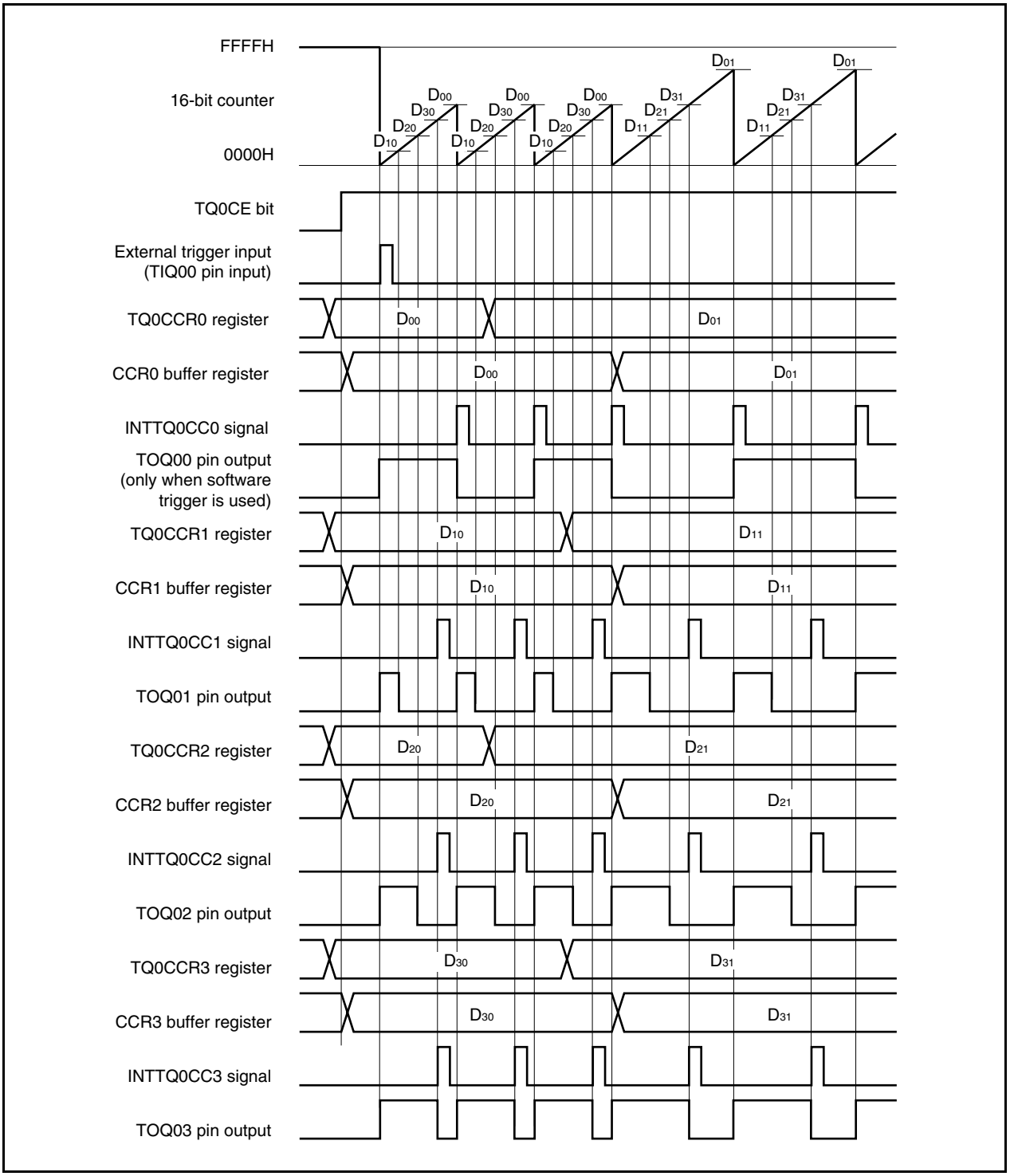

In order to transfer data from the TQ0CCRm register to the CCRm buffer register, the TQ0CCR1 register must be written.

To change both the cycle and active level width of the PWM waveform at this time, first set the cycle to the TQ0CCR0 register, set the active level width to the TQ0CCR2 and TQ0CCR3 registers, and then set an active level to the TQ0CCR1 register.

To change only the cycle of the PWM waveform, first set the cycle to the TQ0CCR0 register, and then write the same value to the TQ0CCR1 register.

To change only the active level width (duty factor) of the PWM waveform, first set an active level to the TQ0CCR2 and TQ0CCR3 registers and then set an active level to the TQ0CCR1 register.

To change only the active level width (duty factor) of the PWM waveform output by the TOQ01 pin, only the TQ0CCR1 register has to be set.

To change only the active level width (duty factor) of the PWM waveform output by the TOQ02 and TOQ03 pins, first set an active level width to the TQ0CCR2 and TQ0CCR3 registers, and then write the same value to the TQ0CCR1 register.

After data is written to the TQ0CCR1 register, the value written to the TQ0CCRm register is transferred to the CCRm buffer register in synchronization with clearing of the 16-bit counter, and is used as the value compared with the 16-bit counter.

To write the TQ0CCR0 to TQ0CCR3 registers again after writing the TQ0CCR1 register once, do so after the INTTQ0CC0 signal is generated. Otherwise, the value of the CCRm buffer register may become undefined because timing of transferring data from the TQ0CCRm register to the CCRm buffer register conflicts with writing the TQ0CCRm register.

Remark m = 0 to 3

(b) 0%/100% output of PWM waveform

To output a 0% waveform, set the TQ0CCRk register to 0000H. If the set value of the TQ0CCR0 register is FFFFH, the INTTQ0CCk signal is generated periodically.

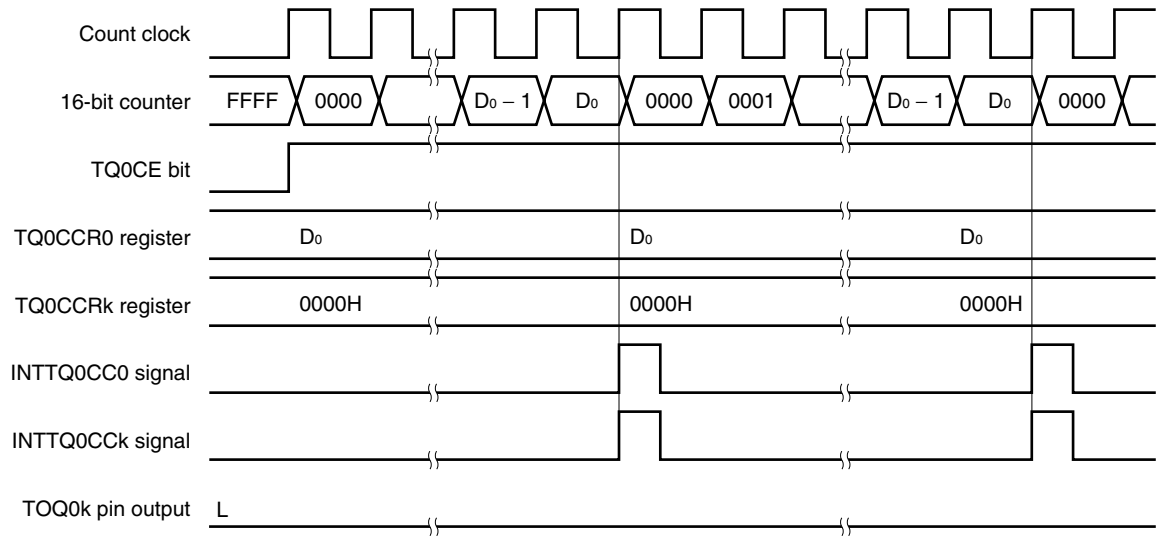

Remark k = 1 to 3

To output a 100% waveform, set a value of (set value of TQ0CCR0 register + 1) to the TQ0CCRk register. If the set value of the TQ0CCR0 register is FFFFH, 100% output cannot be produced.

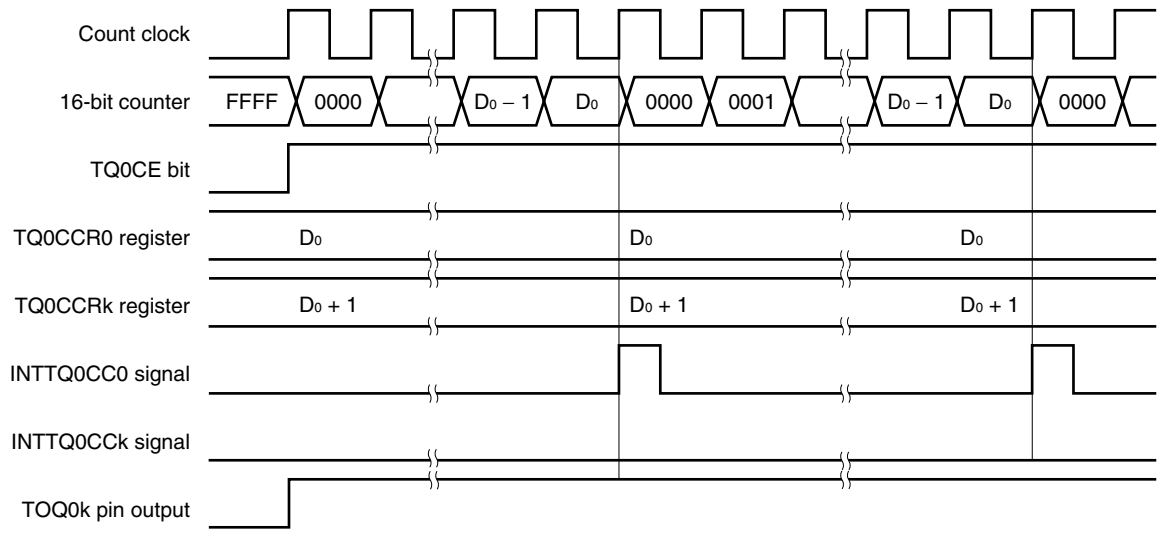

Remark k = 1 to 3

(c) Conflict between trigger detection and match with CCRk buffer register

If the trigger is detected immediately after the INTTQ0CCk signal is generated, the 16-bit counter is immediately cleared to 0000H, the output signal of the TOQ0k pin is asserted, and the counter continues counting. Consequently, the inactive period of the PWM waveform is shortened.

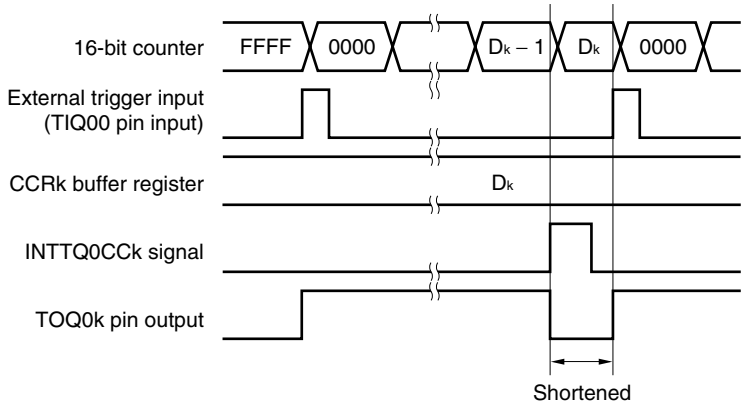

Remark k = 1 to 3

If the trigger is detected immediately before the INTTQ0CCk signal is generated, the INTTQ0CCk signal is not generated, and the 16-bit counter is cleared to 0000H and continues counting. The output signal of the TOQ0k pin remains active. Consequently, the active period of the PWM waveform is extended.

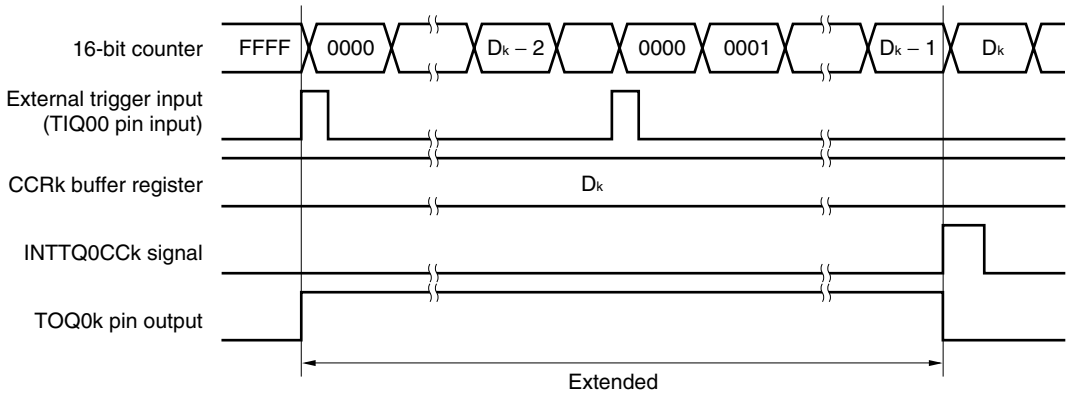

Remark k = 1 to 3

(d) Conflict between trigger detection and match with CCR0 buffer register

If the trigger is detected immediately after the INTTQ0CC0 signal is generated, the 16-bit counter is cleared to 0000H and continues counting up. Therefore, the active period of the TOQ0k pin is extended by time from generation of the INTTQ0CC0 signal to trigger detection.

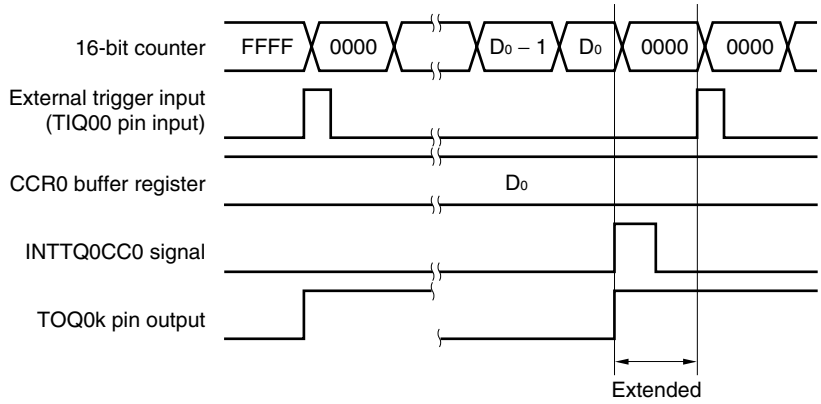

Remark k = 1 to 3

If the trigger is detected immediately before the INTTQ0CC0 signal is generated, the INTTQ0CC0 signal is not generated. The 16-bit counter is cleared to 0000H, the TOQ0k pin is asserted, and the counter continues counting. Consequently, the inactive period of the PWM waveform is shortened.

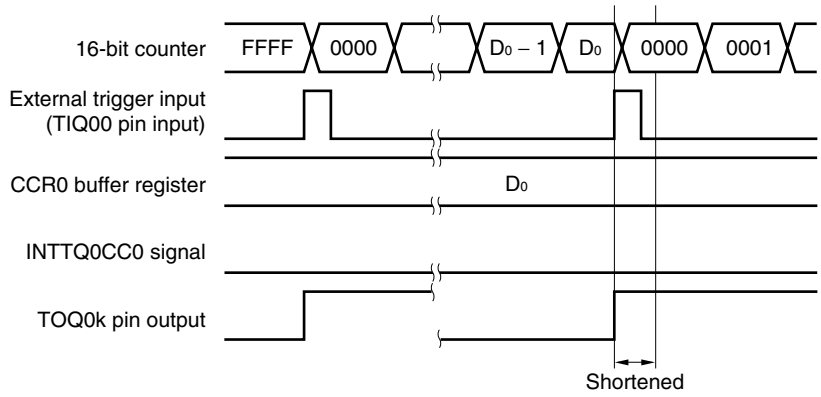

Remark k = 1 to 3

(e) Generation timing of compare match interrupt request signal (INTTQ0CCk)

The timing of generation of the INTTQ0CCk signal in the external trigger pulse output mode differs from the timing of other INTTQ0CCk signals; the INTTQ0CCk signal is generated when the count value of the 16-bit counter matches the value of the CCRk buffer register.

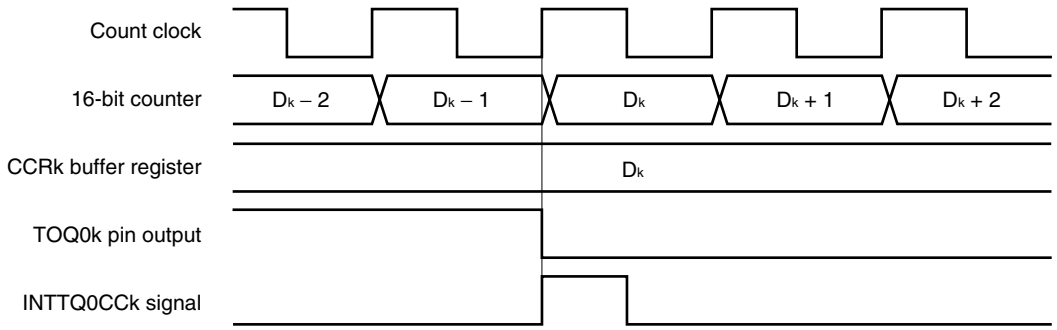

Remark k = 1 to 3

Usually, the INTTQ0CCk signal is generated in synchronization with the next count up after the count value of the 16-bit counter matches the value of the CCRk buffer register.

In the external trigger pulse output mode, however, it is generated one clock earlier. This is because the timing is changed to match the timing of changing the output signal of the TOQ0k pin.

7.5.4 One-shot pulse output mode (TQ0MD2 to TQ0MD0 bits = 011)

In the one-shot pulse output mode, 16-bit timer/event counter Q waits for a trigger when the TQ0CTL0.TQ0CE bit is set to 1. When the valid edge of an external trigger input is detected, 16-bit timer/event counter Q starts counting, and outputs a one-shot pulse from the TOQ01 to TOQ03 pins.

Instead of the external trigger, a software trigger can also be generated to output the pulse. When the software trigger is used, the TOQ00 pin outputs the active level while the 16-bit counter is counting, and the inactive level when the counter is stopped (waiting for a trigger).

Figure 7-20. Configuration in One-Shot Pulse Output Mode

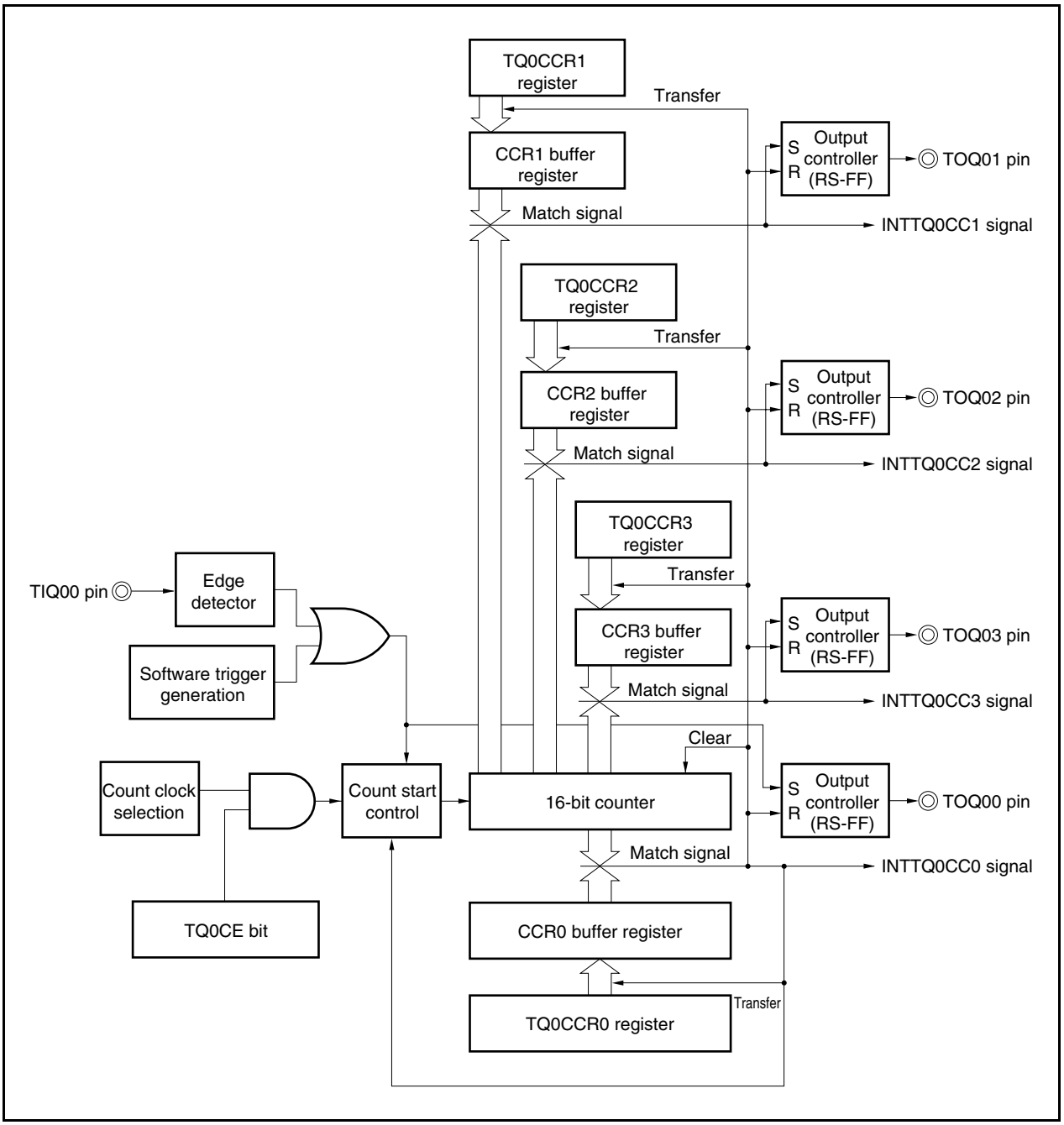

Figure 7-21. Basic Timing in One-Shot Pulse Output Mode

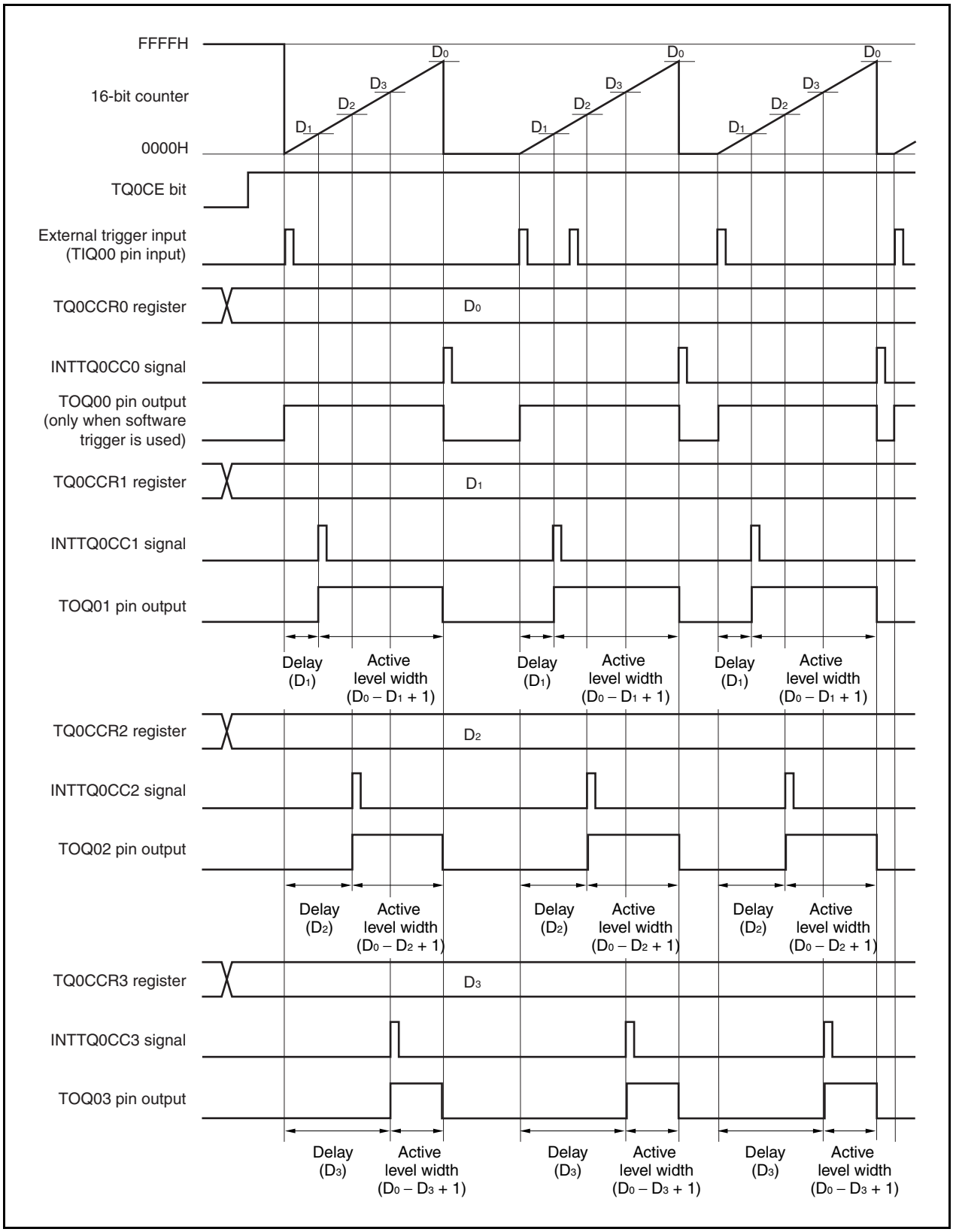

When the TQ0CE bit is set to 1, 16-bit timer/event counter Q waits for a trigger. When the trigger is generated, the 16-bit counter is cleared from FFFFH to 0000H, starts counting, and outputs a one-shot pulse from the TOQ0k pin. After the one-shot pulse is output, the 16-bit counter is set to FFFFH, stops counting, and waits for a trigger. If a trigger is generated again while the one-shot pulse is being output, it is ignored.

The output delay period and active level width of the one-shot pulse can be calculated as follows.

Output delay period = (Set value of TQ0CCRk register) × Count clock cycle
Active level width = (Set value of TQ0CCR0 register − Set value of TQ0CCRk register + 1) × Count clock cycle

The compare match interrupt request signal INTTQ0CC0 is generated when the 16-bit counter counts after its count value matches the value of the CCR0 buffer register. The compare match interrupt request signal INTTQ0CCk is generated when the count value of the 16-bit counter matches the value of the CCRk buffer register.

The valid edge of an external trigger input or setting the software trigger (TQ0CTL1.TQ0EST bit) to 1 is used as the trigger.

Remark k = 1 to 3

Figure 7-22. Setting of Registers in One-Shot Pulse Output Mode (1/3)

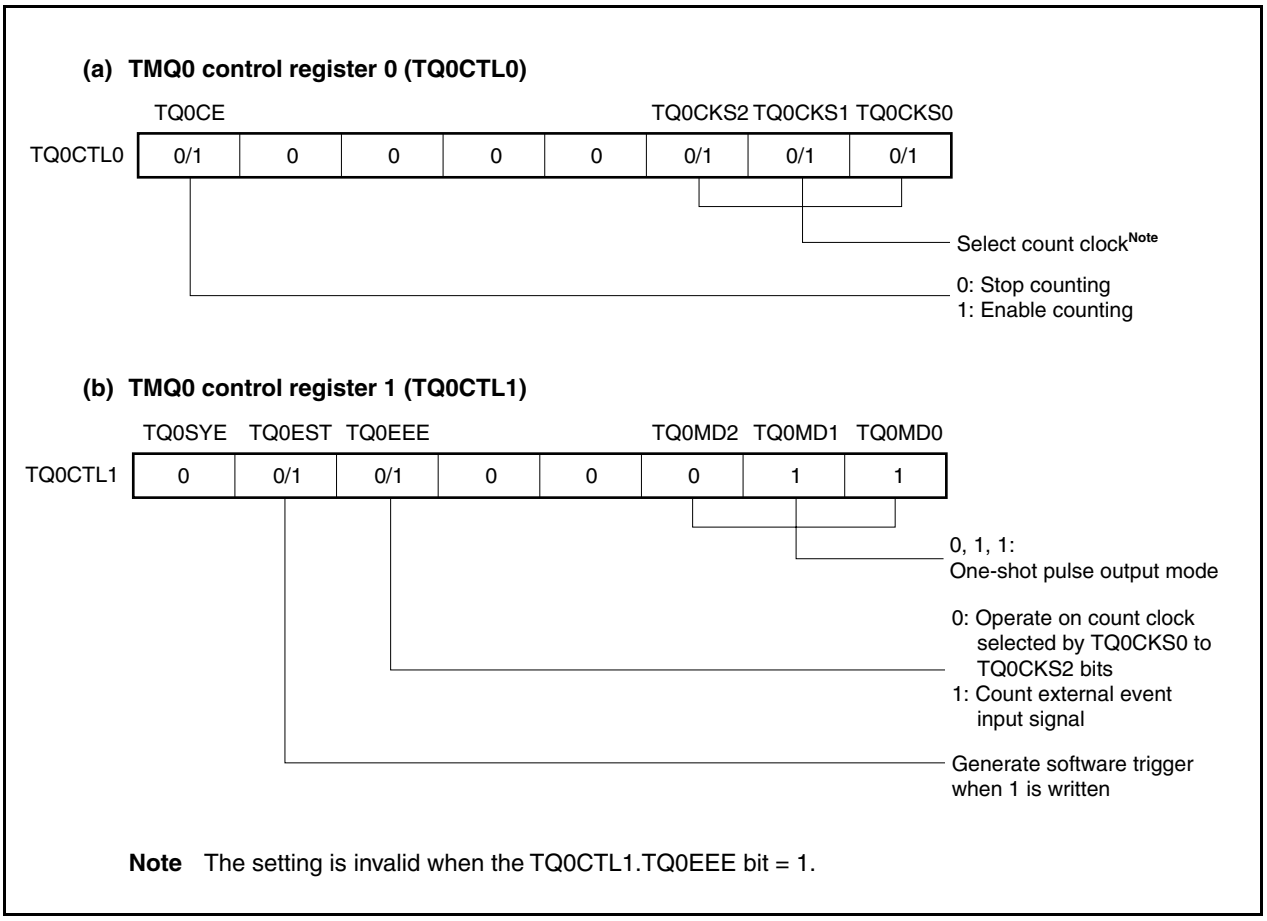

Note The setting is invalid when the TQ0CTL1.TQ0EEE bit = 1.

Figure 7-22. Register Setting in One-Shot Pulse Output Mode (2/3)

(c) TMQ0 I/O control register 0 (TQ0IOC0)

	TQ0OL3	TQ0OE3	TQ0OL2	TQ0OE2	TQ0OL1	TQ0OE1	TQ0OL0	TQ0OE0
TQ0IOC0	0/1	0/1	0/1	0/1	0/1	0/1	0/1	0/1 Note

0: Disable TOQ00 pin output
1: Enable TOQ00 pin output

Setting of output level while operation of TOQ00 pin is disabled
0: Low level
1: High level

0: Disable TOQ01 pin output
1: Enable TOQ01 pin output

Specification of active level of TOQ01 pin output
0: Active-high
1: Active-low

0: Disable TOQ02 pin output
1: Enable TOQ02 pin output

Specification of active level of TOQ02 pin output
0: Active-high
1: Active-low

0: Disable TOQ03 pin output
1: Enable TOQ03 pin output

Specification of active level of TOQ03 pin output
0: Active-high
1: Active-low

• When TQ0OLk bit = 0

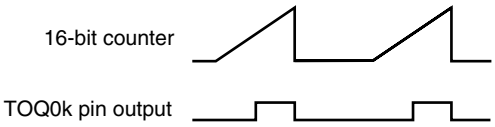

• When TQ0OLk bit = 1

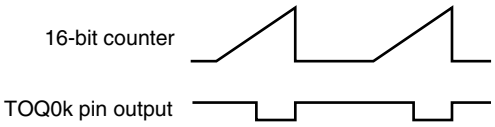

(d) TMQ0 I/O control register 2 (TQ0IOC2)

					TQ0EES1	TQ0EES0	TQ0ETS1	TQ0ETS0
TQ0IOC2	0	0	0	0	0/1	0/1	0/1	0/1

Select valid edge of external trigger input

Select valid edge of external event count input

Note Clear this bit to 0 when the TOQ00 pin is not used in the one-shot pulse output mode.

Figure 7-22. Register Setting in One-Shot Pulse Output Mode (3/3)

(e) TMQ0 counter read buffer register (TQ0CNT)

The value of the 16-bit counter can be read by reading the TQ0CNT register.

(f) TMQ0 capture/compare registers 0 to 3 (TQ0CCR0 to TQ0CCR3)

If D_0 is set to the TQ0CCR0 register and D_k to the TQ0CCRk register, the active level width and output delay period of the one-shot pulse are as follows.

Active level width = $(D_k - D_0 + 1) \times$ Count clock cycle

Output delay period = $(D_k) \times$ Count clock cycle

Remarks 1. TMQ0 I/O control register 1 (TQ0IOC1) and TMQ0 option register 0 (TQ0OPT0) are not used in the one-shot pulse output mode.

2. k = 1 to 3

(1) Operation flow in one-shot pulse output mode

Figure 7-23. Software Processing Flow in One-Shot Pulse Output Mode (1/2)

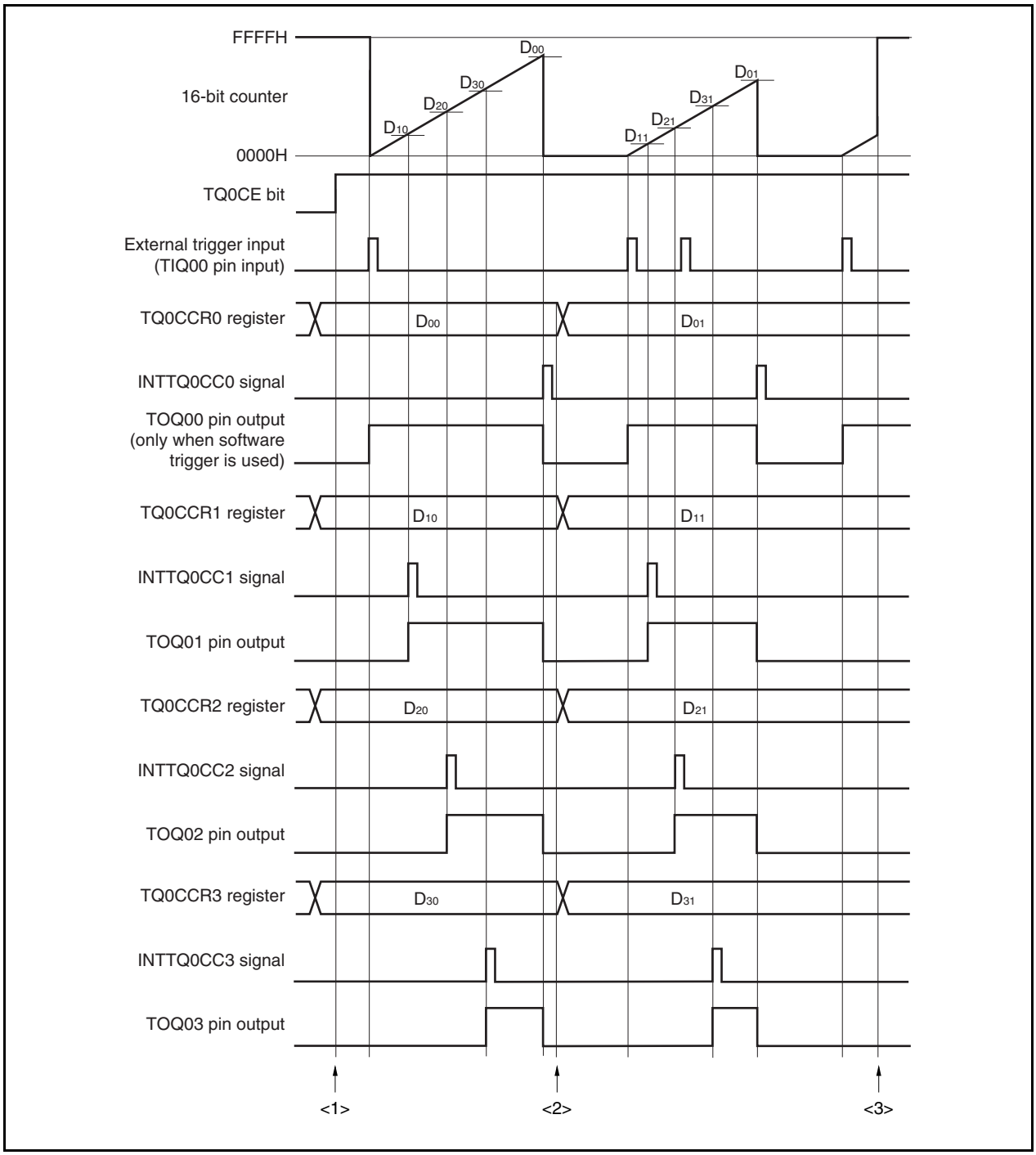

Figure 7-23. Software Processing Flow in One-Shot Pulse Output Mode (2/2)

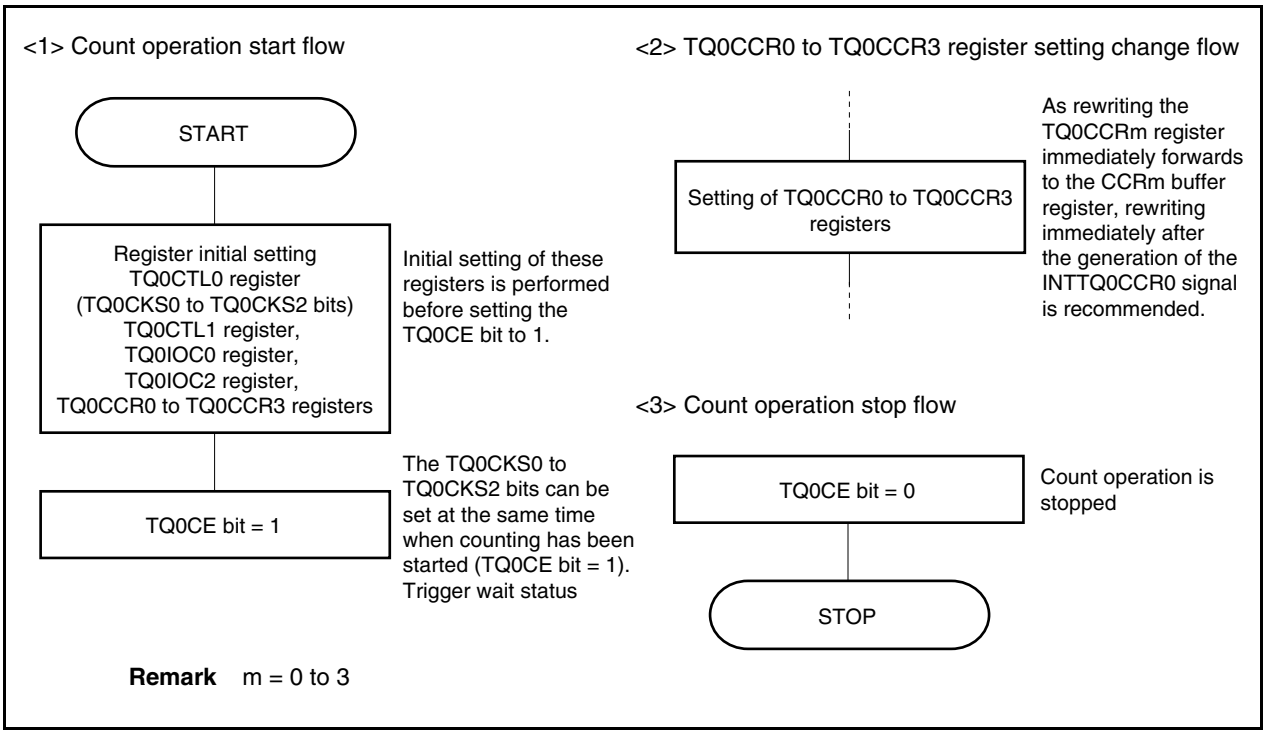

Remark m = 0 to 3

(2) Operation timing in one-shot pulse output mode

(a) Note on rewriting TQ0CCRm register

To change the set value of the TQ0CCRm register to a smaller value, stop counting once, and then change the set value.

If the value of the TQ0CCR0 register is rewritten to a smaller value during counting, the 16-bit counter may overflow.

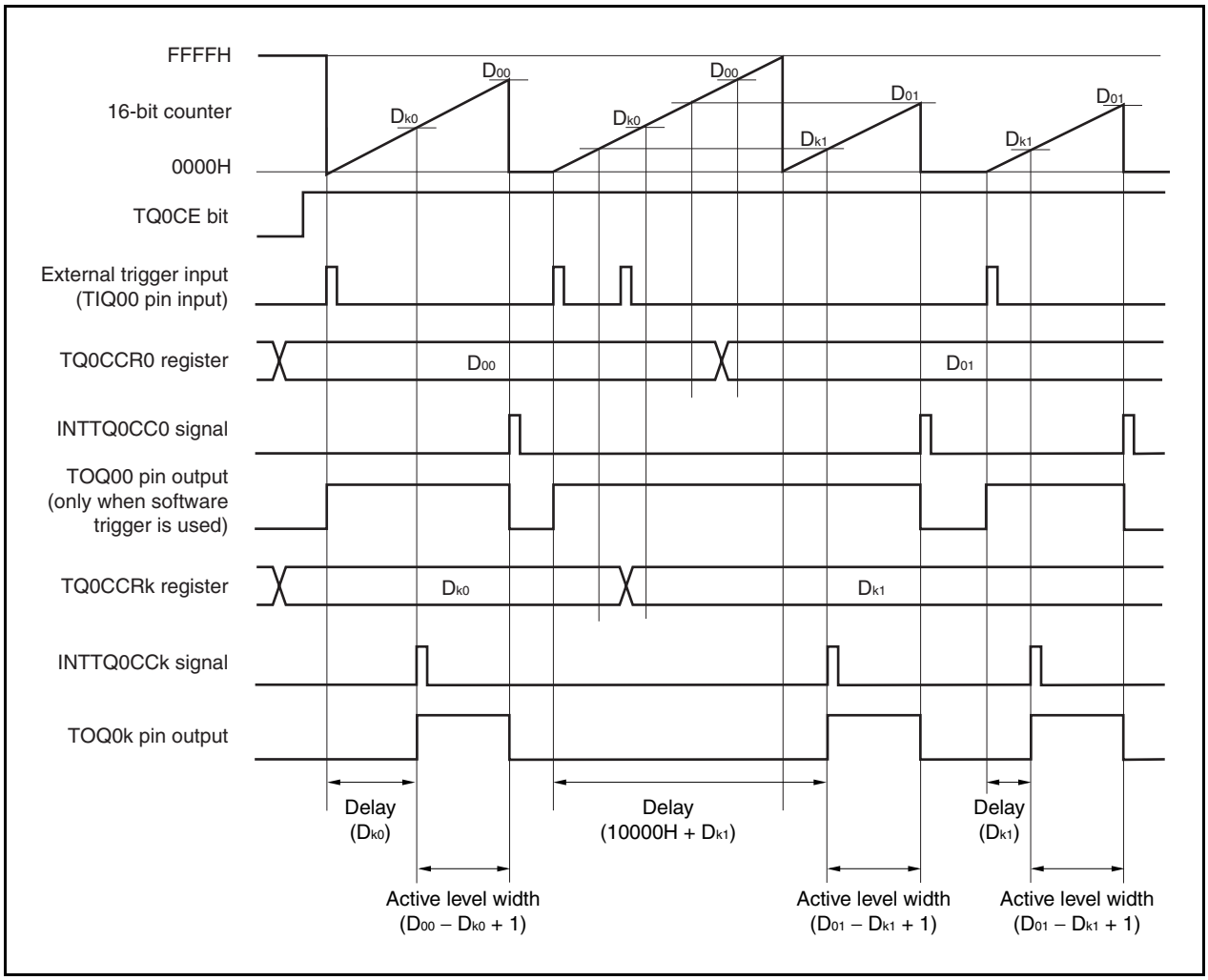

When the TQ0CCR0 register is rewritten from D_{00} to D_{01} and the TQ0CCRk register from D_{k0} to D_{k1} where $D_{00} > D_{01}$ and $D_{k0} > D_{k1}$, if the TQ0CCRk register is rewritten when the count value of the 16-bit counter is greater than D_{k1} and less than D_{k0} and if the TQ0CCR0 register is rewritten when the count value is greater than D_{01} and less than D_{00}, each set value is reflected as soon as the register has been rewritten and compared with the count value. The counter counts up to FFFFH and then counts up again from 0000H. When the count value matches D_{k1}, the counter generates the INTTQ0CCk signal and asserts the TOQ0k pin. When the count value matches D_{01}, the counter generates the INTTQ0CC0 signal, deasserts the TOQ0k pin, and stops counting.

Therefore, the counter may output a pulse with a delay period or active period different from that of the one-shot pulse that is originally expected.

Remark k = 1 to 3

(b) Generation timing of compare match interrupt request signal (INTTQ0CCk)

The generation timing of the INTTQ0CCk signal in the one-shot pulse output mode is different from other INTTQ0CCk signals; the INTTQ0CCk signal is generated when the count value of the 16-bit counter matches the value of the TQ0CCRk register.

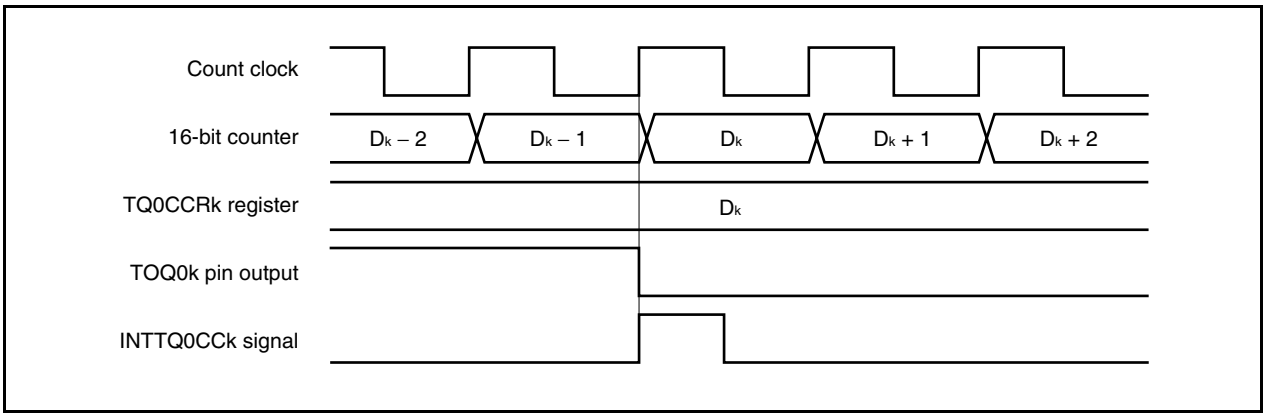

Usually, the INTTQ0CCk signal is generated when the 16-bit counter counts up next time after its count value matches the value of the TQ0CCRk register.

In the one-shot pulse output mode, however, it is generated one clock earlier. This is because the timing is changed to match the change timing of the TOQ0k pin.

Remark k = 1 to 3

7.5.5 PWM output mode (TQ0MD2 to TQ0MD0 bits = 100)

In the PWM output mode, a PWM waveform is output from the TOQ01 to TOQ03 pins when the TQ0CTL0.TQ0CE bit is set to 1.

In addition, a pulse with one cycle of the PWM waveform as half its cycle is output from the TOQ00 pin.

Figure 7-24. Configuration in PWM Output Mode

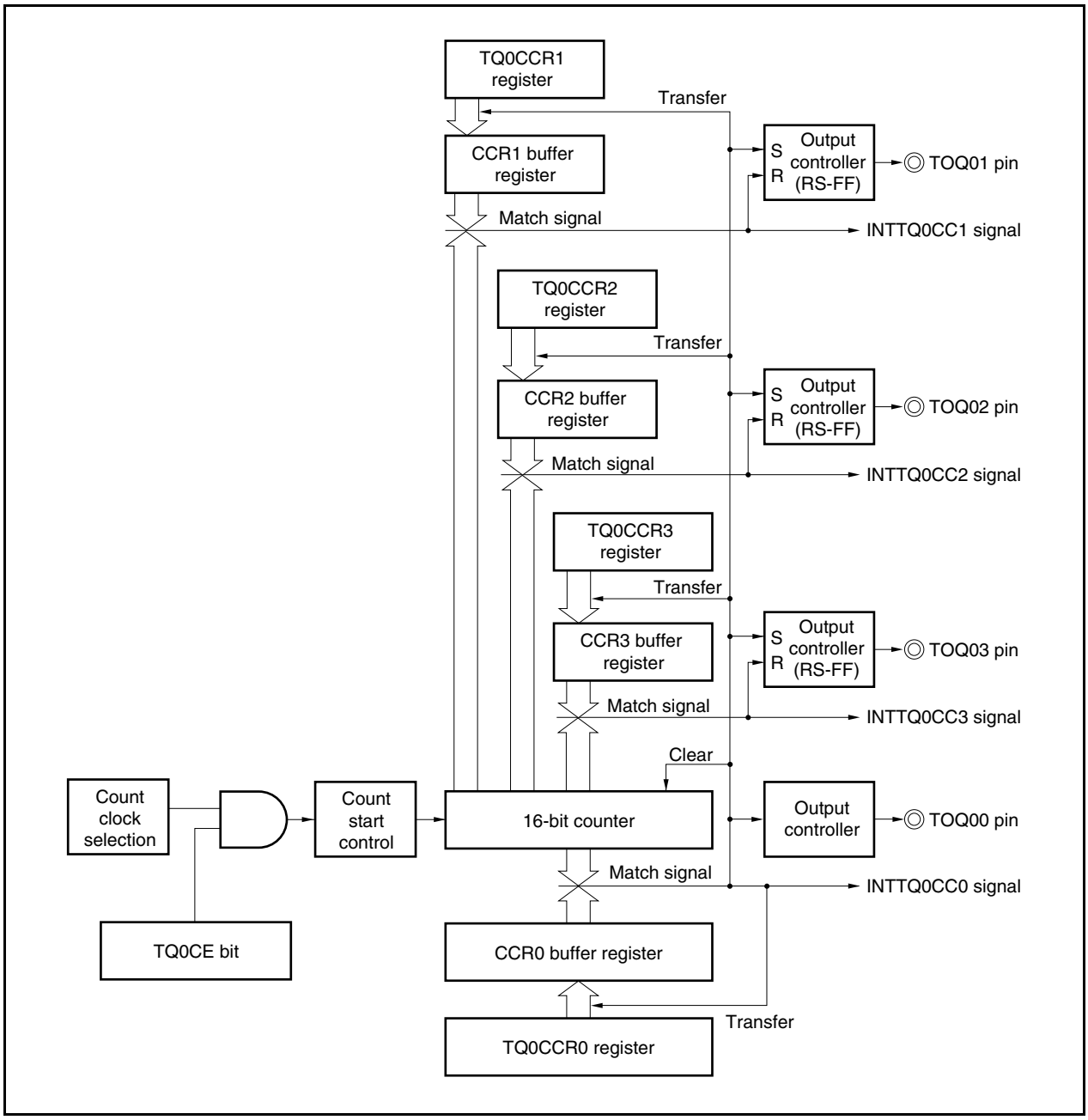

Figure 7-25. Basic Timing in PWM Output Mode

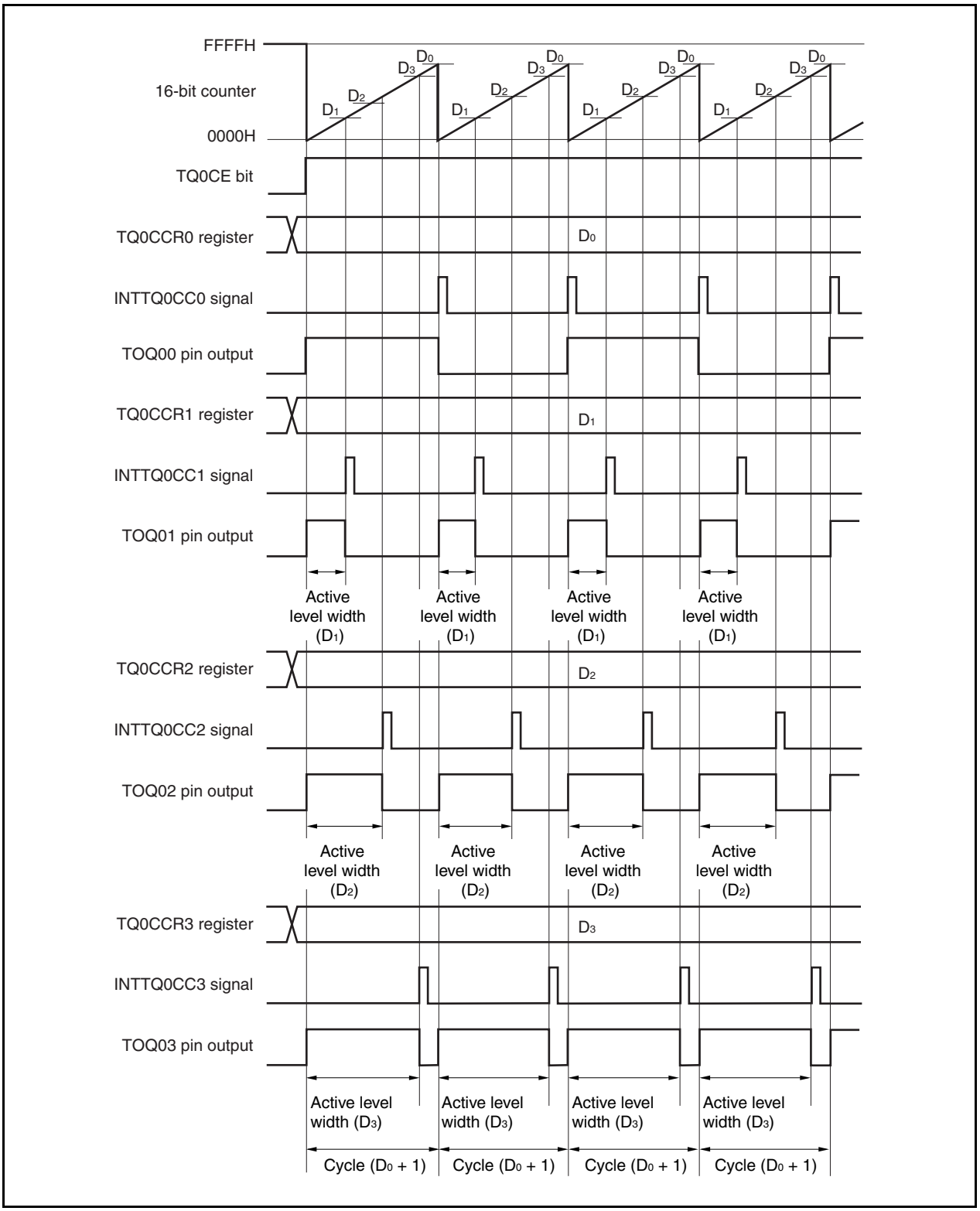

When the TQ0CE bit is set to 1, the 16-bit counter is cleared from FFFFH to 0000H, starts counting, and outputs PWM waveform from the TOQ0k pin.

The active level width, cycle, and duty factor of the PWM waveform can be calculated as follows.

Active level width = (Set value of TQ0CCRk register) × Count clock cycle
Cycle = (Set value of TQ0CCR0 register + 1) × Count clock cycle
Duty factor = (Set value of TQ0CCRk register)/(Set value of TQ0CCR0 register + 1)

The PWM waveform can be changed by rewriting the TQ0CCRm register while the counter is operating. The newly written value is reflected when the count value of the 16-bit counter matches the value of the CCR0 buffer register and the 16-bit counter is cleared to 0000H.

The compare match interrupt request signal INTTQ0CC0 is generated when the 16-bit counter counts next time after its count value matches the value of the CCR0 buffer register, and the 16-bit counter is cleared to 0000H. The compare match interrupt request signal INTTQ0CCk is generated when the count value of the 16-bit counter matches the value of the CCRk buffer register.

Remark k = 1 to 3, m = 0 to 3

Figure 7-26. Setting of Registers in PWM Output Mode (1/3)

(a) TMQ0 control register 0 (TQ0CTL0)

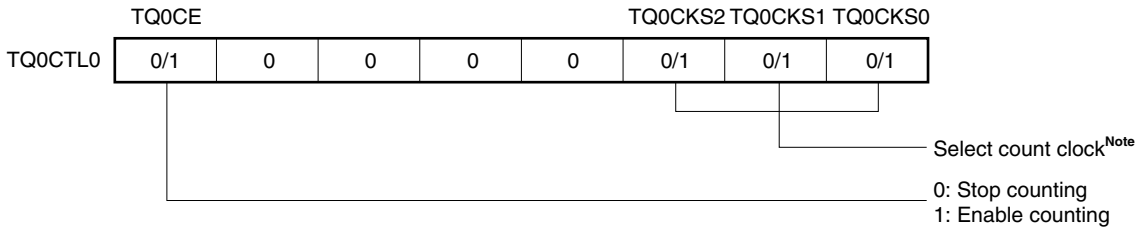

(b) TMQ0 control register 1 (TQ0CTL1)

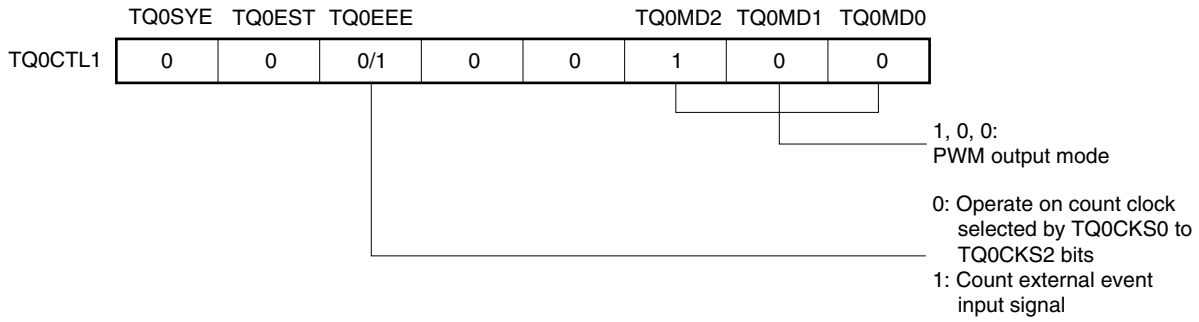

Note The setting is invalid when the TQ0CTL1.TQ0EEE bit = 1.

Figure 7-26. Setting of Registers in PWM Output Mode (2/3)

(c) TMQ0 I/O control register 0 (TQ0IOC0)

	TQ0OL3	TQ0OE3	TQ0OL2	TQ0OE2	TQ0OL1	TQ0OE1	TQ0OL0	TQ0OE0
TQ0IOC0	0/1	0/1	0/1	0/1	0/1	0/1	0/1	0/1 Note

- TQ0OE0: 0: Disable TOQ00 pin output; 1: Enable TOQ00 pin output
- TQ0OL0: Setting of output level while operation of TOQ00 pin is disabled; 0: Low level; 1: High level
- TQ0OE1: 0: Disable TOQ01 pin output; 1: Enable TOQ01 pin output
- TQ0OL1: Specification of active level of TOQ01 pin output; 0: Active-high; 1: Active-low
- TQ0OE2: 0: Disable TOQ02 pin output; 1: Enable TOQ02 pin output
- TQ0OL2: Specification of active level of TOQ02 pin output; 0: Active-high; 1: Active-low
- TQ0OE3: 0: Disable TOQ03 pin output; 1: Enable TOQ03 pin output
- TQ0OL3: Specification of active level of TOQ03 pin output; 0: Active-high; 1: Active-low

- When TQ0OLk bit = 0

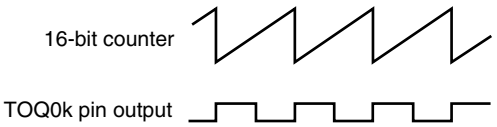

- When TQ0OLk bit = 1

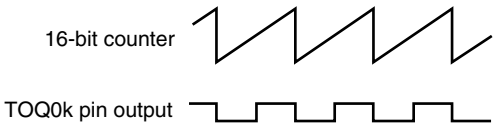

(d) TMQ0 I/O control register 2 (TQ0IOC2)

					TQ0EES1	TQ0EES0	TQ0ETS1	TQ0ETS0
TQ0IOC2	0	0	0	0	0/1	0/1	0	0

- TQ0EES1, TQ0EES0: Select valid edge of external event count input.

(e) TMQ0 counter read buffer register (TQ0CNT)

The value of the 16-bit counter can be read by reading the TQ0CNT register.

Note Clear this bit to 0 when the TOQ00 pin is not used in the PWM output mode.

Figure 7-26. Register Setting in PWM Output Mode (3/3)

(f) TMQ0 capture/compare registers 0 to 3 (TQ0CCR0 to TQ0CCR3)

If D_0 is set to the TQ0CCR0 register and D_k to the TQ0CCRk register, the cycle and active level of the PWM waveform are as follows.

Cycle = $(D_0 + 1) \times$ Count clock cycle

Active level width = $D_k \times$ Count clock cycle

Remarks 1. TMQ0 I/O control register 1 (TQ0IOC1) and TMQ0 option register 0 (TQ0OPT0) are not used in the PWM output mode.

2. Updating the TMQ0 capture/compare register 2 (TQ0CCR2) and TMQ0 capture/compare register 3 (TQ0CCR3) is validated by writing the TMQ0 capture/compare register 1 (TQ0CCR1).

(1) Operation flow in PWM output mode

Figure 7-27. Software Processing Flow in PWM Output Mode (1/2)

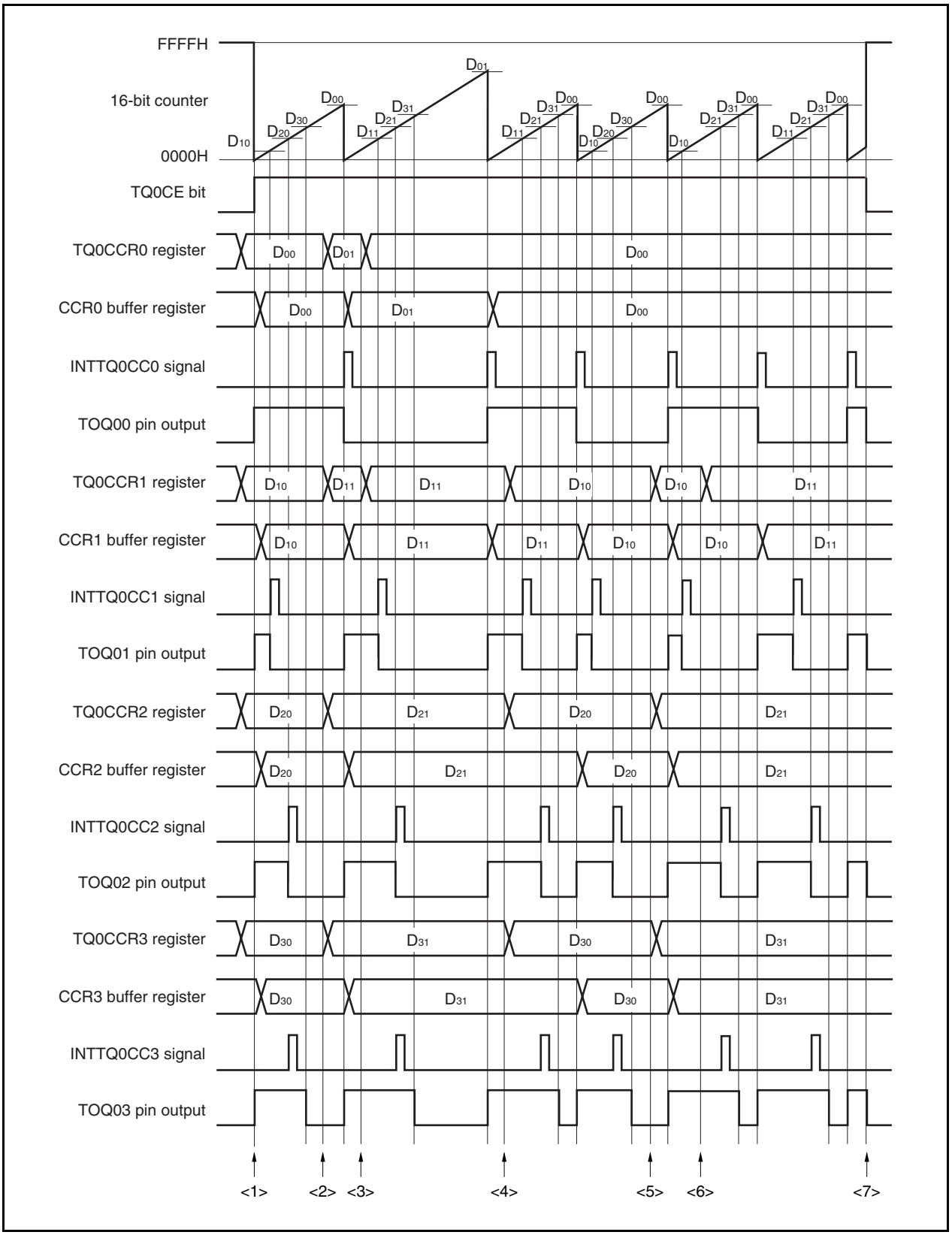

Figure 7-27. Software Processing Flow in PWM Output Mode (2/2)

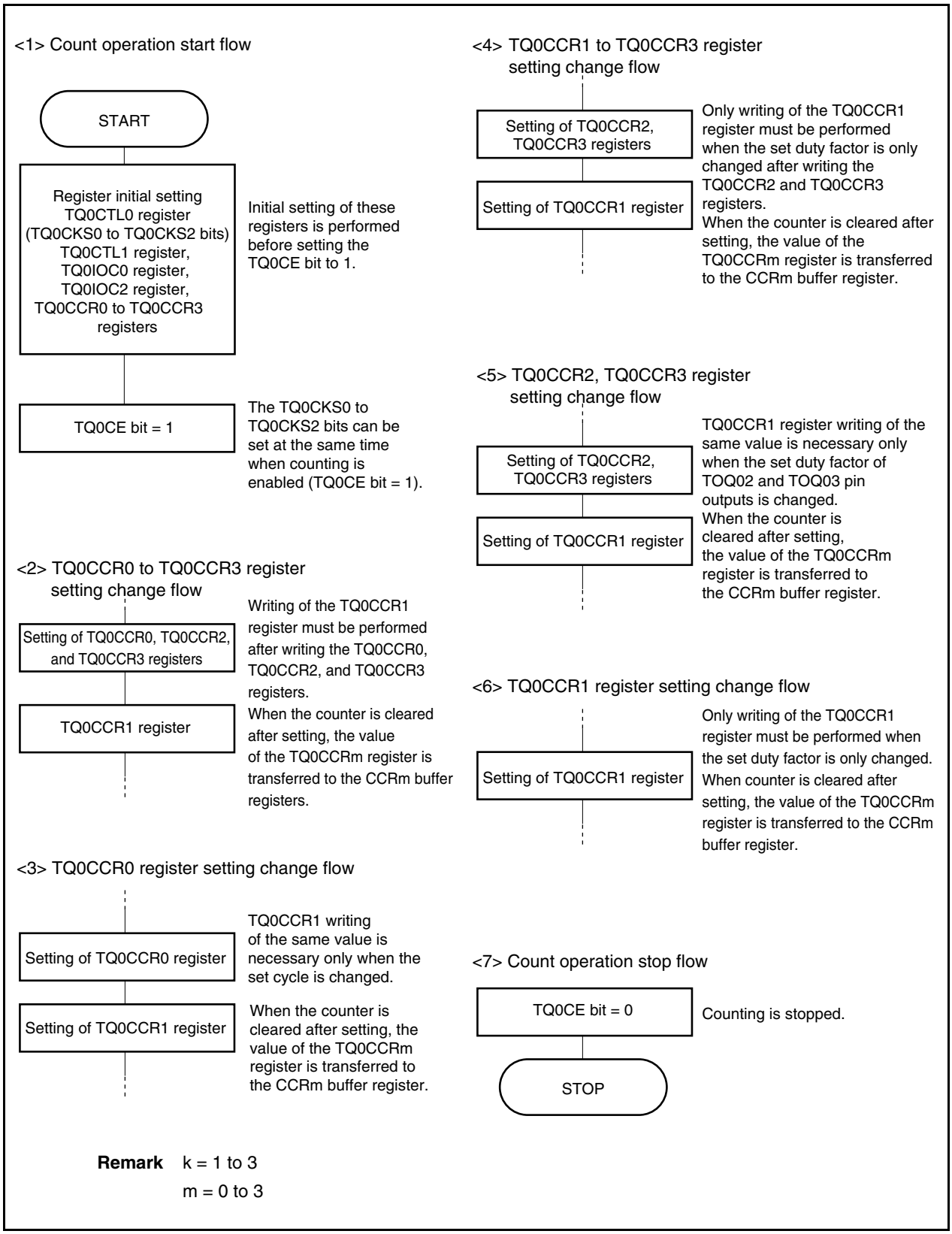

Remark k = 1 to 3
m = 0 to 3

(2) PWM output mode operation timing

(a) Changing pulse width during operation

To change the PWM waveform while the counter is operating, write the TQ0CCR1 register last.

Rewrite the TQ0CCRk register after writing the TQ0CCR1 register after the INTTQ0CC1 signal is detected.

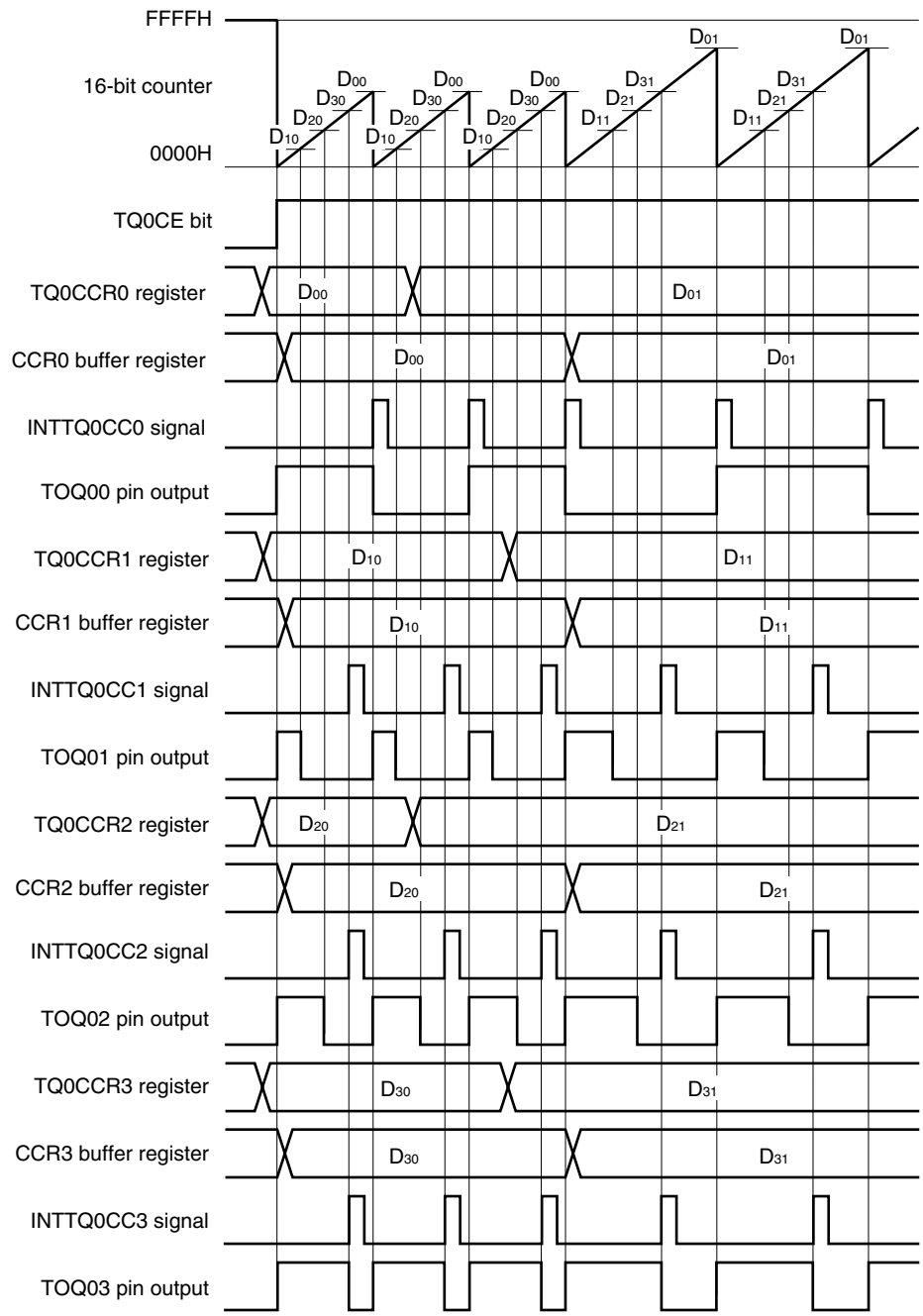

To transfer data from the TQ0CCRm register to the CCRm buffer register, the TQ0CCR1 register must be written.

To change both the cycle and active level of the PWM waveform at this time, first set the cycle to the TQ0CCR0 register, set the active level width to the TQ0CCR2 and TQ0CCR3 registers, and then set an active level width to the TQ0CCR1 register.

To change only the active level width (duty factor) of PWM wave, first set the active level to the TQ0CCR2 and TQ0CCR3 registers, and then set an active level to the TQ0CCR1 register.

To change only the active level width (duty factor) of the PWM waveform output by the TOQ01 pin, only the TQ0CCR1 register has to be set.

To change only the active level width (duty factor) of the PWM waveform output by the TOQ02 and TOQ03 pins, first set an active level width to the TQ0CCR2 and TQ0CCR3 registers, and then write the same value to the TQ0CCR1 register.

After the TQ0CCR1 register is written, the value written to the TQ0CCRm register is transferred to the CCRm buffer register in synchronization with the timing of clearing the 16-bit counter, and is used as a value to be compared with the value of the 16-bit counter.

To change only the cycle of the PWM waveform, first set a cycle to the TQ0CCR0 register, and then write the same value to the TQ0CCR1 register.

To write the TQ0CCR0 to TQ0CCR3 registers again after writing the TQ0CCR1 register once, do so after the INTTQ0CC0 signal is generated. Otherwise, the value of the CCRm buffer register may become undefined because the timing of transferring data from the TQ0CCRm register to the CCRm buffer register conflicts with writing the TQ0CCRm register.

Remark m = 0 to 3

(b) 0%/100% output of PWM waveform

To output a 0% waveform, set the TQ0CCRk register to 0000H. If the set value of the TQ0CCR0 register is FFFFH, the INTTQ0CCk signal is generated periodically.

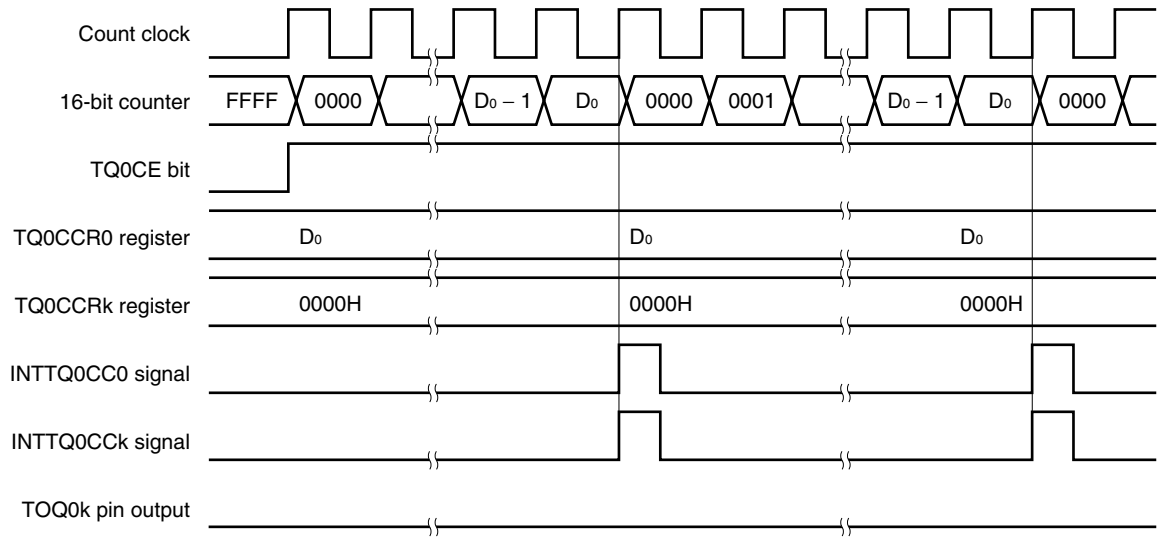

Remark k = 1 to 3

To output a 100% waveform, set a value of (set value of TQ0CCR0 register + 1) to the TQ0CCRk register. If the set value of the TQ0CCR0 register is FFFFH, 100% output cannot be produced.

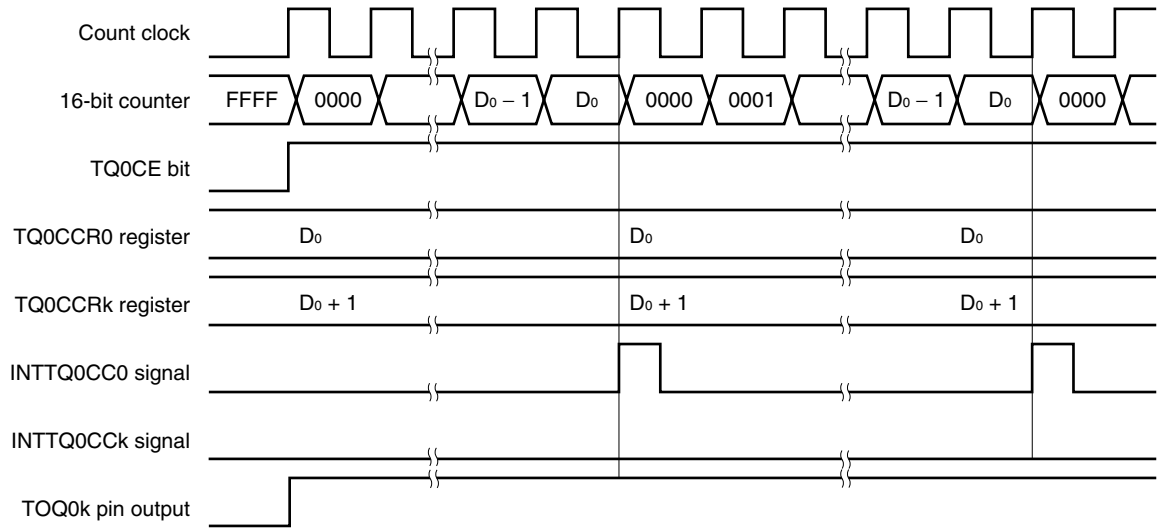

Remark k = 1 to 3

(c) Generation timing of compare match interrupt request signal (INTTQ0CCk)

The timing of generation of the INTTQ0CCk signal in the PWM output mode differs from the timing of other INTTQ0CCk signals; the INTTQ0CCk signal is generated when the count value of the 16-bit counter matches the value of the TQ0CCRk register.

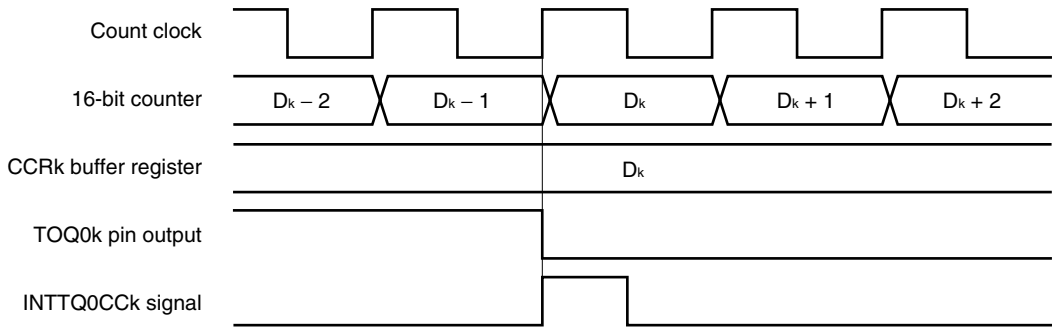

Remark k = 1 to 3

Usually, the INTTQ0CCk signal is generated in synchronization with the next counting up after the count value of the 16-bit counter matches the value of the TQ0CCRk register.

In the PWM output mode, however, it is generated one clock earlier. This is because the timing is changed to match the change timing of the output signal of the TOQ0k pin.

7.5.6 Free-running timer mode (TQ0MD2 to TQ0MD0 bits = 101)

In the free-running timer mode, 16-bit timer/event counter Q starts counting when the TQ0CTL0.TQ0CE bit is set to 1. At this time, the TQ0CCRm register can be used as a compare register or a capture register, depending on the setting of the TQ0OPT0.TQ0CCS0 and TQ0OPT0.TQ0CCS1 bits.

Remark m = 0 to 3

Figure 7-28. Configuration in Free-Running Timer Mode

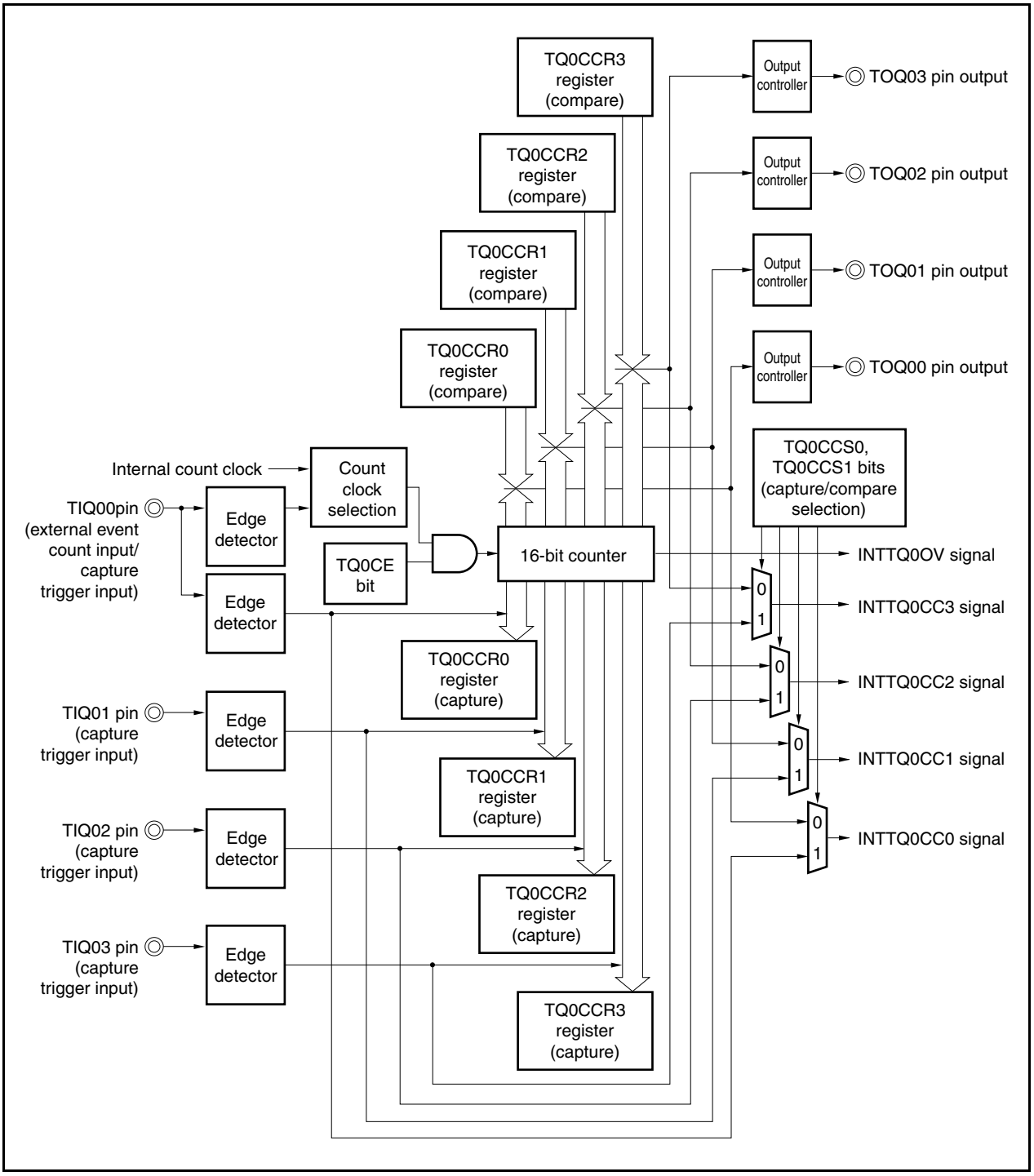

When the TQ0CE bit is set to 1, 16-bit timer/event counter Q starts counting, and the output signals of the TOQ00 to TOQ03 pins are inverted. When the count value of the 16-bit counter later matches the set value of the TQ0CCRm register, a compare match interrupt request signal (INTTQ0CCm) is generated, and the output signal of the TOQ0m pin is inverted.

The 16-bit counter continues counting in synchronization with the count clock. When it counts up to FFFFH, it generates an overflow interrupt request signal (INTTQ0OV) at the next clock, is cleared to 0000H, and continues counting. At this time, the overflow flag (TQ0OPT0.TQ0OVF bit) is also set to 1. Clear the overflow flag to 0 by executing the CLR instruction by software.

The TQ0CCRm register can be rewritten while the counter is operating. If it is rewritten, the new value is reflected at that time, and compared with the count value.

Figure 7-29. Basic Timing in Free-Running Timer Mode (Compare Function)

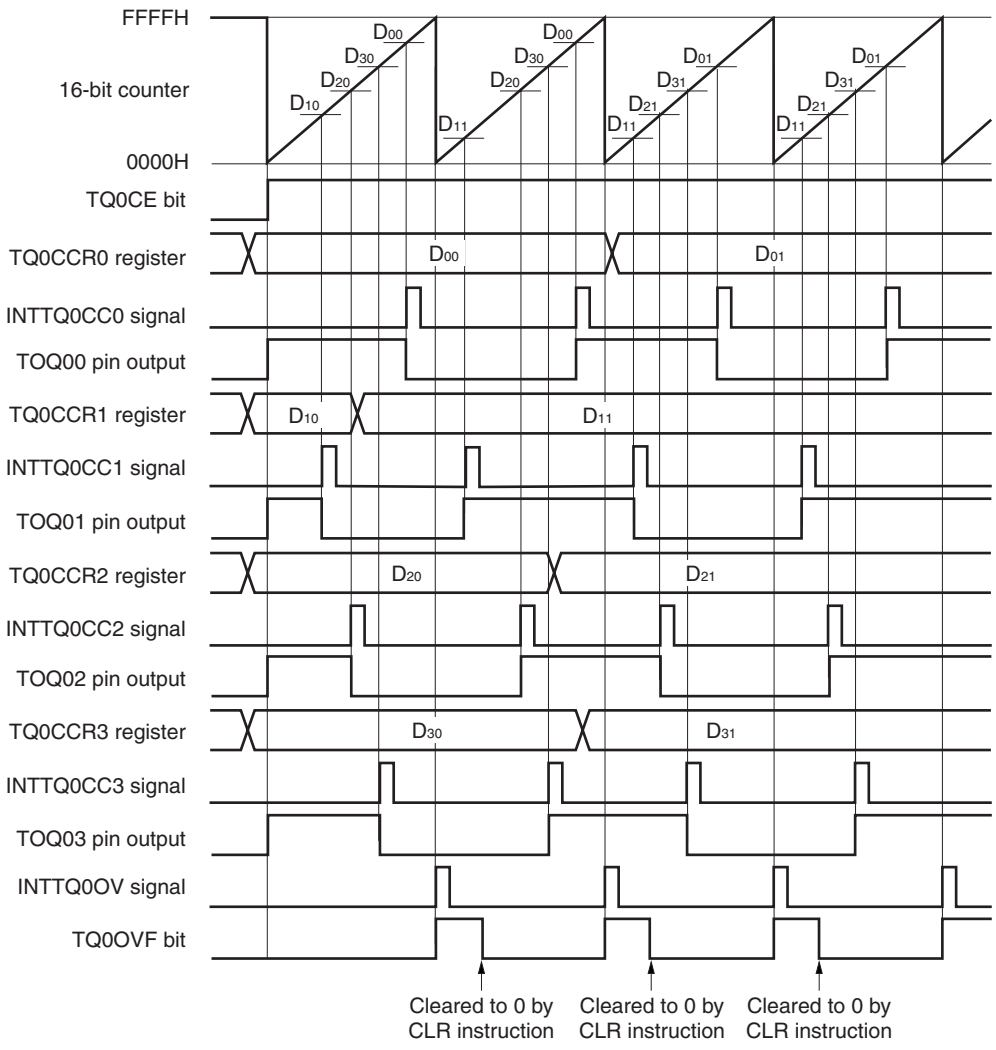

When the TQ0CE bit is set to 1, the 16-bit counter starts counting. When the valid edge input to the TIQ0m pin is detected, the count value of the 16-bit counter is stored in the TQ0CCRm register, and a capture interrupt request signal (INTTQ0CCm) is generated.

The 16-bit counter continues counting in synchronization with the count clock. When it counts up to FFFFH, it generates an overflow interrupt request signal (INTTQ0OV) at the next clock, is cleared to 0000H, and continues counting. At this time, the overflow flag (TQ0OVF bit) is also set to 1. Clear the overflow flag to 0 by executing the CLR instruction by software.

Figure 7-30. Basic Timing in Free-Running Timer Mode (Capture Function)

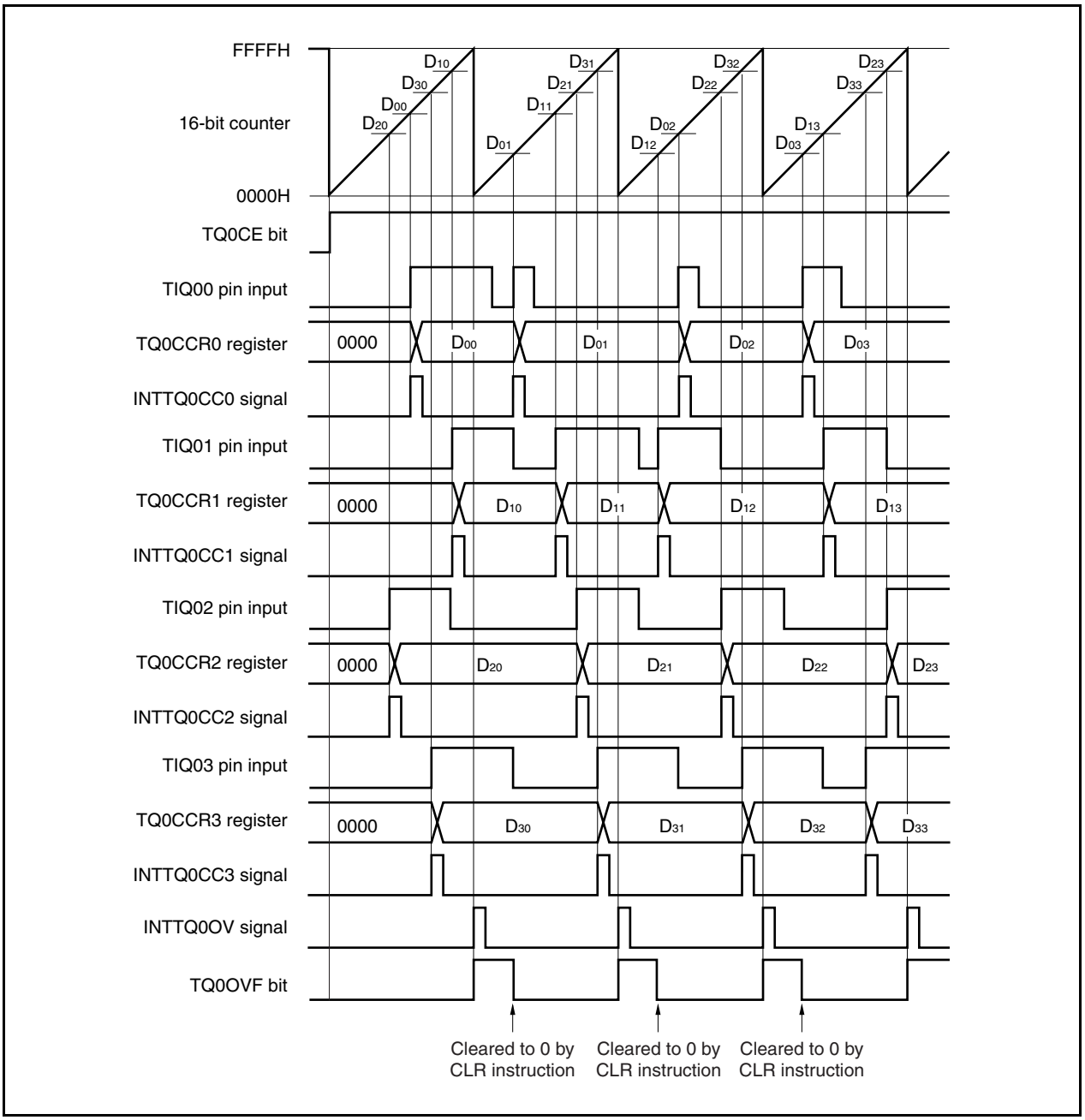

Figure 7-31. Register Setting in Free-Running Timer Mode (1/3)

(a) TMQ0 control register 0 (TQ0CTL0)

	TQ0CE					TQ0CKS2	TQ0CKS1	TQ0CKS0
TQ0CTL0	0/1	0	0	0	0	0/1	0/1	0/1

Select count clock[Note]

0: Stop counting
1: Enable counting

Note The setting is invalid when the TQ0CTL1.TQ0EEE bit = 1

(b) TMQ0 control register 1 (TQ0CTL1)

	TQ0SYE	TQ0EST	TQ0EEE			TQ0MD2	TQ0MD1	TQ0MD0
TQ0CTL1	0	0	0/1	0	0	1	0	1

1, 0, 1:
Free-running mode

0: Operate with count clock selected by TQ0CKS0 to TQ0CKS2 bits
1: Count on external event count input signal

Figure 7-31. Register Setting in Free-Running Timer Mode (2/3)

(c) TMQ0 I/O control register 0 (TQ0IOC0)

	TQ0OL3	TQ0OE3	TQ0OL2	TQ0OE2	TQ0OL1	TQ0OE1	TQ0OL0	TQ0OE0
TQ0IOC0	0/1	0/1	0/1	0/1	0/1	0/1	0/1	0/1

- TQ0OE0: 0: Disable TOQ00 pin output
1: Enable TOQ00 pin output
- TQ0OL0: Setting of output level with operation of TOQ00 pin disabled
0: Low level
1: High level
- TQ0OE1: 0: Disable TOQ01 pin output
1: Enable TOQ01 pin output
- TQ0OL1: Setting of output level with operation of TOQ01 pin disabled
0: Low level
1: High level
- TQ0OE2: 0: Disable TOQ02 pin output
1: Enable TOQ02 pin output
- TQ0OL2: Setting of output level with operation of TOQ02 pin disabled
0: Low level
1: High level
- TQ0OE3: 0: Disable TOQ03 pin output
1: Enable TOQ03 pin output
- TQ0OL3: Setting of output level with operation of TOQ03 pin disabled
0: Low level
1: High level

(d) TMQ0 I/O control register 1 (TQ0IOC1)

	TQ0IS7	TQ0IS6	TQ0IS5	TQ0IS4	TQ0IS3	TQ0IS2	TQ0IS1	TQ0IS0
TQ0IOC1	0/1	0/1	0/1	0/1	0/1	0/1	0/1	0/1

- TQ0IS0, TQ0IS1: Select valid edge of TIQ00 pin input
- TQ0IS2, TQ0IS3: Select valid edge of TIQ01 pin input
- TQ0IS4, TQ0IS5: Select valid edge of TIQ02 pin input
- TQ0IS6, TQ0IS7: Select valid edge of TIQ03 pin input

Figure 7-31. Register Setting in Free-Running Timer Mode (3/3)

(e) TMQ0 I/O control register 2 (TQ0IOC2)

					TQ0EES1	TQ0EES0	TQ0ETS1	TQ0ETS0
TQ0IOC2	0	0	0	0	0/1	0/1	0	0

Select valid edge of external event count input

(f) TMQ0 option register 0 (TQ0OPT0)

	TQ0CCS3	TQ0CCS2	TQ0CCS1	TQ0CCS0				TQ0OVF
TQ0OPT0	0/1	0/1	0/1	0/1	0	0	0	0/1

Overflow flag

Specifies if TQ0CCR0 register functions as capture or compare register

Specifies if TQ0CCR1 register functions as capture or compare register

Specifies if TQ0CCR2 register functions as capture or compare register

Specifies if TQ0CCR3 register functions as capture or compare register

(g) TMQ0 counter read buffer register (TQ0CNT)

The value of the 16-bit counter can be read by reading the TQ0CNT register.

(h) TMQ0 capture/compare registers 0 to 3 (TQ0CCR0 to TQ0CCR3)

These registers function as capture registers or compare registers depending on the setting of the TQ0OPT0.TQ0CCSm bit.

When the registers function as capture registers, they store the count value of the 16-bit counter when the valid edge input to the TIQ0m pin is detected.

When the registers function as compare registers and when D_m is set to the TQ0CCRm register, the INTTQ0CCm signal is generated when the counter reaches (D_m + 1), and the output signal of the TOQ0m pin is inverted.

Remark m = 0 to 3

(1) Operation flow in free-running timer mode

(a) When using capture/compare register as compare register

Figure 7-32. Software Processing Flow in Free-Running Timer Mode (Compare Function) (1/2)

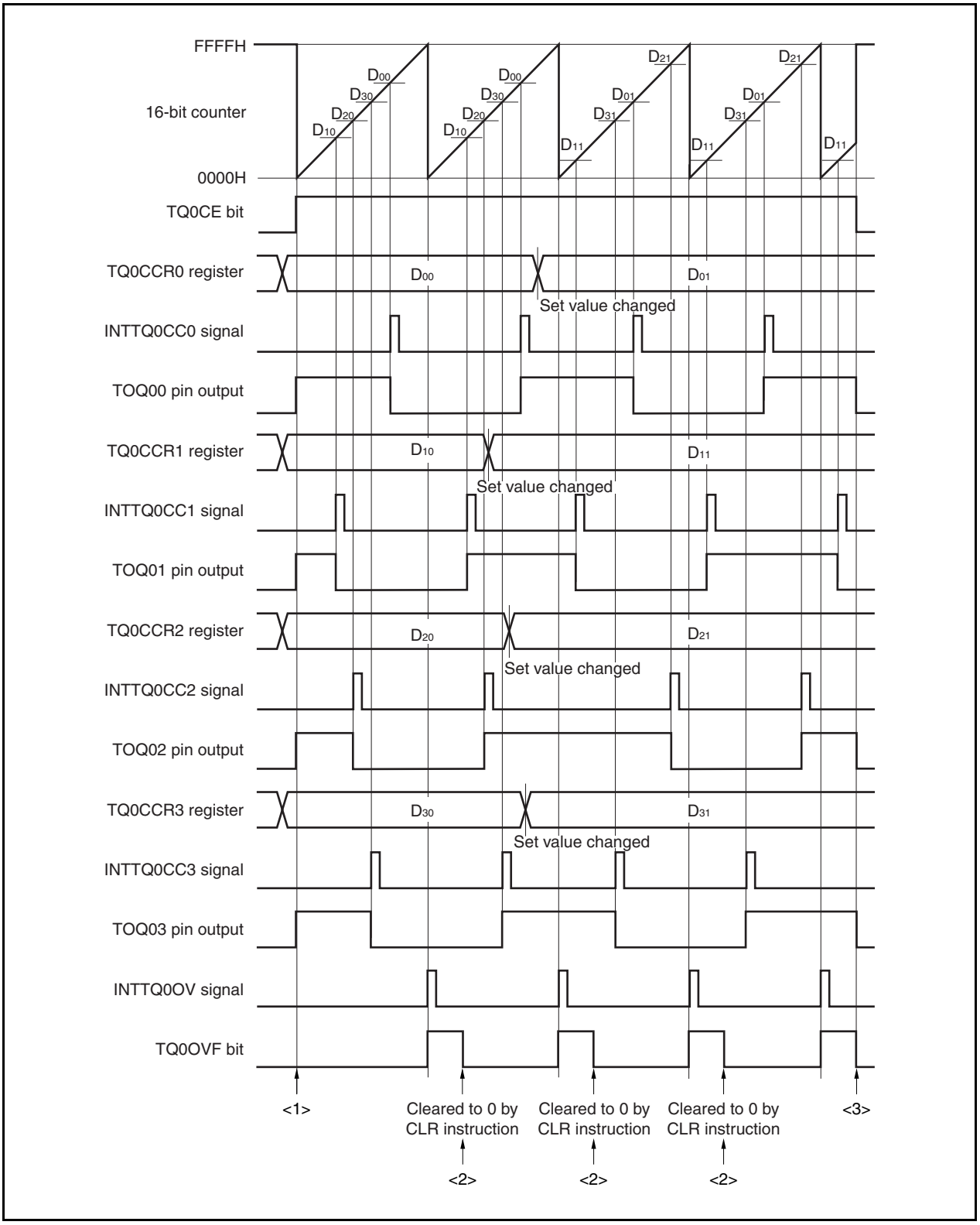

Figure 7-32. Software Processing Flow in Free-Running Timer Mode (Compare Function) (2/2)

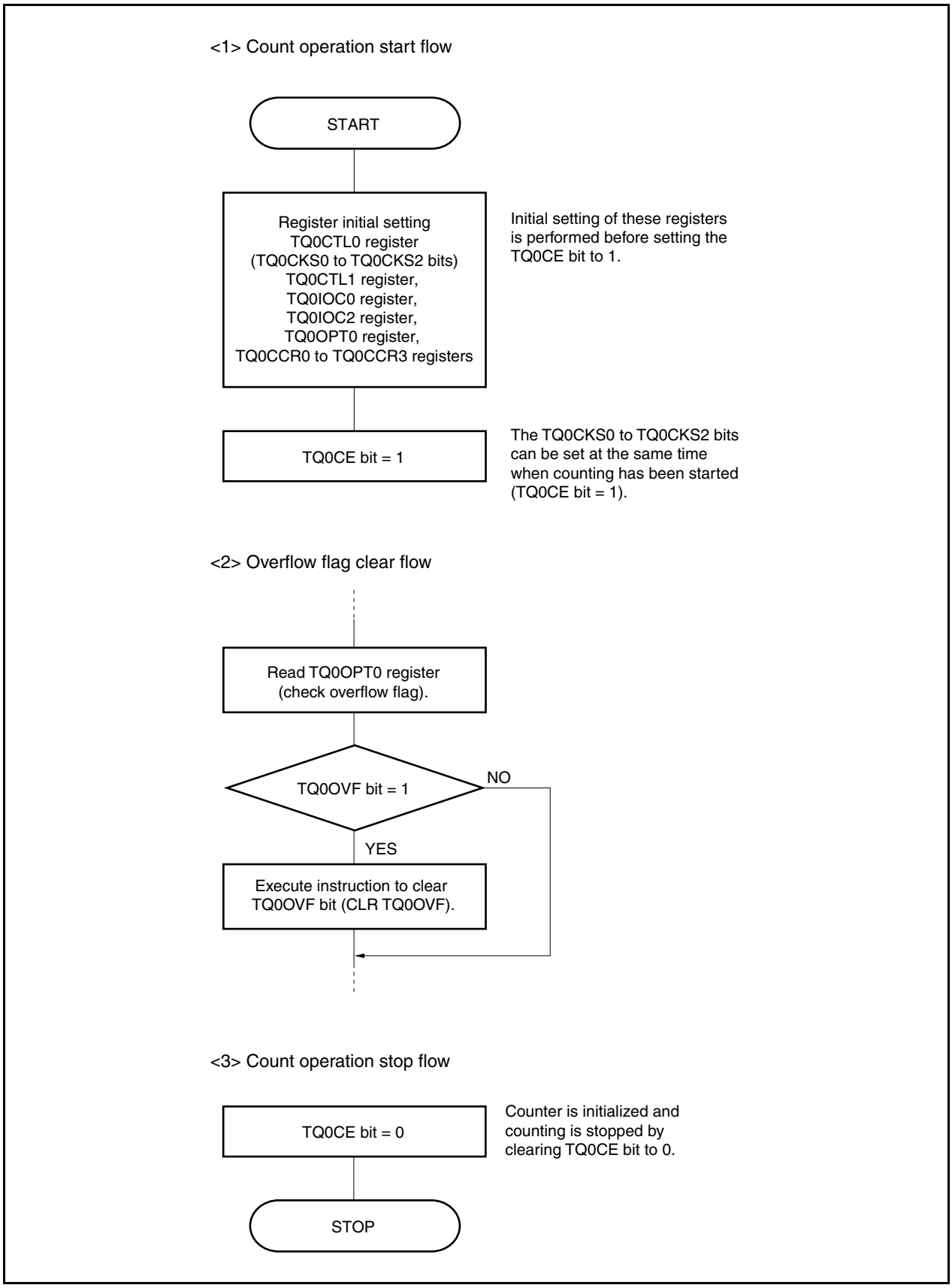

(b) When using capture/compare register as capture register

Figure 7-33. Software Processing Flow in Free-Running Timer Mode (Capture Function) (1/2)

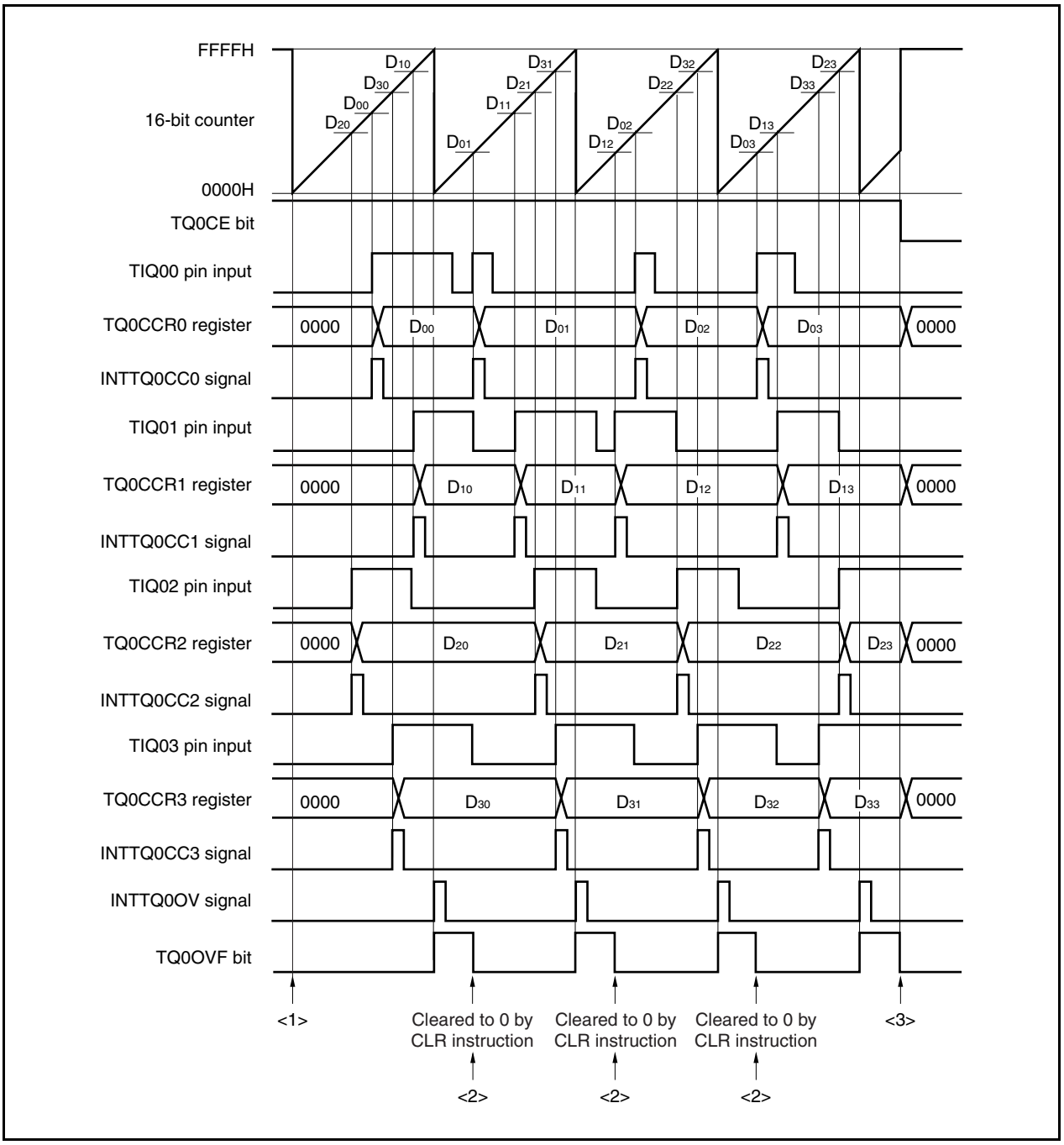

Figure 7-33. Software Processing Flow in Free-Running Timer Mode (Capture Function) (2/2)

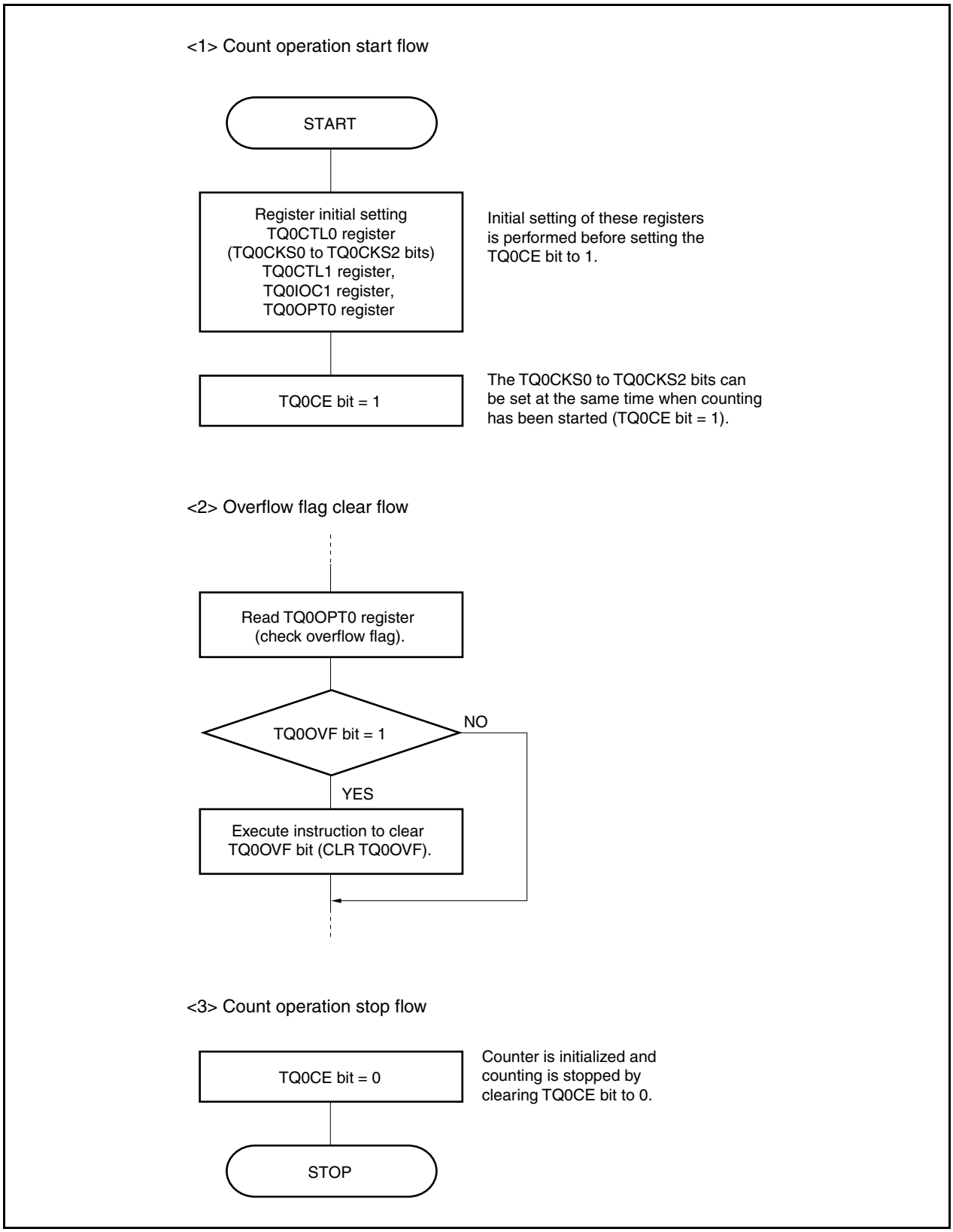

(2) Operation timing in free-running timer mode

(a) Interval operation with compare register

When 16-bit timer/event counter Q is used as an interval timer with the TQ0CCRm register used as a compare register, software processing is necessary for setting a comparison value to generate the next interrupt request signal each time the INTTQ0CCm signal has been detected.

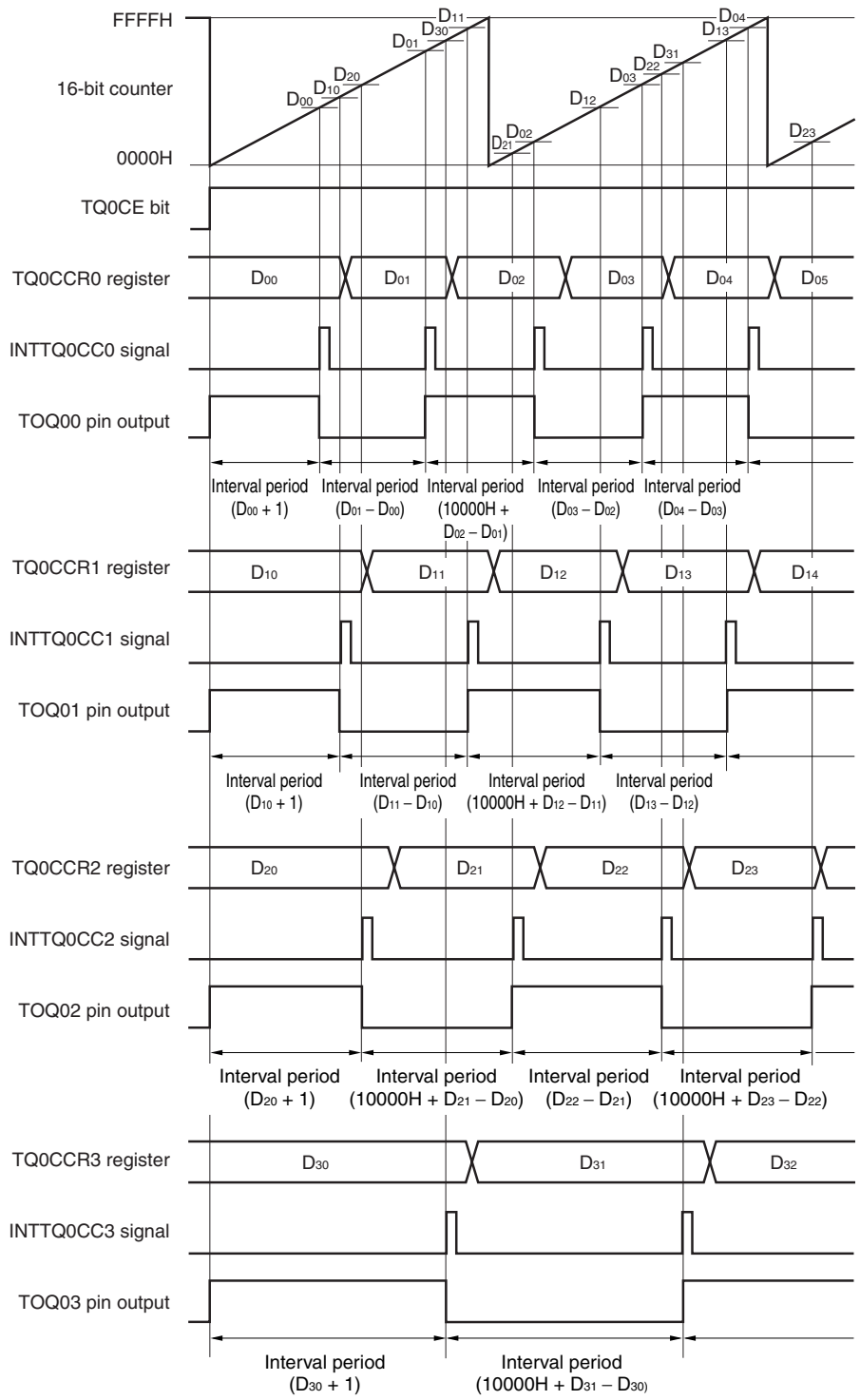

When performing an interval operation in the free-running timer mode, two intervals can be set with one channel.

To perform the interval operation, the value of the corresponding TQ0CCRm register must be re-set in the interrupt servicing that is executed when the INTTQ0CCm signal is detected.

The set value for re-setting the TQ0CCRm register can be calculated by the following expression, where "D_m" is the interval period.

Compare register default value: $D_m - 1$

Value set to compare register second and subsequent time: Previous set value + D_m

(If the calculation result is greater than FFFFH, subtract 10000H from the result and set this value to the register.)

Remark m = 0 to 3

(b) Pulse width measurement with capture register

When pulse width measurement is performed with the TQ0CCRm register used as a capture register, software processing is necessary for reading the capture register each time the INTTQ0CCm signal has been detected and for calculating an interval.

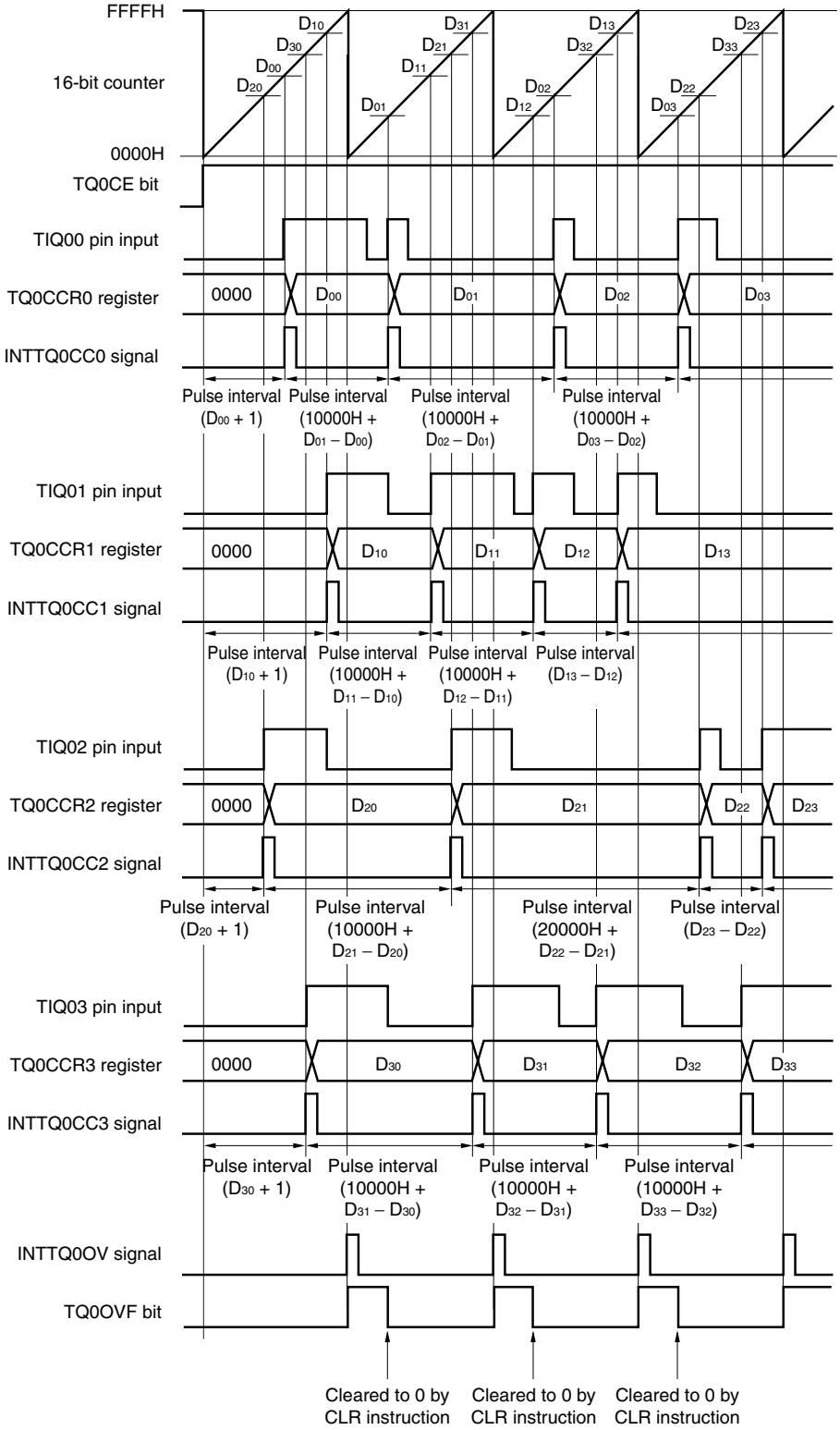

When executing pulse width measurement in the free-running timer mode, four pulse widths can be measured with one channel.

To measure a pulse width, the pulse width can be calculated by reading the value of the TQ0CCRm register in synchronization with the INTTQ0CCm signal, and calculating the difference between the read value and the previously read value.

Remark m = 0 to 3

(c) Processing of overflow when two or more capture registers are used

Care must be exercised in processing the overflow flag when two capture registers are used. First, an example of incorrect processing is shown below.

Example of incorrect processing when two or more capture registers are used

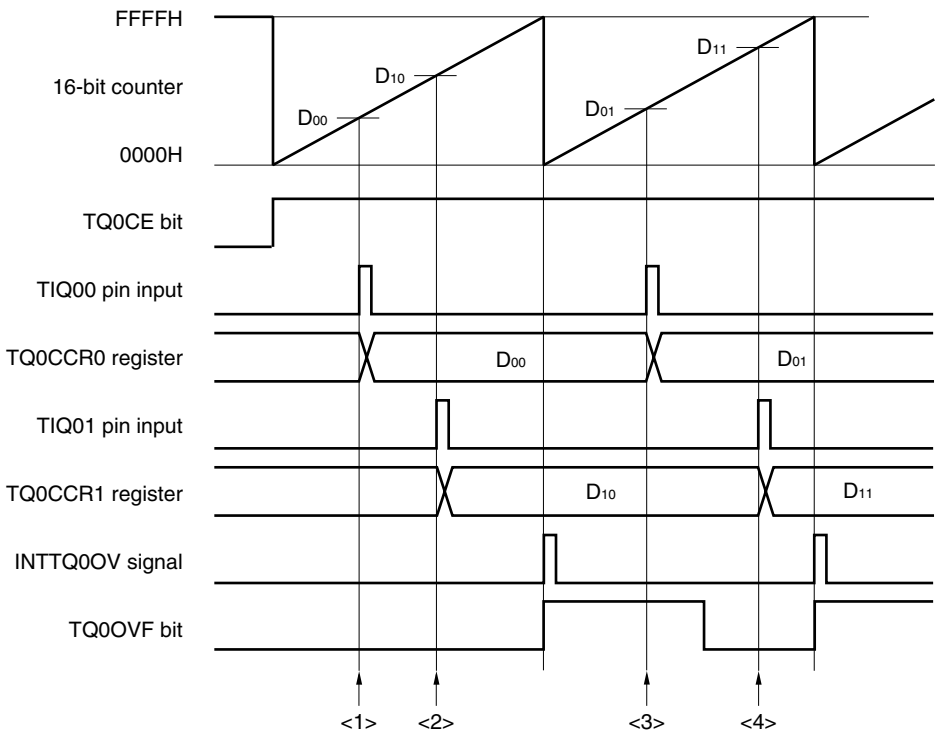

The following problem may occur when two pulse widths are measured in the free-running timer mode.

<1> Read the TQ0CCR0 register (setting of the default value of the TIQ00 pin input).
<2> Read the TQ0CCR1 register (setting of the default value of the TIQ01 pin input).
<3> Read the TQ0CCR0 register.
Read the overflow flag. If the overflow flag is 1, clear it to 0.
Because the overflow flag is 1, the pulse width can be calculated by (10000H + D_{01} – D_{00}).
<4> Read the TQ0CCR1 register.
Read the overflow flag. Because the flag is cleared in <3>, 0 is read.
Because the overflow flag is 0, the pulse width can be calculated by (D_{11} – D_{10}) (incorrect).

When two capture registers are used, and if the overflow flag is cleared to 0 by one capture register, the other capture register may not obtain the correct pulse width.
Use software when using two capture registers. An example of how to use software is shown below.

(1/2)

Example when two capture registers are used (using overflow interrupt)

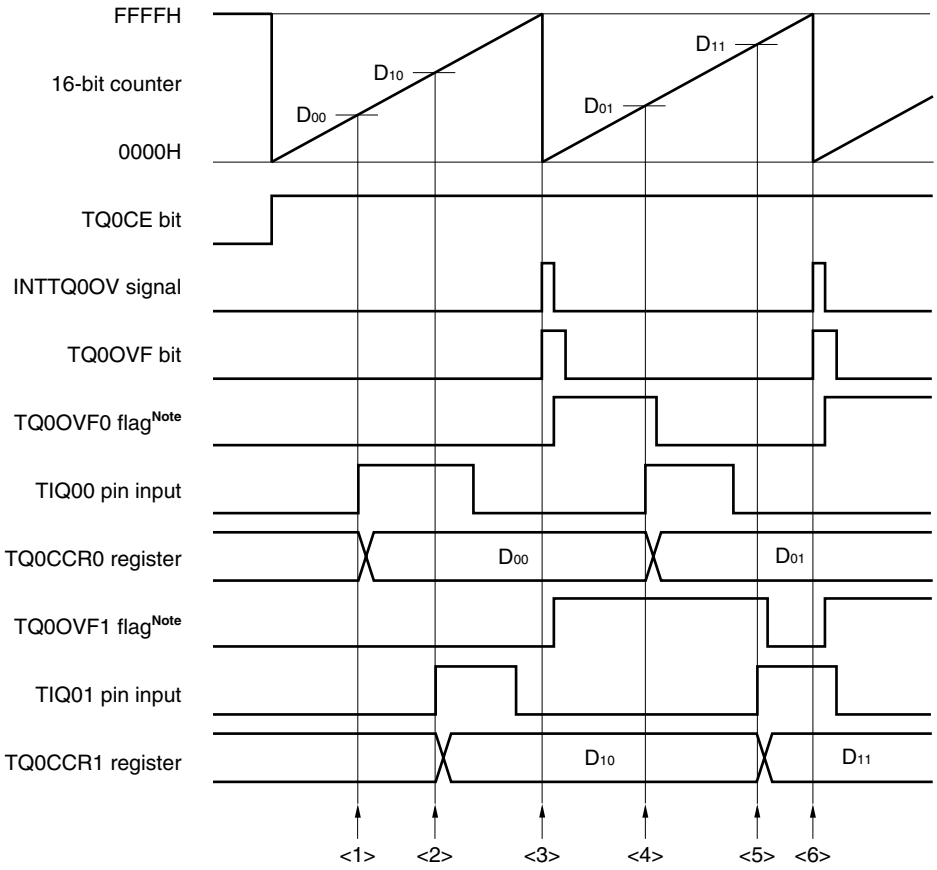

Note The TQ0OVF0 and TQ0OVF1 flags are set on the internal RAM by software.

<1> Read the TQ0CCR0 register (setting of the default value of the TIQ00 pin input).

<2> Read the TQ0CCR1 register (setting of the default value of the TIQ01 pin input).

<3> An overflow occurs. Set the TQ0OVF0 and TQ0OVF1 flags to 1 in the overflow interrupt servicing, and clear the overflow flag to 0.

<4> Read the TQ0CCR0 register.
Read the TQ0OVF0 flag. If the TQ0OVF0 flag is 1, clear it to 0.
Because the TQ0OVF0 flag is 1, the pulse width can be calculated by (10000H + D_{01} – D_{00}).

<5> Read the TQ0CCR1 register.
Read the TQ0OVF1 flag. If the TQ0OVF1 flag is 1, clear it to 0 (the TQ0OVF0 flag is cleared in <4>, and the TQ0OVF1 flag remains 1).
Because the TQ0OVF1 flag is 1, the pulse width can be calculated by (10000H + D_{11} – D_{10}) (correct).

<6> Same as <3>

(2/2)

Example when two capture registers are used (without using overflow interrupt)

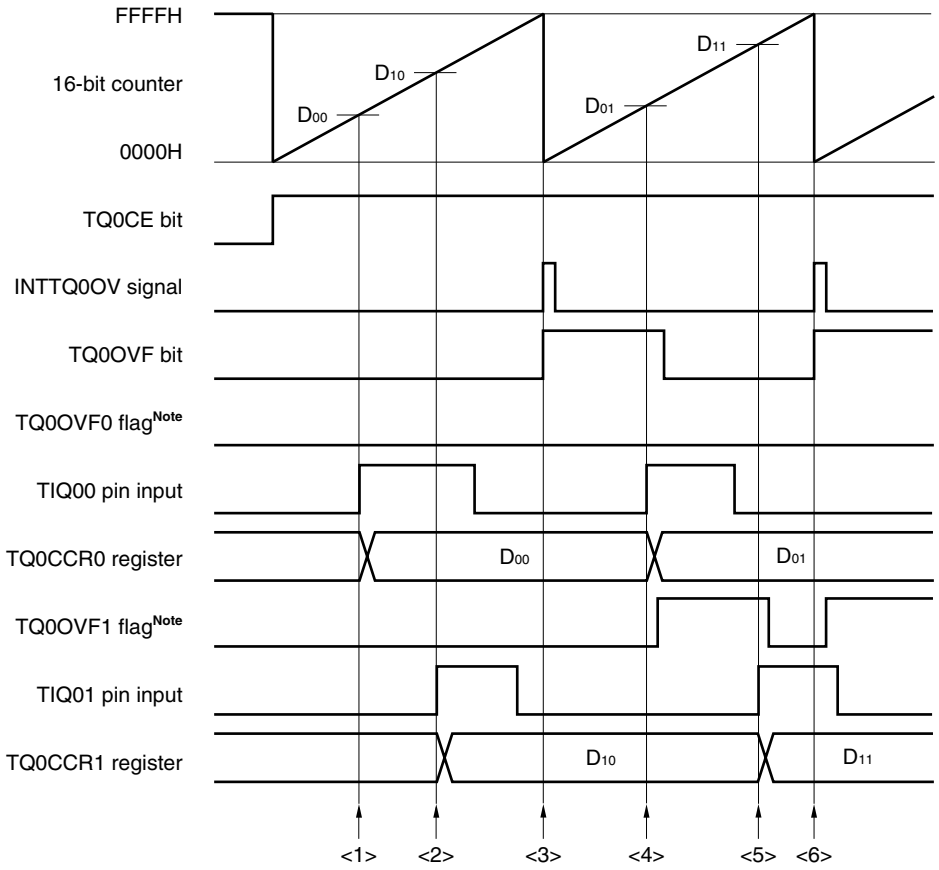

Note The TQ0OVF0 and TQ0OVF1 flags are set on the internal RAM by software.

<1> Read the TQ0CCR0 register (setting of the default value of the TIQ00 pin input).

<2> Read the TQ0CCR1 register (setting of the default value of the TIQ01 pin input).

<3> An overflow occurs. Nothing is done by software.

<4> Read the TQ0CCR0 register.

Read the overflow flag. If the overflow flag is 1, set only the TQ0OVF1 flag to 1, and clear the overflow flag to 0.

Because the overflow flag is 1, the pulse width can be calculated by (10000H + D_{01} – D_{00}).

<5> Read the TQ0CCR1 register.

Read the overflow flag. Because the overflow flag is cleared in <4>, 0 is read.

Read the TQ0OVF1 flag. If the TQ0OVF1 flag is 1, clear it to 0.

Because the TQ0OVF1 flag is 1, the pulse width can be calculated by (10000H + D_{11} – D_{10}) (correct).

<6> Same as <3>

(d) Processing of overflow if capture trigger interval is long

If the pulse width is greater than one cycle of the 16-bit counter, care must be exercised because an overflow may occur more than once from the first capture trigger to the next. First, an example of incorrect processing is shown below.

Example of incorrect processing when capture trigger interval is long

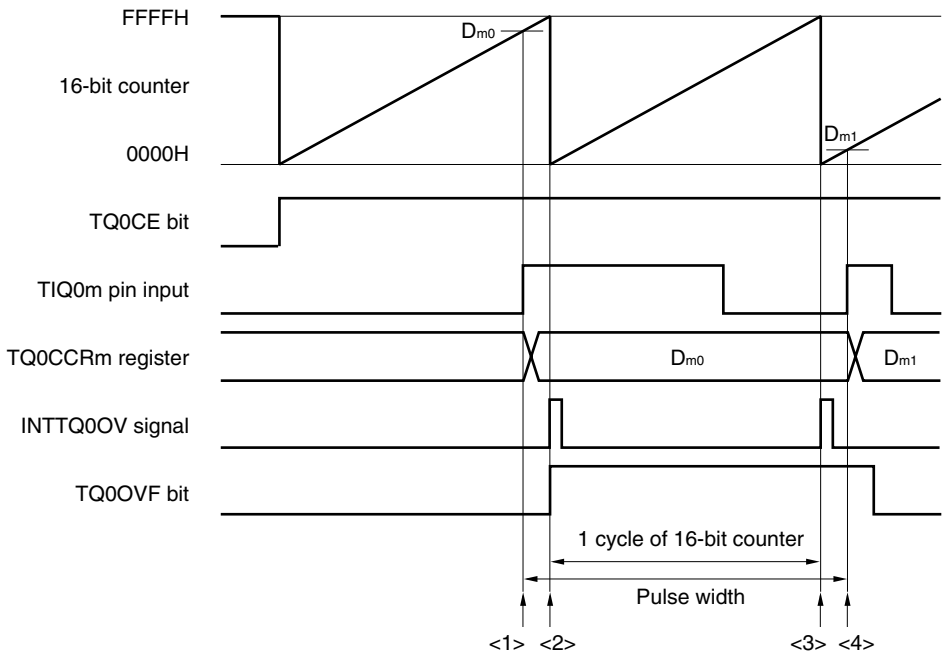

The following problem may occur when a long pulse width in the free-running timer mode.

<1> Read the TQ0CCRm register (setting of the default value of the TIQ0m pin input).
<2> An overflow occurs. Nothing is done by software.
<3> An overflow occurs a second time. Nothing is done by software.
<4> Read the TQ0CCRm register.
Read the overflow flag. If the overflow flag is 1, clear it to 0.
Because the overflow flag is 1, the pulse width can be calculated by (10000H + D_{m1} – D_{m0}) (incorrect).
Actually, the pulse width must be (20000H + D_{m1} – D_{m0}) because an overflow occurs twice.

If an overflow occurs twice or more when the capture trigger interval is long, the correct pulse width may not be obtained.

If the capture trigger interval is long, slow the count clock to lengthen one cycle of the 16-bit counter, or use software. An example of how to use software is shown next.

Example when capture trigger interval is long

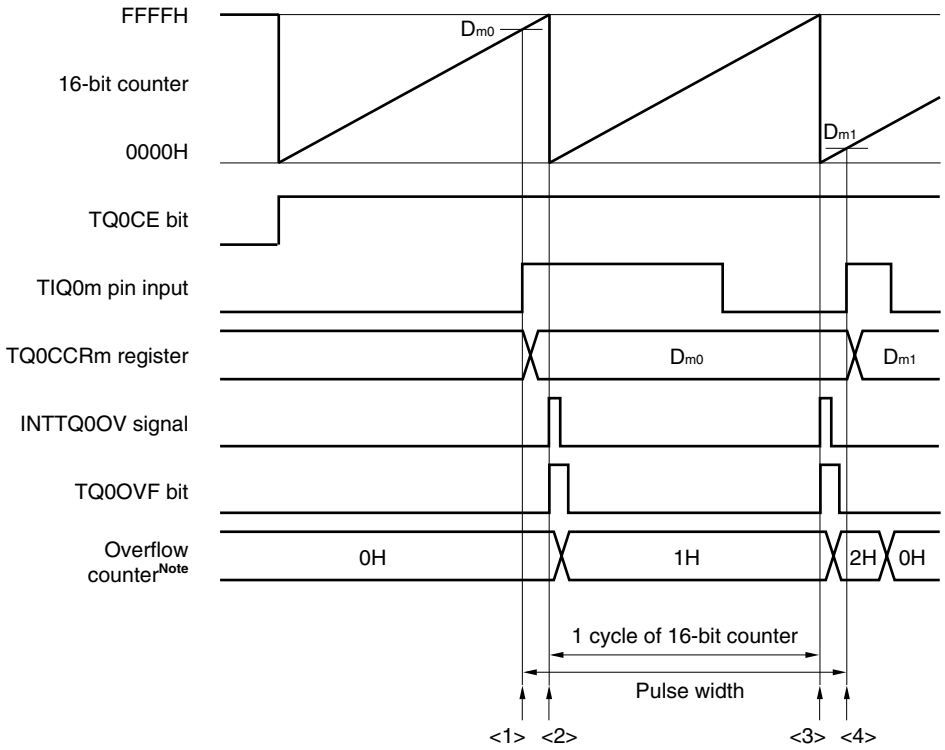

Note The overflow counter is set arbitrarily by software on the internal RAM.

<1> Read the TQ0CCRm register (setting of the default value of the TIQ0m pin input).

<2> An overflow occurs. Increment the overflow counter and clear the overflow flag to 0 in the overflow interrupt servicing.

<3> An overflow occurs a second time. Increment (+1) the overflow counter and clear the overflow flag to 0 in the overflow interrupt servicing.

<4> Read the TQ0CCRm register.

Read the overflow counter.

→ When the overflow counter is “N”, the pulse width can be calculated by ($N \times 10000H + D_{m1} - D_{m0}$).

In this example, the pulse width is ($20000H + D_{m1} - D_{m0}$) because an overflow occurs twice.

Clear the overflow counter (0H).

(e) Clearing overflow flag

The overflow flag can be cleared to 0 by clearing the TQ0OVF bit to 0 with the CLR instruction and by writing 8-bit data (bit 0 is 0) to the TQ0OPT0 register. To accurately detect an overflow, read the TQ0OVF bit when it is 1, and then clear the overflow flag by using a bit manipulation instruction.

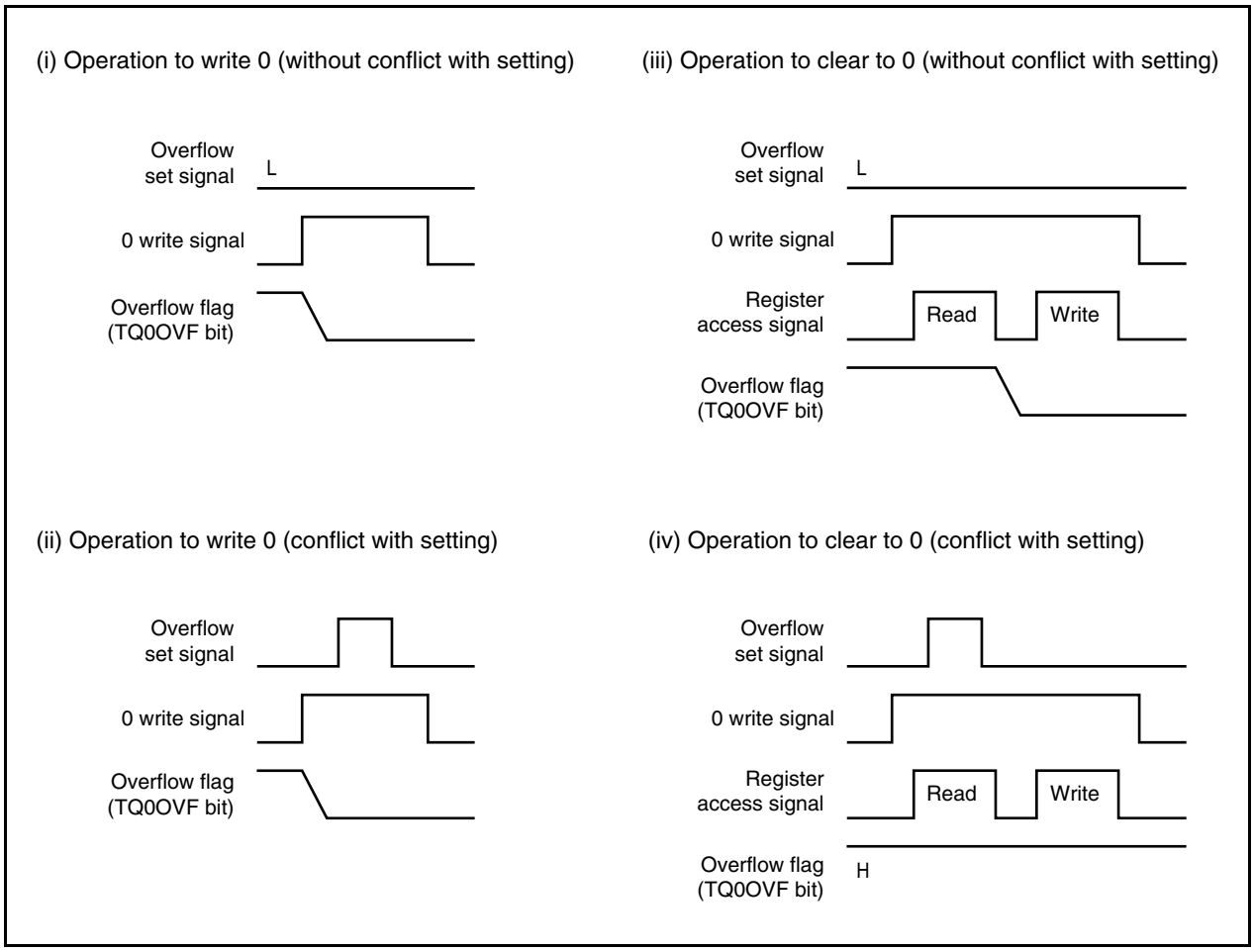

To clear the overflow flag to 0, read the overflow flag to check if it is set to 1, and clear it with the CLR instruction. If 0 is written to the overflow flag without checking if the flag is 1, the set information of overflow may be erased by writing 0 ((ii) in the above chart). Therefore, software may judge that no overflow has occurred even when an overflow actually has occurred.

If execution of the CLR instruction conflicts with occurrence of an overflow when the overflow flag is cleared to 0 with the CLR instruction, the overflow flag remains set even after execution of the clear instruction.

7.5.7 Pulse width measurement mode (TQ0MD2 to TQ0MD0 bits = 110)

In the pulse width measurement mode, 16-bit timer/event counter Q starts counting when the TQ0CTL0.TQ0CE bit is set to 1. Each time the valid edge input to the TIQ0m pin has been detected, the count value of the 16-bit counter is stored in the TQ0CCRm register, and the 16-bit counter is cleared to 0000H.

The interval of the valid edge can be measured by reading the TQ0CCRm register after a capture interrupt request signal (INTTQ0CCm) occurs.

Select either of the TIQ00 to TIQ03 pins as the capture trigger input pin. Specify “No edge detected” by using the TQ0IOC1 register for the unused pins.

When an external clock is used as the count clock, measure the pulse width of the TIQ0k pin because the external clock is fixed to the TIQ00 pin. At this time, clear the TQ0IOC1.TQ0IS1 and TQ0IOC1.TQ0IS0 bits to 00 (capture trigger input (TIQ00 pin): No edge detected).

Remark m = 0 to 3
k = 1 to 3

Figure 7-34. Configuration in Pulse Width Measurement Mode

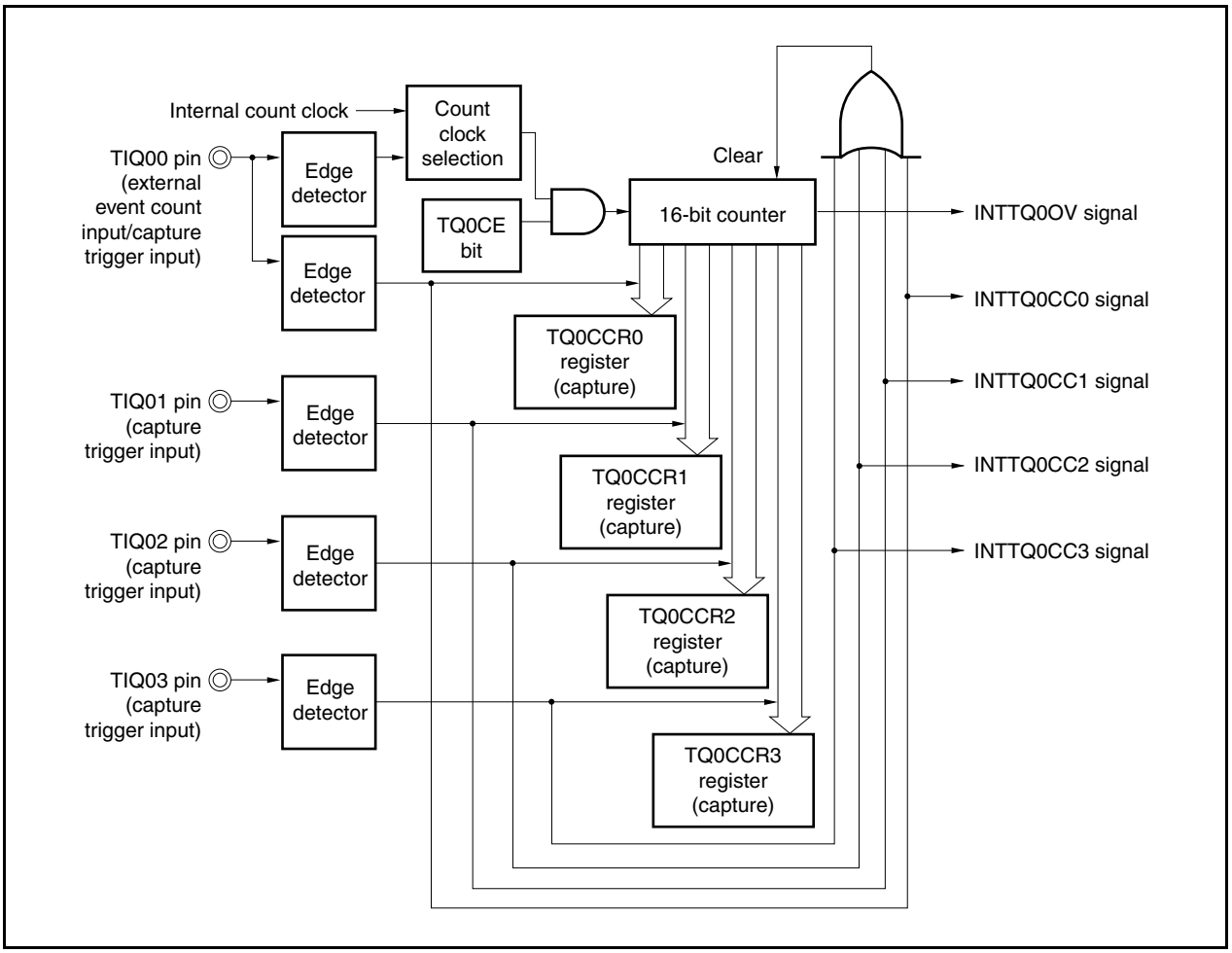

Figure 7-35. Basic Timing in Pulse Width Measurement Mode

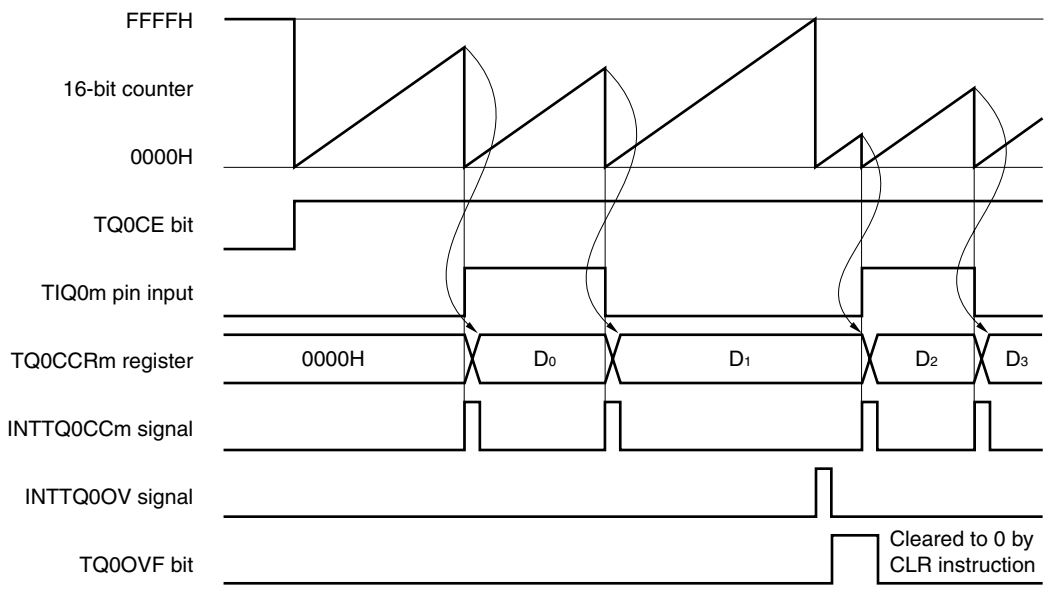

Remark m = 0 to 3

When the TQ0CE bit is set to 1, the 16-bit counter starts counting. When the valid edge input to the TIQ0m pin is later detected, the count value of the 16-bit counter is stored in the TQ0CCRm register, the 16-bit counter is cleared to 0000H, and a capture interrupt request signal (INTTQ0CCm) is generated.

The pulse width is calculated as follows.

Pulse width = Captured value × Count clock cycle

If the valid edge is not input to the TIQ0m pin even when the 16-bit counter counted up to FFFFH, an overflow interrupt request signal (INTTQ0OV) is generated at the next count clock, and the counter is cleared to 0000H and continues counting. At this time, the overflow flag (TQ0OPT0.TQ0OVF bit) is also set to 1. Clear the overflow flag to 0 by executing the CLR instruction via software.

If the overflow flag is set to 1, the pulse width can be calculated as follows.

Pulse width = (10000H × TQ0OVF bit set (1) count + Captured value) × Count clock cycle

Remark m = 0 to 3

Figure 7-36. Register Setting in Pulse Width Measurement Mode (1/2)

(a) TMQ0 control register 0 (TQ0CTL0)

	TQ0CE					TQ0CKS2	TQ0CKS1	TQ0CKS0
TQ0CTL0	0/1	0	0	0	0	0/1	0/1	0/1

Select count clock[Note]

0: Stop counting
1: Enable counting

Note Setting is invalid when the TQ0EEE bit = 1.

(b) TMQ0 control register 1 (TQ0CTL1)

	TQ0SYE	TQ0EST	TQ0EEE			TQ0MD2	TQ0MD1	TQ0MD0
TQ0CTL1	0	0	0/1	0	0	1	1	0

1, 1, 0:
Pulse width measurement mode

0: Operate with count clock selected by TQ0CKS0 to TQ0CKS2 bits
1: Count external event count input signal

(c) TMQ0 I/O control register 1 (TQ0IOC1)

	TQ0IS7	TQ0IS6	TQ0IS5	TQ0IS4	TQ0IS3	TQ0IS2	TQ0IS1	TQ0IS0
TQ0IOC1	0/1	0/1	0/1	0/1	0/1	0/1	0/1	0/1

Select valid edge of TIQ00 pin input

Select valid edge of TIQ01 pin input

Select valid edge of TIQ02 pin input

Select valid edge of TIQ03 pin input

(d) TMQ0 I/O control register 2 (TQ0IOC2)

					TQ0EES1	TQ0EES0	TQ0ETS1	TQ0ETS0
TQ0IOC2	0	0	0	0	0/1	0/1	0	0

Select valid edge of external event count input

Figure 7-36. Register Setting in Pulse Width Measurement Mode (2/2)

(e) TMQ0 option register 0 (TQ0OPT0)

	TQ0CCS3	TQ0CCS2	TQ0CCS1	TQ0CCS0				TQ0OVF
TQ0OPT0	0	0	0	0	0	0	0	0/1

Overflow flag

(f) TMQ0 counter read buffer register (TQ0CNT)

The value of the 16-bit counter can be read by reading the TQ0CNT register.

(g) TMQ0 capture/compare registers 0 to 3 (TQ0CCR0 to TQ0CCR3)

These registers store the count value of the 16-bit counter when the valid edge input to the TIQ0m pin is detected.

Remarks 1. TMQ0 I/O control register 0 (TQ0IOC0) is not used in the pulse width measurement mode.

2. m = 0 to 3

(1) Operation flow in pulse width measurement mode

Figure 7-37. Software Processing Flow in Pulse Width Measurement Mode

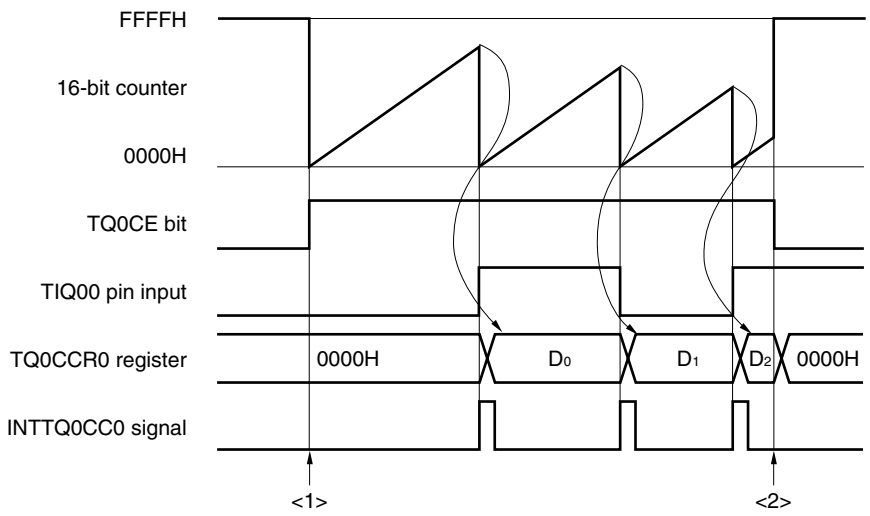

<1> Count operation start flow

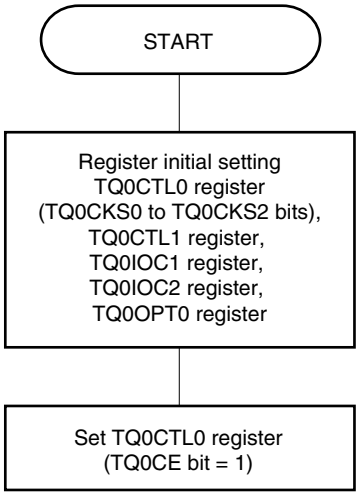

Initial setting of these registers is performed before setting the TQ0CE bit to 1.

The TQ0CKS0 to TQ0CKS2 bits can be set at the same time when counting has been started (TQ0CE bit = 1).

<2> Count operation stop flow

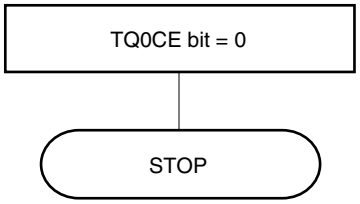

The counter is initialized and counting is stopped by clearing the TQ0CE bit to 0.

(2) Operation timing in pulse width measurement mode

(a) Clearing overflow flag

The overflow flag can be cleared to 0 by clearing the TQ0OVF bit to 0 with the CLR instruction and by writing 8-bit data (bit 0 is 0) to the TQ0OPT0 register. To accurately detect an overflow, read the TQ0OVF bit when it is 1, and then clear the overflow flag by using a bit manipulation instruction.

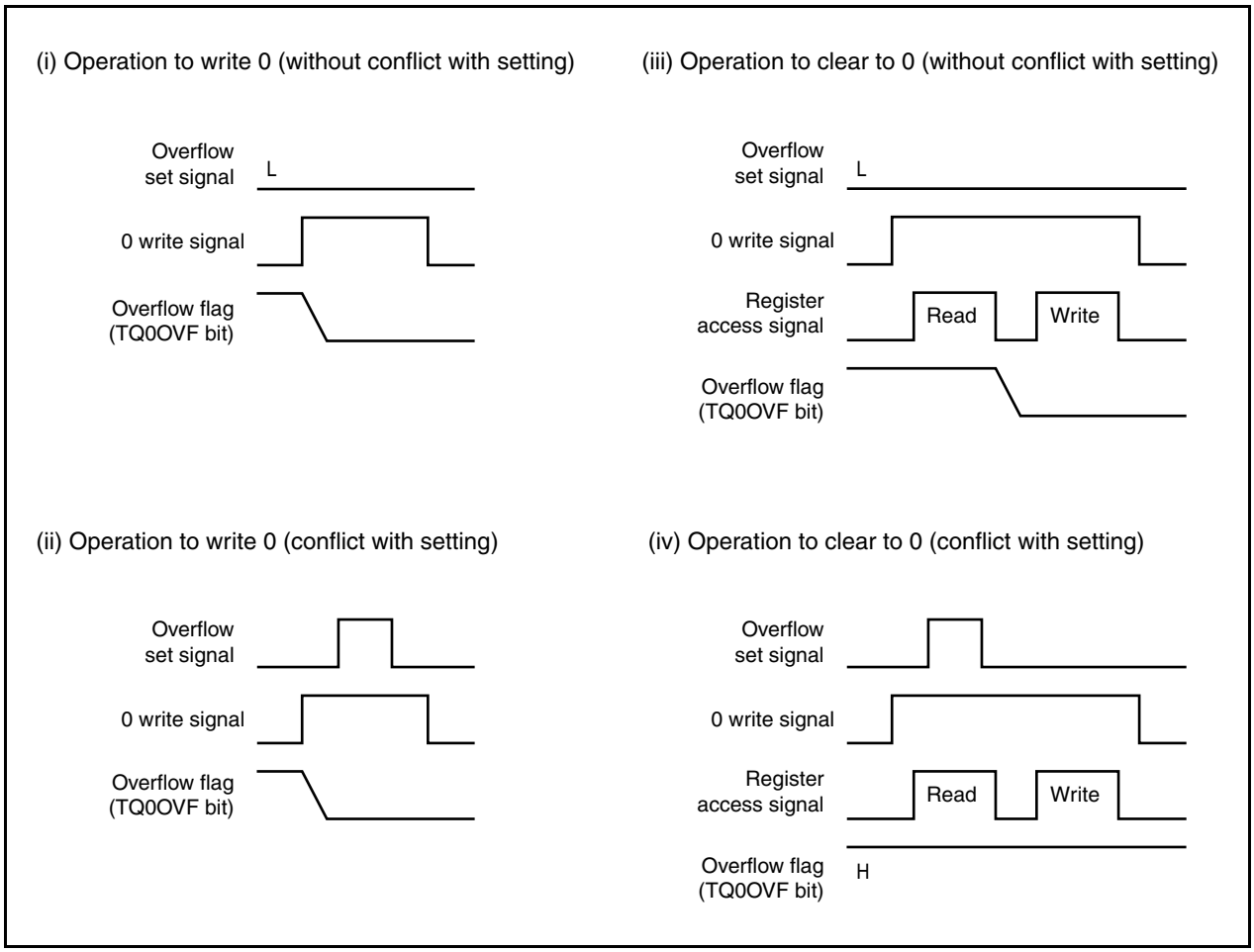

To clear the overflow flag to 0, read the overflow flag to check if it is set to 1, and clear it with the CLR instruction. If 0 is written to the overflow flag without checking if the flag is 1, the set information of overflow may be erased by writing 0 ((ii) in the above chart). Therefore, software may judge that no overflow has occurred even when an overflow actually has occurred.

If execution of the CLR instruction conflicts with occurrence of an overflow when the overflow flag is cleared to 0 with the CLR instruction, the overflow flag remains set even after execution of the clear instruction.

7.5.8 Triangular wave PWM mode (TQ0MD2 to TQ0MD0 = 111)

In the triangular wave PWM mode, TMQ0 capture/compare register k (TQ0CCRk) is used to set the duty factor, and TMQ0 capture/compare register 0 (TQ0CCR0) is used to set the cycle.

By using these four registers and operating the timer, triangular wave PWM with a variable cycle is output.

The value of the TQ0CCRm register can be rewritten when TQ0CE = 1.

To stop timer Q, clear TQ0CE to 0. The waveform of PWM is output from the TOQ0k pin. The TOQ00 pin produces a toggle output when the value of the 16-bit counter matches the value of the TQ0CCR0 register and when the counter underflows.

Caution In the PWM mode, the capture function of the TQ0CCRm register cannot be used because this register can be used only as a compare register.

Remark m = 0 to 3, k = 1 to 3

Figure 7-38. Timing of Basic Operation in Triangular Wave PWM Mode

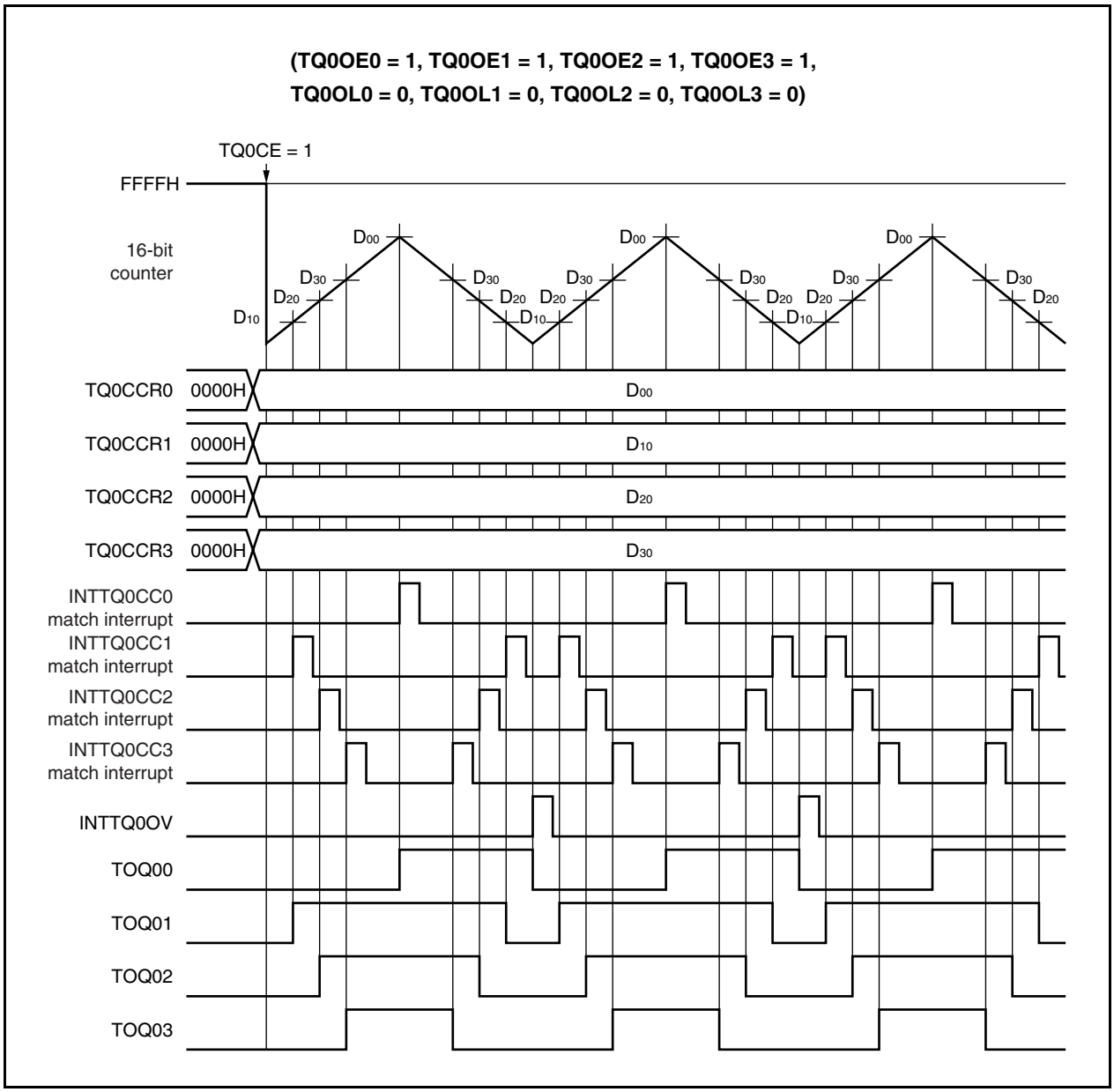

7.5.9 Timer output operations

The following table shows the operations and output levels of the TOQ00 to TOQ03 pins.

Table 7-6. Timer Output Control in Each Mode

Operation Mode	TOQ00 Pin	TOQ01 Pin	TOQ02 Pin	TOQ03 Pin
Interval timer mode	Square wave output			
External event count mode	Square wave output	–		
External trigger pulse output mode	Square wave output	External trigger pulse output	External trigger pulse output	External trigger pulse output
One-shot pulse output mode		One-shot pulse output	One-shot pulse output	One-shot pulse output
PWM output mode		PWM output	PWM output	PWM output
Free-running timer mode	Square wave output (only when compare function is used)			
Pulse width measurement mode	–			
Triangular wave PWM output mode	Square wave output	Triangular wave PWM output	Triangular wave PWM output	Triangular wave PWM output

Table 7-7. Truth Table of TOQ00 to TOQ03 Pins Under Control of Timer Output Control Bits

TQ0IOC0.TQ0OLm Bit	TQ0IOC0.TQ0OEm Bit	TQ0CTL0.TQ0CE Bit	Level of TOQ0m Pin
0	0	×	Low-level output
	1	0	Low-level output
		1	Low level immediately before counting, high level after counting is started
1	0	×	High-level output
	1	0	High-level output
		1	High level immediately before counting, low level after counting is started

Remark m = 0 to 3

7.6 Timer Tuned Operation Function

Timer P and timer Q have a timer tuned operation function.
The timers that can be synchronized are listed in Table 7-8.

Table 7-8. Tuned Operation Mode of Timers

Master Timer	Slave Timer	
TMP0	TMP1	–
TMP2	TMP3	TMQ0

Cautions 1. The tuned operation mode is enabled or disabled by the TPmCTL1.TPmSYE and TQ0CTL1.TQ0SYE bits. For TMQ2, either or both TMQ3 and TMQ0 can be specified as slaves.

2. Set the tuned operation mode using the following procedure.

<1> Set the TPmCTL1.TPmSYE and TQ0CTL1.TQ0SYE bits of the slave timer to enable the tuned operation.
Set the TPmCTL1.TPmMD2 to TPmCTL1.TPmMD0 and TQ0CTL1.TQ0MD2 to TQ0CTL1.TQ0MD0 bits of the slave timer to the free-running mode

<2> Set the timer mode by using the TPnCTL1.TPnMD2 to TPnCTL1.TPnMD0 bits.
At this time, do not set the TPnCTL1.TPnSYE of the master timer.

<3> Set the compare register value of the master and slave timers.

<4> Set the TPmCTL0.TPmCE and TQ0CTL0.TQ0CE bits of the slave timer to enable operation on the internal operating clock.

<5> Set the TPnCTL0.TPnCE bit of the master timer to enable operation on the internal operating clock.

Remark m = 1, 3

Tables 7-9 and 7-10 show the timer modes that can be used in the tuned operation mode (√: Settable, ×: Not settable).

Table 7-9. Timer Modes Usable in Tuned Operation Mode

Master Timer	Free-Running Mode	PWM Mode	Triangular Wave PWM Mode
TMP0	√	√	×
TMP2	√	√	×

Table 7-10. Timer Output Functions

Tuned Channel	Timer	Pin	Free-Running Mode		PWM Mode		Triangular Wave PWM Mode	
			Tuning OFF	Tuning ON	Tuning OFF	Tuning ON	Tuning OFF	Tuning ON
Ch0	TMP0 (master)	TOP00	PPG	←	Toggle	←	N/A	←
		TOP01	PPG	←	PWM	←	N/A	←
	TMP1 (slave)	TOP10	PPG	←	Toggle	PWM	N/A	←
		TOP11	PPG	←	PWM	←	N/A	←
Ch1	TMP2 (master)	TOP20	PPG	←	Toggle	←	N/A	←
		TOP21	PPG	←	PWM	←	N/A	←
	TMP3 (slave)	TOP30	PPG	←	Toggle	PWM	N/A	←
		TOP31	PPG	←	PWM	←	N/A	←
	TMQ0 (slave)	TOQ00	PPG	←	Toggle	PWM	Toggle	N/A
		TOQ01 to TOQ03	PPG	←	PWM	←	Triangular wave PWM	N/A

Remark The timing of transmitting data from the compare register of the master timer to the compare register of the slave timer is as follows.

PPG: CPU write timing

Toggle, PWM, triangular wave PWM: Timing at which timer counter and compare register match TOPn0 and TOQ00 (n = 0 to 3)

Figure 7-39. Tuned Operation Image (TMP2, TMP3, TMQ0)

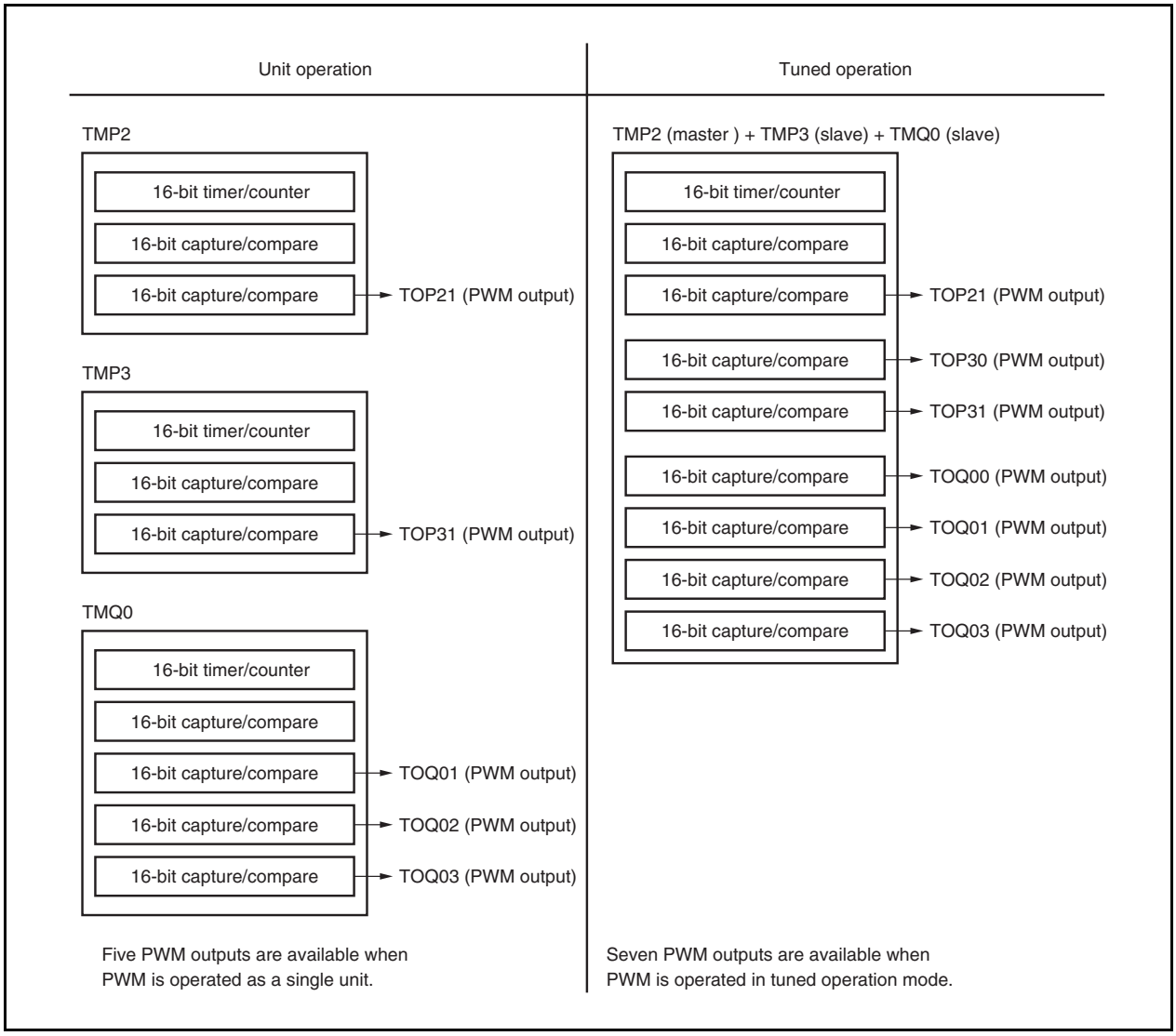

Figure 7-40. Basic Operation Timing of Tuned PWM Function (TMP2, TMP3, TMQ0)

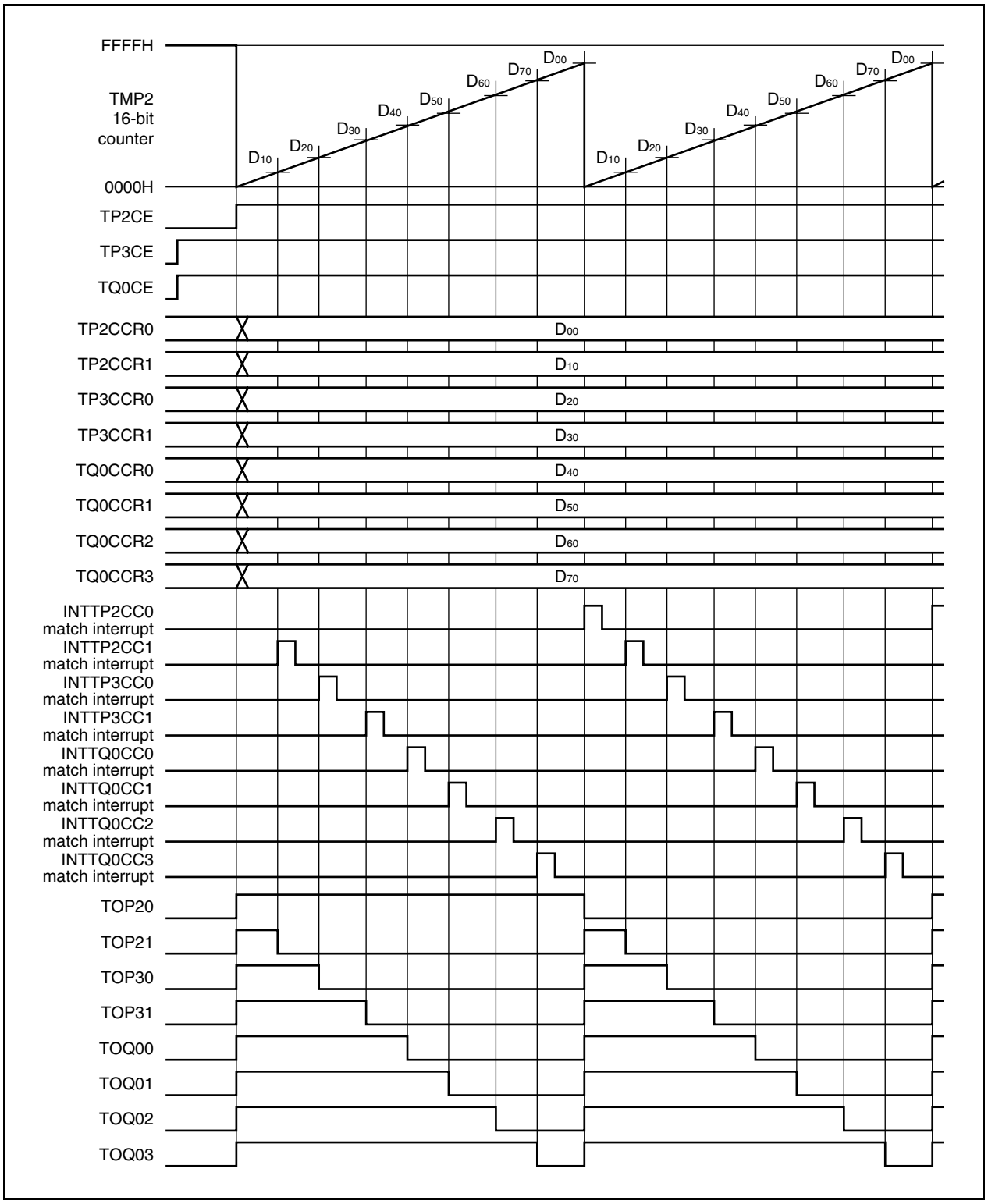

7.7 Cautions

(1) Capture operation

When the capture operation is used and a slow clock is selected as the count clock, FFFFH, not 0000H, may be captured in the TQ0CCR0, TQ0CCR1, TQ0CCR2, and TQ0CCR3 registers if the capture trigger is input immediately after the TQ0CE bit is set to 1.

(a) Free-running timer mode

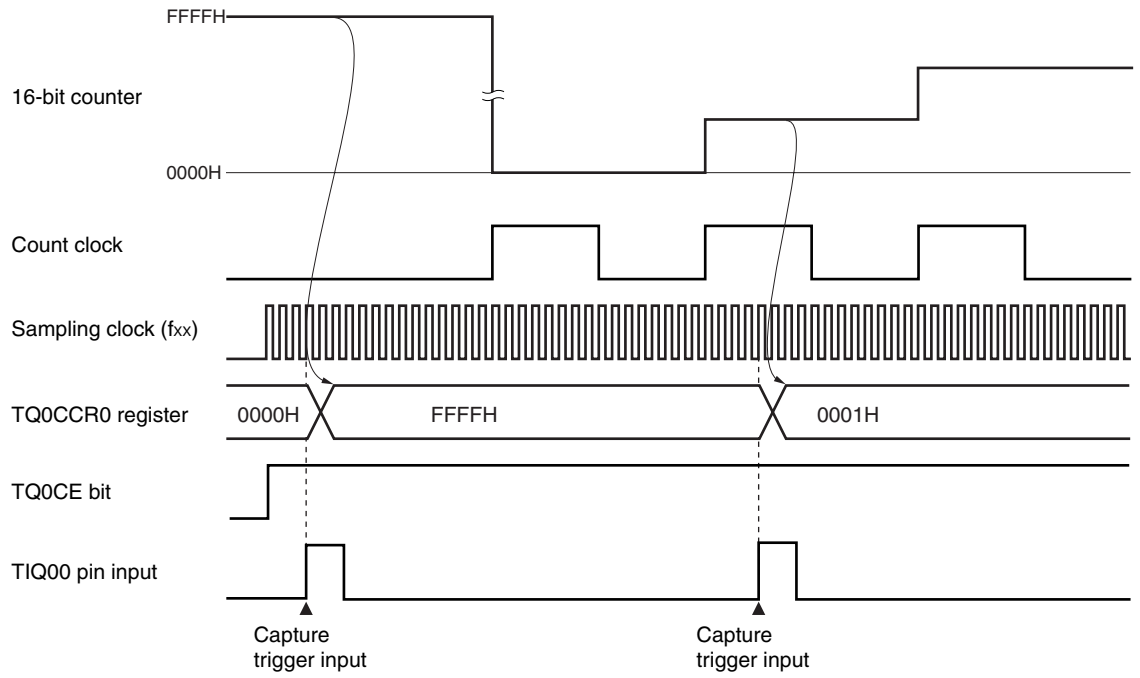

(b) Pulse width measurement mode

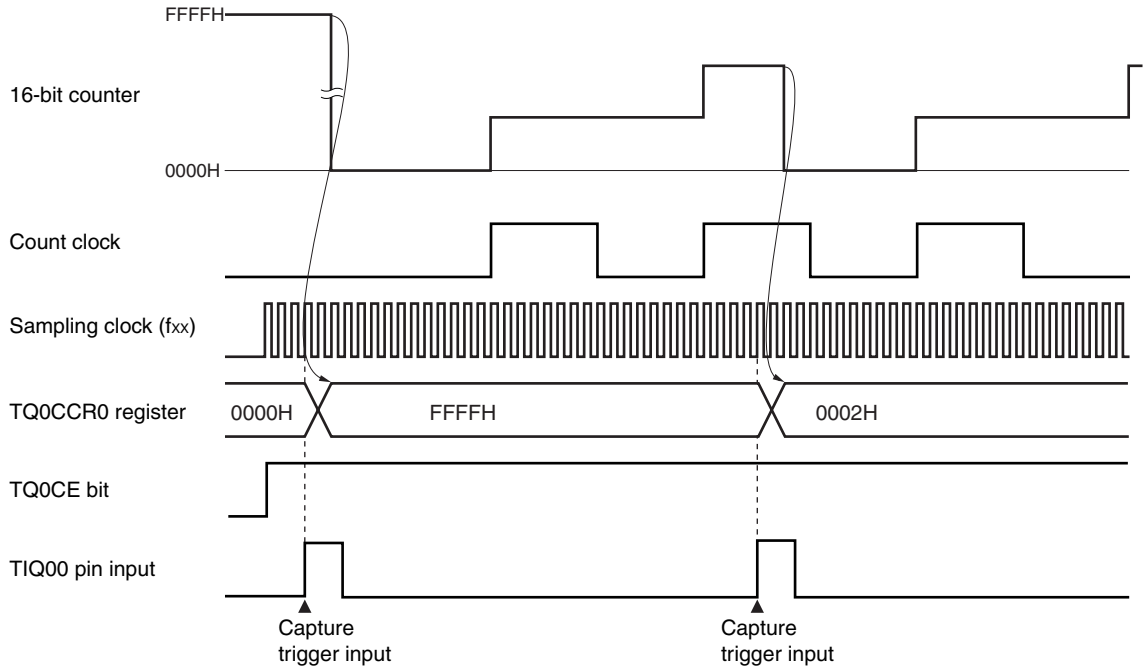

CHAPTER 8 16-BIT INTERVAL TIMER M (TMM)

8.1 Overview

- Interval function
- 8 clocks selectable
- 16-bit counter × 1
  (The 16-bit counter cannot be read during timer count operation.)
- Compare register × 1
  (The compare register cannot be written during timer counter operation.)
- Compare match interrupt × 1

Timer M supports only the clear & start mode. The free-running timer mode is not supported.

8.2 Configuration

TMM0 includes the following hardware.

Table 8-1. Configuration of TMM0

Item	Configuration
Timer register	16-bit counter
Register	TMM0 compare register 0 (TM0CMP0)
Control register	TMM0 control register 0 (TM0CTL0)

Figure 8-1. Block Diagram of TMM0

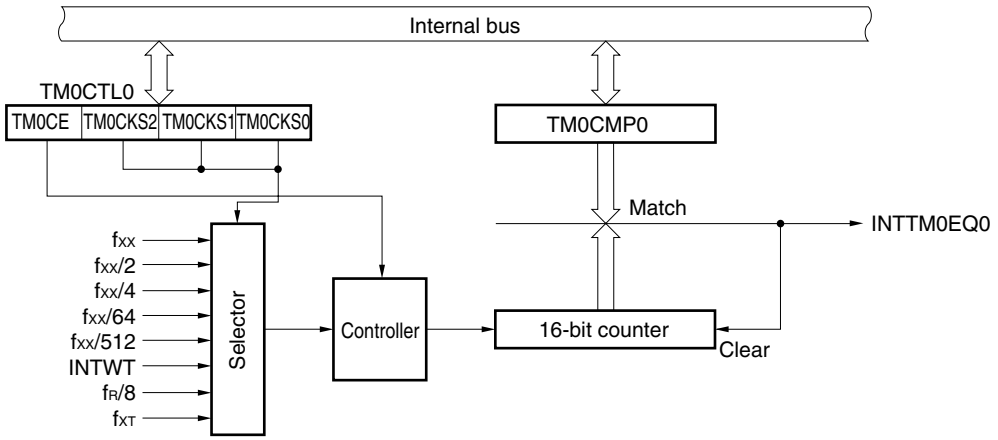

Remark f_{XX}: Main clock frequency
f_R: Internal oscillation clock frequency
f_{XT}: Subclock frequency
INTWT: Watch timer interrupt request signal

(1) 16-bit counter

This is a 16-bit counter that counts the internal clock.
The 16-bit counter cannot be read or written.

(2) TMM0 compare register 0 (TM0CMP0)

The TM0CMP0 register is a 16-bit compare register.
This register can be read or written in 16-bit units.
Reset sets this register to 0000H.
The same value can always be written to the TM0CMP0 register by software.
TM0CMP0 register rewrite is prohibited when the TM0CTL0.TM0CE bit = 1.

After reset: 0000H R/W Address: FFFFF694H

	15	14	13	12	11	10	9	8	7	6	5	4	3	2	1	0
TM0CMP0																

8.3 Register

(1) TMM0 control register (TM0CTL0)

The TM0CTL0 register is an 8-bit register that controls the TMM0 operation.

This register can be read or written in 8-bit or 1-bit units.

Reset sets this register to 00H.

The same value can always be written to the TM0CTL0 register by software. Rewriting this register, except the TM0CE bit, is prohibited while the timer is operating.

After reset: 00H R/W Address: FFFFF690H

	7	6	5	4	3	2	1	0
TM0CTL0	TM0CE	0	0	0	0	TM0CKS2	TM0CKS1	TM0CKS0

TM0CE	Internal clock operation enable/disable specification
0	TMM0 operation disabled (16-bit counter reset asynchronously). Operation clock application stopped.
1	TMM0 operation enabled. Operation clock application started. TMM0 operation started.
The internal clock control and internal circuit reset for TMM0 are performed asynchronously with the TM0CE bit. When the TM0CE bit is cleared to 0, the internal clock of TMM0 is disabled (fixed to low level) and 16-bit counter is reset asynchronously.	

TM0CKS2	TM0CKS1	TM0CKS0	Count clock selection
0	0	0	f_{XX}
0	0	1	$f_{XX}/2$
0	1	0	$f_{XX}/4$
0	1	1	$f_{XX}/64$
1	0	0	$f_{XX}/512$
1	0	1	INTWT
1	1	0	$f_R/8$
1	1	1	f_{XT}

Cautions 1. Set the TM0CKS2 to TM0CKS0 bits when TM0CE bit = 0.
When changing the value of TM0CE from 0 to 1, it is not possible to set the value of the TM0CKS2 to TM0CKS0 bits simultaneously.
2. Be sure to clear bits 3 to 6 to "0".

Remark f_{XX}: Main clock frequency
f_R: Internal oscillation clock frequency
f_{XT}: Subclock frequency

8.4 Operation

Caution Do not set the TM0CMP0 register to FFFFH.

8.4.1 Interval timer mode

In the interval timer mode, an interrupt request signal (INTTM0EQ0) is generated at the specified interval if the TM0CTL0.TM0CE bit is set to 1.

Figure 8-2. Configuration of Interval Timer

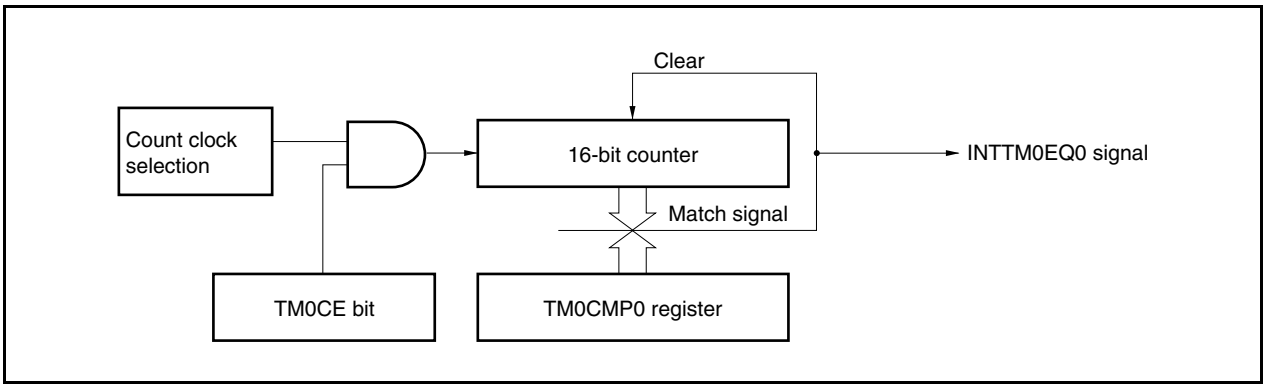

Figure 8-3. Basic Timing of Operation in Interval Timer Mode

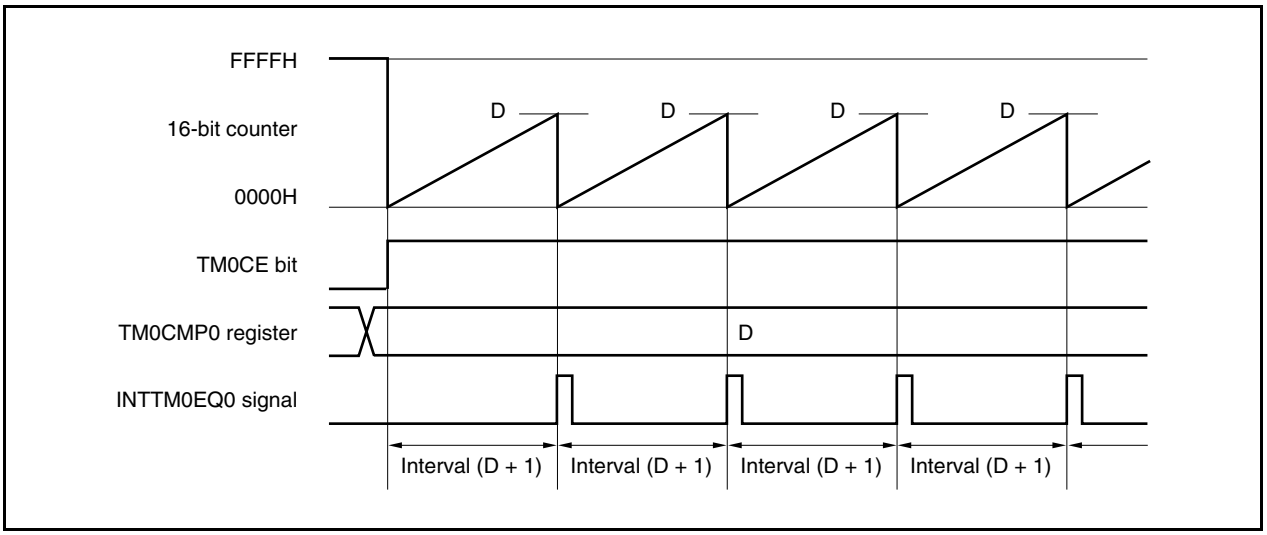

When the TM0CE bit is set to 1, the value of the 16-bit counter is cleared from FFFFH to 0000H in synchronization with the count clock, and the counter starts counting.

When the count value of the 16-bit counter matches the value of the TM0CMP0 register, the 16-bit counter is cleared to 0000H and a compare match interrupt request signal (INTTM0EQ0) is generated.

The interval can be calculated by the following expression.

Interval = (Set value of TM0CMP0 register + 1) × Count clock cycle

Figure 8-4. Register Setting for Interval Timer Mode Operation

(a) TMM0 control register 0 (TM0CTL0)

	TM0CE					TM0CKS2	TM0CKS1	TM0CKS0
TM0CTL0	0/1	0	0	0	0	0/1	0/1	0/1

Select count clock

0: Stop counting
1: Enable counting

(b) TMM0 compare register 0 (TM0CMP0)

If the TM0CMP0 register is set to D, the interval is as follows.

Interval = (D + 1) × Count clock cycle

(1) Interval timer mode operation flow

Figure 8-5. Software Processing Flow in Interval Timer Mode

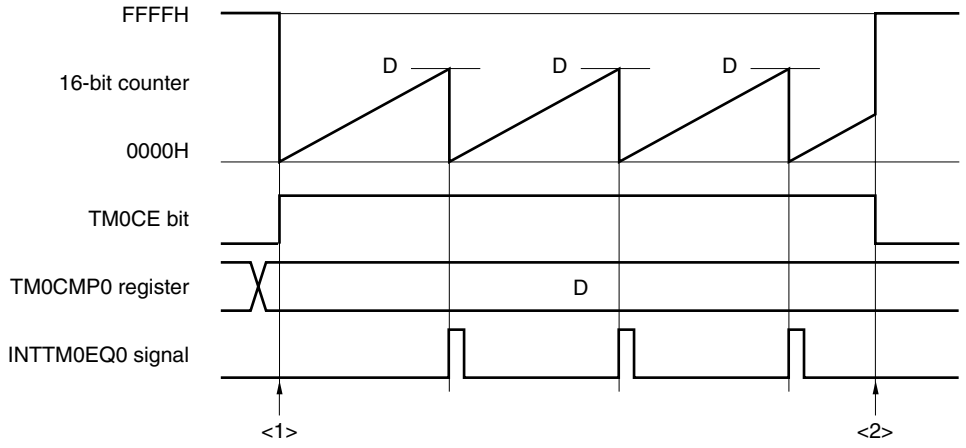

<1> Count operation start flow

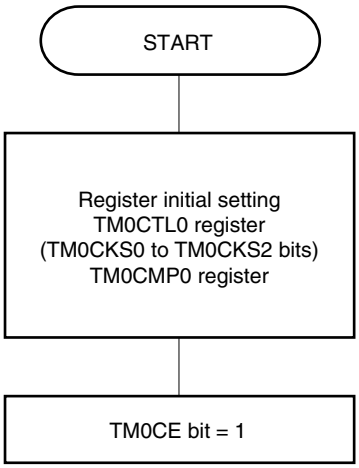

Initial setting of these registers is performed before setting the TM0CE bit to 1.

The TM0CKS0 to TM0CKS2 bits can be set at the same time when counting has been started (TM0CE bit = 1).

<2> Count operation stop flow

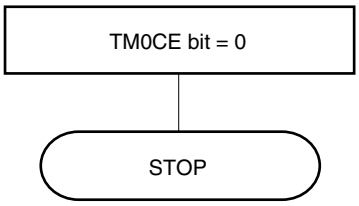

The counter is initialized and counting is stopped by clearing the TM0CE bit to 0.

(2) Interval timer mode operation timing

Caution Do not set the TM0CMP0 register to FFFFH.

(a) Operation if TM0CMP0 register is set to 0000H

If the TM0CMP0 register is set to 0000H, the INTTM0EQ0 signal is generated at each count clock. The value of the 16-bit counter is always 0000H.

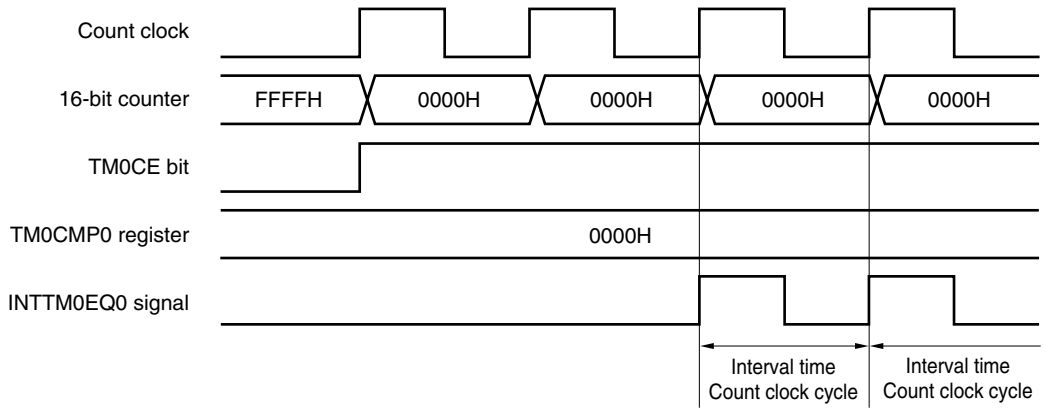

(b) Operation if TM0CMP0 register is set to N

If the TM0CMP0 register is set to N, the 16-bit counter counts up to N. The counter is cleared to 0000H in synchronization with the next count-up timing and the INTTM0EQ0 signal is generated.

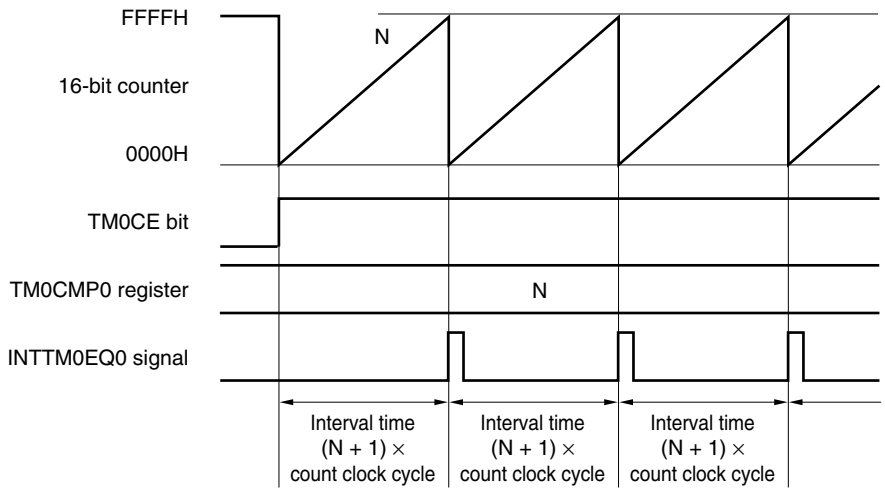

Remark 0000H < N < FFFFH

8.4.2 Cautions

(1) It takes the 16-bit counter up to the following time to start counting after the TM0CTL0.TM0CE bit is set to 1, depending on the count clock selected.

Selected Count Clock	Maximum Time Before Counting Start
f_{XX}	$2/f_{XX}$
$f_{XX}/2$	$6/f_{XX}$
$f_{XX}/4$	$24/f_{XX}$
$f_{XX}/64$	$128/f_{XX}$
$f_{XX}/512$	$1024/f_{XX}$
INTWT	Second rising edge of INTWT signal
$f_R/8$	$16/f_R$
f_{XT}	$2/f_{XT}$

(2) Rewriting the TM0CMP0 and TM0CTL0 registers is prohibited while TMM0 is operating.
If these registers are rewritten while the TM0CE bit is 1, the operation cannot be guaranteed.
If they are rewritten by mistake, clear the TM0CTL0.TM0CE bit to 0, and re-set the registers.

CHAPTER 9 WATCH TIMER FUNCTIONS

9.1 Functions

The watch timer has the following functions.

- Watch timer: An interrupt request signal (INTWT) is generated at intervals of 0.5 or 0.25 seconds by using the main clock or subclock.
- Interval timer: An interrupt request signal (INTWTI) is generated at set intervals.

The watch timer and interval timer functions can be used at the same time.

9.2 Configuration

The block diagram of the watch timer is shown below.

Figure 9-1. Block Diagram of Watch Timer

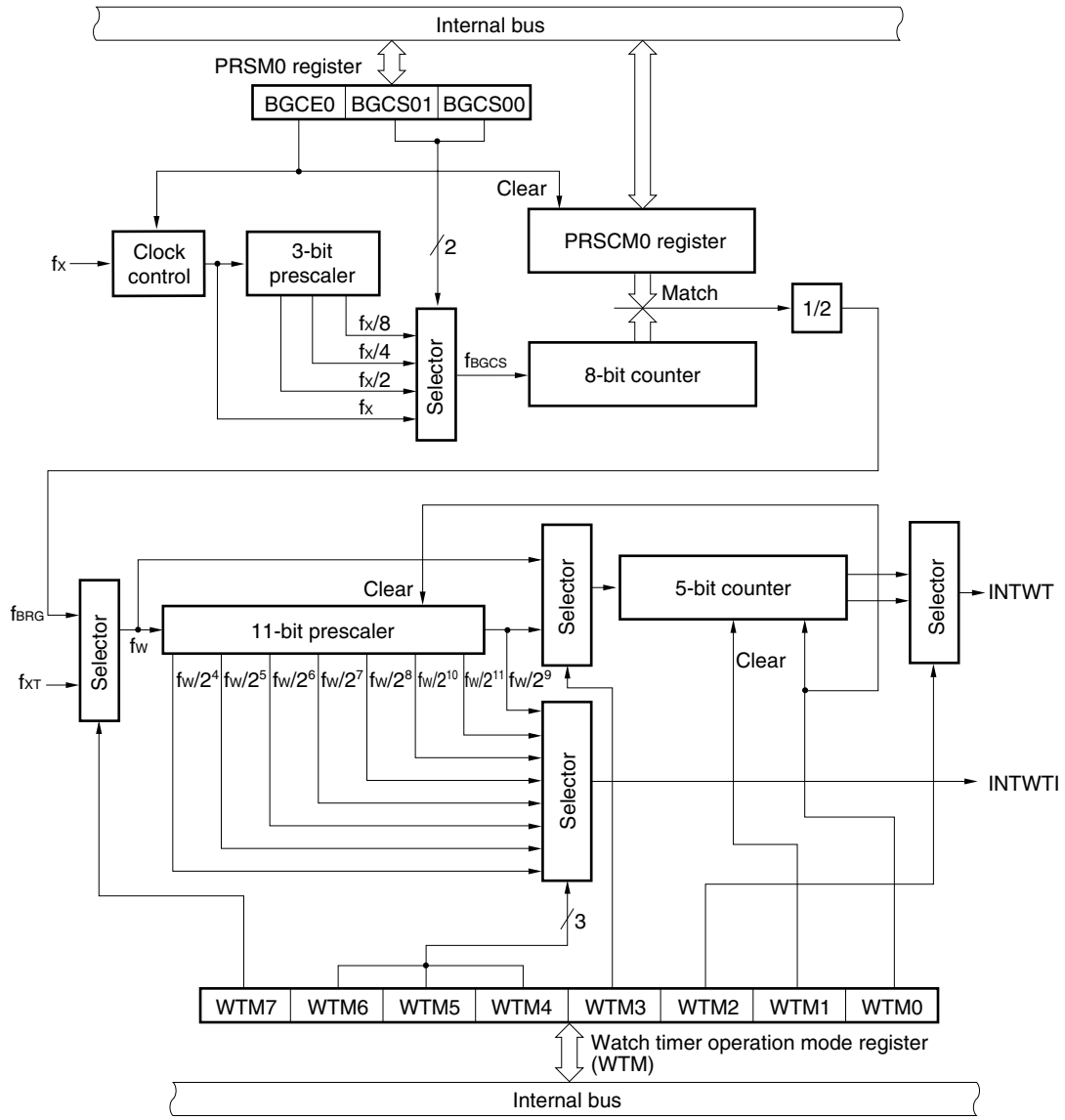

Remark f_X: Main clock oscillation frequency
f_{BGCS}: Watch timer source clock frequency
f_{BRG}: Watch timer count clock frequency
f_{XT}: Subclock frequency
f_W: Watch timer clock frequency
INTWT: Watch timer interrupt request signal
INTWTI: Interval timer interrupt request signal

(1) Clock control

This block controls supplying and stopping the operating clock (f_X) when the watch timer operates on the main clock.

(2) 3-bit prescaler

This prescaler divides f_X to generate $f_X/2$, $f_X/4$, or $f_X/8$.

(3) 8-bit counter

This 8-bit counter counts the source clock (f_{BGCS}).

(4) 11-bit prescaler

This prescaler divides f_W to generate a clock of $f_W/2^4$ to $f_W/2^{11}$.

(5) 5-bit counter

This counter counts f_W or $f_W/2^9$, and generates a watch timer interrupt request signal at intervals of $2^4/f_W$, $2^5/f_W$, $2^{12}/f_W$, or $2^{14}/f_W$.

(6) Selector

The watch timer has the following five selectors.

- Selector that selects one of f_X, $f_X/2$, $f_X/4$, or $f_X/8$ as the source clock of the watch timer
- Selector that selects the main clock (f_X) or subclock (f_{XT}) as the clock of the watch timer
- Selector that selects f_W or $f_W/2^9$ as the count clock frequency of the 5-bit counter
- Selector that selects $2^4/f_W$, $2^{13}/f_W$, $2^5/f_W$, or $2^{14}/f_W$ as the INTWT signal generation time interval
- Selector that selects $2^4/f_W$ to $2^{11}/f_W$ as the interval timer interrupt request signal (INTWTI) generation time interval

(7) PRSCM register

This is an 8-bit compare register that sets the interval time.

(8) PRSM register

This register controls clock supply to the watch timer.

(9) WTM register

This is an 8-bit register that controls the operation of the watch timer/interval timer, and sets the interrupt request signal generation interval.

9.3 Registers

The following registers are provided for the watch timer.

- Prescaler mode register 0 (PRSM0)
- Prescaler compare register 0 (PRSCM0)
- Watch timer operation mode register (WTM)

(1) Prescaler mode register 0 (PRSM0)

The PRSM0 register controls the generation of the watch timer count clock.
This register can be read or written in 8-bit or 1-bit units.
Reset sets this register to 00H.

After reset: 00H R/W Address: FFFFF8B0H

	7	6	5	4	3	2	1	0
PRSM0	0	0	0	BGCE0	0	0	BGCS01	BGCS00

BGCE0	Main clock operation enable
0	Disabled
1	Enabled

BGCS01	BGCS00	Selection of watch timer source clock (f_{BGCS})		
			5 MHz	4 MHz
0	0	f_X	200 ns	250 ns
0	1	$f_X/2$	400 ns	500 ns
1	0	$f_X/4$	800 ns	1 μs
1	1	$f_X/8$	1.6 μs	2 μs

Cautions 1. Do not change the values of the BGCS00 and BGCS01 bits during watch timer operation.
2. Set the PRSM0 register before setting the BGCE0 bit to 1.
3. Set the PRSM0 and PRSCM0 registers according to the main clock frequency that is used so as to obtain an f_{BRG} frequency of 32.768 kHz.

(2) Prescaler compare register 0 (PRSCM0)

The PRSCM0 register is an 8-bit compare register.

This register can be read or written in 8-bit units.

Reset sets this register to 00H.

After reset: 00H R/W Address: FFFFF8B1H

	7	6	5	4	3	2	1	0
PRSCM0	PRSCM07	PRSCM06	PRSCM05	PRSCM04	PRSCM03	PRSCM02	PRSCM01	PRSCM00

Cautions 1. Do not rewrite the PRSCM0 register during watch timer operation.

2. Set the PRSCM0 register before setting the PRSM0.BGCE0 bit to 1.

3. Set the PRSM0 and PRSCM0 registers according to the main clock frequency that is used so as to obtain an f_{BRG} frequency of 32.768 kHz.

The calculation for f_{BRG} is shown below.

$$f_{BRG} = f_{BGCS}/2N$$

Remark f_{BGCS}: Watch timer source clock set by the PRSM0 register

N: Set value of PRSCM0 register = 1 to 256

However, N = 256 only when PRSCM0 register is set to 00H.

(3) Watch timer operation mode register (WTM)

The WTM register enables or disables the count clock and operation of the watch timer, sets the interval time of the prescaler, controls the operation of the 5-bit counter, and sets the set time of the watch flag.

Set the PRSM0 register before setting the WTM register.

This register can be read or written in 8-bit or 1-bit units.

Reset sets this register to 00H.

(1/2)

After reset: 00H R/W Address: FFFFF680H

	7	6	5	4	3	2	1	0
WTM	WTM7	WTM6	WTM5	WTM4	WTM3	WTM2	WTM1	WTM0

WTM7	WTM6	WTM5	WTM4	Selection of interval time of prescaler
0	0	0	0	$2^4/f_W$ (488 μs: $f_W = f_{XT}$)
0	0	0	1	$2^5/f_W$ (977 μs: $f_W = f_{XT}$)
0	0	1	0	$2^6/f_W$ (1.95 ms: $f_W = f_{XT}$)
0	0	1	1	$2^7/f_W$ (3.91 ms: $f_W = f_{XT}$)
0	1	0	0	$2^8/f_W$ (7.81 ms: $f_W = f_{XT}$)
0	1	0	1	$2^9/f_W$ (15.6 ms: $f_W = f_{XT}$)
0	1	1	0	$2^{10}/f_W$ (31.3 ms: $f_W = f_{XT}$)
0	1	1	1	$2^{11}/f_W$ (62.5 ms: $f_W = f_{XT}$)
1	0	0	0	$2^4/f_W$ (488 μs: $f_W = f_{BRG}$)
1	0	0	1	$2^5/f_W$ (977 μs: $f_W = f_{BRG}$)
1	0	1	0	$2^6/f_W$ (1.95 ms: $f_W = f_{BRG}$)
1	0	1	1	$2^7/f_W$ (3.90 ms: $f_W = f_{BRG}$)
1	1	0	0	$2^8/f_W$ (7.81 ms: $f_W = f_{BRG}$)
1	1	0	1	$2^9/f_W$ (15.6 ms: $f_W = f_{BRG}$)
1	1	1	0	$2^{10}/f_W$ (31.2 ms: $f_W = f_{BRG}$)
1	1	1	1	$2^{11}/f_W$ (62.5 ms: $f_W = f_{BRG}$)

(2/2)

WTM7	WTM3	WTM2	Selection of set time of watch flag
0	0	0	$2^{14}/f_W$ (0.5 s: $f_W = f_{XT}$)
0	0	1	$2^{13}/f_W$ (0.25 s: $f_W = f_{XT}$)
0	1	0	$2^5/f_W$ (977 μs: $f_W = f_{XT}$)
0	1	1	$2^4/f_W$ (488 μs: $f_W = f_{XT}$)
1	0	0	$2^{14}/f_W$ (0.5 s: $f_W = f_{BRG}$)
1	0	1	$2^{13}/f_W$ (0.25 s: $f_W = f_{BRG}$)
1	1	0	$2^5/f_W$ (977 μs: $f_W = f_{BRG}$)
1	1	1	$2^4/f_W$ (488 μs: $f_W = f_{BRG}$)

WTM1	Control of 5-bit counter operation
0	Clears after operation stops
1	Starts

WTM0	Watch timer operation enable
0	Stops operation (clears both prescaler and 5-bit counter)
1	Enables operation

Caution Rewrite the WTM2 to WTM7 bits while both the WTM0 and WTM1 bits are 0.

Remarks 1. f_W: Watch timer clock frequency

2. Values in parentheses apply to operation with f_W = 32.768 kHz

3. f_{XT}: Subclock frequency

4. f_{BRG}: Watch timer count clock frequency

9.4 Operation

9.4.1 Operation as watch timer

The watch timer generates an interrupt request signal (INTWT) at fixed time intervals. The watch timer operates using time intervals of 0.25 or 0.5 seconds with the subclock (32.768 kHz) or main clock.

The count operation starts when the WTM.WTM1 and WTM.WTM0 bits are set to 11. When the WTM0 bit is cleared to 0, the 11-bit prescaler and 5-bit counter are cleared and the count operation stops.

The time of the watch timer can be adjusted by clearing the WTM1 bit to 0 and then the 5-bit counter when operating at the same time as the interval timer. At this time, an error of up to 15.6 ms may occur for the watch timer, but the interval timer is not affected.

If the main clock is used as the count clock of the watch timer, set the count clock using the PRSM0.BGCS01 and BGCS00 bits, the 8-bit comparison value using the PRSCM0 register, and the count clock frequency (f_{BRG}) of the watch timer to 32.768 kHz.

When the PRSM0.BGCE0 bit is set (1), f_{BRG} is supplied to the watch timer.

f_{BRG} can be calculated by the following expression.

$$f_{BRG} = f_X/(2^{m+1} \times N)$$

To set f_{BRG} to 32.768 kHz, perform the following calculation and set the BGCS01 and BGCS00 bits and the PRSCM0 register.

<1> Set N = f_X/65,536. Set m = 0.
<2> When the value resulting from rounding up the first decimal place of N is even, set N before the roundup as N/2 and m as m + 1.
<3> Repeat <2> until N is odd or m = 3.
<4> Set the value resulting from rounding up the first decimal place of N to the PRSCM0 register and m to the BGCS01 and BGCS00 bits.

Example: When f_X = 4.00 MHz
<1> N = 4,000,000/65,536 = 61.03…, m = 0
<2>, <3> Because N (round up the first decimal place) is odd, N = 61, m = 0.
<4> Set value of PRSCM0 register: 3DH (61), set value of BGCS01 and BGCS00 bits: 00

At this time, the actual f_{BRG} frequency is as follows.

$$f_{BRG} = f_X/(2^{m+1} \times N) = 4{,}000{,}000/(2 \times 61)$$
$$= 32.787 \text{ kHz}$$

Remark m: Division value (set value of BGCS01 and BGCS00 bits) = 0 to 3
N: Set value of PRSCM0 register = 1 to 256
However, N = 256 only when PRSCM0 register is set to 00H.
f_X: Main clock oscillation frequency

9.4.2 Operation as interval timer

The watch timer can also be used as an interval timer that repeatedly generates an interrupt request signal (INTWTI) at intervals specified by a preset count value.

The interval time can be selected by the WTM4 to WTM7 bits of the WTM register.

Table 9-1. Interval Time of Interval Timer

WTM7	WTM6	WTM5	WTM4	Interval Time	
0	0	0	0	$2^4 \times 1/fw$	488 μs (operating at $f_W = f_{XT}$ = 32.768 kHz)
0	0	0	1	$2^5 \times 1/fw$	977 μs (operating at $f_W = f_{XT}$ = 32.768 kHz)
0	0	1	0	$2^6 \times 1/fw$	1.95 ms (operating at $f_W = f_{XT}$ = 32.768 kHz)
0	0	1	1	$2^7 \times 1/fw$	3.91 ms (operating at $f_W = f_{XT}$ = 32.768 kHz)
0	1	0	0	$2^8 \times 1/fw$	7.81 ms (operating at $f_W = f_{XT}$ = 32.768 kHz)
0	1	0	1	$2^9 \times 1/fw$	15.6 ms (operating at $f_W = f_{XT}$ = 32.768 kHz)
0	1	1	0	$2^{10} \times 1/fw$	31.3 ms (operating at $f_W = f_{XT}$ = 32.768 kHz)
0	1	1	1	$2^{11} \times 1/fw$	62.5 ms (operating at $f_W = f_{XT}$ = 32.768 kHz)
1	0	0	0	$2^4 \times 1/fw$	488 μs (operating at $f_W = f_{BRG}$ = 32.768 kHz)
1	0	0	1	$2^5 \times 1/fw$	977 μs (operating at $f_W = f_{BRG}$ = 32.768 kHz)
1	0	1	0	$2^6 \times 1/fw$	1.95 ms (operating at $f_W = f_{BRG}$ = 32.768 kHz)
1	0	1	1	$2^7 \times 1/fw$	3.91 ms (operating at $f_W = f_{BRG}$ = 32.768 kHz)
1	1	0	0	$2^8 \times 1/fw$	7.81 ms (operating at $f_W = f_{BRG}$ = 32.768 kHz)
1	1	0	1	$2^9 \times 1/fw$	15.6 ms (operating at $f_W = f_{BRG}$ = 32.768 kHz)
1	1	1	0	$2^{10} \times 1/fw$	31.3 ms (operating at $f_W = f_{BRG}$ = 32.768 kHz)
1	1	1	1	$2^{11} \times 1/fw$	62.5 ms (operating at $f_W = f_{BRG}$ = 32.768 kHz)

Remark f_W: Watch timer clock frequency

Figure 9-2. Operation Timing of Watch Timer/Interval Timer

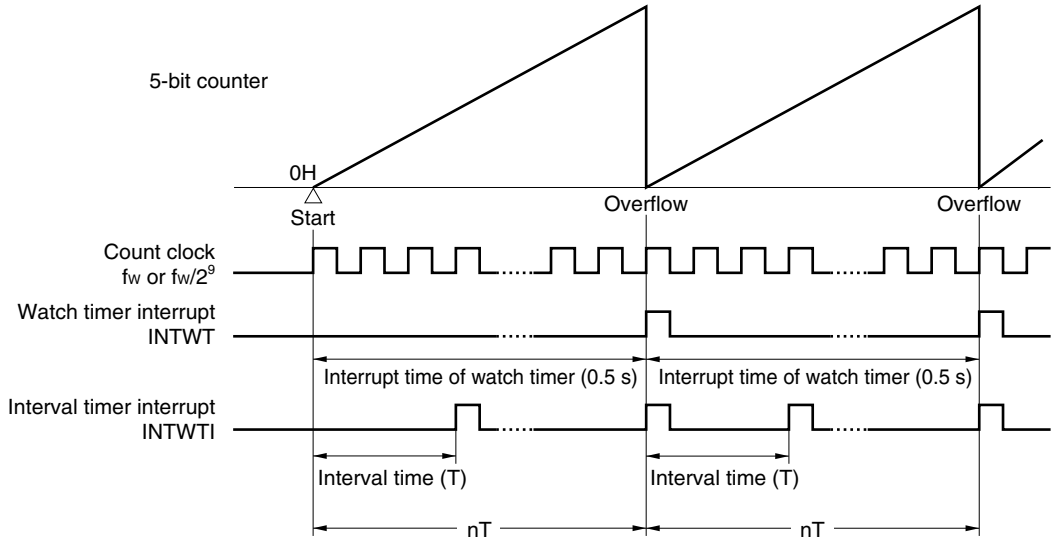

Remarks 1. When 0.5 seconds of the watch timer interrupt time is set.

2. fw: Watch timer clock frequency

Values in parentheses apply to operation with fw = 32.768 kHz.

n: Number of interval timer operations

9.4.3 Cautions

Some time is required before the first watch timer interrupt request signal (INTWT) is generated after operation is enabled (WTM.WTM1 and WTM.WTM0 bits = 1).

Figure 9-3. Example of Generation of Watch Timer Interrupt Request Signal (INTWT) (When Interrupt Cycle = 0.5 s)

It takes 0.515625 seconds (max.) for the first INTWT signal to be generated ($2^9 \times 1/32768 = 0.015625$ seconds longer (max.)). The INTWT signal is then generated every 0.5 seconds.

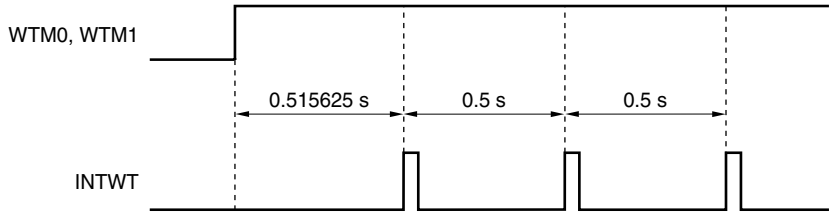

CHAPTER 10 FUNCTIONS OF WATCHDOG TIMER 2

10.1 Functions

Watchdog timer 2 has the following functions.

- Default-start watchdog timer[Note 1]
  → Reset mode: Reset operation upon overflow of watchdog timer 2 (generation of WDT2RES signal)
  → Non-maskable interrupt request mode: NMI operation upon overflow of watchdog timer 2 (generation of INTWDT2 signal)[Note 2]
- Input selectable from main clock and internal oscillation clock as the source clock

Notes 1. Watchdog timer 2 automatically starts in the reset mode following reset release.
When watchdog timer 2 is not used, either stop its operation before reset is executed via this function, or clear watchdog timer 2 once and stop it within the next interval time.
Also, write to the WDTM2 register for verification purposes only once, even if the default settings (reset mode, interval time: $f_R/2^{19}$) do not need to be changed.

2. For the non-maskable interrupt servicing due to a non-maskable interrupt request signal (INTWDT2), see **14.2.2 (2) INTWDT2 signal**.

10.2 Configuration

The following shows the block diagram of watchdog timer 2.

Figure 10-1. Block Diagram of Watchdog Timer 2

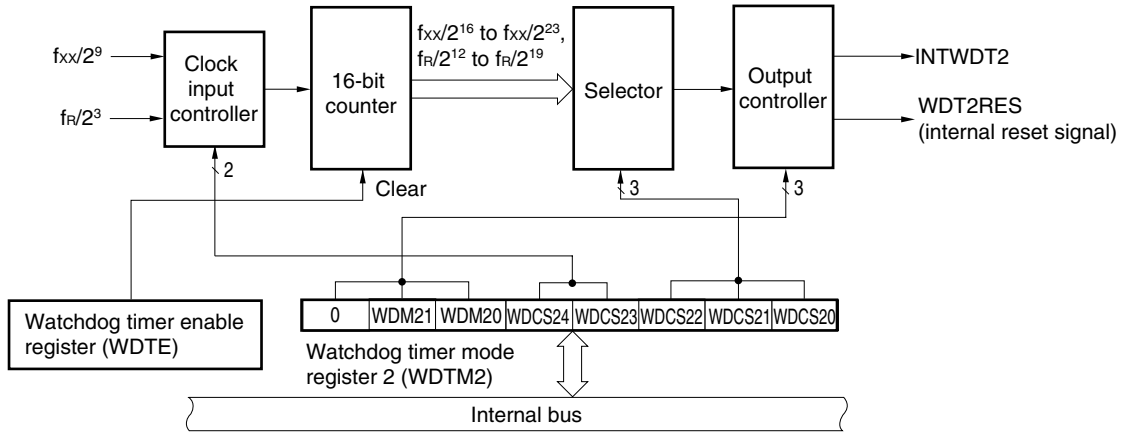

Remark f_{XX}: Main clock frequency
f_R: Internal oscillation clock frequency
INTWDT2: Non-maskable interrupt request signal from watchdog timer 2
WDTRES2: Watchdog timer 2 reset signal

Watchdog timer 2 includes the following hardware.

Table 10-1. Configuration of Watchdog Timer 2

Item	Configuration
Control registers	Watchdog timer mode register 2 (WDTM2) Watchdog timer enable register (WDTE)

10.3 Registers

(1) Watchdog timer mode register 2 (WDTM2)

The WDTM2 register sets the overflow time and operation clock of watchdog timer 2.

This register can be read or written in 8-bit units. This register can be read any number of times, but it can be written only once following reset release.

Reset sets this register to 67H.

Caution Accessing the WDTM2 register is prohibited in the following statuses. For details, see 3.4.8 (2) Accessing specific on-chip peripheral I/O registers.

- **When the CPU operates with the subclock and the main clock oscillation is stopped**
- **When the CPU operates with the internal oscillation clock**

After reset: 67H R/W Address: FFFFF6D0H

	7	6	5	4	3	2	1	0
WDTM2	0	WDM21	WDM20	WDCS24	WDCS23	WDCS22	WDCS21	WDCS20

WDM21	WDM20	Selection of operation mode of watchdog timer 2[Note]
0	0	Stops operation
0	1	Non-maskable interrupt request mode (generation of INTWDT2 signal)
1	–	Reset mode (generation of WDT2RES signal)

Note If the OPB1 bit is set to 1 by using the option byte function (see **CHAPTER 23**), the reset mode is fixed.

Cautions 1. For details of the WDCS20 to WDCS24 bits, see Table 10-2 Watchdog Timer 2 Clock Selection.

2. If the WDTM2 register is rewritten twice after reset, an overflow signal is forcibly generated and the counter is reset.

3. To intentionally generate an overflow signal, write to the WDTM2 register only twice or write a value other than ACH to the WDTE register once.

4. To stop the operation of watchdog timer 2, write 1FH to the WDTM2 register. If the OPB1 bit is set to 1 by using the option byte function (see CHAPTER 23), however, watchdog timer 2 cannot be stopped by any means other than reset.

Table 10-2. Watchdog Timer 2 Clock Selection

WDCS24	WDCS23	WDCS22	WDCS21	WDCS20	Selected Clock	100 kHz (MIN.)	200 kHz (TYP.)	400 kHz (MAX.)
0	0	0	0	0	$2^{12}/f_R$	41.0 ms	20.5 ms	10.2 ms
0	0	0	0	1	$2^{13}/f_R$	81.9 ms	41.0 ms	20.5 ms
0	0	0	1	0	$2^{14}/f_R$	163.8 ms	81.9 ms	41.0 ms
0	0	0	1	1	$2^{15}/f_R$	327.7 ms	163.8 ms	81.9 ms
0	0	1	0	0	$2^{16}/f_R$	655.4 ms	327.7 ms	163.8 ms
0	0	1	0	1	$2^{17}/f_R$	1,310.7 ms	655.4 ms	327.7 ms
0	0	1	1	0	$2^{18}/f_R$	2,621.4 ms	1,310.7 ms	655.4 ms
0	0	1	1	1	$2^{19}/f_R$	5,242.9 ms	2,621.4 ms	1,310.7 ms
						f_{XX} = 4 MHz		f_{XX} = 5 MHz
0	1	0	0	0	$2^{16}/f_{XX}$	16.4 ms		13.1 ms
0	1	0	0	1	$2^{17}/f_{XX}$	32.8 ms		26.2 ms
0	1	0	1	0	$2^{18}/f_{XX}$	65.5 ms		52.4 ms
0	1	0	1	1	$2^{19}/f_{XX}$	131.1 ms		104.9 ms
0	1	1	0	0	$2^{20}/f_{XX}$	262.1 ms		209.7 ms
0	1	1	0	1	$2^{21}/f_{XX}$	524.3 ms		419.4 ms
0	1	1	1	0	$2^{22}/f_{XX}$	1,048.6 ms		838.9 ms
0	1	1	1	1	$2^{23}/f_{XX}$	2,097.2 ms		1,677.7 ms
1	1	1	1	1	Operation stopped			

Caution If the OPB1 bit is set to 1 by using the option byte function, the clock is fixed to the internal oscillation clock (f_R) ($2^{12}/f_R$ to $2^{19}/f_R$ can be selected). For details, see CHAPTER 23 OPTION BYTE FUNCTION.

(2) Watchdog timer enable register (WDTE)

The counter of watchdog timer 2 is cleared and counting restarted by writing “ACH” to the WDTE register.

The WDTE register can be read or written in 8-bit units.

Reset sets this register to 9AH.

After reset: 9AH R/W Address: FFFFF6D1H

	7	6	5	4	3	2	1	0
WDTE								

Cautions 1. When a value other than “ACH” is written to the WDTE register, an overflow signal is forcibly output.

2. When a 1-bit memory manipulation instruction is executed for the WDTE register, an overflow signal is forcibly output.

3. To intentionally generate an overflow signal, write to the WDTM2 register only twice or write a value other than ACH to the WDTE register once.

4. The read value of the WDTE register is “9AH” (which differs from written value “ACH”).

10.4 Operation

Watchdog timer 2 automatically starts in the reset mode following reset release.

The WDTM2 register can be written to only once following reset using byte access. To use watchdog timer 2, write the operation mode and the interval time to the WDTM2 register using an 8-bit memory manipulation instruction. After this, the operation of watchdog timer 2 cannot be stopped.

The WDCS24 to WDCS20 bits of the WDTM2 register are used to select the watchdog timer 2 loop detection time interval.

Writing ACH to the WDTE register clears the counter of watchdog timer 2 and starts the count operation again. After the count operation has started, write ACH to WDTE within the loop detection time interval.

If the time interval expires without ACH being written to the WDTE register, a reset signal (WDT2RES) or a non-maskable interrupt request signal (INTWDT2) is generated, depending on the set values of the WDM21 and WDTM2.WDM20 bits.

When the WDTM2.WDM21 bit is set to 1 (reset mode), if a WDT overflow occurs during oscillation stabilization after a reset or standby is released, no internal reset will occur and the CPU clock will switch to the internal oscillation clock.

To not use watchdog timer 2, write 1FH to the WDTM2 register.

For the non-maskable interrupt servicing while the non-maskable interrupt request mode is set, see **14.2.2 (2) From INTWDT2 signal**.

CHAPTER 11 A/D CONVERTER

11.1 Overview

The A/D converter converts analog input signals into digital values, has a resolution of 10 bits, and can handle 10 analog input signal channels (ANI0 to ANI9).

The A/D converter has the following features.

○ 10-bit resolution
○ 10 channels
○ Successive approximation method
○ Operating voltage: AV_{REF0} = 4.0 to 5.5 V
○ Analog input voltage: 0 V to AV_{REF0}
○ The following functions are provided as operation modes.
- Continuous select mode
- Continuous scan mode
- One-shot scan mode

○ The following functions are provided as trigger modes.
- Software trigger mode
- External trigger mode (external, 1)
- Timer trigger mode

○ Power-fail monitor function (conversion result compare function)

11.2 Functions

(1) 10-bit resolution A/D conversion

An analog input channel is selected from ANI0 to ANI9, and an A/D conversion operation is repeated at a resolution of 10 bits. Each time A/D conversion has been completed, an interrupt request signal (INTAD) is generated.

(2) Power-fail detection function

This function is used to detect a drop in the battery voltage. The result of A/D conversion (the value of the ADA0CRnH register) is compared with the value of the ADA0PFT register, and the INTAD signal is generated only when a specified comparison condition is satisfied (n = 0 to 9).

11.3 Configuration

The block diagram of the A/D converter is shown below.

Figure 11-1. Block Diagram of A/D Converter

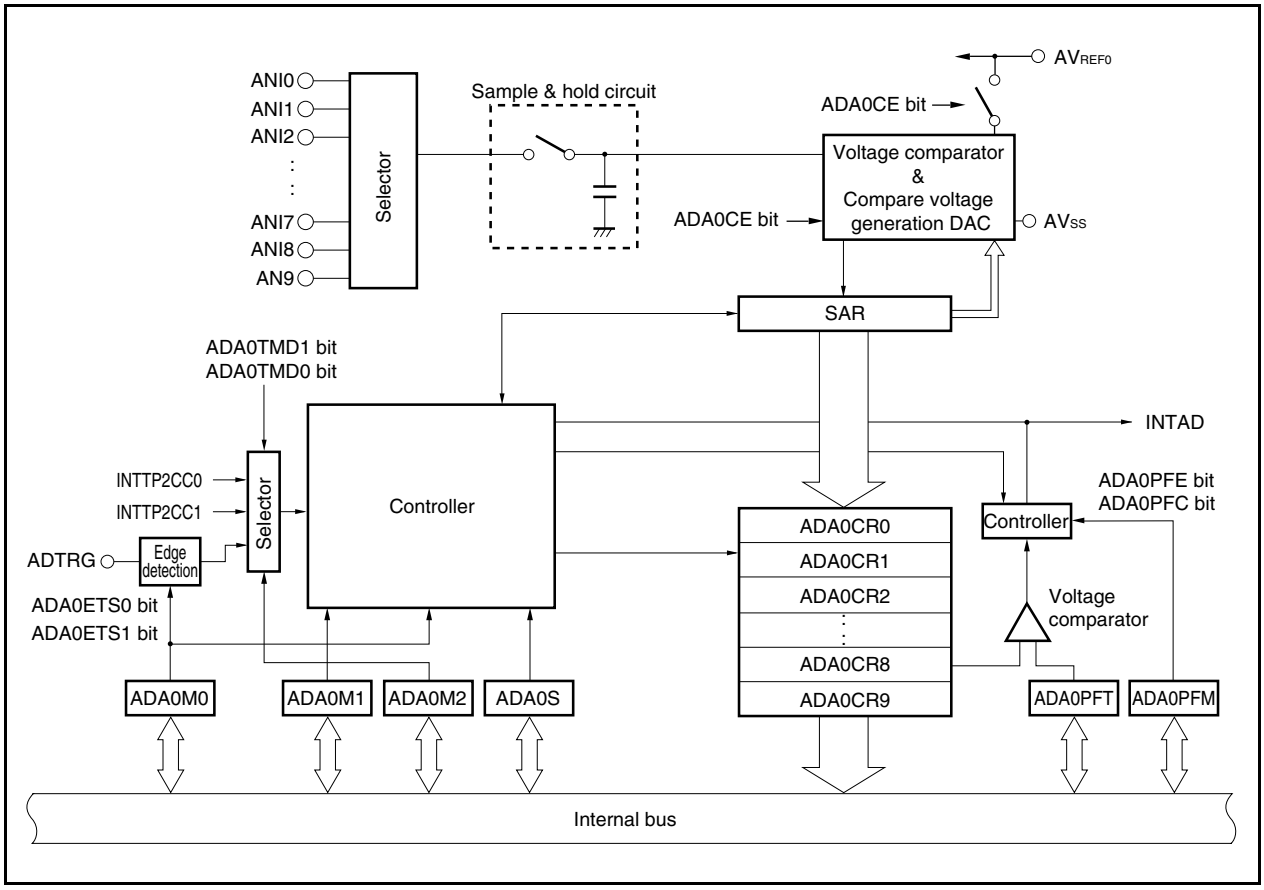

The A/D converter includes the following hardware.

Table 11-1. Configuration of A/D Converter

Item	Configuration
Analog inputs	10 channels (ANI0 to ANI9 pins)
Registers	Successive approximation register (SAR) A/D conversion result registers 0 to 9 (ADA0CR0 to ADA0CR9) A/D conversion result registers 0H to 9H (ADCR0H to ADCR9H): Only higher 8 bits can be read
Control registers	A/D converter mode registers 0 to 2 (ADA0M0 to ADA0M2) A/D converter channel specification register 0 (ADA0S) Power fail compare mode register (ADA0PFM) Power fail compare threshold value register (ADA0PFT)

(1) Successive approximation register (SAR)

The SAR register compares the voltage value of the analog input signal with the output voltage of the compare voltage generation DAC (compare voltage), and holds the comparison result starting from the most significant bit (MSB).

When the comparison result has been held down to the least significant bit (LSB) (i.e., when A/D conversion is complete), the contents of the SAR register are transferred to the ADA0CRn register.

Remark n = 0 to 9

(2) A/D conversion result register n (ADA0CRn), A/D conversion result register nH (ADA0CRnH)

The ADA0CRn register is a 16-bit register that stores the A/D conversion result. ADA0ARn consist of 10 registers and the A/D conversion result is stored in the 10 higher bits of the AD0CRn register corresponding to analog input. (The lower 6 bits are fixed to 0.)

(3) A/D converter mode register 0 (ADA0M0)

This register specifies the operation mode and controls the conversion operation by the A/D converter.

(4) A/D converter mode register 1 (ADA0M1)

This register sets the conversion time of the analog input signal to be converted.

(5) A/D converter mode register 2 (ADA0M2)

This register sets the hardware trigger mode.

(6) A/D converter channel specification register (ADA0S)

This register sets the input port that inputs the analog voltage to be converted.

(7) Power-fail compare mode register (ADA0PFM)

This register sets the power-fail monitor mode.

(8) Power-fail compare threshold value register (ADA0PFT)

The ADA0PFT register sets a threshold value that is compared with the value of A/D conversion result register nH (ADA0CRnH). The 8-bit data set to the ADA0PFT register is compared with the higher 8 bits of the A/D conversion result register (ADA0CRnH).

(9) Controller

The controller compares the result of the A/D conversion (the value of the ADA0CRnH register) with the value of the ADA0PFT register when A/D conversion is completed or when the power-fail detection function is used, and generates the INTAD signal only when a specified comparison condition is satisfied.

(10) Sample & hold circuit

The sample & hold circuit samples each of the analog input signals selected by the input circuit and sends the sampled data to the voltage comparator. This circuit also holds the sampled analog input signal voltage during A/D conversion.

(11) Voltage comparator

The voltage comparator compares a voltage value that has been sampled and held with the voltage value of the compare voltage generation DAC.

(12) Compare voltage generation DAC

This compare voltage generation DAC is connected between AV_{REF0} and AV_{SS} and generates a voltage for comparison with the analog input signal.

(13) ANI0 to ANI9 pins

These are analog input pins for the 10 A/D converter channels and are used to input analog signals to be converted into digital signals. Pins other than the one selected as the analog input by the ADA0S register can be used as input port pins.

Cautions 1. Make sure that the voltages input to the ANI0 to ANI9 pins do not exceed the rated values. In particular if a voltage of AV_{REF0} or higher is input to a channel, the conversion value of that channel becomes undefined, and the conversion values of the other channels may also be affected.

2. The analog input pins (ANI0 to ANI9) function alternately as input port pins (P70 to P79). If any of ANI0 to ANI9 is selected to execute A/D conversion, do not execute an input instruction to port 7 during conversion. If executed, the conversion resolution may be degraded.

(14) AV_{REF0} pin

This is the pin used to input the reference voltage of the A/D converter. Always make the potential at this pin the same as that at the V_{DD} pin even when the A/D converter is not used. The signals input to the ANI0 to ANI9 pins are converted to digital signals based on the voltage applied between the AV_{REF0} and AV_{SS} pins.

(15) AV_{SS} pin

This is the ground pin of the A/D converter. Always make the potential at this pin the same as that at the V_{SS} pin even when the A/D converter is not used.

11.4 Registers

The A/D converter is controlled by the following registers.

- A/D converter mode registers 0, 1, 2 (ADA0M0, ADA0M1, ADA0M2)
- A/D converter channel specification register 0 (ADA0S)
- Power-fail compare mode register (ADA0PFM)

The following registers are also used.

- A/D conversion result register n (ADA0CRn)
- A/D conversion result register nH (ADA0CRnH)
- Power-fail compare threshold value register (ADA0PFT)

(1) A/D converter mode register 0 (ADA0M0)

The ADA0M0 register is an 8-bit register that specifies the operation mode and controls conversion operations.
This register can be read or written in 8-bit or 1-bit units. However, ADA0EF bit is read-only.
Reset sets this register to 00H.

Caution Accessing the ADA0M0 register is prohibited in the following statuses. For details, see 3.4.8 (2) Accessing specific on-chip peripheral I/O registers.

- **When the CPU operates with the subclock and the main clock oscillation is stopped**
- **When the CPU operates with the internal oscillation clock**

After reset: 00H R/W Address: FFFFF200H

	7	6	5	4	3	2	1	0
ADA0M0	ADA0CE	0	ADA0MD1	ADA0MD0	ADA0ETS1	ADA0ETS0	ADA0TMD	ADA0EF

ADA0CE	A/D conversion control
0	Stops A/D conversion
1	Enables A/D conversion

ADA0MD1	ADA0MD0	Specification of A/D converter operation mode
0	0	Continuous select mode
0	1	Continuous scan mode
1	0	Setting prohibited
1	1	One-shot scan mode

ADA0ETS1	ADA0ETS0	Specification of external trigger (ADTRG pin) input valid edge
0	0	No edge detection
0	1	Falling edge detection
1	0	Rising edge detection
1	1	Detection of both rising and falling edges

ADA0TMD	Trigger mode specification
0	Software trigger mode
1	External trigger mode/timer trigger mode

ADA0EF	A/D converter status display
0	A/D conversion stopped
1	A/D conversion in progress

Cautions 1. Write operations to bit 0 are ignored.

2. Changing the ADA0M1 register value is prohibited while A/D conversion is enabled (ADA0CE bit = 1).

3. If the ADA0M0, ADA0M2, ADA0S, ADA0PFM, and ADA0PFT registers are written during A/D conversion (ADA0EF bit = 1), the following will be performed according to the mode.

- **In software trigger mode**
  A/D conversion is stopped and started again from the beginning.
- **In hardware trigger mode**
  A/D conversion is stopped, and the trigger standby state is set.

4. When not using the A/D converter, stop the operation by setting the ADA0CE bit to 0 to reduce the power consumption.

5. The resolution for the first conversion of the data of the input pin immediately after the start of A/D conversion may be degraded. For details, see 11.6 (7) AV_{REF0} pin.

(2) A/D converter mode register 1 (ADA0M1)

The ADA0M1 register is an 8-bit register that controls the conversion time specification.

This register can be read or written in 8-bit or 1-bit units.

Reset sets this register to 00H.

After reset: 00H R/W Address: FFFFF201H

	7	6	5	4	3	2	1	0
ADA0M1	ADA0HS1	0	0	0	ADA0FR3	ADA0FR2	ADA0FR1	ADA0FR0

Cautions 1. Be sure to clear bits 6 to 4 to "0".

2. Be sure to set the ADA0HS1 bit to "1".

Remark For A/D conversion time setting examples, see **Table 11-2**.

Table 11-2. Conversion Mode Setting Example

ADA0HS1	ADA0FR3 to ADA0FR0				A/D Conversion Time	f_{XX} = 20 MHz	f_{XX} = 16 MHz	f_{XX} = 4 MHz	A/D Stabilization Time[Note]
	3	2	1	0					
1	0	0	0	0	31/f_{XX}	Setting prohibited	Setting prohibited	7.75 μs	16/f_{XX}
	0	0	0	1	62/f_{XX}	3.10 μs	3.88 μs	15.50 μs	31/f_{XX}
	0	0	1	0	93/f_{XX}	4.65 μs	5.81 μs	Setting prohibited	47/f_{XX}
	0	0	1	1	124/f_{XX}	6.20 μs	7.75 μs	Setting prohibited	50/f_{XX}
	0	1	0	0	155/f_{XX}	7.75 μs	9.69 μs	Setting prohibited	50/f_{XX}
	0	1	0	1	186/f_{XX}	9.30 μs	11.63 μs	Setting prohibited	50/f_{XX}
	0	1	1	0	217/f_{XX}	10.85 μs	13.56 μs	Setting prohibited	50/f_{XX}
	0	1	1	1	248/f_{XX}	12.40 μs	15.50 μs	Setting prohibited	50/f_{XX}
	1	0	0	0	279/f_{XX}	13.95 μs	Setting prohibited	Setting prohibited	50/f_{XX}
	1	0	0	1	310/f_{XX}	15.50 μs	Setting prohibited	Setting prohibited	50/f_{XX}
	1	0	1	0	341/f_{XX}	Setting prohibited	Setting prohibited	Setting prohibited	50/f_{XX}
	1	0	1	1	372/f_{XX}	Setting prohibited	Setting prohibited	Setting prohibited	50/f_{XX}
	1	1	0	0	403/f_{XX}	Setting prohibited	Setting prohibited	Setting prohibited	50/f_{XX}
	1	1	0	1	434/f_{XX}	Setting prohibited	Setting prohibited	Setting prohibited	50/f_{XX}
	1	1	1	0	465/f_{XX}	Setting prohibited	Setting prohibited	Setting prohibited	50/f_{XX}
	1	1	1	1	496/f_{XX}	Setting prohibited	Setting prohibited	Setting prohibited	50/f_{XX}

Note When the ADA0CE bit of the ADA0M0 register is changed from 0 to 1 to secure the A/D converter stabilization time, the first A/D conversion starts after one of the above clock values is input.

(3) A/D converter mode register 2 (ADA0M2)

The ADA0M2 register specifies the hardware trigger mode.

This register can be read or written in 8-bit or 1-bit units.

Reset sets this register to 00H.

After reset: 00H R/W Address: FFFFF203H

	7	6	5	4	3	2	1	0
ADA0M2	0	0	0	0	0	0	ADA0TMD1	ADA0TMD0

ADA0TMD1	ADA0TMD0	Specification of hardware trigger mode
0	0	External trigger mode (when ADTRG pin valid edge detected)
0	1	Timer trigger mode 0 (when INTTP2CC0 interrupt request generated)
1	0	Timer trigger mode 1 (when INTTP2CC1 interrupt request generated)
1	1	Setting prohibited

Caution Be sure to clear bits 7 to 2 to “0”.

(4) A/D converter channel specification register 0 (ADA0S)

The ADA0S register specifies the pin that inputs the analog voltage to be converted into a digital signal.

This register can be read or written in 8-bit or 1-bit units.

Reset sets this register to 00H.

After reset: 00H R/W Address: FFFFF202H

	7	6	5	4	3	2	1	0
ADA0S	0	0	0	0	ADA0S3	ADA0S2	ADA0S1	ADA0S0

ADA0S3	ADA0S2	ADA0S1	ADA0S0	Select mode	Scan mode
0	0	0	0	ANI0	ANI0
0	0	0	1	ANI1	ANI0, ANI1
0	0	1	0	ANI2	ANI0 to ANI2
0	0	1	1	ANI3	ANI0 to ANI3
0	1	0	0	ANI4	ANI0 to ANI4
0	1	0	1	ANI5	ANI0 to ANI5
0	1	1	0	ANI6	ANI0 to ANI6
0	1	1	1	ANI7	ANI0 to ANI7
1	0	0	0	ANI8	ANI0 to ANI8
1	0	0	1	ANI9	ANI0 to ANI9
Other than above				Setting prohibited	

(5) A/D conversion result registers n, nH (ADA0CRn, ADA0CRnH)

The ADA0CRn and ADA0CRnH registers store the A/D conversion results.

These registers are read-only, in 16-bit or 8-bit units. However, specify the ADA0CRn register for 16-bit access and the ADA0CRnH register for 8-bit access. The 10 bits of the conversion result are read from the higher 10 bits of the ADA0CRn register, and 0 is read from the lower 6 bits. The higher 8 bits of the conversion result are read from the ADA0CRnH register.

Caution Accessing the ADA0CRn and ADA0CRnH registers is prohibited in the following statuses. For details, see 3.4.8 (2) Accessing specific on-chip peripheral I/O registers.

- **When the CPU operates with the subclock and the main clock oscillation is stopped**
- **When the CPU operates with the internal oscillation clock**

After reset: Undefined R Address: ADA0CR0 FFFFF210H, ADA0CR1 FFFFF212H, ADA0CR2 FFFFF214H, ADA0CR3 FFFFF216H, ADA0CR4 FFFFF218H, ADA0CR5 FFFFF21AH, ADA0CR6 FFFFF21CH, ADA0CR7 FFFFF21EH, ADA0CR8 FFFFF220H, ADA0CR9 FFFFF222H

	15	14	13	12	11	10	9	8	7	6	5	4	3	2	1	0
ADA0CRn	AD9	AD8	AD7	AD6	AD5	AD4	AD3	AD2	AD1	AD0	0	0	0	0	0	0

After reset: Undefined R Address: ADA0CR0H FFFFF211H, ADA0CR1H FFFFF213H, ADA0CR2H FFFFF215H, ADA0CR3H FFFFF217H, ADA0CR4H FFFFF219H, ADA0CR5H FFFFF21BH, ADA0CR6H FFFFF21DH, ADA0CR7H FFFFF21FH, ADA0CR8H FFFFF221H, ADA0CR9H FFFFF223H

	7	6	5	4	3	2	1	0
ADA0CRnH	AD9	AD8	AD7	AD6	AD5	AD4	AD3	AD2

Remark n = 0 to 9

Caution A write operation to the ADA0M0 and ADA0S registers may cause the contents of the ADA0CRn register to become undefined. After the conversion, read the conversion result before writing to the ADA0M0 and ADA0S registers. Correct conversion results may not be read if a sequence other than the above is used.

The relationship between the analog voltage input to the analog input pins (ANI0 to ANI9) and the A/D conversion result (ADA0CRn register) is as follows.

$$SAR = INT\left(\frac{V_{IN}}{AV_{REF0}} \times 1{,}024 + 0.5\right)$$

$$ADA0CR^{Note} = SAR \times 64$$

Or,

$$(SAR - 0.5) \times \frac{AV_{REF0}}{1{,}024} \leq V_{IN} < (SAR + 0.5) \times \frac{AV_{REF0}}{1{,}024}$$

INT( ): Function that returns the integer of the value in ( )
V_{IN}: Analog input voltage
AV_{REF0}: AV_{REF0} pin voltage
ADA0CR: Value of ADA0CRn register

Note The lower 6 bits of the ADA0CRn register are fixed to 0.

The following shows the relationship between the analog input voltage and the A/D conversion results.

Figure 11-2. Relationship Between Analog Input Voltage and A/D Conversion Results

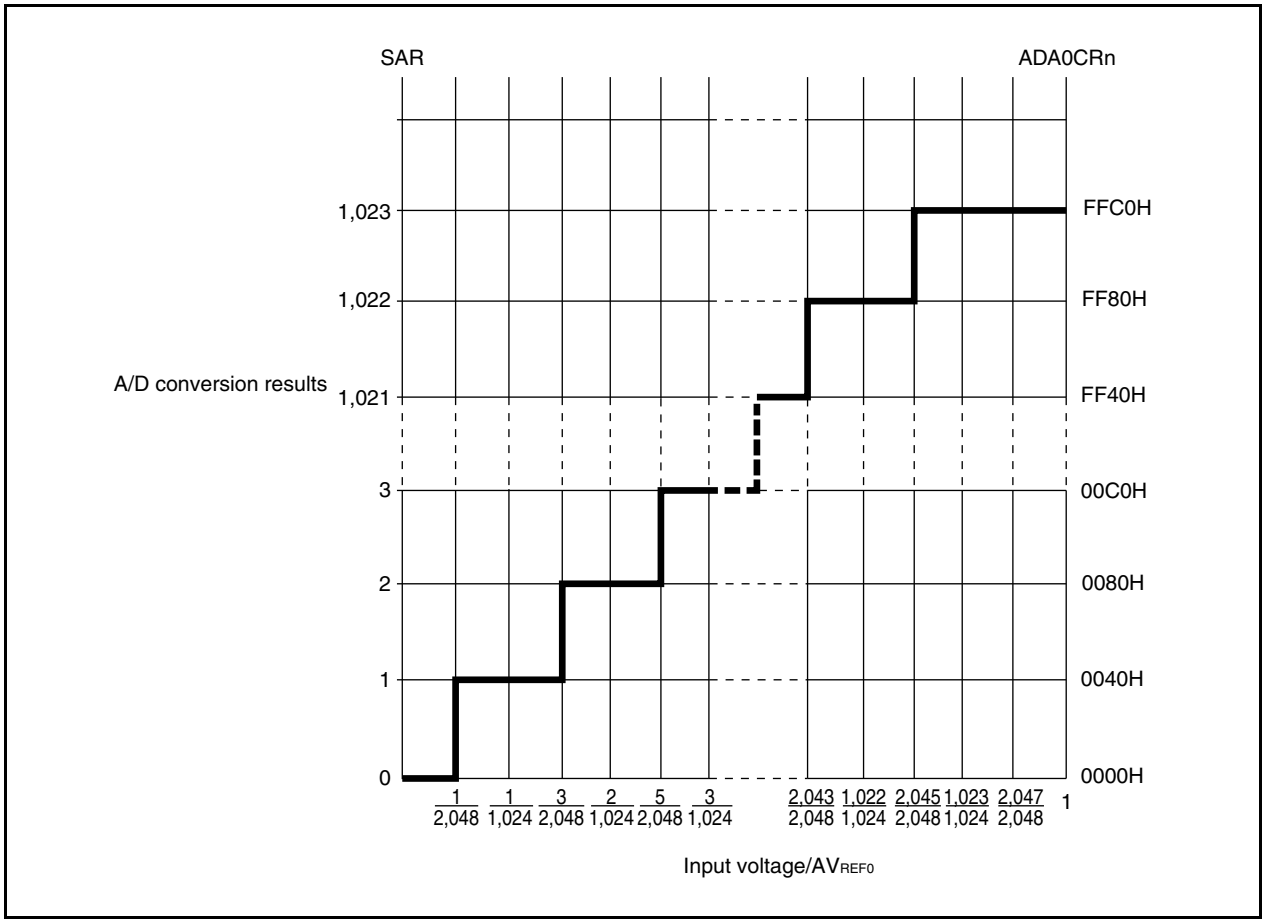

(6) Power-fail compare mode register (ADA0PFM)

The ADA0PFM register is an 8-bit register that sets the power-fail compare mode.

This register can be read or written in 8-bit or 1-bit units.

Reset sets this register to 00H.

After reset: 00H R/W Address: FFFFF204H

	7	6	5	4	3	2	1	0
ADA0PFM	ADA0PFE	ADA0PFC	0	0	0	0	0	0

ADA0PFE	Selection of power-fail compare enable/disable
0	Power-fail compare disabled
1	Power-fail compare enabled

ADA0PFC	Selection of power-fail compare mode
0	Generates an interrupt request signal (INTAD) when ADA0CRnH ≥ ADA0PFT
1	Generates an interrupt request signal (INTAD) when ADA0CRnH < ADA0PFT

Cautions 1. In the select mode, the 8-bit data set to the ADA0PFT register is compared with the value of the ADA0CRnH register specified by the ADA0S register. If the result matches the condition specified by the ADA0PFC bit, the conversion result is stored in the ADA0CRn register and the INTAD signal is generated. If it does not match, however, the interrupt signal is not generated.

2. In the scan mode, the 8-bit data set to the ADA0PFT register is compared with the contents of the ADA0CR0H register. If the result matches the condition specified by the ADA0PFC bit, the conversion result is stored in the ADA0CR0 register and the INTAD signal is generated. If it does not match, however, the INTAD signal is not generated. Regardless of the comparison result, the scan operation is continued and the conversion result is stored in the ADA0CRn register until the scan operation is completed. However, the INTAD signal is not generated after the scan operation has been completed.

(7) Power-fail compare threshold value register (ADA0PFT)

The ADA0PFT register sets the compare value in the power-fail compare mode.

This register can be read or written in 8-bit or 1-bit units.

Reset sets this register to 00H.

After reset: 00H R/W Address: FFFFF205H

	7	6	5	4	3	2	1	0
ADA0PFT								

11.5 Operation

11.5.1 Basic operation

<1> Set the operation mode, trigger mode, and conversion time for executing A/D conversion by using the ADA0M0, ADA0M1, ADA0M2, and ADA0S registers. When the ADA0CE bit of the ADA0M0 register is set, conversion is started in the software trigger mode and the A/D converter waits for a trigger in the external or timer trigger mode.

<2> When A/D conversion is started, the voltage input to the selected analog input channel is sampled by the sample & hold circuit.

<3> When the sample & hold circuit samples the input channel for a specific time, it enters the hold status, and holds the input analog voltage until A/D conversion is complete.

<4> Set bit 9 of the successive approximation register (SAR) to set the compare voltage generation DAC to (1/2) AV_{REF0}.

<5> The voltage difference between the compare voltage generation DAC and the analog input voltage is compared by the voltage comparator. If the analog input voltage is higher than (1/2) AV_{REF0}, the MSB of the SAR register remains set. If it is lower than (1/2) AV_{REF0}, the MSB is reset.

<6> Next, bit 8 of the SAR register is automatically set and the next comparison is started. Depending on the value of bit 9, to which a result has been already set, the compare voltage generation DAC is selected as follows.
- Bit 9 = 1: (3/4) AV_{REF0}
- Bit 9 = 0: (1/4) AV_{REF0}

This compare voltage and the analog input voltage are compared and, depending on the result, bit 8 is manipulated as follows.
Analog input voltage ≥ Compare voltage: Bit 8 = 1
Analog input voltage ≤ Compare voltage: Bit 8 = 0

<7> This comparison is continued to bit 0 of the SAR register.

<8> When comparison of the 10 bits is complete, the valid digital result is stored in the SAR register, which is then transferred to and stored in the ADA0CRn register. After that, an A/D conversion end interrupt request signal (INTAD) is generated.

11.5.2 Trigger mode

The timing of starting the conversion operation is specified by setting a trigger mode. The trigger mode includes a software trigger mode and hardware trigger modes. The hardware trigger modes include timer trigger modes 0 and 1, and external trigger mode. The ADA0M0.ADA0TMD bit is used to set the trigger mode. The hardware trigger modes are set by the ADA0M2.ADA0TMD1 and ADA0M2.ADA0TMD0 bits.

(1) Software trigger mode

When the ADA0M0.ADA0CE bit is set to 1, the signal of the analog input pin (ANI0 to ANI9) specified by the ADA0S register is converted. When conversion is complete, the result is stored in the ADA0CRn register. At the same time, the A/D conversion end interrupt request signal (INTAD) is generated.

If the operation mode specified by the ADA0M0.ADA0MD1 and ADA0M0.ADA0MD0 bits is the continuous select/scan mode, the next conversion is started, unless the ADA0CE bit is cleared to 0 after completion of the first conversion. Conversion is performed once and ends if the operation mode is the one-shot select/scan mode.

When conversion is started, the ADA0M0.ADA0EF bit is set to 1 (indicating that conversion is in progress).

If the ADA0M0, ADA0M2, ADA0S, ADA0PFM, or ADA0PFT register is written during conversion, the conversion is aborted and started again from the beginning.

(2) External trigger mode

In this mode, converting the signal of the analog input pin (ANI0 to ANI9) specified by the ADA0S register is started when an external trigger is input (to the ADTRG pin). Which edge of the external trigger is to be detected (i.e., the rising edge, falling edge, or both rising and falling edges) can be specified by using the ADA0M0.ADA0ETS1 and ADA0M0.ATA0ETS0 bits. When the ADA0CE bit is set to 1, the A/D converter waits for the trigger, and starts conversion after the external trigger has been input.

When conversion is completed, the result of conversion is stored in the ADA0CRn register, regardless of whether the continuous select, continuous scan, or one-shot scan mode is set as the operation mode by the ADA0MD1 and ADA0MD0 bits. At the same time, the INTAD signal is generated, and the A/D converter waits for the trigger again.

When conversion is started, the ADA0EF bit is set to 1 (indicating that conversion is in progress). While the A/D converter is waiting for the trigger, however, the ADA0EF bit is cleared to 0 (indicating that conversion is stopped). If the valid trigger is input during the conversion operation, the conversion is aborted and started again from the beginning.

If the ADA0M0, ADA0M2, ADA0S, ADA0PFM, or ADA0PFT register is written during the conversion operation, the conversion is not aborted, and the A/D converter waits for the trigger again.

(3) Timer trigger mode

In this mode, converting the signal of the analog input pin (ANI0 to ANI9) specified by the ADA0S register is started by the compare match interrupt request signal (INTTP2CC0 or INTTP2CC1) of the capture/compare register connected to the timer. The INTTP2CC0 or INTTP2CC1 signal is selected by the ADA0TMD1 and ADA0TMD0 bits, and conversion is started at the rising edge of the specified compare match interrupt request signal. When the ADA0CE bit is set to 1, the A/D converter waits for a trigger, and starts conversion when the compare match interrupt request signal of the timer is input.

When conversion is completed, regardless of whether the continuous select, continuous scan, or one-shot scan mode is set as the operation mode by the ADA0MD1 and ADA0MD0 bits, the result of the conversion is stored in the ADA0CRn register. At the same time, the INTAD signal is generated, and the A/D converter waits for the trigger again.

When conversion is started, the ADA0EF bit is set to 1 (indicating that conversion is in progress). While the A/D converter is waiting for the trigger, however, the ADA0EF bit is cleared to 0 (indicating that conversion is stopped). If the valid trigger is input during the conversion operation, the conversion is aborted and started again from the beginning.

If the ADA0M0, ADA0M2, ADA0S, ADA0PFM, or ADA0PFT register is written during conversion, the conversion is stopped and the A/D converter waits for the trigger again.

11.5.3 Operation mode

Three operation modes are available as the modes in which to set the ANI0 to ANI9 pins: continuous select mode, continuous scan mode, and one-shot scan mode.

The operation mode is selected by the ADA0M0.ADA0MD1 and ADA0M0.ADA0MD0 bits.

(1) Continuous select mode

In this mode, the voltage of one analog input pin selected by the ADA0S register is continuously converted into a digital value.

The conversion result is stored in the ADA0CRn register corresponding to the analog input pin. In this mode, an analog input pin corresponds to an ADA0CRn register on a one-to-one basis. Each time A/D conversion is completed, the A/D conversion end interrupt request signal (INTAD) is generated. After completion of conversion, the next conversion is started, unless the ADA0M0.ADA0CE bit is cleared to 0 (n = 0 to 9).

Figure 11-3. Timing Example of Continuous Select Mode Operation (ADA0S Register = 01H)

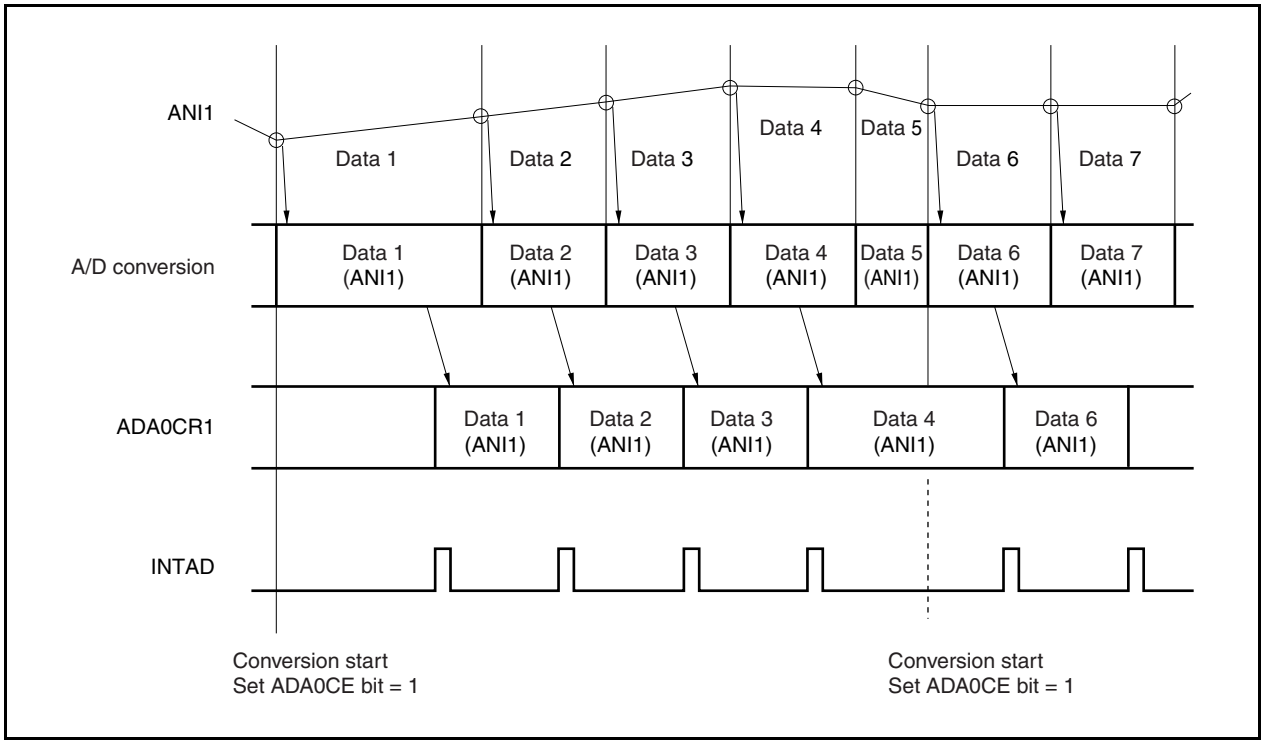

(2) Continuous scan mode

In this mode, analog input pins are sequentially selected, from the ANI0 pin to the pin specified by the ADA0S register, and their values are converted into digital values.

The result of each conversion is stored in the ADA0CRn register corresponding to the analog input pin. When conversion of the analog input pin specified by the ADA0S register is complete, the INTAD signal is generated, and A/D conversion is started again from the ANI0 pin, unless the ADA0CE bit is cleared to 0 (n = 0 to 9).

Figure 11-4. Timing Example of Continuous Scan Mode Operation (ADA0S Register = 03H)

(a) Timing example

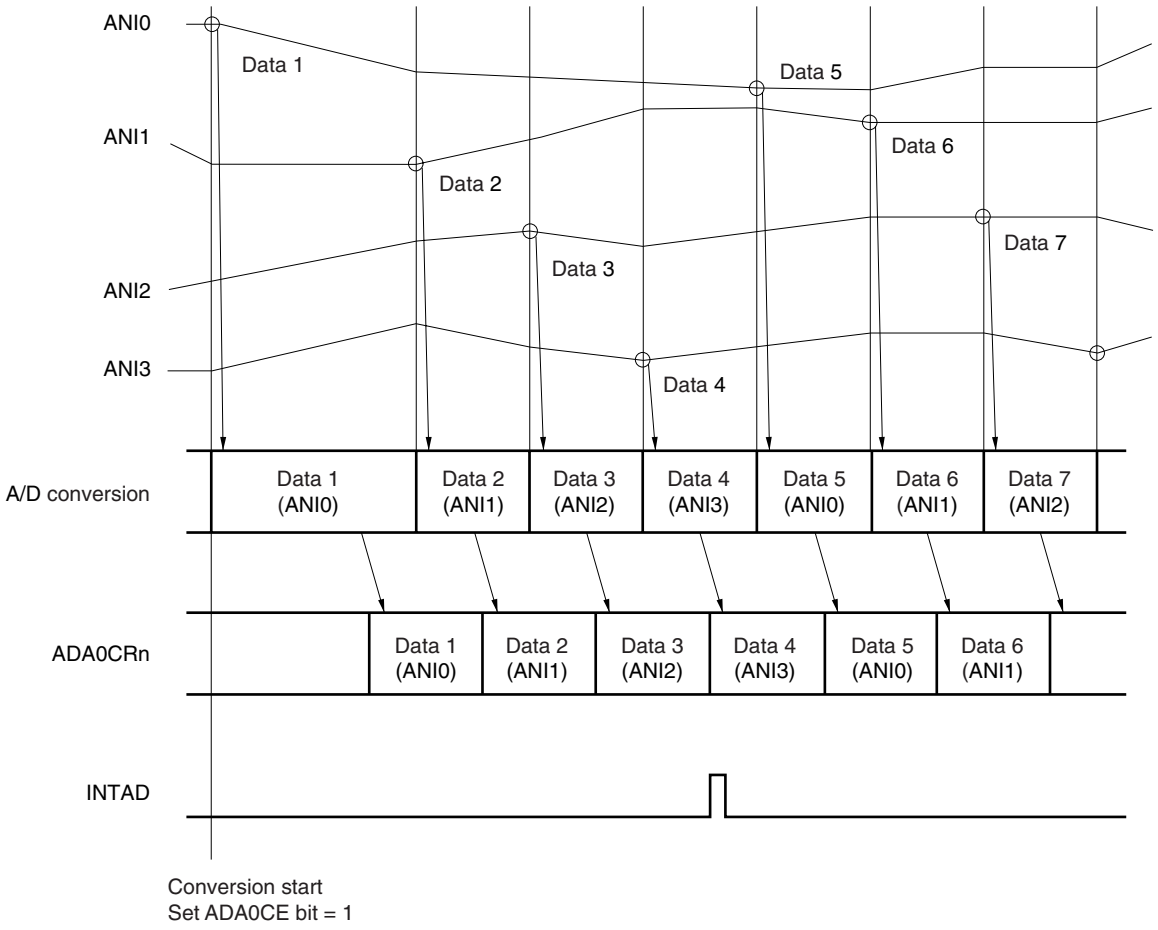

(b) Block diagram

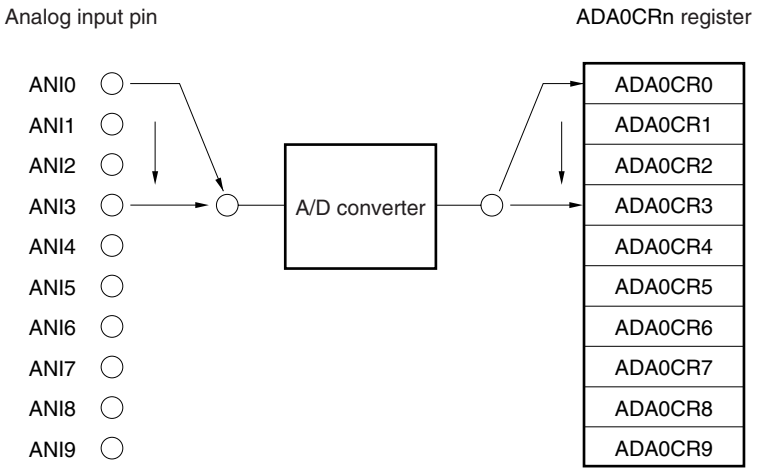

(3) One-shot scan mode

In this mode, analog input pins are sequentially selected, from the ANI0 pin to the pin specified by the ADA0S register, and their values are converted into digital values.

Each conversion result is stored in the ADA0CRn register corresponding to the analog input pin. When conversion of the analog input pin specified by the ADA0S register is complete, the INTAD signal is generated. A/D conversion is stopped after it has been completed (n = 0 to 9).

Figure 11-5. Timing Example of One-Shot Scan Mode Operation (ADA0S Register = 03H)

(a) Timing example

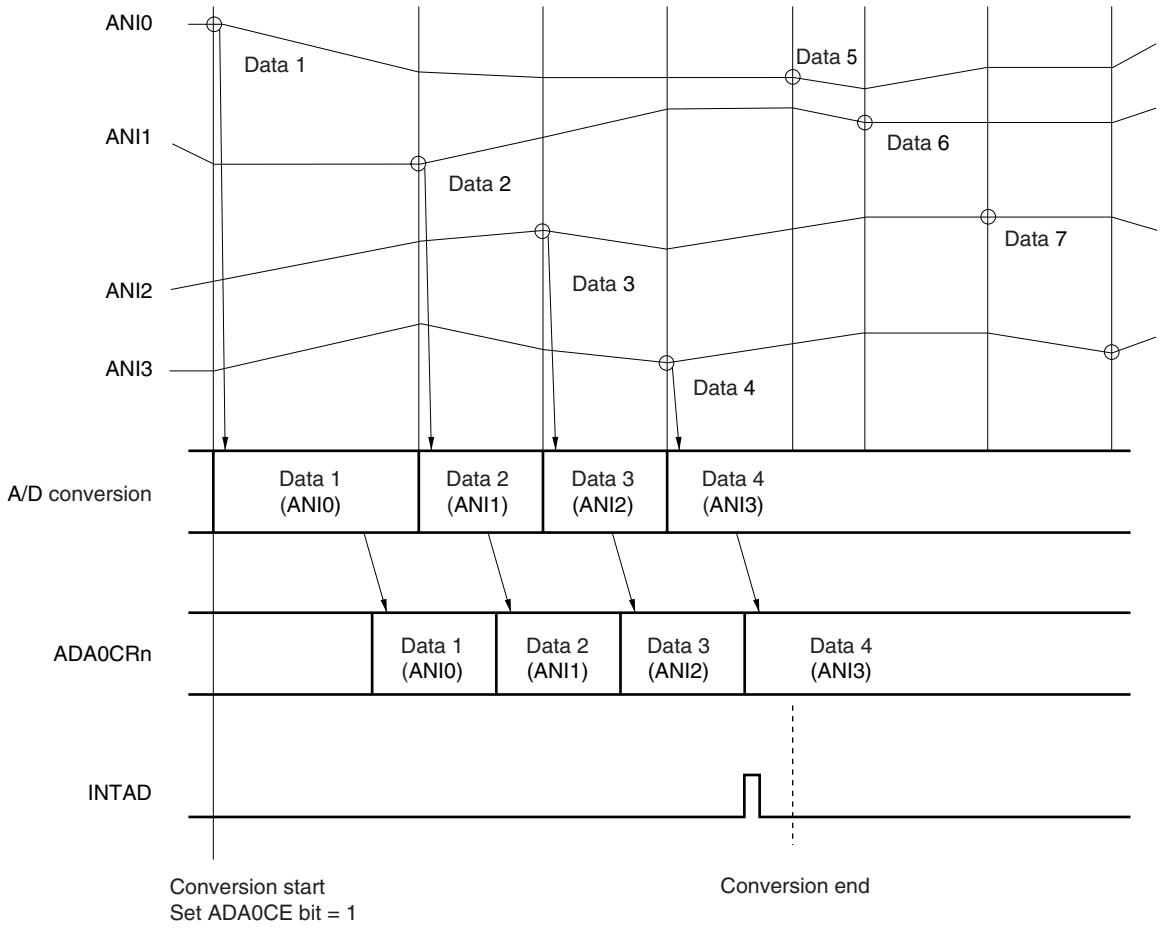

(b) Block diagram

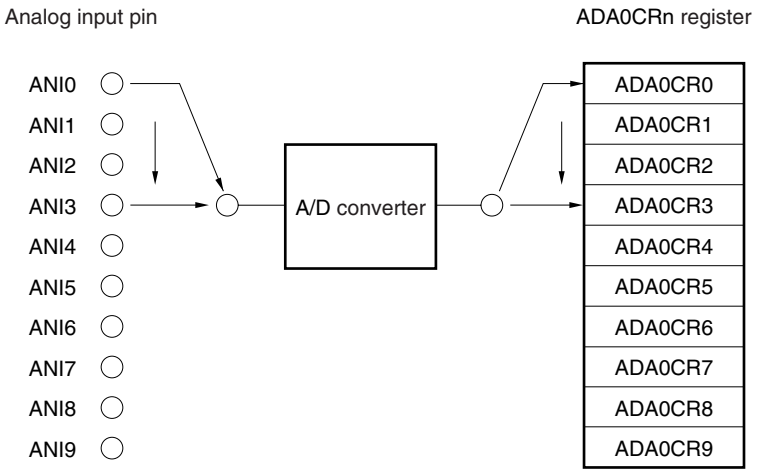

11.5.4 Power-fail compare mode

The A/D conversion end interrupt request signal (INTAD) can be controlled as follows by the ADA0PFM and ADA0PFT registers.

- When the ADA0PFM.ADA0PFE bit = 0, the INTAD signal is generated each time conversion is completed (normal use of the A/D converter).
- When the ADA0PFE bit = 1 and when the ADA0PFM.ADA0PFC bit = 0, the value of the ADA0CRnH register is compared with the value of the ADA0PFT register when conversion is completed, and the INTAD signal is generated only if ADA0CRnH ≥ ADA0PFT.
- When the ADA0PFE bit = 1 and when the ADA0PFC bit = 1, the value of the ADA0CRnH register is compared with the value of the ADA0PFT register when conversion is completed, and the INTAD signal is generated only if ADA0CRnH < ADA0PFT.

Remark n = 0 to 9

In the power-fail compare mode, three modes are available as modes in which to set the ANI0 to ANI9 pins: continuous select mode, continuous scan mode, and one-shot scan mode.

(1) Continuous select mode

In this mode, the result of converting the voltage of the analog input pin specified by the ADA0S register is compared with the set value of the ADA0PFT register. If the result of power-fail comparison matches the condition set by the ADA0PFC bit, the conversion result is stored in the ADA0CRn register, and the INTAD signal is generated. If it does not match, the conversion result is stored in the ADA0CRn register, and the INTAD signal is not generated. After completion of the first conversion, the next conversion is started, unless the ADA0M0.ADA0CE bit is cleared to 0 (n = 0 to 9).

Figure 11-6. Timing Example of Continuous Select Mode Operation (When Power-Fail Comparison Is Made: ADA0S Register = 01H)

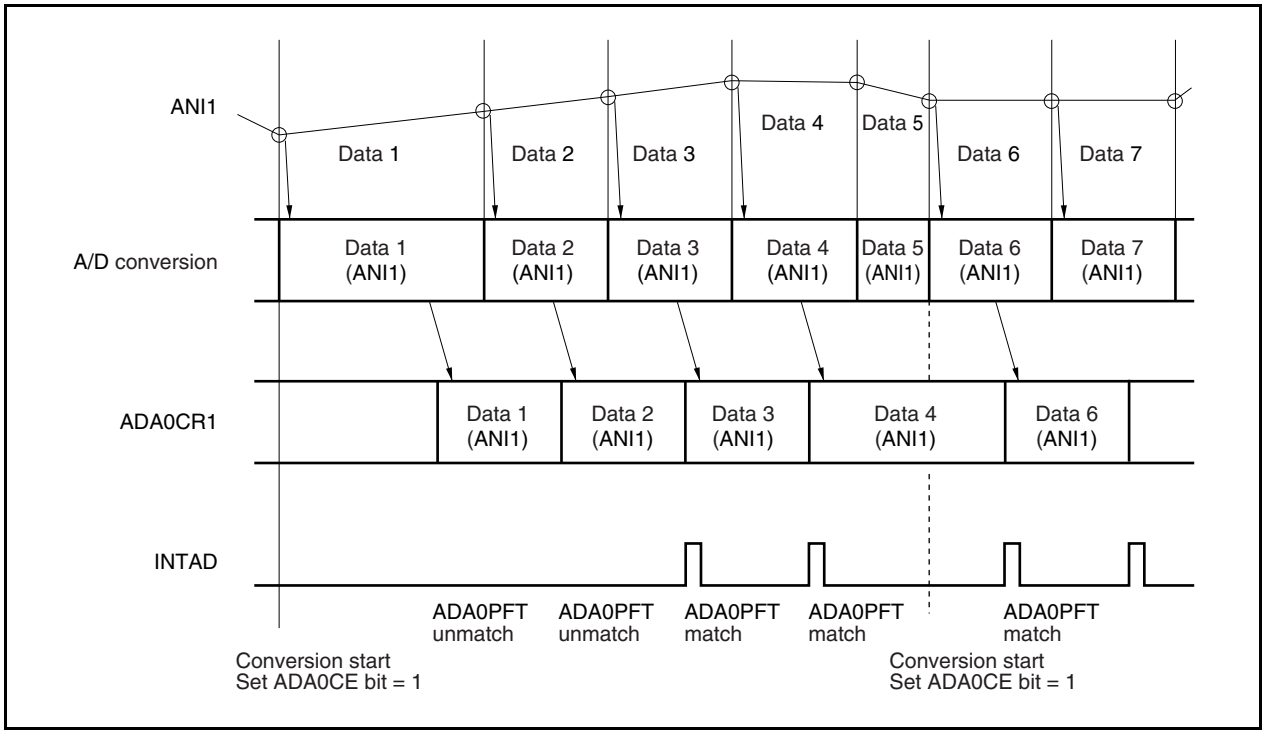

(2) Continuous scan mode

In this mode, the results of converting the voltages of the analog input pins sequentially selected from the ANI0 pin to the pin specified by the ADA0S register are stored, and the set value of the ADA0CR0H register of channel 0 is compared with the value of the ADA0PFT register. If the result of power-fail comparison matches the condition set by the ADA0PFC bit, the conversion result is stored in the ADA0CR0 register, and the INTAD signal is generated. If it does not match, the conversion result is stored in the ADA0CR0 register, and the INTAD signal is not generated.

After the result of the first conversion has been stored in the ADA0CR0 register, the results of sequentially converting the voltages on the analog input pins up to the pin specified by the ADA0S register are continuously stored. After completion of conversion, the next conversion is started from the ANI0 pin again, unless the ADA0CE bit is cleared to 0.

Figure 11-7. Timing Example of Continuous Scan Mode Operation (When Power-Fail Comparison Is Made: ADA0S Register = 03H)

(a) Timing example

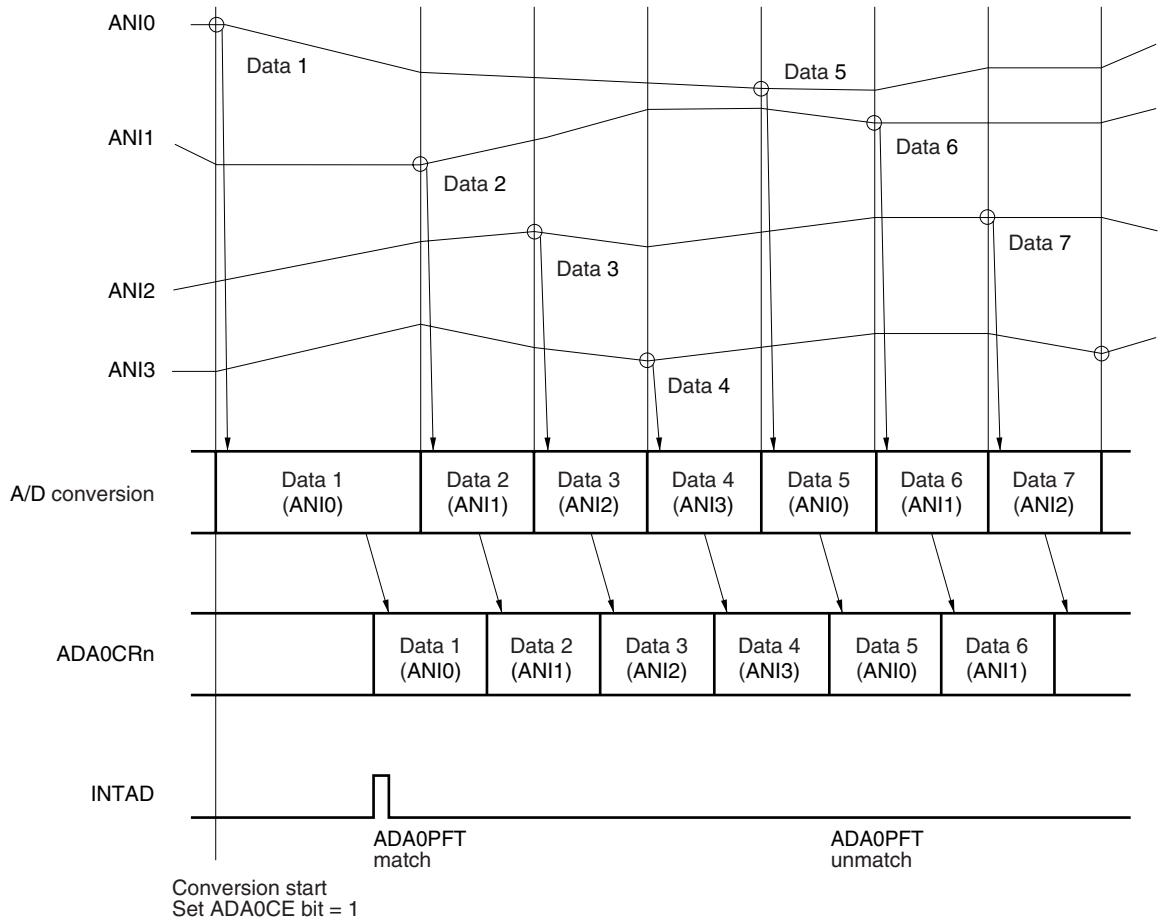

(b) Block diagram

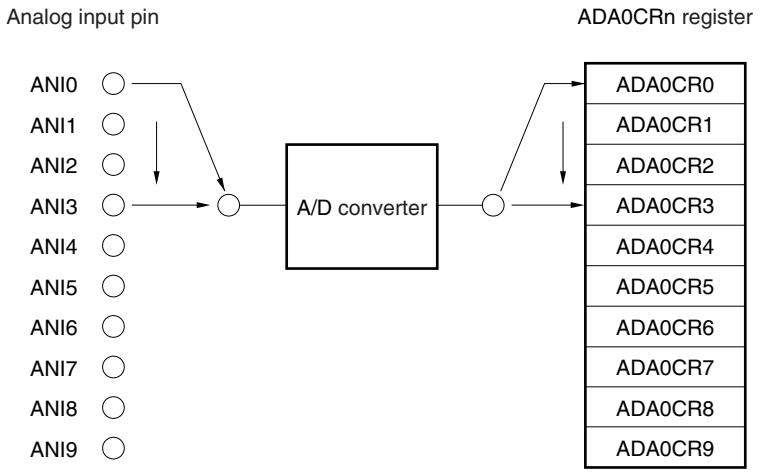

(3) One-shot scan mode

In this mode, the results of converting the voltages of the analog input pins sequentially selected from the ANI0 pin to the pin specified by the ADA0S register are stored, and the set value of the ADA0CR0H register of channel 0 is compared with the set value of the ADA0PFT register. If the result of power-fail comparison matches the condition set by the ADA0PFC bit, the conversion result is stored in the ADA0CR0 register and the INTAD signal is generated. If it does not match, the conversion result is stored in the ADA0CR0 register, and the INTAD0 signal is not generated. After the result of the first conversion has been stored in the ADA0CR0 register, the results of converting the signals on the analog input pins specified by the ADA0S register are sequentially stored. The conversion is stopped after it has been completed.

Figure 11-8. Timing Example of One-Shot Scan Mode Operation (When Power-Fail Comparison Is Made: ADA0S Register = 03H)

(a) Timing example

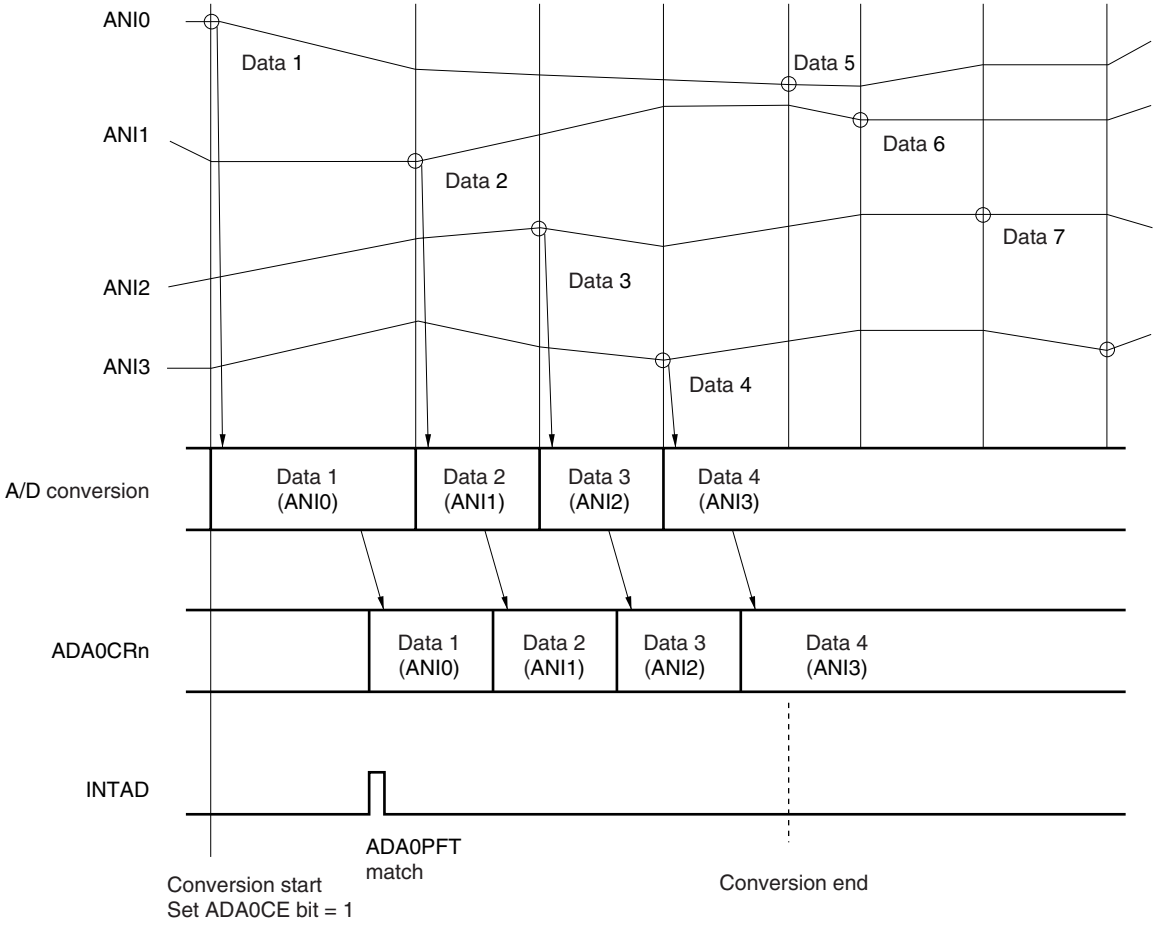

(b) Block diagram

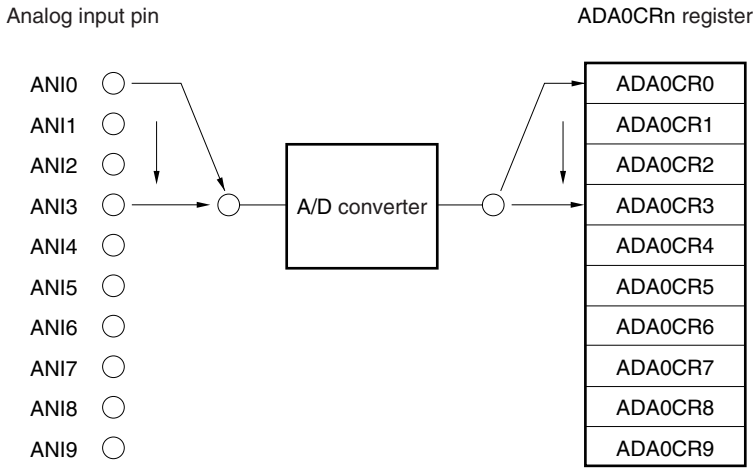

11.6 Cautions

(1) When A/D converter is not used

When the A/D converter is not used, the power consumption can be reduced by clearing the ADA0M0.ADA0CE bit to 0.

(2) Input range of ANI0 to ANI9 pins

Input the voltage within the specified range to the ANI0 to ANI9 pins. If a voltage equal to or higher than AV_{REF0} or equal to or lower than AV_{SS} (even within the range of the absolute maximum ratings) is input to any of these pins, the conversion value of that channel is undefined, and the conversion value of the other channels may also be affected.

(3) Countermeasures against noise

To maintain the 10-bit resolution, the ANI0 to ANI9 pins must be effectively protected from noise. The influence of noise increases as the output impedance of the analog input source becomes higher. To lower the noise, connecting an external capacitor as shown in Figure 11-9 is recommended.

Figure 11-9. Processing of Analog Input Pin

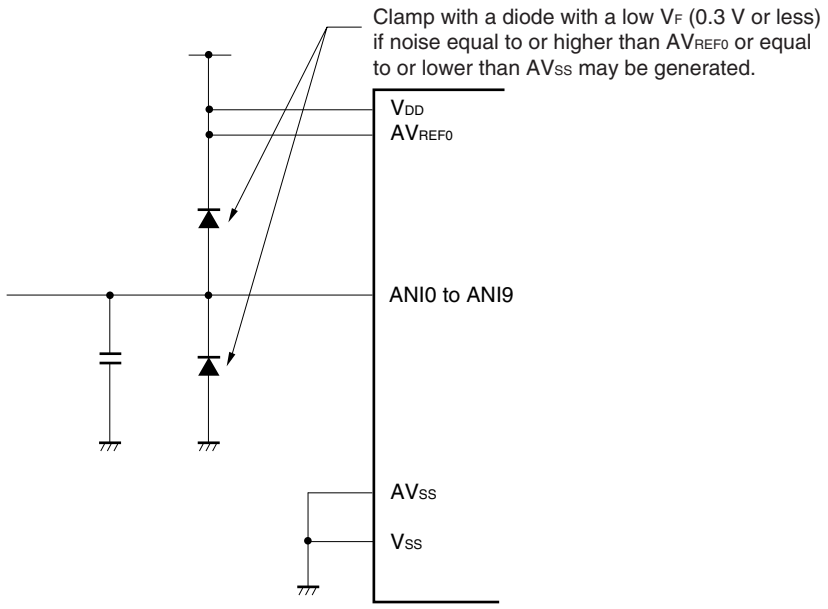

(4) Alternate I/O

The analog input pins (ANI0 to ANI9) function alternately as port pins. When selecting one of the ANI0 to ANI9 pins to execute A/D conversion, do not execute an instruction to read an input port or write to an output port during conversion as the conversion resolution may drop.

Also the conversion resolution may drop at the pins set as output port pins during A/D conversion if the current flows due to the effect of the external circuit connected to the port pins.

If a digital pulse is applied to a pin adjacent to the pin whose input signal is being converted, the A/D conversion value may not be as expected due to the influence of coupling noise. Therefore, do not apply a pulse to a pin adjacent to the pin undergoing A/D conversion.

(5) Interrupt request flag (ADIF)

The interrupt request flag (ADIF) is not cleared even if the contents of the ADA0S register are changed. If the analog input pin is changed during A/D conversion, therefore, the result of converting the previously selected analog input signal may be stored and the conversion end interrupt request flag may be set immediately before the ADA0S register is rewritten. If the ADIF flag is read immediately after the ADA0S register is rewritten, the ADIF flag may be set even though the A/D conversion of the newly selected analog input pin has not been completed. When A/D conversion is stopped, clear the ADIF flag before resuming conversion.

Figure 11-10. Generation Timing of A/D Conversion End Interrupt Request

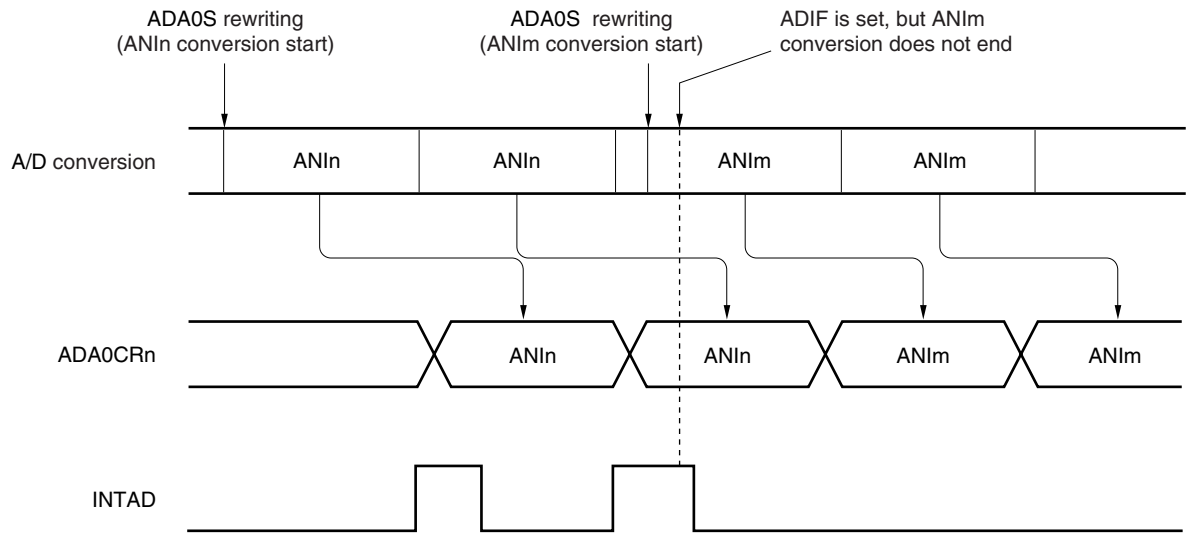

Remark n = 0 to 9
m = 0 to 9

(6) Internal equivalent circuit

The following shows the equivalent circuit of the analog input block.

Figure 11-11. Internal Equivalent Circuit of ANIn Pin

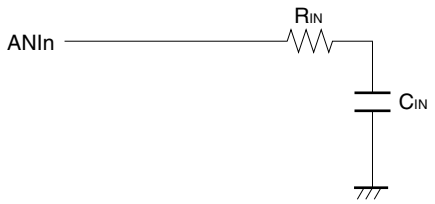

R_{IN}	C_{IN}
TBD	TBD

Remark n = 0 to 9

(7) AV_{REF0} pin

(a) The AV_{REF0} pin is used as the power supply pin of the A/D converter and also supplies power to the alternate-function ports. In an application where a backup power supply is used, be sure to supply the same voltage as V_{DD} to the AV_{REF0} pin as shown in Figure 11-12.

(b) The AV_{REF0} pin is also used as the reference voltage pin of the A/D converter. If the source supplying power to the AV_{REF0} pin has a high impedance or if the power supply has a low current supply capability, the reference voltage may fluctuate due to the current that flows during conversion (especially, immediately after the conversion operation enable bit ADA0CE has been set to 1). As a result, the conversion accuracy may drop. To avoid this, it is recommended to connect a capacitor across the AV_{REF0} and AV_{SS} pins to suppress the reference voltage fluctuation as shown in Figure 11-12.

(c) If the source supplying power to the AV_{REF0} pin has a high DC resistance (for example, because of insertion of a diode), the voltage when conversion is enabled may be lower than the voltage when conversion is stopped, because of a voltage drop caused by the A/D conversion current.

Figure 11-12. AV_{REF0} Pin Processing Example

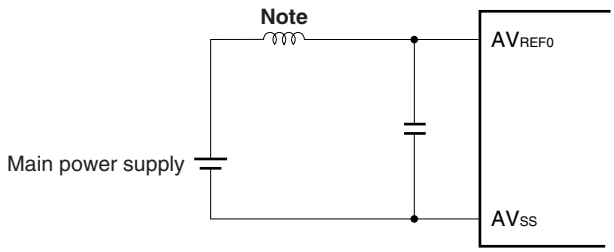

Note Parasitic inductance

(8) Reading ADA0CRn result

When the ADA0M0 to ADA0M2 or ADA0S register is written, the contents of the ADA0CRn register may be undefined. Read the conversion result after completion of conversion and before writing to the ADA0M0 to ADA0M2 and ADA0S registers. The correct conversion result may not be read at a timing different from the above.

(9) A/D conversion result

If there is noise at the analog input pins and at the reference voltage input pins, that noise may generate an illegal conversion result. Software processing will be needed to avoid a negative effect on the system from this illegal conversion result. An example of this software processing is shown below.

- Take the average result of a number of A/D conversions and use that as the A/D conversion result.
- Execute a number of A/D conversions consecutively and use those results, omitting any exceptional results that may have been obtained.
- If an A/D conversion result that is judged to have generated a system malfunction is obtained, be sure to recheck the system malfunction before performing malfunction processing.

(10) Variation of A/D conversion results

The results of the A/D conversion may vary depending on the fluctuation of the supply voltage, or may be affected by noise. To reduce the variation, take counteractive measures with the program such as averaging the A/D conversion results.

(11) A/D conversion result hysteresis characteristics

The successive comparison type A/D converter holds the analog input voltage in the internal sample & hold capacitor and then performs A/D conversion. After the A/D conversion has finished, the analog input voltage remains in the internal sample & hold capacitor. As a result, the following phenomena may occur.

- When the same channel is used for A/D conversions, if the voltage is higher or lower than the previous A/D conversion, then hysteresis characteristics may appear where the conversion result is affected by the previous value. Thus, even if the conversion is performed at the same potential, the result may vary.
- When switching the analog input channel, hysteresis characteristics may appear where the conversion result is affected by the previous channel value. This is because one A/D converter is used for the A/D conversions. Thus, even if the conversion is performed at the same potential, the result may vary.

11.7 How to Read A/D Converter Characteristics Table

This section describes the terms related to the A/D converter.

(1) Resolution

The minimum analog input voltage that can be recognized, i.e., the ratio of an analog input voltage to 1 bit of digital output is called 1 LSB (least significant bit). The ratio of 1 LSB to the full scale is expressed as %FSR (full-scale range). %FSR is the ratio of a range of convertible analog input voltages expressed as a percentage, and can be expressed as follows, independently of the resolution.

1%FSR = (Maximum value of convertible analog input voltage – Minimum value of convertible analog input voltage)/100

$= (AV_{REF0} - 0)/100$

$= AV_{REF0}/100$

When the resolution is 10 bits, 1 LSB is as follows:

$1\ LSB = 1/2^{10} = 1/1{,}024$

$= 0.098\%FSR$

The accuracy is determined by the overall error, independently of the resolution.

(2) Overall error

This is the maximum value of the difference between an actually measured value and a theoretical value.
It is a total of zero-scale error, full-scale error, linearity error, and a combination of these errors.
The overall error in the characteristics table does not include the quantization error.

Figure 11-13. Overall Error

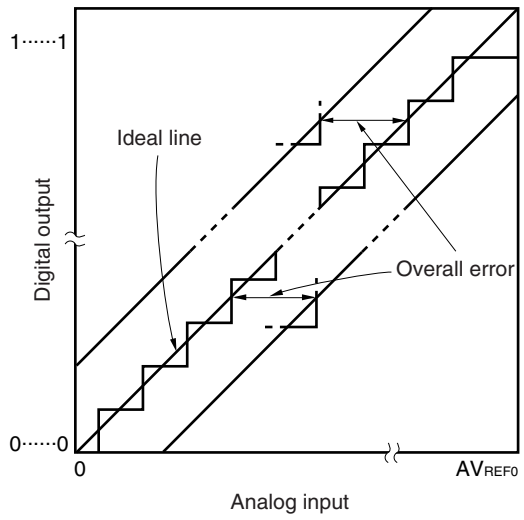

(3) Quantization error

This is an error of ±1/2 LSB that inevitably occurs when an analog value is converted into a digital value. Because the A/D converter converts analog input voltages in a range of ±1/2 LSB into the same digital codes, a quantization error is unavoidable.

This error is not included in the overall error, zero-scale error, full-scale error, integral linearity error, or differential linearity error in the characteristics table.

Figure 11-14. Quantization Error

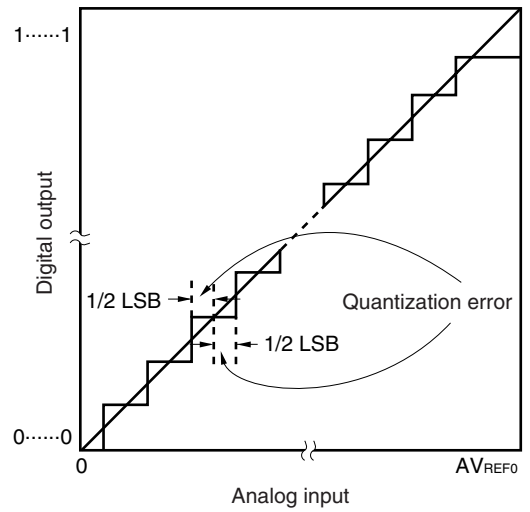

(4) Zero-scale error

This is the difference between the actually measured analog input voltage and its theoretical value when the digital output changes from 0…000 to 0…001 (1/2 LSB).

Figure 11-15. Zero-Scale Error

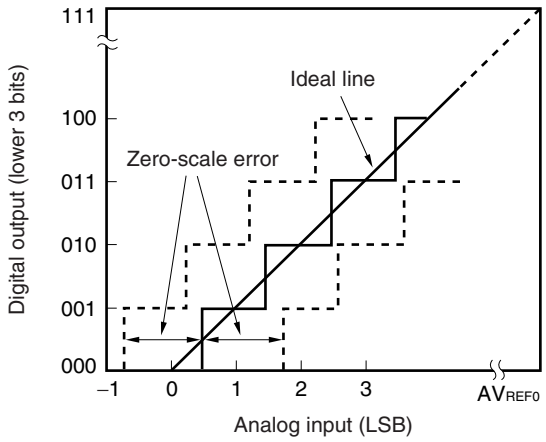

(5) Full-scale error

This is the difference between the actually measured analog input voltage and its theoretical value when the digital output changes from 1…110 to 1…111 (full scale – 3/2 LSB).

Figure 11-16. Full-Scale Error

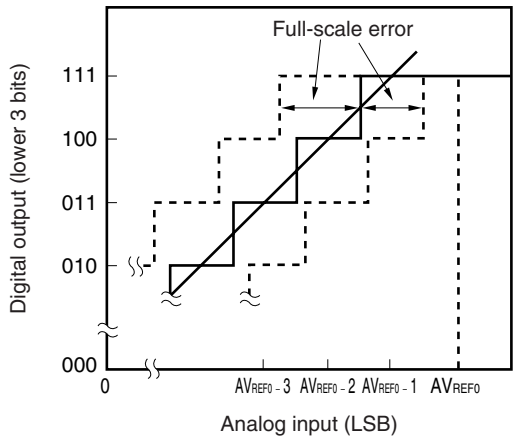

(6) Differential linearity error

Ideally, the width to output a specific code is 1 LSB. This error indicates the difference between the actually measured value and its theoretical value when a specific code is output. This indicates the basic characteristics of the A/D conversion when the voltage applied to the analog input pins of the same channel is consistently increased bit by bit from AV_{SS} to AV_{REF0}. When the input voltage is increased or decreased, or when two or more channels are used, see **11.7 (2) Overall error**.

Figure 11-17. Differential Linearity Error

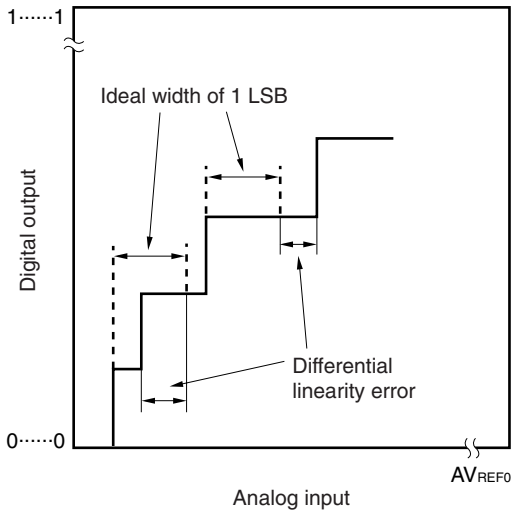

(7) Integral linearity error

This error indicates the extent to which the conversion characteristics differ from the ideal linear relationship. It indicates the maximum value of the difference between the actually measured value and its theoretical value where the zero-scale error and full-scale error are 0.

Figure 11-18. Integral Linearity Error

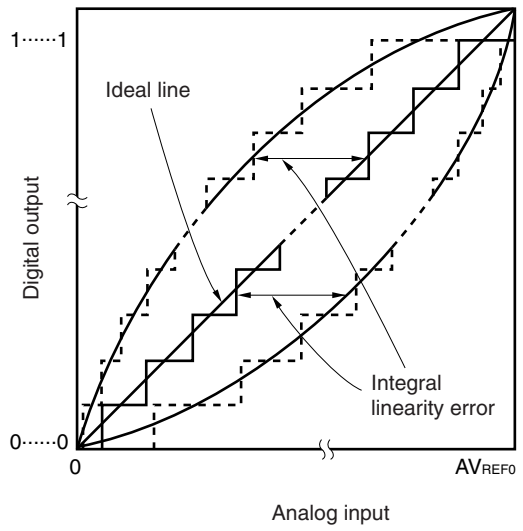

(8) Conversion time

This is the time required to obtain a digital output after each trigger has been generated.
The conversion time in the characteristics table includes the sampling time.

(9) Sampling time

This is the time for which the analog switch is ON to load an analog voltage to the sample & hold circuit.

Figure 11-19. Sampling Time

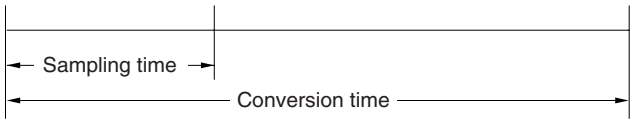

CHAPTER 12 ASYNCHRONOUS SERIAL INTERFACE A (UARTA)

The V850ES/HE2 includes two channels of asynchronous serial interface A (UARTA).

12.1 Features

○ Transfer rate: 300 bps to 312.5 kbps (using internal system clock of 20 MHz and dedicated baud rate generator)

○ Full-duplex communication: Internal UARTAn receive data register (UAnRX)
Internal UARTAn transmit data register (UAnTX)

○ 2-pin configuration: TXDAn: Transmit data output pin
RXDAn: Receive data input pin

○ Reception error output function
- Parity error
- Framing error
- Overrun error

○ Interrupt sources: 2
- Reception complete interrupt (INTUAnR): An interrupt is generated in the reception enabled status by ORing three types of reception errors. It is also generated when receive data is transferred from the receive shift register to the receive data register after completion of serial transfer.
- Transmission enable interrupt (INTUAnT): This interrupt occurs upon transfer of transmit data from the transmit data register to the transmit shift register in the transmission enabled status.

○ Character length: 7, 8 bits

○ Parity function: Odd, even, 0, none

○ Transmission stop bit: 1, 2 bits

○ On-chip dedicated baud rate generator

○ MSB-/LSB-first transfer selectable

○ Transmit/receive data inverted input/output possible

○ SBF (Sync Break Field) transmission/reception in the LIN (Local Interconnect Network) communication format possible
- 13 to 20 bits selectable for SBF transmission
- Recognition of 11 bits or more possible for SBF reception
- SBF reception flag provided

Remark n = 0, 1

12.2 Configuration

The block diagram of the UARTAn is shown below.

Figure 12-1. Block Diagram of Asynchronous Serial Interface An

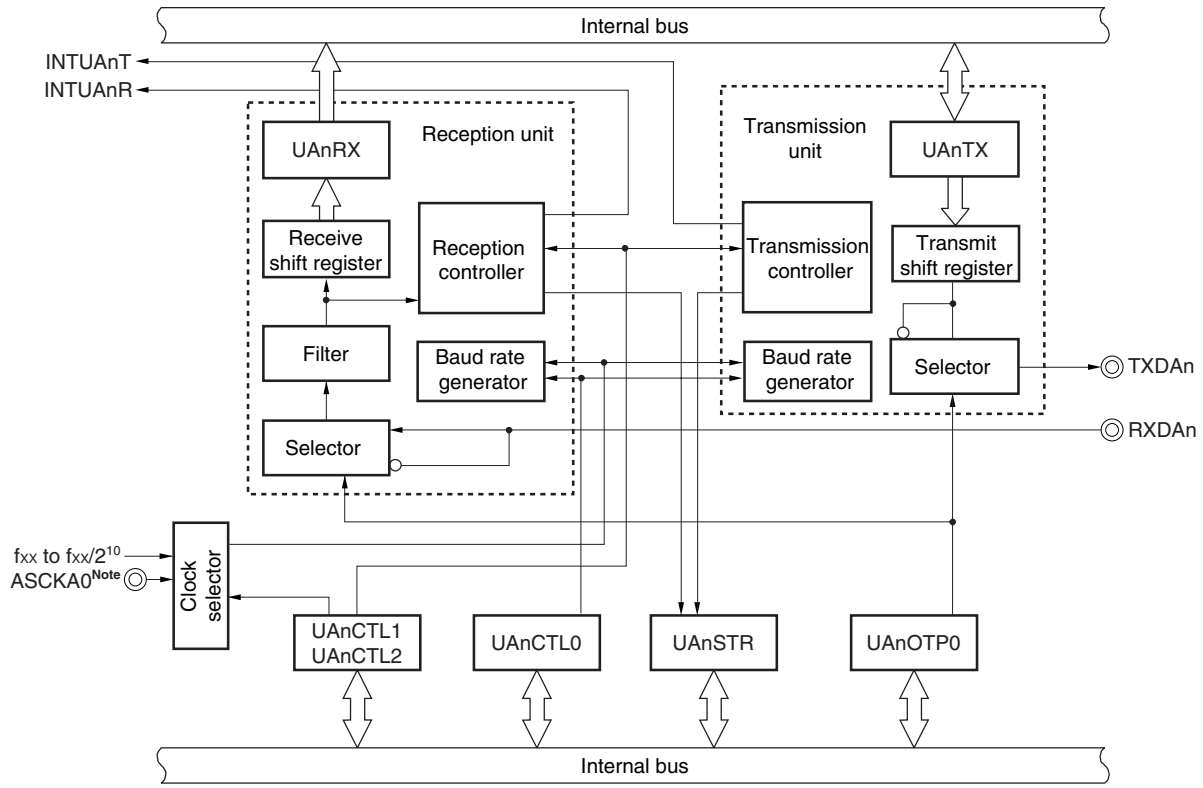

Note UARTA0 only

Remarks 1. n = 0, 1

2. For the configuration of the baud rate generator, see **Figure 12-13**.

UARTAn includes the following hardware units.

Table 12-1. Configuration of UARTAn

Item	Configuration
Registers	UARTAn control register 0 (UAnCTL0) UARTAn control register 1 (UAnCTL1) UARTAn control register 2 (UAnCTL2) UARTAn option control register 0 (UAnOPT0) UARTAn status register (UAnSTR) UARTAn receive shift register UARTAn receive data register (UAnRX) UARTAn transmit shift register UARTAn transmit data register (UAnTX)

(1) UARTAn control register 0 (UAnCTL0)

The UAnCTL0 register is an 8-bit register used to specify the UARTAn operation.

(2) UARTAn control register 1 (UAnCTL1)

The UAnCTL1 register is an 8-bit register used to select the input clock for the UARTAn.

(3) UARTAn control register 2 (UAnCTL2)

The UAnCTL2 register is an 8-bit register used to control the baud rate for the UARTAn.

(4) UARTAn option control register 0 (UAnOPT0)

The UAnOPT0 register is an 8-bit register used to control serial transfer for the UARTAn.

(5) UARTAn status register (UAnSTR)

The UAnSTRn register consists of flags indicating the error contents when a reception error occurs. Each one of the reception error flags is set (to 1) upon occurrence of a reception error and is reset (to 0) by reading the UAnSTR register.

(6) UARTAn receive shift register

This is a shift register used to convert the serial data input to the RXDAn pin into parallel data. Upon reception of 1 byte of data and detection of the stop bit, the receive data is transferred to the UAnRX register.

This register cannot be manipulated directly.

(7) UARTAn receive data register (UAnRX)

The UAnRX register is an 8-bit register that holds receive data. When 7 characters are received, 0 is stored in the highest bit (when data is received LSB first).

In the reception enabled status, receive data is transferred from the UARTAn receive shift register to the UAnRX register in synchronization with the completion of shift-in processing of 1 frame.

Transfer to the UAnRX register also causes the reception complete interrupt request signal (INTUAnR) to be output.

(8) UARTAn transmit shift register

The transmit shift register is a shift register used to convert the parallel data transferred from the UAnTX register into serial data.

When 1 byte of data is transferred from the UAnTX register, the shift register data is output from the TXDAn pin.

This register cannot be manipulated directly.

(9) UARTAn transmit data register (UAnTX)

The UAnTX register is an 8-bit transmit data buffer. Transmission starts when transmit data is written to the UAnTX register. When data can be written to the UAnTX register (when data of one frame is transferred from the UAnTX register to the UARTAn transmit shift register), the transmission enable interrupt request signal (INTUAnT) is generated.

12.3 Registers

(1) UARTAn control register 0 (UAnCTL0)

The UAnCTL0 register is an 8-bit register that controls the UARTAn serial transfer operation.

This register can be read or written in 8-bit or 1-bit units.

Reset sets this register to 10H.

(1/2)

After reset: 10H R/W Address: UA0CTL0 FFFFFA00H, UA1CTL0 FFFFFA10H

	7	6	5	4	3	2	1	0
UAnCTL0 (n = 0, 1)	UAnPWR	UAnTXE	UAnRXE	UAnDIR	UAnPS1	UAnPS0	UAnCL	UAnSL

UAnPWR	UARTAn operation control
0	Disable UARTAn operation (UARTAn reset asynchronously)
1	Enable UARTAn operation

The UARTAn operation is controlled by the UAnPWR bit. The TXDAn pin output is fixed to high level by clearing the UAnPWR bit to 0 (fixed to low level if UAnOPT0.UAnTDL bit = 1).

UAnTXE	Transmission operation enable
0	Disable transmission operation
1	Enable transmission operation

- To start transmission, set the UAnPWR bit to 1 and then set the UAnTXE bit to 1. To stop, transmission clear the UAnTXE bit to 0 and then UAnPWR bit to 0.
- To initialize the transmission unit, clear the UAnTXE bit to 0, wait for two cycles of the base clock, and then set the UAnTXE bit to 1 again. Otherwise, initialization may not be executed (for the base clock, see **12.6 (1) (a) Base clock**).

UAnRXE	Reception operation enable
0	Disable reception operation
1	Enable reception operation

- To start reception, set the UAnPWR bit to 1 and then set the UAnRXE bit to 1. To stop reception, clear the UAnRXE bit to 0 and then UAnPWR bit to 0.
- To initialize the reception unit, clear the UAnRXE bit to 0, wait for two periods of the base clock, and then set the UAnRXE bit to 1 again. Otherwise, initialization may not be executed (for the base clock, see **12.6 (1) (a) Base clock**).

(2/2)

UAnDIR	Transfer direction selection
0	MSB-first transfer
1	LSB-first transfer
This register can be rewritten only when the UAnPWR bit = 0 or the UAnTXE bit = the UAnRXE bit = 0.	

UAnPS1	UAnPS0	Parity selection during transmission	Parity selection during reception
0	0	No parity output	Reception with no parity
0	1	0 parity output	Reception with 0 parity
1	0	Odd parity output	Odd parity check
1	1	Even parity output	Even parity check

- This register is rewritten only when the UAnPWR bit = 0 or the UAnTXE bit = the UAnRXE bit = 0.
- If “Reception with 0 parity” is selected during reception, a parity check is not performed. Therefore, the UAnSTR.UAnPE bit is not set.
- When transmission and reception are performed in the LIN format, clear the UAnPS1 and UAnPS0 bits to 00.

UAnCL	Specification of data character length of 1 frame of transmit/receive data
0	7 bits
1	8 bits
This register can be rewritten only when the UAnPWR bit = 0 or the UAnTXE bit = the UAnRXE bit = 0.	

UAnSL	Specification of length of stop bit for transmit data
0	1 bit
1	2 bits
This register can be rewritten only when the UAnPWR bit = 0 or the UAnTXE bit = the UAnRXE bit = 0.	

Remark For details of parity, see **12.5.9 Parity types and operations**.

(2) UARTAn control register 1 (UAnCTL1)

For details, see **12.6 (2) UARTAn control register 1 (UAnCTL1)**.

(3) UARTAn control register 2 (UAnCTL2)

For details, see **12.6 (3) UARTAn control register 2 (UAnCTL2)**.

(4) UARTAn option control register 0 (UAnOPT0)

The UAnOPT0 register is an 8-bit register that controls the serial transfer operation of the UARTAn register.

This register can be read or written in 8-bit or 1-bit units.

Reset sets this register to 14H.

(1/2)

After reset: 14H R/W Address: UA0OPT0 FFFFFA03H, UA1OPT0 FFFFFA13H

	7	6	5	4	3	2	1	0
UAnOPT0	UAnSRF	UAnSRT	UAnSTT	UAnSLS2	UAnSLS1	UAnSLS0	UAnTDL	UAnRDL

(n = 0, 1)

UAnSRF	SBF reception flag
0	When the UAnCTL0.UAnPWR bit = UAnCTL0.UAnRXE bit = 0 are set. Also upon normal end of SBF reception.
1	During SBF reception

- SBF (Sync Break Field) reception is judged during LIN communication.
- The UAnSRF bit is held at 1 when an SBF reception error occurs, and then SBF reception is started again.

UAnSRT	SBF reception trigger
0	–
1	SBF reception trigger

- This is the SBF reception trigger bit during LIN communication, and when read, “0” is always read. For SBF reception, set the UAnSRT bit (to 1) to enable SBF reception.
- Set the UAnSRT bit after setting the UAnPWR bit = UAnRXE bit = 1.

UAnSTT	SBF transmission trigger
0	–
1	SBF transmission trigger

- This is the SBF transmission trigger bit during LIN communication, and when read, “0” is always read.
- Set the UAnSTT bit after setting the UAnPWR bit = UAnTXE bit = 1.

Caution Do not set the UAnSRT and UAnSTT bits (to 1) during SBF reception (UAnSRF bit = 1).

(2/2)

UAnSLS2	UAnSLS1	UAnSLS0	SBF transmit length selection
1	0	1	13-bit output (reset value)
1	1	0	14-bit output
1	1	1	15-bit output
0	0	0	16-bit output
0	0	1	17-bit output
0	1	0	18-bit output
0	1	1	19-bit output
1	0	0	20-bit output
This register can be set when the UAnPWR bit = 0 or when the UAnTXE bit = 0.			

UAnTDL	Transmit data level bit
0	Normal output of transfer data
1	Inverted output of transfer data
• The output level of the TXDAn pin can be inverted using the UAnTDL bit. • This register can be set when the UAnPWR bit = 0 or when the UAnTXE bit = 0.	

UAnRDL	Receive data level bit
0	Normal input of transfer data
1	Inverted input of transfer data
• The input level of the RXDAn pin can be inverted using the UAnRDL bit. • This register can be set when the UAnPWR bit = 0 or the UAnRXE bit = 0.	

(5) UARTAn status register (UAnSTR)

The UAnSTR register is an 8-bit register that displays the UARTAn transfer status and reception error contents. This register can be read or written in 8-bit or 1-bit units, but the UAnTSF bit is a read-only bit, while the UAnPE, UAnFE, and UAnOVE bits can both be read and written. However, these bits can only be cleared by writing 0; they cannot be set by writing 1 (even if 1 is written to them, the value is retained).

The initialization conditions are shown below.

Register/Bit	Initialization Conditions
UAnSTR register	• Reset • UAnCTL0.UAnPWR = 0
UAnTSF bit	• UAnCTL0.UAnTXE = 0
UAnPE, UAnFE, UAnOVE bits	• 0 write • UAnCTL0.UAnRXE = 0

After reset: 00H R/W Address: UA0STR FFFFFA04H, UA1STR FFFFFA14H

	7	6	5	4	3	2	1	0
UAnSTR	UAnTSF	0	0	0	0	UAnPE	UAnFE	UAnOVE

(n = 0, 1)

UAnTSF	Transfer status flag
0	• When the UAnPWR bit = 0 or the UAnTXE bit = 0 has been set. • When, following transfer completion, there was no next data transfer from UAnTX register
1	Write to UAnTX register

The UAnTSF bit is always 1 when performing continuous transmission. When initializing the transmission unit, check that the UAnTSF bit = 0 before performing initialization. The transmit data is not guaranteed when initialization is performed while the UAnTSF bit = 1.

UAnPE	Parity error flag
0	• When the UAnPWR bit = 0 or the UAnRXE bit = 0 has been set. • When 0 has been written
1	When parity of data and parity bit do not match during reception.

- The operation of the UAnPE bit is controlled by the settings of the UAnCTL0.UAnPS1 and UAnCTL0.UAnPS0 bits.
- The UAnPE bit can be read and written, but it can only be cleared by writing 0 to it, and it cannot be set by writing 1 to it. When 1 is written to this bit, the value is retained.

UAnFE	Framing error flag
0	• When the UAnPWR bit = 0 or the UAnRXE bit = 0 has been set • When 0 has been written
1	When no stop bit is detected during reception

- Only the first bit of the receive data stop bits is checked, regardless of the value of the UAnCTL0.UAnSL bit.
- The UAnFE bit can be both read and written, but it can only be cleared by writing 0 to it, and it cannot be set by writing 1 to it. When 1 is written to this bit, the value is retained.

UAnOVE	Overrun error flag
0	• When the UAnPWR bit = 0 or the UAnRXE bit = 0 has been set. • When 0 has been written
1	When receive data has been set to the UAnRX register and the next receive operation is completed before that receive data has been read

- When an overrun error occurs, the data is discarded without the next receive data being written to the receive buffer.
- The UAnOVE bit can be both read and written, but it can only be cleared by writing 0 to it. When 1 is written to this bit, the value is retained.

(6) UARTAn receive data register (UAnRX)

The UAnRX register is an 8-bit buffer register that stores parallel data converted by the receive shift register.

The data stored in the receive shift register is transferred to the UAnRX register upon completion of reception of 1 byte of data.

During LSB-first reception when the data length has been specified as 7 bits, the receive data is transferred to bits 6 to 0 of the UAnRX register and the MSB always becomes 0. During MSB-first reception, the receive data is transferred to bits 7 to 1 of the UAnRX register and the LSB always becomes 0.

When an overrun error (UAnOVE) occurs, the receive data at this time is not transferred to the UAnRX register and is discarded.

This register is read-only, in 8-bit units.

In addition to reset input, the UAnRX register can be set to FFH by clearing the UAnCTL0.UAnPWR bit to 0.

After reset: FFH R Address: UA0RX FFFFFA06H, UA1RX FFFFFA16H

	7	6	5	4	3	2	1	0
UAnRX (n = 0, 1)								

(7) UARTAn transmit data register (UAnTX)

The UAnTX register is an 8-bit register used to set transmit data.

This register can be read or written in 8-bit units.

Reset sets this register to FFH.

After reset: FFH R/W Address: UA0TX FFFFFA07H, UA1TX FFFFFA17H

	7	6	5	4	3	2	1	0
UAnTX (n = 0, 1)								

12.4 Interrupt Request Signals

The following two interrupt request signals are generated from UARTAn.

- Reception complete interrupt request signal (INTUAnR)
- Transmission enable interrupt request signal (INTUAnT)

The default priority for these two interrupt request signals is reception complete interrupt request signal then transmission enable interrupt request signal.

Table 12-2. Interrupts and Their Default Priorities

Interrupt	Priority
Reception complete	High
Transmission enable	Low

(1) Reception complete interrupt request signal (INTUAnR)

A reception complete interrupt request signal is output when data is shifted into the receive shift register and transferred to the UAnRX register in the reception enabled status.

When a reception complete interrupt request signal is received and the data is read, read the UAnSTR register and check that the reception result is not an error.

No reception complete interrupt request signal is generated in the reception disabled status.

(2) Transmission enable interrupt request signal (INTUAnT)

If transmit data is transferred from the UAnTX register to the UARTAn transmit shift register with transmission enabled, the transmission enable interrupt request signal is generated.

12.5 Operation

12.5.1 Data format

Full-duplex serial data reception and transmission is performed.

As shown in Figure 12-2, one data frame of transmit/receive data consists of a start bit, character bits, parity bit, and stop bit(s).

Specification of the character bit length within 1 data frame, parity selection, specification of the stop bit length, and specification of MSB/LSB-first transfer are performed using the UAnCTL0 register.

Moreover, control of UART output/inverted output for the TXDAn bit is performed using the UAnOPT0.UAnTDL bit.

- Start bit ..... 1 bit
- Character bits..... 7 bits/8 bits
- Parity bit ..... Even parity/odd parity/0 parity/no parity
- Stop bit..... 1 bit/2 bits

Figure 12-2. UARTA Transmit/Receive Data Format

(a) 8-bit data length, LSB first, even parity, 1 stop bit, transfer data: 55H

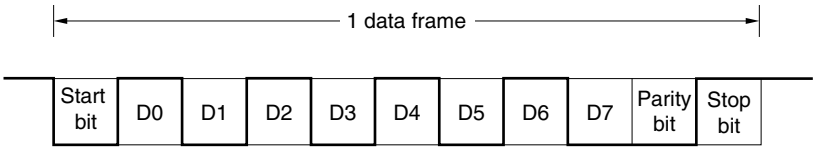

(b) 8-bit data length, MSB first, even parity, 1 stop bit, transfer data: 55H

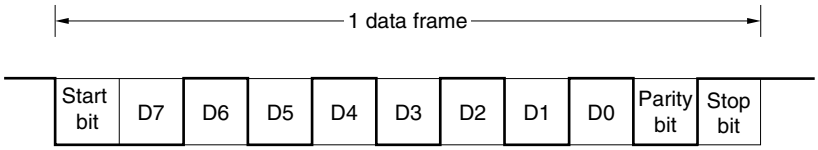

(c) 8-bit data length, MSB first, even parity, 1 stop bit, transfer data: 55H, TXDAn inversion

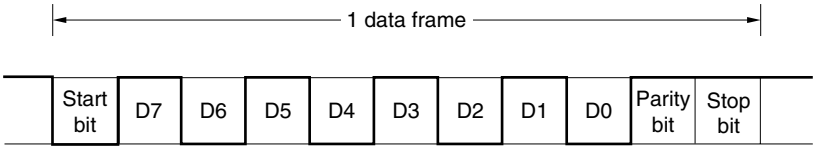

(d) 7-bit data length, LSB first, odd parity, 2 stop bits, transfer data: 36H

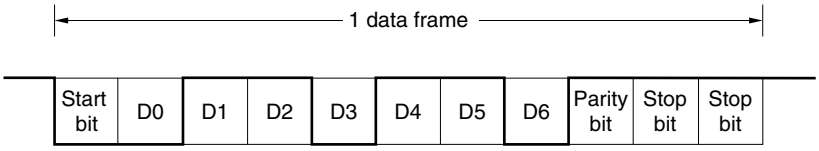

(e) 8-bit data length, LSB first, no parity, 1 stop bit, transfer data: 87H

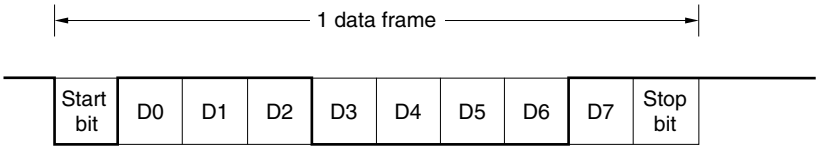

12.5.2 SBF transmission/reception format

The V850ES/HE2 has an SBF (Sync Break Field) transmission/reception control function to enable use of the LIN function.

Remark LIN stands for Local Interconnect Network and is a low-speed (1 to 20 kbps) serial communication protocol intended to aid the cost reduction of an automotive network.
LIN communication is single-master communication, and up to 15 slaves can be connected to one master.
The LIN slaves are used to control the switches, actuators, and sensors, and these are connected to the LIN master via the LIN network.
Normally, the LIN master is connected to a network such as CAN (Controller Area Network).
In addition, the LIN bus uses a single-wire method and is connected to the nodes via a transceiver that complies with ISO9141.
In the LIN protocol, the master transmits a frame with baud rate information and the slave receives it and corrects the baud rate error. Therefore, communication is possible when the baud rate error in the slave is ±15% or less.

Figures 12-3 and 12-4 outline the transmission and reception manipulations of LIN.

Figure 12-3. LIN Transmission Manipulation Outline

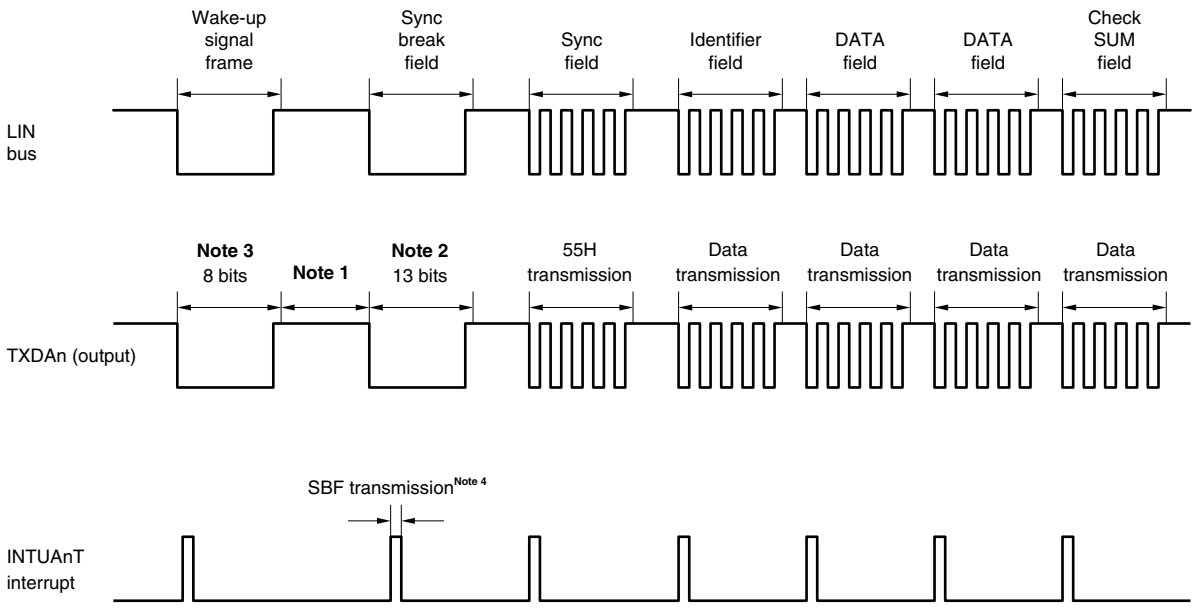

Notes 1. The interval between each field is controlled by software.

2. SBF output is performed by hardware. The output width is the bit length set by the UAnOPT0.UAnSBL2 to UAnOPT0.UAnSBL0 bits. If even finer output width adjustments are required, such adjustments can be performed using the UAnCTLn.UAnBRS7 to UAnCTLn.UAnBRS0 bits.

3. 80H transfer in the 8-bit mode is substituted for the wakeup signal frame.

4. A transmission enable interrupt request signal (INTUAnT) is output at the start of each transmission. The INTUAnT signal is also output at the start of each SBF transmission.

Figure 12-4. LIN Reception Manipulation Outline

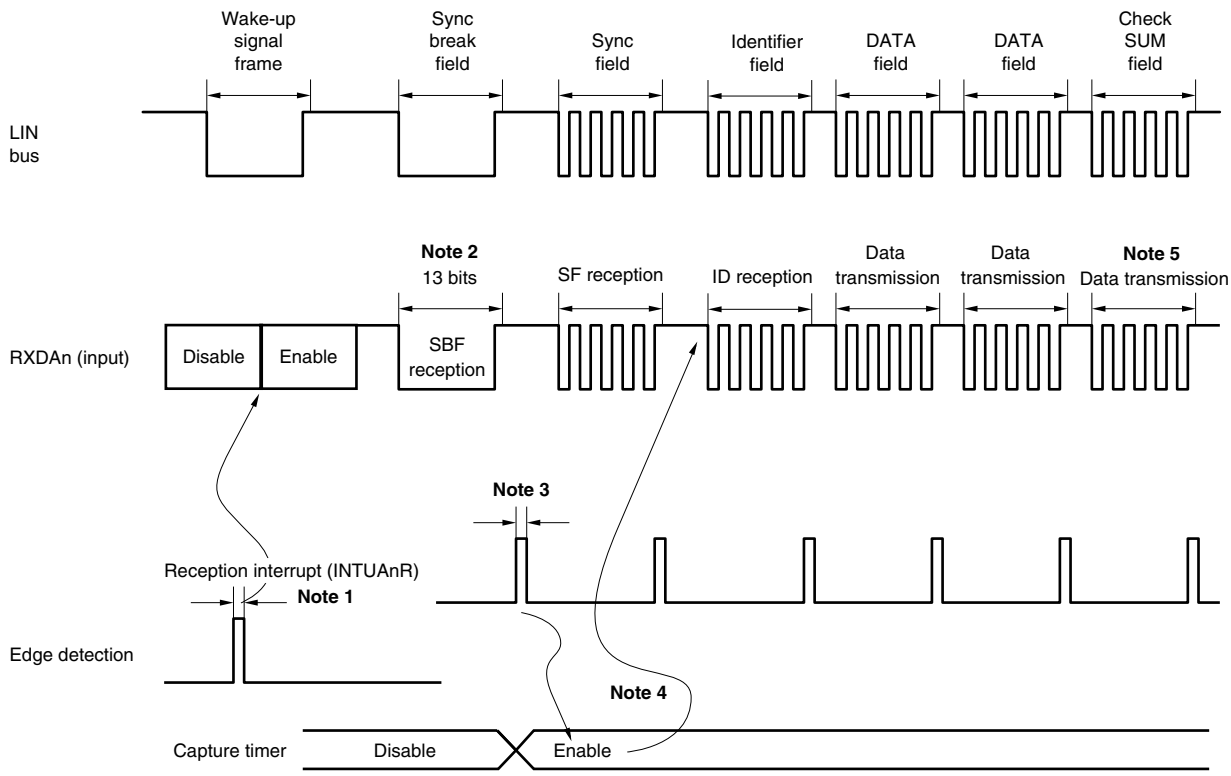

Notes 1. The wakeup signal is sent by the pin edge detector, UARTAn is enabled, and the SBF reception mode is set.

2. The receive operation is performed until detection of the stop bit. Upon detection of SBF reception of 11 or more bits, normal SBF reception end is judged, and an interrupt signal is output. Upon detection of SBF reception of less than 11 bits, an SBF reception error is judged, no interrupt signal is output, and the mode returns to the SBF reception mode.

3. If SBF reception ends normally, an interrupt request signal is output. The timer is enabled by an SBF reception complete interrupt. Moreover, error detection for the UAnSTR.UAnOVE, UAnSTR.UAnPE, and UAnSTR.UAnFE bits is suppressed and UART communication error detection processing and UARTAn receive shift register and data transfer of the UAnRX register are not performed. The UARTAn receive shift register holds the initial value, FFH.

4. The RXDAn pin is connected to TI (capture input) of the timer, the transfer rate is calculated, and the baud rate error is calculated. The value of the UAnCTL2 register obtained by correcting the baud rate error after dropping UARTA enable is set again, causing the status to become the reception status.

5. Check-sum field distinctions are made by software. UARTAn is initialized following CSF reception, and the processing for setting the SBF reception mode again is performed by software.

12.5.3 SBF transmission

When the UAnCTL0.UAnPWR bit = UAnCTL0.UAnTXE bit = 1, the transmission enabled status is entered, and SBF transmission is started by setting (to 1) the SBF transmission trigger (UAnOPT0.UAnSTT bit).

Thereafter, a low level the width of bits 13 to 20 specified by the UAnOPT0.UAnSLS2 to UAnOPT0.UAnSLS0 bits is output. A transmission enable interrupt request signal (INTUAnT) is generated upon SBF transmission start. Following the end of SBF transmission, the UAnSTT bit is automatically cleared. Thereafter, the UART transmission mode is restored.

Transmission is suspended until the data to be transmitted next is written to the UAnTX register, or until the SBF transmission trigger (UAnSTT bit) is set.

Figure 12-5. SBF Transmission

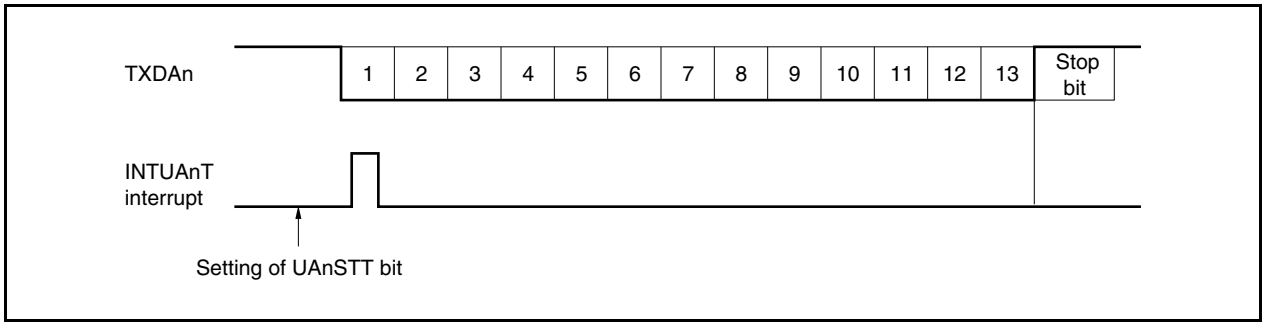

12.5.4 SBF reception

The reception enabled status is achieved by setting the UAnCTL0.UAnPWR bit to 1 and then setting the UAnCTL0.UAnRXE bit to 1.

The SBF reception wait status is set by setting the SBF reception trigger (UAnOPT0.UAnSTR bit) to 1.

In the SBF reception wait status, similarly to the UART reception wait status, the RXDAn pin is monitored and start bit detection is performed.

Following detection of the start bit, reception is started and the internal counter counts up according to the set baud rate.

When a stop bit is received, if the SBF width is 11 or more bits, normal processing is judged and a reception complete interrupt request signal (INTUAnR) is output. The UAnOPT0.UAnSRF bit is automatically cleared and SBF reception ends. Error detection for the UAnSTR.UAnOVE, UAnSTR.UAnPE, and UAnSTR.UAnFE bits is suppressed and UART communication error detection processing is not performed. Moreover, data transfer of the UARTAn receive shift register and UAnRX register is not performed and FFH, the initial value, is held. If the SBF width is 10 or fewer bits, reception is terminated as error processing without outputting an interrupt, and the SBF reception mode is returned to. The UAnSRF bit is not cleared at this time.

Figure 12-6. SBF Reception

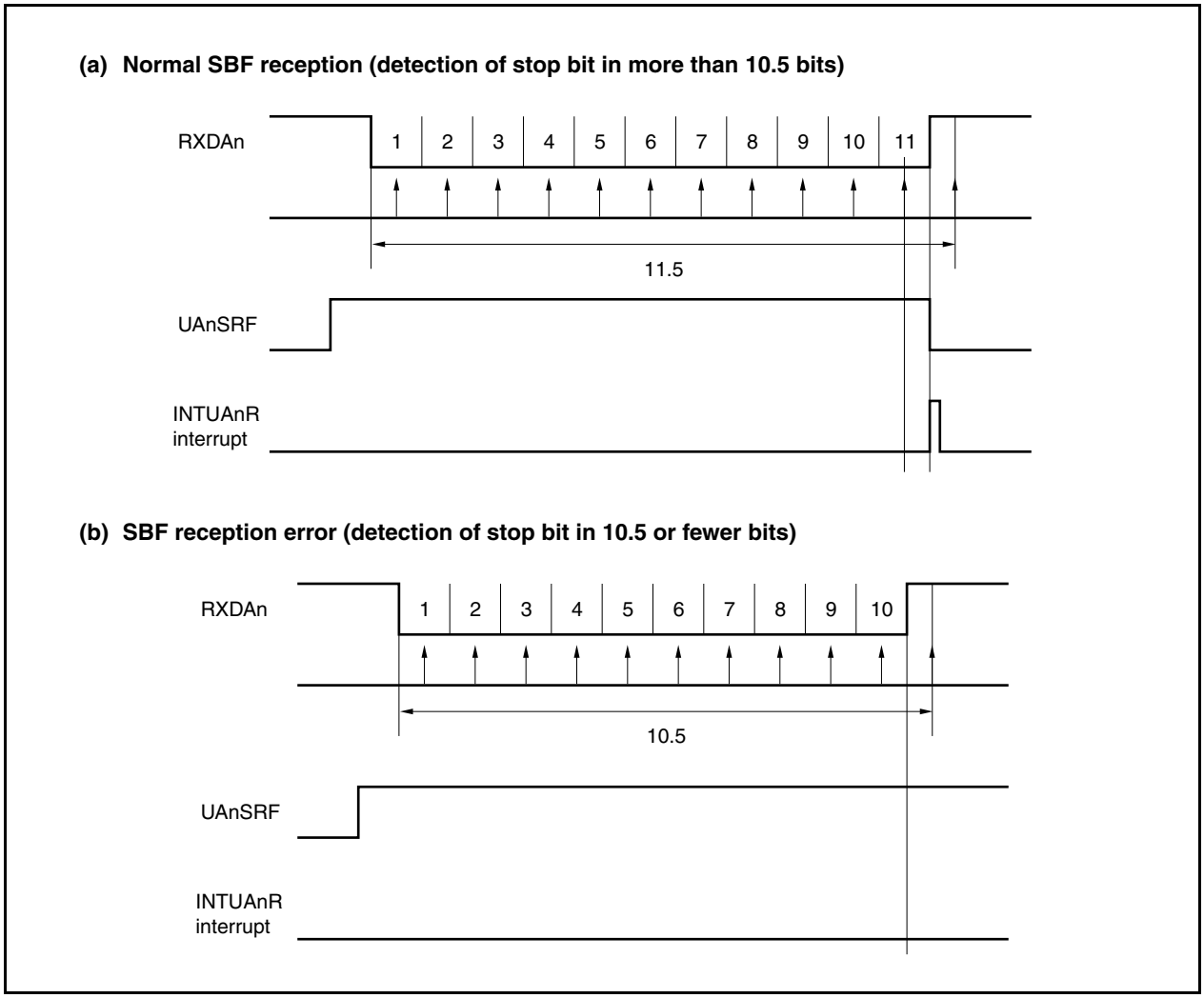

12.5.5 UART transmission

A high level is output to the TXDAn pin by setting the UAnCTL0.UAnPWR bit to 1.

Next, the transmission enabled status is set by setting the UAnCTL0.UAnTXE bit to 1, and transmission is started by writing transmit data to the UAnTX register. The start bit, parity bit, and stop bit are automatically added.

Since the CTS (transmit enable signal) input pin is not provided in UARTAn, use a port to check that reception is enabled at the transmit destination.

The data in the UAnTX register is transferred to the UARTAn transmit shift register upon the start of the transmit operation.

A transmission enable interrupt request signal (INTUAnT) is generated upon completion of transmission of the data of the UAnTX register to the UARTAn transmit shift register, and thereafter the contents of the UARTAn transmit shift register are output to the TXDAn pin.

Write of the next transmit data to the UAnTX register is enabled after the INTUAnT signal is generated.

Figure 12-7. UART Transmission

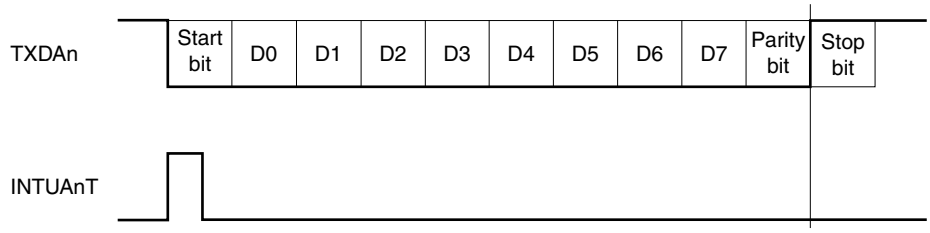

Remarks 1. LSB first

2. n = 0, 1

12.5.6 Continuous transmission procedure

UARTAn can write the next transmit data to the UAnTX register when the UARTAn transmit shift register starts the shift operation. The transmit timing of the UARTAn transmit shift register can be judged from the transmission enable interrupt request signal (INTUAnT).

An efficient communication rate is realized by writing the data to be transmitted next to the UAnTX register during transfer.

During continuous transmission, do not write the next transmit data to the UAnTX register before a transmit request interrupt signal (INTUAnT) is generated after transmit data is written to the UAnTX register and transferred to the UARTAn transmit shift register. If a value is written to the UAnTX register before a transmit request interrupt signal is generated, the previously set transmit data is overwritten by the latest transmit data.

Caution When initializing transmissions during the execution of continuous transmissions, make sure that the UAnSTR.UAnTSF bit is 0, then perform the initialization. Transmit data that is initialized when the UAnTSF bit is 1 cannot be guaranteed.
In the case of continuous transmission, the communication rate from the stop bit to the start bit of the next data is extended by two operating clocks from the normal rate.

Figure 12-8. Continuous Transmission Processing Flow

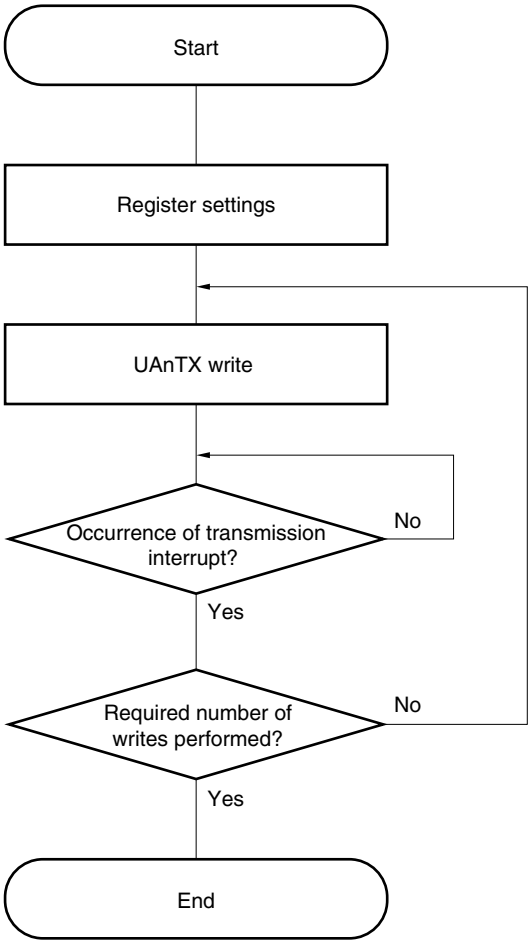

Figure 12-9. Continuous Transmission Operation Timing

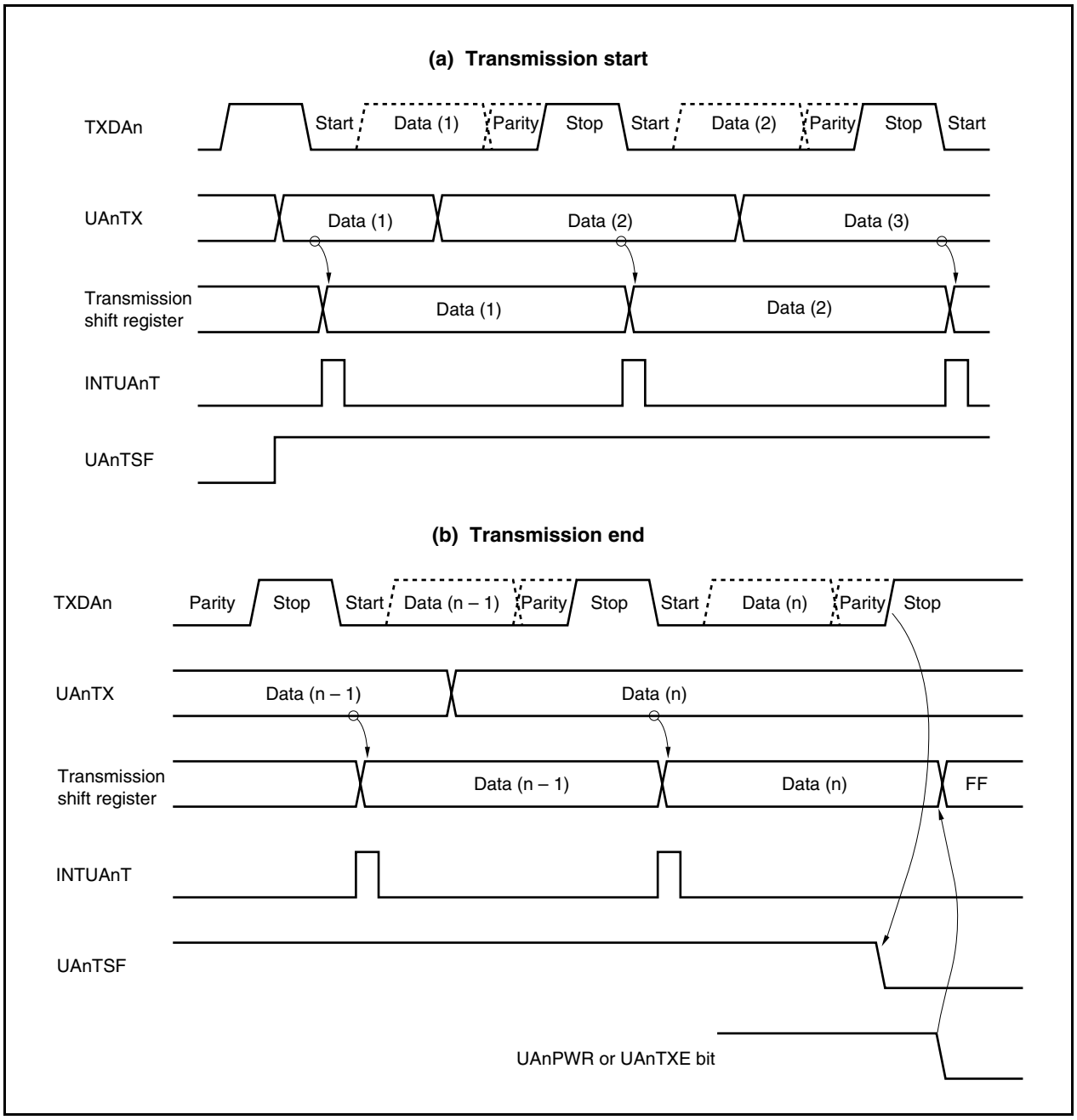

12.5.7 UART reception

The reception wait status is set by setting the UAnCTL0.UAnPWR bit to 1 and then setting the UAnCTL0.UAnRXE bit to 1. In the reception wait status, the RXDAn pin is monitored and start bit detection is performed.

Start bit detection is performed using a two-step detection routine.

First the rising edge of the RXDAn pin is detected and sampling is started at the falling edge. The start bit is recognized if the RXDAn pin is low level at the start bit sampling point. After a start bit has been recognized, the receive operation starts, and serial data is saved to the UARTAn receive shift register according to the set baud rate.

When the reception complete interrupt request signal (INTUAnR) is output upon reception of the stop bit, the data of the UARTAn receive shift register is written to the UAnRX register. However, if an overrun error (UAnSTR.UAnOVE bit) occurs, the receive data at this time is not written to the UAnRX register and is discarded.

Even if a parity error (UAnSTR.UAnPE bit) or a framing error (UAnSTR.UAnFE bit) occurs during reception, reception continues until the reception position of the first stop bit, and INTUAnR is output following reception completion.

Figure 12-10. UART Reception

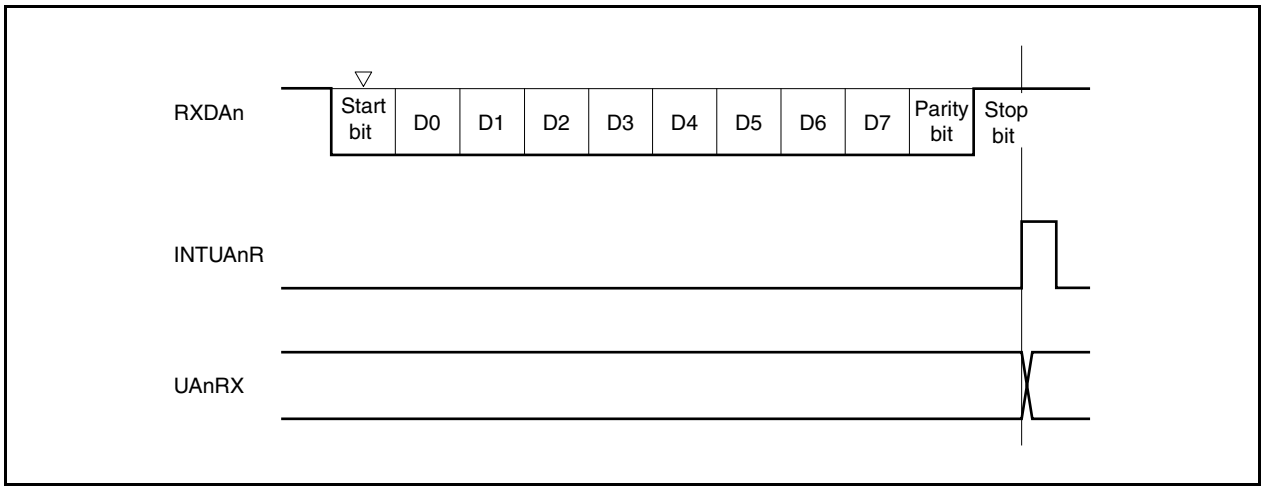

Cautions 1. Be sure to read the UAnRX register even when a reception error occurs. If the UAnRX register is not read, an overrun error occurs during reception of the next data, and reception errors continue occurring indefinitely.

2. The operation during reception is performed assuming that there is only one stop bit. A second stop bit is ignored.

3. When reception is completed, read the UAnRX register after the reception complete interrupt request signal (INTUAnR) has been generated, and clear the UAnPWR or UAnRXE bit to 0. If the UAnPWR or UAnRXE bit is cleared to 0 before the INTUAnR signal is generated, the read value of the UAnRX register cannot be guaranteed.

4. If receive completion processing (INTUAnR signal generation) of UARTAn and the UAnPWR bit = 0 or UAnRXE bit = 0 conflict, the INTUAnR signal may be generated in spite of these being no data stored in the UAnRX register.

To complete reception without waiting INTUAnR signal generation, be sure to clear (0) the interrupt request flag (UAnRIF) of the UAnRIC register, after setting (1) the interrupt mask flag (UAnRMK) of the interrupt control register (UAnRIC) and then set (1) the UAnPWR bit = 0 or UAnRXE bit = 0.

12.5.8 Reception errors

Errors during a receive operation are of three types: parity errors, framing errors, and overrun errors. Data reception result error flags are set in the UAnSTR register and a reception complete interrupt request signal (INTUAnR) is output when an error occurs.

It is possible to ascertain which error occurred during reception by reading the contents of the UAnSTR register.

Clear the reception error flag by writing 0 to it after reading it.

- Receive data read flow

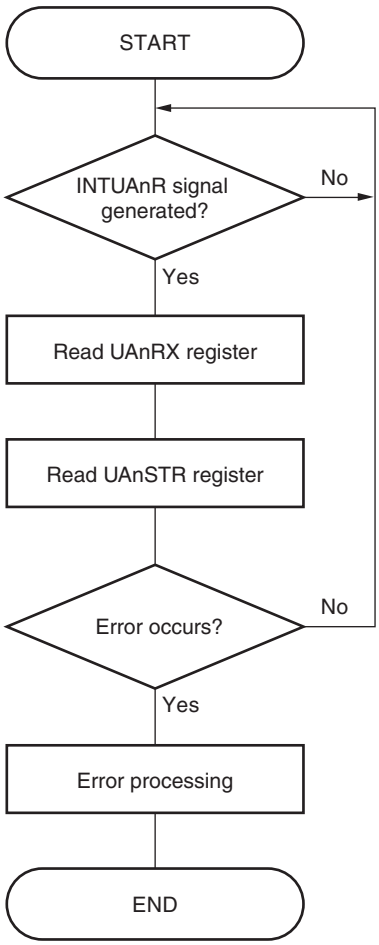

Caution When an INTUAnR signal is generated, the UAnSTR register must be read to check for errors.

- Reception error causes

Error Flag	Reception Error	Cause
UAnPE	Parity error	Received parity bit does not match the setting
UAnFE	Framing error	Stop bit not detected
UAnOVE	Overrun error	Reception of next data completed before data was read from receive buffer

When reception errors occur, perform the following procedures depending upon the kind of error.

- Parity error
  If false data is received due to problems such as noise in the reception line, discard the received data and retransmit.

- Framing error
  A baud rate error may have occurred between the reception side and transmission side or the start bit may have been erroneously detected. Since this is a fatal error for the communication format, check the operation stop in the transmission side, perform initialization processing each other, and then start the communication again.

- Overrun error
  Since the next reception is completed before reading receive data, 1 frame of data is discarded. If this data was needed, do a retransmission.

Caution If a receive error interrupt occurs during continuous reception, read the contents of the UAnSTR register must be read before the next reception is completed, then perform error processing.

12.5.9 Parity types and operations

Caution When using the LIN function, fix the UAnCTL0.UAnPS1 and UAnCTL0.UAnPS0 bits to 00.

The parity bit is used to detect bit errors in the communication data. Normally the same parity is used on the transmission side and the reception side.

In the case of even parity and odd parity, it is possible to detect odd-count bit errors. In the case of 0 parity and no parity, errors cannot be detected.

(a) Even parity

(i) During transmission

The number of bits whose value is “1” among the transmit data, including the parity bit, is controlled so as to be an even number. The parity bit values are as follows.

- Odd number of bits whose value is “1” among transmit data: 1
- Even number of bits whose value is “1” among transmit data: 0

(ii) During reception

The number of bits whose value is “1” among the reception data, including the parity bit, is counted, and if it is an odd number, a parity error is output.

(b) Odd parity

(i) During transmission

Opposite to even parity, the number of bits whose value is “1” among the transmit data, including the parity bit, is controlled so that it is an odd number. The parity bit values are as follows.

- Odd number of bits whose value is “1” among transmit data: 0
- Even number of bits whose value is “1” among transmit data: 1

(ii) During reception

The number of bits whose value is “1” among the receive data, including the parity bit, is counted, and if it is an even number, a parity error is output.

(c) 0 parity

During transmission, the parity bit is always made 0, regardless of the transmit data.

During reception, parity bit check is not performed. Therefore, no parity error occurs, regardless of whether the parity bit is 0 or 1.

(d) No parity

No parity bit is added to the transmit data.

Reception is performed assuming that there is no parity bit. No parity error occurs since there is no parity bit.

12.5.10 Receive data noise filter

This filter samples the RXDAn pin using the base clock of the prescaler output.

When the same sampling value is read twice, the match detector output changes and the RXDAn signal is sampled as the input data. Therefore, data not exceeding 2 clock width is judged to be noise and is not delivered to the internal circuit (see **Figure 12-12**). See **12.6 (1) (a) Base clock** regarding the base clock.

Moreover, since the circuit is as shown in Figure 12-11, the processing that goes on within the receive operation is delayed by 3 clocks in relation to the external signal status.

Figure 12-11. Noise Filter Circuit

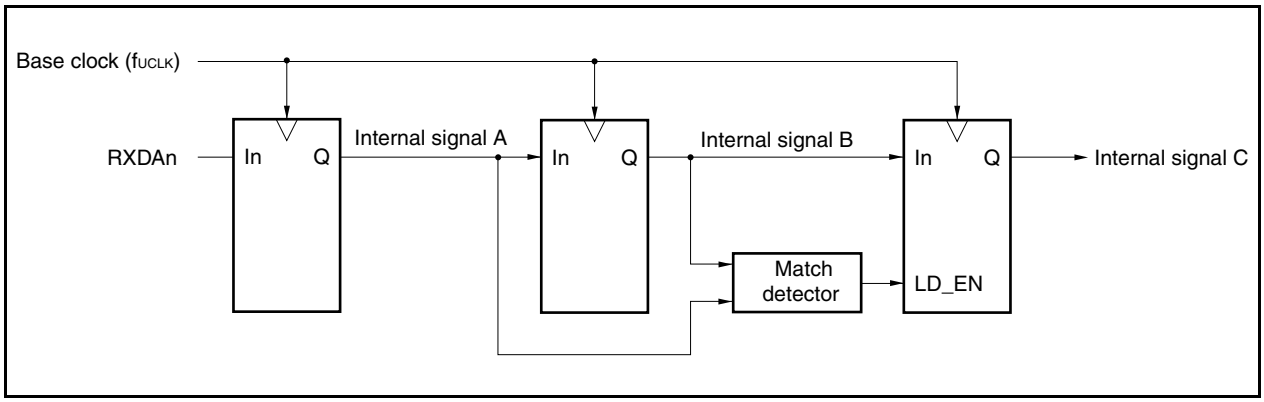

Figure 12-12. Timing of RXDAn Signal Judged as Noise

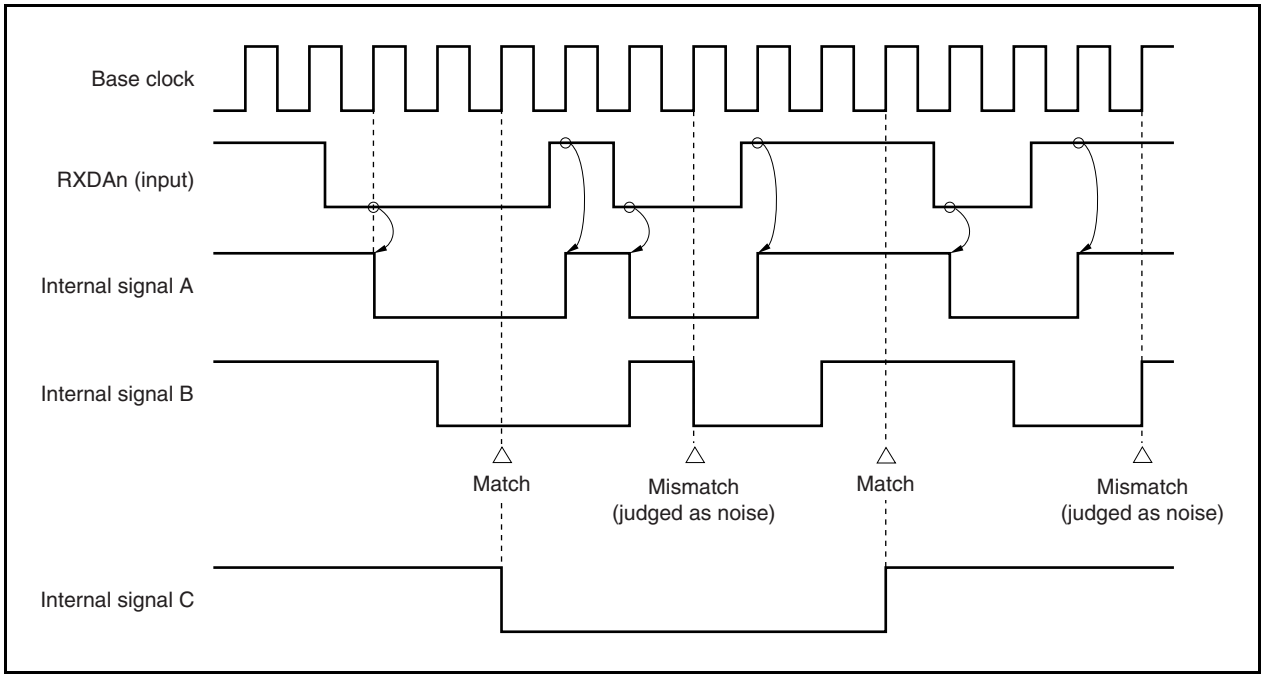

12.6 Dedicated Baud Rate Generator

The dedicated baud rate generator consists of a source clock selector block and an 8-bit programmable counter, and generates a serial clock during transmission and reception with UARTAn. Regarding the serial clock, a dedicated baud rate generator output can be selected for each channel.

There is an 8-bit counter for transmission and another one for reception.

(1) Baud rate generator configuration

Figure 12-13. Configuration of Baud Rate Generator

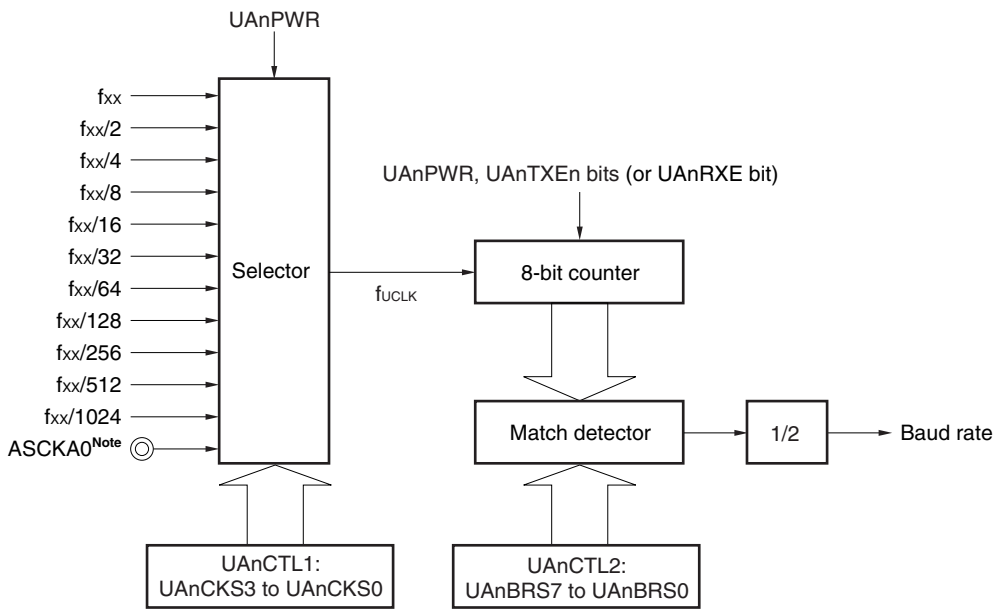

Note Only UARTA0 is valid; setting UARTA1 is prohibited.

Remarks 1. n = 0, 1

2. fxx: Main clock frequency

3. fUCLK: Base clock frequency

(a) Base clock

When the UAnCTL0.UAnPWR bit is 1, the clock selected by the UAnCTL1.UAnCKS3 to UAnCTL1.UAnCKS0 bits is supplied to the 8-bit counter. This clock is called the base clock (fUCLK).

(b) Serial clock generation

A serial clock can be generated by setting the UAnCTL1 register and the UAnCTL2 register (n = 0, 1).

The base clock is selected by UAnCTL1.UAnCKS3 to UAnCTL1.UAnCKS0 bits.

The frequency division value for the 8-bit counter can be set using the UAnCTL2.UAnBRS7 to UAnCTL2.UAnBRS0 bits.

(2) UARTAn control register 1 (UAnCTL1)

The UAnCTL1 register is an 8-bit register that selects the UARTAn base clock.

This register can be read or written in 8-bit units.

Reset sets this register to 00H.

Caution Clear the UAnCTL0.UAnPWR bit to 0 before rewriting the UAnCTL1 register.

After reset: 00H R/W Address: UA0CTL1 FFFFFA01H, UA1CTL1 FFFFFA11H

	7	6	5	4	3	2	1	0
UAnCTL1	0	0	0	0	UAnCKS3	UAnCKS2	UAnCKS1	UAnCKS0

UAnCKS3	UAnCKS2	UAnCKS1	UAnCKS0	Base clock (f_{UCLK}) selection
0	0	0	0	fxx
0	0	0	1	fxx/2
0	0	1	0	fxx/4
0	0	1	1	fxx/8
0	1	0	0	fxx/16
0	1	0	1	fxx/32
0	1	1	0	fxx/64
0	1	1	1	fxx/128
1	0	0	0	fxx/256
1	0	0	1	fxx/512
1	0	1	0	fxx/1,024
1	0	1	1	External clock[Note] (ASCKA0 pin)
Other than above				Setting prohibited

Note Only UARTA0 is valid; setting UARTA1 is prohibited.

Remarks 1. fxx: Main clock frequency

2. n = 0, 1

(3) UARTAn control register 2 (UAnCTL2)

The UAnCTL2 register is an 8-bit register that selects the baud rate (serial transfer speed) clock of UARTAn.

This register can be read or written in 8-bit units.

Reset sets this register to FFH.

Caution Clear the UAnCTL0.UAnPWR bit to 0 or clear the UAnTXE and UAnRXE bits to 00 before rewriting the UAnCTL2 register.

After reset FFH R/W Address: UA0CTL2 FFFFFA02H, UA1CTL2 FFFFFA12H

	7	6	5	4	3	2	1	0
UAnCTL2	UAnBRS7	UAnBRS6	UAnBRS5	UAnBRS4	UAnBRS3	UAnBRS2	UAnBRS1	UAnBRS0

UAn BRS7	UAn BRS6	UAn BRS5	UAn BRS4	UAn BRS3	UAn BRS2	UAn BRS1	UAn BRS0	Default (k)	Serial clock
0	0	0	0	0	0	×	×	×	Setting prohibited
0	0	0	0	0	1	0	0	4	$f_{UCLK}/4$
0	0	0	0	0	1	0	1	5	$f_{UCLK}/5$
0	0	0	0	0	1	1	0	6	$f_{UCLK}/6$
:	:	:	:	:	:	:	:	:	:
1	1	1	1	1	1	0	0	252	$f_{UCLK}/252$
1	1	1	1	1	1	0	1	253	$f_{UCLK}/253$
1	1	1	1	1	1	1	0	254	$f_{UCLK}/254$
1	1	1	1	1	1	1	1	255	$f_{UCLK}/255$

Remarks 1. f_{UCLK}: Clock frequency selected by the UAnCTL1.UAnCKS3 to UAnCTL1.UAnCKS0 bits

2. n = 0, 1

(4) Baud rate

The baud rate is obtained by the following equation.

$$\text{Baud rate} = \frac{f_{UCLK}}{2 \times k} \text{ [bps]}$$

When using the internal clock, the equation will be as follows (when using the ASCKA0 pin as clock at UARTA0, calculate using the above equation).

$$\text{Baud rate} = \frac{f_{XX}}{2^{m+1} \times k} \text{ [bps]}$$

Remark f_{UCLK} = Frequency of base clock selected by the UAnCTL1.UAnCKS3 to UAnCTL1.UAnCKS0 bits
f_{XX}: Main clock frequency
m = Value set using the UAnCTL1.UAnCKS3 to UAnCTL1.UAnCKS0 bits (m = 0 to 10)
k = Value set using the UAnCTL2.UAnBRS7 to UAnCTL2.UAnBRS0 bits (k = 4 to 255)

The baud rate error is obtained by the following equation.

$$\text{Error (\%)} = \left(\frac{\text{Actual baud rate (baud rate with error)}}{\text{Target baud rate (correct baud rate)}} - 1 \right) \times 100 \text{ [\%]}$$

$$= \left(\frac{f_{UCLK}}{2 \times k \times \text{Target baud rate}} - 1 \right) \times 100 \text{ [\%]}$$

When using the internal clock, the equation will be as follows (when using the ASCKA0 pin as clock at UARTA0, calculate the baud rate error using the above equation).

$$\text{Error (\%)} = \left(\frac{f_{XX}}{2^{m+1} \times k \times \text{Target baud rate}} - 1 \right) \times 100 \text{ [\%]}$$

Cautions 1. The baud rate error during transmission must be within the error tolerance on the receiving side.

2. The baud rate error during reception must satisfy the range indicated in (5) Allowable baud rate range during reception.

To set the baud rate, perform the following calculation and set the UAnCTL1 and UAnCTL2 registers (when using internal clock).

<1> Set k = fxx/(2 × Target baud rate). Set m = 0.
<2> Set k = k/2 and m = m + 1 where k ≥ 256.
<3> Repeat <2> until k < 256.
<4> Roundup the first decimal place of k.
If k = 256 by the roundup, perform <2> again (k will become 128).
<5> Set m to the UAnCTL1 register and k to the UAnCTL2 register.

Example: When fxx = 20 MHz and target baud rate = 153,600 bps
<1> k = 20,000,000/(2 × 153,600) = 65.10…, m = 0
<2>, <3> k = 65.10… < 256, m = 0
<4> Set value of UAnCTL2 register: k = 65 = 41H, set value of UAnCTL1 register: m = 0

Actual baud rate = 20,000,000/(2 × 65)
= 153,846 [bps]

Baud rate error = {20,000,000/(2 × 65 × 153,600) − 1} × 100
= 0.160 [%]

The representative examples of baud rate settings are shown below.

Table 12-3. Baud Rate Generator Setting Data

Baud Rate (bps)	fxx = 20 MHz			fxx = 16 MHz			fxx = 10 MHz		
	UAnCTL1	UAnCTL2	ERR (%)	UAnCTL1	UAnCTL2	ERR (%)	UAnCTL1	UAnCTL2	ERR (%)
300	08H	82H	0.16	0AH	1AH	0.16	07H	82H	0.16
600	07H	82H	0.16	0AH	0DH	0.16	06H	82H	0.16
1,200	06H	82H	0.16	09H	0DH	0.16	05H	82H	0.16
2,400	05H	82H	0.16	08H	0DH	0.16	04H	82H	0.16
4,800	04H	82H	0.16	07H	0DH	0.16	03H	82H	0.16
9,600	03H	82H	0.16	06H	0DH	0.16	02H	82H	0.16
19,200	02H	82H	0.16	05H	0DH	0.16	01H	82H	0.16
31,250	01H	A0H	0.00	01H	80H	0.00	00H	A0H	0.00
38,400	01H	82H	0.16	00H	D0H	0.16	00H	82H	0.16
76,800	00H	82H	0.16	03H	0DH	0.16	00H	41H	0.16
153,600	00H	41H	0.16	02H	0DH	0.16	00H	21H	−1.36
312,500	00H	20H	0.00	00H	1AH	−1.54	00H	10H	0.00

Remark fxx: Main clock frequency
ERR: Baud rate error (%)

(5) Allowable baud rate range during reception

The baud rate error range at the destination that is allowable during reception is shown below.

Caution The baud rate error during reception must be set within the allowable error range using the following equation.

Figure 12-14. Allowable Baud Rate Range During Reception

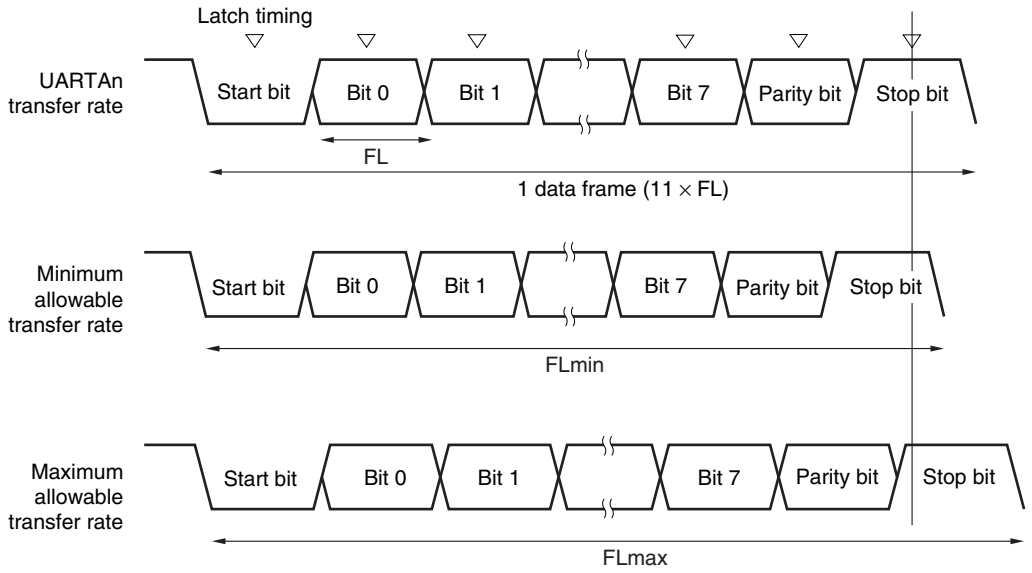

Remark n = 0, 1

As shown in Figure 12-14, the receive data latch timing is determined by the counter set using the UAnCTL2 register following start bit detection. The transmit data can be normally received if up to the last data (stop bit) can be received in time for this latch timing.

When this is applied to 11-bit reception, the following is the theoretical result.

$$FL = (Brate)^{-1}$$

Brate: UARTAn baud rate (n = 0, 1)

k: Setting value of UAnCTL2.UAnBRS7 to UAnCTL2.UAnBRS0 bits (n = 0, 1)

FL: 1-bit data length

Latch timing margin: 2 clocks

Minimum allowable transfer rate: $FLmin = 11 \times FL - \frac{k-2}{2k} \times FL = \frac{21k+2}{2k} FL$

Therefore, the maximum baud rate that can be received by the destination is as follows.

$$BRmax = (FLmin/11)^{-1} = \frac{22k}{21k + 2} Brate$$

Similarly, obtaining the following maximum allowable transfer rate yields the following.

$$\frac{10}{11} \times FLmax = 11 \times FL - \frac{k + 2}{2 \times k} \times FL = \frac{21k - 2}{2 \times k} FL$$

$$FLmax = \frac{21k - 2}{20\ k} FL \times 11$$

Therefore, the minimum baud rate that can be received by the destination is as follows.

$$BRmin = (FLmax/11)^{-1} = \frac{20k}{21k - 2} Brate$$

Obtaining the allowable baud rate error for UARTAn and the destination from the above-described equations for obtaining the minimum and maximum baud rate values yields the following.

Table 12-4. Maximum/Minimum Allowable Baud Rate Error

Division Ratio (k)	Maximum Allowable Baud Rate Error	Minimum Allowable Baud Rate Error
4	+2.32%	–2.43%
8	+3.52%	–3.61%
20	+4.26%	–4.30%
50	+4.56%	–4.58%
100	+4.66%	–4.67%
255	+4.72%	–4.72%

Remarks 1. The reception accuracy depends on the bit count in 1 frame, the input clock frequency, and the division ratio (k). The higher the input clock frequency and the larger the division ratio (k), the higher the accuracy.

2. k: Setting value of UAnCTL2.UAnBRS7 to UAnCTL2.UAnBRS0 bits (n = 0, 1)

(6) Baud rate during continuous transmission

During continuous transmission, the transfer rate from the stop bit to the next start bit is usually 2 base clocks longer. However, timing initialization is performed via start bit detection by the receiving side, so this has no influence on the transfer result.

Figure 12-15. Transfer Rate During Continuous Transfer

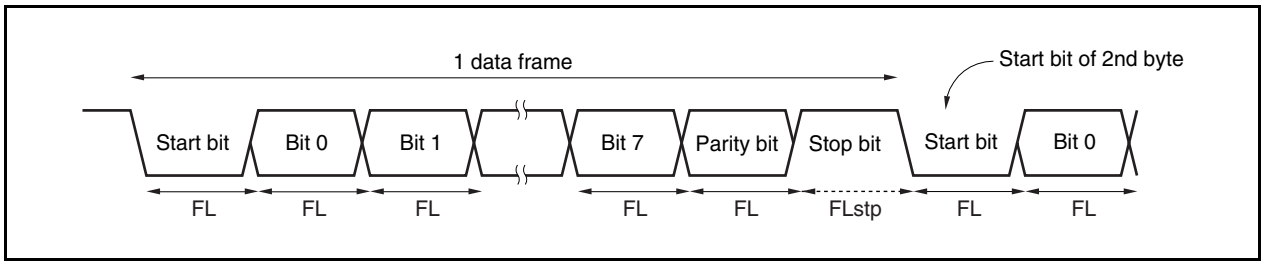

Assuming 1 bit data length: FL; stop bit length: FLstp; and base clock frequency: f_{UCLK}, we obtain the following equation.

$$FLstp = FL + 2/f_{UCLK}$$

Therefore, the transfer rate during continuous transmission is as follows.

$$\text{Transfer rate} = 11 \times FL + (2/f_{UCLK})$$

12.7 Cautions

(1) When the clock supply to UARTAn is stopped (for example, in IDLE1, IDLE2, or STOP mode), the operation stops with each register retaining the value it had immediately before the clock supply was stopped. The TXDAn pin output also holds and outputs the value it had immediately before the clock supply was stopped. However, the operation is not guaranteed after the clock supply is resumed. Therefore, after the clock supply is resumed, the circuits should be initialized by setting the UAnCTL0.UAnPWR, UAnCTL0.UAnRXEn, and UAnCTL0.UAnTXEn bits to 000.

(2) The RXDA1 and KR7 pins must not be used at the same time. To use the RXDA1 pin, do not use the KR7 pin. To use the KR7 pin, do not use the RXDA1 pin (it is recommended to set the PFC91 bit to 1 and clear PFCE91 bit to 0).

(3) In UARTAn, the interrupt caused by a communication error does not occur. When performing the transfer of transmit data and receive data using DMA transfer, error processing cannot be performed even if errors (parity, overrun, framing) occur during transfer. Either read the UAnSTR register after DMA transfer has been completed to make sure that there are no errors, or read the UAnSTR register during communication to check for errors.

(4) Start up the UARTAn in the following sequence.
<1> Set the UAnCTL0.UAnPWR bit to 1.
<2> Set the ports.
<3> Set the UAnCTL0.UAnTXE bit to 1, UAnCTL0.UAnRXE bit to 1.

(5) Stop the UARTAn in the following sequence.
<1> Set the UAnCTL0.UAnTXE bit to 0, UAnCTL0.UAnRXE bit to 0.
<2> Set the ports and set the UAnCTL0.UAnPWR bit to 0 (it is not a problem if port setting is not changed).

(6) In transmit mode (UAnCTL0.UAnPWR bit = 1 and UAnCTL0.UAnTXE bit = 1), do not overwrite the same value to the UAnTX register by software because transmission starts by writing to this register. To transmit the same value continuously, overwrite the same value.

(7) In continuous transmission, the communication rate from the stop bit to the next start bit is extended 2 base clocks more than usual. However, the reception side initializes the timing by detecting the start bit, so the reception result is not affected.

(8) If the break command is executed in the on-chip debug (OCD) mode and if UART receives data, an overrun error occurs.

CHAPTER 13 3-WIRE VARIABLE-LENGTH SERIAL I/O (CSIB)

The V850ES/HE2 has two channels of 3-wire serial interface (CSIB).

13.1 Features

- ○ Transfer rate: 8 Mbps to 4.9 kbps (f_{XX} = 20 MHz, using internal clock)
- ○ Master mode and slave mode selectable
- ○ 8-bit to 16-bit transfer, 3-wire serial interface
- ○ Interrupt request signals (INTCBnT, INTCBnR) × 2
- ○ Serial clock and data phase switchable
- ○ Transfer data length selectable in 1-bit units between 8 and 16 bits
- ○ Transfer data MSB-first/LSB-first switchable
- ○ 3-wire transfer SOBn: Serial data output
  SIBn: Serial data input
  $\overline{\text{SCKBn}}$: Serial clock I/O
  Transmission mode, reception mode, and transmission/reception mode specifiable

Remark n = 0, 1

13.2 Configuration

The following shows the block diagram of CSIBn.

Figure 13-1. Block Diagram of CSIBn

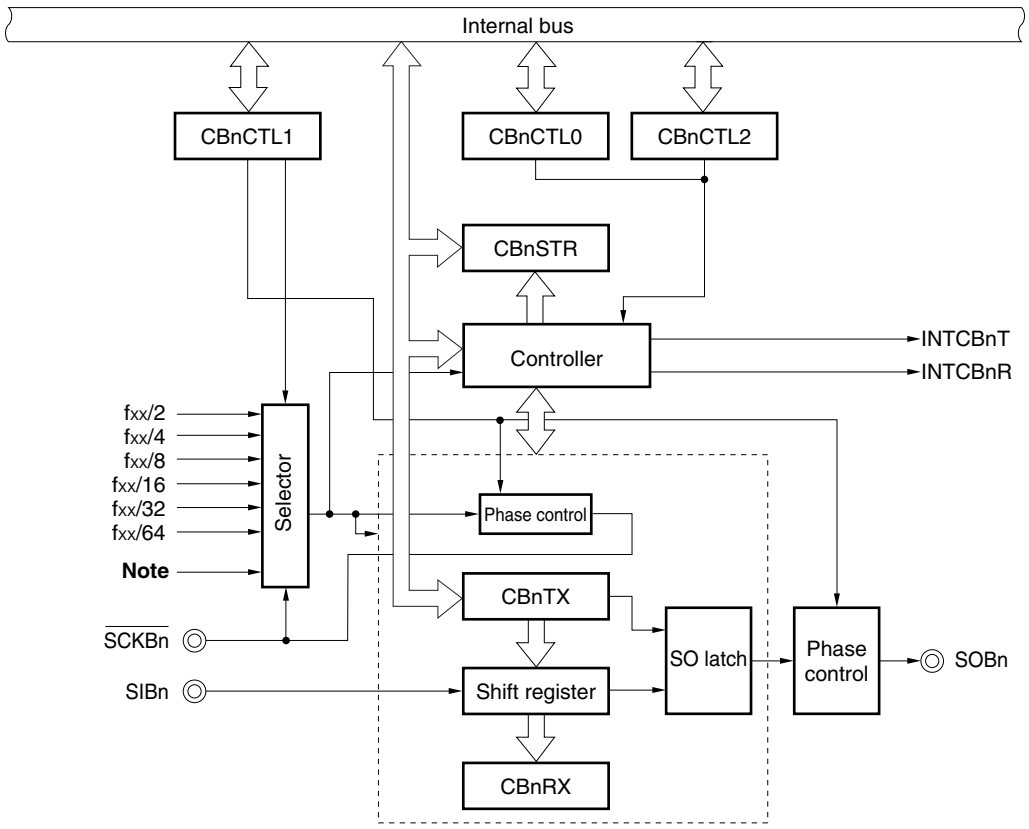

Note n = 0: f_{BRG}
n = 1: TOP01

Remark n = 0, 1

CSIBn includes the following hardware.

Table 13-1. Configuration of CSIBn

Item	Configuration
Registers	CSIBn receive data register (CBnRX) CSIBn transmit data register (CBnTX)
Control registers	CSIBn control register 0 (CBnCTL0) CSIBn control register 1 (CBnCTL1) CSIBn control register 2 (CBnCTL2) CSIBn status register (CBnSTR)

(1) CSIBn receive data register (CBnRX)

The CBnRX register is a 16-bit buffer register that holds receive data.

This register is read-only, in 16-bit units.

The receive operation is started by reading the CBnRX register in the reception enabled status.

If the transfer data length is 8 bits, the lower 8 bits of this register are read-only in 8-bit units as the CBnRXL register.

Reset sets this register to 0000H.

In addition to reset input, the CBnRX register can be initialized by clearing (to 0) the CBnPWR bit of the CBnCTL0 register.

After reset: 0000H R Address: CB0RX FFFFFD04H, CB1RX FFFFFD14H

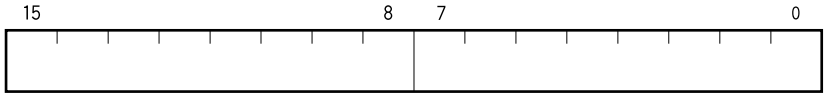

CBnRX
(n = 0, 1)

(2) CSIB transmit data register (CBnTX)

The CBnTX register is a 16-bit buffer register used to write the CSIBn transfer data.

This register can be read or written in 16-bit units.

The transmit operation is started by writing data to the CBnTX register in the transmission enabled status.

If the transfer data length is 8 bits, the lower 8 bits of this register are read-only in 8-bit units as the CBnTXL register.

Reset sets this register to 0000H.

After reset 0000H R/W Address: CB0TX FFFFFD06H, CB1TX FFFFFD16H

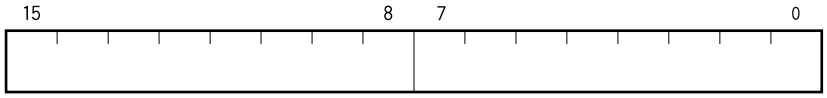

CBnTX
(n = 0, 1)

Remark The communication start conditions are shown below.

Transmission mode (CBnTXE bit = 1, CBnRXE bit = 0):	Write to CBnTX register
Transmission/reception mode (CBnTXE bit = 1, CBnRXE bit = 1):	Write to CBnTX register
Reception mode (CBnTXE bit = 0, CBnRXE bit = 1):	Read from CBnRX register

13.3 Registers

The following registers are used to control CSIBn.

- CSIBn control register 0 (CBnCTL0)
- CSIBn control register 1 (CBnCTL1)
- CSIBn control register 2 (CBnCTL2)
- CSIBn status register (CBnSTR)

(1) CSIBn control register 0 (CBnCTL0)

CBnCTL0 is a register that controls the CSIBn serial transfer operation.
This register can be read or written in 8-bit or 1-bit units.
Reset sets this register to 01H.

(1/3)

After reset: 01H R/W Address: CB0CTL0 FFFFFD00H, CB1CTL0 FFFFFD10H

	7	6	5	4	3	2	1	0
CBnCTL0 (n = 0, 1)	CBnPWR	CBnTXE[Note]	CBnRXE[Note]	CBnDIR[Note]	0	0	CBnTMS[Note]	CBnSCE

CBnPWR	Specification of CSIBn operation disable/enable
0	Disable CSIBn operation and reset the CBnSTR register
1	Enable CSIBn operation
• The CBnPWR bit controls the CSIBn operation and resets the internal circuit.	

CBnTXE[Note]	Specification of transmit operation disable/enable
0	Disable transmit operation
1	Enable transmit operation
• The SOBn output is low level when the CBnTXE bit is 0.	

CBnRXE[Note]	Specification of receive operation disable/enable
0	Disable receive operation
1	Enable receive operation
• When the CBnRXE bit is cleared to 0, no reception complete interrupt is output even when the prescribed data is transferred in order to disable the receive operation, and the receive data (CBnRX register) is not updated.	

Note These bits can only be rewritten when the CBnPWR bit = 0. However, CBnPWR bit = 1 can also be set at the same time as rewriting these bits.

Caution To forcibly suspend transmission/reception, clear the CBnPWR bit instead of the CBnRXE bit to 0.
At this time, the clock output is stopped.

(2/3)

CBnDIR[Note]	Specification of transfer direction mode (MSB/LSB)
0	MSB-first transfer
1	LSB-first transfer

CBnTMS[Note]	Transfer mode specification
0	Single transfer mode
1	Continuous transfer mode

[In single transfer mode]
The reception complete interrupt request signal (INTCBnR) is generated.
Even if transmission is enabled (CBnTXE bit = 1), the transmission enable interrupt request signal (INTCBnT) is not generated.
If the next transmit data is written during communication (CBnSTR.CBnTSF bit = 1), it is ignored and the next communication is not started. Also, if reception-only communication is set (CBnTXE bit = 0, CBnRXE bit = 1), the next communication is not started even if the receive data is read during communication (CBnSTR. CBbTSF bit = 1).

[In continuous transfer mode]
The continuous transmission is enabled by writing the next transmit data during communication (CBnSTR.CBnTSF bit = 1). Writing the next transmission data is enabled after a transmission enable interrupt (INTCBnT) occurrence.
If reception-only communication is set (CBnTXE bit = 0, CBnRXE bit = 1) in the continuous transfer mode, the next reception is started continuously after a reception complete interrupt (INTCBnR) regardless of the read operation of the CBnRX register.
Therefore, read immediately the receive data from the CBnRX register. If this read operation is delayed, an overrun error (CBnOVE bit = 1) occurs.

Note These bits can only be rewritten when the CBnPWR bit = 0. However, CBnPWR bit = 1 can also be set at the same time as rewriting these bits.

(3/3)

CBnSCE	Specification of start transfer disable/enable
0	Communication start trigger invalid
1	Communication start trigger valid

- In master mode
  This bit enables or disables the communication start trigger.
  (a) In single transmission or transmission/reception mode, or continuous transmission or continuous transmission/reception mode
  The setting of the CBnSCE bit has no influence on communication operation.
  (b) In single reception mode
  Clear the CBnSCE bit to 0 before reading the last receive data because reception is started by reading the receive data (CBnRX register) to disable the reception startup[Note 1].
  (c) In continuous reception mode
  Clear the CBnSCE bit to 0 one communication clock before reception of the last data is completed to disable the reception startup after the last data is received[Note 2].
- In slave mode
  This bit enables or disables the communication start trigger.
  Set the CBnSCE bit to 1.

[Usage of CBnSCE bit]
- In single reception mode
  <1> When reception of the last data is completed by INTCBnR interrupt servicing, clear the CBnSCE bit to 0 before reading the CBnRX register.
  <2> After confirming the CBnSTR.CBnTSF bit = 0, clear the CBnRXE bit to 0 to disable reception.
  To continue reception, set the CBnSCE bit to 1 to start up the next reception by dummy-reading the CBnRX register.
- In continuous reception mode
  <1> Clear the CBnSCE bit to 0 during the reception of the last data by INTCBnR interrupt servicing.
  <2> Read the CBnRX register.
  <3> Read the last reception data by reading the CBnRX register after acknowledging the CBnTIR interrupt.
  <4> After confirming the CBnSTR.CBnTSF bit = 0, clear the CBnRXE bit to 0 to disable reception.
  To continue reception, set the CBnSCE bit to 1 to wait for the next reception by dummy-reading the CBnRX register.

Notes 1. If the CBnSCE bit is read while it is 1, the next communication operation is started.

2. The CBnSCE bit is not cleared to 0 one communication clock before the completion of the last data reception, the next communication operation is automatically started.

Caution Be sure to clear bits 3 and 2 to "0".

(2) CSIBn control register 1 (CBnCTL1)

CBnCTL1 is an 8-bit register that controls the CSIBn serial transfer operation.

This register can be read or written in 8-bit or 1-bit units.

Reset sets this register to 00H.

Caution The CBnCTL1 register can be rewritten only when the CBnCTL0.CBnPWR bit = 0.

After reset 00H R/W Address: CB0CTL1 FFFFFD01H, CB1CTL1 FFFFFD11H

	7	6	5	4	3	2	1	0
CBnCTL1 (n = 0, 1)	0	0	0	CBnCKP	CBnDAP	CBnCKS2	CBnCKS1	CBnCKS0

	CBnCKP	CBnDAP	Specification of data transmission/ reception timing in relation to $\overline{\text{SCKBn}}$
Communication type 1	0	0	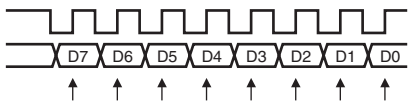
Communication type 2	0	1	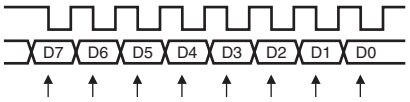
Communication type 3	1	0	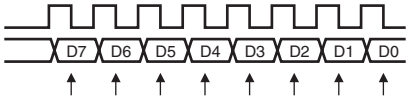
Communication type 4	1	1	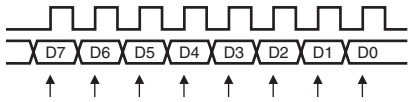

CBnCKS2	CBnCKS1	CBnCKS0	Communication clock		Mode
			n = 0	n = 1	
0	0	0	$f_{XX}/2$		Master mode
0	0	1	$f_{XX}/4$		Master mode
0	1	0	$f_{XX}/8$		Master mode
0	1	1	$f_{XX}/16$		Master mode
1	0	0	$f_{XX}/32$		Master mode
1	0	1	$f_{XX}/64$		Master mode
1	1	0	f_{BRG} **Note**	TMP0 (TOP01)	Master mode
1	1	1	External clock ($\overline{\text{SCKBn}}$)		Slave mode

Note For details, see **13.8 Baud Rate Generator**.

(3) CSIBn control register 2 (CBnCTL2)

CBnCTL2 is an 8-bit register that controls the number of CSIBn serial transfer bits.

This register can be read or written in 8-bit units.

Reset sets this register to 00H.

Caution The CBnCTL2 register can be rewritten only when the CBnCTL0.CBnPWR bit = 0 or when both the CBnTXE and CBnRXE bits = 0.

After reset: 00H R/W Address: CB0CTL2 FFFFFD02H, CB1CTL2 FFFFFD12H

	7	6	5	4	3	2	1	0
CBnCTL2 (n = 0, 1)	0	0	0	0	CBnCL3	CBnCL2	CBnCL1	CBnCL0

CBnCL3	CBnCL2	CBnCL1	CBnCL0	Serial register bit length
0	0	0	0	8 bits
0	0	0	1	9 bits
0	0	1	0	10 bits
0	0	1	1	11 bits
0	1	0	0	12 bits
0	1	0	1	13 bits
0	1	1	0	14 bits
0	1	1	1	15 bits
1	×	×	×	16 bits

Remarks 1. If the number of transfer bits is other than 8 or 16, prepare and use data stuffed from the LSB of the CBnTX and CBnRX registers.

2. ×: don't care

(a) Transfer data length change function

The CSIBn transfer data length can be set in 1-bit units between 8 and 16 bits using the CBnCTL2.CBnCL3 to CBnCTL2.CBnCL0 bits.

When the transfer bit length is set to a value other than 16 bits, set the data to the CBnTX or CBnRX register starting from the LSB, regardless of whether the transfer start bit is the MSB or LSB. Any data can be set for the higher bits that are not used, but the receive data becomes 0 following serial transfer.

(i) Transfer bit length = 10 bits, MSB first

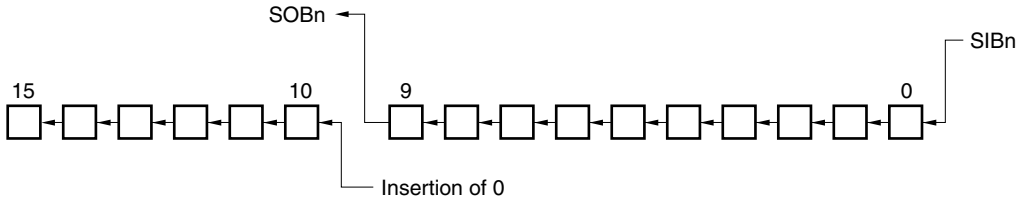

(ii) Transfer bit length = 12 bits, LSB first

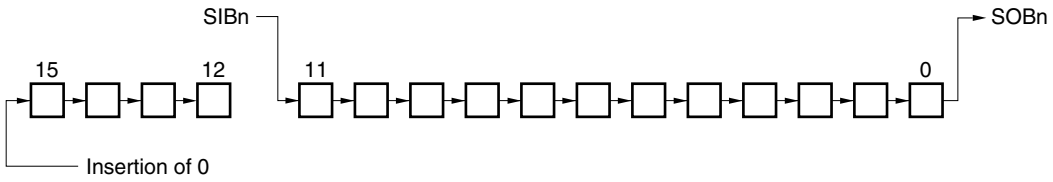

(4) CSIBn status register (CBnSTR)

CBnSTR is an 8-bit register that displays the CSIBn status.

This register can be read or written in 8-bit or 1-bit units, but the CBnTSF flag is read-only.

Reset sets this register to 00H.

In addition to reset input, the CBnSTR register can be initialized by clearing (0) the CBnCTL0.CBnPWR bit.

After reset 00H R/W Address: CB0STR FFFFFD03H, CB1STR FFFFFD13H

	7	6	5	4	3	2	1	0
CBnSTR	CBnTSF	0	0	0	0	0	0	CBnOVE

(n = 0, 1)

CBnTSF	Communication status flag
0	Communication stopped
1	Communicating

- During transmission, this register is set when data is prepared in the CBnTX register, and during reception, it is set when a dummy read of the CBnRX register is performed.
  When transfer ends, this flag is cleared to 0 at the last edge of the clock.

CBnOVE	Overrun error flag
0	No overrun
1	Overrun

- An overrun error occurs when the next reception starts without reading the value of the receive buffer by CPU, upon completion of the receive operation.
  The CBnOVE flag displays the overrun error occurrence status in this case.
- The CBnOVE bit is valid also in the single transfer mode. Therefore, when only using transmission, note the following.
  - Do not check the CBnOVE flag.
  - Read this bit even if reading the reception data is not required.
- The CBnOVE flag is cleared by writing 0 to it. It cannot be set even by writing 1 to it.

13.4 Interrupt Request Signals

CSIBn can generate the following two types of interrupt request signals.

- Reception complete interrupt request signal (INTCBnR)
- Transmission enable interrupt request signal (INTCBnT)

Of these two interrupt request signals, the reception complete interrupt request signal has the higher priority by default, and the priority of the transmission enable interrupt request signal is lower.

Table 13-2. Interrupts and Their Default Priority

Interrupt	Priority
Reception complete	High
Transmission enable	Low

(1) Reception complete interrupt request signal (INTCBnR)

When receive data is transferred to the CBnRX register while reception is enabled, the reception complete interrupt request signal is generated.

This interrupt request signal can also be generated if an overrun error occurs.

When the reception complete interrupt request signal is acknowledged and the data is read, read the CBnSTR register to check that the result of reception is not an error.

In the single transfer mode, the INTCBnR interrupt request signal is generated upon completion of transmission, even when only transmission is executed.

(2) Transmission enable interrupt request signal (INTCBnT)

In the continuous transmission or continuous transmission/reception mode, transmit data is transferred from the CBnTX register and, as soon as writing to CBnTX has been enabled, the transmission enable interrupt request signal is generated.

In the single transmission and single transmission/reception modes, the INTCBnT interrupt is not generated.

13.5 Operation

13.5.1 Single transfer mode (master mode, transmission/reception mode)

This section shows a case of MSB first (CBnCTL0.CBnDIR bit = 0), communication type 1 (see **13.3 (2) CSIBn control register 1 (CBnCTL1)**, and transfer data length = 8 bits (CBnCTL2.CBnCL3 to CBnCTL2.CBnCL0 bits = 0, 0, 0, 0).

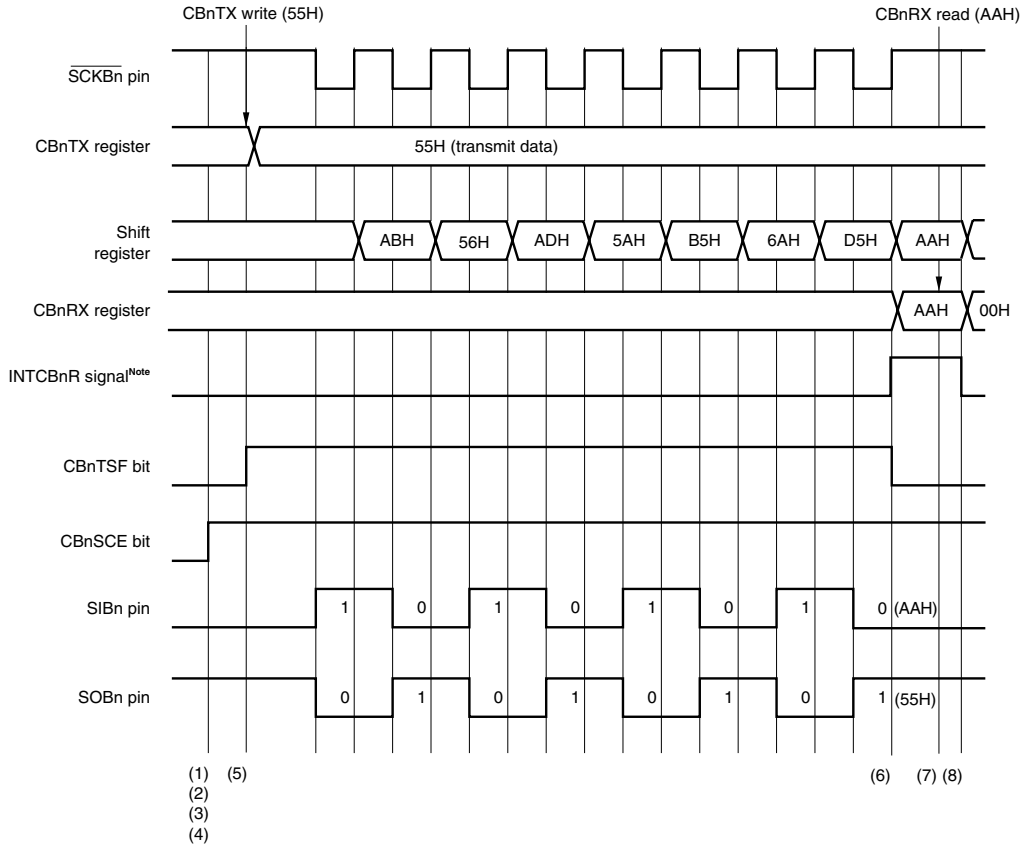

(1) Clear the CBnCTL0.CBnPWR bit to 0.
(2) Set the CBnCTL1 and CBnCTL2 registers to specify the transfer mode.
(3) Set the CBnTXE, CBnRXE, and CBnSCE bits of the CBnCTL0 register to 1 at the same time as specifying the transfer mode using the CBnDIR bit, to set the transmission/reception enabled status.
(4) Set the CBnPWR bit to 1 to enable the CSIBn operation.
(5) Write transfer data to the CBnTX register (transmission start).
(6) The reception complete interrupt request signal (INTCBnR) is output.
(7) Read the CBnRX register before clearing the CBnPWR bit to 0.
(8) Check that the CBnSTR.CBnTSF bit = 0 and set the CBnPWR bit to 0 to stop operation of CSIBn (end of transmission/reception).

Note In single transmission or single transmission/reception mode, the INTCBnT signal is not generated. When communication is complete, the INTCBnR signal is generated.

Remarks 1. The processing of steps (3) and (4) can be set simultaneously.
2. n = 0, 1

13.5.2 Single transfer mode (master mode, reception mode)

This section shows the case using MSB first (CBnCTL0.CBnDIR bit = 0) and communication type 1 (see **13.3 (2) CSIBn control register 1 (CBnCTL1)**, transfer data length = 8 bits (CBnCTL2.CBnCL3 to CBnCTL2.CBnCL0 bits = 0, 0, 0, 0).

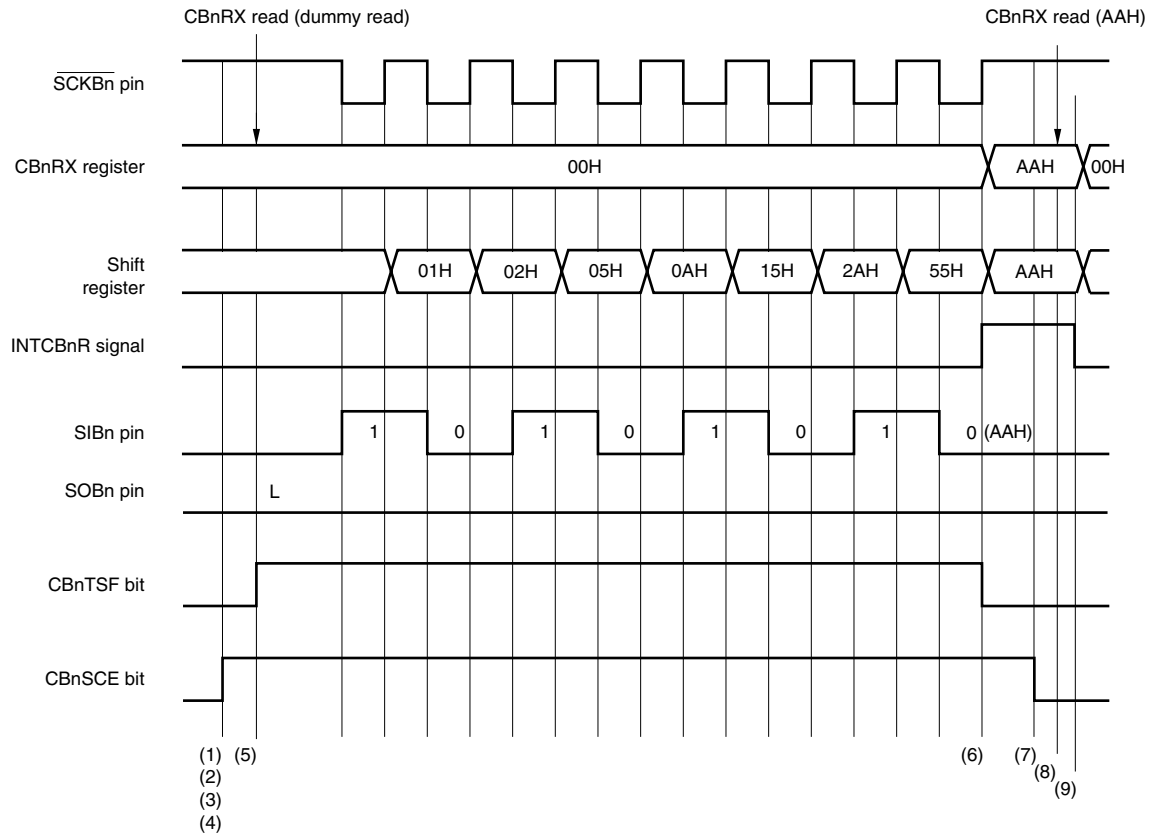

(1) Clear the CBnCTL0.CBnPWR bit to 0.
(2) Set the CBnCTL1 and CBnCTL2 registers to specify the transfer mode.
(3) Set the CBnCTL0.CBnRXE and CBnCTL0.CBnSCE bits to 1 at the same time as specifying the transfer mode using the CBnDIR bit, to set the reception enabled status.
(4) Set the CBnPWR bit to 1 to enable the CSIBn operation.
(5) Perform a dummy read of the CBnRX register (reception start trigger).
(6) The reception complete interrupt request signal (INTCBnR) is output.
(7) Set the CBnSCE bit to 0 to set the final receive data status.
(8) Read the CBnRX register.
(9) Check that the CBnSTR.CBnTSF bit = 0 and set the CBnPWR bit to 0 to stop the CSIBn operation (end of reception).

Remarks 1. The processing of steps (3) and (4) can be set simultaneously.
2. n = 0, 1

13.5.3 Continuous mode (master mode, transmission/reception mode)

This section shows the case using MSB first (CBnCTL0.CBnDIR bit = 0) and communication type 3 (see **13.3 (2) CSIBn control register 1 (CBnCTL1)**), transfer data length = 8 bits (CBnCTL2.CBnCL3 to CBnCTL2.CBnCL0 bits = 0, 0, 0, 0).

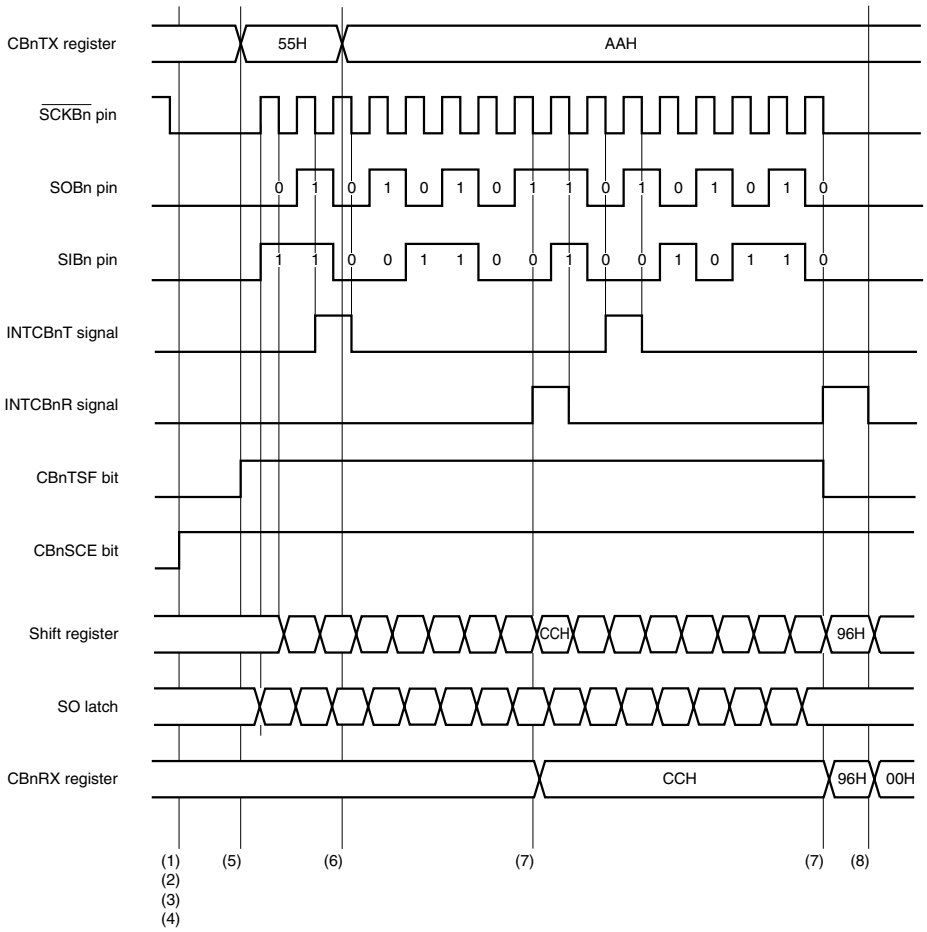

(1) Clear the CBnCTL0.CBnPWR bit to 0.
(2) Set the CBnCTL1 and CBnCTL2 registers to specify the transfer mode.
(3) Set the CBnTXE, CBnRXE, and CBnSCE bits of the CBnCTL0 register to 1 at the same time as specifying the transfer mode using the CBnDIR bit, to set the transmission/reception enabled status.
(4) Set the CBnPWR bit to 1 to enable the CSIBn operation.
(5) Write transfer data to the CBnTX register (transmission start).
(6) The transmission enable interrupt request signal (INTCBnT) is received and transfer data is written to the CBnTX register.
(7) The reception complete interrupt request signal (INTCBnR) is output.
Read the CBnRX register before the next receive data arrives or before the CBnPWR bit is cleared to 0.
(8) Check that the CBnSTR.CBnTSF bit = 0 and set the CBnPWR bit to 0 to stop the operation of CSIBn (end of transmission/reception).

To continue transfer, repeat steps (5) to (7) before (8).

In transmission mode or transmission/reception mode, the communication is not started by reading the CBnRX register.

Remark n = 0, 1

13.5.4 Continuous mode (master mode, reception mode)

This section shows the case using MSB first (CBnCTL0.CBnDIR bit = 0) and communication type 2 (see **13.3 (2) CSIBn control register 1 (CBnCTL1)**), transfer data length = 8 bits (CBnCTL2.CBnCL3 to CBnCTL2.CBnCL0 bits = 0, 0, 0, 0).

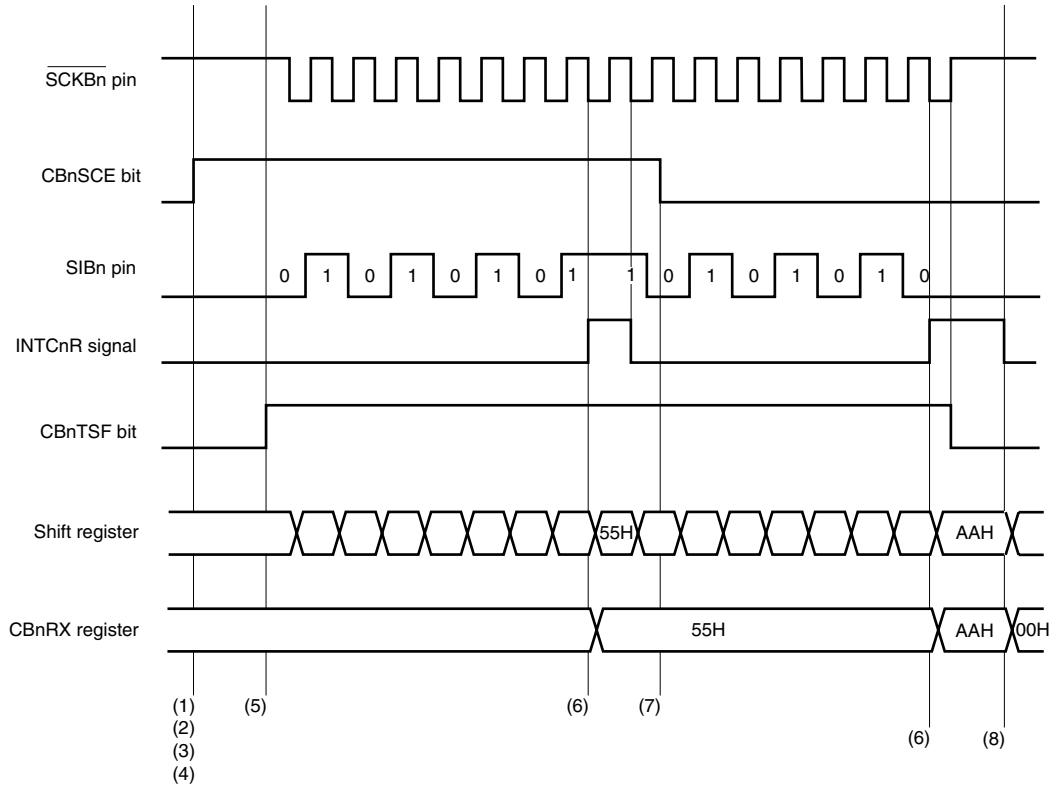

(1) Clear the CBnCTL0.CBnPWR bit to 0.
(2) Set the CBnCTL1 and CBnCTL2 registers to specify the transfer mode.
(3) Set the CBnCTL0.CBnRXE bit to 1 at the same time as specifying the transfer mode using the CBnDIR bit, to set the reception enabled status.
(4) Set the CBnPWR bit to 1 to enable the CSIBn operation.
(5) Perform a dummy read of the CBnRX register (reception start trigger).
(6) The reception complete interrupt request signal (INTCBnR) is output.
Read the CBnRX register before the next receive data arrives or before the CBnPWR bit is cleared to 0.
(7) Set the CBnCTL0.CBnSCE bit = 0 while the last data being received to set the final receive data status.
(8) Check that the CBnSTR.CBnTSF bit = 0 and set the CBnPWR bit to 0 to stop the operation of CSIBn (end of reception).

To continue transfer, repeat steps (5) and (6) before (7).

Remark n = 0, 1

13.5.5 Continuous reception mode (error)

This section shows the case using MSB first (CBnCTL0.CBnDIR bit = 0) and communication type 2 (see **13.3 (2) CSIBn control register 1 (CBnCTL1)**), transfer data length = 8 bits (CBnCTL2.CBnCL3 to CBnCTL2.CBnCL0 bits = 0, 0, 0, 0).

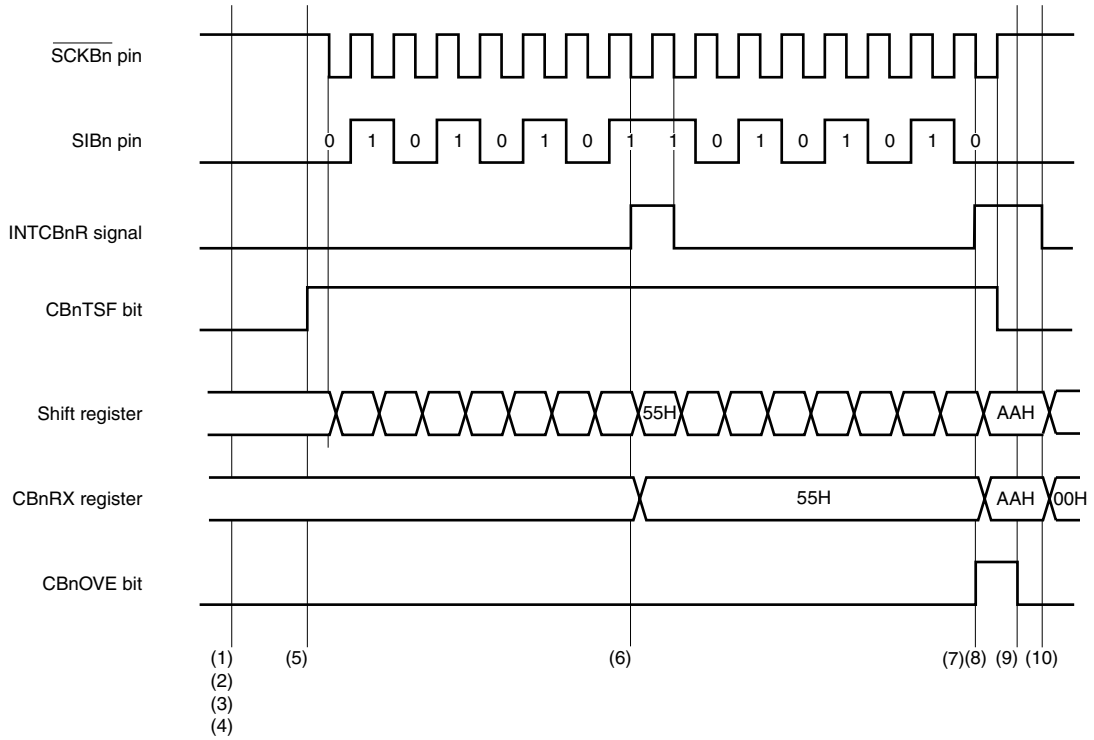

(1) Clear the CBnCTL0.CBnPWR bit to 0.
(2) Set the CBnCTL1 and CBnCTL2 registers to specify the transfer mode.
(3) Set the CBnCTL0.CBnRXE bit to 1 at the same time as specifying the transfer mode using the CBnDIR bit, to set the reception enabled status.
(4) Set the CBnPWR bit = 1 to enable CSIBn operation.
(5) Perform a dummy read of the CBnRX register (reception start trigger).
(6) The reception complete interrupt request signal (INTCBnR) is output.
(7) If the data could not be read before the end of the next transfer, the CBnSTR.CBnOVE flag is set to 1 upon the end of reception and the INTCBnR signal is output.
(8) Overrun error processing is performed after checking that the CBnOVE bit = 1 in the INTCBnR interrupt servicing.
(9) Clear CBnOVE bit to 0.
(10) Check that the CBnSTR.CBnTSF bit = 0 and set the CBnPWR bit to 0 to stop the operation CSIBn (end of reception).

Remark n = 0, 1

13.5.6 Continuous mode (slave mode, transmission/reception mode)

This section shows the case using MSB first (CBnCTL0.CBnDIR bit = 0) and communication type 2 (see **13.3 (2) CSIBn control register 1 (CBnCTL1)**), transfer data length = 8 bits (CBnCTL2.CSnCL3 to CBnCTL2.CBnCL0 bits = 0, 0, 0, 0).

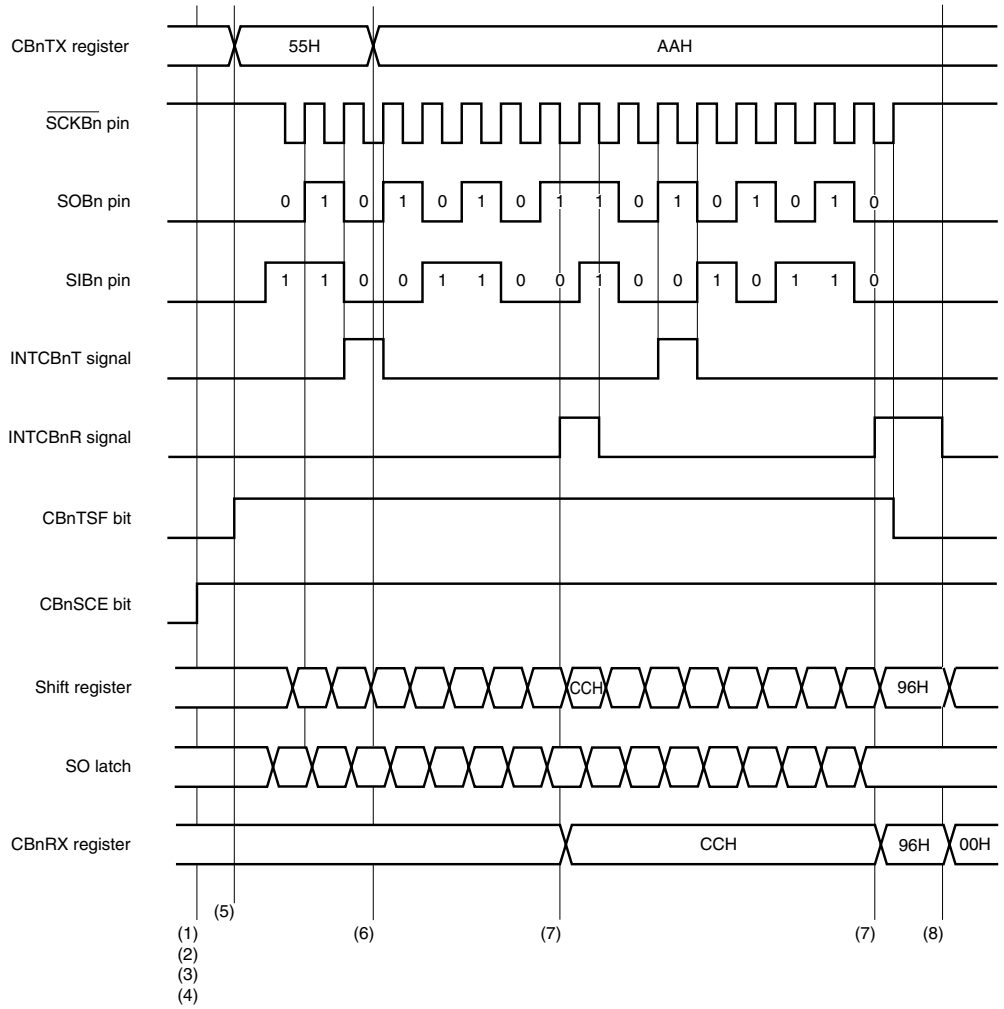

(1) Clear the CBnCTL0.CBnPWR bit to 0.
(2) Set the CBnCTL1 and CBnCTL2 registers to specify the transfer mode.
(3) Set the CBnTXE, CBnRXE and CBnSCE bits of the CBnCTL0 register to 1 at the same time as specifying the transfer mode using the CBnDIR bit, to set the transmission/reception enabled status.
(4) Set the CBnPWR bit to 1 to enable supply of the CSIBn operation.
(5) Write the transfer data to the CBnTX register.
(6) The transmission enable interrupt request signal (INTCBnT) is received and the transfer data is written to the CBnTX register.
(7) The reception complete interrupt request signal (INTCBnR) is output.
Read the CBnRX register.
(8) Check that the CBnSTR.CBnTSF bit = 0 and set the CBnPWR bit to 0 to stop the operation of CSIBn (end of transmission/reception).

To continue transfer, repeat steps (5) to (7) before (8).

Remark n = 0, 1

13.5.7 Continuous mode (slave mode, reception mode)

This section shows the case using MSB first (CBnCTL0.CBnDIR bit = 0) and communication type 1 (see **13.3 (2) CSIBn control register 1 (CBnCTL1)**), transfer data length = 8 bits (CBnCTL2.CBnCL3 to CBnCTL2.CBnCL0 bits = 0, 0, 0, 0).

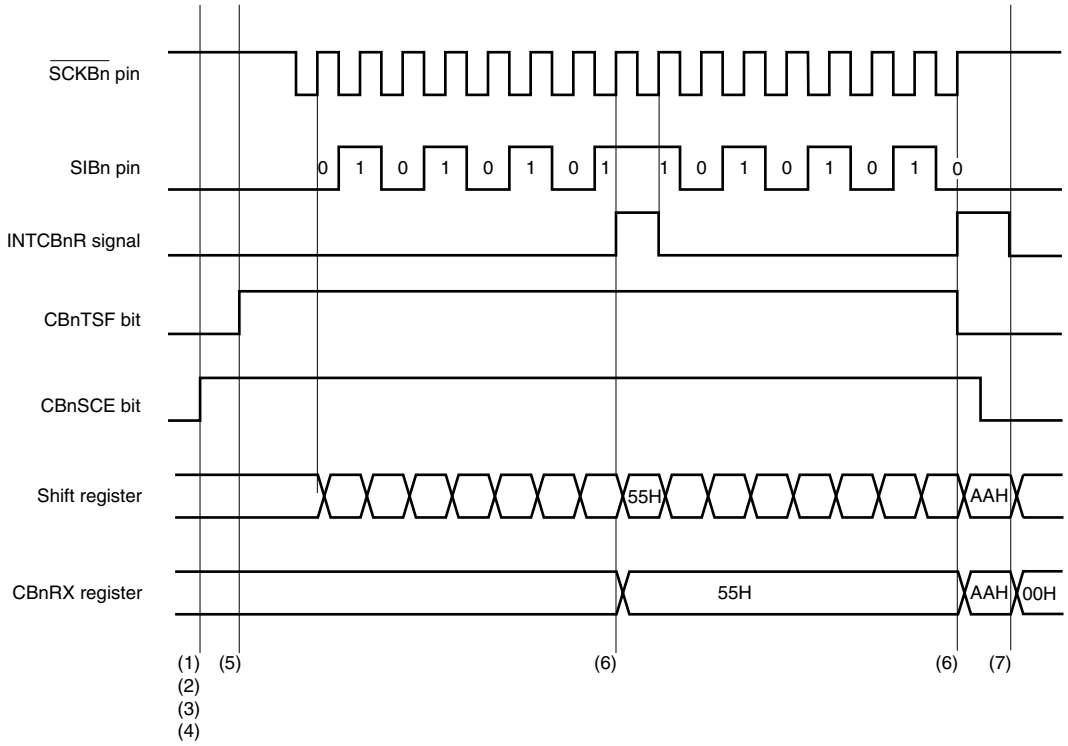

(1) Clear the CBnCTL0.CBnPWR bit to 0.
(2) Set the CBnCTL1 and CBnCTL2 registers to specify the transfer mode.
(3) Set the CBnCTL0.CBnRXE and CBnCTL0.CBnSCE bits to 1 at the same time as specifying the transfer mode using the CBnDIR bit, to set the reception enabled status.
(4) Set the CBnPWR bit = 1 to enable CSIBn operation.
(5) Perform a dummy read of the CBnRX register (reception start trigger).
(6) The reception complete interrupt request signal (INTCBnR) is output.
Read the CBnRX register. When reading the last data, clear the CBnCTL0.CBnSCE bit to 0 before reading the CBnRX register.
(7) Check that the CBnSTR.CBnTSF bit = 0 and set the CBnPWR bit to 0 to stop the operation of CSIBn (end of reception).

To continue transfer, repeat steps (5) and (6) before (7).

Remark n = 0, 1

13.5.8 Clock timing

(1/2)

(1) Communication type 1 (CBnCKP = 0, CBnDAP = 0)

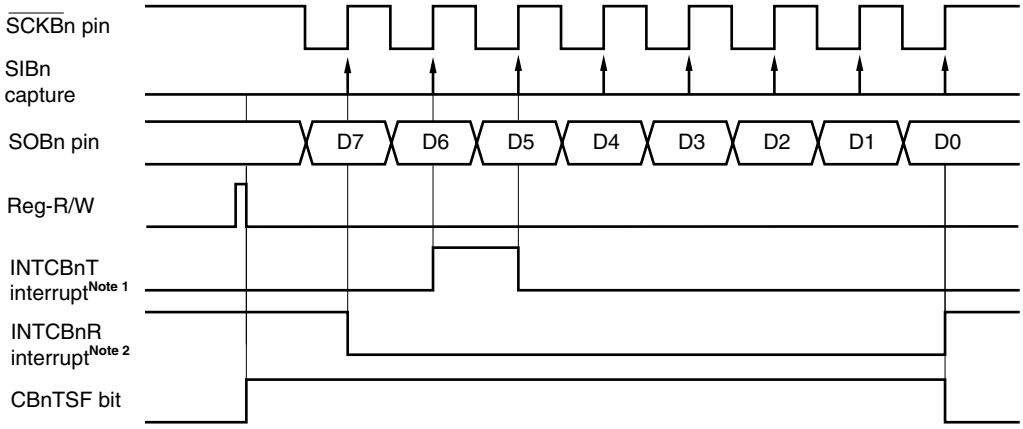

(2) Communication type 2 (CBnCKP = 0, CBnDAP = 1)

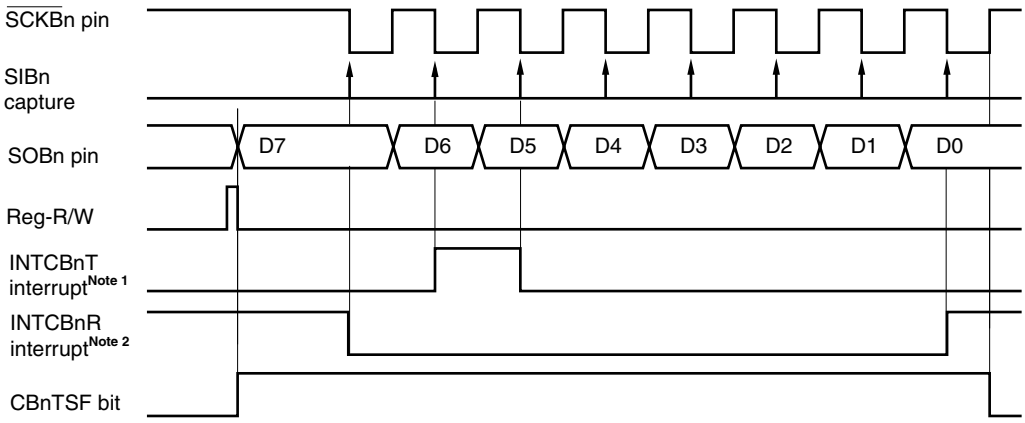

Notes 1. The INTCBnT interrupt is set when the data written to the transmit buffer is transferred to the data shift register in the continuous transmission or continuous transmission/reception mode. In the single transmission or single transmission/reception mode, the INTCBnT interrupt request signal is not generated, but the INTCBnR interrupt request signal is generated upon completion of communication.

2. The INTCBnR interrupt occurs if reception is correctly completed and receive data is ready in the CBnRX register while reception is enabled, and if an overrun error occurs. In the single mode, the INTCBnR interrupt request signal is generated even in the transmission mode, upon completion of communication.

Caution In communication type 2, the CBnTSF bit is cleared half a $\overline{\text{SCKBn}}$ clock after generation of an INTCBnR interrupt request signal.

Remark n = 0, 1

(2/2)

(3) Communication type 3 (CBnCKP = 1, CBnDAP = 0)

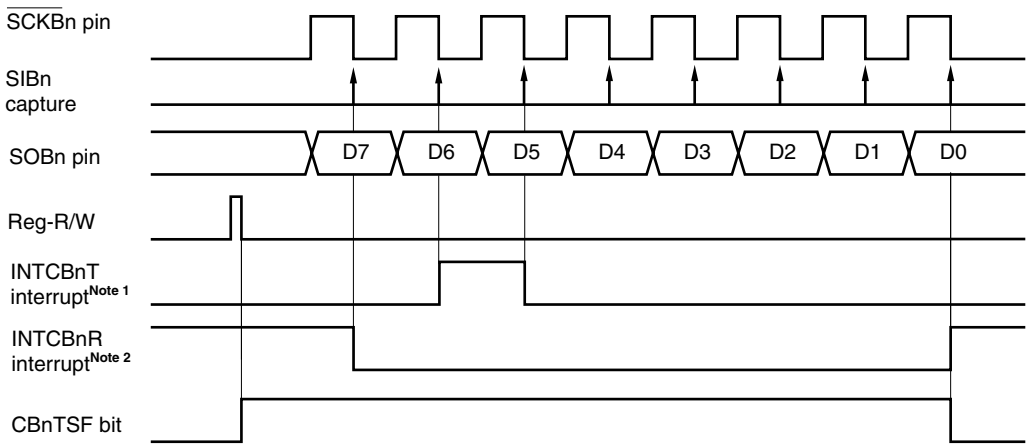

(4) Communication type 4 (CBnCKP = 1, CBnDAP = 1)

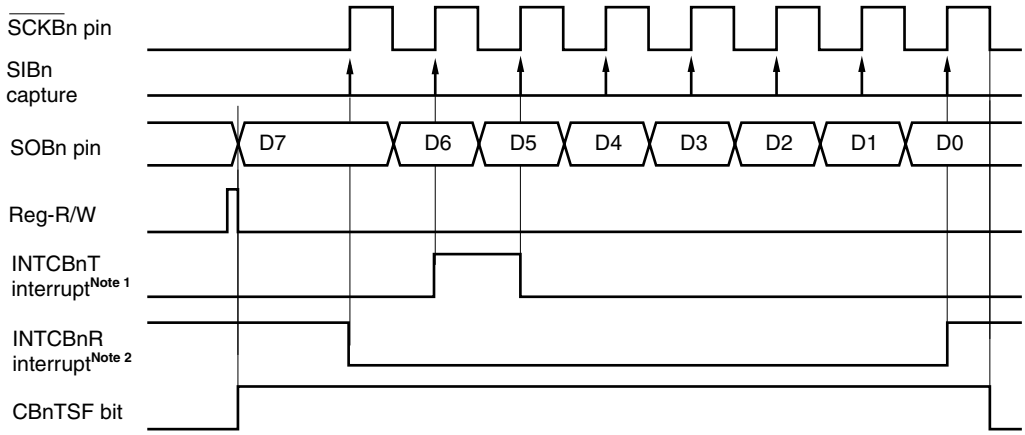

Notes 1. The INTCBnT interrupt is set when the data written to the transmit buffer is transferred to the data shift register in the continuous transmission or continuous transmission/reception modes. In the single transmission or single transmission/reception modes, the INTCBnT interrupt request signal is not generated, but the INTCBnR interrupt request signal is generated upon completion of communication.

2. The INTCBnR interrupt occurs if reception is correctly completed and receive data is ready in the CBnRX register while reception is enabled, and if an overrun error occurs. In the single mode, the INTCBnR interrupt request signal is generated even in the transmission mode, upon completion of communication.

Caution In communication type 4, the CBnTSF bit is cleared half a $\overline{\text{SCKBn}}$ clock after generation of an INTCBnR interrupt request signal.

Remark n = 0, 1

13.6 Output Pin Status with Operation Disabled

(1) $\overline{\text{SCKBn}}$ pin

When CSIBn operation is disabled (CBnCTL0.CBnPWR bit = 0), the $\overline{\text{SCKBn}}$ pin output status is as follows.

CBnCKS2	CBnCKS1	CBnCKS0	CBnCKP	$\overline{\text{SCKBn}}$ Pin Output
1	1	1	×	High impedance
Other than above			0	Fixed to high level
			1	Fixed to low level

Remarks 1. The output level of the $\overline{\text{SCKBn}}$ pin changes if any of the CBnCTL1.CBnCKP and CBnCKS2 to CBnCKS0 bits is rewritten.

2. n = 0, 1

3. ×: don't care

(2) SOBn pin

When CSIBn operation is disabled (CBnPWR bit = 0), the SOBn pin output status is as follows.

CBnTXE	CBnDAP	CBnDIR	SOBn Pin Output
0	×	×	Fixed to low level
1	0	×	SOBn latch value (low level)
	1	0	CBnTX register value (MSB)
		1	CBnTX register value (LSB)

Remarks 1. The SOBn pin output changes when any one of the CBnCTL0.CBnTXE, CBnCTL0.CBnDIR bits, and CBnCTL1.CBnDAP bit is rewritten.

2. n = 0, 1

3. ×: don't care

13.7 Operation Flow

(1) Single transmission

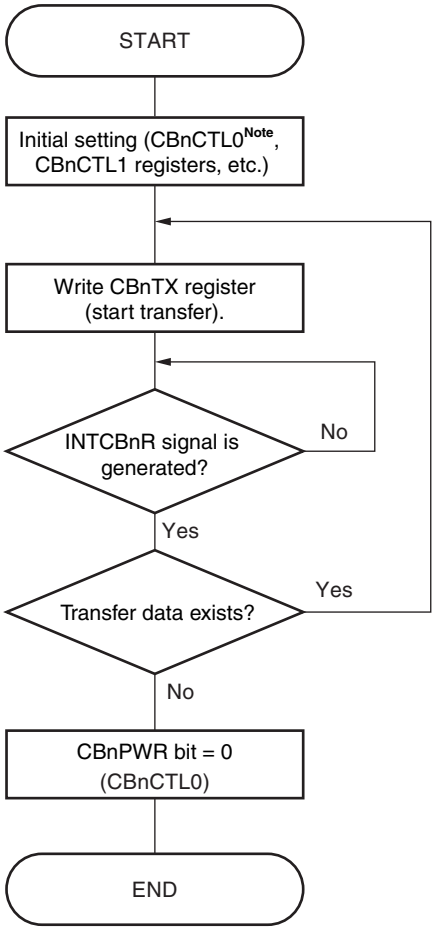

Note Set the CBnSCE bit to 1 in the initial setting.

Caution **In the slave mode, data cannot be correctly transmitted if the next transfer clock is input earlier than the CBnTX register is written.**

Remark n = 0, 1

(2) Single reception

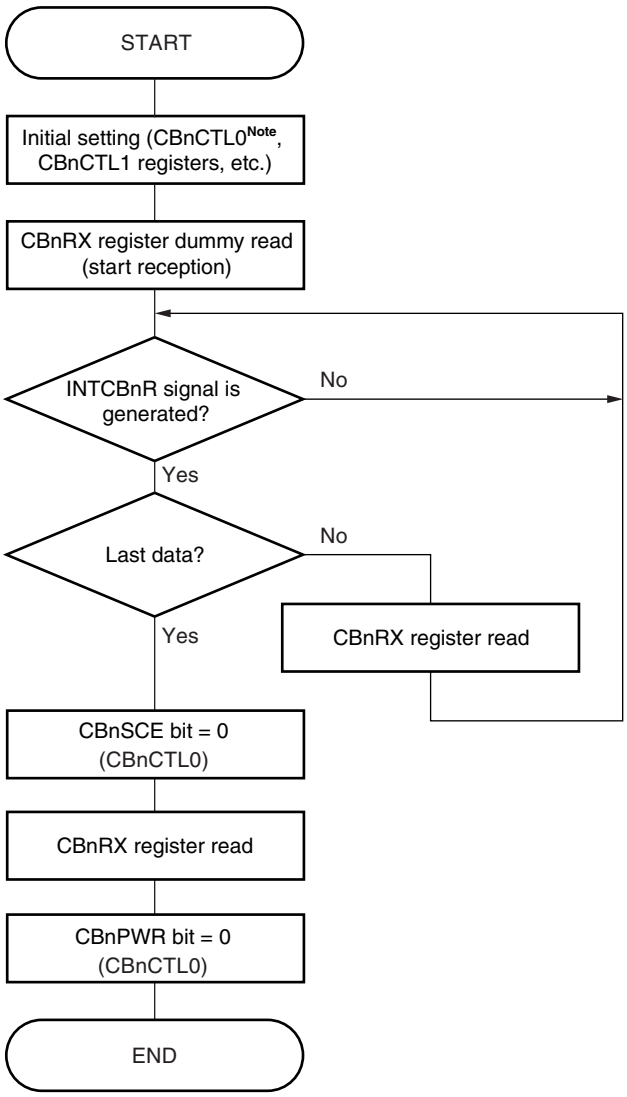

Note Set the CBnSCE bit to 1 in the initial setting.

Caution **In the single mode, data cannot be correctly received if the next transfer clock is input earlier than the CBnRX register is read.**

Remark n = 0, 1

(3) Single transmission/reception

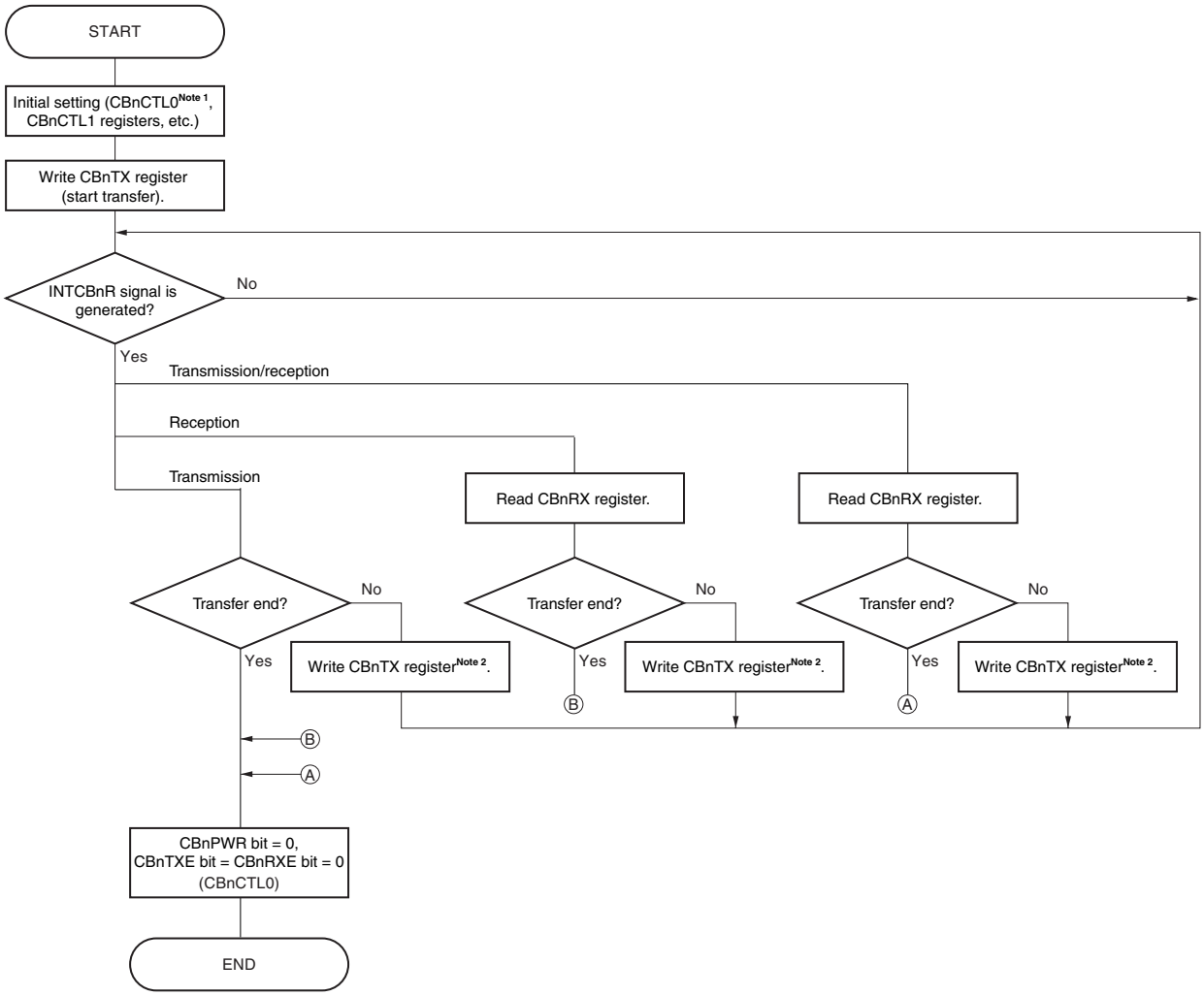

Notes 1. Set the CBnSCE bit to 1 in the initial setting.

2. If the next transfer is reception only, dummy data is written to the CBnTX register.

Caution **Even in the single mode, the CBnSTR.CBnOVE flag is set to 1. If only transmission is used in the transmission/reception mode, therefore, checking the CBnOVE flag is not required.**

Remark n = 0, 1

(4) Continuous transmission

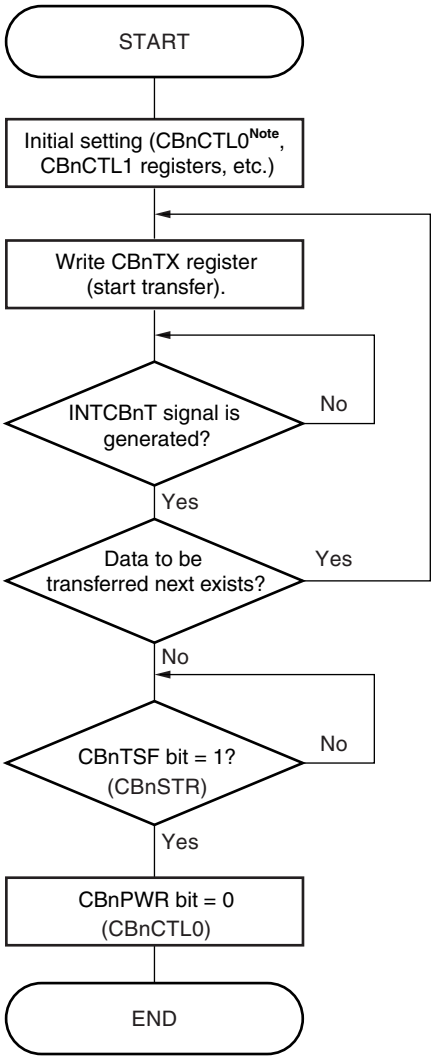

Note Set the CBnSCE bit to 1 in the initial setting.

Remark n = 0, 1

(5) Continuous reception

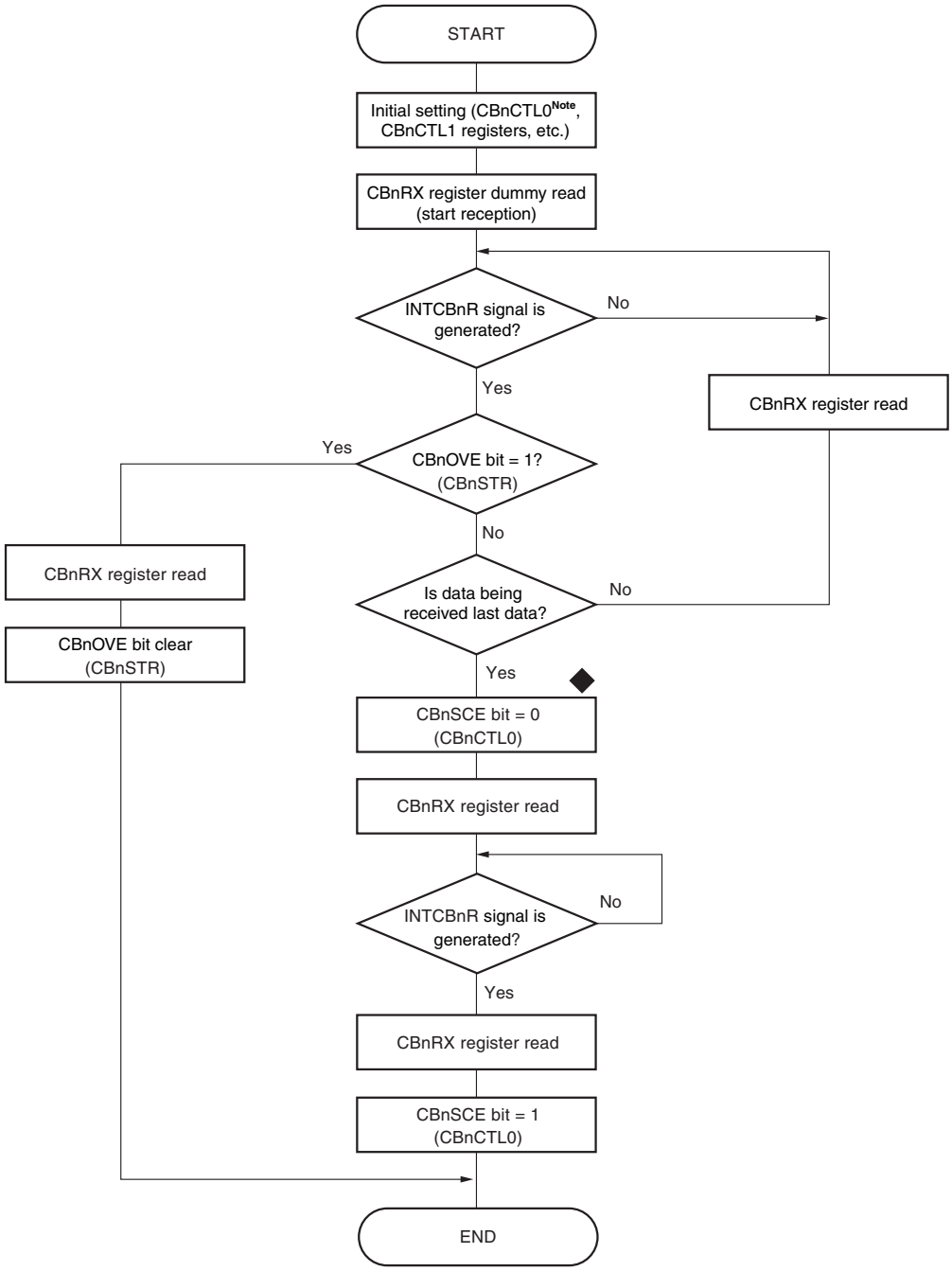

Note Set the CBnSCE bit to 1 in the initial setting

Caution **In the master mode, the clock is output without limit when dummy data is read from the CBnRX register. To stop the clock, execute the flow marked ◆ in the above flowchart.**
In the slave mode, malfunction due to noise during communication can be prevented by executing the flow marked ◆ in the above flowchart.
Before resuming communication, set the CBnCTL0.CBnSCE bit to 1, and read dummy data from the CBnRX register.

Remark n = 0, 1

(6) Continuous transmission/reception

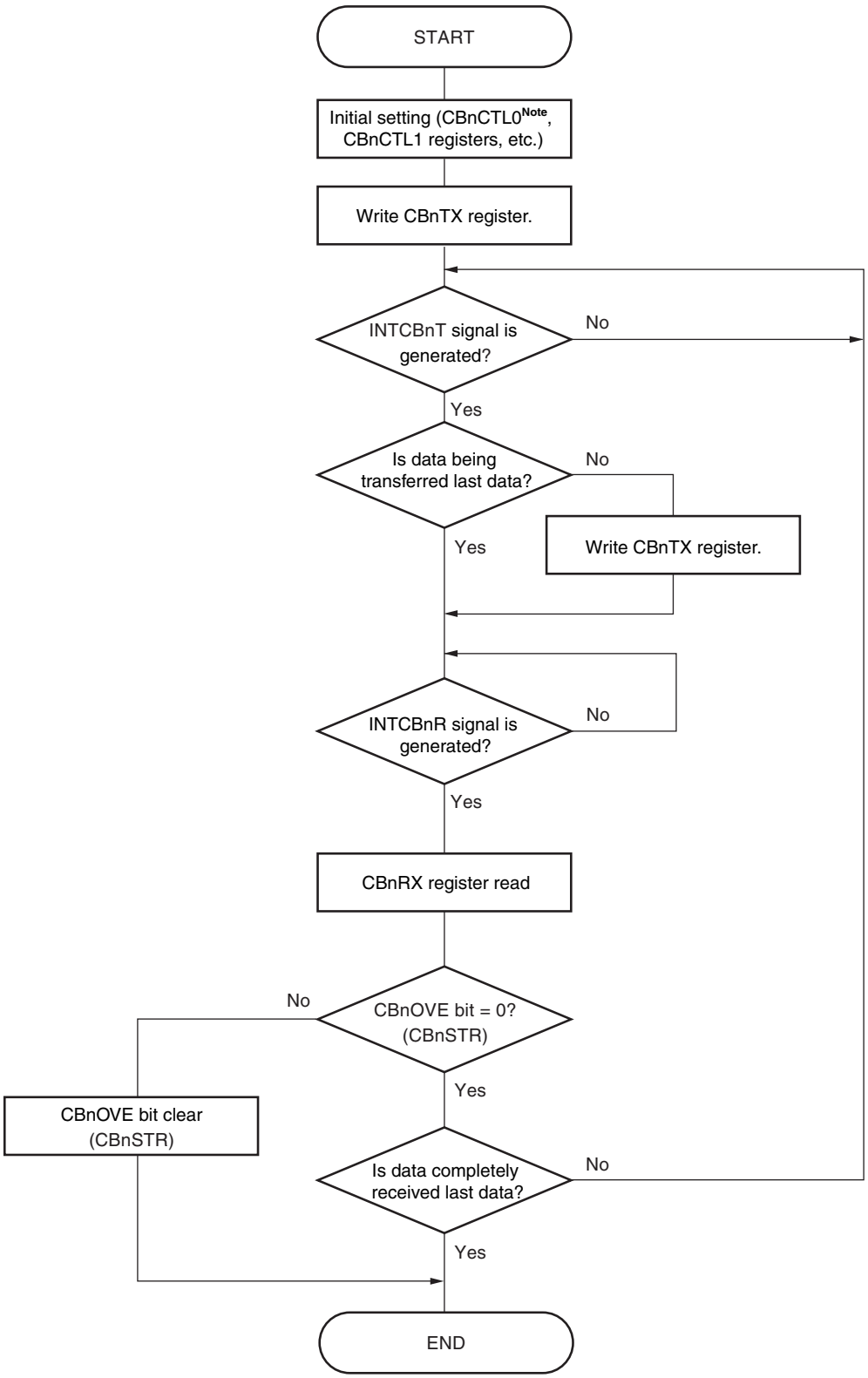

Note Set the CBnSCE bit to 1 in the initial setting.

Remark n = 0, 1

13.8 Baud Rate Generator

The clock generated by the baud rate generator (prescaler 3) is supplied to the watch timer and CSIB0.

(1) Prescaler mode register 0 (PRSM0)

The PRSM0 register controls generation of the baud rate signal for CSIB.

This register can be read or written in 8-bit or 1-bit units.

Reset sets this register to 00H.

After reset: 00H R/W Address: FFFFF8B0H

	7	6	5	4	3	2	1	0
PRSM0	0	0	0	BGCE0	0	0	BGCS01	BGCS00

BGCE0	Baud rate output
0	Disabled
1	Enabled

BGCS01	BGCS00	Count clock selection (f_{BGCS})		
			5 MHz	4 MHz
0	0	f_X	200 ns	250 ns
0	1	$f_X/2$	400 ns	500 ns
1	0	$f_X/4$	800 ns	1 μs
1	1	$f_X/8$	1.6 μs	2 μs

Cautions 1. Do not rewrite the PRSM0 register while watch timer and CSIB0 are operating.

2. Set the PRSM0 register before setting the BGCE0 bit to 1.

(2) Prescaler compare register 0 (PRSCM0)

The PRSCM0 register is an 8-bit compare registers.

This register can be read or written in 8-bit units.

Reset sets this register to 00H.

After reset: 00H R/W Address: FFFFF8B1H

	7	6	5	4	3	2	1	0
PRSCM0	PRSCM07	PRSCM06	PRSCM05	PRSCM04	PRSCM03	PRSCM02	PRSCM01	PRSCM00

Cautions 1. Do not rewrite the PRSCM0 register while watch timer and CSIB are operating.

2. Set the PRSCM0 register before setting the PRSM0.BGCE0 bit to 1.

13.8.1 Baud rate generation

The transmission/reception clock is generated by dividing the main clock. The baud rate generated from the main clock is obtained by the following equation.

$$f_{BRG} = \frac{f_{XX}}{2^{k+1} \times N}$$

Remark f_{BRG}: BRG count clock

f_{XX}: Main clock oscillation frequency

k: PRSM0 register setting value = 0 to 3

N: PRSCM0 register setting value = 1 to 256

However, N = 256 only when PRSCM0 register is set to 00H.

13.9 Cautions

(1) In regards to registers that are forbidden from being rewritten during operations (CBnCTL0.CBnPWR bit is 1), if rewriting has been carried out by mistake during operations, set the CBnCTL0.CBnPWR bit to 0 once, then initialize CSIBn.

Registers to which rewriting during operation are prohibited are shown below.

- CBnCTL0 register: CBnTXE, CBnRXE, CBnDIR, CBnTMS bits
- CBnCTL1 register: CBnCKP, CBnDAP, CBnCKS2 to CBnCKS0 bits
- CBnCTL2 register: CBnCL3 to CBnCL0 bits

(2) In communication type 2 and 4 (CBnCTL1.CBnDAP bit = 1), the CBnSTR.CBnTSF bit is cleared half a $\overline{\text{SCKBn}}$ clock after occurrence of a reception complete interrupt (INTCBnR).

In the single transfer mode, writing the next transmit data is ignored during communication (CBnTSF bit = 1), and the next communication is not started. Also if reception-only communication (CBnCTL0.CBnTXE bit = 0, CBnCTL0.CBnRXE bit = 1) is set, the next communication is not started even if the receive data is read during communication (CBnTSF bit = 1).

Therefore, when using the single transfer mode with communication type 2 or 4 (CBnDAP bit = 1), pay particular attention to the following.

- To start the next transmission, confirm that CBnTSF bit = 0 and then write the transmit data to the CBnTX register.
- To perform the next reception continuously when reception-only communication (CBnTXE bit = 0, CBnRXE bit = 1) is set, confirm that CBnTSF bit = 0 and then read the CBnRX register.

Or, use the continuous transfer mode instead of the single transfer mode. Use of the continuous transfer mode is recommended especially for using DMA.

Remark n = 0, 1

CHAPTER 14 INTERRUPT/EXCEPTION PROCESSING FUNCTION

The V850ES/HE2 is provided with a dedicated interrupt controller (INTC) for interrupt servicing and can process a total of 41 interrupt requests.

An interrupt is an event that occurs independently of program execution, and an exception is an event whose occurrence is dependent on program execution.

The V850ES/HE2 can process interrupt request signals from the on-chip peripheral hardware and external sources. Moreover, exception processing can be started by the TRAP instruction (software exception) or by generation of an exception event (i.e. fetching of an illegal opcode) (exception trap).

14.1 Features

○ Interrupts
- Non-maskable interrupts: 2 sources
- Maskable interrupts: External: 8, Internal: 31 sources
- 8 levels of programmable priorities (maskable interrupts)
- Multiple interrupt control according to priority
- Masks can be specified for each maskable interrupt request.
- Noise elimination, edge detection, and valid edge specification for external interrupt request signals.

○ Exceptions
- Software exceptions: 32 sources
- Exception trap: 2 sources (illegal opcode exception, debug trap)

Interrupt/exception sources are listed in Table 14-1.

Table 14-1. Interrupt Source List (1/2)

Type	Classification	Default Priority	Name	Trigger	Generating Unit	Exception Code	Handler Address	Restored PC	Interrupt Control Register
Reset	Interrupt	–	RESET	$\overline{\text{RESET}}$ pin input Reset input by internal source	RESET	0000H	00000000H	Undefined	–
Non-maskable	Interrupt	–	NMI	NMI pin valid edge input	Pin	0010H	00000010H	nextPC	–
		–	INTWDT2	WDT2 overflow	WDT2	0020H	00000020H	**Note 1**	–
Software exception	Exception	–	TRAP0n[Note 2]	TRAP instruction	–	004nH[Note 2]	00000040H	nextPC	–
		–	TRAP1n[Note 2]	TRAP instruction	–	005nH[Note 2]	00000050H	nextPC	–
Exception trap	Exception	–	ILGOP/ DBG0	Illegal opcode/ DBTRAP instruction	–	0060H	00000060H	nextPC	–
Maskable	Interrupt	0	INTLVI	Low voltage detection	POCLVI	0080H	00000080H	nextPC	LVIIC
		1	INTP0	External interrupt pin input edge detection (INTP0)	Pin	0090H	00000090H	nextPC	PIC0
		2	INTP1	External interrupt pin input edge detection (INTP1)	Pin	00A0H	000000A0H	nextPC	PIC1
		3	INTP2	External interrupt pin input edge detection (INTP2)	Pin	00B0H	000000B0H	nextPC	PIC2
		4	INTP3	External interrupt pin input edge detection (INTP3)	Pin	00C0H	000000C0H	nextPC	PIC3
		5	INTP4	External interrupt pin input edge detection (INTP4)	Pin	00D0H	000000D0H	nextPC	PIC4
		6	INTP5	External interrupt pin input edge detection (INTP5)	Pin	00E0H	000000E0H	nextPC	PIC5
		7	INTP6	External interrupt pin input edge detection (INTP6)	Pin	00F0H	000000F0H	nextPC	PIC6
		8	INTP7	External interrupt pin input edge detection (INTP7)	Pin	0100H	00000100H	nextPC	PIC7
		9	INTTQ0OV	TMQ0 overflow	TMQ0	0110H	00000110H	nextPC	TQ0OVIC
		10	INTTQ0CC0	TMQ0 capture 0/compare 0 match	TMQ0	0120H	00000120H	nextPC	TQ0CCIC0
		11	INTTQ0CC1	TMQ0 capture 1/compare 1 match	TMQ0	0130H	00000130H	nextPC	TQ0CCIC1
		12	INTTQ0CC2	TMQ0 capture 2/compare 2 match	TMQ0	0140H	00000140H	nextPC	TQ0CCIC2
		13	INTTQ0CC3	TMQ0 capture 3/compare 3 match	TMQ0	0150H	00000150H	nextPC	TQ0CCIC3
		14	INTTP0OV	TMP0 overflow	TMP0	0160H	00000160H	nextPC	TP0OVIC
		15	INTTP0CC0	TMP0 capture 0/compare 0 match	TMP0	0170H	00000170H	nextPC	TP0CCIC0
		16	INTTP0CC1	TMP0 capture 1/compare 1 match	TMP0	0180H	00000180H	nextPC	TP0CCIC1
		17	INTTP1OV	TMP1 overflow	TMP1	0190H	00000190H	nextPC	TP1OVIC
		18	INTTP1CC0	TMP1 capture 0/compare 0 match	TMP1	01A0H	000001AH	nextPC	TP1CCIC0
		19	INTTP1CC1	TMP1 capture 1/compare 1 match	TMP1	01B0H	000001B0H	nextPC	TP1CCIC1
		20	INTTP2OV	TMP2 overflow	TMP2	01C0H	000001C0H	nextPC	TP2OVIC
		21	INTTP2CC0	TMP2 capture 0/compare 0 match	TMP2	01D0H	000001D0H	nextPC	TP2CCIC0

Notes 1. For the restoring in the case of INTWDT2, see **14.2.2 (2) From INTWDT2 signal**.

2. n = 0H to FH

Table 14-1. Interrupt Source List (2/2)

Type	Classification	Default Priority	Name	Trigger	Generating Unit	Exception Code	Handler Address	Restored PC	Interrupt Control Register
Maskable	Interrupt	22	INTTP2CC1	TMP2 capture 1/compare 1 match	TMP2	01E0H	000001E0H	nextPC	TP2CCIC1
		23	INTTP3OV	TMP3 overflow	TMP3	01F0H	000001F0H	nextPC	TP3OVIC
		24	INTTP3CC0	TMP3 capture 0/compare 0 match	TMP3	0200H	00000200H	nextPC	TP3CCIC0
		25	INTTP3CC1	TMP3 capture 1/compare 1 match	TMP3	0210H	00000210H	nextPC	TP3CCIC1
		26	INTTM0EQ0	TMM0 compare match	TMM0	0220H	00000220H	nextPC	TM0EQIC0
		27	INTCB0R	CSIB0 reception completion	CSIB0	0230H	00000230H	nextPC	CB0RIC
		28	INTCB0T	CSIB0 consecutive transmission write enable	CSIB0	0240H	00000240H	nextPC	CB0TIC
		29	INTCB1R	CSIB1 reception completion	CSIB1	0250H	00000250H	nextPC	CB1RIC
		30	INTCB1T	CSIB1 consecutive transmission write enable	CSIB1	0260H	00000260H	nextPC	CB1TIC
		31	INTUA0R	UARTA0 reception completion	UARTA0	0270H	00000280H	nextPC	UA0RIC
		32	INTUA0T	UARTA0 transmission enable	UARTA0	0280H	00000280H	nextPC	UA0TIC
		33	INTUA1R	UARTA1 reception completion/UARTA1 reception error	UARTA1	0290H	00000290H	nextPC	UA1RIC
		34	INTUA1T	UARTA1 transmission enable	UARTA1	02A0H	000002A0H	nextPC	UA1TIC
		35	INTAD	A/D conversion completion	A/D	02BH	000002B0H	nextPC	ADIC
		36	INTKR	Key return interrupt request	KR	0300H	00000300H	nextPC	KRIC
		37	INTWTI	Watch timer interval	WT	0310H	00000310H	nextPC	WTIIC
		38	INTWT	Watch timer reference time	WT	0320H	00000320H	nextPC	WTIC

Remarks 1. Default Priority: The priority order when two or more maskable interrupt requests occur at the same time. The highest priority is 0.
The priority order of non-maskable interrupt is INTWDT2 > NMI.

Restored PC: The value of the program counter (PC) saved to EIPC, FEPC, or DBPC when interrupt servicing is started. Note, however, that the restored PC when a non-maskable or maskable interrupt is acknowledged while one of the following instructions is being executed does not become the nextPC (if an interrupt is acknowledged during interrupt execution, execution stops, and then resumes after the interrupt servicing has finished).

- Load instructions (SLD.B, SLD.BU, SLD.H, SLD.HU, SLD.W)
- Division instructions (DIV, DIVH, DIVU, DIVHU)
- PREPARE, DISPOSE instructions (only if an interrupt is generated before the stack pointer is updated)

nextPC: The PC value that starts the processing following interrupt/exception processing.

2. The execution address of the illegal instruction when an illegal opcode exception occurs is calculated by (Restored PC – 4).

14.2 Non-Maskable Interrupts

A non-maskable interrupt request signal is acknowledged unconditionally, even when interrupts are in the interrupt disabled (DI) status. An NMI is not subject to priority control and takes precedence over all the other interrupt request signals.

This product has the following two non-maskable interrupt request signals.

- NMI pin input (NMI)
- Non-maskable interrupt request signal generated by overflow of watchdog timer (INTWDT2)

The valid edge of the NMI pin can be selected from four types: “rising edge”, “falling edge”, “both edges”, and “no edge detection”.

The function of the NMI pin is enabled by setting the PMC0.PMC02 bit to 1 and the INTF0.INTF02 bit and INTR0.INTR02 bit to a desired value, and specifying a desired valid edge.

The non-maskable interrupt request signal generated by overflow of watchdog timer 2 (INTWDT2) functions when the WDTM2.WDM21 and WDTM2.WDM20 bits are set to “01”.

If two or more non-maskable interrupt request signals occur at the same time, the interrupt with the higher priority is serviced, as follows (the interrupt request signal with the lower priority is ignored).

INTWDT2 > NMI

If a new NMI or INTWDT2 request signal is issued while an NMI is being serviced, it is serviced as follows.

(1) If new NMI request signal is issued while NMI is being serviced

The new NMI request signal is held pending, regardless of the value of the PSW.NP bit. The pending NMI request signal is acknowledged after the NMI currently under execution has been serviced (after the RETI instruction has been executed).

(2) If INTWDT2 request signal is issued while NMI is being serviced

The INTWDT2 request signal is held pending if the NP bit remains set (1) while the NMI is being serviced. The pending INTWDT2 request signal is acknowledged after the NMI currently under execution has been serviced (after the RETI instruction has been executed).

If the NP bit is cleared (0) while the NMI is being serviced, the newly generated INTWDT2 request signal is executed (the NMI servicing is stopped).

Caution For the non-maskable interrupt servicing executed by the non-maskable interrupt request signal (INTWDT2), see 14.2.2 (2) From INTWDT2 signal.

Figure 14-1. Non-Maskable Interrupt Request Signal Acknowledgment Operation (1/2)

(a) NMI and INTWDT2 request signals generated at the same time

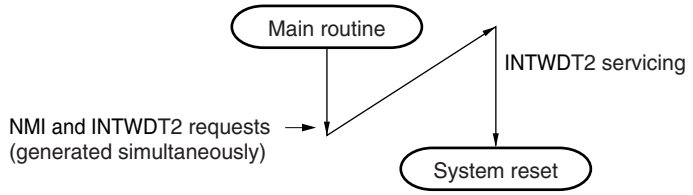

Figure 14-1. Non-Maskable Interrupt Request Signal Acknowledgment Operation (2/2)

(b) Non-maskable interrupt request signal generated during non-maskable interrupt servicing

Non-maskable interrupt being serviced	Non-maskable interrupt request signal generated during non-maskable interrupt servicing	
	NMI	INTWDT2
NMI	• NMI request generated during NMI servicing 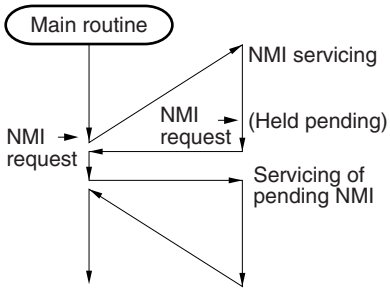 	• INTWDT2 request generated during NMI servicing (NP bit = 1 retained before INTWDT2 request) 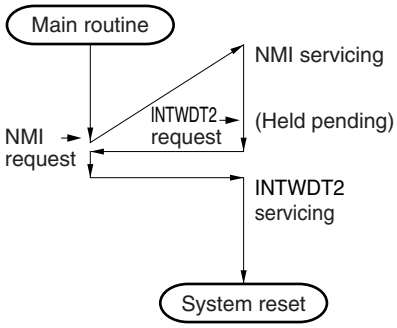 • INTWDT2 request generated during NMI servicing (NP bit = 0 set before INTWDT2 request) 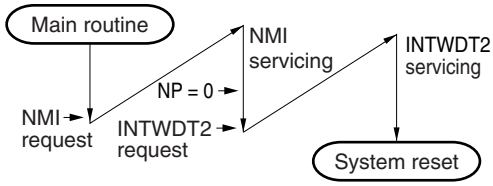 • INTWDT2 request generated during NMI servicing (NP = 0 set after INTWDT2 request) 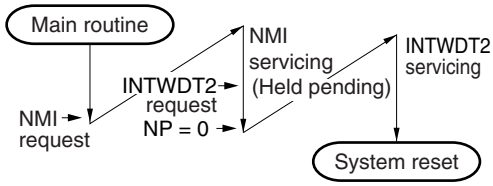
INTWDT2	• NMI request generated during INTWDT2 servicing 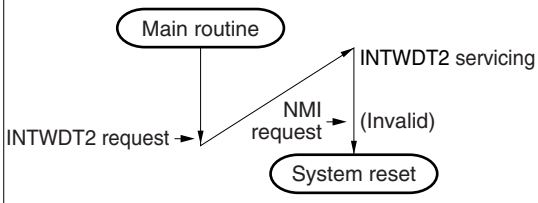 	• INTWDT2 request generated during INTWDT2 servicing 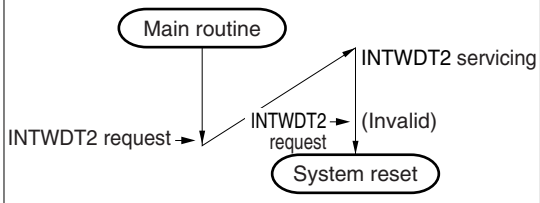

14.2.1 Operation

If a non-maskable interrupt request signal is generated, the CPU performs the following processing, and transfers control to the handler routine.

<1> Saves the restored PC to FEPC.
<2> Saves the current PSW to FEPSW.
<3> Writes exception code (0010H, 0020H) to the higher halfword (FECC) of ECR.
<4> Sets the PSW.NP and PSW.ID bits to 1 and clears the PSW.EP bit to 0.
<5> Sets the handler address (00000010H, 00000020H) corresponding to the non-maskable interrupt to the PC, and transfers control.

The servicing configuration of a non-maskable interrupt is shown in Figure 14-2.

Figure 14-2. Servicing Configuration of Non-Maskable Interrupt

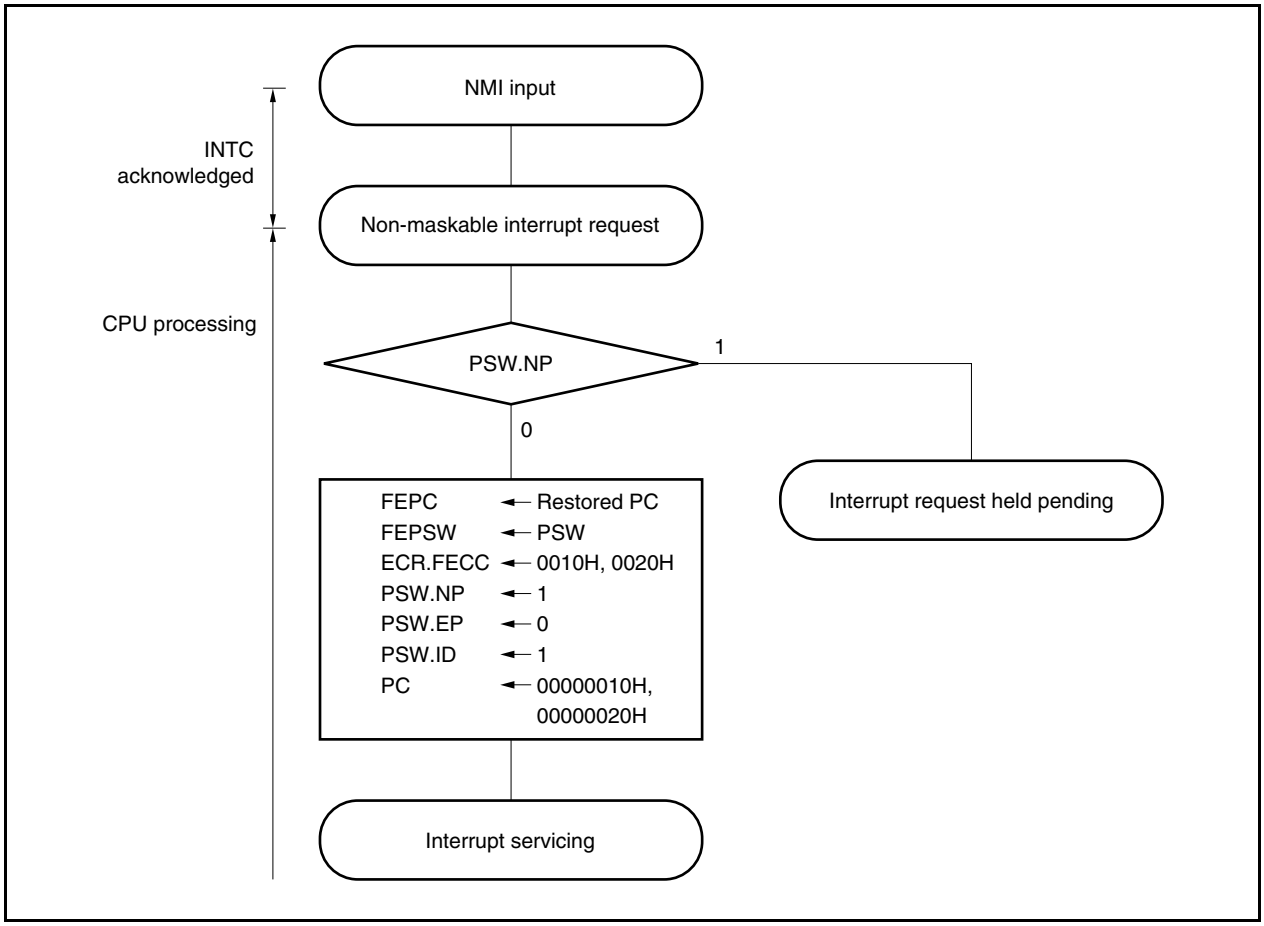

14.2.2 Restore

(1) From NMI pin input

Execution is restored from the NMI servicing by the RETI instruction.

When the RETI instruction is executed, the CPU performs the following processing, and transfers control to the address of the restored PC.

<1> Loads the restored PC and PSW from FEPC and FEPSW, respectively, because the PSW.EP bit is 0 and the PSW.NP bit is 1.

<2> Transfers control back to the address of the restored PC and PSW.

Figure 14-3 illustrates how the RETI instruction is processed.

Figure 14-3. RETI Instruction Processing

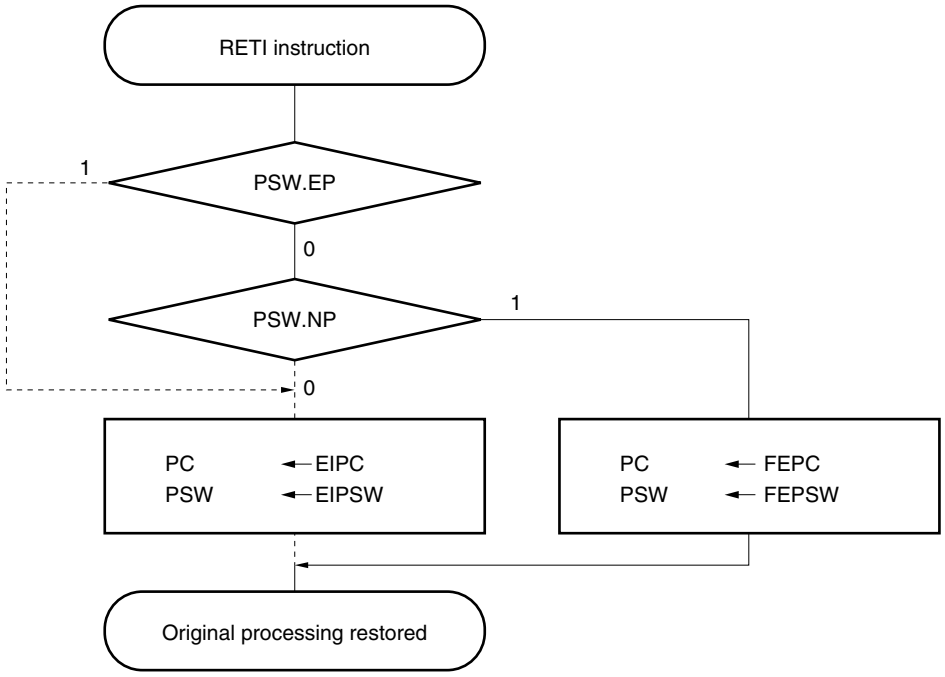

Caution When the EP and NP bits are changed by the LDSR instruction during non-maskable interrupt servicing, in order to restore the PC and PSW correctly during recovery by the RETI instruction, it is necessary to set the EP bit back to 0 and the NP bit back to 1 using the LDSR instruction immediately before the RETI instruction.

Remark The solid line shows the CPU processing flow.

(2) From INTWDT2 signal

Restoring from non-maskable interrupt servicing executed by the non-maskable interrupt request (INTWDT2) by using the RETI instruction is disabled. Execute the following software reset processing.

Figure 14-4. Software Reset Processing

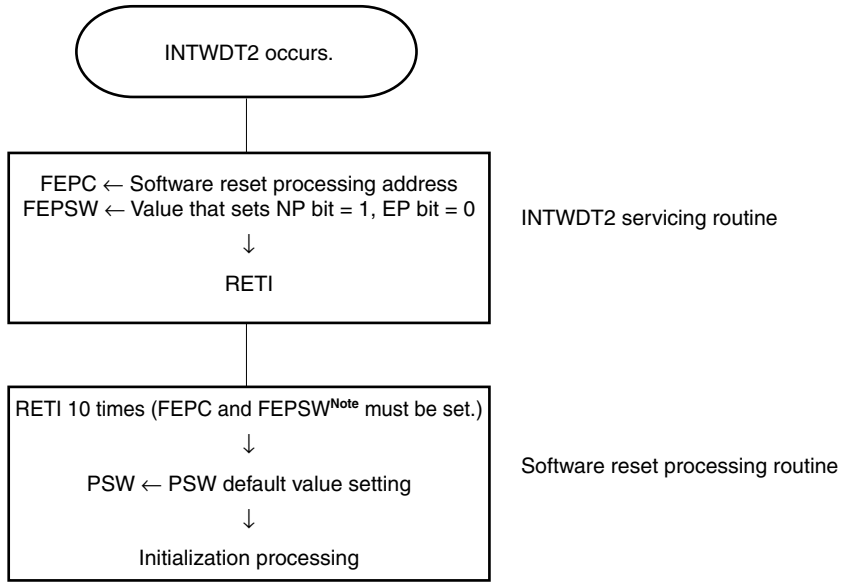

Note FEPSW ← Value that sets NP bit = 1, EP bit = 0

14.2.3 NP flag

The NP flag is a status flag that indicates that non-maskable interrupt servicing is under execution.

This flag is set when a non-maskable interrupt request signal has been acknowledged, and masks non-maskable interrupt requests to prohibit multiple interrupts from being acknowledged.

After reset: 00000020H

	31		8	7	6	5	4	3	2	1	0
PSW	0			NP	EP	ID	SAT	CY	OV	S	Z

NP	Non-maskable interrupt servicing status
0	No non-maskable interrupt servicing
1	Non-maskable interrupt currently being serviced

14.3 Maskable Interrupts

Maskable interrupt request signals can be masked by interrupt control registers. The V850ES/HE2 has 39 maskable interrupt sources.

If two or more maskable interrupt request signals are generated at the same time, they are acknowledged according to the default priority. In addition to the default priority, eight levels of priorities can be specified by using the interrupt control registers (programmable priority control).

When an interrupt request signal has been acknowledged, the acknowledgment of other maskable interrupt request signals is disabled and the interrupt disabled (DI) status is set.

When the EI instruction is executed in an interrupt service routine, the interrupt enabled (EI) status is set, which enables servicing of interrupts having a higher priority than the interrupt request signal in progress (specified by the interrupt control register). Note that only interrupts with a higher priority will have this capability; interrupts with the same priority level cannot be nested.

To enable multiple interrupts, however, save EIPC and EIPSW to memory or general-purpose registers before executing the EI instruction, and execute the DI instruction before the RETI instruction to restore the original values of EIPC and EIPSW.

14.3.1 Operation

If a maskable interrupt occurs, the CPU performs the following processing, and transfers control to a handler routine.

<1> Saves the restored PC to EIPC.
<2> Saves the current PSW to EIPSW.
<3> Writes an exception code to the lower halfword of ECR (EICC).
<4> Sets the PSW. ID bit to 1 and clears the PSW. EP bit to 0.
<5> Sets the handler address corresponding to each interrupt to the PC, and transfers control.

The maskable interrupt request signal masked by INTC and the maskable interrupt request signal generated while another interrupt is being serviced (while the PSW.NP bit = 1 or the PSW.ID bit = 1) are held pending inside INTC. In this case, servicing a new maskable interrupt is started in accordance with the priority of the pending maskable interrupt request signal if either the maskable interrupt is unmasked or the NP and ID bits are cleared to 0 by using the RETI or LDSR instruction.

How maskable interrupts are serviced is illustrated below.

Figure 14-5. Maskable Interrupt Servicing

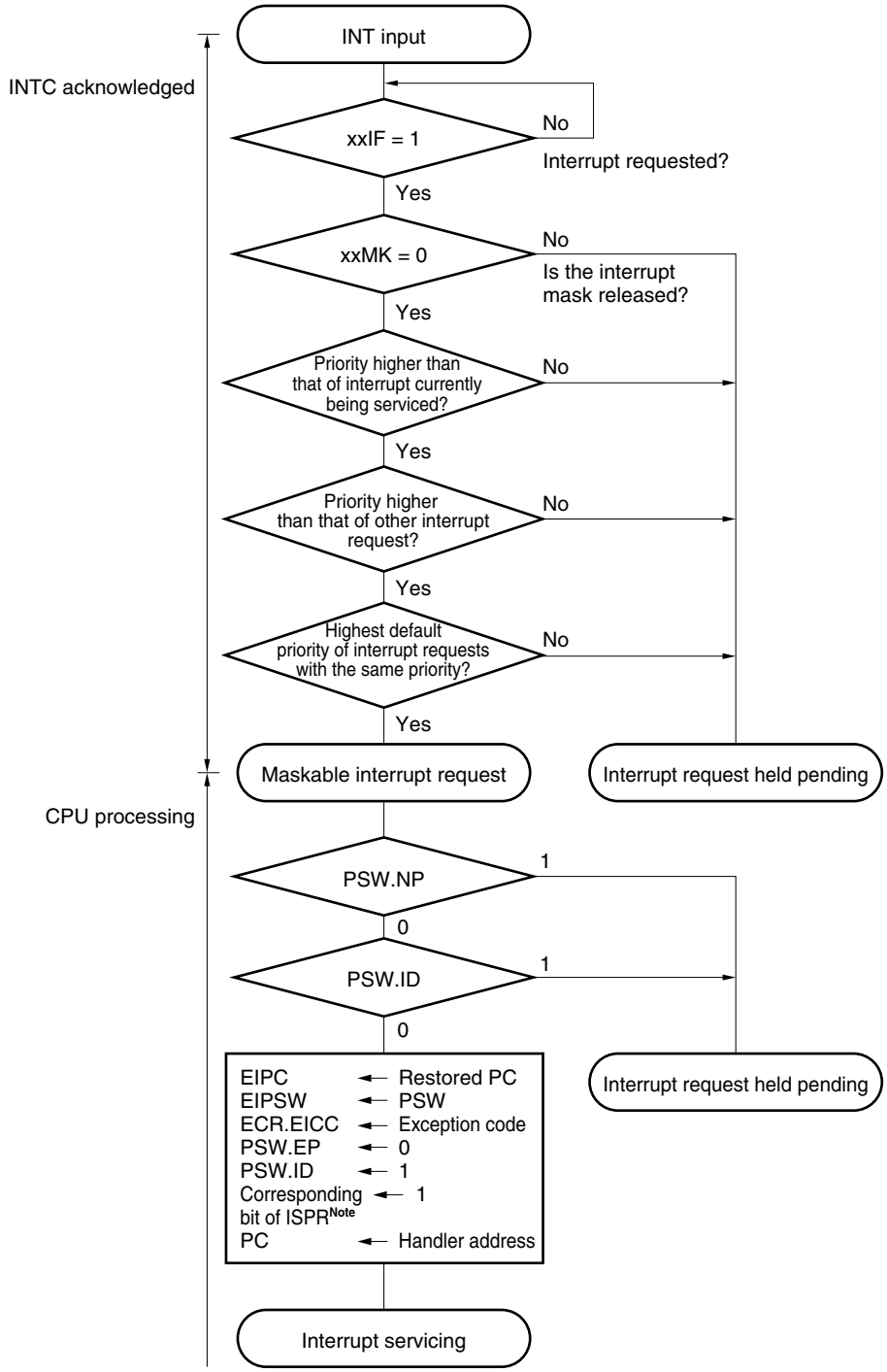

Note For the ISPR register, see **14.3.6 In-service priority register (ISPR)**.

14.3.2 Restore

Recovery from maskable interrupt servicing is carried out by the RETI instruction.

When the RETI instruction is executed, the CPU performs the following steps, and transfers control to the address of the restored PC.

<1> Loads the restored PC and PSW from EIPC and EIPSW because the PSW.EP bit is 0 and the PSW.NP bit is 0.

<2> Transfers control to the address of the restored PC and PSW.

Figure 14-6 illustrates the processing of the RETI instruction.

Figure 14-6. RETI Instruction Processing

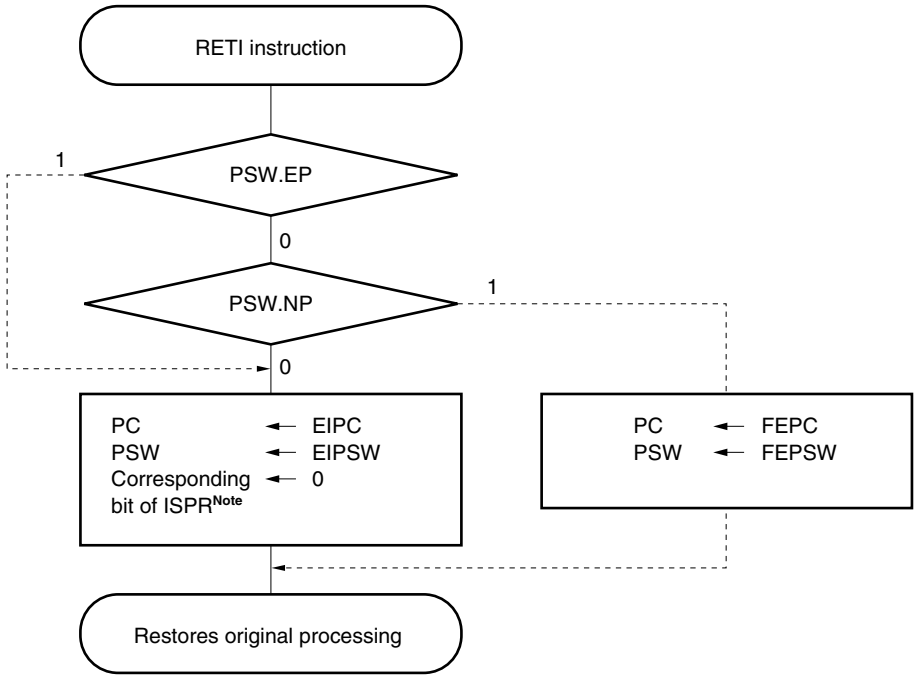

Note For the ISPR register, see **14.3.6 In-service priority register (ISPR)**.

Caution When the EP and NP bits are changed by the LDSR instruction during maskable interrupt servicing, in order to restore the PC and PSW correctly during recovery by the RETI instruction, it is necessary to set the EP bit back to 0 and the NP bit back to 0 using the LDSR instruction immediately before the RETI instruction.

Remark The solid line shows the CPU processing flow.

14.3.3 Priorities of maskable interrupts

The INTC performs multiple interrupt servicing in which an interrupt is acknowledged while another interrupt is being serviced. Multiple interrupts can be controlled by priority levels.

There are two types of priority level control: control based on the default priority levels, and control based on the programmable priority levels that are specified by the interrupt priority level specification bit (xxPRn) of the interrupt control register (xxICn). When two or more interrupts having the same priority level specified by the xxPRn bit are generated at the same time, interrupt request signals are serviced in order depending on the priority level allocated to each interrupt request type (default priority level) beforehand. For more information, see **Table 14-1 Interrupt/Exception Source List**. The programmable priority control customizes interrupt request signals into eight levels by setting the priority level specification flag.

Note that when an interrupt request signal is acknowledged, the PSW.ID flag is automatically set to 1. Therefore, when multiple interrupts are to be used, clear the ID flag to 0 beforehand (for example, by placing the EI instruction in the interrupt service program) to set the interrupt enable mode.

Remark xx: Identification name of each peripheral unit (see **Table 14-2 Interrupt Control Register (xxICn)**)
n: Peripheral unit number (see **Table 14-2 Interrupt Control Register (xxICn)**).

Figure 14-7. Example of Processing in Which Another Interrupt Request Signal Is Issued While an Interrupt Is Being Serviced (1/2)

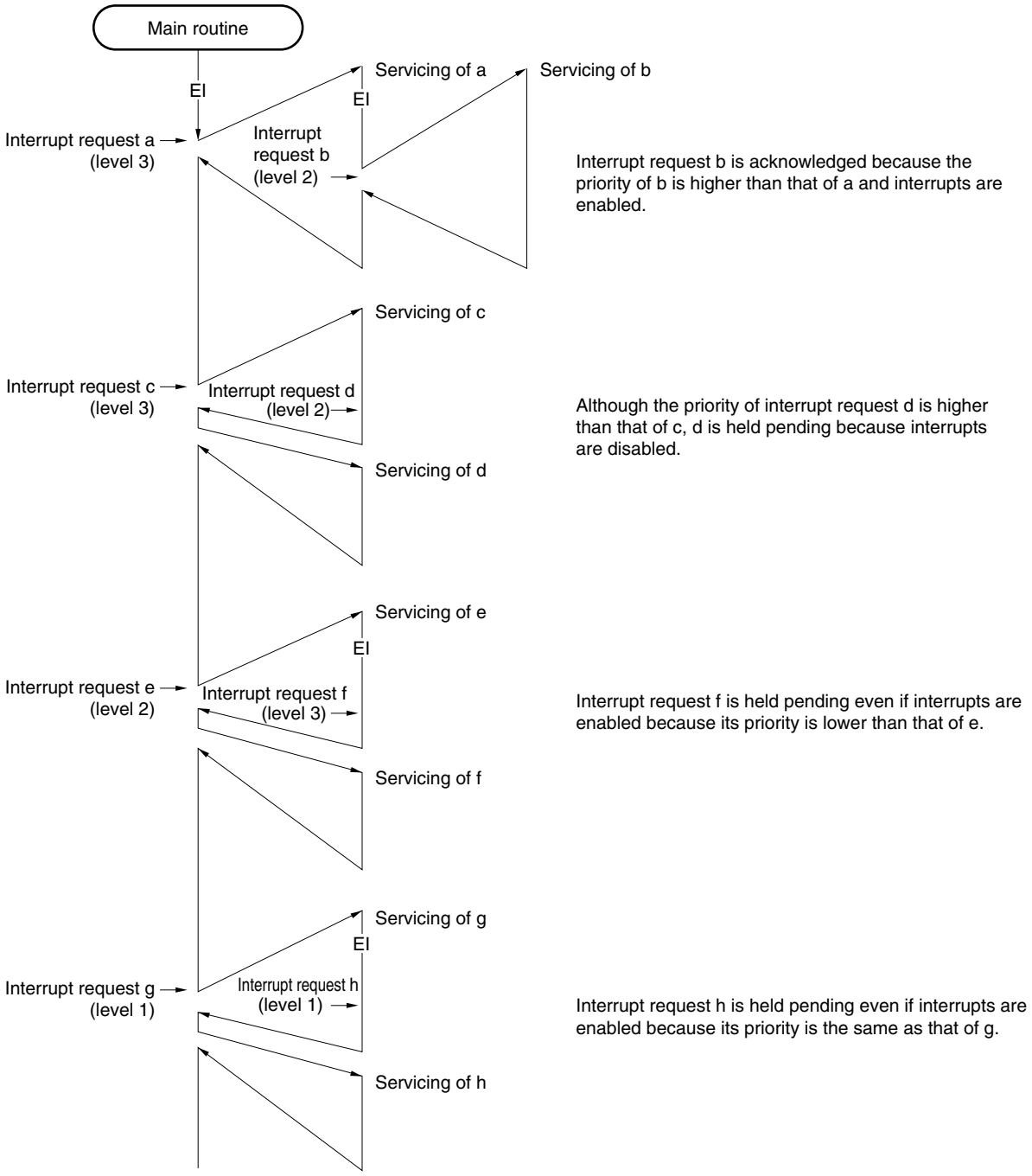

Caution To perform multiple interrupt servicing, the values of the EIPC and EIPSW registers must be saved before executing the EI instruction. When returning from multiple interrupt servicing, restore the values of EIPC and EIPSW after executing the DI instruction.

Remarks 1. a to u in the figure are the temporary names of interrupt request signals shown for the sake of explanation.

2. The default priority in the figure indicates the relative priority between two interrupt request signals.

Figure 14-7. Example of Processing in Which Another Interrupt Request Signal Is Issued While an Interrupt Is Being Serviced (2/2)

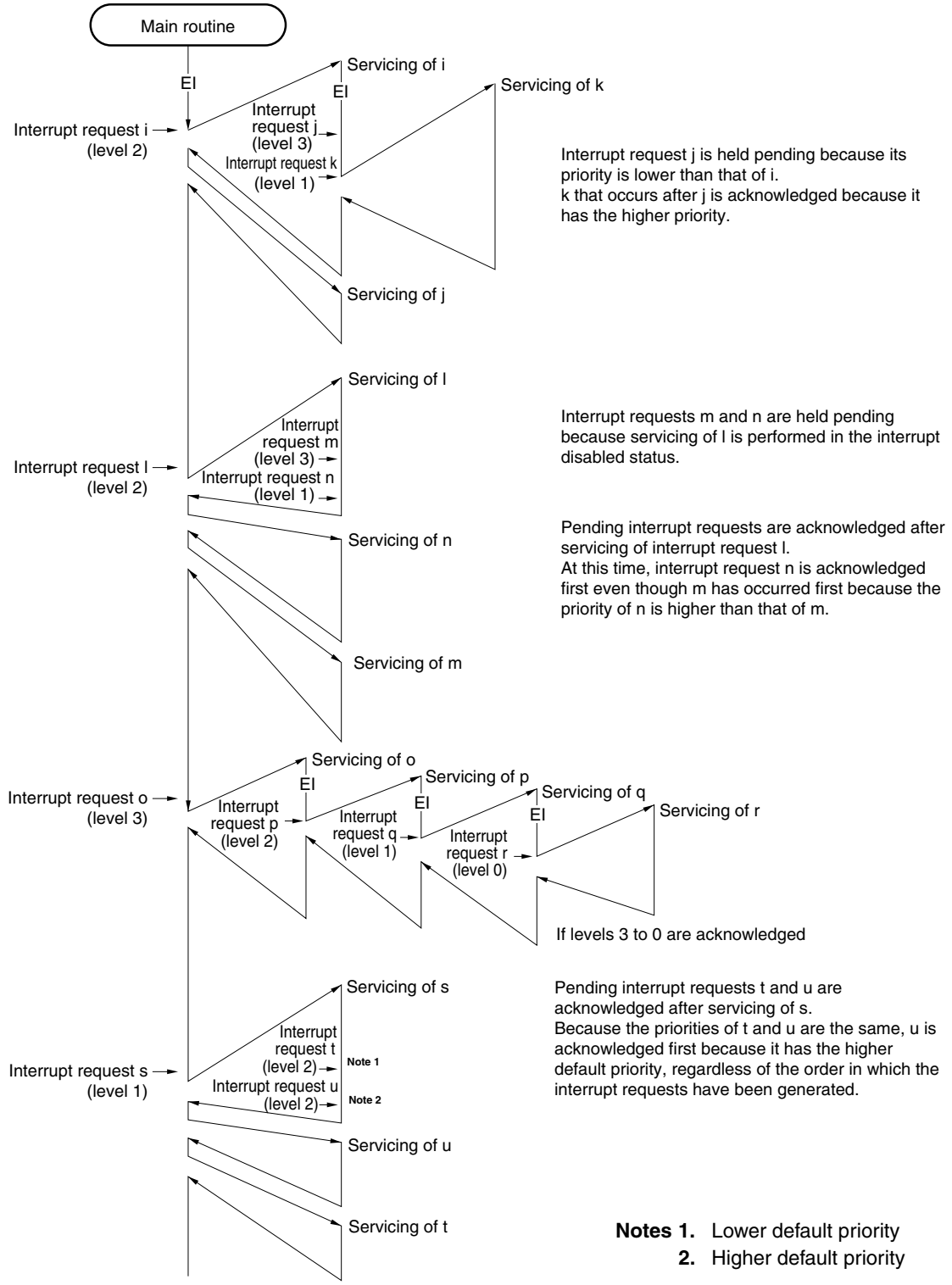

Caution To perform multiple interrupt servicing, the values of the EIPC and EIPSW registers must be saved before executing the EI instruction. When returning from multiple interrupt servicing, restore the values of EIPC and EIPSW after executing the DI instruction.

Figure 14-8. Example of Servicing Interrupt Request Signals Simultaneously Generated

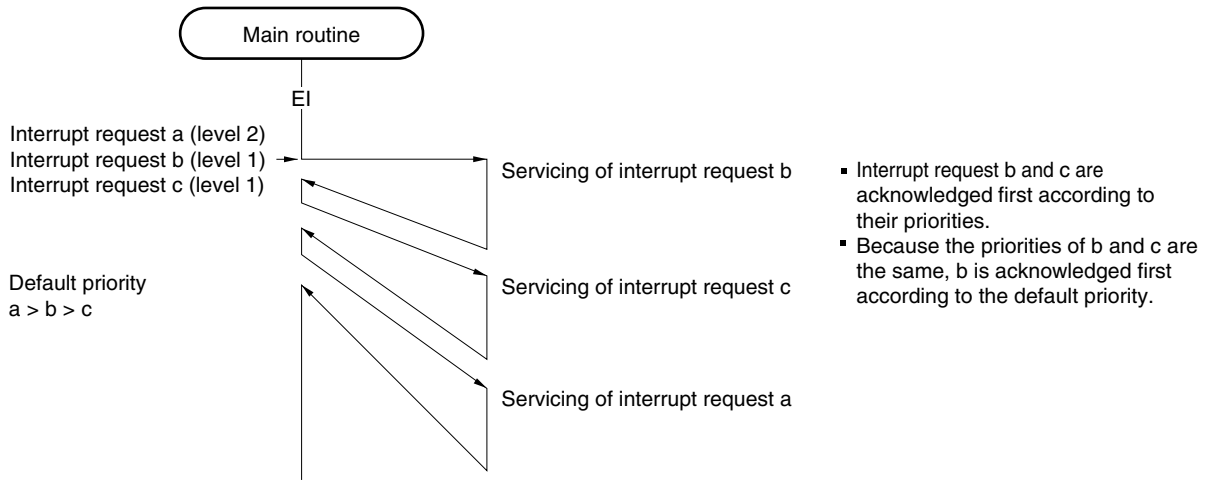

Caution To perform multiple interrupt servicing, the values of the EIPC and EIPSW registers must be saved before executing the EI instruction. When returning from multiple interrupt servicing, restore the values of EIPC and EIPSW after executing the DI instruction.

Remarks 1. a to c in the figure are the temporary names of interrupt request signals shown for the sake of explanation.

2. The default priority in the figure indicates the relative priority between two interrupt request signals.

14.3.4 Interrupt control register (xxICn)

The xxICn register is assigned to each interrupt request signal (maskable interrupt) and sets the control conditions for each maskable interrupt request.

This register can be read or written in 8-bit or 1-bit units.

Reset sets this register to 47H.

Caution Disable interrupts (DI) or mask the interrupt to read the xxICn.xxIFn bit. If the xxIFn bit is read while interrupts are enabled (EI) or while the interrupt is unmasked, the correct value may not be read when acknowledging an interrupt and reading the bit conflict.

After reset: 47H R/W Address: FFFFF110H to FFFFF164H

	7	6	5	4	3	2	1	0
xxICn	xxIFn	xxMKn	0	0	0	xxPRn2	xxPRn1	xxPRn0

xxIFn	Interrupt request flag[Note]
0	Interrupt request not issued
1	Interrupt request issued

xxMKn	Interrupt mask flag
0	Interrupt servicing enabled
1	Interrupt servicing disabled (pending)

xxPRn2	xxPRn1	xxPRn0	Interrupt priority specification bit
0	0	0	Specifies level 0 (highest).
0	0	1	Specifies level 1.
0	1	0	Specifies level 2.
0	1	1	Specifies level 3.
1	0	0	Specifies level 4.
1	0	1	Specifies level 5.
1	1	0	Specifies level 6.
1	1	1	Specifies level 7 (lowest).

Note The flag xxIFn is reset automatically by the hardware if an interrupt request signal is acknowledged.

Remark xx: Identification name of each peripheral unit (see **Table 14-2 Interrupt Control Registers (xxICn)**)
n: Peripheral unit number (see **Table 14-2 Interrupt Control Registers (xxICn)**).

The addresses and bits of the interrupt control registers are as follows.

Table 14-2. Interrupt Control Registers (xxICn)

Address	Register	Bit							
		7	6	5	4	3	2	1	0
FFFFF110H	LVIIC	LVIIF	LVIMK	0	0	0	LVIPR2	LVIPR1	LVIPR0
FFFFF112H	PIC0	PIF0	PMK0	0	0	0	PPR02	PPR01	PPR00
FFFFF114H	PIC1	PIF1	PMK1	0	0	0	PPR12	PPR11	PPR10
FFFFF116H	PIC2	PIF2	PMK2	0	0	0	PPR22	PPR21	PPR20
FFFFF118H	PIC3	PIF3	PMK3	0	0	0	PPR32	PPR31	PPR30
FFFFF11AH	PIC4	PIF4	PMK4	0	0	0	PPR42	PPR41	PPR40
FFFFF11CH	PIC5	PIF5	PMK5	0	0	0	PPR52	PPR51	PPR50
FFFFF11EH	PIC6	PIF6	PMK6	0	0	0	PPR62	PPR61	PPR60
FFFFF120H	PIC7	PIF7	PMK7	0	0	0	PPR72	PPR71	PPR70
FFFFF122H	TQ0OVIC	TQ0OVIF	TQ0OVMK	0	0	0	TQ0OVPR2	TQ0OVPR1	TQ0OVPR0
FFFFF124H	TQ0CCIC0	TQ0CCIF0	TQ0CCMK0	0	0	0	TQ0CCPR02	TQ0CCPR01	TQ0CCPR00
FFFFF126H	TQ0CCIC1	TQ0CCIF1	TQ0CCMK1	0	0	0	TQ0CCPR12	TQ0CCPR11	TQ0CCPR10
FFFFF128H	TQ0CCIC2	TQ0CCIF2	TQ0CCMK2	0	0	0	TQ0CCPR22	TQ0CCPR21	TQ0CCPR20
FFFFF12AH	TQ0CCIC3	TQ0CCIF3	TQ0CCMK3	0	0	0	TQ0CCPR32	TQ0CCPR31	TQ0CCPR30
FFFFF12CH	TP0OVIC	TP0OVIF	TP0OVMK	0	0	0	TP0OVPR2	TP0OVPR1	TP0OVPR0
FFFFF12EH	TP0CCIC0	TP0CCIF0	TP0CCMK0	0	0	0	TP0CCPR02	TP0CCPR01	TP0CCPR00
FFFFF130H	TP0CCIC1	TP0CCIF1	TP0CCMK1	0	0	0	TP0CCPR12	TP0CCPR11	TP0CCPR10
FFFFF132H	TP1OVIC	TP1OVIF	TP1OVMK	0	0	0	TP1OVPR2	TP1OVPR1	TP1OVPR0
FFFFF134H	TP1CCIC0	TP1CCIF0	TP1CCMK0	0	0	0	TP1CCPR02	TP1CCPR01	TP1CCPR00
FFFFF136H	TP1CCIC1	TP1CCIF1	TP1CCMK1	0	0	0	TP1CCPR12	TP1CCPR11	TP1CCPR10
FFFFF138H	TP2OVIC	TP2OVIF	TP2OVMK	0	0	0	TP2OVPR2	TP2OVPR1	TP2OVPR0
FFFFF13AH	TP2CCIC0	TP2CCIF0	TP2CCMK0	0	0	0	TP2CCPR02	TP2CCPR01	TP2CCPR00
FFFFF13CH	TP2CCIC1	TP2CCIF1	TP2CCMK1	0	0	0	TP2CCPR12	TP2CCPR11	TP2CCPR10
FFFFF13EH	TP3OVIC	TP3OVIF	TP3OVMK	0	0	0	TP3OVPR2	TP3OVPR1	TP3OVPR0
FFFFF140H	TP3CCIC0	TP3CCIF0	TP3CCMK0	0	0	0	TP3CCPR02	TP3CCPR01	TP3CCPR00
FFFFF142H	TP3CCIC1	TP3CCIF1	TP3CCMK1	0	0	0	TP3CCPR12	TP3CCPR11	TP3CCPR10
FFFFF144H	TM0EQIC0	TM0EQIF0	TM0EQMK0	0	0	0	TM0EQPR02	TM0EQPR01	TM0EQPR00
FFFFF146H	CB0RIC	CB0RIF	CB0RMK	0	0	0	CB0RPR2	CB0RPR1	CB0RPR0
FFFFF148H	CB0TIC	CB0TIF	CB0TMK	0	0	0	CB0TPR2	CB0TPR1	CB0TPR0
FFFFF14AH	CB1RIC	CB1RIF	CB1RMK	0	0	0	CB1RPR2	CB1RPR1	CB1RPR0
FFFFF14CH	CB1TIC	CB1TIF	CB1TMK	0	0	0	CB1TPR2	CB1TPR1	CB1TPR0
FFFFF14EH	UA0RIC	UA0RIF	UA0RMK	0	0	0	UA0RPR2	UA0RPR1	UA0RPR0
FFFFF150H	UA0TIC	UA0TIF	UA0TMK	0	0	0	UA0TPR2	UA0TPR1	UA0TPR0
FFFFF152H	UA1RIC	UA1RIF	UA1RMK	0	0	0	UA1RPR2	UA1RPR1	UA1RPR0
FFFFF154H	UA1TIC	UA1TIF	UA1TMK	0	0	0	UA1TPR2	UA1TPR1	UA1TPR0
FFFFF156H	ADIC	ADIF	ADMK	0	0	0	ADPR2	ADPR1	ADPR0
FFFFF160H	KRIC	KRIF	KRMK	0	0	0	KRPR2	KRPR1	KRPR0
FFFFF162H	WTIIC	WTIIF	WTIMK	0	0	0	WTIPR2	WTIPR1	WTIPR0
FFFFF164H	WTIC	WTIF	WTMK	0	0	0	WTPR2	WTPR1	WTPR0

14.3.5 Interrupt mask registers 0 to 2 (IMR0 to IMR2)

The IMR0 to IMR2 registers set the interrupt mask state for the maskable interrupts. The xxMKn bit of the IMR0 to IMR2 registers is equivalent to the xxICn.xxMKn bit.

The IMRm register can be read or written in 16-bit units (m = 0 to 2).

If the higher 8 bits of the IMRm register are used as an IMRmH register and the lower 8 bits as an IMRmL register, these registers can be read or written in 8-bit or 1-bit units (m = 0 to 2).

Reset sets these registers to FFFFH.

Caution The device file defines the xxICn.xxMKn bit as a reserved word. If a bit is manipulated using the name of xxMKn, the contents of the xxICn register, instead of the IMRm register, are rewritten (as a result, the contents of the IMRm register are also rewritten).

After reset: FFFFH R/W Address: IMR2 FFFFF104H, IMR2L FFFFF104H, IMR2H FFFFF105H

	15	14	13	12	11	10	9	8
IMR2 (IMR2H[Note])	1	1	1	1	1	WTMK	WTIMK	KRMK
	7	6	5	4	3	2	1	0
IMR2L	1	1	1	1	ADMK	UA1TMK	UA1RMK	UA0TMK

After reset: FFFFH R/W Address: IMR1 FFFFF102H, IMR1L FFFFF102H, IMR1H FFFFF103H

	15	14	13	12	11	10	9	8
IMR1 (IMR1H[Note])	UA0RMK	CB1TMK	CB1RMK	CB0TMK	CB0RMK	TM0EQMK0	TP3CCMK1	TP3CCMK0
	7	6	5	4	3	2	1	0
IMR1L	TP3OVMK	TP2CCMK1	TP2CCMK0	TP2OVMK	TP1CCMK1	TP1CCMK0	TP1OVMK	TP0CCMK1

After reset: FFFFH R/W Address: IMR0 FFFFF100H, IMR0L FFFFF100H, IMR0H FFFFF101H

	15	14	13	12	11	10	9	8
IMR0 (IMR0H[Note])	TP0CCMK0	TP0OVMK	TQ0CCMK3	TQ0CCMK2	TQ0CCMK1	TQ0CCMK0	TQ0OVMK	PMK7
	7	6	5	4	3	2	1	0
IMR0L	PMK6	PMK5	PMK4	PMK3	PMK2	PMK1	PMK0	LVIMK

xxMKn	Setting of interrupt mask flag
0	Interrupt servicing enabled
1	Interrupt servicing disabled

Note To read bits 8 to 15 of the IMR0 to IMR2 registers in 8-bit or 1-bit units, specify them as bits 0 to 7 of the IMR0H to IMR2H registers.

Caution Set bits 15 to 11 and 7 to 4 of the IMR2 register to "1". If the setting of these bits is changed, the operation is not guaranteed.

Remark xx: Identification name of each peripheral unit (see **Table 14-2 Interrupt Control Registers (xxICn)**).

n: Peripheral unit number (see **Table 14-2 Interrupt Control Registers (xxICn)**)

14.3.6 In-service priority register (ISPR)

The ISPR register holds the priority level of the maskable interrupt currently acknowledged. When an interrupt request signal is acknowledged, the bit of this register corresponding to the priority level of that interrupt request signal is set to 1 and remains set while the interrupt is serviced.

When the RETI instruction is executed, the bit corresponding to the interrupt request signal having the highest priority is automatically reset to 0 by hardware. However, it is not reset to 0 when execution is returned from non-maskable interrupt servicing or exception processing.

This register is read-only, in 8-bit or 1-bit units.

Reset sets this register to 00H.

Caution If an interrupt is acknowledged while the ISPR register is being read in the interrupt enabled (EI) status, the value of the ISPR register after the bits of the register have been set by acknowledging the interrupt may be read. To accurately read the value of the ISPR register before an interrupt is acknowledged, read the register while interrupts are disabled (DI).

After reset: 00H R Address: FFFFF1FAH

	7	6	5	4	3	2	1	0
ISPR	ISPR7	ISPR6	ISPR5	ISPR4	ISPR3	ISPR2	ISPR1	ISPR0

ISPRn	Priority of interrupt currently acknowledged
0	Interrupt request signal with priority n not acknowledged
1	Interrupt request signal with priority n acknowledged

Remark n = 0 to 7 (priority level)

14.3.7 ID flag

This flag controls the maskable interrupt's operating state, and stores control information regarding enabling or disabling of interrupt request signals. An interrupt disable flag (ID) is assigned to the PSW.

Reset sets this flag to 00000020H.

After reset: 00000020H

	31		8	7	6	5	4	3	2	1	0
PSW	0			NP	EP	ID	SAT	CY	OV	S	Z

ID	Specification of maskable interrupt servicing[Note]
0	Maskable interrupt request signal acknowledgment enabled
1	Maskable interrupt request signal acknowledgment disabled (pending)

Note Interrupt disable flag (ID) function

This bit is set to 1 by the DI instruction and cleared to 0 by the EI instruction. Its value is also modified by the RETI instruction or LDSR instruction when referencing the PSW.

Non-maskable interrupt request signals and exceptions are acknowledged regardless of this flag. When a maskable interrupt request signal is acknowledged, the ID flag is automatically set to 1 by hardware.

The interrupt request signal generated during the acknowledgment disabled period (ID flag = 1) is acknowledged when the xxICn.xxIFn bit is set to 1, and the ID flag is cleared to 0.

14.3.8 Watchdog timer mode register 2 (WDTM2)

This register can be read or written in 8-bit units (for details, see **CHAPTER 10 FUNCTIONS OF WATCHDOG TIMER 2**).

Reset sets this register to 67H.

After reset: 67H R/W Address: FFFFF6D0H

	7	6	5	4	3	2	1	0
WDTM2	0	WDM21	WDM20	0	0	0	0	0

WDM21	WDM20	Selection of watchdog timer operation mode
0	0	Stops operation
0	1	Non-maskable interrupt request mode
1	×	Reset mode (initial-value)

14.4 Software Exception

A software exception is generated when the CPU executes the TRAP instruction, and can always be acknowledged.

14.4.1 Operation

If a software exception occurs, the CPU performs the following processing, and transfers control to the handler routine.

<1> Saves the restored PC to EIPC.
<2> Saves the current PSW to EIPSW.
<3> Writes an exception code to the lower 16 bits (EICC) of ECR (interrupt source).
<4> Sets the PSW.EP and PSW.ID bits to 1.
<5> Sets the handler address (00000040H or 00000050H) corresponding to the software exception to the PC, and transfers control.

Figure 14-9 illustrates the processing of a software exception.

Figure 14-9. Software Exception Processing

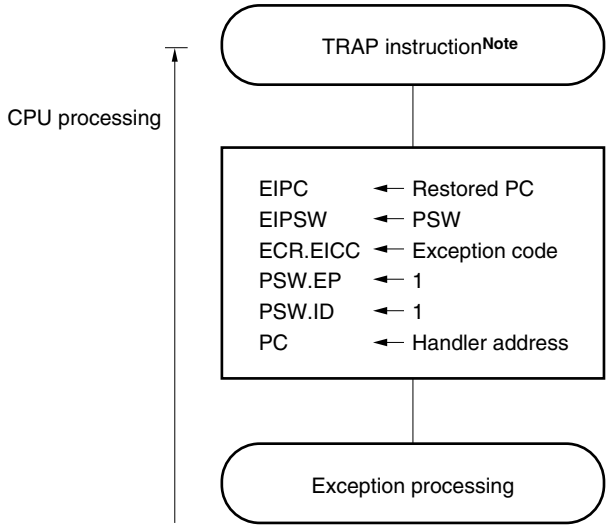

Note TRAP instruction format: TRAP vector (the vector is a value from 00H to 1FH.)

The handler address is determined by the TRAP instruction's operand (vector). If the vector is 00H to 0FH, it becomes 00000040H, and if the vector is 10H to 1FH, it becomes 00000050H.

14.4.2 Restore

Recovery from software exception processing is carried out by the RETI instruction.

By executing the RETI instruction, the CPU carries out the following processing and shifts control to the restored PC's address.

<1> Loads the restored PC and PSW from EIPC and EIPSW because the PSW.EP bit is 1.
<2> Transfers control to the address of the restored PC and PSW.

Figure 14-10 illustrates the processing of the RETI instruction.

Figure 14-10. RETI Instruction Processing

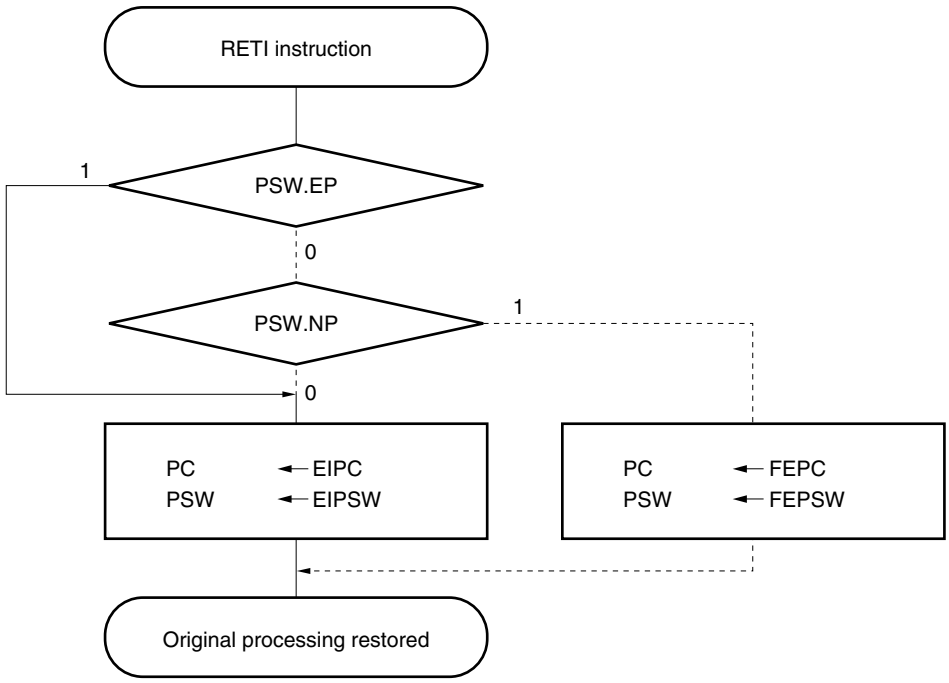

Caution When the EP and NP bits are changed by the LDSR instruction during the software exception processing, in order to restore the PC and PSW correctly during recovery by the RETI instruction, it is necessary to set the EP bit back to 1 and the NP bit back to 0 using the LDSR instruction immediately before the RETI instruction.

Remark The solid line shows the CPU processing flow.

14.4.3 EP flag

The EP flag is a status flag used to indicate that exception processing is in progress. It is set when an exception occurs.

After reset: 00000020H

	31	8	7	6	5	4	3	2	1	0
PSW	0		NP	**EP**	ID	SAT	CY	OV	S	Z

EP	Exception processing status
0	Exception processing not in progress.
1	Exception processing in progress.

14.5 Exception Trap

An exception trap is an interrupt that is requested when the illegal execution of an instruction takes place. In the V850ES/HE2, an illegal opcode exception (ILGOP: Illegal Opcode Trap) is considered as an exception trap.

14.5.1 Illegal opcode definition

The illegal instruction has an opcode (bits 10 to 5) of 111111B, a sub-opcode (bits 26 to 23) of 0111B to 1111B, and a sub-opcode (bit 16) of 0B. An exception trap is generated when an instruction applicable to this illegal instruction is executed.

15 – 11	10 – 5	4 – 0	31 – 27	26 – 23	22 – 16	
x x x x x	1 1 1 1 1 1	x x x x x	x x x x x	0 1 1 1 to 1 1 1 1	x x x x x x	0

x: Arbitrary

Caution Since it is possible to assign this instruction to an illegal opcode in the future, it is recommended that it not be used.

(1) Operation

If an exception trap occurs, the CPU performs the following processing, and transfers control to the handler routine.

<1> Saves the restored PC to DBPC.
<2> Saves the current PSW to DBPSW.
<3> Sets the PSW.NP, PSW.EP, and PSW.ID bits to 1.
<4> Sets the handler address (00000060H) corresponding to the exception trap to the PC, and transfers control.

Figure 14-11 illustrates the processing of the exception trap.

Figure 14-11. Exception Trap Processing

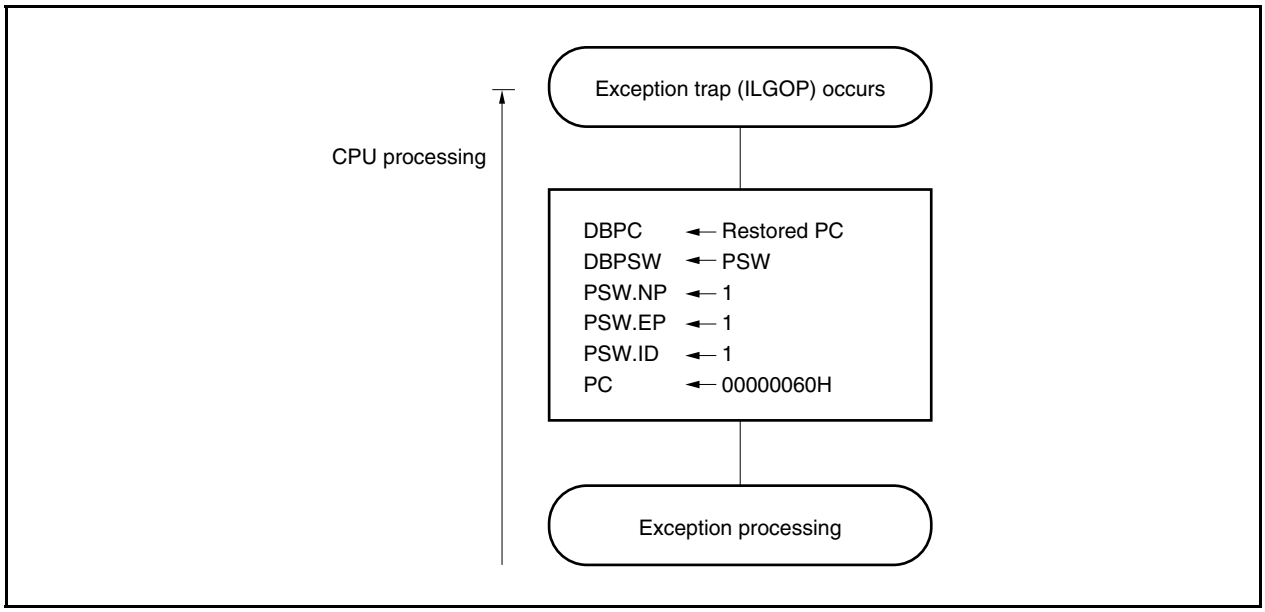

(2) Restore

Recovery from an exception trap is carried out by the DBRET instruction. By executing the DBRET instruction, the CPU carries out the following processing and controls the address of the restored PC.

<1> Loads the restored PC and PSW from DBPC and DBPSW.
<2> Transfers control to the address indicated by the restored PC and PSW.

Caution DBPC and DBPSW can be accessed only during the interval between the execution of the illegal opcode and the DBRET instruction.

Figure 14-12 illustrates the restore processing from an exception trap.

Figure 14-12. Restore Processing from Exception Trap

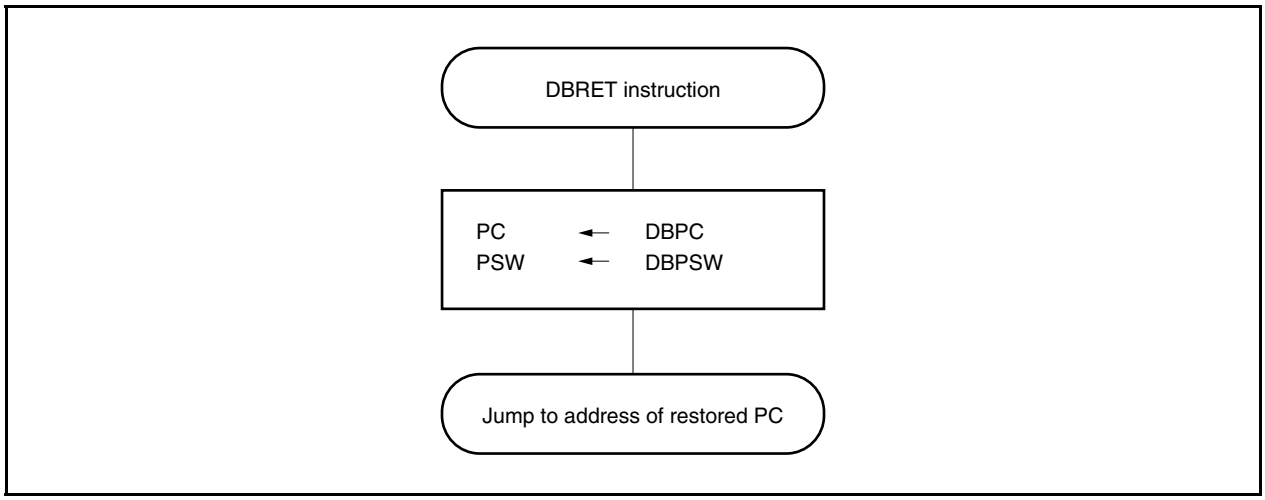

14.5.2 Debug trap

A debug trap is an exception that is generated when the DBTRAP instruction is executed and is always acknowledged.

(1) Operation

Upon occurrence of a debug trap, the CPU performs the following processing.

<1> Saves restored PC to DBPC.
<2> Saves current PSW to DBPSW.
<3> Sets the PSW.NP, PSW.EP, and PSW.ID bits to 1.
<4> Sets handler address (00000060H) for debug trap to PC and transfers control.

Figure 14-13 shows the debug trap processing format.

Figure 14-13. Debug Trap Processing Format

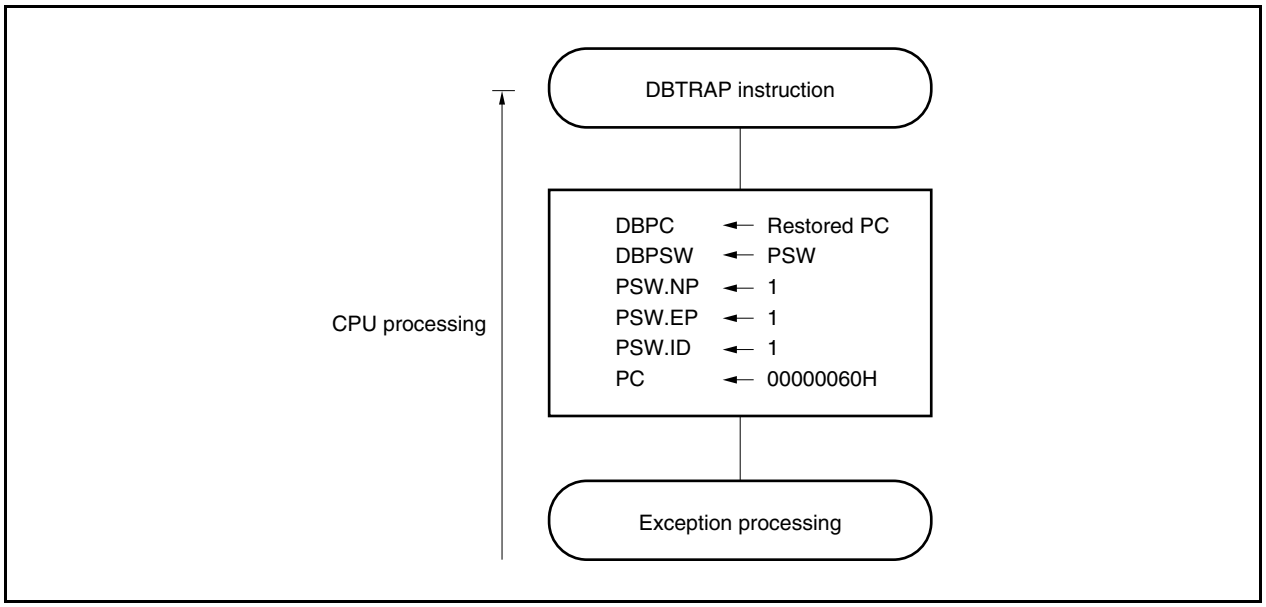

(2) Restoration

Restoration from a debug trap is executed with the DBRET instruction.

With the DBRET instruction, the CPU performs the following steps and transfers control to the address of the restored PC.

<1> The restored PC and PSW are read from DBPC and DBPSW.

<2> Control is transferred to the fetched address of the restored PC and PSW.

Caution DBPC and DBPSW can be accessed only during the interval between the execution of the DBTRAP instruction and the DBRET instruction.

Figure 14-14 shows the processing format for restoration from a debug trap.

Figure 14-14. Processing Format of Restoration from Debug Trap

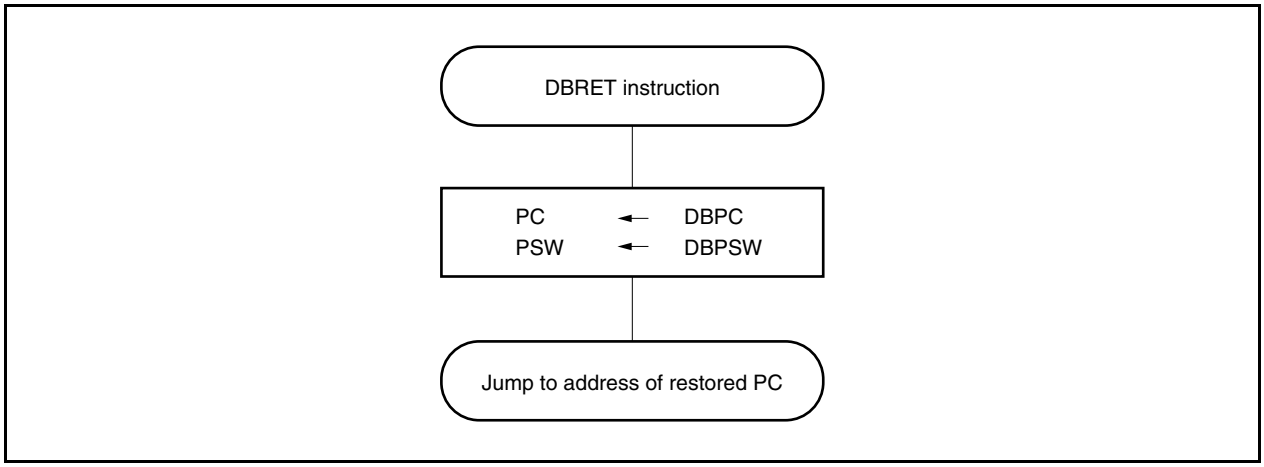

14.6 External Interrupt Request Input Pins (NMI and INTP0 to INTP7)

14.6.1 Noise elimination

(1) Eliminating noise on NMI pin

The NMI pin has an internal noise elimination circuit that uses analog delay. Therefore, the input level of the NMI pin is not detected as an edge unless it is maintained for a specific time or longer. Therefore, an edge is detected after specific time.

The NMI pin can be used to release the STOP mode. In the STOP mode, noise is not eliminated by using the system clock because the internal system clock is stopped.

(2) Eliminating noise on INTP0 to INTP7 pins

The INTP0 to INTP7 pins have an internal noise elimination circuit that uses analog delay. Therefore, the input level of the NMI pin is not detected as an edge unless it is maintained for a specific time or longer. Therefore, an edge is detected after specific time.

14.6.2 Edge detection

The valid edge of each of the NMI and INTP0 to INTP7 pins can be selected from the following four.

- Rising edge
- Falling edge
- Both rising and falling edges
- No edge detected

The edge of the NMI pin is not detected after reset. Therefore, the interrupt request signal is not acknowledged unless a valid edge is enabled by using the INTF0 and INTR0 register (the NMI pin functions as a normal port pin).

(1) External interrupt falling, rising edge specification register 0 (INTF0, INTR0)

The INTF0 and INTR0 registers are 8-bit registers that specify detection of the falling and rising edges of the NMI pin via bit 2 and the external interrupt pins (INTP0 to INTP3) via bits 3 to 6.

These registers can be read or written in 8-bit or 1-bit units.

Reset sets these registers to 00H.

Caution When the function is changed from the external interrupt function (alternate function) to the port function, an edge may be detected. Therefore, clear the INTF0n and INTR0n bits to 00, and then set the port mode.

After reset: 00H R/W Address: INTF0 FFFFFC00H, INTR0 FFFFFC20H

	7	6	5	4	3	2	1	0
INTF0	0	INTF06	INTF05	INTF04	INTF03	INTF02	0	0
		INTP3	INTP2	INTP1	INTP0	NMI		

	7	6	5	4	3	2	1	0
INTR0	0	INTR06	INTR05	INTR04	INTR03	INTR02	0	0
		INTP3	INTP2	INTP1	INTP0	NMI		

Remark For the valid edge specification combinations, see **Table 14-3**.

Table 14-3. Valid Edge Specification

INTF0n	INTR0n	Valid Edge Specification (n = 2 to 6)
0	0	No edge detected
0	1	Rising edge
1	0	Falling edge
1	1	Both rising and falling edges

Caution Be sure to clear the INTF0n and INTR0n bits to 00 if the corresponding pin is not used as the NMI or INTP0 to INTP3 pins.

Remark n = 2: Control of NMI pin
n = 3 to 6: Control of INTP0 to INTP3 pins

(2) External interrupt rising, falling edge specification register 3L (INTR3L, INTF3L)

The INTR3 and INTF3 registers are 8-bit registers that specify detection of the rising and falling edges of the INTP7 pin.

These registers can be read or written in 8-bit or 1-bit units.

Reset sets these registers to 00H.

Caution When the function is changed from the external interrupt function (alternate function) to the port function, an edge may be detected. Therefore, clear the INTF31 and INTR31 bits to 00, and then set the port mode.

After reset: 00H R/W Address: INTF3L FFFFFC06H, INTR3L FFFFFC26H

	7	6	5	4	3	2	1	0
INTF3L	0	0	0	0	0	0	INTF31	0
							INTP7	

	7	6	5	4	3	2	1	0
INTR3L	0	0	0	0	0	0	INTR31	0
							INTP7	

Remark For the valid edge specification combinations, see **Table 14-5**.

Table 14-5. Valid Edge Specification

INTF31	INTR31	Valid Edge Specification
0	0	No edge detected
0	1	Rising edge
1	0	Falling edge
1	1	Both rising and falling edges

Caution Be sure to clear the INTF31 and INTR31 bits to 00 if the corresponding pin is not used as the INTP7 pin.

(3) External interrupt falling, rising edge specification register 9H (INTF9H, INTR9H)

The INTF9H and INTR9H registers are 8-bit registers that specify detection of the falling and rising edges of the external interrupt pins (INTP4 to INTP6).

These registers can be read or written in 8-bit or 1-bit units.

Reset sets these registers to 00H.

Caution When the function is changed from the external interrupt function (alternate function) to the port function, an edge may be detected. Therefore, clear the INTF9n and INTR9n bits to 0, and then set the port mode.

After reset: 00H R/W Address: INTF9H FFFFFC13H, INTR9H FFFFFC33H

	15	14	13	12	11	10	9	8
INTF9H	INTF915	INTF914	INTF913	0	0	0	0	0
	INTP6	INTP5	INTP4					

	15	14	13	12	11	10	9	8
INTR9H	INTR915	INTR914	INTR913	0	0	0	0	0
	INTP6	INTP5	INTP4					

Remark For the valid edge specification combinations, see **Table 14-8**.

Table 14-8. Valid Edge Specification

INTF9n	INTR9n	Valid Edge Specification (n = 13 to 15)
0	0	No edge detected
0	1	Rising edge
1	0	Falling edge
1	1	Both rising and falling edges

Caution Be sure to clear the INTF9n and INTR9n bits to 00 if the corresponding pin is not used as INTP4 to INTP6 pins.

Remark n = 13 to 15: Control of INTP4 to INTP6 pins

(4) Noise elimination control register (NFC)

Digital noise elimination can be selected for the INTP3 pin. The noise elimination settings are performed using the NFC register.

When digital noise elimination is selected, the sampling clock for digital sampling can be selected from among $f_{XX}/64$, $f_{XX}/128$, $f_{XX}/256$, $f_{XX}/512$, $f_{XX}/1,024$, and f_{XT}. Sampling is performed three times.

When digital noise elimination is selected, if the clock that performs sampling in the standby mode is stopped, then the INTP3 interrupt request signal cannot be used for releasing the standby mode. When f_{XT} is used as the sampling clock, the INTP3 interrupt request signal can be used for releasing either the subclock operating mode or the IDLE1/IDLE2/STOP/sub-IDLE mode.

This register can be read or written in 8-bit units.

Reset sets this register to 00H.

Caution Time equal to the sampling clock × the number of times set by the NFSTS bit is required until the digital noise eliminator is initialized after the sampling clock has been changed. If the valid edge of INTP3 is input after the sampling clock has been changed and before the time of the sampling clock × the number of times set by the NFSTS bit passes, therefore, the interrupt request signal may be generated. Therefore, note the following points when using the interrupt function.

- **When using the interrupt function, after the sampling clock × the number of times set by the NFSTS bit have elapsed, enable interrupts after the interrupt request flag (PIC3.PIF3 bit) has been cleared.**

After reset: 00H R/W Address: FFFFF318H

	7	6	5	4	3	2	1	0
NFC	NFEN	NFSTS	0	0	0	NFC2	NFC1	NFC0

NFEN	Settings of INTP3 pin noise elimination
0	Analog noise elimination (60 ns (TYP.))
1	Digital noise elimination

NFSTS	Setting of number of times of sampling of digital noise elimination
0	Number of times of sampling × 3 times
1	Number of times of sampling × twice

NFC2	NFC1	NFC0	Digital sampling clock
0	0	0	$f_{XX}/64$
0	0	1	$f_{XX}/128$
0	1	0	$f_{XX}/256$
0	1	1	$f_{XX}/512$
1	0	0	$f_{XX}/1,024$
1	0	1	f_{XT} (subclock)
Other than above			Setting prohibited

Remarks 1. Since sampling is performed three times, the reliably eliminated noise width is 2 sampling clocks.

2. In the case of noise with a width smaller than 2 sampling clocks, an interrupt request signal is generated if noise synchronized with the sampling clock is input.

14.7 Interrupt Acknowledge Time of CPU

Except the following cases, the interrupt acknowledge time of the CPU is 4 clocks minimum. To input interrupt request signals successively, input the next interrupt request signal at least 5 clocks after the preceding interrupt.

- In IDLE1/IDLE2/STOP mode
- When interrupt request non-sampling instructions are successively executed (see **14.8 Periods in Which Interrupts Are Not Acknowledged by CPU**.)
- When the interrupt control register is accessed

Figure 14-15. Pipeline Operation at Interrupt Request Signal Acknowledgment (Outline)

(1) Minimum interrupt response time

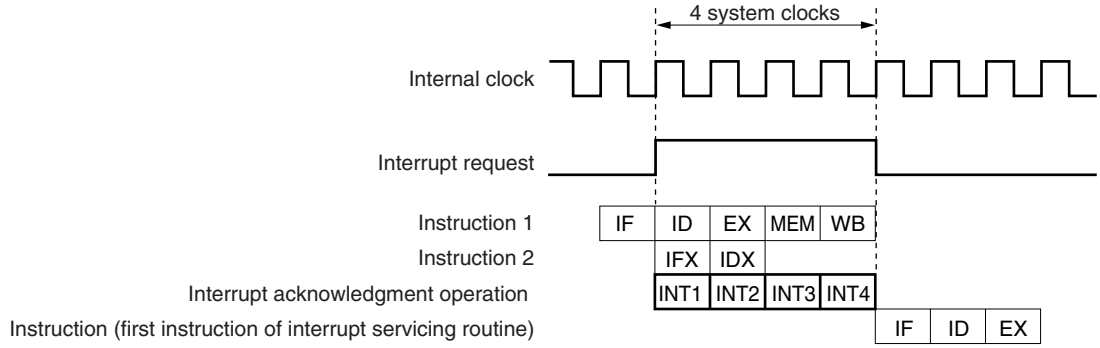

(2) Maximum interrupt response time

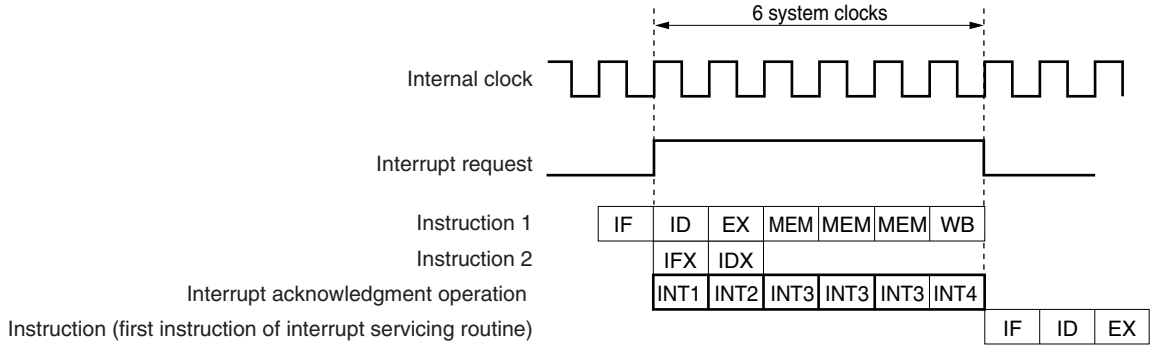

Remark INT1 to INT4: Interrupt acknowledgment processing
IFX: Invalid instruction fetch
IDX: Invalid instruction decode

Interrupt acknowledge time (internal system clock)			Condition
	Internal interrupt	External interrupt	
Minimum	4	4 + Analog delay time	The following cases are exceptions. • In IDLE1/IDLE2/STOP mode • Two or more interrupt request non-sample instructions are executed in succession • Access to peripheral I/O register
Maximum	6	6 + Analog delay time	

14.8 Periods in Which Interrupts Are Not Acknowledged by CPU

An interrupt is acknowledged by the CPU while an instruction is being executed. However, no interrupt will be acknowledged between an interrupt request non-sample instruction and the next instruction (interrupt is held pending).

The interrupt request non-sample instructions are as follows.

- EI instruction
- DI instruction
- LDSR reg2, 0x5 instruction (for PSW)
- The store instruction for the PRCMD register
- The store, SET1, NOT1, or CLR1 instructions for the following registers.
  - Interrupt-related registers:
    Interrupt control register (xxICn), interrupt mask registers 0 to 2 (IMR0 to IMR2)
  - In-service priority register (ISPR):
  - Command register (PRCMD):
  - Power save control register (PSC)
  - On-chip debug mode register (OCDM)
  - Peripheral emulation register 1 (PEMU1):

Remark xx: Identification name of each peripheral unit (see **Table 14-2 Interrupt Control Registers (xxICn)**)

n: Peripheral unit number (see **Table 14-2 Interrupt Control Registers (xxICn)**).

14.9 Cautions

The NMI pin alternately functions as the P02 pin. It functions as a normal port pin after reset. To enable the NMI pin, validate the NMI pin with the PMC0 register. The initial setting of the NMI pin is “No edge detected”. Select the NMI pin valid edge using the INTF0 and INTR0 registers.

CHAPTER 15 KEY INTERRUPT FUNCTION

15.1 Function

A key interrupt request signal (INTKR) can be generated by inputting a falling edge to the eight key input pins (KR0 to KR7) by setting the KRM register.

Table 15-1. Assignment of Key Return Detection Pins

Flag	Pin Description
KRM0	Controls KR0 signal in 1-bit units
KRM1	Controls KR1 signal in 1-bit units
KRM2	Controls KR2 signal in 1-bit units
KRM3	Controls KR3 signal in 1-bit units
KRM4	Controls KR4 signal in 1-bit units
KRM5	Controls KR5 signal in 1-bit units
KRM6	Controls KR6 signal in 1-bit units
KRM7	Controls KR7 signal in 1-bit units

Figure 15-1. Key Return Block Diagram

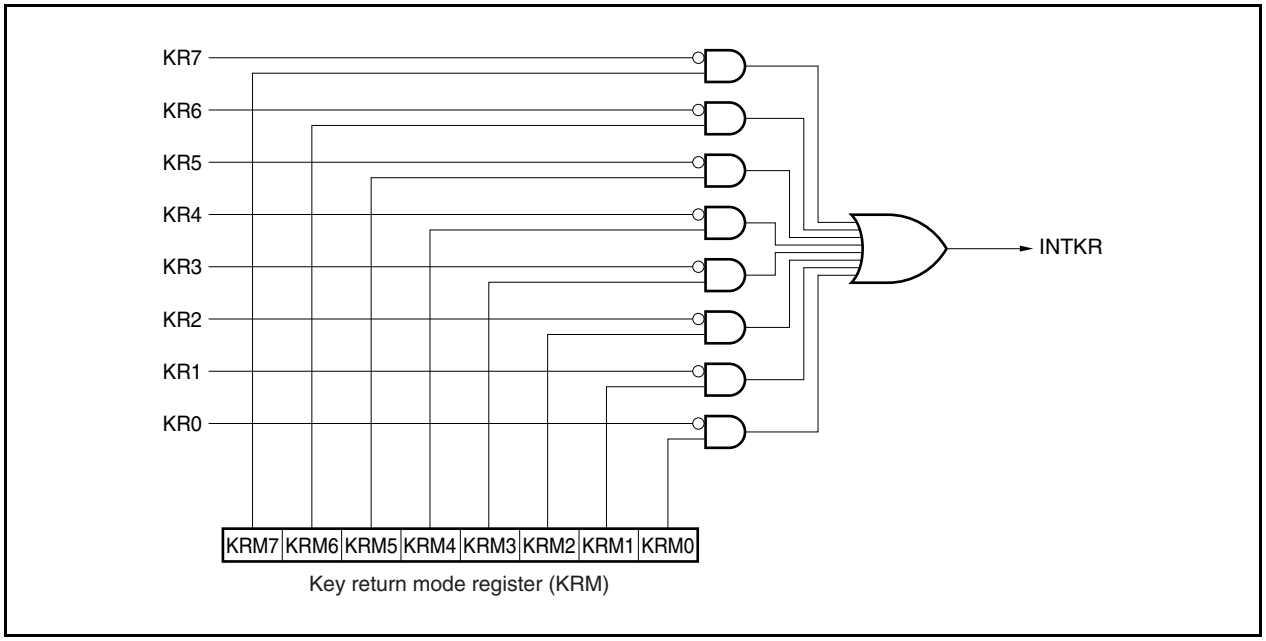

15.2 Register

(1) Key return mode register (KRM)

The KRM register controls the KRM0 to KRM7 bits using the KR0 to KR7 signals.
This register can be read or written in 8-bit or 1-bit units.
Reset sets this register to 00H.

After reset: 00H R/W Address: FFFFF300H

	7	6	5	4	3	2	1	0
KRM	KRM7	KRM6	KRM5	KRM4	KRM3	KRM2	KRM1	KRM0

KRMn	Control of key return mode
0	Does not detect key return signal
1	Detects key return signal

Caution Rewrite the KRM register after once clearing the KRM register to 00H.

Remark For the alternate-function pin settings, see **Table 4-15 Using Port Pin as Alternate Function Pin**.

15.3 Cautions

(1) If a low level is input to any of the KR0 to KR7 pins, the INTKR signal is not generated even if the falling edge of another pin is input.

(2) The RXDA1 and KR7 pins must not be used at the same time. To use the RXDA1 pin, do not use the KR7 pin. To use the KR7 pin, do not use the RXDA1 pin (it is recommended to set the PFC91 bit to 1 and clear PFCE91 bit to 0).

(3) If the KRM register is changed, an interrupt request signal (INTKR) may be generated. To prevent this, change the KRM register after disabling interrupts (DI) or masking, then clear the interrupt request flag (KRIC.KRIF bit) to 0, and enable interrupts (EI) or clear the mask.

(4) To use the key interrupt function, be sure to set the port pin to the key return pin and then enable the operation with the KRM register. To switch from the key return pin to the port pin, disable the operation with the KRM register and then set the port pin.

CHAPTER 16 STANDBY FUNCTION

16.1 Overview

The power consumption of the system can be effectively reduced by using the standby modes in combination and selecting the appropriate mode for the application. The available standby modes are listed in Table 16-1.

Table 16-1. Standby Modes

Mode	Functional Outline
HALT mode	Mode in which only the operating clock of the CPU is stopped
IDLE1 mode	Mode in which all the operations of the internal circuits except the oscillator, PLL[Note], and flash memory are stopped
IDLE2 mode	Mode in which all the internal operations of the chip except the oscillator are stopped
STOP mode	Mode in which all the internal operations of the chip except the subclock oscillator are stopped
Subclock operation mode	Mode in which the subclock is used as the internal system clock
Sub-IDLE mode	Mode in which all the internal operations of the chip except the oscillator are stopped, in the subclock operation mode

Note The PLL holds the previous operating status.

Figure 16-1. Status Transition

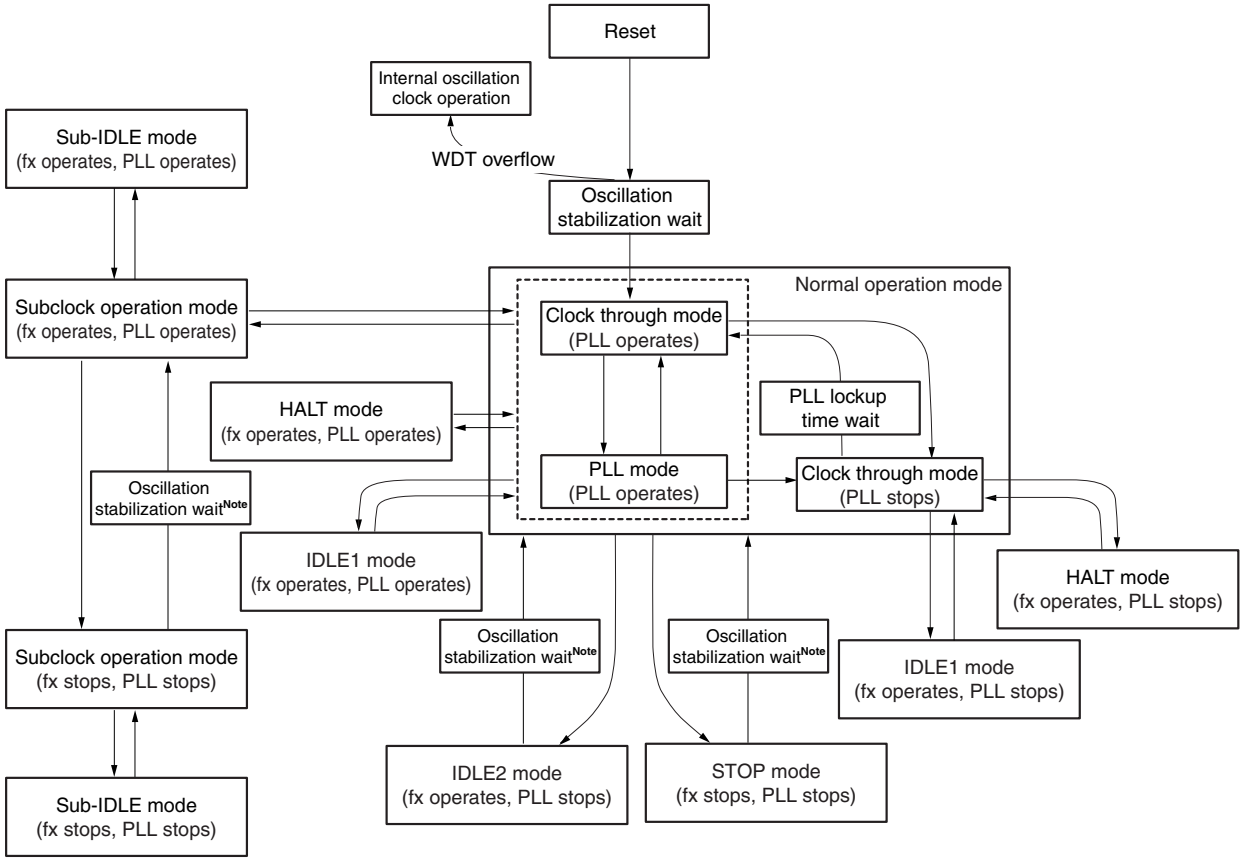

Note If a WDT overflow occurs during an oscillation stabilization time, the CPU operates on the internal oscillation clock.

Remark fx: Main clock oscillation frequency

16.2 Registers

(1) Power save control register (PSC)

The PSC register is an 8-bit register that controls the standby function. The STP bit of this register is used to specify the STOP mode. This register is a special register that can be written only by the special sequence combinations (see **3.4.7 Special registers**).

This register can be read or written in 8-bit or 1-bit units.

Reset sets this register to 00H.

After reset: 00H R/W Address: FFFFF1FEH

	7	6	5	4	3	2	1	0
PSC	0	NMI1M	NMI0M	INTM	0	0	STP	0

NMI1M	Standby mode release control upon occurrence of INTWDT2 signal
0	Standby mode release by INTWDT2 signal enabled
1	Standby mode release by INTWDT2 signal disabled

NMI0M	Standby mode release control by NMI pin input
0	Standby mode release by NMI pin input enabled
1	Standby mode release by NMI pin input disabled

INTM	Standby mode release control via maskable interrupt request signal
0	Standby mode release by maskable interrupt request signal enabled
1	Standby mode release by maskable interrupt request signal disabled

STP	Standby mode[Note] setting
0	Normal mode
1	Standby mode

Note Standby mode set by STP bit: IDLE1, IDLE2, STOP, or sub-IDLE mode

Cautions 1. Before setting the IDLE1, IDLE2, STOP, or sub-IDLE mode, set the PSMR.PSM1 and PSMR.PSM0 bits and then set the STP bit.

2. Settings of the NMI1M, NMI0M, and INTM bits are invalid when HALT mode is released.

(2) Power save mode register (PSMR)

The PSMR register is an 8-bit register that controls the operation status in the power save mode and the clock operation.

This register can be read or written in 8-bit or 1-bit units.

Reset sets this register to 00H.

After reset: 00H R/W Address: FFFFF820H

	7	6	5	4	3	2	1	0
PSMR	0	0	0	0	0	0	PSM1	PSM0

PSM1	PSM0	Specification of operation in software standby mode
0	0	IDLE1, sub-IDLE modes
0	1	STOP mode
1	0	IDLE2, sub-IDLE modes
1	1	STOP mode

Cautions 1. Be sure to clear bits 2 to 7 to "0".

2. The PSM0 and PSM1 bits are valid only when the PSC.STP bit is 1.

Remark IDLE1: In this mode, all operations except the oscillator operation and some other circuits (flash memory and PLL) are stopped.
After the IDLE1 mode is released, the normal operation mode is restored without needing to secure the oscillation stabilization time, like the HALT mode.

IDLE2: In this mode, all operations except the oscillator operation are stopped.
After the IDLE2 mode is released, the normal operation mode is restored following the lapse of the setup time specified by the OSTS register (flash memory and PLL).

STOP: In this mode, all operations except the subclock oscillator operation are stopped.
After the STOP mode is released, the normal operation mode is restored following the lapse of the oscillation stabilization time specified by the OSTS register.

Sub-IDLE: In this mode, all other operations are halted except for the oscillator. After the IDLE mode has been released by the interrupt request signal, the subclock operation mode will be restored after 12 cycles of the subclock have been secured.

(3) Oscillation stabilization time select register (OSTS)

The wait time until the oscillation stabilizes after the STOP mode is released or the wait time until the on-chip flash memory stabilizes after the IDLE2 mode is released is controlled by the OSTS register.

The OSTS register can be read or written 8-bit units.

Reset sets this register to 06H.

After reset: 06H R/W Address: FFFFF6C0H

	7	6	5	4	3	2	1	0
OSTS	0	0	0	0	0	OSTS2	OSTS1	OSTS0

OSTS2	OSTS1	OSTS0	Selection of oscillation stabilization time/setup time[Note]	fx	
				4 MHz	5 MHz
0	0	0	$2^{10}/f_X$	0.256 ms	0.205 ms
0	0	1	$2^{11}/f_X$	0.512 ms	0.410 ms
0	1	0	$2^{12}/f_X$	1.024 ms	0.819 ms
0	1	1	$2^{13}/f_X$	2.048 ms	1.638 ms
1	0	0	$2^{14}/f_X$	4.096 ms	3.277 ms
1	0	1	$2^{15}/f_X$	8.192 ms	6.554 ms
1	1	0	$2^{16}/f_X$	16.38 ms	13.107 ms
1	1	1	Setting prohibited		

Note The oscillation stabilization time and setup time are required when the STOP mode and IDLE2 mode are released, respectively.

Cautions 1. The wait time following release of the STOP mode does not include the time until the clock oscillation starts ("a" in the figure below) following release of the STOP mode, regardless of whether the STOP mode is released by reset or the occurrence of an interrupt request signal.

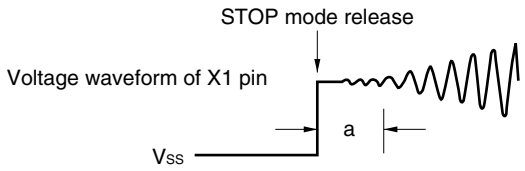

2. Be sure to clear bits 3 to 7 to "0".

3. The oscillation stabilization time following reset release is $2^{16}/f_X$ (because the initial value of the OSTS register = 06H).

Remark f_X = Main clock oscillation frequency

16.3 HALT Mode

16.3.1 Setting and operation status

The HALT mode is set when a dedicated instruction (HALT) is executed in the normal operation mode.

In the HALT mode, the clock oscillator continues operating. Only clock supply to the CPU is stopped; clock supply to the other on-chip peripheral functions continues.

As a result, program execution is stopped, and the internal RAM retains the contents before the HALT mode was set. The on-chip peripheral functions that are independent of instruction processing by the CPU continue operating.

Table 16-3 shows the operating status in the HALT mode.

The average current consumption of the system can be reduced by using the HALT mode in combination with the normal operation mode for intermittent operation.

Cautions 1. Insert five or more NOP instructions after the HALT instruction.

2. If the HALT instruction is executed while an unmasked interrupt request signal is being held pending, the status shifts to HALT mode, but the HALT mode is then released immediately by the pending interrupt request.

16.3.2 Releasing HALT mode

The HALT mode is released by a non-maskable interrupt request signal (NMI pin input, INTWDT2 signal), unmasked external interrupt request signal (INTP0 to INTP7 pin input), unmasked internal interrupt request signal from a peripheral function operable in the HALT mode, or reset signal (reset by $\overline{\text{RESET}}$ pin input, WDT2RES signal, power-on-clear circuit (POC), low-voltage detector (LVI), or clock monitor (CLM)).

After the HALT mode has been released, the normal operation mode is restored.

(1) Releasing HALT mode by non-maskable interrupt request signal or unmasked maskable interrupt request signal

The HALT mode is released by a non-maskable interrupt request signal or an unmasked maskable interrupt request signal, regardless of the priority of the interrupt request signal. If the HALT mode is set in an interrupt servicing routine, however, an interrupt request signal that is issued later is serviced as follows.

(a) If an interrupt request signal with a priority lower than that of the interrupt request currently being serviced is issued, the HALT mode is released, but that interrupt request signal is not acknowledged. The interrupt request signal itself is retained.

(b) If an interrupt request signal with a priority higher than that of the interrupt request currently being serviced is issued (including a non-maskable interrupt request signal), the HALT mode is released and that interrupt request signal is acknowledged.

Table 16-2. Operation After Releasing HALT Mode by Interrupt Request Signal

Release Source	Interrupt Enabled (EI) Status	Interrupt Disabled (DI) Status
Non-maskable interrupt request signal	Execution branches to the handler address.	
Maskable interrupt request signal	Execution branches to the handler address or the next instruction is executed.	The next instruction is executed.

(2) Releasing HALT mode by reset

The same operation as the normal reset operation is performed.

Table 16-3. Operating Status in HALT Mode

Setting of HALT Mode / Item		Operating Status	
		When Subclock Is Not Used	When Subclock Is Used
Main clock oscillator		Oscillation enabled	
Subclock oscillator		–	Oscillation enabled
Internal oscillator		Oscillation enabled	
PLL		Operable	
CPU		Stops operation	
Interrupt controller		Operable	
Timer P (TMP0 to TMP3)		Operable	
Timer Q (TMQ0)		Operable	
Timer M (TMM0)		Operable when a clock other than f_{XT} is selected as the count clock	Operable
Watch timer		Operable when f_X (divided BRG) is selected as the count clock	Operable
Watchdog timer 2		Operable	
Serial interface	CSIB0, CSIB1	Operable	
	UARTA0, UARTA1	Operable	
A/D converter		Operable	
Key interrupt function (KR)		Operable	
Port function		Retains status before HALT mode was set	
Internal data		The CPU registers, statuses, data, and all other internal data such as the contents of the internal RAM are retained as they were before the HALT mode was set.	

16.4 IDLE1 Mode

16.4.1 Setting and operation status

The IDLE1 mode is set by clearing the PSMR.PSM1 and PSMR.PSM0 bits to 00 and setting the PSC.STP bit to 1 in the normal operation mode.

In the IDLE1 mode, the clock oscillator, PLL, and flash memory continue operating but clock supply to the CPU and other on-chip peripheral functions stops.

As a result, program execution stops and the contents of the internal RAM before the IDLE1 mode was set are retained. The CPU and other on-chip peripheral functions stop operating. However, the on-chip peripheral functions that can operate with the subclock or an external clock continue operating.

Table 16-5 shows the operating status in the IDLE1 mode.

The IDLE1 mode can reduce the power consumption more than the HALT mode because it stops the operation of the on-chip peripheral functions. The main clock oscillator does not stop, so the normal operation mode can be restored without waiting for the oscillation stabilization time after the IDLE1 mode has been released, in the same manner as when the HALT mode is released.

Cautions 1. Insert five or more NOP instructions after the instruction that stores data in the PSC register to set the IDLE1 mode.

2. If the IDLE1 mode is set while an unmasked interrupt request signal is being held pending, the IDLE1 mode is released immediately by the pending interrupt request.

16.4.2 Releasing IDLE1 mode

The IDLE1 mode is released by a non-maskable interrupt request signal (NMI pin input, INTWDT2 signal), unmasked external interrupt request signal (INTP0 to INTP7 pin input), unmasked internal interrupt request signal from a peripheral function operable in the IDLE1 mode, or reset signal (reset by $\overline{\text{RESET}}$ pin input, WDT2RES signal, power-on-clear circuit (POC), low-voltage detector (LVI), or clock monitor (CLM)).

After the IDLE1 mode has been released, the normal operation mode is restored.

(1) Releasing IDLE1 mode by non-maskable interrupt request signal or unmasked maskable interrupt request signal

The IDLE1 mode is released by a non-maskable interrupt request signal or an unmasked maskable interrupt request signal, regardless of the priority of the interrupt request signal. If the IDLE1 mode is set in an interrupt servicing routine, however, an interrupt request signal that is issued later is processed as follows.

Cautions 1. An interrupt request signal that is disabled by setting the PSC.NMI1M, PSC.NMI0M, and PSC.INTM bits to 1 becomes invalid and IDLE1 mode is not released.

2. If eliminating digital noise is selected by using the NFC register and if the sampling clock is selected from f_{XX}/64, f_{XX}/128, f_{XX}/256, f_{XX}/512, and f_{XX}/1024, the IDLE1 mode cannot be released by the interrupt request signal of the INTP3 pin. For details, see 14.6.2 (4) Noise elimination control register (NFC).

(a) If an interrupt request signal with a priority lower than that of the interrupt request currently being serviced is issued, the IDLE1 mode is released, but that interrupt request signal is not acknowledged. The interrupt request signal itself is retained.

(b) If an interrupt request signal with a priority higher than that of the interrupt request currently being serviced is issued (including a non-maskable interrupt request signal), the IDLE1 mode is released and that interrupt request signal is acknowledged.

Table 16-4. Operation After Releasing IDLE1 Mode by Interrupt Request Signal

Release Source	Interrupt Enabled (EI) Status	Interrupt Disabled (DI) Status
Non-maskable interrupt request signal	Execution branches to the handler address.	
Maskable interrupt request signal	Execution branches to the handler address or the next instruction is executed.	The next instruction is executed.

(2) Releasing IDLE1 mode by reset

The same operation as the normal reset operation is performed.

Table 16-5. Operating Status in IDLE1 Mode

Setting of IDLE1 Mode / Item		Operating Status	
		When Subclock Is Not Used	When Subclock Is Used
Main clock oscillator		Oscillation enabled	
Subclock oscillator		–	Oscillation enabled
Internal oscillator		Oscillation enabled	
PLL		Operable	
CPU		Stops operation	
Interrupt controller		Stops operation (but standby mode release is possible)	
Timer P (TMP0 to TMP3)		Stops operation	
Timer Q (TMQ0)		Stops operation	
Timer M (TMM0)		Operable when $f_R/8$ is selected as the count clock	Operable when $f_R/8$ or f_{XT} is selected as the count clock
Watch timer		Operable when f_X (divided BRG) is selected as the count clock	Operable
Watchdog timer 2		Operable	
Serial interface	CSIB0, CSIB1	Operable when the $\overline{\text{SCKBn}}$ input clock is selected as the count clock (n = 0, 1)	
	UARTA0, UARTA1	Stops operation (but UARTA0 is operable when the ASCKA0 input clock is selected)	
A/D converter		Holds operation (conversion result held)[Note]	
Key interrupt function (KR)		Operable	
Port function		Retains status before IDLE1 mode was set	
Internal data		The CPU registers, statuses, data, and all other internal data such as the contents of the internal RAM are retained as they were before the IDLE1 mode was set.	

Note To realize low power consumption, stop the A/D converter before shifting to the IDLE1 mode.

16.5 IDLE2 Mode

16.5.1 Setting and operation status

The IDLE2 mode is set by setting the PSMR.PSM1 and PSMR.PSM0 bits to 10 and setting the PSC.STP bit to 1 in the normal operation mode.

In the IDLE2 mode, the clock oscillator continues operation but clock supply to the CPU, PLL, flash memory, and other on-chip peripheral functions stops.

As a result, program execution stops and the contents of the internal RAM before the IDLE2 mode was set are retained. The CPU, PLL, and other on-chip peripheral functions stop operating. However, the on-chip peripheral functions that can operate with the subclock or an external clock continue operating.

Table 16-7 shows the operating status in the IDLE2 mode.

The IDLE2 mode can reduce the power consumption more than the IDLE1 mode because it stops the operations of the on-chip peripheral functions, PLL, and flash memory. However, because the PLL and flash memory are stopped, a setup time for the PLL and flash memory is required when IDLE2 mode is released.

Cautions 1. Insert five or more NOP instructions after the instruction that stores data in the PSC register to set the IDLE2 mode.

2. If the IDLE2 mode is set while an unmasked interrupt request signal is being held pending, the IDLE2 mode is released immediately by the pending interrupt request.

16.5.2 Releasing IDLE2 mode

The IDLE2 mode is released by a non-maskable interrupt request signal (NMI pin input, INTWDT2 signal), unmasked external interrupt request signal (INTP0 to INTP7 pin input), unmasked internal interrupt request signal from the peripheral functions operable in the IDLE2 mode, or reset signal (reset by $\overline{\text{RESET}}$ pin input, WDT2RES signal, power-on-clear circuit (POC), low-voltage detector (LVI), or clock monitor (CLM)). The PLL returns to the operating status it was in before the IDLE2 mode was set.

After the IDLE2 mode has been released, the normal operation mode is restored.

(1) Releasing IDLE2 mode by non-maskable interrupt request signal or unmasked maskable interrupt request signal

The IDLE2 mode is released by a non-maskable interrupt request signal or an unmasked maskable interrupt request signal, regardless of the priority of the interrupt request signal. If the IDLE2 mode is set in an interrupt servicing routine, however, an interrupt request signal that is issued later is processed as follows.

Cautions 1. The interrupt request signal that is disabled by setting the PSC.NMI1M, PSC.NMI0M, and PSC.INTM bits to 1 becomes invalid and IDLE2 mode is not released.

2. If eliminating digital noise is selected by using the NFC register and if the sampling clock is selected from f_{XX}/64, f_{XX}/128, f_{XX}/256, f_{XX}/512, and f_{XX}/1024, the IDLE2 mode cannot be released by the interrupt request signal of the INTP3 pin. For details, see 14.6.2 (4) Noise elimination control register (NFC).

(a) If an interrupt request signal with a priority lower than that of the interrupt request currently being serviced is issued, the IDLE2 mode is released, but that interrupt request signal is not acknowledged. The interrupt request signal itself is retained.

(b) If an interrupt request signal with a priority higher than that of the interrupt request currently being serviced is issued (including a non-maskable interrupt request signal), the IDLE2 mode is released and that interrupt request signal is acknowledged.

Table 16-6. Operation After Releasing IDLE2 Mode by Interrupt Request Signal

Release Source	Interrupt Enabled (EI) Status	Interrupt Disabled (DI) Status
Non-maskable interrupt request signal	Execution branches to the handler address after securing the prescribed setup time.	
Maskable interrupt request signal	Execution branches to the handler address or the next instruction is executed after securing the prescribed setup time.	The next instruction is executed after securing the prescribed setup time.

(2) Releasing IDLE2 mode by reset

The same operation as the normal reset operation is performed.

Table 16-7. Operating Status in IDLE2 Mode

Setting of IDLE2 Mode / Item		Operating Status	
		When Subclock Is Not Used	When Subclock Is Used
Main clock oscillator		Oscillation enabled	
Subclock oscillator		–	Oscillation enabled
Internal oscillator		Oscillation enabled	
PLL		Stops operation	
CPU		Stops operation	
Interrupt controller		Stops operation (but standby mode release is possible)	
Timer P (TMP0 to TMP3)		Stops operation	
Timer Q (TMQ0)		Stops operation	
Timer M (TMM0)		Operable when $f_R/8$ is selected as the count clock	Operable when $f_R/8$ or f_{XT} is selected as the count clock
Watch timer		Operable when f_X (divided BRG) is selected as the count clock	Operable
Watchdog timer 2		Operable	
Serial interface	CSIB0, CSIB1	Operable when the $\overline{\text{SCKBn}}$ input clock is selected as the count clock (n = 0, 1)	
	UARTA0, UARTA1	Stops operation (but UARTA0 is operable when the ASCKA0 input clock is selected)	
A/D converter		Holds operation (conversion result held)[Note]	
Key interrupt function (KR)		Operable	
Port function		Retains status before IDLE2 mode was set	
Internal data		The CPU registers, statuses, data, and all other internal data such as the contents of the internal RAM are retained as they were before the IDLE2 mode was set.	

Note To realize low power consumption, stop the A/D converter before shifting to the IDLE2 mode.

16.5.3 Securing setup time when releasing IDLE2 mode

Secure the setup time for the ROM (flash memory) after releasing the IDLE2 mode because the operation of the blocks other than the main clock oscillator stops after the IDLE2 mode is set.

(1) Releasing IDLE2 mode by non-maskable interrupt request signal or unmasked maskable interrupt request signal

Secure the specified setup time by setting the OSTS register.

When the releasing source is generated, the dedicated internal timer starts counting according to the OSTS register setting. When it overflows, the normal operation mode is restored.

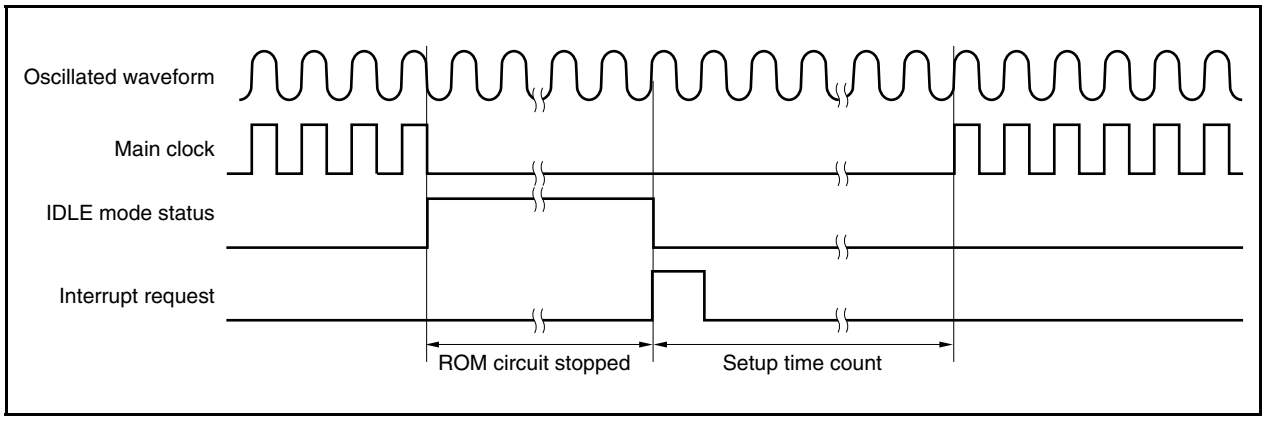

(2) Release by reset ($\overline{\text{RESET}}$ pin input, WDT2RES generation)

This operation is the same as that of a normal reset.

The oscillation stabilization time is the initial value of the OSTS register, 2^{16}/fx.

16.6 STOP Mode

16.6.1 Setting and operation status

The STOP mode is set by setting the PSMR.PSM1 and PSMR.PSM0 bits to 01 or 11 and setting the PSC.STP bit to 1 in the normal operation mode.

In the STOP mode, the subclock oscillator continues operating but the main clock oscillator stops. Clock supply to the CPU and the on-chip peripheral functions is stopped.

As a result, program execution stops, and the contents of the internal RAM before the STOP mode was set are retained. The on-chip peripheral functions that operate with the clock oscillated by the subclock oscillator or an external clock continue operating.

Table 16-9 shows the operating status in the STOP mode.

Because the STOP mode stops operation of the main clock oscillator, it reduces the power consumption to a level lower than the IDLE2 mode. If the subclock oscillator, internal oscillator, and external clock are not used, the power consumption can be minimized with only leakage current flowing.

Cautions 1. Insert five or more NOP instructions after the instruction that stores data in the PSC register to set the STOP mode.

2. If the STOP mode is set while an unmasked interrupt request signal is being held pending, the STOP mode is released immediately by the pending interrupt request.

16.6.2 Releasing STOP mode

The STOP mode is released by a non-maskable interrupt request signal (NMI pin input, INTWDT2 signal), unmasked external interrupt request signal (INTP0 to INTP7 pin input), unmasked internal interrupt request signal from the peripheral functions operable in the STOP mode, or reset signal (reset by $\overline{\text{RESET}}$ pin input, WDT2RES signal, power-on-clear circuit (POC), or low-voltage detector (LVI)).

After the STOP mode has been released, the normal operation mode is restored after the oscillation stabilization time has been secured.

Cautions 1. The interrupt request that is disabled by setting the PSC.NMI1M, PSC.NMI0M, and PSC.INTM bits to 1 becomes invalid and STOP mode is not released.

2. If eliminating digital noise is selected by using the NFC register and if the sampling clock is selected from f_{XX}/64, f_{XX}/128, f_{XX}/256, f_{XX}/512, and f_{XX}/1024, the STOP mode cannot be released by the interrupt request signal of the INTP3 pin. For details, see 14.6.2 (4) Noise elimination control register (NFC).

(1) Releasing STOP mode by non-maskable interrupt request signal or unmasked maskable interrupt request signal

The STOP mode is released by a non-maskable interrupt request signal or an unmasked maskable interrupt request signal, regardless of the priority of the interrupt request signal. If the STOP mode is set in an interrupt servicing routine, however, an interrupt request signal that is issued later is serviced as follows.

(a) If an interrupt request signal with a priority lower than that of the interrupt request currently being serviced is issued, the STOP mode is released, but that interrupt request signal is not acknowledged. The interrupt request signal itself is retained.

(b) If an interrupt request signal with a priority higher than that of the interrupt request currently being serviced is issued (including a non-maskable interrupt request signal), the STOP mode is released and that interrupt request signal is acknowledged.

Table 16-8. Operation After Releasing STOP Mode by Interrupt Request Signal

Release Source	Interrupt Enabled (EI) Status	Interrupt Disabled (DI) Status
Non-maskable interrupt request signal	Execution branches to the handler address after securing the oscillation stabilization time.	
Maskable interrupt request signal	Execution branches to the handler address or the next instruction is executed after securing the oscillation stabilization time.	The next instruction is executed after securing the oscillation stabilization time.

(2) Releasing STOP mode by reset

The same operation as the normal reset operation is performed.

Table 16-9. Operating Status in STOP Mode

Setting of STOP Mode / Item		Operating Status	
		When Subclock Is Not Used	When Subclock Is Used
Main clock oscillator		Stops oscillation	
Subclock oscillator		–	Oscillation enabled
Internal oscillator		Oscillation enabled	
PLL		Stops operation	
CPU		Stops operation	
Interrupt controller		Stops operation (but standby mode release is possible)	
Timer P (TMP0 to TMP3)		Stops operation	
Timer Q (TMQ0)		Stops operation	
Timer M (TMM0)		Operable when $f_R/8$ is selected as the count clock	Operable when $f_R/8$ or f_{XT} is selected as the count clock
Watch timer		Stops operation	Operable when f_{XT} is selected as the count clock
Watchdog timer 2		Operable when f_R is selected as the count clock	
Serial interface	CSIB0, CSIB1	Operable when the $\overline{\text{SCKBn}}$ input clock is selected as the count clock (n = 0, 1)	
	UARTA0, UARTA1	Stops operation (but UARTA0 is operable when the ASCKA0 input clock is selected)	
A/D converter		Stops operation (conversion result undefined)[Notes 1, 2]	
Key interrupt function (KR)		Operable	
Port function		Retains status before STOP mode was set	
Internal data		The CPU registers, statuses, data, and all other internal data such as the contents of the internal RAM are retained as they were before the STOP mode was set.	

Notes 1. If the STOP mode is set while the A/D converter is operating, the A/D converter is automatically stopped and starts operating again after the STOP mode is released. However, in that case, the A/D conversion results after the STOP mode is released are invalid. All the A/D conversion results before the STOP mode is set are invalid.

2. Even if the STOP mode is set while the A/D converter is operating, the power consumption is reduced equivalently to when the A/D converter is stopped before the STOP mode is set.

16.6.3 Securing oscillation stabilization time when releasing STOP mode

Secure the oscillation stabilization time for the main clock oscillator after releasing the STOP mode because the operation of the main clock oscillator stops after STOP mode is set.

(1) Releasing STOP mode by non-maskable interrupt request signal or unmasked maskable interrupt request signal

Secure the oscillation stabilization time by setting the OSTS register.

When the releasing source is generated, the dedicated internal timer starts counting according to the OSTS register setting. When it overflows, the normal operation mode is restored.

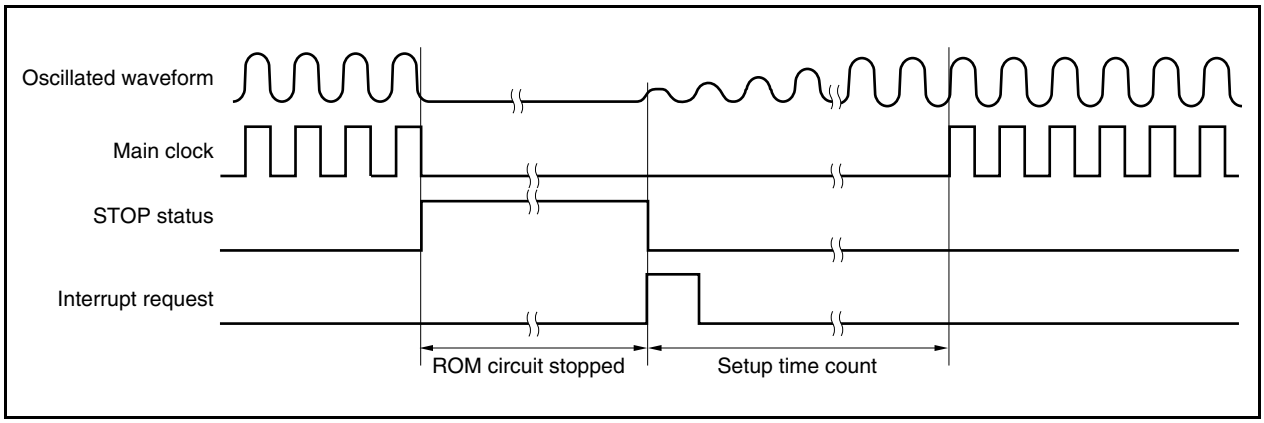

(2) Release by reset

This operation is the same as that of a normal reset.

The oscillation stabilization time is the initial value of the OSTS register, 2^{16}/fx.

16.7 Subclock Operation Mode

16.7.1 Setting and operation status

The subclock operation mode is set by setting the PCC.CK3 bit to 1 in the normal operation mode.

When the subclock operation mode is set, the internal system clock is changed from the main clock to the subclock. Check whether the clock has been switched by using the PCC.CLS bit.

When the PCC.MCK bit is set to 1, the operation of the main clock oscillator is stopped. As a result, the system operates only on the subclock.

In the subclock operation mode, the power consumption can be reduced to a level lower than in the normal operation mode because the subclock is used as the internal system clock. In addition, the power consumption can be further reduced to the level of the STOP mode by stopping the operation of the main clock oscillator.

Table 16-10 shows the operating status in subclock operation mode.

Cautions 1. When manipulating the CK3 bit, do not change the set values of the PCC.CK2 to PCC.CK0 bits (using a bit manipulation instruction to manipulate the bit is recommended). For details of the PCC register, see 5.3 (1) Processor clock control register (PCC).

2. If the following conditions are not satisfied, change the CK2 to CK0 bits so that the conditions are satisfied and set the subclock operation mode.
Internal system clock (f_{CLK}) > Subclock (f_{XT} = 32.768 kHz) × 4

Remark Internal system clock (f_{CLK}): Clock generated from main clock (f_{XX}) in accordance with the settings of the CK2 to CK0 bits

16.7.2 Releasing subclock operation mode

The subclock operation mode is released by a reset signal (reset by $\overline{\text{RESET}}$ pin input, WDT2RES signal, power-on-clear circuit (POC), low-voltage detector (LVI), or clock monitor (CLM)) when the CK3 bit is cleared to 0.

If the main clock is stopped (MCK bit = 1), set the MCK bit to 1, secure the oscillation stabilization time of the main clock by software, and clear the CK3 bit to 0.

The normal operation mode is restored when the subclock operation mode is released.

Caution When manipulating the CK3 bit, do not change the set values of the CK2 to CK0 bits (using a bit manipulation instruction to manipulate the bit is recommended).
For details of the PCC register, see 5.3 (1) Processor clock control register (PCC).

Table 16-10. Operating Status in Subclock Operation Mode

Setting of Subclock Operation Mode / Item		Operating Status	
		When Main Clock Is Oscillating	When Main Clock Is Stopped
Subclock oscillator		Oscillation enabled	
Internal oscillator		Oscillation enabled	
PLL		Operable	Stops operation[Note]
CPU		Operable	
Interrupt controller		Operable	
Timer P (TMP0 to TMP3)		Operable	Stops operation
Timer Q (TMQ0)		Operable	Stops operation
Timer M (TMM0)		Operable	Operable when $f_R/8$ or f_{XT} is selected as the count clock
Watch timer		Operable	Operable when f_{XT} is selected as the count clock
Watchdog timer 2		Operable	Operable when f_R is selected as the count clock
Serial interface	CSIB0, CSIB1	Operable	Operable when the $\overline{\text{SCKBn}}$ input clock is selected as the count clock (n = 0, 1)
	UARTA0, UARTA1	Operable	Stops operation (but UARTA0 is operable when the ASCKA0 input clock is selected)
A/D converter		Operable	Stops operation
Key interrupt function (KR)		Operable	
Port function		Settable	
Internal data		Settable	

Note Be sure to stop the PLL (PLLCTL.PLLON = 0) before stopping the main clock.

Caution When the CPU is operating on the subclock and main clock oscillation is stopped, accessing a register in which a wait occurs is disabled. If a wait is generated, it can be released only by reset (see 3.4.8 (2)).

16.8 Sub-IDLE Mode

16.8.1 Setting and operation status

The sub-IDLE mode is set by setting the PSMR.PSM1 and PSMR.PSM0 bits to 00 or 10 and setting the PSC.STP bit to 1 in the subclock operation mode.

In this mode, the clock oscillator continues operating but clock supply to the CPU, flash memory, and the other on-chip peripheral functions is stopped.

As a result, program execution stops and the contents of the internal RAM before the sub-IDLE mode was set are retained. The CPU and the other on-chip peripheral functions are stopped. However, the on-chip peripheral functions that can operate with the subclock or an external clock continue operating.

Because the sub-IDLE mode stops operation of the CPU, flash memory, and other on-chip peripheral functions, it can reduce the power consumption more than the subclock operation mode. If the sub-IDLE mode is set after the main clock has been stopped, the current consumption can be reduced to a level as low as that in the STOP mode.

Table 16-12 shows the operating status in the sub-IDLE mode.

Cautions 1. Following the store instruction to set the PSC register to the sub-IDLE mode, insert five or more NOP instructions.

2. If the sub-IDLE mode is set while an unmasked interrupt request signal is being held pending, the sub-IDLE mode is then released immediately by the pending interrupt request.

16.8.2 Releasing sub-IDLE mode

The sub-IDLE mode is released by a non-maskable interrupt request signal (NMI pin input, INTWDT2 signal), unmasked external interrupt request signal (INTP0 to INTP7 pin input), unmasked internal interrupt request signal from the peripheral functions operable in the sub-IDLE mode, or reset signal (reset by $\overline{\text{RESET}}$ pin input, WDT2RES signal, power-on-clear circuit (POC), low-voltage detector (LVI), or clock monitor (CLM)). The PLL returns to the operating status it was in before the sub-IDLE mode was set.

When the sub-IDLE mode is released by an interrupt request signal, the subclock operation mode is set.

(1) Releasing sub-IDLE mode by non-maskable interrupt request signal or unmasked maskable interrupt request signal

The sub-IDLE mode is released by a non-maskable interrupt request signal or an unmasked maskable interrupt request signal, regardless of the priority of the interrupt request signal.

If the sub-IDLE mode is set in an interrupt servicing routine, however, an interrupt request signal that is issued later is serviced as follows.

Cautions 1. The interrupt request signal that is disabled by setting the PSC.NMI1M, PSC.NMI0M, and PSC.INTM bits to 1 becomes invalid and sub-IDLE mode is not released.

2. When the sub-IDLE mode is released, 12 cycles of the subclock (about 366 μs) elapse from when the interrupt request signal that releases the sub-IDLE mode is generated to when the mode is released.

3. If eliminating digital noise is selected by using the NFC register and if the sampling clock is selected from f_{XX}/64, f_{XX}/128, f_{XX}/256, f_{XX}/512, and f_{XX}/1024, the sub-IDLE mode cannot be released by the interrupt request signal of the INTP3 pin. For details, see 14.6.2 (4) Noise elimination control register (NFC).

(a) If an interrupt request signal with a priority lower than that of the interrupt request currently being serviced is issued, the sub-IDLE mode is released, but that interrupt request signal is not acknowledged. The interrupt request signal itself is retained.

(b) If an interrupt request signal with a priority higher than that of the interrupt request currently being serviced is issued (including a non-maskable interrupt request signal), the sub-IDLE mode is released and that interrupt request signal is acknowledged.

Table 16-11. Operation After Releasing Sub-IDLE Mode by Interrupt Request Signal

Release Source	Interrupt Enabled (EI) Status	Interrupt Disabled (DI) Status
Non-maskable interrupt request signal	Execution branches to the handler address.	
Maskable interrupt request signal	Execution branches to the handler address or the next instruction is executed.	The next instruction is executed.

(2) Releasing sub-IDLE mode by reset

The same operation as the normal reset operation is performed.

Table 16-12. Operating Status in Sub-IDLE Mode

Setting of Sub-IDLE Mode / Item		Operating Status	
		When Main Clock Is Oscillating	When Main Clock Is Stopped
Subclock oscillator		Oscillation enabled	
Internal oscillator		Oscillation enabled	
PLL		Operable	Stops operation[Note 1]
CPU		Stops operation	
Interrupt controller		Stops operation (but standby mode release is possible)	
Timer P (TMP0 to TMP3)		Stops operation	
Timer Q (TMQ0)		Stops operation	
Timer M (TMM0)		Operable when $f_R/8$ or f_{XT} is selected as the count clock	
Watch timer		Stops operation	Operable when f_{XT} is selected as the count clock
Watchdog timer 2		Operable when f_R is selected as the count clock	
Serial interface	CSIB0, CSIB1	Operable when the $\overline{SCKBn}$ input clock is selected as the count clock (n = 0, 1)	
	UARTA0, UARTA1	Stops operation (but UARTA0 is operable when the ASCKA0 input clock is selected)	
A/D converter		Holds operation (conversion result held)[Note 2]	
Key interrupt function (KR)		Operable	
Port function		Retains status before sub-IDLE mode was set	
Internal data		The CPU registers, statuses, data, and all other internal data such as the contents of the internal RAM are retained as they were before the sub-IDLE mode was set.	

Notes 1. Be sure to stop the PLL (PLLCTL.PLLON bit = 0) before stopping the main clock.

2. To realize low power consumption, stop the A/D converter before shifting to the sub-IDLE mode.

CHAPTER 17 RESET FUNCTIONS

17.1 Overview

The following reset functions are available.

(1) Four kinds of reset sources

- External reset input via the $\overline{\text{RESET}}$ pin
- Reset via the watchdog timer 2 (WDT2) overflow (WDT2RES)
- System reset via the comparison of the low-voltage detector (LVI) supply voltage and detected voltage
- System reset via the detecting clock monitor (CLM) oscillation stop
- System reset via the power-on-clear circuit

After a reset is released, the source of the reset can be confirmed with the reset source flag register (RESF).

(2) Emergency operation mode

If the WDT2 overflows during the main clock oscillation stabilization time inserted after reset, a main clock oscillation anomaly is judged and the CPU starts operating on the internal oscillation clock.

Caution When the CPU is being operated with the internal oscillation clock, access to the register in which a wait state is generated is prohibited. For the register in which a wait state is generated, see 3.4.8 (2) Accessing specific on-chip peripheral I/O registers.

17.2 Registers to Check Reset Source

The V850ES/HE2 has four kinds of reset sources. After a reset has been released, the source of the reset that occurred can be checked with the reset source flag register (RESF).

(1) Reset source flag register (RESF)

The RESF register is a special register that can be written only by a combination of specific sequences (see **3.4.7 Special registers**).

The RESF register indicates the source from which a reset signal is generated.

This register is read or written in 8-bit or 1-bit units.

$\overline{\text{RESET}}$ pin input or POC reset sets this register to 00H. The default value differs if the source of reset is other than the $\overline{\text{RESET}}$ pin signal.

After reset: 00H[Note] R/W Address: FFFFF888H

	7	6	5	4	3	2	1	0
RESF	0	0	0	WDT2RF	0	0	CLMRF	LVIRF

WDT2RF	Reset signal from WDT2
0	Not generated
1	Generated

CLMRF	Reset signal from CLM
0	Not generated
1	Generated

LVIRF	Reset signal from LVI
0	Not generated
1	Generated

Note The value of the RESF register is cleared to 00H when a reset is executed via the $\overline{\text{RESET}}$ pin. When a reset is executed by watchdog timer 2 (WDT2), low-voltage detector (LVI), or clock monitor (CLM), the reset flags of this register (WDT2RF bit, CLMRF bit, and LVIRF bit) are set. However, other sources are retained.

Caution Only "0" can be written to each bit of this register. If writing "0" conflicts with setting the flag (occurrence of reset), setting the flag takes precedence.

17.3 Operation

17.3.1 Reset operation via $\overline{\text{RESET}}$ pin

When a low level is input to the $\overline{\text{RESET}}$ pin, the system is reset, and each hardware unit is initialized.

When the level of the $\overline{\text{RESET}}$ pin is changed from low to high, the reset status is released.

Table 17-1. Hardware Status on $\overline{\text{RESET}}$ Pin Input

Item		During Reset	After Reset
Main clock oscillator (f_X)		Oscillation stops	Oscillation starts
Subclock oscillator (f_{XT})	Crystal oscillation	Oscillation continues	
	RC oscillation	Oscillation stops	Oscillation starts
Internal oscillator		Oscillation stops	Oscillation starts
Peripheral clock (f_X to f_X/1,024)		Operation stops	Operation starts after securing oscillation stabilization time
Internal system clock (f_{CLK}), CPU clock (f_{CPU})		Operation stops	Operation starts after securing oscillation stabilization time (initialized to f_{XX}/8)
CPU		Initialized	Program execution starts after securing oscillation stabilization time
Watchdog timer 2		Operation stops (initialized to 0)	Operation starts
Internal RAM		Undefined if power-on reset or CPU access and reset input conflict (data is damaged). Otherwise value immediately after reset input is retained[Note 1].	
I/O lines (ports/alternate-function pins)		High impedance[Note 2]	
On-chip peripheral I/O registers		Initialized to specified status, OCDM register is set (01H).	
Other on-chip peripheral functions		Operation stops	Operation can be started after securing oscillation stabilization time

Notes 1. The firmware of the V850ES/HE2 uses a part of the internal RAM after the internal system reset status has been released because it supports a boot swap function. Therefore, the contents of some RAM areas (RAM size: 6 KB (3FFD000H to 3FFD095H)) are not retained after power-on reset.

2. When the power is turned on, the following pin may output an undefined level temporarily even during reset.

- P53/KR3/TIQ00/TOQ00/DDO pin

Caution The OCDM register is initialized by the $\overline{\text{RESET}}$ pin input. Therefore, note with caution that, if a high level is input to the P05/$\overline{\text{DRST}}$ pin after a reset release before the OCDM.OCDM0 bit is cleared, the on-chip debug mode is entered. For details, see CHAPTER 4 PORT FUNCTIONS.

Figure 17-1. Timing of Reset Operation by $\overline{\text{RESET}}$ Pin Input

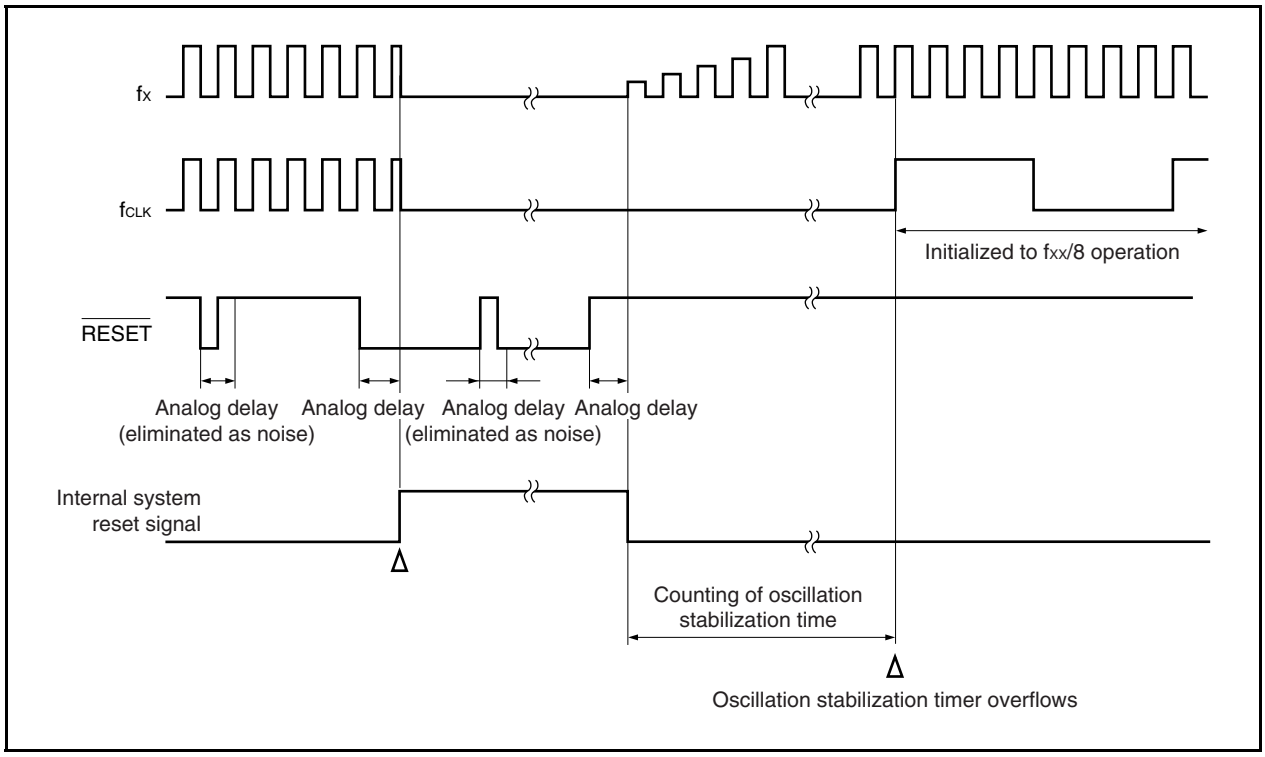

Figure 17-2. Timing of Power-on Reset Operation

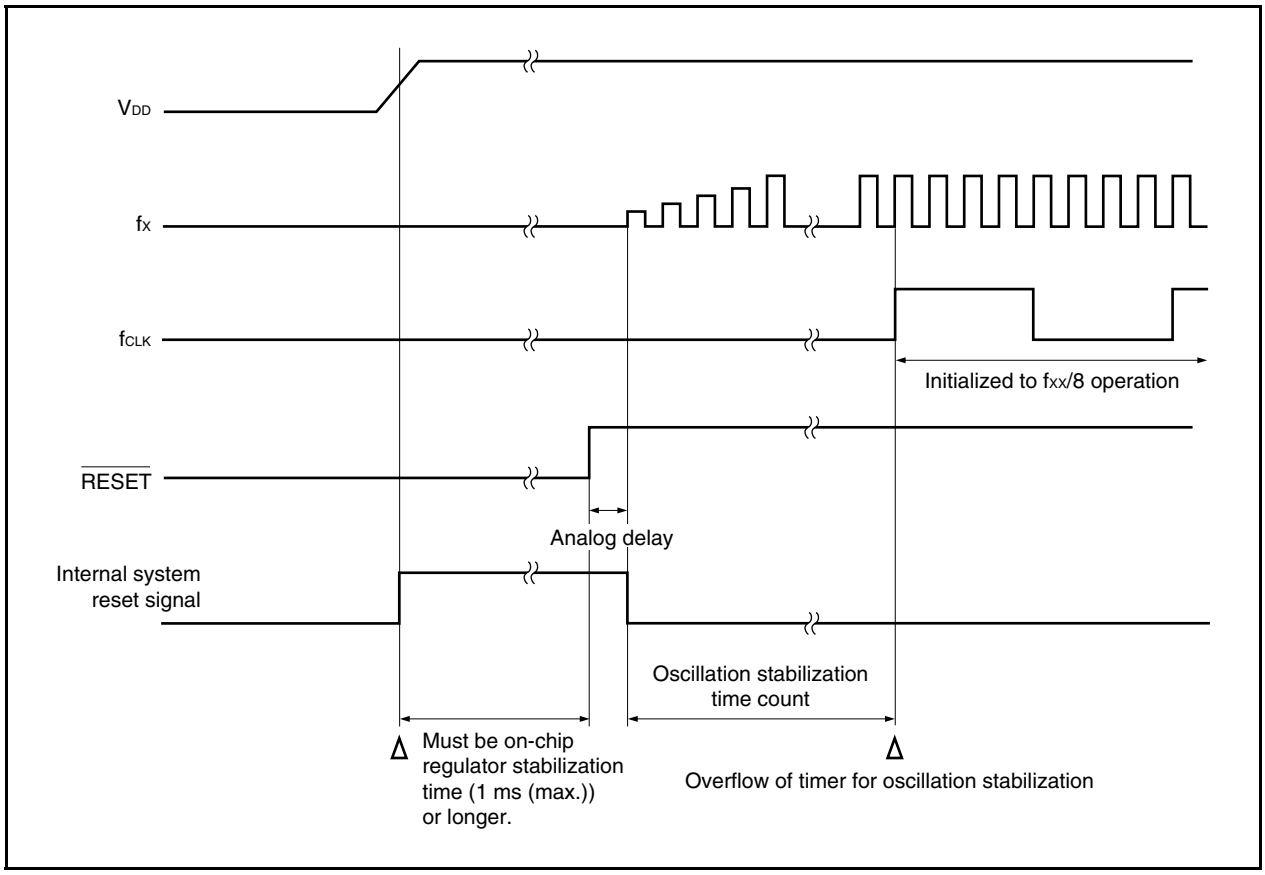

17.3.2 Reset operation by watchdog timer 2

When watchdog timer 2 is set to the reset operation mode due to overflow, upon watchdog timer 2 overflow (WDT2RES signal generation), a system reset is executed and the hardware is initialized to the initial status.

Following watchdog timer 2 overflow, the reset status is entered and lasts the predetermined time (analog delay), and the reset status is then automatically released.

The main clock oscillator is stopped during the reset period.

Table 17-2. Hardware Status During Watchdog Timer 2 Reset Operation

Item		During Reset	After Reset
Main clock oscillator (f_X)		Oscillation stops	Oscillation starts
Subclock oscillator (f_{XT})	Crystal oscillation	Oscillation continues	
	RC oscillation	Oscillation stops	Oscillation starts
Internal oscillator		Oscillation stops	Oscillation starts
Peripheral clock (f_{XX} to f_{XX}/1,024)		Operation stops	Operation starts after securing oscillation stabilization time
Internal system clock (f_{XX}), CPU clock (f_{CPU})		Operation stops	Operation starts after securing oscillation stabilization time (initialized to f_{XX}/8)
CPU		Initialized	Program execution after securing oscillation stabilization time
Watchdog timer 2		Operation stops (initialized to 0)	Operation starts
Internal RAM		Undefined if power-on reset or CPU access and reset input conflict (data is damaged). Otherwise value immediately after reset input is retained[Note].	
I/O lines (ports/alternate-function pins)		High impedance	
On-chip peripheral I/O register		Initialized to specified status, OCDM register retains its value.	
On-chip peripheral functions other than above		Operation stops	Operation can be started after securing oscillation stabilization time.

Note The firmware of the V850ES/HE2 uses a part of the internal RAM after the internal system reset status has been released because it supports a boot swap function. Therefore, the contents of some RAM areas (RAM size: 6 KB (3FFD000H to 3FFD095H)) are not retained after power-on reset.

17.3.3 Reset operation by power-on-clear circuit

The supply voltage and detection voltage are compared when the power-on-clear operation is enabled. If the supply voltage drops below the detection voltage (including when power is applied), the system is reset and each hardware unit is initialized to the default status.

The reset status lasts since the voltage drop has been detected until the supply voltage rises above the detection voltage, and then is automatically cleared. After the reset status is cleared, time to stabilize oscillation of the main clock oscillator (default value of OSTS register: 2^{16}/fx) elapses, and then the CPU starts program execution. For details, see **CHAPTER 19 POWER-ON-CLEAR CIRCUIT**.

17.3.4 Reset operation by low-voltage detector

When LVI operation is enabled and when the LVIM.LVIMD bit is set to “1”, the supply voltage and detection voltage are compared. If the supply voltage drops below the detection voltage, the system is reset and each hardware unit is initialized to the default status.

The reset status lasts from detection of the voltage drop until the supply voltage rises above the detection voltage, and then is automatically cleared. After the reset status is cleared, time to stabilize oscillation of the main clock oscillator (default value of OSTS register: 2^{16}/fx) elapses, and then the CPU starts program execution.

For details, see **CHAPTER 20 LOW-VOLTAGE DETECTOR**.

17.3.5 Reset operation by clock monitor

When the clock monitor operation is enabled, the main clock is monitored by using the sampling clock (internal oscillator). If stoppage of the main clock is detected, the system is reset and each hardware unit is initialized to the default status.

For details, see **CHAPTER 18 CLOCK MONITOR**.

CHAPTER 18 CLOCK MONITOR

18.1 Functions

The clock monitor samples the main clock by using the internal oscillation clock and generates a reset request signal when oscillation of the main clock is stopped.

Once the operation of the clock monitor has been enabled by an operation enable flag, it cannot be cleared to 0 by any means other than reset.

When a reset by the clock monitor occurs, the RESF.CLMRF bit is set. For details on the RESF register, see **17.2 Registers to Check Reset Source**.

The clock monitor automatically stops under the following conditions.

- During oscillation stabilization time after STOP mode is released
- When the main clock is stopped (from when the PCC.MCK bit = 1 during subclock operation, until the PCC.CLS bit = 0 during main clock operation)
- When the sampling clock (internal oscillation clock) is stopped
- When the CPU operates with the internal oscillation clock

18.2 Configuration

The clock monitor includes the following hardware.

Table 18-1. Configuration of Clock Monitor

Item	Configuration
Control register	Clock monitor mode register (CLM)

Figure 18-1. Block Diagram of Clock Monitor

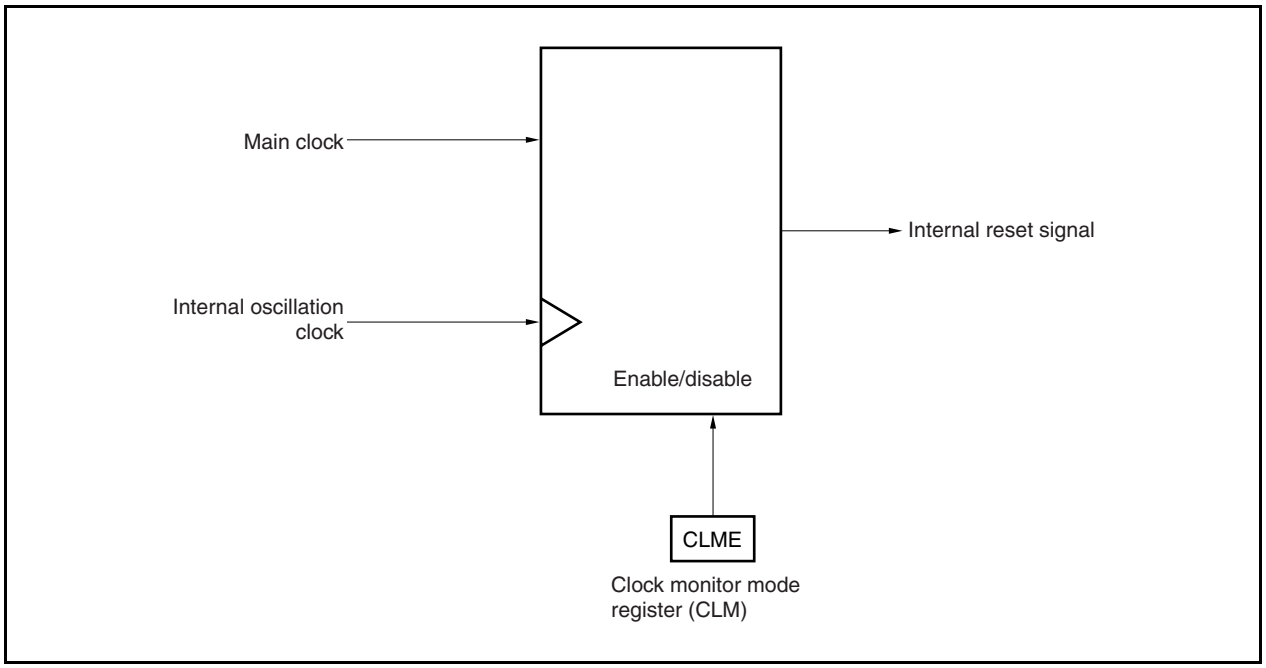

18.3 Register

The clock monitor is controlled by the clock monitor mode register (CLM).

(1) Clock monitor mode register (CLM)

The CLM register is a special register. This can be written only in a special combination of sequences (see **3.4.7 Special registers**).

This register is used to set the operation mode of the clock monitor.

This register can be read or written in 8-bit or 1-bit units.

Reset sets this register to 00H.

After reset: 00H R/W Address: FFFFF870H

	7	6	5	4	3	2	1	0
CLM	0	0	0	0	0	0	0	CLME

CLME	Clock monitor operation enable or disable
0	Disable clock monitor operation.
1	Enable clock monitor operation.

Cautions 1. Once the CLME bit has been set to 1, it cannot be cleared to 0 by any means other than reset.

2. When a reset by the clock monitor occurs, the CLME bit is cleared to 0 and the RESF.CLMRF bit is set to 1.

18.4 Operation

This section explains the functions of the clock monitor. The start and stop conditions are as follows.

<Start condition>

Enabling operation by setting the CLM.CLME bit to 1

<Stop conditions>

- While oscillation stabilization time is being counted after STOP mode is released
- When the main clock is stopped (from when PCC.MCK bit = 1 during subclock operation to when PCC.CLS bit = 0 during main clock operation)
- When the sampling clock (internal oscillation clock) is stopped
- When the CPU operates using the internal oscillation clock

Table 18-2. Operation Status of Clock Monitor
(When CLM.CLME Bit = 1, During Internal Oscillation Clock Operation)

CPU Operating Clock	Operation Mode	Status of Main Clock	Status of Internal Oscillation Clock	Status of Clock Monitor
Main clock	HALT mode	Oscillates	Oscillates[Note 1]	Operates[Note 2]
	IDLE1, IDLE2 modes	Oscillates	Oscillates[Note 1]	Operates[Note 2]
	STOP mode	Stops	Oscillates[Note 1]	Stops
Subclock (PCC.MCK bit = 0)	Sub-IDLE mode	Oscillates	Oscillates[Note 1]	Operates[Note 2]
Subclock (PCC.MCK bit = 1)	Sub-IDLE mode	Stops	Oscillates[Note 1]	Stops
Internal oscillation clock	–	Stops	Oscillates[Note 1]	Stops
During reset	–	Stops	Stops	Stops

Notes 1. The internal oscillator can be stopped by using the option byte function (see **CHAPTER 23**) to enable the internal oscillator to stop, and setting the RCM.RSTOP bit to 1.

2. The clock monitor is stopped while the internal oscillator is stopped.

(1) Operation when main clock oscillation is stopped (CLME bit = 1)

If oscillation of the main clock is stopped when the CLME bit = 1, an internal reset signal is generated as shown in Figure 18-2.

Figure 18-2. Reset Period Due to That Oscillation of Main Clock Is Stopped

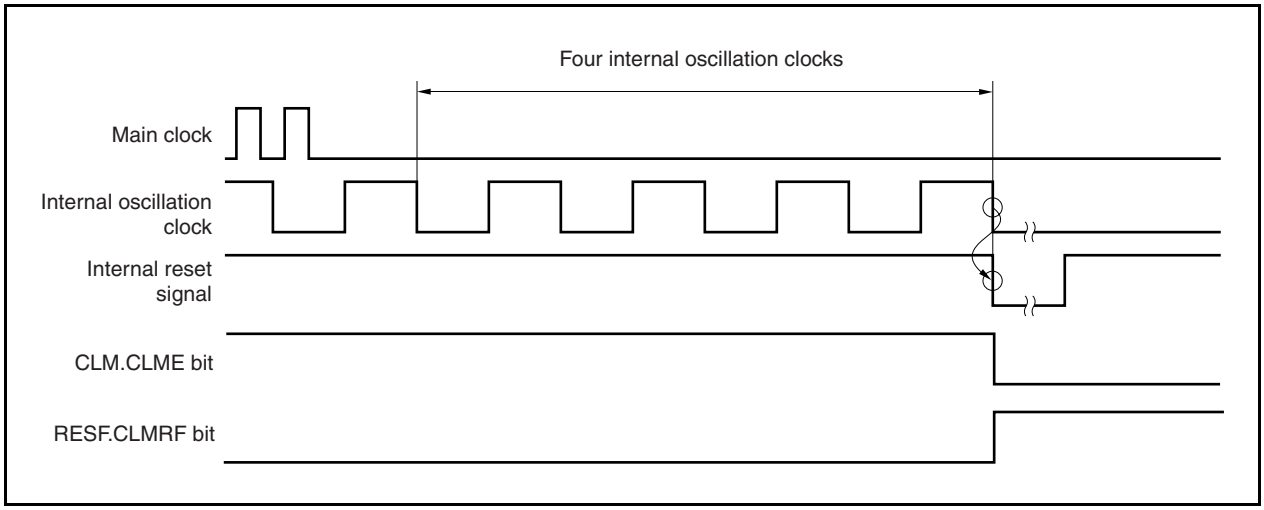

(2) Clock monitor status after $\overline{\text{RESET}}$ input

$\overline{\text{RESET}}$ input clears the CLM.CLME bit to 0 and stops the clock monitor operation. When CLME bit is set to 1 by software at the end of the oscillation stabilization time of the main clock, monitoring is started.

Figure 18-3. Clock Monitor Status After $\overline{\text{RESET}}$ Input
(CLM.CLME bit = 1 is set after $\overline{\text{RESET}}$ input and at the end of main clock oscillation stabilization time)

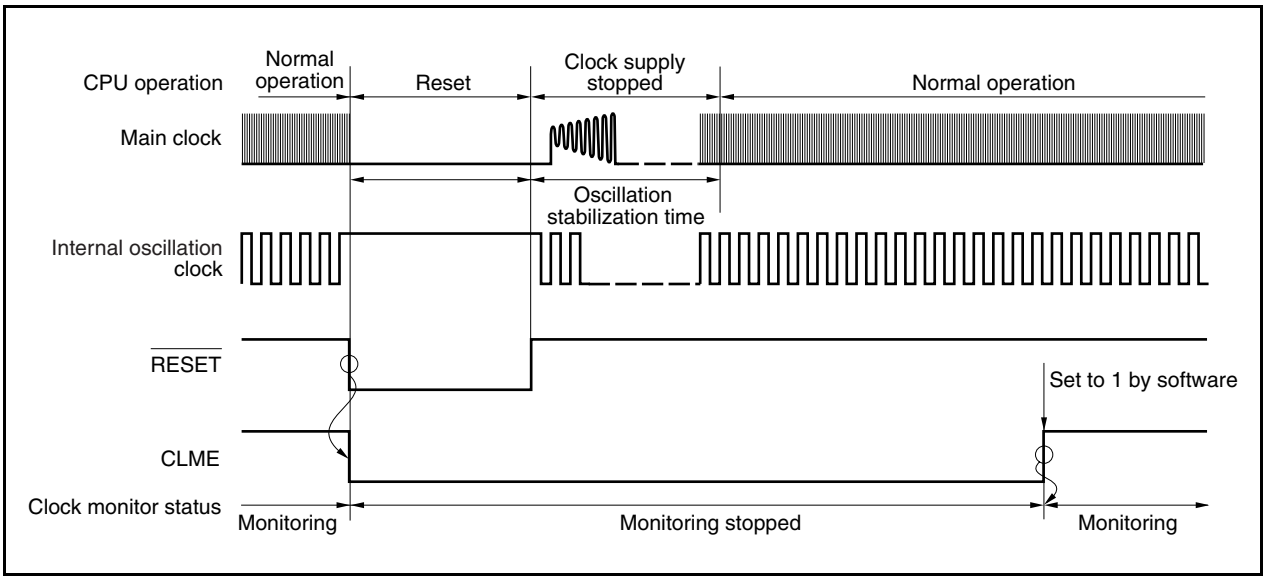

(3) Operation in STOP mode or after STOP mode is released

If the STOP mode is set with the CLM.CLME bit = 1, the monitor operation is stopped in the STOP mode and while the oscillation stabilization time is being counted. After the oscillation stabilization time, the monitor operation is automatically started.

Figure 18-4. Operation in STOP Mode or After STOP Mode Is Released

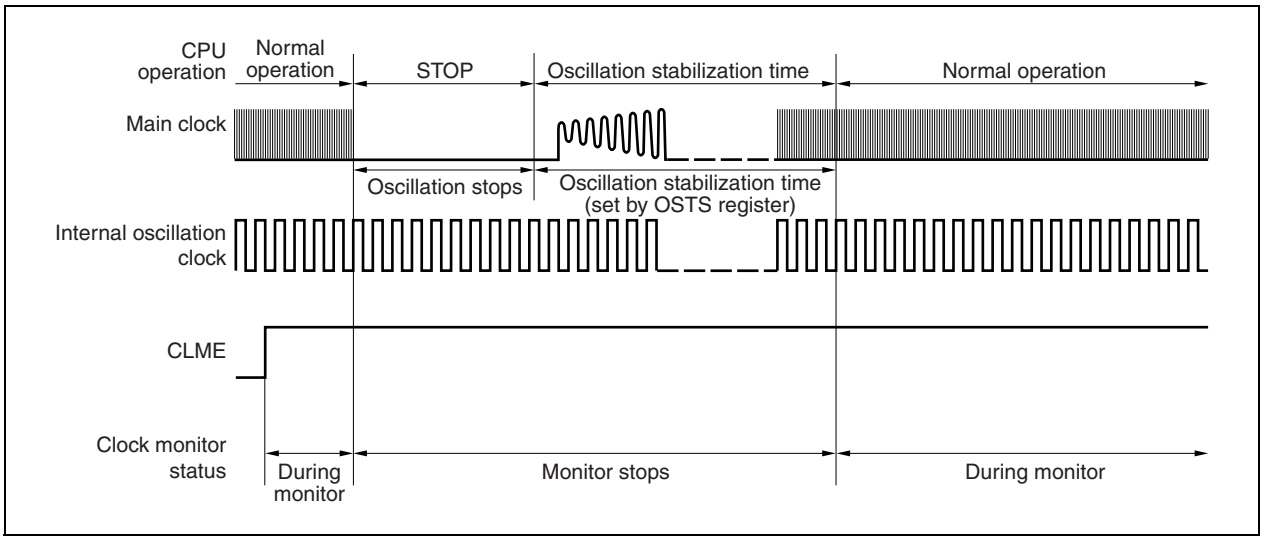

(4) Operation when main clock is stopped (arbitrary)

During subclock operation (PCC.CLS bit = 1) or when the main clock is stopped by setting the PCC.MCK bit to 1, the monitor operation is stopped until the main clock operation is started (PCC.CLS bit = 0). The monitor operation is automatically started when the main clock operation is started.

Figure 18-5. Operation When Main Clock Is Stopped (Arbitrary)

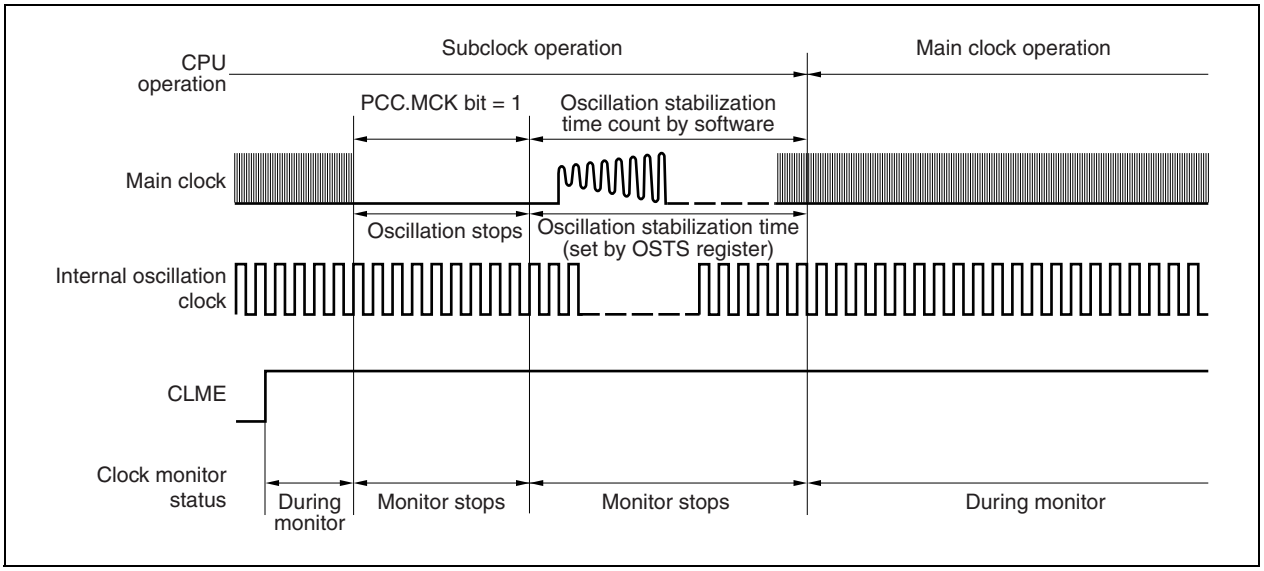

(5) Operation while CPU is operating on internal oscillation clock (CCLS.CCLSF bit = 1)

The monitor operation is not stopped when the CCLSF bit is 1, even if the CLME bit is set to 1.

CHAPTER 19 POWER-ON-CLEAR CIRCUIT

19.1 Function

Functions of the power-on-clear (POC) circuit are shown below.

- Generates a reset signal upon power application.
- Compares the supply voltage (V_{DD}) and detection voltage (V_{POC0}), and generates a reset signal when $V_{DD} < V_{POC0}$ (detection voltage (V_{POC0}): 3.7 V ±0.2 V).

Remarks 1. The V850ES/HE2 has plural internal hardware units that generate an internal reset signal. When the system is reset by watchdog timer 2 (WDT2RES), low-voltage detector (LVI), or clock monitor (CLM), a flag corresponding to the reset source is allocated to the reset source flag register (RESF).
The RESF register is not cleared when an internal reset signal is generated by WDT2RES, LVI, or clock monitor, and its flag corresponding to the reset source is set to 1. For details of the RESF register, see **CHAPTER 17 RESET FUNCTIONS**.

2. The time from power application to starting program execution is "Time from power application to releasing reset + 16 ms" if the operating frequency of a resonator externally connected is 5 MHz. However, it varies depending on the external cause (such as a status of supply voltage to the microcontroller and the stabilization time of the resonator).

19.2 Configuration

The block diagram is shown below.

Figure 19-1. Block Diagram of Power-on-Clear Circuit

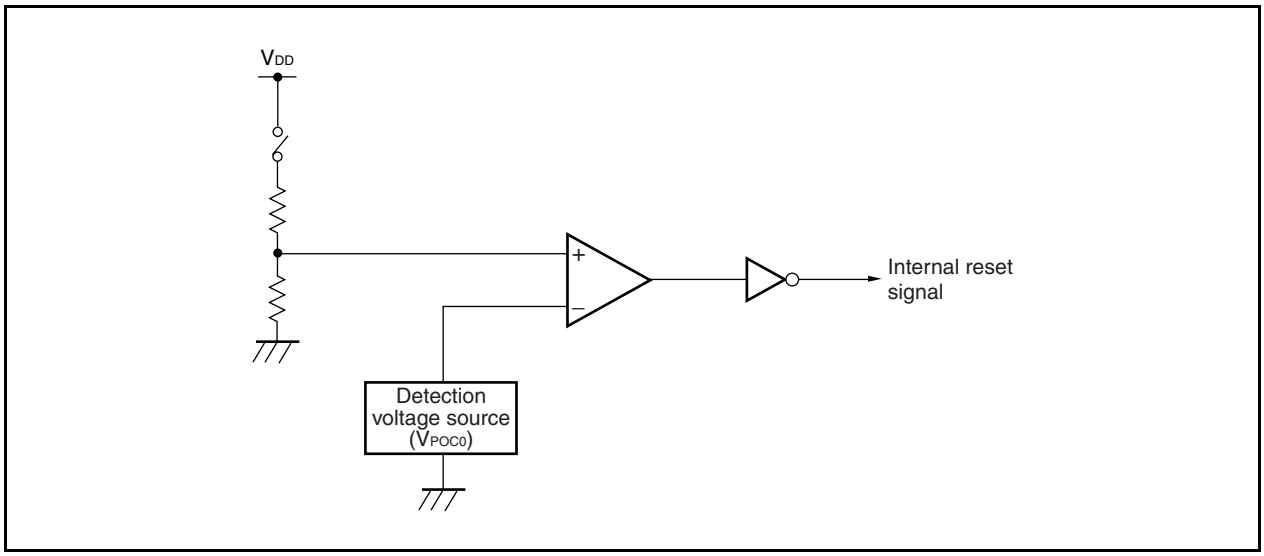

19.3 Operation

When the supply voltage and detection voltage are compared and if the supply voltage is lower than the detection voltage (including at power application), the system is reset and each hardware is returned to the specific status.

Figure 19-2. Timing of Reset Signal Generation by Power-on-Clear Circuit

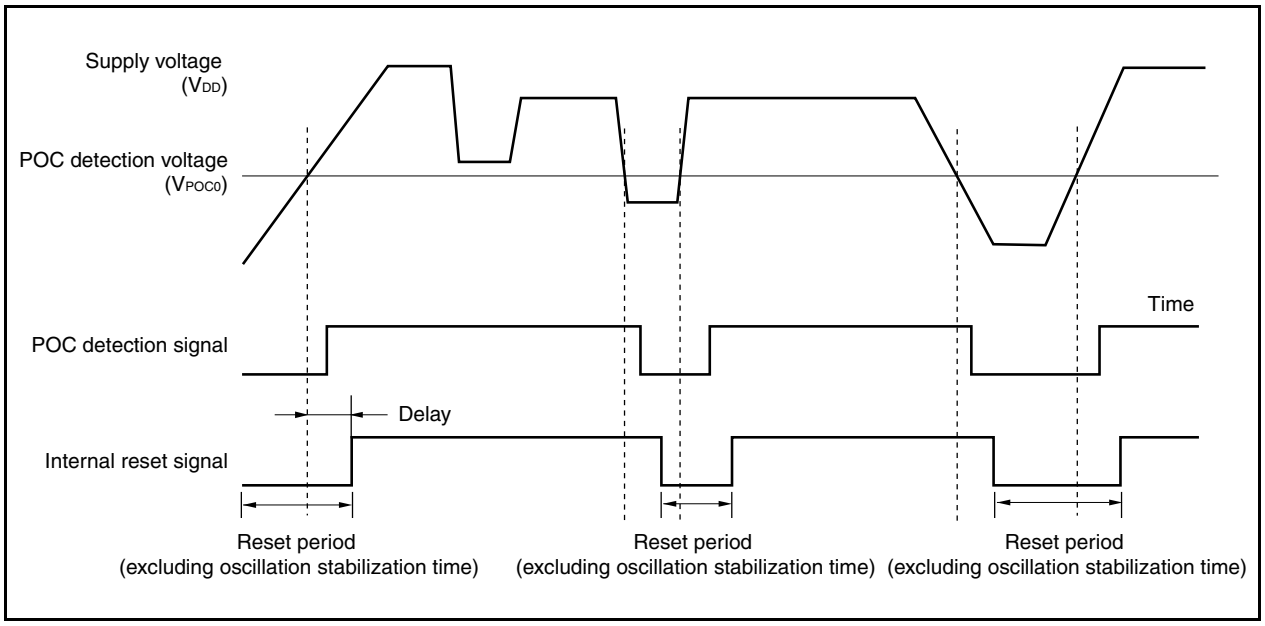

CHAPTER 20 LOW-VOLTAGE DETECTOR

20.1 Functions

The low-voltage detector (LVI) has the following functions.

- Compares the supply voltage (V_{DD}) and detection voltage (V_{LVI}) and generates an interrupt request signal or internal reset signal when $V_{DD} < V_{LVI}$.
- The level of the supply voltage to be detected can be changed by software (in two steps).
- An interrupt request signal or internal reset signal can be selected.
- Can operate in STOP mode.
- Operation can be stopped by software.

If the low-voltage detector is used to generate a reset signal, the RESF.LVIRF bit is set to 1 when the reset signal is generated. For details of the RESF register, see **CHAPTER 17 RESET FUNCTIONS**.

20.2 Configuration

The block diagram is shown below.

Figure 20-1. Block Diagram of Low-Voltage Detector

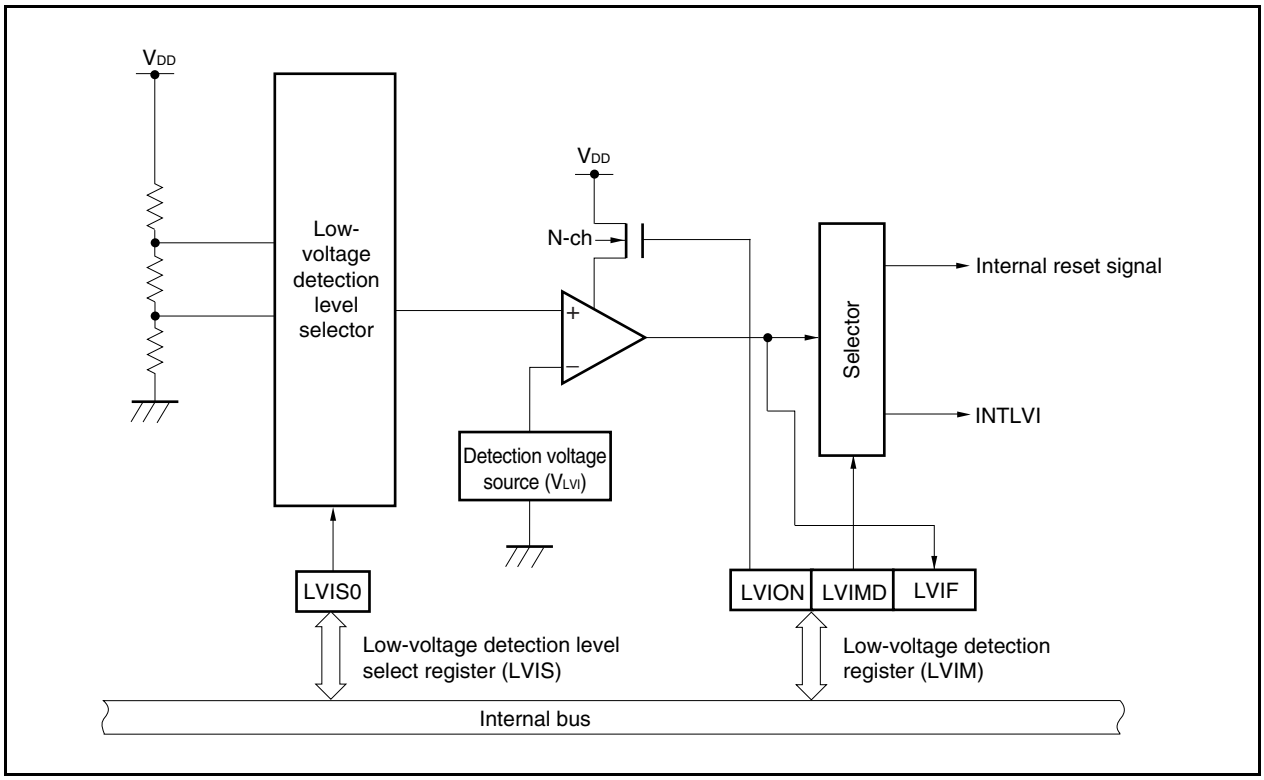

20.3 Registers

(1) Low-voltage detection register (LVIM)

The LVIM register is used to enable or disable low voltage detection, and to set the operation mode of the low-voltage detector. The LVIM register is a special register. It can be written only by a combination of specific sequences (see **3.4.7 Special registers**).

This register can be read or written in 8-bit or 1-bit units. However, bit 0 is read-only.

After reset: 00H R/W Address: FFFFF890H

	7	6	5	4	3	2	1	0
LVIM	LVION	0	0	0	0	0	LVIMD	LVIF

LVION	Low voltage detection operation enable or disable
0	Disable operation.
1	Enable operation.

LVIMD	Selection of operation mode of low voltage detection
0	Generate interrupt request signal INTLVI when supply voltage < detection voltage.
1	Generate internal reset signal LVIRES when supply voltage < detection voltage.

LVIF	Low voltage detection flag
0	When supply voltage > detection voltage, or when operation is disabled
1	Supply voltage < detection voltage

Cautions 1. After setting the LVION bit to 1, wait for 0.2 ms (TYP.) (target value) before checking the voltage using the LVIF bit.

2. The value of the LVIF flag is output as the output signal INTLVI when the LVION bit = 1 and LVIMD bit = 0.

3. Be sure to clear bits 2 to 6 to “0”.

(2) Low-voltage detection level select register (LVIS)

The LVIS register is used to select the level of low voltage to be detected.

This register can be read or written in 8-bit units.

After reset: 00H R/W Address: FFFFF891H

	7	6	5	4	3	2	1	0
LVIS	0	0	0	0	0	0	0	LVIS0

LVIS0	Detection level
0	4.4 V ±0.2 V
1	4.2 V ±0.2 V

Cautions 1. This register cannot be written until a reset request due to something other than low-voltage detection is generated after the LVIM.LVION and LVIM.LVIMD bits are set to 1.

2. Be sure to clear bits 1 to 7 to "0".

(3) Internal RAM data status register (RAMS)

The RAMS register is a flag register that indicates whether the internal RAM is valid or not. The RAMS register is a special register. It can be written only by a combination of specific sequences (see **3.4.7 Special registers**).

For the RAMS register, see **20.5 RAM Retention Voltage Detection Operation**.

This register can be read or written in 8-bit or 1-bit units.

Caution The following shows the specific sequence after reset.

- **Setting conditions: Detection of voltage lower than detection level**
  Set by instruction
  Generation of reset signal by watchdog timer overflow
  Generation of reset signal while RAM is being accessed
  Generation of reset signal by clock monitor
- **Clearing condition: Writing of 0 in specific sequence**

After reset: 01H R/W Address: FFFFF892H

	7	6	5	4	3	2	1	0
RAMS	0	0	0	0	0	0	0	RAMF

RAMF	Internal RAM data valid/invalid
0	Valid
1	Invalid

20.4 Operation

Depending on the setting of the LVIM.LVIMD bit, an interrupt request signal (INTLVI) or an internal reset signal is generated.

20.4.1 To use for internal reset signal

<To start operation>

<1> Mask the interrupt of LVI.

<2> Select the voltage to be detected by using the LVIS.LVIS0 bit.

<3> Set the LVIM. LVION bit to 1 (to enable operation).

<4> Insert a wait cycle of 0.2 ms MAX. by software.

<5> By using the LVIM.LVIF bit, check if the supply voltage > detection voltage.

<6> Set the LVIM.LVIMD bit to 1 (to generate an internal reset signal).

Caution If the LVIMD bit is set to 1, the contents of the LVIM and LVIS registers cannot be changed until a reset request other than LVI is generated.

Figure 20-2. Operation Timing of Low-Voltage Detector (LVIMD Bit = 1)

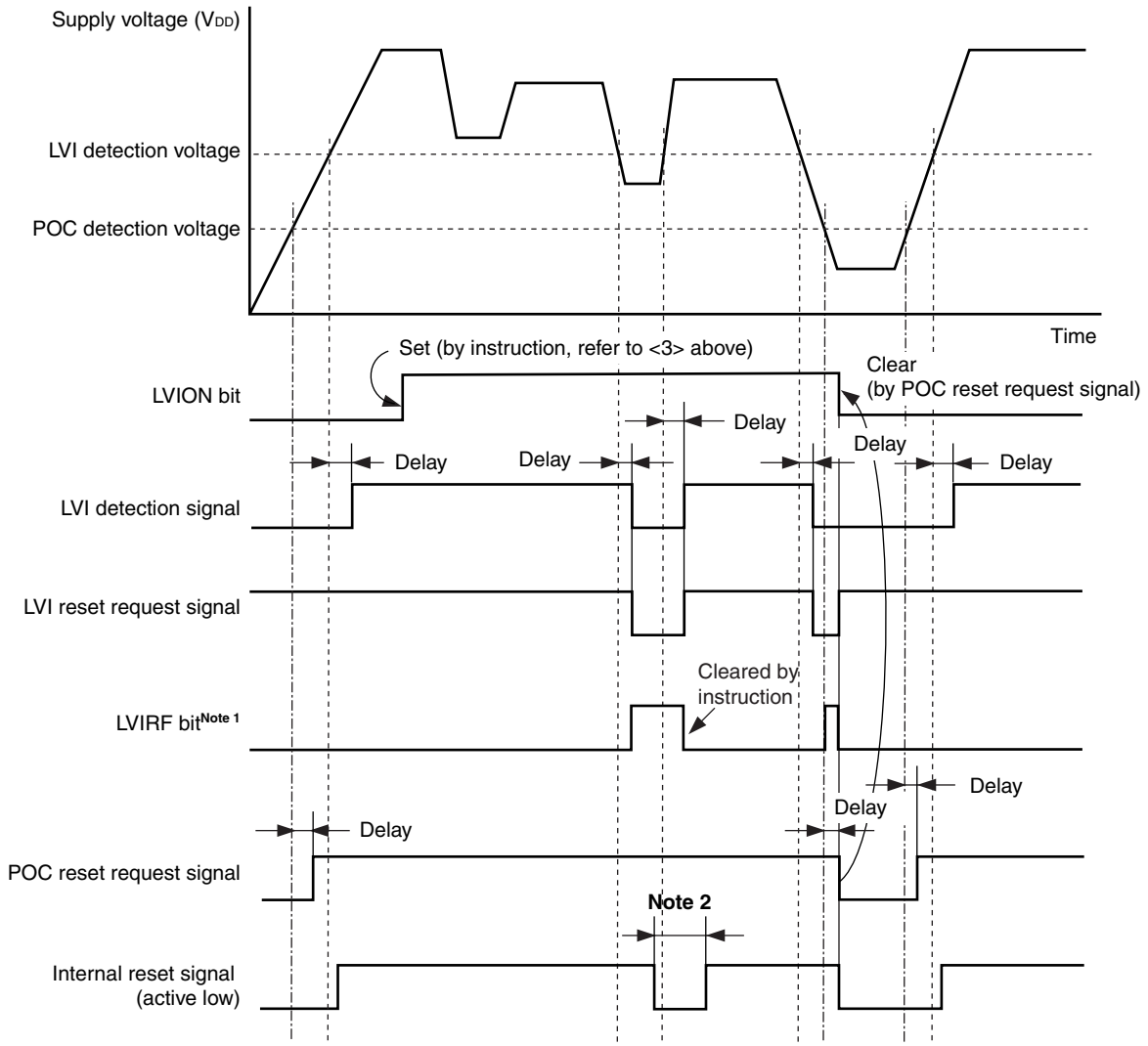

Notes 1. The LVIRF bit is bit 0 of the reset source flag register (RESF). For details of RESF, see **CHAPTER 17 RESET FUNCTIONS**.

2. During the period in which the supply voltage is the set voltage or lower, the internal reset signal is retained (internal reset state).

20.4.2 To use for interrupt

<To start operation>

<1> Mask the interrupt of LVI.

<2> Select the voltage to be detected by using the LVIS.LVIS0 bit.

<3> Set the LVIM.LVION bit to 1 (to enable operation).

<4> Insert a wait cycle of 0.2 ms MAX, by software.

<5> By using the LVIM.LVIF bit, check if the supply voltage > detection voltage.

<6> Clear the interrupt request flag of LVI.

<7> Unmask the interrupt of LVI.

<To stop operation>

Clear the LVION bit to 0.

Figure 20-3. Operation Timing of Low-Voltage Detector (LVIM Bit = 0)

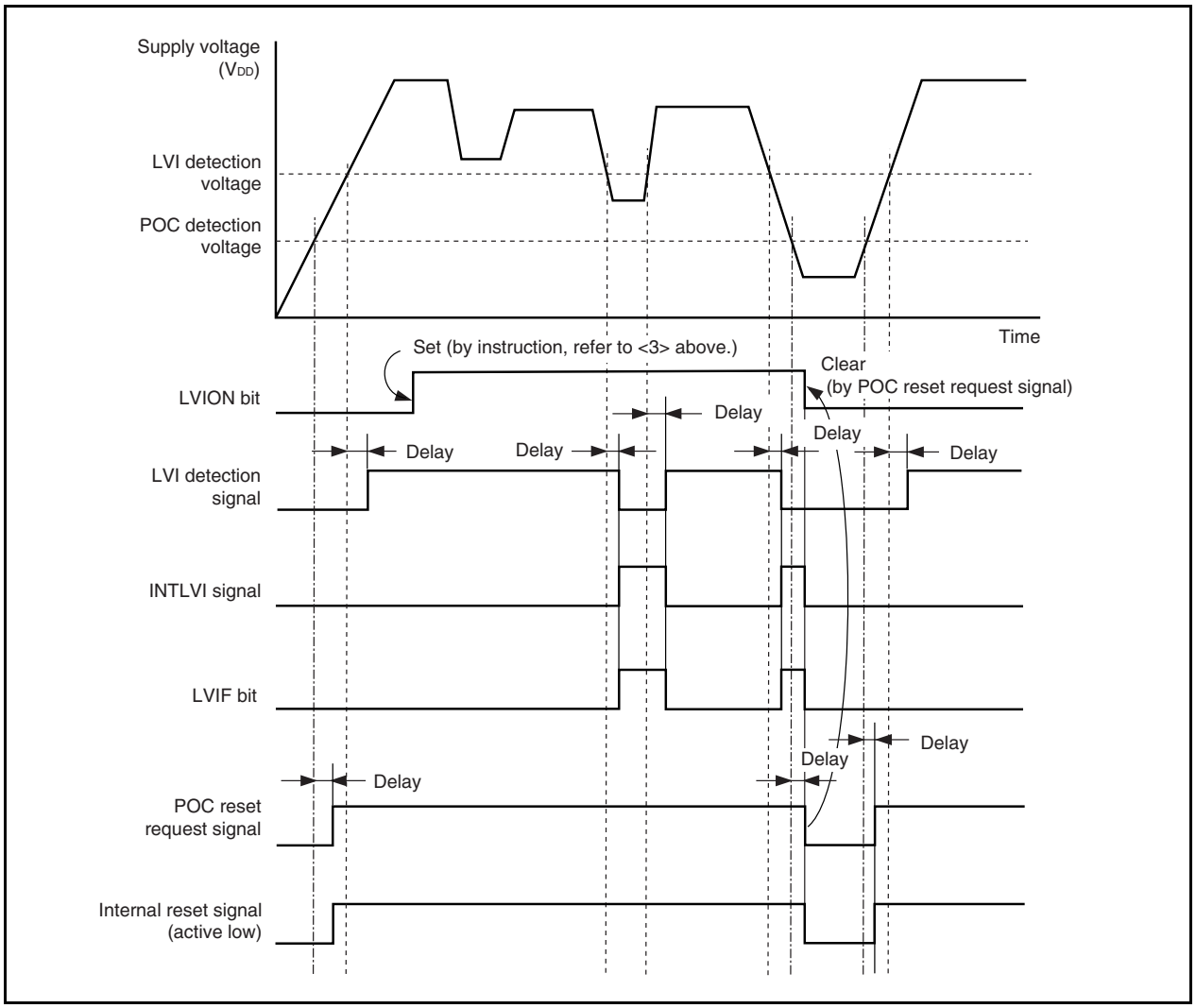

20.5 RAM Retention Voltage Detection Operation

The supply voltage and detection voltage are compared. When the supply voltage drops below the detection voltage (including on power application), the RAMS.RAMF bit is set (1).

When the POC function is not used and when the RAM retention voltage detection function is used, be sure to input an external reset signal if the detected voltage falls below the operating voltage.

Figure 20-4. Operation Timing of RAM Retention Voltage Detection Function

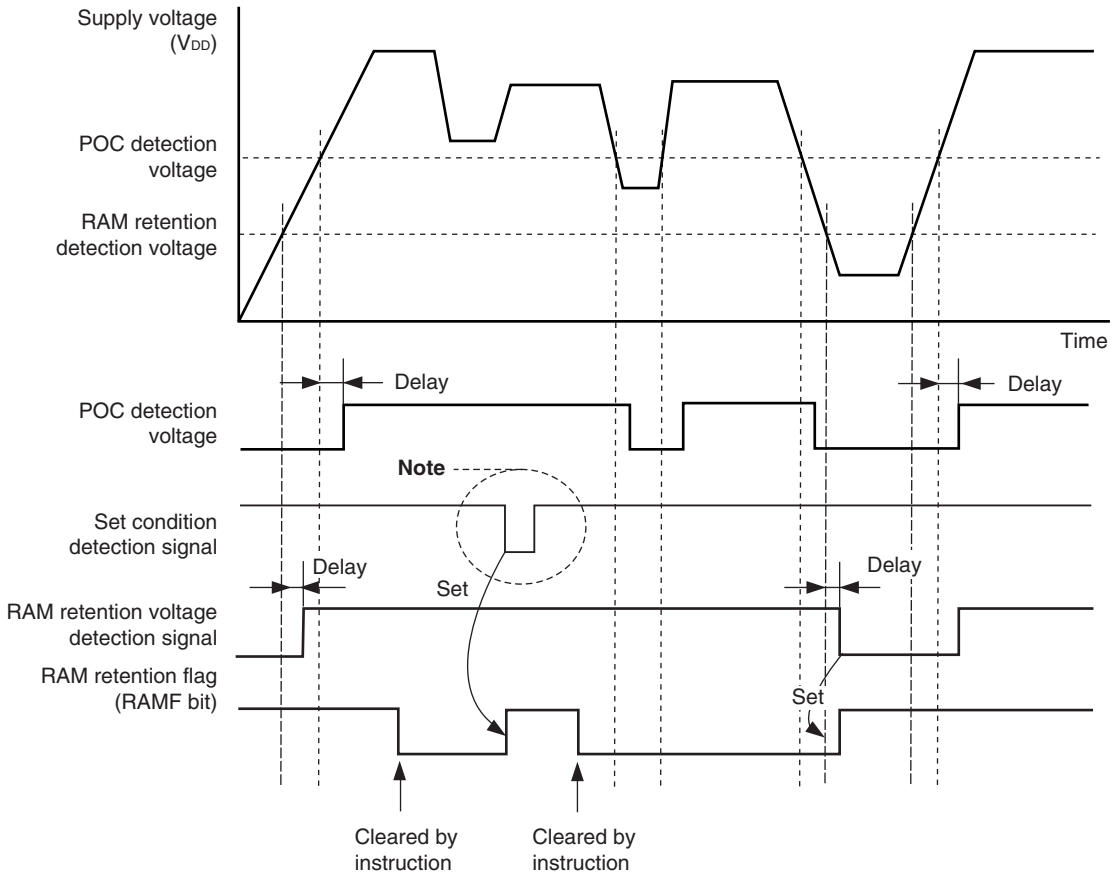

Note A reset signal (WDTRES) is generated due to an overflow of the watchdog timer or $\overline{\text{RESET}}$ pin input during RAM access.

20.6 Emulation Function

When an in-circuit emulator is used, the operation of the RAM retention flag (RAMS.RAMF bit) can be pseudo-controlled and emulated by manipulating the PEMU1 register on the debugger.

This register is valid only in the emulation mode. It is invalid in the normal mode.

(1) Peripheral emulation register 1 (PEMU1)

After reset: 00H R/W Address: FFFFF9FEH

	7	6	5	4	3	2	1	0
PEMU1	0	0	0	0	0	EVARAMIN	0	0

EVARAMIN	Pseudo specification of RAM retention voltage detection signal
0	Do not detect voltage lower than RAM retention voltage.
1	Detect voltage lower than RAM retention voltage (set RAMF flag).

Caution This bit is not automatically cleared.

[Usage]

When an in-circuit emulator is used, pseudo emulation of RAMF is realized by rewriting this register on the debugger.

<1> CPU break (CPU operation stops.)

<2> Set the EVARAMIN bit to 1 by using a register write command.
By setting the EVARAMIN bit to 1, the RAMF bit is set to 1 on hardware (the internal RAM data is invalid).

<3> Clear the EVARAMIN bit to 0 by using a register write command again.
Unless this operation is performed (clearing the EVARAMIN bit to 0), the RAMF bit cannot be cleared to 0 by a CPU operation instruction.

<4> Run the CPU and resume emulation.

CHAPTER 21 REGULATOR

21.1 Overview

The V850ES/HE2 includes a regulator to reduce power consumption and noise.

This regulator supplies a stepped-down V_{DD} power supply voltage to the oscillator block and internal logic circuits (except the A/D converter and output buffers). The regulator output voltage is set to 2.5 V (TYP.).

Figure 21-1. Regulator

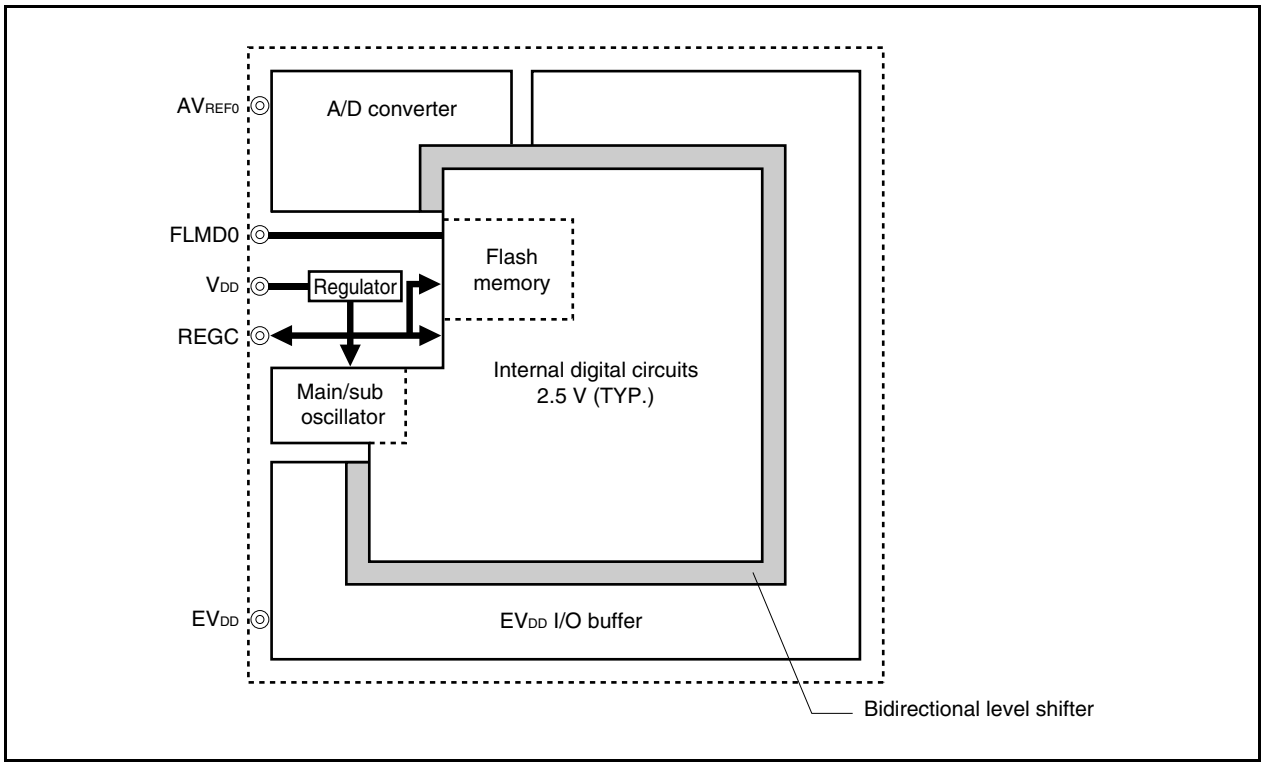

21.2 Operation

The regulator of this product always operates in any mode (normal operation mode, HALT mode, IDLE1 mode, IDLE2 mode, STOP mode, or during reset).

Be sure to connect a capacitor (4.7 μF (preliminary value)) to the REGC pin to stabilize the regulator output.

A diagram of the regulator pin connection method is shown below.

Figure 21-2. REGC Pin Connection

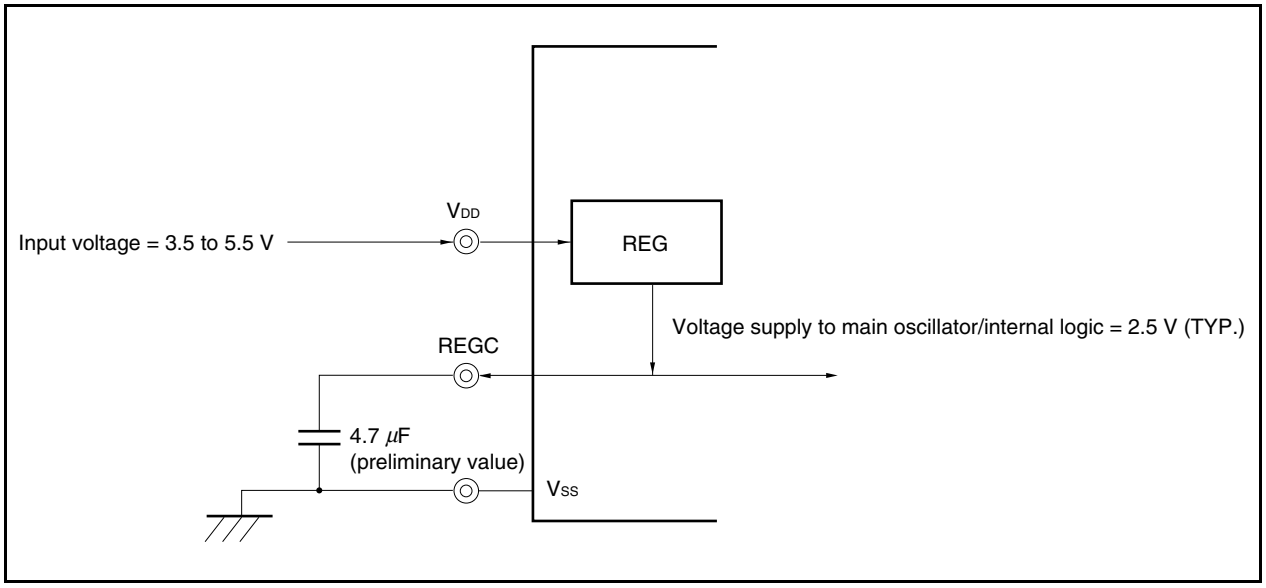

CHAPTER 22 FLASH MEMORY

The following can be considered as the development environment and mass production applications using flash memory versions.

○ For altering software after the V850ES/HE2 is soldered onto the target system.
○ For data adjustment when starting mass production.
○ For differentiating software according to the specification in small scale production of various models.
○ For facilitating inventory management.
○ For updating software after shipment.

22.1 Features

○ 4-byte/1-clock access (when instruction is fetched)
○ Capacity: 128 KB/64 KB
○ Write voltage: Erase/write with a single power supply
○ Rewriting method
- Rewriting by communication with dedicated flash programmer via serial interface (on-board/off-board programming)
- Rewriting flash memory by user program (self programming)

○ Flash memory write prohibit function supported (security function)
○ Safe rewriting of entire flash memory area by self programming using boot swap function
○ Interrupts can be acknowledged during self programming.

22.1.1 Erasure unit

The units in which the 128 KB or 64 KB flash memory can be erased are as follows.

(1) All-area erasure

The flash memory areas can be erased at the same time.

(2) Block erasure

The flash memory can be erased in block units[Note].

Block 0: 56 KB
Block 1: 8 KB
Block 2: 56 KB
Block 3: 8 KB

Note 2 blocks, blocks 0 and 1, for the 64 KB version (μPD70F3700).
4 blocks, blocks 0 to 3, for the 128 KB version (μPD70F3701).

22.2 Rewriting by Dedicated Flash Programmer

The flash memory can be rewritten by using a dedicated flash programmer after the V850ES/HE2 is mounted on the target system (on-board programming). The flash memory can also be rewritten before the device is mounted on the target system (off-board programming) by using a dedicated program adapter (FA series).

22.2.1 Programming environment

The following shows the environment required for writing programs to the flash memory of the V850ES/HE2.

Figure 22-1. Environment Required for Writing Programs to Flash Memory

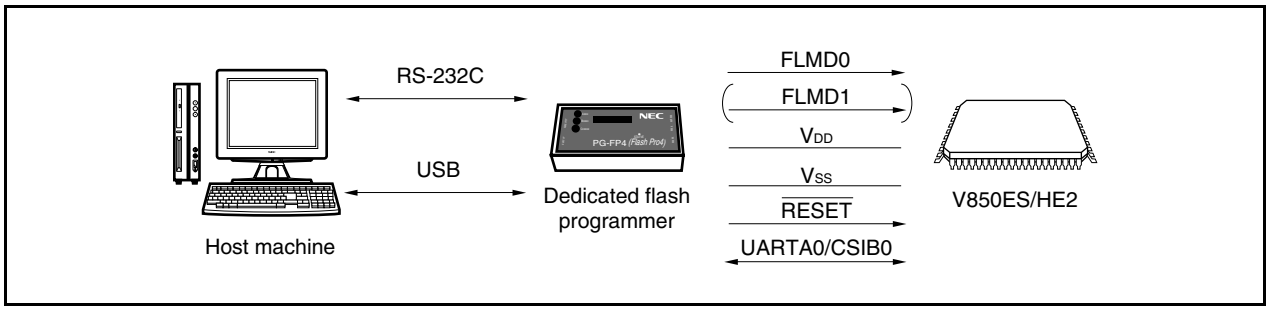

A host machine is required for controlling the dedicated flash programmer.

UARTA0 or CSIB0 is used for the interface between the dedicated flash programmer and the V850ES/HE2 to perform writing, erasing, etc. A dedicated program adapter (FA series) required for off-board writing.

Remark The FA series is a product of Naito Densei Machida Mfg. Co., Ltd.

22.2.2 Communication mode

Communication between the dedicated flash programmer and the V850ES/HE2 is performed by serial communication using the UARTA0 or CSIB0 interfaces of the V850ES/HE2.

(1) UARTA0

Transfer rate: 9,600 to 153,600 bps

Figure 22-2. Communication with Dedicated Flash Programmer (UARTA0)

Cautions 1. Process the pins not shown in compliance with the processing of unused pins (see 2.3 Pin I/O Circuit Types and Recommended Connection of Unused Pins). Connect a resistor of 1 kΩ to 10 kΩ as necessary.

2. Do not input a high level to the $\overline{\text{DRST}}$ pin.

(2) CSIB0

Serial clock: 2.4 kHz to 2.5 MHz (MSB first)

Figure 22-3. Communication with Dedicated Flash Programmer (CSIB0)

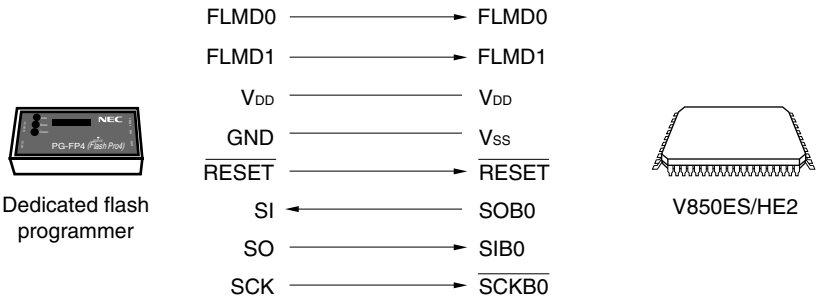

Cautions 1. Process the pins not shown in compliance with the processing of unused pins (see 2.3 Pin I/O Circuit Types and Recommended Connection of Unused Pins). Connect a resistor of 1 kΩ to 10 kΩ as necessary.

2. Do not input a high level to the $\overline{\text{DRST}}$ pin.

(3) CSIB0 + HS

Serial clock: 2.4 kHz to 2.5 MHz (MSB first)

Figure 22-4. Communication with Dedicated Flash Programmer (CSIB0 + HS)

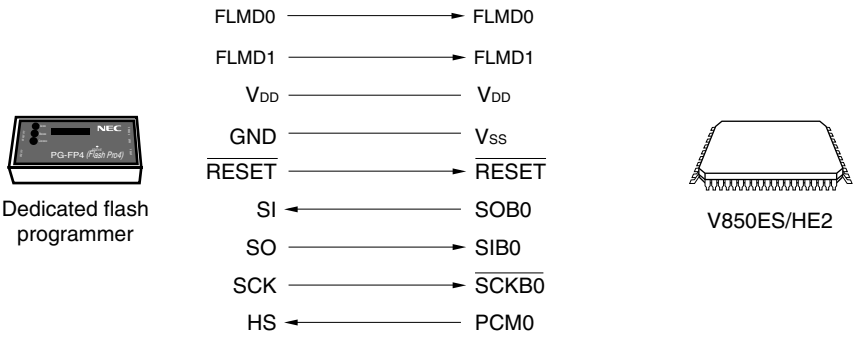

Cautions 1. Process the pins not shown in compliance with the processing of unused pins (see 2.3 Pin I/O Circuit Types and Recommended Connection of Unused Pins). Connect a resistor of 1 kΩ to 10 kΩ as necessary.

2. Do not input a high level to the $\overline{\text{DRST}}$ pin.

The dedicated flash programmer outputs the transfer clock, and the V850ES/HE2 operates as a slave.

When the PG-FP4 is used as the dedicated flash programmer, it generates the following signals to the V850ES/HE2. For details, refer to the **PG-FP4 User's Manual (U15260E)**.

Table 22-1. Signal Connections of Dedicated Flash Programmer (PG-FP4)

PG-FP4			V850ES/HE2	Processing for Connection		
Signal Name	I/O	Pin Function	Pin Name	UARTA0	CSIB0	CSIB0 + HS
FLMD0	Output	Write enable/disable	FLMD0	◎	◎	◎
FLMD1	Output	Write enable/disable	FLMD1	◎Note 1	◎Note 1	◎Note 1
VDD	–	V_{DD} voltage generation/voltage monitor	V_{DD}	◎	◎	◎
GND	–	Ground	V_{SS}	◎	◎	◎
CLK	Output	Clock output to V850ES/HE2	X1, X2	×Note 2	×Note 2	×Note 2
$\overline{\text{RESET}}$	Output	Reset signal	$\overline{\text{RESET}}$	◎	◎	◎
SI/RxD	Input	Receive signal	SOB0, TXDA0	◎	◎	◎
SO/TxD	Output	Transmit signal	SIB0, RXDA0	◎	◎	◎
SCK	Output	Transfer clock	$\overline{\text{SCKB0}}$	×	◎	◎
HS	Input	Handshake signal for CSIB0 + HS communication	PCM0	×	×	◎

Notes 1. Wire these pins as shown in Figure 22-5, or connect then to GND via pull-down resistor on board.

2. Clock cannot be supplied via the CLK pin of the flash programmer. Create an oscillator on board and supply the clock.

Remark ◎: Must be connected.

×: Does not have to be connected.

Table 22-2. Wiring of Flash Writing Adapter for V850ES/HE2 (FA-64GB-8EU)

Flash Programmer (PG-FP4) Connection Pins			Pin Name on FA Board	When CSIB0 + HS Is Used		When CSIB0 Is Used		When UARTA0 Is Used	
Signal Name	I/O	Pin Function		Pin Name	Pin No.	Pin Name	Pin No.	Pin Name	Pin No.
SI/RxD	Input	Receive signal	SI	P41/SOB0	20	P41/SOB0	20	P30/TXDA0	22
SO/TxD	Output	Transmit signal	SO	P40/SIB0	19	P40/SIB0	19	P31/RXDA0/INTP7	23
SCK	Output	Transfer clock	SCK	P42/$\overline{\text{SCKB0}}$	21	P42/$\overline{\text{SCKB0}}$	21	Not necessary	–
CLK	Output	Clock to V850ES/HE2	X1	Not necessary	–	Not necessary	–	Not necessary	–
			X2	Not necessary	–	Not necessary	–	Not necessary	–
/RESET	Output	Reset signal	/RESET	$\overline{\text{RESET}}$	9	$\overline{\text{RESET}}$	9	$\overline{\text{RESET}}$	9
FLMD0	Input	Write voltage	FLMD0	FLMD0	3	FLMD0	3	FLMD0	3
FLMD1	Input	Write voltage	FLMD1	PDL5/FLMD1	52	PDL5/FLMD1	52	PDL5/FLMD1	52
HS	Input	Handshake signal of CSI0 + HS communication	RESERVE/ HS	PCM0	45	Not necessary	–	Not necessary	–
VDD	–	VDD voltage generation/ voltage monitor	VDD	V_{DD}	4	V_{DD}	4	V_{DD}	4
				EV_{DD}	33	EV_{DD}	33	EV_{DD}	33
				AV_{REF0}	1	AV_{REF0}	1	AV_{REF0}	1
GND	–	Ground	GND	V_{SS}	6	V_{SS}	6	V_{SS}	6
				AV_{SS}	2	AV_{SS}	2	AV_{SS}	2
				EV_{SS}	32	EV_{SS}	32	EV_{SS}	32

Cautions 1. Be sure to connect the REGC pin to GND via a 4.7 μF (preliminary value) capacitor.

2. A clock cannot be supplied from the CLK pin of the flash programmer. Create an oscillator on the board and supply the clock from that oscillator.

Figure 22-5. Example of Wiring of V850ES/HE2 Flash Writing Adapter (FA-64GB-8EU) (in CSIB0 + HS Mode) (1/2)

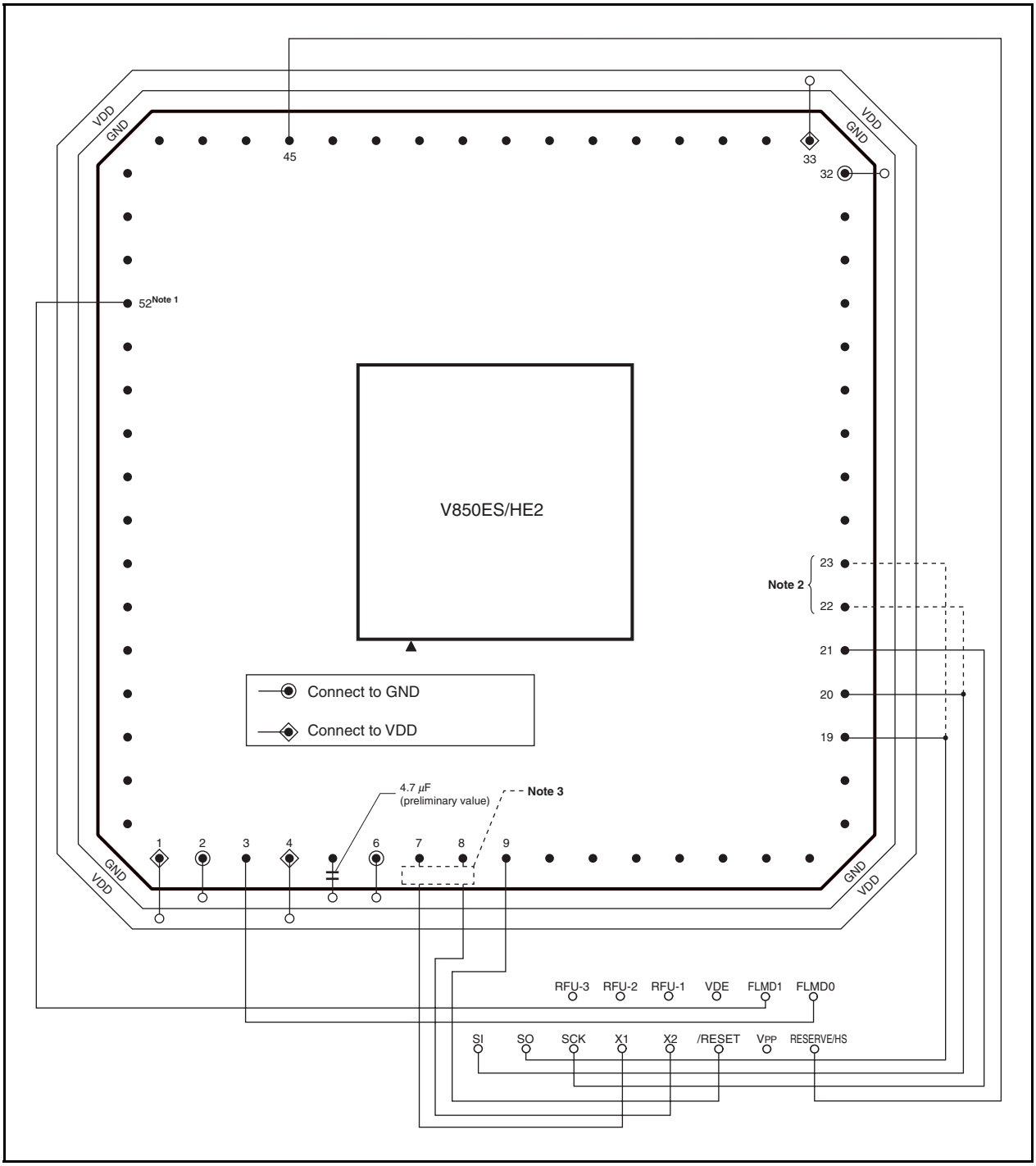

Figure 22-5. Example of Wiring of V850ES/HE2 Flash Writing Adapter (FA-64GB-8EU) (in CSIB0 + HS Mode) (2/2)

Notes 1. Wire the FLMD1 pin as shown below, or connect it to GND on board via a pull-down resistor.

2. Pins used when UARTA0 is used

3. Supply a clock by creating an oscillator on the flash writing adapter (enclosed by the broken lines). Here is an example of the oscillator.

Example

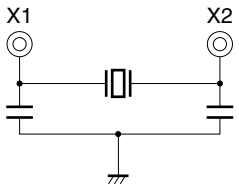

Caution Do not input a high level to the $\overline{\text{DRST}}$ pin.

Remarks 1. Process the pins not shown in accordance with processing of unused pins (see **2.3 Pin I/O Circuit Types and Recommended Connection of Unused Pins**).

2. This adapter is used for the 64-pin plastic LQFP package.

22.2.3 Flash memory control

The following shows the procedure for manipulating the flash memory.

Figure 22-6. Procedure for Manipulating Flash Memory

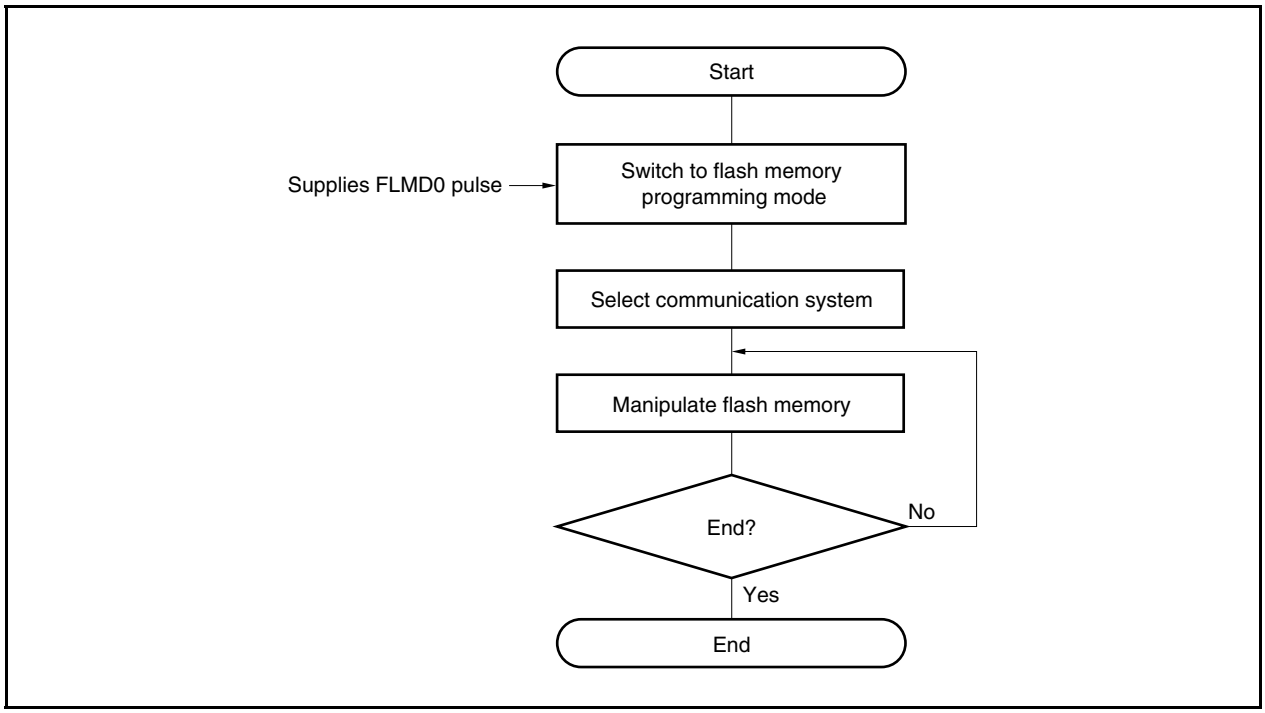

22.2.4 Selection of communication mode

In the V850ES/HE2, the communication mode is selected by inputting pulses (12 pulses max.) to the FLMD0 pin after switching to the flash memory programming mode. The FLMD0 pulse is generated by the dedicated flash programmer.

The following shows the relationship between the number of pulses and the communication mode.

Figure 22-7. Selection of Communication Mode

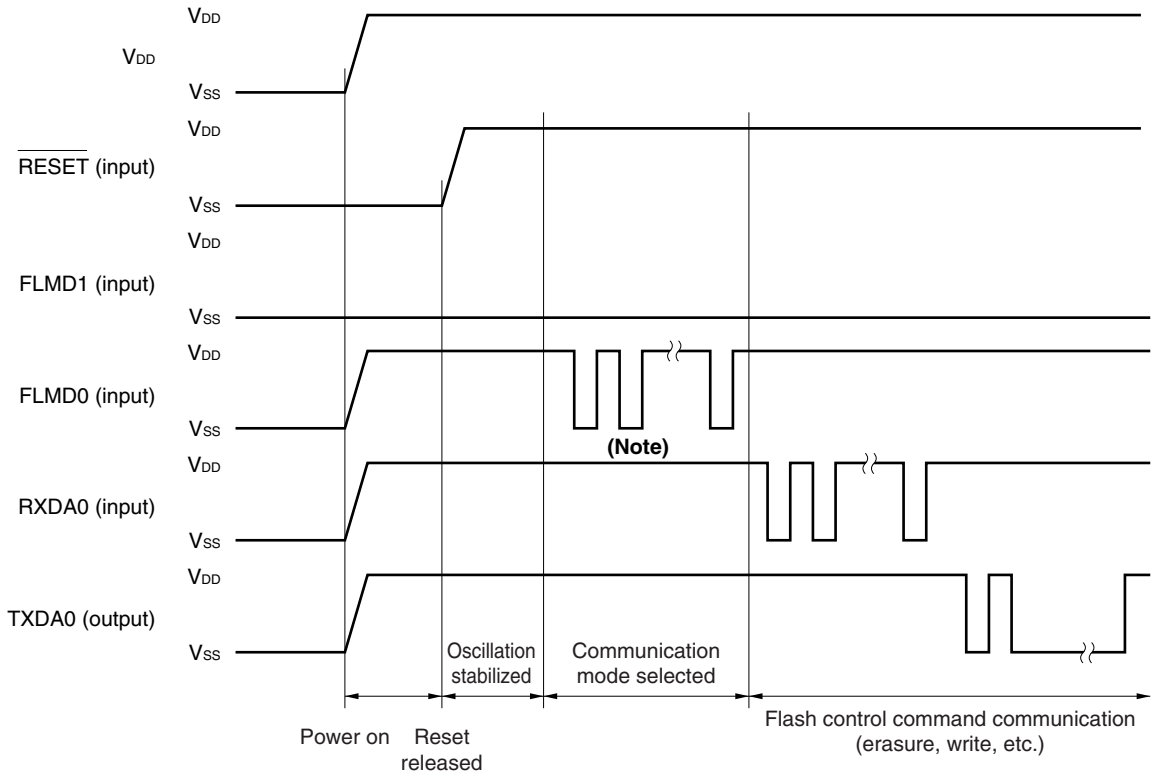

Note The number of clocks is as follows depending on the communication mode.

FLMD0 Pulse	Communication Mode	Remarks
0	UARTA0	Communication rate: 9,600 bps (after reset), LSB first
8	CSIB0	V850ES/HE2 performs slave operation, MSB first
11	CSIB0 + HS	V850ES/HE2 performs slave operation, MSB first
Other	RFU	Setting prohibited

Caution When UARTA0 is selected, the receive clock is calculated based on the reset command sent from the dedicated flash programmer after receiving the FLMD0 pulse.

22.2.5 Communication commands

The V850ES/HE2 communicates with the dedicated flash programmer by means of commands. The signals sent from the dedicated flash programmer to the V850ES/HE2 are called “commands”. The response signals sent from the V850ES/HE2 to the dedicated flash programmer are called “response commands”.

Figure 22-8. Communication Commands

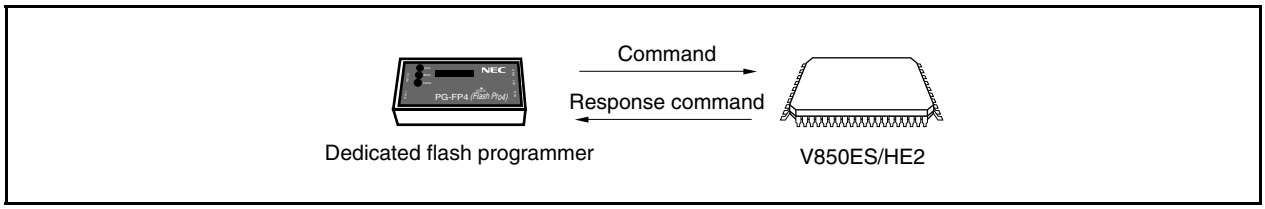

The following shows the commands for flash memory control in the V850ES/HE2. All of these commands are issued from the dedicated flash programmer, and the V850ES/HE2 performs the processing corresponding to the commands.

Table 22-3. Flash Memory Control Commands

Classification	Command Name	Support			Function
		CSIB0	CSIB0 + HS	UARTA0	
Blank check	Block blank check command	√	√	√	Checks if the contents of the memory in the specified block have been correctly erased.
Erase	Chip erase command	√	√	√	Erases the contents of the entire memory.
	Block erase command	√	√	√	Erases the contents of the memory of the specified block.
Write	Write command	√	√	√	Writes the specified address range, and executes a contents verify check.
Verify	Verify command	√	√	√	Compares the contents of memory in the specified address range with data transferred from the flash programmer.
	Checksum command	√	√	√	Reads the checksum in the specified address range.
System setting, control	Silicon signature command	√	√	√	Reads silicon signature information.
	Security setting command	√	√	√	Disables the block erase, chip erase, program, read commands, and rewriting of the boot area.

22.2.6 Pin connection

When performing on-board writing, mount a connector on the target system to connect to the dedicated flash programmer. Also, incorporate a function on-board to switch from the normal operation mode to the flash memory programming mode.

In the flash memory programming mode, all the pins not used for flash memory programming become the same status as that immediately after reset. Therefore, pin handling is required when the external device does not acknowledge the status immediately after a reset.

(1) FLMD0 pin

In the normal operation mode, input a voltage of V_{SS} level to the FLMD0 pin. In the flash memory programming mode, supply a write voltage of V_{DD} level to the FLMD0 pin.

Because the FLMD0 pin serves as a write protection pin in the self programming mode, a voltage of V_{DD} level must be supplied to the FLMD0 pin via port control, etc., before writing to the flash memory. For details, see **22.3.5 (1) FLMD0 pin**.

Figure 22-9. FLMD0 Pin Connection Example

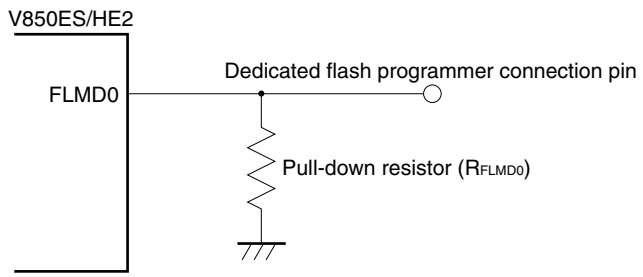

(2) FLMD1 pin

When 0 V is input to the FLMD0 pin, the FLMD1 pin does not function. When V_{DD} is supplied to the FLMD0 pin, the flash memory programming mode is entered, so 0 V must be input to the FLMD1 pin. The following shows an example of the connection of the FLMD1 pin.

Figure 22-10. FLMD1 Pin Connection Example

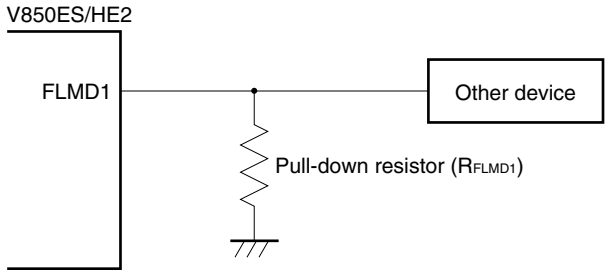

Caution If the V_{DD} signal is input to the FLMD1 pin from another device during on-board writing and immediately after reset, isolate this signal.

Table 22-4. Relationship Between FLMD0 and FLMD1 Pins and Operation Mode When Reset Is Released

FLMD0	FLMD1	Operation Mode
0	Don't care	Normal operation mode
V_{DD}	0	Flash memory programming mode
V_{DD}	V_{DD}	Setting prohibited

(3) Serial interface pin

The following shows the pins used by each serial interface.

Table 22-5. Pins Used by Serial Interfaces

Serial Interface	Pins Used
UARTA0	TXDA0, RXDA0
CSIB0	SOB0, SIB0, $\overline{\text{SCKB0}}$
CSIB0 + HS	SOB0, SIB0, $\overline{\text{SCKB0}}$, PCM0

When connecting a dedicated flash programmer to a serial interface pin that is connected to another device on-board, care should be taken to avoid conflict of signals and malfunction of the other device.

(a) Conflict of signals

When the dedicated flash programmer (output) is connected to a serial interface pin (input) that is connected to another device (output), a conflict of signals occurs. To avoid the conflict of signals, isolate the connection to the other device or set the other device to the output high-impedance status.

Figure 22-11. Conflict of Signals (Serial Interface Input Pin)

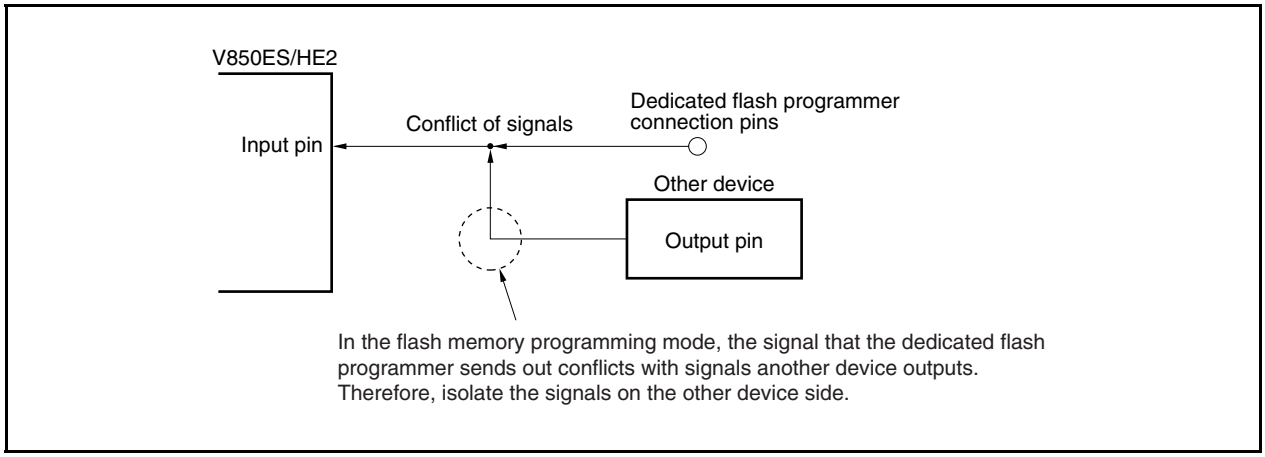

(b) Malfunction of other device

When the dedicated flash programmer (output or input) is connected to a serial interface pin (input or output) that is connected to another device (input), the signal is output to the other device, causing the device to malfunction. To avoid this, isolate the connection to the other device.

Figure 22-12. Malfunction of Other Device

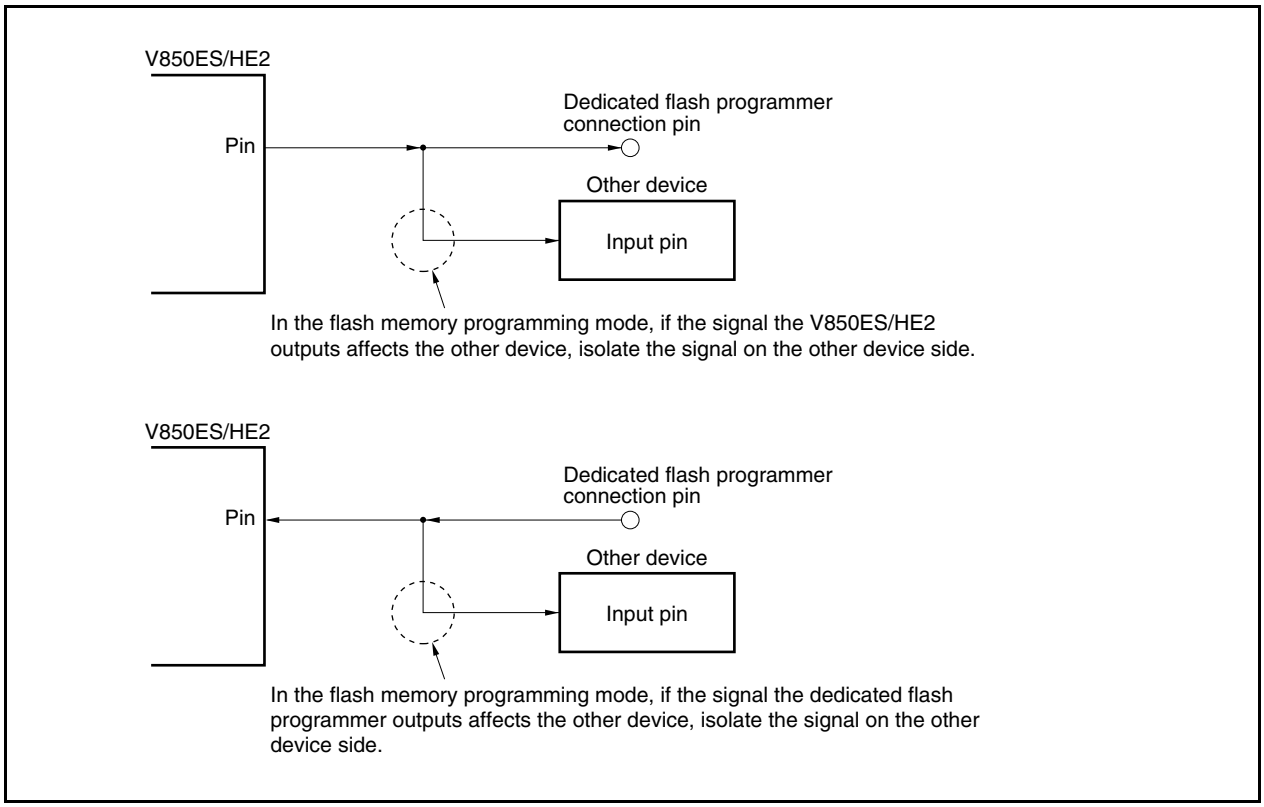

(4) $\overline{\text{RESET}}$ pin

When the reset signals of the dedicated flash programmer are connected to the $\overline{\text{RESET}}$ pin that is connected to the reset signal generator on-board, a conflict of signals occurs. To avoid the conflict of signals, isolate the connection to the reset signal generator.

When a reset signal is input from the user system in the flash memory programming mode, the programming operation will not be performed correctly. Therefore, do not input signals other than the reset signals from the dedicated flash programmer.

Figure 22-13. Conflict of Signals ($\overline{\text{RESET}}$ Pin)

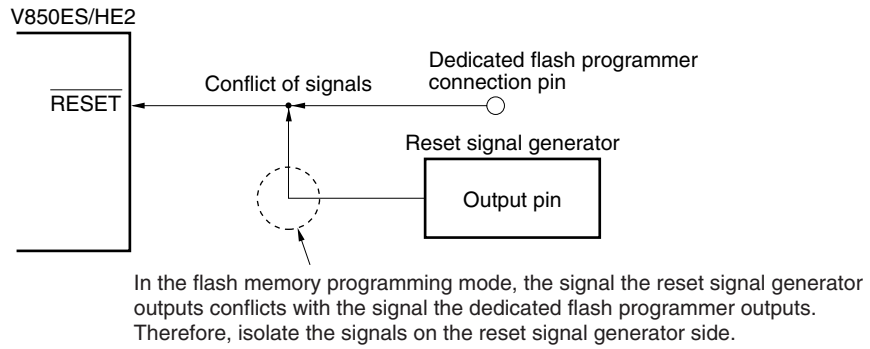

(5) Port pins (including NMI)

When the system shifts to the flash memory programming mode, all the pins that are not used for flash memory programming are in the same status as that immediately after reset. If the external device connected to each port does not recognize the status of the port immediately after reset, pins require appropriate processing, such as connecting to V_{DD} via a resistor or connecting to V_{SS} via a resistor.

(6) Other signal pins

Connect X1, X2, XT1, and XT2 in the same status as that in the normal operation mode.

During flash memory programming, input a low level to the $\overline{\text{DRST}}$ pin or leave it open. Do not input a high level.

(7) Power supply

Supply the same power (V_{DD}, V_{SS}, EV_{DD}, EV_{SS}, AV_{REF0}, AV_{SS}, REGC) as in normal operation mode.

22.2.7 Recommended circuit example for writing

Figure 22-14 shows the recommended circuit example for writing.

Figure 22-14. Procedure for Manipulating Flash Memory

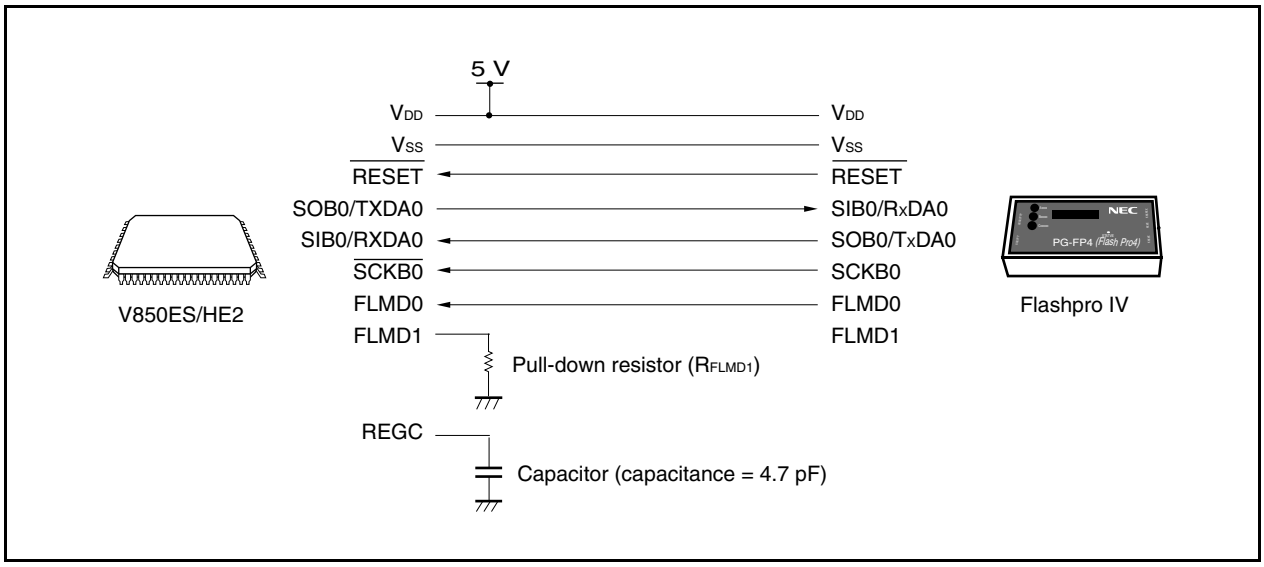

22.3 Rewriting by Self Programming

22.3.1 Overview

The V850ES/HE2 supports a flash macro service that allows the user program to rewrite the internal flash memory by itself. By using this interface and a self programming library that is used to rewrite the flash memory with a user application program, the flash memory can be rewritten by a user application transferred in advance to the internal RAM or external memory. Consequently, the user program can be upgraded and constant data can be rewritten in the field.

Figure 22-15. Concept of Self Programming

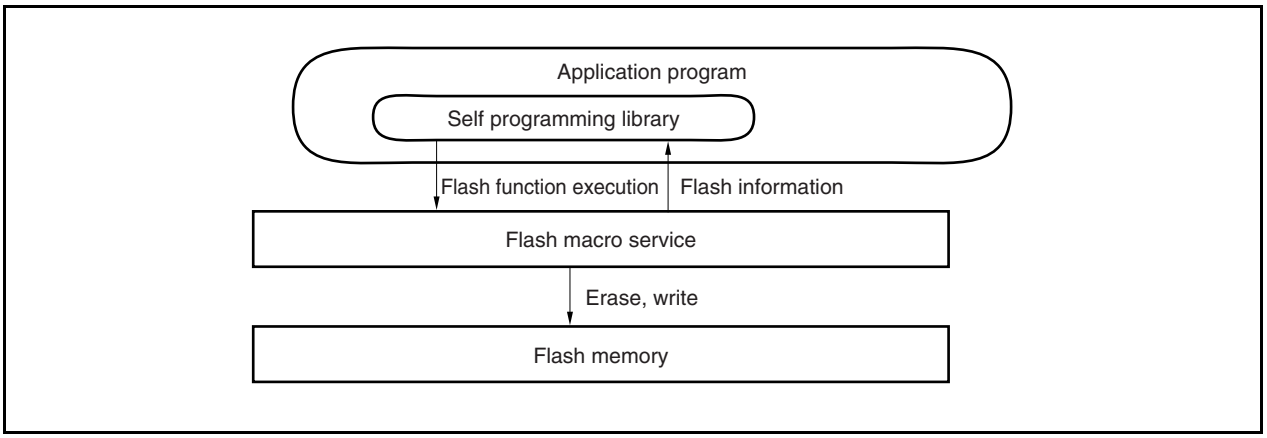

22.3.2 Features

(1) Secure self programming (boot swap function)

The μPD70F3701 supports a boot swap function that can exchange the physical memory of blocks 0 and 1 with the physical memory of blocks 2 and 3. By writing the start program to be rewritten to blocks 2 and 3 in advance and then swapping the physical memory, the entire area can be safely rewritten even if a power failure occurs during rewriting because the correct user program always exists in blocks 0 and 1.

Caution The boot swap function is not supported in the μPD70F3700 because only blocks 0 and 1 are the memory areas.

Figure 22-16. Rewriting Entire Memory Area (Boot Swap)

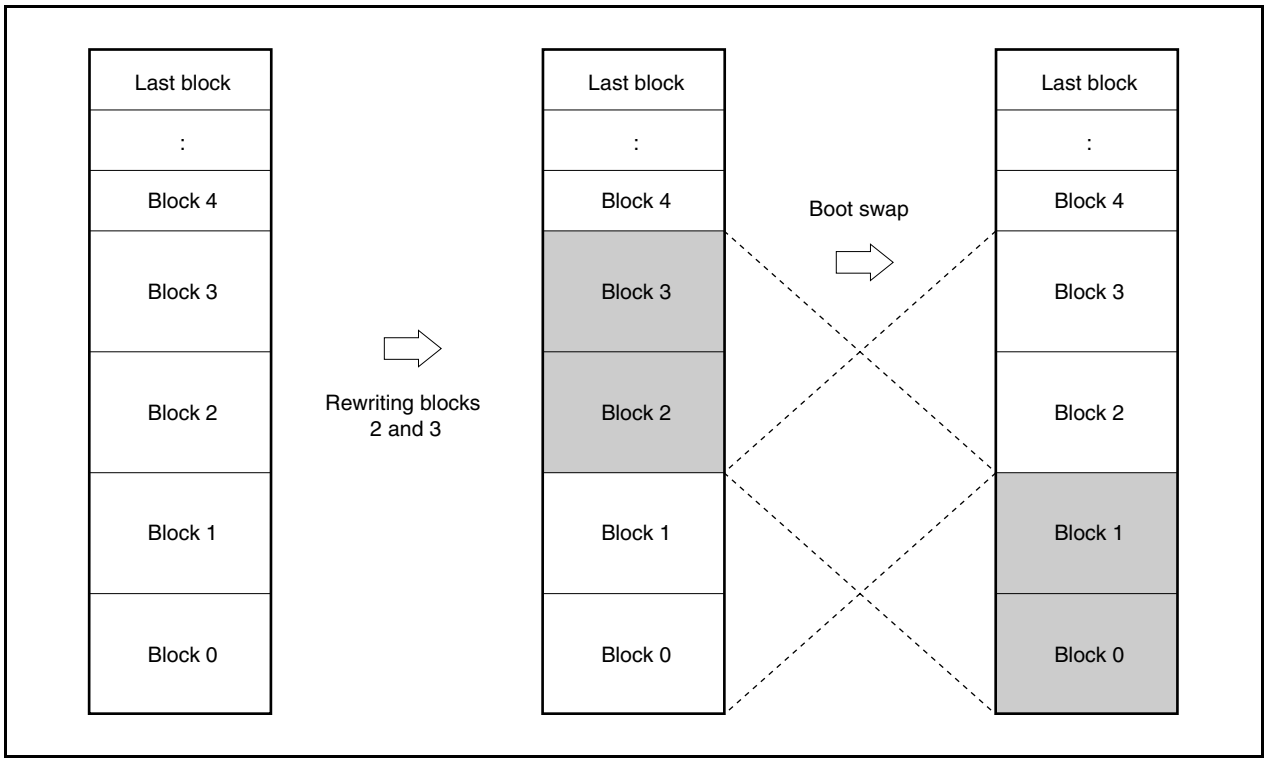

(2) Interrupt support

Instructions cannot be fetched from the flash memory during self programming. Conventionally, a user handler written to the flash memory could not be used even if an interrupt occurred.

Therefore, in the V850ES/HE2, to use an interrupt during self programming, processing transits to the specific address[Note] in the internal RAM. Allocate the jump instruction that transits processing to the user interrupt servicing at the specific address[Note] in the internal RAM.

Note NMI interrupt: Start address of internal RAM
Maskable interrupt: Start address of internal RAM + 4 addresses

22.3.3 Standard self programming flow

The entire processing to rewrite the flash memory by flash self programming is illustrated below.

Figure 22-17. Standard Self Programming Flow

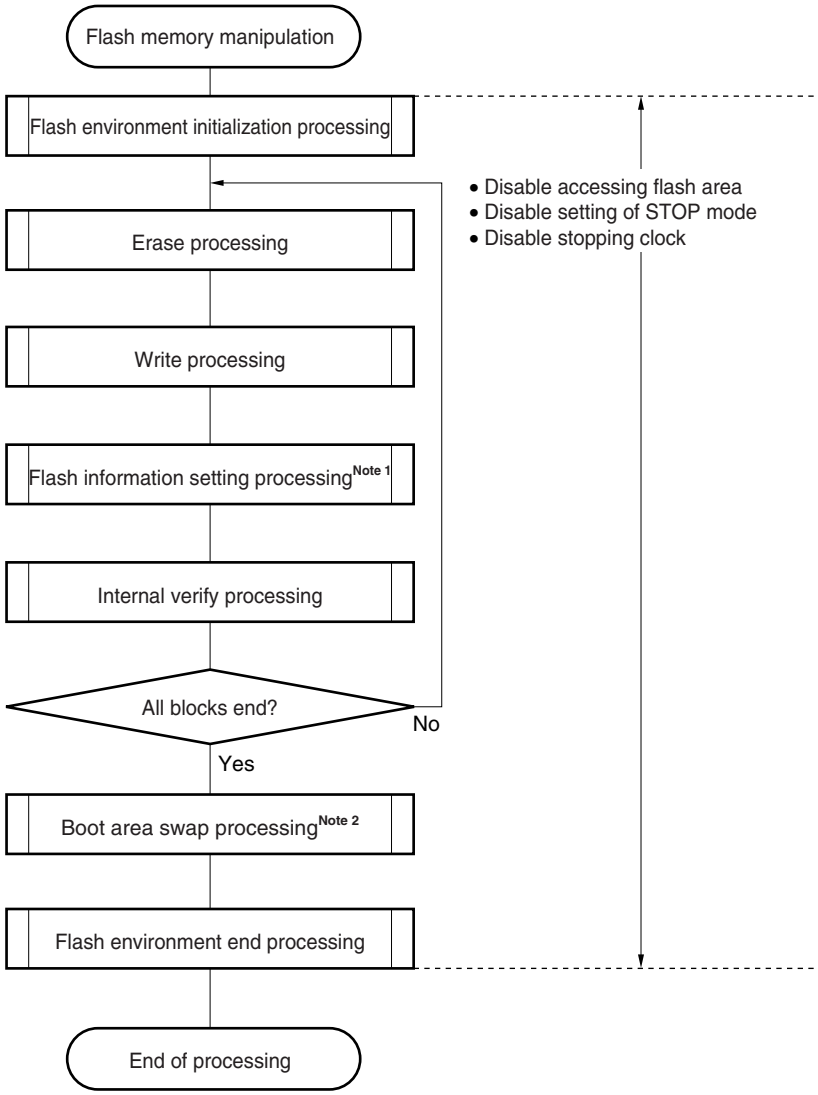

Notes 1. If a security setting is not performed, flash information setting processing does not have to be executed.

2. If boot swap is not used, flash information setting processing and boot swap processing do not have to be executed.

22.3.4 Flash functions

Table 22-6. Flash Function List

Function Name	Outline	Support
FlashEnv	Initialization of flash control macro	√
FlashBlockErase	Erasure of specified one block	√
FlashWordWrite	Writing from specified address	√
FlashBlockIVerify	Internal verification of specified one block	√
FlashBlockBlankCheck	Blank check of specified one block	√
FlashFLMDCheck	Check of FLMD pin	√
FlashStatusCheck	Status check of operation specified immediately before	√
FlashGetInfo	Reading of flash information	√
FlashSetInfo	Setting of flash information	√
FlashBootSwap	Swapping of boot area	√
FlashWordRead	Data read from specified address	√
FlashSetUserHandler	User interrupt handler registration function	√

22.3.5 Pin processing

(1) FLMD0 pin

The FLMD0 pin is used to set the operation mode when reset is released and to protect the flash memory from being written during self rewriting. It is therefore necessary to keep the voltage applied to the FLMD0 pin at 0 V when reset is released and a normal operation is executed. It is also necessary to apply a voltage of V_{DD} level to the FLMD0 pin during the self programming mode period via port control before the memory is rewritten.

When self programming has been completed, the voltage on the FLMD0 pin must be returned to 0 V.

Figure 22-18. Mode Change Timing

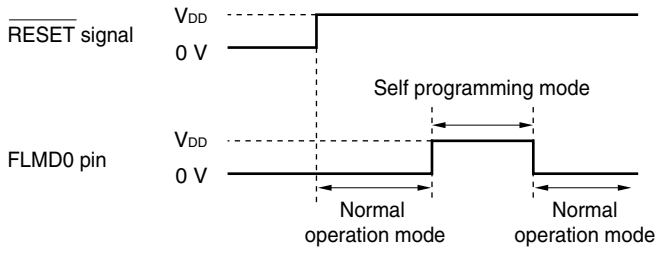

Caution Make sure that the FLMD0 pin is at 0 V when reset is released.

22.3.6 Internal resources used

The following table lists the internal resources used for self programming. These internal resources can also be used freely for purposes other than self programming.

Table 22-7. Internal Resources Used

Resource Name	Description
Stack area (user stack + (TBD) bytes)	An extension of the stack used by the user is used by the library (can be used in both the internal RAM and external RAM).
Library code ((TBD) bytes)	Program entity of library (can be used anywhere other than the flash memory block to be manipulated).
Application program	Executed as a user application. Calls flash functions.
Maskable interrupt	Can be used in user application execution status or self programming status. To use this interrupt in the self-programming status, since the processing transits to the address of the internal RAM start address + 4 addresses, allocate the jump instruction that transits the processing to the user interrupt servicing at the address of the internal RAM start address + 4 addresses in advance.
NMI interrupt	Can be used in user application execution status or self programming status. To use this interrupt in the self-programming status, since the processing transits to the address of the internal RAM start address, allocate the jump instruction that transits the processing to the user interrupt servicing at the internal RAM start address in advance.

CHAPTER 23 OPTION BYTE FUNCTION

The option byte is stored in address 000007AH of the internal flash memory (internal ROM area) as 8-bit data.

When writing a program to the V850ES/HE2, be sure to set the option data corresponding to the following option in the program at address 000007AH as default data.

The data in this area cannot be rewritten during program execution.

Address: 0000007AH

7	6	5	4	3	2	1	0
OPB7	OPB6	–	–	–	–	OPB1	OPB0

OPB7	OPB6	Subclock operation mode setting
0	0	Crystal resonator mode
1	1	RC oscillator mode

OPB1	Watchdog timer 2 mode setting
0	Operating clock (f_X/f_R) selectable INTWDT2 mode/WDTRES mode selectable
1	Fixed to internal oscillation clock (f_R) Fixed to WDTRES mode

OPB0	Stopping internal oscillator enable/disable
0	Stopping enabled
1	Stopping disabled

CHAPTER 24 ON-CHIP DEBUG FUNCTION

The V850ES/HE2 has an on-chip debug function that uses the JTAG (Joint Test Action Group) interface ($\overline{\text{DRST}}$, DCK, DMS, DDI, and DDO pins) and that can be used via an on-chip debug emulator (MINICUBE®).

24.1 Features

- ○ Hardware break function: 2 points
- ○ Software break function: 4 points
- ○ Real-time RAM monitor function: Memory contents can be read during program execution.
- ○ Dynamic memory modification function (DMM function): RAM contents can be rewritten during program execution.
- ○ Mask function: $\overline{\text{RESET}}$, NMI
- ○ ROM security function: 10-byte ID code authentication

Caution The following functions are not supported.

- **Trace function**
- **Event function**
- **Debug interrupt interface function (DBINT)**

24.2 Connection Circuit Example

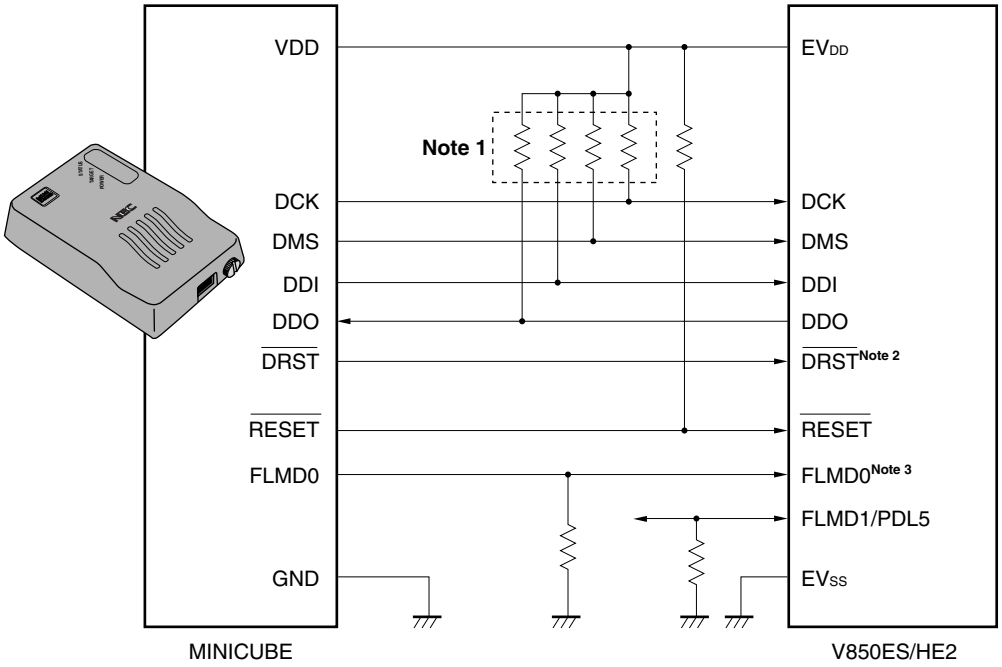

Notes 1. Example of pin connection when MINICUBE is not connected

2. A pull-down resistor is provided on chip.

3. For flash memory rewriting

24.3 Interface Signals

The interface signals are described below.

(1) $\overline{\text{DRST}}$

This is a reset input signal for the on-chip debug unit. It is a negative-logic signal that asynchronously initializes the debug control unit.

MINICUBE raises the $\overline{\text{DRST}}$ signal when it detects V_{DD} of the target system after the integrated debugger is started, and starts the on-chip debug unit of the device.

When the $\overline{\text{DRST}}$ signal goes high, a reset signal is also generated in the CPU.

When starting debugging by starting the integrated debugger, a CPU reset is always generated.

(2) DCK

This is a clock input signal. It supplies a 20 MHz clock from MINICUBE. In the on-chip debug unit, the DMS and DDI signals are sampled at the rising edge of the DCK signal, and the data DDO is output at its falling edge.

(3) DMS

This is a transfer mode select signal. The transfer status in the debug unit changes depending on the level of the DMS signal.

(4) DDI

This is a data input signal. It is sampled in the on-chip debug unit at the rising edge of DCK.

(5) DDO

This is a data output signal. It is output from the on-chip debug unit at the falling edge of the DCK signal.

(6) EV_{DD}

This signal is used to detect VDD of the target system. If VDD from the target system is not detected, the signals output from MINICUBE ($\overline{\text{DRST}}$, DCK, DMS, DDI, FLMD0, and $\overline{\text{RESET}}$) go into a high-impedance state.

(7) FLMD0

The flash self programming function is used for the function to download data to the flash memory via the integrated debugger. During flash self programming, the FLMD0 pin must be kept high. In addition, connect a pull-down resistor to the FLMD0 pin.

The FLMD0 pin can be controlled in either of the following two ways.

<1> To control from MINICUBE

Connect the FLMD0 signal of MINICUBE to the FLMD0 pin.

In the normal mode, nothing is driven by MINICUBE (high impedance).

During a break, MINICUBE raises the FLMD0 pin to the high level when the download function of the integrated debugger is executed.

<2> To control from port

Connect any port of the device to the FLMD0 pin.

The same port as the one used by the user program to realize the flash self programming function may be used.

On the console of the integrated debugger, make a setting to raise the port pin to high level before executing the download function, or lower the port pin after executing the download function.

For details, refer to the **ID850QB Ver. 3.10 Integrated Debugger Operation User's Manual (U17435E)**.

(8) $\overline{\text{RESET}}$

This is a system reset input pin. If the $\overline{\text{DRST}}$ pin is made invalid by the value of the OCDM.OCDM0 bit set by the user program, on-chip debugging cannot be executed. Therefore, reset is effected by MINICUBE, using the $\overline{\text{RESET}}$ pin, to make the $\overline{\text{DRST}}$ pin valid (initialization).

24.4 Register

(1) On-chip debug mode register (OCDM)

The OCDM register is used to select the normal operation mode or on-chip debug mode. This register is a special register and can be written only in a combination of specific sequences (see **3.4.7 Special registers**).

This register is also used to specify whether a pin provided with an on-chip debug function is used as an on-chip debug pin or as an ordinary port/peripheral function pin. It also is used to disconnect the internal pull-down resistor of the P05 pin.

The OCDM register can be written only while a low level is input to the P05 pin.

This register can be read or written in 8-bit or 1-bit units.

After reset: 01H[Note] R/W Address: FFFFF9FCH

	7	6	5	4	3	2	1	0
OCDM	0	0	0	0	0	0	0	OCDM0

OCDM0	Operation mode
0	Selects normal operation mode (in which a pin that functions alternately as on-chip debug function pin is used as a port/peripheral function pin) and disconnects the on-chip pull-down resistor of the P05 pin.
1	When P05 pin is low: Normal operation mode (in which a pin that functions alternately as an on-chip debug function pin is used as a port/peripheral function pin) When P05 pin is high: On-chip debug mode (in which a pin that functions alternately as an on-chip debug function pin is used as an on-chip debug mode pin)

Note The value of this register is 01H after reset by the $\overline{\text{RESET}}$ pin and is 00H after reset by power-on-clear circuit (POC). After reset by the WDTRES2 signal, clock monitor (CLM), or low-voltage detector (LVI), however, the value of the OCDM register is retained.

Cautions 1. When using the DDI, DDO, DCK, and DMS pins not as on-chip debug pins but as port pins after external reset, the following actions must be taken.

- **Input a low level to the P05 pin.**
- **Set the ODCM0 bit. In this case, take the following actions.**
  <1> Clear the OCDM0 bit to 0.
  <2> Fix the P05 pin to the low level until <1> is completed.

2. The P05 pin has an on-chip pull-down resistor. This resistor is disconnected when the OCDM0 flag is cleared to 0.

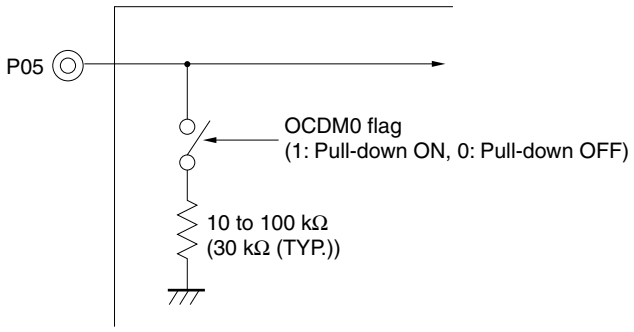

24.5 Operation

The on-chip debug function is made invalid under the conditions shown in the table below.
When this function is not used, keep the $\overline{\text{DRST}}$ pin low until the OCDM.OCDM0 flag is cleared to 0.

OCDM0 Flag / $\overline{\text{DRST}}$ Pin	0	1
L	Invalid	Invalid
H	Invalid	Valid

Remark L: Low-level input
H: High-level input

Figure 24-1. Timing When On-Chip Debug Function Is Not Used

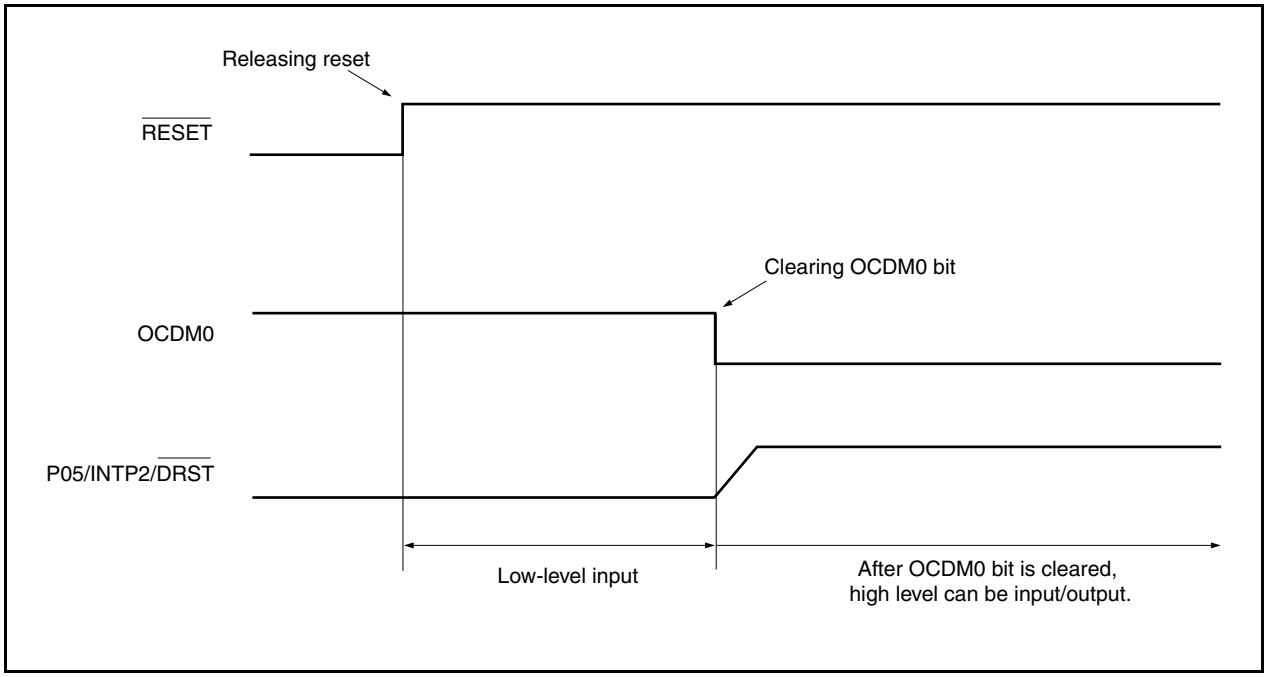

24.6 ROM Security Function

24.6.1 Security ID

The flash memory versions of the V850ES/HE2 perform authentication using a 10-byte ID code to prevent the contents of the flash memory from being read by an unauthorized person during on-chip debugging by the on-chip debug emulator.

Set the ID code in the 10-byte on-chip flash memory area from 0000070H to 0000079H to allow the debugger perform ID authentication.

If the IDs match, the security is released and reading flash memory and using the on-chip debug emulator are enabled.

- Set the 10-byte ID code to 0000070H to 0000079H.
- Bit 7 of 0000079H is the on-chip debug emulator enable flag.
  (0: Disable, 1: Enable)
- When the on-chip debug emulator is started, the debugger requests ID input. When the ID code input on the debugger and the ID code set in 0000070H to 0000079H match, the debugger starts.
- Debugging cannot be performed if the on-chip debug emulator enable flag is 0, even if the ID codes match.

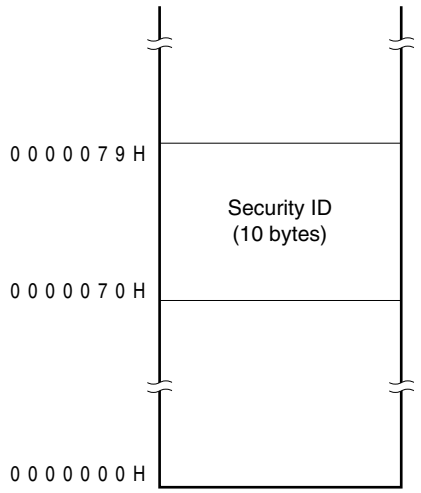

Caution When the data in the flash memory has been deleted, all the bits are set to 1.

24.6.2 Setting

The following shows how to set the ID code as shown in Table 24-1.

When the ID code is set as shown in Table 24-1, the ID code input in the configuration dialog box of the ID850QB is “123456789ABCDEF123D4” (not case-sensitive).

Table 24-1. ID Code

Address	Value
0x70	0x12
0x71	0x34
0x72	0x56
0x73	0x78
0x74	0x9A
0x75	0xBC
0x76	0xDE
0x77	0XF1
0x78	0x23
0x79	0xD4

The ID code can be specified for the device file that supports the CA850 Ver. 2.60 or later and the security ID by the PM+ linker option setting.

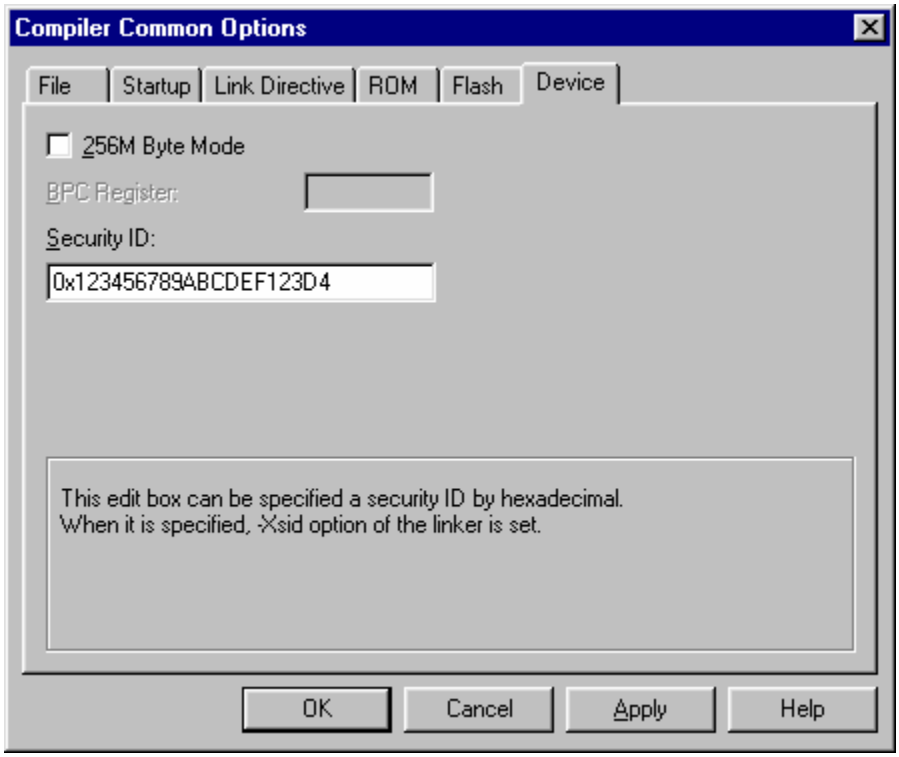

[Program example (when using CA850 Ver. 2.60 or later)]

```
#-------------------------------------
#       SECURITYID (continue ILGOP  handler)
#-------------------------------------
        .section   "SECURITY_ID"   --Interrupt handler address 0x70
        .word      0x78563412      --0-3 byte code
        .word      0xF1DEBC9A      --4-7 byte code
        .hword     0xD423          --8-9 byte code
```

Remark Add the above program example to the startup files.

24.7 Cautions

(1) If a reset signal is input (from the target system or a reset signal from an internal reset source) during RUN (program execution), the break function may malfunction.

(2) Even if the reset signal is masked by the mask function, the I/O buffer (port pin) may be reset if a reset signal is input from a pin.

(3) Because a software breakpoint set in the internal flash memory is realized by the ROM correction function, it is made temporarily invalid by target reset or internal reset generated by watchdog timer 2. The breakpoint becomes valid again when a hardware break or forced break occurs, but a software break does not occur until then.

(4) Pin reset during a break is masked and the CPU and peripheral I/O are not reset. If pin reset or internal reset is generated as soon as the flash memory is rewritten by DMA or read by the RAM monitor function while the user program is being executed, the CPU and peripheral I/O may not be correctly reset.

(5) In the on-chip debug mode, the DDO pin is forcibly set to the high-level output.

CHAPTER 25 ELECTRICAL SPECIFICATIONS (TARGET)

25.1 Electrical Specifications

Absolute Maximum Ratings (T_A = 25°C) (1/2)

Parameter	Symbol	Conditions	Ratings	Unit
Supply voltage	V_{DD}	$V_{DD} = EV_{DD}$	−0.5 to +6.5	V
	EV_{DD}	$V_{DD} = EV_{DD}$	−0.5 to +6.5	V
	AV_{REF0}		−0.5 to +6.5	V
	V_{SS}	$V_{SS} = EV_{SS} = AV_{SS}$	−0.5 to +0.5	V
	AV_{SS}	$V_{SS} = EV_{SS} = AV_{SS}$	−0.5 to +0.5	V
	EV_{SS}	$V_{SS} = EV_{SS} = AV_{SS}$	−0.5 to +0.5	V
Input voltage	V_{I1}	P00 to P06, P30 to P35, P40 to P42, P50 to P55, P90, P91, P96 to P99, P913 to P915, PCM0, PCM1, PDL0 to PDL7, $\overline{RESET}$, FLMD0	−0.5 to EV_{DD} + 0.5[Note]	V
	V_{I3}	X1, X2, XT1, XT2	−0.5 to V_{RO} + 0.5[Note]	V
Analog input voltage	V_{IAN}	P70 to P79	−0.5 to AV_{REF0} + 0.5[Note]	V

Note Be sure not to exceed the absolute maximum ratings (MAX. value) of each supply voltage.

Cautions 1. Avoid direct connections among the IC device output (or I/O) pins and between V_{DD} or V_{CC} and GND.

2. Product quality may suffer if the absolute maximum rating is exceeded even momentarily for any parameter. That is, the absolute maximum ratings are rated values at which the product is on the verge of suffering physical damage, and therefore the product must be used under conditions that ensure that the absolute maximum ratings are not exceeded.

The ratings and conditions indicated for DC characteristics and AC characteristics represent the quality assurance range during normal operation.

3. When directly connecting the external circuit to the pin that becomes high impedance state, the timing must be designed such that the output conflict is avoided on the external circuit.

Remark Unless specified otherwise, the characteristics of alternate-function pins are the same as those of port pins.

Absolute Maximum Ratings (T_A = 25°C) (2/2)

Parameter	Symbol	Conditions		Ratings	Unit
Output current, low	I_{OL}	P00 to P06, P30 to P35, P40 to P42, P50 to P55, P90, P91, P96 to P99, P913 to P915, PCM0, PCM1, PDL0 to PDL7	Per pin	4	mA
			Total of all pins	50	mA
		P70 to P79	Per pin	4	mA
			Total of all pins	20	mA
Output current, high	I_{OH}	P00 to P06, P30 to P35, P40 to P42, P50 to P55, P90, P91, P96 to P99, P913 to P915, PCM0, PCM1, PDL0 to PDL7	Per pin	–4	mA
			Total of all pins	–50	mA
		P70 to P79	Per pin	–4	mA
			Total of all pins	–20	mA
Operating ambient temperature	T_A	Normal operation mode		–40 to +85	°C
		Flash memory programming mode			
Storage temperature	T_{stg}			–40 to +125	°C

Cautions 1. Do not directly connect the output (or I/O) pins of IC products to each other, or to V_{DD}, V_{CC} and GND.

2. Product quality may suffer if the absolute maximum rating is exceeded even momentarily for any parameter. That is, the absolute maximum ratings are rated values at which the product is on the verge of suffering physical damage, and therefore the product must be used under conditions that ensure that the absolute maximum ratings are not exceeded.

The ratings and conditions indicated for DC characteristics and AC characteristics represent the quality assurance range during normal operation.

3. When directly connecting the external circuit to the pin that becomes high impedance state, the timing must be designed such that the output conflict is avoided on the external circuit.

Remark Unless specified otherwise, the characteristics of alternate-function pins are the same as those of port pins.

25.2 Capacitance

(T_A = 25°C, V_{DD} = EV_{DD} = AV_{REF0} = V_{SS} = EV_{SS} = AV_{SS} = 0 V)

Parameter	Symbol	Conditions	MIN.	TYP.	MAX.	Unit
I/O capacitance	C_{IO}	f_X = 1 MHz, Unmeasured pins returned to 0 V.			10	pF

25.3 Operating Conditions

(T_A = –40 to +85°C, V_{DD} = EV_{DD} = 3.5 V to 5.5 V, 4.0 V ≤ AV_{REF0} ≤ 5.5 V, V_{SS} = EV_{SS} = AV_{SS} = 0 V)

Parameter	Symbol	Conditions	MIN.	TYP.	MAX.	Unit
Internal system clock frequency	f_{CLK}	REGC = 4.7 μF, at operation with main clock	4		20	MHz
		REGC = 4.7 μF, at operation with subclock (crystal resonator)	32		35	kHz
		REGC = 4.7 μF, at operation with subclock (RC resonator)	12.5[Note]		27.5[Note]	kHz

Note The internal system clock frequency is half the oscillation frequency.

25.4 Oscillator Characteristics

25.4.1 Main clock oscillator characteristics

(T_A = –40 to +85°C, V_{DD} = EV_{DD} = 3.5 V to 5.5 V, 4.0 V ≤ AV_{REF0} ≤ 5.5 V, V_{SS} = EV_{SS} = AV_{SS} = 0 V)

Resonator	Recommended Circuit	Parameter	Conditions	MIN.	TYP.	MAX.	Unit
Ceramic resonator	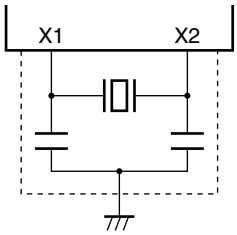	Oscillation frequency (f_X)[Note 1]		4		5	MHz
		Oscillation stabilization time[Note 2]	After reset release		$2^{16}/f_X$		s
			After STOP mode release	0.5[Note 3]	**Note 4**		ms
			After IDLE2 mode release	0.35[Note 3]	**Note 4**		ms
Crystal resonator		Oscillation frequency (f_X)[Note 1]		4		5	MHz
		Oscillation stabilization time[Note 2]	After reset release		$2^{16}/f_X$		s
			After STOP mode release	0.5[Note 3]	**Note 4**		ms
			After IDLE2 mode release	0.35[Note 3]	**Note 4**		ms

Notes 1. Indicates only oscillator characteristics.

2. Time required to stabilize the crystal resonator after reset or STOP mode is released.

3. Time required to stabilize access to the internal flash memory.

4. The value differs depending on the OSTS register settings.

Cautions 1. When using the main clock oscillator, wire as follows in the area enclosed by the broken lines in the above figures to avoid an adverse effect from wiring capacitance.

- **Keep the wiring length as short as possible.**
- **Do not cross the wiring with the other signal lines.**
- **Do not route the wiring near a signal line through which a high fluctuating current flows.**
- **Always make the ground point of the oscillator capacitor the same potential as V_{SS}.**
- **Do not ground the capacitor to a ground pattern through which a high current flows.**
- **Do not fetch signals from the oscillator.**

2. When the main clock is stopped and the subclock is operating, wait until the oscillation stabilization time has been secured by the program before switching back to the main clock.

25.4.2 Subclock oscillator characteristics

(T_A = –40 to +85°C, V_{DD} = EV_{DD} = 3.5 V to 5.5 V, 4.0 V ≤ AV_{REF0} ≤ 5.5 V, V_{SS} = EV_{SS} = AV_{SS} = 0 V)

Resonator	Recommended Circuit	Parameter	Conditions	MIN.	TYP.	MAX.	Unit
Crystal resonator	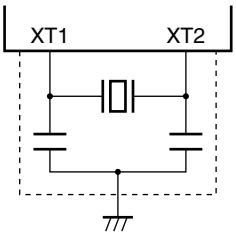	Oscillation frequency (f_{XT})[Note 1]		32	32.768	35	kHz
		Oscillation stabilization time[Note 2]				10	s
RC resonator	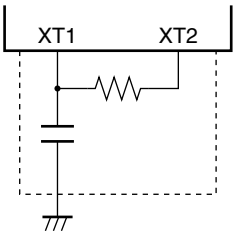	Oscillation frequency (f_{XT})[Notes 1, 4]	R = 390 kΩ ±5%[Note 3] C = 47 pF ±10%[Note 3]	25	40	55	kHz
		Oscillation stabilization time[Note 2]				100	μs

Notes 1. Indicates only oscillator characteristics. For the CPU operation clock, see **25.8 AC Characteristics**.

2. Time required from when V_{DD} reaches oscillation voltage range (MIN.: 3.5 V) to when the crystal resonator stabilizes.

3. To avoid an adverse effect from wiring capacitance, keep the wiring length as short as possible.

4. RC oscillation frequency is 40 kHz (TYP.). This clock is internally divided by 2. In the case of the RC resonator, the internal system clock frequency is half the oscillation frequency: MIN. = 12.5 kHz, TYP. = 20 kHz, MAX. = 27.5 kHz.

Cautions 1. When using the subclock oscillator, wire as follows in the area enclosed by the broken lines in the above figures to avoid an adverse effect from wiring capacitance.

- **Keep the wiring length as short as possible.**
- **Do not cross the wiring with the other signal lines.**
- **Do not route the wiring near a signal line through which a high fluctuating current flows.**
- **Always make the ground point of the oscillator capacitor the same potential as V_{SS}.**
- **Do not ground the capacitor to a ground pattern through which a high current flows.**
- **Do not fetch signals from the oscillator.**

2. The subclock oscillator is designed as a low-amplitude circuit for reducing current consumption, and is more prone to malfunction due to noise than the main clock oscillator. Particular care is therefore required with the wiring method when the subclock is used.

25.4.3 PLL characteristics

(T_A = –40 to +85°C, V_{DD} = EV_{DD} = 3.5 V to 5.5 V, 4.0 V ≤ AV_{REF0} ≤ 5.5 V, V_{SS} = EV_{SS} = AV_{SS} = 0 V)

Parameter	Symbol	Conditions	MIN.	TYP.	MAX.	Unit
Input frequency	f_X		4		5	MHz
Output frequency	f_{XX}		16		20	MHz
Lock time	t_{PLL}	After V_{DD} reaches MIN.: 3.5 V			800	μs

25.4.4 Internal oscillator characteristics

(T_A = –40 to +85°C, V_{DD} = EV_{DD} = 3.5 V to 5.5 V, 4.0 V ≤ AV_{REF0} ≤ 5.5 V, V_{SS} = EV_{SS} = AV_{SS} = 0 V)

Parameter	Symbol	Conditions	MIN.	TYP.	MAX.	Unit
Output frequency	f_R		100	200	400	kHz

25.5 Voltage Regulator Characteristics

(T_A = –40 to +85°C, V_{DD} = EV_{DD}, V_{SS} = EV_{SS} = AV_{SS} = 0 V)

Parameter	Symbol	Conditions	MIN.	TYP.	MAX.	Unit
Input frequency	V_{DD}		3.5		5.5	V
Output frequency	V_{RO}			2.5		V
Lock time	t_{REG}	After V_{DD} reaches MIN.: 3.5 V, C = 4.7 μF ±20% connected to REGC pin			1	ms

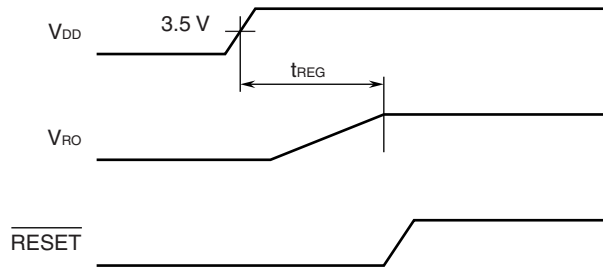

25.6 DC Characteristics

25.6.1 I/O level

(T_A = –40 to +85°C, V_{DD} = EV_{DD} = 3.5 V to 5.5 V, 4.0 V ≤ AV_{REF0} ≤ 5.5 V, V_{SS} = EV_{SS} = AV_{SS} = 0 V)

(1/2)

Parameter	Symbol	Conditions	MIN.	TYP.	MAX.	Unit
Input voltage, high	V_{IH1}	P30, P34, P41, P98, PCM0, PCM1, PDL0 to PDL7	0.7EV_{DD}		EV_{DD}	V
	V_{IH2}	P00 to P06, P31 to P33, P35, P40, P42, P50 to P55, P90, P91, P96, P97, P99, P913 to P915	0.8EV_{DD}		EV_{DD}	V
	V_{IH4}	P70 to P79	0.7AV_{REF0}		AV_{REF0}	V
	V_{IH5}	$\overline{RESET}$, FLMD0	0.8EV_{DD}		EV_{DD}	V
Input voltage, low	V_{IL1}	P30, P34, P41, P98, PCM0, PCM1, PDL0 to PDL7	EV_{SS}		0.3EV_{DD}	V
	V_{IL2}	P00 to P06, P31 to P33, P35, P40, P42, P50 to P55, P90, P91, P96, P97, P99, P913 to P915	EV_{SS}		0.2EV_{DD}	V
	V_{IL4}	P70 to P79	AV_{SS}		0.3AV_{REF0}	V
	V_{IL5}	$\overline{RESET}$, FLMD0	EV_{SS}		0.2EV_{DD}	V

Remark Unless specified otherwise, the characteristics of alternate-function pins are the same as those of port pins.

(T_A = –40 to +85°C, V_{DD} = EV_{DD} = 3.5 V to 5.5 V, 4.0 V ≤ AV_{REF0} ≤ 5.5 V, V_{SS} = EV_{SS} = AV_{SS} = 0 V)

(2/2)

Parameter	Symbol	Conditions		MIN.	TYP.	MAX.	Unit
Output voltage, high[Note 1]	V_{OH1}	P00 to P06, P30 to P35, P40 to P42, P50 to P55, P90, P91, P96 to P99, P913 to P915, PCM0, PCM1, PDL0 to PDL7	I_{OH} = –1.0 mA	EV_{DD} – 1.0		EV_{DD}	V
			I_{OH} = –0.1 mA	EV_{DD} – 0.5		EV_{DD}	V
	V_{OH3}	P70 to P79	I_{OH} = –1.0 mA	AV_{REF0} – 1.0		AV_{REF0}	V
			I_{OH} = –0.1 mA	AV_{REF0} – 0.5		AV_{REF0}	V
Output voltage, low[Note 1]	V_{OL1}	P00 to P06, P30 to P35, P40 to P42, P50 to P55, P90, P91, P96 to P99, P913 to P915, PCM0, PCM1, PDL0 to PDL7	I_{OL} = 1.0 mA	0		0.4	V
	V_{OL3}	P70 to P79	I_{OL} = 1.0 mA	0		0.4	V
Pull-up resistor	R_1	V_I = 0 V		10	30	100	kΩ
Pull-down resistor[Note 2]	R_2	V_I = V_{DD}		10	30	100	kΩ

Notes 1. The maximum value of the total of I_{OH}/I_{OL} is 20 mA/–20 mA for each power supply (EV_{DD}, AV_{REF0}).

2. $\overline{\text{DRST}}$ pin only

Remark Unless specified otherwise, the characteristics of alternate-function pins are the same as those of port pins.

25.6.2 Pin leakage current

(T_A = –40 to +85°C, V_{DD} = EV_{DD} = 3.5 V to 5.5 V, 4.0 V ≤ AV_{REF0} ≤ 5.5 V, V_{SS} = EV_{SS} = AV_{SS} = 0 V)

Parameter	Symbol	Conditions		MIN.	TYP.	MAX.	Unit
Input leakage current, high[Note]	I_{LIH1}	V_{IN} = V_{DD}	Analog pin			+0.2	μA
			Other than analog pin			+0.5	
Input leakage current, low[Note]	I_{LIL1}	V_{IN} = 0 V	Analog pin			–0.2	μA
			Other than analog pin			–0.5	
Output leakage current, high	I_{LOH1}	V_O = V_{DD}	Analog pin			+0.2	μA
			Other than analog pin			+0.5	
Output leakage current, low	I_{LOL1}	V_O = 0 V	Analog pin			–0.2	μA
			Other than analog pin			–0.5	

Note The value of the FLMD0 pin is as follows.

- Input leakage current, high: 2 μA (MAX.)
- Input leakage current, low: –2 μA (MAX.)

25.6.3 Supply current

(T_A = –40 to +85°C, V_{DD} = EV_{DD} = 3.5 V to 5.5 V, 4.0 V ≤ AV_{REF0} ≤ 5.5 V, V_{SS} = EV_{SS} = AV_{SS} = 0 V)

Parameter	Symbol	Conditions			MIN.	TYP.	MAX.	Unit
Supply current[Note 1]	I_{DD1}	Normal operation mode	f_{XX} = 20 MHz (f_X = 5 MHz)	All peripheral function operating		25	40	mA
				All peripheral function stopped		21		mA
	I_{DD2}	HALT mode	f_{XX} = 20 MHz (f_X = 5 MHz)	All peripheral function operating		14	24	mA
				All peripheral function stopped		9		mA
	I_{DD3}	IDLE1 mode	f_{XX} = 5 MHz (f_X = 5 MHz), PLL off			0.6	0.9	mA
	I_{DD4}	IDLE2 mode	f_{XX} = 5 MHz (f_X = 5 MHz), PLL off			0.25	0.7	mA
	I_{DD5}	Subclock operation mode[Notes 2, 3]	Crystal resonator (f_{XT} = 32.768 kHz)			200	400	μA
			RC resonator (f_{XT} = 40 kHz [Note 4])			200	400	μA
	I_{DD6}	Sub-IDLE mode[Notes 2, 3]	Crystal resonator (f_{XT} = 32.768 kHz)			20	120	μA
			RC resonator (f_{XT} = 40 kHz[Note 4])			35	140	μA
	I_{DD7}	Stop mode[Notes 2, 5]	POC stopped, internal oscillator stopped			7	50	μA
			POC operating, internal oscillator stopped			10	55	μA
			POC stopped, internal oscillator operating			15	65	μA
			POC operating, internal oscillator operating			18	70	μA

Notes 1. Total current of V_{DD} and EV_{DD} (all ports stopped). The current of AV_{REF0} and the port buffer current including the current flowing through the on-chip pull-up/pull-down resistors are not included.

2. When the main clock oscillation is stopped.

3. POC operating, internal oscillator operating.

4. The RC oscillation frequency is 40 kHz (TYP.). This clock is internally divided by 2.

5. When the subclock oscillation is not used.

25.7 Data Retention Characteristics

STOP Mode (T_A = –40 to +85°C, V_{DD} = EV_{DD} = 1.9 V to 5.5 V, V_{SS} = EV_{SS} = AV_{SS} = 0 V)

Parameter	Symbol	Conditions	MIN.	TYP.	MAX.	Unit
Data retention voltage	V_{DDDR}	In STOP mode	1.9		5.5	V
Data retention current	I_{DDDR}	V_{DDDR} = 2.0 V		6	45	μA
Supply voltage rise time	t_{RVD}		1			μs
Supply voltage fall time	t_{FVD}		1			μs
Supply voltage retention time	t_{HVD}	After STOP mode release	0			ms
STOP release signal input time	t_{DREL}	After V_{DD} reaches MIN.: 3.5 V	0			ms
Data retention input voltage, high	V_{IHDR}	All input ports	$0.9V_{DDDR}$		V_{DDDR}	V
Data retention input voltage, low	V_{ILDR}	All input ports	0		$0.1V_{DDDR}$	V

Caution Shifting to STOP mode and restoring from STOP mode must be performed within the rated operating range.

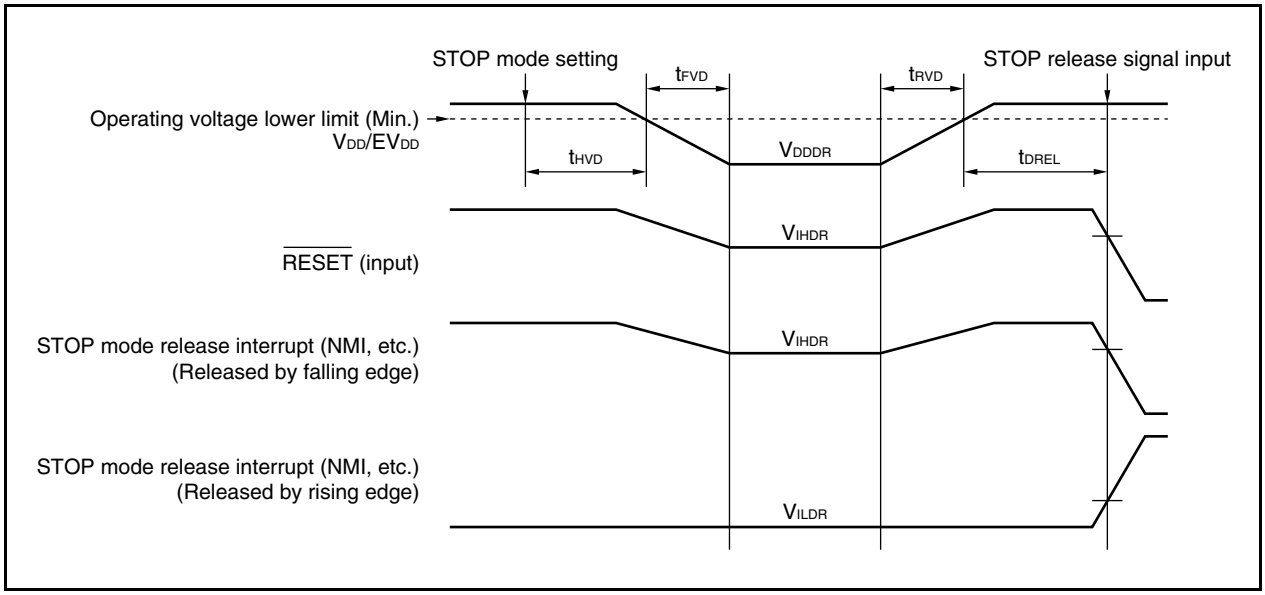

25.8 AC Characteristics

(1) AC test input measurement points (V_{DD}, AV_{REF0}, EV_{DD})

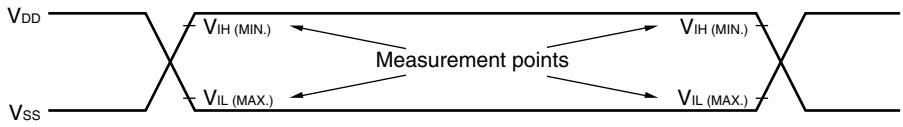

(2) AC test output measurement points

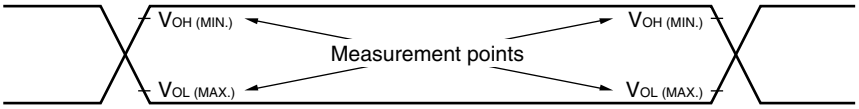

(3) Load conditions

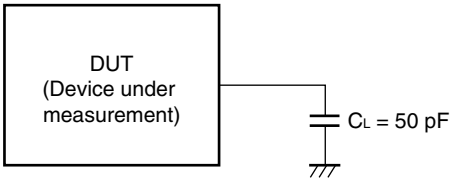

Caution If the load capacitance exceeds 50 pF due to the circuit configuration, bring the load capacitance of the device to 50 pF or less by inserting a buffer or by some other means.

25.8.1 CLKOUT output timing

(T_A = –40 to +85°C, V_{DD} = EV_{DD} = 3.5 V to 5.5 V, 4.0 V ≤ AV_{REF0} ≤ 5.5 V, V_{SS} = EV_{SS} = AV_{SS} = 0 V, C_L = 50 pF)

Parameter	Symbol	Conditions	MIN.	MAX.	Unit
Output cycle	t_{CYK}		50 ns	80 μs	
High-level width	t_{WKH}		t_{CYK}/2 – 15		ns
Low-level width	t_{WKL}		t_{CYK}/2 – 15		ns
Rise time	t_{KR}			15	ns
Fall time	t_{KF}			15	ns

Clock Timing

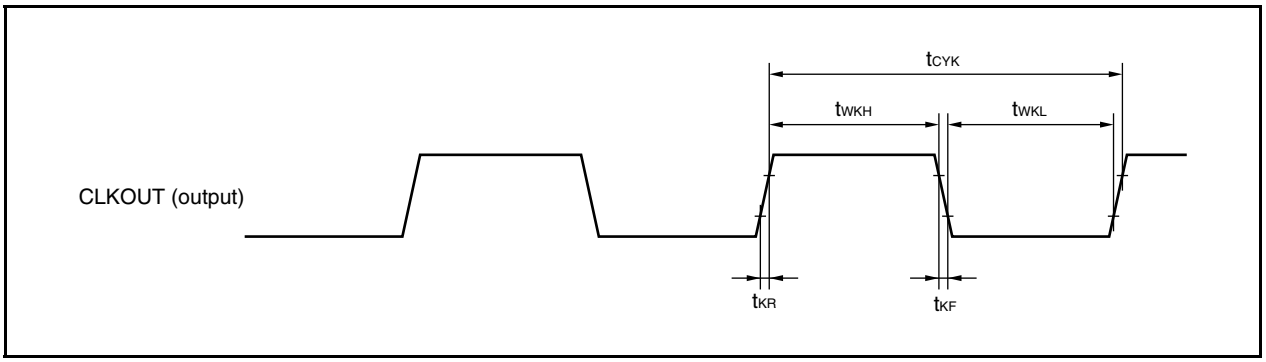

25.9 Basic Operation

(1) Reset, interrupt timing

(T_A = –40 to +85°C, V_{DD} = EV_{DD} = 3.5 V to 5.5 V, 4.0 V ≤ AV_{REF0} ≤ 5.5 V, V_{SS} = EV_{SS} = AV_{SS} = 0 V, C_L = 50 pF)

Parameter	Symbol	Conditions	MIN.	MAX.	Unit
$\overline{\text{RESET}}$ low-level width	t_{WRSL}		500		ns
NMI high-level width	t_{WNIH}	Analog noise elimination	500		ns
NMI low-level width	t_{WNIL}	Analog noise elimination	500		ns
INTPn[Note 1] high-level width	t_{WITH}	Analog noise elimination (n = 0 to 7)	500		ns
		Digital noise elimination (n = 3)	**Note 2**		ns
INTPn[Note 1] low-level width	t_{WITL}	Analog noise elimination (n = 0 to 7)	500		ns
		Digital noise elimination (n = 3)	**Note 2**		ns

Notes 1. The same value as the INTP0/P03 pin applies in the case of the ADTRG pin. The same value as the INTP2/P05 pin applies in the case of the $\overline{\text{DRST}}$ pin.

2. $2T_{samp}$ + 20 or $3T_{samp}$ + 20

T_{samp}: Sampling clock for noise elimination

Reset/Interrupt

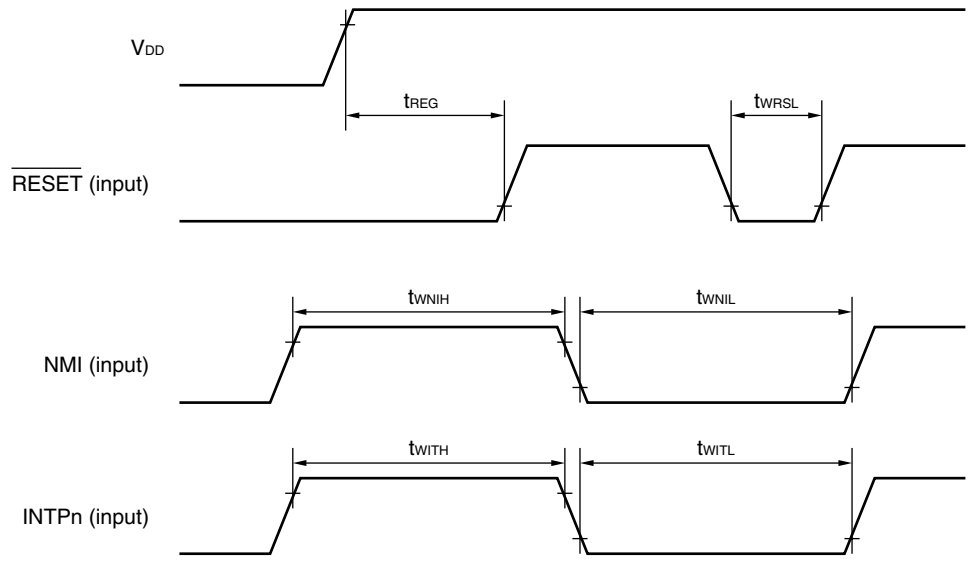

Remark n = 0 to 7

(2) Key interrupt timing

(T_A = –40 to +85°C, V_{DD} = EV_{DD} = 3.5 V to 5.5 V, 4.0 V ≤ AV_{REF0} ≤ 5.5 V, V_{SS} = EV_{SS} = AV_{SS} = 0 V, C_L = 50 pF)

Parameter	Symbol	Conditions	MIN.	MAX.	Unit
KRn input high-level width	t_{WKRH}	Analog noise elimination (n = 0 to 7)	500		ns
KRn input low-level width	t_{WKRL}		500		ns

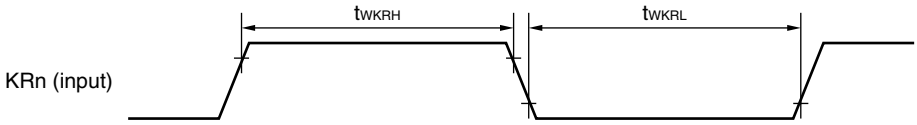

Remark n = 0 to 7

(3) Timer input timing

(T_A = –40 to +85°C, V_{DD} = EV_{DD} = 3.5 V to 5.5 V, 4.0 V ≤ AV_{REF0} ≤ 5.5 V, V_{SS} = EV_{SS} = AV_{SS} = 0 V, C_L = 50 pF)

Parameter	Symbol	Conditions	MIN.	MAX.	Unit
TIn high-level width	t_{TIH}	TIP00, TIP01, TIP10, TIP11, TIP20, TIP21, TIP30, TIP31, TIQ00 to TIQ03[Note 1]	**Note 2**		ns
TIn low-level width	t_{TIL}		**Note 2**		ns

Notes 1. Noise on the TIP00, TIP10, TIP20, TIP30, and TIQ00 pins can be eliminated only when a capture signal is input.
The noise cannot be eliminated when an external trigger signal or an external event counter signal is input.

2. $2T_{samp}$ + 20 or $3T_{samp}$ + 20
T_{samp}: Sampling clock for noise elimination

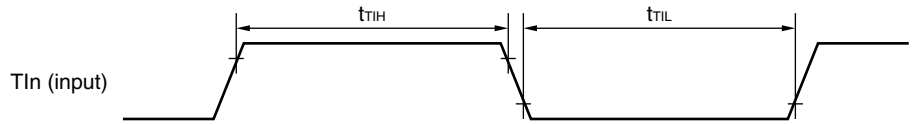

Remark TIn: TIP00, TIP01, TIP10 TIP11, TIP20, TIP21, TIP30, TIP31, TIQ00 to TIQ03

(4) CSIB timing

(a) Master mode

(T_A = –40 to +85°C, V_{DD} = EV_{DD} = 3.5 V to 5.5 V, 4.0 V ≤ AV_{REF0} ≤ 5.5 V, V_{SS} = EV_{SS} = AV_{SS} = 0 V, C_L = 50 pF)

Parameter	Symbol	Conditions	MIN.	MAX.	Unit
$\overline{SCKBn}$ cycle time	t_{KCYn}		125		ns
$\overline{SCKBn}$ high-level width	t_{KHn}		t_{KCYn}/2 – 15		ns
$\overline{SCKBn}$ low-level width	t_{KLn}		t_{KCYn}/2 – 15		ns
SIBn setup time (to $\overline{SCKBn}$↑)	t_{SIKn}		30		ns
SIBn hold time (from $\overline{SCKBn}$↑)	t_{KSIn}		25		ns
Output delay time from $\overline{SCKBn}$↓ to SOBn	t_{KSOn}			25	ns

Remark n = 0, 1

(b) Slave mode

(T_A = –40 to +85°C, V_{DD} = EV_{DD} = 3.5 V to 5.5 V, 4.0 V ≤ AV_{REF0} ≤ 5.5 V, V_{SS} = EV_{SS} = AV_{SS} = 0 V, C_L = 50 pF)

Parameter	Symbol	Conditions	MIN.	MAX.	Unit
$\overline{SCKBn}$ cycle time	t_{KCYn}		200		ns
$\overline{SCKBn}$ high-level width	t_{KHn}		90		ns
$\overline{SCKBn}$ low-level width	t_{KLn}		90		ns
SIBn setup time (to $\overline{SCKBn}$↑)	t_{SIKn}		50		ns
SIBn hold time (from $\overline{SCKBn}$↑)	t_{KSIn}		50		ns
Output delay time from $\overline{SCKBn}$↓ to SOBn	t_{KSOn}			50	ns

Remark n = 0, 1

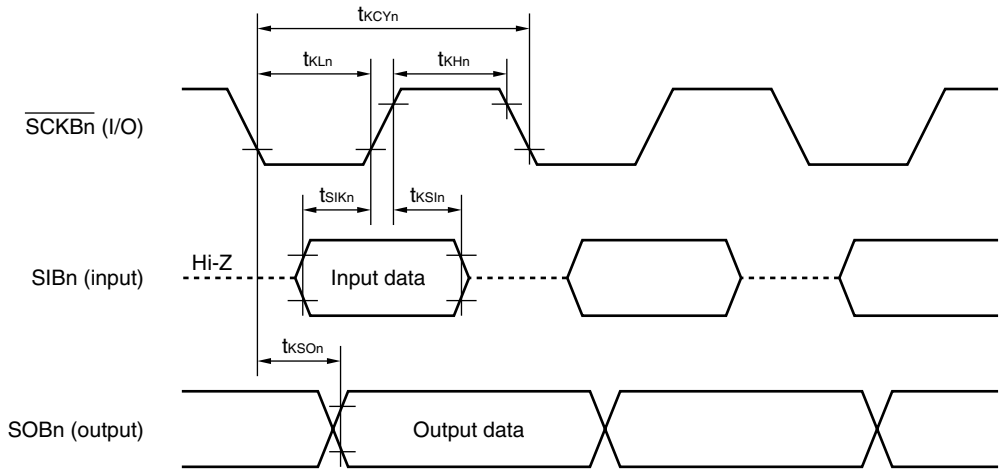

Remark n = 0, 1

(5) UARTA timing

(T_A = –40 to +85°C, V_{DD} = EV_{DD} = 3.5 V to 5.5 V, 4.0 V ≤ AV_{REF0} ≤ 5.5 V, V_{SS} = EV_{SS} = AV_{SS} = 0 V, C_L = 50 pF)

Parameter	Symbol	Conditions	MIN.	MAX.	Unit
Communication rate				312.5	kbps
ASCK0 cycle time				10	MHz

(6) A/D converter

(T_A = –40 to +85°C, V_{DD} = EV_{DD} = 3.5 V to 5.5 V, 4.0 V ≤ AV_{REF0} ≤ 5.5 V, V_{SS} = EV_{SS} = AV_{SS} = 0 V, C_L = 50 pF)

Parameter	Symbol	Conditions	MIN.	TYP.	MAX.	Unit
Resolution					10	bit
Overall error[Note]		4.0 ≤ AV_{REF0} ≤ 5.5 V		±0.15	±0.3	%FSR
Conversion time	t_{CONV}		3.1		16	μs
Analog input voltage	V_{IAN}		AV_{SS}		AV_{REF0}	V
AV_{REF0} current	I_{AREF0}	When using A/D converter		5	10	mA
		When not using A/D converter		1	10	μA

Note Excluding quantization error (±0.05 %FSR). Indicates the ratio to the full-scale value (%FSR).

Remark FSR: Full Scale Range

(7) POC circuit characteristics

(T_A = –40 to +85°C, V_{DD} = EV_{DD} = 3.5 V to 5.5 V, 4.0 V ≤ AV_{REF0} ≤ 5.5 V, V_{SS} = EV_{SS} = AV_{SS} = 0 V, C_L = 50 pF)

Parameter	Symbol	Conditions	MIN.	TYP.	MAX.	Unit
Detection voltage	V_{POC0}		3.5	3.7	3.9	V
Power supply startup time	t_{PTH}	V_{DD} = 0 V → 3.5 V	0.002			ms
Response delay time 1[Note 1]	t_{PTHD}	After V_{DD} reaches 3.9 V on power application			3.0	ms
Response delay time 2[Note 2]	t_{PD}	After V_{DD} drops below 3.5 V on power drop			1	ms
Minimum V_{DD} width	t_{PW}		0.2			ms

Notes 1. The time required to release a reset after the detection voltage is detected.

2. The time required to output a reset after the detection voltage is detected.

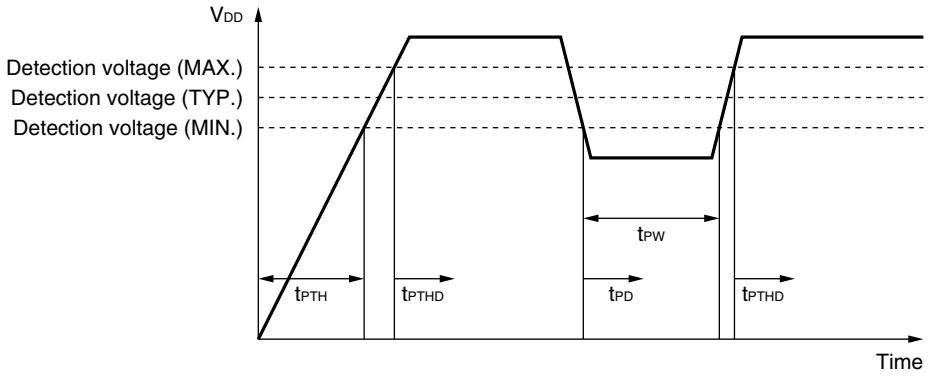

(8) LVI circuit characteristics

(T_A = –40 to +85°C, V_{DD} = EV_{DD} = 3.5 V to 5.5 V, 4.0 V ≤ AV_{REF0} ≤ 5.5 V, V_{SS} = EV_{SS} = AV_{SS} = 0 V, C_L = 50 pF)

Parameter	Symbol	Conditions	MIN.	TYP.	MAX.	Unit
Detection voltage	V_{LVI0}		4.2	4.4	4.6	V
	V_{LVI1}		4.0	4.2	4.4	V
Response time[Note 1]	t_{LD}	After V_{DD} reaches V_{LVI0}/V_{LVI1} (MAX.) or drops below V_{LVI0}/V_{LVI1} (MIN.)		0.2	2	ms
Minimum V_{DD} width	t_{LW}		0.2			ms
Reference voltage stabilization wait time[Note 2]	t_{LWAIT}	After V_{DD} reaches 3.5 V or LVION bit (LVIM.bit7) changes from 0 to 1		0.1	0.2	ms

Notes 1. The time required to output an interrupt/reset after the detection voltage is detected.

2. Unnecessary when the POC function is used.

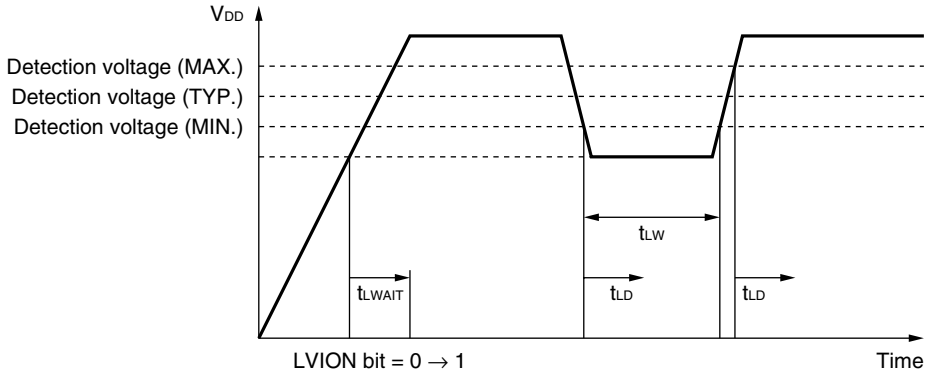

(9) RAM retention flag characteristics

(T_A = –40 to +85°C, V_{DD} = EV_{DD} = 3.5 V to 5.5 V, 4.0 V ≤ AV_{REF0} ≤ 5.5 V, V_{SS} = EV_{SS} = AV_{SS} = 0 V, C_L = 50 pF)

Parameter	Symbol	Conditions	MIN.	TYP.	MAX.	Unit
Detection voltage	V_{RAMH}		1.9	2.0	2.1	V
Supply voltage rise time	t_{RAMHTH}	V_{DD} = 0 V → 3.5 V	0.002		1800	ms
Response time[Note]	t_{RAMHD}	After the supply voltage reaches the detection voltage (MAX.)		0.2	2.0	ms
Minimum V_{DD} width	t_{RAMHW}		0.2			ms

Note Time required to set the RAMF bit after the detection voltage is detected.

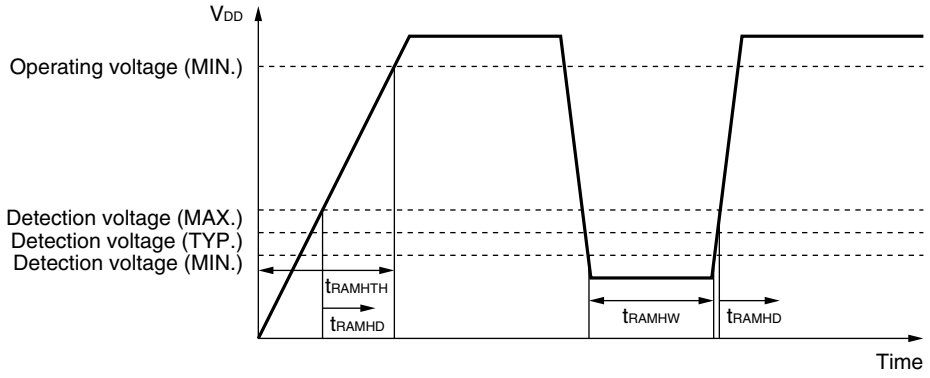

25.10 Flash Memory Programming Characteristics

(1) Basic characteristics

(T_A = –40 to +85°C, V_{DD} = EV_{DD} = 3.5 V to 5.5 V, 4.0 V ≤ AV_{REF0} ≤ 5.5 V, V_{SS} = EV_{SS} = AV_{SS} = 0 V, C_L = 50 pF)

Parameter	Symbol	Conditions	MIN.	TYP.	MAX.	Unit
Operating frequency	f_{CPU}		4		20	MHz
Supply voltage	V_{DD}		3.5		5.5	V
Number of writes	C_{WRT} Note				100	Times
Input voltage, high	V_{IH}	FLMD0	0.8EV_{DD}		EV_{DD}	V
Input voltage, low	V_{IL}	FLMD0	EV_{SS}		0.2EV_{SS}	V
Write time + erase time	t_{IWRT} + t_{ERASE}				TBD	s
Programming temperature	t_{PRG}		–40		+85	°C

Note When writing initially to shipped products, it is counted as one rewrite for both “erase to write” and “write only”.

Example (P: Write, E: Erase)
Shipped product → P → E → P → E → P: 3 rewrites
Shipped product → E → P → E → P → E → P: 3 rewrites

(2) Serial write operation characteristics

(T_A = –40 to +85°C, V_{DD} = EV_{DD} = 3.5 V to 5.5 V, 4.0 V ≤ AV_{REF0} ≤ 5.5 V, V_{SS} = EV_{SS} = AV_{SS} = 0 V, C_L = 50 pF)

Parameter	Symbol	Conditions	MIN.	TYP.	MAX.	Unit
FLMD0 setup time from $\overline{RESET}$↑	t_{RFCF}		70536/f_X			s
Count execution time	t_{COUNT}				3	ms
FLMD0 high-level width	t_{CH}		10		100	μs
FLMD0 low-level width	t_{CL}		10		100	μs
FLMD0 rise time	t_R				50	ns
FLMD0 fall time	t_F				50	ns

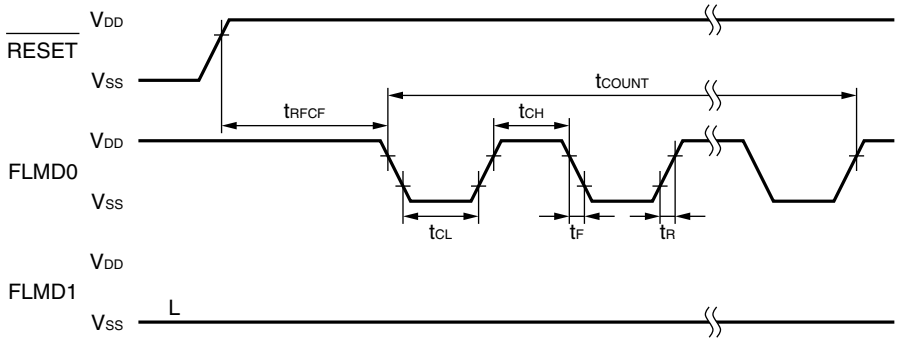

64-PIN PLASTIC LQFP (10x10)

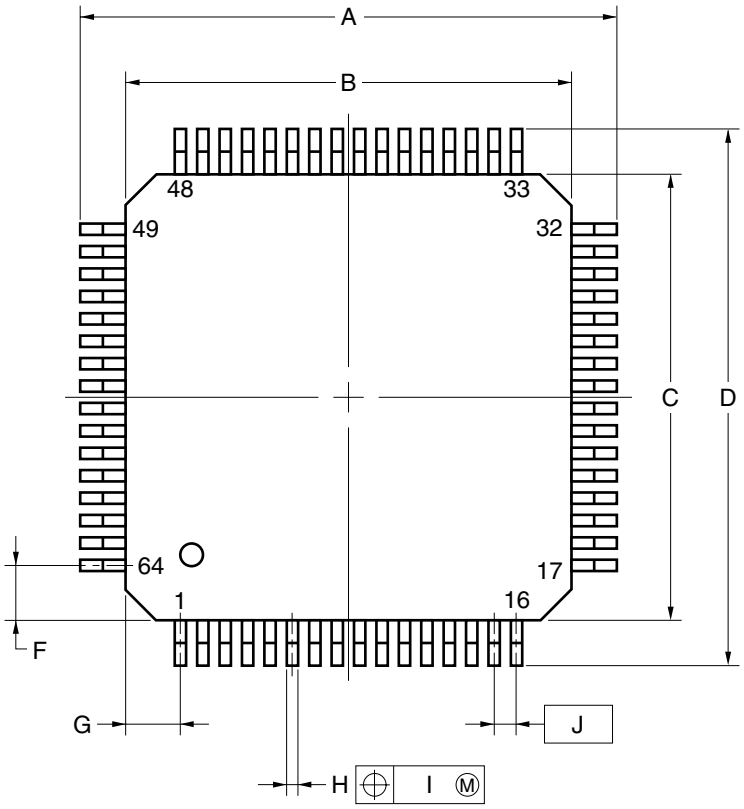

detail of lead end

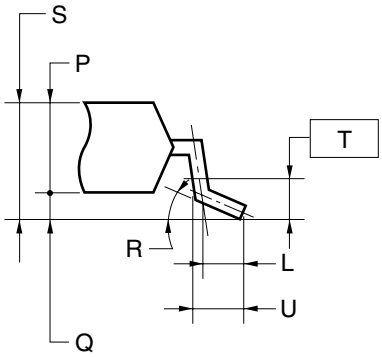

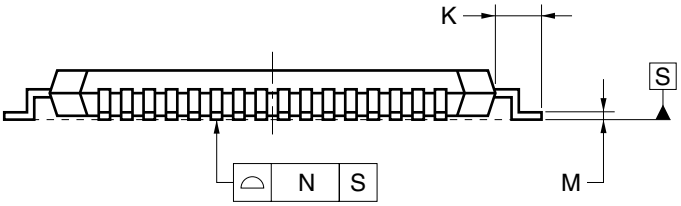

NOTE

Each lead centerline is located within 0.08 mm of its true position (T.P.) at maximum material condition.

ITEM	MILLIMETERS
A	12.0±0.2
B	10.0±0.2
C	10.0±0.2
D	12.0±0.2
F	1.25
G	1.25
H	0.22±0.05
I	0.08
J	0.5 (T.P.)
K	1.0±0.2
L	0.5
M	$0.17^{+0.03}_{-0.07}$
N	0.08
P	1.4
Q	0.1±0.05
R	$3^{\circ}{}^{+4^{\circ}}_{-3^{\circ}}$
S	1.5±0.10
T	0.25
U	0.6±0.15

S64GB-50-8EU-2

APPENDIX A REGISTER INDEX

(1/6)

Symbol	Name	Unit	Page
ADA0CR0	A/D conversion result register 0	ADC	396
ADA0CR0H	A/D conversion result register 0H	ADC	396
ADA0CR1	A/D conversion result register 1	ADC	396
ADA0CR1H	A/D conversion result register 1H	ADC	396
ADA0CR2	A/D conversion result register 2	ADC	396
ADA0CR2H	A/D conversion result register 2H	ADC	396
ADA0CR3	A/D conversion result register 3	ADC	396
ADA0CR3H	A/D conversion result register 3H	ADC	396
ADA0CR4	A/D conversion result register 4	ADC	396
ADA0CR4H	A/D conversion result register 4H	ADC	396
ADA0CR5	A/D conversion result register 5	ADC	396
ADA0CR5H	A/D conversion result register 5H	ADC	396
ADA0CR6	A/D conversion result register 6	ADC	396
ADA0CR6H	A/D conversion result register 6H	ADC	396
ADA0CR7	A/D conversion result register 7	ADC	396
ADA0CR7H	A/D conversion result register 7H	ADC	396
ADA0CR8	A/D conversion result register 8	ADC	396
ADA0CR8H	A/D conversion result register 8H	ADC	396
ADA0CR9	A/D conversion result register 9	ADC	396
ADA0CR9H	A/D conversion result register 9H	ADC	396
ADA0M0	A/D converter mode register 0	ADC	391
ADA0M1	A/D converter mode register 1	ADC	393
ADA0M2	A/D converter mode register 2	ADC	394
ADA0PFM	Power-fail compare mode register	ADC	398
ADA0PFT	Power-fail compare threshold value register	ADC	398
ADA0S	A/D converter channel specification register 0	ADC	395
ADIC	Interrupt control register	INTC	498
CB0CTL0	CSIB0 control register 0	CSI	455
CB0CTL1	CSIB0 control register 1	CSI	458
CB0CTL2	CSIB0 control register 2	CSI	459
CB0RIC	Interrupt control register	INTC	498
CB0RX	CSIB0 receive data register	CSI	454
CB0RXL	CSIB0 receive data register L	CSI	454
CB0STR	CSIB0 status register	CSI	461
CB0TIC	Interrupt control register	INTC	498
CB0TX	CSIB0 transmit data register	CSI	454
CB0TXL	CSIB0 transmit data register L	CSI	454
CB1CTL0	CSIB1 control register 0	CSI	455
CB1CTL1	CSIB1 control register 1	CSI	458
CB1CTL2	CSIB1 control register 2	CSI	459

(2/6)

Symbol	Name	Unit	Page
CB1RIC	Interrupt control register	INTC	498
CB1RX	CSIB1 receive data register	CSI	454
CB1RXL	CSIB1 receive data register L	CSI	454
CB1STR	CSIB1 status register	CSI	461
CB1TIC	Interrupt control register	INTC	498
CB1TX	CSIB1 transmit data register	CSI	454
CB1TXL	CSIB1 transmit data register L	CSI	454
CCLS	CPU operation clock status register	CG	154
CLM	Clock monitor mode register	CLM	546
CTBP	CALLT base pointer	CPU	48
CTPC	CALLT execution status saving register	CPU	47
CTPSW	CALLT execution status saving register	CPU	47
DBPC	Exception/debug trap status saving register	CPU	48
DBPSW	Exception/debug trap status saving register	CPU	48
ECR	Interrupt source register	CPU	45
EIPC	Interrupt status saving register	CPU	44
EIPSW	Interrupt status saving register	CPU	44
FEPC	NMI status saving register	CPU	45
FEPSW	NMI status saving register	CPU	45
IMR0	Interrupt mask register 0	INTC	499
IMR0H	Interrupt mask register 0H	INTC	499
IMR0L	Interrupt mask register 0L	INTC	499
IMR1	Interrupt mask register 1	INTC	499
IMR1H	Interrupt mask register 1H	INTC	499
IMR1L	Interrupt mask register 1L	INTC	499
IMR2	Interrupt mask register 2	INTC	499
IMR2H	Interrupt mask register 2H	INTC	499
IMR2L	Interrupt mask register 2L	INTC	499
INTF0	External interrupt falling edge specification register 0	INTC	81, 510
INTF3L	External interrupt falling edge specification register 3L	INTC	87, 511
INTF9H	External interrupt falling edge specification register 9H	INTC	109, 512
INTR0	External interrupt rising edge specification register 0	INTC	81, 510
INTR3L	External interrupt rising edge specification register 3L	INTC	88, 511
INTR9H	External interrupt rising edge specification register 9H	INTC	110, 512
ISPR	In-service priority register	INTC	500
KRIC	Interrupt control register	INTC	498
KRM	Key return mode register	KR	518
LOCKR	Lock register	CG	157
LVIIC	Interrupt control register	INTC	498
LVIM	Low-voltage detection register	LVI	553
LVIS	Low-voltage detection level select register	LVI	554
NFC	Noise elimination control register	INTC	513
OCDM	On-chip debug mode register	Debug	588
OSTS	Oscillation stabilization time select register	WDT	523

(3/6)

Symbol	Name	Unit	Page
P0	Port 0	Port	78
P00NFC	TIP00 pin noise elimination control register	Timer	177
P01NFC	TIP01 pin noise elimination control register	Timer	177
P10NFC	TIP10 pin noise elimination control register	Timer	177
P11NFC	TIP11 pin noise elimination control register	Timer	177
P20NFC	TIP20 pin noise elimination control register	Timer	177
P21NFC	TIP21 pin noise elimination control register	Timer	177
P30NFC	TIP30 pin noise elimination control register	Timer	177
P31NFC	TIP31 pin noise elimination control register	Timer	177
P3L	Port 3L	Port	84
P4	Port 4	Port	90
P5	Port 5	Port	93
P7H	Port 7H	Port	99
P7L	Port 7L	Port	99
P9	Port 9	Port	102
P9H	Port 9H	Port	102
P9L	Port 9L	Port	102
PC	Program counter	CPU	42
PCC	Processor clock control register	CG	150
PCLM	Programmable clock mode register	CG	159
PCM	Port CM	Port	112
PDLL	Port DLL	Port	115
PEMU1	Peripheral emulation register 1	LVI	559
PFC0	Port function control register 0	Port	80
PFC3L	Port function control register 3L	Port	86
PFC5	Port function control register 5	Port	95
PFC9	Port function control register 9	Port	106
PFC9H	Port function control register 9H	Port	106
PFC9L	Port function control register 9L	Port	106
PFCE3L	Port function control expansion register 3L	Port	86
PFCE5	Port function control expansion register 5	Port	95
PFCE9	Port function control expansion register 9	Port	106
PFCE9H	Port function control expansion register 9H	Port	106
PFCE9L	Port function control expansion register 9L	Port	106
PIC0	Interrupt control register	INTC	498
PIC1	Interrupt control register	INTC	498
PIC2	Interrupt control register	INTC	498
PIC3	Interrupt control register	INTC	498
PIC4	Interrupt control register	INTC	498
PIC5	Interrupt control register	INTC	498
PIC6	Interrupt control register	INTC	498
PIC7	Interrupt control register	INTC	498
PLLCTL	PLL control register	CG	156
PLLS	PLL lockup time specification register	CG	158

(4/6)

Symbol	Name	Unit	Page
PM0	Port mode register 0	Port	78
PM3L	Port mode register 3L	Port	84
PM4	Port mode register 4	Port	90
PM5	Port mode register 5	Port	93
PM7H	Port mode register 7H	Port	100
PM7L	Port mode register 7L	Port	100
PM9	Port mode register 9	Port	103
PM9H	Port mode register 9H	Port	103
PM9L	Port mode register 9L	Port	103
PMC0	Port mode control register 0	Port	79
PMC3L	Port mode control register 3L	Port	85
PMC4	Port mode control register 4	Port	91
PMC5	Port mode control register 5	Port	94
PMC9	Port mode control register 9	Port	104
PMC9H	Port mode control register 9H	Port	104
PMC9L	Port mode control register 9L	Port	104
PMCCM	Port mode control register CM	Port	113
PMCM	Port mode register CM	Port	112
PMDLL	Port mode register DLL	Port	115
PRCMD	Command register	CPU	68
PRSCM0	Prescaler compare register 0	WT	375, 480
PRSM0	Prescaler mode register 0	WT	374, 479
PSC	Power save control register	CG	521
PSMR	Power save mode register	CG	522
PSW	Program status word	CPU	46
PU0	Pull-up resistor option register 0	Port	80
PU3L	Pull-up resistor option register 3L	Port	87
PU4	Pull-up resistor option register 4	Port	91
PU5	Pull-up resistor option register 5	Port	97
PU9	Pull-up resistor option register 9	Port	109
PU9H	Pull-up resistor option register 9H	Port	109
PU9L	Pull-up resistor option register 9L	Port	109
Q00NFC	TIQ00 pin noise elimination control register	Timer	277
Q01NFC	TIQ01 pin noise elimination control register	Timer	277
Q02NFC	TIQ02 pin noise elimination control register	Timer	277
Q03NFC	TIQ03 pin noise elimination control register	Timer	277
r0 to r31	General-purpose register	CPU	42
RAMS	Internal RAM data status register	CG	554
RCM	Internal oscillation mode register	CG	154
RESF	Reset source flag register	Reset	540
SELCNT0	Selector operation control register 0	Timer	254
SYS	System status register	CPU	69
TM0CMP0	TMM0 compare register 0	Timer	364
TM0CTL0	TMM0 control register 0	Timer	365

(5/6)

Symbol	Name	Unit	Page
TM0EQIC0	Interrupt control register	INTC	498
TP0CCIC0	Interrupt control register	INTC	498
TP0CCIC1	Interrupt control register	INTC	498
TP0CCR0	TMP0 capture/compare register 0	Timer	172
TP0CCR1	TMP0 capture/compare register 1	Timer	174
TP0CNT	TMP0 counter read buffer register	Timer	176
TP0CTL0	TMP0 control register 0	Timer	165
TP0CTL1	TMP0 control register 1	Timer	166
TP0IOC0	TMP0 I/O control register 0	Timer	168
TP0IOC1	TMP0 I/O control register 1	Timer	169
TP0IOC2	TMP0 I/O control register 2	Timer	170
TP0OPT0	TMP0 option register 0	Timer	171
TP0OVIC	Interrupt control register	INTC	498
TP1CCIC0	Interrupt control register	INTC	498
TP1CCIC1	Interrupt control register	INTC	498
TP1CCR0	TMP1 capture/compare register 0	Timer	172
TP1CCR1	TMP1 capture/compare register 1	Timer	174
TP1CNT	TMP1 counter read buffer register	Timer	176
TP1CTL0	TMP1 control register 0	Timer	165
TP1CTL1	TMP1 control register 1	Timer	166
TP1IOC0	TMP1 I/O control register 0	Timer	168
TP1IOC1	TMP1 I/O control register 1	Timer	169
TP1IOC2	TMP1 I/O control register 2	Timer	170
TP1OPT0	TMP1 option register 0	Timer	171
TP1OVIC	Interrupt control register	INTC	498
TP2CCIC0	Interrupt control register	INTC	498
TP2CCIC1	Interrupt control register	INTC	498
TP2CCR0	TMP2 capture/compare register 0	Timer	172
TP2CCR1	TMP2 capture/compare register 1	Timer	174
TP2CNT	TMP2 counter read buffer register	Timer	176
TP2CTL0	TMP2 control register 0	Timer	165
TP2CTL1	TMP2 control register 1	Timer	166
TP2IOC0	TMP2 I/O control register 0	Timer	168
TP2IOC1	TMP2 I/O control register 1	Timer	169
TP2IOC2	TMP2 I/O control register 2	Timer	170
TP2OPT0	TMP2 option register 0	Timer	171
TP2OVIC	Interrupt control register	INTC	498
TP3CCIC0	Interrupt control register	INTC	498
TP3CCIC1	Interrupt control register	INTC	498
TP3CCR0	TMP3 capture/compare register 0	Timer	172
TP3CCR1	TMP3 capture/compare register 1	Timer	174
TP3CNT	TMP3 counter read buffer register	Timer	176
TP3CTL0	TMP3 control register 0	Timer	165
TP3CTL1	TMP3 control register 1	Timer	166

(6/6)

Symbol	Name	Unit	Page
TP3IOC0	TMP3 I/O control register 0	Timer	168
TP3IOC1	TMP3 I/O control register 1	Timer	169
TP3IOC2	TMP3 I/O control register 2	Timer	170
TP3OPT0	TMP3 option register 0	Timer	171
TP3OVIC	Interrupt control register	INTC	498
TQ0CCIC0	Interrupt control register	INTC	498
TQ0CCIC1	Interrupt control register	INTC	498
TQ0CCIC2	Interrupt control register	INTC	498
TQ0CCIC3	Interrupt control register	INTC	498
TQ0CCR0	TMQ0 capture/compare register 0	Timer	268
TQ0CCR1	TMQ0 capture/compare register 1	Timer	270
TQ0CCR2	TMQ0 capture/compare register 2	Timer	272
TQ0CCR3	TMQ0 capture/compare register 3	Timer	274
TQ0CNT	TMQ0 counter read buffer register	Timer	276
TQ0CTL0	TMQ0 control register 0	Timer	261
TQ0CTL1	TMQ0 control register 1	Timer	262
TQ0IOC0	TMQ0 I/O control register 0	Timer	264
TQ0IOC1	TMQ0 I/O control register 1	Timer	265
TQ0IOC2	TMQ0 I/O control register 2	Timer	266
TQ0OPT0	TMQ0 option register 0	Timer	267
TQ0OVIC	Interrupt control register	INTC	498
UA0CTL0	UARTA0 control register 0	UART	422
UA0CTL1	UARTA0 control register 1	UART	444
UA0CTL2	UARTA0 control register 2	UART	445
UA0OPT0	UARTA0 option control register 0	UART	424
UA0RIC	Interrupt control register	INTC	498
UA0RX	UARTA0 receive data register	UART	427
UA0STR	UARTA0 status register	UART	425
UA0TIC	Interrupt control register	INTC	498
UA0TX	UARTA0 transmit data register	UART	427
UA1CTL0	UARTA1 control register 0	UART	422
UA1CTL1	UARTA1 control register 1	UART	444
UA1CTL2	UARTA1 control register 2	UART	445
UA1OPT0	UARTA1 option control register 0	UART	424
UA1RIC	Interrupt control register	INTC	498
UA1RX	UARTA1 receive data register	UART	427
UA1STR	UARTA1 status register	UART	425
UA1TIC	Interrupt control register	INTC	498
UA1TX	UARTA1 transmit data register	UART	427
VSWC	System wait control register	CPU	70
WDTE	Watchdog timer enable register	WDT	385
WDTM2	Watchdog timer mode register 2	WDT	383, 501
WTIC	Interrupt control register	INTC	498
WTIIC	Interrupt control register	INTC	498
WTM	Watch timer operation mode register	WT	376

APPENDIX B INSTRUCTION SET LIST

B.1 Conventions

(1) Register symbols used to describe operands

Register Symbol	Explanation
reg1	General-purpose registers: Used as source registers.
reg2	General-purpose registers: Used mainly as destination registers. Also used as source register in some instructions.
reg3	General-purpose registers: Used mainly to store the remainders of division results and the higher 32 bits of multiplication results.
bit#3	3-bit data for specifying the bit number
immX	X bit immediate data
dispX	X bit displacement data
regID	System register number
vector	5-bit data that specifies the trap vector (00H to 1FH)
cccc	4-bit data that shows the conditions code
sp	Stack pointer (r3)
ep	Element pointer (r30)
listX	X item register list

(2) Register symbols used to describe opcodes

Register Symbol	Explanation
R	1-bit data of a code that specifies reg1 or regID
r	1-bit data of the code that specifies reg2
w	1-bit data of the code that specifies reg3
d	1-bit displacement data
I	1-bit immediate data (indicates the higher bits of immediate data)
i	1-bit immediate data
cccc	4-bit data that shows the condition codes
CCCC	4-bit data that shows the condition codes of Bcond instruction
bbb	3-bit data for specifying the bit number
L	1-bit data that specifies a program register in the register list

(3) Register symbols used in operations

Register Symbol	Explanation
←	Input for
GR [ ]	General-purpose register
SR [ ]	System register
zero-extend (n)	Expand n with zeros until word length.
sign-extend (n)	Expand n with signs until word length.
load-memory (a, b)	Read size b data from address a.
store-memory (a, b, c)	Write data b into address a in size c.
load-memory-bit (a, b)	Read bit b of address a.
store-memory-bit (a, b, c)	Write c to bit b of address a.
saturated (n)	Execute saturated processing of n (n is a 2's complement). If, as a result of calculations, n ≥ 7FFFFFFFH, let it be 7FFFFFFFH. n ≤ 80000000H, let it be 80000000H.
result	Reflects the results in a flag.
Byte	Byte (8 bits)
Halfword	Half word (16 bits)
Word	Word (32 bits)
+	Addition
–	Subtraction
ll	Bit concatenation
×	Multiplication
÷	Division
%	Remainder from division results
AND	Logical product
OR	Logical sum
XOR	Exclusive OR
NOT	Logical negation
logically shift left by	Logical shift left
logically shift right by	Logical shift right
arithmetically shift right by	Arithmetic shift right

(4) Register symbols used in execution clock

Register Symbol	Explanation
i	If executing another instruction immediately after executing the first instruction (issue).
r	If repeating execution of the same instruction immediately after executing the first instruction (repeat).
l	If using the results of instruction execution in the instruction immediately after the execution (latency).

(5) Register symbols used in flag operations

Identifier	Explanation
(Blank)	No change
0	Clear to 0
X	Set or cleared in accordance with the results.
R	Previously saved values are restored.

(6) Condition codes

Condition Code (cccc)	Condition Formula	Explanation
0 0 0 0	OV = 1	Overflow
1 0 0 0	OV = 0	No overflow
0 0 0 1	CY = 1	Carry Lower (Less than)
1 0 0 1	CY = 0	No carry Not lower (Greater than or equal)
0 0 1 0	Z = 1	Zero
1 0 1 0	Z = 0	Not zero
0 0 1 1	(CY or Z) = 1	Not higher (Less than or equal)
1 0 1 1	(CY or Z) = 0	Higher (Greater than)
0 1 0 0	S = 1	Negative
1 1 0 0	S = 0	Positive
0 1 0 1	–	Always (Unconditional)
1 1 0 1	SAT = 1	Saturated
0 1 1 0	(S xor OV) = 1	Less than signed
1 1 1 0	(S xor OV) = 0	Greater than or equal signed
0 1 1 1	((S xor OV) or Z) = 1	Less than or equal signed
1 1 1 1	((S xor OV) or Z) = 0	Greater than signed

B.2 Instruction Set (in Alphabetical Order)

(1/6)

Mnemonic	Operand	Opcode	Operation		Execution Clock			Flags				
					i	r	l	CY	OV	S	Z	SAT
ADD	reg1,reg2	rrrrr001110RRRRR	GR[reg2]←GR[reg2]+GR[reg1]		1	1	1	×	×	×	×	
	imm5,reg2	r r r r r 0 1 0 0 1 0 i i i i i	GR[reg2]←GR[reg2]+sign-extend(imm5)		1	1	1	×	×	×	×	
ADDI	imm16,reg1,reg2	rrrrr110000RRRRR i i i i i i i i i i i i i i i i	GR[reg2]←GR[reg1]+sign-extend(imm16)		1	1	1	×	×	×	×	
AND	reg1,reg2	rrrrr001010RRRRR	GR[reg2]←GR[reg2]AND GR[reg1]		1	1	1		0	×	×	
ANDI	imm16,reg1,reg2	rrrrr110110RRRRR i i i i i i i i i i i i i i i i	GR[reg2]←GR[reg1]AND zero-extend(imm16)		1	1	1		0	×	×	
Bcond	disp9	ddddd1011dddcccc **Note 1**	if conditions are satisfied then PC←PC+sign-extend(disp9)	When conditions are satisfied	2 Note 2	2 Note 2	2 Note 2					
				When conditions are not satisfied	1	1	1					
BSH	reg2,reg3	rrrrr11111100000 wwwww01101000010	GR[reg3]←GR[reg2] (23 : 16) ll GR[reg2] (31 : 24) ll GR[reg2] (7 : 0) ll GR[reg2] (15 : 8)		1	1	1	×	0	×	×	
BSW	reg2,reg3	rrrrr11111100000 wwwww01101000000	GR[reg3]←GR[reg2] (7 : 0) ll GR[reg2] (15 : 8) ll GR [reg2] (23 : 16) ll GR[reg2] (31 : 24)		1	1	1	×	0	×	×	
CALLT	imm6	0 0 0 0 0 0 1 0 0 0 i i i i i i	CTPC←PC+2(return PC) CTPSW←PSW adr←CTBP+zero-extend(imm6 logically shift left by 1) PC←CTBP+zero-extend(Load-memory(adr,Halfword))		4	4	4					
CLR1	bit#3,disp16[reg1]	10bbb111110RRRRR ddddddddddddddd	adr←GR[reg1]+sign-extend(disp16) Z flag←Not(Load-memory-bit(adr,bit#3)) Store-memory-bit(adr,bit#3,0)		3 Note 3	3 Note 3	3 Note 3				×	
	reg2,[reg1]	rrrrr111111RRRRR 0000000011100100	adr←GR[reg1] Z flag←Not(Load-memory-bit(adr,reg2)) Store-memory-bit(adr,reg2,0)		3 Note 3	3 Note 3	3 Note 3				×	
CMOV	cccc,imm5,reg2,reg3	r r r r r 1 1 1 1 1 i i i i i wwwww011000cccc0	if conditions are satisfied then GR[reg3]←sign-extended(imm5) else GR[reg3]←GR[reg2]		1	1	1					
	cccc,reg1,reg2,reg3	rrrrr111111RRRR wwwww011001cccc0	if conditions are satisfied then GR[reg3]←GR[reg1] else GR[reg3]←GR[reg2]		1	1	1					
CMP	reg1,reg2	rrrrr001111RRRRR	result←GR[reg2]–GR[reg1]		1	1	1	×	×	×	×	
	imm5,reg2	r r r r r 0 1 0 0 1 1 i i i i i	result←GR[reg2]–sign-extend(imm5)		1	1	1	×	×	×	×	
CTRET		0000011111100000 0000000101000100	PC←CTPC PSW←CTPSW		3	3	3	R	R	R	R	R
DBRET		0000011111100000 0000000101000110	PC←DBPC PSW←DBPSW		3	3	3	R	R	R	R	R

(2/6)

Mnemonic	Operand	Opcode	Operation	Execution Clock			Flags				
				i	r	l	CY	OV	S	Z	SAT
DBTRAP		1111100001000000	DBPC←PC+2 (restored PC) DBPSW←PSW PSW.NP←1 PSW.EP←1 PSW.ID←1 PC←00000060H	3	3	3					
DI		0000011111100000 0000000101100000	PSW.ID←1	1	1	1					
DISPOSE	imm5,list12	0 0 0 0 0 1 1 0 0 1 i i i i i L L L L L L L L L L L L 0 0 0 0 0	sp←sp+zero-extend(imm5 logically shift left by 2) GR[reg in list12]←Load-memory(sp,Word) sp←sp+4 repeat 2 steps above until all regs in list12 is loaded	n+1 Note 4	n+1 Note 4	n+1 Note 4					
	imm5,list12,[reg1]	0 0 0 0 0 1 1 0 0 1 i i i i i L L L L L L L L L L L L R R R R R **Note 5**	sp←sp+zero-extend(imm5 logically shift left by 2) GR[reg in list12]←Load-memory(sp,Word) sp←sp+4 repeat 2 steps above until all regs in list12 is loaded PC←GR[reg1]	n+3 Note 4	n+3 Note 4	n+3 Note 4					
DIV	reg1,reg2,reg3	rrrrr111111RRRRR wwwww01011000000	GR[reg2]←GR[reg2]÷GR[reg1] GR[reg3]←GR[reg2]%GR[reg1]	35	35	35		×	×	×	
DIVH	reg1,reg2	rrrrr000010RRRRR	GR[reg2]←GR[reg2]÷GR[reg1]Note 6	35	35	35		×	×	×	
	reg1,reg2,reg3	rrrrr111111RRRRR wwwww01010000000	GR[reg2]←GR[reg2]÷GR[reg1]Note 6 GR[reg3]←GR[reg2]%GR[reg1]	35	35	35		×	×	×	
DIVHU	reg1,reg2,reg3	rrrrr111111RRRRR wwwww01010000010	GR[reg2]←GR[reg2]÷GR[reg1]Note 6 GR[reg3]←GR[reg2]%GR[reg1]	34	34	34		×	×	×	
DIVU	reg1,reg2,reg3	rrrrr111111RRRRR wwwww01011000010	GR[reg2]←GR[reg2]÷GR[reg1] GR[reg3]←GR[reg2]%GR[reg1]	34	34	34		×	×	×	
EI		1000011111100000 0000000101100000	PSW.ID←0	1	1	1					
HALT		0000011111100000 0000000100100000	Stop	1	1	1					
HSW	reg2,reg3	rrrrr11111100000 wwwww01101000100	GR[reg3]←GR[reg2](15 : 0) ll GR[reg2] (31 : 16)	1	1	1	×	0	×	×	
JARL	disp22,reg2	rrrrr11110ddddd dddddddddddddd0 **Note 7**	GR[reg2]←PC+4 PC←PC+sign-extend(disp22)	2	2	2					
JMP	[reg1]	00000000011RRRRR	PC←GR[reg1]	3	3	3					
JR	disp22	0000011110ddddd dddddddddddddd0 **Note 7**	PC←PC+sign-extend(disp22)	2	2	2					
LD.B	disp16[reg1],reg2	rrrrr111000RRRRR ddddddddddddddd	adr←GR[reg1]+sign-extend(disp16) GR[reg2]←sign-extend(Load-memory(adr,Byte))	1	1	Note 11					
LD.BU	disp16[reg1],reg2	rrrrr11110bRRRRR dddddddddddddd1 **Notes 8, 10**	adr←GR[reg1]+sign-extend(disp16) GR[reg2]←zero-extend(Load-memory(adr,Byte))	1	1	Note 11					

(3/6)

Mnemonic	Operand	Opcode	Operation		Execution Clock			Flags				
					i	r	l	CY	OV	S	Z	SAT
LD.H	disp16[reg1],reg2	rrrrr111001RRRRR ddddddddddddddd0 **Note 8**	adr←GR[reg1]+sign-extend(disp16) GR[reg2]←sign-extend(Load-memory(adr,Halfword))		1	1	Note 11					
LDSR	reg2,regID	rrrrr111111RRRRR 0000000000100000 **Note 12**	SR[regID]←GR[reg2]	Other than regID = PSW	1	1	1					
				regID = PSW	1	1	1	×	×	×	×	×
LD.HU	disp16[reg1],reg2	rrrrr111111RRRRR ddddddddddddddd1 **Note 8**	adr←GR[reg1]+sign-extend(disp16) GR[reg2]←zero-extend(Load-memory(adr,Halfword)		1	1	Note 11					
LD.W	disp16[reg1],reg2	rrrrr111001RRRRR ddddddddddddddd1 **Note 8**	adr←GR[reg1]+sign-extend(disp16) GR[reg2]←Load-memory(adr,Word)		1	1	Note 11					
MOV	reg1,reg2	rrrrr000000RRRRR	GR[reg2]←GR[reg1]		1	1	1					
	imm5,reg2	r r r r r 0 1 0 0 0 0 i i i i i	GR[reg2]←sign-extend(imm5)		1	1	1					
	imm32,reg1	00000110001RRRRR i i i i i i i i i i i i i i i i l l l l l l l l l l l l l l l l	GR[reg1]←imm32		2	2	2					
MOVEA	imm16,reg1,reg2	rrrrr110001RRRRR i i i i i i i i i i i i i i i i	GR[reg2]←GR[reg1]+sign-extend(imm16)		1	1	1					
MOVHI	imm16,reg1,reg2	rrrrr110010RRRRR i i i i i i i i i i i i i i i i	GR[reg2]←GR[reg1]+(imm16 ll 0^{16})		1	1	1					
MUL	reg1,reg2,reg3	rrrrr111111RRRRR wwwww01000100000	GR[reg3] ll GR[reg2]←GR[reg2]xGR[reg1] **Note 14**		1	4	5					
	imm9,reg2,reg3	r r r r r 1 1 1 1 1 1 i i i i i w w w w w 0 1 0 0 1 l l l l 0 0 **Note 13**	GR[reg3] ll GR[reg2]←GR[reg2]xsign-extend(imm9)		1	4	5					
MULH	reg1,reg2	rrrrr000111RRRRR	GR[reg2]←GR[reg2]$^{Note\ 6}$xGR[reg1]$^{Note\ 6}$		1	1	2					
	imm5,reg2	r r r r r 0 1 0 1 1 1 i i i i i	GR[reg2]←GR[reg2]$^{Note\ 6}$xsign-extend(imm5)		1	1	2					
MULHI	imm16,reg1,reg2	rrrrr110111RRRRR i i i i i i i i i i i i i i i i	GR[reg2]←GR[reg1]$^{Note\ 6}$ximm16		1	1	2					
MULU	reg1,reg2,reg3	rrrrr111111RRRRR wwwww01000100010	GR[reg3] ll GR[reg2]←GR[reg2]xGR[reg1] **Note 14**		1	4	5					
	imm9,reg2,reg3	r r r r r 1 1 1 1 1 1 i i i i i w w w w w 0 1 0 0 1 l l l l 1 0 **Note 13**	GR[reg3] ll GR[reg2]←GR[reg2]xzero-extend(imm9)		1	4	5					
NOP		0000000000000000	Pass at least one clock cycle doing nothing.		1	1	1					
NOT	reg1,reg2	rrrrr000001RRRRR	GR[reg2]←NOT(GR[reg1])		1	1	1		0	×	×	
NOT1	bit#3,disp16[reg1]	01bbb111110RRRRR ddddddddddddddd	adr←GR[reg1]+sign-extend(disp16) Z flag←Not(Load-memory-bit(adr,bit#3)) Store-memory-bit(adr,bit#3,Z flag)		3 Note 3	3 Note 3	3 Note 3				×	
	reg2,[reg1]	rrrrr111111RRRRR 0000000011100010	adr←GR[reg1] Z flag←Not(Load-memory-bit(adr,reg2)) Store-memory-bit(adr,reg2,Z flag)		3 Note 3	3 Note 3	3 Note 3				×	

(4/6)

Mnemonic	Operand	Opcode	Operation	Execution Clock			Flags				
				i	r	l	CY	OV	S	Z	SAT
OR	reg1,reg2	rrrrr001000RRRRR	GR[reg2]←GR[reg2]OR GR[reg1]	1	1	1		0	×	×	
ORI	imm16,reg1,reg2	rrrrr110100RRRRR iiiiiiiiiiiiiiiii	GR[reg2]←GR[reg1]OR zero-extend(imm16)	1	1	1		0	×	×	
PREPARE	list12,imm5	0000011110iiiiiL LLLLLLLLLLL00001	Store-memory(sp–4,GR[reg in list12],Word) sp←sp–4 repeat 1 step above until all regs in list12 is stored sp←sp-zero-extend(imm5)	n+1 Note 4	n+1 Note 4	n+1 Note 4					
	list12,imm5, sp/imm[Note 15]	0000011110iiiiiL LLLLLLLLLLLff011 imm16/imm32 **Note 16**	Store-memory(sp–4,GR[reg in list12],Word) sp←sp+4 repeat 1 step above until all regs in list12 is stored sp←sp-zero-extend (imm5) ep←sp/imm	n+2 Note 4 Note 17	n+2 Note 4 Note 17	n+2 Note 4 Note 17					
RETI		0000011111100000 0000000101000000	if PSW.EP=1 then PC ←EIPC PSW ←EIPSW else if PSW.NP=1 then PC ←FEPC PSW ←FEPSW else PC ←EIPC PSW ←EIPSW	3	3	3	R	R	R	R	R
SAR	reg1,reg2	rrrrr111111RRRRR 0000000010100000	GR[reg2]←GR[reg2]arithmetically shift right by GR[reg1]	1	1	1	×	0	×	×	
	imm5,reg2	rrrrr010101iiiii	GR[reg2]←GR[reg2]arithmetically shift right by zero-extend (imm5)	1	1	1	×	0	×	×	
SASF	cccc,reg2	rrrrr1111110cccc 0000001000000000	if conditions are satisfied then GR[reg2]←(GR[reg2]Logically shift left by 1) OR 00000001H else GR[reg2]←(GR[reg2]Logically shift left by 1) OR 00000000H	1	1	1					
SATADD	reg1,reg2	rrrrr000110RRRRR	GR[reg2]←saturated(GR[reg2]+GR[reg1])	1	1	1	×	×	×	×	×
	imm5,reg2	rrrrr010001iiiii	GR[reg2]←saturated(GR[reg2]+sign-extend(imm5)	1	1	1	×	×	×	×	×
SATSUB	reg1,reg2	rrrrr000101RRRRR	GR[reg2]←saturated(GR[reg2]–GR[reg1])	1	1	1	×	×	×	×	×
SATSUBI	imm16,reg1,reg2	rrrrr110011RRRRR iiiiiiiiiiiiiiiii	GR[reg2]←saturated(GR[reg1]–sign-extend(imm16)	1	1	1	×	×	×	×	×
SATSUBR	reg1,reg2	rrrrr000100RRRRR	GR[reg2]←saturated(GR[reg1]–GR[reg2])	1	1	1	×	×	×	×	×
SETF	cccc,reg2	rrrrr1111110cccc 0000000000000000	If conditions are satisfied then GR[reg2]←00000001H else GR[reg2]←00000000H	1	1	1					

(5/6)

Mnemonic	Operand	Opcode	Operation	Execution Clock			Flags				
				i	r	l	CY	OV	S	Z	SAT
SET1	bit#3,disp16[reg1]	00bbb111110RRRRR ddddddddddddddd	adr←GR[reg1]+sign-extend(disp16) Z flag←Not (Load-memory-bit(adr,bit#3)) Store-memory-bit(adr,bit#3,1)	3 Note 3	3 Note 3	3 Note 3				×	
	reg2,[reg1]	rrrrr111111RRRRR 0000000011100000	adr←GR[reg1] Z flag←Not(Load-memory-bit(adr,reg2)) Store-memory-bit(adr,reg2,1)	3 Note 3	3 Note 3	3 Note 3				×	
SHL	reg1,reg2	rrrrr111111RRRRR 0000000011000000	GR[reg2]←GR[reg2] logically shift left by GR[reg1]	1	1	1	×	0	×	×	
	imm5,reg2	r r r r r 0 1 0 1 1 0 i i i i i	GR[reg2]←GR[reg2] logically shift left by zero-extend(imm5)	1	1	1	×	0	×	×	
SHR	reg1,reg2	rrrrr111111RRRRR 0000000010000000	GR[reg2]←GR[reg2] logically shift right by GR[reg1]	1	1	1	×	0	×	×	
	imm5,reg2	r r r r r 0 1 0 1 0 0 i i i i i	GR[reg2]←GR[reg2] logically shift right by zero-extend(imm5)	1	1	1	×	0	×	×	
SLD.B	disp7[ep],reg2	rrrrr0110ddddddd	adr←ep+zero-extend(disp7) GR[reg2]←sign-extend(Load-memory(adr,Byte))	1	1	Note 9					
SLD.BU	disp4[ep],reg2	rrrrr0000110dddd **Note 18**	adr←ep+zero-extend(disp4) GR[reg2]←zero-extend(Load-memory(adr,Byte))	1	1	Note 9					
SLD.H	disp8[ep],reg2	rrrrr1000ddddddd **Note 19**	adr←ep+zero-extend(disp8) GR[reg2]←sign-extend(Load-memory(adr,Halfword))	1	1	Note 9					
SLD.HU	disp5[ep],reg2	rrrrr0000111dddd **Notes 18, 20**	adr←ep+zero-extend(disp5) GR[reg2]←zero-extend(Load-memory(adr,Halfword))	1	1	Note 9					
SLD.W	disp8[ep],reg2	rrrrr1010ddddddd0 **Note 21**	adr←ep+zero-extend(disp8) GR[reg2]←Load-memory(adr,Word)	1	1	Note 9					
SST.B	reg2,disp7[ep]	rrrrr0111ddddddd	adr←ep+zero-extend(disp7) Store-memory(adr,GR[reg2],Byte)	1	1	1					
SST.H	reg2,disp8[ep]	rrrrr1001ddddddd **Note 19**	adr←ep+zero-extend(disp8) Store-memory(adr,GR[reg2],Halfword)	1	1	1					
SST.W	reg2,disp8[ep]	rrrrr1010ddddddd1 **Note 21**	adr←ep+zero-extend(disp8) Store-memory(adr,GR[reg2],Word)	1	1	1					
ST.B	reg2,disp16[reg1]	rrrrr111010RRRRR ddddddddddddddd	adr←GR[reg1]+sign-extend(disp16) Store-memory(adr,GR[reg2],Byte)	1	1	1					
ST.H	reg2,disp16[reg1]	rrrrr111011RRRRR dddddddddddddd0 **Note 8**	adr←GR[reg1]+sign-extend(disp16) Store-memory (adr,GR[reg2], Halfword)	1	1	1					
ST.W	reg2,disp16[reg1]	rrrrr111011RRRRR dddddddddddddd1 **Note 8**	adr←GR[reg1]+sign-extend(disp16) Store-memory (adr,GR[reg2], Word)	1	1	1					
STSR	regID,reg2	rrrrr111111RRRRR 0000000001000000	GR[reg2]←SR[regID]	1	1	1					

(6/6)

Mnemonic	Operand	Opcode	Operation	Execution Clock			Flags				
				i	r	l	CY	OV	S	Z	SAT
SUB	reg1,reg2	rrrrr001101RRRRR	GR[reg2]←GR[reg2]–GR[reg1]	1	1	1	×	×	×	×	
SUBR	reg1,reg2	rrrrr001100RRRRR	GR[reg2]←GR[reg1]–GR[reg2]	1	1	1	×	×	×	×	
SWITCH	reg1	00000000010RRRRR	adr←(PC+2) + (GR [reg1] logically shift left by 1) PC←(PC+2) + (sign-extend (Load-memory (adr,Halfword)) logically shift left by 1	5	5	5					
SXB	reg1	00000000101RRRRR	GR[reg1]←sign-extend (GR[reg1] (7 : 0))	1	1	1					
SXH	reg1	00000000111RRRRR	GR[reg1]←sign-extend (GR[reg1] (15 : 0))	1	1	1					
TRAP	vector	0 0 0 0 0 1 1 1 1 1 1 i i i i i 0000000100000000	EIPC ←PC+4 (Restored PC) EIPSW ←PSW ECR.EICC ←Interrupt code PSW.EP ←1 PSW.ID ←1 PC ←00000040H (when vector is 00H to 0FH) 00000050H (when vector is 10H to 1FH)	3	3	3					
TST	reg1,reg2	rrrrr001011RRRRR	result←GR[reg2] AND GR[reg1]	1	1	1		0	×	×	
TST1	bit#3,disp16[reg1]	11bbb111110RRRRR ddddddddddddddd	adr←GR[reg1]+sign-extend(disp16) Z flag←Not (Load-memory-bit (adr,bit#3))	3 Note 3	3 Note 3	3 Note 3				×	
	reg2, [reg1]	rrrrr111111RRRRR 0000000011100110	adr←GR[reg1] Z flag←Not (Load-memory-bit (adr,reg2))	3 Note 3	3 Note 3	3 Note 3				×	
XOR	reg1,reg2	rrrrr001001RRRRR	GR[reg2]←GR[reg2] XOR GR[reg1]	1	1	1		0	×	×	
XORI	imm16,reg1,reg2	rrrrr110101RRRRR i i i i i i i i i i i i i i i i	GR[reg2]←GR[reg1] XOR zero-extend (imm16)	1	1	1		0	×	×	
ZXB	reg1	00000000100RRRRR	GR[reg1]←zero-extend (GR[reg1] (7 : 0))	1	1	1					
ZXH	reg1	00000000110RRRRR	GR[reg1]←zero-extend (GR[reg1] (15 : 0))	1	1	1					

Notes 1. ddddddd: Higher 8 bits of disp9.

2. 3 if there is an instruction that rewrites the contents of the PSW immediately before.

3. If there is no wait state (3 + the number of read access wait states).

4. n is the total number of list12 load registers. (According to the number of wait states. Also, if there are no wait states, n is the total number of list12 registers. If n = 0, same operation as when n = 1)

5. RRRRR: other than 00000.

6. The lower halfword data only are valid.

7. dddddddddddddddddddddd: The higher 21 bits of disp22.

8. ddddddddddddddd: The higher 15 bits of disp16.

9. According to the number of wait states (1 if there are no wait states).

10. b: bit 0 of disp16.

11. According to the number of wait states (2 if there are no wait states).

Notes 12. In this instruction, for convenience of mnemonic description, the source register is made reg2, but the reg1 field is used in the opcode. Therefore, the meaning of register specification in the mnemonic description and in the opcode differs from other instructions.

rrrrr = regID specification

RRRRR = reg2 specification

13. iiiii: Lower 5 bits of imm9.

IIII: Higher 4 bits of imm9.

14. Do not specify the same register for general-purpose registers reg1 and reg3.

15. sp/imm: specified by bits 19 and 20 of the sub-opcode.

16. ff = 00: Load sp in ep.

01: Load sign expanded 16-bit immediate data (bits 47 to 32) in ep.

10: Load 16-bit logically left shifted 16-bit immediate data (bits 47 to 32) in ep.

11: Load 32-bit immediate data (bits 63 to 32) in ep.

17. If imm = imm32, n + 3 clocks.

18. rrrrr: Other than 00000.

19. ddddddd: Higher 7 bits of disp8.

20. dddd: Higher 4 bits of disp5.

21. dddddd: Higher 6 bits of disp8.

For further information, please contact:

NEC Electronics Corporation
1753, Shimonumabe, Nakahara-ku,
Kawasaki, Kanagawa 211-8668,
Japan
Tel: 044-435-5111
http://www.necel.com/

[America]

NEC Electronics America, Inc.
2880 Scott Blvd.
Santa Clara, CA 95050-2554, U.S.A.
Tel: 408-588-6000
800-366-9782
http://www.am.necel.com/

[Europe]

NEC Electronics (Europe) GmbH
Arcadiastrasse 10
40472 Düsseldorf, Germany
Tel: 0211-65030
http://www.eu.necel.com/

Hanover Office
Podbielski Strasse 166 B
30177 Hanover
Tel: 0 511 33 40 2-0

Munich Office
Werner-Eckert-Strasse 9
81829 München
Tel: 0 89 92 10 03-0

Stuttgart Office
Industriestrasse 3
70565 Stuttgart
Tel: 0 711 99 01 0-0

United Kingdom Branch
Cygnus House, Sunrise Parkway
Linford Wood, Milton Keynes
MK14 6NP, U.K.
Tel: 01908-691-133

Succursale Française
9, rue Paul Dautier, B.P. 52180
78142 Velizy-Villacoublay Cédex
France
Tel: 01-3067-5800

Sucursal en España
Juan Esplandiu, 15
28007 Madrid, Spain
Tel: 091-504-2787

Tyskland Filial
Täby Centrum
Entrance S (7th floor)
18322 Täby, Sweden
Tel: 08 638 72 00

Filiale Italiana
Via Fabio Filzi, 25/A
20124 Milano, Italy
Tel: 02-667541

Branch The Netherlands
Limburglaan 5
5616 HR Eindhoven
The Netherlands
Tel: 040 265 40 10

[Asia & Oceania]

NEC Electronics (China) Co., Ltd
7th Floor, Quantum Plaza, No. 27 ZhiChunLu Haidian
District, Beijing 100083, P.R.China
TEL: 010-8235-1155
http://www.cn.necel.com/

NEC Electronics Shanghai Ltd.
Room 2509-2510, Bank of China Tower,
200 Yincheng Road Central,
Pudong New Area, Shanghai P.R. China P.C:200120
Tel: 021-5888-5400
http://www.cn.necel.com/

NEC Electronics Hong Kong Ltd.
12/F., Cityplaza 4,
12 Taikoo Wan Road, Hong Kong
Tel: 2886-9318
http://www.hk.necel.com/

Seoul Branch
11F., Samik Lavied'or Bldg., 720-2,
Yeoksam-Dong, Kangnam-Ku,
Seoul, 135-080, Korea
Tel: 02-558-3737

NEC Electronics Taiwan Ltd.
7F, No. 363 Fu Shing North Road
Taipei, Taiwan, R. O. C.
Tel: 02-2719-2377

NEC Electronics Singapore Pte. Ltd.
238A Thomson Road,
#12-08 Novena Square,
Singapore 307684
Tel: 6253-8311
http://www.sg.necel.com/

G05.12A