User Manual

Twisted Pair

MTP SW6

Six Input MTP Twisted Pair Switcher

Extron® Electronics
INTERFACING, SWITCHING AND CONTROL

68-1462-01 Rev. B
02 10

Safety Instructions • English

This symbol is intended to alert the user of important operating and maintenance (servicing) instructions in the literature provided with the equipment.

This symbol is intended to alert the user of the presence of uninsulated dangerous voltage within the product's enclosure that may present a risk of electric shock.

Caution

Read Instructions • Read and understand all safety and operating instructions before using the equipment.

Retain Instructions • The safety instructions should be kept for future reference.

Follow Warnings • Follow all warnings and instructions marked on the equipment or in the user information.

Avoid Attachments • Do not use tools or attachments that are not recommended by the equipment manufacturer because they may be hazardous.

Warning

Power sources • This equipment should be operated only from the power source indicated on the product. This equipment is intended to be used with a main power system with a grounded (neutral) conductor. The third (grounding) pin is a safety feature, do not attempt to bypass or disable it.

Power disconnection • To remove power from the equipment safely, remove all power cords from the rear of the equipment, or the desktop power module (if detachable), or from the power source receptacle (wall plug).

Power cord protection • Power cords should be routed so that they are not likely to be stepped on or pinched by items placed upon or against them.

Servicing • Refer all servicing to qualified service personnel. There are no user-serviceable parts inside. To prevent the risk of shock, do not attempt to service this equipment yourself because opening or removing covers may expose you to dangerous voltage or other hazards.

Slots and openings • If the equipment has slots or holes in the enclosure, these are provided to prevent overheating of sensitive components inside. These openings must never be blocked by other objects.

Lithium battery • There is a danger of explosion if battery is incorrectly replaced. Replace it only with the same or equivalent type recommended by the manufacturer. Dispose of used batteries according to the manufacturer's instructions.

Consignes de Sécurité • Français

Ce symbole sert à avertir l'utilisateur que la documentation fournie avec le matériel contient des instructions importantes concernant l'exploitation et la maintenance (réparation).

Ce symbole sert à avertir l'utilisateur de la présence dans le boîtier de l'appareil de tensions dangereuses non isolées posant des risques d'électrocution.

Attention

Lire les instructions• Prendre connaissance de toutes les consignes de sécurité et d'exploitation avant d'utiliser le matériel.

Conserver les instructions• Ranger les consignes de sécurité afin de pouvoir les consulter à l'avenir.

Respecter les avertissements • Observer tous les avertissements et consignes marqués sur le matériel ou présentés dans la documentation utilisateur.

Eviter les pièces de fixation • Ne pas utiliser de pièces de fixation ni d'outils non recommandés par le fabricant du matériel car cela risquerait de poser certains dangers.

Avertissement

Alimentations • Ne faire fonctionner ce matériel qu'avec la source d'alimentation indiquée sur l'appareil. Ce matériel doit être utilisé avec une alimentation principale comportant un fil de terre (neutre). Le troisième contact (de mise à la terre) constitue un dispositif de sécurité : n'essayez pas de la contourner ni de la désactiver.

Déconnexion de l'alimentation• Pour mettre le matériel hors tension sans danger, déconnectez tous les cordons d'alimentation de l'arrière de l'appareil ou du module d'alimentation de bureau (s'il est amovible) ou encore de la prise secteur.

Protection du cordon d'alimentation • Acheminer les cordons d'alimentation de manière à ce que personne ne risque de marcher dessus et à ce qu'ils ne soient pas écrasés ou pincés par des objets.

Réparation-maintenance • Faire exécuter toutes les interventions de réparation-maintenance par un technicien qualifié. Aucun des éléments internes ne peut être réparé par l'utilisateur. Afin d'éviter tout danger d'électrocution, l'utilisateur ne doit pas essayer de procéder lui-même à ces opérations car l'ouverture ou le retrait des couvercles risquent de l'exposer à de hautes tensions et autres dangers.

Fentes et orifices • Si le boîtier de l'appareil comporte des fentes ou des orifices, ceux-ci servent à empêcher les composants internes sensibles de surchauffer. Ces ouvertures ne doivent jamais être bloquées par des objets.

Lithium Batterie • Il a danger d'explosion s'll y a remplacment incorrect de la batterie. Remplacer uniquement avec une batterie du meme type ou d'un ype equivalent recommande par le constructeur. Mettre au reut les batteries usagees conformement aux instructions du fabricant.

Sicherheitsanleitungen • Deutsch

Dieses Symbol soll dem Benutzer in der im Lieferumfang enthaltenen Dokumentation besonders wichtige Hinweise zur Bedienung und Wartung (Instandhaltung) geben.

Dieses Symbol soll den Benutzer darauf aufmerksam machen, daß im Inneren des Gehäuses dieses Produktes gefährliche Spannungen, die nicht isoliert sind und die einen elektrischen Schock verursachen können, herrschen.

Achtung

Lesen der Anleitungen • Bevor Sie das Gerät zum ersten Mal verwenden, sollten Sie alle Sicherheits-und Bedienungsanleitungen genau durchlesen und verstehen.

Aufbewahren der Anleitungen • Die Hinweise zur elektrischen Sicherheit des Produktes sollten Sie aufbewahren, damit Sie im Bedarfsfall darauf zurückgreifen können.

Befolgen der Warnhinweise • Befolgen Sie alle Warnhinweise und Anleitungen auf dem Gerät oder in der Benutzerdokumentation.

Keine Zusatzgeräte • Verwenden Sie keine Werkzeuge oder Zusatzgeräte, die nicht ausdrücklich vom Hersteller empfohlen wurden, da diese eine Gefahrenquelle darstellen können.

Vorsicht

Stromquellen • Dieses Gerät sollte nur über die auf dem Produkt angegebene Stromquelle betrieben werden. Dieses Gerät wurde für eine Verwendung mit einer Hauptstromleitung mit einem geerdeten (neutralen) Leiter konzipiert. Der dritte Kontakt ist für einen Erdanschluß, und stellt eine Sicherheitsfunktion dar. Diese sollte nicht umgangen oder außer Betrieb gesetzt werden.

Stromunterbrechung • Um das Gerät auf sichere Weise vom Netz zu trennen, sollten Sie alle Netzkabel aus der Rückseite des Gerätes, aus der externen Stomversorgung (falls dies möglich ist) oder aus der Wandsteckdose ziehen.

Schutz des Netzkabels • Netzkabel sollten stets so verlegt werden, daß sie nicht im Weg liegen und niemand darauf treten kann oder Objekte darauf- oder unmittelbar dagegengestellt werden können.

Wartung • Alle Wartungsmaßnahmen sollten nur von qualifiziertem Servicepersonal durchgeführt werden. Die internen Komponenten des Gerätes sind wartungsfrei. Zur Vermeidung eines elektrischen Schocks versuchen Sie in keinem Fall, dieses Gerät selbst öffnen, da beim Entfernen der Abdeckungen die Gefahr eines elektrischen Schlags und/oder andere Gefahren bestehen.

Schlitze und Öffnungen • Wenn das Gerät Schlitze oder Löcher im Gehäuse aufweist, dienen diese zur Vermeidung einer Überhitzung der empfindlichen Teile im Inneren. Diese Öffnungen dürfen niemals von anderen Objekten blockiert werden.

Litium-Batterie • Explosionsgefahr, falls die Batterie nicht richtig ersetzt wird. Ersetzen Sie verbrauchte Batterien nur durch den gleichen oder einen vergleichbaren Batterietyp, der auch vom Hersteller empfohlen wird. Entsorgen Sie verbrauchte Batterien bitte gemäß den Herstelleranweisungen.

Evitar el uso de accesorios • No usar herramientas o accesorios que no sean especificamente recomendados por el fabricante, ya que podrian implicar riesgos.

Instrucciones de seguridad • Español

Este símbolo se utiliza para advertir al usuario sobre instrucciones importantes de operación y mantenimiento (o cambio de partes) que se desean destacar en el contenido de la documentación suministrada con los equipos.

Este símbolo se utiliza para advertir al usuario sobre la presencia de elementos con voltaje peligroso sin protección aislante, que puedan encontrarse dentro de la caja o alojamiento del producto, y que puedan representar riesgo de electrocución.

Precaucion

Leer las instrucciones • Leer y analizar todas las instrucciones de operación y seguridad, antes de usar el equipo.

Conservar las instrucciones • Conservar las instrucciones de seguridad para futura consulta.

Obedecer las advertencias • Todas las advertencias e instrucciones marcadas en el equipo o en la documentación del usuario, deben ser obedecidas.

Advertencia

Alimentación eléctrica • Este equipo debe conectarse únicamente a la fuente/tipo de alimentación eléctrica indicada en el mismo. La alimentación eléctrica de este equipo debe provenir de un sistema de distribución general con conductor neutro a tierra. La tercera pata (puesta a tierra) es una medida de seguridad, no puentearia ni eliminaria.

Desconexión de alimentación eléctrica • Para desconectar con seguridad la acometida de alimentación eléctrica al equipo, desenchufar todos los cables de alimentación en el panel trasero del equipo, o desenchufar el módulo de alimentación (si fuera independiente), o desenchufar el cable del receptáculo de la pared.

Protección del cables de alimentación • Los cables de alimentación eléctrica se deben instalar en lugares donde no sean pisados ni apretados por objetos que se puedan apoyar sobre ellos.

Reparaciones/mantenimiento • Solicitar siempre los servicios técnicos de personal calificado. En el interior no hay partes a las que el usuario deba acceder. Para evitar riesgo de electrocución, no intentar personalmente la reparación/mantenimiento de este equipo, ya que al abrir o extraer las tapas puede quedar expuesto a voltajes peligrosos u otros riesgos.

Ranuras y aberturas • Si el equipo posee ranuras o orificios en su caja/alojamiento, es para evitar el sobrecalientamiento de componentes internos sensibles. Estas aberturas nunca se deben obstruir con otros objetos.

Batería de litio • Existe riesgo de explosión si esta batería se coloca en la posición incorrecta. Cambiar esta batería únicamente con el mismo tipo (o su equivalente) recomendado por el fabricante. Desachar las baterías usadas siguiendo las instrucciones del fabricante.

安全须知 • 中文

这个符号提示用户该设备用户手册中有重要的操作和维护说明。

这个符号警告用户该设备机壳内有暴露的危险电压，有触电危险。

注意

阅读说明书 • 用户使用该设备前必须阅读并理解所有安全和使用说明。

保存说明书 • 用户应保存安全说明书以备将来使用。

遵守警告 • 用户应遵守产品和用户指南上的所有安全和操作说明。

避免追加 • 不要使用该产品厂商没有推荐的工具或追加设备，以避免危险。

警告

电源 • 该设备只能使用产品上标明的电源。 设备必须使用有地线的供电系统供电。 第三条线（地线）是安全设施，不能不用或跳过 。

拔掉电源 • 为安全地从设备拔掉电源，请拔掉所有设备后或桌面电源的电源线，或任何接到市电系统的电源线。

电源线保护 • 妥善布线， 避免被踩踏，或重物挤压。

维护 • 所有维修必须由认证的维修人员进行。 设备内部没有用户可以更换的零件。为避免出现触电危险不要自己试图打开设备盖子维修该设备。

通风孔 • 有些设备机壳上有通风槽或孔，它们是用来防止机内敏感元件过热。 不要用任何东西挡住通风孔。

锂电池 • 不正确的更换电池会有爆炸的危险。必须使用与厂家推荐的相同或相近型号的电池。按照生产厂的建议处理废弃电池。

FCC Class A Notice

This equipment has been tested and found to comply with the limits for a Class A digital device, pursuant to part 15 of the FCC Rules. Operation is subject to the following two conditions:

1. This device may not cause harmful interference.
2. This device must accept any interference received, including interference that may cause undesired operation.

The Class A limits are designed to provide reasonable protection against harmful interference when the equipment is operated in a commercial environment. This equipment generates, uses, and can radiate radio frequency energy and, if not installed and used in accordance with the instruction manual, may cause harmful interference to radio communications. Operation of this equipment in a residential area is likely to cause harmful interference, in which case the user will be required to correct the interference at his own expense.

Copyright

© 2010 Extron Electronics. All rights reserved.

Trademarks

All trademarks mentioned in this manual are the properties of their respective owners.

Contents

Introduction 1

About this Manual 1
About the MTP SW6 Switcher 1
RS-232 Function 2
Twisted Pair (TP) Cable Advantages 3
Features 5

Installation and Operation 6

Mounting the MTP SW6 6
Tabletop Use 6
Rack Shelf Mounting 6
Furniture Mounting 8
Connectors and Settings 9
Making Connections 12
Receiver Considerations 14
Operation 15
Switch Mode 16
Optimizing the Video 17
Level/Peaking Setting 17
Skew Delay Compensation 18

Remote Control 19

Simple Instruction Set™ Control 20
Host-to-Interface Communications 20
Symbol Definitions 20
Unit-Initiated Messages 21
Error Responses 21
Timeout 22
Using the Command/Response Table 22
Command/response Table for SIS Commands 23
Windows-Based Program Control 26
Installing the Software 26
Using the Software 27
Contact Closure Remote Control 27
IR 102 Infrared Remote Control 28

Reference Information 29

Specifications 29
Part Numbers 31
Included Parts 31
Accessories 31
Cables 31
Connectors 32

Introduction

This section gives an overview of the manual and describes the Extron® MTP SW6 and its features, including:

- **About this Manual**
- **About the MTP SW6 Switcher**
- **Features**

About this Manual

This manual describes the function, installation, configuration, and operation of the MTP SW6 twisted pair switcher.

About the MTP SW6 Switcher

The Extron MTP SW6 is a 6-input, 1-output twisted pair switcher that is compatible with the entire line of Extron MTP transmitters and receivers.

The Extron MTP transmitters and receivers are a system for long-distance distribution of video and either audio or RS-232 communications. The MTPs transmit and receive over Extron Enhanced Skew-Free™ A/V UTP cable or over CAT 5, 5e, or 6 shielded twisted pair (STP), unshielded twisted pair (UTP), or foil shielded twisted pair (FTP) cable.

The MTP switcher receives up to six sets of signals from compatible MTP devices on RJ-45 connectors (figure 1). You can select one input to output to a compatible MTP device on an RJ-45 connector. The signal sets are comprised of high or low resolution video signals (RGB, bi-level or tri-level component video, S-video, or composite video) and can also include either RS-232 serial signals or audio.

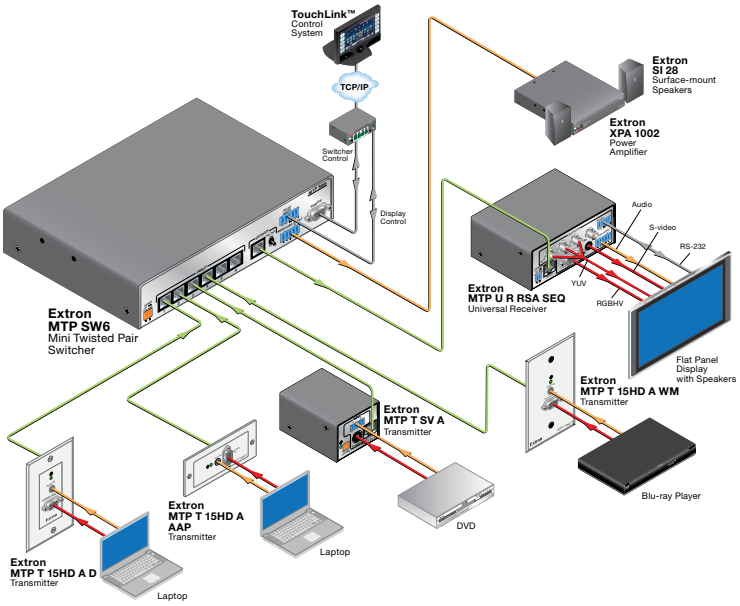

Figure 1. **Typical MTP SW6 application**

NOTE: The remote power capabilities of certain MTP models are not supported by this switcher.

The MTP switcher has image enhancement features that allow you to correct for long distance transmissions and skew:

- Level and Peaking controls enhance the TP signals received on the inputs.
- A Pre-Peaking control enhances the TP output for optimum display.
- Delay (skew correction) controls correct for skew delay (misconvergence) commonly encountered when using CAT 5, 5e, or 6 TP cables for RGB video, and component video transmission.

  NOTE: Skew correction should not be necessary when Extron Enhanced Skew-Free A/V UTP cable is used and the transmission distance is less than 1,000 feet (300 m).

Bidirectional RS-232 signal from a dedicated source (rather than from the selected input) can be directly inserted into the signal set routed to the TP output. You can even route RS-232 on a link that is normally audio, such as to an MTP R 15HD RSA D receiver, which can autodetect whether the signal input to it includes an audio component or an RS-232 component.

The MTP switcher is housed in a rack-mountable, 1U high, half rack-width metal enclosure. This switcher is shipped with an external 12 V power supply that accepts 100 to 240 VAC, 50 Hz or 60 Hz input and provides worldwide power compatibility.

RS-232 Function

When the TP link includes RS-232 signals, they are unidirectional (switcher to receiver).

NOTE: The RS-232 insert signal path is bidirectional.

The RS-232 link:

- Supports software flow control (XON, XOFF).

  NOTE: Hardware flow control is not supported.

- Supports full duplex and half duplex operation.
- Supports baud rates up to 38,400, data bits, parity, stop bits, and data format without configuration.

  NOTE: Higher rates are possible, but performance will vary as a function of baud rate and TP cable length.

Twisted Pair (TP) Cable Advantages

Twisted pair cable is much smaller, lighter, more flexible, and less expensive than coaxial cable. These TP products make cable runs simpler and less cumbersome. Termination of the cable with RJ-45 connectors is simple, quick, and economical.

Transmission distance

NOTE: VGA video transmitters provide pre-peaking, which boosts the signal before it is transmitted.

The maximum distance is determined by the frequency and resolution of the signal that is input to the transmitter. **Figure 2** and **Table 1**, on the next page, define the switcher input cables (1) and output cables (2) and specify the recommended maximum transmission distances on the input and output. **Table 1** also defines the output Pre-Peak switch positions (**item** ④ on page 10) using Extron Enhanced Skew-Free A/V UTP cable or UTP CAT 5, 5e, or 6 cable, terminated with RJ-45 connectors.

NOTES:

- It is possible to exceed the recommended distance; however, image quality may be reduced.
- The MTP units are designed for and perform best with Extron Enhanced Skew-Free A/V cable terminated in accordance with the TIA/EIA T 568 A wiring standard. CAT 5, 5e, and 6 cables are acceptable, but less preferable. We also recommend the use of preterminated and tested cables. Cables terminated on site should be tested before use to ensure that they comply with Category 5 specifications.
- Resolutions marked with an asterisk in table 1 have the same range specifications at 75 Hz.

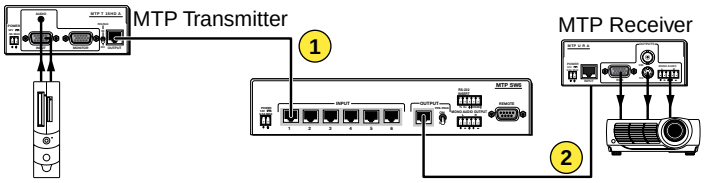

Figure 2. Transmission cables

Table 1. Recommended transmission distances at 60 Hz

Video format	MTP SW6 Pre-Peak		High quality		Variable quality	
	Off	On	Input 1	Output 2	Input 1	Output 2
Component, S-video, composite	<300' (90 m)	>350' (105 m)	700' (215 m)	700 (215 m)	700' (215 m)	800 (245 m)
640 x 480	<300' (90 m)	>350' (105 m)	550' (170 m)	600' (185 m)	550' (170 m)	700' (215 m)
800 x 600	<300' (90 m)	>350' (105 m)	500' (150 m)	500' (150 m)	600' (185 m)	600' (185 m)
1024 x 768*	<300' (90 m)	>350' (105 m)	450' (135 m)	450' (135 m)	550' (170 m)	550' (170 m)
1280 x 960*	<300' (90 m)	>350' (105 m)	350' (105 m)	350' (105 m)	450' (135 m)	450' (135 m)
1280 x 1024*	<250' (75 m)	>300' (90 m)	350' (105 m)	350' (105 m)	450' (135 m)	450' (135 m)
1360 x 765	<250' (75 m)	>300' (90 m)	350' (105 m)	350' (105 m)	500' (150 m)	500' (150 m)
1365 x 768	<250' (75 m)	>300' (90 m)	350' (105 m)	350' (105 m)	450' (135 m)	450' (135 m)
1366 x 768	<250' (75 m)	>300' (90 m)	350' (105 m)	350' (105 m)	450' (135 m)	450' (135 m)
1440 x 900	<250' (75 m)	>300' (90 m)	350' (105 m)	300' (90 m)	400' (120 m)	400' (120 m)
1400 x 1050	<250' (75 m)	>300' (90 m)	350' (105 m)	300' (90 m)	400' (120 m)	400' (120 m)
1600 x 1200*	<250' (75 m)	>300' (90 m)	300' (90 m)	300' (90 m)	450' (135 m)	450' (135 m)
1920 x 1200	<250' (75 m)	>300' (90 m)	300' (90 m)	250' (75 m)	400' (120 m)	400' (120 m)
HDTV 720p	<250' (75 m)	>300' (90 m)	400' (120 m)	400' (120 m)	500' (150 m)	500' (150 m)
HDTV 1080i	<250' (75 m)	>300' (90 m)	300' (90 m)	250' (75 m)	400' (120 m)	400' (120 m)
HDTV 1080p	<250' (75 m)	>300' (90 m)	300' (90 m)	250' (75 m)	400' (120 m)	400' (120 m)

Features

Compatible with all Extron MTP Series Twisted Pair products — Broad compatibility with all MTP products enables design flexibility when selecting components, and allows the use of an economical CAT 5-type cable infrastructure for A/V system integration.

Dynamic input skew equalization — Adjustments are stored in memory for each input, maintaining RGB color alignment at all times.

Video level and peaking compensation on each input — Actively compensates for input signal attenuation for various cable lengths, resulting in a brighter and sharper image.

Switchable video pre-peaking for output — Provides additional compensation for optimal performance on the longest cable runs, ensuring the highest quality signal at the display.

Local dual mono audio output — A line level output on the product splits mono audio feed from the MTP transmitter into two channels for direct connection of audio equipment that is located within the same rack as the MTP SW6.

Local audio output volume adjustment and muting — A local line level output has volume and muting control via RS-232 that can be set dynamically to feed an audio amplifier, eliminating the need for a preamplifier in many systems.

Auto-input switching — Automatically switches to the highest-numbered input with an active video signal.

Local RS-232 insertion port — Allows direct insertion of bi-directional serial control signals into the MTP output. This eliminates the need for additional control system wiring to the remote display and extends the serial control beyond the recommended 100-foot distance.

RS-232 and contact closure control — Provides versatile control options, simplifying remote control integration.

External universal power supply included — Provides worldwide power capability.

Installation and Operation

This section describes the installation and the operation of the MTP SW6, including:

- **Mounting the MTP SW6**
- **Connectors and Settings**
- **Operation**
- **Optimizing the Video**

Mounting the MTP SW6

The MTP SW6 can be set on a table, mounted on a rack shelf, or mounted under a desk, podium, or tabletop.

Tabletop Use

Four self-adhesive rubber feet are included with the switcher. For tabletop use, attach one foot at each corner on the bottom of the unit and place the unit in the desired location.

Rack Shelf Mounting

For rack mounting, mount the switcher using any of the following rack mounting options:

- RSU 129 9.5-inch deep 1U universal rack shelf kit (part #60-190-01) (**figure 3**)
- RSB 129 9.5-inch deep 1U basic rack shelf (part #60-604-02)
- RSU 126 6-inch deep universal rack shelf kit (part #60-190-10) (**figure 4**)
- RSB 126 6-inch deep basic rack shelf (part #60-604-11)

UL Guidelines for Rack Mounting

The following Underwriters Laboratories (UL) guidelines pertain to the installation of an MTP SW6 unit onto a rack.

1. **Elevated operating ambient —** If installed in a closed or multi-unit rack assembly, the operating ambient temperature of the rack environment may be greater than room ambient. Therefore, consider installing the equipment in an environment compatible with the maximum ambient temperature specified by the manufacturer [Tma = +32 to +122 °F (0 to +50 °C)].
2. **Reduced air flow —** Installation of the equipment in a rack should be such that the amount of air flow required for safe operation of the equipment is not compromised.
3. **Mechanical loading —** Mounting of the equipment in the rack should be such that a hazardous condition is not achieved due to uneven mechanical loading.
4. **Circuit overloading —** Consideration should be given to the connection of the equipment to the supply circuit and the effect that overloading of the circuits might have on overcurrent protection and supply wiring. Appropriate consideration of equipment nameplate ratings should be used when addressing this concern.

5. **Reliable earthing (grounding) —** Reliable earthing of rack-mounted equipment should be maintained. Particular attention should be given to supply connections other than direct connections to the branch circuit (such as the use of power strips).

Rack shelf mounting instructions

1. Remove feet from the bottom of the MTP SW6 if installed.
2. Mount the switcher on the rack shelf, using two 4-40 x 3/16″ screws in opposite (diagonal) corners to secure it to the shelf (figure 3).
3. Install blank panel(s) or other unit(s) on the rack shelf.
4. Attach the rack shelf to the rack using the supplied bolts.

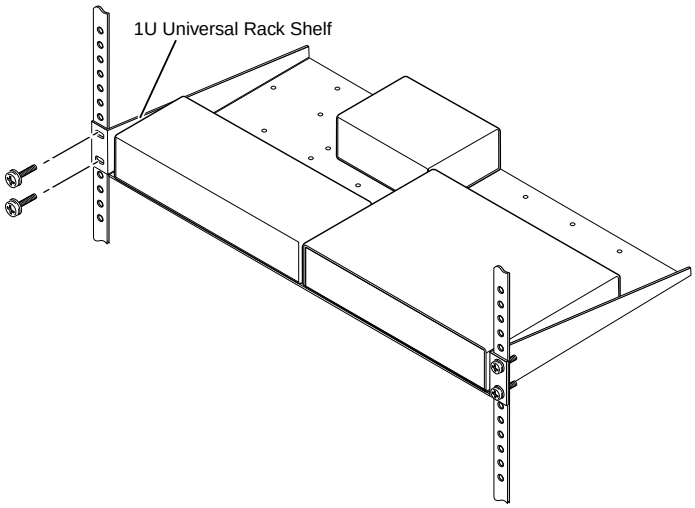

Figure 3. Mounting the switcher on a universal rack shelf

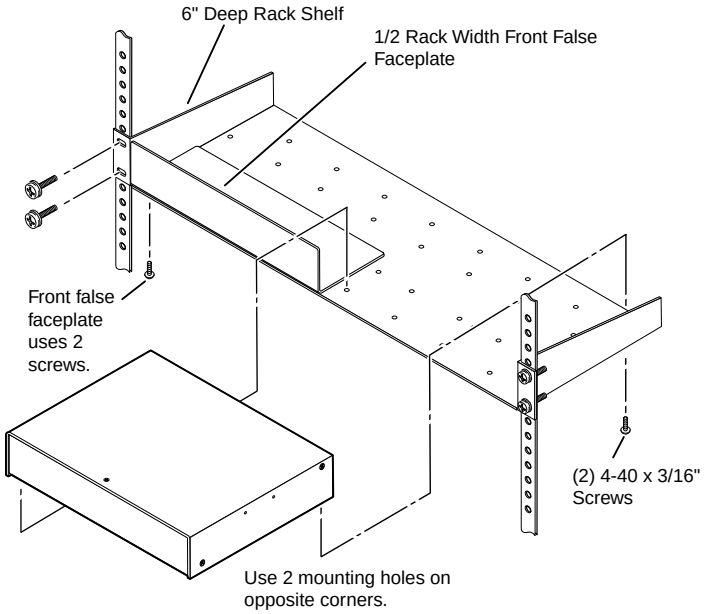

Figure 4. Mounting the switcher unit on a 6-inch deep rack shelf

Furniture Mounting

For furniture mounting, do not attach the rubber feet. Furniture mount the switcher using the optional MBU 125 under desk mounting kit (part #70-077-01) as follows:

1. Remove feet from the bottom of the MTP SW6 if installed.
2. Attach the furniture mounting brackets to the switcher with the four machine screws supplied with the mounting kit (figure 5).

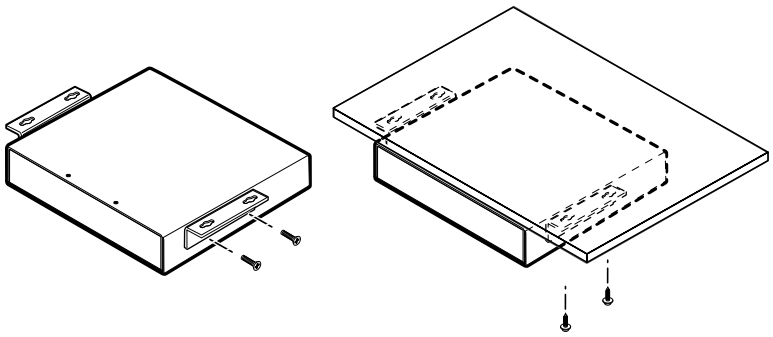

Figure 5. Attaching the furniture mounting brackets to an MTP SW6

3. Hold the switcher with the attached brackets against the underside of the mounting surface. Mark the location of the bracket's screw holes on the surface.
4. Drill 3/32-inch (2 mm) diameter pilot holes, 1/4 inch (6.3 mm) deep in the mounting surface at the marked locations.
5. Insert #8 wood screws into the four pilot holes. Tighten each screw into the mounting surface until just less than 1/4" of the screw protrudes.
6. Align the mounting screws with the slots in the brackets and place the switcher against the surface, with the screws through the bracket slots.
7. Slide the switcher slightly forward or back to align it with the edge of the surface, then tighten all four screws to secure the unit in place.

Connectors and Settings

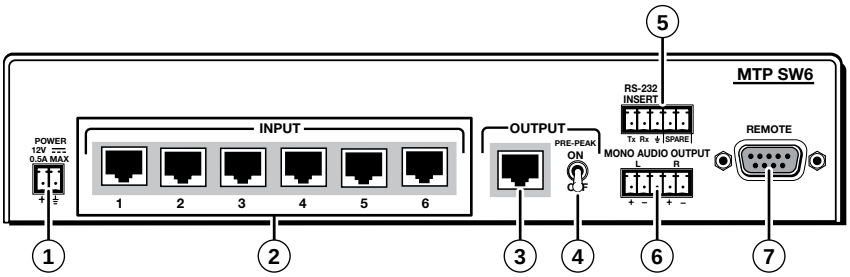

Figure 6. **MTP SW 6 rear panel features**

① **DC power connector —** Plug the external 12 VDC power supply into this 2-pole captive screw connector. See **Power supply wiring** to wire the connectors.

> **NOTE:** The remote power capabilities available with certain MTP models are not supported by this unit; the transmitter, switcher, and receiver must all be powered.

② **Input connectors —** Connect up to six TP cables from transmitters to these RJ-45 female connectors. See **TP cable termination** to wire the RJ-45 connectors.

> **CAUTION:** Do not connect this device to a computer data or telecommunications network.

> **NOTES:**
> - See **Table 1** for recommended transmission ranges.
> - You must configure the switcher for the appropriate content on the audio/RS-232 wire pair (pins 3 and 6) for each TP input. See the **Audio/RS-232 TP input (wire pair 3 and 6) configuration** SIS commands.
> - For best results, use a combined cable length of at least 50 feet (15 m) between the transmitter and the receiver on the MTP SW6 output.
> - RJ-45 termination with CAT 5, CAT 5e, or CAT 6 cable must comply with the TIA/EIA T568A or TIA/EIA T568B wiring standards for all connections.
> - RJ-45 termination with Enhanced Skew-Free A/V UTP cable must comply with TIA/EIA T568A only.
> - When low resolution MTPs (S-video and composite video) are the TP inputs, the MTP SW6 audio circuits are compatible only with the newer generation, mono audio models. See the appropriate MTP transmitter/receiver user's manual to determine which MTP models you have.

③ **Output connector —** Connect one end of a terminated TP cable to this RJ-45 female connector.
Connect the free end of the same TP cable from the switcher to the RJ-45 female connector on a compatible MTP receiver.
See **TP Cable Termination** to properly wire the RJ-45 connectors.

④ **Pre-Peak switch —** The Pre-Peak switch alters the TP signal output to correct for long cable runs. See **Table 1** for suggested switch settings based on the transmitted video format and transmission distance.

⑤ **RS-232 Insert connector —** For bidirectional RS-232 data that is routed from a common source to the TP output regardless of the selected input, connect a serial device to this 3.5 mm, 5-pole captive screw connector. Figure 7 shows how to wire the connector.

> **NOTE:** For the RS-232 insert to be available on the TP output, it must be enabled via an SIS command or the Windows-based control program. See the **RS-232 insert enable** SIS commands.
>
> **NOTE:** When the RS-232 insert is enabled, any content on the audio/RS-232 wire pair for the TP input tied to the output is disabled.

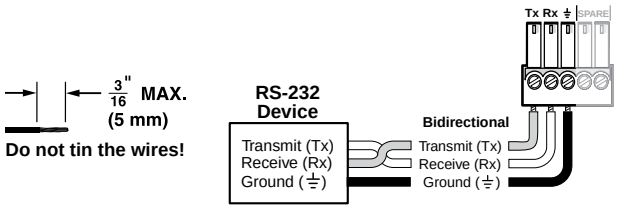

Figure 7. RS-232 insert wiring

⑥ **Mono Audio (local audio) output —** Connect an audio device, such as an audio amplifier or powered speakers to this 3.5 mm, 5-pole captive screw connector. This connector outputs the selected unamplified, mono line level audio. See figure 8 to properly wire the output connector. Use the supplied tie-wrap to strap the audio cable to the extended tail of the connector.

Figure 8. Captive screw connector wiring for audio output

> **CAUTION:** Connect the sleeve to ground (Gnd). Connecting the sleeve to a negative (-) terminal will damage the audio output circuits.
>
> **CAUTION:** The length of the exposed (stripped) portion of the copper wires is important. **The ideal length is 3/16" (5 mm).** Longer bare wires can short together. Shorter bare wires are not as secure in the direct insertion connectors and could be pulled out.

The volume level for the local output can be set under serial port control. See the **Local audio output volume** SIS commands for details.
By default, the audio ties follow the video ties. Audio breakaway switching, which can be performed under serial port control, allows you to select from any one of the audio input sources and route it separately from its corresponding video source. See the **Input selection** SIS Commands for details.

⑦ **Remote RS-232/contact closure connector —** Connect a computer or control system to this 9-pin D connector (figure 9) to allow remote control using the Simple Instruction Set (SIS™), the Extron graphical control program for Windows, or a contact closure device. See **Remote Control** for details.

PIN	RS-232	Contact Closure	Function
1	—	In #1	Input #1
2	TX	—	Transmit data
3	RX	—	Receive data
4	—	In #2	Input #2
5	Gnd	Gnd	Ground
6	—	In #3	Input #3
7	—	In #4	Input #4
8	—	In #5	Input #5
9	—	In #6	Input #6

Figure 9. Remote connector pinout

You can also connect a KP 6 remote control keypad (part #60-111-20) or an IR 102 Kit infrared remote control (part #70-224-01) system to this connector.

NOTE: The switcher can be controlled only by an RS-232 device **OR** a contact closure device, not both.

NOTE: The cable used to connect the Remote port to a computer, control, contact closure device, or IR control kit may need to be modified by removing pins or cutting wires. If unneeded pins are connected, the switcher may hang up. See **Remote Control** for additional information.

Making Connections

Power supply wiring

Figure 10 shows how to wire the power connector. Use the supplied tie-wrap to strap the power cord to the extended tail of the connector.

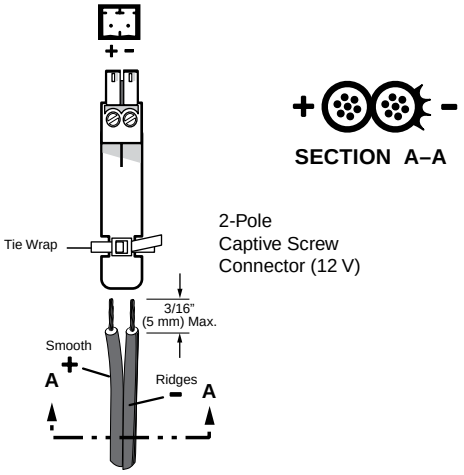

Figure 10. **Power connector wiring**

CAUTION: Always use a power supply supplied and or specified by Extron. Use of an unauthorized power supply voids all regulatory compliance certification and may cause damage to the supply and the end product. Unless otherwise stated, the AC/DC adapters are not suitable for use in air handling spaces or in wall cavities. The installation must always be in accordance with the applicable provisions of National Electrical Code ANSI/NFPA 70, article 75 and the Canadian Electrical Code part 1, section 16. The power supply shall not be permanently fixed to building structure or similar structure.

Power supply voltage polarity is critical. Incorrect voltage polarity can damage the power supply and the unit. The ridges on the side of the cord (figure 10) identify the power cord negative lead.

To verify the polarity before connection, plug in the power supply with no load and check the output with a voltmeter.

WARNING: The two power cord wires must be kept separate while the power supply is plugged in. Remove power before wiring.

CAUTION: The length of the exposed (stripped) copper wires is important. **The ideal length is 3/16 inch (5 mm)**. Longer bare wires can short together. Shorter wires are not as secure in the connectors and could be pulled out.

NOTE: Do not tin the power supply leads before installing them in the direct insertion connector. Tinned wires are not as secure in the connectors and could be pulled out.

Rather than the included power supply, you can use an optional Extron PS 123 Universal 12 VDC Power Supply, part #60-814-01, can power multiple Extron 12 VDC devices using only one AC power connector.

TP cable termination

NOTE: RJ-45 termination with CAT 5, CAT 5e, or CAT 6 cable must comply with the TIA/EIA T568A or TIA/EIA T568B wiring standards for all connections.
RJ-45 termination with Skew-Free A/V UTP cable must comply with TIA/EIA T568A only.

Figure 11 details the recommended termination of TP cables with RJ-45 connectors in accordance with the TIA/EIA T568A or TIA/EIA T568B wiring standards. You can use either standard with CAT 5/5e/6 cable, but ensure that you use the same standard on both ends of the cable.

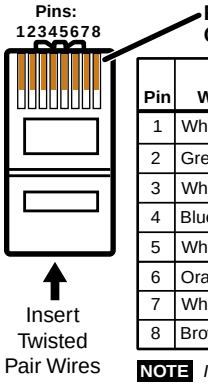

Pin	T568A Wire color	T568B Wire color	Video input (via transmitter) RGB	Composite	S-video	Secondary input Stereo audio	RS-232
1	White-green	White-orange	Red+/V. sync+	Reserved	Chroma (C)+		
2	Green	Orange	Red–/V. sync–	Reserved	Chroma (C)-		
3	White-orange	White-green				Mono audio+	RS-232+
4	Blue	Blue	Green+	Video+	Luma (Y)+		
5	White-blue	White-blue	Green-	Video-	Luma (Y)-		
6	Orange	Green				Mono audio-	RS-232-
7	White-brown	White-brown	Blue+/H. sync+	Reserved	Reserved		
8	Brown	Brown	Blue-/H. sync-	Reserved	Reserved		

NOTE *If you are using Enhanced Skew-Free A/V cable, use the TIA/EIA T568A standard only.*

Figure 11. **TP cable termination**

NOTE: The audio data that is carried on wire pair 3 and 6 is incompatible with the Extron TPX 88A, which cannot switch the audio, output it locally, or break it away.

NOTES:
- Enhanced Skew-Free A/V cable is not recommended for Ethernet/LAN applications. This cable is specially designed for compatibility with Extron's Twisted Pair products that are wired using the TIA/EIA T568A standard.
- The green, brown, and blue wire pairs of this cable have virtually identical lengths and should be used to transmit the RGB signals.
- The orange wire pair of this cable has a different length and should not be used to transmit the RGB signals.

Receiver Considerations

- The receivers' buffered outputs do not provide pre-peaking control. The total recommended distance for an entire daisy chain is the same as for a single transmitter and receiver. The transmitter's Pre-Peak switch has the same affect on the recommended transmission distance for a daisy chain as for a single transmitter and receiver.
- See the recommended transmission ranges in **Table 1**. The recommendations in the table apply equally for the switcher and one receiver and for a transmission daisy chain. For example, the maximum suggested range for high quality transmission of 1024 x 768 video is 600 feet between either the switcher and one receiver or the switcher and three daisy-chained receivers.
- For daisy-chained units, the first receiver in the chain must be at least 100 feet from the switcher when the Pre-Peak switch is on.
- For daisy-chained units, any receiver in the chain closer than 350 feet may experience some form of over-peaking when the Pre-Peak switch is on.
- If a receiver is the last receiver in a daisy chain, its end unit DIP switch setting needs to be changed. Refer to the MTP 15HD RS Series User's Manual that applies to your receiver or details.

Operation

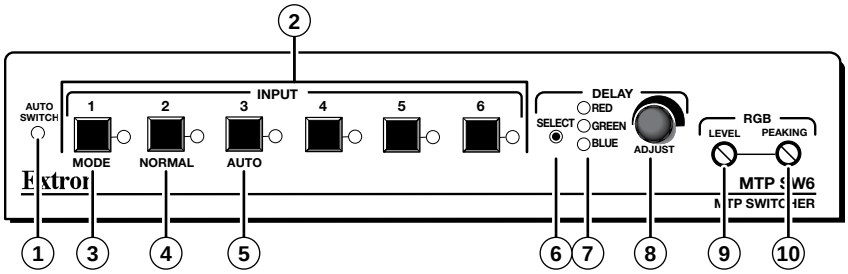

Figure 12. Switcher's front panel features

① **Auto Switch LED —** When lit, the Auto Switch LED indicates that the switcher is in auto switch mode. When unlit, the switch is in normal (manual) mode. See **Switch Mode** in this chapter.

② **Input Buttons and LEDs —** When the auto switch mode is off, these buttons select the input. The LED for the selected input lights.
The LEDs continue to indicate the selected input when the auto switch mode is on. If no input LED is lit, no input has active sync pulses and no input is selected.

> **NOTE:** Front panel input selection cannot be performed when the auto switch mode is on (Auto Switch [①] is lit).

③ **Mode button —** Use this button, with either the Auto or the Normal button, to manually turn auto switch mode on or off. This control is a secondary function of the Input 1 button.

④ **Normal button —** Use this button, with the Mode button, to manually turn auto switch mode off. This control is a secondary function of the Input 2 button.

⑤ **Auto button —** Use this button, with the Mode button, to manually turn auto switch mode on. This control is a secondary function of the Input 3 button.

⑥ **Delay Select button —** This recessed button selects the red, green, or blue video signal to adjust and resets all three video signals to a skew delay of zero nanoseconds. Use a Tweeker to press and release this button to select among the red, green, or blue video signal to adjust. The selected signal is indicated by the Delay Red, Green, and Blue LEDs (⑦).
The switcher automatically saves the setting for the video signal that is being deselected when you push this button or when the selection times out after 10 seconds.
Press and hold this button for approximately 3 seconds to zero the skew delay for red, green, and blue. The Delay Red, Green, and Blue LEDS (⑦) all turn off. Release the button.

⑦ **Delay Red, Green, and Blue LEDs —** These LEDs Indicate the video signal that is selected by the Select button (⑥) for skew adjustment using the Adjust control (⑧). The LED for the selected color flashes when the skew compensation for that color's video signal has reached the minimum or maximum limit.

⑧ **Delay Adjust (skew adjustment) control —** This control delays the selected red, green, or blue video signal by up to 62 nanoseconds. The delay is applied in incremental, 2-nanosecond, steps. Rotate the control counterclockwise to reduce the delay or clockwise to increase the delay.
The control's movement is smooth; it does not have mechanical steps or high- and low-limit stops.
Watch the displayed image to observe the steps of delay.
The Delay Red, Green, or Blue LED (⑦) (whichever is selected) flashes to indicate that the control has reached the minimum (counterclockwise rotation) or maximum (clockwise rotation) limit.

⑨ **Level control —** The Level control alters the video output voltage to affect the brightness of the displayed image. Adjust the knob while viewing the displayed image to set the level/boost that provides the best picture quality.

⑩ **Peaking control —** Peaking affects the sharpness of a picture. Increased peaking can compensate for mid- and high-frequency detail loss from low bandwidth system components or capacitance in long cables. The minimum setting (at the counterclockwise limit) provides no peaking. The maximum setting (at the clockwise limit) provides 100% peaking. Adjust this control while viewing the displayed image to obtain the optimum picture sharpness.

Switch Mode

In auto switch mode, the switcher automatically switches to the highest-numbered input with video sync signals present. Input selection, by the front panel buttons or the Remote port, is blocked while in auto switch mode. However, the front panel LEDs remain functional and the Input 1 through Input 3 buttons can be used to view or change the mode.

NOTES:
- The switcher must be in normal (manual) mode for contact closure to work.
- Audio breakaway (available via SIS or Windows-based control program control only) is disabled in auto switch mode; audio always follows video.

Turn auto switch mode on as follows:

1. Press and hold the Mode (Input 1) button.
2. Press and release the Auto (Input 3) button. The Auto Switch Active LED lights.
3. Release the Mode button.

NOTE: Manual switching is disabled.

Turn auto switch mode off as follows:

1. Press and hold the Mode (Input 1) button.
2. Press and release the Normal (Input 2) button. The Auto Switch Active LED goes off.
3. Release the Mode button.

NOTE: When the switcher exits auto switch mode, it deselects all inputs (no output).

Optimizing the Video

Most MTP transmitters and the MTP SW6 output have a pre-peaking feature. Set these features as follows for the best image quality:

1. **For inputs from MTP T 15HD products only —** If the cable between the MTP transmitter and the MTP SW6 is > 300 feet, turn the transmitter's Pre-Peak switch on. For shorter cables, turn the switch off.
2. **For the output —** If the cable between the MTP SW6 and the receiver is > 300 feet, turn the switcher's Pre-Peak switch on. For shorter cables, turn the switch off.

> **NOTE:** Unless the TP cable lengths are changed, these settings should need to be made only once, during installation.

Level/Peaking Setting

1. Connect an oscilloscope (preferred) or a monitor (acceptable) to the switcher's output via a very short (less than 25 feet [7.5 m]) TP cable and a compatible MTP receiver).
2. **If using an oscilloscope**, apply a white field test pattern to the input to be optimized via an MTP transmitter.
   If using a monitor, apply a grayscale or Color Bars test pattern to the input to be optimized via an MTP transmitter.

   > **TIP:** The Extron VTG 300 or VTG 400 are recommended to provide the test pattern.

3. Select the input to be optimized.
4. Observe the oscilloscope or the monitor with a critical eye while you adjust the front panel input level and peaking controls to compensate for signal loss between the transmitter and the MTP SW6.
5. If necessary, repeat steps **1** through **4** for each input.
6. If level/peaking and skew adjustments are available on the connected receiver(s), set them in accordance with the applicable MTP receiver product manual.
7. Disconnect the oscilloscope or monitor connected in step **1**.

> **NOTES:**
> - A simpler way to set the input level/peaking is to use the optional MTP signal generator and the auto calibration function on each input, available as an SIS command. See the **Auto level and peaking adjustment** SIS command.
> - The auto calibration function compensates for signal losses on the inputs only. Compensate for signal losses on the output via the connected receivers' level and peaking controls.

Skew Delay Compensation

CAT 5/5e/6 TP cable can lead to registration errors between the red, green, and blue video signals. Pair skew can be measured with test equipment or identified by viewing a crosshatch test pattern with a critical eye to determine if either the red, green, or blue video image leads (appears to the left of) the other two video images.

NOTE: Skew correction should not be necessary when Extron Enhanced Skew-Free A/V UTP cable is used and the transmission distance is less than 1,000 feet (300 m).

NOTE: Unless the TP cable lengths are changed, these settings should need to be made only once, during installation.

NOTE: For best results, repeat the skew compensation for each input.

The switcher has built-in skew compensation capabilities for its TP output. Adjust the equalization as follows:

1. Select an input
2. Zero the skew delay for red, green, and blue as follows:
   a. Use a Tweeker or other small screwdriver to press and hold the Delay Select button for 3 seconds. The Delay Red, Green, and Blue LEDs all go out.
   b. Release the Delay Select button.
3. Use UTP cable test equipment or examine the displayed video image with a critical eye to determine which video signal — red, green, or blue — is most shifted to the left.

   TIP: The Extron VTG 300 or VTG 400 are recommended to provide a crosshatch test pattern, which is ideal for determining skew. A black background with vertical white lines can also be useful.

4. Adjust the leftmost video signal as follows:

   NOTE: The switcher cannot shift the rightmost video image to the left.

   a. Use a Tweeker or other small screwdriver to press and release the Delay Select button until the LED lights for the left-shifted color — Delay Red, Green, or Blue.
   b. Slowly rotate the Delay Adjust control clockwise while monitoring the display. Observe that the leftmost color shifts rightward one step at a time. Continue to rotate the control until that color is properly converged.

      NOTE: A 2-nanosecond adjustment is very fine. Up to 10 nanoseconds of delay may be necessary before you detect a change in the display.

   c. Use a Tweeker or other small screwdriver to press the Delay Select button one more time to save the most recent adjustment or allow the 10-second timeout to elapse.
5. If one of the remaining colors is left shifted, repeat steps **3** and **4**.
6. Repeat step **1** through **5** for each input.

Remote Control

This section discusses how to connect and configure the MTP SW6. Topics that are covered, include:

- **Simple Instruction Set Control**
- **Windows-Based Program Control**
- **Contact Closure Control**
- **IR 102 Infrared Remote Control**

The switcher can be remotely controlled via its rear panel Remote connector (Figure 13). Remote control devices can be:

- A host device such as a computer or control system
- A device such as an Extron IR 102 Universal remote control kit
- A contact closure device such as an Extron KP 6 Keypad Control

PIN	RS-232	Contact Closure	Function
1	—	In #1	Input #1
2	TX	—	Transmit data
3	RX	—	Receive data
4	—	In #2	Input #2
5	Gnd	Gnd	Ground
6	—	In #3	Input #3
7	—	In #4	Input #4
8	—	In #5	Input #5
9	—	In #6	Input #6

Figure 13. Remote connector pinout

NOTES:

- The cable used to connect the Remote port to a computer, control system, contact closure device, or IR control kit may need to be modified by removing pins or cutting wires. If unneeded pins are connected, the switcher may hang up.
- For RS-232, Windows-based program, and IR control, use a control cable with only pins 2, 3, and 5 connected. Otherwise, either cut the wires to the other pins in hard-shelled connectors or remove the unneeded pins from molded plugs
- See **Simple Instruction Set Control** for definitions of the SIS commands.
- See **Windows-Based Program Control** for details on how to install and use the control software.
- For contact closure, use a control cable with pins 2 and 3 disconnected. Otherwise, either cut the wires to these pins in hard-shelled connectors or remove these pins from molded plugs. See **Contact Closure Control** for information on how to make a remote contact closure device.

Simple Instruction Set™ Control

Host-to-Interface Communications

SIS commands consist of one or more characters per field. No special characters are required to begin or end a command character sequence. When a command is valid, the unit executes the command and sends a response to the host device. All responses from the unit to the host end with a carriage return and a line feed (CR/LF = ↵), which signals the end of the response character string. A string is one or more characters.

Symbol Definitions

Symbols (variables), defined on the next page, are used throughout the **Unit-Initiated Messages** section and the **Command/Response Table for SIS Commands**. The symbols represent variables in the unit-initiated messages and the command/response table fields.

↵	=	CR/LF (carriage return/line feed)	
←	=	Carriage return (no line feed)	
•	=		Space (hard) character
X1	=	Input	1 – 6
X2	=	Threshold	0 = outside of threshold range 1 = within threshold
X3	=	Input peaking range	00 – 65
X4	=	Input level range	00 – 255
X5	=	Skew adjustment range	00 – 31 (each step = 2ns)
X6	=	Video plane	0 = red 1 = green 2 = blue
X7	=	RS-232 insert status	0 = disabled 1 = enabled
X8	=	Audio/RS-232 wire pair input type	0 = audio 1 = RS-232
X9	=	Audio gain	0 – 24 (1 dB/step)
X10	=	Numeric dB value	–18 to +24 (45 steps of gain or attenuation) (Default = 0 dB)
X11	=	Audio attenuation	1 – 18 (1 dB/step)
X12	=	Volume adjustment range	0 – 100
X13	=	Mute, Front panel lock	0 = off 1 = on
X14	=	Switch mode	1 = normal (manual) 2 = auto
X15	=	Firmware version	*v.vv*

Unit-Initiated Messages

When a local event, such as a front panel operation, auto switch, or error condition, occurs, the unit responds by sending a message to the host. The unit-initiated messages are listed below:

(c)COPYRIGHT 2008, EXTRON ELECTRONICS "MTP SW6", *v.vv*↵↵

The connected unit issues the appropriate copyright message (above) when it first powers on. *v.vv* is the firmware version number.

ALL[X1]↵

The unit sends the All message as a unit-initiated message under two conditions:

- You press a front panel input button.
- An input selection occurs via auto switch mode.

NOTE: The switcher returns the All message for every press of an input button, even if no switch occurs. No switch will occur if you press an already selected button or if the switcher is in auto switch mode (front panel input selection is disabled).

F[X14]↵

The unit sends the F message whenever the switch mode is changed from the front panel.

ILVL[X1]*[X2]↵

The unit sends the Ilvl message whenever the level adjustment is changed from the front panel.

IPEK[X1]*[X3]↵

The unit sends the Ipek message whenever the peaking adjustment is changed from the front panel.

ISEQ[X1]*[X5]*[X5]*[X5]↵

The unit sends the Iseq message whenever the skew settings have been changed from the front panel. The [X5] values are the red, green, and blue skew values, in that order.

ZPK↵

The unit sends the Zpk message whenever the skew settings have been reset from the front panel.

Error Responses

When the unit receives a valid SIS command, it executes the command and sends a response to the host device. If the unit is unable to execute the command because the command is invalid or it contains invalid parameters, the unit returns an error response to the host. The error response codes are:

E10	-	Invalid command
E11	-	Invalid preset number
E13	-	Invalid parameter
E14	-	Invalid command for this configuration

Timeout

Pauses of 10 seconds or longer between command ASCII characters result in a timeout. The command operation is aborted with no other indication.

Using the Command/Response Table

The command/response table begins on page 23. Lower case letters are acceptable in the command field except where indicated for the audio level (gain and attenuation) commands. Symbols are used throughout the table to represent variables in the command/response fields. Command and response examples are shown throughout the table. The ASCII to HEX conversion table below is for use with the command/response table.

ASCII to HEX Conversion Table										Esc	1B	CR	ØD	LF	ØA
Space	2Ø	!	21	“	22	#	23	$	24	%	25	&	26	‘	27
(	28	)	29	*	2A	+	2B	,	2C	-	2D	.	2E	/	2F
Ø	3Ø	1	31	2	32	3	33	4	34	5	35	6	36	7	37
8	38	9	39	:	3A	;	3B	<	3C	=	3D	>	3E	?	3F
@	4Ø	A	41	B	42	C	43	D	44	E	45	F	46	G	47
H	48	I	49	J	4A	K	4B	L	4C	M	4D	N	4E	O	4F
P	5Ø	Q	51	R	52	S	53	T	54	U	55	V	56	W	57
X	58	Y	59	Z	5A	[	5B	\	5C	]	5D	^	5E	_	5F
`	6Ø	a	61	b	62	c	63	d	64	e	65	f	66	g	67
h	68	i	69	j	6A	k	6B	l	6C	m	6D	n	6E	o	6F
p	7Ø	q	71	r	72	s	73	t	74	u	75	v	76	w	77
x	78	y	79	z	7A	{	7B	|	7C	}	7D	~	7E	DEL	7F

Command/Response Table for SIS Commands

Command	ASCII Command (host to unit)	Response (unit to host)	Additional description
Input selection			
NOTE: The switcher supports 1-, 2-, or 3-digit numeric entries (1!, 02&, or 003%). The switcher reports all selections with 1-digit numbers. **NOTE:** The & **select** and % **select** commands for video can be used interchangeably.			
Select input X1 video and audio to output	X1!	All X1↵	Select input X1 video and audio to be the output.
Example:	1!	All1↵	Select input 1 video and audio.
Select input X1 video only to output	X1&	Vid X1↵	Select X1 video (audio is broken away).
Example (see 2nd note above):	5&	Vid1↵	Select input 5 video.
Select input X1 video only to output	X1%	Vid X1↵	Select X1 video (audio is broken away).
Select input X1 audio only to output	X1$	Aud X1↵	Select X1 audio (audio is broken away).
Example:	2$	Aud2↵	Select input 2 audio.
Auto level and peaking adjustment			
NOTE: The switcher must be running firmware version 1.02 or newer (issue the Q SIS command). Older firmware versions appear to respond correctly, but do not adjust the level and peaking values correctly.			
Execute auto peaking calibration *(with optional MTP signal generator)*	Esc X1 AADJ←	Aadj X1 *2↵ *{start}* All X1↵ *{switch}* Aadj X1 * X2↵ *{finished}* Ipek X1 * X3↵ *{new value}* Ilvl X1 * X4↵ *{new value}*	Switch input X1 to the output and auto adjust the peaking on input X1. The X2 value in the responses reports whether the adjustment value was within or outside of the threshold.
NOTE: Before issuing the auto calibration command: **1**. Disconnect the power and RJ-45 cables at the MTP transmitter connected to X1. **2**. Connect the two cables to the optional MTP signal generator. **3**. If the input cable is longer than 300 feet (90 m), set the MTP signal generator Pre-Peak switch on (up when the RJ-45 connector on the signal generator is to the right as shown). If the cable is shorter than 300 feet (90 m), set the switch down.			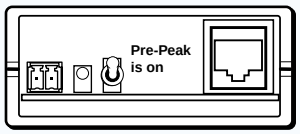
Manual video peaking adjustment			
Set a peaking value	Esc X1 * X3 IPEK←	Ipek X1 * X3↵	Set the peaking to X3.
Increment peaking	Esc X1 +IPEK←	Ipek X1 * X3↵	Increase peaking setting 1 step.
Decrement peaking	Esc X1 -IPEK←	Ipek X1 * X3↵	Decrease peaking setting 1 step.
Show peaking	Esc X1 IPEK←	X3↵	
Manual video level adjustment			
Set a level value	Esc X1 * X4 ILVL←	Ilvl X1 * X4↵	Set the level to X4.
Increment level	Esc X1 +ILVL←	Ilvl X1 * X4↵	Increase level setting 1 step.
Decrement level	Esc X1 -ILVL←	Ilvl X1 * X4↵	Decrease level setting 1 step.
Show level	Esc X1 ILVL←	X4↵	

NOTE:

X1 = Input number	1-6	
X2 = Threshold	0 = outside threshold	1 = within threshold
X3 = Input peaking range	00 - 65	
X4 = Input level range	000 - 255	

Command/response table for SIS commands (continued)

Command	ASCII Command (host to unit)	Response (unit to host)	Additional description
Skew adjustment			
Set all skew values for an input	Esc X1*X5*X5*X5Iseq←	Iseq X1*X5*X5*X5*X5↵	Set specific skew adjustment values for TP input X1. X5 values are listed in RGB order.
Example:	Esc2*0*0*4Iseq←	Iseq02*00*00*04↵	Set input 2's skew settings as follows: Red = 0 ns Green = 0 ns Blue = 8 ns (delayed 8 ns)
Increment one skew value for an input	Esc X1*X6+Iseq←	Iseq X1*X5*X5*X5*X5↵	Increase input X1's X6 plane's skew value by 1 step (2 ns).
Decrement one skew value for an input	Esc X1*X6-Iseq←	Iseq X1*X5*X5*X5*X5↵	Decrease input X1's X6 plane's skew value by 1 step (2 ns).
Example:	Esc2*2-Iseq←	Iseq02*00*00*03↵	Decrease input 2's blue skew by 2 ns to 6 ns.
Read skew values	Esc X1Iseq←	X5*X5*X5↵	
RS-232 insert enable			
Disable the RS-232 insert	Esc1*0Lrpt←	Lrpt0↵	Disable the RS-232 insert.
Enable the RS-232 insert	Esc1*1Lrpt←	Lrpt1↵	Enable the RS-232 insert.
Read the RS-232 insert status	Esc1Lrpt←	X7↵	
Audio/RS-232 TP input (wire pair 3 and 6) configuration			
NOTE: The RS-232 insert, when enabled (Esc1*1Lrpt←), overrides the audio/RS-232 TP input configuration.			
Configure input as audio	X1*0\	Typ X1*0↵	Define the audio/RS-232 input as audio, such as provided by an MTP 15HD A transmitter.
Configure input as RS-232	X1*1\	Typ X1*1↵	Define the audio/RS-232 input as bidirectional serial communications, such as provided by an MTP 15HD RS transmitter.
Show TP input configuration	X1\	X8↵	Show the audio/RS-232 wire pair input definition.
Audio input gain and attenuation level			
NOTE: The set gain (**G**) and set attenuation (**g**) commands **are** case sensitive. The increment, decrement, and read commands are not case sensitive.			
Set the input audio gain to a +dB value	X1*X9G	In X1•Aud X10↵	
Example:	1*2G	In01•Aud+02↵	Set input 1 audio gain to +2 dB.
Set the input audio attenuation to a -dB value	X1*X11g	In X1•Aud X10↵	
Increment gain	X1+G	In X1•Aud X10↵	Increase gain by 1 dB.
Example:	5+G	In05•Aud+03↵	Increase audio input 5 level from +2 dB to +3 dB.
Decrement gain	X1-G	In X1•Aud X10↵	Decrease gain by 1 dB.
Example:	7-G	In07•Aud-09↵	Decrease audio input 7 level from -8 dB to -9 dB.
Read input level	X1G	X10↵	

NOTE:

X1 = Input number	1-6		
X5 = Skew adjustment range	00 - 31 (each step = 2 ns)		
X6 = Video plane	0 = red	1 = green	2 = blue
X7 = RS-232 insert status	0= disabled	1 = enabled	
X8 = Audio/RS-232 wire pair input type	0 = audio	1 = RS-232	
X9 = Video plane	0 = red	1 = green	2 = blue
X10 = RS-232 insert status	0= disabled	1 = enabled	
X11 = Audio/RS-232 wire pair input type	0 = audio	1 = RS-232	

Command/response table for SIS commands (continued)

Command	ASCII Command (host to unit)	Response (unit to host)	Additional description
Local audio output volume			
Set the local audio output volume to a specific value	X12V	VolX12↵	
Example:	50V	Vol50↵	Set the output volume to 50%.
Increment volume	+V	VolX12↵	Increment volume by 1%.
Example:	+V	Vol51↵	
Decrement volume	-V	VolX12↵	Decrement volume by 1%
Read output volume	V	X12↵	
Audio or RS-232 mute commands			
Audio or RS-232 mute	1Z	Amt1↵	Mute (silence) the audio or RS-232 output.
Audio or RS-232 unmute	0Z	Amt0↵	Unmute the audio or RS-232 output (audio on).
Read audio/RS-232 mute status	Z	X13↵	1 = mute on, 0 = mute off.
Switch mode			
Set normal (manual) switch mode	1#	F1↵	The user selects an input manually, from the front panel or under remote control.
Set auto switch mode	2#	F2↵	The switcher automatically switches to the highest numbered input with signals present. Manual input selection is disabled.
Front panel lock (executive mode)			
Lock the front panel	1X	Exe1↵	Lock the front panel level, peaking, and skew functions. The switch mode (auto or manual) cannot be changed. Input selection is still available.
Unlock the front panel	0X	Exe0↵	All front panel functions are available.
View lock status	X	X13↵	
Resets			
Reset all video level and peaking adjustments	EscZT←	Zpt↵	Clear all video level and peaking adjustments to their default (0) values.
Reset all skew adjustments	EscZK←	Zpk↵	Clear all input and output skew values to 0 ns.
Reset audio input levels	EscZA←	Zpa↵	Reset all audio input levels (gain and attenuation) to 0 dB.
Reset audio output levels	EscZV←	Zpv↵	Reset the audio output level (volume) to 100% (no attenuation.
Reset whole switcher	EscZXXX←	Zpx↵	Reset all level and peaking, skew, audio input gain and attenuation values to 0. Reset output volume to 100% (no attenuation).
Information requests			
Information request	I	VX1•AX1•FX14•VmtX13•AmtX13•ExeX13↵	V (selected video input) • A (selected audio input) • F (switch mode) • Vmt *(video mute — not supported by this switcher)* • Amt (audio mute status) • Exe (front panel lock).
Request part number	N	68-928-01↵	
Query controller version	Q	X15↵	
Example:	Q	1.23↵	The factory-installed firmware version is 1.23 (sample value only).
Request system threshold status	42S	X2↵	

NOTE:

X1 = Input number	1-6	
X2 = Threshold	0 = outside threshold	1 = within threshold
X12 = Volume adjustment range	0 - 100	
X13 = Mute, front panel lock	0 = off	1 = on
X14 = Switch mode	1 = normal (manual)	2 = auto
X15 = Firmware version	*v.vv*	

Windows-Based Program Control

The Windows-based Extron Universal Switcher Control Program, which communicates with the switcher via the Remote port, provides an easy way to configure and operate the MTP SW6 switcher. The program is compatible with Windows 2000 and Windows XP or higher versions.

Installing the Software

The program is contained on the Extron Software Products DVD. Install the software as follows:

1. Insert the disk into the drive. The Extron software DVD window should appear automatically (figure 14).

Figure 14. **Software CD window**

> **NOTE:** If the window does not self-start, run Launch.exe from the DVD.

2. Click the Software tab (figure 14).

3. Scroll to the desired program and click Install (figure 15).

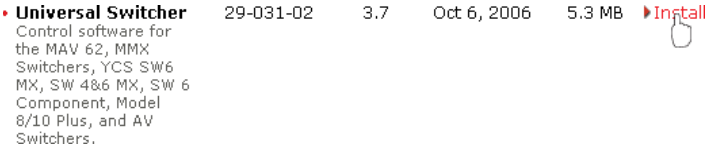

Figure 15. **Software installation**

4. Follow the on-screen instructions. By default, the installation of the Universal Switchers Control Program creates a C:\Program Files\Extron\UniversalSwitcher folder, and it places four icons into a group folder named "Extron Electronics\Universal Switcher." The four installed icons are:
   - Check for Universal Switcher Updates
   - Uninstall Universal Switcher
   - Universal Switcher Control Program
   - Universal Switcher Help

Using the Software

Run the program as follows:

1. Click **Start** > **Programs** > **Extron Electronics** > **Universal Switcher (New)** > **Universal Switcher Control Pgm**.
2. Click the comm port that is connected to the switcher's RS-232 port.
3. The Extron Universal Switcher Control Program window (figure 16) displays the selected video and audio input.

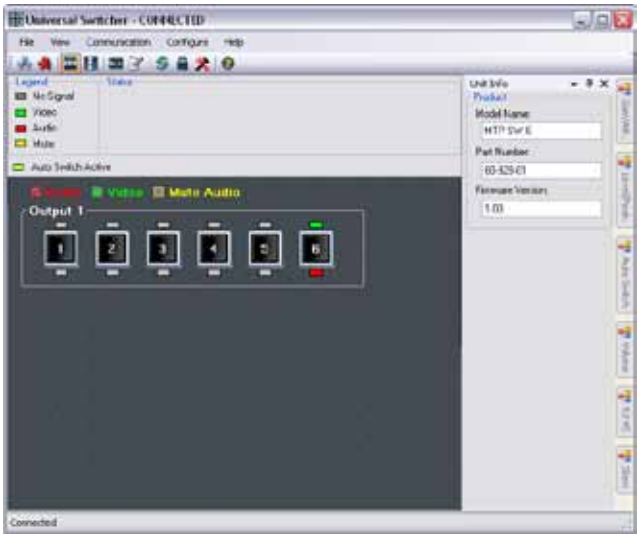

Figure 16. Universal Switcher Control program window

- To set up for audio follow switching (the output has the same audio and video input selected), select the Audio and Video check boxes. To set up for audio breakaway switching (the output has different audio and video inputs selected), deselect the Audio or Video check box.
- To select an input, click the input button.
- To set the input audio level (gain and attenuation), click the Gain/Att tab.
- To manually adjust the level and peaking, click the Level/Peak tab.
- To select or deselect auto switch mode, click the Auto Switch tab.
- To set the output volume, click the Volume tab.
- To set the RS-232 or audio definition for wire pair 3 and 6, click the RJ-45 tab.
- To set the skew adjustments, click the Skew tab.

Contact Closure Remote Control

The Remote connector also provides a way to select an input to the switcher using a remote contact closure device. Contact closure control uses pins on the Remote connector that are not used by the RS-232 interface. **Figure 13** shows the contact closure pin assignments.

To select a different input number using a contact closure device, momentarily short the pin for the desired input number to logic ground (pin 5). To force one of the inputs to be always selected, leave the short to logic ground in place. The short overrides front panel input selections.

IR 102 Infrared Remote Control

The optional Extron IR 102 kit consists of the following components:

- IR 102 handheld remote control unit
- IR 102 remote receiver with 3-foot cable and RS-232 connector
- IR detector with 6-foot cable and captive screw connector
- External 12 VDC power supply

Install and operate the remote control in accordance with the *IR 102 User's Guide* included with the remote.

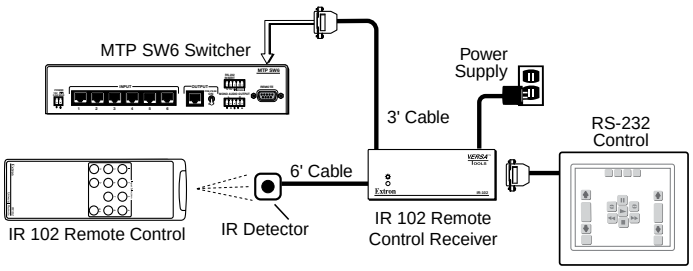

Figure 17. IR 102 Remote application

Reference Information

This section discusses the specifications, part numbers, and accessories for the MTP SW6. Topics that are covered, include:

- **Specifications**
- **Part Numbers**

Specifications

Video

Gain ..... Unity

Video input — see MTP Series transmitter specifications

Number/signal type..... 6 sets of proprietary analog signals
Connectors ..... 6 female RJ-45

Video output — See MTP Series receiver specifications

Number/signal type..... 1 set of proprietary analog signals
Connectors ..... 1 female RJ-45
Maximum resolution 1920x1200

NOTE *Refer to the applicable MTP 15HD transmitter/receiver user's manual for the maximum distances recommended for specific resolutions.*

Audio

Number/signal type..... 1 set of proprietary analog signals
Connectors ..... 1 female RJ-45
Gain ..... Unbalanced output: 0 dB; balanced output: +6 dB
Frequency response ..... 20 Hz to 20 kHz, ±1 dB
THD + Noise..... 0.15% @ 1 kHz, 0.3% @ 20 kHz at nominal level
S/N..... >70 dB at maximum output (unweighted)
CMRR..... >43 dB @ 20 Hz to 20 kHz

Audio input — see MTP Series transmitter specifications

Number/signal type..... 6 sets of proprietary analog signals
Connectors ..... 6 female RJ-45

NOTE *0 dBu = 0.775 Vrms, 0 dBV = 1 Vrms, 0 dBV ≈ 2 dBu*

Audio output — local

Number/signal type..... 1 dual mono, balanced/unbalanced
Connectors ..... (1) 3.5 mm captive screw connector, 5 pole
Impedance..... 50 ohms unbalanced, 100 ohms balanced
Gain error ..... ±1 dB channel to channel
Maximum level (Hi-Z) ..... >+18 dBu, balanced or unbalanced at 1% THD+N
Maximum level (600 ohm)..... >+15 dBm, balanced or unbalanced at 1% THD+N

Audio output — see MTP Series receiver specifications

Number/signal type	1 set of proprietary analog signals
Connectors	1 female RJ-45

Control/remote— switcher host control

Serial control port	1 RS-232, 9-pin female D connector
Baud rate and protocol	9600 baud, 8 data bits, 1 stop bit, no parity
Serial control pin configuration	2 = TX, 3 = RX, 5 = GND
Program control	Extron control/configuration program for Windows® Extron Simple Instruction Set (SIS™)

Control/remote — external device (pass-through)

Serial control port	RS-232, 3.5 mm captive screw connector, 5 pole (uses 3 poles)
Baud rate and protocol	Up to 38400 baud; 5-8 data bits; 1 or 2 stop bits; odd, even, or no parity; XON, XOFF, or no flow control

NOTE *Protocol is mirrored between the switcher and the receiver.*

Serial control pin configuration	1 = TX, 2 = RX, 3 = GND

General

Recommended cable type	CAT5/5E/6 (shielded or unshielded)
External power supply	100 VAC to 240 VAC, 50/60 Hz, external; to 12 VDC, 2 A, regulated
Power input requirements	12 VDC, 0.8 A
Temperature/humidity	Storage: -40 to +158 °F (-40 to +70 °C) / 10% to 90%, noncondensing Operating: +32 to +122 °F (0 to +50 °C) / 10% to 90%, noncondensing
Cooling	Convection, vents on right and left sides
Mounting	
Rack mount	Yes, with optional 1U, 9.5" deep rack shelf (RSU 129, #60-190-01 or RSB 129, 60-604-02) or 1U, 6" deep rack shelf (RSU 126, #60-190-10 or RSB 126, 60-604-11)
Furniture mount	Yes, with optional Under-Desk Mounting Kit (MBU 125, #70-077-01)
Enclosure type	Metal
Enclosure dimensions	1.7" H x 8.7" W x 6.0" D (1U high, half rack wide) (4.3 cm H x 22.1 cm W x 15.2 cm D) (Depth excludes connector and knob.)
Product weight	1.2 lbs (0.5 kg)
Shipping weight	3 lbs (2 kg)
Vibration	ISTA 1A in carton (International Safe Transit Association)
Regulatory compliance	
Safety	CE, c-UL, UL
EMI/EMC	CE, C-tick, FCC Class A, ICES, VCCI
MTBF	30,000 hours
Warranty	3 years parts and labor

NOTE: All nominal levels are at ±10%.

NOTE: Specifications are subject to change without notice.

Part Numbers

Included Parts

These items are included in each order for an MTP SW6:

Included parts	Part number
MTP SW6 switcher	60-928-01
IEC power cord	
Tweeker (small screwdriver)	
MTP SW6 Setup Guide	
Desktop power supply, 12 V, 2 A	70-775-01
Captive screw 5-pole connectors (qty. 2)	10-457-12
Captive screw 2-pole connector (qty. 1)	
Extron Software Products DVD (Universal Switcher Control Program)	

Accessories

Accessory	Part number
RSU 129 1U universal rack shelf	60-190-01
RSB 129 1U basic rack shelf	60-604-02
RSU 126 6-inch deep universal rack shelf	60-190-10
RSB 126 6-inch deep basic rack shelf	60-604-11
MBU 125 under-desk mounting kit	70-077-01
MTP signal generator	70-647-01
KP 6 remote control keypad	60-111-20
IR 102 remote control kit	70-224-01

Cables

NOTE: Enhanced Skew-Free A/V UTP cables are not recommended for Ethernet/LAN applications.

Enhanced Skew-Free™ A/V cable	Part number
Enhanced Skew-Free A/V cable (cut, various lengths)	26-569-*xx*
Enhanced Skew-Free A/V 1000’ (Bulk) (non-plenum)	22-141-03
Plenum enhanced Skew-Free A/V 1000’ (Bulk)	22-142-03

Connectors

Connector	Part number
CAT 6 jack (black), qty. 10	100-476-01
CAT 6 jack (red), qty. 10	100-477-01
CAT 6 jack (blue), qty. 10	100-478-01
CAT 6 jack (orange), qty. 10	100-479-01
CAT 6 jack (gray), qty. 10	100-480-01
CAT 6 jack (white), qty. 10	100-481-01
CAT 6 jack (ivory), qty. 10	100-482-01

Extron Warranty

Extron Electronics warrants this product against defects in materials and workmanship for a period of three years from the date of purchase. In the event of malfunction during the warranty period attributable directly to faulty workmanship and/or materials, Extron Electronics will, at its option, repair or replace said products or components, to whatever extent it shall deem necessary to restore said product to proper operating condition, provided that it is returned within the warranty period, with proof of purchase and description of malfunction to:

USA, Canada, South America, and Central America:
Extron Electronics
1001 East Ball Road
Anaheim, CA 92805
U.S.A.

Japan:
Extron Electronics, Japan
Kyodo Building, 16 Ichibancho
Chiyoda-ku, Tokyo 102-0082
Japan

Europe, Africa, and the Middle East:
Extron Europe
Hanzeboulevard 10
3825 PH Amersfoort
The Netherlands

China:
Extron China
686 Ronghua Road
Songjiang District
Shanghai 201611
China

Asia:
Extron Asia
135 Joo Seng Road, #04-01
PM Industrial Bldg.
Singapore 368363
Singapore

Middle East:
Extron Middle East
Dubai Airport Free Zone
F12, PO Box 293666
United Arab Emirates, Dubai

This Limited Warranty does not apply if the fault has been caused by misuse, improper handling care, electrical or mechanical abuse, abnormal operating conditions, or modification were made to the product that were not authorized by Extron.

NOTE: If a product is defective, please call Extron and ask for an Application Engineer to receive an RA (Return Authorization) number. This will begin the repair process.

USA:	(714) 491-1500	**Europe**:	31.33.453.4040
Asia:	65.383.4400	**Japan**:	381.3.3511.7655

Units must be returned insured, with shipping charges prepaid. If not insured, you assume the risk of loss or damage during shipment. Returned units must include the serial number and a description of the problem, as well as the name of the person to contact in case there are any questions.

Extron Electronics makes no further warranties either expressed or implied with respect to the product and its quality, performance, merchantability, or fitness for any particular use. In no event will Extron Electronics be liable for direct, indirect, or consequential damages resulting from any defect in this product even if Extron Electronics has been advised of such damage.

Please note that laws vary from state to state and country to country, and that some provisions of this warranty may not apply to you.

Extron **USA - West**
Headquarters

+800.633.9876
Inside USA / Canada Only

+1.714.491.1500
+1.714.491.1517 FAX

Extron **USA - East**

+800.633.9876
Inside USA / Canada Only

+1.919.863.1794
+1.919.863.1797 FAX

Extron **Europe**

+800.3987.6673
Inside Europe Only

+31.33.453.4040
+31.33.453.4050 FAX

Extron **Asia**

+800.7339.8766
Inside Asia Only

+65.6383.4400
+65.6383.4664 FAX

Extron **Japan**

+81.3.3511.7655
+81.3.3511.7656 FAX

Extron **China**

+400.883.1568
Inside China Only

+86.21.3760.1568
+86.21.3760.1566 FAX

Extron **Middle East**

+971.4.2991800
+971.4.2991880 FAX

© 2010 Extron Electronics. All rights reserved. **www.extron.com**