**KERN & Sohn GmbH**
*Ziegelei 1*
*D-72336 Balingen*
*E-Mail: info@kern-sohn.com*
*Tel: +49-[0]7433- 9933-0*
*Fax: +49-[0]7433-9933-149*
*Internet: www.kern-sohn.com*

# Service manual
## Baby weighing scale

## KERN MBB-M (approval series)

Version 1.0
3/2010
GB



**MBB-M-SH-e-1010**

GB

# KERN MBB-M

Version 1.0 3/2010

## Service manual

**Baby weighing scale**

## Table of Contents


1 Basic Information ..... 3
2 Technical Data ..... 4
3 Overview of Display / Keyboard ..... 5
4 Error Message Indication ..... 6
5 Trouble Shooting ..... 7
6 Calibration ..... 8
6.1 Calibration switch and seals ..... 8
6.2 Calibration procedure ..... 10
7 Service Mode ..... 12
7.1 Navigation in the menu ..... 12
7.2 Description ..... 13
7.3 Setting of maximum capacity and resolution ..... 14
8 Approval Mode – Menu Overview ..... 15
9 Schematics ..... 16
10 System Block Diagram ..... 20
11 Display Format ..... 21
12 Layout ..... 22
13 Assembly Drawing ..... 25

# 1 Basic Information

## Grundlegende Hinweise

**The device must be repaired only by trained specialist staff or personnel with professional formation (such as a repair-specialist accredited by law concerning verification).**

**The service manual is obligatory for repair work.**

**After repair, original conditions of the device have to be restored.**

**Only original spare parts should be used.**

**<u>Instructions about conformity-evaluated scales</u>:**

**Repair must be carried only at 100% compliance with the type approval.**
**A violation of this specification will result in a loss of the type approval!**

**After successful repair the balance will have to be reverified before it can be used again in a statutorily regulated field.**

Das Gerät darf nur von geschultem oder beruflich ausgebildetem Fachpersonal (z. B. eichrechtlich anerkannter Instandsetzer) repariert werden.

Die Serviceanleitung ist bindend für Reparaturen.

Das Gerät muss nach erfolgter Reparatur wieder in den Originalzustand zurückversetzt werden.

Es dürfen nur Originalersatzteile verwendet werden.

<u>Hinweis zu konformitätsbewerteten Waagen</u>:

Reparatur darf nur in 100% -iger Übereinstimmung mit der Bauartzulassung erfolgen. Ein Verstoß gegen diese Vorgabe führt zum Erlöschen der Bauartzulassung!

Nach erfolgreicher Reparatur muss eine Nacheichung erfolgen, um die Waage wieder im gesetzlich geregelten Bereich verwenden zu können.

# 2 Technical Data

| KERN | MBB 15K5M | MBB 15K2DM |
|---|---|---|
| Weighing range (max) | 15 kg | 6 kg; 15 kg |
| Minimum load (Min) | 100 g | 40 g |
| Verification value (e) | 5 g | 2 g; 5 g |
| Display | LCD 24mm digit height<br>1.0 inch LCD with 5 and ½ digits | |
| Recommended calibration weight, (class) | 12 kg<br>(M1) | |
| Warm-up time | 10 min | |
| Operating temperature | + 5° C …. + 35° C | |
| Storage temperature | - 20°C … + 60°C | |
| Humidity of air | max. 80 % (not condensing) | |
| Power Supply | Line adapter 15V / 300 mA ( EN60601-1) | |
| | Battery operation 6 x 1.5V, size AA | |
| Auto Off | After 3 min without load change, adjustable | |
| Housing display unit (B x D x H) mm | 210 x 110 x 45 | |
| Weighing pan (WxD) mm | 550 x 240 | |
| Calibrated in accordance with 90/384/EEC | Medical grade III | |
| Medical product in accordance with 93/42/EEC | Category I with measuring function | |

# 3 Overview of Display / Keyboard

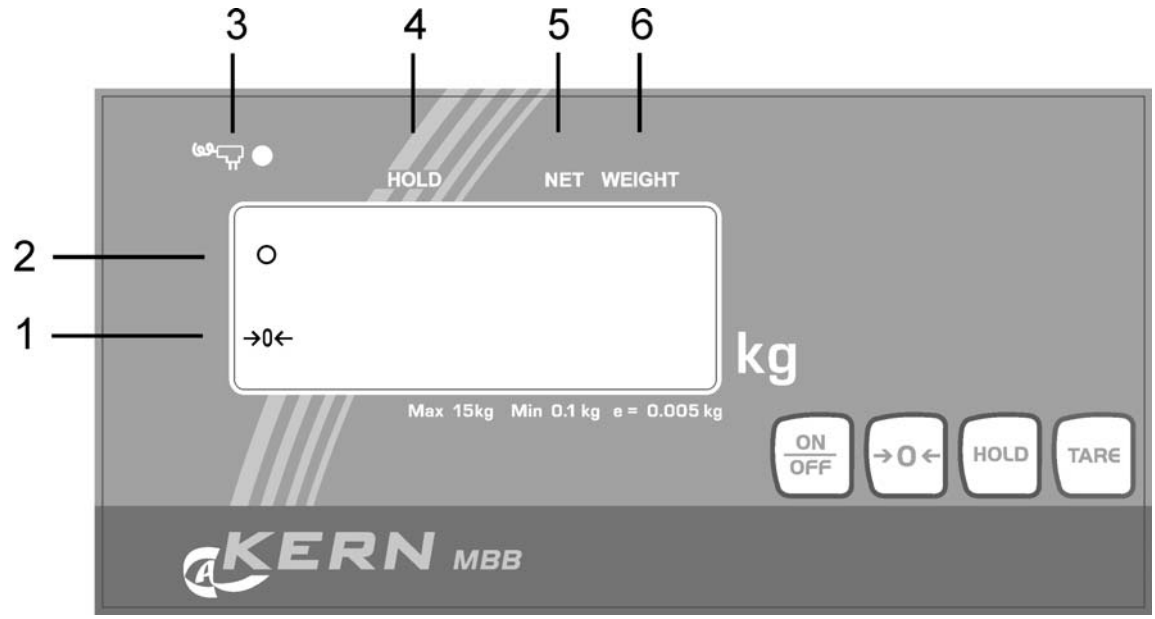


**Display view**

| Display | | Designation | Description |
|---|---|---|---|
| 1 | →0← | Zeroing display | Should the balance not display exactly zero despite empty scale pan, press the →0← button. Your balance will be set to zero after a short standby time. |
| 2 | ○ | Stability display | Scales are in a steady state |
| 3 | ○ | Power supply connected | Illuminates in the event of power supply via mains adaptor |
| 4 | HOLD ▲ | HOLD function active | Hold/Save function active |
| 5 | NET ▲ | Net weight display | Net weight will be displayed |
| 6 | WEIGHT ▲ | Weight value display | Current weight value will be displayed |

**Keyboard**

| Button | Designation | Function |
|---|---|---|
|  | ON/OFF-switch | Turn on/off |
|  | Zero setting key | Balance will be reset to 0.0 kg.<br>Possible up to max. 2% of maximum load for verified scales or 2 % or 100% of maximum load for all other scales (selectable via menu) |
|  | HOLD button | Hold function/Calculation of a stable weight value |
|  | TARE button | Tare balance |

# 4 Error Message Indication

A. **ErrE** : EEprom Error

B. **ErrL** : Low zero count

C. **Err** : High zero count / Overload

D. Lo : Low battery indication

E. ooooo : The scale plate was loaded during switching on the scale

# 5 Trouble Shooting

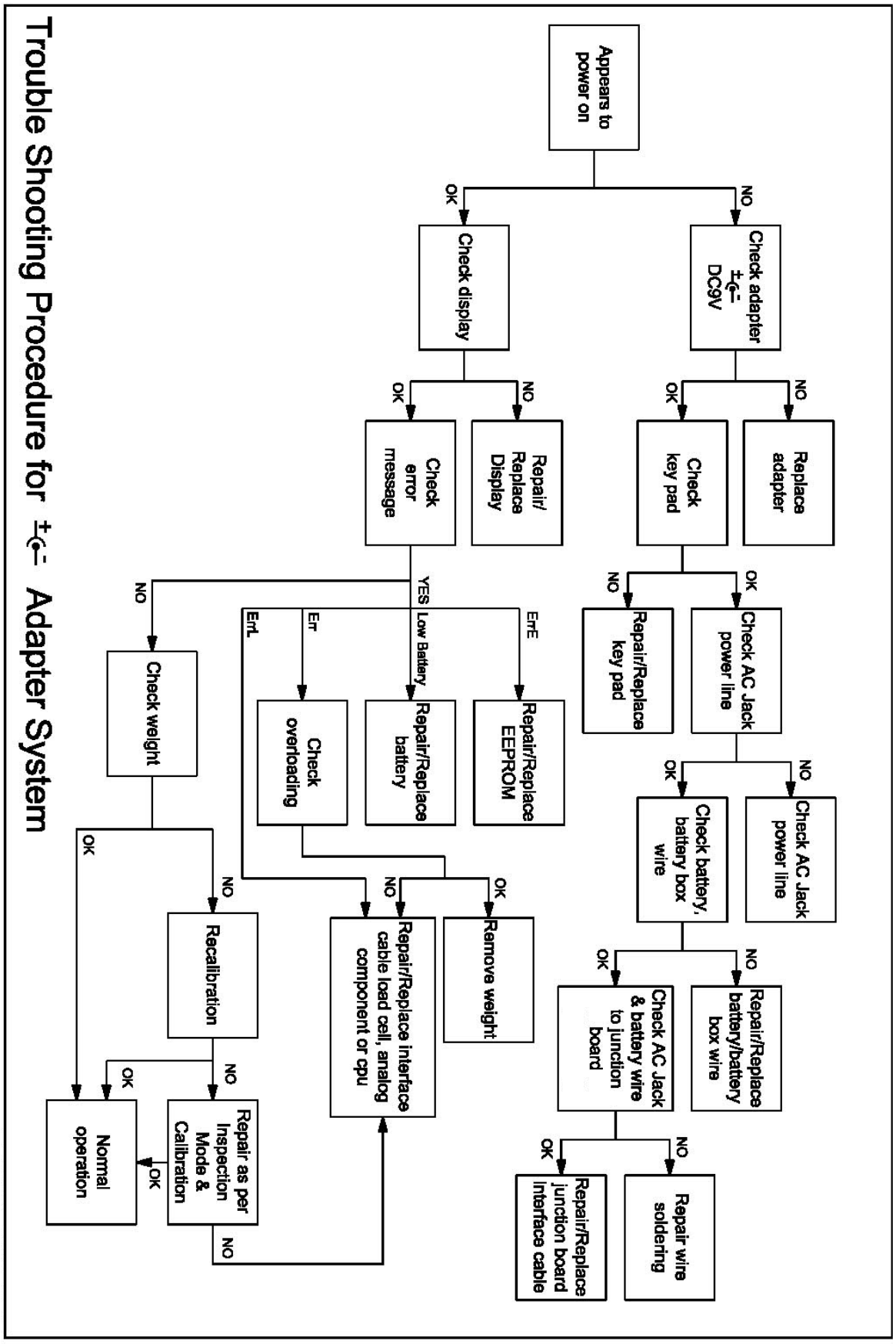

# 6 Calibration

## 6.1 Calibration switch and seals

After verification the display device is sealed at the indicated positions.
**Verification of the balance is invalid without the "seal".**

**Position of the official seals:**

1. Rear of display device




2. Battery compartment




3. Bottom side of platform

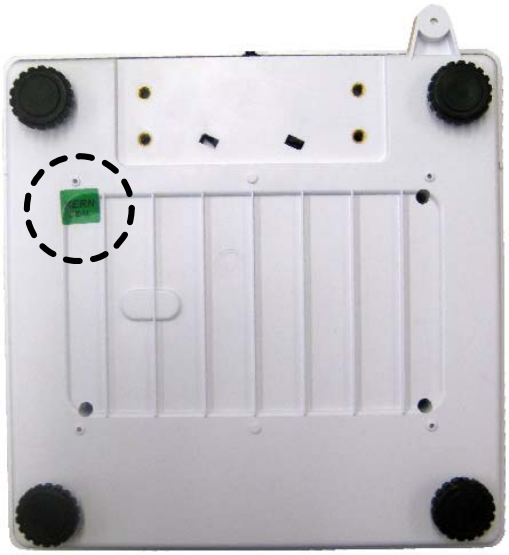

**Position of calibration switch:**

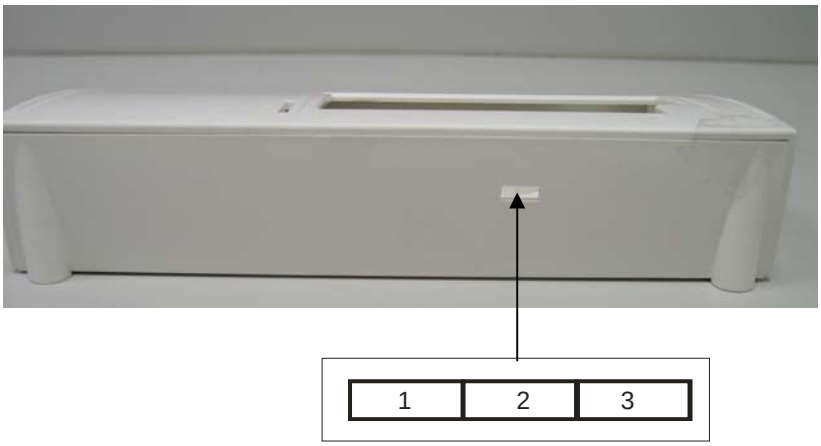


| Position of calibration switch | Status |
|---|---|
| 1. to the left | **Test mode**<br>Shows internal count, e.g. 100052<br>Zero count: 5000 ~ 200000<br>Span count: 10000 ~ 250000<br><br>**Note**: If the value of internal count is outside the reference value, please change the load cell or the main board. |
| 2. concentric | **Service mode**<br>Calibration position – enables calibration |
| 3. to the right | **Approval mode**<br>Verification position – calibration locked |



**Switch key**

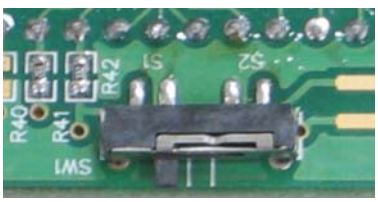


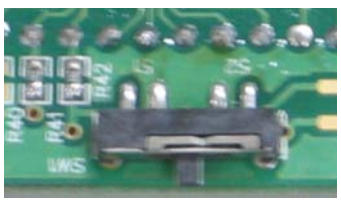




## 6.2 Calibration procedure

Observe stable environmental conditions. A warming up time of approx. 10 minutes is required for stabilization.

**Attention:**
In calibrated balances the calibration function is switch locked. To carry out calibration, set the switch to calibration position (centre position). (See chpt. 6.1).

| **Display** | **Operation** |
|---|---|
|  | ⇨ Start balance by pressing ON/OFF |
|  | ⇨ Press →0← for approx. 3 sec, in the display appears „SETUP“, followed by „UNIT“ |
| ⇩ | |
|  | |
|  | ⇨ Press TARE repeatedly until “CALIB“ appears |
| 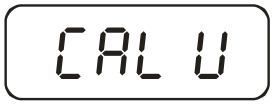 | ⇨ Press HOLD, „CAL U“ appears |
|  | ⇨ Press TARE, the appeared triangle ◀ must be located in the upper left part of the display.<br>If it is not, press again TARE. |




⇨ Press HOLD repeatedly until “CAL 0“ appears.

⇩







⇨ Press TARE,
the display will show a numeric value.

⇩

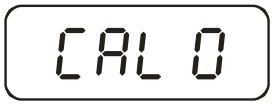


⇨ Then press →0←,
“CAL 0“ appears.

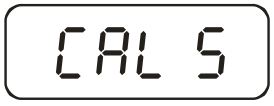


⇨ Press HOLD,
“CAL 5“ appears.




⇨ Press TARE
Enter the required size of the calibration weight.
For this select the digit to be changed
with HOLD and the numeric value using TARE.




⇨ Acknowledge by →0←.




⇨ Place the calibration weight carefully in the centre of the weighing pan and a numerical value will appear in the display.

⇨ Press HOLD, the calibration process is started.




The balance will automatically return to weighing mode upon successful completion of the calibration and will display the weight of the calibration weight.

Take away calibration weight.

| | |
|---|---|
| **i** | For verified scales, turn off the scales and move the calibration switch back to verification position. |

# 7 Service Mode

The balance must be switched over to the service mode. To achieve this, set the calibration switch to calibration position (See chpt. 6.1).

In the service mode all parameters of the balance can be modified.

## 7.1 Navigation in the menu

- When the scale is switched on, press and hold the **[→0←]**-key for approx. 3 seconds until “SETUP“, followed by ”UNIT“ appears.
- Press the **[ TARE ]**-key repeatedly until the desired function appears.
- Confirm the selected function by pressing the **[HOLD]**-key. The first parameter appears. To select the desired parameter, use the **[HOLD]**-key and confirm by pressing the **[TARE]**-key.

To exit the menu and to store, press the **[ TARE ]**-key repeatedly until “End“ appears, then confirm by pressing the **[HOLD]**-key. The balance returns automatically into weighing mode.

A selection is made by pressing the **[HOLD]**-key → and the **[ TARE]**-key ↓

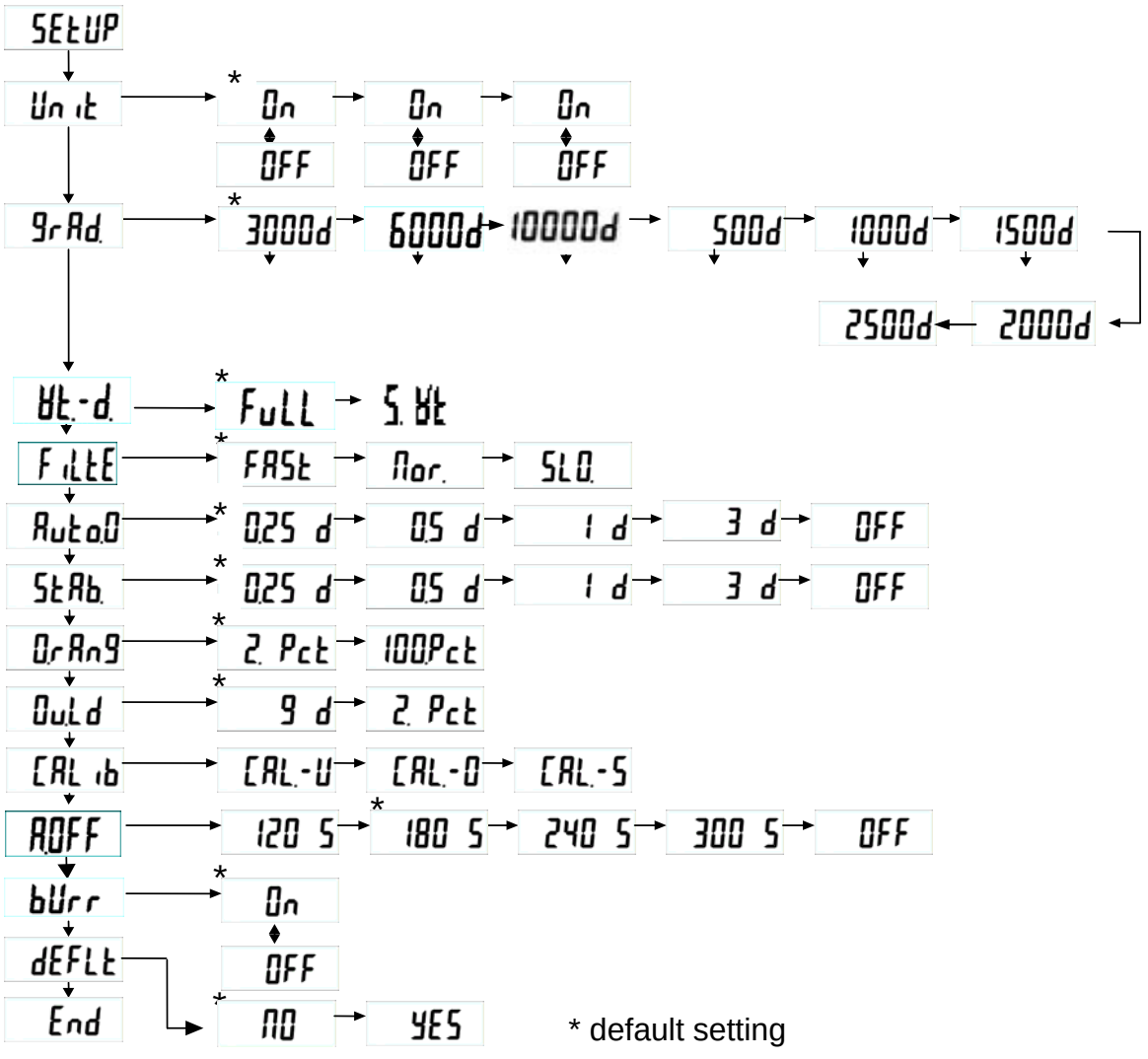


* default setting

## 7.2 Description

| | |
|---|---|
| 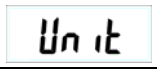 | Weighing unit: Kg |
|  | Dividing steps (resolution) and weighing range (max) |
| 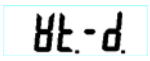 | Selection multi-range scales / single range scales |
|  | Single-range scales |
| 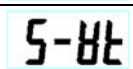 | Multi-range scales |
|  | Filter: Fast / normal / slow |
|  | Auto Zero Tracking: 0.25d / 0.5d / 1d / 3d / OFF |
|  | Stabilisation range: 0.25d / 0.5d / 1d / 3d / OFF |
| 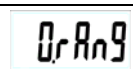 | Zero range: 2% / 100% |
|  | Overload range: 9d / 2% |
|  | Calibration |
|  | Auto off: 120 sec / 180 sec / 240 sec / 300 sec / OFF |
| 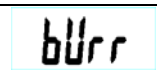 | Audible signal: ON/OFF |
|  | Reset to default settings (default setup) |
| 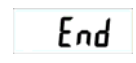 | Exit menu |

## 7.3 Setting of maximum capacity and resolution

A selection is made by pressing the **[HOLD]**-key → and the **[ TARE]**-key ↓

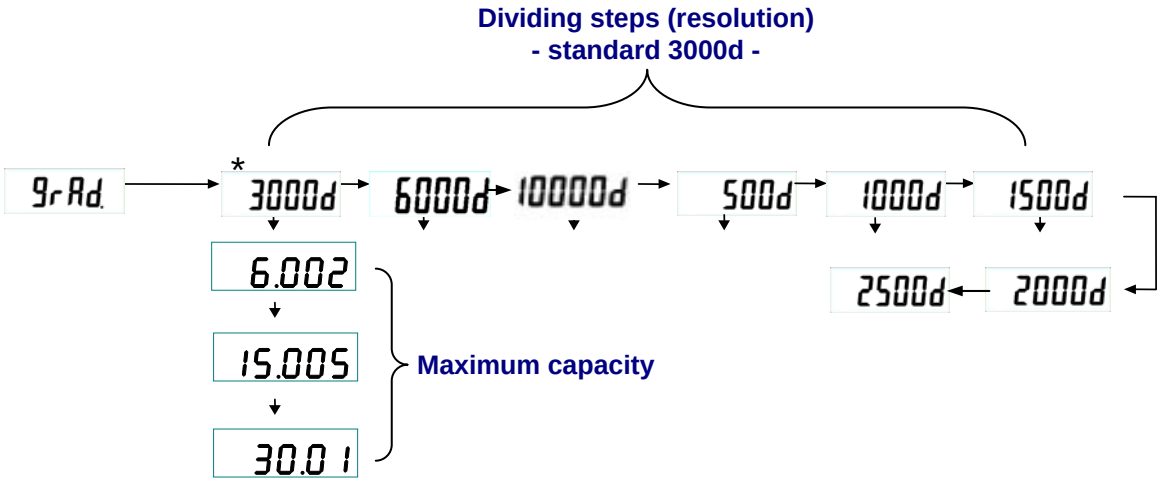


Table 1- Dividing steps

| NO. | 500d | 1000d | 1500d | 2000d | 2500d | 3000d | 6000d |
|---|---|---|---|---|---|---|---|
| 1 | 1.002 kg | 1.001 kg | 1.501 kg | 1.0005 kg | 1.2505 kg | 1.5005 kg | 1.2002 kg |
| 2 | 2.505 kg | 2.002 kg | 3.002 kg | 2.001 kg | 2.501 kg | 3.001 kg | 3.0005 kg |
| 3 | 5.01 kg | 5.005 kg | 7.505 kg | 4.002 kg | 5.002 kg | 6.002 kg | 6.001 kg |
| 4 | 10.02 kg | 10.01 kg | 15.01 kg | 10.005 kg | 12.505 kg | 15.005 kg | 12.002 kg |
| 5 | 25.05 kg | 20.02 kg | 30.02 kg | 20.01 kg | 25.01 kg | 30.01 kg | 30.005 kg |
| 6 | 50.1 kg | 50.05 kg | 75.05 kg | 40.02 kg | 50.02 kg | 60.02 kg | 60.01 kg |
| 7 | 100.2 kg | 100.1 kg | 150.1 kg | 100.05 kg | 125.05 kg | 150.05 kg | 120.02 kg |
| 8 | 250.5 kg | 200.2 kg | 300.2 kg | 200.1 kg | 250.1 kg | 300.1 kg | 300.05 kg |
| 9 | 501 kg | 500.5 kg | 750.5 kg | 400.2 kg | 500.2 kg | 600.2 kg | 600.1 kg |
| 10 | 1002 kg | 1001 kg | 1501 kg | 1000.5 kg | 1250.5 kg | 1500.5 kg | 1200.2 kg |
| 11 | 2505 kg | 2002 kg | 3002 kg | 2001 kg | 2501 kg | 3001 kg | 3000.5 kg |
| 12 | 5010 kg | 5005 kg | 7505 kg | 4002 kg | 5002 kg | 6002 kg | 6001 kg |
| 13 | 10020 kg | 10010 kg | 15010 kg | 10005 kg | 12505 kg | 15005 kg | 12002 kg |

# 8 Approval Mode – Menu Overview

**Menu overview for calibrated scales (calibration switch in verification position)**

When the scale is switched on, press and hold the **[→0←]**-key for about 3 seconds until “SETUP“ followed by “A.OFF“ appears.

A parameter selection is made by pressing the **[ TARE]** ↓ -key and the **[HOLD]** → -key.

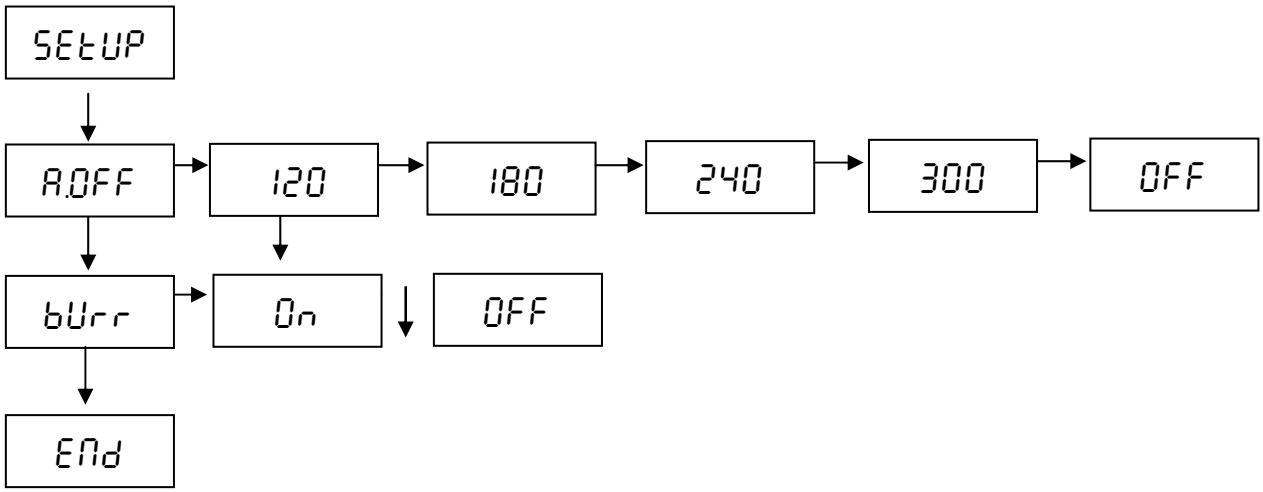


A.OFF = Auto off: 120 s / 180 s / 240 s / 300 s / OFF
bUrr = Audible signal: ON/OFF
End = Exiting the menu

When “End” is selected, press the **[HOLD]** → -key to return to normal weighing mode.

# 9 Schematics

**Main Board CH-0651**

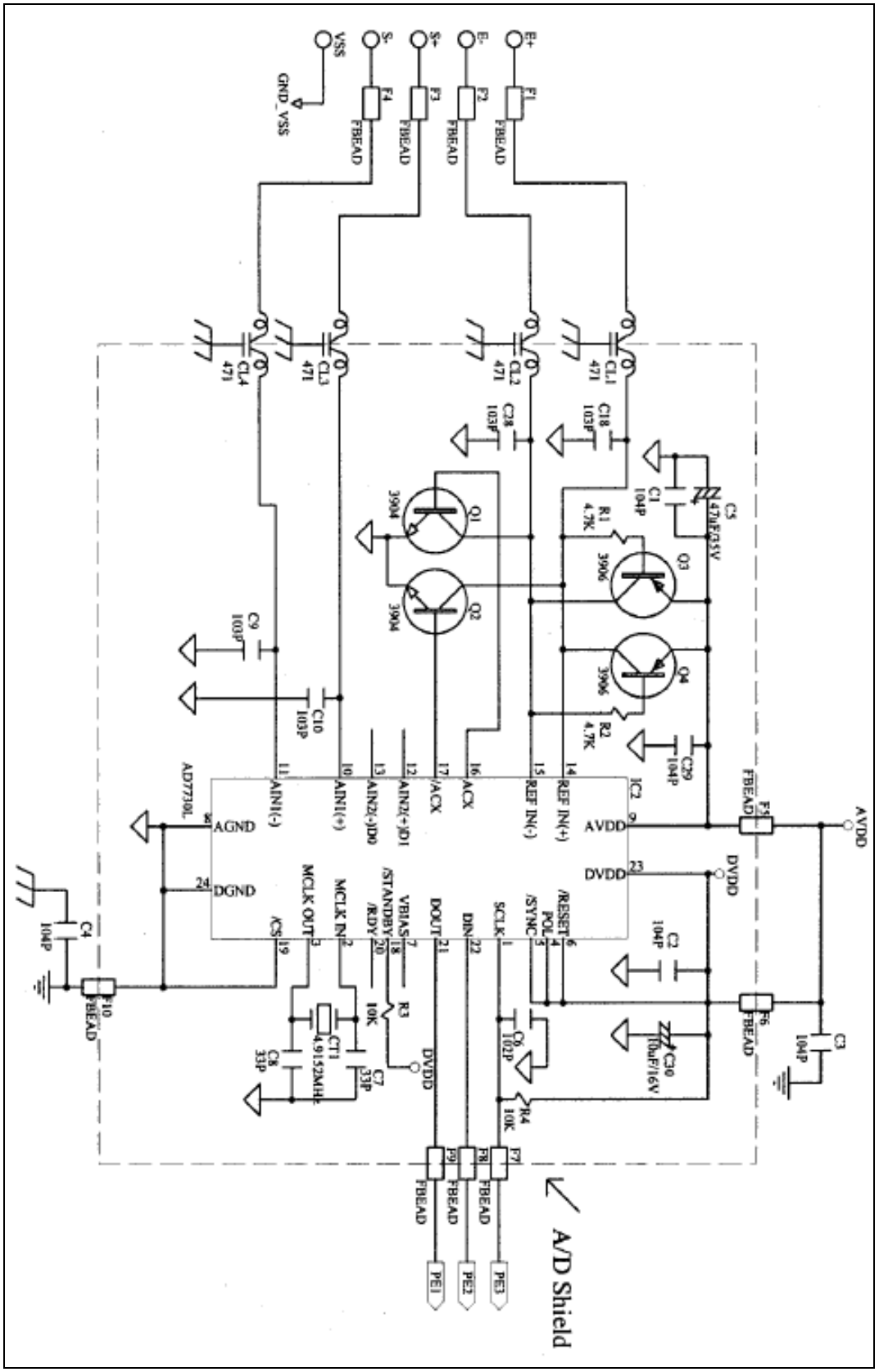

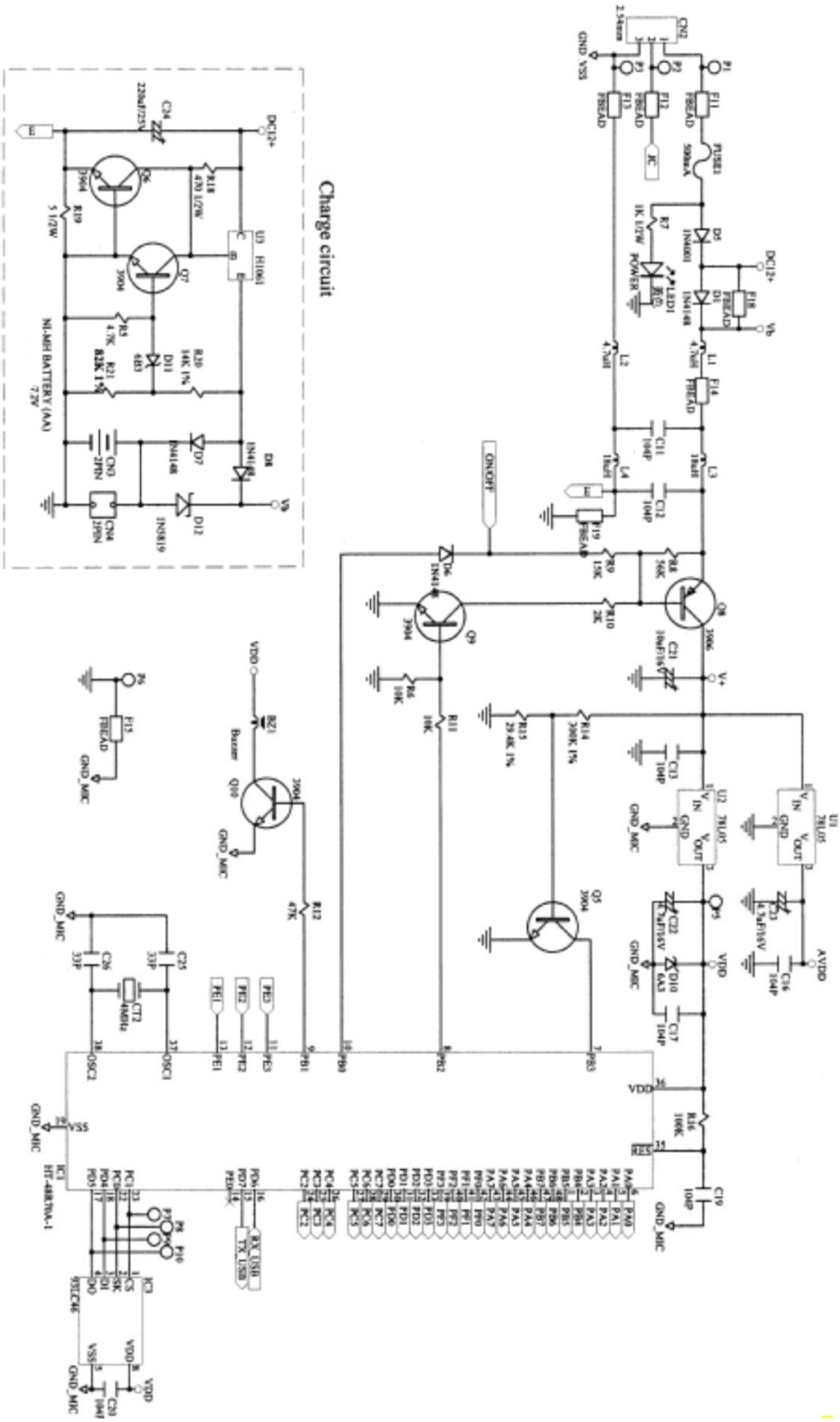
Charge circuit

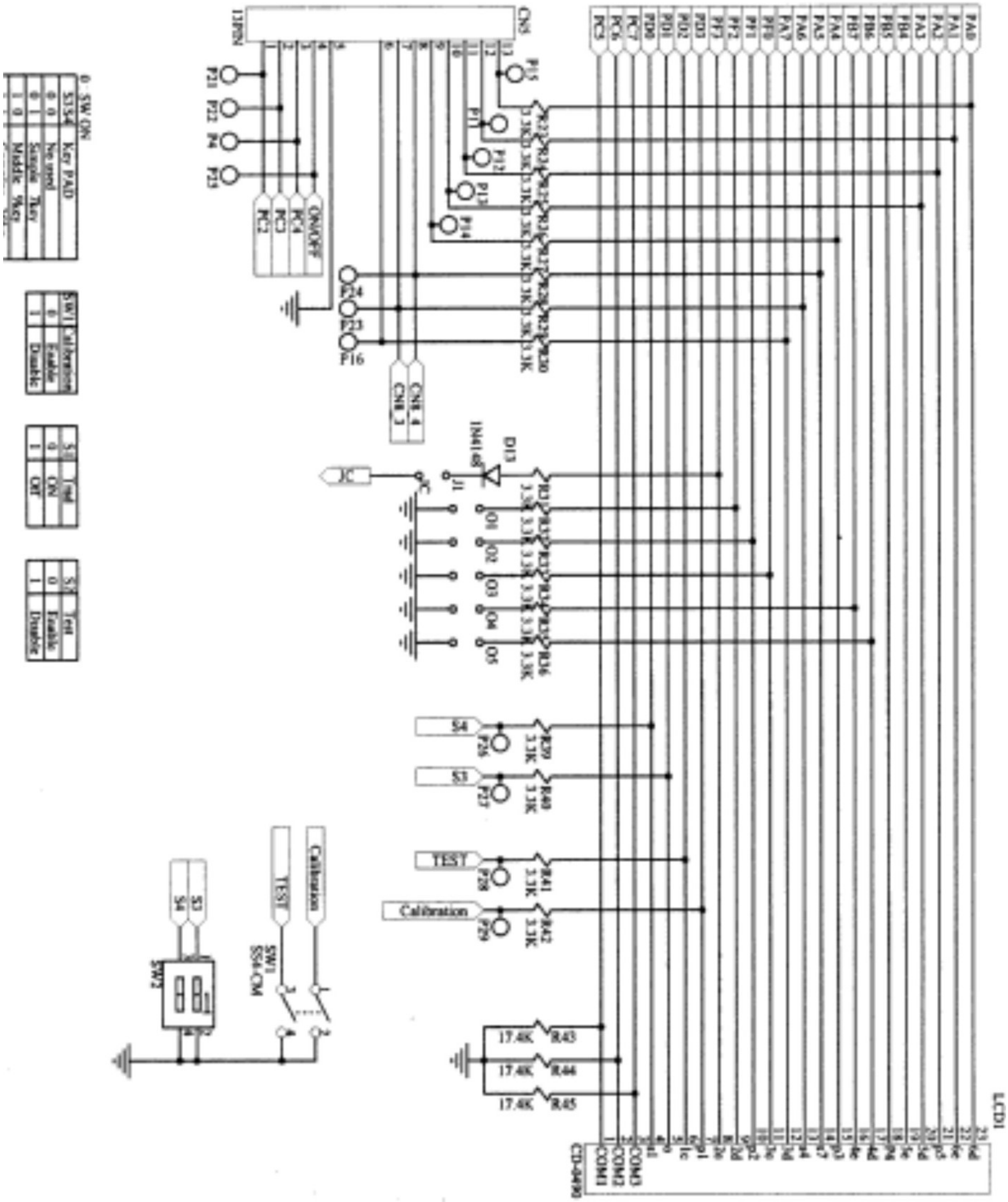
CN5
13PIN
LCD1
COM1
COM2
COM3
R43
R44
R45
17.4K
D13
1N4148
J1
JC
CN8_4
CN8_3
ON/OFF
Calibration
TEST
S3
S4
SW1
SW2
Key PAD
Enable
Disable

**Power Board CH-0723**

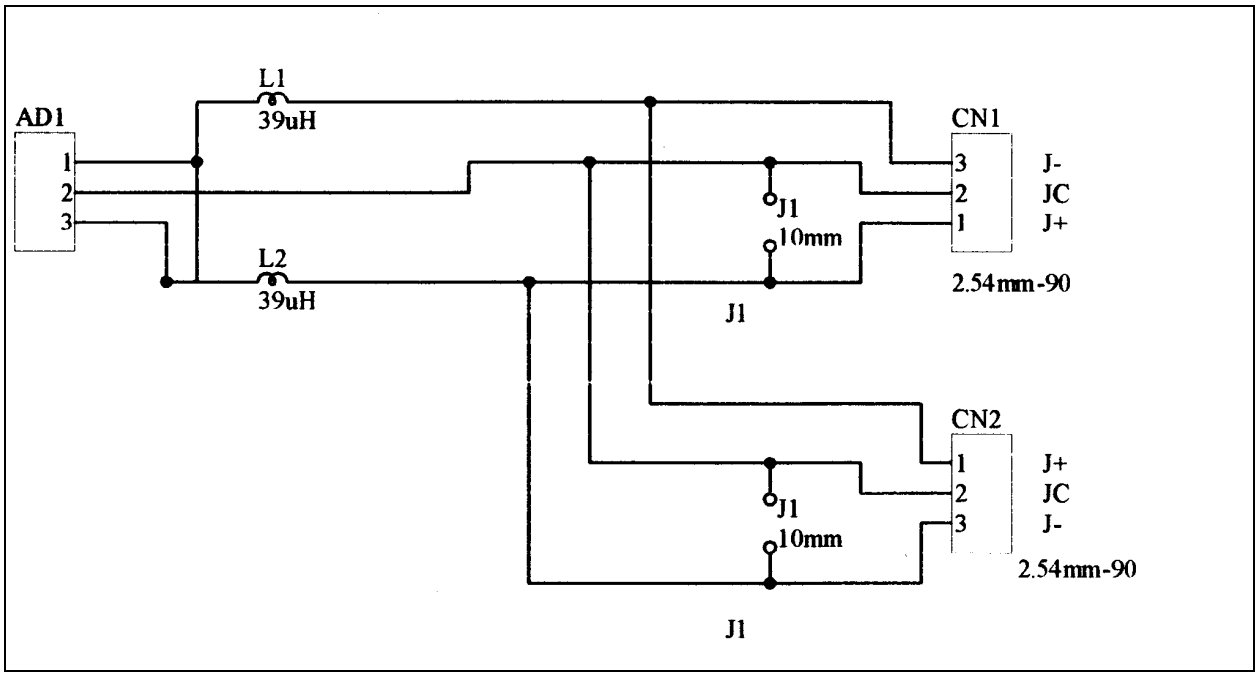


**Junction Board CH-0725**

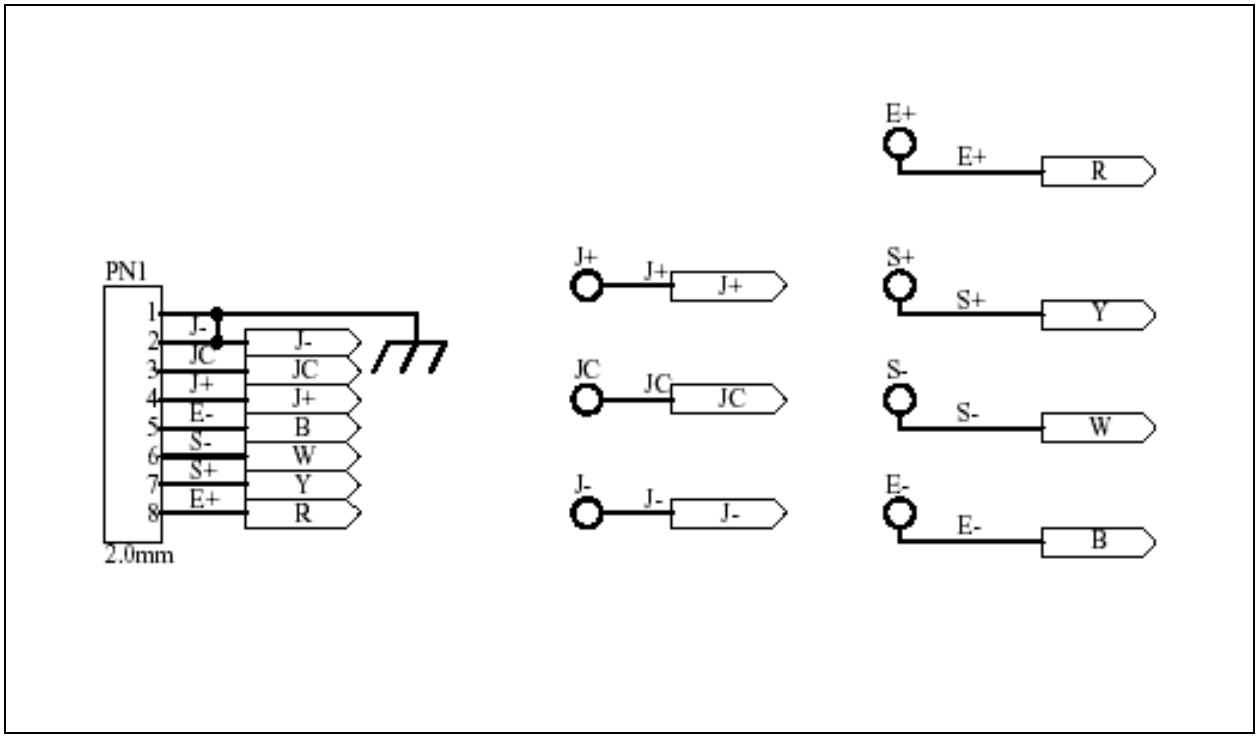

## 10 System Block Diagram

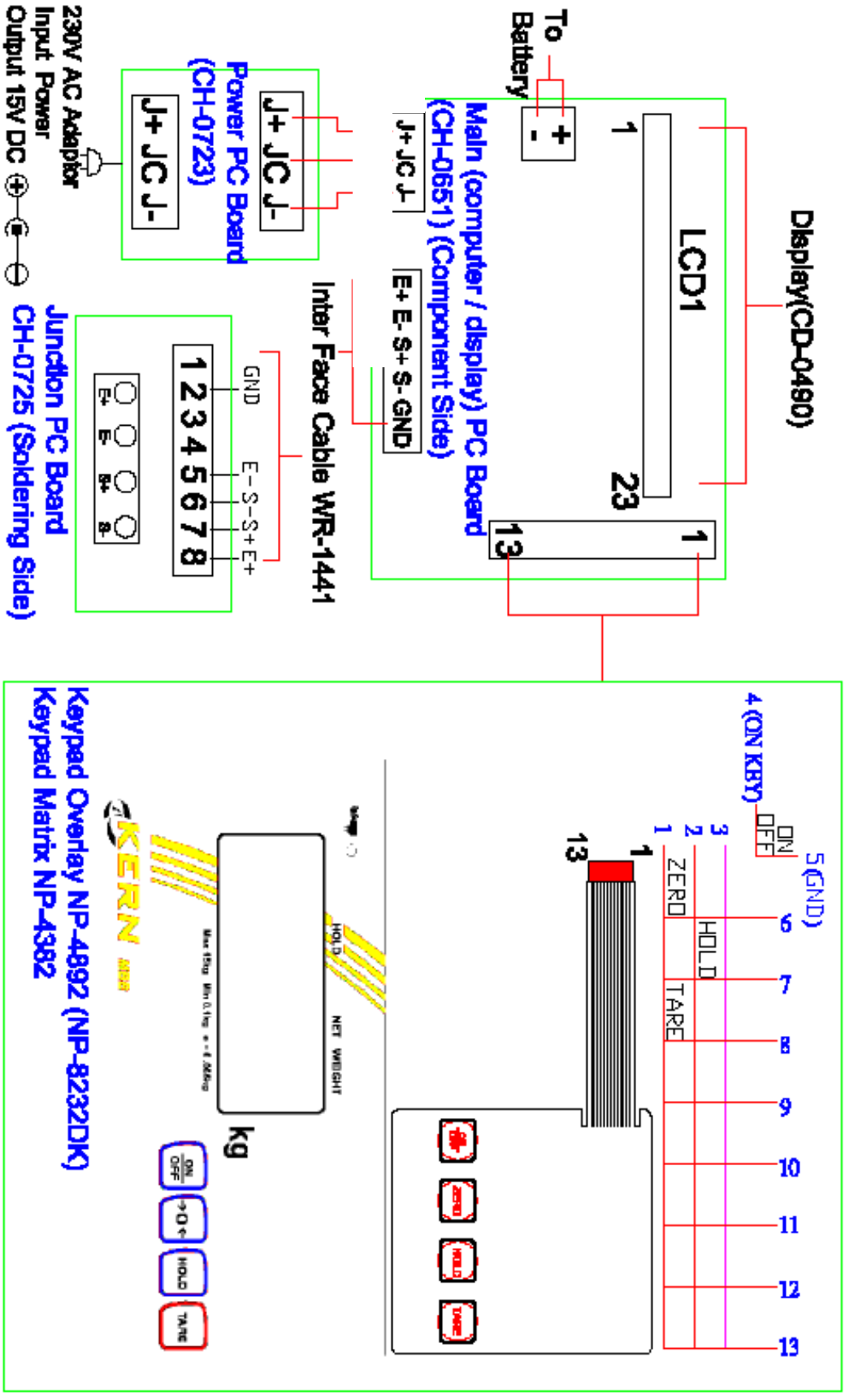

## 11 Display Format

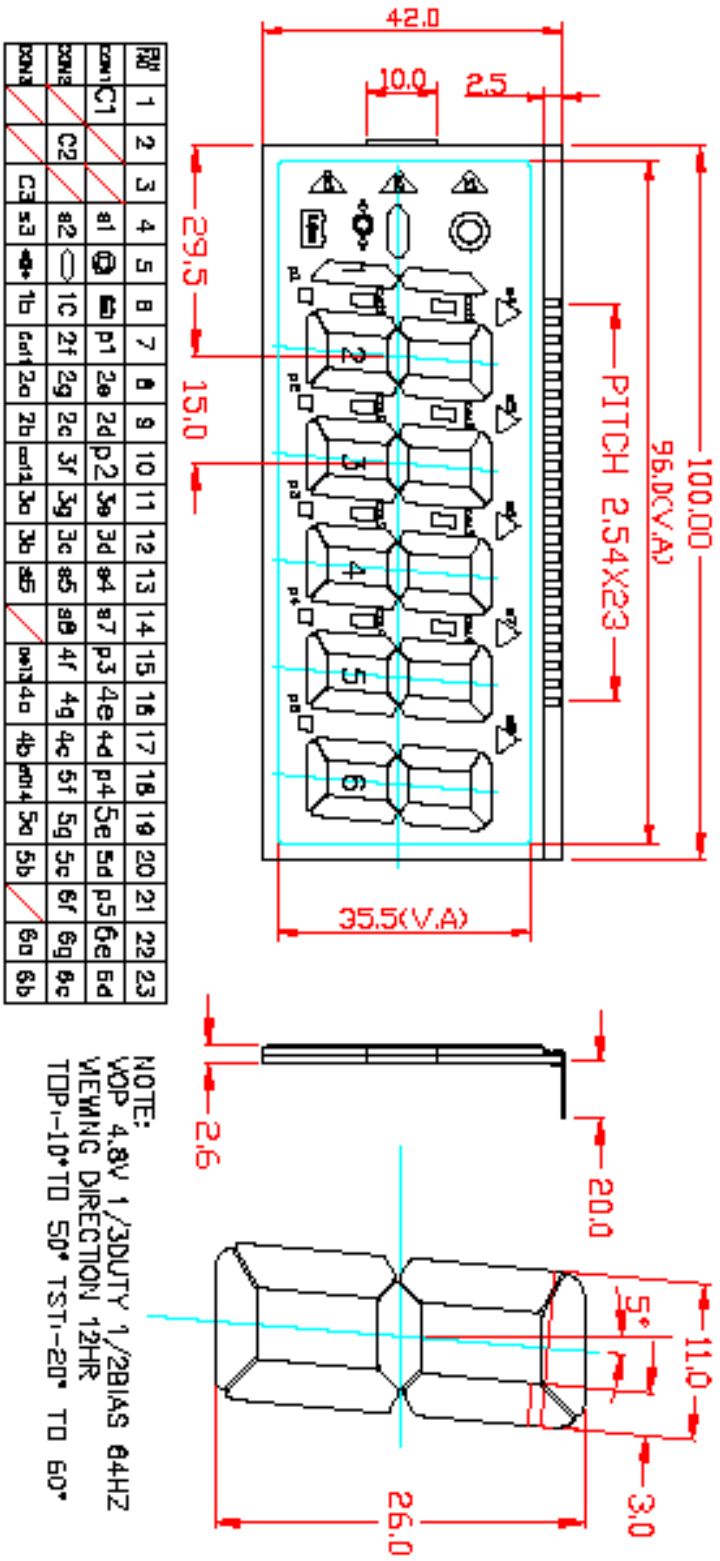

# 12 Layout

### Primary Side of Main Board CH-0651

Top Overlay

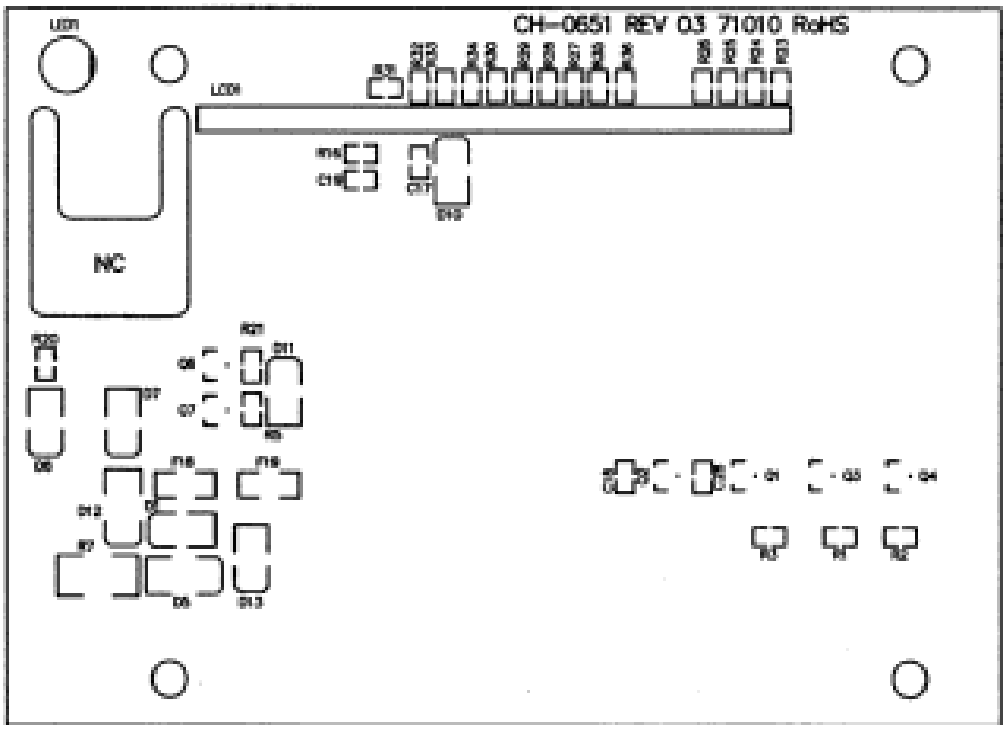


Bottom Overlay

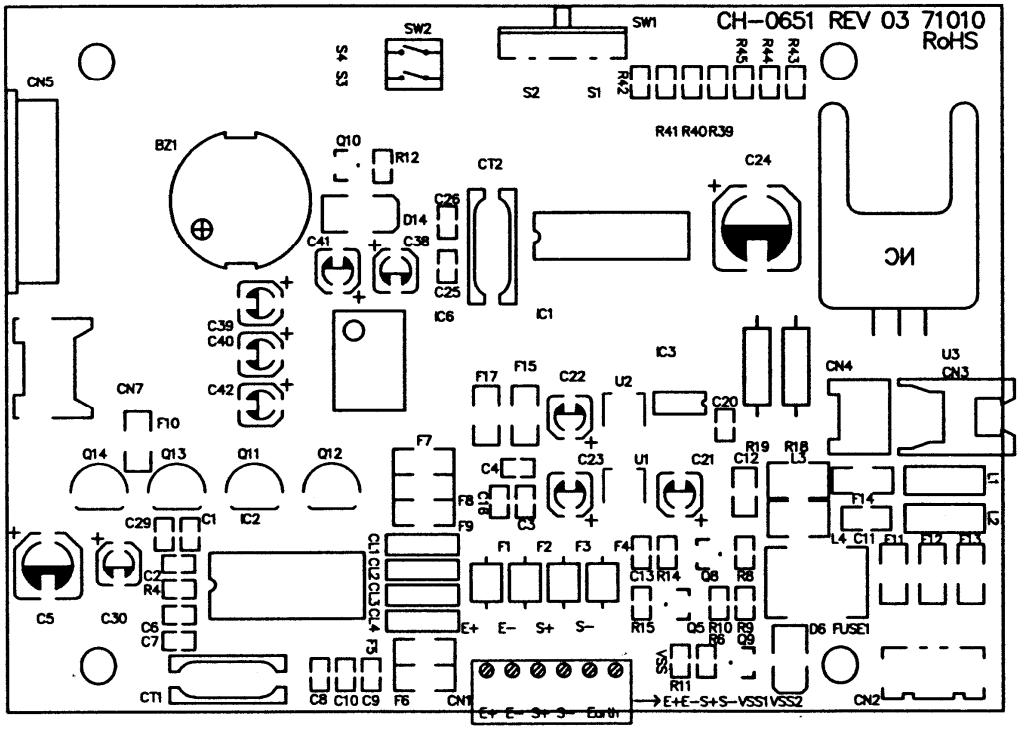

**Secondary Side of Main Board CH-0651**

Top Layer

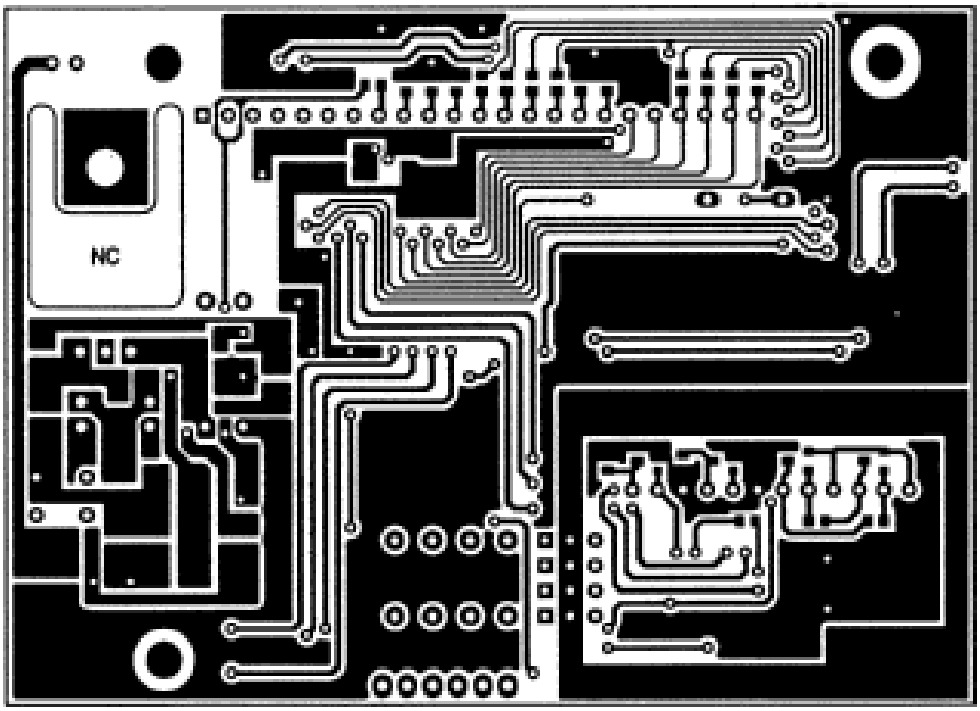


Bottom Layer

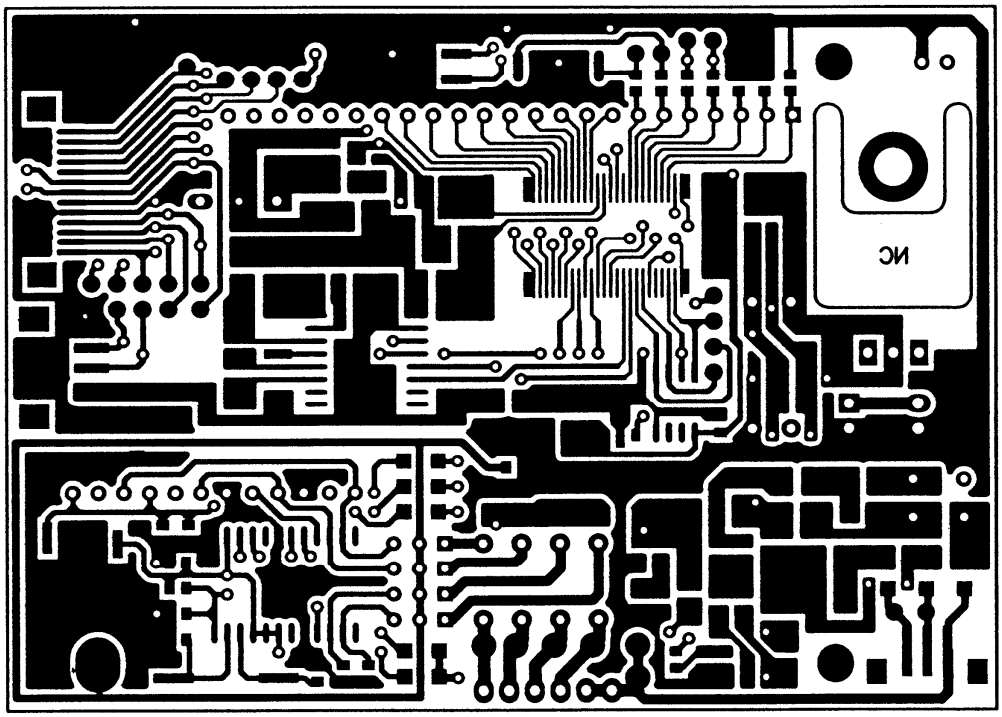

**Primary Side of Power Board CH-0723**

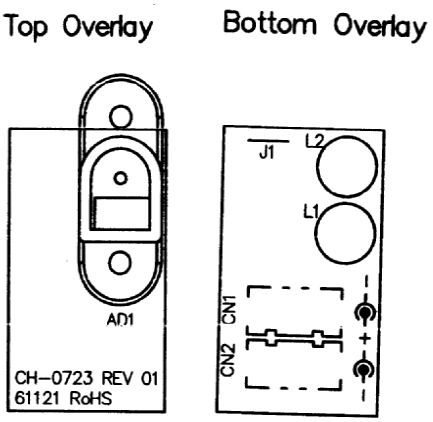


**Secondary Side of Power Board CH-0723**

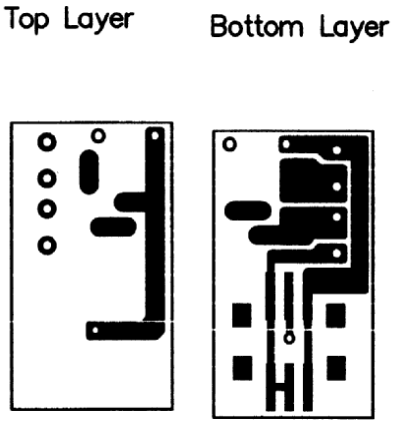


**Primary Side of Junction Board CH-0725**

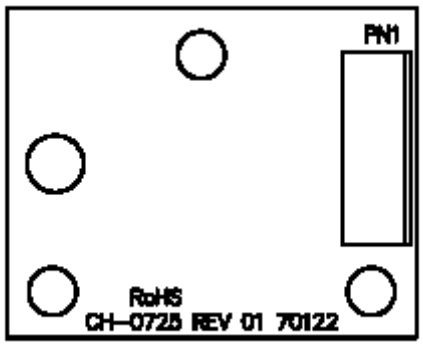


**Secondary Side of Junction Board CH-0725**

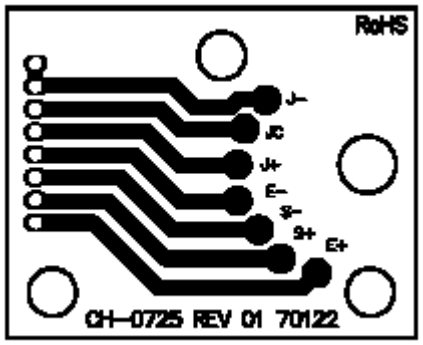

## 13 Assembly Drawing

| No. | Item | Spec. | Q'TY |
|---|---|---|---|
| 1 | Plastic Base | BM-1491 | 1 |
| 2 | LOAD CELL | | 1 |
| 3 | Screw | M3X8 | 6 |
| 4 | Wire & Ferrite | WR-2091+Ferrite (181-14-3028.5X7) | 1 |
| 5 | Sleeve | #153° black | 1 |
| 6 | Cable clip | PC-25 | 1 |
| 7 | Screw | M4X8 | 1 |
| 8 | Strain Relief | SB-5M-2 | 1 |
| 9 | Rubber Feet | SW-0170 | 1 |
| 10 | Junction Board | CH-0725 | 1 |
| 11 | Nut | M6 | 4 |
| 12 | Feet | SW-1111 | 4 |
| 13 | Bubble level | Φ14 | 1 |
| 14 | Plastic Cover | CR-1351 | 1 |
| 15 | Screw | M3X10 | 8 |
| 16 | Panel | NP-8231 | 1 |
| 17 | Battery Snap | AE-013E | 1 |
| 18 | Nut | M6X1.0 | 2 |
| 19 | Battery Box | BH-3631 | 1 |
| 20 | Foam | 3x20x40mm | 2 |
| 21 | Battery Cover | BT-0881 | 1 |
| 22 | LENS | LS-0941 | 1 |
| 23 | Tray | SM-2581 | 1 |
| 24. | Please Cover (Ind) | BM-1222 | 1 |
| 25. | Main Board | CH-0651 | 1 |

| No. | Item | Spec. | Q'TY |
|---|---|---|---|
| 26. | Control Panel | NP-4382 | 1 |
| 27. | Power Board | CH-0723 | 1 |
| 28. | AC Jack | LD-0201 | 1 |
| 29. | Screw | M2x8 | 2 |
| 30. | PVC+Housing | WR-2421 | 1 |
| 31. | Plastic cover (Ind) | CR-2201 | 1 |