客服热线 (021) 5863-9595

YSC

绵密网络　专业服务

中达电通已建立了40个分支机构及服务网点，并塑建训练有素的专业团队，提供客户最满意的服务，公司技术人员能在2小时内回应您的问题，并在48小时内提供所需服务。

气动元件(简本)

中达电通股份有限公司
地址:上海市浦东新区民夏路238号

邮编:201209
电话:(021)5863-5678
传真:(021)5863-0003
网址:http://www.deltagreentech.com.cn
http://中达电通
服务热线:(021)5863-9595

中达电通

型录编号: TAC06C201106

YSC | All Products (产品目录)

(一) Clean Air System(空气洁净设备)

Picture (产品照片)	Name (产品名称)	Type (产品型号)	Page.Range (页码范围)
	Main Line Filter (主路过滤器)	YAFF	1.01
		YAM	1.02
		YAMD	1.03
		YAMG	1.04
		YAMH	1.05
		YAME	1.06
		YAMF	1.07
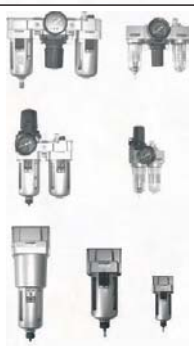	F.R.L Combination (空气过滤组合)	YAC20~50	1.08
		YAC20A~40A	1.09
		YAF20~50	1.10
		YAR20~50	1.11
		YAL20~50	1.12
		YAW20~40	1.13
	Accessor (空气过滤组合配件)	Y20~Y40,Y20L~Y40L	1.14
		Y20T~Y40T,B220~B420	1.14
		G Series	1.15

(二) Directional Control Valve(方向控制阀)

Picture (产品照片)	Name (产品名称)	Type (产品型号)	Page.Range (页码范围)
	2-Way Valves(两通阀)	YAB21	2.01~2.02
		YVDW	2.03
		YVPW	2.04
		YVPS	2.05
	3-Way Solenoid Valves (3通电磁阀)	GM114	2.06~2.08
		YVP342	2.09
	5-Way Solenoid Valves and Manifold (5通电磁阀及汇流板)	YSVZ5000	2.10~2.11
		YSVF3000	2.12
		YSVF3134	2.13~2.14
		YSVF5000	2.15~2.16
		YSVF6000	2.17~2.18
		YSVM110	2.19~2.20
		YSVM220	2.21~2.22
		YSVM310	2.23~2.24
	Hand Valve(手转阀)	YHV	2.25
	5 Port Pilot Foot Valve (5通脚踏阀)	YFV	2.26~2.27
	5 Port Hand-pull Valve (5通手扳阀)	YHLV	2.28
	3 Port Hand Slide Valve (3通手滑阀)	YHVS	2.29
	3/5 Port Hand-draw Valve (3/5通手拉阀)	YKMV	2.30~2.31
	3/5 Port Mechanicall Valve (5通机械阀)	YPMV	2.32~2.33

(三) Pneumatic Actuator(执行元件)

Picture (产品照片)	Name (产品名称)	Type (产品型号)	Page.Range (页码范围)
	Min./Small Bore Size Cylinder (小型标准气缸)	YCJ2,YCDJ2	3.01~3.06
		YAM1,YADM1	3.07~3.12
		YADM2	3.13~3.20
		YCM1,YCDM1	3.21~3.26
		YCM2,YCDM2	3.27~3.36
		YCM2RA,YCM2RB	3.37~3.39
	Medium Bore Size Cylinder (中型标准气缸)	YCA2,YCDA2	3.40~3.46
		YCA3,YCDA3	3.47~3.50
		YMB	3.51~3.56
		YMC	3.57~3.60
		YMD	3.61~3.64
	Large Bore Size Cylinder (大型标准气缸)	YCS1,YCDS1	3.65~3.72
	Compact Cylinder (标准型薄型气缸)	YAQ2,YADQ2	3.73~3.79
		YCQ2,YCDQ2	3.80~3.89
	Direct Mount Cylinder (直接安装型气缸)	YC(D)U	3.90~3.92
	Guide Cylinder (带导杆型气缸)	YMGP	3.93~3.96
	Block Cylinder(双缸气缸)	YCXS	3.97~3.103
	Small Bore Cylinder (小型欧标气缸)	YC85	3.104~3.105
	Light Cylinder(轻型气缸)	YCG1	3.106
	Air Chuck(气动手指)	YCHA	3.107~3.108
	Air Chuck(气动手指)	YCHB	3.109~3.110
	Stopper Cylinder (阻挡气缸)	YSN6045	3.111~3.113
	Rodless Cylinder (磁偶式无杆缸)	YRD	3.114
	Shock Absorber (油压吸震器)	YRB,YRB-OEM	3.115~3.118

(四) Auxiliary Component(辅助气动元件)

Picture (产品照片)	Name (产品名称)	Type (产品型号)	Page.Range (页码范围)
	Pneumatic Joint (气动接头)	P ※ ※	4.01~4.10
	Tube(软管)	PU、UC	4.11
	Silencer(消声器)	YAN	4.12
	Pump ejector (真空发生器)	YMVF90~20(40)	4.13~4.14
		YSV	4.15
	Vacuum Filter (真空过滤器)	YCF	4.16
	Pressure Switch (压力开关)	YSNS	4.17

Unit Conversion Table
(单位换算表)

Units of Length (长度单位)

1 in	=25.4	mm
1 ft	=0.3048	m
1 mile	=1609.3	m
1 micron	$=10^0$	m

Units of Mass (质量单位)

1 lb	=453.6	g
1 cwt	=50.8	kg
1 ton(imp)	=1016	kg
1ton(us)	=907.2	kg
1 tonne	=1000	kg

Unit of Moment (力矩单位)

1 inlb	=0.113	Nm
1 ftlb	=1.356	Nm
1 kgm	=9.807	Nm
1 ftpoundal	=0.0421	Nm

Temperature Conversion Table(温度单位)

(^{0} F–32) x 5/9	=℃
K–273.15	=℃

Units of Area (面积单位)

1 in^2	=6.45	cm^2
1 it^2	=0.093	m^2

Units of pressure (压力单位)

1 psi	=6.89	Kpa
1 kgf/cm^2	=98.07	KPa
1 bar	=100	KPa
1 bar	=14.5	Psi
1 atmosphere	=98.1	KPa
1"(Standard)	=101.33	KPa
1 cm water	=97.89	Pa
1 in water	=248.64	Pa
1 mm mercury	=133.3	Pa
1 in merucy	=3.39	KPa
1 Torr	=133.3	Pa
1 ft water	=0.0298	bar
1 bar	=33.33	ft water

Units of Work (功及能量单位)

1 lbft	=1.356	J
1 Nm	=1	J
1 Kgm	=9.807	J
1 KW/hr	=3.6	MJ

Units of Volume (体积单位)

1 litre	=0.001	m^3
1 cu.ft.	=0.0283	m^3
1 cu.in.	=16.39	cm^3
1 gal(imp)	=4.546	L
1 gal(us)	=3.79	L
1 fluid oz.(imp)	=28.41	mL
1 fluid oz.(us)	=29.57	mL

Units of Force (力单位)

1 lbf	=4.45	W
1 Kgf	=9.81	W
1 Kp(kilopond)	=9.81	W
1 Poundal	=138.3	W
1 ton force	=9.964	W

Units of Power (Work/Time)(功率单位(功/时间))

1 lbft/sec	=1.356	W
1 Kgm/sec	=9.807	W
1 Nm/sec	=1	W
1 Joule/sec	=1	W
1 H.P.(imp)	=745.7	W

Units(单位)	Abbreviation (缩写)
Pascal	Pa
Newton	N
Metre	m
Litre	L
Watt	W
Newton metre.	Nm
Joule	K
Megajoule	MJ
^{0} kelvin	K

Flow Volume(流量)

CV Value (值)=Water Flow Volume: 1 US Gal/min at 60^{0}F & Pressure Differential 1 Psi.
(Cv x 1000=l/min)
(水流量(US Gal/min)於60^{0}F下，流经差压为1Psi之阀门而所得出之流量定值)

Kv Value (值)=Water Flow Volume: L/min at 20℃ & pressure Differential 1Kgf/cm^2.
(空气流量(L/min)於20℃下，流经差为1Kgf/cm^2 之阀门而所得出之流量定值).

Kv Value (值)=Air Flow Volume: m3/min at 20℃ & pressure Differential 1Kgf/cm^2.
(空气流量(m^3/min)於20℃下，流经差为1Kgf/cm^2之阀门而所得出之流量定值).

S.T.P.= Temp: 0℃, Absolute Pressure:101.3kpa.
(标准温度及压力 (0℃及101.3Kpa绝对压力))

N.T.P.= Temp: 20℃, Absolute Pressure:101.3kpa.
(标准温度及压力 (20℃及101.3Kpa绝对压力))

M.S.C= Temp: 15℃, Absolute Pressure:101.3kpa.
(公制标准情况 (15℃及101.3Kpa绝对压力)

ANR= Temp:20℃ & Relative Humidity:65%.
(温度:20℃及相对湿度：65%)

Equivalent(等值换算):

1 Psi=6.895 kpa=0.07kgf/cm^2=0.06895 bar=0.703 atm
1 standard atmosphere=14.7 psi=1.01325 bar
1 kgf/cm^2=98.07 kpa=14.22 psi=28.96 ins merury
1 ft lb=0.13826 kgm=1.356 Nm
1 L=1000cm^3=1.7598 pint=106mm^3
1 tonne=1000kg=0.984 ton=2205 lb
1 m^3=10^6cm^3
1 cu ft/min.=0.0283m^3/min=28.3 l/min
1 Pa=1 N/m^2

Theoretical Output Table of cylinder
(气缸理论出力表)

(Unit:kgf)

Bore Size (缸径) (mm)	Vertical Operation(上下方向操作)					Horizontal Operation(横向操作)				
	Operationg Pressure (使用空气压力) MPa{kgf/cm^2}					Operationg Pressure (使用空气压力) MPa{kgf/cm^2}				
	0.3 {3.1}	0.4 {4.1}	0.5 {5.1}	0.6 {6.1}	0.7 {7.1}	0.3 {3.1}	0.4 {4.1}	0.5 {5.1}	0.6 {6.1}	0.7 {7.1}
6	0.43	0.57	0.71	0.85	0.99	0.85	1.13	1.41	1.70	1.98
10	1.18	1.57	1.97	2.36	2.57	2.36	3.41	3.93	4.71	5.50
12	1.70	2.26	2.83	3.39	4.00	3.39	4.52	5.65	6.78	7.91
16	3.02	4.02	5.05	6.05	7.05	6.03	8.04	10.1	12.1	14.1
20	4.71	6.30	7.85	9.40	11.0	9.42	12.6	15.7	18.8	22.0
25	7.35	9.80	12.3	14.7	17.2	14.4	19.6	24.5	29.4	34.4
32	12.1	16.1	20.1	24.2	28.2	24.1	32.2	40.2	48.3	56.3
40	18.9	25.2	31.4	37.7	44.0	37.7	50.3	62.8	75.4	88.0
50	29.5	39.3	49.1	58.5	68.5	58.9	78.5	98.2	117	137
63	46.8	62.5	78.0	93.5	109	93.5	125	156	187	218
80	75.5	101	126	151	176	151	201	251	302	352
100	118	157	197	236	275	236	314	393	471	550
125	184	246	308	368	430	368	491	615	736	859
140	231	308	385	462	539	462	616	770	924	1078
160	302	402	503	603	704	603	804	1005	1206	1407
180	382	509	636	764	891	763	1018	1272	1527	1781
200	471	529	786	943	1100	942	1257	1571	1885	2199
250	737	982	1227	1473	1718	1473	1936	2454	2945	3436
300	1061	1414	1767	2121	2474	2121	2827	3534	4241	4948

Note. 1) Above data indicate the output at piston speed 50~500mm/s
Note. 2) The actual output of vertical operation are 50% of theoretical output.
Note. 3) The actual output of horizontal operation are same as theoretical output.
注1） 上述出力换算表适用於气缸速度为50~500/mm/秒的范围内。
注2） 气缸以上下垂直形式操作时， 其实际出力若为理论计算出力的50%
注3） 横向水平操作时因要考虑机械惯性因素， 气缸实际出力与理论出力相当。

YSC | Main Line Filter(主路过滤器)
YAFF250~850 series

图形符号

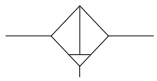

YAFF 250,350 / 450,550 series

YAFF650,850 series

COMMON SPECIFICATIONS(共同规格)

Model(型号)	YAFF
Fluid(流体)	Air(压缩空气)
Max Press.(最高使用压力)	1.0Mpa(10.2kgf/cm²)
Min Press.(最低使用压力)	※0.05Mpa(0.5kgf/cm²)
Proof Press.(保证耐压力)	1.5Mpa(15.2kgf/cm²)
Amb.Temp.(环境和流体温度)	5~60°C
Filteration(过滤孔径)	3μm Removal(去除)95%
Element Life(滤芯寿命)	At Press.Differential(当压力差达到)0.1Mpa(1kgf/cm²) or 2 years(或两年)

※Auto Drain Type:0.15Mpa(1.5kgf/cm²)
使用自动排水器时,最低压力0.15Mpa(1.5kgf/cm²)

Model(型号)		Size(规格)			Part(配件)	Repair Parts[备件(任选项)]	
Manual Drain Type (手动排水型)	Auto Drain Type (手动排水型)	Flow Rate(额定流量) (l/min)	Pipe Size (接管口径)	Wt.(质量) (kg)	Bracket (托架组件)	Auto Drain Float (自动排水器浮子)	Element (滤芯组件)
YAFF250-02	YAFF250-02D	750	1/4"	0.55	BM-25	YAD40	YAFF-EL250
YAFF250-03	YAFF250-03D	750	3/8"	0.55	BM-25	YAD40	YAFF-EL250
YAFF350-03	YAFF350-03D	1500	3/8"	0.9	BM-35	YAD40	YAFF-EL350
YAFF350-04	YAFF350-04D	1500	1/2"	0.9	BM-35	YAD40	YAFF-EL350
YAFF450-04	YAFF450-04D	2200	1/2"	1.4	BM-45	YAD40	YAFF-EL450
YAFF450-06	YAFF450-06D	2200	3/4"	1.4	BM-45	YAD40	YAFF-EL450
YAFF550-06	YAFF550-06D	3500	3/4"	2.1	BM-55	YAD40	YAFF-EL550
YAFF550-10	YAFF550-10D	3500	1"	2.1	BM-55	YAD40	YAFF-EL550
YAFF650-14	YAFF650-14D	6000	1½"	5.0	BM-65	YAD40	YAFF-EL650
YAFF850-14	YAFF850-14D	12000	1½"	11.5	BM-85	YAD40	YAFF-EL850
YAFF850-20	YAFF850-20D	12000	2"	11.5	BM-85	YAD40	YAFF-EL850

注:如自动排水器需接管排水,需另配接头PCF06-03。

Dimensions(mm)(外型尺寸图)(毫米)

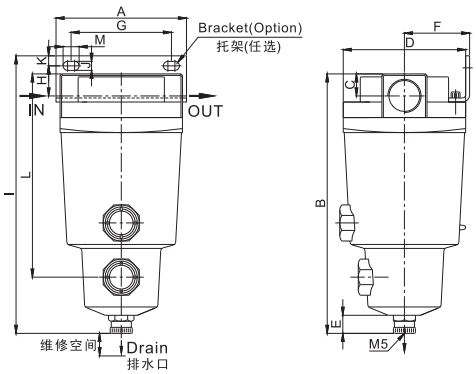

YAFF 250,350 / 450,550 series

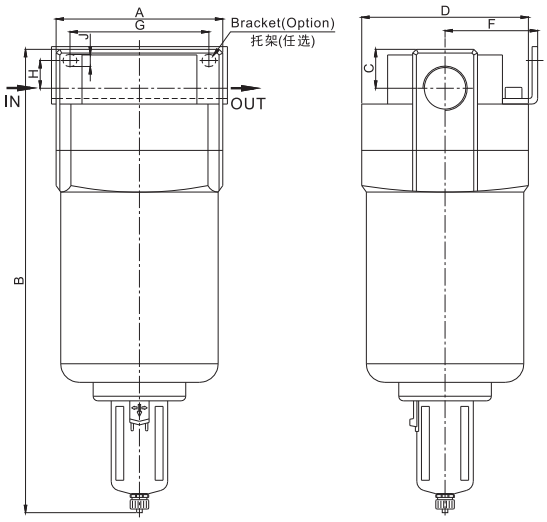

YAFF650,850 series

Model No. (型 号)	Pipe Size (接管口径)Rc(PT)	A	B	C	D	E	I	K	L	W/Bracket(带托架时)				
										F	G	H	J	M
YAFF250	1/4",3/8"	76	172	13	76	20	187	8	113	40	66	20	6	12
YAFF350	3/8",1/2"	90	204	16	90	20	218	8	145	50	80	22	7	14
YAFF450	1/2",3/4"	106	225	19	106	20	241	10	166	55	88	25	9	14
YAFF550	3/4,1"	122	259	22	122	20	277	10	200	65	100	30	9	16
YAFF650	1½"	180	390	42	180					95	150	40	11	
YAFF850	1½",2"	180	500	42	180					95	150	30	13	

推荐选用：YAFF250-02、YAFF350-03、YAFF450-04、YAFF550-10、YAFF650-14

YSC | Oil Mist Seperator(油雾分离器)
YAM250~850 series

图形符号

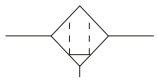

YAM 250,350 / 450,550 series **YAM650,850 series**

COMMON SPECIFICATIONS(共同规格)

Model(型号)	YAM
Fluid(流体)	Air(压缩空气)
Max Press.(最高使用压力)	1.0Mpa(10.2kgf/cm²)
Min Press.(最低使用压力)	※0.05Mpa(0.5kgf/cm²)
Proof Press.(保证耐压力)	1.5Mpa(15.2kgf/cm²)
Amb.Temp.(环境和流体温度)	5~60°C
Filteration(过滤孔径)	0.03μm Removal(去除)95%
Oil Mist Density(次压侧油雾浓度)	Max.(最多)1.0mg/Nm³
Element Life(滤芯寿命)	At Press.Differential(当压力差达到)0.1Mpa(1kgf/cm²) or 2 years(或两年)

※Auto Drain Type:0.15Mpa(1.5kgf/cm²)
使用自动排水器时,最低压力0.15Mpa(1.5kgf/cm²)

Model(型号)		Size(规格)			Part(配件)	Repair Parts[备件(任选项)]	
Manual Drain Type (手动排水型)	Auto Drain Type (手动排水型)	Flow Rate(额定流量) (l/min)	Pipe Size (接管口径)	Wt.(质量) (kg)	Bracket (托架组件)	Auto Drain Float (自动排水器浮子)	Element (滤芯组件)
YAM250-02	YAM250-02D	750	1/4"	0.55	BM-25	YAD40	YAM-EL250
YAM250-03	YAM250-03D	750	3/8"	0.55	BM-25	YAD40	YAM-EL250
YAM350-03	YAM350-03D	1500	3/8"	0.9	BM-35	YAD40	YAM-EL350
YAM350-04	YAM350-04D	1500	1/2"	0.9	BM-35	YAD40	YAM-EL350
YAM450-04	YAM450-04D	2200	1/2"	1.4	BM-45	YAD40	YAM-EL450
YAM450-06	YAM450-06D	2200	3/4"	1.4	BM-45	YAD40	YAM-EL450
YAM550-06	YAM550-06D	3500	3/4"	2.1	BM-55	YAD40	YAM-EL550
YAM550-10	YAM550-10D	3500	1"	2.1	BM-55	YAD40	YAM-EL550
YAM650-14	YAM650-14D	6000	1½"	5.0	BM-65	YAD40	YAM-EL650
YAM850-14	YAM850-14D	12000	1½"	11.5	BM-85	YAD40	YAM-EL850
YAM850-20	YAM850-20D	12000	2"	11.5	BM-85	YAD40	YAM-EL850

注:如自动排水器需接管排水,需另配接头PCF06-03。

Dimensions(mm)(外型尺寸图)(毫米)

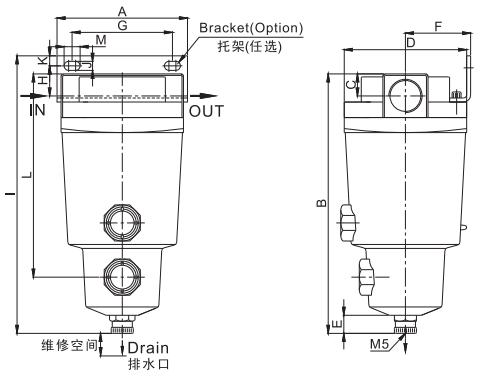

YAM 250,350 / 450,550 series

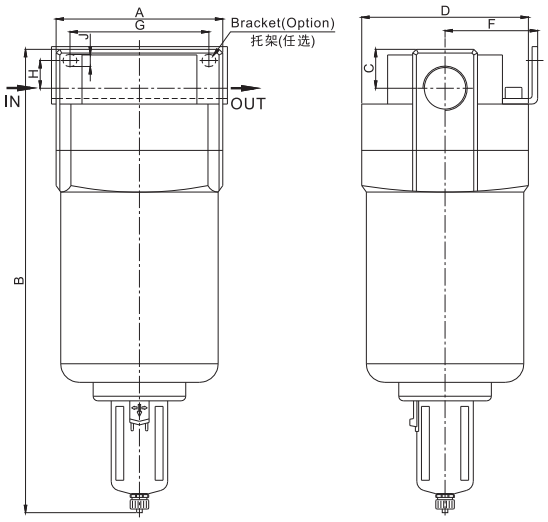

YAM650,850 series

Model No. (型 号)	Pipe Size (接管口径)Rc(PT)	A	B	C	D	E	I	K	L	W/Bracket(带托架时)				
										F	G	H	J	M
YAM250	1/4",3/8"	76	172	13	76	20	187	8	113	40	66	20	6	12
YAM350	3/8",1/2"	90	204	16	90	20	218	8	145	50	80	22	7	14
YAM450	1/2",3/4"	106	225	19	106	20	241	10	166	55	88	25	9	14
YAM550	3/4,1"	122	259	22	122	20	277	10	200	65	100	30	9	16
YAM650	1½"	180	390	42	180					95	150	40	11	
YAM850	1½",2"	180	500	42	180					95	150	30	13	

推荐选用：YAM250-02、YAM350-03、YAM450-04、YAM550-10、YAM650-14

YSC | Micro Mist Seperator(微雾分离器)
YAMD250~850 series

图形符号

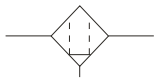

YAMD 250,350 / 450,550 series **YAMD650,850 series**

COMMON SPECIFICATIONS(共同规格)

Model(型号)	YAMD
Fluid(流体)	Air(压缩空气)
Max Press.(最高使用压力)	1.0Mpa(10.2kgf/cm²)
Min Press.(最低使用压力)	※0.05Mpa(0.5kgf/cm²)
Proof Press.(保证耐压力)	1.5Mpa(15.2kgf/cm²)
Amb.Temp.(环境和流体温度)	5~60°C
Filteration(过滤孔径)	0.01μm Removal(去除)95%
Oil Mist Density(次压侧油雾浓度)	Max.(最多)1.0mg/Nm³
Element Life(滤芯寿命)	At Press.Differential(当压力差达到)0.1Mpa(1kgf/cm²) or 2 years(或两年)

※Auto Drain Type:0.15Mpa(1.5kgf/cm²)
使用自动排水器时,最低压力0.15Mpa(1.5kgf/cm²)

Model(型号)		Size(规格)			Part(配件)	Repair Parts[备件(任选项)]	
Manual Drain Type (手动排水型)	Auto Drain Type (手动排水型)	Flow Rate(额定流量) (l/min)	Pipe Size (接管口径)	Wt.(质量) (kg)	Bracket (托架组件)	Auto Drain Float (自动排水器浮子)	Element (滤芯组件)
YAMD250-02	YAMD250-02D	500	1/4"	0.55	BM-25	YAD40	YAMD-EL250
YAMD250-03	YAMD250-03D	500	3/8"	0.55	BM-25	YAD40	YAMD-EL250
YAMD350-03	YAMD350-03D	1000	3/8"	0.9	BM-35	YAD40	YAMD-EL350
YAMD350-04	YAMD350-04D	1000	1/2"	0.9	BM-35	YAD40	YAMD-EL350
YAMD450-04	YAMD450-04D	2000	1/2"	1.4	BM-45	YAD40	YAMD-EL450
YAMD450-06	YAMD450-06D	2000	3/4"	1.4	BM-45	YAD40	YAMD-EL450
YAMD550-06	YAMD550-06D	3500	3/4"	2.1	BM-55	YAD40	YAMD-EL550
YAMD550-10	YAMD550-10D	3500	1"	2.1	BM-55	YAD40	YAMD-EL550
YAMD650-14	YAMD650-14D	6000	1½"	5.0	BM-65	YAD40	YAMD-EL650
YAMD850-14	YAMD850-14D	12000	1½"	11.5	BM-85	YAD40	YAMD-EL850
YAMD850-20	YAMD850-20D	12000	2"	11.5	BM-85	YAD40	YAMD-EL850

注:如自动排水器需接管排水,需另配接头PCF06-03。

Dimensions(mm)(外型尺寸图)(毫米)

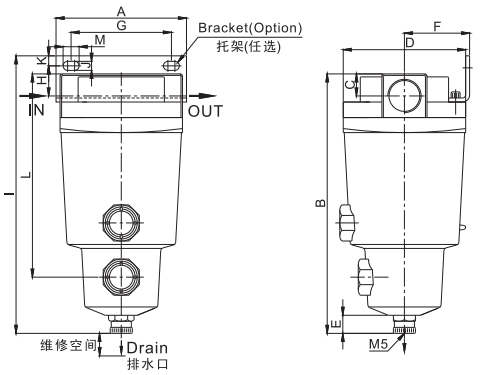

YAMD 250,350 / 450,550 series

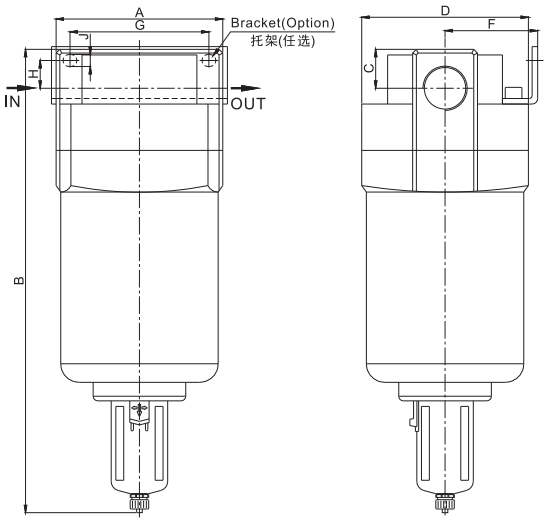

YAMD650,850 series

Model No. (型 号)	Pipe Size (接管口径)Rc(PT)	A	B	C	D	E	I	K	L	W/Bracket(带托架时)				
										F	G	H	J	M
YAMD250	1/4",3/8"	76	172	13	76	20	187	8	113	40	66	20	6	12
YAMD350	3/8",1/2"	90	204	16	90	20	218	8	145	50	80	22	7	14
YAMD450	1/2",3/4"	106	225	19	106	20	241	10	166	55	88	25	9	14
YAMD550	3/4,1"	122	259	22	122	20	277	10	200	65	100	30	9	16
YAMD650	1½"	180	390	42	180					95	150	40	11	
YAMD850	1½",2"	180	500	42	180					95	150	30	13	

推荐选用：YAMD250-02、YAMD350-03、YAMD450-04、YAMD550-10、YAMD650-14

YSC | Water Seperator(水份分离器)
YAMG250~850 series

图形符号

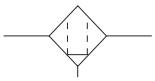

YAMG 250,350 / 450,550 series YAMG650,850 series

COMMON SPECIFICATIONS(共同规格)

Model(型号)	YAMG
Fluid(流体)	Air(压缩空气)
Max Press.(最高使用压力)	1.0Mpa(10.2kgf/cm²)
Min Press.(最低使用压力)	※0.05Mpa(0.5kgf/cm²)
Proof Press.(保证耐压力)	1.5Mpa(15.2kgf/cm²)
Amb.Temp.(环境和流体温度)	5~60°C
Scavenging Particle Size(水分去除率)	99%
Element Life(滤芯寿命)	At Press.Differential(当压力差达到)0.1Mpa(1kgf/cm²) or 2 years(或两年)

※Auto Drain Type:0.15Mpa(1.5kgf/cm²)
使用自动排水器时,最低压力0.15Mpa(1.5kgf/cm²)

Model(型号)		Size(规格)			Part(配件)	Repair Parts[备件(任选项)]	
Manual Drain Type (手动排水型)	Auto Drain Type (手动排水型)	Flow Rate(额定流量) (l/min)	Pipe Size (接管口径)	Wt.(质量) (kg)	Bracket (托架组件)	Auto Drain Float (自动排水器浮子)	Element (滤芯组件)
YAMG250-02	YAMG250-02D	750	1/4"	0.55	BM-25	YAD40	YAMG-EL250
YAMG250-03	YAMG250-03D	750	3/8"	0.55	BM-25	YAD40	YAMG-EL250
YAMG350-03	YAMG350-03D	1500	3/8"	0.9	BM-35	YAD40	YAMG-EL350
YAMG350-04	YAMG350-04D	1500	1/2"	0.9	BM-35	YAD40	YAMG-EL350
YAMG450-04	YAMG450-04D	2200	1/2"	1.4	BM-45	YAD40	YAMG-EL450
YAMG450-06	YAMG450-06D	2200	3/4"	1.4	BM-45	YAD40	YAMG-EL450
YAMG550-06	YAMG550-06D	3500	3/4"	2.1	BM-55	YAD40	YAMG-EL550
YAMG550-10	YAMG550-10D	3500	1"	2.1	BM-55	YAD40	YAMG-EL550
YAMG650-14	YAMG650-14D	6000	1½"	5.0	BM-65	YAD40	YAMG-EL650
YAMG850-14	YAMG850-14D	12000	1½"	11.5	BM-85	YAD40	YAMG-EL850
YAMG850-20	YAMG850-20D	12000	2"	11.5	BM-85	YAD40	YAMD-EL850

注:如自动排水器需接管排水,需另配接头PCF06-03。

Dimensions(mm)(外型尺寸图)(毫米)

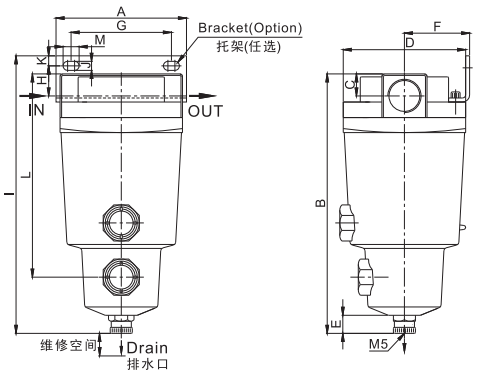

YAMG 250,350 / 450,550 series

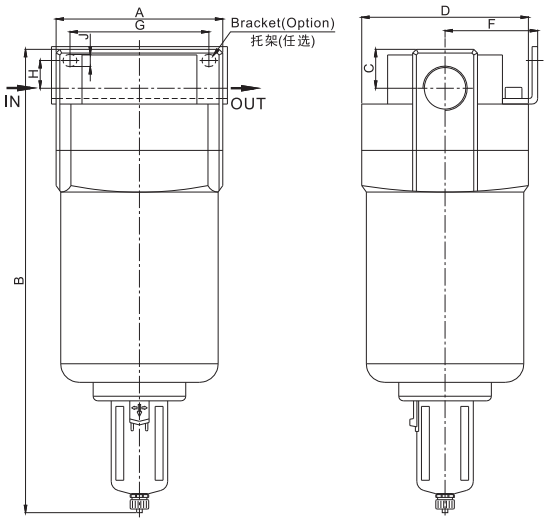

YAMG650,850 series

Model No. (型 号)	Pipe Size (接管口径)Rc(PT)	A	B	C	D	E	I	K	L	W/Bracket(带托架时)				
										F	G	H	J	M
YAMG250	1/4",3/8"	76	172	13	76	20	187	8	113	40	66	20	6	12
YAMG350	3/8",1/2"	90	204	16	90	20	218	8	145	50	80	22	7	14
YAMG450	1/2",3/4"	106	225	19	106	20	241	10	166	55	88	25	9	14
YAMG550	3/4,1"	122	259	22	122	20	277	10	200	65	100	30	9	16
YAMG650	1½"	180	390	42	180					95	150	40	11	
YAMG850	1½",2"	180	500	42	180					95	150	30	13	

推荐选用：YAMD250-02、YAMD350-03、YAMD450-04、YAMD550-10、YAMD650-14

YSC | Micro Mist Seperator With Prefilter(微雾分离器带前置过滤)
YAMH250~850 series

图形符号

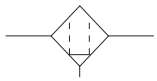

YAMH 250,350 450,550 series

YAMH650,850 series

COMMON SPECIFICATIONS(共同规格)

Model(型号)	YAMH
Fluid(流体)	Air(压缩空气)
Max Press.(最高使用压力)	1.0Mpa(10.2kgf/cm²)
Min Press.(最低使用压力)	※0.05Mpa(0.5kgf/cm²)
Proof Press.(保证耐压力)	1.5Mpa(15.2kgf/cm²)
Amb.Temp.(环境和流体温度)	5~60°C
Filteration(过滤孔径)	0.01μm Removal(去除)95%
Element Life(滤芯寿命)	At Press.Differential(当压力差达到)0.1Mpa(1kgf/cm²) or 2 years(或两年)

※Auto Drain Type:0.15Mpa(1.5kgf/cm²)
使用自动排水器时,最低压力0.15Mpa(1.5kgf/cm²)

Model(型号)		Size(规格)			Part(配件)	Repair Parts[备件(任选项)]	
Manual Drain Type (手动排水型)	Auto Drain Type (手动排水型)	Flow Rate(额定流量) (l/min)	Pipe Size (接管口径)	Wt.(质量) (kg)	Bracket (托架组件)	Auto Drain Float (自动排水器浮子)	Element (滤芯组件)
YAMH250-02	YAMH250-02D	500	1/4"	0.55	BM-25	YAD40	YAMH-EL250
YAMH250-03	YAMH250-03D	500	3/8"	0.55	BM-25	YAD40	YAMH-EL250
YAMH350-03	YAMH350-03D	1000	3/8"	0.9	BM-35	YAD40	YAMH-EL350
YAMH350-04	YAMH350-04D	1000	1/2"	0.9	BM-35	YAD40	YAMH-EL350
YAMH450-04	YAMH450-04D	2000	1/2"	1.4	BM-45	YAD40	YAMH-EL450
YAMH450-06	YAMH450-06D	2000	3/4"	1.4	BM-45	YAD40	YAMH-EL450
YAMH550-06	YAMH550-06D	3500	3/4"	2.1	BM-55	YAD40	YAMH-EL550
YAMH550-10	YAMH550-10D	3500	1"	2.1	BM-55	YAD40	YAMH-EL550
YAMH650-14	YAMH650-14D	6000	1½"	5.0	BM-65	YAD40	YAMH-EL650
YAMH850-14	YAMH850-14D	12000	1½"	11.5	BM-85	YAD40	YAMH-EL850
YAMH850-20	YAMH850-20D	12000	2"	11.5	BM-85	YAD40	YAMH-EL850

注:如自动排水器需接管排水,需另配接头PCF06-03。

Dimensions(mm)(外型尺寸图)(毫米)

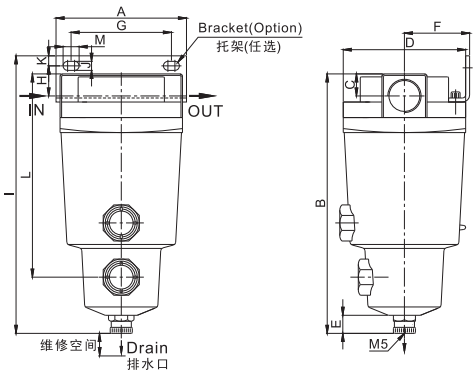

YAMH 250,350 450,550 series

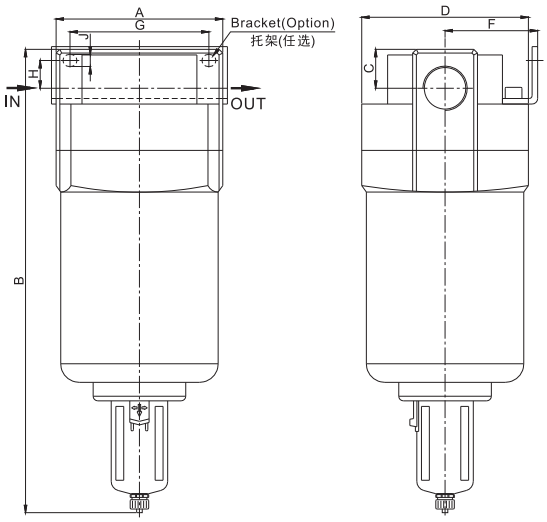

YAMH650,850 series

Model No. (型 号)	Pipe Size (接管口径)Rc(PT)	A	B	C	D	E	I	K	L	W/Bracket(带托架时)				
										F	G	H	J	M
YAMH250	1/4",3/8"	76	172	13	76	20	187	8	113	40	66	20	6	12
YAMH350	3/8",1/2"	90	204	16	90	20	218	8	145	50	80	22	7	14
YAMH450	1/2",3/4"	106	225	19	106	20	241	10	166	55	88	25	9	14
YAMH550	3/4,1"	122	259	22	122	20	277	10	200	65	100	30	9	16
YAMH650	1½"	180	390	42	180					95	150	40	11	
YAMH850	1½",2"	180	500	42	180					95	150	30	13	

推荐选用：YAMH250-02、YAMH350-03、YAMH450-04、YAMH550-10、YAMH650-14

YSC Super Mist Seperator(超小油雾分离器)
YAME250~850 series

图形符号

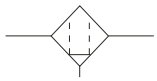

YAME 250,350 / 450,550 series **YAME650,850 series**

COMMON SPECIFICATIONS(共同规格)

Model(型号)	YAME
Fluid(流体)	Air(压缩空气)
Max Press.(最高使用压力)	1.0Mpa(10.2kgf/cm²)
Min Press.(最低使用压力)	※0.05Mpa(0.5kgf/cm²)
Proof Press.(保证耐压力)	1.5Mpa(15.2kgf/cm²)
Amb.Temp.(环境和流体温度)	5~60°C
Filteration(过滤孔径)	0.01μm Removal(去除)95%
Scavenging Particle Size(水分去除率)	99%
Element Life(滤芯寿命)	At Press.Differential(当压力差达到)0.1Mpa(1kgf/cm²) or 2 years(或两年)

※Auto Drain Type:0.15Mpa(1.5kgf/cm²)
使用自动排水器时,最低压力0.15Mpa(1.5kgf/cm²)

Model(型号)		Size(规格)			Part(配件)	Repair Parts[备件(任选项)]	
Manual Drain Type (手动排水型)	Auto Drain Type (手动排水型)	Flow Rate(额定流量) (l/min)	Pipe Size (接管口径)	Wt.(质量) (kg)	Bracket (托架组件)	Auto Drain Float (自动排水器浮子)	Element (滤芯组件)
YAME250-02	YAME250-02D	750	1/4”	0.55	BM–25	YAD40	YAME-EL250
YAME250-03	YAME250-03D	750	3/8”	0.55	BM–25	YAD40	YAME-EL250
YAME350-03	YAME350-03D	1000	3/8”	0.9	BM–35	YAD40	YAME-EL350
YAME350-04	YAME350-04D	1000	1/2”	0.9	BM–35	YAD40	YAME-EL350
YAME450-04	YAME450-04D	2000	1/2”	1.4	BM–45	YAD40	YAME-EL450
YAME450-06	YAME450-06D	2000	3/4”	1.4	BM–45	YAD40	YAME-EL450
YAME550-06	YAME550-06D	3500	3/4”	2.1	BM–55	YAD40	YAME-EL550
YAME550-10	YAME550-10D	3500	1”	2.1	BM–55	YAD40	YAME-EL550
YAME650-14	YAME650-14D	6000	1½”	5.0	BM–65	YAD40	YAME-EL650
YAME850-14	YAME850-14D	12000	1½”	11.5	BM–85	YAD40	YAME-EL850
YAME850-20	YAME850-20D	12000	2”	11.5	BM–85	YAD40	YAME-EL850

注:如自动排水器需接管排水,需另配接头PCF06-03。

Dimensions(mm)(外型尺寸图)(毫米)

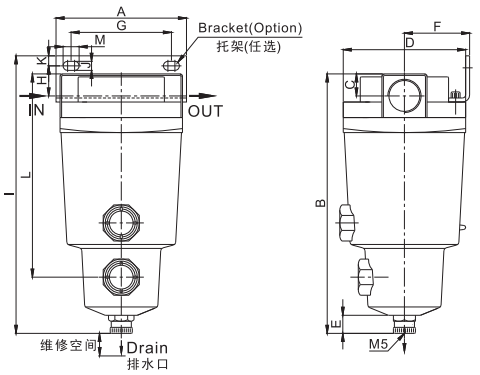

YAME 250,350 / 450,550 series

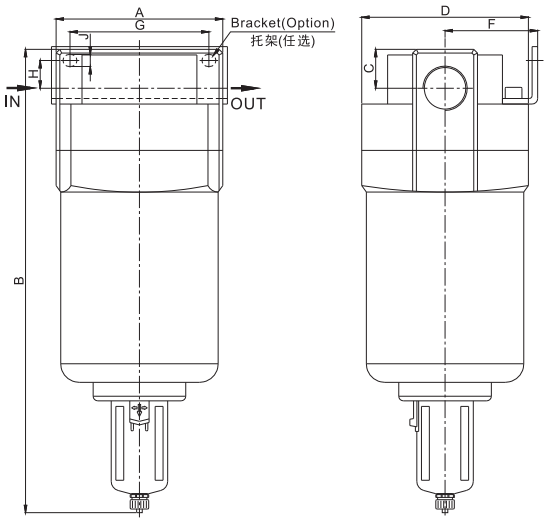

YAME650,850 series

Model No. (型 号)	Pipe Size (接管口径)Rc(PT)	A	B	C	D	E	I	K	L	W/Bracket(带托架时)				
										F	G	H	J	M
YAME250	1/4",3/8"	76	172	13	76	20	187	8	113	40	66	20	6	12
YAME350	3/8",1/2"	90	204	16	90	20	218	8	145	50	80	22	7	14
YAME450	1/2",3/4"	106	225	19	106	20	241	10	166	55	88	25	9	14
YAME550	3/4,1"	122	259	22	122	20	277	10	200	65	100	30	9	16
YAME650	1½"	180	390	42	180					95	150	40	11	
YAME850	1½",2"	180	500	42	180					95	150	30	13	

推荐选用：YAME250-02、YAME350-03、YAME450-04、YAME550-10、YAME650-14

YSC | Oder Removal Filter(除臭过滤器)
YAMF250~850 series

图形符号

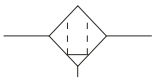

YAMF 250,350 / 450,550 series **YAMF650,850 series**

COMMON SPECIFICATIONS(共同规格)

Model(型号)	YAMF
Fluid(流体)	Air(压缩空气)
Max Press.(最高使用压力)	1.0Mpa(10.2kgf/cm²)
Min Press.(最低使用压力)	※0.05Mpa(0.5kgf/cm²)
Proof Press.(保证耐压力)	1.5Mpa(15.2kgf/cm²)
Amb.Temp.(环境和流体温度)	5~60°C
Filteration(过滤孔径)	0.01μm Removal(去除)95%
Scavenging Particle Size(水分去除率)	99%
Element Life(滤芯寿命)	At Press.Differential(当压力差达到)0.1Mpa(1kgf/cm²) or 2 years(或两年)

※Auto Drain Type:0.15Mpa(1.5kgf/cm²)
使用自动排水器时,最低压力0.15Mpa(1.5kgf/cm²)

Model(型号)		Size(规格)			Part(配件)	Repair Parts[备件(任选项)]	
Manual Drain Type (手动排水型)	Auto Drain Type (手动排水型)	Flow Rate(额定流量) (l/min)	Pipe Size (接管口径)	Wt.(质量) (kg)	Bracket (托架组件)	Auto Drain Float (自动排水器浮子)	Element (滤芯组件)
YAMF250-02	YAMF250-02D	500	1/4"	0.55	BM-25	YAD40	YAMF-EL250
YAMF250-03	YAMF250-03D	500	3/8"	0.55	BM-25	YAD40	YAMF-EL250
YAMF350-03	YAMF350-03D	1000	3/8"	0.9	BM-35	YAD40	YAMF-EL350
YAMF350-04	YAMF350-04D	1000	1/2"	0.9	BM-35	YAD40	YAMF-EL350
YAMF450-04	YAMF450-04D	2000	1/2"	1.4	BM-45	YAD40	YAMF-EL450
YAMF450-06	YAMF450-06D	2000	3/4"	1.4	BM-45	YAD40	YAMF-EL450
YAMF550-06	YAMF550-06D	3500	3/4"	2.1	BM-55	YAD40	YAMF-EL550
YAMF550-10	YAMF550-10D	3500	1"	2.1	BM-55	YAD40	YAMF-EL550
YAMF650-14	YAMF650-14D	6000	1½"	5.0	BM-65	YAD40	YAMF-EL650
YAMF850-14	YAMF850-14D	12000	1½"	11.5	BM-85	YAD40	YAMF-EL850
YAMF850-20	YAMF850-20D	12000	2"	11.5	BM-85	YAD40	YAMF-EL850

注:如自动排水器需接管排水,需另配接头PCF06-03。

Dimensions(mm)(外型尺寸图)(毫米)

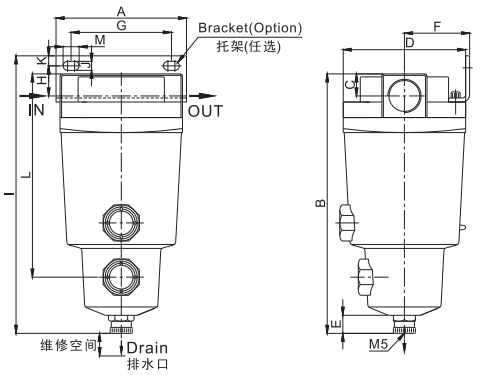

YAMF 250,350 / 450,550 series

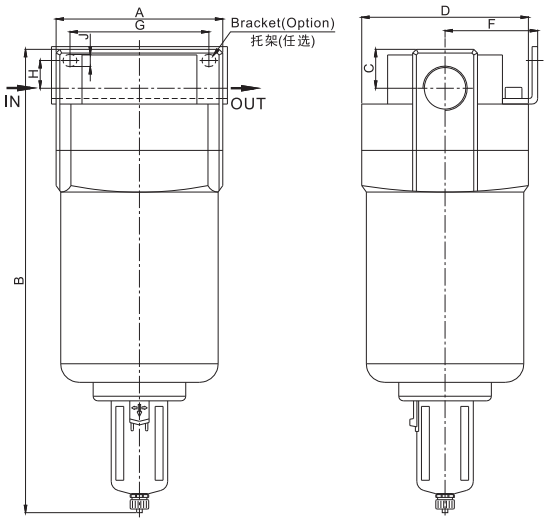

YAMF650,850 series

Model No. (型 号)	Pipe Size (接管口径)Rc(PT)	A	B	C	D	E	I	K	L	W/Bracket(带托架时)				
										F	G	H	J	M
YAMF250	1/4",3/8"	76	172	13	76	20	187	8	113	40	66	20	6	12
YAMF350	3/8",1/2"	90	204	16	90	20	218	8	145	50	80	22	7	14
YAMF450	1/2",3/4"	106	225	19	106	20	241	10	166	55	88	25	9	14
YAMF550	3/4,1"	122	259	22	122	20	277	10	200	65	100	30	9	16
YAMF650	1½"	180	390	42	180					95	150	40	11	
YAMF850	1½",2"	180	500	42	180					95	150	30	13	

推荐选用：YAMF250-02、YAMF350-03、YAMF450-04、YAMF550-10、YAMF650-14

F.R.L. Combination（空气过滤组合）
YAC20~YAC50 series

图形符号

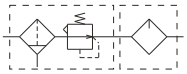

COMMON SPECIFICATION（共同规格）

Proof Press.(保证耐压力)	1.5Mpa(15.3kgf/cm²)
Max Press.(最高使用压力)	1.0Mpa(10.2kgf/cm²)
Amb.Temp.(环境和流体温度)	-5~60°C(未冻结)
Filteration(过滤孔径)	5μm
Recommanded Oil(建议用油)	Turbine Oil(透平1号油)ISOVG32
Bowl Material(杯组件材料)	Porycarbonate(聚碳酸酯)
Bowl Guide(杯防护罩)	YAC20:W/O(无),YAC30~50:W(有)
Regulating Range(调压范围)	0.05~0.85Mpa(0.51~8.7kgf/cm²)

*Element(滤芯)2,10,20,40,70,100μm Available(可供选择).

HOW TO ORDER(型号表示方法)

YAC 30 – 03 BD

- YAC: YSC series F+R+L
- 30: 主体大小
  - 20:1/4
  - 30:3/8
  - 40:1/2
  - 50:1
- 03: 接管口径
  - 02:1/4
  - 03:3/8
  - 04:1/2
  - 10:1
- BD: 可选项
  - B：带托架
  - D：自动排水
  - G：带压力表

Model(型号)		Size(规 格)							
Manual Drain Type (手动排水型)	Auto Drain Type (手动排水型)	Combination(构成元件)			Flow Rate(额定流量) (l/min)	Pipe Size (接管口径)	Gauge Port(压力表口径) Rc(PT)	Wt.(质量) (kg)	Bracket (托架)(2个)
		Air Filter(过滤器)	Regulator(减压阀)	Lubricator(油雾器)					
YAC20-02	YAC20-02D	YAF20	YAR20	YAL20	500	1/4”	1/8”	0.74	Y20L
YAC30-03	YAC30-03D	YAF30	YAR30	YAL30	2000	3/8”	1/8”	1.18	Y30L
YAC40-04	YAC40-04D	YAF40	YAR40	YAL40	4000	1/2”	1/4”	2.14	Y40L
YAC50-10	YAC50-10D	YAF50	YAR50	YAL50	5000	1”	1/4”	3.82	Y50L

※标准自动排水型为停气排水,其最低使用压力为0.1MPa.

Dimensions(mm)(外形尺寸(毫米))

YAC20

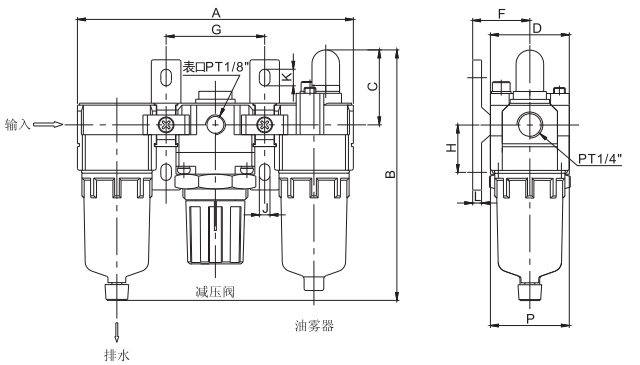

YAC30~50

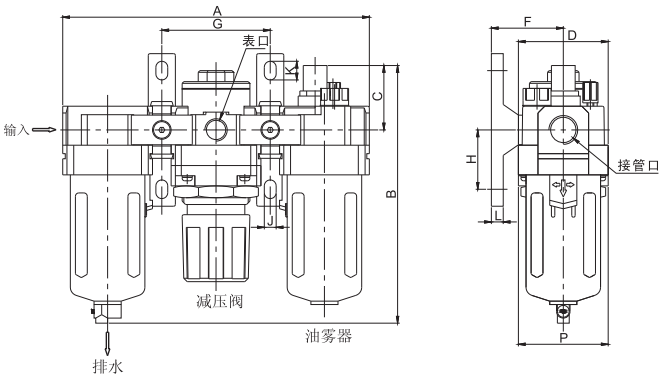

Model No. (型 号)	Pipe Size (接管口径)Rc(PT)	A	B	C	D	W/Bracket(带托架时)						
						F	G	H	J	K	L	P
YAC20	1/4”	113	125	38	40	30	50	24	5.5	8.5	5	50
YAC30	3/8”	181	156.5	38	53	41	64	35	7	11	7	70.5
YAC40	1/2”	238	191.5	40	70	50	84	40	9	13	7	88
YAC50	1”	300	271.5	48	90	70	105	50	12	16	10	115

F.R.L. Combination（空气过滤组合）
YAC20A~YAC40A series

图形符号

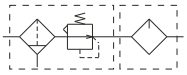

COMMON SPECIFICATION（共同规格）

Proof Press.(保证耐压力)	1.5Mpa(15.3kgf/cm²)
Max Press.(最高使用压力)	1.0Mpa(10.2kgf/cm²)
Amb.Temp.(环境和流体温度)	-5~60°C(未冻结)
Filteration(过滤孔径)	5μm
Recommanded Oil(建议用油)	Turbine Oil(透平1号油)ISOVG32
Bowl Material(杯组件材料)	Porycarbonate(聚碳酸酯)
Bowl Guide(杯防护罩)	YAC20A:W/O(无),YAC30A~50A:W(有)
Regulating Range(调压范围)	0.05~0.85Mpa(0.51~8.7kgf/cm²)

*Element(滤芯)2,10,20,40,70,100μm Available(可供选择).

HOW TO ORDER(型号表示方法)

YAC 30 A – 03 BD

- YAC: YSC series F+R+L
- 30: 主体大小 20:1/4, 30:3/8, 40:1/2, 50:1
- A: F.L一体
- 03: 接管口径 02:1/4, 03:3/8, 04:1/2, 10:1
- BD: 可选项 B：带托架, D：自动排水, G：带压力表

Model(型号)		Size(规　格)						
Manual Drain Type (手动排水型)	Auto Drain Type (手动排水型)	Combination(构成元件)		Flow Rate(额定流量) (l/min)	Pipe Size (接管口径)	Gauge Port(压力表口径) Rc(PT)	Wt.(质量) (kg)	Bracket (托架)(2个)
		Air Filter+Regulator(过滤器带减压阀)	Lubricator(油雾器)					
YAC20A-02	YAC20A-02D	YAW20	YAL20	500	1/4”	1/8”	0.66	Y20T
YAC30A-03	YAC30A-03D	YAW30	YAL30	1700	3/8”	1/8”	0.98	Y30T
YAC40A-04	YAC40A-04D	YAW40	YAL40	3000	1/2”	1/4”	1.93	Y40T

※标准自动排水型为停气排水,其最低使用压力为0.1MPa.

Dimensions(mm)(外形尺寸(毫米))

YAC20A

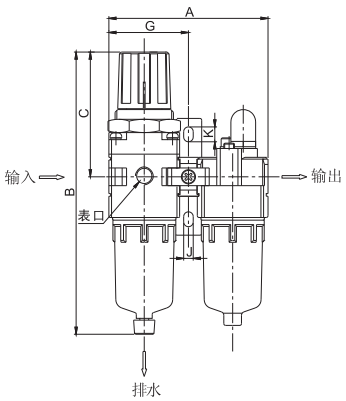

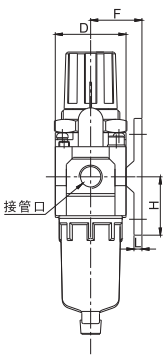

YAC30A~40A

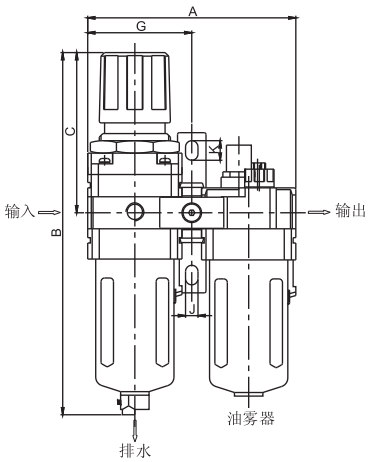

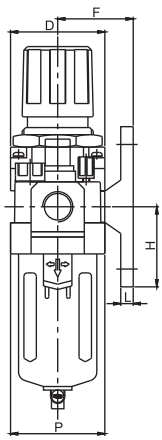

Model No. (型　号)	Pipe Size (接管口径)Rc(PT)	A	B	C	D	W/Bracket(带托架时)						
						F	G	H	J	K	L	P
YAC20A	1/4”	90	164.5	78	40	30	45	24	5.5	8.5	5	50
YAC30A	3/8”	117	211	92.5	53	41	58.5	35	7	11	7	70.5
YAC40A	1/2”	154	262.5	112	70	50	77	40	9	13	7	88

YSC | Air Filter（空气过滤器）
YAF20~50 series

图形符号

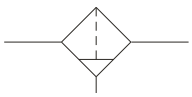

COMMON SPECIFICATION（共同规格）

Proof Press.(保证耐压力)	1.5Mpa(15.3kgf/cm²)
Max Press.(最高使用压力)	1.0Mpa(10.2kgf/cm²)
Amb.Temp.(环境和流体温度)	-5~60°C(未冻结)
Filteration(过滤孔径)	5μm
Bowl Material(杯组件材料)	Porycarbonate(聚碳酸酯)
Bowl Guide(杯防护罩)	YAF20:W/O(无),YAF30~50:W(有)

*Element(滤芯)2,10,20,40,70,100μm Available(可供选择).

HOW TO ORDER(型号表示方法)

YAF 30 – 03 BD

- YAF: YSC series
- 30: 主体大小
  - 20:1/4
  - 30:3/8
  - 40:1/2
  - 50: 1
- 03: 接管口径
  - 02:1/4
  - 03:3/8
  - 04:1/2
  - 10: 1
- BD: 可选项
  - B：带托架
  - D：自动排水

Model(型号)		Size(规 格)			
Manual Drain Type (手动排水型)	Auto Drain Type (手动排水型)	Flow Rate(额定流量) (L/min)	Pipe Size(接管口径) Rc(PT)	Bowl Capacity(杯容量) (cm³)	Wt.(质量) (kg)
YAF20-02	YAF20-02D	750	1/4”	15	0.19
YAF30-03	YAF30-03D	1500	3/8”	20	0.29
YAF40-04	YAF40-04D	4000	1/2”	45	0.55
YAF50-10	YAF50-10D	7000	1”	130	1.08

※标准自动排水型为停气排水,其最低使用压力为0.1MPa.

Dimensions(mm)(外形尺寸(毫米))

YAF20

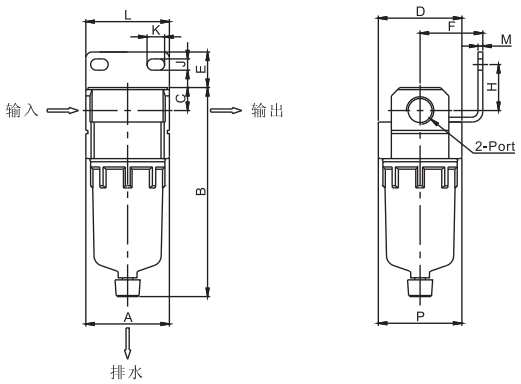

YAF30~50

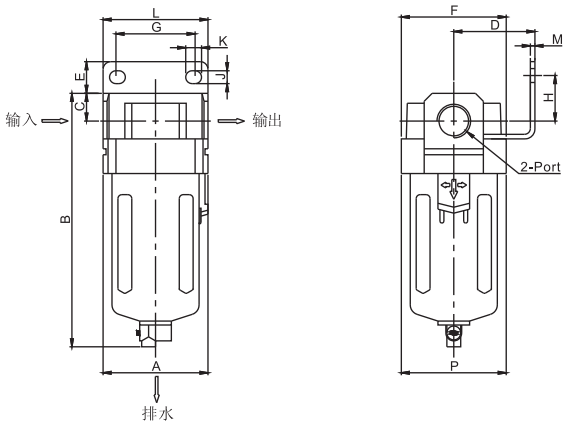

Model No. (型 号)	Pipe Size (接管口径)Rc(PT)	A	B	C	D	W/Bracket(带托架时)						
						F	G	H	J	K	M	P
YAF20	1/4”	40	97.5	11	40	30	27	22	5.4	8.4	2.3	40
YAF30	3/8”	53	132.5	14	53	41	40	23	6.5	8	2.3	56
YAF40	1/2”	70	168.5	18	70	50	54	26	8.5	10.5	2.3	73
YAF50	1”	90	247.5	24	90	70	70	35	11	13	3.2	90

YSC | Regulator（减压阀）
YAR20~50 series

图形符号

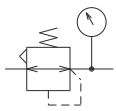

COMMON SPECIFICATION（共同规格）

Proof Press.(保证耐压力)	1.5Mpa(15.3kgf/cm²)
Max Press.(最高使用压力)	1.0Mpa(10.2kgf/cm²)
Regulating Range(调压范围)*	0.05~0.85Mpa(0.51~8.7kgf/cm²)
Amb.Temp.(环境和流体温度)	-5~60°C(未冻结)
Valve Type(阀型)	Relief Type(带溢流型)

*YAR20~YAR50
Available Regulating Range(调压范围):0.02~0.2Mpa(0.2~2kgf/cm²).

HOW TO ORDER(型号表示方法)

YAR 30 – 03 BG

YSC series

主体大小
20:1/4
30:3/8
40:1/2
50: 1

接管口径
02:1/4
03:3/8
04:1/2
10: 1

可选项
B：带托架
G：带压力表

Model(型号)	Size(规 格)			
	Flow Rate(额定流量) (L/min)	Pipe Size(接管口径) Rc(PT)	Gage Port(压力表口径) Rc(PT)	Wt.(质量) (kg)
YAR20-02	550	1/4”	1/8”	0.27
YAR30-03	2500	3/8”	1/8”	0.41
YAR40-04	6000	1/2”	1/4”	0.84
YAR50-10	6000	1”	1/4”	0.84

Dimensions(mm)(外形尺寸(毫米))

YAR20~50

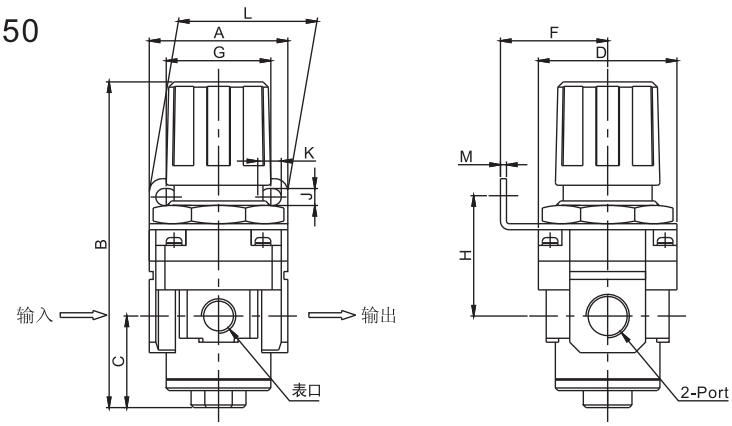

Model No. (型 号)	Pipe Size (接管口径)Rc(PT)	A	B	C	D	W/Bracket(带托架时)						
						F	G	H	J	K	L	M
YAR20	1/4”	40	95	17	40	30	34	45	5.4	8.4	55	2.3
YAR30	3/8”	53	127.5	35	53	41	40	46	6.5	8	53	2.3
YAR40	1/2”	70	149.5	37.5	70	50	54	54	8.5	10.5	70	2.3
YAR50	1”	90	168	48	90	70	66	65.8	11	13	90	3.2

YSC | Lubricator（油雾器）
YAL20~50 series

图形符号

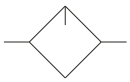

COMMON SPECIFICATION（共同规格）

Proof Press.(保证耐压力)	1.5Mpa(15.3kgf/cm²)
Max Press.(最高使用压力)	1.0Mpa(10.2kgf/cm²)
Amb.Temp.(环境和流体温度)	-5~60°C(未冻结)
Recommanded Oil(建议用油)	Turbine Oil(透平1号油)ISOVG32
Bowl Material(杯组件材料)	Porycarbonate(聚碳酸酯)
Bowl Guide(杯防护罩)	YAL20:W/O(无),YAL30~50:W(有)

HOW TO ORDER(型号表示方法)

YAL 30 – 03 B

- YSC series
- 主体大小: 20:1/4, 30:3/8, 40:1/2, 50: 1
- 接管口径: 02:1/4, 03:3/8, 04:1/2, 10: 1
- 可选项 B：带托架

Note 1) Supply Pressure 5kgf/cm², No. of Drop 5 Drops/min, ISO Vg32, 20℃.
Note 2) Flow Rete: Supply Pressure 0.5Mpa(5.1kgf/cm²), Pressure Drop 0.03Mpa{0.3kg/cm²}
注1) 供应压力为0.5Mpa(5.1kgf/cm²)，油滴流量为 5 滴/分钟，透平1号油(ISOVG32)温度20℃情况下.
注2) 供应压力为0.5Mpa(5.1kgf/cm²)，压降为0.03Mpa{0.3kg/cm²}情况下.

Model(型号)	Size(规 格)				
	Min.Flow(油滴最小流量)Note1) (l/Min)	Flow Rate(额定流量)Note2) (l/Min)	Pipe Size(接管口径) Rc(PT)	Bowl Capacity(杯容量) (cm³)	Wt.(质量) (kg)
YAL20-02	15	800	1/4”	25	0.22
YAL30-03	40	1700	3/8”	50	0.30
YAL40-04	50	5000	1/2”	130	0.56
YAL50-10	190	7000	1”	130	1.08

Dimensions(mm)(外形尺寸(毫米))

YAL20

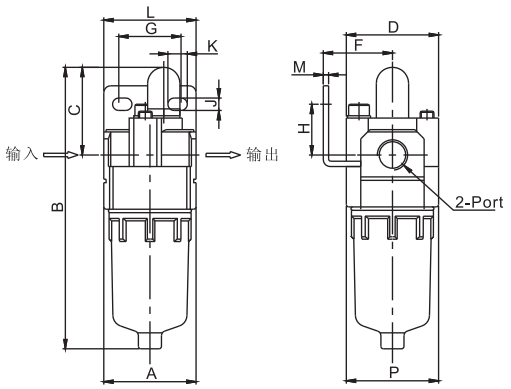

YAL30~50

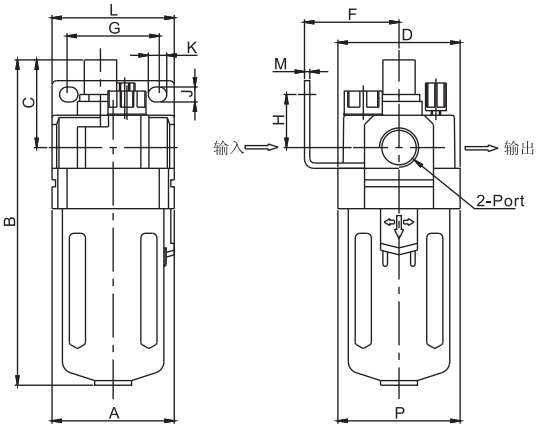

Model No. (型 号)	Pipe Size (接管口径)Rc(PT)	A	B	C	D	W/Bracket(带托架时)							
						F	G	H	J	K	L	M	P
YAL20	1/4”	40	122	38	40	30	27	22	5.4	8.4	40	2.3	40
YAL30	3/8”	53	142	38	53	41	40	23	6.5	8	53	2.3	53
YAL40	1/2”	70	177	41	70	50	54	26	8.5	10.5	70	2.3	70
YAL50	1”	90	177	45	90	70	66	35	11	13	90	3.2	90

YSC | Filter+Regulator（空气过滤器带减压阀）
YAW20~40 series

图形符号

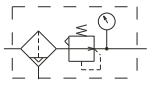

COMMON SPECIFICATION（共同规格）

Proof Press.(保证耐压力)	1.5Mpa(15.3kgf/cm²)
Max Press.(最高使用压力)	1.0Mpa(10.2kgf/cm²)
Amb.Temp.(环境和流体温度)	-5~60°C(未冻结)
Filteration(过滤孔径)	5μm
Recommanded Oil(建议用油)	Turbine Oil(透平1号油)ISOVG32
Bowl Material(杯组件材料)	Porycarbonate(聚碳酸酯)
Bowl Guide(杯防护罩)	YAW20:W/O(无),YAW30~50:W(有)
Valve Type(阀型)	Relief Type(带溢流型)

*Element(滤芯)2,10,20,40,70,100μm Available(可供选择).

HOW TO ORDER(型号表示方法)

YAW 30 – 03 BDG

- YAW: YSC series
- 30: 主体大小 20:1/4, 30:3/8, 40:1/2, 50: 1
- 03: 接管口径 02:1/4, 03:3/8, 04:1/2, 10: 1
- BDG: 可选项 B：带托架, D：自动排水, G：带压力表

Model(型号)		Size(规 格)			
Manual Drain Type (手动排水型)	Auto Drain Type (手动排水型)	Flow Rate(额定流量) (L/min)	Pipe Size(接管口径) Rc(PT)	Gage Port(压力表口径) Rc(PT)	Wt.(质量) (kg)
YAW20-02	YAW20-02D	550	1/4”	1/8”	0.36
YAW30-03	YAW30-03D	2000	3/8”	1/8”	0.56
YAW40-04	YAW40-04D	4000	1/2”	1/4”	1.15

※标准自动排水型为停气排水,其最低使用压力为0.1MPa.

Dimensions(mm)(外形尺寸(毫米))

YAW20

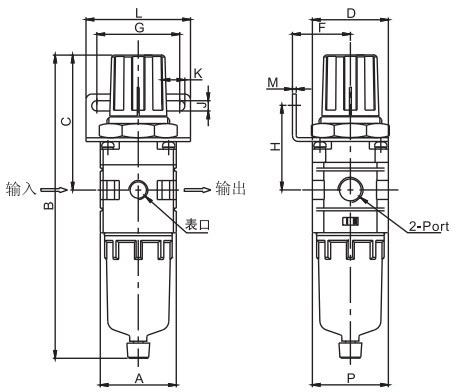

YAW30~40

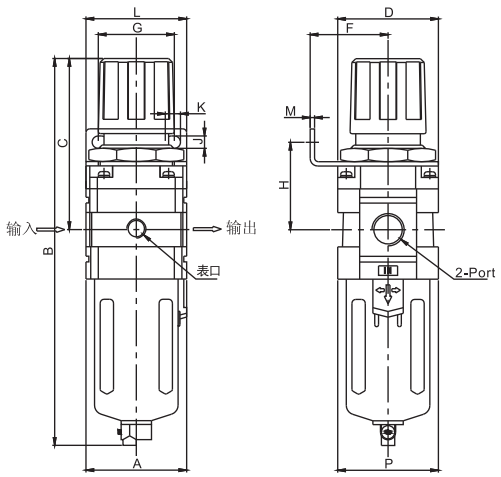

Model No. (型 号)	Pipe Size (接管口径)Rc(PT)	A	B	C	D	W/Bracket(带托架时)							
						F	G	H	J	K	L	M	P
YAW20	1/4”	40	164.5	78	40	30	34	45	5.4	8.4	55	2.3	40
YAW30	3/8”	53	211	92	53	41	40	45	6.5	8	53	2.3	56
YAW40	1/2”	70	262.5	112	70	50	54	54	8.5	10.5	70	2.3	73

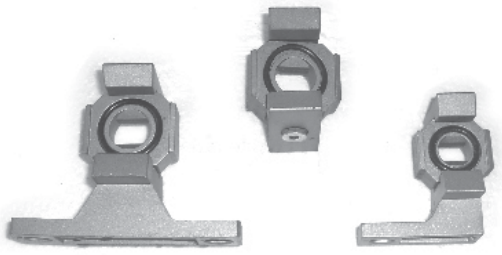

Spacer(隔板)

Model(型号)	A	适用的型号
Y20	10	YAC20,20A
Y30	11	YAC30,30A
Y40	14	YAC40,40A

Y20–Y40

L-Type Bracket(L型隔板托架)

Model(型号)	A	B	C	D	E	F	G	R	L	适用的型号
Y20L	24	15	5.5	3	30	5	8.6	2.5	33	YAC20,20A
Y30L	35	16	7	4	41	7	11	3.5	45	YAC30,30A
Y40L	40	22	9	4	50	7	12.2	4.5	50	YAC40,40A

Y20L–Y40L

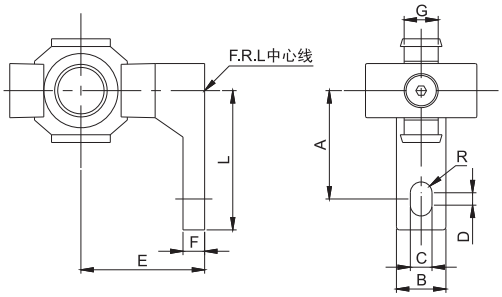

T-Type Bracket(T型隔板托架)

Model(型号)	A	B	C	D	E	F	G	R	L	适用的型号
Y20L	24	15	5.5	3	30	5	8.6	2.5	33	YAC20,20A
Y30L	35	16	7	4	41	7	11	3.5	45	YAC30,30A
Y40L	40	22	9	4	50	7	12.2	4.5	50	YAC40,40A

Y20T–Y40T

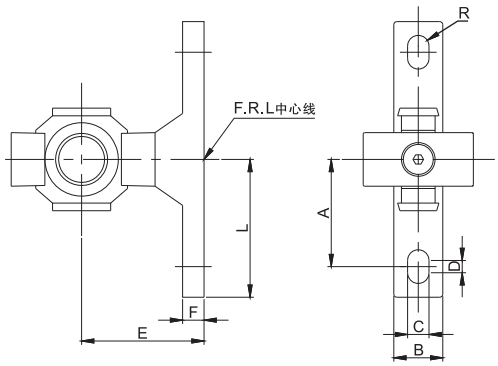

Bracket(托架) For YAR, YAW Series

型号	A	B	C	D	F	G	H	J	L	N	R	T	适用的型号
B220	55	34	25	19	50	30	33.5	20	15	5.5	2.5	2.3	YAR20,YAW20
B320	53	40	21	13.5	66	41	42.5	25	8	7	3.5	2.3	YAR30,YAW30
B420	70	54	27	18	80	50	52.5	30	11	9	4.5	2.3	YAR40,YAW40

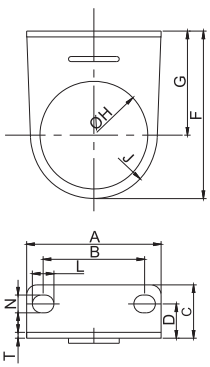

Gauge(压力表)

G40-10-01

G50-10-02

G40-10-01

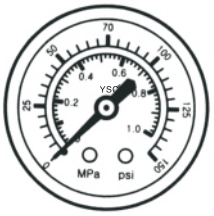

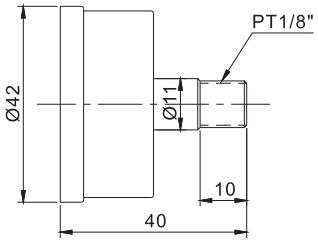

G50-10-02

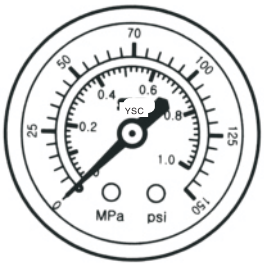

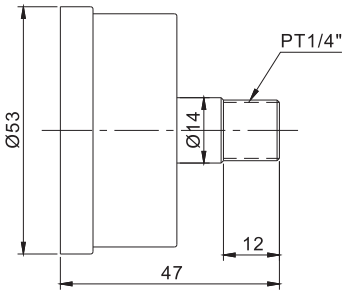

Pate No.(型　号)	Pressure Range(压力范围)(MPa)	Applicable Model(适用的型号)	Weight(质量)(g)
G40–10–01	0~1.0	YAC20,YAC20A,YAR20,YAW20 YAC30,YAC30A,YAR30,YAW30	72
G50–10–02	0~1.0	YAC40,YAC40A,YAR40,YAW40 YAC50,YAR50	128

YSC | Direct Operated 2 Way Solenoid Valve for Any Fluid (直动式2通电磁阀) YAB21 series

图形符号

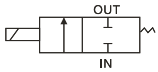

Air,Water,Oil(50cst)Multilex YAB21*Series (空气，水，油（50cst以下）多用途2位电磁阀YAB21*系列）

COMMON SPECIFICATIONS(共同规格）

Item (项　目）	Specification (标准规格)
Media(使用流体)	Air,Water,Oil(空气,水,油)(50Cst or less(以下))
※Operating Press. Range(工作压力范围)	0~1.5MPa(0~15kgf/cm²)
Proof Pressure(耐压)	3MPa(30kgf/cm²)
Fluid Temp.(流体温度)	-10~40°C
Ambient Temp.(环境温度)	-20~50°C
Responce Time(响应时间)	30ms以下(5kgf/cm²时)
Type(动作形式)	Direct Operation(直动式)

※Note:please refer to the Specifications because of difference from the Model and Fluid
※注：因型号和流体有所不同，所以请注明规格.

Feature (特征)

- Compact & light weight 结构紧凑,重量轻
- Excellent flow character 极好的流量特性

Note (注意)

- Differential pressure of oil as a fluid is on the viscosity 50 cst.
- DC coil is designed for longevity to frequently use of dry Air,gas Vacuum.
- Not allowable to use in explosion ambient place.
- 压差栏中的油粘度是50CST以下.
- DC线圈设计适用于干燥空气\真空等频繁动作的环境.
- 不容许使用在易爆场合.

Model No & Specifications(型号及规格)

Spec.(项目) / Model(型号)"	Pipe Size (接管口径)	Oriffce (公称通径) (mm)	CV Value (值)	Eff.Sectional Area (有效断面积) (mm²)	Max.Press.Differential(最高工作差压力)(MPa)						Rated Voltge (额定电压P)	Apparent Power (视在功率)(W)		PWR Consumption (功率消耗)(W)	
					Air(空气)		Water(水,灯,油)		Oil(油)(50cet)			Holding (持续)	Starting (起动)		
					AC	DC	AC	DC	AC	DC		60HZ	60HZ	AC	DC
YAB21-02-1A	Rc 1/4"(8A)	1.5	0.10	1.8	1.5	1.0	1.5	1.0	0.9	1.0	AC100V 50/60HZ AC110V 60HZ AC200V 50/60HZ AC220V 60HZ DC12V DC24V	9	12.6	4.2 / 60HZ	7
YAB21-02-2A		2.0	0.15	2.7	1.0	0.6	1.0	0.7	0.5	0.6					
YAB21-02-3A		3.0	0.30	5.5	0.7	0.2	0.4	0.2	0.2	0.2					
YAB21-02-5A		4.0	0.40	7.4	0.4	0.1	0.2	0.1	0.1	0.1					

Construction/Parts(内部构造及材料)

OFF(断电状态)　　ON(通电状态)

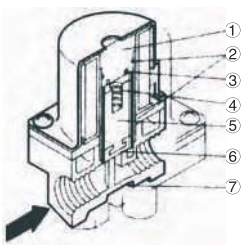

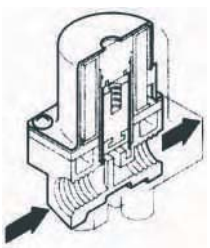

No.(序号)	Part Name(零件名称)	Material(材料)
1	Core Ass'y(静铁芯组件)	SUS(不锈钢)
2	O Ring(O型圈)	FKM(氟橡胶)
3	Shading Coil(分磁环)	Copper(铜)
4	Spring(弹簧)	SUS(不锈钢)
5	Plunger(动铁芯)	SUS(不锈钢)
6	Seat Seal(下封塞)	NBR(丁晴橡胶)
7	Body(阀体)	Brass(黄铜)

YSC | Direct Operated 2 Way Solenoid Valve for Any Fluid (直动式2通电磁阀) YAB21 series

HOW TO ORDER(型号表示方法)

YAB21	0	2	2	A	AC220V
	A	B	C	D	E

A	B	Pipe Size (接管口径)
0	2	Rc 1/4"

E	Rated Voltage(额定电压)
AC110V	AC110V 60HZ AC100V 50/60HZ
AC220V	AC220V 60HZ AC200V 50/60HZ
DC24V	DC24V
DC12V	DC12V

C	Oriffice(公称通径)
1	ø1.5
2	ø2.0
3	ø3.0
5	ø4.0

	D	Material(材料组合)		Remark (备注)
		Body(阀体)	Seal(密封件)	
Standard(标准)	A	Brass(黄铜)	Brass(丁晴橡胶)	Water(水用) Air
Option	B	Brass(黄铜)	FKM	Low Temp Type

Example(型号表示例)

YAB21–02–2A–AC220V
YAB21 Model NC Type(直动式，NC型),Pipe Size(接管口径)为 Rc 1/4"
Orifice(公称通径)2.0, Voltage(电压)AC 220V.

Dimensions(mm)(外形尺寸图(毫米))

YAB21–**–*

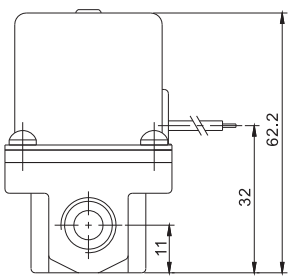

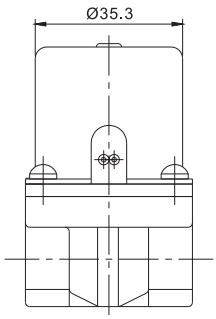

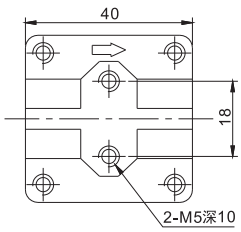

※300mm lead wire length

YSC

Direct Type 2 Way Solenoid Vavle
(2通直动型电磁阀)

YVDW2120G~2190G series

图形符号

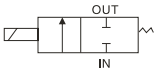

HOW TO ORDER(型号表示方法)

YVD W 2140 S–04 4–NO G

- YSC series
  W:water(水)
- Nil:Brass(黄铜)
  S:Stainless Body(不锈钢阀体)
- Pipe size(接管口径)
  02:1/4”
  03:3/8”
  04:1/2”
  06:3/4”
  10:1”
  14:1¼”
  16:1½”
  20:2”
- Rated Voltage(使用电压)
  3=AC110V
  4=AC220V
  5=DC24V
- Type(形式)
  Nil:Normal Close(常闭)
  NO:Normal Open(常开)

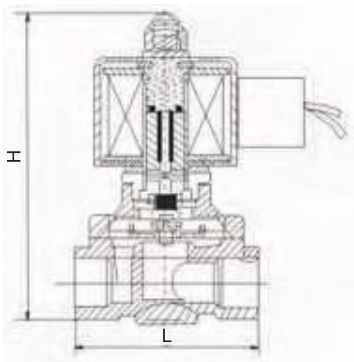

COMMON SPECIFICATIONS(共同规格)

Media(使用流体)	Clean Air,Water,Oil(洁净空气,水,油)(50Cst or less(以下))
Fluid Temp.(流体温度)	-5~+80°C
Ambient Temp.(周围环境温度及湿度)	Temp.(温度)0~60°C,Hunidity(湿度)90% or less(以下)
Proof Pressure(耐压)	1.2MPa(12kgf/cm²)
Voltage(电压)	AC110V,220V(50Hz);DC24V
Allowable Voltage(允许电压变动范围)	Rated Voltage(额定电压)±10%
Insulation(绝缘种类)	B Class
Power Consumption(消耗功率)	AC110V,220V(50Hz):22VA;DC24V:18W
Connection(接线方式)	Din Terminal Type(Din接线盒式)
Type(动作形式)	直动式(3/8”以上为分步直动式)
Material(材料)	Body(阀体):Brass(黄铜),Stainless(不锈钢); Seal(密封):NBR

Specifications(规格)

Model No. (型 号)	Port Size (接管口径)	Operating Press. (使用压力)	Orifice(通径) (ømm)	Cv值	长L	高H
YVDW2120(S)	G1/4”(8A)	NC:0~10kgf/cm² NO:0~6kgf/cm²	4	0.23	40.5	75
YVDW2130(S)	G3/8”(10A)		16	4.8	52.5	90
YVDW2140(S)	G1/2”(15A)		16	4.8	69	117
YVDW2150(S)	G3/4”(20A)		20	7.6	73	123.5
YVDW2160(S)	G1”(25A)		25	12	99	134.5
YVDW2170(S)	G1¼”(32A)		35	24	110	154
YVDW2180(S)	G1½”(40A)		40	29	120	162
YVDW2190(S)	G2”(50A)		50	48	154	185

YSC

Pilot Operated 2 Way Solenoid Vavle for Air,Water,Oil
(2通先导型电磁阀(空气,水,油))

YVPW2130G~2190G series

图形符号

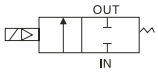

HOW TO ORDER(型号表示方法)

YVPW 2140 S–04 4–NO G

- YSC series
- Nil:brass(黄铜)
  S:Stainless Body(不锈钢阀体)
- Pipe size(接管口径)
  03:3/8”
  04:1/2”
  06:3/4”
  10:1”
  14:1¼”
  16:1½”
  20:2”
- Rated Voltage(使用电压)
  3=AC110V
  4=AC220V
  5=DC24V
- Type(形式)
  Nil:Normal Close(常闭)
  NO:Normal Open(常开)

Construction(构造图)

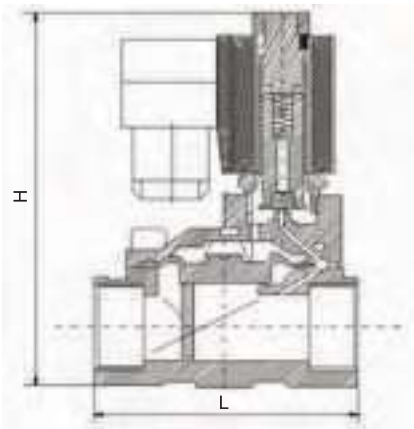

YVPW

YVPW-S

COMMON SPECIFICATIONS(共同规格)

Media(使用流体)	Clean Air,Water,Oil(洁净空气,水,油)(50Cst or less(以下))
Fluid Temp.(流体温度)	-10~+80°C
Ambient Temp.(周围环境温度及湿度)	Temp.(温度)0~60°C;Hunidity(湿度)90% or less(以下)
Proof Pressure(耐压)	1.7MPa(17kgf/cm²)
Voltage(电压)	AC110V,220V(50Hz);DC24V
Allowable Voltage(允许电压变动范围)	Rated Voltage(额定电压)±10%
Insulation(绝缘种类)	B Class
Power Consumption(消耗功率)	AC110V,220V(50Hz):17VA;DC24V:11W
Connection(接线方式)	Din Terminal Type(Din接线盒式)
Type(动作形式)	Pilot Wire(先导式)
Material(材料)	Body(阀体):Brass(黄铜);Stainless(不锈钢); Seal(密封):NBR

Specifications(规格)

Model No. (型 号)	Port Size (接管口径)	Operating Press. (使用压力)	Orifice(通径) (ømm)	Cv值	长L	高H
YVPW2130	G3/8”(10A)	NC:0.5~13kgf/cm² NO:0.5~8kgf/cm²	13	3.5	66	112
YVPW2140	G1/2”(15A)		13	4.5	66	112
YVPW2150	G3/4”(20A)		20	7.6	75	118
YVPW2160	G1”(25A)		25	12	92(96)	125
YVPW2170	G1¼”(32A)		32	22	122(131)	137
YVPW2180	G1½”(40A)		40	30	131	150
YVPW2190	G2”(50A)		50	48	165	165(176)

※注:()内为不锈钢阀体尺寸

YSC

Pilot Operated 2 Way Solenoid Vavle for Steam
(2通先导型电磁阀(蒸气))

YVPS2140G~2190G series

图形符号

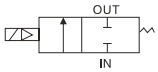

Construction(构造图)

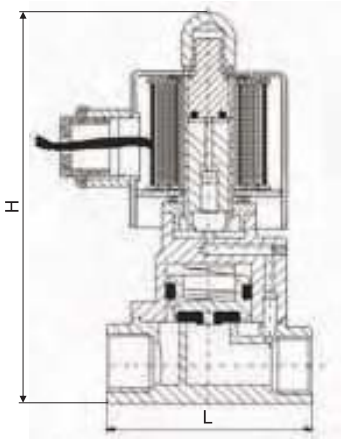

HOW TO ORDER(型号表示方法)

YVPS 2140 S–04 4–NO G

- YSC series
- Nil:brass(黄铜)
  S:Stainless Body(不锈钢阀体)
- Pipe size(接管口径)
  04:1/2”
  06:3/4”
  10:1”
  14:1¼”
  16:1½”
  20:2”
- Rated Voltage(使用电压)
  3=AC110V
  4=AC220V
  5=DC24V
- Type(形式)
  Nil:Normal Close(常闭)
  NO:Normal Open(常开)

COMMON SPECIFICATIONS(共同规格)

Media(使用流体)	Clean Air,Steam,Water,Oil(洁净空气,蒸气,水,油)(50Cst or less(以下))
Fluid Temp.(流体温度)	-5~+180°C
Ambient Temp.(周围环境温度及湿度)	Temp.(温度)0~60°C;Hunidity(湿度)90% or less(以下)
Proof Pressure(耐压)	2.0MPa(20kgf/cm²)
Voltage(电压)	AC110V,220V(50Hz);DC24V
Allowable Voltage(允许电压变动范围)	Rated Voltage(额定电压)±10%
Insulation(绝缘种类)	B Class
Power Consumption(消耗功率)	AC110V,220V(50Hz):19VA;DC24V:10W
Connection(接线方式)	Din Terminal Type(Din接线盒式)
Type(动作形式)	Pilot Wire(先导式)
Material(材料)	Body(阀体):Brass(黄铜);Stainless(不锈钢); Seal(密封):PTFE

Specifications(规格)

Model No. (型 号)	Port Size (接管口径)	Operating Press. (使用压力)	Orifice(通径) (ømm)	Cv值	长L	高H
YVPS2140	G1/2”(15A)	NC:0.4~16kgf/cm² NO:0.4~10kgf/cm²	15	4.5	70	135
YVPS2150	G3/4”(20A)		20	7.6	75	142
YVPS2160	G1”(25A)		25	12	92(94)	150(152)
YVPS2170	G1¼”(32A)		32	22	110(111)	150(155)
YVPS2180	G1½”(40A)		40	30	122	155(166)
YVPS2190	G2”(50A)		50	48	161(167)	174(184)

※注:()内为不锈钢阀体尺寸

3 Way Direct Type Solenoid Value(Micro Type)(3通直动型电磁阀(超微型))

GM series

图形符号

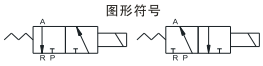

Solenoid Valve (10mm , 15mm)

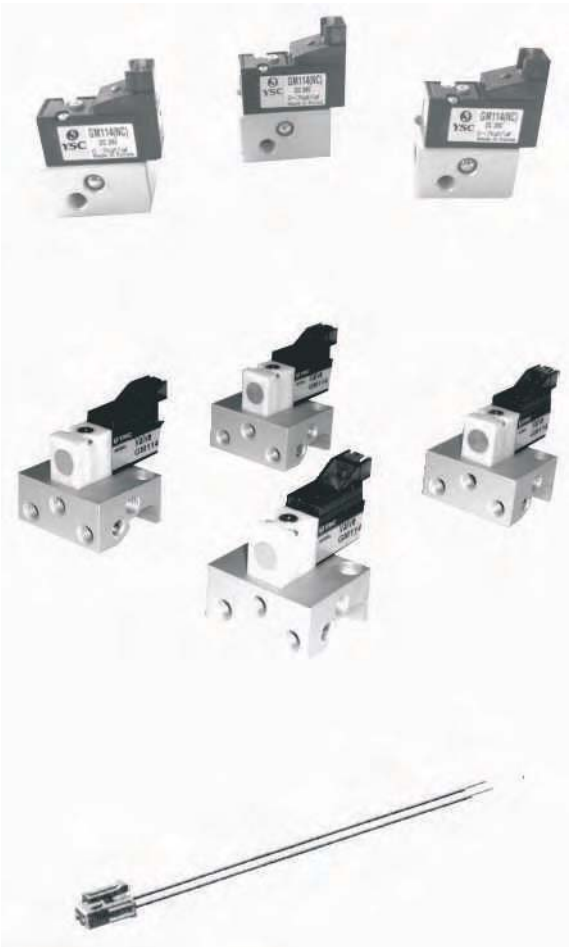

引线形式

Features (特征)

- Micro Type(超微型):10mm ,15mm
- Flow(流量): 22L/min(5bar) ,110L/min(5bar)
- Built-in Surge Suppressor(STD)(标准内置过压抑制器)
- Coil & Body Assembling Type(阀本体和电磁线圈分离型)
- Mountable for Manifold Base(可用汇流板集装)
- Response Time(反应时间):Approx.10ms

COMMON SPECIFICATIONS(共同规格)

Model(型号) / Item(项目)		Gm114/GM124	Gm215/GM225
Bolt(安装螺母)		M1.7	M3
Fluids(使用流体)		Compressed Air(压缩空气)	
Opr.Press.Range (工作压力范围)		(0~0.7)(Mpa)	
Flow(流量)L/min[5bar]		22	110
Orifice size (通径)(mm)		0.7	1.6
Ambient Temp(环境及流体温度)		-5~60°C	
Response Time(反应时间)(5bar)		10ms以下	
Max.Cycles(最大使用频率)		10cycle/sec	
Lubrication*(润滑)		Not Required(不需要)	
Surge Suppressor(过压抑制器)		Build-in Surge Suppressor(STD)(内置过压抑制器)	
Rated Voltage(额定电压)		DC24V,DC12V	
Allowable Voltage(容许电压范围)		Rated Voltage(额定电压)±10%	
Oil Insulation(绝缘种类)		Class B(B级或相同等级)	
Power Consumption (功率消耗)	DC	1.3W	2.3W

*Please Use Tubine Oil 1st-grade ISO VG32#,If Required.
若需要润滑油请使用透平1号油ISOVG32

Application(适应设备)

- Micro Cylinder Control(微型气缸控制)
- Semi Conductor Industries(半导体设备)
- Pharmacy Industries(医药设备)
- Weariong Machine(纺机)
- Accuracy Control Machine(精密控制机)
- Electronics Machine(电子机械)
- Food Industries(食品工业)
- Assaying Machine(分析机)
- Ink Jet

HOW TO ORDER(型号表示方法)

GM 1 1 4 – 0 2 L – 5 B

YSC series
1:10mm
2:15mm

Body size
(阀体尺寸)
4:10mm
5:15mm

Operation(切换方式)
1.NC（常闭)
2.NO（常开)

Voltage(电压)
01.DC 12V
02.DC 24V
10.AC 110V (特殊定做)
20.AC 220V (特殊定做)

Connection(接电形式)
M.Front Side Piping (前面接电型)
L.Top Side Piping (上面接电型)
LL.Direct Piping (直接接电型)

Number of Stations(位置数目)
1.1 Station (1个)
2.2 Station (2个)
.
.
.
19.19 Station (19个)
20.20 Station (20个)

3 Way Direct Type Solenoid Value(Micro Type)(3通直动型电磁阀(超微型))
GM series

图形符号

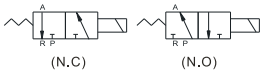

Gm114 Structure & Main Parts Material
结构及主要部件的材料

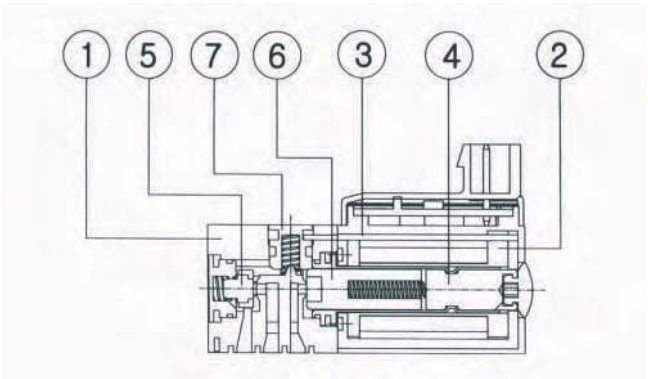

序号	数量	Part name 零件名称	Material材质
1	1	BODY	NYLON
2	1	BOBBIN	NYLON
3	1	YOKE	SPC
4	1	STOPPER	SUS
5	1	R–PACKING	NBR
6	1	PLUNGER	SUS
7	1	BUTTON	C3604

GM114-02 M

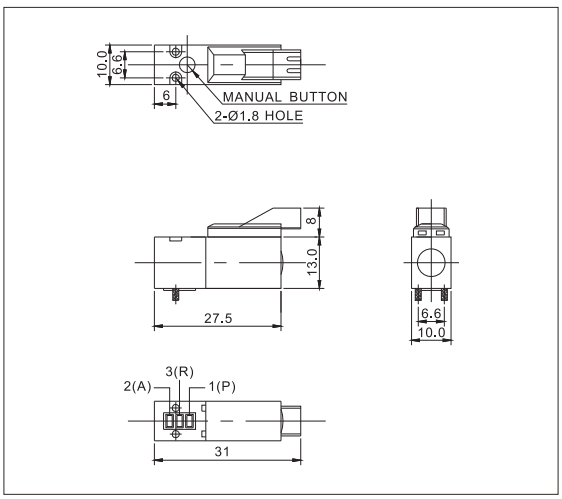

GM114 -02 L

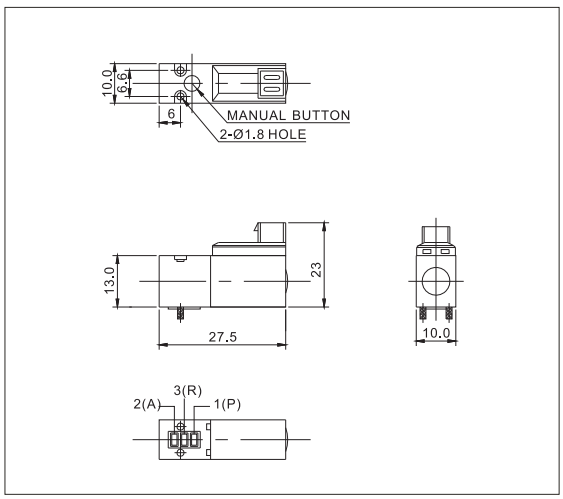

GM215-02 M

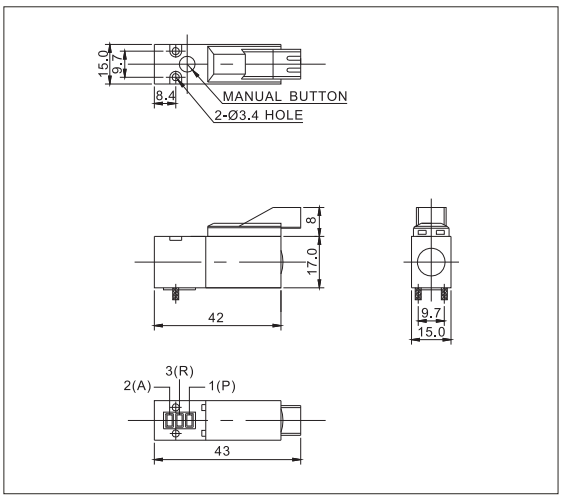

GM215-02 L

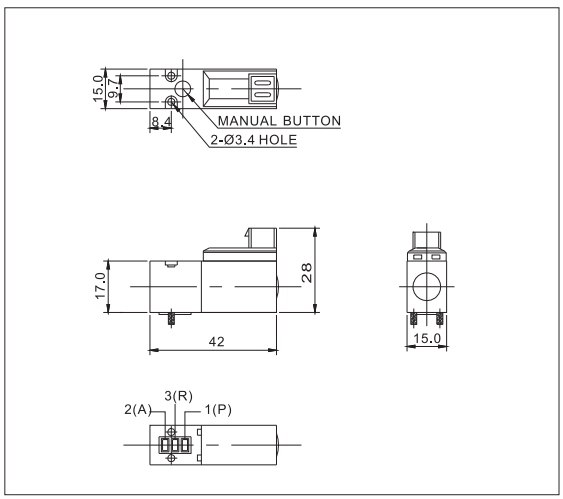

YSC | 3 Way Direct Type Solenoid Value(Micro Type)(3通直动型电磁阀(超微型))

GM series

图形符号

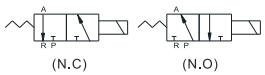

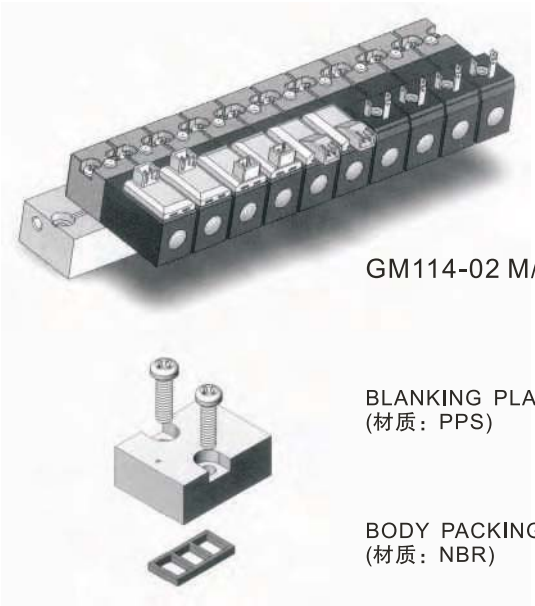

GM114 MANIFOLD BLOCK

BODY PACKING (尺寸)

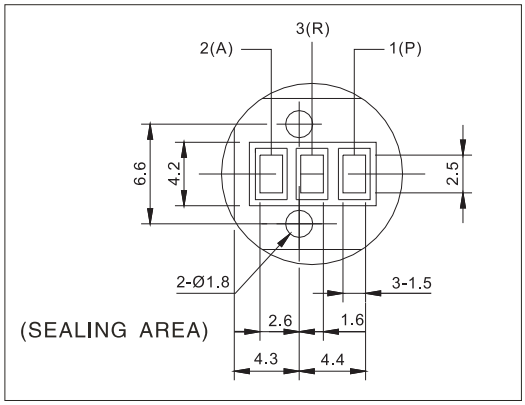

VALVE ASS'Y

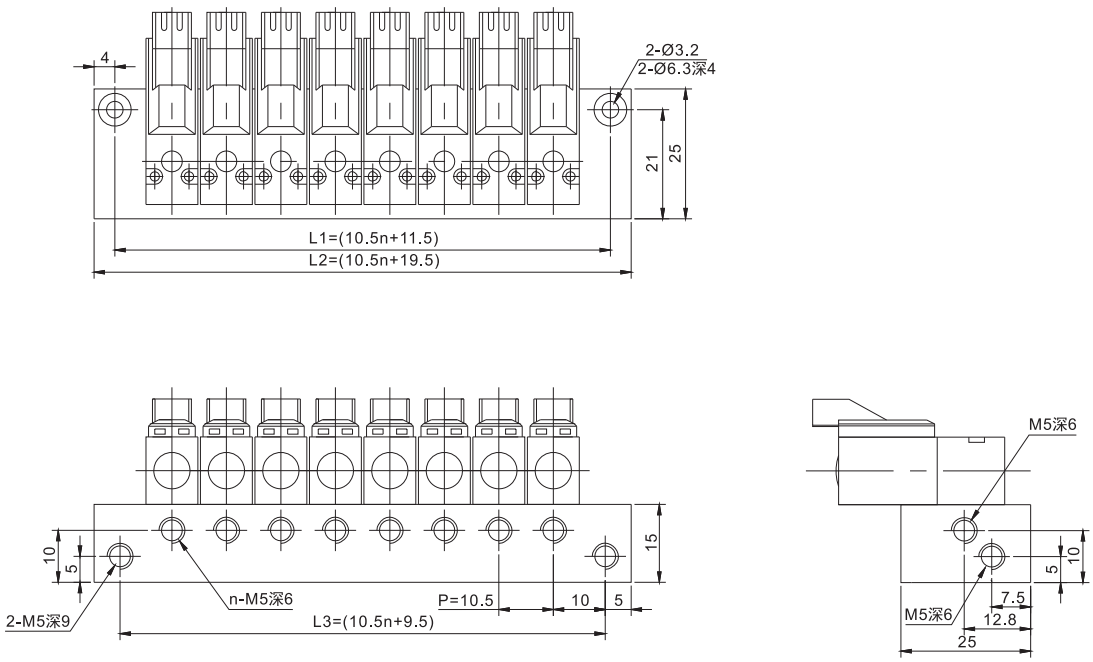

位数 / 长度	1	2	3	4	5	6	7	8	9	10	11	12	13	14	15
L1	22	32.5	43.0	53.5	64.0	74.5	85.0	95.5	106.0	116.5	127	137	148	158.5	169
L2	30	40.5	51.0	61.5	72.0	82.5	93.0	103.5	114.0	124.5	135	145.5	156	166.5	177
L3	20	30.5	41.0	51.5	62.0	72.5	83.0	93.5	104.0	114.5	125	135.5	146	156.5	167

YSC

3 Way Pilot Type Solenoid Valve/Elastic Seal
(3通先导型电磁阀/橡胶密封)

YVP342 series

图形符号

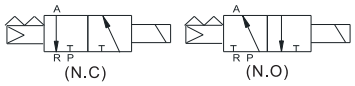

COMMON SPECIFICATIONS(共同规格)

Fluid(流体)	Clean Air,Inert Gas(洁净空气,惰性气体)
Ambient Temp.(环境及流体温度)	-5~+50°C(未冻结)
Response Time(反应时间)	30ms(毫秒)or Less(以下)
Max.Cycles(最高操作频率)	5c/s(次/秒)
Lubrication*(润滑)	Not Required(不需要)
Manual Override(手动操作)	Push & Non Lock(无锁定按钮式)
Shock/Vibration(抗冲击/振动能力)	30G/5G(8.3~2000Hz)

*Please Use Tubine Oil 1st-grade ISO VG32#,If Required.
若需要润滑油请使用透平1号油ISOVG32

SOLENOID SPECIFICATIONS(电磁线圈规格)

Connection(接线方式)		Grommet(直接出线式)(G),DIN Teminal(插座式)(DZ)
*Rated Voltage(标准电压)		AC(交流):110V,220V(50Hz) DC(直流):24V
Allowable Voltage(容许电压变动范围)		Rated Voltage(额定电压)-15~+10%
Insulation(绝缘)		Class B(B级或相同等级)
Power Consumption (功率消耗)	AC(交流)	Starting(启动):5.6VA,Holding(持续):4.5VA
	DC(直流)	1.8W/2W With Indication Light(带指示灯)

HOW TO ORDER(型号表示方法)

YVP 3 4 2 – 3 G – 02 A

- Series(系列)
- Normal Open(常开) / Normal Close(常闭)
- Direct Piping Type (直接配件型)
- Rated voltage(代表使用电压)
  - 3=AC110V
  - 4=AC220V
  - 5=DC24V
  - 6=DC12V
- zConnection(代表接电方式):
  - G=Grommet(直接出线方式) (Wire Length(引线长)300mm)
  - D=DIN Terminal(DIN型插座式)
  - DZ=DIN Terminal/Indication Light & Surge suppressor (插座式/带有指示灯和过压抑制器)
- 02=1/4"
- A=NC(常闭)
- B=NO(常开)

Dimensions(mm)(外形尺寸图(毫米))

YVP342–○G–02A(常闭)

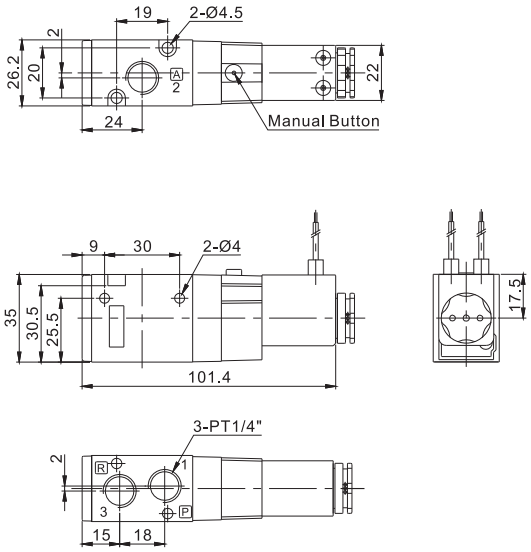

YVP342–○D(DZ)–02B(常开)

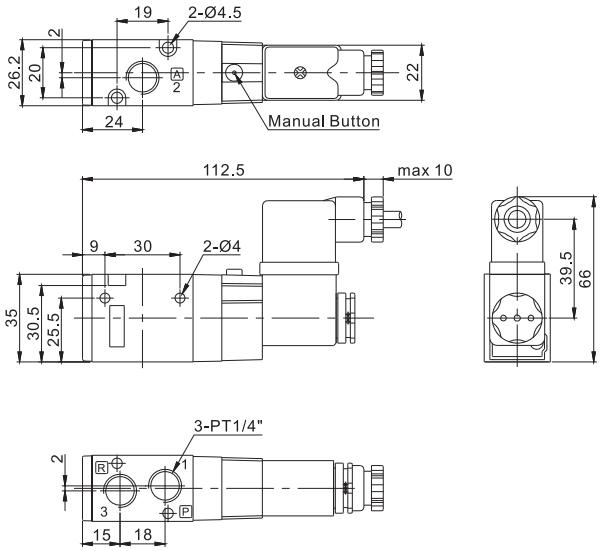

Model No. (型 号)	Specifications(规格)				
	Pilot Method (先导方式)	Operating Press.Range (操作压力范围)	Port Size (接管口径) Rc(PT)	Eff.Sectional Area (有效断面积) mm^2(Cv Value(值))	Weight (质量) (kg)
YVP342	Inside Circuit (内 部)	0.15~0.9MPa (1.5~9kgf/cm^2)	1/4"	22(1.2)	0.19

YSC

5 Way Pilot Type Solenoid Value/Elastic seal
(5通先导型电磁阀/橡胶密封)
YSVZ5000 series

图形符号

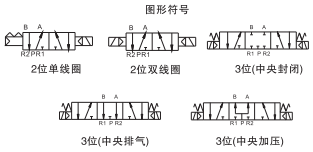

COMMON SPECIFICATIONS(共同规格)

Fluid(流体)	Clean Air(洁净空气)
Ambient Temp.(环境及流体温度)	-5~+50°C(未冻结)
Lubrication*(润滑)	Not Required(不需要)
Manual Override(手动操作)	Push Button(无锁定按钮式)
Shock/Vibration(抗冲击/振动能力)	30G/5G(8.3~2000Hz)
Sealing(密封)	Dust Proof(防灰尘)

*Please Use Tubine Oil 1st-grade ISO VG32#,If Required.
若需要润滑油请使用透平1号油ISOVG32

SOLENOID SPECIFICATIONS(电磁线圈规格)

Connection(接线方式)		Grommet(直接出线式)(G),DIN Teminal(插座式)(DZ,LZ)
*Rated Voltage(标准电压)		AC(交流):110V,220V(50Hz) DC(直流):24V
Allowable Voltage(容许电压变动范围)		Rated Voltage(额定电压)-15~+10%
Insulation(绝缘)		Class E(E级或相同等级)
Power Consumption (功率消耗)	AC(交流)	Starting(启动):4.5VA,Holding(持续):3.5VA
	DC(直流)	1.8W/2.1W With Indication Light(带指示灯)
Surge Suppressor(过压抑制器)		AC:Varistor(压敏电阻),DC:Diode(二极管)
Indication Lamp(指示灯)		AC:Neon(氖灯),DC:LED(发光二极管)

*有非标准电压可供选择.

HOW TO ORDER(型号表示方法)

YSVZ 5 1 2 0 – 4 G – 01

YSC Series(代号)

Solenoid(电磁线圈)
1:Single(单线圈)
2:Double(双线圈)
3: Closed Center(中央封闭)
4: Exchaust Center(中央排气)
5: Press.Center(中央加压)

※Rated Voltage (代表使用电压)
3=AC110V
4=AC220V
5=DC24V
6=DC12V

Connection(代表接电方式):
G=Grommet(直接出线方式)
(Wire Lenghth (引线长)300mm)
D=DIN Terminal(DIN式插座式)
DZ=DIN Terminal(DIN式插座式)
/Indication Light(带有指示灯)

Port Size(接管口径):1/8

Dimensions(mm)(外形尺寸图(毫米))

YSVZ5120–○D

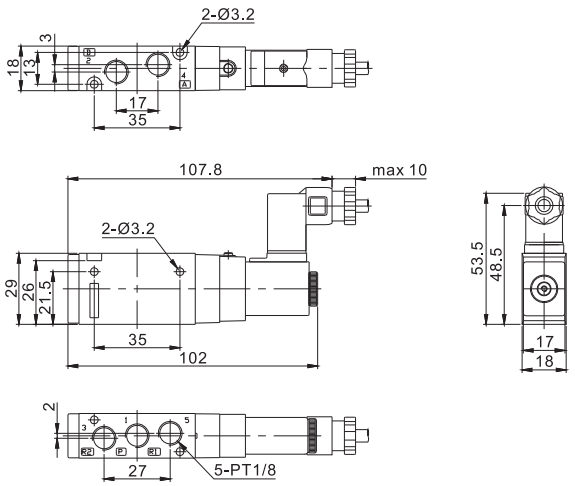

YSVZ5120–○G

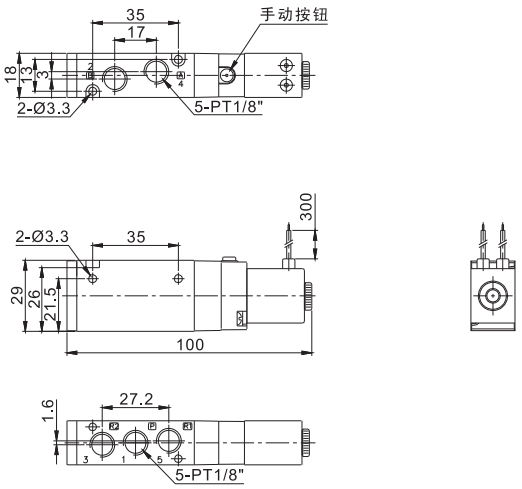

Model No. (型 号)	Specifications(规格)							
	Positions (位置数)	Solenoid (电磁线圈)	Operating Press.Range (操作压力范围)MPa(kgf/cm²)	Response Time(ms) (反应时间)(毫秒)	Max.Cycles(c/s) (最高操作频率)(次/秒)	Port Size (接管口径)	Eff.Sectional Area (有效断面积)mm² Cv Value(值)	Wt (质量)(g)
YSVZ5120	2	Single(单线圈)	0.15~0.7(1.5~7.1)	20 or Less(或以下)	5	1/8"	9.5(0.53)	100
YSVZ5220	2	Double(单线圈)	0.1~0.7(1~7.1)	20 or Less(或以下)	5		9.5(0.53)	150
YSVZ5320	3	Double Closed Center(中央封闭)	0.15~0.7(1.5~7.1)	50 or Less(或以下)	3		8.5(0.47)	160
YSVZ5420	3	Double Exhaust Center(中央排气)	0.15~0.7(1.5~7.1)	50 or Less(或以下)	3		8.5(0.47)	160
YSVZ5520	3	Double Press. Center(中央加压)	0.15~0.7(1.5~7.1)	50 or Less(或以下)	3		8.5(0.47)	160

YSC | 5 Way Pilot Type Solenoid Value/Elastic seal
(5通先导型电磁阀/橡胶密封)
YSVZ5000 series

Dimensions(mm)(外形尺寸图(毫米))

YSVZ5220-○G

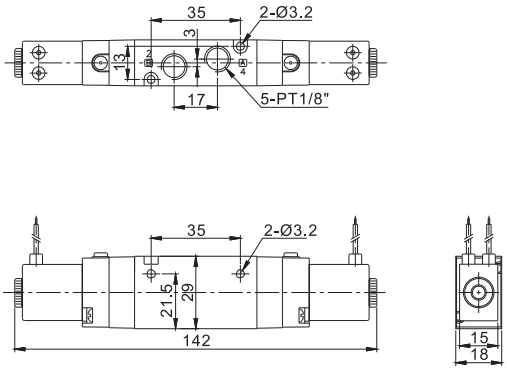

YSVZ5220-○D

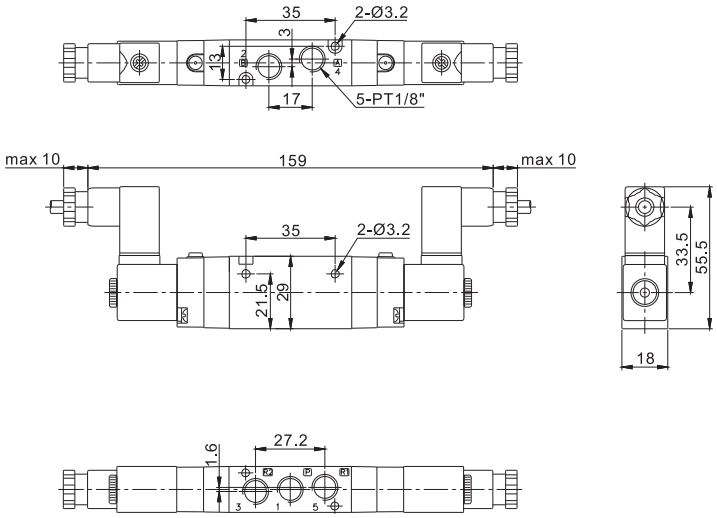

Manifold Dimensions(mm)(汇流板尺寸)

YVV5Z5

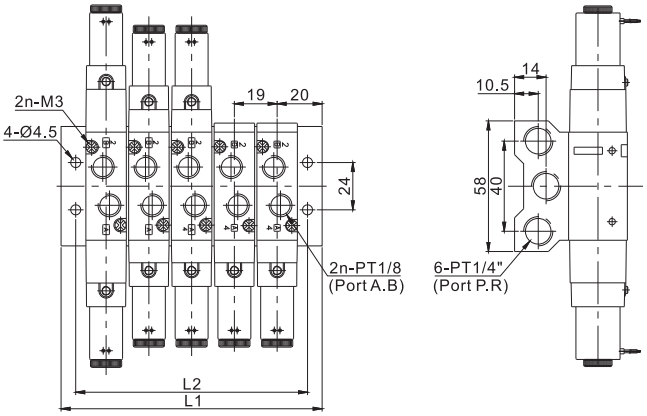

HOW TO ORDER(型号表示方法)

YVV5Z 5 – 20 – 04 1

- YSC Model (代号)
- Series(系列) 5:YSVZ5000(用)
- No. of Sation(位置数目)
  - 02=2 Valves
  - 03=3 Valves
  - 20=20 Valves

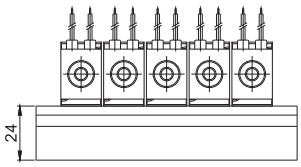

L \ N	2	3	4	5	6	7	8	9	10	11	12	13	14	15	16	17	18	19	20
L_1	66	85	104	123	142	161	180	199	218	237	256	275	294	313	332	351	370	389	408
L_2	46	65	84	103	122	141	160	179	198	217	236	255	274	293	312	331	350	369	388

YSC

5 Way Pilot Type Solenoid Value/Elastic seal
(5通先导型电磁阀/橡胶密封)
YSVF3000 series

图形符号

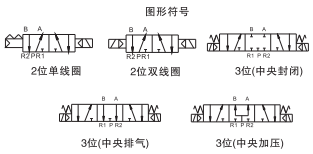

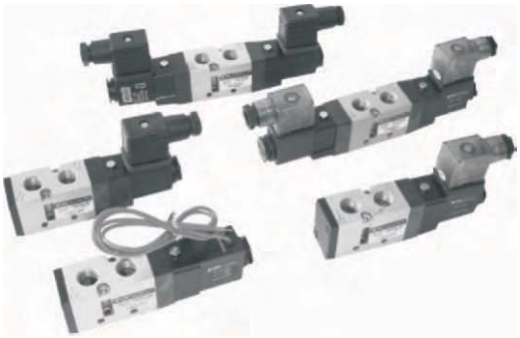

COMMON SPECIFICATIONS(共同规格)

Fluid(流体)	Clean Air(洁净空气)
Ambient Temp.(环境及流体温度)	-5~+50°C(未冻结)
Lubrication*(润滑)	Not Required(不需要)
Manual Override(手动操作)	Push & Button(锁定按钮式)
Shock/Vibration(抗冲击/振动能力)	30G/5G(8.3~2000Hz)
Sealing(密封)	Dust Proof(防灰尘)

*Please Use Tubine Oil 1st-grade ISO VG32#,If Required.
若需要润滑油请使用透平1号油ISOVG32

SOLENOID SPECIFICATIONS(电磁线圈规格)

Connection(接线方式)		Grommet(直接出线式)(G),DIN Teminal(插座式)(D,DZ)
*Rated Voltage(标准电压)		AC(交流):110V,220V(50Hz) DC(直流):24V
Allowable Voltage(容许电压变动范围)		Rated Voltage(额定电压)-15~+10%
Insulation(绝缘)		Class B(B级或相同等级)130C
Power Consumption (功率消耗)	AC(交流)	Starting(启动):5.6VA,Holding(持续):4.5VA
	DC(直流)	1.8W/2W With Indication Light(带指示灯)
Surge Suppressor(过压抑制器)		AC:Varistor(压敏电阻),DC:Diode(二极管)
Indication Lamp(指示灯)		AC:Neon(氖灯),DC:LED(发光二极管)

HOW TO ORDER(型号表示方法)

YSVF 3 1 3 0 – 4 G – 02 – S

YSC Series(代号)

Solenoid(电磁线圈)
1:Single(单线圈)
2:Double(双线圈)
3: Closed Center(中央封闭)
4: Exchaust Center(中央排气)
5: Press.Center(中央加压)

Body Type(阀安装)
3= Body Ported Type(直接管型)
4= Sub -PlateType(底版安装型)

※Rated Voltage (代表使用电压)
3=AC110V
4=AC220V
5=DC24V
6=DC12V

Connection(代表接电方式):
G=Grommet(直接出线方式)
D=DIN Type Terminal(插座式)
DZ=DIN Type Terminal(插座式) /indication Light(带有指示灯)

Port Size(接管口径)
02=1/4" Basic(基本)

Nill: 无锁定按纽
S: 带锁定按纽

Dimensions(mm)(外形尺寸图(毫米))

YSVF3130–D

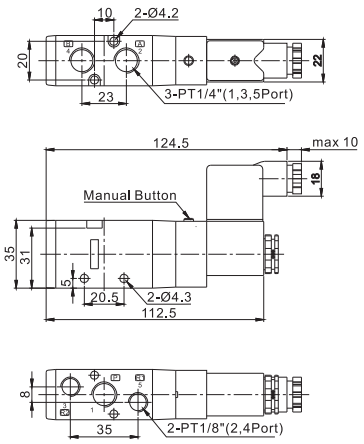

YSVF3230–G

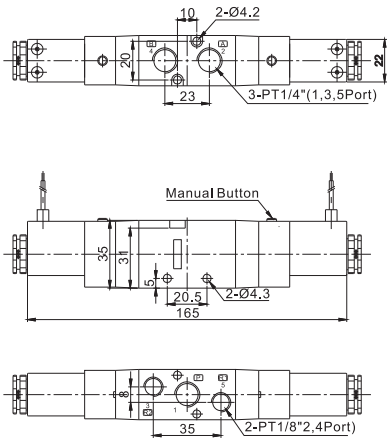

YSVF3$^{4}_{5}$30–G

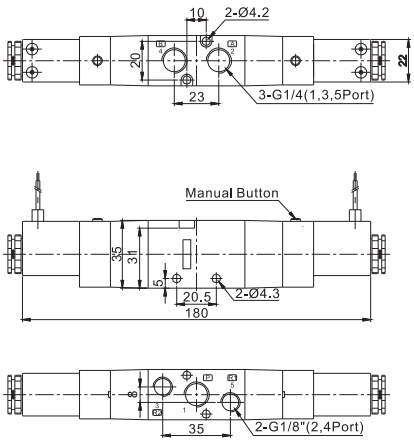

Model No. (型 号)	Specifications(规格)							
	Positions (位置数)	Solenoid (电磁线圈)	Operating Press.Range (操作压力范围)MPa(kgf/cm²)	Response Time(ms) (反应时间)(毫秒)	Max.Cycles(c/s) (最高操作频率)(次/秒)	Port Size (接管口径)	Eff.Sectional Area (有效断面积)mm² Cv Value(值)	Wt (质量)(kg)
YSVF3120	2	Single(单线圈)	0.15~0.9(1.5~9.1)	30 or Less(或以下)	5	1/4"	18(1.0)	0.22
YSVF3220	2	Double(单线圈)	0.1~0.9(1~9.1)	30 or Less(或以下)	5		18(1.0)	0.3
YSVF3320	3	Double Closed Center(中央封闭)	0.1~0.9(1~9.1)	50 or Less(或以下)	3		14.4(0.8)	0.35
YSVF3420	3	Double Exhaust Center(中央排气)	0.1~0.9(1~9.1)	50 or Less(或以下)	3		14.4(0.8)	0.35
YSVF3520	3	Double Press. Center(中央加压)	0.1~0.7(1~7.1)	50 or Less(或以下)	3		14.4(0.8)	0.35

YSC

5 Way Pilot Type Solenoid Valve /Elastic Seal
先导5通电磁阀（贴面阀）/弹性密封

YSVF3134,3234 series(NAMUR VALVE)

ORDERING NO. (选型方法)

YSVF 3 [1] [3] [4] – [3] [G] – [P]
① ② ③ ④ ⑤ ⑥

①Total Symbol 类型

1	Singoe Soienoid 单电
2	Singoe Soienoid 双电

② Podrat Size 接管口径

3	G 1/4

③ Body Type 主体类型

4	MANIFOLD or Direct Ccnnection 汇流板或直接连接

④Voltage 额定电压

3	AC110V
4	AC220V
5	DC24V

⑤ Electtronic Connection接线方式

G	Lead wire 直线出现型
D	DIN Connector DIN 插座型
DL	Insicating Lamp, surge Killer 指示灯带过压抑制器

⑥Manual Override 手动方式

P	Push Type 按式

YSVF3134–□D

YSVF3134–□G

Feature (特征)

- Compact–Light Weight;Width: 30.0mm (结构紧凑,重量轻,宽30mm)
- Mass Flow:Cv 1.8(Cv值 1.8)
- Effective Sectional Area:35.0 mm2 (有效截面积35mm2)
- Flexidle Option Availadle (便于操作)
- Excellent Duradility (经久耐用)

SPECIFICATION (规格)

ITEM 项目 / MODEL 型号	SINGLE 单电 YSVF3134	DOUBLE 双电 YSVF3234
Port Size 接管口径	G1/4	
Fluids 流体	Compact Air&Inert Gasses 压缩空气及惰性气体	
Pressure(bar) 压力	1.5~10	1.0~10
Eff.Sectional Area(CV)mm²有效截面积	35.0(1.8)	
Ambient & Fluid Temp.环境及介质温度	5~60% (41~140)	
Response Time(5bar)反应时间	20ms or Less	35ms or Less
Max.Working Frequency最大工作频率	10c/sec	3c/sec
Lubrication 润滑	Not Required 无需润滑	
Shock/Vidration 防冲击/防震	30G~5G (8.3~200HZ)	
Protection Structure 保护结构	Anti/Vibration 防震	
Frequency/Rated Voltage 电压	AC220V,AC110V(50/60Hz/DC24V)	
Coil Insulation Class线圈种类	F Class or Equivalent	
Permissible Voltage Varaition(电压波动范围)	±10% of Rated Voltage	
Power Compact 电源 AC	5.5VA(60Hz):HOLING 维持	
Power Compact 电源 DC	2.5W	

*Please Use Tubine Oil 1st-grade ISO VG32#,If Required.
若需要润滑油请使用透平1号油ISOVG32

SYMBOL 符号

2 Position(2位)	SINGLE 单电 YSVF3134	DOUBLE 双电 YSVF3234
		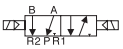

ISO Marking(标准)：P–1，B–2，R2–3，A–4，R1–5

STRUCTURE/OUTSIDE DIMENSION DRAWING(结构/外型尺寸)

YSVF3134–□D(2Position/Single Solenoid Type)

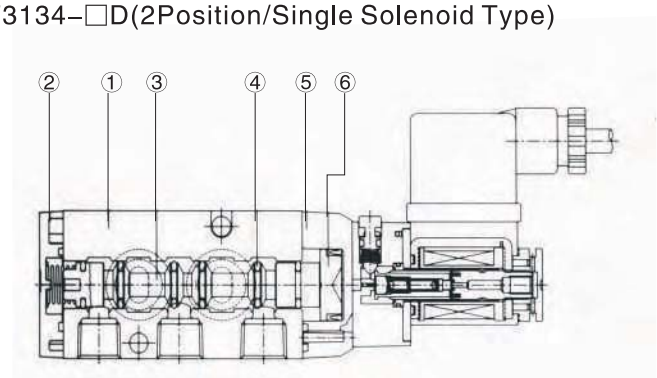

No.	Description	Material	No.	Description	Material
1	Body	Aldc	4	Spool Packing	Nbr
2	Cover	Pps	5	Pilot	Pps
3	spool	Al	6	Piston	Pom

YSC 5 Way Pilot Type Solenoid Valve /Elastic Seal
YSVF3134,3234 series(NAMUR VALVE)

OUTSIDE DIMENSION DRAWING/LEAD WIRE SOLENOID

YSVF3134– □G

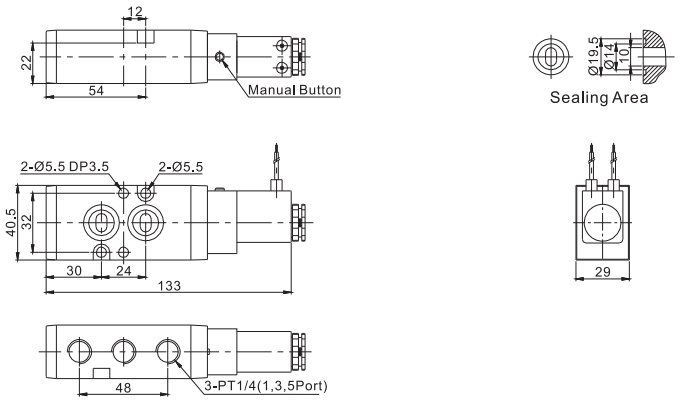

YSVF3234– □G

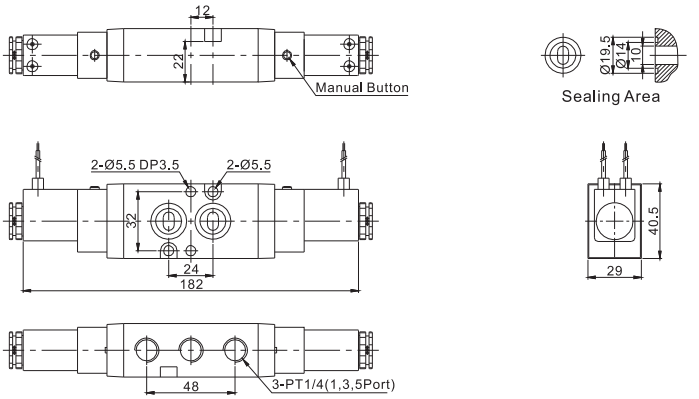

YSVF3134– □D

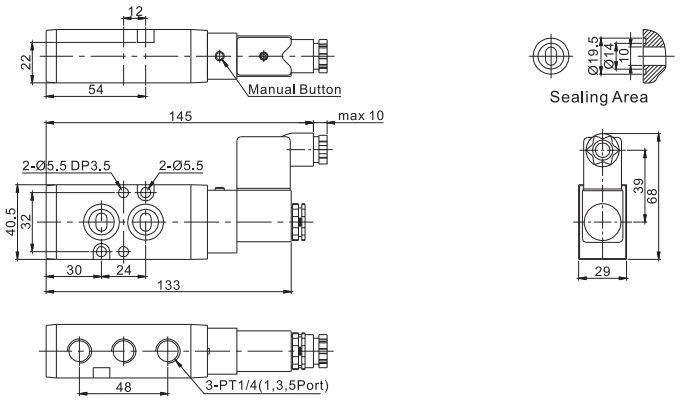

YSVF3234– □DZ

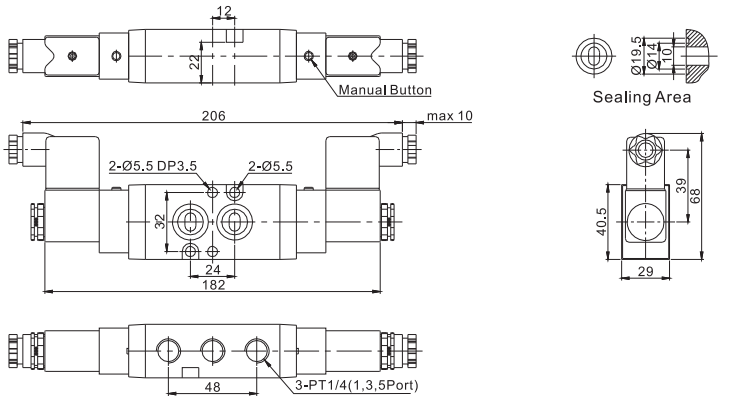

YSC

5 Way Pilot Type Solenoid Valve /Elastic Seal
(五通先导型电磁阀/橡胶密封)

YSVF5000 series

图形符号

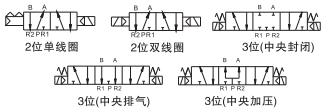

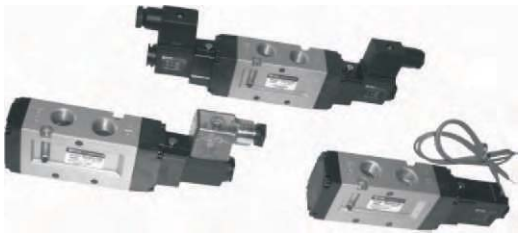

COMMON SPECIFICATIONS(共同规格)

Fluid(流体)	Clean Air(洁净空气)
Ambient Temp.(环境及流体温度)	-5~+50°C(未冻结)
Lubrication*(润滑)	Not Required(不需要)
Manual Override(手动操作)	Push & Non Lock(无锁定按钮式)
Shock/Vibration(抗冲击/振动能力)	30G/5G(8.3~2000Hz)
Sealing(密封)	Dust Proof(防灰尘)

*Please Use Tubine Oil 1st-grade ISO VG32#,If Required.
若需要润滑油请使用透平1号油ISOVG32

SOLENOID SPECIFICATIONS(电磁线圈规格)

Connection(接线方式)		Grommet(直接出线式)(G),DIN Teminal(插座式)(D,DZ)
*Rated Voltage(标准电压)		AC(交流):110V,220V(50Hz) DC(直流):24V
Allowable Voltage(容许电压变动范围)		Rated Voltage(额定电压)-15~+10%
Insulation(绝缘)		Class B(B级或相同等级)
Power Consumption (功率消耗)	AC(交流)	Starting(启动):5.6VA,Holding(持续):4.5VA
	DC(直流)	1.8W/2W With Indication Light(带指示灯)
Surge Suppressor(过压抑制器)		AC:Varistor(压敏电阻),DC:Diode(二极管)
Indication Lamp(指示灯)		AC:Neon(氖管),DC:LED(发光二极管)

HOWT TO ORDER(型号选择)

YSVF 5 1 2 0 – 4 G – 03 – S

YSC Series(代号)

Solenoid(电磁线圈)
1:Single(单线圈)
2:Double(双线圈)
3:Closed Center(中央封闭)
4:Exhaust Center(中央排气)
5:Press.Center(中央加压)

Rated Voltage
(代表使用电压)
3=AC110V
4=AC220V
5=DC24V

Connection (代表接电方式)
G=Grommet(直接出线式)
D=DIN Type Terminal(插座式)
Dz=DIN Type Terminal(插座式)
/Indication Light(带有指示灯)

Port Size(接管口径)
03=3/8"

Nill: 无锁定按纽
S: 带锁定按纽

Dimensions(mm)(外形尺寸图(毫米))

YSVF5120

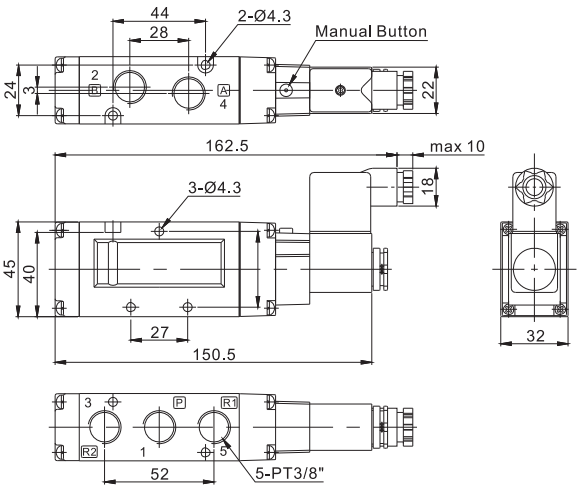

YSVF5320,5420,5520

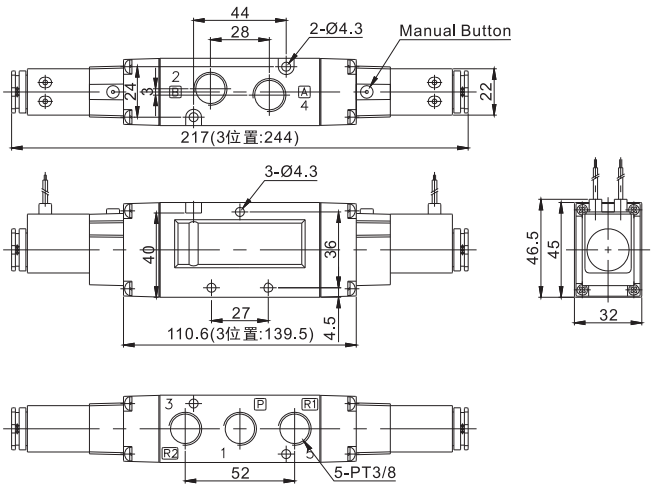

Model No. (型 号)	Specifications(规格)							
	Positions (位置数)	Solenoid (电磁线圈)	Operating Press.Range (操作压力范围)MPa(kgf/cm²)	Response Time(ms) (反应时间)(毫秒)	Max.Cycles(c/s) (最高操作频率)(次/秒)	Port Size (接管口径)	Eff.Sectional Area (有效断面积)mm² Cv Value(值)	Wt (质量)(kg)
YSVF5120	2	Single(单线圈)	0.15~0.9(1.5~9)	30 or Less(或以下)	5	3/8”	45(2.5)	0.35
YSVF5220	2	Double(单线圈)	0.1~0.9(1~9)	30 or Less(或以下)	5		45(2.5)	0.45
YSVF5320	3	Double Closed Center(中央封闭)	0.15~0.9(1.5~9)	50 or Less(或以下)	3		36(2)	0.55
YSVF5420	3	Double Exhaust Center(中央排气)	0.15~0.9(1.5~9)	50 or Less(或以下)	3		36(2)	0.55
YSVF5520	3	Double Press. Center(中央加压)	0.15~0.9(1.5~9)	50 or Less(或以下)	3		36(2)	0.55

YSC Manifold(汇流板) YVV5F3,5,6 series

CMMON SPECIFICATIONS(共同规格)

Applicable Valve (适用电磁阀)	YSVF3000,YVF3000		YSVF5000,YVF5000	
Port Size(口径方式)	Supply(供气口)(1/4")	Exhaust(排气口)(1/4")	Supply(供气口)(3/8")	Exhaust(排气口)(3/8")
Stations(位置数目)	Max.20 PCS(个)		Max.20 PCS(个)	

HOW TO ORDER(型号选择)

YVV 5F 3 – 30 – 04 1

YSC Model(代号)

Series(系列)
3:YSVF3000
5:YSVF5000
6:YSVF6000

NO.of Station(位置数目)
02=2 Valves
03=3 Valves
20=20 Valves

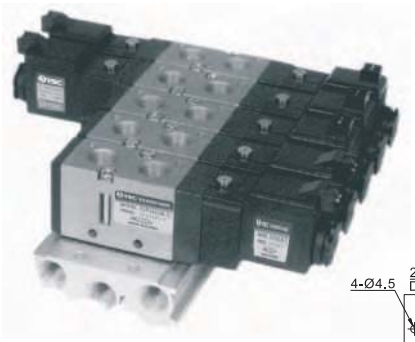

YVV5F3

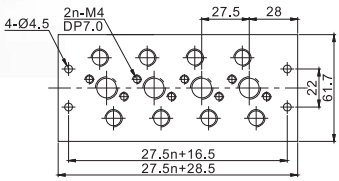

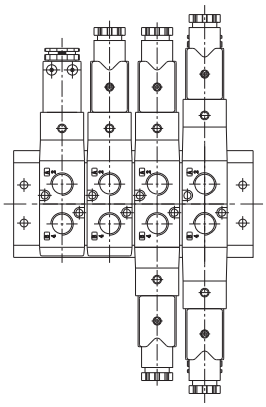

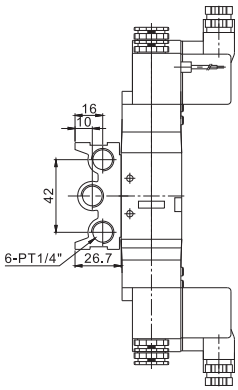

A,B:DIMENSIONS(尺寸)

ITEM \ STATION	2	3	4	5	6	7	8	9	10
A	83.5	111.0	138.5	166.0	193.5	221.0	248.5	276.0	303.5
B	71.5	99.0	126.5	154.0	181.5	209.0	236.5	264.0	291.5

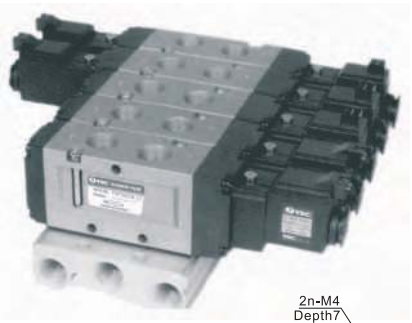

YVV5F5

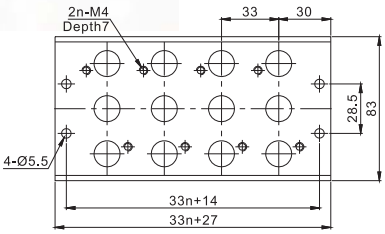

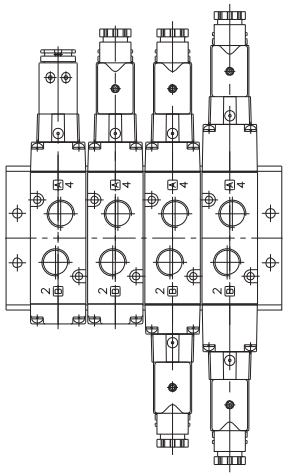

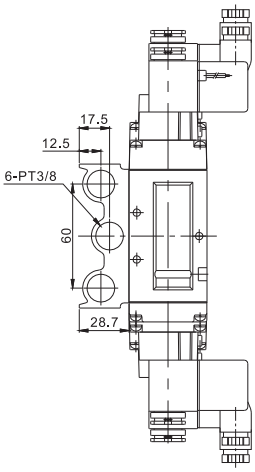

A,B:DIMENSIONS(尺寸)

ITEM \ STATION	2	3	4	5	6	7	8	9	10
A	93.0	126.0	159.0	192.0	225.0	258.0	291.0	324.0	357.0
B	80.0	113.0	146.0	179.0	212.0	245.0	278.0	311.0	344.0

YSC 5 Way Pilot Type Solenoid Valve /Elastic Seal
(五通先导型电磁阀/橡胶密封)
YSVF6000 series

图形符号

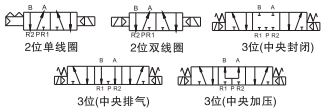

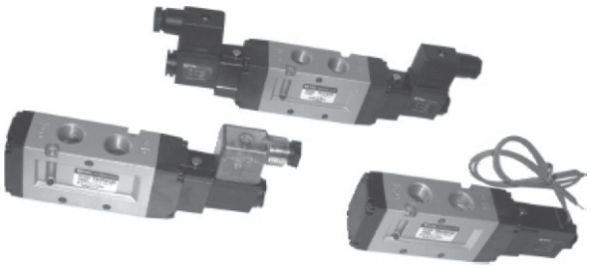

COMMON SPECIFICATIONS(共同规格)

Fluid(流体)	Clean Air(洁净空气)
Ambient Temp.(环境及流体温度)	-5~+60°C(未冻结)
Lubrication*(润滑)	Not Required(不需要)
Manual Override(手动操作)	Push(Standard)按钮式(基本型)
Shock/Vibration(抗冲击/振动能力)	40G/5G(8.3~200Hz)
Sealing(密封)	Dust Proof(防灰尘)

*Please Use Tubine Oil 1st-grade ISO VG32#,If Required.
若需要润滑油请使用透平1号油ISOVG32

SOLENOID SPECIFICATIONS(电磁线圈规格)

Connection(接线方式)		Grommet(直接出线式)(G),DIN Teminal(插座式)(D,DZ)
*Rated Voltage(标准电压)		AC(交流):110V,220V(50Hz/60Hz) DC(直流):24V
Allowable Voltage(容许电压变动范围)		Rated Voltage(额定电压)±10%
Insulation(绝缘)		Class F(F级或相同等级)
Power Consumption (功率消耗)	AC(交流)	Starting(启动):5.6VA,Holding(持续):4.5VA
	DC(直流)	2.5W
Surge Suppressor(过压抑制器)		AC:Varistor(压敏电阻),DC:Diode(二极管)
Indication Lamp(指示灯)		AC:Neon(氖管),DC:LED(发光二极管)

HOW TO ORDER(型号选择)

YSVF 6 1 2 0 – 4 G – 04 – S

YSC Series(代号)

Solenoid(电磁线圈)
1:Single(单线圈)
2:Double(双线圈)
3:Closed Center(中央封闭)
4 Exhaust Center(中央排气)
5:Press.Center(中央加压)

Rated Voltage (代表使用电压)
3=AC110V
4=AC220V
5=DC24V

Connection(代表接电方式):
G=Grommet(直接出线式)
D=DIN Terminal(插座式)I
DZ=DIN Terminal/Light & Surge Suppressor (带有指示灯和过压抑制器)

Port Size(接管口径)
04=1/2"

Nill: 无锁定按纽
S: 带锁定按纽

Dimensions(mm)(外型尺寸图(毫米))

Grommet Type (直接出线式): YSVF6120–○G–04

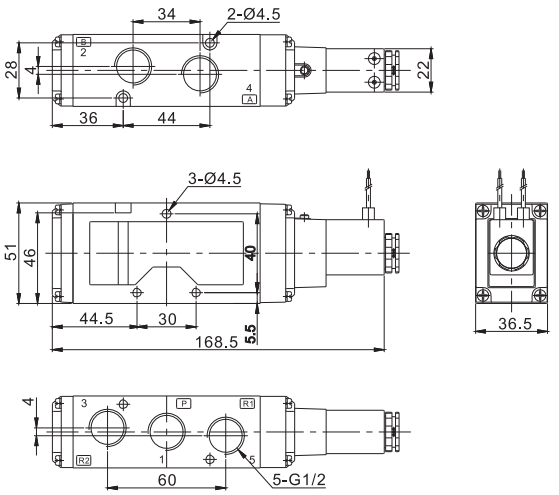

DIN Terminal Type(DIN型插座式): YSVF6120–○D(DZ)–04

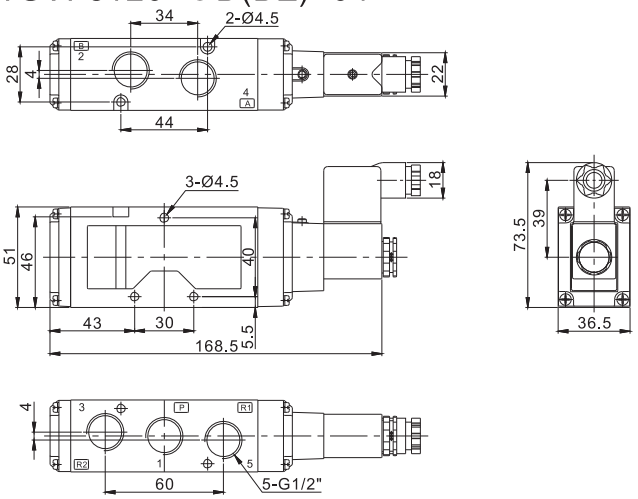

Model No. (型 号)	Specifications(规格)						
	Positions (位置数)	Solenoid (电磁线圈)	Operating Press.Range (操作压力范围)MPa(kgf/cm²)	Response Time(ms) (反应时间)(毫秒)	Max.Cycles(c/s) (最高操作频率)(次/秒)	Port Size (接管口径)	Eff.Sectional Area (有效断面积)mm² Cv Value(值)
YSVF6120	2	Single(单线圈)	0.15~0.9(1.5~9)	30 or Less(或以下)	2	1/2"	65(3.5)
YSVF6220	2	Double(单线圈)	0.1~0.9(1~9)	30 or Less(或以下)	2		65(3.5)
YSVF6320	3	Double Closed Center(中央封闭)	0.2~0.9(2.0~9)	50 or Less(或以下)	1		50(2.8)
YSVF6420	3	Double Exhaust Center(中央排气)	0.2~0.9(2.0~9)	50 or Less(或以下)	1		50(2.8)
YSVF6520	3	Double Press. Center(中央加压)	0.2~0.9(2.0~9)	50 or Less(或以下)	1		50(2.8)

YSVF6000 series

Grommet Type (直接出线式):
YSVF6220–○G–04

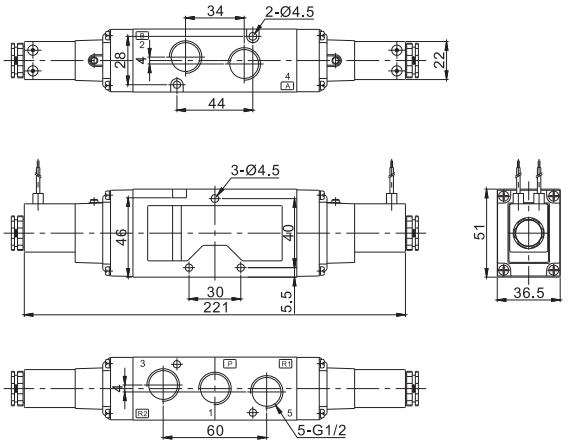

DIN Type Terminal Type (DIN型插座式):
YSVF6220–○D(DZ)–04

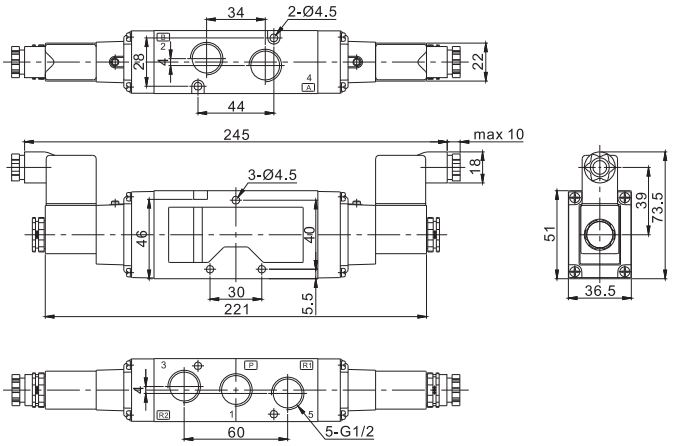

Grommet Type (直接出线式):
YSVF6420–○G–04

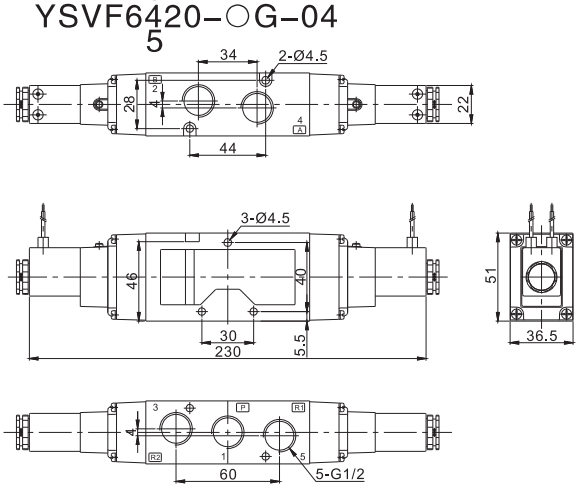

DIN Terminal Type(DIN型插座式):
YSVF6420–○D(DZ)–04

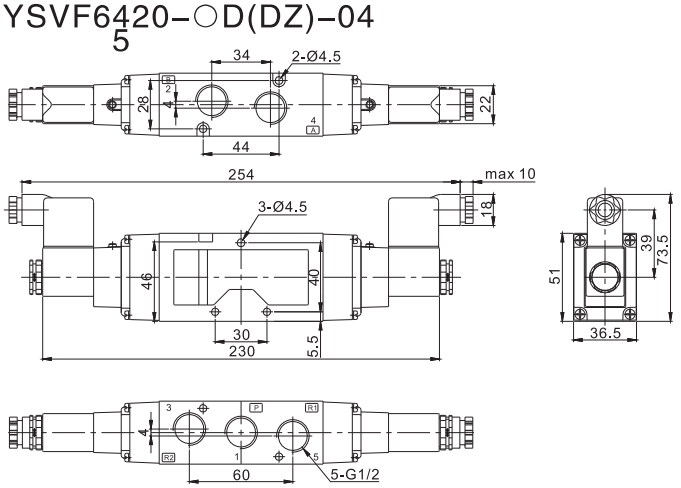

YSVF6000系列用汇流板
YVV5F6 series

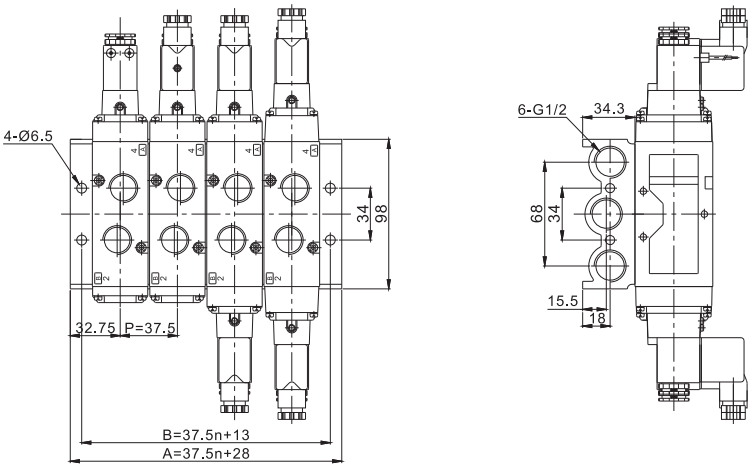

A,B:DIMENSIONS(尺寸)

ITEM \ STATION	2	3	4	5	6	7	8	9	10
A	103.0	140.5	178.0	215.5	253.0	290.5	328.0	365.5	403.0
B	88.0	125.5	163.0	200.5	238.0	275.5	313.0	350.5	388.0

YSC 5 Way Pilot Type Solenoid Valve/Elastic seal (5通先导型电磁阀/橡胶密封) YSVM110 series

图形符号

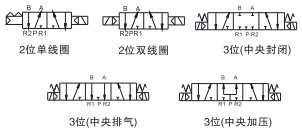

COMMON SPECIFICATIONS(共同规格)

Fluid(流体)	Clean Air(洁净空气)	
Ambient Temp.(环境及流体温度)	-5~+50°C(未冻结)	
Lubrication*(润滑)	Not Required(不需要)	
Manual Override(手动操作)	Push Button(无锁定按钮式)	
Shock/Vibration(抗冲击/振动能力)	30G/5G(8.3~2000Hz)	
Sealing(密封)	Dust Proof(防灰尘)	
Response Time(反应时间)(ms)	50 or less(或以下)	
有效截面积(CV值)	12mm²(0.67)(二位)	9mm²(0.50)(三位)

*Please Use Tubine Oil 1st-grade ISO VG32#,If Required.
若需要润滑油请使用透平1号油ISOVG32

SOLENOID SPECIFICATIONS(电磁线圈规格)

Connection(接线方式)		Grommet(直接出线式)(G),DIN Teminal(插座式)(DZ,LZ)
*Rated Voltage(标准电压)		AC(交流):110V,220V(50Hz) DC(直流):24V
Allowable Voltage(容许电压变动范围)		Rated Voltage(额定电压)-15~+10%
Insulation(绝缘)		Class E(E级或相同等级)
Power Consumption (功率消耗)	AC(交流)	Starting(启动):4.5VA,Holding(持续):3.5VA
	DC(直流)	1.8W/2.1W With Indication Light(带指示灯)
Surge Suppressor(过压抑制器)		AC:Varistor(压敏电阻),DC:Diode(二极管)
Indication Lamp(指示灯)		AC:Neon(氖灯),DC:LED(发光二极管)

HOW TO ORDER(型号表示方法)

YSVM 110 — 4E 2C — 5 D — 01

- YSVM 110: YSC Series(代号)
- 4E 2C: Solenoid(电磁线圈)
  - 1:Single(单线圈)
  - 2:Double(双线圈)
  - 2C: Closed Center(中央封闭)
  - 2R: Exchaust Center(中央排气)
  - 2P: Press.Center(中央加压)
- 5: ※Rated Voltage (代表使用电压)
  - 3=AC110V
  - 4=AC220V
  - 5=DC24V
  - 6=DC12V
- D: Connection(接电方式):
  - G=Grommet(直接出线式)
  - D=Din Type Terminal(插座式)
  - LZ=Din Type Terminal(插座式) /indication Light(带有指示灯)
  - DZ=Din Type Terminal(插座式) /LED&Varistor(带指示灯和过压抑制器)
- 01: Port Size(接管口径) 01=1/8"

注：三位五通(2C/2R/2P)尚在开发中，选型时请注意。

Dimensions(mm)(外形尺寸图(毫米))

YSVM110-4E1- D

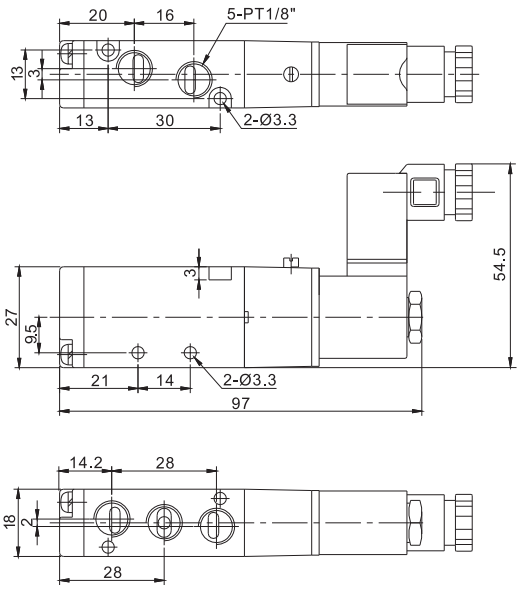

YSVM110-4E2- G

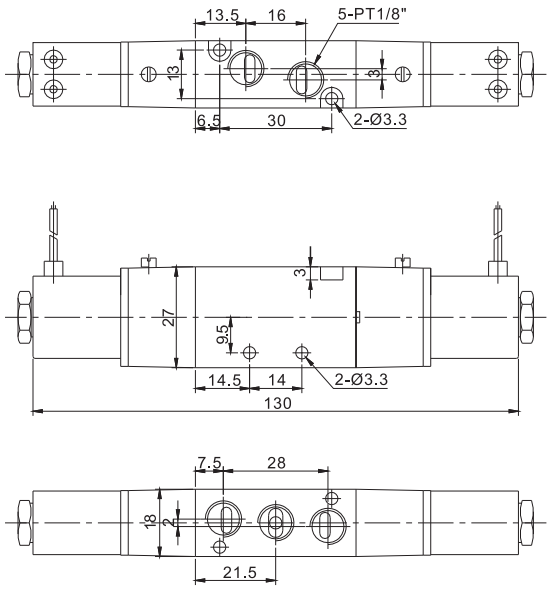

YSC 5 Way Pilot Type Solenoid Valve/Elastic seal
(5通先导型电磁阀/橡胶密封)
YSVM110 series

YSVM110-4E2C- D

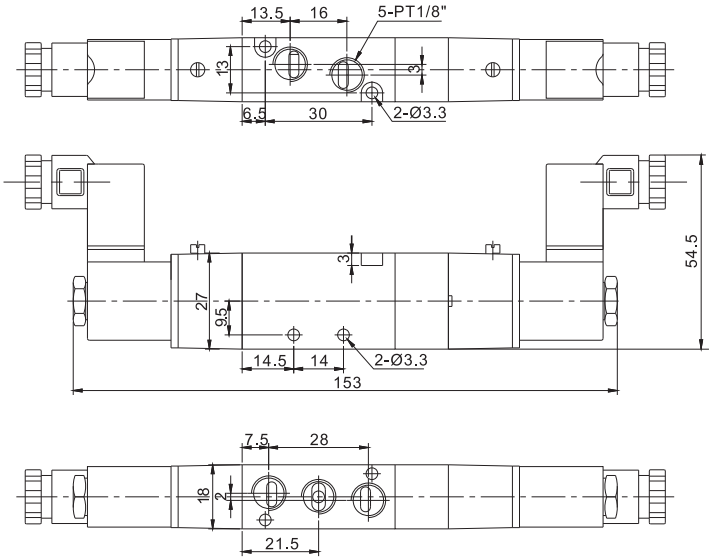

流量特性图:

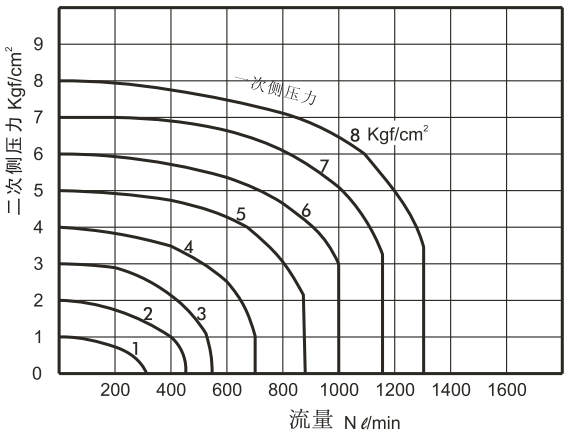

Manifold (汇流板)

YVV 5M 1 – 20 – 04 1

YSC Model(代号)

Series(系列)
2:YSVM110
Each interchangeable(共用)

NO.of Station(位置数目)
02=2 Valves
03=3 Valves
20=20 Valves

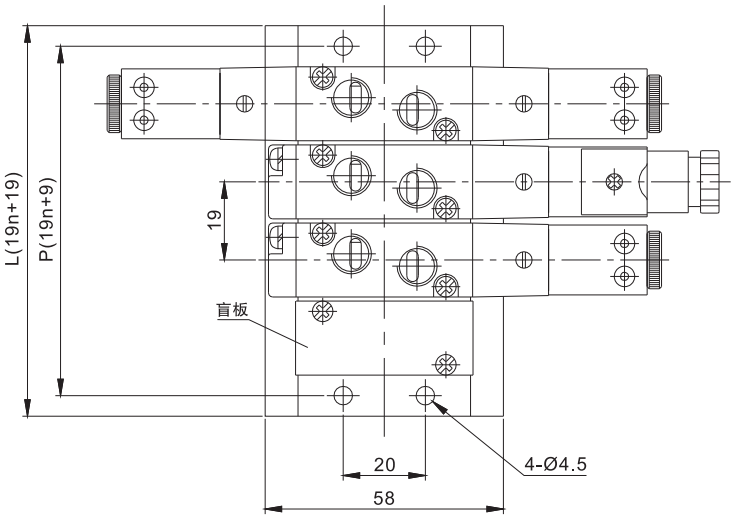

阀位数	P	L
2	47	57
3	66	76
4	85	95
5	104	114
6	123	133
7	142	152
8	161	171
9	180	190
10	199	209

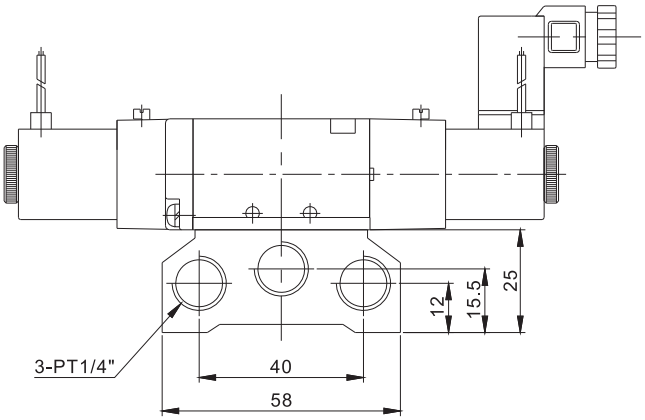

YSC 5 Way Pilot Type Solenoid Value/Elastic seal (5通先导型电磁阀/橡胶密封) YSVM220 series

图形符号

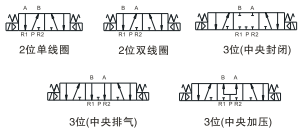

COMMON SPECIFICATIONS(共同规格)

Fluid(流体)	Clean Air(洁净空气)	
Opr.Press.Range(工作压力范围)	0.2~0.7Mpa(2~7kgf/cm²)	
Ambient Temp.(环境及流体温度)	-5~+50°C(未冻结)	
Lubrication*(润滑)	Not Required(不需要)	
Manual Override(手动操作)	Push & Non Lock(无锁定按钮式)	
Shock/Vibration(抗冲击/振动能力)	30G/5G(8.3~2000Hz)	
Sealing(密封)	Dust Proof(防灰尘)	
Response Time(反应时间)(ms)	50 or less(或以下)	
有效截面积(CV值)	16mm²(0.89)(二位	12mm²(0.67)(三位)

*Please Use Tubine Oil 1st-grade ISO VG32#,If Required.
若需要润滑油请使用透平1号油ISOVG32

SOLENOID SPECIFICATIONS(电磁线圈规格)

Connection(接线方式)		Grommet(直接出线式)(G),Din Teminal(插座式)(DZ,LZ)
*Rated Voltage(标准电压)		AC(交流):110V,220V(50Hz) DC(直流):24V
Allowable Voltage(容许电压变动范围)		Rated Voltage(额定电压)-15~+10%
Insulation(绝缘)		Class B(B级或相同等级)130C
Power Consumption (功率消耗)	AC(交流)	Starting(启动):5.6VA,Holding(持续):4.5VA
	DC(直流)	1.8W/2W With Indication Light(带指示灯)
Surge Suppressor(过压抑制器)		AC:Varistor(压敏电阻),DC:Diode(二极管)
Indication Lamp(指示灯)		AC:Neon(氖灯),DC:LED(发光二极管)

HOW TO ORDER(型号表示方法)

YSVM 220 — 4E 2C — 5 D — 02

YSC Series(代号)

Solenoid(电磁线圈)
1:Single(单线圈)
2:Double(双线圈)
2C: Closed Center(中央封闭)
2R: Exchaust Center(中央排气)
2P: Press.Center(中央加压)

※Rated Voltage (代表使用电压)
3=AC110V
4=AC220V
5=DC24V
6=DC12V

Connection(接电方式):
G=Grommet(直接出线式)
D=Din Type Terminal(插座式)
LZ=Din Type Terminal(插座式) /indication Light(带有指示灯)
DZ=Din Type Terminal(插座式) /LED&Varistor(带指示灯和过压抑制器)

Port Size(接管口径)
02=1/4"

Dimensions(mm)(外形尺寸图(毫米))

YSVM220-4E1- D

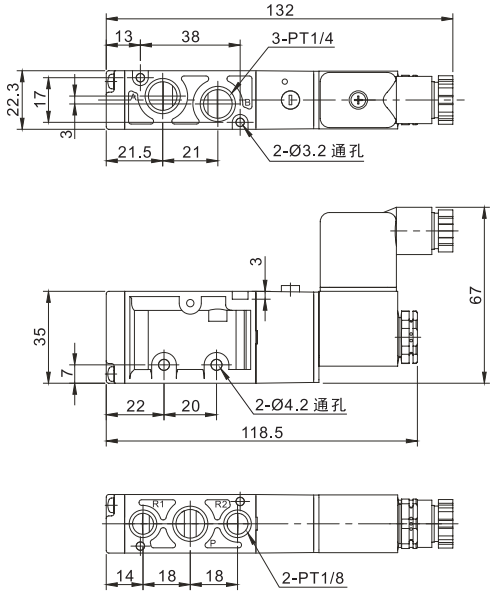

YSVM220-4E2- G

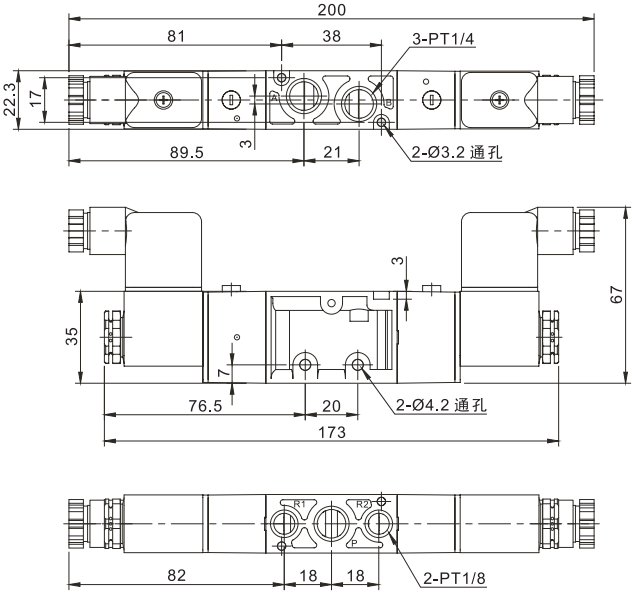

YSC 5 Way Pilot Type Solenoid Value/Elastic seal (5通先导型电磁阀/橡胶密封) YSVM220 series

图形符号

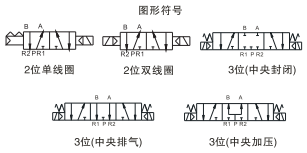

YSVM220-4E2C- D

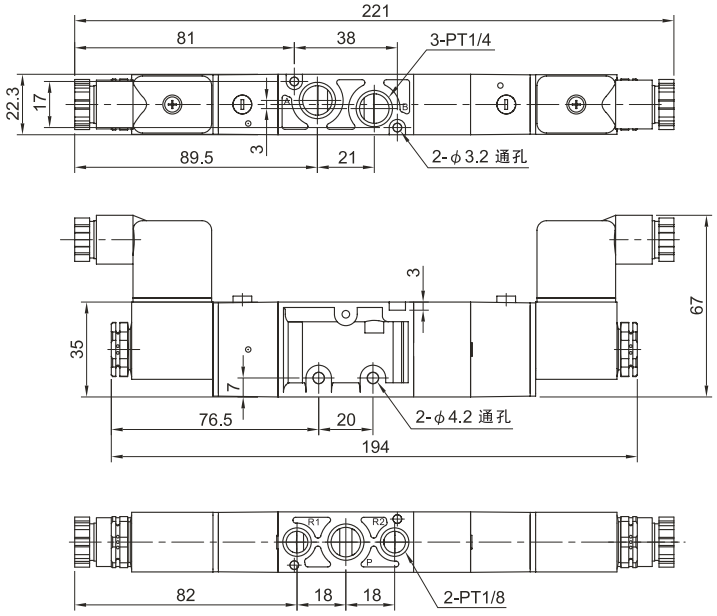

流量特性图:

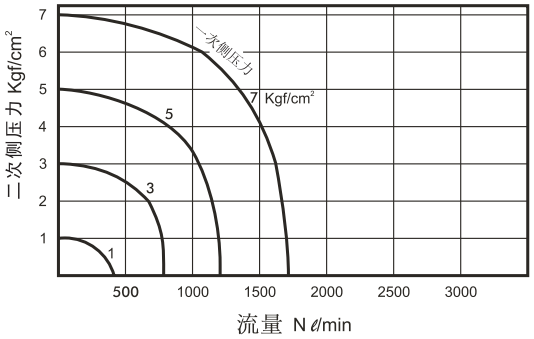

Manifold (汇流板)

YVV 5M 2 – 30 – 04 1

YSC Model(代号)

Series(系列)
2:YSVM220
Each interchangeable(共用)

NO.of Station(位置数目)
02=2 Valves
03=3 Valves
20=20 Valves

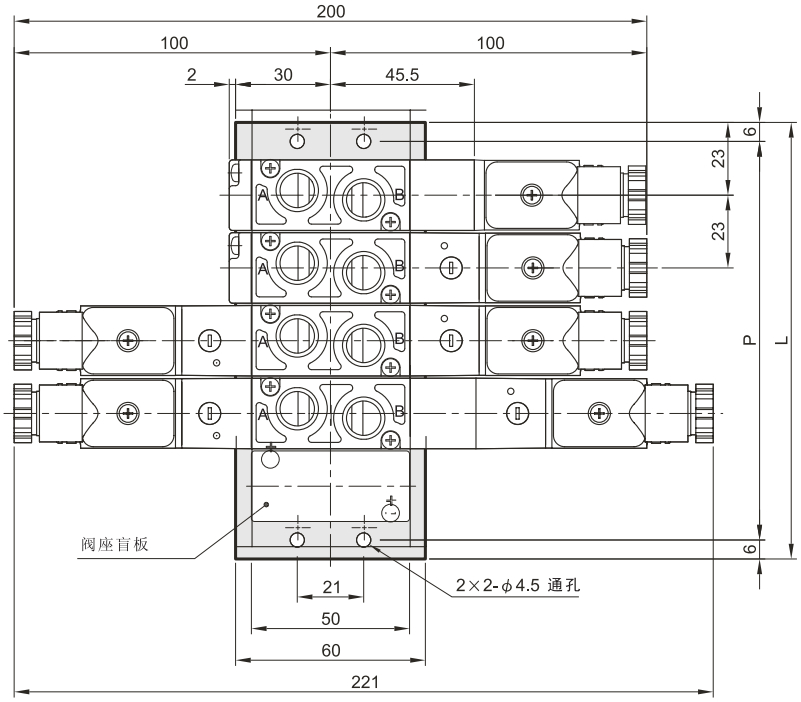

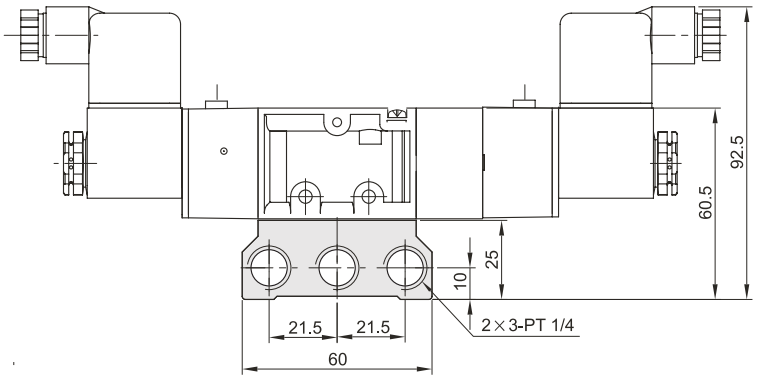

阀位数	P	L
2	57	69
3	80	92
4	103	115
5	126	138
6	149	161
7	172	184
8	195	207
9	218	230
10	241	253

YSC

5 Way Pilot Type Solenoid Valve/Elastic seal
(5通先导型电磁阀/橡胶密封)
YSVM310 series

图形符号

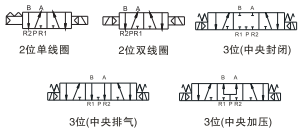

COMMON SPECIFICATIONS(共同规格)

Fluid(流体)	Clean Air(洁净空气)	
Opr.Press.Range(工作压力范围)	0.2~0.7Mpa(2~7kgf/cm²)	
Ambient Temp.(环境及流体温度)	-5~+50°C(未冻结)	
Lubrication*(润滑)	Not Required(不需要)	
Manual Override(手动操作)	Push & Non Lock(无锁定按钮式)	
Shock/Vibration(抗冲击/振动能力)	30G/5G(8.3~2000Hz)	
Sealing(密封)	Dust Proof(防灰尘)	
Response Time(反应时间)(ms)	50 or less(或以下)	
有效截面积(CV值)	30mm²(1.68)(二位)	18mm²(1.00)(三位)

*Please Use Tubine Oil 1st-grade ISO VG32#,If Required.
若需要润滑油请使用透平1号油ISOVG32

SOLENOID SPECIFICATIONS(电磁线圈规格)

Connection(接线方式)		Grommet(直接出线式)(G),Din Teminal(插座式)(DZ,LZ)
*Rated Voltage(标准电压)		AC(交流):110V,220V(50Hz) DC(直流):24V
Allowable Voltage(容许电压变动范围)		Rated Voltage(额定电压)-15~+10%
Insulation(绝缘)		Class B(B级或相同等级)130C
Power Consumption (功率消耗)	AC(交流)	Starting(启动):5.6VA,Holding(持续):4.5VA
	DC(直流)	1.8W/2W With Indication Light(带指示灯)
Surge Suppressor(过压抑制器)		AC:Varistor(压敏电阻),DC:Diode(二极管)
Indication Lamp(指示灯)		AC:Neon(氖灯),DC:LED(发光二极管)

HOW TO ORDER(型号表示方法)

YSVM 310 — 4E 2C — 5 D — 03

- YSVM 310: YSC Series(代号)
- 4E 2C: Solenoid(电磁线圈)
  - 1:Single(单线圈)
  - 2:Double(双线圈)
  - 2C: Closed Center(中央封闭)
  - 2R: Exchaust Center(中央排气)
  - 2P: Press.Center(中央加压)
- 5: ※Rated Voltage (代表使用电压)
  - 3=AC110V
  - 4=AC220V
  - 5=DC24V
  - 6=DC12V
- D: Connection(接电方式):
  - G=Grommet(直接出线式)
  - D=Din Type Terminal(插座式)
  - LZ=Din Type Terminal(插座式) /indication Light(带有指示灯)
  - DZ=Din Type Terminal(插座式) /LED&Varistor(带指示灯和过压抑制器)
- 03: Port Size(接管口径) 03=3/8"

注：三位五通(2C/2R/2P)尚在开发中，选型时请注意。

Dimensions(mm)(外形尺寸图(毫米))

YSVM310-4E1- D

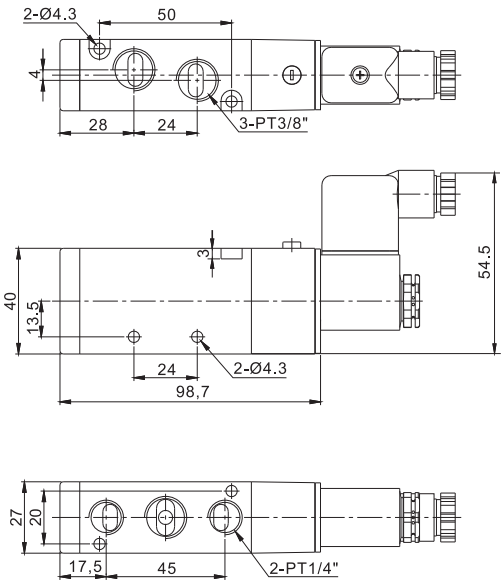

YSVM310-4E2- G

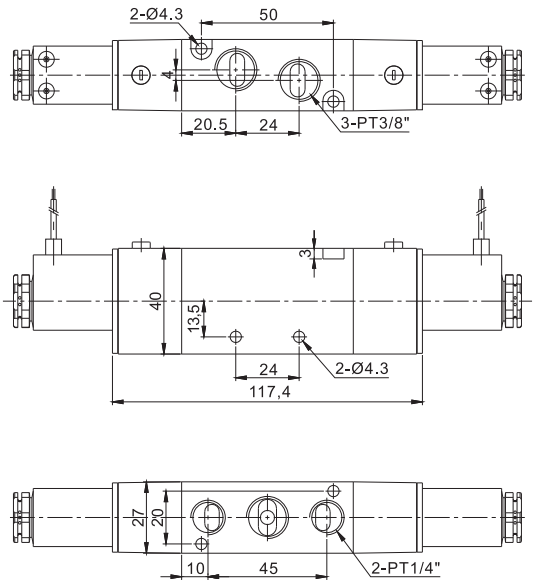

5 Way Pilot Type Solenoid Valve/Elastic seal
(5通先导型电磁阀/橡胶密封)
YSVM310 series

YSVM310-4E2C- D

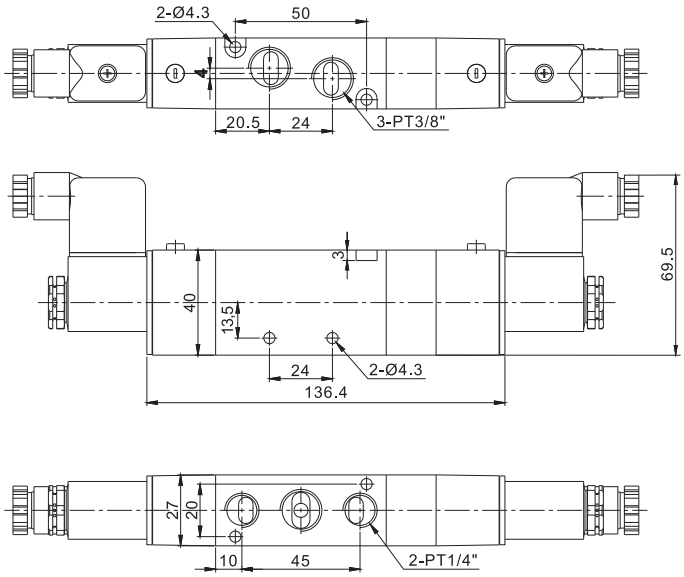

流量特性图:

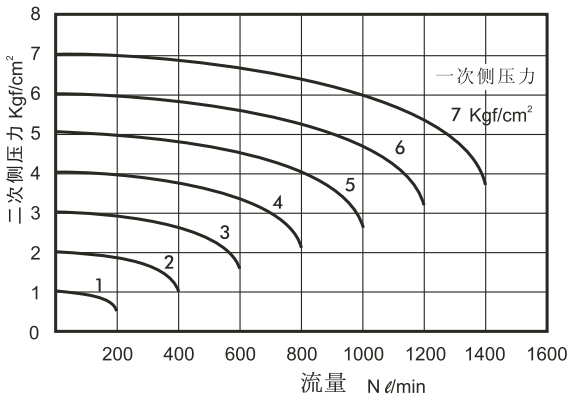

Manifold (汇流板)

YVV 5M 3 – 30 – 04 1

YSC Model(代号)

Series(系列)
2:YSVM310
Each interchangeable(共用)

NO.of Station(位置数目)
02=2 Valves
03=3 Valves
20=20 Valves

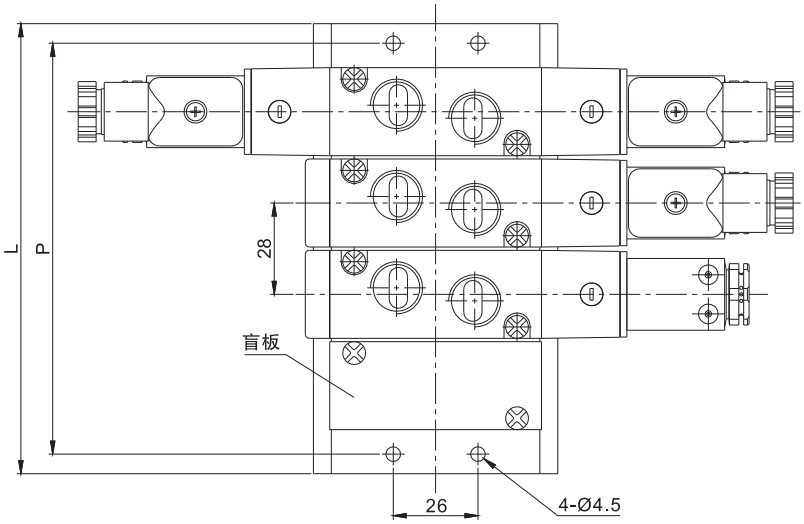

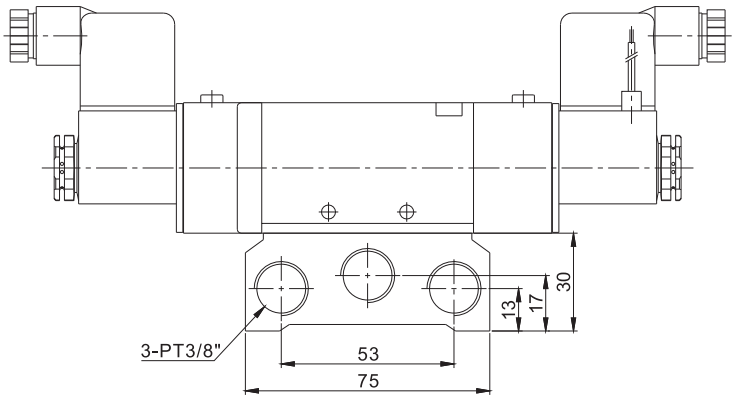

阀位数	P	L
2	70	82
3	98	110
4	126	138
5	154	166
6	182	194
7	210	222
8	238	250
9	266	278
10	294	306

YSC | 4 Port Hand Valve(4通手转阀)
YHV seires

图形符号

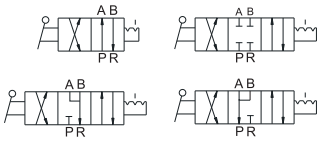

COMMON SPECIFICATIONS(共同规格)

Fluids(流体)	Clean Air(洁净空气)
Proof Press.(保证耐压力)	1.2Mpa(12kgf/cm²)
Max.Press.(最高使用压力)	1Mpa(10kgf/cm²)
Amb & Media Temp.(环境和流体温度)	-5~+60°C
Operation Angle(操作角度)	90°

HOW TO ORDER(型号表示方法)

YHV	2	30	C	–	02	–	S
YSC代码	Series (系列代号) 2:2系列 3:3系列	Station (位置数) 10:二位四通 30:三位四通	Middle Station (中央位置符号) C:中央封闭 R:中央排气 P:中央加压 (三位有此选项)		Port Size (接管口径) 02:G1/4 03:G3/8 04:G1/2		Panel Type (面板安装螺母) Nill:不配螺母 S:带螺母

Dimensions(mm)(外形尺寸图)

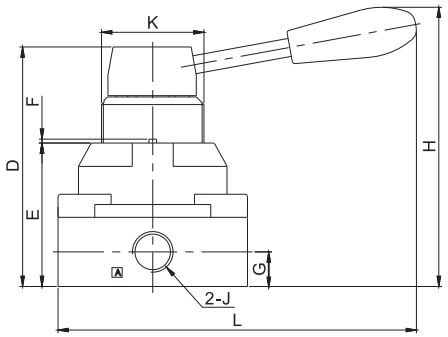

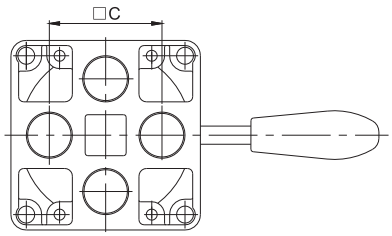

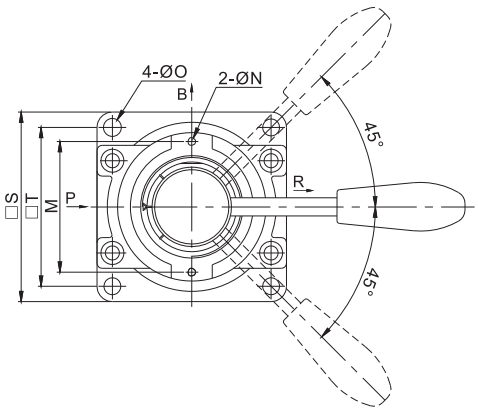

Model No.(型号)	Pipe Size(接管口径)	有效截面积(CV值)	C	D	E	F	G	H	J	K	L	M	N	O	S	T
YHV200	1/4”	7.5mm²(0.4)	36	73	45	1.7	11.5	92.5	G1/4”	M34×1.5	120	40	3	7	62	49
YHV300	3/8”	17mm²(0.9)	44	83.5	56	1.5	13.5	109	G3/8”	M40×1.5	140	51	3	7	74	64
YHV300	1/2”	20mm²(1.1)	44	83.5	56	1.5	13.5	109	G1/2”	M40×1.5	140	51	3	7	74	64

YSC 5 Port Pilot Foot Valve(5通脚踏板机械阀)
YFV210 series

图形符号

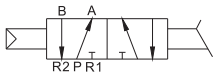

COMMON SPECIFICATIONS(共同规格)

Fluids(流体)	Clean Air(洁净空气)
Proof Press.(保证耐压力)	1Mpa(10kgf/cm²)
Max.Press.(最高使用压力)	0.8Mpa(8kgf/cm²)
Amb & Media Temp.(环境和流体温度)	0~60°C
Actuating Type(动作方式)	Direct Operated(直动型)
有效截面积(CV值)	19mm²(1.1)

HOW TO ORDER(型号表示方法)

YFV	2	10	–	02	–	L
YSC代码	Series 系列代号 2:2系列	Station 位置数 10:单头双位置		Port Size (接管口径) 02:G1/4		Type(形式代号) 空白:标准型 L:附锁型 G:附罩型 LG:附锁及罩型

YFV210

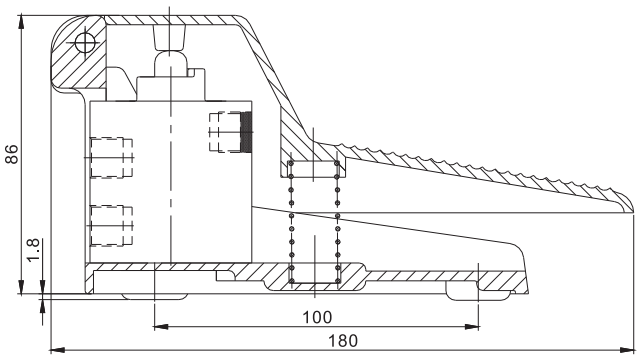

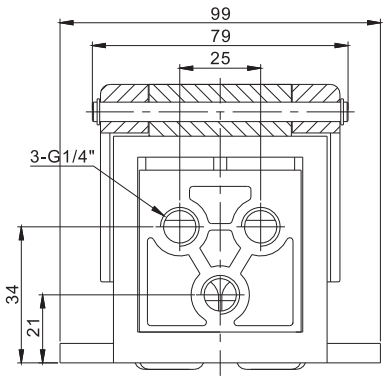

YFV210-L

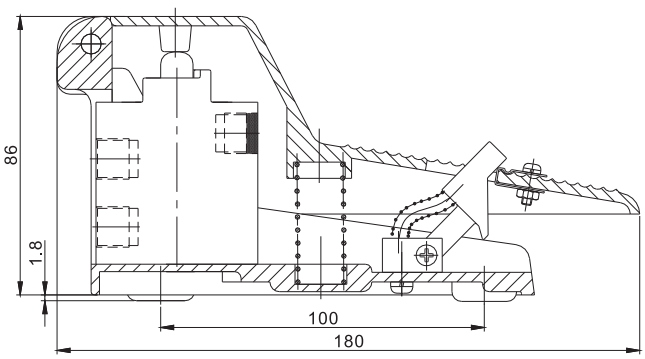

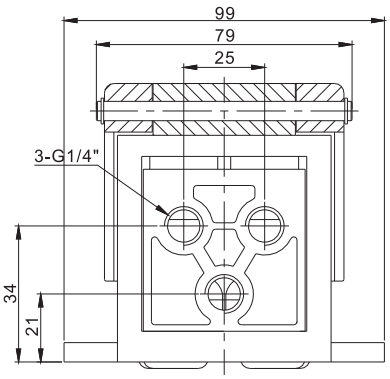

5 Port Pilot Foot Valve(5通脚踏板机械阀)
YFV210 series

YFV210-G

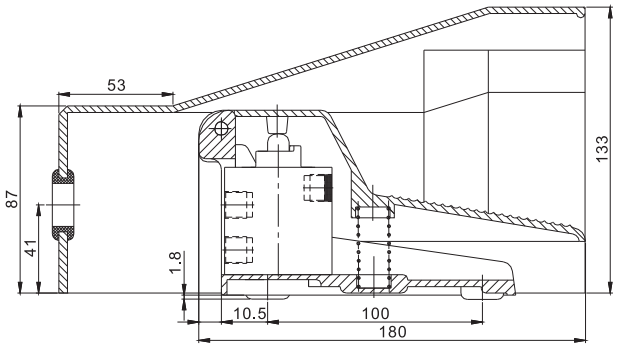

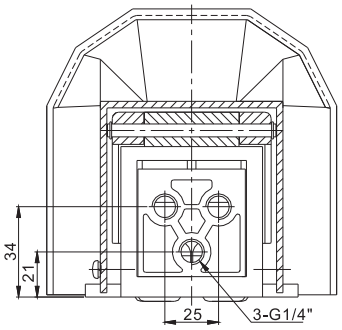

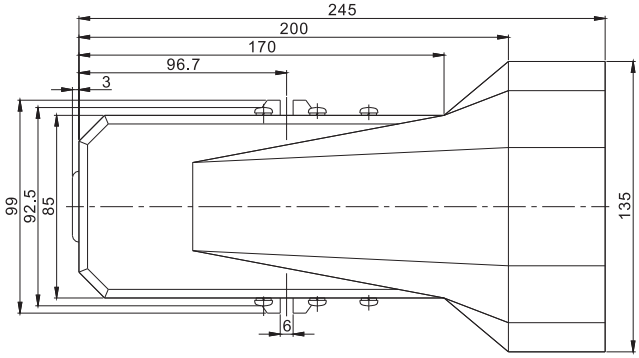

YFV210-LG

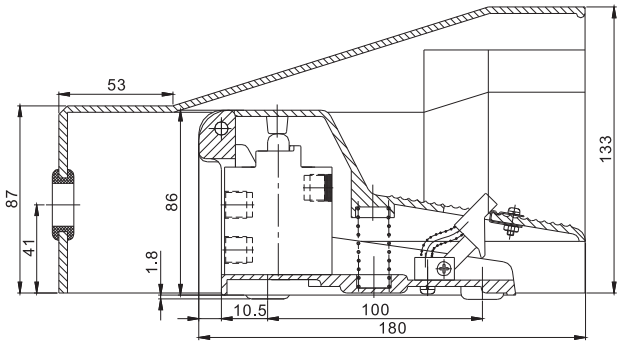

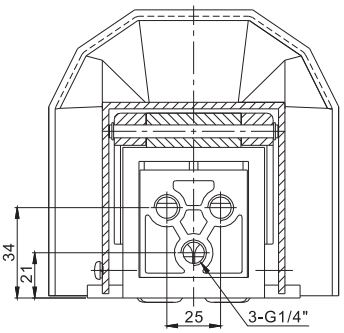

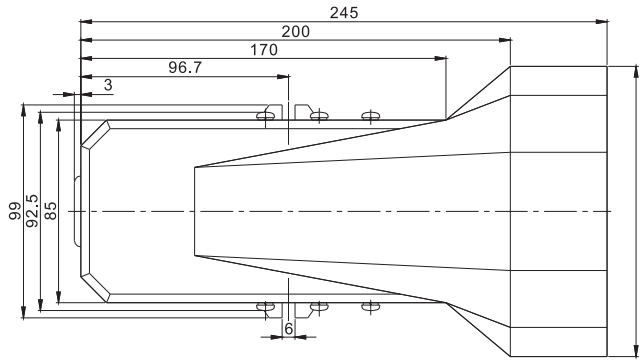

YSC | 5 Port Hand-pull Valve(五通手扳阀)
YHLV seires

图形符号

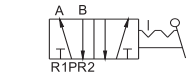

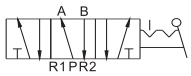

HOW TO ORDER(型号表示方法)

YHLV	2	30	C	–	02	–	L
YSC代码	Series (系列代号) 2:2系列 3:3系列 4:4系列	Station (位置数) 10:二位五通 30:三位五通	Middle Station (中央位置符号) C:中央封闭 R:中央排气 P:中央加压 (三位有此选项)		Pipe Size (接管口径) 02:G1/4 03:G3/8 04:G1/2		Addition(附加) 空白:二位五通锁定型 L:三位五通锁定型 S:二位五通,三位五通弹簧复位型

COMMON SPECIFICATIONS(共同规格)

Model No.(型号)	YHLV210-02	YHLV230-02	YHLV310-03	YHLV330-03	YHLV410-04	YHLV430-04
Fluids(流体)	Clean Air(洁净空气)					
Proof Press.(保证耐压力)	1Mpa(10kgf/cm²)					
Max.Press.(最高使用压力)	0.8Mpa(8kgf/cm²)					
Amb & Media Temp.(环境和流体温度)	0~60°C					
Actuating Type(动作方式)	Direct Operated(直动型)					
Effective Sectional Area (有效断面积)mm²(CV值)	16(0.89)	12(0.67)	30(1.68)	18(1.00)	50(2.79)	30(1.68)

Dimensions(mm)(外形尺寸图)

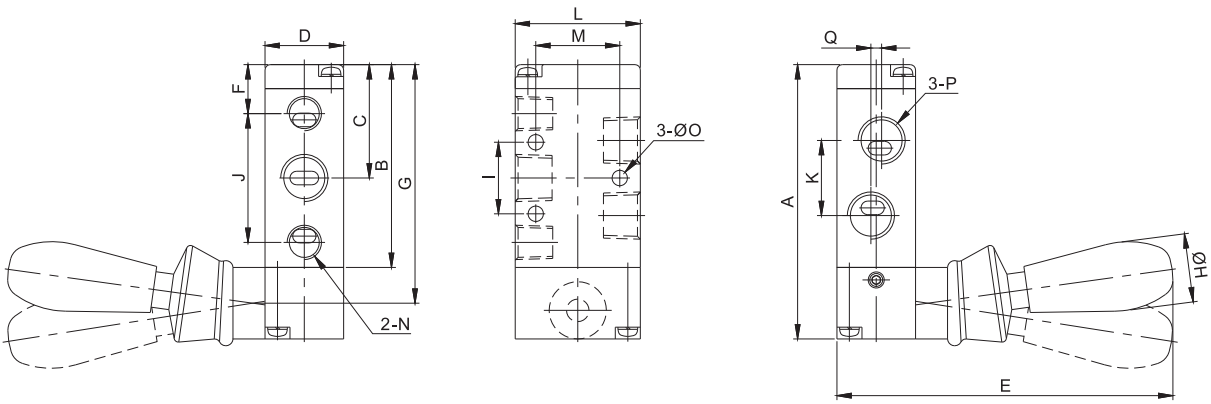

Model No.(型号)	A	B	C	D	E	F	G	H	I	J	K	L	M	N	O	P	Q
YHLV210-02	76	56.5	31.5	22	95	6.5	66.5	18	20	36	21	35	21	G1/8”	4.3	G1/4”	1.5
YHLV230-02-S	95	75.5	31.5	22	95	6.5	85.5	18	20	36	21	35	21	G1/8”	4.3	G1/4”	1.5
YHLV310-03	96	72	40	27	100	7.5	84	18	24	45	24	40	27	G3/8”	4.3	G3/8”	2
YHLV330-03-S	115	91	60	27	100	7.5	103	18	24	45	24	40	27	G3/8”	4.3	G3/8”	2
YHLV410-04	126	102	55.5	34	110	7.5	114	18	28	63	36	50	35	G1/2”	5.5	G1/2”	-
YHLV430-04-S	147	123	76.5	34	110	7.5	135	18	28	63	36	50	35	G1/2”	5.5	G1/2”	-

3 Port Hand Slide Valve(3通手滑阀)
YHVS seires

HOW TO ORDER(型号表示方法)

YHVS - 02

YSC代码

Port Size
(接管口径)
01:G1/8”
02:G1/4”
03:G3/8”
04:G1/2”

COMMON SPECIFICATIONS(共同规格)

Model No.(型号)	YHVS-01	YHVS-02	YHVS-03	YHVS-04
Fluids(流体)	Clean Air(洁净空气)			
Press Range(使用压力范围)	0~1Mpa(0~10kgf/cm²)			
Amb & Media Temp.(环境和流体温度)	0~60°C			
操作力	20N			
Orifice(通径)(mm)	4	7	10	12

Dimensions(mm)(外形尺寸图)

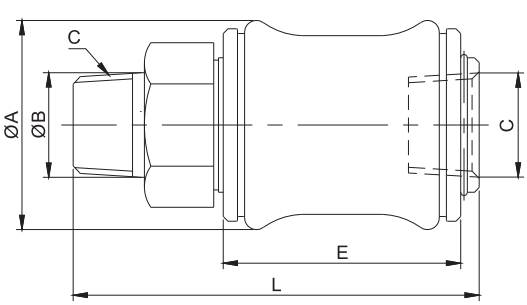

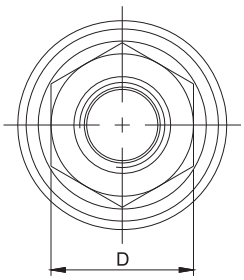

Model No.(型号)	A	B	C	D	E	L
YHVS-01	25	13	G1/8”	14	28	48
YHVS-02	30	18	G1/4”	19	32	58
YHVS-03	35	21	G3/8”	22	39	68
YHVS-04	40	26	G1/2”	27	45	80

3 Port/5 Port Hand-draw Valve(3通/5通手拉阀)
YKMV seires

图形符号

HOW TO ORDER(型号表示方法)

YKMV	2	10	–	02
YSC代码 3:二位三通 5:二位五通	Series (系列代号) 1:100系列 2:200系列 3:300系列	Station (位置数) 10:二位三通 30:二位五通		Port Size (系列代号) 01:G1/8 02:G1/4 03:G3/8

COMMON SPECIFICATIONS(共同规格)

Model No.(型号)	YKMV110-01	YKMV130-01	YKMV210-02	YKMV230-02	YKMV310-03	YKMV330-03
Fluids(流体)	Clean Air(洁净空气)					
Proof Press.(保证耐压力)	1Mpa(10kgf/cm²)					
Max.Press.(最高使用压力)	0.8Mpa(8kgf/cm²)					
Amb & Media Temp.(环境和流体温度)	0~60°C					
Effective Sectional Area (有效断面积)mm²(CV值)	10(0.56)	16(0.89)	30(1.68)	10(0.56)	16(0.89)	30(1.68)

Dimensions(mm)(外形尺寸图)

YKMV210-02

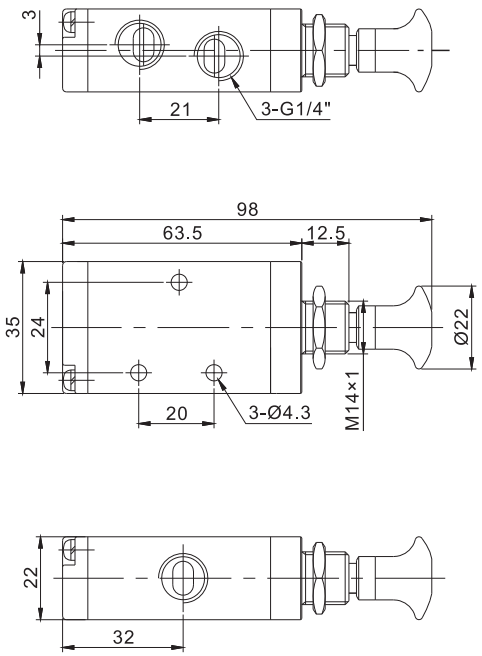

YKMV310-03

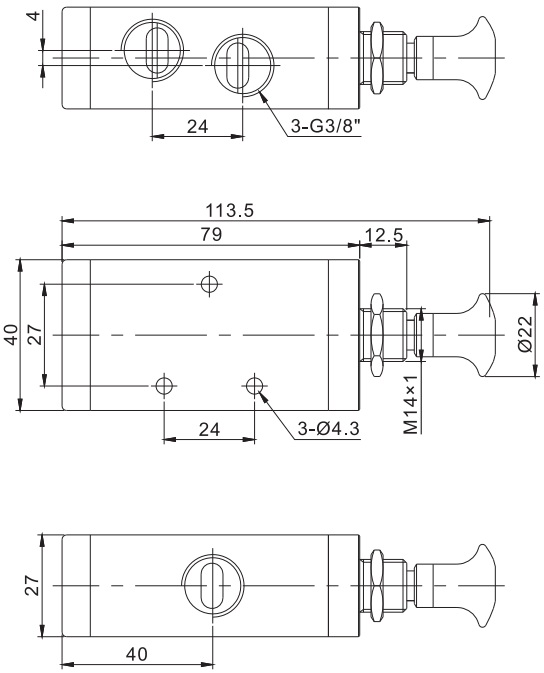

3 Port/5 Port Hand-draw Valve(3通/5通手拉阀)
YKMV seires

YKMV130-01

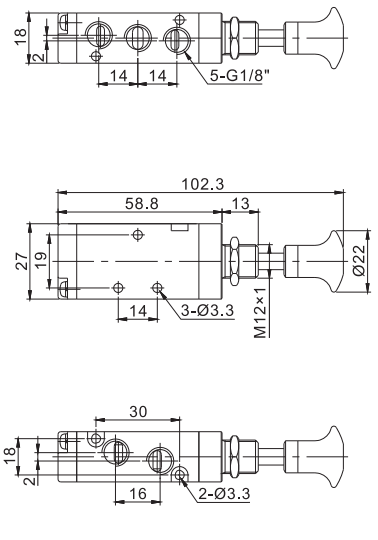

YKMV230-02

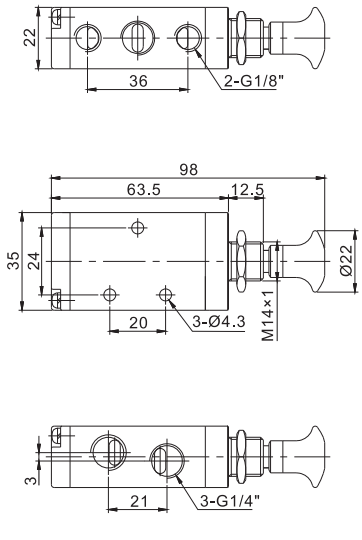

YKMV330-03

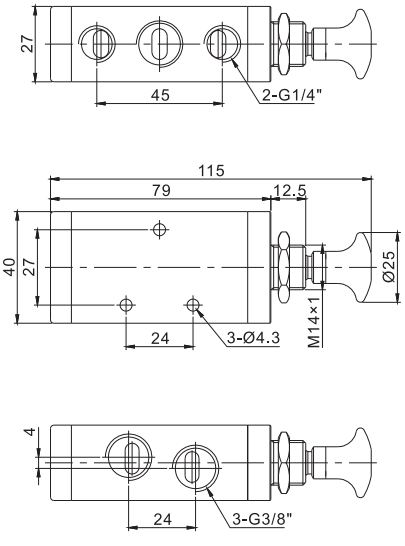

3 Port/5 Port Mechanical Valve(3通/5通机械阀)
YPMV seires

图形符号

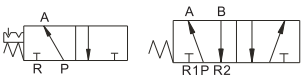

YMV110

YMV230

YMV210

EB LB TB PP PPL PB R

HOW TO ORDER(型号表示方法)

YPMV	1	10	–	01	–	TB
YSC代码	Series (系列代号) 1:1系列 2:2系列	Positions (位置数) 10:二位三通 30:二位五通		Port Size (接管口径) 1:G1/8” 2:G1/4”		按钮形式 Nill:基本型 R:滚轮型 TB:选择型旋钮 LB:加长型旋钮 PB:大圆型按钮 PP:平圆型按钮 PPL:凸圆型按钮 EB:带锁型按钮

COMMON SPECIFICATIONS(共同规格)

Model No.(型号)	YPMV110	YPMV210	YPMV230
Fluids(流体)	Clean Air(洁净空气)		
Max.Press.(最高使用压力)	0.8Mpa(8kgf/cm²)		
Amb & Media Temp.(环境和流体温度)	0~60°C		
Effective Sectional Area (有效断面积)mm²(CV值)	12(0.67)	16(0.89)	16(0.89)
Port Size(接管口径)	G1/8”	G1/4”	G1/4”
Postions(位置数)	二位三通	二位三通	二位五通

Dimensions(mm)(外形尺寸图)

YPMV230-02

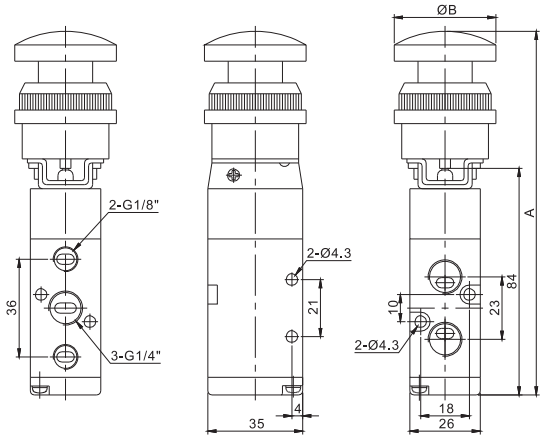

YPMV210-02

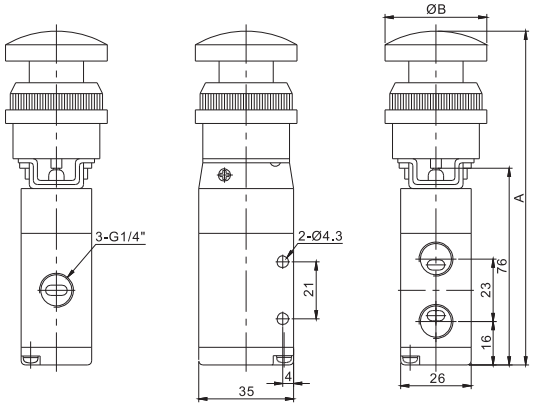

YPMV110-01

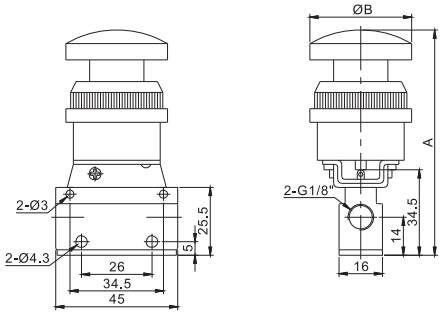

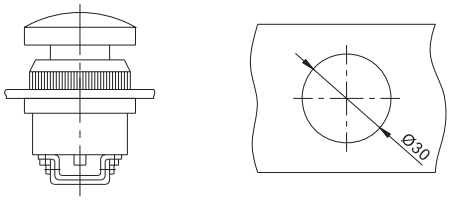

面板安装孔尺寸

Series(系列)		PP	PPB	LB	TB	EB	PB	R
YPMV230	A	114	119	133	136.5	134	131	107.5
	B	39.5	24.5	26.5	36.5	39.5	37.5	42.5
YPMV210	A	106	111	125	129.5	126	123	99.5
	B	39.5	24.5	26.5	36.5	39.5	37.5	42.5
YPMV110	A	66	71	85	88.5	86	83	59.5
	B	39.5	24.5	26.5	36.5	39.5	37.5	42.5

PP

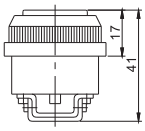

PPL

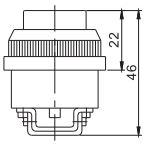

TB

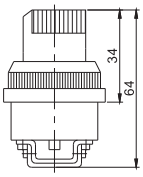

LB

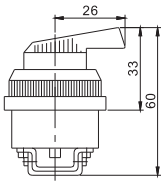

PB

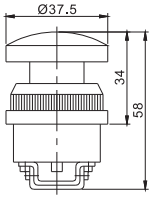

EB

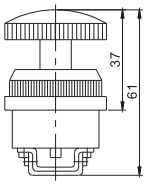

R

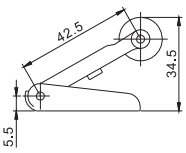

YSC | Miniature Cylinder(微型气缸,无油润滑)
YCJ2,YCDJ2(ø6~ø16) series

图形符号

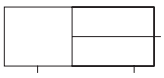

COMMON SPECIFICATIONS(共同规格)

Bore(缸径)(mm)	6	10	16
Fluid(流体)	Clean Air(洁净空气)		
Action(动作形式)	Double Acting(双动)		
Proof Press.(保证耐压力)	1.05Mpa(10.5kgf/cm²)		
Max Press.(最高使用压力)	0.7Mpa(7kgf/cm²)		
Min Press.(最低使用压力)	0.12(1.2)	0.06(0.6)	
Amb.Temp.(环境和流体温度)	-5~+60°C(未冻结)		
Piston Speed(活塞速度)	50~750mm/s		
Cushion(缓冲)	Both Side Rubber(STD)(两端橡胶缓冲(标准))		
Stroke Tolerance(行程公差)	$^{+1.0}_{0}$		
*Lubrication(润滑)	Non-Lube(不需要)		
Pipe Size(接管口径)Rc(PT)	M5×0.8		

*Use Turbine Oil 1st-grade ISO VG32#,If Required.(如需要润滑,请用透平1号油ISO VG32)

Standard Stroke/Auto Swith(行程/磁性开关选择)

Bore (缸径) (mm)	STD Stroke (标准行程)(mm)	Band Mounted(环带安装型)	
		Auto Switch(磁性开关)	Band(开关固定码)
6	15,30,45,60	D-C72K D-C72KL	YCJ2-006
10	15,30,45,60 75,100,125,150		YCJ2-010
16	15,30,45,60,75 100,125,150,175,200		YCJ2-016

HOW TO ORDER(型号表示方法)

YCDJ2 B 10 – 60 R – C73K S – XC16

Magnet(有无磁环)
Nil: Non(无磁环)
D: Built-in(有磁环)

Mouting(附件号)
B:Basic(基本型)
F:FrontFlange(法兰)
L:Foot(脚座)
D:Double Clevis(双U型钩)

BoreSize (缸径)

Stroke (行程)

Auto Switch(磁性开关种类)
Band Mount(环带安装型)

Port Location on Head Cover (在前端盖的接气孔形式)
Nil:ø6 In-Line(轴向)
ø10,ø16 Perpendicular(垂直)
R:ø10,ø16 In-Line(轴向)

No. of Auto Switch(磁性开关数量)
Nil(无记号):2(个)
S:1(个)
3:3(个)

Option(系列)
Nil(无记号):STD(标准型)
XC16:Copper Free(不含铜)

Construction(构造图)

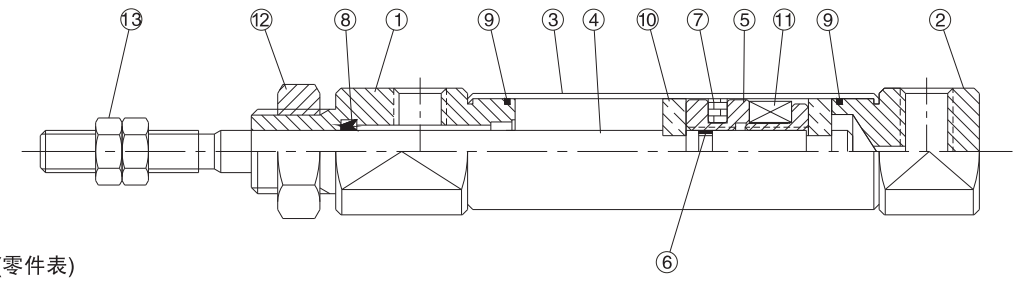

PART LIST(零件表)

NO.(序号)	Description(名称)	Material(材料)	NO.(序号)	Description(名称)	Material(材料)
1	Rod Cover(前盖)	Al.	8	Rod Packing(活塞杆密封圈)	NBR
2	Head Cover(后盖)	Al.	9	Guide Packing(缸筒密封圈)	NBR
3	Cylinder Tube(缸筒)	SUS	10	Damper(缓冲垫)	URETJAN
4	Piston Rod(活塞杆)	SUS	11	Magnet(磁环)	Nd-Fe-B
5	Piston(活塞)	MBSBE	12	Mounting Nut(安装螺母)	MBSBE
6	O-Ring(活塞垫圈)	NBR	13	Hexagon Nut(螺母)	
7	Piston Packing(活塞密封圈)	NBR			

Dimensions(mm)(外形尺寸图)

Basic Type(基本型):YCJ2B,YCDJ2B

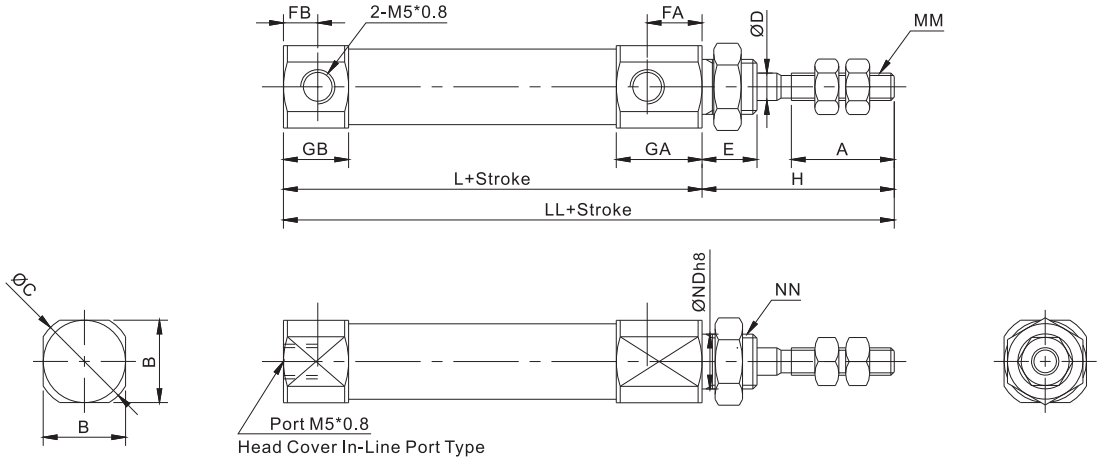

Bore(缸径)	A	B	C	D	E	FA	FB	H	MM	GA	GB	ND h8	NN	L	T	LL
ø6	15	12	14	3	8	14.5	-	28	M3×0.5	16	7	$6^{0}_{-0.018}$	M6×1.0	49	3	77
ø10	15	12	14	4	8	8	5	28	M4×0.7	12.5	9.5	$8^{0}_{-0.022}$	M8×1.0	46	-	74
ø16	15	18	20	5	8	8	5	28	M5×0.8	12.5	9.5	$10^{0}_{-0.022}$	M10×1.0	47	-	75

Dimensions(mm)(外形尺寸图)

Foot Type(脚座型):YCJ2L,YCDJ2L

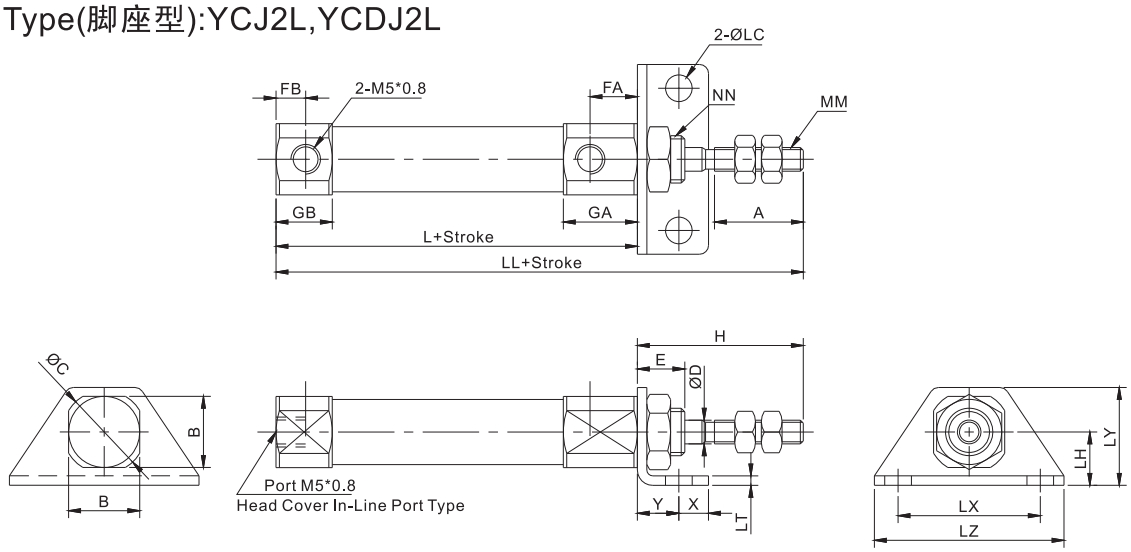

Bore(缸径)	A	B	C	D	E	FA	FB	H	LC	LH	LX	LY	LZ	MM	L	T	X	Y	LL	LT
ø6	15	12	14	3	8	14.5	-	28	4.5	9	24	16.5	32	M3×0.5	49	3	5	7	77	-
ø10	15	12	14	4	8	8	5	28	4.5	9	24	16.5	32	M4×0.7	46	-	5	7	74	1.6
ø16	15	18	20	5	8	8	5	28	5.5	14	33	25	42	M5×0.8	47	-	6	9	75	2.3

Dimensions(mm)(外形尺寸图)

Frant Flange Type(前法兰型):YCJ2F,YCDJ2F

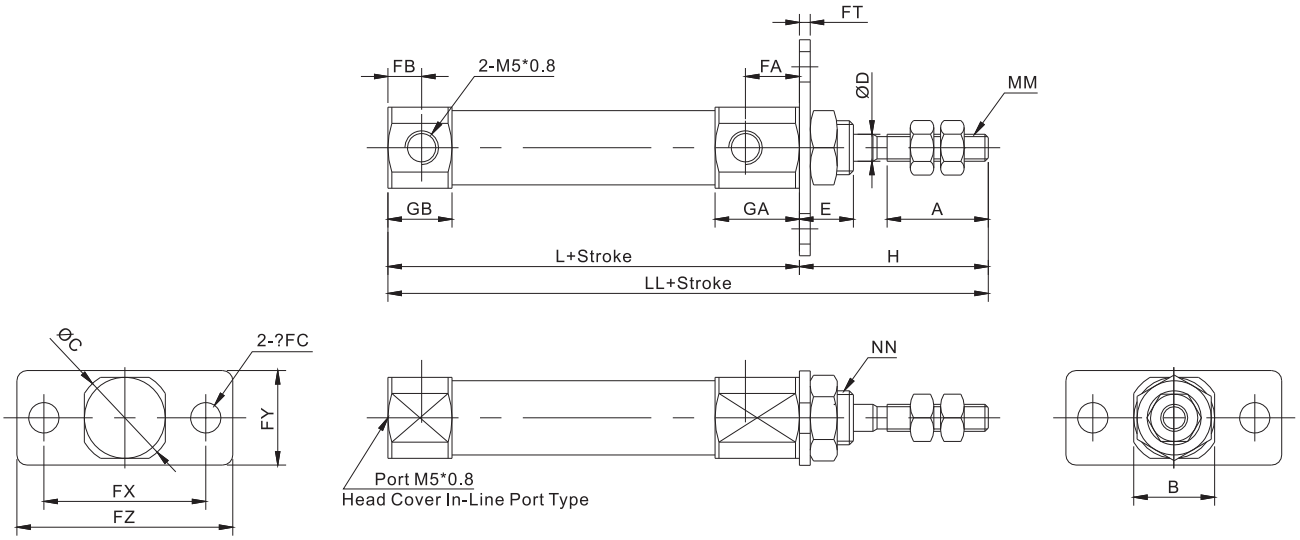

Bore(缸径)	A	B	C	D	E	FC	FT	FX	FY	FZ	FA	FB	H	MM	GA	GB	NN	L	T	LL
ϕ6	15	12	14	3	8	4.5	1.6	24	14	32	14.5	–	28	M3X0.5	16	7	M6X1.0	49	3	77
ϕ10	15	12	14	4	8	4.5	1.6	24	14	32	8	5	28	M4X0.7	12.5	9.5	M8X1.0	46	–	74
ϕ16	15	18	20	5	8	5.5	2.3	33	20	42	8	5	28	M5X0.8	12.5	9.5	M10X1.0	47	–	75

Dimensions(mm)(外形尺寸图)

Double Clevis Type(双U型钩型):YCJ2D,YCDJ2D

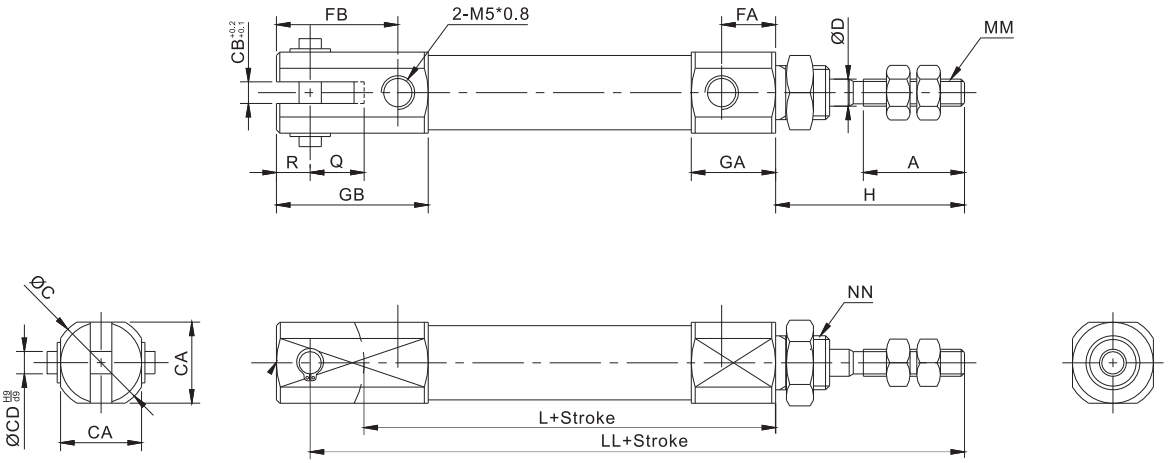

Bore(缸径)	A	B	C	CD(cd)	CB	CA	D	FA	FB	H	MM	GA	GB	NN	R	L	Q	LL
ϕ10	15	12	14	3.3	3.2	12	4	8	18	28	M4X0.7	12.5	22.5	M8X1.0	5	46	8	82
ϕ16	15	18	20	5	6.5	18	5	8	23	28	M5X0.8	12.5	27.5	M10X1.0	8	47	10	85

Single Knuckle Joint
(I型单肘节接头)

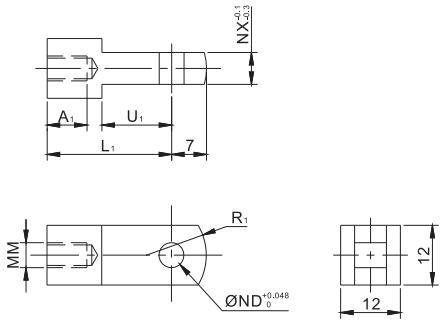

Part No.(零件号)	Bore(适用缸径)	A_1	L_1	MM	ND^{H10}	NX	R_1	U_1
YCJ2010-17	10	8	21	M4×0.7	$3.3^{+0.048}_{0}$	3.1	8	9
YCJ2016-17	16	8	25	M5×0.8	$5^{+0.048}_{0}$	6.4	12	14

Double Knuckle Joint
(Y型单肘节接头)

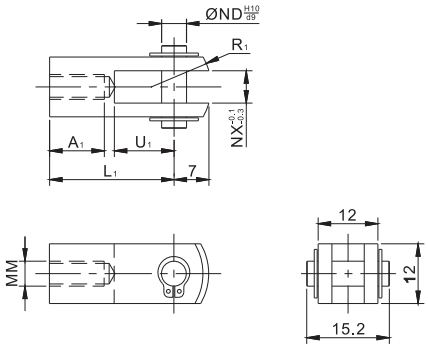

Part No.(零件号)	Bore(适用缸径)	A_1	L_1	MM	ND^{H10}	NX	R_1	U_1
YCJ2010-17	10	8	21	M4×0.7	$3.3^{+0.048}_{0}$	3.2	10	8
YCJ2016-17	16	11	21	M5×0.8	$5^{+0.048}_{0}$	6.5	10	12

Clevis Pin
(双U型钩销子)

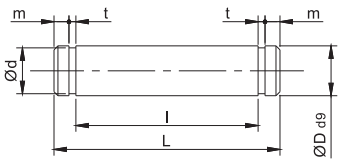

Part No.(零件号)	Bore(适用缸径)	øD d9	ød	L	l	m	t
YCJ2010-23A	10	$3.3^{+0.030}_{-0.060}$	3	15.2	12.2	1.2	0.3
YCJ2016-23A	16	$5^{+0.030}_{-0.060}$	4.8	22.7	18.3	1.5	0.7

Moving Nut
(缸身螺母)

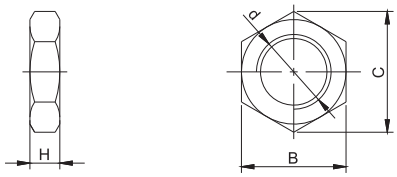

Part No.(零件号)	Bore(适用缸径)	B	C	d	H
YCJ2006-13A	6	8	9.2	M6×1.0	4
YCJ2010-13A	10	11	12.7	M8×1.0	4
YCJ2016-13A	16	14	16.2	M10×1.0	4

Knuckle Pin
(肘节接头销子)

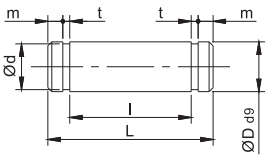

Part No.(零件号)	Bore(适用缸径)	øD d9	ød	L	l	m	t
YCJ2010-23B	10	$3.3^{+0.030}_{-0.060}$	3	16.2	12.2	1.7	0.3
YCJ2016-23B	16	$5^{+0.030}_{-0.060}$	4.8	16.6	12.2	1.5	0.7

Rod End Nut
(杆端螺母)

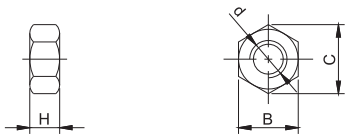

Bore(适用缸径)	B	C	d	H
6	5.5	6.4	M3×0.5	2.4
10	7	8.1	M4×0.7	3.2
16	8	9.2	M5×0.8	4

T Mounting
(T型接座)

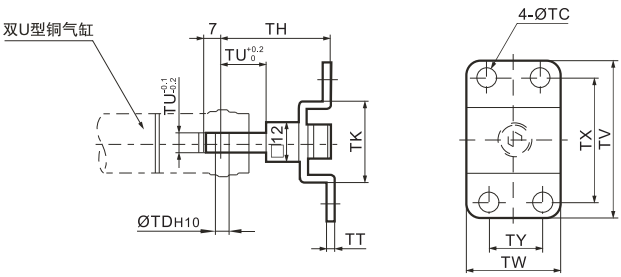

Part No.(零件号)	Bore(适用缸径)	TC	TD_{H10}	TH	TK	TN	TT	TU	TV	TW	TX	TY
YCJ2010-42B	10	4.5	$3.3^{+0.048}_{0}$	29	18	3.1	2	9	40	22	32	12
YCJ2016-42B	16	5.5	$5^{+0.048}_{0}$	35	20	6.4	2.3	14	48	28	38	16

YSC | Double Rod Cylinder/Miniature Cylinder(双活塞杆型/微型气缸)
YCJ2W,YCDJ2W series

Symbol 符号

How to order (选型方法)

YCDJ2W (L) 10 – 15 (Y) (C73K) (2)

① Bore-Stroke 缸径-行程

③ ④ ⑤

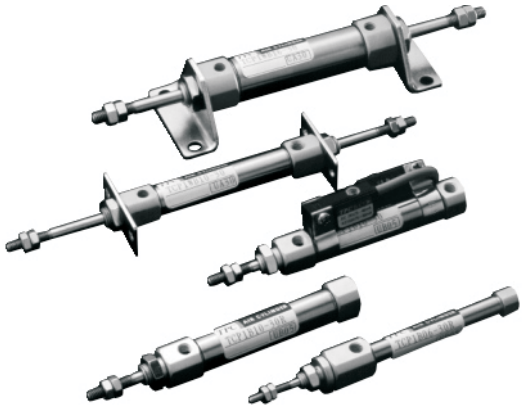

①Bore Size-Standard stroke 缸径尺寸-标准行程

ø10	15,30,45,60
ø16	15,30,45,60

- Built-in magnet(standard) 内置磁环
- Stainless steel tube provides long cycle life 不锈钢缸筒保证使用寿命长
- No lubrication required 无油
- Compact and light weight 结构紧凑和重量轻

②Mounting 安装

Blank	Basic type 基本型
L	Axial foot type 脚座安装型
F	Rod side flange type 杆端法兰型

③ Knuckle joint 关节连接

Y	Double knuckle joint 双肘节
I	Single knuckle joint 双肘节

④ Applicable auto switch 磁性开关种类

Blank	None 无
D-C73K	D-C73K(常规)
D-C73KL	D-C73KL(3m引线)

※ Note:See"Auto Switch Series"请看磁性开关系列

⑤ Number of switches 磁性开关数量

1	1 pc
2	2 pcs
n	n pcs

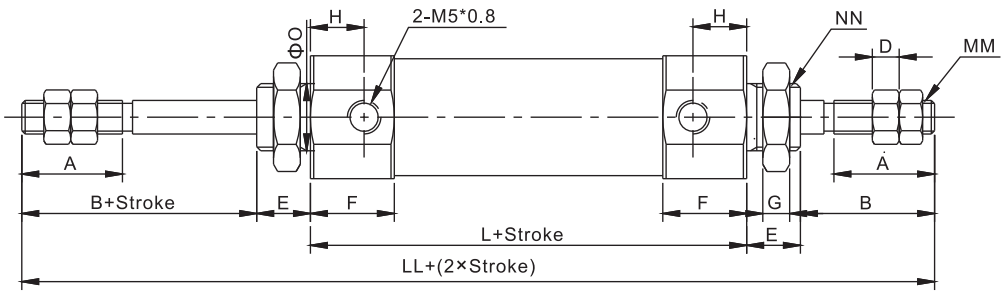

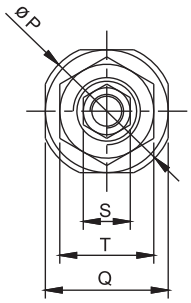

Bore size	A	B	D	E	F	G	H	K	L	N	øQ	øP	Q	MM	NN	S	T
ø6	15			8	16		14.5	28	68.5	124.5	$6^{0}_{-0.022}$		14	M3×0.5	M6×1.0		
ø10	15	20	3.2	8	12.5	4	8	28	49	105	$8^{0}_{-0.022}$	14	12	M4×0.7	M8×1.0	7	11
ø16	15	20	4	8	12.5	4	8	28	50	106	$10^{0-0.022}$	20	18	M5×0.8	M10×1.0	8	14

YCJ2,YCDJ2--S(T) series

Spring Return Type(弹簧压回)

YCJ2 — B — Bore Size 缸径 x Stroke — Port Location on Head Cover 后端盖接口位置 — S

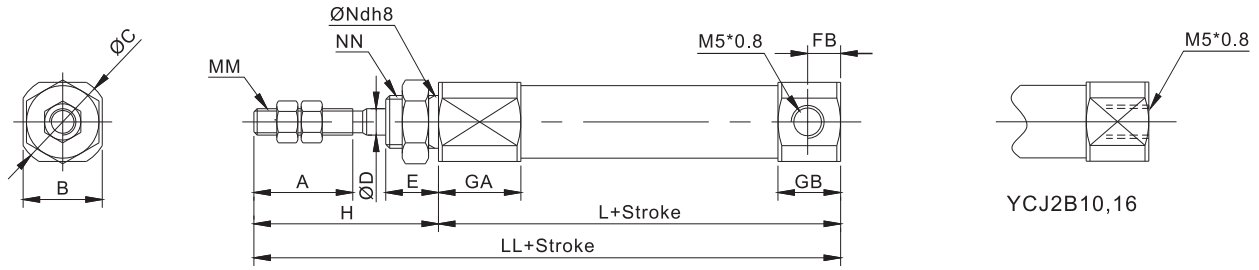

Bore (mm)	A	B	C	D	E	FB	H	MM	GA	GB	ND_{H8}	NN	L				LL			
													5~15ST	16~30ST	31~45ST	46~60ST	5~15ST	16~30ST	31~45ST	46~60ST
6	15	12	14	3	8	-	28	M3×0.5	16	7	$6^{0}_{-0.018}$	M6×1.0	39.5	48.5	52	66.5	67.5	76.5	80.5	94.5
10	15	12	14	4	8	5	28	M4×0.7	12.5	9.5	$8^{0}_{-0.022}$	M8×1.0	46.5	54	66	78	74.5	82	94	106
16	15	18	20	5	8	5	28	M5×0.8	12.5	9.5	$10^{0}_{-0.022}$	M10×1.0	46	54.5	66.5	78.5	74	82.5	94.5	106.5

Spring Extended Type(弹簧压出)

YCJ2 — B — Bore Size 缸径 x Stroke — T

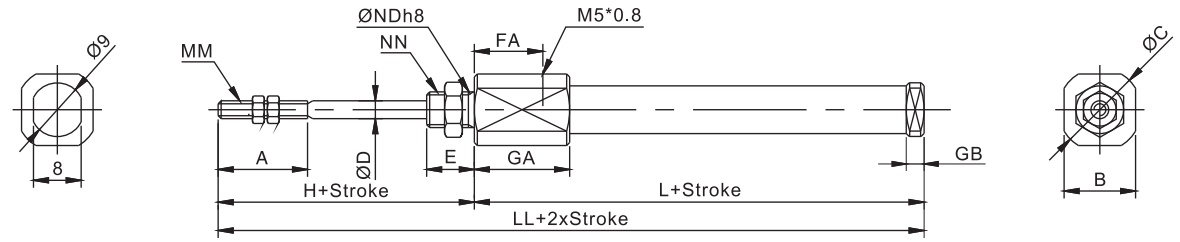

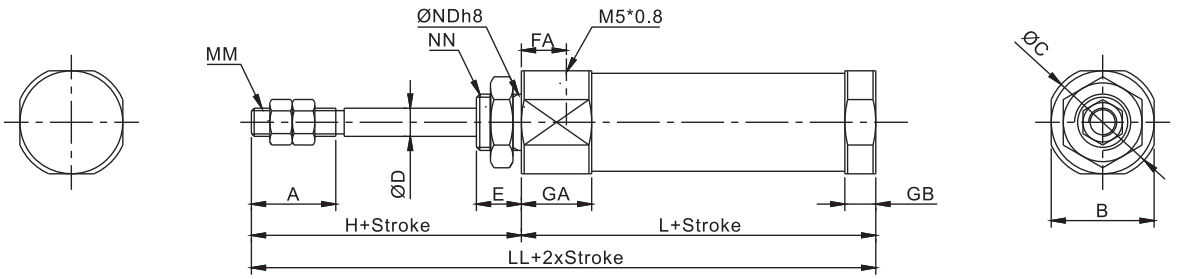

Bore (mm)	A	B	C	D	E	FA	H	MM	GA	GB	ND_{H8}	NN	L				LL			
													5~15ST	16~30ST	31~45ST	46~60ST	5~15ST	16~30ST	31~45ST	46~60ST
6	15	12	14	3	8	14.5	28	M3×0.5	16	3	$6^{0}_{-0.018}$	M6×1.0	51.5	60.5	64.5	78.5	79.5	88.5	82.5	106.5
10	15	12	14	4	8	5	28	M4×0.7	12.5	5.5	$8^{0}_{-0.022}$	M8×1.0	49.5	57	69	81	77.5	85	97	109
16	15	18	20	5	8	5	28	M5×0.8	12.5	5.5	$10^{0}_{-0.022}$	M10×1.0	49	57.5	69.5	81.5	77	85.5	97.5	109.5

YSC

Air Cylinder/Small Bore Size(小型标准型气缸,无油润滑)

YAM1,YADM1(ø20~ø40) series

图形符号

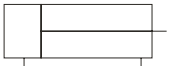

YAM1 ※Series

COMMON SPECIFICATIONS(共同规格)

Bore(缸径)(mm)	20	25	32	40
Fluid(流体)	Clean Air(洁净空气)			
Action(动作形式)	Double/Single Acting(双/单动)			
Proof Press.(保证耐压力)	1.5Mpa(15kgf/cm²)			
Max Press.(最高使用压力)	0.99Mpa(9.9kgf/cm²)			
Min Press.(最低使用压力)	0.05Mpa(0.5kgf/cm²)			
Amb.Temp.(环境和流体温度)	-5~+60°C(未冻结)			
Piston Speed(活塞速度)	50~750mm/s			
Cushion(缓冲)	Rubber(STD)两端橡胶缓冲(标准),Air(Option)气缓冲(任选)			
Stroke Tolerance(行程公差)	$^{+1.4}_{0}$			
*Lubrication(润滑)	Non-Lube(不需要)			
Pipe Size(接管口径)Rc(PT)	1/8"	1/8"	1/8"	1/4"

*Use Turbine Oil 1st-grade ISO VG32#,If Required.(如需要润滑,请用透平1号油 ISO VG32)

Standard Stroke/Auto Switch(行程/磁性开关选择)

Bore (缸径) (mm)	STD Stroke (标准行程)(mm)	Band Mounted(环带安装型)	
		Auto Switch(磁性开关)	Band(开关固定码)
20	25,50,75,100,125,150 200,250,300	D-C72K D-C72KL	YBM1-020
25			YBM1-025
32			YBM1-032
40			YBM1-040

Note(注1):Non STD Stroke Available.(有非标准行程可供选择)
Note(注2):For Auto Switch:Refer to Catalogue Auto Switch Series.
(磁性开关规格及特性可参阅磁性开关系列)
Note(注3):YAM1 Series Tube(ø20,ø25,ø32,ø40) Is Aluminum Tube.
(YAM1系列的缸筒为标准铝合金材料)

HOW TO ORDER(型号表示方法)

YA D M1 L 32 – 150 A J Y – C72K S – XC1

- YSC Model(代号)
- Magnet(有无磁环)
  Nil():Non(无磁环)
  D:Built-in Magnet(有磁环)
- Mounting(附件号)
  B:Basic Type(基本型)
  E:Integrated Clevis Type (原装单U型钩)
  L:Foot Type(脚座)
  F;Front Flange(杆侧法兰)
  R:Bracket(原装单U型钩接座)
- Bore (缸径)
- Stroke (行程)
- Cushion(缓冲)
  Nil(无记号):Rubber(橡胶缓冲)
  A:Air Cushion(气缓冲)
- Amb.Temp>for Gaiter (伸缩保护套为周围温度)
  Nil(无记号):None(无)
  J:60°C
  K:110°C
- Accessory(附件)
  I=:I Type,Y=Y Type
- Auto Switch(有无磁性开关)
  Nil(无记号):None(无)
  C73K:Reed Switch(有接点磁性开关)
- No.of Auto Switch(开关数量)
  Nil(无记号):2(个)
  S:1(个)
  3:3(个)
- Boss Type(尾部形状)
  Nil(无记号):标准型
  XC1:平尾型

Gaiter Material(伸缩保护套的材质及环境温度)

Code(记号)	Material(伸缩保护套的材质)	Max.Amb.Temp.(环境最高温度)
J	Nylon Tarpaulin(尼龙防水帆布)	60°C
K	Neoprene Cloth(丁橡胶封塞)	110°C

※For Rod Boot Temperature.(伸缩保护套自身的周围最高温度)
25缸径以上可配伸缩保护套

Part No. of Mounting(安装附件型号)

Bore(缸径)(mm)	20	25	32	40
Foot(脚座)	YAM1-L020B	YAM1-L025B	YAM1-L032B	YAM1-L040B
Flange(法兰)	YAM1-F020B	YAM1-F025B	YAM1-F032B	YAM1-F040B
Bracket(单U型钩接座)	YAM1-R020B	YAM1-R025B	YAM1-R032B	YAM1-R040B

Dimensions(mm) (外形尺寸图(毫米))

Basic Type(基本型) YAM1B,YADM1B

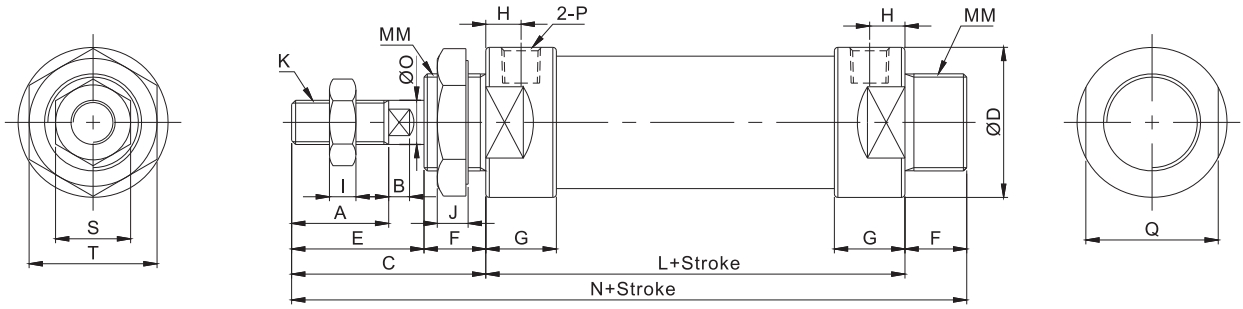

Bore(缸径)	A	B	C	D	E	F	G	H	I	J	K	L	MM	N	O	P	Q	S	T
ø20	20	5	40	29	28	12	16	8	6	7	M8×1.25	70	M22×1.5	122	8	1/8”	25	12	29
ø25	22	5.5	44	34	30	14	16	8	6	7	M10×1.25	70	M22×1.5	128	10	1/8”	30	17	29
ø32	22	5.5	44	39.5	30	14	16	8	6	8	M10×1.25	70	M24×2.0	128	12	1/8”	35	17	32
ø40	24	7	46	49.5	32	14	22	11	7	9	M12×1.25	92	M30×2.0	152	16	1/4”	45	17	41

Axial Foot Type(脚座型) YAM1L,YADM1L

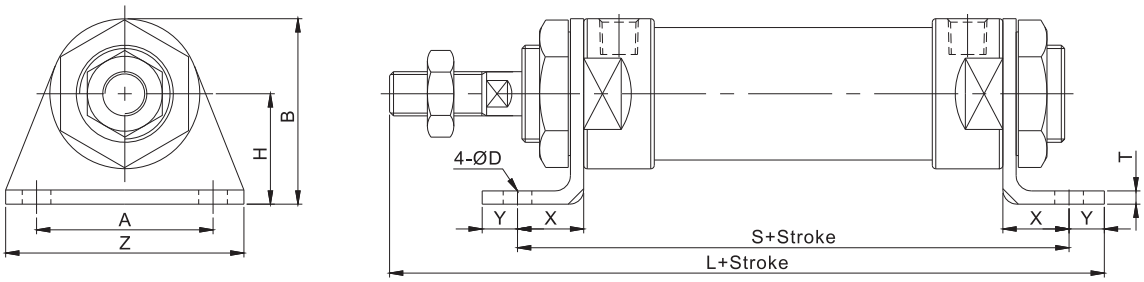

Bore(缸径)	A	B	D	H	L	S	T	X	Y	Z
ø20	40	5	6.5	25	133	100	3	15	8	54
ø25	40	5.5	6.5	25	137	100	3	15	8	54
ø32	45	5.5	6.5	32	147	120	4	25	8	59
ø40	50	7	6.5	36	171	142	4.5	25	8	64

Front Flange Type(杆端法兰型) YAM1F,YADM1F

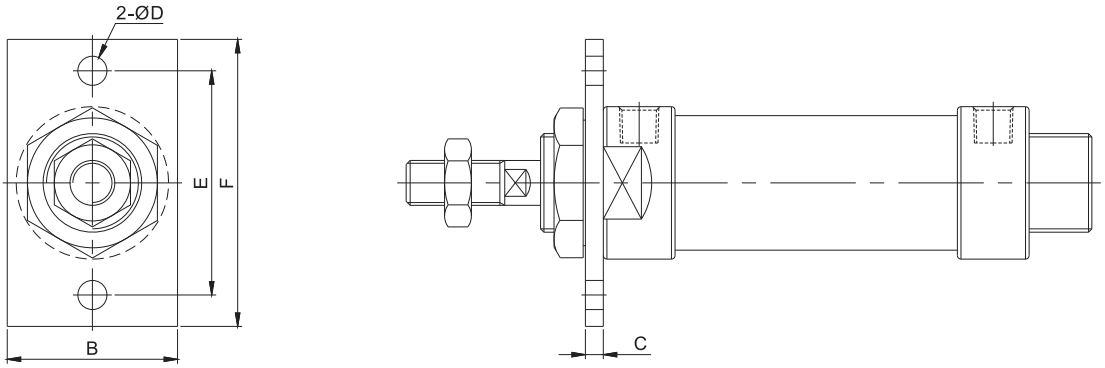

Bore(缸径)	B	C	D	E	F
ø20	38	4	6.5	50	64
ø25	38	4	6.5	50	64
ø32	47	4	6.5	58	72
ø40	50	4	6.5	70	84

Integrated Double Clevis Type(原装单U型钩型)
YAM1E,YADM1E

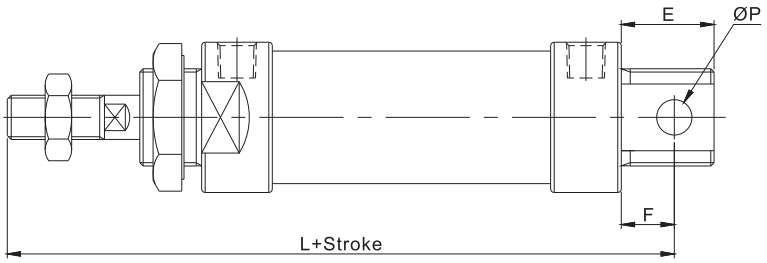

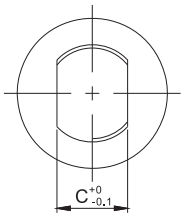

Bore(缸径)	C	E	F	L	P
ø20	16	21	12	122	8
ø25	16	21	12	126	8
ø32	16	27	15	129	10
ø40	20	27	15	153	12

Bracket(原装单U型钩接座)
YAM1R,YADM1R

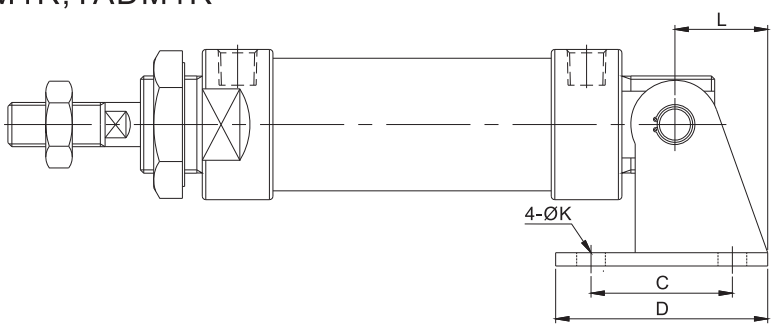

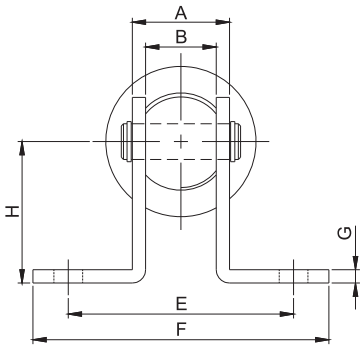

Bore(缸径)	A	B	C	D	E	F	G	H	L	K
ø20	22	16	32	48	51	67	3	32	21	6.5
ø25	22	16	32	48	51	67	3	32	21	6.5
ø32	24	16	36	52	51	67	4	36	27	6.5
ø40	28	20	40	56	55	71	4	40	27	6.5

Boss-Cut Type(尾部切削型)

YAM1 Mounting(安装) Bore(缸径) - Stroke(行程) - XC1

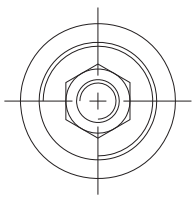

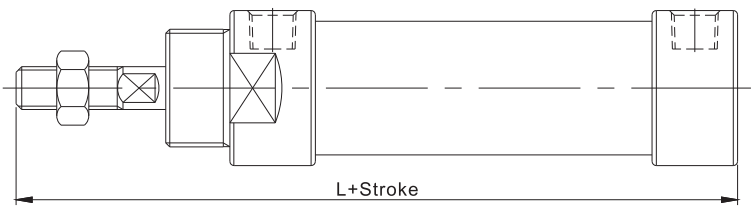

Bore(缸径)	L
ø20	110
ø25	114
ø32	114
ø40	138

※Other dimensions are the same as for standard type.
其它尺寸与标准型相同

HOW TO ORDER(型号表示方法)

YAM1W — (Mounting(附件号)) — (Bore(缸径)) x (Stroke(行程)) — (Cushion(缓冲)) — (Auto s/w(磁性开关))

Dimensions(mm) (外形尺寸图(毫米))

Double Rod Type(双活塞杆型)
YAM1W,YADM1W

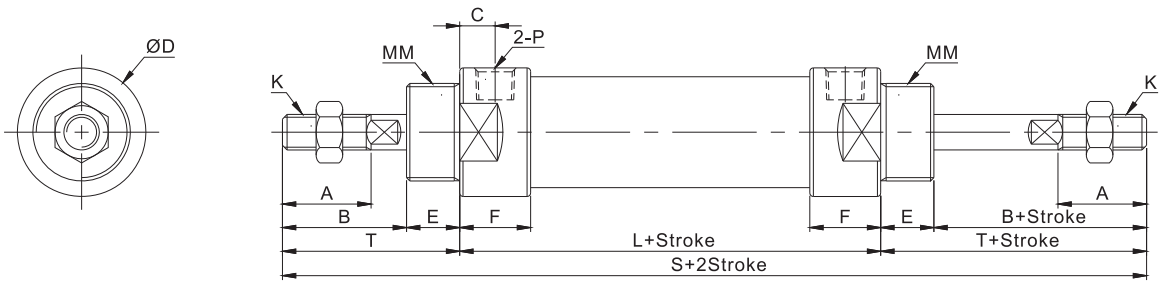

Bore(缸径)	A	B	C	D	E	F	K	L	MM	P(PT)	S	T
ø20	20	28	8	29	12	16	M8×1.25	70	M22×1.5	1/8”	150	40
ø25	22	30	8	34	14	16	M10×1.25	70	M22×1.5	1/8”	158	44
ø32	22	30	8	39.5	14	16	M10×1.25	70	M24×2.0	1/8”	158	44
ø40	24	32	11	49.5	14	22	M12×1.25	92	M30×2.0	1/4”	184	46

Adjustable Stroke Cylinder/Extension Adjustable Type (可调行程气缸/伸出调整型)

YAM1 [Mounting 安装形式] [Bore 缸径] – [Stroke 行程] [Stroke Adjusting Symbol 行程调节] – XC8 – [Cushion 缓冲] – [Auto Switch 磁性开关]

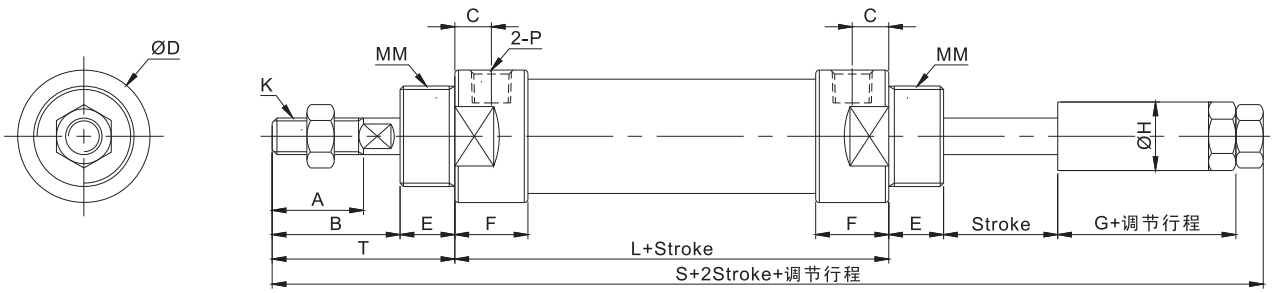

Bore(缸径)	A	B	C	D	E	F	G	H	K	L	MM	P(PT)	S	T
ø20	20	28	8	29	12	16	19	15	M8×1.25	70	M22×1.5	1/8”	147	40
ø25	22	30	8	34	14	16	21	20	M10×1.25	70	M22×1.5	1/8”	155	44
ø32	22	30	8	39.5	14	16	21	20	M10×1.25	70	M24×2.0	1/8”	155	44
ø40	24	32	11	49.5	14	22	21	25	M12×1.25	92	M30×2.0	1/4”	180	46

YAM1,YADM1--S(T)(ø20~ø40) series

HOW TO ORDER(型号表示方法)

YAM1 – (Mounting(附件号)) – (Bore(缸径)) – (Stroke(行程)) (Cushion(缓冲)) – (S(弹簧压回)) – (Auto s/w(磁性开关))

Spring Return Type(弹簧压回)

YAM1B,YADM1B--S

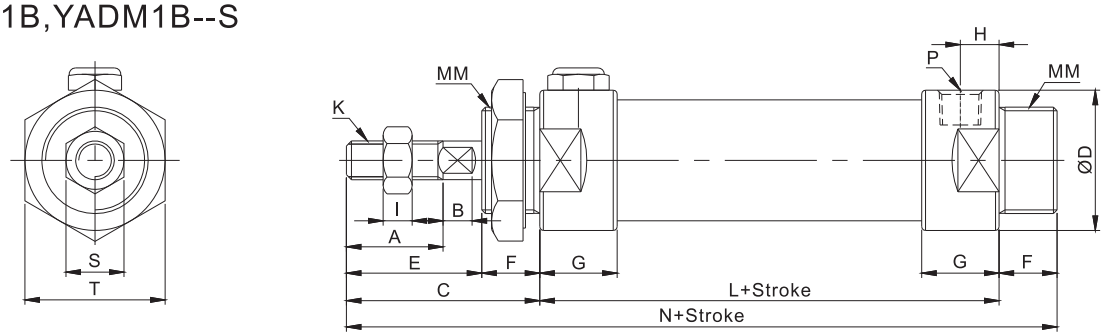

YAM1E,YADM1E--S

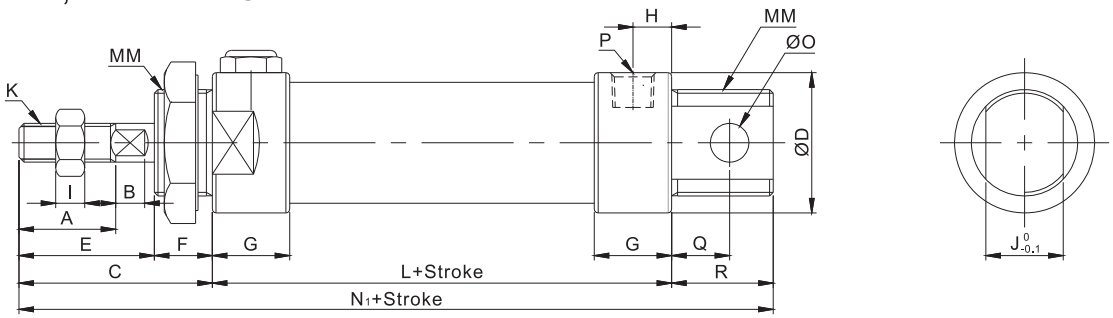

YAM1B,YADM1B--S-XC1

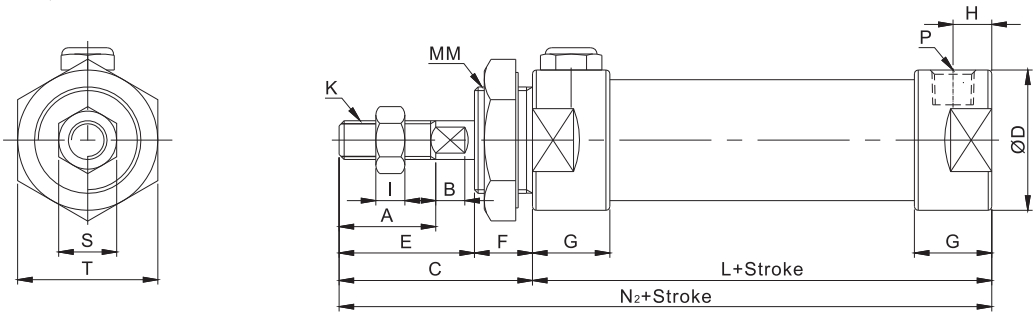

Bore(缸径)	A	B	C	D	E	F	G	H	I	J	K	L		MM	N		N_1	
												0~50	51~100		0~50	51~100	0~50	51~100
ø20	20	5	40	29	28	12	16	8	6	16	M8×1.25	70	95	M22×1.5	122	147	131	156
ø25	22	5.5	44	34	30	14	16	8	6	16	M10×1.25	70	95	M22×1.5	128	153	135	160
ø32	22	5.5	44	39.5	30	14	16	8	6	16	M10×1.25	70	95	M24×2.0	128	153	141	166
ø40	24	7	46	49.5	32	14	22	11	7	20	M12×1.25	92	117	M30×2.0	152	177	165	190

Bore(缸径)	N_2		O	P	Q	R	S	T
	0~50	51~100						
ø20	110	135	8	1/8”	12	21	12	29
ø25	114	139	8	1/8”	12	21	17	29
ø32	114	139	10	1/8”	15	22	17	32
ø40	138	163	12	1/4”	15	27	17	41

YAM1,YADM1--S(T)(ø20~ø40) series

HOW TO ORDER(型号表示方法)

YAM1 – (Mounting(附件号)) – (Bore(缸径)) – (Stroke(行程)) (Cushion(缓冲)) – (T(弹簧压出)) – (Auto s/w(磁性开关))

Spring Extended Type(弹簧压出)

YAM1B,YADM1B--T

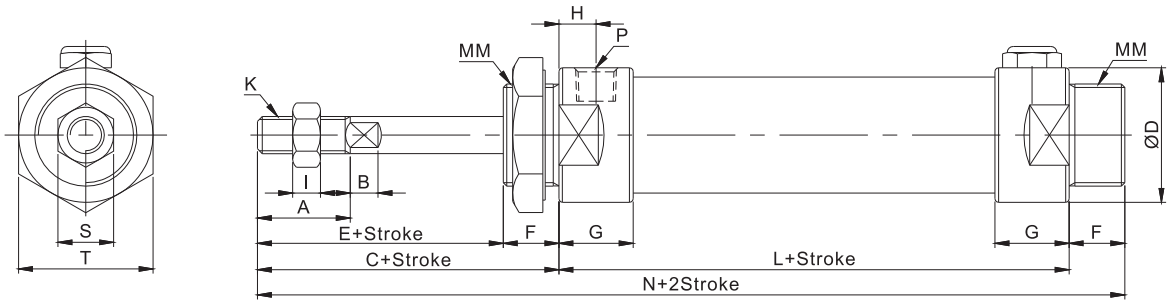

YAM1E,YADM1E--T

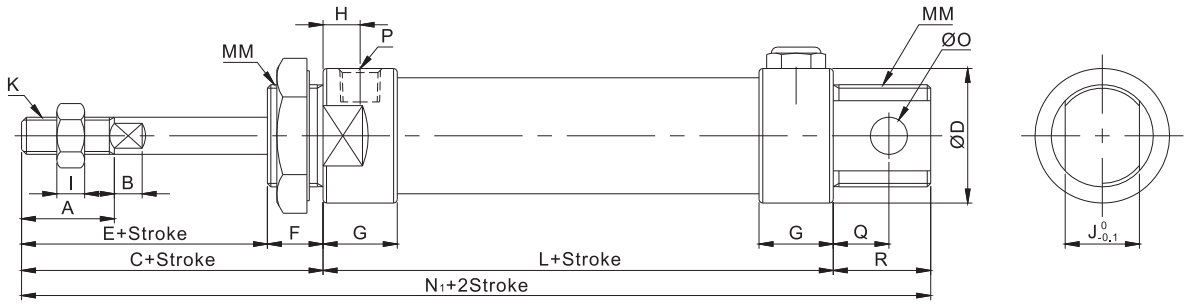

YAM1B,YADM1B--T-XC1

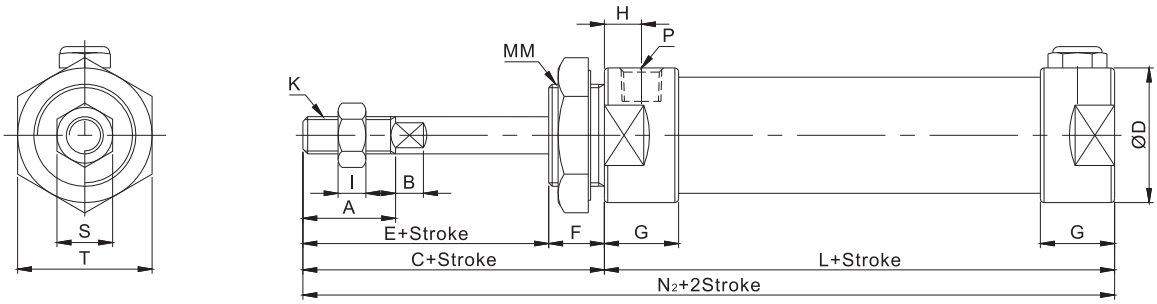

Bore(缸径)	A	B	C	D	E	F	G	H	I	J	K	L				MM	N	
												0~25	26~50	51~75	76~100		0~25	26~50
ø20	20	5	40	29	28	12	16	8	6	16	M8×1.25	85	95	110	120	M22×1.5	137	147
ø25	22	5.5	44	34	30	14	16	8	6	16	M10×1.25	85	95	110	120	M22×1.5	143	153
ø32	22	5.5	44	39.5	30	14	16	8	6	16	M10×1.25	85	95	115	125	M24×2.0	143	153
ø40	24	7	46	49.5	32	14	22	11	7	20	M12×1.25	107	117	137	147	M30×2.0	167	177

Bore(缸径)	N		N_1				N_2				O	P	Q	R	S	T
	51~75	76~100	0~25	26~50	51~75	76~100	0~25	26~50	51~75	76~100						
ø20	162	172	146	156	171	181	125	135	150	160	8	1/8”	12	21	12	29
ø25	168	178	150	160	175	185	129	139	154	164	8	1/8”	12	21	17	29
ø32	173	183	156	166	186	196	129	139	159	169	10	1/8”	15	22	17	32
ø40	197	207	180	190	210	220	153	163	183	193	12	1/4”	15	27	17	41

YSC | Air Cylinder/Small Bore Size(小型标准型气缸,基本内置磁环,无油润滑)

YADM2(ø16~ø40) series

图形符号

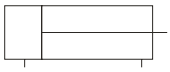

YADM2 ※Series

COMMON SPECIFICATIONS(共同规格)

Bore(缸径)(mm)	16	20	25	32	40
Fluid(流体)	Clean Air(洁净空气)				
Action(动作形式)	Double/Single Acting(双/单动)				
Proof Press.(保证耐压力)	1.5Mpa(15kgf/cm²)				
Max Press.(最高使用压力)	0.99Mpa(9.9kgf/cm²)				
Min Press.(最低使用压力)	0.05Mpa(0.5kgf/cm²)				
Amb.Temp.(环境和流体温度)	-5~+60°C(未冻结)				
Piston Speed(活塞速度)	50~750mm/s				
Cushion(缓冲)	Rubber(STD)两端橡胶缓冲(标准),Air(Option)气缓冲(任选)				
Stroke Tolerance(行程公差)	$^{+1.4}_{0}$				
*Lubrication(润滑)	Non-Lube(不需要)				
Pipe Size(接管口径)Rc(PT)	M5×0.8	1/8"	1/8"	1/8"	1/4"

*Use Turbine Oil 1st-grade ISO VG32#,If Required.(如需要润滑,请用透平1号油 ISO VG32)

Standard Stroke/Auto Switch(行程/磁性开关选择)

Bore (缸径) (mm)	STD Stroke (标准行程)(mm)	Band Mounted(环带安装型)	
		Auto Switch(磁性开关)	Band(开关固定码)
16	25,50,75,100,125,150 200,250,300	D-C72K D-C72KL	YBM2-016
20			YBM2-020
25			YBM2-025
32			YBM2-032
40			YBM2-040

Note(注1):Non STD Stroke Available.(有非标准行程可供选择)
Note(注2):For Auto Switch:Refer to Catalogue Auto Switch Series.
(磁性开关规格及特性可参阅磁性开关系列)
Note(注3):YAM2 Series Tube(ø16,ø20,ø25,ø32,ø40) Is Stainless Steel Tube.
(YAM2系列的缸筒为标准不锈钢材料)

HOW TO ORDER(型号表示方法)

YA D M2 L 32 – 150 A J Y – C72K S – XC1

- YSC Model(代号)
- Mounting(附件号)
  B:Basic Type(基本型)
  E:Integrated Clevis Type (原装单U型钩)
  L:Foot Type(脚座)
  F;Front Flange(杆侧法兰)
  R:Bracket(原装单U型钩接座)
- Bore (缸径)
- Stroke (行程)
- Cushion(缓冲)
  Nil(无记号):Rubber(橡胶缓冲)
  A:Air Cushion(气缓冲)
- Amb.Temp>for Gaiter (伸缩保护套为周围温度)
  Nil(无记号):None(无)
  J:60°C
  K:110°C
- Accessory(附件)
  I=:I Type,Y=Y Type
- Auto Switch(有无磁性开关)
  Nil(无记号):None(无)
  C73K:Reed Switch(有接点磁性开关)
- No.of Auto Switch(开关数量)
  Nil(无记号):2(个)
  S:1(个)
  3:3(个)
- Boss Type(尾部形状)
  Nil(无记号):标准型
  XC1:平尾型

Gaiter Material(伸缩保护套的材质及环境温度)

Code(记号)	Material(伸缩保护套的材质)	Max.Amb.Temp.(环境最高温度)
J	Nylon Tarpaulin(尼龙防水帆布)	60°C
K	Neoprene Cloth(丁橡胶封塞)	110°C

※For Rod Boot Temperature.(伸缩保护套自身的周围最高温度)
25缸径以上可配伸缩保护套

Part No. of Mounting(安装附件型号)

Bore(缸径)(mm)	16	20	25	32	40
Foot(脚座)	YAM2-L016B	YAM2-L020B	YAM2-L025B	YAM2-L032B	YAM2-L040B
Flange(法兰)	YAM2-F016B	YAM2-F020B	YAM2-F025B	YAM2-F032B	YAM2-F040B
Bracket(单U型钩接座)	YAM2-R016B	YAM2-R020B	YAM2-R025B	YAM2-R032B	YAM2-R040B

Dimensions(mm) (外形尺寸图(毫米))

Basic Type(基本型) YADM2B

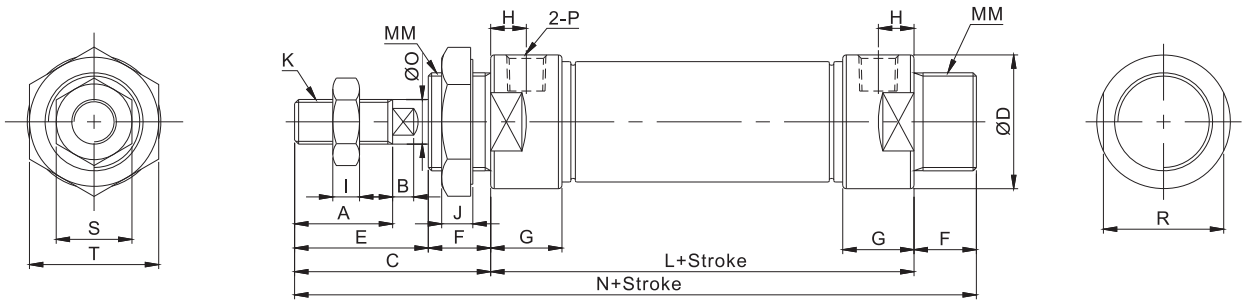

Bore(缸径)	A	B	C	D	E	F	G	H	I	J	K	L	MM	N	O	P	R	S	T
ø16	16	5	38	21	22	16	13	8	5	6	M6×1.0	60	M16×1.5	114	6	M5	18	10	22
ø20	20	5	40	27	28	12	16	8	6	7	M8×1.25	76	M22×1.5	128	8	1/8”	24	12	29
ø25	22	5.5	44	30	30	14	16	8	6	7	M10×1.25	76	M22×1.5	134	10	1/8”	27	17	29
ø32	22	5.5	44	35	30	14	16	8	6	8	M10×1.25	76	M24×2.0	134	12	1/8”	30	17	32
ø40	24	7	46	43.5	32	14	16	11	7	9	M12×1.25	76	M30×2.0	136	16	1/4”	38	17	41

Axial Foot Type(脚座型) YADM2L

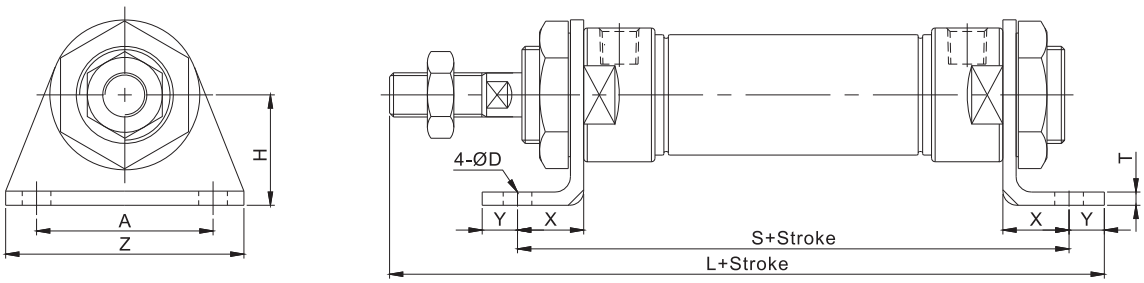

Bore(缸径)	A	D	H	L	S	T	X	Y	Z
ø16	32	5.5	20	117	86	3	13	6	44
ø20	40	6.5	25	147	106	3	15	8	54
ø25	40	6.5	25	151	106	3	15	8	54
ø32	45	6.5	32	161	126	4	25	8	59
ø40	50	6.5	36	163	126	4.5	25	8	64

Front Flange Type(杆端法兰型) YADM2F

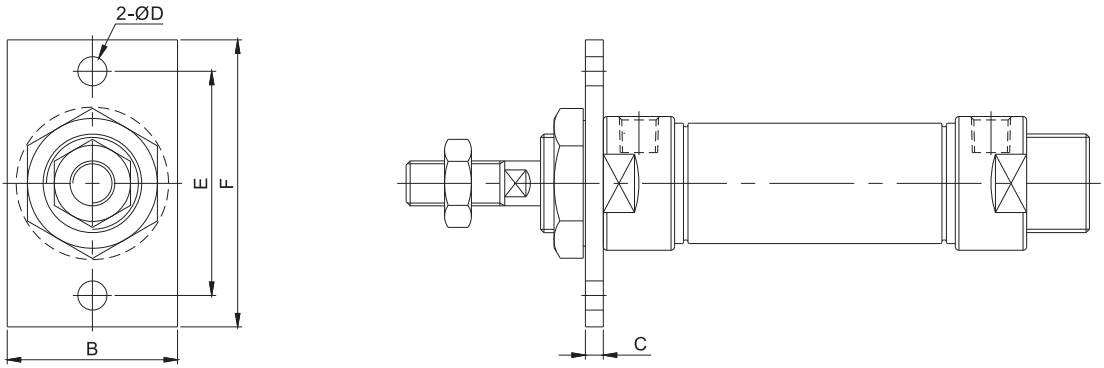

Bore(缸径)	B	C	D	E	F
ø16	26	3	5.5	40	52
ø20	38	4	6.5	50	64
ø25	38	4	6.5	50	64
ø32	47	4	6.5	58	72
ø40	50	4	6.5	70	84

Integrated Double Clevis Type(原装单U型钩型)
YADM2E

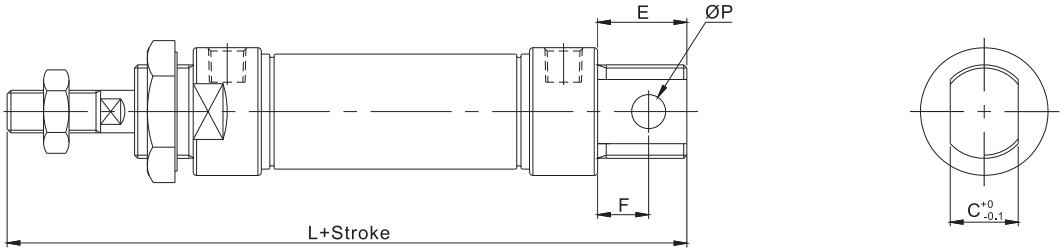

Bore(缸径)	C	E	F	L	P
ø16	12	16	9	114	6
ø20	16	21	12	137	8
ø25	16	21	12	141	8
ø32	16	27	15	147	10
ø40	20	27	15	149	12

Bracket(原装单U型钩接座)
YADM2R

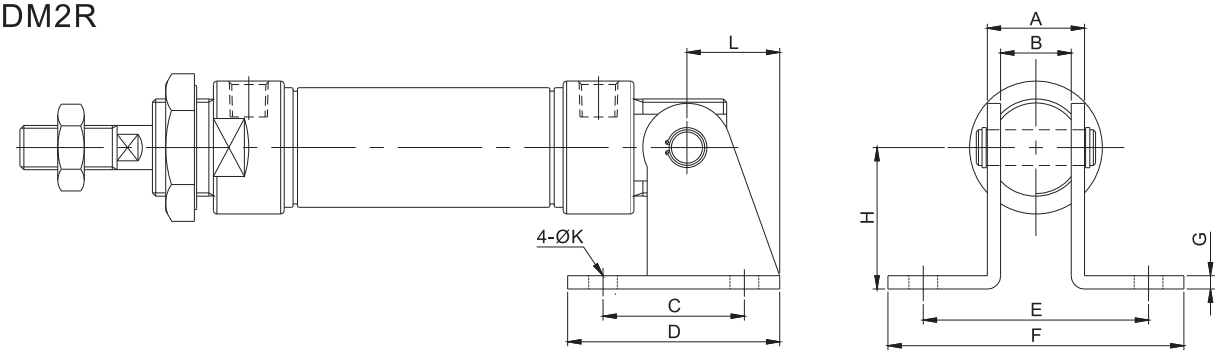

Bore(缸径)	A	B	C	D	E	F	G	H	L	K
ø16	16	12	12	23	-	-	2	20	16	5.5
ø20	22	16	32	48	51	67	3	32	21	6.5
ø25	22	16	32	48	51	67	3	32	21	6.5
ø32	24	16	36	52	51	67	4	36	27	6.5
ø40	28	20	40	56	55	71	4	40	27	6.5

Boss-Cut Type(尾部切削型)

YADM2 [Mounting(安装)] [Bore(缸径)] - [Stroke(行程)] - XC1

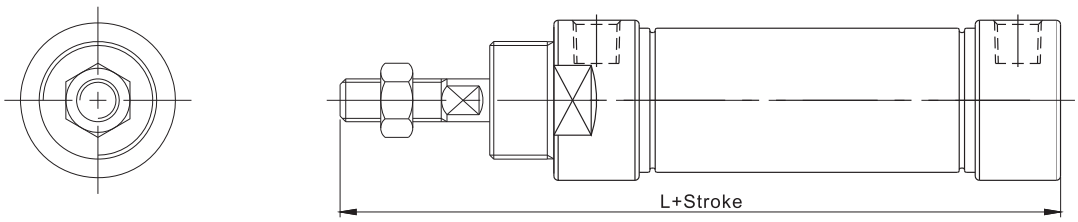

Bore(缸径)	L
ø16	98
ø20	116
ø25	120
ø32	120
ø40	122

※Other dimensions are the same as for standard type.
其它尺寸与标准型相同

HOW TO ORDER(型号表示方法)

YADM2W– (Mounting(附件号)) – (Bore(缸径)) – (Stroke(行程)) – (Cushion(缓冲)) – (Auto s/w(磁性开关))

Dimensions(mm) (外形尺寸图(毫米))

Double Rod Type(双活塞杆型)
YADM2W

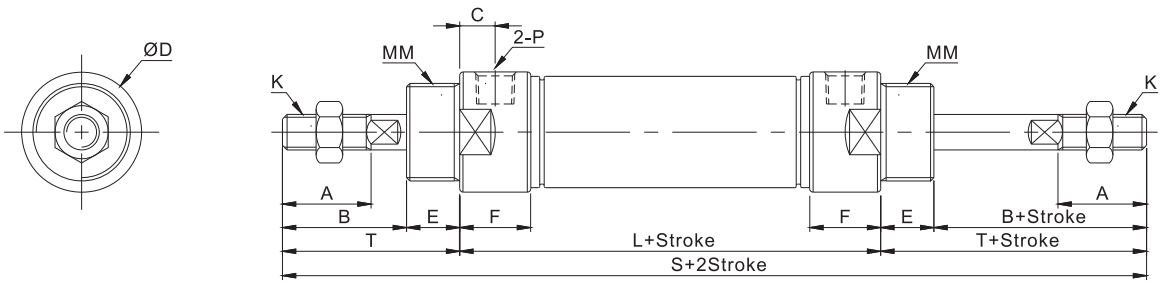

Bore(缸径)	A	B	C	D	E	F	K	L	MM	P(PT)	S	T
ø16	16	22	8	21	16	13	M6×1.0	60	M16×1.5	M5	136	38
ø20	20	28	8	27	12	16	M8×1.25	76	M22×1.5	1/8”	156	40
ø25	22	30	8	30	14	16	M10×1.25	76	M22×1.5	1/8”	164	44
ø32	22	30	8	35	14	16	M10×1.25	76	M24×2.0	1/8”	164	44
ø40	24	32	11	43.5	14	16	M12×1.25	76	M30×2.0	1/4”	168	46

Adjustable Stroke Cylinder/Extension Adjustable Type (可调行程气缸/伸出调整型)

YADM2 [Mounting 安装形式] [Bore 缸径] – [Stroke 行程] [Stroke Adjusting Symbol 行程调节] – XC8 – [Cushion 缓冲] – [Auto Switch 磁性开关]

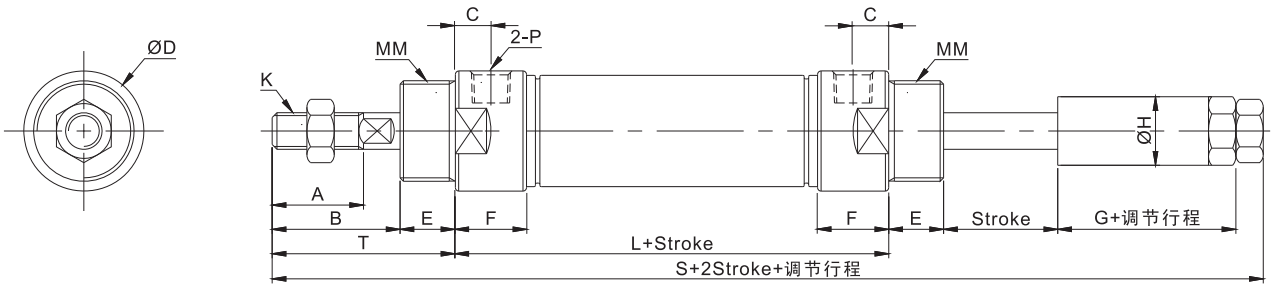

Bore(缸径)	A	B	C	D	E	F	G	H	K	L	MM	P(PT)	S	T
ø16	16	22	8	21	16	13	16	15	M6×1.0	60	M16×1.5	M5	135	38
ø20	20	28	8	27	12	16	19	15	M8×1.25	76	M22×1.5	1/8”	153	40
ø25	22	30	8	30	14	16	21	20	M10×1.25	76	M22×1.5	1/8”	161	44
ø32	22	30	8	35	14	16	21	20	M10×1.25	76	M24×2.0	1/8”	161	44
ø40	24	32	11	43.5	14	16	21	25	M12×1.25	76	M30×2.0	1/4”	164	46

YADM2--S(T)(ø16~ø40) series

HOW TO ORDER(型号表示方法)

YADM2 (Mounting(附件号)) – (Bore(缸径)) – (Stroke(行程)) (Cushion(缓冲)) – (S(弹簧压回)) – (Auto s/w(磁性开关))

Spring Return Type(弹簧压回)

YADM2B--S

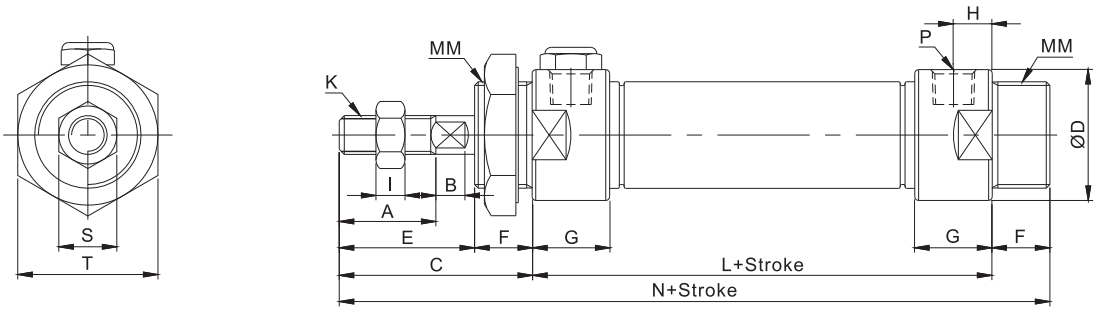

YADM2E--S

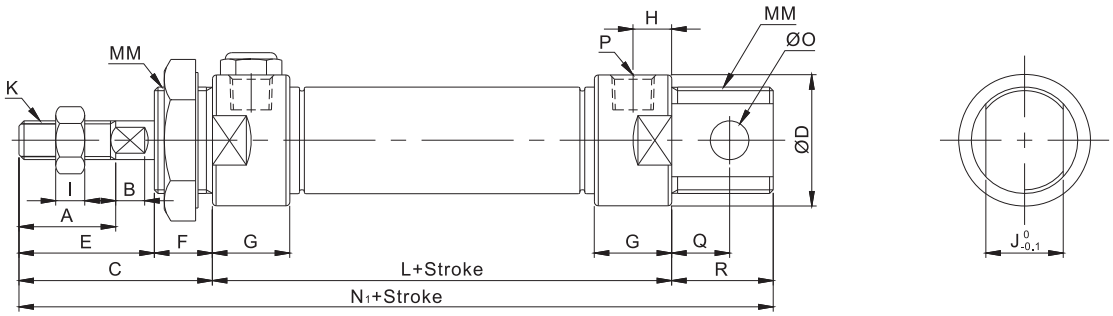

YADM2B--S-XC1

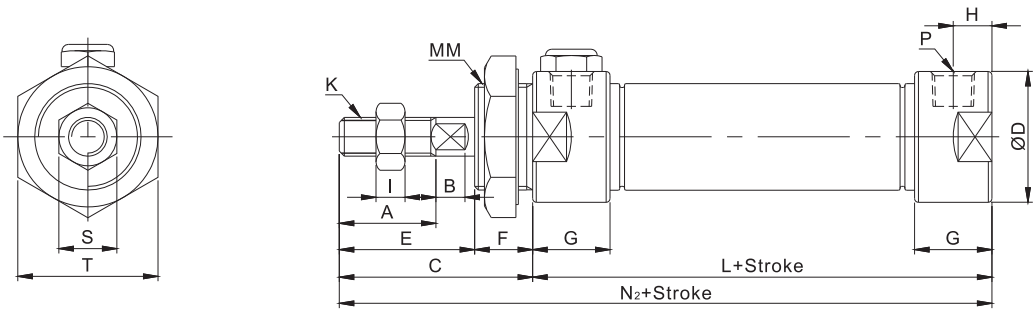

Bore(缸径)	A	B	C	D	E	F	G	H	I	J	K	L		MM	N		N_1	
												0~50	51~100		0~50	51~100	0~50	51~100
ø16	16	4	38	21	22	16	13	8	5	12	M6×1.0	85	110	M16×1.5	139	164	139	164
ø20	20	5	40	27	28	12	16	8	6	16	M8×1.25	101	126	M22×1.5	153	178	162	187
ø25	22	5.5	44	30	30	14	16	8	6	16	M10×1.25	101	126	M22×1.5	159	184	166	191
ø32	22	5.5	44	35	30	14	16	8	6	16	M10×1.25	101	126	M24×2.0	159	184	172	197
ø40	24	7	46	43.5	32	14	16	11	7	20	M12×1.25	101	126	M30×2.0	161	186	174	199

Bore(缸径)	N_2		O	P	Q	R	S	T
	0~50	51~100						
ø20	123	148	6	M5	9	16	10	22
ø20	141	166	8	1/8”	12	21	12	29
ø25	145	170	8	1/8”	12	21	17	29
ø32	145	170	10	1/8”	15	22	17	32
ø40	147	172	12	1/4”	15	27	17	41

YADM2--S(T)(ø16~ø40) series

HOW TO ORDER(型号表示方法)

YADM2 (Mounting(附件号)) – (Bore(缸径)) – (Stroke(行程)) (Cushion(缓冲)) – (T(弹簧压出)) – (Auto s/w(磁性开关))

Spring Extended Type(弹簧压出)

YADM2B--T

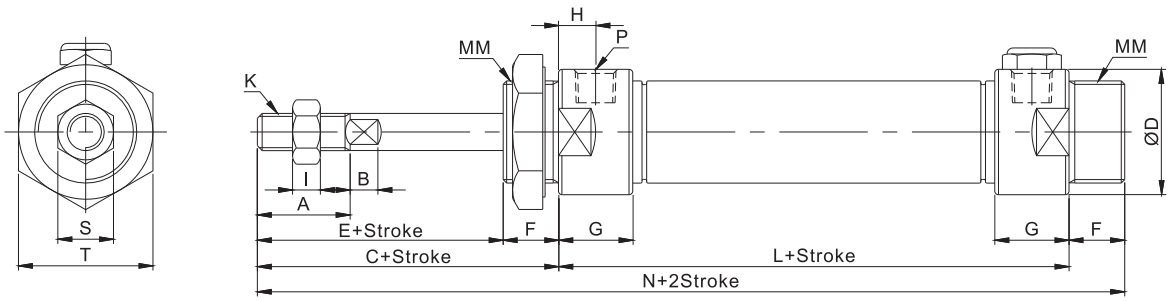

YADM2E--T

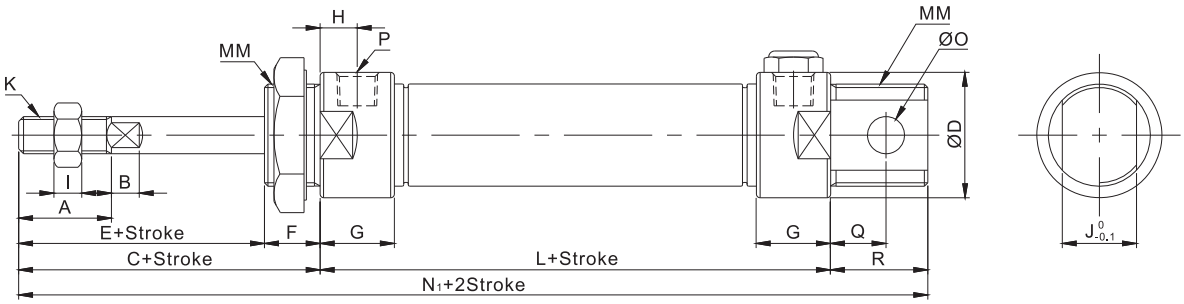

YADM2B--T-XC1

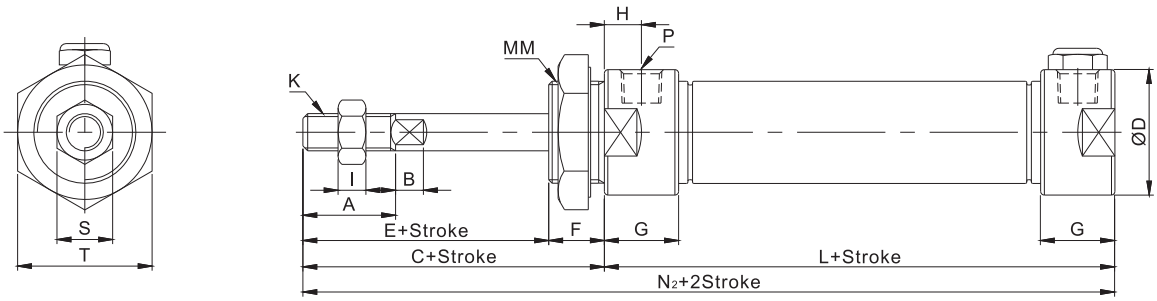

Bore(缸径)	A	B	C	D	E	F	G	H	I	J	K	L				MM	N	
												0~25	26~50	51~75	76~100		0~25	26~50
ø16	16	4	38	21	22	16	13	8	5	12	M6×1.0	75	85	100	110	M16×1.5	129	139
ø20	20	5	40	27	28	12	16	8	6	16	M8×1.25	91	101	116	126	M22×1.5	143	153
ø25	22	5.5	44	30	30	14	16	8	6	16	M10×1.25	91	101	116	126	M22×1.5	149	159
ø32	22	5.5	44	35	30	14	16	8	6	16	M10×1.25	91	101	121	121	M24×2.0	149	159
ø40	24	7	46	43.5	32	14	16	11	7	20	M12×1.25	91	101	121	131	M30×2.0	151	161

Bore(缸径)	N		N_1				N_2				O	P	Q	R	S	T
	51~75	76~100	0~25	26~50	51~75	76~100	0~25	26~50	51~75	76~100						
ø16	154	164	129	139	154	164	113	123	138	148	6	M5	9	16	10	22
ø20	168	178	152	162	177	187	131	141	156	166	8	1/8”	12	21	12	29
ø25	174	184	156	166	181	191	135	145	160	170	8	1/8”	12	21	17	29
ø32	179	179	162	172	192	192	135	145	165	165	10	1/8”	15	22	17	32
ø40	181	291	164	174	294	204	137	147	167	177	12	1/4”	15	27	17	41

YSC Direct Mounting Cylinder(直接安装气缸)
YADM2R(ø20~ø40)series

图形符号

- Space Saving Design.
- Built-in Magnet(STD)
- Non Lube Type.
- Compact and Light Weight.

- 节省空间
- 内置磁环(标准)
- 不锈钢缸筒,无油润滑,使用寿命长
- 结构紧凑,重量轻

COMMON SPECIFICATIONS(共同规格)

Fluid(流体)	Clean Air(洁净空气)
Action(动作形式)	Double/Single Acting(双/单动)
Proof Press.(保证耐压力)	1.5Mpa(15kgf/cm²)
Max Press.(最高使用压力)	0.99Mpa(9.9kgf/cm²)
Min Press.(最低使用压力)	0.05Mpa(0.5kgf/cm²)
Amb.Temp.(环境和流体温度)	-5~+60°C(未冻结)
Cushion(缓冲)	Rubber(STD)两端橡胶缓冲(标准),Air(Option)气缓冲(任选)
Stroke Tolerance(行程公差)	$^{+1.4}_{0}$

PISTON SPEED(活塞速度)

Bore(缸径)(mm)	20	25	32	40
Piston Speed(活塞速度)	50~750mm/s			

STD STROKE (标准行程表)

Bore(缸径)	Stroke (标准行程)
20	25,50,75,100,125,150
25	25,50,75,100,125,150,200
32	25,50,75,125,150,200
40	25,50,75,100,125,150,200,250,300

HOW TO ORDER (型号表示方法)

YADM2R A 20 – 100 – C72K S

Auto Swith Type
(内置磁环)

Mouting (安装形式)
A:Bottom Mouting
(底部安装型)
B:Front Mounting
(面部安装型)

Bore(气缸)
20: 20mm
25: 25mm
32: 32mm
40: 40mm

Stroke(行程)

Auto Switch(磁性开关种类)

No.of Switch(磁性开关数量)
Nil(无记号):2(个)
S: 1(个)
n: n(个)

Dimensions(mm) (外形尺寸图(毫米)) YADM2RA

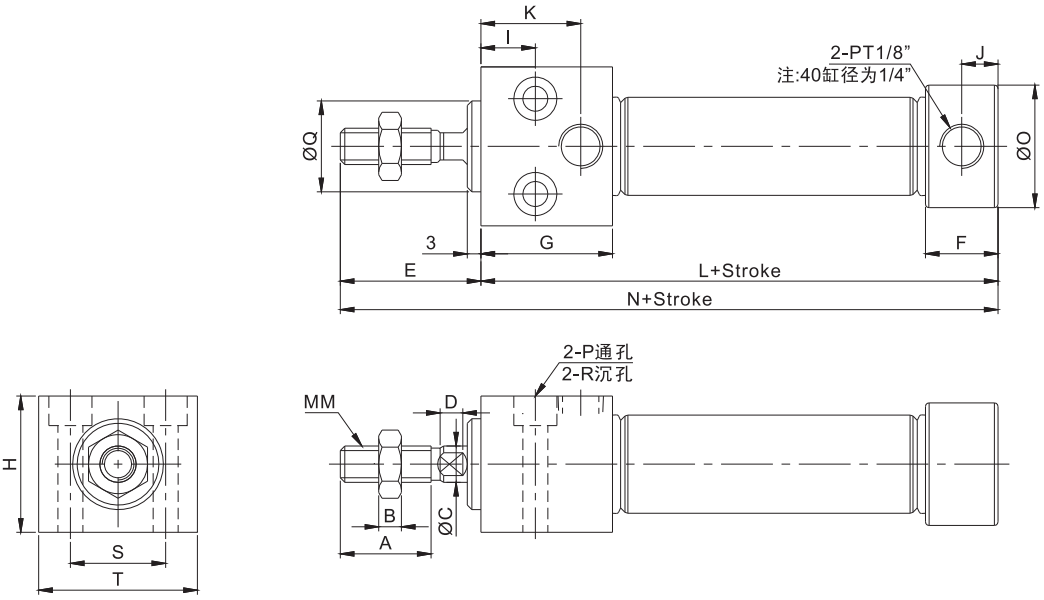

Bore(缸径)	A	B	C	D	E	F	G	H	I	J	K	L	MM	N	O	P	Q	R	S	T
ø20	20	5	8	5	31	16	29	30.3	12	8	22	89	M8×1.25	120	27	ø5.5	20	ø9.5深6.5	21	33
ø25	21	6	10	5.5	33	16	29	36.3	12	8	22	89	M10×1.25	122	30	ø6.6	26	ø11深7.5	30	39
ø32	21	6	12	5.5	33	16	29	42.3	12	8	22	89	M10×1.25	122	35	ø9	26	ø14深10	30	47
ø40	23	7	16	7	35	16	37.5	52.3	15	8	27	98	M12×1.25	133	43.5	ø11	32	ø17.5深12.5	38	58.5

Dimensions(mm) (外形尺寸图(毫米)) YADM2RB

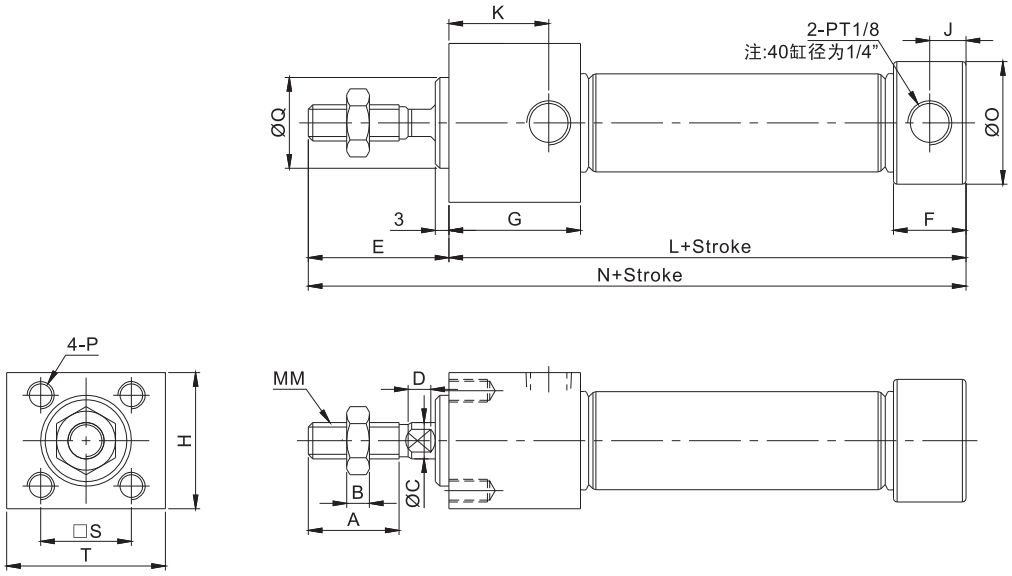

Bore(缸径)	A	B	C	D	E	F	G	H	J	K	L	MM	N	O	P	Q	S	T
ø20	20	5	8	5	31	16	29	30.3	8	22	89	M8×1.25	120	27	M5×0.8深9	20	22	33
ø25	21	6	10	5.5	33	16	29	36.3	8	22	89	M10×1.25	122	30	M6×1.0深11	26	26	39
ø32	21	6	12	5.5	33	16	29	42.3	8	22	89	M10×1.25	122	35	M6×1.0深11	26	30	47
ø40	23	7	16	7	35	16	37.5	52.3	8	27	98	M12×1.25	133	43.5	M8×1.25深14	32	36	58.5

YSC | Air Cylinder/Small Bore Size(小型标准型气缸,无油润滑)
YCM1,YCDM1(ø20~ø40) series

图形符号

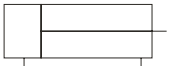

YCM1 ※Series

COMMON SPECIFICATIONS(共同规格)

Bore(缸径)(mm)	20	25	32	40
Fluid(流体)	Clean Air(洁净空气)			
Action(动作形式)	Double Acting(双动)			
Proof Press.(保证耐压力)	1.5Mpa(15kgf/cm²)			
Max Press.(最高使用压力)	0.99Mpa(9.9kgf/cm²)			
Min Press.(最低使用压力)	0.05Mpa(0.5kgf/cm²)			
Amb.Temp.(环境和流体温度)	-5~+60°C(未冻结)			
Piston Speed(活塞速度)	50~750mm/s			
Cushion(缓冲)	Rubber(STD)两端橡胶缓冲(标准),Air(Option)气缓冲(任选)			
Stroke Tolerance(行程公差)	$^{+1.4}_{0}$			
*Lubrication(润滑)	Non-Lube(不需要)			
Pipe Size(接管口径)Rc(PT)	1/8"	1/8"	1/8"	1/4"

*Use Turbine Oil 1st-grade ISO VG32#,If Required.(如需要润滑,请用透平1号油 ISO VG32)

Standard Stroke/Auto Switch(行程/磁性开关选择)

Bore (缸径) (mm)	STD Stroke (标准行程)(mm)	Band Mounted(环带安装型)	
		Auto Switch(磁性开关)	Band(开关固定码)
20	25,50,75,100,125,150 200,250,300	D-C72K D-C72KL	YBM1-020
25			YBM1-025
32			YBM1-032
40			YBM1-040

Note(注1):Non STD Stroke Available.(有非标准行程可供选择)
Note(注2):For Auto Switch:Refer to Catalogue Auto Switch Series.
(磁性开关规格及特性可参阅磁性开关系列)
Note(注3):YCM1 Series Tube(ø20,ø25,ø32,ø40) Is Aluminum Tube.
(YCM1系列的缸筒为标准铝合金材料)

HOW TO ORDER(型号表示方法)

YC D M1 L 32 – 150 A J Y – C72K S – XC1

- YSC Model(代号)
- Magnet(有无磁环)
  Nil(无记号): Non(无磁环)
  D: Built-in Magnet(有磁环)
- Mounting (附件号)
  B: Basic Type (基本型)
  E: Integrated Clevis Type (原装单U型钩)
  L: Foot Type(脚座)
  F: Front Flange(杆侧法兰)
  G: Rear Flange(后法兰)
  C: Single Clevis (单U型钩)
  D: Double Clevis (双U型钩)
  T: Front Trunnion(杆侧轴耳)
  U: Rear Trunnion(后侧轴耳)
- Bore (缸径)
- Stroke (行程)
- Cushion(缓冲)
  Nil (无记号)： Rubber (橡胶缓冲)
  A: Air Cushion (气缓冲)
- Amb. Temp. for Gaiter (伸缩保护套为周围温度)
  Nil(无记号)： None(无)
  J: 60℃
  K: 110℃
- Accessory(附件)
  I=I Type(型)，Y=Y Type(型)
- Auto Switch (有无磁性开关)
  Nil(无记号)： None(无开关)
  C73K:Reed Switch(有接点磁性开关)
- No.of Auto Switch(开关数量)
  Nil(无记号): 2(个)
  S: 1(个)
  3: 3(个)
- Boss Type(尾部形状)
  Nil(无记号):标准型
  XC1:平尾型

Gaiter Material(伸缩保护套的材质及环境温度)

Code(记号)	Material(伸缩保护套的材质)	Max.Amb.Temp.(环境最高温度)
J	Nylon Tarpaulin(尼龙防水帆布)	60°C
K	Neoprene Cloth(丁橡胶封塞)	110°C

※For Rod Boot Temperature.(伸缩保护套自身的周围最高温度)

Part No. of Mounting(安装附件型号)

Bore(缸径)(mm)	20	25	32	40
Foot(脚座)	YCM1-L020B	YCM1-L025B	YCM1-L032B	YCM1-L040B
Flange(法兰)	YCM1-F020B	YCM1-F025B	YCM1-F032B	YCM1-F040B
Single Clevis(单U型钩)	YCM1-C020B	YCM1-C025B	YCM1-C032B	YCM1-C040B
Double Clevis(双U型钩)	YCM1-D020B	YCM1-D025B	YCM1-D032B	YCM1-D040B
Trunnion(轴耳(带螺母))	YCM1-T020B	YCM1-T025B	YCM1-T032B	YCM1-T040B

Dimensions(mm) (外形尺寸图(毫米))

Basic Type(基本型) YCM1B,YCDM1B

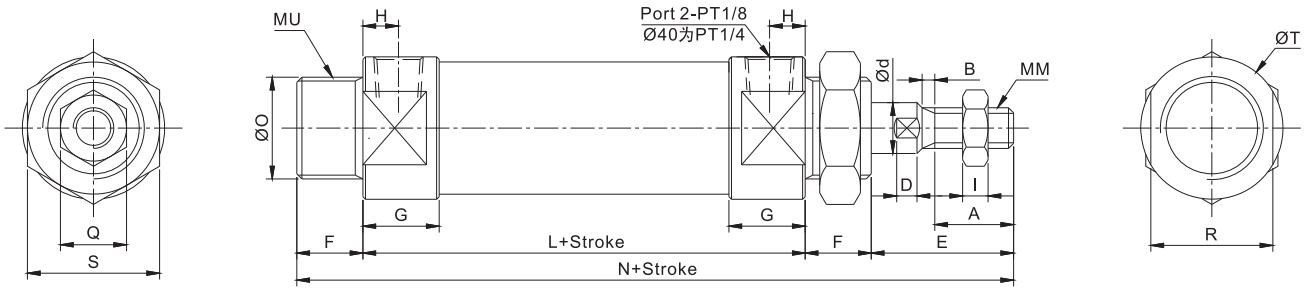

Bore(缸径)	A	B	D	E	F	G	H	I	L	N	ød	øO	Q	MM	MU	R	S	øT
ø20	15.5	2.5	5	28	13	15	8	5	62	116	8	$20^{0}_{-0.033}$	13	M8*1.25	M20*1.5	24	26	28
ø25	19.5	2.5	5.5	32	13	15	8	6	62	120	10	$26^{0}_{-0.033}$	17	M10*1.25	M26*1.5	30	32	34
ø32	19.5	2.5	5.5	32	13	15	8	6	64	122	12	$26^{0}_{-0.033}$	17	M10*1.25	M26*1.5	32	32	38
ø40	21	3	7	34	16	21.5	11	8	88	154	14	$32^{0}_{-0.033}$	22	M14*1.5	M32*2	46	41	50

Axial Foot Type(脚座型) YCM1L,YCDM1L

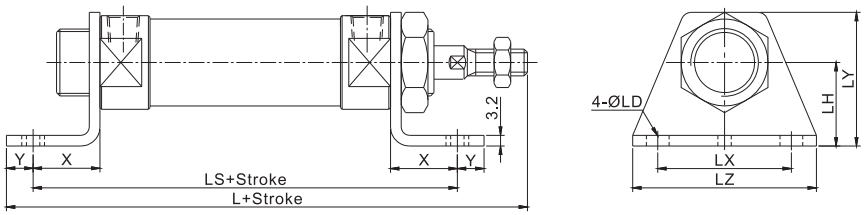

Bore(缸径)	L	LS	ΦLD	LH	LX	LY	LZ	X	Y
ø20	131	102	6.8	25	40	40	55	20	8
ø25	135	102	6.8	28	40	47	55	20	8
ø32	137	104	6.8	28	40	47	55	20	8
ø40	171	134	7	30	55	54	75	23	10

Front Flange Type(杆端法兰型)

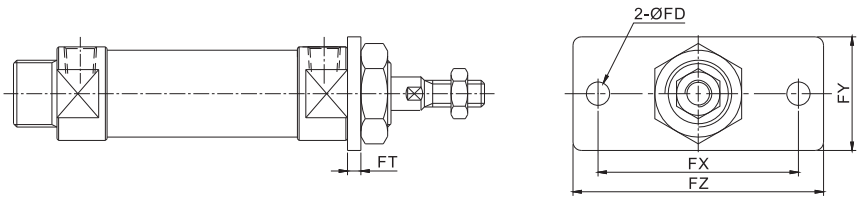

Bore(缸径)	ΦFD	FT	FX	FY	FZ
ø20	7	4	60	34	75
ø25	7	4	60	40	75
ø32	7	4	60	40	75
ø40	7	5	66	52	82

Rear Flange Type (后法兰型) YCM1G,YCDM1G

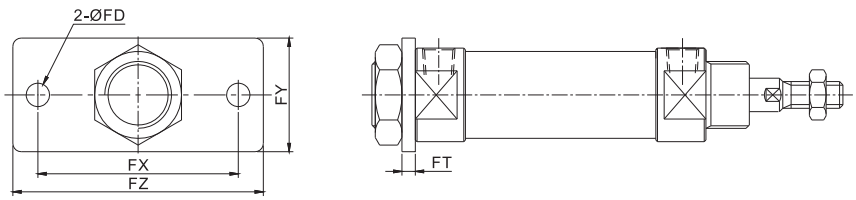

Bore(缸径)	ΦFD	FT	FX	FY	FZ
ø20	7	4	60	34	75
ø25	7	4	60	40	75
ø32	7	4	60	40	75
ø40	7	5	66	52	82

Single Clevis Type(单U型钩型)
YCM1C,YCDM1C

Bore(缸径)	L	LL	A	U	R	ΦCD	CX
ø20	133	142	30	14	9	9	10
ø25	137	146	30	14	9	9	10
ø32	139	148	30	14	9	9	10
ø40	177	188	39	18	11	10	15

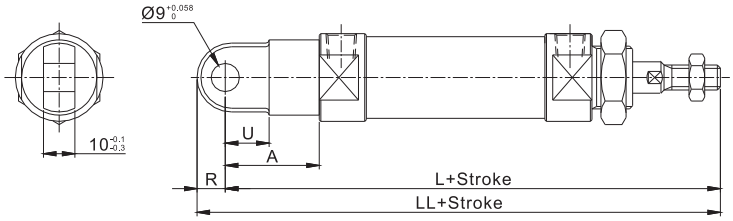

Double Clevis Type(双U型钩型)
YCM1D,YCDM1D

Bore(缸径)	L	LL	A	U	R	ΦCD	CX	CZ
ø20	133	142	30	14	9	9	10	19
ø25	137	146	30	14	9	9	10	19
ø32	139	148	30	14	9	9	10	19
ø40	177	188	39	18	11	10	15	30

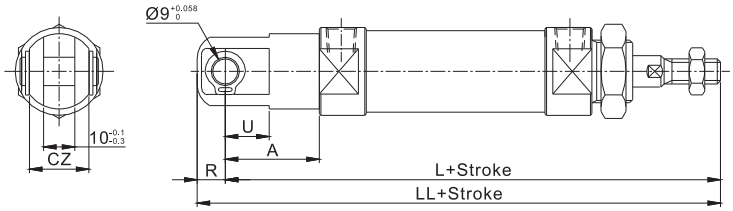

Trunnion Type(后侧轴耳型)
YCM1U,YCDM1U

Bore(缸径)	L	LL	ΦTD	TT	TX	TY	TZ
ø20	108	116	8	10	32	32	52
ø25	112	120	9	10	40	40	60
ø32	114	122	9	10	40	40	60
ø40	143.5	154	10	11	53	53	77

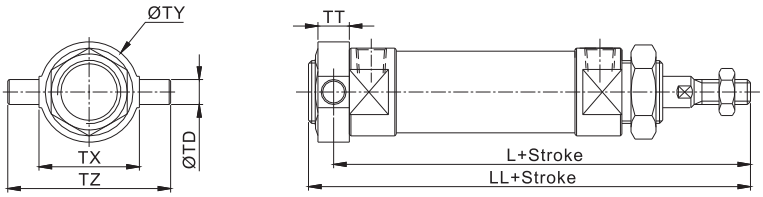

Front Trunnion Type(杆侧轴耳型)
YCM1T,YCDM1T

Bore(缸径)	L	ΦTD	TT	TX	TY	TZ
ø20	36	8	10	32	32	52
ø25	40	9	10	40	40	60
ø32	40	9	10	40	40	60
ø40	44.5	10	11	53	53	77

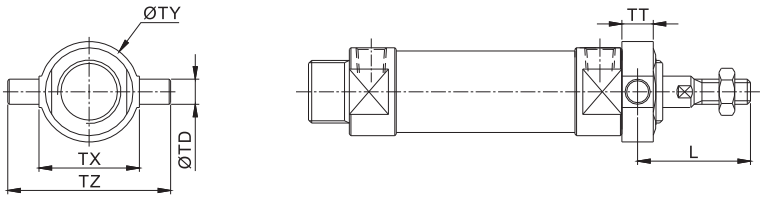

Integrated Double Clevis Type
(原装单U型钩型)
YCM1E,YCDM1E

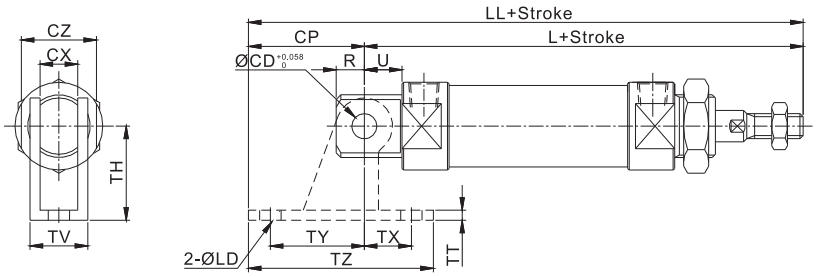

Bore(缸径)	L	R	U	ΦCD	CX	CZ	LL	ΦLD	TH	CP	TV	TX	TY	TZ	TT
ø20	115	9	11.5	8	12	24	152	6.8	30	37	18.4	15	30	59	3.2
ø25	119	9	11.5	8	12	30	156	6.8	30	37	18.4	15	30	59	3.2
ø32	124	12	14.5	10	20	34.5	174	9	40	50	28	15	40	75	4
ø40	153	12	14.5	10	20	42.5	203	9	40	50	28	15	40	75	4

YCM1W,YCDM1W(ø20~ø40) series

HOW TO ORDER(型号表示方法)

YCM1W—(Mounting(附件号))—(Bore(缸径)) x (Stroke(行程))—(Cushion(缓冲))—(Auto s/w(磁性开关))

COMMON SPECIFICATIONS(共同规格)

Bore(缸径)(mm)	20	25	32	40
Fluid(流体)	Clean Air(洁净空气)			
Action(动作形式)	Double Acting(双动)			
Proof Press.(保证耐压力)	1.5Mpa(15kgf/cm²)			
Max Press.(最高使用压力)	0.99Mpa(9.9kgf/cm²)			
Min Press.(最低使用压力)	0.05Mpa(0.5kgf/cm²)			
Amb.Temp.(环境和流体温度)	-10~+70°C			
Piston Speed(活塞速度)	50~750mm/s			
Cushion(缓冲)	Rubber(STD)两端橡胶缓冲(标准),Air(Option)气缓冲(任选)			
Stroke Tolerance(行程公差)	$^{+1.4}_{0}$			
*Lubrication(润滑)	Non-Lube(不需要)			
Pipe Size(接管口径)Rc(PT)	1/8"	1/8"	1/8"	1/4"

*Use Turbine Oil 1st-grade ISO VG32#,If Required.(如需要润滑,请用透平1号油 ISO VG32)

Symbol

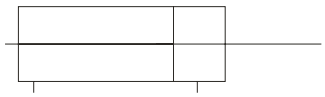

Dimensions(mm) (外形尺寸图(毫米))

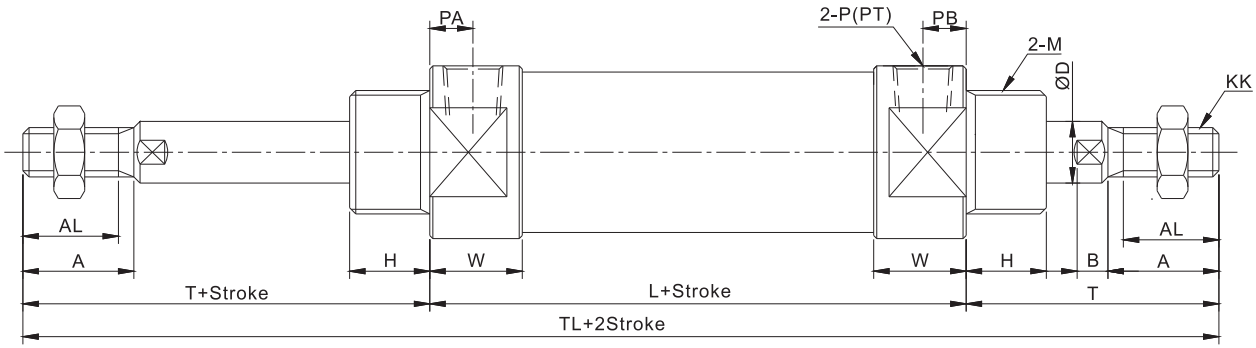

Unit:mm

Bore (mm)	Stroke	AL	A	B	øD	H	KK	L	M	P(PT)	PA	PB	T	TL	W
20	~300	15.5	18	5.0	8	13	M8×1.25	62	M20×1.5	1/8	8	8	41	144	15
25	~300	19.5	22	5.5	10	13	M10×1.25	62	M26×1.5	1/8	8	8	45	152	15
32	~300	19.5	22	5.5	12	13	M10×1.25	64	M26×1.5	1/8	8	8	45	154	15
40	~300	21.0	24	7.5	14	16	M14×1.50	88	M32×2.0	1/4	11	11	50	188	21

Adjustable Stroke Cylinder/Extension Adjustable Type (可调行程气缸/伸出调整型)

YCM1 | Mounting 安装 | Type 型式 | Bore Size 缸径 — Stroke 行程 | Adjusting Symbol 附件 | Stroke Adjusting Symbol 行程调节 — XC8

Additional 附件
Blank-Without gaiter 无-无伸缩套
J-With gaiter(Nylon Tarpaulin)有伸缩套(尼龙防水)
K-With gaiter(Neperence Cloth)有伸缩套(氯丁橡胶外层)

Stroke Adjusting Sybol 行程调节
A–Stroke Adjusting Range 0~25mm
行程可调范围0~25mm
B–Stroke Adjusting Range 0~50mm
行程可调范围0~50mm

The Extended Stroke of the cylinder can be sdjusted by the stopper in the head side.
可以通过头盖挡块将气缸伸出行程进行调节。

Symbol 符号

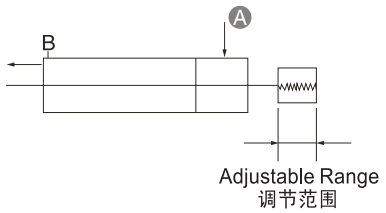

Specifications 规格

Fluid(流体)	Clean Air(洁净空气)
Proof Press.(保证耐压力)	200 PS(1.5Mpa)
Max Press.(最高使用压力)	140 PS(1.0Mpa)
Min Press.(最低使用压力)	7 PS(0.05Mpa)
Piston Speed(活塞速度)	50~750mm/s
Cushion(缓冲)	Rubber Cushion(Standard)橡胶缓冲(标准)
Stroke Adjusting System行程调节装置	Adjusting Stopper 调节挡块
Stroke Adjusting Range行程调节范围	A:0~25mm,B0~50mm
Mounting 安装	Basic Type,Foot Type,Rod Side Flange Type Head Side Flange Type,Rod Size Trunnion Type 基本型，脚座型，杆侧法兰型，头端侧法兰型，杆侧轴耳型
Applicable Bore Size(mm)适用缸径	ø20,ø25,ø32,ø40
Stroke 行程	~300mm

Construction, Dimensions/Basic Type (结构尺寸,尺寸/基本型)

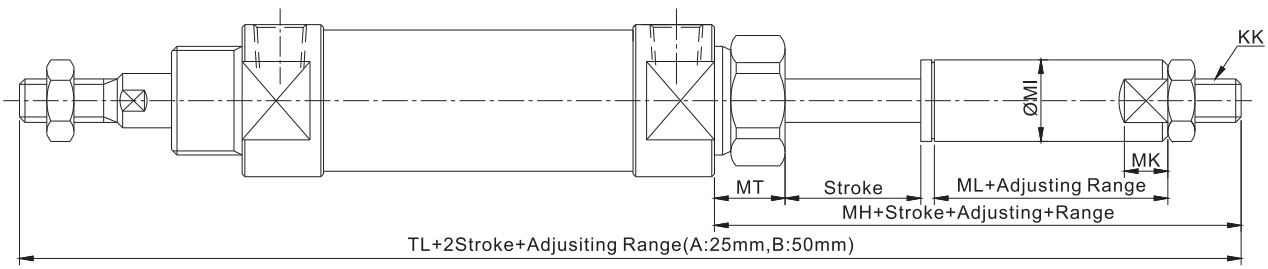

Bore Size (mm)	MA	KK	MK	MI	MT	MH	ML	TL
20	12	M8×1.25	8	15	16.5	47	18	150
25	17	M10×1.25	10	20	17.5	49	18	156
32	17	M10×1.25	10	20	17.5	49	18	158
40	22	M14×1.50	12	25	21.5	60	22	198

※Other dimensions are the same as for standard type.
其它尺寸与标准相同

Single Knuckle Joint(Rod End Drawing)(带I型单轴接头气缸杆端尺寸)

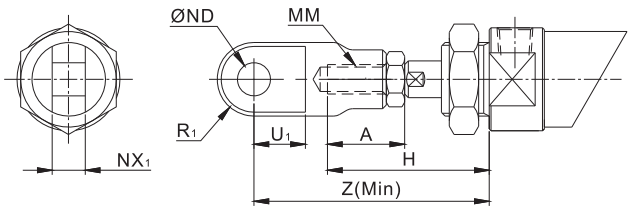

Bore(缸径)	A	H	MM	øND$_{H10}$	NX$_1$	U$_1$	R$_1$	Z
20	18	41	M8×1.25	$9^{+0.0058}_{0}$	$9^{-0.1}_{-0.2}$	14	10	66
25,32	22	45	M10×1.25	$9^{+0.0058}_{0}$	$9^{-0.1}_{-0.2}$	14	10	69
40	24	50	M14×1.5	$12^{+0.0058}_{0}$	$16^{-0.1}_{-0.2}$	20	15.5	92

Single Knuckle Joint Dimensions(mm)(I型单轴节接头尺寸)

I-020B,032B,040B

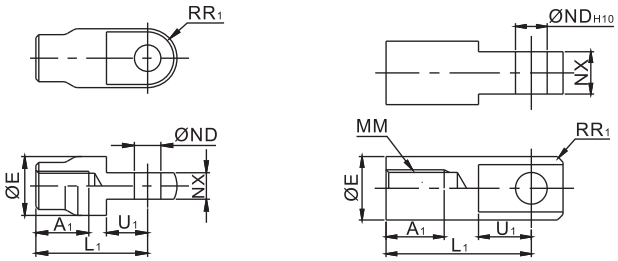

Part No.(型号)	Bore(缸径)	A$_1$	E	L$_1$	MM	øND$_{H10}$	NX	U$_1$	R$_1$
I-020B	20	16	20	36	M8×1.25	$9^{+0.0058}_{0}$	$9^{-0.1}_{-0.2}$	10	14
I-032B	25,32	18	22	38	M10×1.25	$9^{+0.0058}_{0}$	$9^{-0.1}_{-0.2}$	10	14
I-040B	40	22	24	55	M14×1.5	$12^{+0.0058}_{0}$	$16^{-0.1}_{-0.2}$	15.5	20

Double Knuckle Joint(Rod End Drawing)(带Y型双轴接头气缸杆端尺寸)

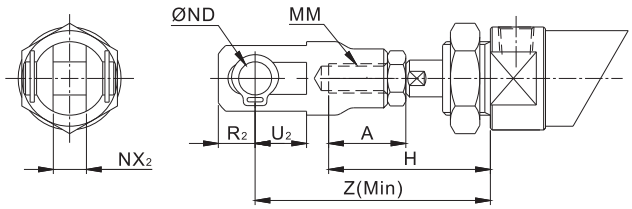

Bore(缸径)	A	H	MM	øND$_{H10}$	NX$_2$	U$_2$	R$_2$	Z
20	18	41	M8×1.25	$9^{+0.0058}_{0}$	$9^{-0.1}_{-0.2}$	14	10	66
25,32	22	45	M10×1.25	$9^{+0.0058}_{0}$	$9^{-0.1}_{-0.2}$	14	10	69
40	24	50	M14×1.5	$12^{+0.0058}_{0}$	$16^{-0.1}_{-0.2}$	25	13	92

Double Knuckle Joint Dimensions(mm)(Y型双轴节接头尺寸)

Y-020B,032B　　Y-040B

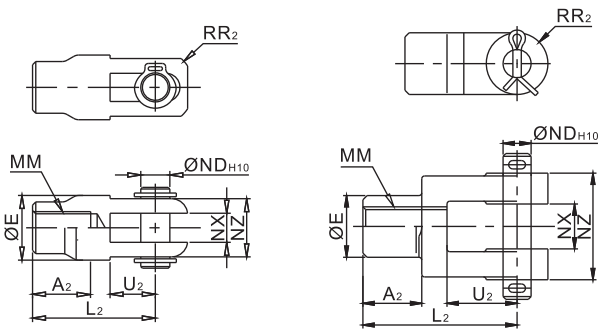

Part No.(型号)	Bore(缸径)	A$_2$	E	L$_2$	MM	øND$_{H10}$	NX	NZ	U$_2$	R$_2$	
Y-020B	20	16	20	36	M8×1.25	$9^{+0.0058}_{0}$	$9^{-0.1}_{-0.2}$	18	14	12	YCDP-1
Y-032B	25,32	18	22	38	M10×1.25	$9^{+0.0058}_{0}$	$9^{-0.1}_{-0.2}$	18	14	12	YCDP-1
Y-040B	40	22	24	55	M14×1.5	$12^{+0.0058}_{0}$	$16^{-0.1}_{-0.2}$	38	20	13	YCDP-3

Knuckle Joint Pin(单(双)U型钩及肘节接头销子)

Applicable Cylinder Bore(适合缸径):ø40

YCDP-2

Material(材质):Carbon Steel(碳钢)

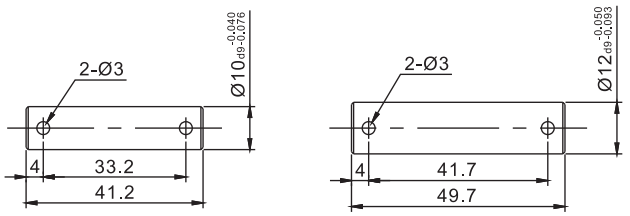

Stopper Pin(分割针) : φ3x18L

Knuckle Joint Pin(单(双)U型钩及肘节接头销子)

Applicable Cylinder Bore(适合缸径):ø20,ø25,ø32

YCDP-1

Material(材质):Carbon Steel(碳钢)

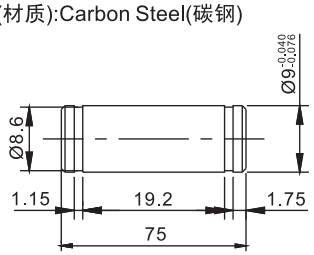

Stopper : C Ring No.9 (挡圈:轴用C型9)

YSC | Air Cylinder/Small Bore Size(小型标准型气缸,基本内置磁环,无油润滑)

YCM2,YCDM2(ø20~ø40) series

图形符号

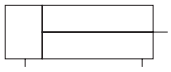

YCM2 ※Series

COMMON SPECIFICATIONS(共同规格)

Bore(缸径)(mm)	20	25	32	40
Fluid(流体)	Clean Air(洁净空气)			
Action(动作形式)	Double/Single Acting(双/单动)			
Proof Press.(保证耐压力)	1.5Mpa(15kgf/cm²)			
Max Press.(最高使用压力)	0.99Mpa(9.9kgf/cm²)			
Min Press.(最低使用压力)	0.05Mpa(0.5kgf/cm²)			
Amb.Temp.(环境和流体温度)	-5~+60°C(未冻结)			
Piston Speed(活塞速度)	50~750mm/s			
Cushion(缓冲)	Rubber(STD)两端橡胶缓冲(标准),Air(Option)气缓冲(任选)			
Stroke Tolerance(行程公差)	$^{+1.4}_{0}$			
*Lubrication(润滑)	Non-Lube(不需要)			
Pipe Size(接管口径)Rc(PT)	1/8"	1/8"	1/8"	1/4"

*Use Turbine Oil 1st-grade ISO VG32#,If Required.(如需要润滑,请用透平1号油 ISO VG32)

Standard Stroke/Auto Switch(行程/磁性开关选择)

Bore (缸径) (mm)	STD Stroke (标准行程)(mm)	Band Mounted(环带安装型)	
		Auto Switch(磁性开关)	Band(开关固定码)
20	25,50,75,100,125,150 200,250,300	D-C73K D-C73KL	YBM2-020
25			YBM2-025
32			YBM2-032
40			YBM2-040

Note(注1):Non STD Stroke Available.(有非标准行程可供选择)
Note(注2):For Auto Switch:Refer to Catalogue Auto Switch Series.
(磁性开关规格及特性可参阅磁性开关系列)
Note(注3):YCM2 Series Tube(ø20,ø25,ø32,ø40) Is Stainless Steel Tube.
(YCM2系列的缸筒为标准不锈钢材料)

HOW TO ORDER(型号表示方法)

YC D M2 L 32 – 150 A J Y – C73K S

- YSC Model(代号)
  - Nil: Standard Type
  - D: Auto Switch Type
- Mounting (附件号)
  - B: Basic Type (基本型)
  - L: Foot Type(脚座)
  - F: Front Flange(杆侧法兰)
  - G: Rear Flange(后法兰)
  - C: Single Clevis (单U型钩)
  - D: Double Clevis (双U型钩)
  - T: Front Trunnion(杆侧轴耳)
  - U: Rear Trunnion(后侧轴耳)
  - E: Integrated Clevis Type (原装单U型钩)
- Bore (缸径)
- Stroke (行程)
- Cushion(缓冲)
  - Nil (无记号)： Rubber (橡胶缓冲)
  - A: Air Cushion (气缓冲)
- Amb. Temp. for Gaiter (伸缩保护套为周围温度)
  - Nil(无记号)： None(无)
  - J: 60℃
  - K: 110℃
- Accessory(附件)
  - I=I Type(型)，Y=Y Type(型)
- Auto Switch (磁性开关种类)
  - Nil(无记号)： None(无开关)
  - C73K:Reed Switch(有接点磁性开关)
- No.of Auto Switch (磁性开关)
  - Nil(无记号) : 2(个)
  - S: 1(个)
  - 3: 3(个)

Gaiter Material (伸缩保护套的材质及环境温度)

Code(记号)	Material(伸缩保护套的材质)	Max.Amb.Temp.(环境最高温度)
J	Nylon Tarpaulin(尼龙防水帆布)	60°C
K	Neoprene Cloth(丁橡胶封塞)	110°C

※For Rod Boot Temperature. (伸缩保护套自身的周围最高温度)

Part No. of Mounting(安装附件型号)

Bore(缸径)(mm)	20	25	32	40
Foot(脚座)	YCM2-L020B	YCM2-L025B	YCM2-L032B	YCM2-L040B
Flange(法兰)	YCM2-F020B	YCM2-F025B	YCM2-F032B	YCM2-F040B
Single Clevis(单U型钩)	YCM2-C020B	YCM2-C025B	YCM2-C032B	YCM2-C040B
Double Clevis(双U型钩)	YCM2-D020B	YCM2-D025B	YCM2-D032B	YCM2-D040B
Trunnion(轴耳(带螺母))	YCM2-T020B	YCM2-T025B	YCM2-T032B	YCM2-T040B

Dimensions(mm) (外形尺寸图(毫米))

Basic Type (基本型) YCM2B,YCDM2B

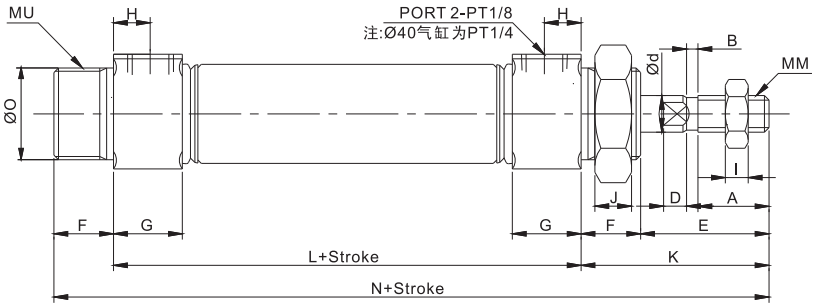

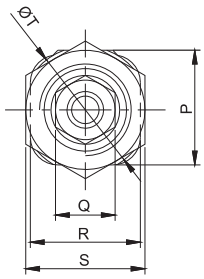

Bore(缸径)	A	B	D	E	F	G	H	I	J	K	L	N	ød	øO	MM	MU	P	Q	R	S	øT
ø20	15.5	2.5	5	28	13	15	8	5	8	41	62	116	8	$20^{0}_{-0.033}$	M8×1.25	M20×1.5	25	13	24	26	28
ø25	19.5	2.5	5.5	32	13	15	8	6	8	45	62	120	10	$26^{0}_{-0.033}$	M10×1.25	M26×1.5	31	17	30	32	34
ø32	19.5	2.5	5.5	32	13	15	8	6	8	45	64	122	12	$26^{0}_{-0.033}$	M10×1.25	M26×1.5	35.5	17	32	32	38
ø40	21	3	7	34	16	21.5	11	8	10	50	88	154	14	$32^{0}_{-0.033}$	M14×1.5	M32×2	42.5	22	46	41	50

Axial Foot Type (脚座型) YCM2L, YCDM2L

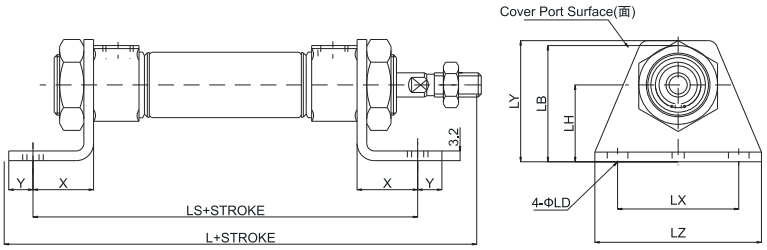

Bore(缸径)	L	LS	LB	ΦLD	LH	LX	LY	LZ	X	Y
ø20	131	102	38	6.8	25	40	40	55	20	8
ø25	135	102	44	6.8	28	40	47	55	20	8
ø32	137	104	44.3	6.8	28	40	47	55	20	8
ø40	171	134	51.3	7	30	55	54	75	23	10

Front Flange Type (法兰型) YCM2F, YCDM2F

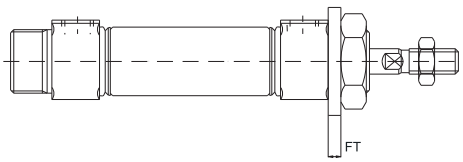

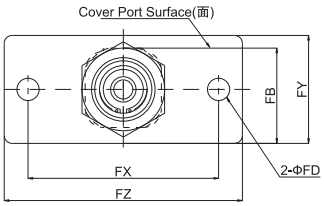

Bore(缸径)	FB	ΦFD	FT	FX	FY	FZ
ø20	30	7	4	60	34	75
ø25	36	7	4	60	40	75
ø32	37.3	7	4	60	40	75
ø40	47.3	7	5	66	52	82

Rear Flange Type (后法兰型) YCM2G, YCDM2G

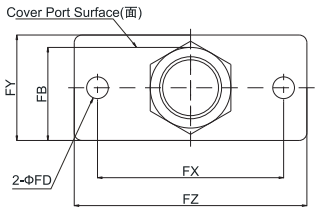

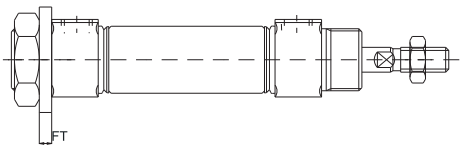

Bore(缸径)	FB	ΦFD	FT	FX	FY	FZ
ø20	30	7	4	60	34	75
ø25	36	7	4	60	40	75
ø32	37.3	7	4	60	40	75
ø40	47.3	7	5	66	52	82

YCM2,YCDM2(ø20~ø40) series

Single Clevis Type(单U型钩型)
YCM2C, YCDM2C

Bore(缸径)	L	LL	A	U	R	ΦCD	CX
ø20	133	142	30	14	9	9	10
ø25	137	146	30	14	9	9	10
ø32	139	148	30	14	9	9	10
ø40	177	188	39	18	11	10	15

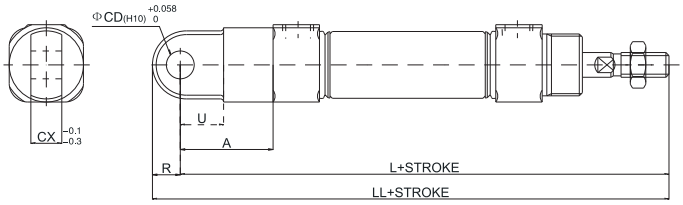

Double Clevis Type (双U型钩型)
YCM2D YCDM2D

Bore(缸径)	L	LL	A	U	R	ΦCD	CX	CZ
ø20	133	142	30	14	9	9	10	19
ø25	137	146	30	14	9	9	10	19
ø32	139	148	30	14	9	9	10	19
ø40	177	188	39	18	11	10	15	30

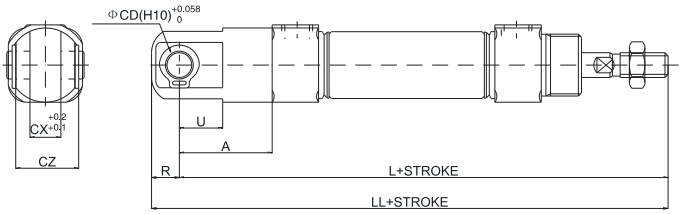

Trunnion Type (后侧轴耳型)
YCM2U, YCDM2U

Bore(缸径)	L	LL	ΦTD	TT	TX	TY	TZ
ø20	108	116	8	10	32	32	52
ø25	112	120	9	10	40	40	60
ø32	114	122	9	10	40	40	60
ø40	43.5	154	10	11	53	53	77

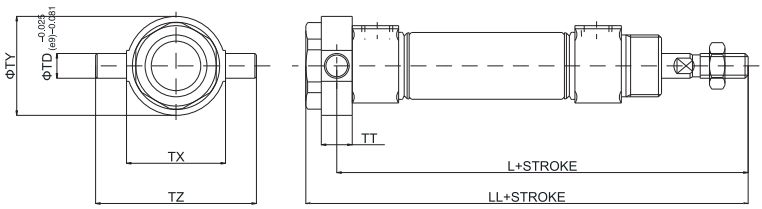

Front Trunnion Type (杆侧轴耳型)
YCM2T, YCDM2T

Bore(缸径)	L	ΦTD	TT	TX	TY	TZ
ø20	36	8	10	32	32	52
ø25	40	9	10	40	40	60
ø32	40	9	10	40	40	60
ø40	44.5	10	11	53	53	77

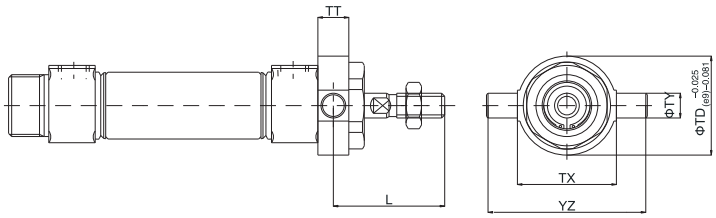

Integrated Double Clevis Type
(原装单U型钩型)
YCM2E, YCDM2E

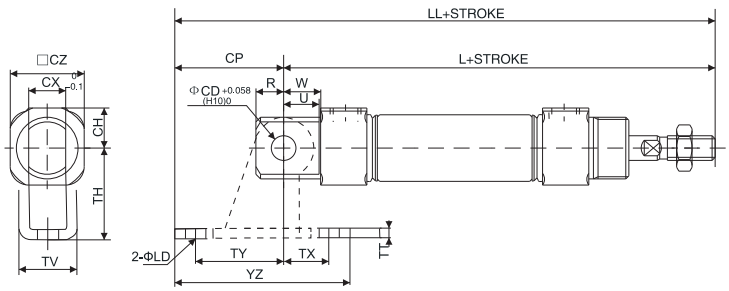

Bore(缸径)	L	R	U	W	ΦCD	CH	CX	□CZ	LL	ΦLD	TH	CP	TV	TX	TY	TZ	TT
ø20	115	9	11.5	12	8	12	12	24	152	6.8	30	37	18.4	15	30	59	3.2
ø25	119	9	11.5	12	8	15	12	30	156	6.8	30	37	18.4	15	30	59	3.2
ø32	124	12	14.5	15	10	17.3	20	34.5	174	9	40	50	28	15	40	75	4
ø40	153	12	14.5	15	10	21.3	20	42.5	203	9	40	50	28	15	40	75	4

YCM2W,YCDM2W(ø20~ø40) series

HOW TO ORDER(型号表示方法)

YCM2W — Mounting (附件号) — Bore(缸径) x Stroke(行程) — Cushion(缓冲) — Auto s/w(磁性开关)

COMMON SPECIFICATIONS(共同规格)

Bore(缸径)(mm)	20	25	32	40
Fluid(流体)	Clean Air(洁净空气)			
Action(动作形式)	Double Acting(双动)			
Proof Press.(保证耐压力)	1.5Mpa{15kgf/cm^2}			
Max. Press.(最高使用压力)	0.99Mpa{9.9kgf/cm^2}			
Min. Press.(最低使用压力)	0.05Mpa{0.5kgf/cm^2}			
Amb. Temp.(环境和流体温度)	-10~+70℃			
Piston Speed(活塞速度)	50~750mm/s			
Cushion(缓冲)	Rubber(STD) (橡胶缓冲(标准),Air(Option)(气缓冲(任选)			
Stroke Tolerance(行程公差)	+14.0			
*Lubrication(润滑)	Non-Lube(不需要)			
Pipe Size(接管口径)Rc(PT)	1/8"	1/8"	1/8"	1/4"

*Use Turbine Oil 1st-Grade ISOVG32, When Use (如需要润滑，请用透平1号油ISOVG32)

Symbol

Dimensions(mm) (外形尺寸图(毫米))

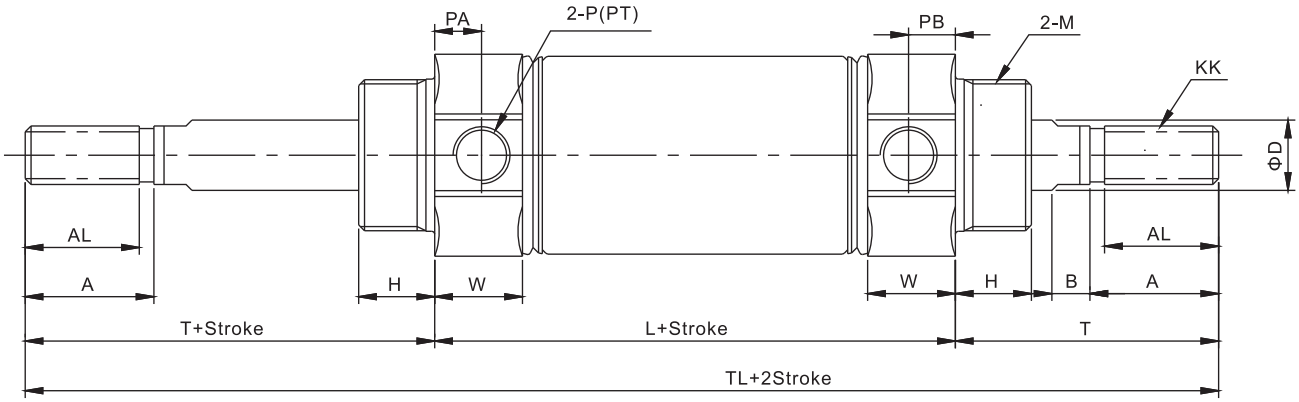

Unit:mm

Bore (mm)	Stroke	AL	A	B	ΦD	H	KK	L	M	P(PT)	PA	PB	T	TL	W
20	~300	15.5	18	5.0	8	13	M8×1.25	62	M20×1.5	1/8	8	8	41	144	15
25	~300	19.5	22	5.5	10	13	M10×1.25	62	M26×1.5	1/8	8	8	45	152	15
32	~300	19.5	22	5.5	12	13	M10×1.25	64	M26×1.5	1/8	8	8	45	154	15
40	~300	21.0	24	7.5	14	16	M14×1.5	88	M32×2	1/4	11	11	50	188	21

YCM2,YCDM2(ø20~ø40) series

How to order 选型方法

With Gatier Type 带伸缩保护套型

YCM2 — Mounting (安装) — Bore(缸径) x Stroke(行程) — (J) — Auto s/w(磁性开关)

Additionla 附件
Blank–Without gaiter 无–无伸缩套
J–With gaiter(NylonTarpaulin) 有伸缩套(尼龙防水)
K–With gaiter(Neperence Cloth)有伸缩套(路丁橡胶外层)

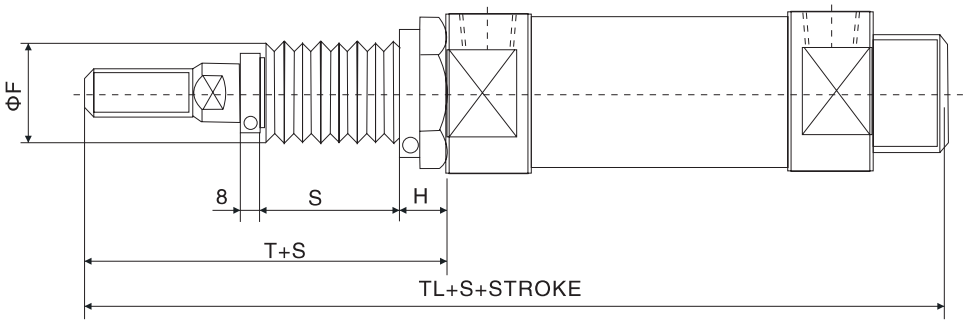

Unit:mm

Bore (mm)	ΦF	H	T	S	TL
20	36	14	56	0.3Stroke(行程)+3	131
25	36	14	60		135
32	36	14	60		137
40	40	16	67	0.25Stroke(行程)+3	171

※ Other dimensions are the same as for standard type.
其它尺寸与标准型相同

Boss–Cut Type尾部切削型

YCM2 Mounting (安装) Bore(缸径) x Stroke(行程) — **XC1**

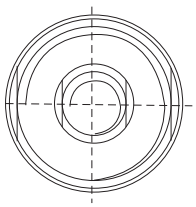

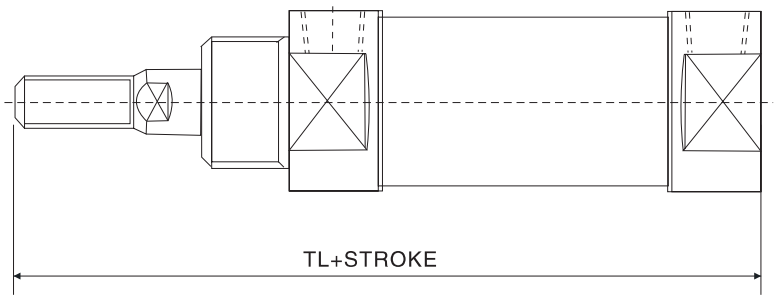

Unit:mm

Boss Cut Type尾部切削型	
Bore(mm)	TL
20	103
25	107
32	109
40	138

※ Other dimensions are the same as for standard type.
其它尺寸与标准型相同

Unit:mm

※Difference of total length compare with Normal Type 与标准企业全长尺寸比较			
ø20	ø25	ø32	ø40
–13	–13	–13	–16

※Mounting:Base Type,Front Flange,Rear Flange
基本型,活塞杆侧法兰型,后端盖侧法兰型

YCM2,YCDM2(ø20~ø40) series

Adjustable Stroke Cylinder/Extension Adjustable Type (可调行程气缸/伸出调整型)

YCM2 | Mounting 安装 | Type 型式 | Bore Size 缸径 — Stroke 行程 | Adjusting Symbol 附件 | Stroke Adjusting Symbol 行程调节 — **XC8**

Additional 附件
Blank–Without gaiter 无–无伸缩套
J–With gaiter(NylonTarpaulin) 有伸缩套(尼龙防水)
K–With gaiter(Neperence Cloth)有伸缩套(氯丁橡胶外层)

Stroke Adjusting Sybol 行程调节
A–Stroke Adjusting Range 0~25mm
行程可调范围0~25mm
B–Stroke Adjusting Range 0~50mm
行程可调范围0~50mm

The Extended Stroke of the cylinder can be adjusted by the stopper in the head side
可以通过头盖挡块将气缸伸出行程进行调整。

Specifications 规格

Fluid 流体	Air 空气
Proof Pressure 耐压	200 PS(1.5Mpa)
Max. Operating Pressure 最大操作压力	140 PS(1.0Mpa)
Min. Operating Pressure 最小操作压力	7 PS(0.05Mpa)
Piston Speed 活塞速度	50~750 mm/sec
Cushion 缓冲	Rubber Cushion(Standard)橡胶缓冲(标准)
Stroke Adjusting System 行程调节	Adjusting Stopper 调节挡块
Stroke Adjusting Range 行程调节范围	A:0~25MM, B:0~50mm
Mounting 安装	Basic Type, Foot Type,Rod Side Flange Type Head Side Flange type, Rod Side Trunnion Type 基本型，脚座型，杆侧法兰型，头端侧法兰型，杆侧轴耳型
Applicable Bore Size(mm) 适用缸径	ϕ20, ϕ25, ϕ32, ϕ40
Stroke 行程	~300mm

Symbol 符号

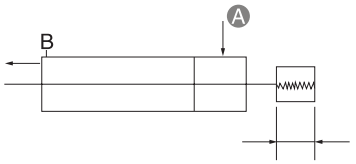

Adjustable Range
调整范围

Construction, Dimensions/Basic Type (结构尺寸,尺寸/基本型)

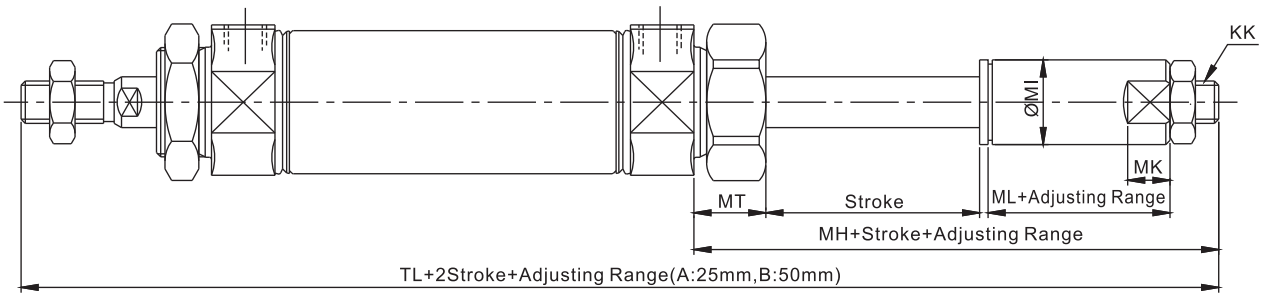

Bore Size (mm)	MA	KK	MK	MI	MT	MH	ML	TL
20	12	M8×1.25	8	15	47	16.5	18	150
25	17	M10×1.25	10	20	49	17.5	18	156
32	17	M10×1.25	10	20	49	17.5	18	158
40	22	M14×1.50	12	25	60	21.5	22	198

※ Other dimensions are the same as for standard type.
其它尺寸与标准型相同

YCM2,YCDM2(ø20~ø40) series

High Temperature Cylinder (耐高温气缸)

YCM2 [Mounting 安装] — [Bore Size 缸径] — [Stroke 行程] —**XB6**

Use at high temperature up to 150 ℃ 最高使用温度150℃

※ Other dimensions are the same as for standard type.
其它尺寸与标准型相同

Dual Stroke Cylinder/Double Rod Type 双行程气缸/双活塞杆型

YCM2 [Mounting 安装] [Type 型式] [Bore Size 缸径] — [StrokeA 行程] [Adjusting Symbol 附件] + [StrokeB 行程] [Adjusting Symbol 附件] —**XC10**

Additionla 附件
Blank–Without gaiter 无–无伸缩套
J–With gaiter(NylonTarpaulin) 有伸缩套(尼龙防水)
K–With gaiter(Neperence Cloth)有伸缩套(路丁橡胶外层)

Two cylinders are constructed as one cylinder in a back–to–back configuration allowing the Cylinder stroke to be controlled in three steeps.
两个气缸以背靠背型式组成一个气缸, 使气缸行程分三步控制。

Symbol 符号

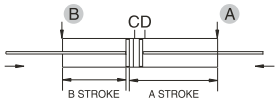

When air pressure is supplied to ports Ⓐ and Ⓑ, both A and B strokes retract.
当ⒶⒷ两口同时进气时，A 、B 行程同时缩回。

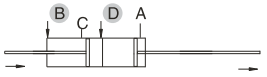

When air pressure is supplied to ports Ⓐ and Ⓑ A stroke extends.
当ⒷⒹ两口同时进气时,伸出A行程。

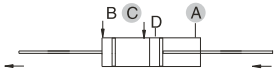

When air pressure is supplied to ports Ⓐ and Ⓒ, B stroke extends.
当ⒶⒸ两口同时进气时，伸出B行程。

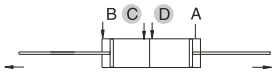

When air pressure is supplied to ports Ⓒ and Ⓓ, both Stroke A and B out Stroke.
当ⒸⒹ两口同时进气时，同时伸出A、B行程。

Specifications 规格

Type 型式	Non–lube 无需要润滑
Fluid 流体	Air 空气
Proof Pressure 耐压	200 PS(1.5Mpa)
Max. Operating Pressure 最大操作压力	140 PS(1.0Mpa)
Min. Operating Pressure 最小操作压力	7 PS(0.05Mpa)
Piston Speed 活塞速度	50~750 mm/sec
Cushion 缓冲	Rubber Cushion(Standard)橡胶缓冲(标准)
Mounting 安装	Basic Type, Foot Type,Rod Side Flange Type 基本型，脚座型，法兰型
Applicable Bore Size(mm) 适用缸径	ϕ20, ϕ25, ϕ30, ϕ32, ϕ40
Stroke 行程	~300mm

Construction, Dimensions/basic Typ 结构尺寸,尺寸/基本型

YCM2※

Unit:mm

Bore Size (mm)	TA	TB	TL
ø20	47	78	207
ø25	47	78	215
ø32	49	80	219
ø40	66.5	110.5	277

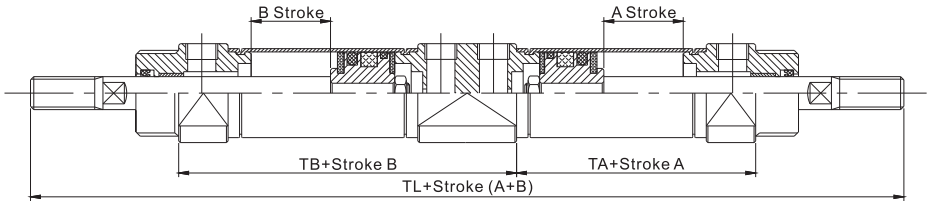

※ Other dimensions are the same as for standard type.
其它尺寸与标准型相同

YCM2,YCDM2(ø20~ø40) series

Dual Stroke Cylinder/Double Rod Type 双行程气缸/双活塞杆型

YCM2 [Mounting 安装] [Type 型式] [Bore Size 缸径] — [StrokeA 行程] + [Stroke B–A 行程 B–A] [Adjusting Symbol 附件] — **XC11**

Additionla 附件
Blank–Without gaiter 无–无伸缩套
J–With gaiter(NylonTarpaulin) 有伸缩套(尼龙防水)
K–With gaiter(Neperence Cloth)有伸缩套(路丁橡胶外层)

Symbol 符号

Function

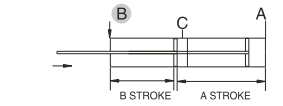

When air pressure is supplied to the Ⓑport, both A and B strokes retract.
当Ⓑ口进气时， A 、B行程同时缩回。

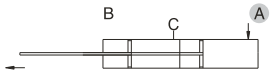

When air pressure is supplied to the Ⓐport, the rod extends by A Stroke
当Ⓐ口进气时， A行程伸出。

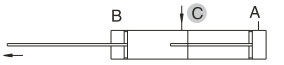

When air pressure is supplied to the Ⓒport, the rod extends by B Stroke
当Ⓒ口进气时， B行程伸出。

When air pressure is supplied to both portsⒶandⒸdouble output force is obtainable in the range of the A stroke length.
当Ⓐ Ⓒ口同时进气， 在 A 行程范围内，活塞杆输出力增加一倍。

Specifications 规格

Fluid 流体	Air 空气
Proof Pressure 耐压	200 PS(1.5Mpa)
Max. Operating Pressure 最大操作压力	140 PS(1.0Mpa)
Min. Operating Pressure 最小操作压力	7 PS(0.05Mpa)
Piston Speed 活塞速度	50~750 mm/sec
Cushion 缓冲	Rubber Cushion(Standard)橡胶缓冲(标准)
Mounting 安装	Basic Type, Foot Type,Rod Side Flange Type Flange Type Head Side Flange type Single Clevis Type, Double Clevis Type. 基本型，脚座型，杆侧法兰型 头端侧法兰型, 单U型钩, 双U型钩
Applicable Bore Size(mm) 适用缸径	ϕ20，ϕ25，ϕ32，ϕ40
Stroke 行程	~300mm

Construction, Dimensions/basic Typ 结构尺寸， 尺寸/基本型

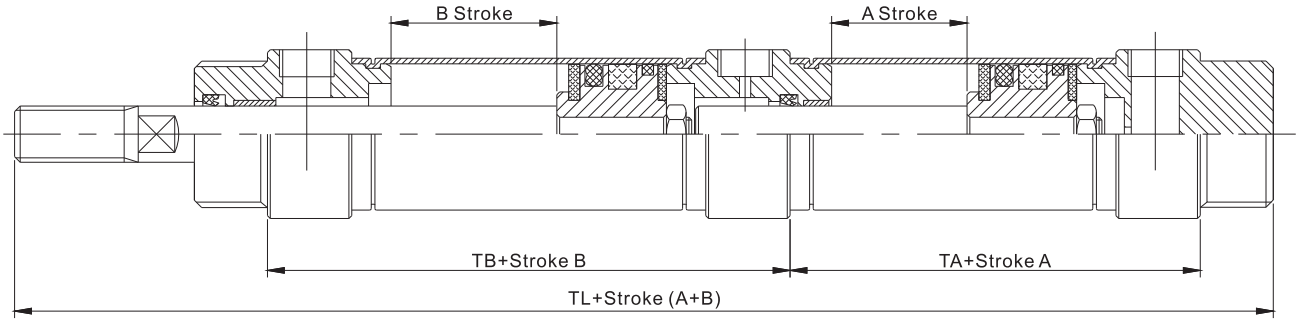

Unit:mm

Bore Size (mm)	TA	TB	TL
ø20	48	62	164
ø25	48	62	168
ø32	50	64	172
ø40	67.5	88.5	222

※ Other dimensions are the same as for standard type.
其它尺寸与标准型相同

Tandem Type Air Cylinder 串联型气缸

YCM2 [Mounting 安装] [Type 型式] [Bore Size 缸径] — [StrokeA 行程] — **XC12**

This is a cylinder produced with two air cylinders in line allowing double the output face.
该气缸由两个气缸串联而成，能使输出力增加一倍。

Symbol 符号

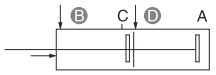

When air pressure is supplied to both ports Ⓑ and Ⓓ, output force is doubled in the retract stroke.
当ⒷⒹ口同时进气时，缩回行程中输出力增加一倍。

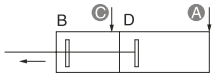

When air pressure is supplied to both ports Ⓐ and Ⓒ, output force is doubled in the extend stroke.
当ⒶⒸ口同时进气时，伸出行程中输出力增加一倍。

Specifications 规格

Fluid 流体	Air 空气
Proof Pressure 耐压	200 PS(1.5Mpa)
Max. Operating Pressure 最大操作压力	140 PS(1.0Mpa)
Min. Operating Pressure 最小操作压力	7 PS(0.05Mpa)
Piston Speed 活塞速度	50~750 mm/sec
Cushion 缓冲	Rubber Cushion(Standard)橡胶缓冲(标准)
Mounting 安装	Basic Type Axial Foot Type,Rod Side Flange Type,Head Side Flange Type,Rod Side Truunion Type 基本型，轴向脚座型，杆断侧法兰型，头断侧法兰型,杆侧轴耳型,头断侧轴耳型

Construction, Dimensions/basic Typ 结构尺寸， 尺寸/基本型

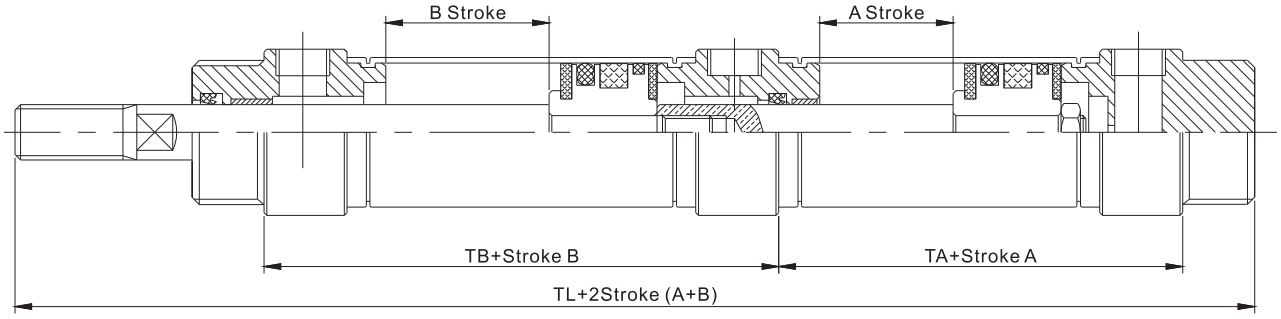

Unit:mm

Bore Size (mm)	TA	TB	TL
ø20	48	62	164
ø25	48	62	168
ø32	50	64	172
ø40	67.5	88.5	222

※ Other dimensions are the same as for standard type.
其它尺寸与标准型相同

Single knuckle Joint(Rod End Drawing)(带I 型单轴接头气缸杆端尺寸)

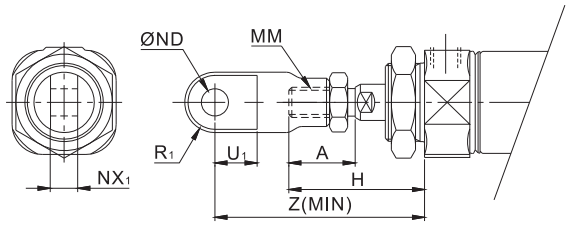

Bore(缸径)	A	H	MM	øND$_{H10}$	NX$_1$	U$_1$	R$_1$	Z
20	18	41	M8×1.25	$9^{+0.0058}_{0}$	$9^{-0.1}_{-0.2}$	14	10	66
25,32	22	45	M10×1.25	$9^{+0.0058}_{0}$	$9^{-0.1}_{-0.2}$	14	10	69
40	24	50	M14×1.5	$12^{+0.0058}_{0}$	$16^{-0.1}_{-0.2}$	20	15.5	92

Single knuckle Joint Dimensions(mm)带I 型单轴接头尺寸)

I–020B, 032B, 040B

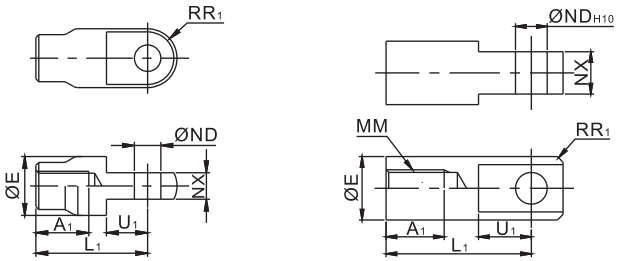

Part No.(型号)	Bore(缸径)	A$_1$	E	L$_1$	MM	øND$_{H10}$	NX	U$_1$	R$_1$
I–020B	20	16	20	36	M8×1.25	$9^{+0.0058}_{0}$	$9^{-0.1}_{-0.2}$	10	14
I–032B	25,32	18	22	38	M10×1.25	$9^{+0.0058}_{0}$	$9^{-0.1}_{-0.2}$	10	14
I–040B	40	22	24	55	M14×1.5	$12^{+0.0058}_{0}$	$16^{-0.1}_{-0.2}$	15.5	20

Double knuckle Joint(Rod End Drawing)(带Y 型双轴接头气缸杆端尺寸)

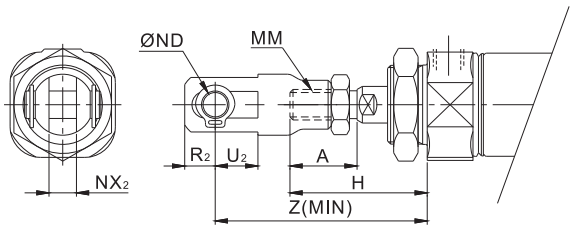

Bore(缸径)	A	H	MM	øND$_{H10}$	NX$_2$	U$_2$	R$_2$	Z
20	18	41	M8×1.25	$9^{+0.0058}_{0}$	$9^{-0.1}_{-0.2}$	14	10	66
25,32	22	45	M10×1.25	$9^{+0.0058}_{0}$	$9^{-0.1}_{-0.2}$	14	10	69
40	24	50	M14×1.5	$12^{+0.0058}_{0}$	$16^{-0.1}_{-0.2}$	25	13	92

Double Knuckle Joint Dimensions(mm) (Y型双轴节接头尺寸)

Y–020B, 032B YY–040B

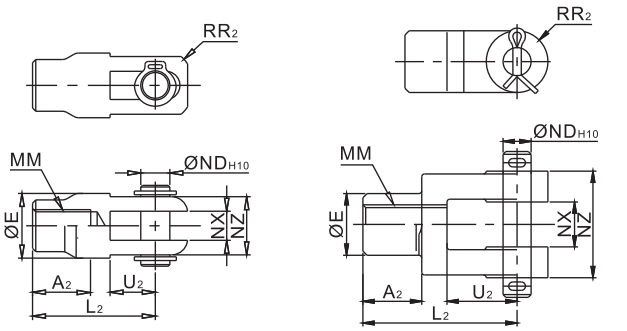

Part No.(型号)	Bore(缸径)	A$_2$	E	L$_2$	MM	øND$_{H10}$	NX	NZ	U$_2$	R$_2$	
Y–020B	20	16	20	36	M8×1.25	$9^{+0.0058}_{0}$	$9^{-0.1}_{-0.2}$	18	14	12	YCDP-1
Y–032B	25,32	18	22	38	M10×1.25	$9^{+0.0058}_{0}$	$9^{-0.1}_{-0.2}$	18	14	12	YCDP-1
Y–040B	40	22	24	55	M14×1.5	$12^{+0.0058}_{0}$	$16^{-0.1}_{-0.2}$	38	20	13	YCDP-3

Knuckle Joint Pin(单(双)U型钩及肘节接头销子)

Applicable Cylinder Bore(适合缸径): ϕ 40

YCDP-2

Material(材质): Carbon Steel (碳钢)

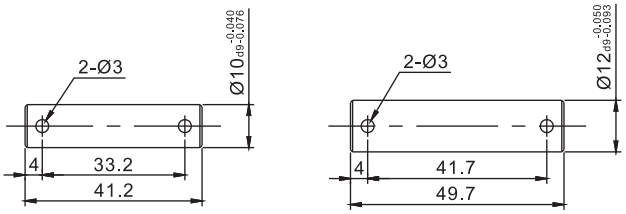

Stopper Pin(分割针) : ϕ3x18L

Knuckle Joint Pin(单(双)U型钩及肘节接头销子)

Applicable Cylinder Bore(适合缸径): ϕ 20, ϕ 25, ϕ 32

YCDP-1

Material(材质): Carbon Steel (碳钢)

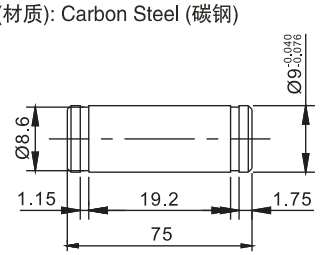

Stopper : C Ring No.9 (挡圈:轴用C型9)

YSC Direct Mounting Cylinder(直接安装气缸)
YCM2R,YCDM2R(ø20~ø40)series

图形符号

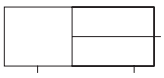

- Space Saving Design.
- Built-in Magnet(STD)
- Non Lube Type.
- Compact and Light Weight.

- 节省空间
- 内置磁环(标准)
- 不锈钢缸筒,无油润滑,使用寿命长
- 结构紧凑,重量轻

COMMON SPECIFICATIONS(共同规格)

Fluid(流体)	Clean Air(洁净空气)
Action(动作形式)	Double/Single Acting(双/单动)
Proof Press.(保证耐压力)	1.5Mpa(15kgf/cm²)
Max Press.(最高使用压力)	0.99Mpa(9.9kgf/cm²)
Min Press.(最低使用压力)	0.05Mpa(0.5kgf/cm²)
Amb.Temp.(环境和流体温度)	-5~+60°C(未冻结)
Cushion(缓冲)	Rubber(STD)两端橡胶缓冲(标准),Air(Option)气缓冲(任选)
Stroke Tolerance(行程公差)	$^{+1.4}_{0}$

PISTON SPEED(活塞速度)

Bore(缸径)(mm)	20	25	32	40
Piston Speed(活塞速度)	50~750mm/s			

STD STROKE (标准行程表)

Bore(缸径)	Stroke (标准行程)
20	25,50,75,100,125,150
25	25,50,75,100,125,150,200
32	25,50,75,125,150,200
40	25,50,75,100,125,150,200,250,300

HOW TO ORDER (型号表示方法)

YCDM2R | A | 20 – 100 – C73K | S

Auto Swith Type
(内置磁环)

Mouting (安装形式)
A:Bottom Mouting
(底部安装型)
B:Front Mounting
(面部安装型)

Bore(气缸)
20: 20mm
25: 25mm
32: 32mm
40: 40mm

Stroke(行程)

Auto Switch(磁性开关种类)
※ Note : See "Auto Switch Series"(Page : R-50)

No. of Switch (磁性开关附加记号)
Nil(无记号):2(个)
S: 1(个)
n: n(个)

Dimensions(mm) (外形尺寸图(毫米)) YCM2RA, YCDM2RA

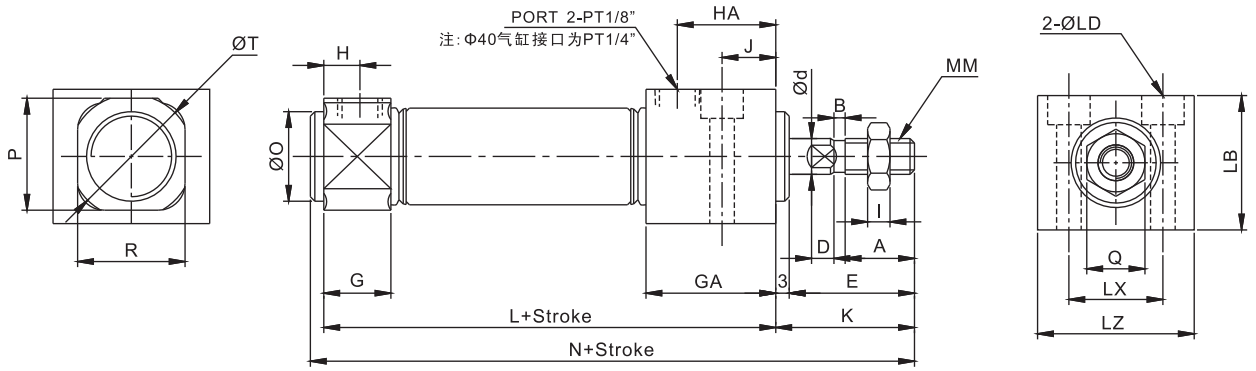

Bore(缸径)	A	B	D	E	G	H	I	J	K	L	N	ØO(h8)	P	Q	MM	R	V	Ød	HA	GA	LB	LX	LZ	ØT	LD
ø20	15.5	2.5	5	24	15	8	5	12	27	76	106	$20^{0}_{-0.033}$	25	13	M8×1.25	24	7	8	22	29	30	20	35	29	ø5.5,ø9.5Dp6.5
ø25	19.5	2.5	5.5	28	15	8	6	12	31	76	110	$26^{0}_{-0.033}$	31	17	M10×1.25	30	8	10	22	29	36	26	39	36	ø6.5,ø11Dp7.5
ø32	19.5	2.5	5.5	28	15	8	6	12	31	78	112	$26^{0}_{-0.033}$	34.5	17	M10×1.25	34.5	10	12	22	29	42	30	46	40.5	ø9,ø11Dp10
ø40	21	3	7	31	21.5	11	8	15	34	104	141	$32^{0}_{-0.033}$	42.5	22	M14×1.5	42.5	12	14	27	37.5	52	36	58	46.5	ø11,ø17.5Dp12.5

Dimensions(mm) (外形尺寸图(毫米)) YCM2RB, YCDM2RB

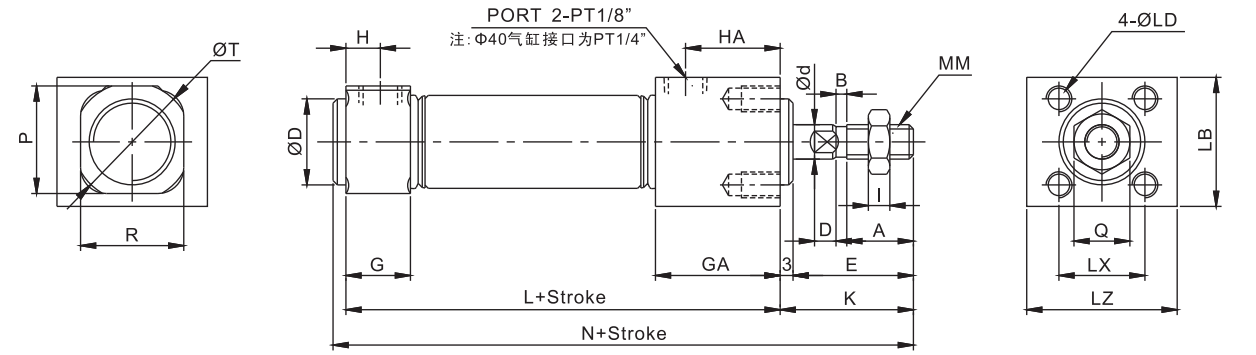

Bore(缸径)	A	B	D	E	G	H	I	K	L	N	ØO(h8)	P	Q	MM	R	V	Ød	HA	GA	LB	LX	LZ	ØT	LD
ø20	15.5	2.5	5	24	15	8	5	27	76	106	$20^{0}_{-0.033}$	25	13	M8×1.25	24	7	8	22	29	30	20	35	29	M5×0.8 Dp9
ø25	19.5	2.5	5.5	28	15	8	6	31	76	110	$26^{0}_{-0.033}$	31	17	M10×1.25	30	8	10	22	29	36	26	39	36	M6×1 Dp11
ø32	19.5	2.5	5.5	28	15	8	6	31	78	112	$26^{0}_{-0.033}$	34.5	17	M10×1.25	34.5	10	12	22	29	42	30	46	40.5	M6×1 Dp11
ø40	21	3	7	31	21.5	11	8	34	104	141	$32^{0}_{-0.033}$	42.5	22	M14×1.5	42.5	12	14	27	37.5	52	36	58	46.5	M8×1.25 Dp14

YSC Direct Mounting Cylinder(直接安装气缸)
YCM2R,YCDM2R(ø20~ø40)series

Adjustable Stroke Cylinder, Extension Adjustable Type (可调行程气缸/伸出调整型)

YCM2R [Mounting 安装] [Bore Size 缸径] — [Stroke 行程] [Stroke Adjusting Symbol 行程调节] — **XC8**

Stroke Adjusting Sybol 行程调节
A–Stroke Adjusting Range 0~25mm
行程可调范围0~25mm
B–Stroke Adjusting Range 0~50mm
行程可调范围0~50mm

The extended stroke of the cylinder can be adjusted by the stopper on the head side from full stroke (0~25)mm or (0~50)mm.

Symbol 符号

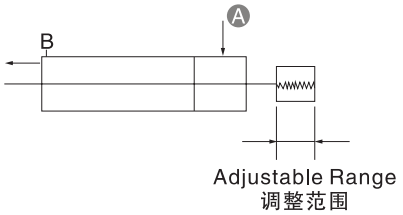

Specifications (规格)

Type 类型	Air Cylinder 洁净空气
Applicable Bore Size 缸径	ø20,ø25,ø32,ø40
Action 动作方式	Double Action Single Rod 双动单活塞杆
Piston Speed (mm/sec)活塞速度	50~750
Cushion 缓冲	Rubber Cushion (Standard) 橡胶缓冲
Stroke Adjusting System 行程调节	Stopper Adjustment 调节挡块
Stroke Adjusting Range 行程调节范围	A:0~25mm,B:0~50mm
Mounting 安装	Rear pivot Mounting, Front Nose Mounting 后轴销安装，关面板安装

Dimensions(mm)(外型尺寸)

Rear Pirot Mouting
头端轴销安装

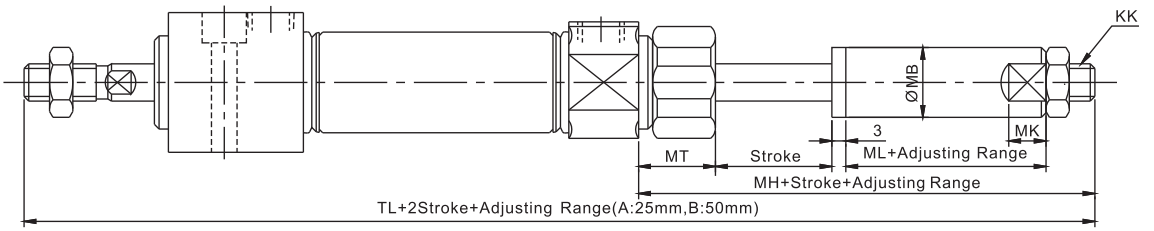

Front Face Mouting
前面板安装

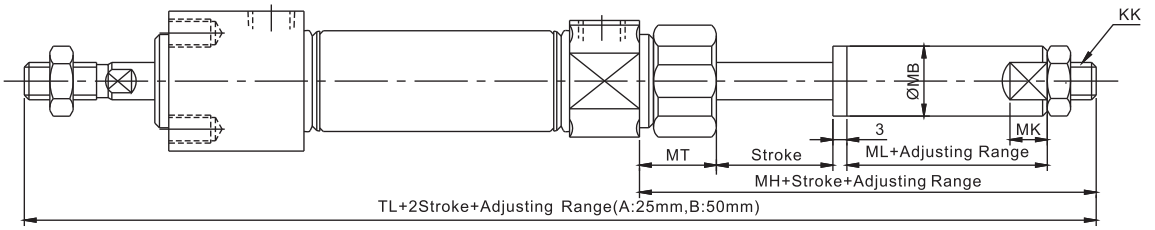

Bore Size (mm)	MA	MH	øMB	MK	ML	KK	MT	TL
ø20	12	47	15	8	18	M8×1.25	16.5	150
ø25	17	49	20	8	18	M10×1.25	17.5	156
ø32	17	49	20	10	18	M10×1.25	17.5	158
ø40	22	60	25	12	22	M14×1.5	21.5	198

※ Other dimensions are the same as for standard type.
其它尺寸与标准型相同

YSC | Air Cylinder/Medium Bore Size(中型标准气缸)
YCA2,YCDA2(ø40~ø100) series

图形符号

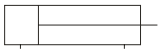

COMMON SPECIFICATIONS(共同规格)

Bore(缸径)(mm)	40	50	63	80	100
Fluid(流体)	Clean Air(洁净空气)				
Action(动作形式)	Double Acting(双动)				
Proof Press.(保证耐压力)	1.5Mpa(15kgf/cm²)				
Max Press.(最高使用压力)	0.99Mpa(9.9kgf/cm²)				
Min Press.(最低使用压力)	0.05Mpa(0.5kgf/cm²)				
Amb.Temp.(环境和流体温度)	-5~+60°C(未冻结)				
Piston Speed(活塞速度)	50~500mm/s				
Cushion(缓冲)	Air Cushion(气缓冲)				
Stroke Tolerance(行程公差)	~250:$^{+1.0}_{0}$ 251~1000:$^{+1.4}_{0}$ 1000~1500:$^{+1.8}_{0}$				
*Lubrication(润滑)	Lube Type(STD),Non-Lube(Option)(油润滑型(标准),不需要(任选))				
Pipe Size(接管口径)Rc(PT)	1/4"	3/8"	3/8"	1/2"	1/2"

*Use Turbine Oil 1st-grade ISO VG32#,If Required.(如需要润滑,请用透平1号油ISO VG32)

HOW TO ORDER(型号表示方法)

Y C D A2 B N 50 – 100 J – A54K S

YSC Model(代号)

Nil(无记号):
STD Type(无开关)
D:AutoSwitch Type
(带开关)

Mounting(附件号)
B:Basic(基本型)
L:Foot(脚座型)
F:FrontFlange(杆侧法兰)
G:RearFlange(后法兰)
C:Single Clevis(单U型钩)
D:Double Clevis(双U型钩)
T:Center Trunnion(中央轴耳)

Bore Size
(缸径)

Stroke
(行程)

Nil(无记号):Lube Type(油润滑型)
N:Non–Lube(无油润滑型)
H:Air Hydro(低油压型)
F:Steel Tube(铁缸筒)

Option(型式):
GallerAmb(伸缩保护套为周围环境)
J:60℃
K:110℃
N:None–Cushion(无缓冲)
R:Rod Cover Cushion(杆侧缓冲)
H:Head Cover Cushion(后侧缓冲)
I:I Type Knuckle Joint(I型单轴接头)
Y:Y Type Knuc kle Joint(Y型双轴接头)
Nil(无记号): Both Side Cushion(两侧带缓冲)

Auto Switch(磁性开关种类)
Nil(无记号):w/o Switch(无磁性开关)
A54K:Reed Switch(有接点磁性开关)

No of Auto Switch(磁性开关数量)
Nil(无记号):2(个)
S:1(个)
3:3(个)

Stroke/Auto Switch(行程/磁性开关选择)

Bore (缸径) (mm)	STD Stroke (标准行程)(mm)	Auto Switch (磁性开关)	Mount Part No. (开关固定码)
40	25, 50, 75, 100, 125, 175, 200, 250, 300, 350, 400, 450, 500	D-A54K	BT-04
50	25, 50, 75, 100, 125, 175, 200, 250, 300, 350, 400, 450, 500, 600		BT-04
63			BT-06
80	25, 50, 75, 125, 150, 175, 200, 250, 300, 350, 400, 450, 500, 600, 700		BT-08
100			BT-08

Note: Other Stroke Available(有非标准行程可供选择)

Dimensions(mm)(外型尺寸图)(mm)

Basic Type(基本型): YC□A2B

Lube,Non–Lube,Air–Hydro Type (润滑型，无油润滑型，低油压型)

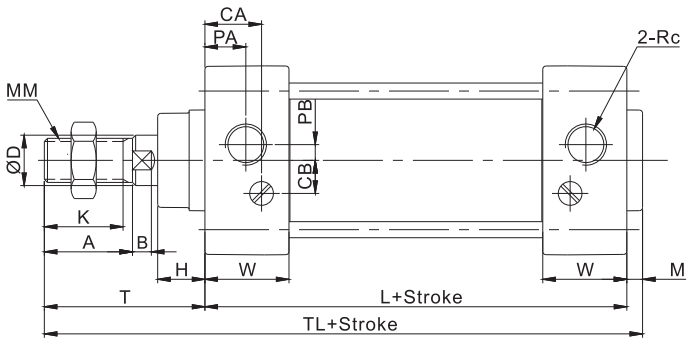

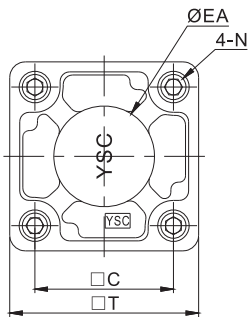

Bore (缸径)(mm)	StroKeRange (行程范围)(mm)	Thread Length(K) (有效螺纹k)	A	B	□C	□T	øD	øEA	H	MM	L	N	2-Rc	PA	PB	W	T	TL	M	CA	CB
40	~500	25	28	6	44	60	16	32	15	M14×1.5	84	M6×1	1/4"	13	5	26.7	51	140	5	18	10.5
50	~600	28	31	7	52	70	20	40	17.5	M18×1.5	90	M8×1.25	3/8"	14.5	8	29.7	58	154	6	21	9.9
63	~600	28	31	7	64	85	20	40	17.4	M18×1.5	98	M8×1.25	3/8"	15	9	30.7	58	162	6	21	11.5
80	~800	33	36	10	78	102	25	52	22.5	M22×1.5	116	M10×1.5	1/2"	21	11	36.7	71	194	7	26	13
100	~800	37	40	10	92	116	30	52	19	M26×1.5	126	M10×1.5	1/2"	21	13	39.7	72	206	8	28	14

Axial Foot Type(脚座型): YC□A2L

Lube, Non–Lube, Air–Hydro Type (润滑型, 无油润滑型, 低油压型)

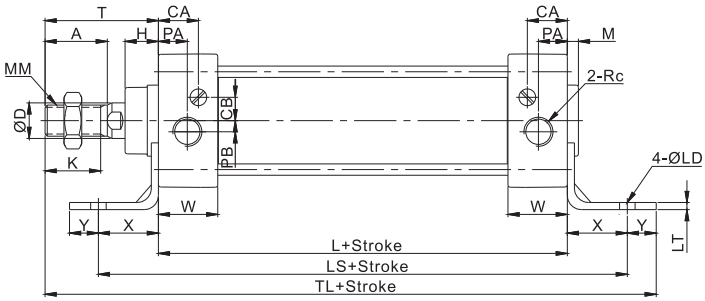

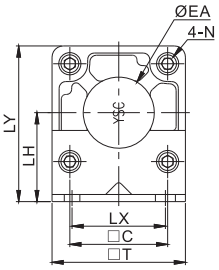

Bore (缸径)(mm)	StroKeRange (行程范围)(mm)	Thread Length(K) (有效螺纹k)	A	B	□C	□T	øD	øEA	H	MM	L	N	2-Rc	PA	PB	W	T	TL	M	CA	CB
40	~500	25	28	6	44	60	16	32	15	M14×1.5	84	M6×1	1/4"	13	5	26.7	51	175	5	18	10.5
50	~600	28	31	7	52	70	20	40	17.7	M18×1.5	90	M8×1.25	3/8"	14.5	8	29.7	58	188	6	21	9.9
63	~600	28	31	7	64	85	20	40	17.4	M18×1.5	98	M8×1.25	3/8"	15	9	30.7	58	206	6	21	11.5
80	~800	33	36	10	78	102	25	52	22.5	M22×1.5	116	M10×1.5	1/2"	21	11	36.7	71	247	7	26	13
100	~800	37	40	10	92	116	30	52	19	M26×1.5	126	M10×1.5	1/2"	21	13	39.7	72	258	8	28	14

Bore (缸径)(mm)	LX	Y	X	LS	LY	LH	LT	4-øLD
40	42	13	27	138	70	40	3.2	7
50	50	13	27	144	80	45	3.2	9
63	59	16	34	166	93	50	3.2	9
80	76	16	44	204	116	65	4.5	11
100	92	17	43	212	133	75	6	11

FrontFlange Type(杆侧法兰型): YC□A2F

Lube, Non–Lube, Air–Hydro Type (润滑型, 无油润滑型, 低油压型)

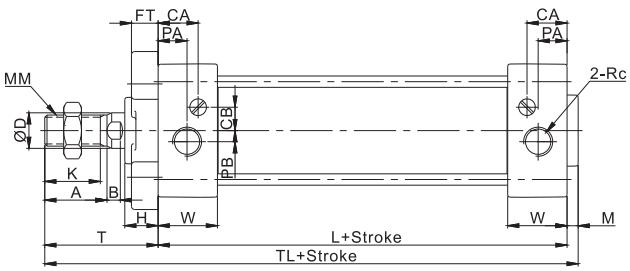

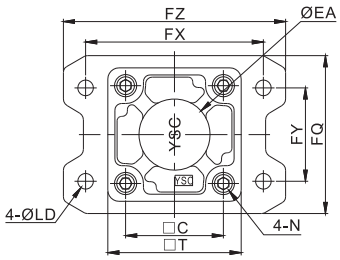

Bore (缸径)(mm)	StroKeRange (行程范围)(mm)	Thread Length(K) (有效螺纹k)	A	B	□C	□T	øD	øEA	H	MM	L	N	2-Rc	PA	PB	W	T	TL	M	CA	CB
40	~500	25	28	6	44	60	16	32	15	M14×1.5	84	M6×1	1/4"	13	5	26.7	51	140	5	18	10.5
50	~600	28	31	7	52	70	20	40	17.7	M18×1.5	90	M8×1.25	3/8"	14.5	8	29.7	58	154	6	21	9.9
63	~600	28	31	7	64	85	20	40	17.4	M18×1.5	98	M8×1.25	3/8"	15	9	30.7	58	162	6	21	11.5
80	~800	33	36	10	78	102	25	52	22.5	M22×1.5	116	M10×1.5	1/2"	21	11	36.7	71	194	7	26	13
100	~800	37	40	10	92	116	30	52	19	M26×1.5	126	M10×1.5	1/2"	21	13	39.7	72	206	8	28	14

Bore (缸径)(mm)	FX	FZ	FQ	FY	øLD	FT
40	80	100	71	42	7	12
50	90	110	81	50	9	12
63	105	130	101	59	9	15
80	130	160	119	76	11	18
100	150	180	133	92	11	18

Rear Flange Type (后法兰型): YC□A2G

Lube, Non–Lube, Air–Hydro Type (润滑型, 无油润滑型, 低油压型)

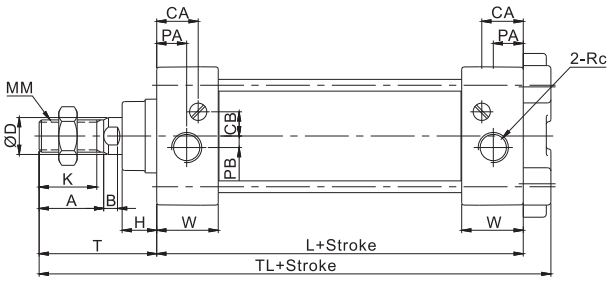

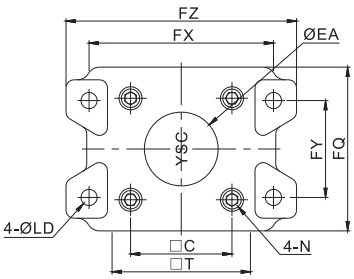

Bore (缸径)(mm)	StroKeRange (行程范围)(mm)	Thread Length(K) (有效螺纹k)	A	B	□C	□T	øD	øEA	H	MM	L	N	2-Rc	PA	PB	W	T	TL	øLD	CA	CB
40	~500	25	28	6	44	60	16	32	15	M14×1.5	84	M6×1	1/4"	13	5	26.7	51	147	7	18	10.5
50	~600	28	31	7	52	70	20	40	17.7	M18×1.5	90	M8×1.25	3/8"	14.5	8	29.7	58	160	9	21	9.9
63	~600	28	31	7	64	85	20	40	17.4	M18×1.5	98	M8×1.25	3/8"	15	9	30.7	58	171	9	21	11.5
80	~800	33	36	10	78	102	25	52	22.5	M22×1.5	116	M10×1.5	1/2"	21	11	36.7	71	205	11	26	13
100	~800	37	40	10	92	116	30	52	19	M26×1.5	126	M10×1.5	1/2"	21	13	39.7	72	216	11	28	14

Bore (缸径)(mm)	FX	FZ	FQ	FY	FT
40	80	100	71	42	12
50	90	110	81	50	12
63	105	130	101	59	15
80	130	160	119	76	18
100	150	180	133	92	18

SingleRear Clevis Type (单U型钩型): YC□A2C

Lube, Non–Lube, Air–Hydro Type (润滑型, 无油润滑型, 低油压型)

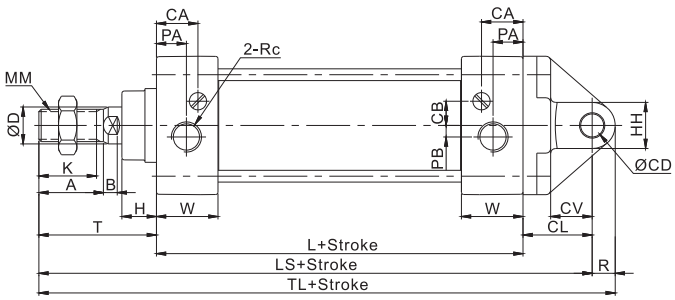

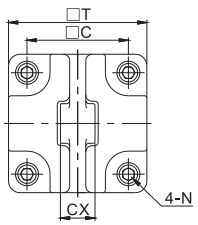

Bore (缸径)(mm)	StroKeRange (行程范围)(mm)	Thread Length(K) (有效螺纹k)	A	B	□C	□T	øD	øEA	H	MM	L	N	2-Rc	PA	PB	W	T	R	CA	CB	øCD
40	~500	25	28	6	44	60	16	32	15	M14×1.5	84	M6×1	1/4"	13	5	26.7	51	10	18	10.5	$10^{+0.068}_{0}$
50	~600	28	31	7	52	70	20	40	17.7	M18×1.5	90	M8×1.25	3/8"	14.5	8	29.7	58	12	21	9.9	$12^{+0.07}_{0}$
63	~600	28	31	7	64	85	20	40	17.4	M18×1.5	98	M8×1.25	3/8"	15	9	30.7	58	16	21	11.5	$16^{+0.07}_{0}$
80	~800	33	36	10	78	102	25	52	22.5	M22×1.5	116	M10×1.5	1/2"	21	11	36.7	71	20	26	13	$20^{+0.084}_{0}$
100	~800	37	40	10	92	116	30	52	19	M26×1.5	126	M10×1.5	1/2"	21	13	39.7	72	25	28	14	$25^{+0.084}_{0}$

Bore (缸径)(mm)	LS	TL	CV	CL	CX	HH
40	165	175	16	30	$15^{-0.1}_{-0.3}$	20
50	183	195	19	35	$18^{-0.1}_{-0.3}$	24
63	196	212	23	40	$25^{-0.1}_{-0.3}$	32
80	235	255	28	48	$31.5^{-0.1}_{-0.3}$	40
100	256	281	36	58	$35.5^{-0.1}_{-0.3}$	50

Double Rear Clevis Type(双U型钩型): YC□A2D

Lube, Non–Lube, Air–Hydro Type (润滑型, 无油润滑型, 低油压型)

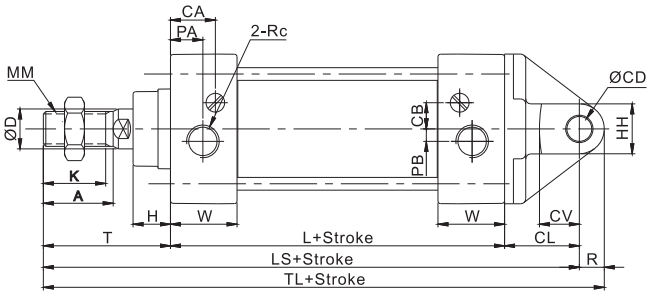

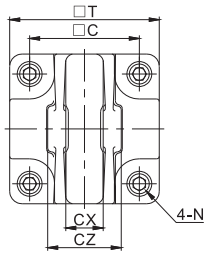

Bore (缸径)(mm)	StroKeRange (行程范围)(mm)	Thread Length(K) (有效螺纹K)	A	B	□C	□T	øD	øEA	H	MM	L	N	2-Rc	PA	PB	W	T	R	CA	CB	øCD
40	~500	25	28	6	44	60	16	32	15	M14×1.5	84	M6×1	1/4"	13	5	26.7	51	10	18	10.5	$10^{+0.068}_{0}$
50	~600	28	31	7	52	70	20	40	17.7	M18×1.5	90	M8×1.25	3/8"	14.5	8	29.7	58	12	21	9.9	$12^{+0.07}_{0}$
63	~600	28	31	7	64	85	20	40	17.4	M18×1.5	98	M8×1.25	3/8"	15	9	30.7	58	16	21	11.5	$16^{+0.07}_{0}$
80	~800	33	36	10	78	102	25	52	22.5	M22×1.5	116	M10×1.5	1/2"	21	11	36.7	71	20	26	13	$20^{+0.084}_{0}$
100	~800	37	40	10	92	116	30	52	19	M26×1.5	126	M10×1.5	1/2"	21	13	39.7	72	25	28	14	$25^{+0.084}_{0}$

Bore (缸径)(mm)	LS	TL	CX	CV	CL	HH	CZ
40	165	175	$15^{-0.1}_{-0.3}$	16	30	20	29.5
50	183	195	$18^{-0.1}_{-0.3}$	19	35	24	38
63	196	212	$25^{-0.1}_{-0.3}$	23	40	32	49
80	235	255	$31.5^{-0.1}_{-0.3}$	28	48	40	61
100	256	281	$35.5^{-0.1}_{-0.3}$	36	58	50	64

Trunnion Type(中央轴耳型): YC□A2T

Lube, Non–Lube, Air–Hydro Type (润滑型, 无油润滑型, 低油压型)

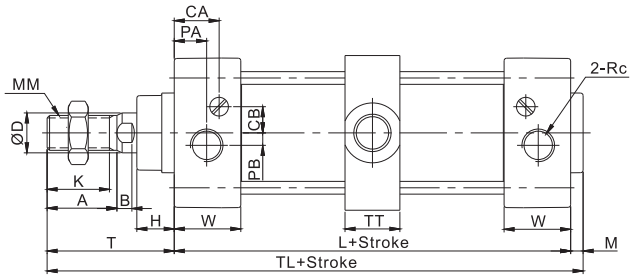

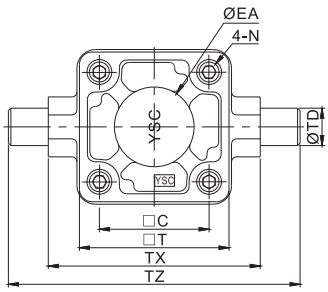

Bore (缸径)(mm)	StroKeRange (行程范围)(mm)	Thread Length(K) (有效螺纹k)	A	B	□C	□T	øD	øEA	H	MM	L	N	2-Rc	PA	PB	W	T	M	CA	CB
40	~500	25	28	6	44	60	16	32	15	M14×1.5	84	M6×1	1/4"	13	5	26.7	51	5	18	10.5
50	~600	28	31	7	52	70	20	40	17.7	M18×1.5	90	M8×1.25	3/8"	14.5	8	29.7	58	6	21	9.9
63	~600	28	31	7	64	85	20	40	17.4	M18×1.5	98	M8×1.25	3/8"	15	9	30.7	58	6	21	11.5
80	~800	33	36	10	78	102	25	52	22.5	M22×1.5	116	M10×1.5	1/2"	21	11	36.7	71	7	26	13
100	~800	37	40	10	92	116	30	52	19	M26×1.5	126	M10×1.5	1/2"	21	13	39.7	72	8	28	14

Bore (缸径)(mm)	TZ	TX	TY	TL	TT	øTD
40	117	85	62	140	22	$15^{-0.04}_{-0.075}$
50	127	95	74	154	22	$15^{-0.04}_{-0.075}$
63	148	110	90	162	28	$18^{-0.04}_{-0.075}$
80	192	140	110	194	34	$25^{-0.04}_{-0.075}$
100	214	162	130	206	40	$25^{-0.04}_{-0.075}$

Double Rod Tylinder (双作用活塞杆型):YC□A2W□

Lube, Non–Lube, Air–Hydro Type (润滑型, 无油润滑型, 低油压型)

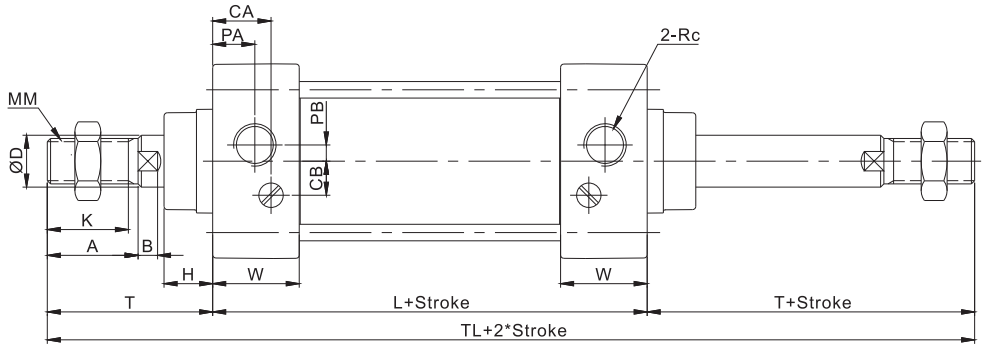

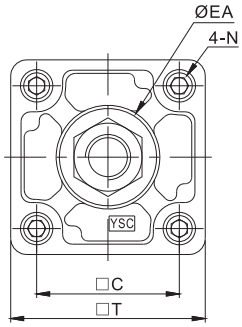

Bore (缸径)(mm)	StroKeRange (行程范围)(mm)	Thread Length(K) (有效螺纹k)	A	B	□C	□T	ϕD	ϕEA	H	MM	L	N	2-Rc	PA	PB	W	T	TL	CA	CB
40	~500	22	28	6	44	60	16	32	15	M14×1.5	84	M6×1	1/4"	13	5	26.7	51	186	18	10.5
50	~600	27	32	8	52	70	20	40	17.5	M18×1.5	90	M8×1.25	3/8"	14.5	8	29.7	58	206	21	9.9
63	~600	27	32	8	64	85	20	40	17.4	M18×1.5	98	M8×1.25	3/8"	15	9	30.7	58	214	21	11.5
80	~800	32	36	10	78	102	25	52	22.5	M22×1.5	116	M10×1.5	1/2"	21	11	36.7	71	258	26	13
100	~800	36	40	10	92	116	30	52	19	M26×1.5	126	M10×1.5	1/2"	21	13	39.7	72	270	28	14

With Gatier Type(带伸缩保护套型): YC□A2

Lube, Non–Lube, Air–Hydro Type (润滑型,无油润滑型,低油压型)

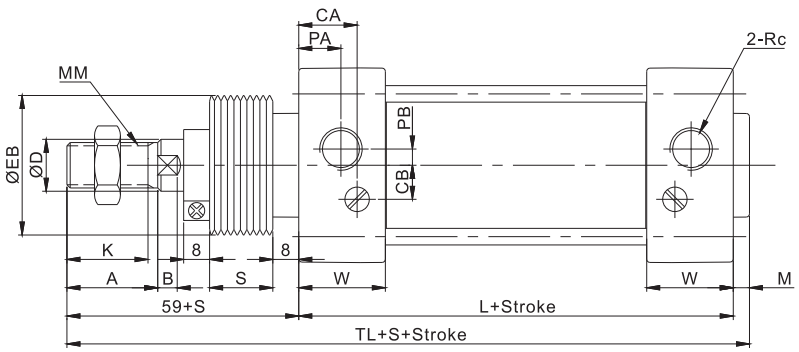

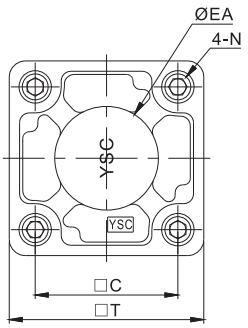

Bore (缸径)(mm)	StroKeRange (行程范围)(mm)	Thread Length(K) (有效螺纹k)	A	B	□C	□T	øD	øEA	MM	L	N	2-Rc	PA	PB	W	T	TL	M	CA	CB
40	~500	22	28	6	44	60	16	32	M14×1.5	84	M6×1	1/4"	13	5	26.7	59	148	5	18	10.5
50	~600	27	32	8	52	70	20	40	M18×1.5	90	M8×1.25	3/8"	14.5	8	29.7	66	162	6	21	9.9
63	~600	27	32	8	64	85	20	40	M18×1.5	98	M8×1.25	3/8"	15	9	30.7	66	170	6	21	11.5
80	~800	32	36	10	78	102	25	52	M22×1.5	116	M10×1.5	1/2"	21	11	36.7	80	203	7	26	13
100	~800	36	40	10	92	116	30	52	M26×1.5	126	M10×1.5	1/2"	21	13	39.7	81	215	8	28	14

Bore (缸径)(mm)	EB	S
40	43	1/4 Stroke (行程)
50	52	
63	52	
80	65	
100	65	

Adjustable Stroke Cylinder/Medium Bore Size(中型可调行程气缸)
YCA2,YCDA2--XC8(ø40~ø100) series

Adjustable Stroke Cylinder (可调行程型): YC□A2-XC8

Lube, Non–Lube, Air–Hydro Type (润滑型,无油润滑型,低油压型)

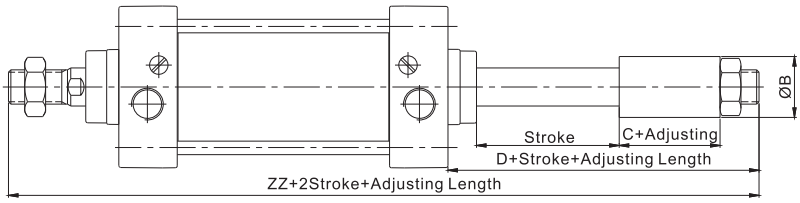

Bore (缸径)	øB	C	D	ZZ
40	32	22	51	186
50	42	28	63.5	211.5
63	42	28	63.5	219.5
80	55	35	78.5	265.5
100	55	35	75	273

Accessories for Medium Bore Size(中型标准气缸配件)
YCA2,YCDA2(ø40~ø100) series

Single knuckle Joint Dimensions(mm)带I 型单轴接头)

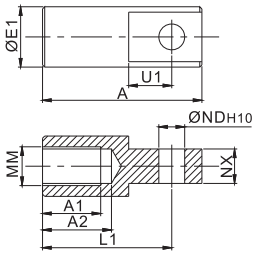

Bore (缸径)	A	A1	A2	L1	MM	U1	øE1	øNDH10
40	69	22	27	55	M14×1.5	20	24	$12^{+0.070}_{0}$
50/63	74	27	32	60	M18×1.5	20	28	
80	91	37	42	71	M22×1.5	26	36	$18^{+0.070}_{0}$
100	105	37	42	83	M26×1.5	28	40	$20^{+0.084}_{0}$

Bore (缸径)	NX	d	b
40	$16^{-0.1}_{-0.3}$	1	2
50/63	$16^{-0.1}_{-0.3}$	1	2
80	$28^{-0.1}_{-0.3}$	1.5	3
100	$30^{-0.1}_{-0.3}$	1.5	3

Double Knuckle Joint Dimensions(mm) (Y型双轴节接头)

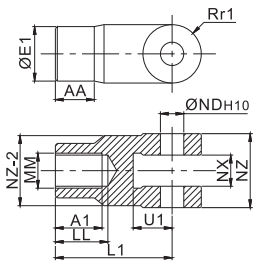

Bore (缸径)	AA	Rr1	A2	L1	MM	U1	øE1	øNDH10
40	20	13	22	55	M14×1.5	20	24	$12^{+0.070}_{0}$
50/63	20	15	24	60	M18×1.5	20	28	
80	25	19	32	71	M22×1.5	26	36	$18^{+0.070}_{0}$
100	25	21	33	83	M26×1.5	28	40	$20^{+0.084}_{0}$

Bore (缸径)	NX	LL	NZ
40	$16^{+0.3}_{+0.1}$	24	38
50/63	$16^{+0.3}_{+0.1}$	27	38
80	$28^{+0.3}_{+0.1}$	35	55
100	$30^{+0.3}_{+0.1}$	36	61

Rod End Nut(螺母)

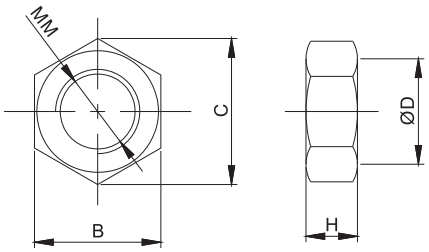

Bore (缸径)	øD	C	B	H	MM
40	22	25.4	21	8	M14×1.5
50/63	27	31.2	26	11	M18×1.5
80	32	37	31	13	M22×1.5
100	41	47.3	39	16	M26×1.5

Knuckle Joint Pin(单(双)U型钩及肘节接头销子)

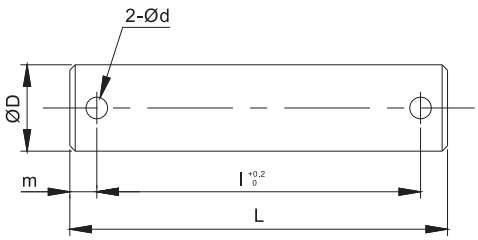

(缸径) Clevis	(缸径) Knuckle	L	l	m	øDd9	d
40	–	45.2	37.2	4	$10^{-0.040}_{-0.076}$	3
50	40/50/63	54.3	46.3	4	$12^{-0.050}_{-0.093}$	3
63	–	70	60	5	$16^{-0.050}_{-0.093}$	4
–	80	76	66	5	$18^{-0.040}_{-0.076}$	4
80	100	82	72	5	$20^{-0.065}_{-0.117}$	4
100	–	87.5	77.5	5	$25^{-0.065}_{-0.117}$	4

Order Made Option(特殊型)
YCA2,YCDA2(ø40~ø100) series

Dual Stroke Cylinder/Double Rod Type 双行程气缸/双活塞杆型

YCA2 [Mounting 安装] [Type 型式] [Bore Size 缸径] – [Stroke A 行程] [Additional Symbol 附件] + [Stroke B 行程] [Additional Symbol 附件] –XC10

Additional 附件
Blank–Without Gaiter 无–无伸缩套
J–With gaiter(Nylon Tarpaulin)有伸缩套(尼龙防水)
K–With gaiter(Neoperene Cloth)有伸缩套（氯丁橡胶外层）

Two cylinders are constructed as one cylinder ina back–to–back configuration allowing the Cylinder stroke to be controller in three steeps.
两个气缸以背靠背型式组成一个气缸，使气缸行程分三部控制。

Construction/Dimensions结构/尺寸

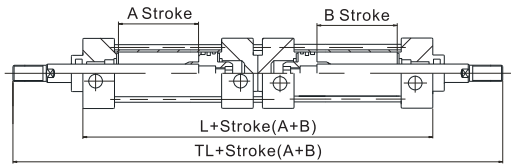

单位：mm

Bore Size	L	TL
40	178	280
50	192	308
63	208	324
80	246	388
100	268	412

Symbol 符号

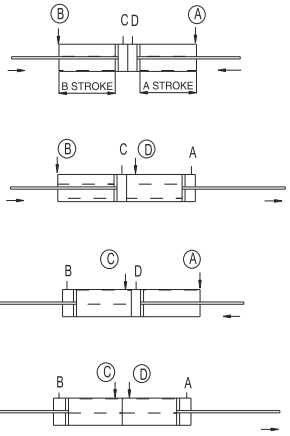

When air pressure is supplied to ports Ⓐ and Ⓑ, both A and B strokes retract.
当ⒶⒷ两口同时进气时，A、B行程同时缩回。

When air pressure is supplied to ports Ⓑ and Ⓓ, A Stroke exteends.
当ⒷⒹ两口同时进气时，伸出A行程。

When air pressure is supplied to ports Ⓐ and Ⓒ, B Stroke exteends.
当ⒶⒸ两口同时进气时，伸出B行程。

When air pressure is supplied to ports Ⓒ and Ⓓ, both Stroke A and B out Storkes.
当ⒸⒹ两口同时进气时，伸出A、B行程。

Dual Stroke Cylinder/Single Rod Type 双行程气缸/单活塞杆型

YCA2 [Mounting 安装] [Type 型式] [Bore Size 缸径] – [Stroke A 行程] + [Stroke B–A 行程 B–A] [Additional Symbol 附件] –XC11

Additional 附件
Blank–Without Gaiter 无–无伸缩套
J–With gaiter(Nylon Tarpaulin)有伸缩套(尼龙防水)
K–With gaiter(Neoperene Cloth)有伸缩套（氯丁橡胶外层）

Construction/Dimensions结构/尺寸

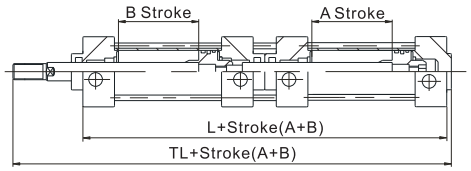

单位：mm

Bore Size	L	TL
40	198	254
50	215	279
63	230.8	294.8
80	277	355
100	290	370

※ Other dimensions are the same as for standard type.
其它尺寸与标准型相同

Symbol 符号

Function

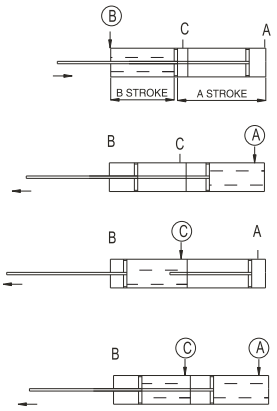

When air pressure is supplied to the Ⓑ port, both A and B strokes retract.
当Ⓑ口进气时，A、B行程同时缩回。

When air pressure is supplied to the Ⓐ prot. the rod exteends by A Stroke
当Ⓐ口进气时，A行程伸出。

When air pressure is supplied to the Ⓒ prot. the rod exteends by B Stroke
当Ⓒ口进气时，B行程伸出。

When air pressure is supplied to both portsⒶand Ⓒddouble output force is obtainable in the range of the A stroke length.
当ⒶⒸ口同时进气，在A行程范围内，活塞杆输出力增加一倍。

YSC Air Cylinder/Light Bore Size(中型标准轻型气缸)
YCA3,YCDA3(ø32~ø125) series

图形符号

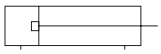

COMMON SPECIFICATIONS(共同规格)

Bore(缸径)(mm)	32	40	50	63	80	100	125
Fluid(流体)	Clean Air With Lube (洁净空气含油雾)						
Action(动作形式)	Double Acting(双动操作型)						
Proof Press.(保证耐压力)	1.5MPa{15kgf/cm^2}						
Max. Press.(最高使用压力)	0.99MPa{9.9kgf/cm^2}						
Min. Press.(最低使用压力)	0.15MPa{1.5kgf/cm^2}						
Amb.Temp.(环境及流体温度)	-5~+60°C(未冻结)						
Piston Speed(活塞速度)	50 ~ 500mm/s						
Cushion(缓冲)	Air Cushion(两侧气缓冲)						
*Lubrication(润滑)	Lube Type(STD)(油润滑型)						
Pipe Size(接管口径)Rc(PT)	1/8"	1/4"		3/8"		1/2"	

・Use Tubine Oil 1st–Grade ISOVG32,If Necessory(如需要润滑请用透平1号油ISOVG32)

HOW TO ORDER(型号表示方法)

Y C D A3 B 50 – 100 J – A58K S

YSC Model(代号)

Nil(无记号):
STD Type(无开关)
D:AutoSwitch Type
(常开关)

Mounting(附件号)
B:Basic(基本型)
L:Foot(脚座型)
F:FrontFlange(杆侧法兰)
G:RearFlange(后法兰)
C:Single Clevis(单U型钩)
D:Double Clevis(双U型钩)
T:Center Trunnion(中央轴耳)

Bore Size
(缸径)

Stroke
(行程)

Auto Switch(磁性开关种类)
Nil(无记号):w/o Switch(无磁性开关)
A58K:Reed Switch(有接点磁性开关)

No of Auto Switch(磁性开关数量)
Nil(无记号):2(个)
S:1(个)
3:3(个)

Option(型式):
GallerAmb(伸绳保护套为周围环境)
J:60℃
Y:Y Type Knuc kle Joint(Y型双肘接头)
Nil(无记号): Both Side Cushion(两侧带缓冲)

Stroke/Auto Switch(行程/磁性开关选择)

Bore (缸径) (mm)	STD Stroke (标准行程)(mm)	Auto Switch (磁性开关)
32	25, 50, 75, 100, 125, 175, 200, 250, 300, 350, 400, 450, 500	D–A58K
40		
50	25, 50, 75, 100, 125, 175, 200, 250, 300, 350, 400, 450, 500, 600	
63		
80	25, 50, 75, 125, 150, 175, 200, 250, 300, 350, 400, 450, 500, 600, 700	
100		
125		

Note: Other Stroke Available(有非标准行程可供选择)

Instruction(产品介绍)

YC(D)A3系列气缸是欧洲型轻型气缸，结构紧凑，安装形式和尺寸符号 IS06431 国际标准，具有工作可靠，耐久性好，互换性强的特点。

Dimensions(mm)(外型尺寸图)(mm)

Basic Type(基本型): YC□A3B

Lube Type (润滑型)

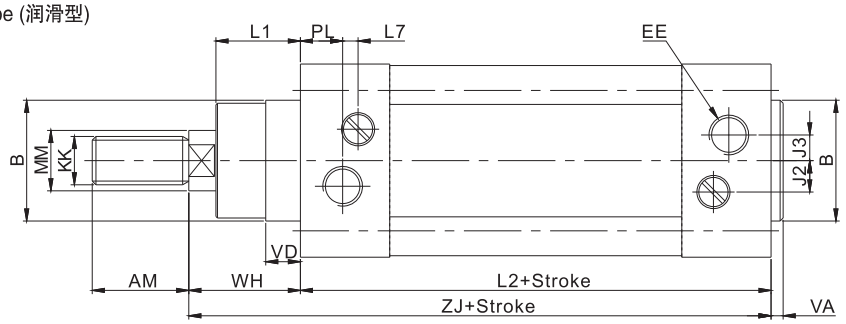

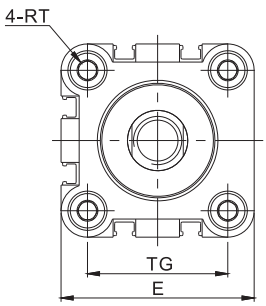

Bore (缸径)(mm)	AM	B	E	EE	RT	J2	J3	VD	MM	KK	L1	L2	L7	TG	PL	VA	WH	ZJ
32	22	30	48	1/8"	M6	6	5.2	9	12	M10×1.25	18	94	3.3	32.5	15.6	4	26	120
40	24	35	54	1/4"	M6	8	6	9	16	M12×1.25	21.5	105	3.6	38	14	4	30	135
50	32	40	65	1/4"	M8	10.4	8.5	9	20	M16×1.5	28	106	5.1	46.5	14	4	37	143
63	32	45	75.2	3/8"	M8	12.4	10	9	20	M16×1.5	28.5	121	6.6	56.5	17	4	37	158
80	40	45	94	3/8"	M10	12.5	8	9	25	M20×1.5	34.7	128	10.5	72	16.4	4	46	174
100	40	55	111	1/2"	M10	12	10	9	25	M20×1.5	38.2	138	8	89	18.8	4	51	189
125	54	60	134	1/2"	M12	13	8	9	25	M27×2	46	160	14	110	18	6	65	225

Double Clevis Bracket Type(双耳环带接座): YC□A3E

Lube Type (润滑型)

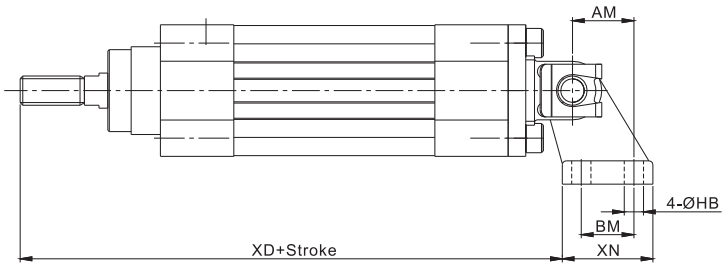

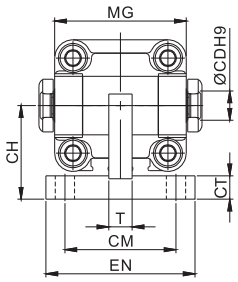

Bore (缸径)(mm)	StroKeRange (行程范围)(mm)	Thread Length(K) (有效螺纹k)	AM	BM	CH	CM	HB	CT	MG	XN	EN	CD	T	XD
32	~500	20	21	18	32	38	7	8	53	31	51	10	10	159.5
40		23	24	22	36	41	7	10	60	35	54	12	15	179
50	~600	25	33	30	45	50	9	12	68	45	65	12	16	189.5
63	~600	25	37	35	50	52	9	12	78	50	67	16	16	208
80	~800	30	47	40	63	66	11	14	98	60	86	16	20	233.5
100	~800	30	55	50	71	76	11	17	118	70	96	20	20	250.5
125	~800	40	70	60	90	94	14	20	140	90	124	25	25	270

Foot(脚座安装型) YC□A3L

Lube Type (润滑型)

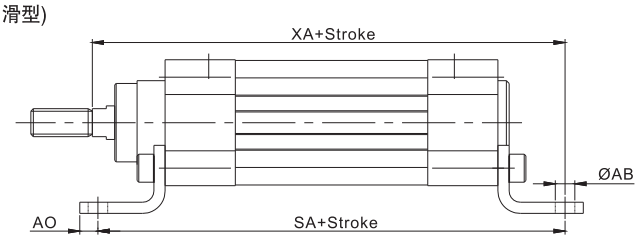

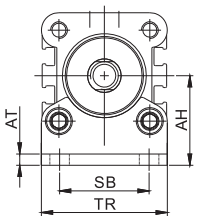

Double Clevis(尾部双耳安装型) YC□A3D

Lube Type (润滑型)

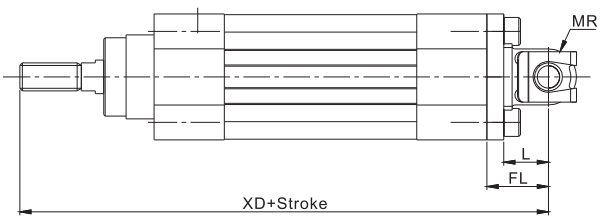

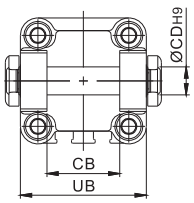

Single Clevis(尾部单耳安装型) YC□A3C

Lube Type (润滑型)

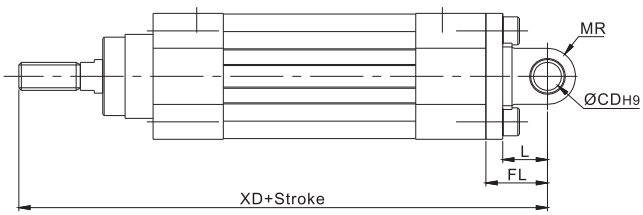

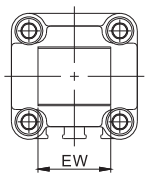

底座型、耳环型 （通用尺寸，其它标准尺寸见标准气缸）

Bore (缸径)(mm)	StroKeRange (行程范围)(mm)	Thread Length(K) (有效螺纹k)	AB	SB	TR	AH	AO	AT	CB	EW	CD	FL	L	MR	SA	UB	XA	XD
32	~ 500	20	7	32	48	32	8	5	26	26	10	21	13	10	142	32.5	144	164
40		23	10	36	53	36	12	5	28	28	12	25	16	12	161	38	163	184
50	~ 600	25	10	45	63	45	13	5	32	32	12	26	16	12	170	46.5	175	202
63	~ 600	25	10	50	73	50	13	5	40	40	16	33	21	16	185	56.5	190	222
80	~ 800	30	12	63	98	63	19	6	50	50	16	36	22	16	210	72	215	250
100	~ 800	30	14	75	115	71	19	6	60	60	20	41	27	20	220	89	230	270
125	~ 800	40	16.5	90	131	90	22	8	70	70	25	20	30	25	250	110	270	329

Trunnion Type(中央轴耳型): YC□A3T

Lube Type (润滑型)

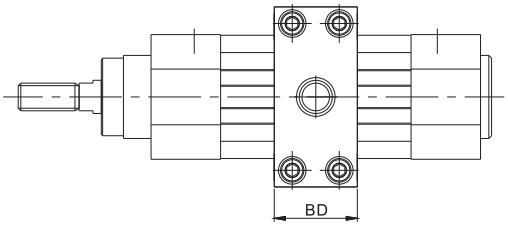

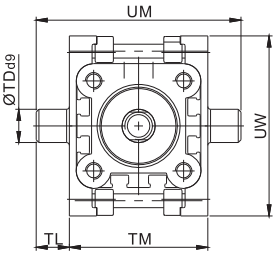

Rear Flange Type (后法兰型): YC□A3G

Lube Type (润滑型)

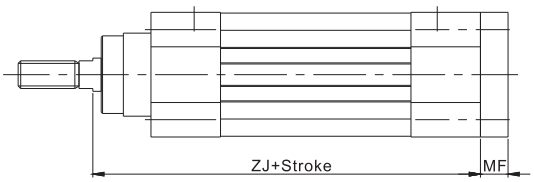

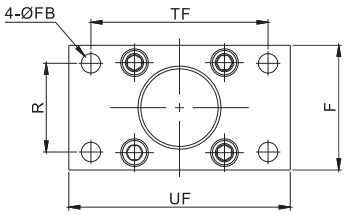

FrontFlange Type(杆侧法兰型): YC□A3F

Lube Type (润滑型)

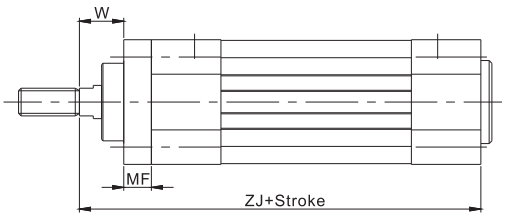

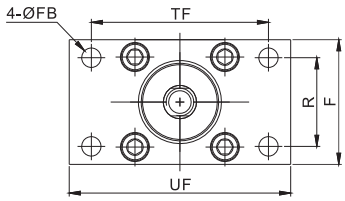

中间轴销型、法兰型 （通用尺寸，其它标准尺寸见标准气缸）

Bore (缸径)(mm)	StroKeRange (行程范围)(mm)	Thread Length(K) (有效螺纹k)	BD	FB	F	MF	R	TD	TF	TL	TM	UF	UM	UW	W	ZJ
32	~ 500	20	16	7	50	10	32	12	64	12	50	80	74	65	16	130
40		23	20	9	55	10	36	16	72	16	63	90	95	75	20	145
50	~ 600	25	24	9	65	12	45	16	90	16	75	110	107	95	25	155
63	~ 600	25	24	9	75	12	50	20	100	20	90	125	130	105	25	170
80	~ 800	30	28	12	100	16	63	20	126	20	110	154	150	130	30	190
100	~ 800	30	38	14	120	16	75	25	150	25	132	186	182	145	35	205
125	~ 800	40	50	16	150	20	90	25	180	25	160	220	210	175	45	245

With Gatier Type(带伸缩保护套型)

本系列气缸活塞杆，如客户需要可带防尘套，但活塞杆必须按本图尺寸加工，用户订货使用必须注意。
If need with Gatier for Gylinder, the rod must machining as draning, please attention.

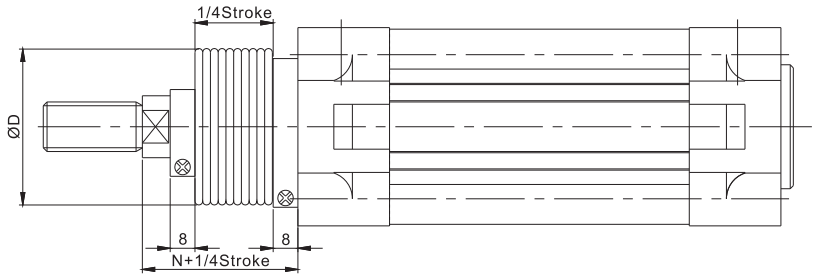

尺寸 / 缸径	N	D
32	32	35
40	32	40
50	32	50
63	32	50
80	40	60
100	40	60
125	50	70

Accessories for Medium Bore Size(中型标准轻型气缸配件)
YCA3,YCDA3(ø32~ø125) series

Y Type Double Rod Clevis (Y型双肘接头)

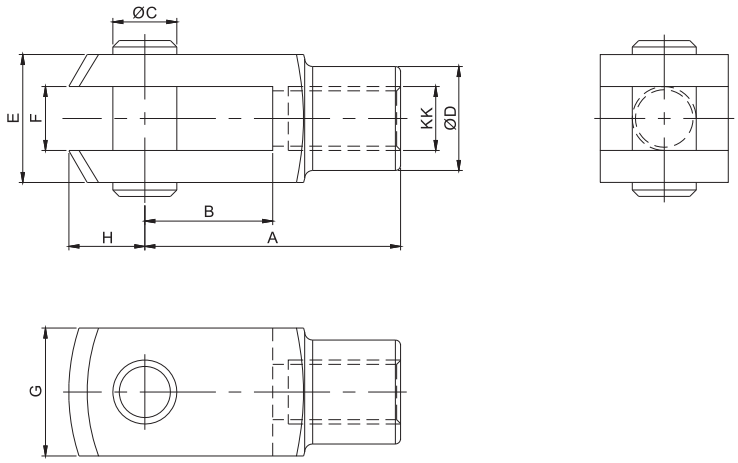

Bore (缸径)(mm)	A	B	C	D	E	F	G	H	K
32	40	20	10	18	20	10_{B13}	20	12	M10×1.25
40	48	24	12	20	24	$12^{+0.7}_{+0.15}$	24	14	M12×1.25
50,63	64	32	16	26	32	$16^{+0.7}_{+0.15}$	32	19	M16×1.5
80,100	80	40	20	34	40	$20^{+0.7}_{+0.15}$	40	25	M20×1.5
125	110	54	30	48	55	$30^{+0.7}_{+0.15}$	55	38	M27×2

Air Cylinder/Medium Size(No-Lube with Magnet Ring)
(中型标准气缸(基本无油润滑,内置磁环))
YMB(ø32~ø100) Series

图形符号

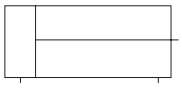

COMMON SPECIFICATIONS(共同规格)

Bore(缸径)(mm)	32	40	50	63	80	100
Fluid(流体)	Clean Air(洁净空气)					
Action(动作形式)	Double Acting(双动)					
Proof Press.(保证耐压力)	1.5Mpa(15kgf/cm²)					
Max Press.(最高使用压力)	0.99Mpa(9.9kgf/cm²)					
Min Press.(最低使用压力)	0.05Mpa(0.5kgf/cm²)					
Amb.Temp.(环境和流体温度)	-5~+60°C(未冻结)					
Piston Speed(活塞速度)	50~500mm/s					
Cushion(缓冲)	Air Cushion(气缓冲)					
Stroke Tolerance(行程公差)	0~250:$^{+1.0}_{0}$ 251~1000:$^{+1.4}_{0}$					
*Lubrication(润滑)	Non-Lube(不需要)					
Pipe Size(接管口径)Rc(PT)	1/8"	1/4"		3/8"		1/2"

*Use Turbine Oil 1st–Grade ISOVG32, When Use(如需要润滑，请用透平1号油ISOVG32)

HOW TO ORDER(型号表示方法)

YMB | B | 50 – 150 | Y – A25B | S

- YMB: YSC Model(代号)
- B: Type(附件号)
  - B: Basic(基本型)
  - F: Foot(脚坐)
  - L: Rod Flange(杆侧法兰)
  - G: Head Flange(无杆侧法兰)
  - C: Single Clevis(单U型钩)
  - D: Double Clevis(双U型钩)
  - T: Trunnion(中央轴耳)
  - E: Double Clevis/Bracket (双U型钩接坐)
  - R: Trunnion/Bracket (中央轴耳接坐)
- 50: Bore Size (缸径)
- 150: Stroke(行程)
- Y: Accessories(附件)
  - I=I Knuckle(单肘节接头)
  - Y=Y Knuckle(双肘节接头)
- A25B: Auto Switch(磁性开关种类) A25B
- S: No.of Auto Switch(磁性开关个数)
  - Nil(无记号) : 2pcs(个)
  - S: 1pcs(个)
  - 3: 3pcs(个)

Standard Stroke & Auto Switch(行程/磁性开关选择)

Bore (缸径) (mm)	Stroke (标准行程) (mm)	Tie Rod Mounting Type(拉杆安装型)	
		Auto Switch(磁性开关)	Switch Holder(开关固定码)
32	25,50,75,100,125,150,175,200, 250,300,350,400,450,500	A-25B	B40
40			
50	25,50,75,100,125,150,175,200, 250,300,350,400,450,500,600		B56
63			
80	25,50,75,100,125,150,175,200,250, 300,350,400,450,500,600,700,750		B81
100			

Note: Other Stroke Avilable (有非标准行程可供选择).
※Note ： See" Auto Switch Series" (Page ：4.155)

Dimensions(mm) (外形尺寸图(毫米))

BASIC TYPE(基本型)

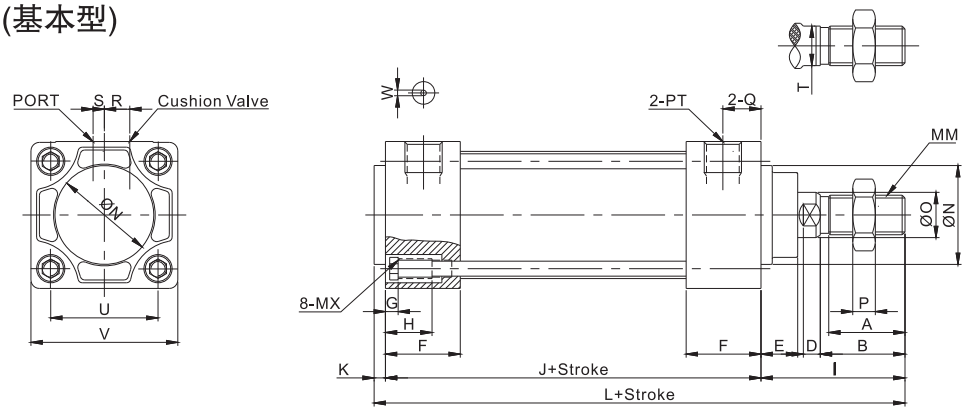

Bore(缸径)	A	B	D	E	F	G	H	I	J	K	L	MM	øN	øO	P	PT	Q	R	S	T	U	V	W	MX
ø32	19.5	22	6	13	26.5	4	16	47	83	4	135	M10×1.25	30	12	8	1/8"	13	6.5	4	10	32.5	46	2.5	M6×1.0
ø40	27	30	6	13	26.5	4	16	51	83	4	138	M14×1.5	35	16	8	1/4"	13.5	9	4	14	38	52	2.5	M6×1.0
ø50	32	35	7	14	31	5	16	58	93	4	155	M18×1.5	40	20	11	1/4"	15	10.5	5	18	46.5	65	2.5	M8×1.25
ø63	32	35	7	14	31	5	16	58	93	4	155	M18×1.5	45	20	11	3/8"	16	12	9	22	56.5	75	4	M8×1.25
ø80	37	40	10	20	37.5	5	16	72	113	4	189	M22×1.5	45	25	13	3/8"	18.5	14	11.5	22	72	95	4	M10×1.5
ø100	37	40	10	20	37.5	5	16	72	113	4	189	M26×1.5	45	30	16	1/2"	18.5	15	17	26	89	114	4	M10×1.5

Air Cylinder/Medium Size(No-Lube with Magnet Ring)
(中型标准气缸(基本无油润滑,内置磁环))
YMB(ø32~ø100) Series

Construction(结构)

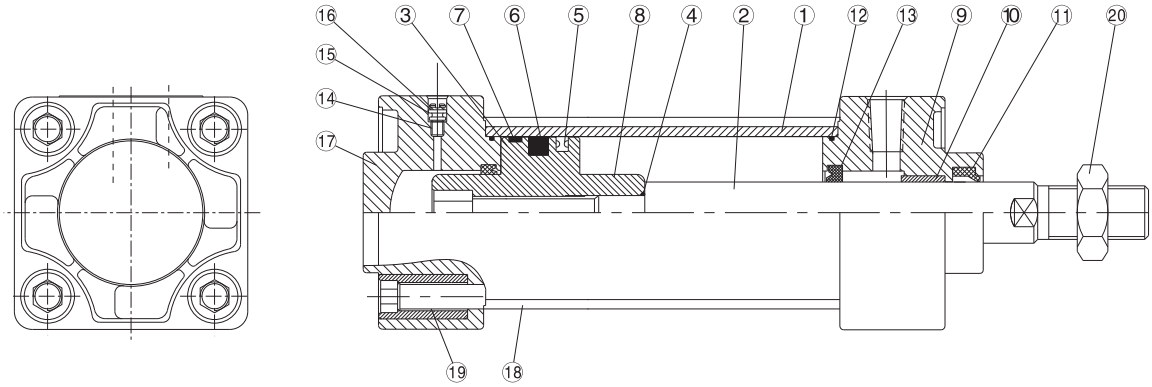

PART LIST(主要零件)

No.(序号)	Description(名称)	Material(材料)
1	Tube(缸筒)	A6063
2	Piston Rod(活塞杆)	SM45C
3	Piston (活塞)	A.
4	O Ring(O型圈)	NBR
5	Piston packing(活塞密封圈)	NBR
6	Magnet Ring(磁环)	–
7	Wear Ring(耐磨环)	–
8	Sleeve(缓冲套)	BS
9	Rod Cover(杆侧端坐)	ADC–12
10	Oilless Bearing(轴套)	–

No.(序号)	Description(名称)	Material(材料)
11	Rod Packing(活塞杆密封圈)	A6063
12	Guide Packing(缸筒密封圈)	SM45C
13	Cushion Packing(缓冲密封阀)	A.
14	Cushion Valve(缓冲阀)	NBR
15	O Ring(O型圈)	NBR
16	Retaining Ring(保持圈)	–
17	Head Cover(头盖)	–
18	Tie Rod(拉杆)	BS
19	Tie Rod Nut (拉杆螺母)	ADC–12
20	Hex. Nut(杆端螺母)	–

Part No. of Paeking(密封圈型号)

Bore (缸径)	5	11	12	13
	Piston packing(活塞密封圈)	Rod Packing(杆密封圈)	Guide Packing(缸筒密封圈)	Cushion Valve(缓冲阀)
ø32	COP–32	DRP–12	GP–32	CP–16
ø40	COP–40	DRP–16	GP–40	CP–20
ø50	COP–50	DRP–20	GP–50	CP–25
ø63	COP–63	DRP–20	GP–63	CP–25
ø80	COP–80	DRP–25	GP–80	CP–30
ø100	COP–100	DRP–30	GP–100	CP–35

Foot Type(脚坐)(L)

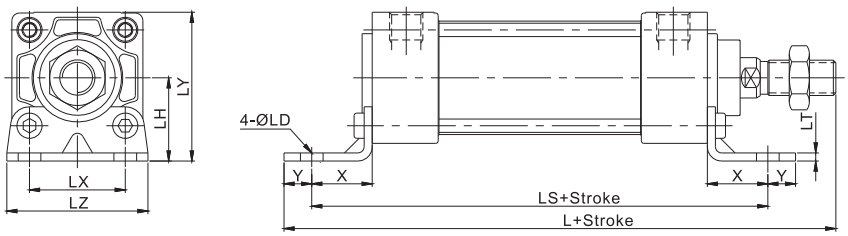

Bore(缸径)	Max. Stroke(最大行程)	X	Y	øLD	LH	LS	LT	LZ	L	LX	LY
ø32	800	22	9	7	30	131	3.2	50	161	32	53
ø40	800	24	11	9	33	131	3.2	55	169	38	59
ø50	1000	27	11	9	40	147	3.2	70	189	46	72.5
ø63	1000	27	14	12	45	147	3.2	80	192	56	82.5
ø80	1000	30	14	12	55	173	4.5	100	229	72	102.5
ø100	1000	32	16	14	65	177	4.5	120	233	89	122

Front Flange Type(前法兰)(F)

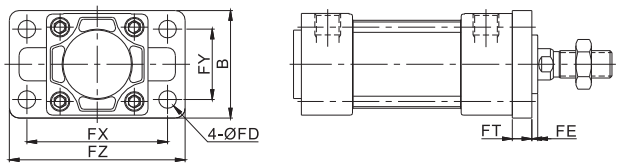

Bore(缸径)	Max. Stroke(最大行程)	B	øFD	FE	FT	FX	FY	FZ
ø32	800	50	9	3	10	64	32	79
ø40	800	55	9	3	10	72	36	90
ø50	1000	70	9	2	12	90	45	110
ø63	1000	80	9	2	12	100	50	120
ø80	1000	100	12	2	18	126	63	153
ø100	1000	120	14	2	18	150	75	178

Rear Flange Type(后法兰)(G)

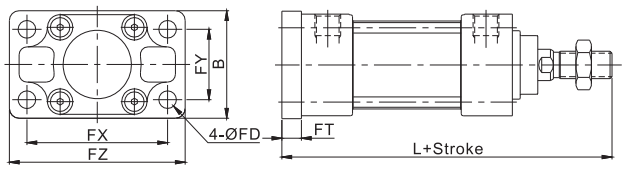

Bore(缸径)	Max. Stroke(最大行程)	B	øFD	FT	FX	FY	FZ	L
ø32	500	50	9	10	64	32	79	140
ø40	500	55	9	10	72	36	90	144
ø50	600	70	9	12	90	45	110	163
ø63	600	80	9	12	100	50	120	163
ø80	750	100	12	18	126	63	153	203
ø100	750	120	12	18	150	75	178	203

Single Clevis Type(单U型钩) (C)

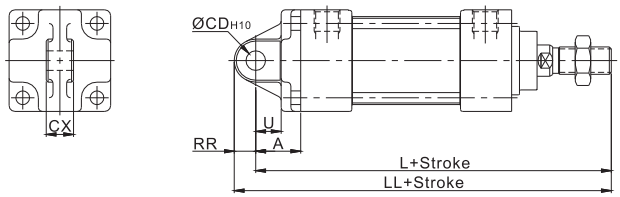

Bore(缸径)	Max. Stroke(最大行程)	A	RR	U	øCD	CX	L	LL
ø32	500	23	10.5	13	10	14	154	164.5
ø40	500	23	11	13	10	14	157	168
ø50	600	30	15	17	14	20	181	192
ø63	600	30	15	17	14	20	181	196
ø80	750	42	23	26	22	30	227	250
ø100	750	42	23	26	22	30	227	250

Double Clevis Type(双U型钩)(D)

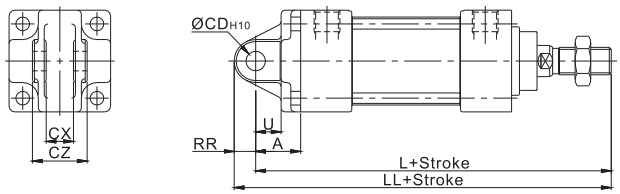

Bore(缸径)	Max. Stroke(最大行程)	A	RR	U	øCD	CX	CZ	L	LL
ø32	500	23	10.5	13	10	14	28	154	164.5
ø40	500	23	11	13	10	14	28	157	168
ø50	600	30	15	17	14	20	40	181	192
ø63	600	30	15	17	14	20	40	181	196
ø80	750	42	23	26	22	30	60	227	250
ø100	750	42	23	26	22	30	60	227	250

Center Trunnion Type(中央轴耳)(T)

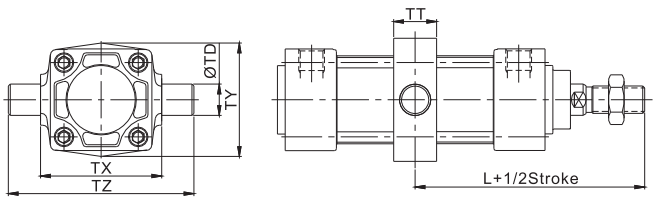

Bore(缸径)	Max. Stroke(最大行程)	øTD	TT	TX	TY	TZ	L
ø32	500	12	17	50	49	74	89
ø40	500	16	22	62	58	95	92.5
ø50	600	16	22	75	71	107	104.5
ø63	600	20	28	90	87	130	104.5
ø80	750	20	34	110	110	150	128.5
ø100	750	25	30	132	136	182	128.5

Double Clevis Bracket Type(双U型钩接座)(E)

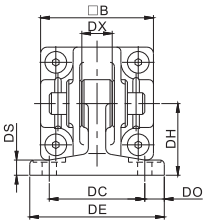

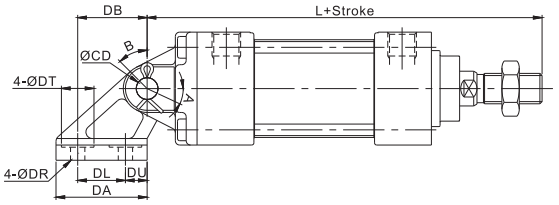

Bore(缸径)	□B	DA	DB	DL	DU	DC	DX	DE	DO	øDR	øDT	DS	DH	L	øCD(H10)	A°	B°
ø40	52	42	32	22	10	44	14	62	9	6.9	15	7	33	157	$10^{+0.053}_{0}$	25	45
ø50	65	53	43	30	11.5	60	20	80	10.5	9	18	8	45	181	$14^{+0.073}_{0}$	40	60
ø63	75	53	43	30	11.5	60	20	81	10.5	9	18	8	45	181	$14^{+0.073}_{0}$	40	60
ø80	95	73	64	45	14	86	30	111	12.5	11	22	10	65	227	$22^{+0.084}_{0}$	30	55
ø100	144	73	64	45	14	86	30	111	12.5	11	22	10	65	227	$22^{+0.084}_{0}$	30	55

Trunnion Bracket Type (中央轴耳接座)(R)

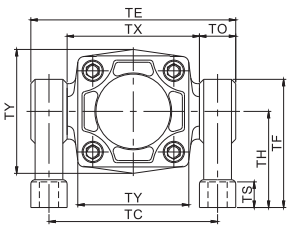

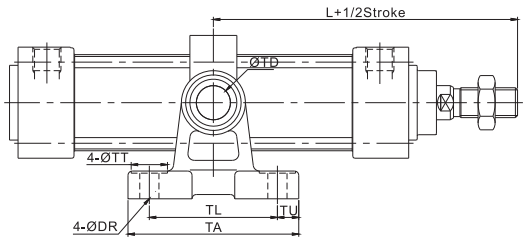

Bore(缸径)	TA	TL	TU	TC	TX	TE	TO	øTR	TT	TS	TH	TF	TY	L	øTD(H10)
ø40	80	60	10	79	62	96	17	9	17	12	45	60	58	92.5	$16^{+0.073}_{0}$
ø50	80	60	10	92	75	109	17	9	17	12	45	60	71	104.5	$16^{+0.073}_{0}$
ø63	10	70	15	110	90	130	20	11	22	14	60	78	87	104.5	$20^{+0.073}_{0}$
ø80	100	70	15	130	110	150	20	11	22	14	60	78	110	128.5	$20^{+0.084}_{0}$
ø100	120	90	15	132	130	182	25	13.5	24	17	75	100	136	128.5	$25^{+0.084}_{0}$

Rod End Nut (杆端螺母)

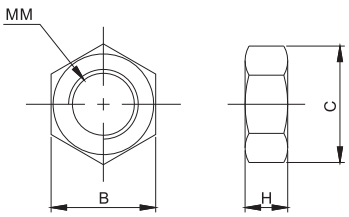

Bore(缸径)	B	C	H	MM
ø40	22	25.4	8	M14×1.5
ø50,ø63	27	31.2	11	M18×1.5
ø80	32	37	13	M22×1.5
ø100	41	47.3	16	M26×1.5

Double Knuckle (销子)

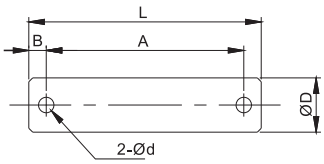

Bore(缸径)	A	B	L	ød	øD(H10)
ø40	36	4	44	3	$10^{-0.040}_{-0.078}$
ø50,ø63	51	4.5	60	4	$14^{-0.050}_{-0.093}$
ø80,ø100	72	5	82	4	$22^{-0.065}_{-0.117}$

Single Knuckle Joint (I型单肘节接头)

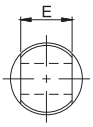

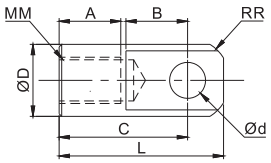

Bore(缸径)	A	B	C	øD	ød(H10)	E(H10)	L	R	MM
ø40	19	19	40	22	$10^{+0.058}_{0}$	$14^{-0.1}_{-0.3}$	50	12.5	M14×1.5
ø50,ø63	24	24	50	28	$10^{+0.070}_{0}$	$20^{-0.1}_{-0.3}$	64	16.5	M18×1.5
ø80	26	34	60	40	$22^{+0.084}_{0}$	$30^{-0.1}_{-0.3}$	80	23.5	M22×1.5
ø100	26	34	60	40	$22^{+0.084}_{0}$	$30^{-0.1}_{-0.3}$	80	23.5	M26×1.5

Double Knuckle Joint (Y型双肘节接头)

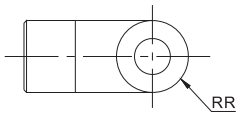

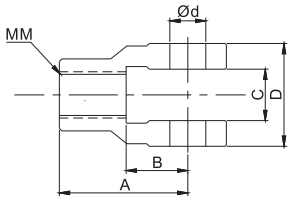

Bore(缸径)	A	B	C	D	ød(H10)	MM	R
ø40	40	19	$14^{-0.1}_{-0.3}$	$28^{-0.1}_{-0.3}$	$10^{+0.058}_{0}$	M14×1.5	11
ø50,ø63	50	24	$20^{-0.1}_{-0.3}$	$40^{-0.1}_{-0.3}$	$10^{+0.070}_{0}$	M18×1.5	14
ø80	65	34	$30^{-0.1}_{-0.3}$	$58^{-0.1}_{-0.3}$	$22^{+0.084}_{0}$	M22×1.5	20
ø100	65	34	$30^{-0.1}_{-0.3}$	$58^{-0.1}_{-0.3}$	$22^{+0.084}_{0}$	M26×1.5	20

YMBBW(ø32~ø100) Series

HOW TO ORDER(型号表示方法)

YMBBW [40] – [50] [ ] [ ] [ ] [ ]

① Bore ② Stroke ③ ④ ⑤ ⑥

③	Mounting 安装形式
④	Knuckle Joint 连接附件
⑤	Auto Switch 磁性开关种类
⑥	Auto Switch Q'ty 磁性开关数量

Bore size	(单位:mm)
40	25,50,75,100,150,200,250,300,400,500
50	25,50,75,100,150,200,250,300,400,500,600
63	25,50,75,100,150,200,250,300,400,500,600
80	25,50,75,100,150,200,250,300,400,500,600,700,800
100	25,50,75,100,150,200,250,300,400,500,600,700,800

Moving 安装形式

符号	安装形式
Nil	Standard Type 标准型
L	Foot Type 脚座型
F	Flange Type 法兰型
T	Trunnion Type 轴耳型
R	Trunnion Bracket Type 轴耳支架型

Auto Switch Type (磁性开关型号)

符号	开关型号
Nil	Non–Switch 无磁性开关
A25B	A25 Switch and Bracket (A25及固定码)

Knuckle Joint 连接附件

符号	附件
Nil	Standard Type 标准型
Y	Double Knuckle joint 双肘节接头
I	Single Knuckle joint 单肘节接头

Auto Switch Q'TY (磁性开关数量)

符号	Q'TY数量
1	1 pc
2	2 pcs
n	n pcs

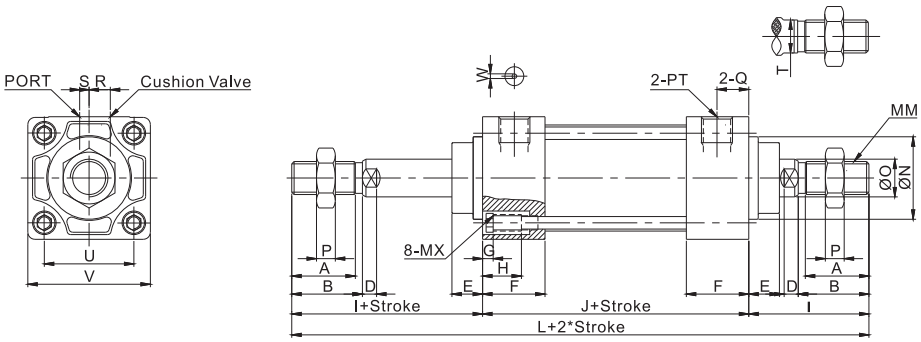

Bore(缸径)	A	B	D	E	F	G	H	I	J	L	MM	øN	øO	P	PT	Q	R	S	T	U	V	W	MX
ø40	27	30	6	13	26.5	4	16	51	83	185	M14×1.5	35	16	8	1/4"	13.5	9	4	14	38	52	2.5	M6×1.0
ø50	32	35	7	14	31	5	16	58	83	209	M18×1.5	40	20	11	1/4"	15	10.5	5	18	46.5	65	2.5	M8×1.25
ø63	32	35	7	14	31	5	16	58	90	209	M18×1.5	45	20	11	3/8"	16	12	9	22	56.5	75	4	M8×1.25
ø80	37	40	10	20	37.5	5	16	72	113	257	M22×1.5	45	25	13	3/8"	18.5	14	11.5	22	72	95	4	M10×1.5
ø100	37	40	10	20	37.5	5	16	72	113	257	M26×1.5	45	30	16	1/2"	18.5	15	17	26	89	114	4	M10×1.5

YSC | Adjustable Stroke Cylinder/Medium Bore Size(中型可调行程气缸)
YMB--XC8(ø40~ø100) Series

HOW TO ORDER(型号表示方法)

YMBB	40	–	50	A					XC8

A	0~25mm Adjust 调节
B	0~50mm Adjust 调节

XC8	Extension Adjustable Type伸出调节型
XC9	Retraction Adjustable Type缩回调节型

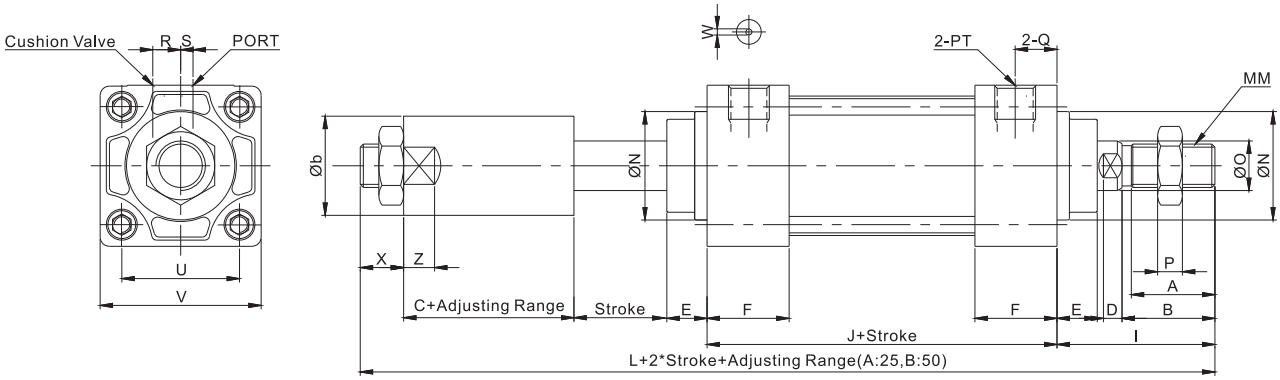

TUBE	A	B	D	E	F	I	J	L	MM	øN	øO	2-PT	2-Q	R	S	U	V	W	P	C	øb	X	Z
ø40	27	30	6	13	26.5	51	83	185	M14×1.5	35	16	1/4”	13.5	9	4	38	52	2.5	8	30	32	27	4
ø50	32	35	7	14	31	58	83	209	M18×1.5	40	20	1/4”	15	10.5	5	46.5	65	2.5	11	39	38	32	15
ø63	32	35	7	14	31	58	90	209	M18×1.5	45	20	3/8”	16	12	9	56.5	75	4	11	39	38	32	15
ø80	37	40	10	20	37.5	72	113	257	M22×1.5	45	25	3/8”	18.5	14	11.5	72	95	4	13	48	45	41	18
ø100	37	40	10	20	37.5	72	113	257	M26×1.5	45	30	1/2”	18.5	15	17	89	114	4	16	51	53	50	21

YSC | Air Cylinder/Medium Bore Size(中型标准气缸)
YMC(ø32~ø100) series

图形符号

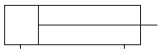

COMMON SPECIFICATIONS(共同规格)

Bore(缸径)(mm)	32	40	50	63	80	100
Fluid(流体)	Clean Air(洁净空气)					
Action(动作形式)	Double Acting(双动操作型)					
Proof Press.(保证耐压力)	1.5MPa{15kgf/cm^2}					
Max. Press.(最高使用压力)	0.99MPa{9.9kgf/cm^2}					
Min. Press.(最低使用压力)	0.05MPa{0.5kgf/cm^2}					
Amb.Temp.(环境及流体温度)	-5~+60°C(未冻结)					
Piston Speed(活塞速度)	50 ~ 500mm/s					
Cushion(缓冲)	Air Cushion(气缓冲)					
Stroke Tolerance(行程公差)	~ 250:$^{+1.0}_{0}$ 251 ~ 1000:$^{+1.4}_{0}$ 1000 ~ 1500:$^{+1.8}_{0}$					
*Lubrication(润滑)	Lube Type(STD) Non-Lube(Option)(油润滑型(标准)不需要(任选))					
Pipe Size(接管口径)Rc(PT)	1/8"	1/4"	1/4"	3/8"	3/8"	1/2"

・Use Tubine Oil 1st-Grade ISOVG32,If Necessory(如需要润滑请用透平1号油ISOVG32)

HOW TO ORDER(型号表示方法)

YMC B 50 - 150 Y - S - A26B S

- YSC Model(代号)
- Type(附件号)
  - B: Basic(基本型)
  - L: Foot(脚座)
  - F: Rod Flange(杆侧法兰)
  - G: Head Flange(无杆侧法兰)
  - C: Single Clevis(单U型钩)
  - D: Double Clevis(双U型钩)
  - T: Trunnion(中央轴耳)
- Bore Size (缸径)
- Stroke(行程)
- Accessories(附件)
  - I=I Knuckle(单肘节接头)
  - Y=Y Knuckle(双肘节接头)
- Magnet Type(磁环情况)
  - Nil(无记号):无
  - S:内置磁环
- No.of Auto Switch(磁性开关个数)
  - Nil(无记号) : 2pcs(个)
  - S: 1pcs(个)
  - 3: 3pcs(个)

Stroke/Auto Switch(行程/磁性开关选择)

Bore (缸径) (mm)	STD Stroke (标准行程)(mm)	Auto Switch (磁性开关)	Mount Part No. (开关固定码)
32,40	25, 50, 75, 100, 125, 175, 200, 250, 300, 350, 400, 450, 500	D-A26B D-A26BL	BC-04
			BC-04
50	25, 50, 75, 100, 125, 175, 200, 250, 300, 350, 400, 450, 500, 600		BC-06
63			BC-06
80	25, 50, 75, 125, 150, 175, 200, 250, 300, 350, 400, 450, 500, 600, 700		BC-08
100			BC-08

Note: Other Stroke Available(有非标准行程可供选择)

Dimensions(mm)(外型尺寸图)(mm)

Basic Type(基本型): YMCB

Lube,Non-Lube (润滑型，无油润滑型)

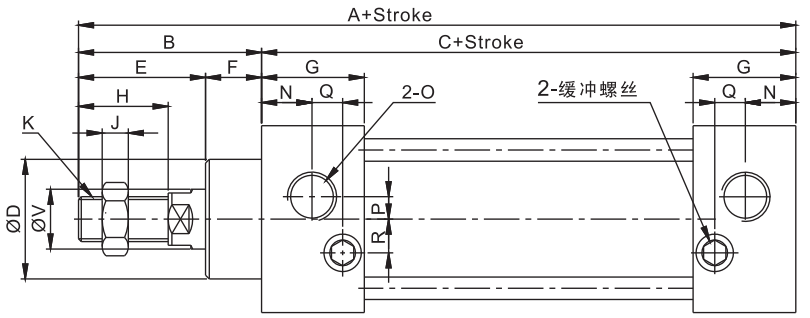

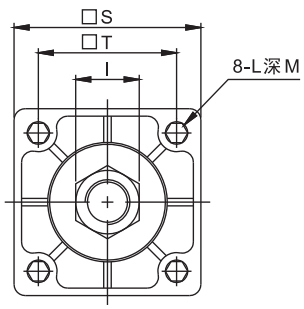

Bore (缸径)(mm)	StroKeRange (行程范围)(mm)	A	B	C	D	E	F	G	H	I	J	K	L	M	N	O	P	Q	R	S	T	V
32	~ 500	140	47	93	28	32	15	27.5	22	17	6	M10×1.25	M6×1	9.5	13.7	1/8"	3.5	7.5	7	45	33	12
40	~ 500	142	49	93	32	34	15	27.5	24	17	7	M12×1.25	M6×1	9.5	13.5	1/4"	6	7.5	9	50	37	16
50	~ 600	150	57	93	38	42	15	27.5	32	23	8	M16×1.5	M6×1	9.5	13.5	1/4"	8.5	7.5	9	62	47	20
63	~ 600	153	57	96	38	42	15	27.5	32	23	8	M16×1.5	M8×1.25	9.5	13.5	3/8"	7	7.5	8.5	75	56	20
80	~ 800	182	75	107	47	54	21	33	40	26	10	M20×1.5	M10×1.5	11.5	16.5	3/8"	10	8.5	14	94	70	25
100	~ 800	188	75	113	47	54	21	33	40	26	10	M20×1.5	M10×1.5	11.5	16.5	1/2"	11	8.5	14	112	84	25

Dimensions(mm)(附件尺寸图(毫米))

Axial Foot (脚座): L

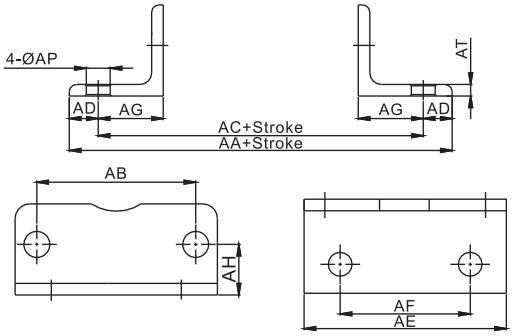

Bore (缸径)(mm)	AA	AB	AC	AD	AE	AF	AG	AH	AP	AT
32	153	33	134	9.5	50	33	20.5	12	9	3
40	169	37	140	14.5	57	36	23.5	11.5	12	3
50	173	47	149	12	68	47	28	13	12	3
63	184	56	158	13	80	56	31	13	12	3
80	189	70	167	16	97	70	30	14	14	4
100	209	84	173	18	112	84	30	15	14	4

Flange (法兰): F、G

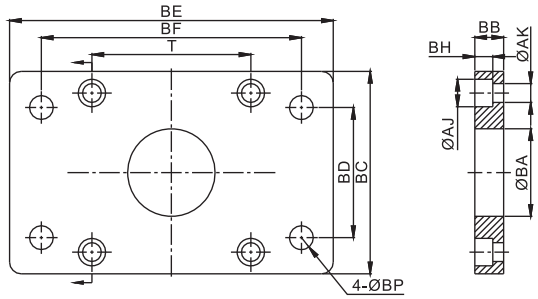

Bore (缸径)(mm)	BA	BB	BC	BD	BE	BF	BH	BP	AJ	AK	T
32	28.3	10	50	33	80	58	6.5	7	10.5	6.5	33
40	32.3	10	55	36	90	70	6.5	7	10.5	6.5	37
50	38.3	12	68	47	108	86	6.5	9	10.5	6.5	47
63	38.3	12	78	56	120	98	8.5	9	13.5	8.5	56
80	47.3	16	100	70	143	119	10.5	11	16.5	10.5	70
100	47.3	16	120	84	162	138	10.5	11	16.5	10.5	84

SingleRear Clevis (单U型钩): C

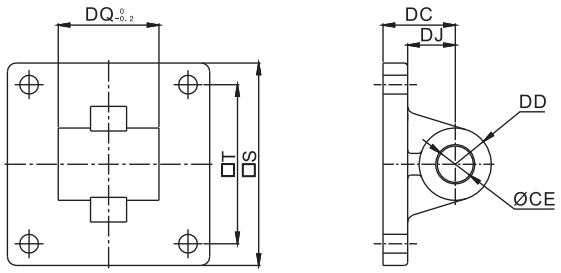

Bore (缸径)(mm)	DC	DD	DE	DJ	DQ	S	T
32	34	14	12	14	16	48	33
40	34	14	14	14	20	50	37
50	34	15	14	15	20	62	47
63	34	15	14	15	20	75	56
80	48	20	20	20	32	94	70
100	48	20	20	20	32	112	84

Double Rear Clevis (双U型钩): D

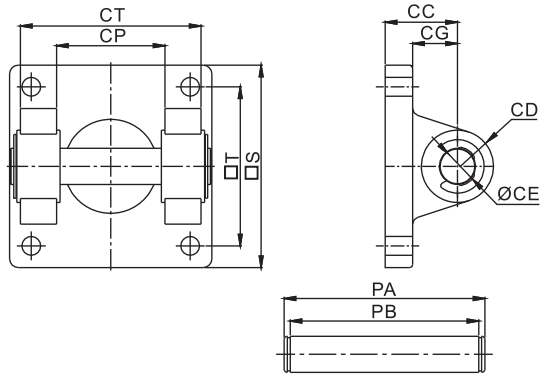

Bore (缸径)(mm)	CC	CD	CE	CG	CP	CT	PA	PB	S	T
32	21	9	12	13	16.3	32	41	33.5	48	33
40	21	12	14	13	20.3	44	51.8	45.5	50	37
50	21	12	14	15	20.3	52	60.3	54	62	47
63	21	15	14	15	20.3	52	60.3	54	75	56
80	32	15	20	21	32.3	64	73.8	65.5	94	70
100	32	20	20	21	32.3	64	73.8	65.5	112	84

Double Rod Tylinder (双作用活塞杆型):YMCW

Lube, Non–Lube, Air–Hydro Type (润滑型, 无油润滑型, 低油压型)

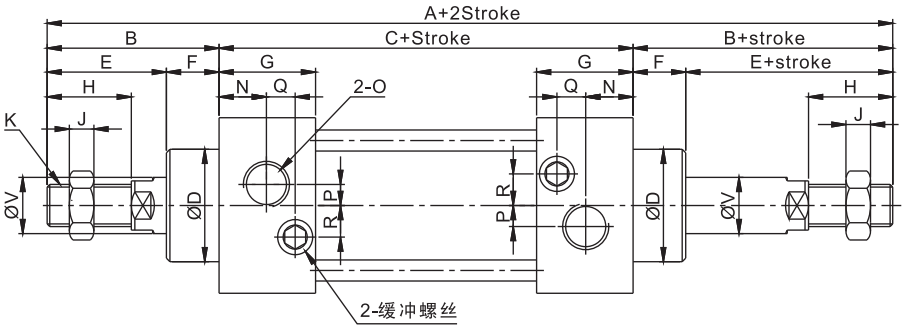

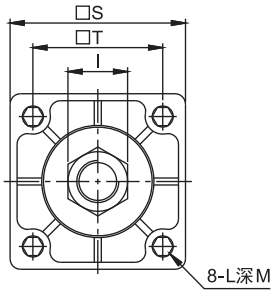

Bore (缸径)(mm)	StroKeRange (行程范围)(mm)	A	B	C	D	E	F	G	H	I	J	K	L	M	N	O	P	Q	R	S	T	V
32	~500	187	47	93	28	32	15	27.5	22	17	6	M10×1.25	M6×1	9.5	13.7	1/8"	3.5	7.5	7	45	33	12
40	~500	191	49	93	32	34	15	27.5	24	17	7	M12×1.25	M6×1	9.5	13.5	1/4"	6	7.5	9	50	37	16
50	~600	207	57	93	38	42	15	27.5	32	23	8	M16×1.5	M6×1	9.5	13.5	1/4"	8.5	7.5	9	62	47	20
63	~600	210	57	96	38	42	15	27.5	32	23	8	M16×1.5	M8×1.25	9.5	13.5	3/8"	7	7.5	8.5	75	56	20
80	~800	257	75	107	47	54	21	33	40	26	10	M20×1.5	M10×1.5	11.5	16.5	3/8"	10	8.5	14	94	70	25
100	~800	263	75	113	47	54	21	33	40	26	10	M20×1.5	M10×1.5	11.5	16.5	1/2"	11	8.5	14	112	84	25

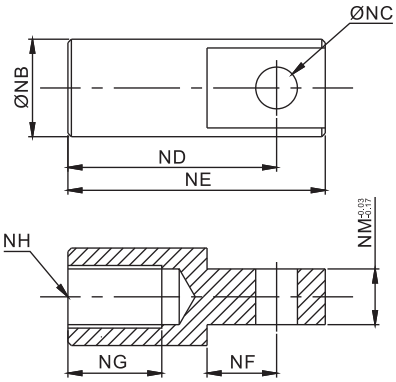

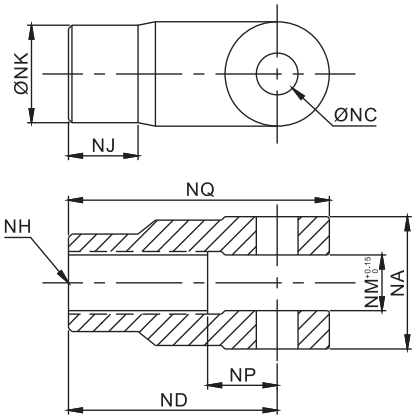

Bore (缸径)(mm)	NA	NB	NC	ND	NE	NF	NG	NH	NJ	NK	NM	NP	NQ
32	19	20	10	40	52	15	20	M10*1.25	12	18	10	20	52
40	25.4	24	12	48	67	24	20	M12*1.25	20	23	12	24	62
50	32	32	16	64	89	32	23	M16*1.5	22	30	16	32	83
63	32	32	16	64	89	32	23	M16*1.5	22	30	16	32	83
80	44.4	40	20	80	112	40	30	M20*1.5	30	39	20	40	105
100	44.4	40	20	80	112	40	30	M20*1.5	30	39	20	40	105

Adjustable Stroke Cylinder (可调行程型): YMC-XC8

Lube, Non–Lube, Air–Hydro Type (润滑型,无油润滑型,低油压型)

YMC [Mounting 安装形式] [Bore 缸径] – [Stroke 行程] [Stroke Adjusting Symbol 行程调节] –XC8– [Auto Switch 磁性开关]

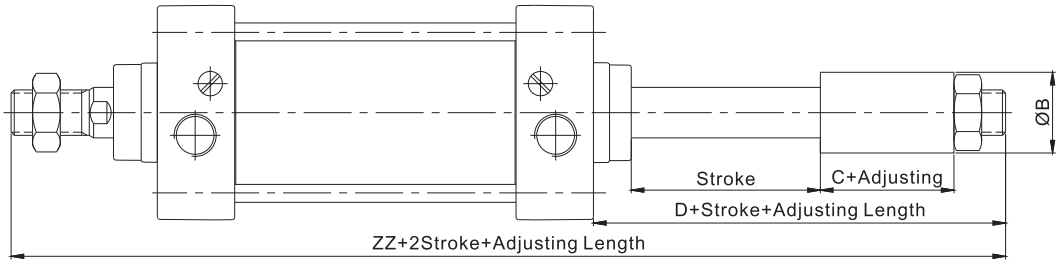

Bore (缸径)	øB	C	D	ZZ
32	32	21	42	182
40	32	21	43	185
50	42	23	46	196
63	42	23	46	199
80	55	29	60	242
100	55	29	60	248

Dual Stroke Cylinder/Single Rod Type 双行程气缸/单活塞杆型

YMC [Mounting 安装] [Type 型式] [Bore Size 缸径] – [Stroke A 行程] + [Stroke B–A 行程 B–A] [Additional Symbol 附件] –XC11

Additional 附件
Blank–Without Gaiter 无–无伸缩套
J–With gaiter(Nylon Tarpaulin)有伸缩套(尼龙防水)
K–With gaiter(Neoperene Cloth)有伸缩套（氯丁橡胶外层）

Construction/Dimensions结构/尺寸

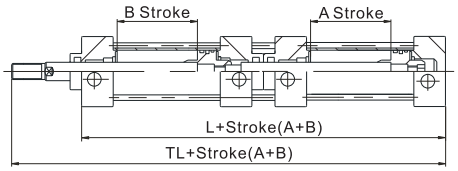

单位：mm

Bore Size	L	TL
32	216	263
40	216	265
50	216	273
63	222	279
80	256	331
100	268	343

※ Other dimensions are the same as for standard type.
其它尺寸与标准型相同

Symbol 符号

Function

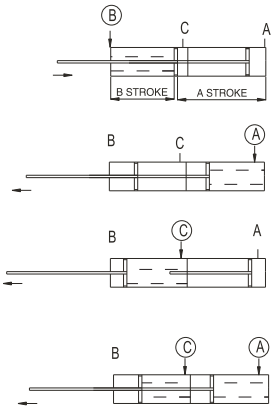

When air pressure is supplied to the Ⓑ port, both A and B strokes retract.
当Ⓑ口进气时，A、B行程同时缩回。

When air pressure is supplied to the Ⓐ prot. the rod exteends by A Stroke
当Ⓐ口进气时，A行程伸出。

When air pressure is supplied to the Ⓒ prot. the rod exteends by B Stroke
当Ⓒ口进气时，B行程伸出。

When air pressure is supplied to both ports Ⓐ and Ⓒ ddouble output force is obtainable in the range of the A stroke length.
当ⒶⒸ口同时进气，在A行程范围内，活塞杆输出力增加一倍。

YSC | Air Cylinder/Medium Bore Size(中型标准气缸)
YMD(ø32~ø200) series

图形符号

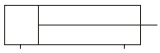

COMMON SPECIFICATIONS(共同规格)

Bore(缸径)(mm)	32	40	50	63	80	100	125	160	200
Fluid(流体)	Clean Air(洁净空气)								
Action(动作形式)	Double Acting(双动)								
Proof Press.(保证耐压力)	1.5Mpa(15kgf/cm²)								
Max Press.(最高使用压力)	0.99Mpa(9.9kgf/cm²)								
Min Press.(最低使用压力)	0.05Mpa(0.5kgf/cm²)								
Amb.Temp.(环境和流体温度)	-5~+60°C(未冻结)								
Piston Speed(活塞速度)	50~500mm/s								
Cushion(缓冲)	Air Cushion(气缓冲)								
Stroke Tolerance(行程公差)	0~250:$^{+1.0}_{0}$ 251~1000:$^{+1.4}_{0}$								
*Lubrication(润滑)	Non-Lube(不需要)								
Pipe Size(接管口径)Rc(PT)	1/8"	1/4"	1/4"	1/4"	3/8"	1/2"	1/2"	3/4"	3/4"

*Use Turbine Oil 1st-grade ISO VG32#,If Required.(如需要润滑,请用透平1号油ISO VG32)

HOW TO ORDER(型号表示方法)

YMD | B | 50 – 150 | Y – S – A26B | S

- YSC Model(代号): YMD
- Type(附件号): B
- Bore Size (缸径): 50
- Stroke(行程): 150
- Accessories(附件): Y
- Magnet Type(磁环情况): S
- No.of Auto Switch(磁性开关个数): S

Type(附件号)
- B: Basic(基本型)
- L: Foot(脚座)
- F: Rod Flange(杆侧法兰)
- G: Head Flange(无杆侧法兰)
- C: Single Clevis(单U型钩)
- D: Double Clevis(双U型钩)
- T: Trunnion(中央轴耳)

Accessories(附件)
- I=I Knuckle(单肘节接头)
- Y=Y Knuckle(双肘节接头)

Magnet Type(磁环情况)
- Nil(无记号):无
- S:内置磁环

No.of Auto Switch(磁性开关个数)
- Nil(无记号) : 2pcs(个)
- S: 1pcs(个)
- 3: 3pcs(个)

Stroke/Auto Switch(行程/磁性开关选择)

Bore (缸径) (mm)	STD Stroke (标准行程)(mm)	Tie Rod Mounting(拉杆安装型)	
		Auto Switch(磁性开关)	Mount Part No.(开关固定码)
32	25, 50, 75, 100, 125, 150, 175, 200, 250, 300, 350, 400, 450, 500, 600, 700, 800, 900, 1000, 1100, 1200	D-A26B D-A26BL	BD-03
40			BD-04
50			BD-06
63			BD-06
80			BD-08
100			BD-10
125			BD-12
160			BD-16
200			BD-20

Note: Other Stroke Available(有非标准行程可供选择) ，100以上缸径尚在开发中。

YMD系列气缸是欧洲型轻型气缸，结构紧凑，安装形式和尺寸符合ISO6431国际标准，具有工作可靠、耐久性好、互换性强的特点。

Dimensions(mm)(外型尺寸图)(mm)

Basic Type(基本型): YMDB

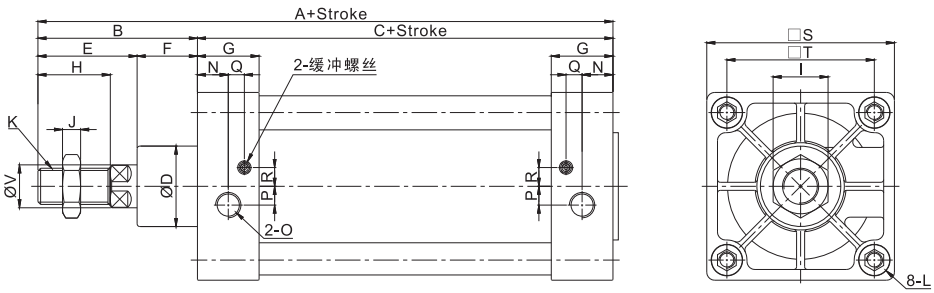

Bore (缸径)(mm)	StroKeRange (行程范围)(mm)	A	B	C	D	E	F	G	H	I	J	K	L	N	O	P	Q	R	S	T	V	X
32	~500	142	48	94	30	28	20	27.5	22	17	6	M10*1.25	M6	13.5	1/8"	4	7.5	7	47	32.5	12	3
40	~500	159	54	105	35	34	22	32	24	19	7	M12*1.25	M6	16	1/4"	6	7.5	9	53	38	16	3.5
50	~600	175	69	106	40	42	27	31	32	24	8	M16*1.5	M8	16.5	1/4"	8.5	7.5	7.5	65	46.5	20	3.5
63	~600	190	69	121	45	40	29	33	32	24	8	M16*1.5	M8	16.5	3/8"	7.5	8.5	8.5	75	56.5	20	4
80	~800	214	86	128	45	53	33	33	40	30	10	M20*1.5	M10	16.5	3/8"	11	8.5	13.5	95	72	25	4
100	~800	229	91	138	55	55	36	37	40	30	10	M20*1.5	M10	18.5	1/2"	9.5	9.5	14.5	115	89	25	4
125	~1000	279	119	160	60	74	45	46	54	41	13.5	M27*2	M12	23	1/2"	14	12	14	140	110	32	4
160	~1000	332	152	180	65	94	58	50	72	55	18	M36*2	M16	25	3/4"	15	12	20	180	140	40	4
200	~1200	347	167	180	75	100	67	50	72	55	18	M36*2	M16	25	3/4"	15	12	20	220	175	40	5

Dimensions(mm)(附件尺寸图(毫米))

Axial Foot (脚座): L

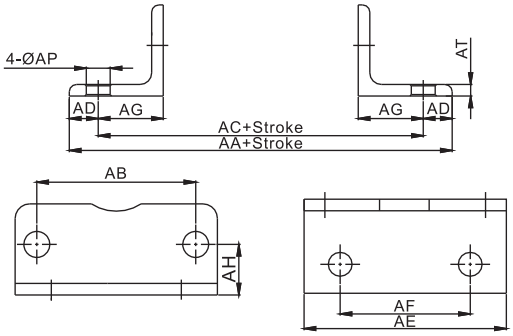

Bore (缸径)(mm)	AA	AB	AC	AD	AE	AF	AG	AH	AP	AT
32	158	32.5	142	8	47	32	24	15.8	7	3
40	179	38	161	9	53	36	28	17	9	3
50	190	46.5	170	10	65	45	32	21.8	9	3
63	209	56.5	185	12	75	50	32	21.8	9	3
80	248	72	210	19	95	63	41	27	12.5	4
100	266	89	228	19	115	75	45	26.5	14.5	4
125	290	110	250	20	140	90	45	35	16.5	8
160	340	140	300	20	180	115	60	45	18.5	8
200	380	175	320	30	220	135	70	47.5	24	9

Flange (法兰): F、G

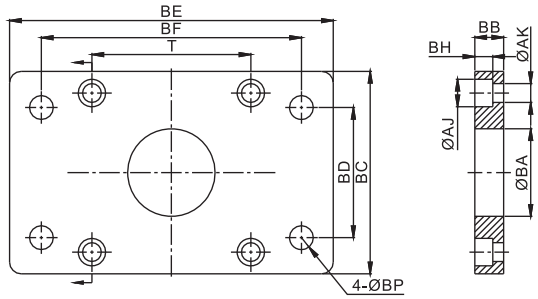

Bore (缸径)(mm)	BA	BB	BC	BD	BE	BF	BH	BP	AJ	AK	T
32	30.5	10	50	32	80	64	6.5	7	11	6.5	32.5
40	35.5	10	55	36	90	72	6.5	9	11	6.5	38
50	40.5	12	68	45	108	90	8.5	9	14	9	46.5
63	45.5	12	78	50	120	100	8.5	9	14	9	56.5
80	45.5	16	100	63	153	126	10.5	12.5	17	11	72
100	55.5	16	120	75	178	150	10.5	14.5	17	11	89
125	60.5	20	140	90	224	180	12.5	16.5	19	13	110
160	65.5	20	180	115	280	230	13	18.5	25	17	140
200	75.5	25	220	135	320	270	17.5	24	25	17	175

SingleRear Clevis (单U型钩): C

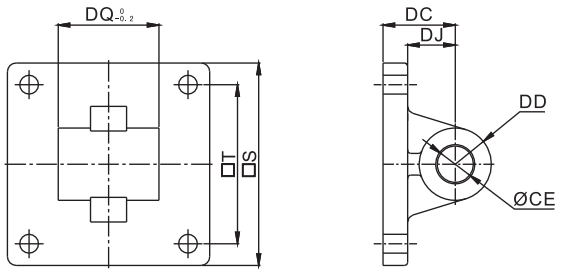

Bore (缸径)(mm)	DC	DD	DE	DJ	DQ	S	T
32	22	9	10	13	25.8	47	32.5
40	25	12	12	16	27.8	53	38
50	27	12	12	17	31.7	65	46.5
63	32	15	16	22	39.7	75	56.5
80	36	15	16	22	49.7	95	72
100	41	20	20	27	59.7	115	89
125	50	25	25	31	69.7	140	110
160	55	30	30	35.5	89.7	180	140
200	60	30	30	36	89.7	220	175

Double Rear Clevis (双U型钩): D

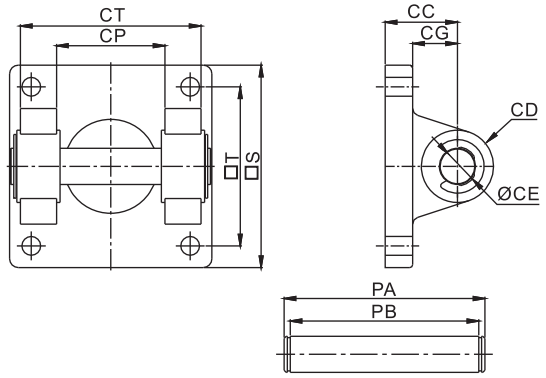

Bore (缸径)(mm)	CC	CD	CE	CG	CP	CT	PA	PB	S	T
32	22	9	10	13	26	45	51	45.5	47	32.5
40	25	12	12	16	28	52	59	52.5	53	38
50	27	12	12	17	32	60	67	60.5	65	46.5
63	32	15	16	22	40	70	77	70.5	75	56.5
80	36	15	16	22	50	90	97	90.5	95	72
100	41	20	20	27	60	110	119	110.5	115	89
125	50	25	25	31	70	130	139	130.5	140	110
160	55	30	30	35.5	90	170	181	170.5	180	140
200	60	30	30	36	90	170	181	170.5	220	175

Double Rod Tylinder (双作用活塞杆型):YMDW

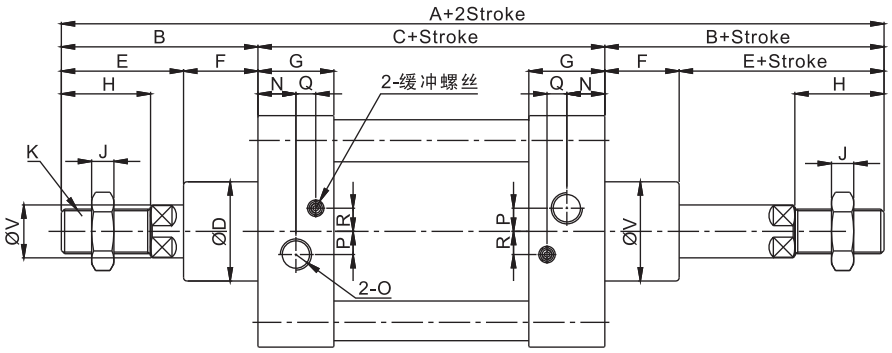

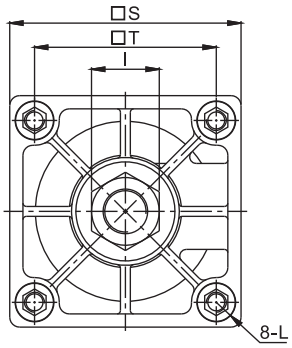

Bore (缸径)(mm)	StroKeRange (行程范围)(mm)	A	B	C	D	E	F	G	H	I	J	K	L	N	O	P	Q	R	S	T	V
32	~500	190	48	94	30	28	20	27.5	22	17	6	M10*1.25	M6	13.5	1/8”	4	7.5	7	47	32.5	12
40	~500	213	54	105	35	32	22	32	24	19	7	M12*1.25	M6	16	1/4”	6	8.5	9	53	38	16
50	~600	244	69	106	40	42	27	31	32	24	8	M16*1.5	M8	16.5	1/4”	8.5	7.5	7.5	65	46.5	20
63	~600	259	69	121	45	40	29	33	32	24	8	M16*1.5	M8	16.5	3/8”	7.5	8.5	8.5	75	56.5	20
80	~800	300	86	128	45	53	33	33	40	30	10	M20*1.5	M10	16.5	3/8”	11	8.5	13.5	95	72	25
100	~800	320	91	138	55	55	36	37	40	30	10	M20*1.5	M10	18.5	1/2”	9.5	9.5	14.5	115	89	25
125	~1000	398	119	160	60	74	45	46	54	41	13.5	M27*2.0	M12	23	1/2”	14	12	14	140	110	32
160	~1000	484	152	180	65	94	58	50	72	55	18	M36*2.0	M16	25	1/4”	15	12	20	180	140	40
200	~1200	514	167	180	75	100	67	50	72	55	18	M36*2.0	M16	25	3/8”	15	12	20	220	175	40

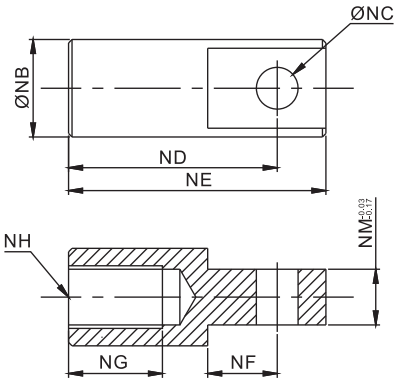

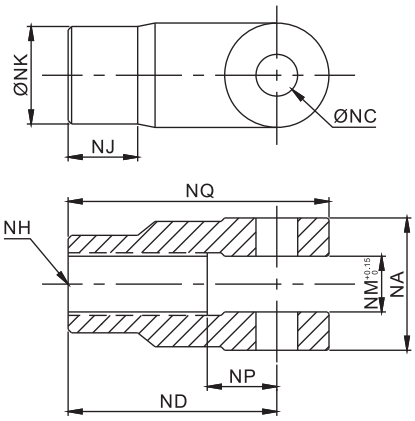

Bore (缸径)(mm)	NA	NC	ND	NE	NF	NG	NH	NM	NP	NQ
32	19	10	40	52	15	20	M10*1.25	10	20	62
40	25.4	12	48	67	24	20	M12*1.25	12	24	62
50	32	16	64	89	32	23	M16*1.5	16	32	83
63	32	16	64	89	32	23	M16*1.5	16	32	83
80	44.4	20	80	112	40	30	M20*1.5	20	40	105
100	44.4	20	80	112	40	30	M20*1.5	20	40	105
125	54	30	110	150	51	45	M27*2	30	55	151.8
160	70	35	144	195	65	55	M36*2	35	73	195.8
200	70	35	144	195	65	55	M36*2	35	73	195.8

Adjustable Stroke Cylinder (可调行程型): YMD-XC8

Lube, Non–Lube, Air–Hydro Type (润滑型,无油润滑型,低油压型)

YMD | Mounting 安装形式 | Bore 缸径 | – | Stroke 行程 | Stroke Adjusting Symbol 行程调节 | –XC8– | Auto Switch 磁性开关

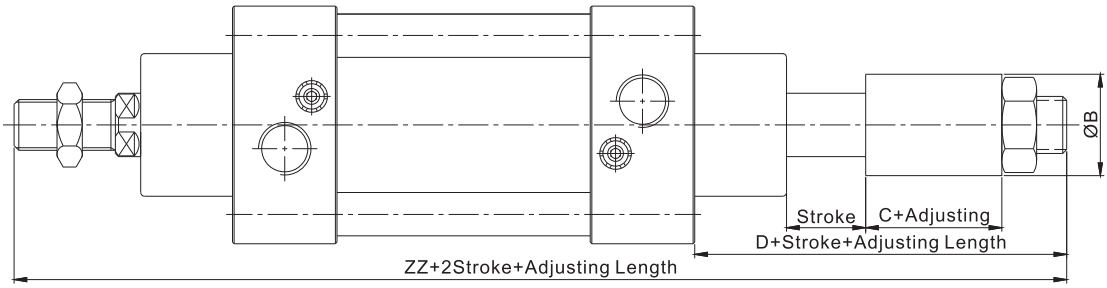

Bore (缸径)	øB	C	D	ZZ
32	32	21	41	189
40	32	21	43	209
50	42	23	50	234
63	42	23	52	250
80	55	29	62	286
100	55	29	65	304

YSC | Air Cylinder/Large Bore Size(大型标准型气缸)
YCS1(ø125~ø300) series
YCDS1(ø125~ø160)

图形符号

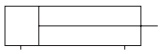

COMMON SPECIFICATIONS(共同规格)

Bore(缸径)(mm)	125	140	160	180	200	250	200
Fluid(流体)	Clean Air(洁净空气)						
Action(动作形式)	Double Acting(双动)						
Proof Press.(保证耐压力)	1.6MPa{16kgf/cm²}						
Max. Press.(最高使用压力)	1.0MPa{10kgf/cm²}						
Min. Press.(最低使用压力)	0.05MPa{0.5kgf/cm²}						
Amb.Temp.(环境及流体温度)	-5~+60°C(未冻结)						
Piston Speed(活塞速度)	50 ~ 500mm/s						
Cushion(缓冲)	Air Cushion(气缓冲)						
Stroke Tolerance(行程公差)	0 ~ 250: $^{+1.0}_{0}$ 251 ~ 1000: $^{+6}_{0}$						
*Lubrication(润滑)	Non–Lube(不需要)						
Pipe Size(接管口径)Rc(PT)	1/2"	1/2"	3/4"	3/4"	3/4"	1"	1"

・Use Tubine Oil 1st–Grade ISOVG32,If Necessory(如需要润滑请用透平1号油ISOVG32)

HOW TO ORDER(型号表示方法)

Y C DS1 B N 160 – 300 JR – A54K S

YSC Model(代号)

Mounting(附件号)
B:Basic(基本型)
L:Foot(脚座型)
F:FrontFlange(杆侧法兰)
G:RearFlange(后法兰)
C:Single Clevis(单U型钩)
D:Double Clevis(双U型钩)
T:Center Trunnion(中央轴耳)

Auto Switch(内置磁环)
Nil(无记号): None(无)
D:Auto Switch(有)

Bore Size (缸径)

Stroke (行程)

Gaiter & Option(型式):
J:Nylon Tarpanline (伸缩防护套(60℃适用))
K:Neoprene(伸缩防护套(110℃适用))
N:None–Cushion(无缓冲)
R:Rod Cover Cushion(杆侧带缓冲)
H:Head Cover Cushion(后侧带缓冲)
Nil(无记号): Both Side Cushion(两侧带缓冲)

Nil(无记号):Lube Type(油润滑型)
N:Non–Lube(无油润滑型)
H:Air Hydro(低油压型)

Auto Switch(磁性开关种类)
Nil(无记号):None(无磁性开关)
A54K:Reed Switch(有接点磁性开关)
※Note: See."Auto Switch Series"(Page:O–04, R–49)

No of Auto Switch(磁性开关数量)
Nil(无记号): 2(个) S:1(个) 3: 3(个) n:n(个)

Stroke/Auto Switch(行程/磁性开关选择)

Bore (缸径) (mm)	STD Stroke (标准行程)(mm)	Tie Rod Mounting(拉杆安装型)	
		Auto Switch(磁性开关)	Mount Part No.(开关固定码)
125	25, 50, 75, 100, 125, 150, 175, 200, 250, 300, 350, 400, 450, 500, 600, 700, 800, 900, 1000, 1100, 1200	D–A54K	BT–12
140			BT–12
160			BT–16
180		None (不适用)	None (不适用)
200			
250			
300			

Note: Other Stroke Available(有非标准行程可供选择)

Dimensions(mm)(外型尺寸图)(mm)

Basic Type(基本型): YC□S1B

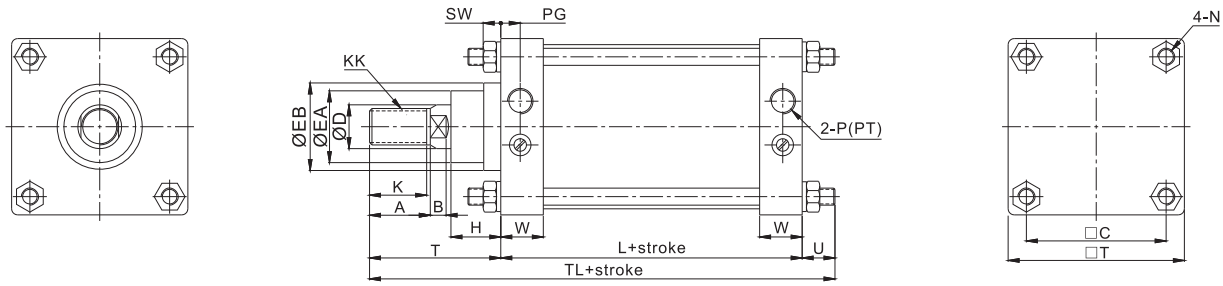

Bore (缸径)(mm)	StroKeRange (行程范围)(mm)	Thread Length(K) (有效螺纹K)	A	B	□C	øD	øEA	øEB	H	KK	L	N	PG	P(PT)	SW	□T	T	TL	U	W
125	~ 1000	47	50	15	115	35	59	90	43	M30×1.5	98	M14×1.5	16	1/2"	14	145	110	235	27	35
140	~ 1000	47	50	15	128	35	59	90	43	M30×1.5	98	M14×1.5	16	1/2"	14	161	110	235	27	35
150	~ 1200	53	56	17	132	40	59	90	43	M36×1.5	106	M16×1.5	17	3/4"	14	170	120	256.5	30.5	39
160	~ 1200	53	56	17	144	40	59	90	43	M36×1.5	106	M16×1.5	17	3/4"	14	184	120	256.5	30.5	39
180	~ 1400	60	63	20	162	45	70	115	48	M40×1.5	111	M18×1.5	17	3/4"	17	204	135	281	35	39
200	~ 1600	60	63	20	182	50	74	115	48	M45×1.5	111	M20×1.5	17	3/4"	17	226	135	281	35	39
250	~ 1800	67	71	25	225	60	96	140	60	M56×2	141	M24×1.5	22	1"	20	277	160	342.5	41.5	49
300	~ 2000	76	80	30	270	70	96	140	60	M64×2	146	M30×1.5	23	1"	20	330	175	372.5	51.5	49

FrontFlange Type(杆侧法兰型): YC□S1F

Lube, Non–Lube, Air–Hydro Type (润滑型, 无油润滑型, 低油压型)

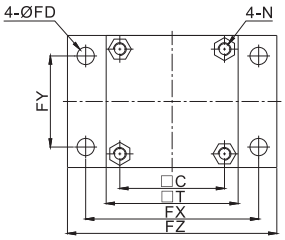

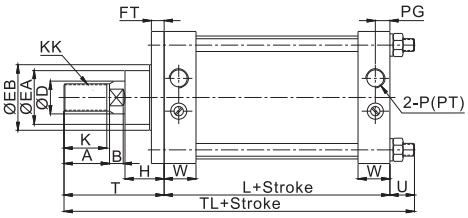

Bore (缸径)(mm)	StroKe Range (行程范围)(mm)	Thread Length(K) (有效螺纹k)	A	B	□C	øD	øEA	øEB	øFD	FT	FX	FY	FZ	H	KK	L	P(PT)
125	~1000	47	50	15	115	35	59	90	19	14	190	100	230	43	M30×1.5	98	1/2
140	~1000	47	50	15	128	35	59	90	19	20	212	112	255	43	M30×1.5	98	1/2
150	~1200	53	56	17	132	40	59	90	19	20	228	115	265	43	M36×1.5	106	3/4
160	~1200	53	56	17	144	40	59	90	19	20	236	118	275	43	M36×1.5	106	3/4
180	~1400	60	63	20	162	45	70	115	24	25	265	132	320	48	M40×1.5	111	3/4
200	~1600	60	63	20	182	50	74	115	24	25	280	150	335	48	M45×1.5	111	3/4
250	~1800	67	71	25	225	60	96	140	29	30	355	180	420	60	M56×2	141	1
300	~2000	76	80	30	270	70	96	140	33	30	400	212	475	60	M64×2	146	1

Bore (缸径)(mm)	N	PG	□T	T	TL	U	W
125	M14×1.5	16	145	110	235	27	35
140	M14×1.5	16	161	110	235	27	35
150	M16×1.5	18.5	170	120	256.5	30.5	39
160	M16×1.5	18.5	184	120	256.5	30.5	39
180	M18×1.5	18.5	204	135	281	35	39
200	M20×1.5	18.5	226	135	281	35	39
250	M24×1.5	23	277	160	342.5	41.5	49
300	M30×1.5	23	330	175	372.5	51.5	49

Rear Flange Type (后法兰型): YC□S1G

Lube, Non–Lube, Air–Hydro Type (润滑型, 无油润滑型, 低油压型)

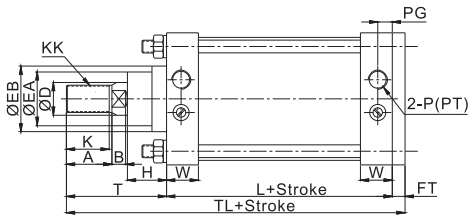

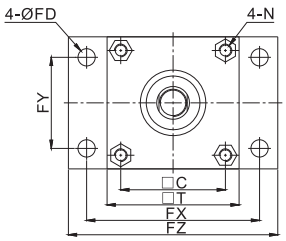

Bore (缸径)(mm)	StroKe Range (行程范围)(mm)	Thread Length(K) (有效螺纹k)	A	B	□C	øD	øEA	øEB	øFD	FT	FX	FY	FZ	H	KK	L	P(PT)
125	~1000	47	50	15	115	35	59	90	19	14	190	100	230	43	M30×1.5	98	1/2
140	~1000	47	50	15	128	35	59	90	19	20	212	112	255	43	M30×1.5	98	1/2
150	~1200	53	56	17	132	40	59	90	19	20	228	115	265	43	M36×1.5	106	3/4
160	~1200	53	56	17	144	40	59	90	19	20	236	118	275	43	M36×1.5	106	3/4
180	~1400	60	63	20	162	45	70	115	24	25	265	132	320	48	M40×1.5	111	3/4
200	~1600	60	63	20	182	50	74	115	24	25	280	150	335	48	M45×1.5	111	3/4
250	~1800	67	71	25	225	60	96	140	29	30	355	180	420	60	M56×2	141	1
300	~2000	76	80	30	270	70	96	140	33	30	400	212	475	60	M64×2	146	1

Bore (缸径)(mm)	N	T	TL	W	□T
125	M14×1.5	110	222	35	145
140	M14×1.5	110	228	35	161
150	M16×1.5	120	246	39	170
160	M16×1.5	120	246	39	184
180	M18×1.5	135	271	39	204
200	M20×1.5	135	271	39	226
250	M24×1.5	160	331	49	277
300	M30×1.5	175	351	49	330

Double Rear Clevis Type(双U型钩型): YC□S1D

Lube, Non–Lube, Air–Hydro Type (润滑型, 无油润滑型, 低油压型)

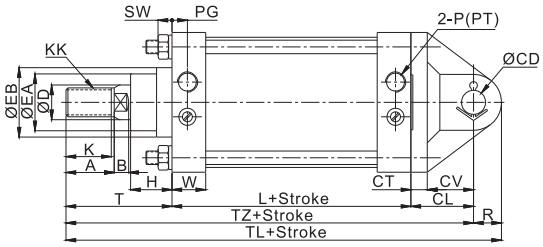

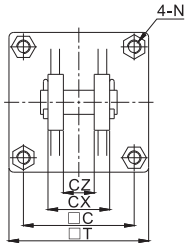

Bore (缸径)(mm)	StroKe Range (行程范围)(mm)	Thread Length(K) (有效螺纹k)	A	B	□C	øCD	CL	CT	CV	CX	CZ	øD	øEA	øEB	H	KK
125	~1000	47	50	15	115	$25^{+0.08}_{0}$	65	17	48	64	$32^{+0.3}_{+0.1}$	35	59	90	43	M30×1.5
140	~1000	47	50	15	128	$28^{+0.08}_{0}$	75	17	58	72	$36^{+0.3}_{+0.1}$	35	59	90	43	M30×1.5
150	~1200	53	56	17	132	$32^{+0.10}_{0}$	80	20	60	80	$40^{+0.3}_{+0.1}$	40	59	90	43	M36×1.5
160	~1200	53	56	17	144	$32^{+0.10}_{0}$	80	20	60	80	$40^{+0.3}_{+0.1}$	40	59	90	43	M36×1.5
180	~1400	60	63	20	162	$40^{+0.10}_{0}$	90	23	67	100	$50^{+0.3}_{+0.1}$	45	70	115	48	M40×1.5
200	~1600	60	63	20	182	$40^{+0.10}_{0}$	100	25	75	100	$50^{+0.3}_{+0.1}$	50	74	115	48	M45×1.5
250	~1800	67	71	25	225	$50^{+0.10}_{0}$	110	30	80	126	$63^{+0.3}_{+0.1}$	60	96	140	60	M56×2
300	~2000	76	80	30	270	$63^{+0.12}_{0}$	130	37	93	160	$80^{+0.3}_{+0.1}$	70	96	140	60	M64×2

Bore (缸径)(mm)	L	N	P(PT)	PG	R	SW	□T	T	TL	TZ	W
125	98	M14×1.5	1/2"	16	29	14	145	110	302	273	35
140	98	M14×1.5	1/2"	16	32	14	161	110	315	283	35
150	106	M16×1.5	3/4"	17	36	14	170	120	342	306	39
160	106	M16×1.5	3/4"	17	36	14	184	120	342	306	39
180	111	M18×1.5	3/4"	17	44	17	204	135	380	336	39
200	111	M20×1.5	3/4"	17	44	17	226	135	390	346	39
250	141	M24×1.5	1"	22	55	20	277	160	466	411	49
300	146	M30×1.5	1"	23	68	20	330	175	519	451	49

SingleRear Clevis Type (单U型钩型): YC□S1C

Lube, Non–Lube, Air–Hydro Type (润滑型, 无油润滑型, 低油压型)

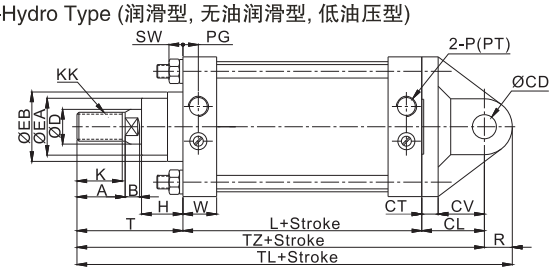

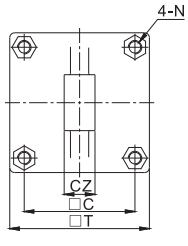

Bore (缸径)(mm)	StroKe Range (行程范围)(mm)	Thread Length(K) (有效螺纹k)	A	B	□C	øCD	CL	CT	CV	CX	øD	øEA	øEB	H	KK
125	~1000	47	50	15	115	$25^{+0.08}_{0}$	65	17	48	$32^{-0.1}_{-0.3}$	35	59	90	43	M30×1.5
140	~1000	47	50	15	128	$28^{+0.08}_{0}$	75	17	58	$36^{-0.1}_{-0.3}$	35	59	90	43	M30×1.5
150	~1200	53	56	17	132	$32^{+0.10}_{0}$	80	20	60	$40^{-0.1}_{-0.3}$	40	59	90	43	M36×1.5
160	~1200	53	56	17	144	$32^{+0.10}_{0}$	80	20	60	$40^{-0.1}_{-0.3}$	40	59	90	43	M36×1.5
180	~1400	60	63	20	162	$40^{+0.10}_{0}$	90	23	67	$50^{-0.1}_{-0.3}$	45	70	115	48	M40×1.5
200	~1600	60	63	20	182	$40^{+0.10}_{0}$	100	25	75	$50^{-0.1}_{-0.3}$	50	74	115	48	M45×1.5
250	~1800	67	71	25	225	$50^{+0.10}_{0}$	110	30	80	$63^{-0.1}_{-0.3}$	60	96	140	60	M56×2
300	~2000	76	80	30	270	$63^{+0.12}_{0}$	130	37	93	$80^{-0.1}_{-0.3}$	70	96	140	60	M64×2

Bore (缸径)(mm)	N	PG	P(PT)	R	SW	□T	T	L	TL	TZ	W
125	M14×1.5	16	1/2	29	14	145	110	98	302	273	35
140	M14×1.5	16	1/2	32	14	161	110	98	315	283	35
150	M16×1.5	17	3/4	36	14	170	120	106	342	306	39
160	M16×1.5	17	3/4	36	14	184	120	106	342	306	39
180	M18×1.5	17	3/4	44	17	204	135	111	380	336	39
200	M20×1.5	17	3/4	44	17	226	135	111	390	346	39
250	M24×1.5	22	1	55	20	277	160	141	466	411	49
300	M30×1.5	23	1	68	20	330	175	146	519	451	49

Axial Foot Type(脚座型): YC□S1L

Lube, Non–Lube, Air–Hydro Type (润滑型, 无油润滑型, 低油压型)

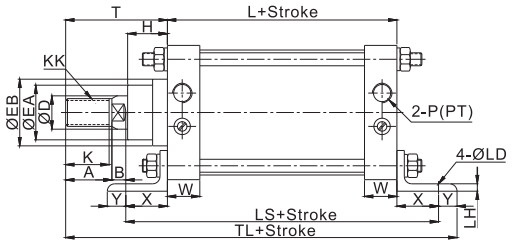

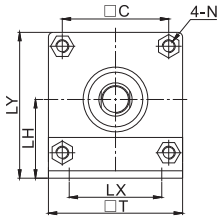

Bore (缸径)(mm)	StroKe Range (行程范围)(mm)	Thread Length(K) (有效螺纹K)	A	B	□C	øD	øEA	øEB	H	KK	L	øLD	LH	LS	LT	LX	LY
125	~1000	47	50	15	115	35	59	90	43	M30×1.5	98	19	85	188	8	100	157.5
140	~1000	47	50	15	128	35	59	90	43	M30×1.5	98	19	100	188	9	112	180.5
150	~1200	53	56	17	132	40	59	90	43	M36×1.5	106	19	105	206	9	118	190
160	~1200	53	56	17	144	40	59	90	43	M36×1.5	106	19	106	206	9	118	197
180	~1400	60	63	20	162	45	70	115	48	M40×1.5	111	24	125	231	10	132	227
200	~1600	60	63	20	182	50	74	115	48	M45×1.5	111	24	132	231	10	150	245
250	~1800	67	71	25	225	60	96	140	60	M56×2	141	29	160	301	12	180	298.5
300	~2000	76	80	30	270	70	96	140	60	M64×2	146	33	200	326	15	212	365

Bore (缸径)(mm)	N	P(PT)	□T	T	TL	W	X	Y
125	M14×1.5	1/2	145	110	273	35	45	20
140	M14×1.5	1/2	161	110	273	35	45	20
150	M16×1.5	3/4	170	120	301	39	50	25
160	M16×1.5	3/4	184	120	301	39	50	25
180	M18×1.5	3/4	204	135	336	39	60	30
200	M20×1.5	3/4	226	135	336	39	60	30
250	M24×1.5	1	177	160	421	49	80	40
300	M30×1.5	1	330	175	451	49	90	40

Trunnion Type(中央轴耳型): YC□S1T

Lube, Non–Lube, Air–Hydro Type (润滑型, 无油润滑型, 低油压型)

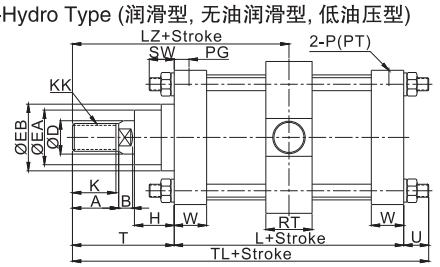

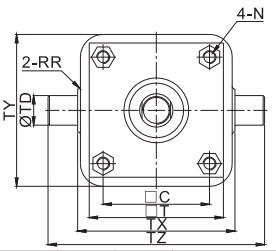

Bore (缸径)(mm)	StroKe Range (行程范围)(mm)	Thread Length(K) (有效螺纹K)	A	B	□C	øD	øEA	øEB	H	KK	L	LZ	N	P(PT)	PG	RR	RT
125	~1000	47	50	15	115	35	59	90	43	M30×1.5	98	159	M14×1.5	1/2	16	1	50
140	~1000	47	50	15	128	35	59	90	43	M30×1.5	98	159	M14×1.5	1/2	16	1.5	55
150	~1200	53	56	17	132	40	59	90	43	M36×1.5	106	173	M16×1.5	3/4	17	1.5	59
160	~1200	53	56	17	144	40	59	90	43	M36×1.5	106	173	M16×1.5	3/4	17	1.5	59
180	~1400	60	63	20	162	45	70	115	48	M40×1.5	111	190.5	M18×1.5	3/4	17	2	60
200	~1600	60	63	20	182	50	74	115	48	M45×1.5	111	190.5	M20×1.5	3/4	17	2	60
250	~1800	67	71	25	225	60	96	140	60	M56×2	141	230.5	M24×1.5	1	22	2	69
300	~2000	76	80	30	270	70	96	140	60	M64×2	146	248	M30×1.5	1	23	2	79

Bore (缸径)(mm)	SW	□T	T	øTD	TL	TX	TY	TZ	U	W
125	14	145	110	$32^{-0.05}_{-0.09}$	227	170	164	234	19	35
140	14	161	110	$36^{-0.05}_{-0.09}$	227	190	184	262	19	35
150	14	170	120	$40^{-0.05}_{-0.09}$	248	200	192	275	22	39
160	14	184	120	$40^{-0.05}_{-0.09}$	248	212	204	292	22	39
180	17	204	135	$45^{-0.05}_{-0.09}$	272.5	236	228	326	26.5	39
200	17	226	135	$45^{-0.05}_{-0.09}$	272.5	265	257	355	26.5	39
250	20	277	160	$56^{-0.05}_{-0.09}$	331.5	335	325	447	30.5	49
300	20	330	175	$67^{-0.05}_{-0.09}$	357	400	390	534	36	49

Dimensions(mm)(外形尺寸图(毫米))

① I Type Single Rod Clevis(I型单肘节接头)

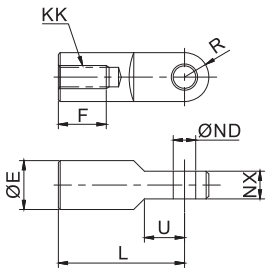

Bore(缸径)(mm)	øE	F	KK	L	øND	NX	R	U
125	46	54	M30×1.5	100	$25^{+0.06}_{0}$	$32^{-0.1}_{-0.3}$	27	33
140	48	54	M30×1.5	105	$28^{+0.08}_{0}$	$36^{-0.1}_{-0.3}$	30	39
150, 160	55	60	M36×1.5	110	$32^{+0.10}_{0}$	$40^{-0.1}_{-0.3}$	34	39
180	70	67	M40×1.5	125	$40^{+0.10}_{0}$	$50^{-0.1}_{-0.3}$	42.5	44
200	70	67	M45×1.5	125	$40^{+0.10}_{0}$	$50^{-0.1}_{-0.3}$	42.5	44
250	86	75.5	M56×2	160	$50^{+0.10}_{0}$	$63^{-0.1}_{-0.3}$	53	66
300	105	84.5	M64×2	175	$63^{+0.12}_{0}$	$80^{-0.1}_{-0.3}$	66	71

② Y Type Double Rod Clevis(Y型双肘节接头)

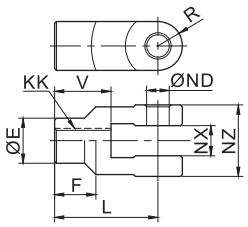

Bore(缸径)(mm)	øE	KK	L	øND	NX	NZ	R
125	46	M30×1.5	100	$25^{+0.06}_{0}$	$32^{-0.1}_{-0.3}$	$64^{-0.3}_{-0.1}$	27
140	48	M30×1.5	105	$28^{+0.08}_{0}$	$36^{-0.1}_{-0.3}$	$72^{-0.3}_{-0.1}$	30
150, 160	55	M36×1.5	110	$32^{+0.10}_{0}$	$40^{-0.1}_{-0.3}$	$80^{-0.3}_{-0.1}$	34
180	70	M40×1.5	125	$40^{+0.10}_{0}$	$50^{-0.1}_{-0.3}$	$100^{-0.3}_{-0.1}$	42.5
200	70	M45×1.5	125	$40^{+0.10}_{0}$	$50^{-0.1}_{-0.3}$	$100^{-0.3}_{-0.1}$	42.5
250	86	M56×2	160	$50^{+0.10}_{0}$	$63^{-0.1}_{-0.3}$	$126^{-0.3}_{-0.1}$	53
300	105	M64×2	175	$63^{+0.12}_{0}$	$80^{-0.1}_{-0.3}$	$160^{-0.3}_{-0.1}$	66

③ Knuckle Clevis Type Pin(钩用销子)

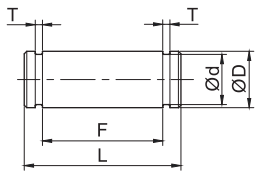

Bore(缸径)(mm)	øD	ød	L	F	T
125	$25^{-0.06}_{-0.11}$	23.5	72	64.3	1.35
140	$28^{-0.06}_{-0.11}$	26	80.6	72.3	1.65
150, 160	$32^{-0.08}_{-0.14}$	29.5	89.6	80.3	1.65
180, 200	$40^{-0.08}_{-0.14}$	37	110.1	100.3	1.9
250	$50^{-0.08}_{-0.11}$	46	138.9	126.5	2.2
300	$63^{-0.10}_{-0.17}$	59	160.5	172.9	2.2

④ Rod Nut(杆端螺母)

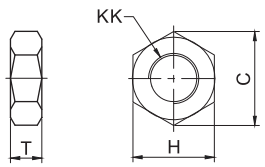

Bore(缸径)(mm)	C	H	KK	T
140	53.1	46	M30×1.5	18
150, 160	63.5	55	M36×1.5	21
180	69.3	60	M40×1.5	23
200	80.8	70	M45×1.5	27
250	98.1	85	M56×2	34
300	110	95	M64×2	38

Double Rod Tylinder (双作用活塞杆型):YC□S1W□

Lube, Non–Lube, Air–Hydro Type (润滑型, 无油润滑型, 低油压型)

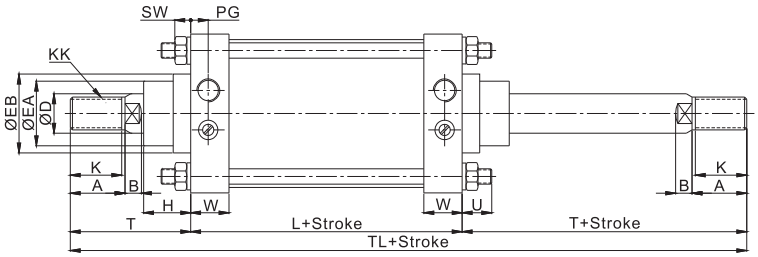

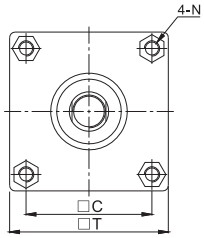

Unit: mm

Bore (缸径)(mm)	StroKe Range (行程范围)(mm)	Thread Length(K) (有效螺纹k)	A	B	□C	øD	øEA	øEB	H	KK	L	N	PG	P(PT)	□T
125	~ 1000	47	50	15	115	35	59	90	43	M30×1.5	98	M14×1.5	16	1/2	145
140	~ 1000	47	50	15	128	35	59	90	43	M30×1.5	98	M14×1.5	16	1/2	161
150	~ 1200	53	56	17	132	40	59	90	43	M36×1.5	106	M16×1.5	17	3/4	170
160	~ 1200	53	56	17	144	40	59	90	43	M36×1.5	106	M16×1.5	17	3/4	184
180	~ 1400	60	63	20	162	45	70	115	48	M40×1.5	111	M18×1.5	17	3/4	204
200	~ 1600	60	63	20	182	50	74	115	48	M45×1.5	111	M20×1.5	17	3/4	226
250	~ 1800	67	71	25	225	60	96	140	60	M56×2	141	M24×1.5	22	1	277
300	~ 2000	76	80	30	270	70	96	140	60	M64×2	146	M30×1.5	23	1	330

Bore (缸径)(mm)	SW	T	TL	U	W
125	14	110	318	27	35
140	14	110	318	27	35
150	14	120	346	30.5	39
160	14	120	346	30.5	39
180	17	135	381	35	39
200	17	135	381	35	39
250	20	160	461	41.5	49
300	20	175	496	51.5	49

With Gatier Type(带伸缩保护套型): YC□S1

Lube, Non–Lube, Air–Hydro Type (润滑型,无油润滑型,低油压型)

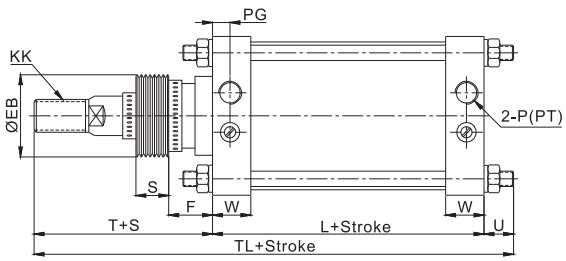

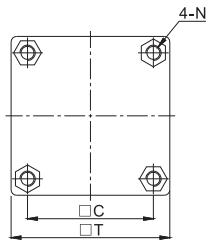

Unit: mm

Bore (缸径)(mm)	□C	øEB	F	KK	N	L	PG	P(PT)	T	□T	TL	S	U	W
125	115	75	40	M30×1.5	M14×1.5	98	16	1/2"	133	145	258	0.2x Stroke	27	35
140	128	75	40	M30×1.5	M14×1.5	98	16	1/2"	133	161	258		27	35
150	132	75	40	M36×1.5	M16×1.5	106	17	3/4"	141	170	277.5		30.5	39
160	144	75	40	M36×1.5	M16×1.5	106	17	3/4"	141	184	277		30.5	39
180	162	85	45	M40×1.5	M18×1.5	111	17	3/4"	153	204	299		35	39
200	182	90	45	M45×1.5	M20×1.5	111	17	3/4"	153	226	299		35	39
250	25	105	55	M56×2	M24×1.5	141	22	1"	176	277	358.5	0.17x Stroke	41.5	49
300	270	115	55	M64×2	M30×1.5	146	23	1"	190	330	387.5		51.5	49

Dual Stroke Cylinder/Double Rod Type 双行程气缸/双活塞杆型

YCS1 [Mounting 安装] [Tube material (缸筒材质)] [Type 型式] [Bore Size 缸径] – [Stroke A 行程] [Additional Symbol 附件] + [Stroke B 行程] [Additional Symbol 附件] –XC10

Additional 附件
Blank–Without Gaiter 无–无伸缩套
J–With gaiter(Nylon Tarpaulin)有伸缩套(尼龙防水)
K–With gaiter(Neoperene Cloth)有伸缩套（氯丁橡胶外层）

Construction, Dimensions/Basic Type 结构, 尺寸/基本型

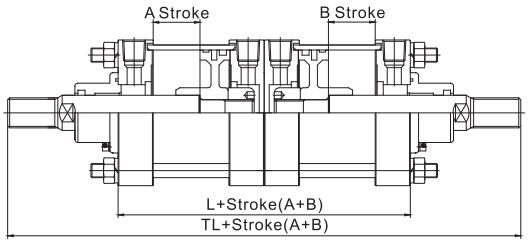

Two cylinders are constructed as one cylinder ina back–to–back configuration allowing the Cylinder stroke to be controller in three steeps.
两个气缸以背靠背型式组成一个气缸，使气缸行程分三部控制。

※ Other dimensions are the same as for standard type.
其它尺寸与标准型相同

单位：mm

Bore Size	L	TL
125	196	416
140	196	416
150	212	452
160	212	452
180	222	492
200	222	492
250	282	602
300	292	642

Dual Stroke Cylinder/Single Rod Type 双行程气缸/单活塞杆型

YCS1 [Mounting 安装] [Tube material (缸筒材质)] [Type 型式] [Bore Size 缸径] – [Stroke A 行程] [Additional Symbol 附件] + [Stroke B 行程] [Additional Symbol 附件] –XC11

Additional 附件
Blank–Without Gaiter 无–无伸缩套
J–With gaiter(Nylon Tarpaulin)有伸缩套(尼龙防水)
K–With gaiter(Neoperene Cloth)有伸缩套（氯丁橡胶外层）

Construction, Dimensions/Basic Type 结构, 尺寸/基本型

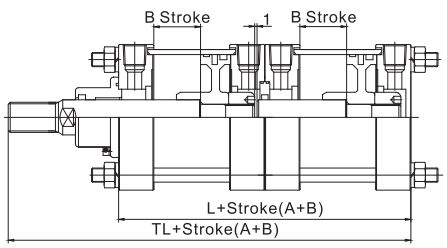

单位：mm

Bore Size	L	TL
125	282	392
140	282	392
150	298	418
160	298	418
180	318	453
200	318	453
250	402	562
300	412	587

Adjustable Stroke Cylinder/Extension Adjustablee Type 可调行程气缸/伸出调节型

YCS1 | Mounting 安装 | Tube material (缸筒材质) | Type 型式 | Bore Size 缸径 | – | Stroke A 行程 | Additional Symbol 附件 | + | Stroke adjusting symbol 行程调节 | – XC8

Additional 附件
Blank–Without Gaiter 无–无伸缩套
J–With gaiter(Nylon Tarpaulin)有伸缩套(尼龙防水)
K–With gaiter(Neoperene Cloth)有伸缩套（氯丁橡胶外层）

Stroke Adjusting Symnol 行程调节
A–Stroke Adjusting Range 0 ~ 25mm
行程可调范围0 ~ 25mm
B–Stroke Adjusting Range 0 ~ 50mm
行程可调范围0 ~ 50mm

The stroke at extend of the cylinder can be adjusted by the stopper in the head side from full stroke 0 ~ 25mm or 0 ~ 50mm
气缸伸出行程可通过调节挡块进行调整，调整范围0 ~ 25mm或0 ~ 50mm

Symbol 符号

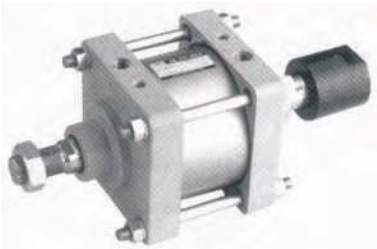

Construction, Dimensions/Basic Type 结构, 尺寸/基本型

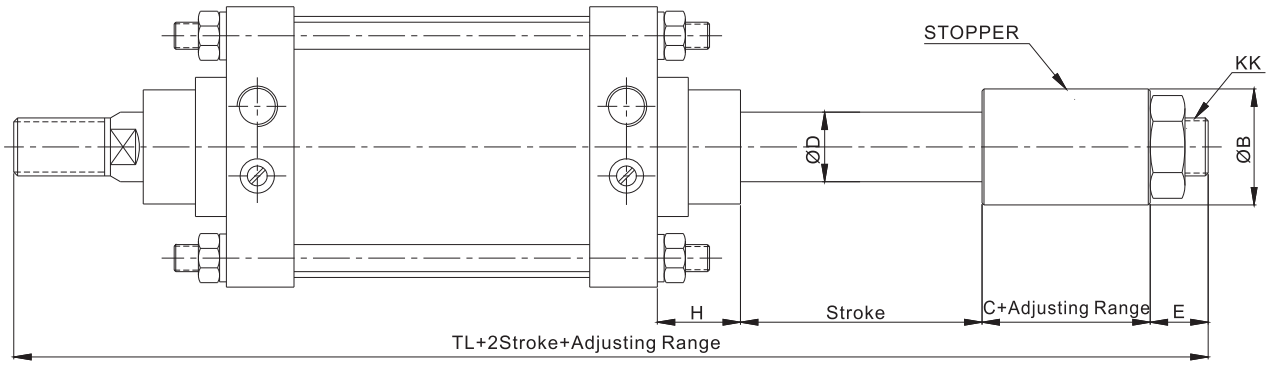

单位：mm

Bore size (mm)	ϕB	C	ϕD	E	ϕEB	H	KK	TL
125	60	37	35	30	90	43	M30×1.5	318
140	60	37	35	30	90	43	M30×1.5	318
150	60	46	40	26	90	43	M36×1.5	341
160	60	46	40	26	90	43	M36×1.5	341
180	70	52	45	30	115	48	M40×1.5	376
200	70	52	50	30	115	48	M45×1.5	376
250	86	60	60	35	140	60	M56×2	456
300	86	60	70	35	140	60	M64×2	496

※ Other dimensions are the same as for standard type.
其它尺寸与标准型相同

YSC

Compact Cylinder/Standard Type(标准型薄型气缸)

YAQ2,YADQ2(ø12~ø100) series

图形符号

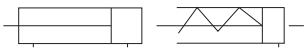

COMMON SPECIFICATIONS(共同规格)

Bore(缸径)	12	16	20	25	32	40	50	63	80	100
Fluid(流体)	Clean Air(洁净空气)									
Action(动作形式)	双作用 单作用:弹簧压回/弹簧压出									
Proof Press.(保证耐压力)	1.5Mpa(15kgf/cm²)									
Max. Press.(最高使用压力)	0.99Mpa(9.9kgf/cm²)									
Amb.Temp(环境及流体温度)	-5~+60°C(未冻结)									
Rod End Thread(杆端螺纹)	Female(STD)(内螺纹(标准)),Male(外螺纹)(任选)									
Cushion(缓冲)	None(无)									
Stroke Tclerance(行程调整范围)	$^{+0.1}_{0}$									
*Lubrication(润滑)	Non-Lube(不需要)									
Mounting(安装)	Through Hole(STD)(通孔(标准),Both End Tapped(两端内螺纹)									
Pipe Size(接管口径)Rc(PT)	M5×0.8				1/8"		1/4"		3/8"	

*Please Use Turbine Oil 1st-Grade ISOVG32,If Necessary.(如需要润滑, 请用透平1号油ISOVG32)

Standard Stroke & Auto Switch(行程/磁性开关选择)

Bore (缸径) (mm)	Stroke(标准行程)		Auto Switch(磁性开关)
	Double(双动)	Single(单动)	Rail Mounting(轨道安装型)
12	5,10,15 20,25,30	5,10	D-A72K
16			
20	5,10,15,20,25, 30,35,40,45,50	5,10	D-A72K D-A92K
25			
32	5,10,15,20,25,30, 35,40,45,50,75,100	5,10	
40			
50	5,10,15,20,25, 30,35,40,45, 50,75,100	Not Avilable (不适用)	
63			
80			
100			

Note: For Auto Switch: Refer to Page(R-51), Magnet Switch: Applicable Double Acting Type Only.
注) 单动气缸内无内置磁环,不能配合磁性开关使用,磁性开关规格及特征可参阅磁性开关之系列.
磁性开关请优先选择D-A72K

HOW TO ORDER(型号表示方法)

Y A D Q2 W A 32 – 30 D C – A72K S

YSC Model(代号)

Magnet(有无磁环)
Nil(无记号): Non(无磁环)
D: Built-in Magnet(有磁环)

Type(类型)
Nil(无记号): Single Rod(单活塞杆型)
W: Double Rod End(双活塞杆型)

Type(安装)
B=Through Hole(通孔)
A=Both End Tapped(两端螺纹)

Bore Size (缸径)

Stroke (行程)

Action(缸身(任选))
D: Double Acting(双动)
S: Single Acting(Spring Return)
(单动(弹簧压回))(Φ12~32)
T:Single Acting(Spring Extended)
(单动(弹簧压出))
*Magnet Switch: Applicable Double Acting Type Only.
(内置磁环型只适合双动气动)

Option(缸身(任选))
Nil(无记号): Rod End Female Thread(杆端内螺纹)
C: Rubber Cushion(橡胶缓冲)
M: Rod End Male Thread(杆端外螺纹)
*Cushion for Single Acting Type: Not Available.
(单动气缸不可以橡胶缓冲)

Auto Switch(有无磁性开关)
Nil(无记号): Non(无磁性开关)
A73K: Reed Switch(带有接点磁性开关)

No.of Auto Switch(开关数量)
Nil(无记号): 2(个)
S: 1(个)
3: 3(个)

Constroction(内部结构)

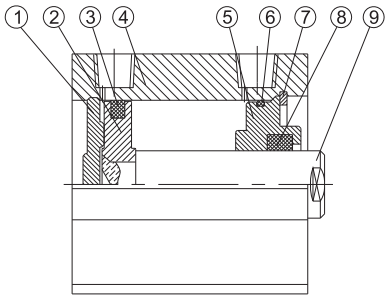

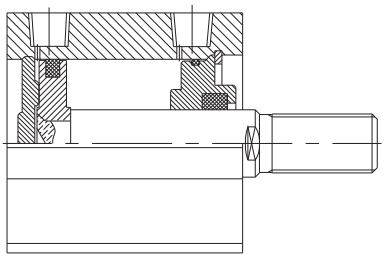

序号	名称	序号	名称
1	后端盖	6	端盖密封
2	活塞	7	卡环
3	活塞密封圈	8	活塞杆密封圈
4	缸筒	9	活塞杆
5	前端盖	10	

Dimensions(mm)(外形尺寸图(mm))

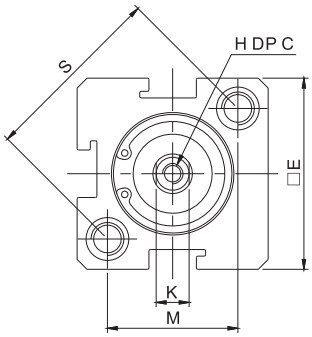

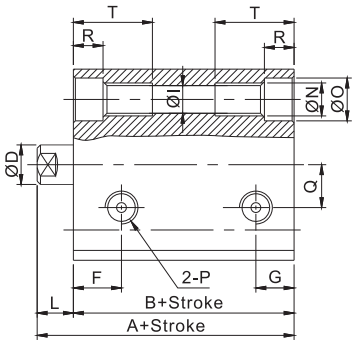

Bore(缸径)(mm)	标准型 Standard Type		带磁环型 Attach magnet		C	øD	E	F	G	H	I	K	L	M	N(两边螺纹)	øO	2-P	Q
	A	B	A	B														
12	22	17	32	27	6	6	25	7.5	5	M3×0.5	4.2	5	5	16.2	M5×0.8	6.5	M5×0.8	6
16	24	18.5	34	28.5	6	6	29	8	5.5	M3×0.5	4.2	5	5.5	19.8	M5×0.8	6.5	M5×0.8	6.5

Bore(缸径)(mm)	R	S	T
12	4.5	23	12
16	4.5	28	12

Male Screw(杆端外螺纹)

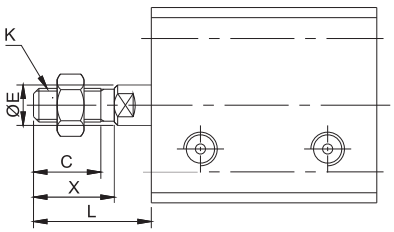

Bore(缸径)(mm)	C	E	K	L	X
12-M	10	6	M5×0.8	17	12
16-M	10	6	M5×0.8	17.5	12

Dimensions(mm)(外形尺寸图(mm))

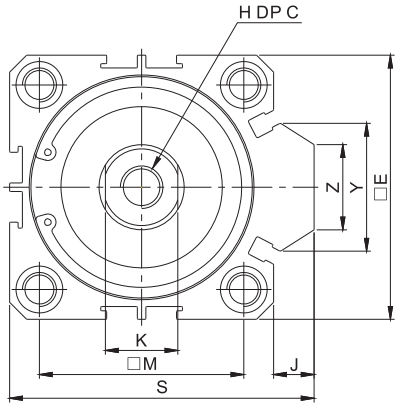

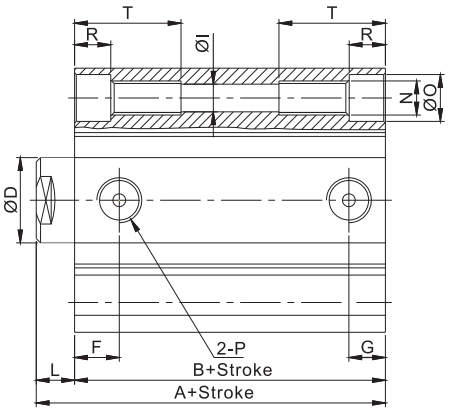

Bore(缸径)(mm)	标准型 Standard Type		带磁环型 Attach magnet		C	øD	E	F	G	H	I	J	K	L	M	N(两边螺纹)	øO	2-P	R
	A	B	A	B															
20	25	19.5	35	29.5	8	8	34	9	5.5	M4×0.7	4.2	2	6	5.5	24	M5×0.8	6.5	M5×0.8	4.5
25	27	21	37	31	10	10	40	9	5.5	M5×0.8	4.6	2	8	6	28	M6×1.0	8.2	M5×0.8	5.5
32	31.5	24.5	41.5	34.5	12	12	44	9	6.5	M6×1.0	4.6	6	10	7	34	M6×1.0	8.2	PT1/8”	5.5
40	33	26	43	36	12	16	52	9.5	7.5	M8×1.25	6.5	6.5	14	7	40	M8×1.25	10	PT1/8”	7.5
50	37	28	47	38	15	20	62	10.5	10.5	M10×1.5	6.5	9.5	17	9	48	M8×1.25	11	PT1/4”	8.5
63	41	32	51	42	15	20	75	11.8	11.8	M10×1.5	6.5	9.5	17	9	60	M8×1.25	11	PT1/4”	8.5
80	52	41	62	51	15	25	94	14.5	14.5	M14×1.5	9.2	10	22	11	74	M12×1.75	14	PT3/8”	10.5
100	63	51	73	61	18	32	114	20.5	20.5	M18×1.5	11.3	10	27	12	90	M14×2.0	17.5	PT3/8”	13

Bore(缸径)(mm)	S	T	Y	Z
20	36	14	11.3	10
25	42	15	12	10
32	50	16	18.3	15
40	58.5	20	21.3	16
50	71.5	25	30	20
63	84.5	25	28.7	20
80	104	25	36	26
100	124	30	35	26

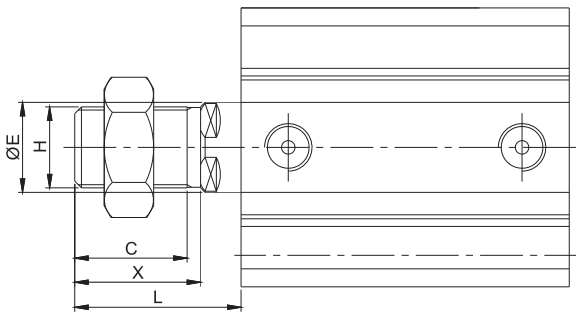

Vertical Screw Of Rod(杆端外螺纹型)(mm)

Bore(缸径)(mm)	C	E	H	L	X
20	13	8	M6×1.0	20.5	15
25	15	10	M8×1.25	23	17
32	15	12	M10×1.25	25	18
40	25	16	M14×1.5	35	28
50	25	20	M18×1.5	37	28
63	25	20	M18×1.5	37	28
80	30	25	M22×1.5	44	33
100	35	32	M26×1.5	50	38

Dimensions(mm)(外形尺寸图(mm))

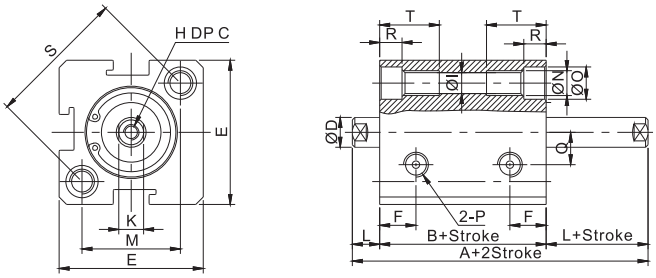

Bore(缸径)(mm)	标准型 Standard Type		带磁环型 Attach magnet		C	øD	E	F	H	I	K	L	M	N(两边螺纹)	øO	2-P	Q	R
	A	B	A	B														
12	27	17	37	27	6	6	25	7.5	M3×0.5	4.2	5	5	16.2	M5×0.8	6.5	M5×0.8	6	4.5
16	29.5	18.5	39.5	28.5	6	6	29	10	M3×0.5	4.2	5	5.5	19.8	M5×0.8	6.5	M5×0.8	6.5	4.5

Bore(缸径)(mm)	S	T
12	23	12
16	28	12

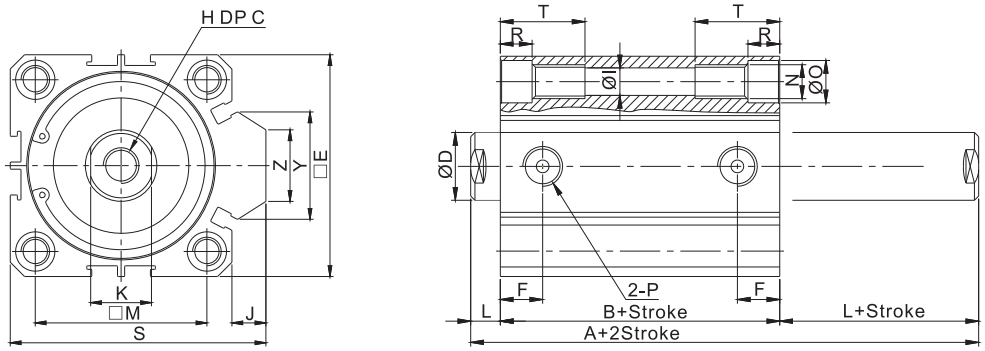

Bore(缸径)(mm)	标准型 Standard Type		带磁环型 Attach magnet		C	øD	E	F	H	I	J	K	L	M	N(两边螺纹)	øO	2-P	R
	A	B	A	B														
YAQ2W20	30.5	19.5	40.5	29.5	8	8	34	10.5	M4×0.7	4.2	2	6	5.5	24	M5×0.8	6.5	M5×0.8	4.5
YAQ2W25	33	21	43	31	10	10	40	11	M5×0.8	4.6	2	8	6	28	M6×1.0	8.2	M5×0.8	5.5
YAQ2W32	38.5	24.5	48.5	34.5	12	12	44	11.5	M6×1.0	4.6	6	10	7	34	M6×1.0	8.2	PT1/8”	5.5
YAQ2W40	40	26	50	36	12	16	52	11	M8×1.25	6.5	6.5	14	7	40	M8×1.25	10	PT1/8”	7.5
YAQ2W50	46	28	56	38	15	20	62	10.5	M10×1.5	6.5	9.5	17	9	48	M8×1.25	11	PT1/4”	8.5
YAQ2W63	50	32	60	42	15	20	75	15	M10×1.5	6.5	9.5	17	9	60	M8×1.25	11	PT1/4”	8.5
YAQ2W80	63	41	73	51	15	25	94	16	M14×1.5	9.2	10	22	11	74	M12×1.75	14	PT3/8”	10.5
YAQ2W100	75	51	85	61	18	32	114	23	M18×1.5	11.3	10	27	12	90	M14×2.0	17.5	PT3/8”	13

Bore(缸径)(mm)	S	T	Y	Z
YAQ2W20	36	14	11.3	10
YAQ2W25	42	15	12	10
YAQ2W32	50	16	18.3	15
YAQ2W40	58.5	20	21.3	16
YAQ2W50	71.5	25	30	20
YAQ2W63	84.5	25	28.7	20
YAQ2W80	104	25	36	26
YAQ2W100	124	30	35	26

注:外螺纹尺寸请参考前页单活塞杆型

YAQ2,YADQ2(ø12~ø40)-S/T series

Dimensions(mm)(外形尺寸图(mm))

YAQ12~16 - S

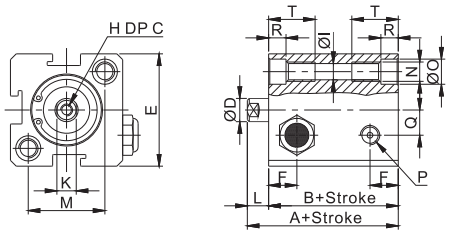

YAQ12~16 - T

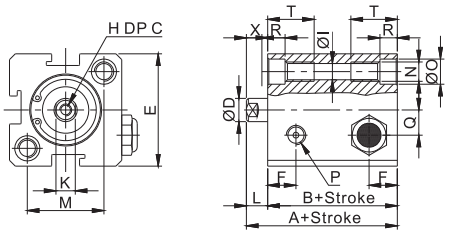

YAQ20~40 - S

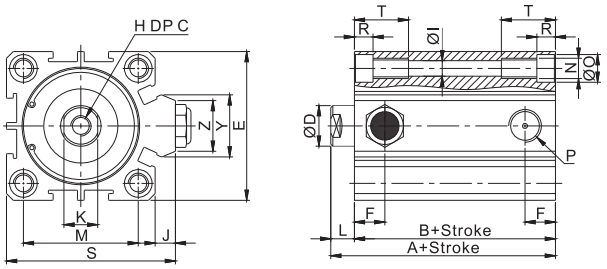

YAQ20~40 - T

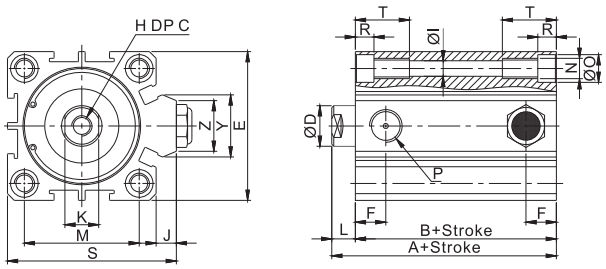

Bore(缸径)(mm)	标准型Standard Type				带磁环型Attach magnet				C	øD	E	F	H	I	J	K	L	M	N(两边螺纹)	øO
	A		B		A		B													
	≤10	>10	≤10	>10	≤10	>10	≤10	>10												
12	32	42	27	37	42	52	37	47	6	6	25	6.3	M3×0.5	4.2	-	5	5	16.2	M5×0.8	6.5
16	34	44	28.5	38.5	44	54	38.5	48.5	6	6	29	7.3	M3×0.5	4.2	-	5	5.5	19.8	M5×0.8	6.5
20	35	45	29.5	39.5	45	55	39.5	49.5	8	8	34	7.5	M4×0.7	4.2	2	6	5.5	24	M5×0.8	6.5
25	37	47	31	41	47	57	41	51	10	10	40	8	M5×0.8	4.6	2	8	6	28	M6×1.0	8.2
32	41.5	51.5	34.5	44.5	51.5	61.5	44.5	54.5	12	12	44	9	M6×1.0	4.6	6	10	7	34	M6×1.0	8.2
40	43	53	36	46	53	63	46	56	12	16	52	10	M8×1.25	6.5	6.5	14	7	40	M8×1.25	10

Bore(缸径)(mm)	2-P	Q	R	S	T	Y	Z
12	M5×0.8	6	4.5	-	12	-	-
16	M5×0.8	6.5	4.5	-	12	-	-
20	M5×0.8	-	4.5	36	14	11.3	10
25	M5×0.8	-	5.5	42	15	12	10
32	PT1/8”	-	5.5	50	16	18.3	15
40	PT1/8”	-	7.5	58.5	20	21.3	16

Dual Stroke Cylinder/Double Rod Type(双行程气缸/双活塞杆型)

YAQ2B
YADQ2B [Bore 缸径] - [StrokeA 行程A] + [StrokeB 行程B] D(C)(M)-XC10

Two cylinders are constructed as one cylinder in a back-to-back configuration allowing the Cylinder stroke to be controlled in the three steps.
两个气缸以背靠背式组成一个气缸,使气缸行程分三步控制.

Symbol 符号

Function

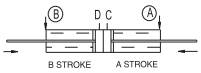

When air pressure is supplied to portsⒶandⒷ, both A and B strokes retract.
当ⒶⒷ口同时进气时，A、B行程同时缩回。

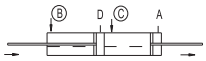

When air pressure is supplied to portsⒷandⒸ, A stroke extends and B stroke retracts strokes.
当ⒷⒸ口同时进气时，A行程伸出，B行程缩回。

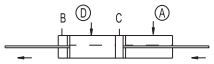

When air pressure is supplied to portsⒶandⒹ, B stroke extends and A retracts strokes .
当ⒶⒹ口同时进气时，B行程伸出,A行程缩回。

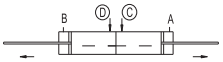

When air pressure is supplied to portsⒹandⒸ, A and B strokes extend.
当ⒹⒸ口同时进气时，A、B行程同时伸出。

Specifications(规格)

Type 类型	Lube,Non-lube 无润滑
Bore(mm) 缸径	ø12-,ø100
Action 动作	Double acting 双动
Fluid 流体	Air 空气
Mounting 安装方式	Through hole 通孔

Dimensions(外形尺寸)

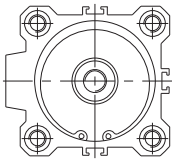

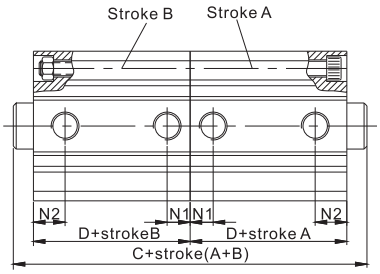

(mm)

Bore(mm)	C	D	N_1	N_2
ø12	44(64)	17(27)	6.3	6.3
ø16	48(68)	18.5(28.5)	7.3	7.3
ø20	50(70)	19.5(29.5)	7.5	7.5
ø25	54(74)	21(31)	8	8
ø32	63(83)	24.5(34.5)	9	9
ø40	66(86)	26(36)	10	10
ø50	74(94)	28(38)	10.5	10.5
ø63	82(102)	32(42)	11.8	11.8
ø80	104(124)	41(51)	14.5	14.5
ø100	126(146)	51(61)	20.5	20.5

※ () With auto switch带磁性开关

Dual Stroke Cylinder/Single Rod Type(双行程气缸/单活塞杆型)

YAQ2B
YADQ2B [Bore 缸径] - [StrokeA 行程A] + [StrokeB-A 行程B-A] D(C)(M)-XC11

Two cylinders are constructed in serial as one cylinder. It is possible control the stroke in two steps to obtain double the cylinder output force.
两个气缸连成一个气缸，可实现行程两种方式控制,并将得到双倍输出力.

Symbol 符号

Function

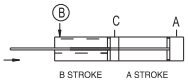

When air pressure is supplied to theⒷ port both A and B strokes retract.
当Ⓑ口进气时，A、B行程同时缩回。

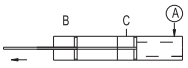

When air pressure is supplied to theⒶport,the rod extends by the A stroke length.
当Ⓐ 口进气时，活塞杆伸出A行程。

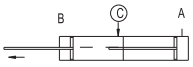

When air pressure is supplied to the Ⓒ port,the rod continue extends by B-A stroke
当Ⓒ口继续供气时,活塞杆继续伸出,行程为B-A.

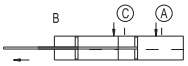

When air pressure is supplied to portsⒶandⒸ, double output force is obtainable in the A stroke length.当ⒶⒸ口同时进气时,在行程A范围内可得到两倍输出力.

Specifications(规格)

Type 类型	Lube,Non-lube 无润滑
Bore(mm) 缸径	ø12-,ø100
Action 动作	Double acting 双动
Fluid 流体	Air 空气
Mounting 安装方式	Through hole 通孔

Dimensions(外形尺寸)

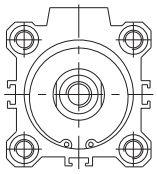

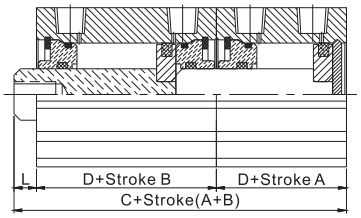

(mm)

Bore(mm)	C	D	L
ø12	39(59)	17(27)	5
ø16	42.5(62.5)	18.5(28.5)	5.5
ø20	44.5(64.5)	19.5(29.5)	5.5
ø25	48(68)	21(31)	6
ø32	56(76)	24.5(34.5)	7
ø40	59(79)	26(36)	7
ø50	65(85)	28(38)	9
ø63	73(93)	32(42)	9
ø80	93(113)	41(51)	11
ø100	114(134)	51(61)	12

※ () With auto switch带磁性开关

Adjustable Stroke Cylinder/Extension Adjustable Type(可调行程气缸/伸出调节缸)

YAQ2B
YADQ2B [Bore 缸径] - [StrokeA 行程A] D - [Adjust stroke 调节行程] -XC8

Two stroke at extendsion of the cylinder can be adjusted by stopper in head side from full stroke 10,20,30,40,50.

气缸伸出行程可通过调节头端挡块实现调节行程10,20,30,40,50.

Symbol 符号
Function

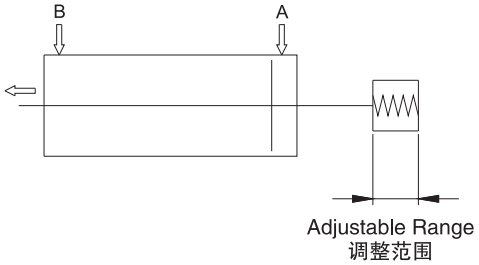

Specifications(规格)

Type 类型	Non-lube 无润滑
Bore(mm) 缸径	ø16-,ø100
Action 动作	Double acting 双动
Fluid 流体	Air 空气
Stroke Adjustment System行程调节	Adjusting Bolt调节挡块
Stroke Adjustment Range调节范围	10mm(0.39inch)
Mounting 安装方式	Through hole 通孔

Dimensions(外形尺寸)

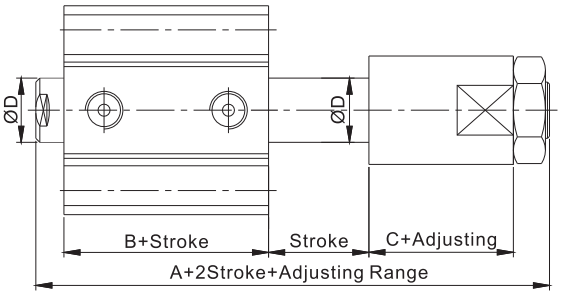

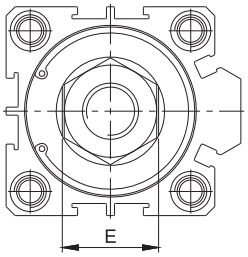

(mm)

Bore (缸径)	A		B		C	D	E
	无磁环	带磁环	无磁环	带磁环			
12	40	50	17	27	13	6	11
16	42.5	52.5	18.5	28.5	13	6	11
20	47.5	57.5	19.5	29.5	16	8	17
25	55	65	21	31	19	10	17
32	61.5	71.5	24.5	34.5	21	12	24
40	65	75	26	36	21	16	24
50	73	83	28	38	21	20	30
63	77	87	32	42	21	20	30
80	94	104	41	51	24	25	41
100	105	105	51	61	24	32	41

※Other dimensions are the same as for standard type.
其他尺寸与标准型相同

注:杆端外螺纹型尺寸请参考前页单活塞杆双动型

YSC | Compact Cylinder/Standard Type(标准型薄型气缸)
YCQ2(ø12~ø100) series

图形符号

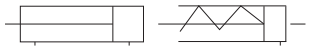

COMMON SPECIFICATIONS(共同规格)

Bore(缸径)	12	16	20	25	32	40	50	63	80	100
Fluid(流体)	Clean Air(洁净空气)									
Action(动作形式)	双作用 单作用:弹簧压回/弹簧压出									
Proof Press.(保证耐压力)	1.5Mpa(15kgf/cm²)									
Max. Press.(最高使用压力)	0.99Mpa(9.9kgf/cm²)									
Amb.Temp(环境及流体温度)	-5~+60°C(未冻结)									
Rod End Thread(杆端螺纹)	Female(STD)(内螺纹(标准)),Male(外螺纹)(任选)									
Cushion(缓冲)	None(无)									
Stroke Tclerance(行程调整范围)	$^{+0.1}_{0}$									
*Lubrication(润滑)	Non-Lube(不需要)									
Mounting(安装)	Through Hole(STD)(通孔(标准),Both End Tapped(两端内螺纹)									
Pipe Size(接管口径)Rc(PT)	M5×0.8				1/8"		1/4"		3/8"	

*Please Use Turbine Oil 1st-Grade ISOVG32,If Necessary.(如需要润滑, 请用透平1号油ISOVG32)

Standard Stroke & Auto Switch(行程/磁性开关选择)

Bore (缸径) (mm)	Stroke(标准行程)		Auto Switch(磁性开关)
	Double(双动)	Single(单动)	Rail Mounting(轨道安装型)
12	5,10,15 20,25,30	5,10	D-A93K
16			
20	5,10,15,20,25, 30,35,40,45,50	5,10	D-A73K
25			
32	5,10,15,20,25,30, 35,40,45,50,75,100	5,10	
40			
50	5,10,15,20,25, 30,35,40,45, 50,75,100	10,20	
63		Not Avilable (不适用)	
80			
100			

Note: For Auto Switch: Refer to Page(R-51), Magnet Switch: Applicable Double Acting Type Only.
注) 单动气缸内无内置磁环,不能配合磁性开关使用,磁性开关规格及特征可参阅磁性开关之系列.

HOW TO ORDER(型号表示方法)

Y C D Q2 W A 32 – 30 D C – A73K S

YSC Model(代号)

Magnet(有无磁环)
Nil(无记号): Non(无磁环)
D: Built-in Magnet(有磁环)

Type(类型)
Nil(无记号): Single Rod(单活塞杆型)
W: Double Rod End(双活塞杆型)

Type(安装)
B=Through Hole(通孔)
A=Both End Tapped(两端螺纹)

Bore Size (缸径)

Stroke (行程)

Action(缸身(任选))
D: Double Acting(双动)
S: Single Acting(Spring Return)
(单动(弹簧压回))(Φ12~32)
T:Single Acting(Spring Extended)
(单动(弹簧压出))
*Magnet Switch: Applicable Double Acting Type Only.
(内置磁环型只适合双动气动)

Option(缸身(任选))
Nil(无记号): Rod End Female Thread(杆端内螺纹)
C: Rubber Cushion(橡胶缓冲)
M: Rod End Male Thread(杆端外螺纹)
*Cushion for Single Acting Type: Not Available.
(单动气缸不可以橡胶缓冲)

Auto Switch(有无磁性开关)
Nil(无记号): Non(无磁性开关)
A73K: Reed Switch(带有接点磁性开关)

No.of Auto Switch(开关数量)
Nil(无记号): 2(个)
S: 1(个)
3: 3(个)

Dimensions(mm)(外形尺寸图(mm))

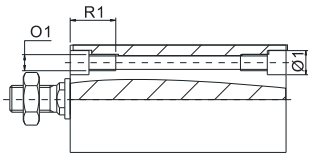

BOTH–SIDED TAP TYPE(两端螺纹孔)

Bore(缸径)(mm)	O1	R1	Ø1
12	M4×0.7	10	6.5
16	M4×0.7	10	6.5
20	M6×1.0	17	9
25	M6×1.0	17	9

Female Screw(杆端内螺纹)

ø12:

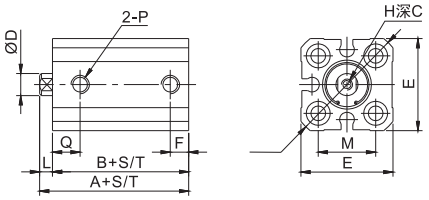

ø16:

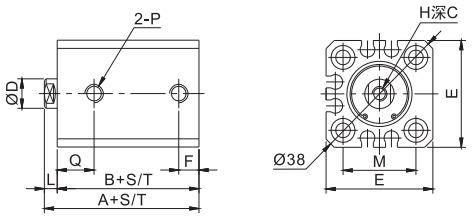

ø20:

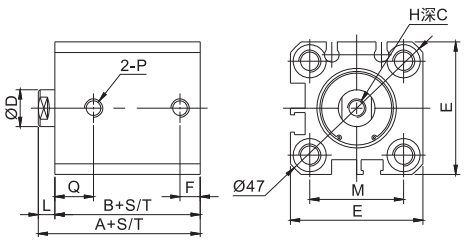

ø25:

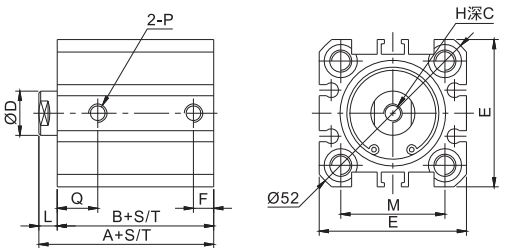

Bore(缸径)(mm)	Stroke Range行程范围(mm)	A	B	C	øD	E	F	L	Q	2-P	H	M
12	10~30	20.5	17	6	6	25	5	3.5	7.5	M5×0.8	M3×0.5	15.6
16	10~30	22	18.5	8	8	29	5.5	3.5	10	M5×0.8	M4×0.7	19.8
20	10~50	24	19.5	7	10	36	5.5	4.5	10.5	M5×0.8	M5×0.8	25.5
25	10~50	27.5	22.5	12	12	40	5.5	5	11	M5×0.8	M6×1.0	28.3

Male Screw(杆端外螺纹)

ø12:

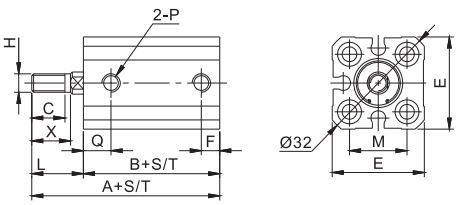

ø16:

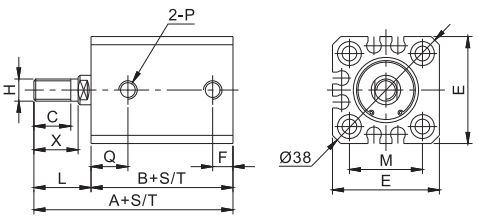

ø20:

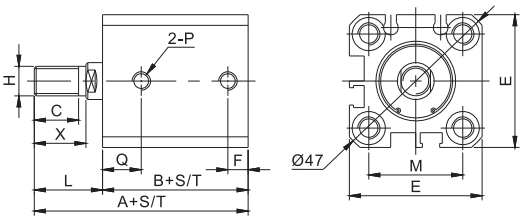

ø25:

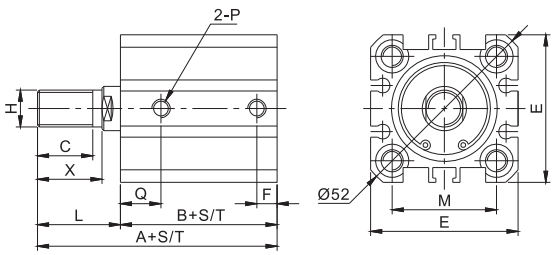

Bore(缸径)(mm)	Stroke Range行程范围(mm)	A	B	C	E	F	L	H	Q	X	2-P	M
12-M	10~30	31	17	9	25	5	14	M5×0.8	11	10.5	M5×0.8	15.6
16-M	10~30	34	18.5	10	29	5.5	15.5	M6×1.0	10	12	M5×0.8	19.8
20-M	10~50	38	19.5	12	36	5.5	18.5	M8×1.25	10.5	14	M5×0.8	25.5
25-M	10~50	45	22.5	15	40	5.5	22.5	M10×1.25	11	17.5	M5×0.8	28.3

Dimensions(mm)(外形尺寸图(mm))

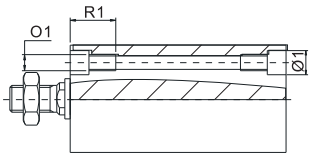

BOTH–SIDED TAP TYPE(两端螺纹孔)

Bore(缸径)(mm)	O1	R1	Ø1
12	M4×0.7	10	6.5
16	M4×0.7	10	6.5
20	M6×1.0	17	9
25	M6×1.0	17	9

Female Screw(杆端内螺纹)

ø12:

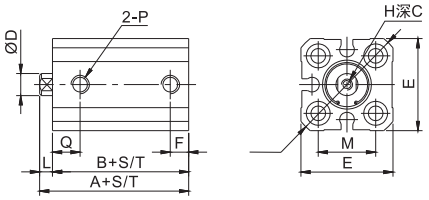

ø16:

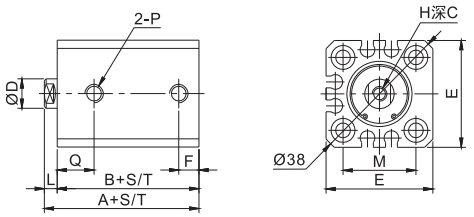

ø20:

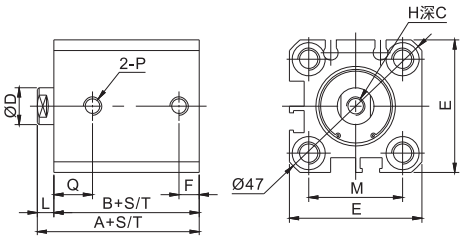

ø25:

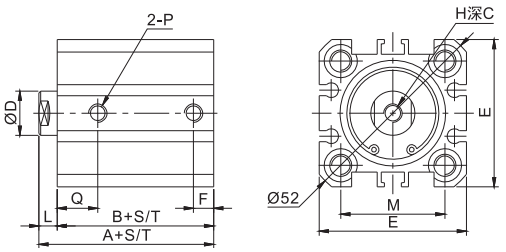

Bore(缸径)(mm)	Stroke Range行程范围(mm)	A	B	C	øD	E	F	L	Q	2-P	H	M
12	10~30	31.5	18	6	6	25	5	3.5	7.5	M5×0.8	M3×0.5	15.6
16	10~30	34	30.5	8	8	29	5.5	3.5	10	M5×0.8	M4×0.7	19.8
20	10~50	36	31.5	7	10	36	5.5	4.5	10.5	M5×0.8	M5×0.8	25.5
25	10~50	37.5	32.5	12	12	40	5.5	5	11	M5×0.8	M6×1.0	28.3

Male Screw(杆端外螺纹)

:Φ12

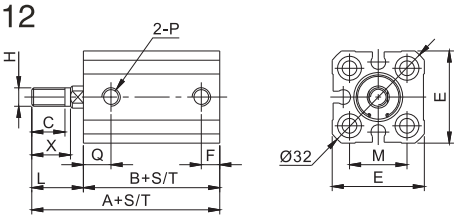

:Φ16

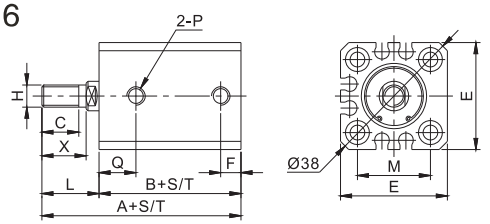

:Φ20

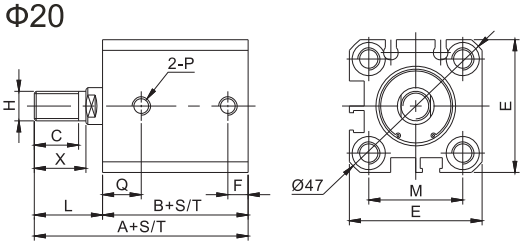

:Φ25

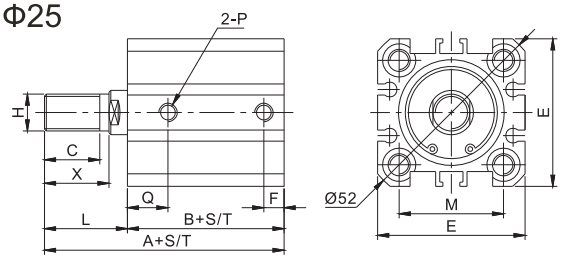

Bore(缸径)(mm)	Stroke Range行程范围(mm)	A	B	C	E	F	L	H	Q	X	2-P	M
12-M	10~30	42	28	9	25	5	14	M5×0.8	11	10.5	M5×0.8	15.6
16-M	10~30	46	30.5	10	29	5.5	15.5	M6×1.0	10	12	M5×0.8	19.8
20-M	10~50	50	31.5	12	36	5.5	18.5	M8×1.25	10.5	14	M5×0.8	25.5
25-M	10~50	55	32.5	15	40	5.5	22.5	M10×1.25	11	17.5	M5×0.8	28.3

Dimensions(mm)(外形尺寸图(mm))

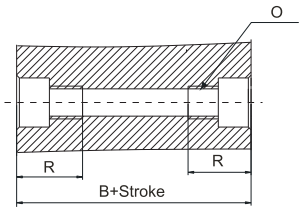

BOTH SIDE TAP TYPE(缸筒两端内螺纹型)

Bore(缸径)(mm)	R	O
32	17	M6×1.0
40	17	M6×1.0
50	20	M8×1.25
63	20	M10×1.5
80	25	M12×1.75
100	30	M12×1.75

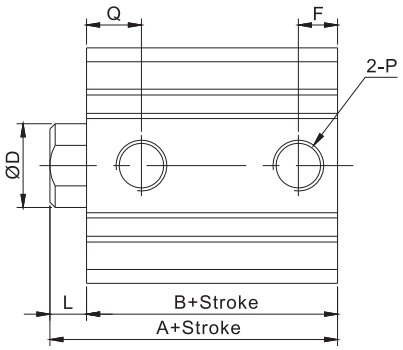

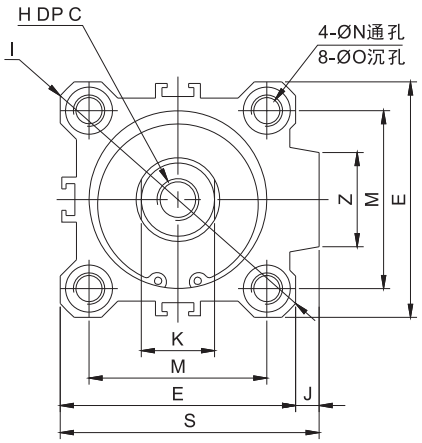

Bore(缸径)(mm)	Stroke Range 行程范围(mm)	A	B	C	øD	E	F	H	I	J	K	L	M	N	øO	2-P	Q	S	Z
32	5 10~50 75,100	30 40	23 33	13	16	45	5.5 7.5	M8×1.25	60	4.5	14	7	34	5.5	9DP7	Rc(PT)1/8"	11.5 10.5	49.5	18
40	5~50 75,100	36.5 46.5	29.5 39.5	13	16	52	8	M8×1.25	69	5	14	7	40	5.5	9DP7	Rc(PT)1/8"	11	57	18
50	10~50 75,100	38.5 48.5	30.5 40.5	15	20	64	10.5	M10×1.5	86	7	17	8	50	6.6	11DP8	Rc(PT)1/4"	10.5	71	22
63	10~50 75,100	44 54	36 46	15	20	77	10.5	M10×1.5	103	7	17	8	60	9	14DP10.5	Rc(PT)1/4"	15	84	22
80	10~50 75,100	53.5 63.5	43.5 53.5	21	25	98	12.5	M16×2.0	132	6	22	10	77	11	17.5DP13.5	Rc(PT)3/8"	16	104	26
100	10~50 75,100	65 75	53 63	27	30	117	13	M20×2.5	156	6.5	27	12	94	11	17.5DP13.5	Rc(PT)3/8"	23	123.5	26

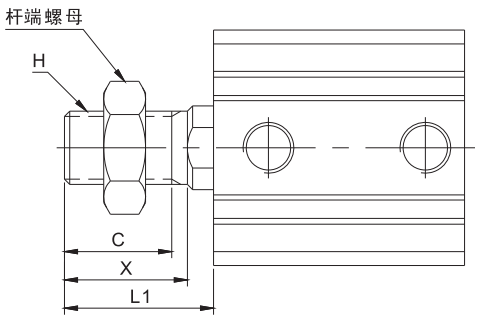

VERTICAL SCREW OF ROD(杆端外螺纹)(mm)

Bore(缸径)(mm)	C	X	H	L1
32-M	20.5	23.5	M14×1.5	28.5(38.5)
40-M	20.5	23.5	M14×1.5	28.5(38.5)
50-M	26	28.5	M18×1.5	33.5(43.5)
63-M	26	28.5	M18×1.5	33.5(43.5)
80-M	32.5	35.5	M22×1.5	43.5(53.5)
100-M	32.5	35.5	M26×1.5	43.5(53.5)

※()行程125以上

Dimensions(mm)(外形尺寸图(mm))

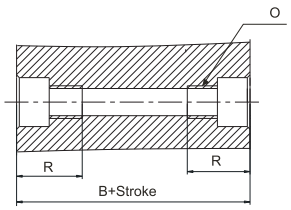

BOTH SIDE TAP TYPE(缸筒两端内螺纹型)

Bore(缸径)(mm)	R	O
32	17	M6×1.0
40	17	M6×1.0
50	20	M8×1.25
63	20	M10×1.5
80	25	M12×1.75
100	30	M12×1.75

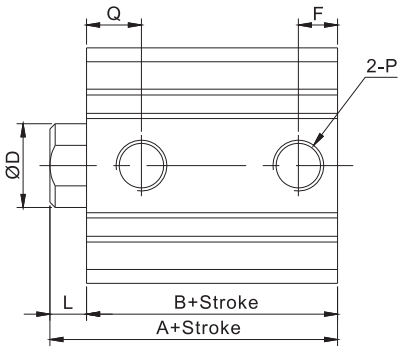

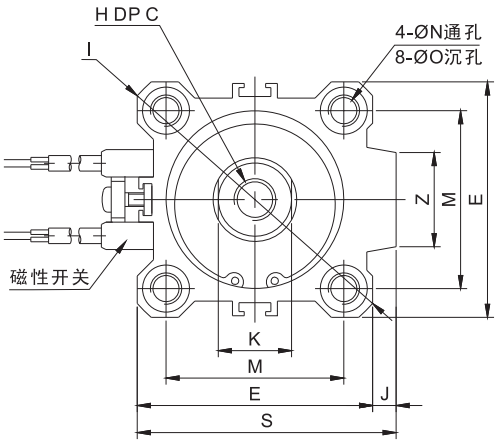

Bore(缸径)(mm)	Stroke Range 行程范围(mm)	A	B	C	øD	E	F	H	I	J	K	L	M	N	øO	2-P	Q	S	Z
32	5~100	40	33	13	16	45	7.5	M8×1.25	60	4.5	14	7	34	5.5	9DP7	Rc(PT)1/8"	10.5	58.5	18
40	5~100	46.5	39.5	13	16	52	8	M8×1.25	69	5	14	7	40	5.5	9DP7	Rc(PT)1/8"	11	66	18
50	10~100	48.5	40.5	15	20	64	10.5	M10×1.5	86	7	17	8	50	6.6	11DP8	Rc(PT)1/4"	10.5	80	22
63	10~100	54	46	15	20	77	10.5	M10×1.5	103	7	17	8	60	9	14DP10.5	Rc(PT)1/4"	15	93	22
80	10~100	63.5	53.5	21	25	98	12.5	M16×2.0	132	6	22	10	77	11	17.5DP13.5	Rc(PT)3/8"	16	112.5	26
100	10~100	75	63	27	30	117	13	M20×2.5	156	6.5	27	12	94	11	17.5DP13.5	Rc(PT)3/8"	23	132.5	26

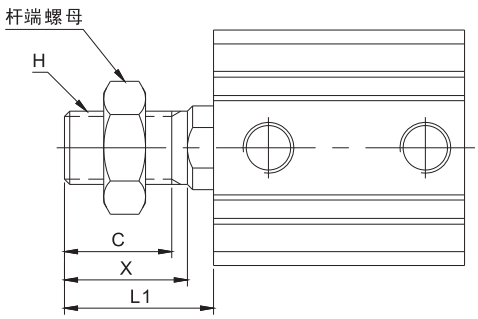

VERTICAL SCREW OF ROD(杆端外螺纹)(mm)

Bore(缸径)(mm)	C	X	H	L1
32-M	20.5	23.5	M14×1.5	28.5(38.5)
40-M	20.5	23.5	M14×1.5	28.5(38.5)
50-M	26	28.5	M18×1.5	33.5(43.5)
63-M	26	28.5	M18×1.5	33.5(43.5)
80-M	32.5	35.5	M22×1.5	43.5(53.5)
100-M	32.5	35.5	M26×1.5	43.5(53.5)

※()行程125以上

Dimensions(mm)(外形尺寸图(mm))

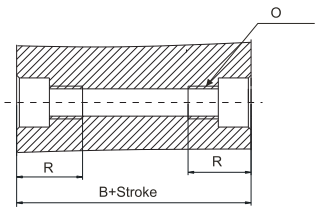

BOTH SIDE TAP TYPE(缸筒两端内螺纹型)

Bore(缸径)(mm)	R	O
32	17	M6×1.0
40	17	M6×1.0
50	20	M8×1.25
63	20	M10×1.5
80	25	M12×1.75
100	30	M12×1.75

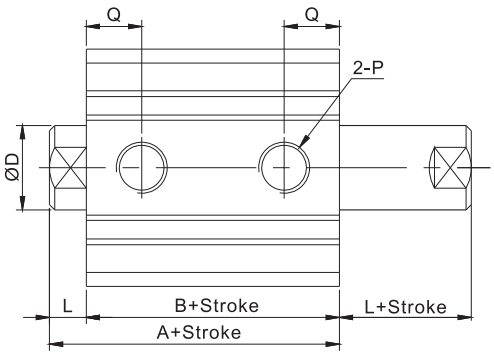

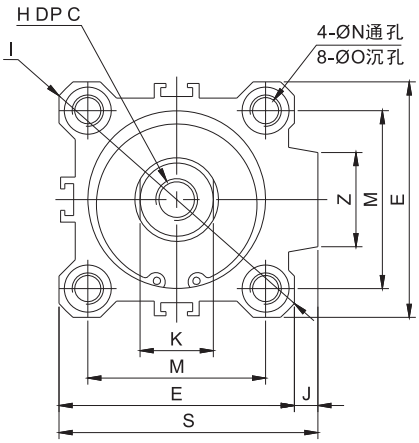

Bore(缸径)(mm)	Stroke Range 行程范围(mm)	A	B	C	øD	E	H	I	J	K	L	M	N	øO	2-P	Q	S	Z
YCQ2W32	5 10~50	44.5	30.5	13	16	45	M8×1.25	60	4.5	14	7	34	5.5	9DP7	Rc(PT)1/8"	12.5	49.5	18
YCQ2W40	5~50	54	40	13	16	52	M8×1.25	69	5	14	7	40	5.5	9DP7	Rc(PT)1/8"	14	57	18
YCQ2W50	10~50	56.5	40.5	15	20	64	M10×1.5	86	7	17	8	50	6.6	11DP8	Rc(PT)1/4"	14	71	22
YCQ2W63	10~50	58	42	15	20	77	M10×1.5	103	7	17	8	60	9	14DP10.5	Rc(PT)1/4"	15.5	84	22
YCQ2W80	10~50	71	51	21	25	98	M16×2.0	132	6	22	10	77	11	17.5DP13.5	Rc(PT)3/8"	18	104	26
YCQ2W100	10~50	84.5	60.5	27	30	117	M20×2.5	156	6.5	27	12	94	11	17.5DP13.5	Rc(PT)3/8"	22	123.5	26

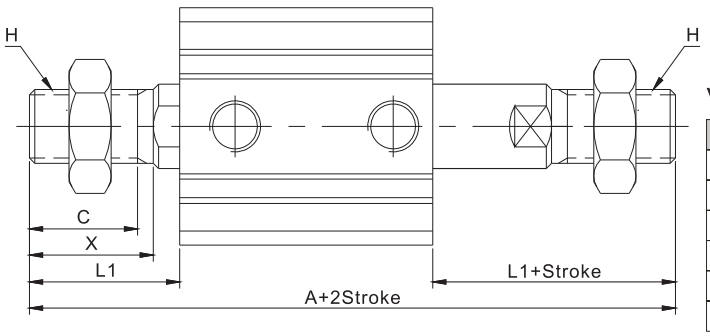

VERTICAL SCREW OF ROD(杆端外螺纹)(mm)

Bore(缸径)(mm)	C	X	H	L1	A
YCQ2W32-M	20.5	23.5	M14×1.5	28.5	87.5
YCQ2W40-M	20.5	23.5	M14×1.5	28.5	97
YCQ2W50-M	26	28.5	M18×1.5	33.5	107.5
YCQ2W63-M	26	28.5	M18×1.5	33.5	109
YCQ2W80-M	32.5	35.5	M22×1.5	43.5	138
YCQ2W100-M	32.5	35.5	M26×1.5	43.5	147.5

Dimensions(mm)(外形尺寸图(mm))

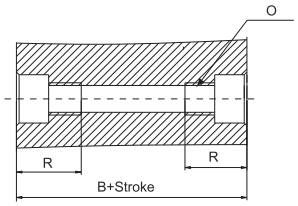

BOTH SIDE TAP TYPE(缸筒两端内螺纹型)

Bore(缸径)(mm)	R	O
32	17	M6×1.0
40	17	M6×1.0
50	20	M8×1.25
63	20	M10×1.5
80	25	M12×1.75
100	30	M12×1.75

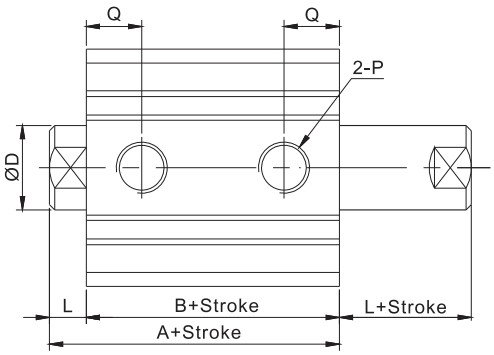

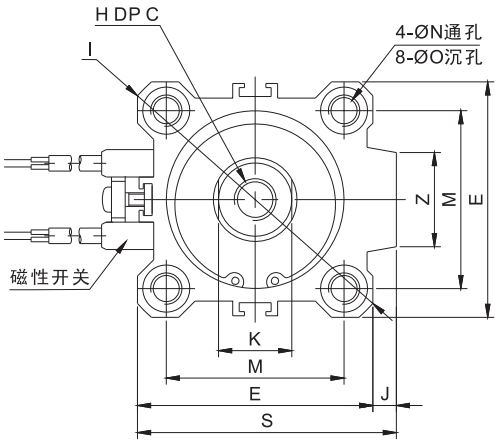

Bore(缸径)(mm)	Stroke Range 行程范围(mm)	A	B	C	øD	E	H	I	J	K	L	M	N	øO	2-P	Q	S	Z
YCDQ2W32	5~75	54.5	40.5	13	16	45	M8×1.25	60	4.5	14	7	34	5.5	9DP7	Rc(PT)1/8"	12.5	58.5	18
YCDQ2W40	5~75	64	50	13	16	52	M8×1.25	69	5	14	7	40	5.5	9DP7	Rc(PT)1/8"	14	66	18
YCDQ2W50	10~75	66.5	50.5	15	20	64	M10×1.5	86	7	17	8	50	6.6	11DP8	Rc(PT)1/4"	14	80	22
YCDQ2W63	10~75	68	52	15	20	77	M10×1.5	103	7	17	8	60	9	14DP10.5	Rc(PT)1/4"	15.5	93	22
YCDQ2W80	10~75	81	61	21	25	98	M16×2.0	132	6	22	10	77	11	17.5DP13.5	Rc(PT)3/8"	18	112.5	26
YCDQ2W100	10~75	94.5	70.5	27	30	117	M20×2.5	156	6.5	27	12	94	11	17.5DP13.5	Rc(PT)3/8"	22	132.5	26

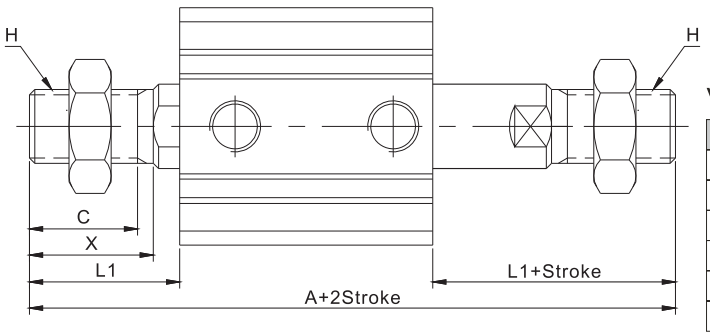

VERTICAL SCREW OF ROD(杆端外螺纹)(mm)

Bore(缸径)(mm)	C	X	H	L1	A
YCQ2W32-M	20.5	23.5	M14×1.5	28.5	97.5
YCQ2W40-M	20.5	23.5	M14×1.5	28.5	107
YCQ2W50-M	26	28.5	M18×1.5	33.5	117
YCQ2W63-M	26	28.5	M18×1.5	33.5	119
YCQ2W80-M	32.5	35.5	M22×1.5	43.5	148
YCQ2W100-M	32.5	35.5	M26×1.5	43.5	157.5

Dimensions(mm)(外形尺寸图(mm))

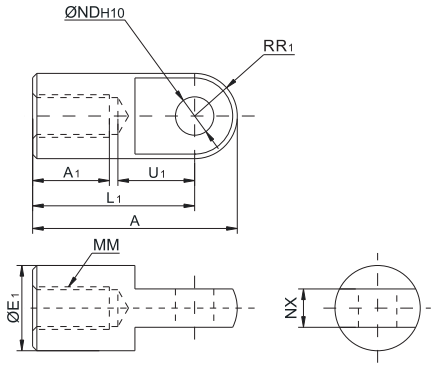

Single Knuckle Joint(I型单肘节接头)

Part No. (型号)	Bore (缸径)	A	A_1	E_1	L_1	MM	R_1	U_1	ND_{H10}	NX
YI-G012	12	21.5	6	10	16	M5×0.8	6.3	7	$5^{+0.048}_{0}$	$5^{-0.2}_{-0.4}$
YI-G015	16	32	8	12	25	M6×1.0	8.1	14	$5^{+0.048}_{0}$	$6.4^{-0.1}_{-0.3}$
YI-G020	20	34	8.5	16	25	M8×1.25	10.3	11.5	$8^{+0.048}_{0}$	$8^{-0.2}_{-0.4}$
YI-G025	25	41	10.5	20	30	M10×1.5	12.8	14	$10^{+0.048}_{0}$	$10^{-0.3}_{-0.5}$
YI-G040	32,40	42	14	22	30	M14×1.5	12	14	$10^{+0.048}_{0}$	$18^{-0.3}_{-0.5}$
YI-G050	50,63	56	18	28	40	M18×1.5	16	20	$14^{+0.048}_{0}$	$22^{-0.3}_{-0.5}$
YI-G080	80	71	21	38	50	M22×1.5	21	27	$18^{+0.048}_{0}$	$28^{-0.3}_{-0.5}$
YI-G100	100	79	21	44	55	M26×1.5	24	24	$22^{+0.048}_{0}$	$32^{-0.3}_{-0.5}$

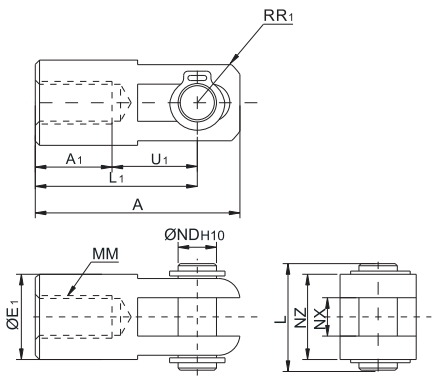

Double Knuckle Joint(Y型双肘节接头)

Part No. (型号)	Bore (缸径)	A	A_1	E_1	L_1	MM	R_1	U_1	ND_{H10}	NX	NZ	L
YY-G012	12	21.5	6	10	16	M5×0.8	6.3	7	$5^{+0.048}_{0}$	$5^{-0.2}_{-0.4}$	10	14.6
YY-G015	16	32	8	12	25	M6×1.0	8.1	14	$5^{+0.048}_{0}$	$6.4^{-0.1}_{-0.3}$	12	16.6
YY-G020	20	34	8.5	16	25	M8×1.25	10.3	11.5	$8^{+0.048}_{0}$	$8^{-0.2}_{-0.4}$	16	21
YY-G025	25	41	10.5	20	30	M10×1.5	12.8	14	$10^{+0.048}_{0}$	$10^{-0.3}_{-0.5}$	20	25.6
YY-G040	32,40	42	14	22	30	M14×1.5	12	14	$10^{+0.048}_{0}$	$18^{-0.3}_{-0.5}$	36	41.6
YY-G050	50,63	56	18	28	40	M18×1.5	16	20	$14^{+0.048}_{0}$	$22^{-0.3}_{-0.5}$	44	50.6
YY-G080	80	71	21	38	50	M22×1.5	21	27	$18^{+0.048}_{0}$	$28^{-0.3}_{-0.5}$	56	64
YY-G100	100	79	21	44	55	M26×1.5	24	24	$22^{+0.048}_{0}$	$32^{-0.3}_{-0.5}$	64	72

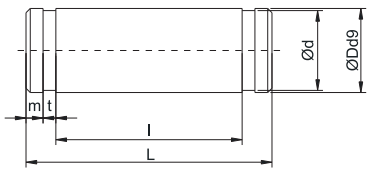

Knuckle Joint Pin(肘节接头销子)

Part No. (型号)	Bore (缸径)	D_{d9}	L	d	l	m	t
YIY-G012	12	$5^{-0.030}_{-0.060}$	14.6	4.8	10.2	1.5	0.7
YIY-G015	16	$5^{-0.030}_{-0.060}$	16.6	4.8	12.2	1.5	0.7
YIY-G020	20	$8^{-0.040}_{-0.076}$	21	7.6	16.2	1.5	0.9
YIY-G025	25	$10^{-0.040}_{-0.076}$	25.6	9.6	20.2	1.55	1.15
YIY-G040	32,40	$10^{-0.040}_{-0.076}$	41.6	9.6	36.2	1.55	1.15
YIY-G050	50,63	$14^{-0.050}_{-0.093}$	50.6	13.4	44.2	2.05	1.15
YIY-G080	80	$18^{-0.050}_{-0.093}$	64	17	56.2	2.55	1.35
YIY-G100	100	$22^{-0.067}_{-0.117}$	72	21	64.2	2.55	1.35

Adjustable Stroke Cylinder/Extension Adjustable Type(可调行程气缸/伸出调节缸)

YCQ2B
YCDQ2B [Bore 缸径] - [StrokeA 行程A] D-XC8

Two stroke at extendsion of the cylinder can be adjusted by stopper in head side from full stroke 0~10mm (0.39inch)

气缸伸出行程可通过调节头端挡块实现调节范围0~10mm,(0.39inch).

Symbol 符号
Function

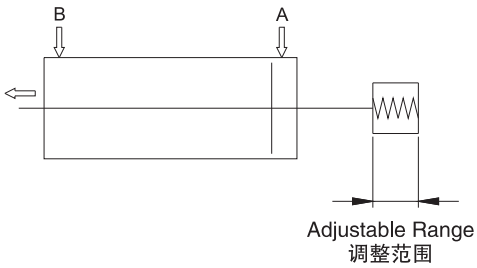

Specifications(规格)

Type 类型	Non-lube 无润滑
Bore(mm) 缸径	ø16-,ø100
Action 动作	Double acting 双动
Fluid 流体	Air 空气
Stroke Adjustment System行程调节	Adjusting Bolt调节挡块
Stroke Adjustment Range调节范围	10mm(0.39inch)
Mounting 安装方式	Through hole 通孔

Dimensions(外形尺寸)

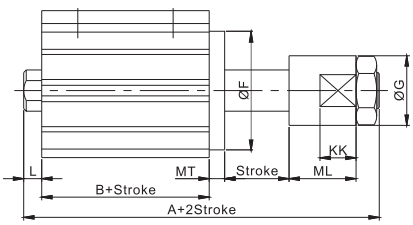

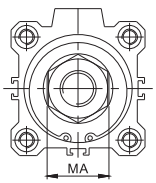

(mm)

Bore(mm)	A	B	L	MT	F	MA	KK	øG	ML	Standard stroke Range
16	58.5	26	3.5	5	ø28	11	7	14	19	30
20	67.5	26	4.5	8	ø36	17	10	20	22.5	50
25	71	29	5	8	ø40	17	10	20	22.5	
32	78.5	30.5	7	6	ø38	24	14	27	26	
40	88	40	7	6	ø46	24	14	27	26	
50	100.5	40.5	8	8	ø57	30	16	35	30	
63	102	42	8	10	ø68	30	16	35	30	
80	125	51	10	12	ø90	41	20	48	38	
100	138.5	60.5	12	14	ø110	41	20	48	38	

※Other dimensions are the same as for standard type.
其他尺寸与标准型相同

Adjustable Stroke Cylinder/Return Adjustable Type(可调行程气缸/缩回调节型)

YCQ2B
YCDQ2B [Bore 缸径] - [StrokeA 行程A] D-XC9

气缸缩回行程可通过调节尾部螺钉实现,调节范围0~10mm(0.39inch)

Symbol 符号
Function

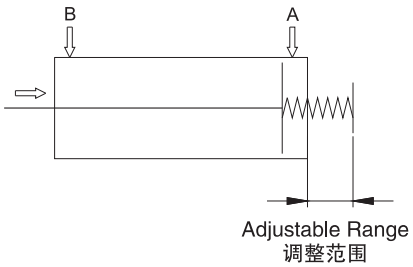

Specifications(规格)

Type 类型	Non-lube 无润滑
Bore(mm) 缸径	ø16-,ø100
Action 动作	Double acting 双动
Fluid 流体	Air 空气
Stroke Adjustment System行程调节	Adjusting Screw调节螺钉
Stroke Adjustment Range调节范围	10mm(0.39inch)
Mounting 安装方式	Through hole 通孔

Dimensions(外形尺寸)

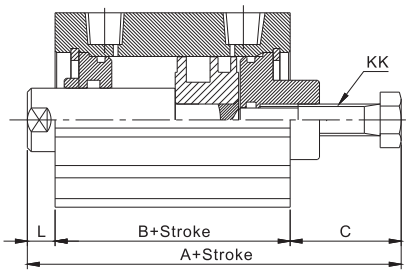

(mm)

Bore(mm)	A	B	L	C	KK	Standard stroke Range
20	61(73)	26(38)	4.5	30.5	M8×1.25	5~50
25	63.5(73.5)	29(39)	5	29.5	M8×1.25	
32	65.5(75.5)	30.5(40.5)	7	28	M8×1.25	
40	84(94)	40(50)	7	37	M8×1.5	
50	84.5(94.5)	40.5(50.5)	8	36	M8×1.25	10~50
63	88.5(98.5)	42(52)	8	38.5	M8×1.5	
80	109.5(119.5)	51(61)	10	48.5	M8×1.5	
100	125(135)	60.5(70.5)	12	52.5	M8×1.5	

※Other dimensions are the same as for standard type.
其它尺寸与标准型相同,( )内为带磁性开关尺寸

Dual Stroke Cylinder/Double Rod Type(双行程气缸/双活塞杆型)

YCQ2B / YCDQ2B [Bore 缸径] - [StrokeA 行程A] + [StrokeB 行程B] D(C)(M)-XC10

Two cylinders are constructed as one cylinder in a back-to-back configuration allowing the Cylinder stroke to be controlled in the three steps.
两个气缸以背靠背式组成一个气缸,使气缸行程分三步控制.

Symbol 符号

Function

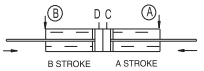

When air pressure is supplied to portsⒶandⒷ, both A and B strokes retract.
当ⒶⒷ口同时进气时，A、B行程同时缩回。

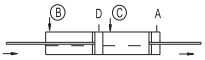

When air pressure is supplied to portsⒷandⒸ, A stroke extends and B stroke retracts strokes.
当ⒷⒸ口同时进气时，A行程伸出，B行程缩回。

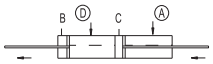

When air pressure is supplied to portsⒶandⒹ, B stroke extends and A retracts strokes .
当ⒶⒹ口同时进气时，B行程伸出,A行程缩回。

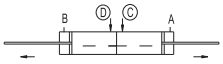

When air pressure is supplied to portsⒹandⒸ, A and B strokes extend.
当ⒹⒸ口同时进气时，A、B行程同时伸出。

Specifications(规格)

Type 类型	Lube,Non-lube 无润滑
Bore(mm) 缸径	ø12-,ø100
Action 动作	Double acting 双动
Fluid 流体	Air 空气
Mounting 安装方式	Through hole 通孔

Dimensions(外形尺寸)

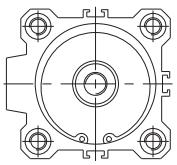

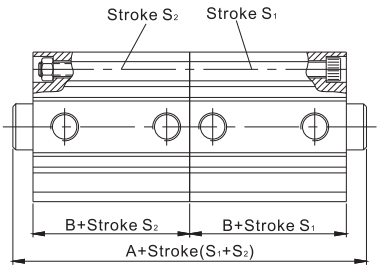

(mm)

Bore(mm)	Stroke adjustable range 行程调节范围	A		B	
		50 Stroke or less	75,100	50 Stroke or less	75,100
ø12	5~30	41(63)	-	17(28)	-
ø16		44(68)	-	18.5(30.5)	-
ø20	5~50	48(72)	-	19.5(31.5)	-
ø25		55(75)	-	22.5(32.5)	-
ø32	5~100	60(80)	80(80)	23(33)	33(33)
ø40		73(93)	93(93)	29.5(39.5)	39.5(39.5)
ø50	10~100	77(97)	97(97)	30.5(40.5)	40.5(40.5)
ø63		88(108)	108(108)	36(46)	46(46)
ø80		107(127)	127(127)	43.5(53.5)	53.5(53.5)
ø100		130(150)	150(150)	53(63)	63(63)

※ () With auto switch带磁性开关

Dual Stroke Cylinder/Single Rod Type(双行程气缸/单活塞杆型)

YCQ2B / YCDQ2B [Bore 缸径] - [StrokeA 行程A] + [StrokeB-A 行程B-A] D(C)(M)-XC11

Two cylinders are constructed in serial as one cylinder.It is possible control the stroke in two steps to obtain double the cylinder output force.
两个气缸连成一个气缸，可实现行程两种方式控制,并将得到双倍输出力.

Symbol 符号

Function

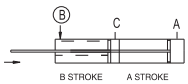

When air pressure is supplied to theⒷ port both A and B strokes retract.
当Ⓑ口进气时，A、B行程同时缩回。

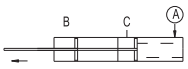

When air pressure is supplied to theⒶport,the rod extends by the A stroke length.
当Ⓐ 口进气时，活塞杆伸出A行程。

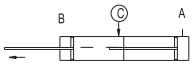

When air pressure is supplied to the Ⓒ port,the rod continue extends by B-A stroke
当Ⓒ口继续供气时,活塞杆继续伸出,行程为B-A.

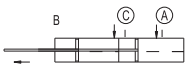

When air pressure is supplied to portsⒶandⒸ, double output force is obtainable in the A stroke length.当ⒶⒸ口同时进气时,在行程A范围内可得到两倍输出力.

Specifications(规格)

Type 类型	Lube,Non-lube 无润滑
Bore(mm) 缸径	ø12-,ø100
Action 动作	Double acting 双动
Fluid 流体	Air 空气
Mounting 安装方式	Through hole 通孔

Dimensions(外形尺寸)

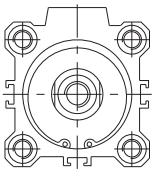

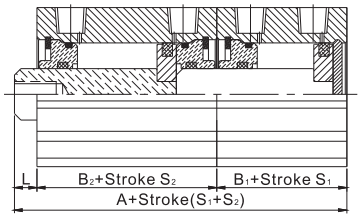

(mm)

Bore(mm)	A	B_1	B_2	L
ø20	50(74)	19.5(31.5)	26(38)	4.5
ø25	56.5(76.5)	22.5(32.5)	29(39)	5
ø32	60.5(80.5)	23(33)	30.5(40.5)	7
ø40	76.5(96.5)	29.5(39.5)	40(50)	7
ø50	79(99)	30.5(40.5)	40.5(50.5)	8
ø63	88(106)	36(46)	42(52)	8
ø80	104.5(124.5)	43.5(53.5)	51(61)	10
ø100	125.5(145.5)	53(63)	60.5(70.5)	12

※ () With auto switch带磁性开关

YSC | Direct Mount Cylinder(Rubber Cushion)直接安装气缸/橡胶缓冲
YCU series

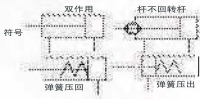

Standard specifications (标准规格)

Bore(缸径)	6	10	16	20	25	32
Fluid(流体)	Clean Air With Lube(洁净空气含油雾)					
Action(动作形式)	双作用 单作用:弹簧压回/弹簧压出					
Proof Press.(保证耐压力)	1.05Mpa(10.5kgf/cm²)					
Max. Press.(最高使用压力)	0.7Mpa(7kgf/cm²)					
Amb.Temp(环境及流体温度)	-5~+60°C(未冻结)					
Cushion(缓冲)	Rubber Cushion(两侧橡胶缓冲)					
Stroke Tolerance(行程调整范围)	$^{+0.1}_{0}$					
*Lubrication(润滑)	不需要					
Mounting(安装)	自由(多面安装)					
活塞杆不转动精度 (只限YCUK/YCDUK)	±0.8°			±0.5°		
Pipe Size(接管口径)Rc(PT)	M5×0.8					1/8"

*Please Use Turbine Oil 1st-Grade ISOVG32,If Necessary.(如需要润滑,请用透平1号油ISOVG32)

HOW TO ORDER(型号表示方法)

YC D U K 6 – 30 D – A93K S

- D: Magnet(有无磁环)
  Nil(无记号):Non(无磁环)
  D:Built-in Magnet(有磁环)
- K: Type(品种)
  Nil(无记号):基本型
  K:杆不回转型
- 6: Bore (缸径)
- 30: Stroke (行程)
- D: Acting(动作)
  D:Double Acting(双动)
  S:Spring Return(弹簧压回)
  T:Spring Extend(弹簧压出)
- A93K: Auto Switch(有无磁性开关)
  Nil(无记号):None(无)
  C73K:Reed Switch(有接点磁性开关)
- S: No.of Auto Switch(开关数量)
  Nil(无记号):2(个)
  S:1(个)
  3:3(个)

订货举例

1)所需缸径:6, 行程:10, 双动,不旋转活塞杆
正确型号:YCUK6-10D
2)所需缸径:25, 行程:25, 双动(弹簧压回),内置磁环型
正确型号:YCDU25-25S
1)Required cylinder diameter:6;Stroke:10;double-acting,with non-rotating plunger rod,
Correct Type:YCUK6-10D
2)Required cylinder diameter:25;Stroke:25;spring-operated with drawas,built-in magnetic ring.
Correct Type:YCDU25-25S

行程/磁性开关型号表

Bore (缸径) (mm)	STD Stroke(标准行程)(mm) 双作用	STD Stroke(标准行程)(mm) 单作用	*磁性开关型号 (轨道安装)
6	5,10,15 20,25,30	5,10,15	D-A93K D-A93KL
10			
16			
20	5,10,15,20, 25,30,40,50		
25			
32			

适应性强的安装/矩形气缸 Very-adaptive installations/rectangular cylinder

安装形式 Installation model	轴平行型(体分型) Psrallel–shaft model(body connected)	轴垂直型(穿体孔) Vertical–shaft model (with through bore in the body)	侧分接型(穿体孔) Side–connected (with through bore in the body)
	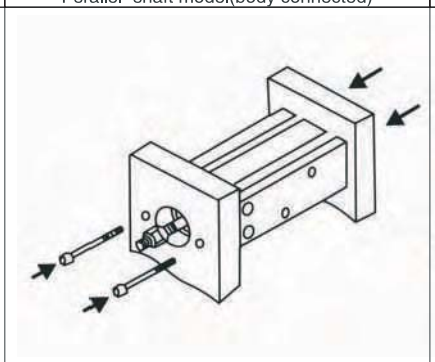	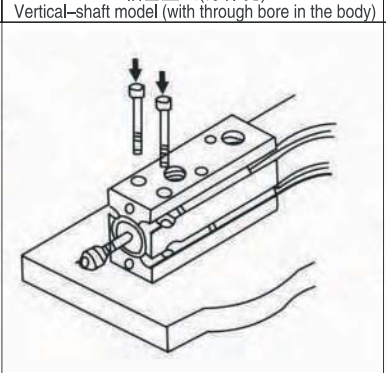	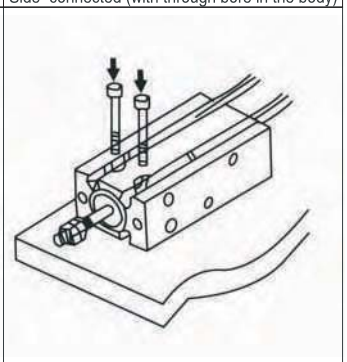

Dimensions(mm)(外型尺寸图)(mm)

基本型,内置磁环型(双动、单动弹簧压回/压出)
Basic model,Model with built-in magnetic ring
(Double action,Single action with spring return/extend)

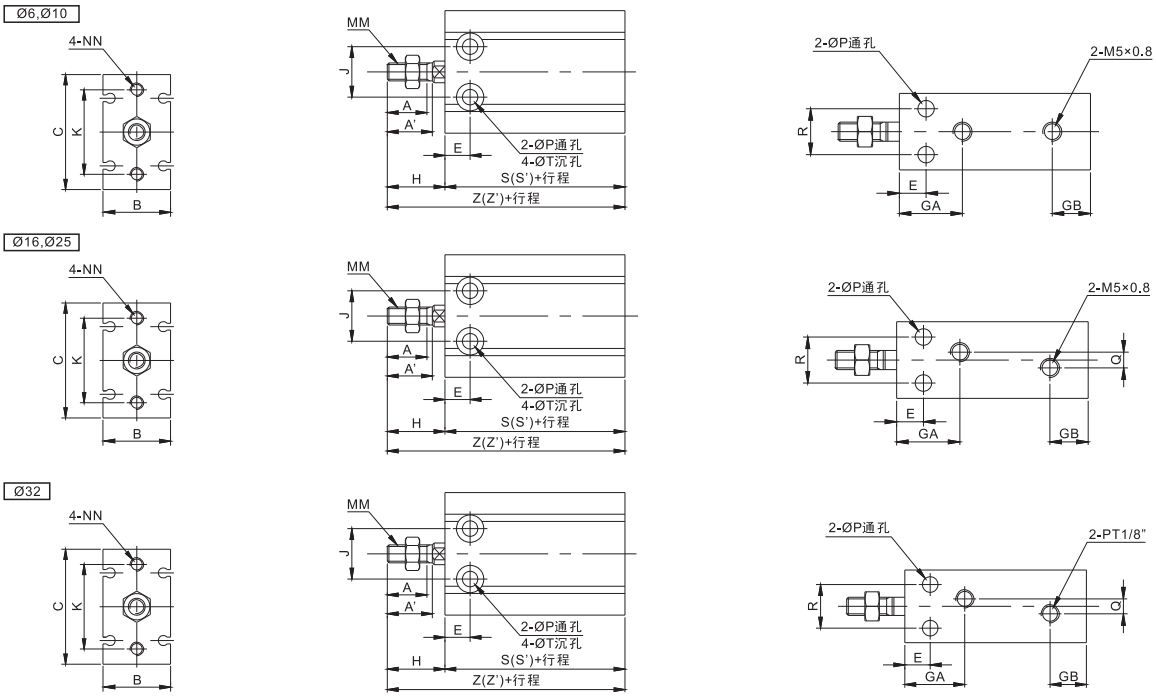

共同尺寸表 Common Dimension Table

Model No.(型号)	A	A'	B	C	ØD	E	GA	GB	J	K	L	MM	NN	ØP	Q	R	ØT
YC□U6	7	-	13	22	3	7	14.5	10	10	17	-	M3×0.5	M3×0.5深5	3.4	-	7	6深4.8
YC□U10	10	-	15	24	4	7	15.5	10	11	18	-	M4×0.7	M3×0.5深5	3.4	-	9	6深5
YC□U16	11	12.5	20	32	6	7	16.5	10	14	25	5	M5×0.8	M4×0.7深6	4.5	4	12	7.6深6.5
YC□U20	12	14	26	40	8	9	19	12.5	16	30	6	M6×1.0	M5×0.8深8	5.5	9	16	9.5深8
YC□U25	15.5	18	32	50	10	10	21	13	20	38	8	M8×1.25	M5×0.8深8	5.5	9	20	9.5深9
YC□U32	19.5	22	40	62	12	11	22	13	24	48	10	M10×1.25	M6×1.0深9	6.6	13.5	24	11深11.5

双动尺寸表 Dimension Table of Double–acting Cylinder

Model No. (型号)	H	基本型 Basic Model		内置磁环型 Mode with built-in magnetic ring		
		S	Z	W	S'	Z'
YC□U6-□D	13	33	46	2.5	33	46
YC□U10-□D	16	36	52	4	36	52
YC□U16-□D	16	30	46	0	40	56
YC□U20-□D	19	36	55	4	46	65
YC□U25-□D	23	40	63	-1	50	73
YC□U32-□D	27	42	69	-4	52	79

单作用(弹簧压回)尺寸表 Dimension Table of Single–acting Cylinder (with spring–operated withdrawal)

Model No. (型号)	H	基本型Basic Model						内置磁环型Mode with built-in magnetic ring						
		S			Z			W	S'			Z'		
		5st	10st	15st	5st	10st	15st		5st	10st	15st	5st	10st	15st
YC□U6-□S	13	38	43	48	51	56	61	2.5	38	43	48	51	56	61
YC□U10-□S	16	41	46	56	57	62	72	4	41	46	56	57	62	72
YC□U16-□S	16	35	40	50	51	56	66	0	45	50	60	61	66	76
YC□U20-□S	19	41	46	56	60	65	75	4	51	56	66	70	75	85
YC□U25-□S	23	45	50	60	68	73	83	-1	55	60	70	78	83	93
YC□U32-□S	27	47	52	62	74	79	89	-4	57	62	72	84	89	99

单作用(弹簧压出)尺寸表 Dimension Table of Single–acting Cylinder (with spring–operated withdrawal)

Model No. (型号)	H			基本型Basic Model						内置磁环型Mode with built-in magnetic ring						
				S			Z			W	S'			Z'		
	5st	10st	15st	5st	10st	15st	5st	10st	15st		5st	10st	15st	5st	10st	15st
YC□U6-□D	18	23	28	38	43	48	56	66	76	2.5	38	43	48	56	66	76
YC□U10-□D	21	26	31	41	46	56	62	72	87	4	41	46	56	62	72	87
YC□U16-□D	21	26	31	45	50	60	66	76	91	0	45	50	60	66	76	91
YC□U20-□D	24	29	34	41	46	56	65	75	90	4	51	56	66	65	85	100
YC□U25-□D	28	33	38	45	50	60	73	83	98	-1	55	60	70	83	93	108
YC□U32-□D	32	37	42	47	52	62	79	89	104	-4	57	62	72	89	99	114

*st =行程

Dimensions(mm)(外型尺寸图)(mm)

杆不回转型,内置磁环型(双动、单动弹簧压回/压出)
Rod non-swiveling,Model with built-in magnetic ring
(Double action,Single action with spring return/extend)

Ø6、10

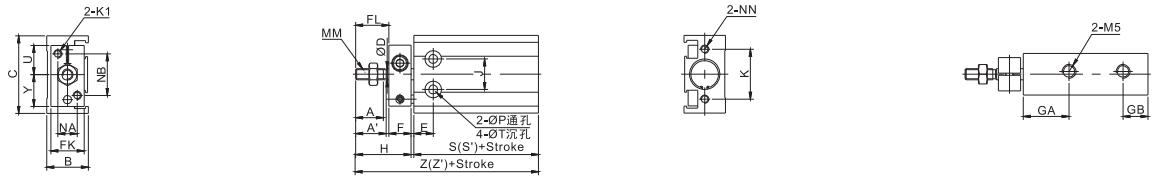

Ø16、25

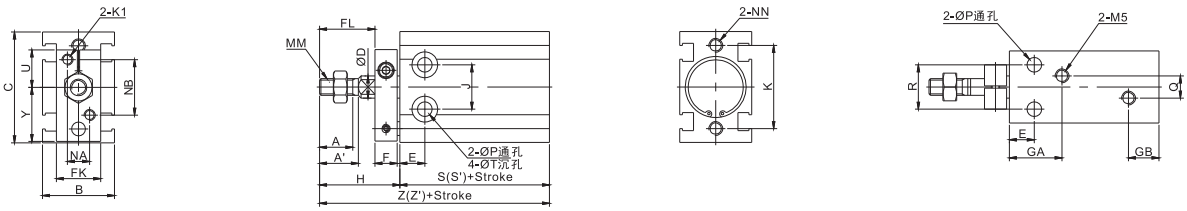

Ø32

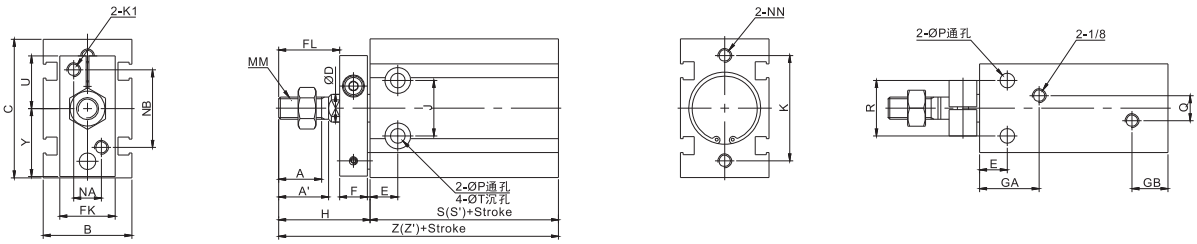

共同尺寸表 Common Dimension Table

Model No.(型号)	A	A'	B	C	ØD	E	F	FL	FK	FY	GA	GB	H	J	K	K1	L	MM	NA	NB	NN	ØP	Q	R	ØT	U	Y
YC□UK6	7	-	13	22	3	7	8	9	11	20.5	14.5	10	18	10	17	M3×0.5	-	M3×0.5	6	14	M3×0.5深5	3.4	-	7	6深4.8	10	10.5
YC□UK10	10	-	15	24	4	7	8	12	12	22	15.5	10	21	11	18	M3×0.5	-	M4×0.7	7	15	M3×0.5深5	3.4	-	9	6深5	10.5	11.5
YC□UK16	11	12.5	20	32	6	7	8	17	13	28	16.5	11.5	26	14	25	M4×0.7	5	M5×0.8	6	18	M4×0.7深6	4.5	4	12	7.6深6.5	12.5	15.5
YC□UK20	12	14	26	40	8	9	8	20	16	33	19	12.5	29	16	30	M4×0.7	6	M6×1.0	8	20	M5×0.8深8	5.5	9	16	9.5深8	13.5	19.5
YC□UK25	15.5	18	32	50	10	10	10	22	20	43.5	21	13	33	20	38	M5×0.8	8	M8×1.25	10	28	M5×0.8深8	5.5	9	20	9.5深9	19	24.5
YC□UK32	19.5	22	40	62	12	11	12	29	24	51.5	22	13	42	24	48	M5×0.8	10	M10×1.25	12	32	M6×1.0深9	6.5	13.5	24	11深11.5	21	30.5

双动尺寸表 Dimension Table of Double-acting Cylinder

Model No. (型号)	H	基本型 Basic Model		内置磁环型 Mode with built-in magnetic ring		
		S	Z	W	S'	Z'
YC□UK6-□D	18	33	51	2.5	33	51
YC□UK10-□D	21	36	57	4	36	57
YC□UK16-□D	26	30	56	0	40	66
YC□UK20-□D	29	36	65	4	46	75
YC□UK25-□D	33	40	73	-1	50	83
YC□UK32-□D	42	42	84	-4	52	94

单作用(弹簧压回)尺寸表 Dimension Table of Single-acting Cylinder (with spring-operated withdrawal)

Model No. (型号)	H	基本型Basic Model						内置磁环型Mode with built-in magnetic ring						
		S			Z			W	S'			Z'		
		5st	10st	15st	5st	10st	15st		5st	10st	15st	5st	10st	15st
YC□UK6-□S	18	38	43	48	56	61	66	2.5	38	43	48	56	61	66
YC□UK10-□S	21	41	46	56	62	67	77	4	41	46	56	62	67	77
YC□UK16-□S	26	35	40	50	61	66	76	0	45	50	60	71	76	86
YC□UK20-□S	29	41	46	56	70	75	85	4	51	56	66	80	85	95
YC□UK25-□S	33	45	50	60	78	83	93	-1	55	60	70	88	93	103
YC□UK32-□S	42	47	52	62	89	94	104	-4	57	62	72	99	104	114

单作用(弹簧压出)尺寸表 Dimension Table of Single-acting Cylinder (with spring-operated withdrawal)

Model No. (型号)	H			ØT	U	Y	基本型Basic Model						内置磁环型Mode with built-in magnetic ring						
							S			Z			W	S'			Z'		
	5st	10st	15st				5st	10st	15st	5st	10st	15st		5st	10st	15st	5st	10st	15st
YC□UK6-□T	18	23	28	6深4.8	10	10.5	38	43	48	61	71	81	2.5	38	43	48	61	71	81
YC□UK10-□T	21	26	31	6深5	10.5	11.5	41	46	56	67	77	92	1	41	46	56	67	77	92
YC□UK16-□T	21	26	31	7.6深6.5	12.5	15.5	45	50	60	76	86	101	0	45	50	60	76	86	101
YC□UK20-□T	24	29	34	9.5深8	13.5	19.5	41	46	56	75	85	100	1	51	56	66	85	95	110
YC□UK25-□T	28	33	38	9.5深9	19	24.5	45	50	60	83	93	108	-1	55	60	70	93	103	118
YC□UK32-□T	32	37	42	11深11.5	21	30.5	47	52	62	94	104	119	-4	57	62	72	104	114	129

行程

YSC | Guide Cylinder(带导杆气缸)
YMGP(ø12~ø100) series

YMGP系列/Series

Small and light
High resistance to lateral loads
High resistance to torsioning force
High pecision in terms of non-swiveling
Guide-rod bearing is slide bearing or ball guide bearing
Easy to install and use
Optional nozzle positions on two sides

*体积小,轻巧
*侧面负载抵抗力强
*不摇转精度高
*导向杆的轴承可选择滑动轴承或滚珠导向轴承
*方便安装使用
*二面接管位置可供选择

Standard specifications(标准规格)

Bore(缸径)		12	16	20	25	32	40	50	63	80	100
Fluid(流体)		Clean Air(洁净空气)									
Action(动作形式)		Double-acting(双动)									
Proof Press.(耐压试验压力)		1.5Mpa(15.3kgf/cm²)									
Max. Press.(最高使用压力)		1.0Mpa(10.2kgf/cm²)									
Min. Press.(最低使用压力)		0.12Mpa(1.2kgf/cm²)									
Amb.Temp(环境和流体温度)		-5~+60°C(未冻结)									
Piston Speed(活塞速度)		50~500mm/s					50~400mm/s				
Cushion(缓冲)		橡胶缓冲									
Stroke Tclerance(行程调整范围)		$^{+1.5}_{0}$mm									
*Lubrication(润滑)		Not Required(不需要)									
Bearing(轴承)		滑动轴承/滚珠导向轴承									
Rod Non-Ratary Allowance(活塞杆不回转精度)	Slide Bearing(滑动轴承)	+0.08°		+0.07°		+0.06°		+0.05°		+0.04°	
	Ball Guide Bearing(滚珠导向轴承)	+0.10°		+0.09°		+0.08°		+0.06°		+0.05°	
Size(接管口径)Rc(PT)		M5×0.8		1/8"				1/4"		3/8"	

*Please Use Turbine Oil 1st-Grade ISOVG32,If Necessary.(如需要润滑, 请用透平1号油ISOVG32)

Order Example(订货举例)

1) 所需缸径: 12, 行程: 50, 滑动轴承。
正确型号：YMGPM12–50
2) 所需缸径: 40, 行程: 100, 滚珠导向轴承。杆端外螺纹， 橡胶缓冲。
正确型号：YMGPL40–100

1) Required cylinder diameter: 12; Stroke: 50, with slide bearing
Correct Type: YMGPM12–50
2) Required cylinder diameter: 40; Stroke: 100; with ball guide bearing, male threads on rod end, and rubber buffer
Correct Type：YMGPL40–100

Model Selection(型号选择)

Model with built–in magnetic ring:YMGP
(内置磁环型)

M 25 — 40

Type of Bearing
M–Slide Bering
L–Ball Guide Bearing
轴承种类
M–滑动轴承
L–滚珠导向轴承

Stroke(行程)

Cylinder Diameter(缸径)
12– ϕ 12mm
16– ϕ 16mm
20– ϕ 20mm
25– ϕ 25mm
32– ϕ 32mm
40– ϕ 40mm
50– ϕ 50mm
63– ϕ 63mm
80– ϕ 80mm
100– ϕ 100mm

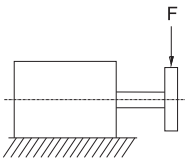

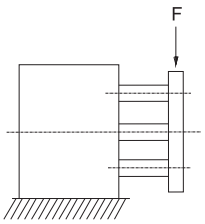

Stroke/magnetic switch selection(行程/磁性开关选择)

Cylinder Diameter(mm) (缸径)	Stroke Range(mm) (标准行程)	磁性开关 坑道安装型
12,16	10,20,30,40,50,75,100	PRO-A1
20,25	20,30,40,50,75,100,150,175,200	
32,40,50,63,80,100	25,50,75,100,125,150,175,200	

Note: medium stroke (5, 10, 15, 20, 30, 35...) is plus 5, 10, 15, 20mm backing plate
For example, YMGPM50–10 means that a 15mm thick backing plate is added between YMGPM50–25

注： 中间行程(5, 10, 15, 20, 30, 35...)是加5, 10, 15, 20mm厚的垫板。
例如： YMGPM50–10是加15mm厚的垫板在YMGPM50–25之间。

负载及扭力

Cylinder Diameter (mm) (缸径)	型式	F(N)(最大侧面负载) Stroke(mm)(行程)											
		10	20	25	30	40	50	75	100	125	150	175	200
12	YMGPM	24	19	–	17	14	13	26	22	–	–	–	–
	YMGPL	37	27	–	22	35	30	23	18	–	–	–	–
16	YMGPM	38	31	–	27	23	21	37	32	–	–	–	–
	YMGPL	54	40	–	32	54	47	35	28	–	–	–	–
20	YMGPM	–	49	–	43	38	35	87	75	66	59	54	49
	YMGPL	–	58	–	48	101	90	70	58	62	54	48	43
25	YMGPM	–	69	–	60	54	49	116	100	88	79	71	65
	YMGPL	–	82	–	68	32	118	93	77	80	70	62	55
32	YMGPM	–	–	203	–	–	164	182	159	142	127	116	106
	YMGPL	–	–	113	–	–	78	130	107	130	114	101	90
40	YMGPM	–	–	203	–	–	164	182	159	142	127	116	106
	YMGPL	–	–	113	–	–	78	129	106	130	114	101	90
50	YMGPM	–	–	296	–	–	245	273	241	216	195	179	164
	YMGPL	–	–	120	–	–	83	178	148	148	129	114	102
63	YMGPM	–	–	296	–	–	245	273	241	216	195	179	164
	YMGPL	–	–	117	–	–	81	176	145	145	126	111	99
80	YMGPM	–	–	352	–	–	297	368	329	298	272	251	232
	YMGPL	–	–	125	–	–	99	281	240	208	184	163	147
100	YMGPM	–	–	515	–	–	445	498	450	410	377	349	325
	YMGPL	–	–	138	–	–	108	395	340	297	263	235	211

YSC | Guide Cylinder(带导杆气缸)
YMGP(ø12~ø100) series

Cylinder Diameter (mm) (缸径)	型式	最大扭矩T（N.M） Stroke(mm)(行程)											
		10	20	25	30	40	50	75	100	125	150	175	200
12	YMGPM	0.39	0.32	–	0.27	0.24	0.21	0.43	0.36	–	–	–	–
	YMGPL	0.78	0.66	–	0.57	0.93	0.85	0.69	0.58	–	–	–	–
16	YMGPM	0.69	0.58	–	0.49	0.43	0.38	0.69	0.58	–	–	–	–
	YMGPL	1.23	1.06	–	0.92	1.53	1.40	1.16	0.99	–	–	–	–
20	YMGPM	–	1.05	–	0.93	0.83	0.75	1.88	1.63	1.44	1.28	1.16	1.06
	YMGPL	–	1.70	–	1.52	3.06	2.87	2.47	2.17	2.38	2.16	1.98	1.82
25	YMGPM	–	1.76	–	1.55	1.38	1.25	2.96	2.57	2.26	2.02	1.83	1.67
	YMGPL	–	2.80	–	2.53	4.67	4.39	3.81	3.36	3.65	3.31	3.02	2.78
32	YMGPM	–	–	6.35	–	–	5.13	5.69	4.97	4.42	3.98	3.61	3.31
	YMGPL	–	–	4.76	–	–	3.86	6.53	5.57	7.10	6.46	5.92	5.47
40	YMGPM	–	–	7.00	–	–	5.66	2.27	5.48	4.87	4.38	3.98	3.65
	YMGPL	–	–	5.24	–	–	4.25	7.19	6.33	7.81	7.11	6.52	6.02
50	YMGPM	–	–	13.00	–	–	10.8	12.0	10.6	9.50	8.60	7.86	7.24
	YMGPL	–	–	7.03	–	–	5.76	12.3	10.9	11.2	10.2	9.40	8.69
63	YMGPM	–	–	14.70	–	–	12.1	13.5	12.0	10.7	9.69	8.86	8.16
	YMGPL	–	–	7.77	–	–	6.35	13.7	12.2	12.5	11.4	10.5	9.65
80	YMGPM	–	–	22.00	–	–	18.6	22.9	20.5	18.6	17.0	15.6	14.5
	YMGPL	–	–	10.30	–	–	9.35	24.8	22.7	20.9	19.4	18.0	16.9
100	YMGPM	–	–	38.80	–	–	33.5	37.5	33.8	30.9	28.4	26.2	24.4
	YMGPL	–	–	13.60		–	12.2	41.1	37.9	35.1	32.7	30.5	28.6

Overall Dimension Drawing(mm)
(外形尺寸 (mm))

ø12-ø25

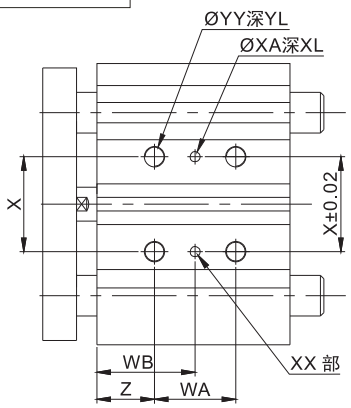

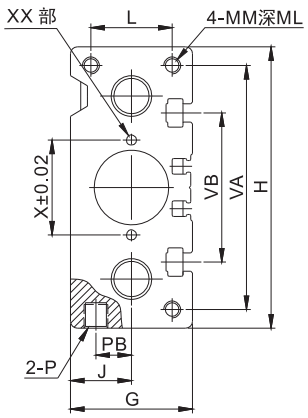

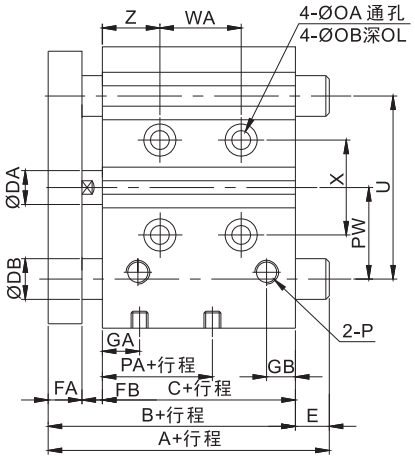

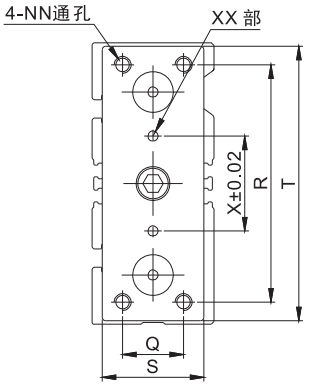

Detailed drawing of XX Part
(XX部详细图)

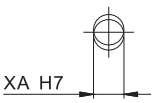

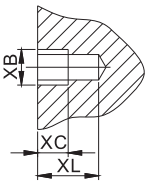

(Common Dimension(ϕ12–ϕ25)YMGP, YMGPL共同尺寸

st=Stroke(行程)

Cylinder Diameter (mm) (缸径)	Standard stroke (标准行程)	B	C	DA	FA	FB	G	GA	GB	H	HA	J	K	L	MM	ML	NN	OA	OB	OL	HA	P	PA	PB	PW	Q
12	10,20,30,40, 50,75,100	42	29	6	8	5	26	11	7.5	58	M4	13	13	18	M4X0.7	10	M4X0.7	4.3	8	4.5	M4	M5X0.8	13	8	18	14
16		46	33	8	8	5	30	11	8	64	M4	15	15	22	M5X0.8	12	M5X0.8	4.3	8	4.5	M4	M5X0.8	15	10	19	16
20	20,30,40,50 75,100,125, 150,175,200	53	37	10	10	6	36	10.5	8.5	83	M5	18	18	24	M5X0.8	13	M5X0.8	5.6	9.5	5.5	M5	RC1/8	12.5	10.5	25	18
25		53.5	37.5	12	10	6	42	11.5	9	93	M5	21	21	30	M6X1.0	15	M6X1.0	5.6	9.5	5.5	M5	RC1/8	12.5	13.5	28.5	26

YSC | Guide Cylinder(带导杆气缸)
YMGP(ø12~ø100) series

Cylinder Diameter (mm) (缸径)	Standard Stroke (标准行程)	R	S	T	U	VA	VB	WA			WB			X	XA	XB	XC	XL	YY	YL	Z
								≤30st	40st–100st	≥125st	≤30st	40st–100st	≥125st								
12	10,20,30,40, 50,75,100	48	22	56	41	50	37	20	40	–	15	25	–	23	3	3.5	3	6	M5X0.8	10	5
16		54	25	62	46	56	38	24	44	–	17	27	–	24	3	3.5	3	6	M5X0.8	10	5
20	10,20,30,40,50, 75,100,125, 150,175,200	70	30	81	54	72	44	24	44	120	29	39	77	28	3	3.5	3	6	M6X1.0	12	17
25		78	38	91	64	82	50	24	44	120	29	39	77	34	3	4.5	3	6	M6X1.0	12	17

YMGPM Slide bearing (滑动轴承)

Cylinder Diameter (mm) (缸径)	A		DB	E	
	<50st	50~100st		<50st	50~100st
12	42	60.5	8	0	18.5
16	46	64.5	10	0	18.5
	<50st	50~200st		<50st	50~200st
20	53	84.5	12	0	31.5
25	53.5	85	16	0	31.5

YMGPL Roller guide bearing (滚动导向轴承)

Cylinder Diameter (mm) (缸径)	A			DB	E		
	<30st	30~100st	>100st		<30st	30~100st	>100st
12	43	55	-	6	1	13	-
16	49	65	-	8	3	19	-
20	63	80	104	10	10	27	51
25	69.5	85.5	104.5	13	16	32	51

Overall Dimension Drawing(mm)(外形尺寸 (毫米))

ø32-ø63

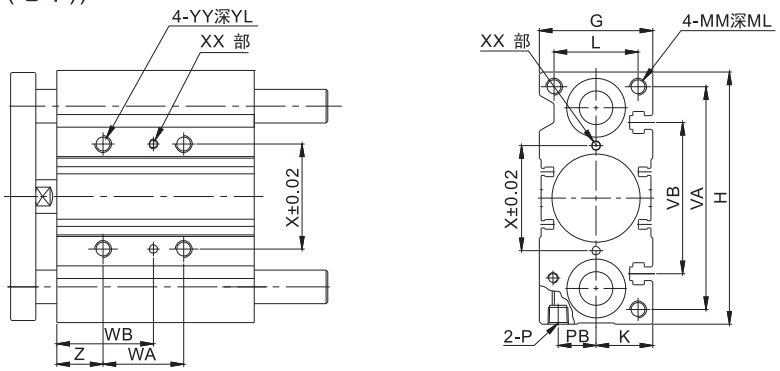

Detailed drawing of XX Part
(XX部详细图)

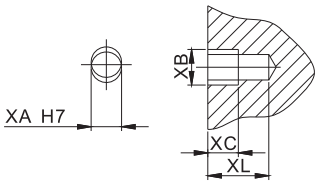

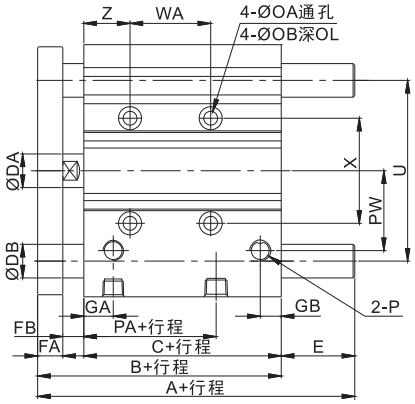

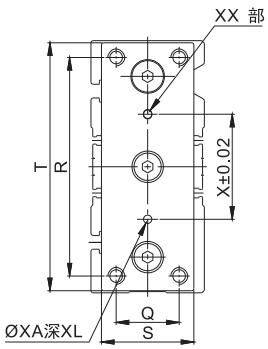

(Common Dimension TabeYMGPM, YMGPL共同尺寸

st=Stroke(行程)

Cylinder Diameter (mm) (缸径)	Standard Stroke (标准行程)	B	C	DA	FA	FB	G	GA	GB	GC	H	HA	K	L	MM	ML	NN	OA	OB	OL	P	PA	PB	PW	Q
32	25,50,75 100,125,150 175,200	59.5	37.5	16	12	10	48	12.5	9	12.5	112	M6	24	34	M8X1.25	20	M8X1.25	6.6	11	7.5	RC1/8	7	15	34	30
40		66	44	16	12	10	54	14	10	14	120	M6	27	40	M8X1.25	20	M8X1.25	6.6	11	7.5	RC1/8	13	18	38	30
50		72	44	20	16	12	64	14	11	12	148	M8	32	46	M10X1.5	22	M10X1.5	8.6	14	9	RC1/4	9	21.5	47	40
63		77	49	20	16	12	78	16.5	13.5	16.5	162	M10	39	58	M10X1.5	22	M10X1.5	8.6	14	9	RC1/4	14	28	55	50

Cylinder Diameter (mm) (缸径)	Standard Stroke (标准行程)	R	S	T	U	VA	VB	WA			WB			X	XA	XB	XC	XL	YY	YL	Z
								25st	50,75,100st	≥100st	25st	50,75,100st	≥100st								
32	25,50,75, 100,125,150, 175,200	96	44	110	78	98	63	24	48	124	33	45	83	42	4	4.5	3	6	M8X1.25	16	21
40		104	44	118	86	106	72	24	48	124	34	46	84	50	4	4.5	3	6	M8X1.25	16	22
60		130	60	146	110	130	92	24	48	124	36	48	86	66	5	6	4	8	M10X1.5	20	24
63		130	70	158	124	142	110	28	52	128	38	50	88	80	5	6	4	8	M10X1.5	20	24

YSC | Guide Cylinder(带导杆气缸)
YMGP(ø12~ø100) series

YMGPM Slide bearing (滑动轴承)

Cylinder Diameter (mm) (缸径)	A		DB	E	
	<50st	50~200st		<50st	50~200st
32	97	102	16	37.5	42.5
40	97	102	20	31	36.5
53	106.5	118	25	34.5	46.5
60	106.5	118	25	29.5	41

YMGPL Roller guide bearing (滚动导向轴承)

Cylinder Diameter (mm) (缸径)	A			DB	E		
	<50st	50~100st	100~200st		<50st	50~100st	100~200st
32	81	98	118	16	21.5	38.5	58.5
40	81	98	118	16	15	32.5	52
50	93	114	134	20	21	42.5	62
63	93	114	134	20	16	37	57

Overall Dimension Drawing(mm)(外形尺寸 (毫米))

ø80-ø100

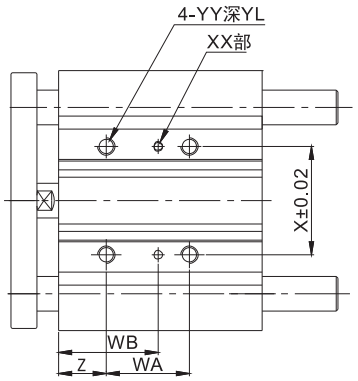

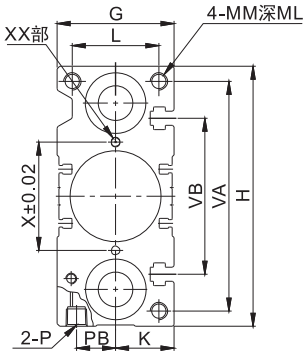

Detailed drawing of XX Part
(XX部详细图)

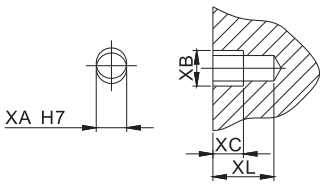

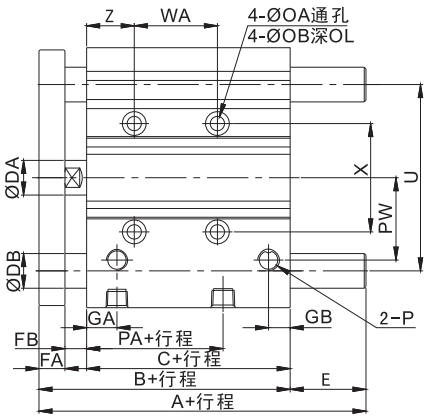

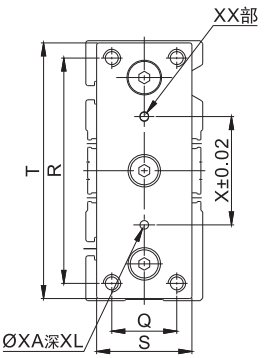

(Common Dimension TableYMGPM, YMGPL共同尺寸

st=Stroke(行程)

Cylinder Diameter (mm) (缸径)	Standard Stroke (标准行程)	B	C	DA	FA	FB	G	GA	GB	GC	H	HA	J	JA	JB	K	L	MM	ML	NN	OA	OB	OL	P	PA	PB	PW
80	25,50,75,100, 125,150,175,200	96.5	56.5	25	22	18	91.5	19	15.5	14.5	202	M12	45.5	38	7.5	46	54	M12X1.75	30	M12X1.75	10.6	17.5	8	RC3/8	14.5	25.5	74
100		116	66	30	25	25	111.5	23	19	18	240	M14	55.5	45	10.5	56	62	M14X2.0	32	M14X2.0	12.5	20	8	RC3/8	17.5	32.5	89

Cylinder Diameter (mm) (缸径)	Standard Stroke (标准行程)	Q	R	S	T	U	VA	VB	WA			WB			X	XA	XB	XC	XL	YY	YL	Z
									25st	50,75,100st	⩾100st	25st	50,75,100st	⩾100st								
80	25,50,75,100, 125,150,175,200	52	174	75	198	156	180	140	28	52	128	42	54	92	100	6	7	5	10	M12X1.75	24	28
100		54	210	90	236	188	210	166	48	72	148	35	47	85	124	6	7	5	10	M14X2.0	28	11

YMGPM Slide bearing (滑动轴承)

Cylinder Diameter (mm) (缸径)	A		DB	E	
	<50st	50~200st		<50st	50~200st
80	115	142	30	18.5	45.5
100	137	162	36	21	46

YMGPL Roller guide bearing (滚动导向轴承)

Cylinder Diameter (mm) (缸径)	A			DB	E		
	<25st	25~50st	50~200st		<25st	25~50st	50~200st
80	109.5	130	160	25	13	33.5	63.5
100	121	147	180	30	5	31	64

Block Cylinder(双缸气缸/单侧杆型)
YCXS series

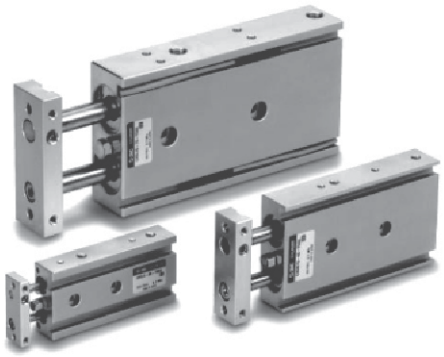

COMMON SPECIFICATIONS(共同规格)

Bore(缸径)(mm)		6	10	15	20	25	32
Fluid(流体)		Clean Air(洁净空气)					
Action(动作形式)		Double(双作用)					
Proof Press.(耐压试验压力)		1.05Mpa(10.7kgf/cm²)					
Max. Press.(最高使用压力)		0.7Mpa(7.1kgf/cm²)					
Min. Press.(最低使用压力)		0.15Mpa{1.5kgf/cm²}		0.1Mpa{1.0kgf/cm²}		0.05Mpa{0.51kgf/cm²}	
Amb.Temp(环境和流体温度)		-5~+60°C(未冻结)					
Cushion(缓冲)		两端橡胶缓冲					
Formation(结构)		双气缸(2倍输出力)					
*Lubrication(润滑)		Non-Lube(不需要)					
Stroke Tclerance(行程调整范围)		缩回行程0~-5mm					
Bearing(轴承)		滑动轴承/球轴承					
Rod Non-Ratary Allowance(活塞杆不回转精度)	滑动轴承	±0.1°	±0.15°	±1.3°	±0.11°	±0.1°	±0.08°
	球轴承	±0.1°	±0.1°	±0.07°	±0.06°	±0.15°	±0.04°
Size(接管口径)Rc(PT)		M5×0.8				1/8"	

*Use Turbine Oil1st-Grade ISOVG32,When Use(如需要润滑,请用透平1号油ISOVG32)

HOW TO ORDER(型号表示方法)

YCXS – M – 20 – 50 – PRO-B1 S

- YCXS: YSC Model(代号)
- M: Bearing Type(轴承种类)
  - M:Silde Bearing (滑动轴承)
  - L:Ball Bushing Bering (滚珠导向轴承)
- 20: Bore Type (缸径)
- 50: Stroke (行程)
- S: No.of Auto Switch (磁性开关数量)
  - Nil(无记号): 2(个)
  - S: 1(个)
  - 3: 3(个)

Model(符号)	Bore Type(缸径)	Standard Stroke(标准行程)
6	6mm	10,20,30,40,50,
10	10mm	10,15,20,25,30,35 40,45,50,60,70,75
15	15mm	10,15,20,25,30,35, 40,45,50,60,70,75, 80,90,100
20	20mm	
25	25mm	
32	32mm	

最大容许负载

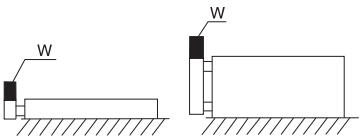

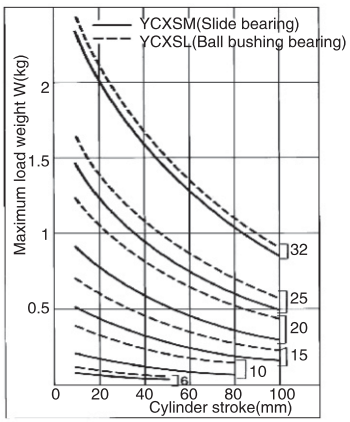

杆端负载量

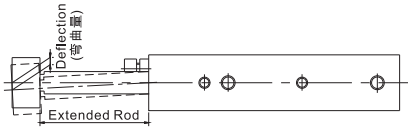

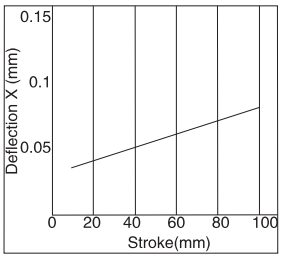

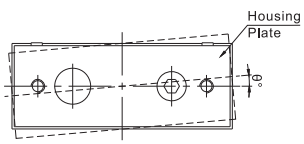

容许动能

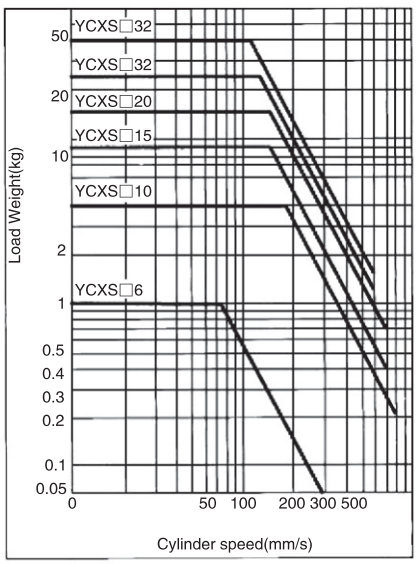

质量表

(kg)

Model型号	10	15	20	25	30	35	40	45	50	60	70	75	80	90	100
YCXS-6	0.081	–	0.095	–	0.108	–	0.122	–	0.135	–	–	–	–	–	–
YCXS-10-M	0.15	0.16	0.17	0.18	0.19	0.20	0.21	0.22	0.23	0.25	0.27	0.28	–	–	–
YCXS-10-L	0.16	0.165	0.17	0.18	0.19	0.20	0.21	0.22	0.23	0.25	0.27	0.28	–	–	–
YCXS-15-M	0.25	0.265	0.28	0.29	0.30	0.315	0.33	0.345	0.36	0.39	0.42	0.435	0.45	0.48	0.51
YCXS-15-L	0.27	0.285	0.30	0.31	0.32	0.335	0.35	0.365	0.38	0.41	0.44	0.455	0.47	0.50	0.53
YCXS-20-M	0.40	0.42	0.44	0.46	0.48	0.495	0.51	0.53	0.55	0.585	0.62	0.64	0.66	0.70	0.74
YCXS-20-L	0.43	0.445	0.46	0.48	0.50	0.515	0.53	0.55	0.57	0.605	0.64	0.66	0.68	0.715	0.75
YCXS-25-M	0.61	0.635	0.66	0.69	0.72	0.745	0.77	0.80	0.83	0.89	0.95	0.97	0.995	1.06	1.10
YCXS-25-L	0.62	0.645	0.67	0.70	0.73	0.755	0.78	0.81	0.84	0.895	0.955	0.98	1.005	1.065	1.11
YCXS-32-M	1.15	1.19	1.23	1.275	1.32	1.36	1.40	1.45	1.49	1.58	1.665	1.71	1.755	1.84	1.93
YCXS-32-L	1.16	1.205	1.25	1.295	1.34	1.38	1.42	1.465	1.51	1.595	1.68	1.72	1.765	1.855	1.94

Dimensions(mm)(外形尺寸图(mm))

YCXS–6

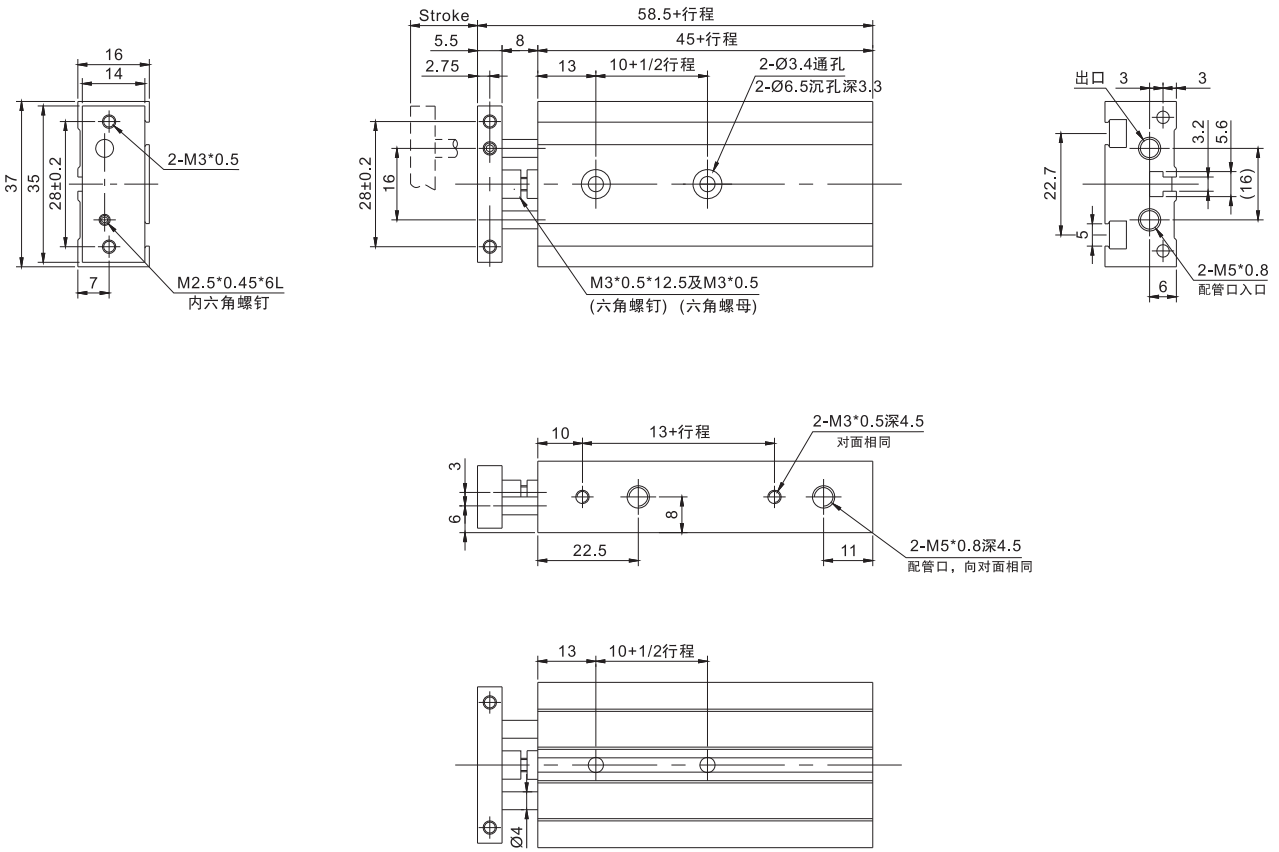

Model(型号)	Stroke(行程)	10+1/2行程	13+行程	45+行程	58.5+行程
YCXS-6-10	10	15	23	55	68.5
YCXS-6-20	20	20	33	65	78.5
YCXS-6-30	30	25	43	75	88.5
YCXS-6-40	40	30	53	85	98.5
YCXS-6-50	50	35	63	95	108.5

Dimensions(mm)(外形尺寸图(mm))

YCXS-10.15.20.25.30

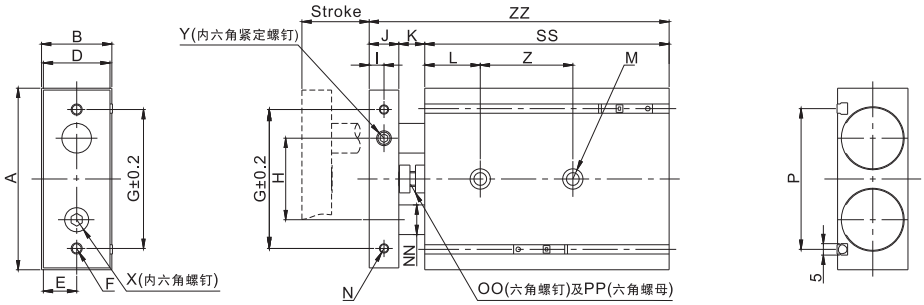

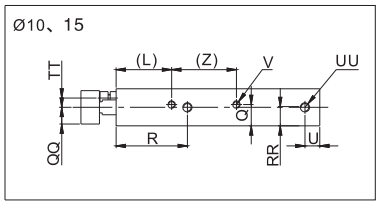

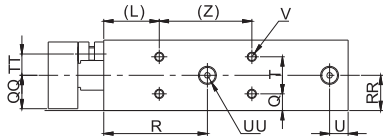

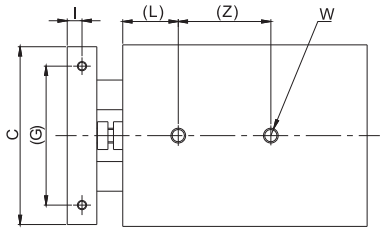

Model(型号)	A	B	C	D	E	F	G	H	I	J	K	L	M	N	NN	O	OO	P	PP	Q	QQ	R	RR	S	SS	T	TT	U	UU	V	W	X	Y	Z	ZZ
YCXS-10-10	46	17	44	15	7.5	2-M4 ×0.7 (通孔)	35	20	4	8	9	20	2-ø3.4 通孔 2-ø6.5 沉孔深度 3.3	2-M3 ×0.5 螺纹深度 5	ø6	5	M4 × 0.7 × 14.5 L	33.6	M4 × 0.7	8.5	7	30	7	10	65	-	5	8	4-M5 ×0.8 螺纹深度 4.5 (接气口)(对面相同)	4-M3 ×0.5 螺纹深度 4.5 (对面相同)	2-M4 ×0.7 螺纹深度 7	M3 × 0.5 × 10 L	M3 × 0.5 × 5 L	30	82
YCXS-10-20																								20	75										92
YCXS-10-30																								30	85									40	102
YCXS-10-40																								40	95										112
YCXS-10-50																								50	105										122
YCXS-15-10	58	20	56	18	9	2-M5 ×0.8 (通孔)	45	25	5	10	9	30	2-ø4.3 通孔 2-ø8 沉孔深度 4.4	2-M4 ×0.7 螺纹深度 6	ø8	6	M4 × 0.7 × 14.5 L	48	M4 × 0.7	10	10	38.5	10	10	70	-	5	8	4-M5 ×0.8 螺纹深度 4.5 (接气口)(对面相同)	4-M4 ×0.7 螺纹深度 5 (对面相同)	2-M5 ×0.8 螺纹深度 8	M5 × 0.8 × 10 L	M4 × 0.7 × 5 L	25	89
YCXS-15-20																								20	80										99
YCXS-15-30																								30	90									35	109
YCXS-15-40																								40	100										119
YCXS-15-50																								50	110										129
YCXS-20-10	64	25	62	23	11.5	2-M5 ×0.8 (通孔)	50	28	6	12	12	30	2-ø5.5 通孔 2-ø9.5 沉孔深度 5.3	2-M4 ×0.7 螺纹深度 6	ø10	8	M6 × 1.0 × 18.5 L	53	M6 × 1.0	7.75	12.5	45	7.75	10	80	9.5	6.5	8	4-M5 ×0.8 螺纹深度 4.5 (接气口)(对面相同)	8-M4 ×0.7 螺纹深度 6 (对面相同)	2-M6 ×1.0 螺纹深度 10	M6 × 1.0 × 12 L	M5 × 0.8 × 5 L	30	104
YCXS-20-20																								20	90										114
YCXS-20-30																								30	100									40	124
YCXS-20-40																								40	110										134
YCXS-20-50																								50	120										144
YCXS-20-75																								75	145									60	169
YCXS-20-100																								100	170										194
YCXS-25-10	80	30	78	28	14	2-M6 ×1.0 (通孔)	60	35	6	12	12	30	2-ø6.9 通孔 2-ø11 沉孔深度 6.3	2-M5 ×0.8 螺纹深度 7.5	ø12	10	M6 × 1.0 × 18.5 L	64	M8 × 1.0	8.5	15	46	15	10	82	13	9	9	4-1/8 螺纹深度 6.5 (接气口)(对面相同)	8-M5 ×0.8 螺纹深度 7.5 (对面相同)	2-M8 × 1.25 螺纹深度 12	M6 × 1.0 × 14 L	M6 × 1.0 × 5 L	30	106
YCXS-25-20																								20	92										116
YCXS-25-30																								30	102									40	126
YCXS-25-40																								40	112										136
YCXS-25-50																								50	122										146
YCXS-25-75																								75	147									60	171
YCXS-25-100																								100	172										196
YCXS-32-10	98	38	96	36	18	2-M6 ×1.0 (通孔)	75	44	8	16	14	30	2-ø6.9 通孔 2-ø11 沉孔深度 6.3	2-M5 ×0.8 螺纹深度 7.5	ø16	13	M8 × 1.25 × 23 L	76	M8 × 1.25	9	19	56	19	10	92	20	11.5	10	4-1/8 螺纹深度 6.5 (接气口)(对面相同)	8-M5 ×0.8 螺纹深度 7.5 (对面相同)	2-M8 × 1.25 螺纹深度 12	M8 × 1.25 × 16 L	M8 × 1.25 × 8 L	40	122
YCXS-32-20																								20	102										132
YCXS-32-30																								30	112									50	142
YCXS-32-40																								40	122										152
YCXS-32-50																								50	132										162
YCXS-32-75																								75	157									70	187
YCXS-32-100																								100	182										212

Block Cylinder(双缸气缸/双侧杆型)
YCXSW series

COMMON SPECIFICATIONS(共同规格)

Bore(缸径)(mm)	6	10	15	20	25	32
Fluid(流体)	Clean Air(洁净空气)					
Action(动作形式)	Double(双作用)					
Proof Press.(耐压试验压力)	1.05Mpa(10.7kgf/cm²)					
Max. Press.(最高使用压力)	0.7Mpa(7.1kgf/cm²)					
Min. Press.(最低使用压力)	0.15Mpa(1.5kgf/cm²)			0.1Mpa(1.0kgf/cm²)		
Amb.Temp(环境和流体温度)	5~60°C					
Cushion(缓冲)	两端橡胶缓冲					
Formation(结构)	双气缸(2倍输出力)					
*Lubrication(润滑)	Non-Lube(不需要)					
Stroke Tclerance(行程调整范围)	缩回行程0~-5mm					
Bearing(轴承)	滑动轴承/滚珠导向轴承					
Size(接管口径)Rc(PT)	M5×0.8				Rc(PT)1/8"	

*Use Turbine Oil1st-Grade ISOVG32,When Use(如需要润滑,请用透平1号油ISOVG32)

HOW TO ORDER(型号表示方法)

YCXSW - 20 - M - 50 - XB11 - PRO–B1

- YCXSW: YSC Model(代号)
- 20: Bore Type (缸径)
- M: Bearing Type(轴承种类) M:Silde Bearing (滑动轴承) L:Ball Bushing Bering (滚珠导向轴承)
- 50: Stroke (行程)
- XB11: 长行程代号 无记号–标准行程 XB11-长行程
- PRO–B1: No.of Auto Switch (磁性开关数量) Nil(无记号): 2(个) S: 1(个) 3: 3(个)

Model(符号)	Bore Type(缸径)	Standard Stroke(标准行程)	长行程(mm)–XB11
6	6mm	10,20,30,40,50,	–
10	10mm	10,20,30,40,50,	75,100,125,150
15	15mm		
20	20mm	10,20,30,40,50, 75,100	125,150,175,200
25	25mm		
32	32mm		

※ø6 缸径待推出

最大容许负载

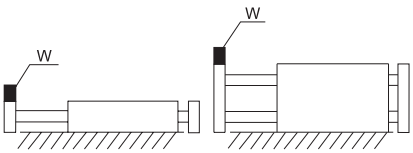

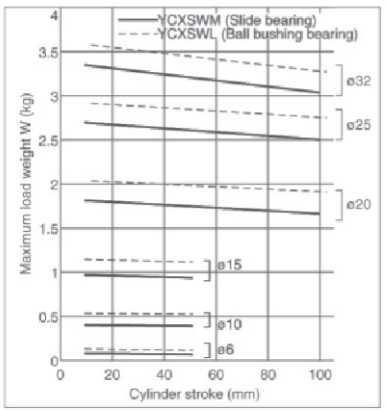

杆端负载量

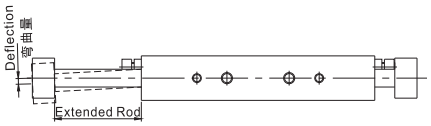

(活塞杆推出)

Stroke缸径(mm)	6~32
YCXSW-M(滑动轴承)	±0.03mm
YCXSW-L(滚珠导向轴承)	

不摇转精度

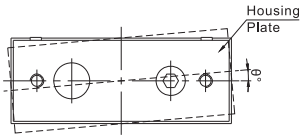

Stroke缸径(mm)	6~32
YCXSW–M(滑动轴承)	±1°
YCXSW–L(滚珠导向轴承)	

容许动能

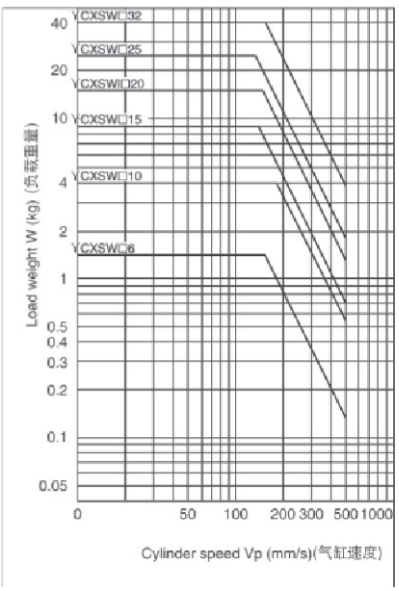

YCXSW–6

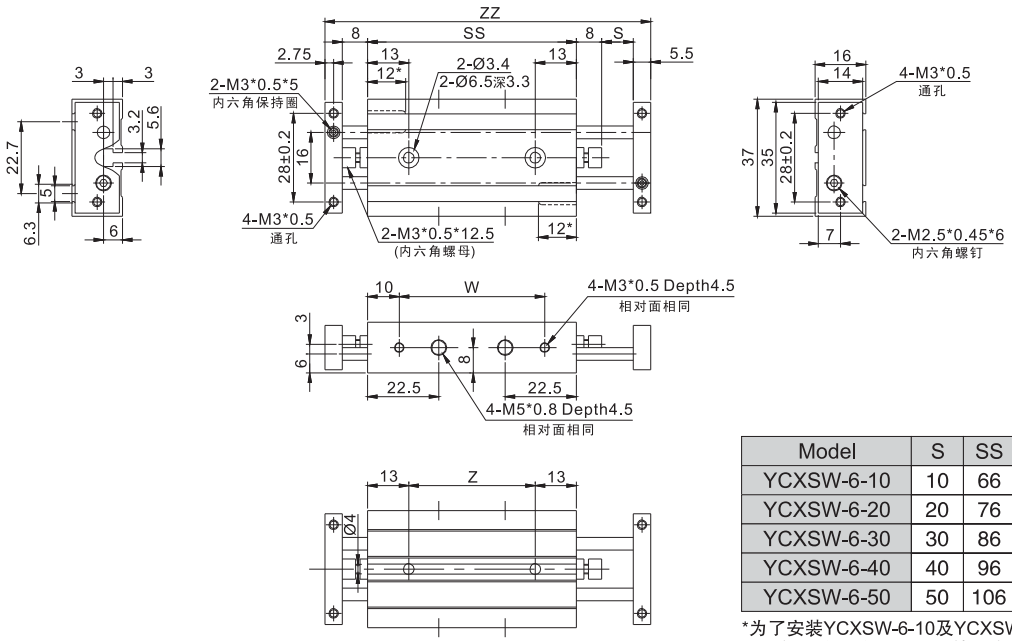

Model	S	SS	ZZ	Z	W
YCXSW-6-10	10	66	103	40	46
YCXSW-6-20	20	76	123	50	56
YCXSW-6-30	30	86	143	60	66
YCXSW-6-40	40	96	163	70	76
YCXSW-6-50	50	106	183	80	86

*为了安装YCXSW-6-10及YCXSW-6-20这两种气缸的磁性开关,切除掉用来固定磁性开关道的一部分.(有标 * 部的尺寸)

YCXSW–10

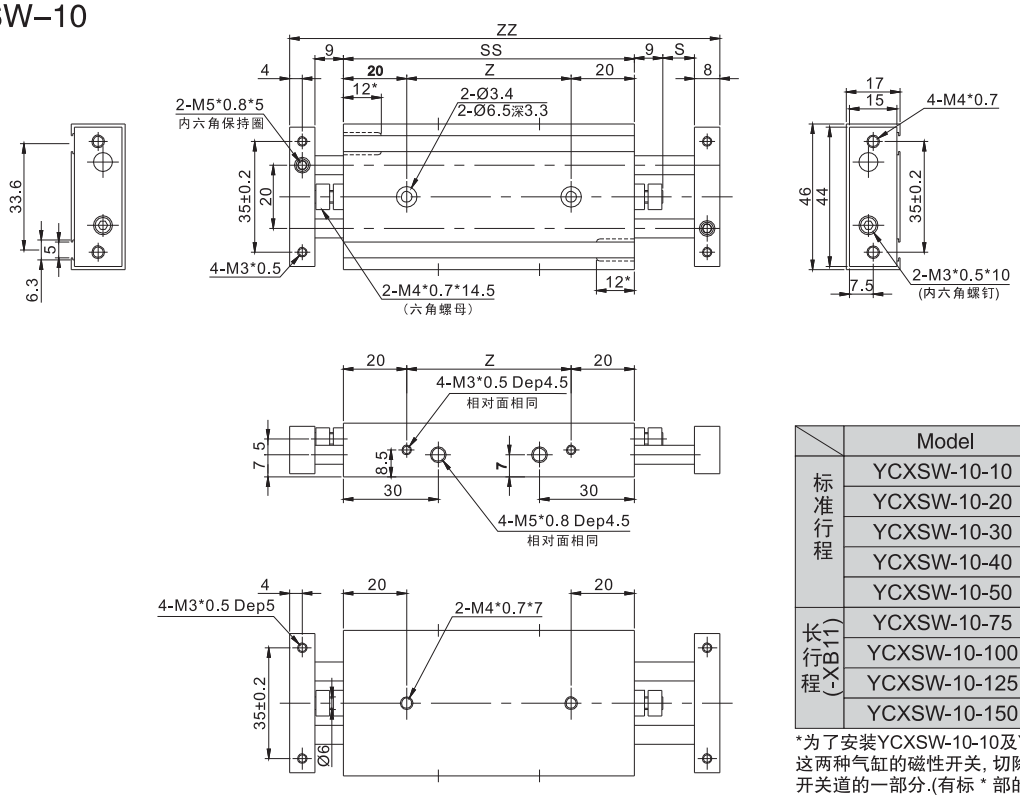

	Model	S	SS	ZZ	Z
标准行程	YCXSW-10-10	10	92	136	52
	YCXSW-10-20	20	102	156	62
	YCXSW-10-30	30	112	176	72
	YCXSW-10-40	40	122	196	82
	YCXSW-10-50	50	132	216	92
长行程(-XB11)	YCXSW-10-75	75	157	266	117
	YCXSW-10-100	100	182	316	142
	YCXSW-10-125	125	207	366	167
	YCXSW-10-150	150	232	416	192

*为了安装YCXSW-10-10及YCXSW-10-20这两种气缸的磁性开关, 切除掉用来固定磁性开关道的一部分.(有标 * 部的尺寸)

YCXSW–15

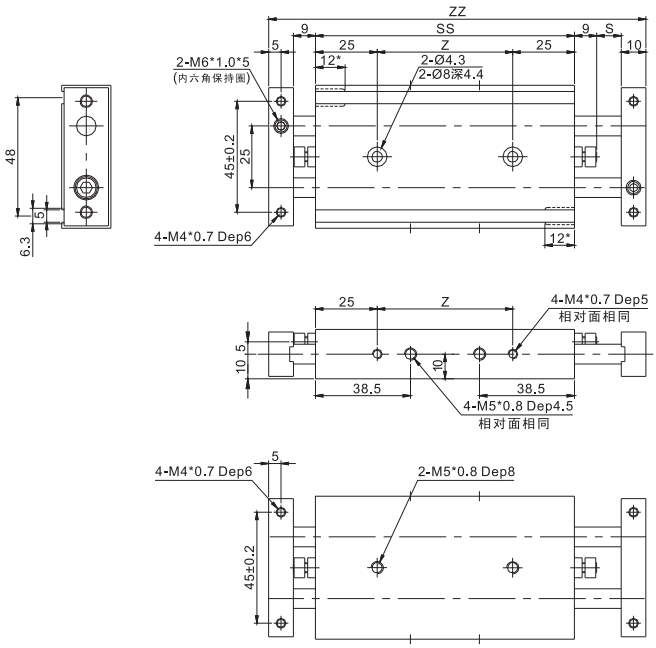

	Model	S	SS	ZZ	Z
标准行程	YCXSW-15-10	10	105	153	55
	YCXSW-15-20	20	115	173	65
	YCXSW-15-30	30	125	193	75
	YCXSW-15-40	40	135	213	85
	YCXSW-15-50	50	145	233	95
长行程(-XB11)	YCXSW-15-75	75	170	283	120
	YCXSW-15-100	100	195	333	145
	YCXSW-15-125	125	220	383	170
	YCXSW-15-150	150	245	433	195

*为了安装YCXSW-15-10及YCXSW-15-20这两种气缸的磁性开关，切除掉用来固定磁性开关道的一部分.(有标 * 部的尺寸)

YCXSW–20

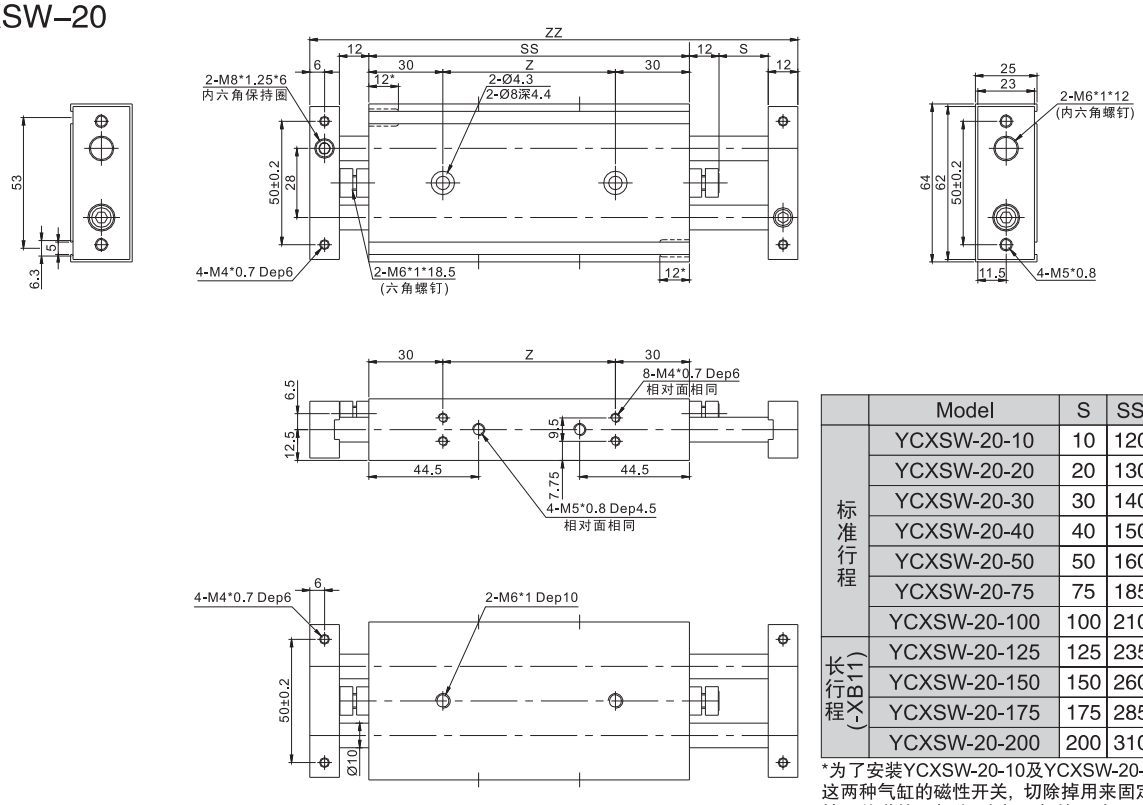

	Model	S	SS	ZZ	Z
标准行程	YCXSW-20-10	10	120	178	60
	YCXSW-20-20	20	130	198	70
	YCXSW-20-30	30	140	218	80
	YCXSW-20-40	40	150	238	90
	YCXSW-20-50	50	160	258	100
	YCXSW-20-75	75	185	308	125
	YCXSW-20-100	100	210	358	150
长行程(-XB11)	YCXSW-20-125	125	235	408	175
	YCXSW-20-150	150	260	458	200
	YCXSW-20-175	175	285	508	225
	YCXSW-20-200	200	310	558	250

*为了安装YCXSW-20-10及YCXSW-20-20这两种气缸的磁性开关，切除掉用来固定磁性开关道的一部分.(有标 * 部的尺寸)

YCXSW–25

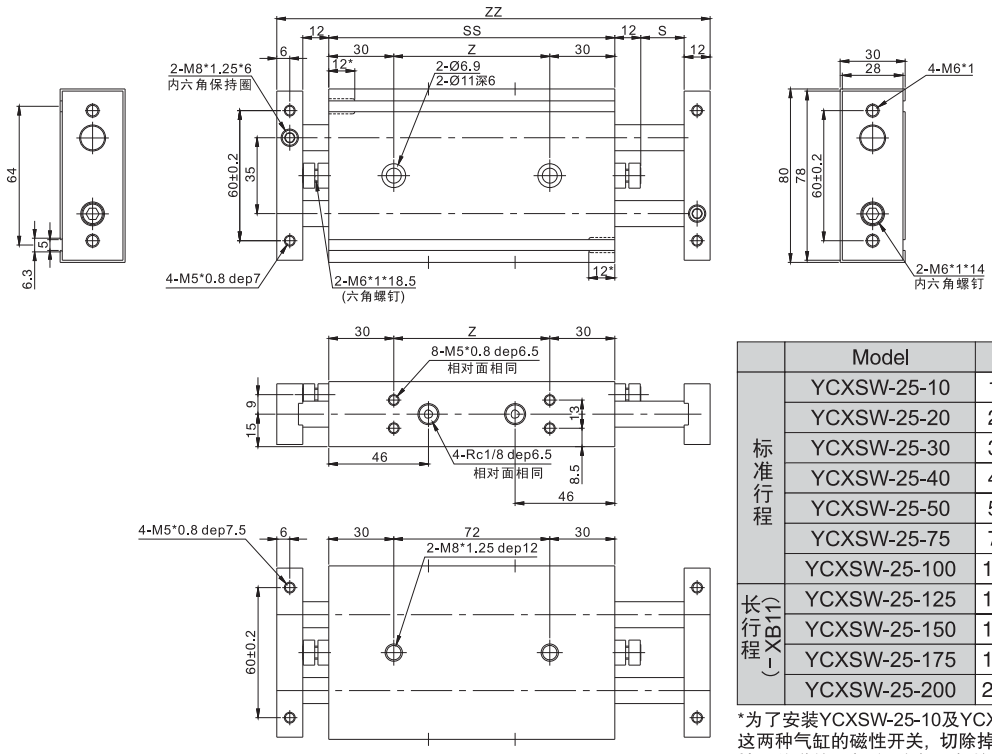

	Model	S	SS	ZZ	Z
标准行程	YCXSW-25-10	10	122	180	62
	YCXSW-25-20	20	132	200	72
	YCXSW-25-30	30	142	220	82
	YCXSW-25-40	40	152	240	92
	YCXSW-25-50	50	162	260	102
	YCXSW-25-75	75	187	310	127
	YCXSW-25-100	100	212	360	152
长行程(-XB11)	YCXSW-25-125	125	237	410	177
	YCXSW-25-150	150	262	460	202
	YCXSW-25-175	175	287	510	227
	YCXSW-25-200	200	312	560	252

*为了安装YCXSW-25-10及YCXSW-25-20
这两种气缸的磁性开关，切除掉用来固定磁
性开关道的一部分.(有标 * 部的尺寸)

YCXSW–32

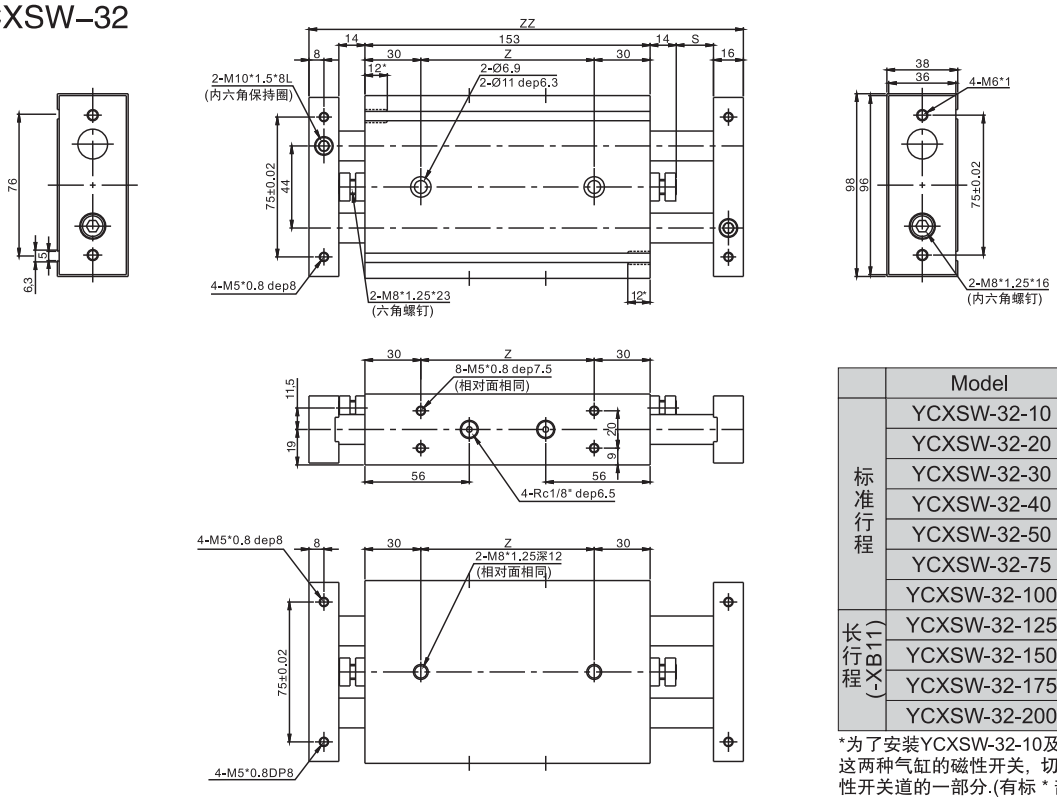

	Model	S	SS	ZZ	Z
标准行程	YCXSW-32-10	10	143	213	83
	YCXSW-32-20	20	153	233	93
	YCXSW-32-30	30	163	253	103
	YCXSW-32-40	40	173	273	113
	YCXSW-32-50	50	183	293	123
	YCXSW-32-75	75	208	343	148
	YCXSW-32-100	100	233	393	173
长行程(-XB11)	YCXSW-32-125	125	258	443	198
	YCXSW-32-150	150	283	493	223
	YCXSW-32-175	175	308	543	248
	YCXSW-32-200	200	333	593	273

*为了安装YCXSW-32-10及YCXSW-32-20
这两种气缸的磁性开关，切除掉用来固定磁
性开关道的一部分.(有标 * 部的尺寸)

YSC

Air Cylinder/Small Bore Size(小型欧洲标准气缸(基本内置磁环，无油润滑))

YC85,YCD85 (Ø10~Ø25) series

图形符号

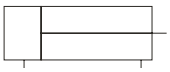

符合欧洲标准：ISO6432

COMMON SPECIFICATIONS(共同规格)

Bore(缸径)(mm)	10	16	20	25
Fluid(流体)	Clean Air(洁净空气)			
Action(动作形式)	Double/Single Acting(双/单动)			
Proof Press.(保证耐压力)	1.5Mpa(15kgf/cm²)			
Max Press.(最高使用压力)	0.99Mpa(9.9kgf/cm²)			
Min Press.(最低使用压力)	0.05Mpa(0.5kgf/cm²)			
Amb.Temp.(环境和流体温度)	-5~+60°C(未冻结)			
Piston Speed(活塞速度)	50~750mm/s			
Cushion(缓冲)	Rubber(STD)两端橡胶缓冲(标准),Air(Option)气缓冲(任选)			
Stroke Tolerance(行程公差)	$^{+1.4}_{0}$			
*Lubrication(润滑)	Non-Lube(不需要)			
Pipe Size(接管口径)Rc(PT)	M5×0.8	M5×0.8	1/8”	1/8”

*Use Turbine Oil 1st-grade ISO VG32#,If Required.(如需要润滑,请用透平1号油 ISO VG32)

Standard Stroke/Auto Switch(行程/磁性开关选择)

Bore (缸径) (mm)	STD Stroke(标准行程) (mm)	Band Mounted (环带安装型)	
		Auto Switch(磁性开关)	Band Part No.(开关固定码)
10	25, 50, 75, 100, 125, 150, 200, 250, 300	D–C73K	YCJ2-010
16			YCJ2-016
20			YBM2-020
25			YBM2-025

Note(注1): Non STD Stroke Available.(有非标准行程可供选择)
Note(注2): For Auto Switch: Refer to Catalogue Auto Switch Series. (Page 4.156)
(磁性开关规格及特性可参阅磁性开关之系列) (Page 4.156)

HOW TO ORDER(型号表示方法)

YC | D | 85 | B | 20 – 150 | A | J – C73K | S

YSC Model

Nil: Standard Type
D: Auto Switch Type

Bore (缸径)

Stroke (行程)

保护套(仅ø20和ø25)
Nil(无记号)： None(无)
J:60°C(尼龙防水帆布)
K:110°C(丁橡胶封塞)

No.of Auto Switch (磁性开关)
Nil(无记号) : 2(个)
S: 1(个)
3: 3(个)

基本固定形式
B:基本型(两端带安装螺纹)
E:单耳环一体型
F:无凸台型(平端型)
L:脚座型
T:杆侧轴耳型
G:法兰型

Cushion(缓冲)
Nil (无记号)： Rubber (橡胶缓冲)
A: Air Cushion (气缓冲)

Auto Switch (磁性开关种类)
Nil(无记号)： None(无开关)
C73K:Reed Switch(有接点磁性开关)

Dimensions(mm) (外形尺寸图(毫米))

单耳环一体型:YC85E,YCD85E

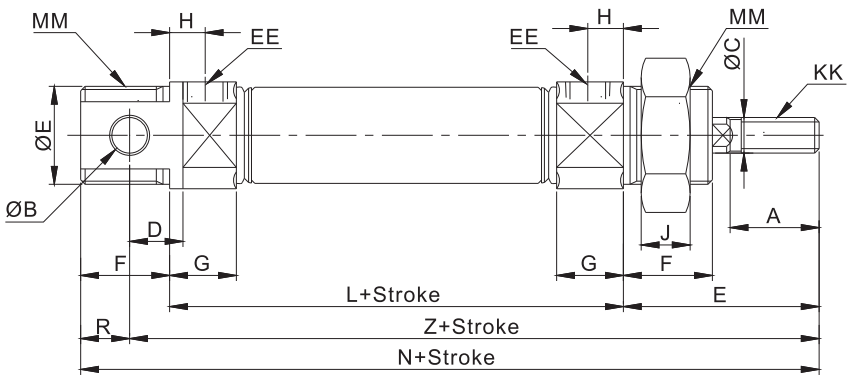

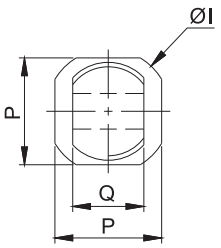

Bore(缸径)	A	B	ØC	D	ØE	F	G	H	I	J	L	EE	KK	MM	N	P	Q	R	Z
Φ10	12	4	4	6	12	12	11.5	5	16.7	6	46	M5×0.8	M4×0.7	M12×1.25	86	15	8	10	76
Φ16	16	6	6	9	16	17	12.5	6	19.7	8	56	M5×0.8	M6×1.0	M16×1.5	111	18.3	12	13	98
Φ20	20	8	8	12	22	20	15	8	28	11	62	1/8”	M8×1.25	M22×1.5	126	24	16	11	115
Φ25	22	8	10	12	22	22	15	8	33.5	11	65	1/8”	M10×1.25	M22×1.5	137	30	16	11	126

图形符号

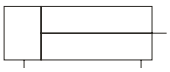

Axial Foot Type (脚座型)
YC85L,YCD85L

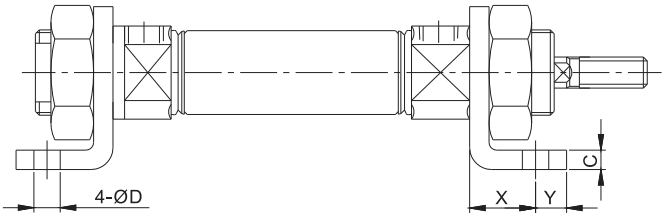

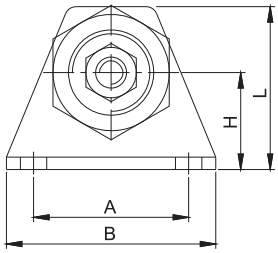

Bore(缸径)	A	B	C	ΦD	H	L	X	Y	脚座型号
Φ10	25	35	3.2	4.5	16	26	11	5	YC85-L10B
Φ16	32	42	4	5.5	20	33	14	6	YC85-L16B
Φ20	40	54	5	6.6	25	42	17	8	YC85-L20B
Φ25	40	54	5	6.6	25	42	17	8	YC85-L25B

Front Flange Type (法兰型)
YC85G,YCD85G

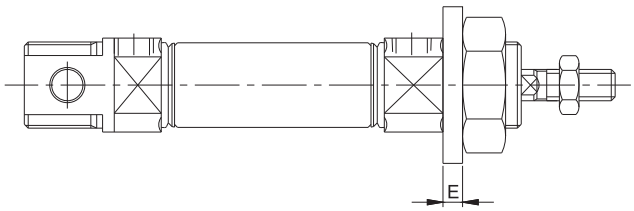

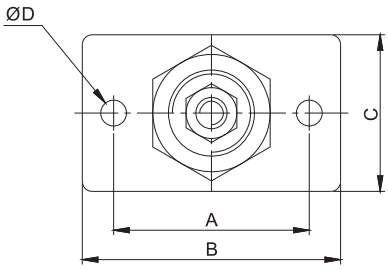

Bore(缸径)	A	B	C	ØD	E	法兰型号
Φ10	30	40	22	4.5	3.2	YC85-G10B
Φ16	40	52	30	5.5	4	YC85-G16B
Φ20	50	66	40	6.6	5	YC85-G20B
Φ25	50	66	40	6.6	5	YC85-G25B

Front Trunnion Type (杆侧轴耳型)
YC85T,YCD85T

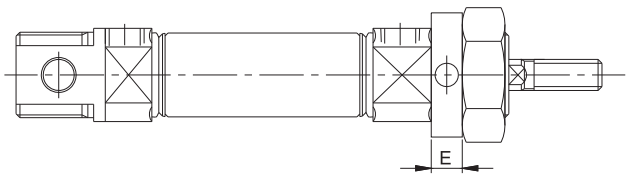

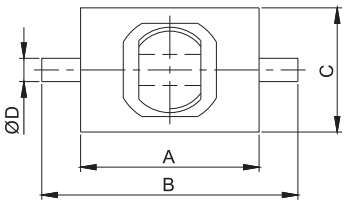

Bore(缸径)	A	B	C	ØD	E	轴耳型号
Φ10	26	38	20	4	6	YC85-T10B
Φ16	38	58	25	6	8	YC85-T16B
Φ20	46	66	32	6	8	YC85-T20B
Φ25	46	66	32	6	8	YC85-T25B

YSC | Air Cylinder/Small Bore Size(小型标准型气缸,基本内置磁环,无油润滑)

YCG1(ø20~ø63) series

图形符号

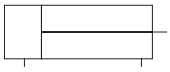

COMMON SPECIFICATIONS(共同规格)

Bore(缸径)(mm)	20	25	32	40	50	63
Fluid(流体)	Clean Air(洁净空气)					
Action(动作形式)	Double/Single Acting(双/单动)					
Proof Press.(保证耐压力)	1.5Mpa(15kgf/cm²)					
Max Press.(最高使用压力)	0.99Mpa(9.9kgf/cm²)					
Min Press.(最低使用压力)	0.05Mpa(0.5kgf/cm²)					
Amb.Temp.(环境和流体温度)	-5~+60°C(未冻结)					
Piston Speed(活塞速度)	50~750mm/s					
Cushion(缓冲)	Rubber(STD)两端橡胶缓冲(标准),Air(Option)气缓冲(任选)					
Stroke Tolerance(行程公差)	$^{+1.4}_{0}$					
*Lubrication(润滑)	Non-Lube(不需要)					
Pipe Size(接管口径)Rc(PT)	1/8"	1/8"	1/8"	1/8"	1/4"	1/4"

*Use Turbine Oil 1st–Grade ISOVG32, When Use (如需要润滑，请用透平1号油ISOVG32)

HOW TO ORDER(型号表示方法)

YC | D | G1 | L | 32 – 150 | A | Y – C72K

YSC Model(代号)

Nil: Standard Type
D: Auto Switch Type

Mounting (附件号)

B: Basic Type (基本型)
L: Foot Type(脚座)
F: Front Flange(杆侧法兰)
G: Rear Flange(后法兰)
D: Double Clevis (双U型钩)
T: Front Trunnion(杆侧轴耳)
U: Rear Trunnion(后侧轴耳)

Bore (缸径)

Stroke (行程)

Cushion(缓冲)

Nil (无记号)： Rubber (橡胶缓冲)
A: Air Cushion (气缓冲)

Accessory(附件)

I=I Type(型)，Y=Y Type(型)

Auto Switch (磁性开关种类)

Nil(无记号)： None(无开关)
C73K:Reed Switch(有接点磁性开关)

Standard Stroke/Auto Switch(行程/磁性开关选择)

Bore (缸径) (mm)	STD Stroke(标准行程) (mm)	Band Mounted (环带安装型)	
		Auto Switch(磁性开关)	Band Part No.(开关固定码)
20	25,50,75,100,125,150 200,250,300	D-C72K D-C72KL	YBM1-020
25			YBM1-025
32			YBM1-032
40			YBM1-040
50			YBM1-050
63			YBM1-063

Note(注1): Non STD Stroke Available.(有非标准行程可供选择)
Note(注2): For Auto Switch: Refer to Catalogue Auto Switch Series.
(磁性开关规格及特性可参阅磁性开关之系列) (厚样本4.155)
Note(注2): 部分缸径尚在开发中，如有需要可直接与我司联系。

Dimensions(mm) (外形尺寸图(毫米))

Basic Type(基本型):YCG1,YCDG1

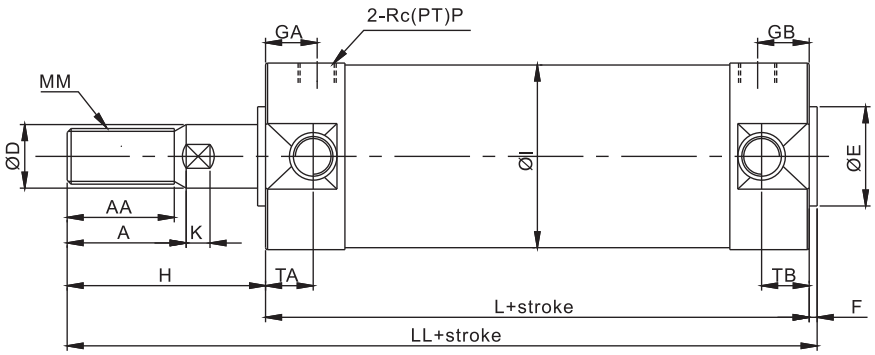

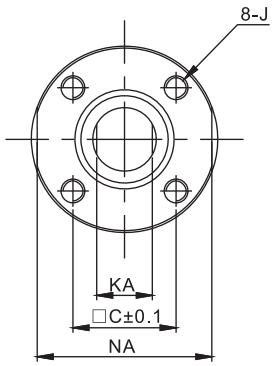

Bore(缸径)	行程范围 (mm)	AA	A	C	D	E	F	GA	GB	K	KA	L	NA	J	P	H	MM	LL	TA	TB	I
ø20	~300	15.5	18	14	6	12	2	12	12	4	6	78	24	M4×0.7深7	1/8	35	M8×1.25	115	11	11	26
ø25	~300	19.5	22	16.5	10	14	2	12	12	5.5	8	78	29	M5×0.8深8	1/8	40	M10×1.25	120	11	11	31
ø32	~300	19.5	22	20	12	18	2	12	12	5.5	10	82	36	M5×0.8深8	1/8	40	M10×1.25	124	11	10	38
ø40	~300	27	30	26	16	25	2	13	13	6	14	87	44	M6×1深12	1/8	50	M14×1.5	139	12	10	47
ø50	~300	32	35	32	20	30	2	14	14	7	18	102	55	M8×1.25深16	1/4	58	M18×1.5	162	13	12	58
ø63	~300	32	35	38	20	32	2	14	14	7	18	105	69	M10×1.5深16	1/4	58	M18×1.5	165	13	12	72

YSC AIR CHUCK(支点开闭型气动手指)
YCHA(Ø12~Ø32) Series

Specification(技术参数)

型号		YCHA				
Bore(缸径)(mm)		12	16	20	25	32
Fluid(流体)		Clean Air With Lube (洁净空气含油雾)				
Action(动作形式)		双作用				
Proof Press.(保证耐压力)		1.05MPa{10.5kgf/cm^2}				
Max. Press.(最高使用压力)		0.7MPa{7kgf/cm^2}				
Amb.Temp.(环境及流体温度)		-5~+60°C(未冻结)				
最高动作频率		180次/分钟				
Lubrication(润滑)	气缸	不需要				
	爪片	要				
最大爪臂长度(L)※		30	40	60	70	85
夹爪开关角度		-10~30°				
理论夹持力矩(M)※	开侧	0.4×P	0.9×P	1.7×P	3.4×P	6.1×P
	闭侧	0.5×P	1.2×P	2.3×P	4.4×P	8.1×P
有效夹持力(F)※		F=M/L×0.85				
Pipe Size(接管口径)Rc(PT)		M3×0.5	M5×0.8			
重量(g)		53	103	193	327	525

※ L:最大爪臂长度(mm),M:理论把持力矩(kgf/cm),
F:有效把持力(kgf),P:使用压力(kgf/cm^2)。

Feature (特征)

- 可因各种场合需要不同夹持力量提供多种口径选择(Ø12~32)
- 高准确度，空压开关工作。

HOW TO ORDER(型号选择)

YCHA – 12 D – RS2

- YCHA: YSC Model(型号)
- 12: SIZE(缸径)
- RS2: 磁性开关数量
  - 无记号:无开关
  - RS1: 开关1只
  - RS2: 开关2只

Sketch(示意图)

爪臂之接点长度

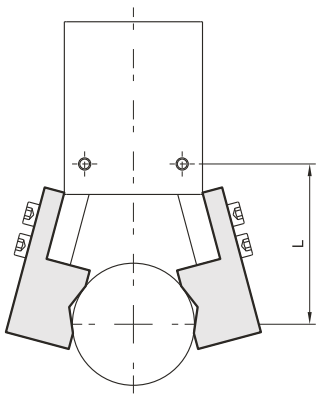

磁性开关安装：

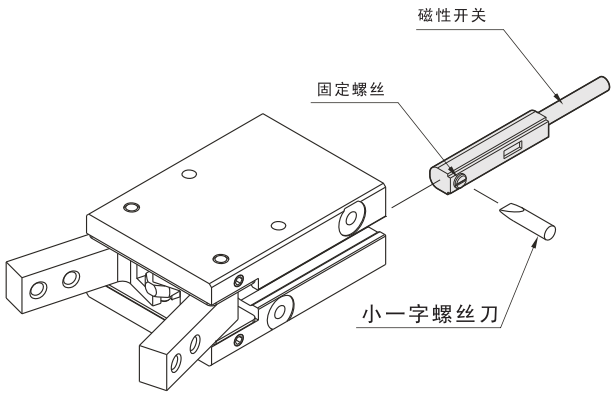

内部构造及材质

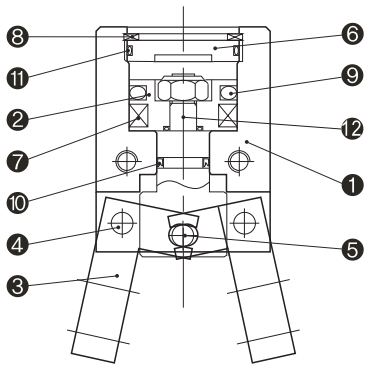

NO.	零件名称	材 质
1	本体	铝合金
2	活塞	铝合金
3	Y型夹爪	中碳钢
4	夹爪转轴	中碳钢
5	主轴转轴	轴承钢
6	后盖	铝合金
7	磁环	磁石材
8	止动环	弹簧钢
9	活塞密封环	NBR
10	活塞杆密封环	NBR
11	缸盖环	NBR
12	活塞杆	不锈钢

Dimensions(mm)(外形尺寸图(毫米))

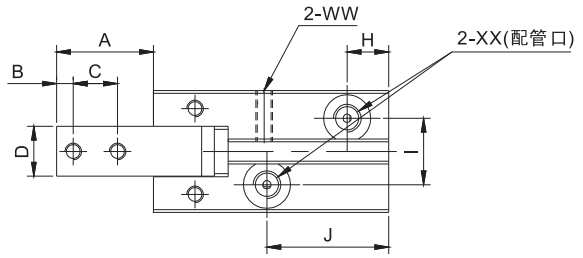

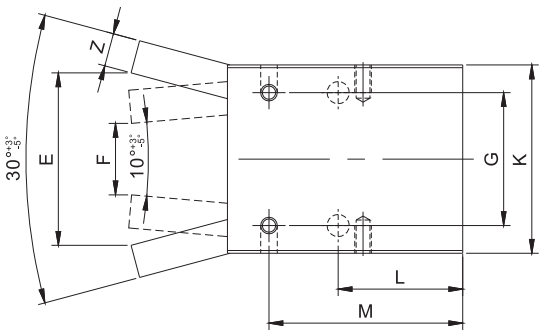

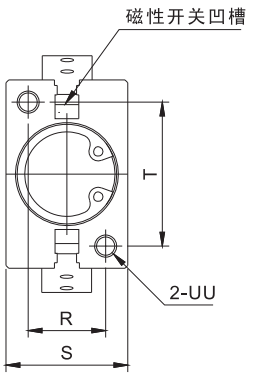

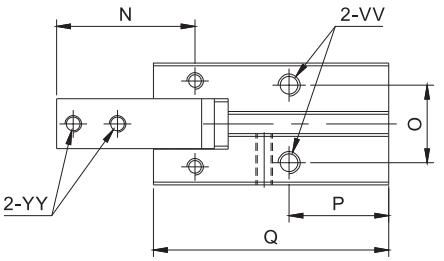

代号 / 内径	A	B	C	D	E	F	G	H	I	J	K	L	M	N	O	P	Q	R	S	T	UU	VV	WW	XX	YY	Z
ø12	15.4	3	6	7	26.3	9	20	7.5	10.2	23.5	28	20	32.9	21.5	10.2	16	39	10	16	22	M3	M3	M3	M3	M3	5
ø16	17.5	3	8	9	31.1	14	24	7.5	12	22	34	22.5	35	25	14	18	42.5	14	22	26	M4	M4	M4	M5	M3	6
ø20	22	4	10	12	40.1	18	30	8	13	25	45	25	39.5	32.5	16	19	50	16	26	35	M5	M5	M5	M5	M4	7
ø25	26	5	12	14	47.9	21	36	8.5	18	28	52	28.5	45.5	38.5	20	21.5	58	20	32	40	M6	M6	M6	M5	M5	9
ø32	30	6	14	18	55.1	24	42	10.5	24	34	60	37.5	54	44	26	30	68	26	40	46	M6	M6	M6	M5	M6	10

YSC AIR CHUCK(平行开闭型气动手指)
YCHB(Ø12~Ø32) Series

Feature (特征)

- 可因应各种场合需要不同夹持力量提供多种口径选择(Ø12~32)。
- 高准确度，空压开关工作。

Specification(技术参数)

型号		YCHB				
Action(动作形式)		双作用				
Bore(缸径)(mm)		12	16	20	25	32
Pipe Size(接管口径)		M3*0.5	M5*0.8			
Fluid(流体)		Clean Air With Lube(洁净空气含油雾)				
使用压力范围		1.5~7kgf/cm²				
Amb.Temp(环境温度)		-5℃~+60℃(不冻结)				
最高动作频率		180次/分钟				
Lubrication(润滑)	气缸	不需要				
	爪片	需要				
最大爪臂长度L(mm)		30	40	60	70	85
理论把持力※ kgf·cm	开侧	0.8	2.4	4.7	7.5	10
	闭侧	0.5	1.8	3.5	6.0	8.5
夹爪开闭行程(mm)		6	8	12	14	16
重量(g)		66	144	255	419	719

※爪臂接点长度L=30mm,使用压力P=5kgf/cm²时的数据。

HOW TO ORDER(型号选择)

YCHB – 12 D – RS2

- YCHB: YSC Model(型号)
- 12: Size(缸径)
- RS2: Auto Switch
  - None: No Switch
  - RS1: Switch 1EA
  - RS2: Switch 2EA
  - 磁性开关数量
  - 无记号:无开关
  - RS1: 开关1只
  - RS2: 开关2只

Sketch(示意图)

爪臂之接点长度

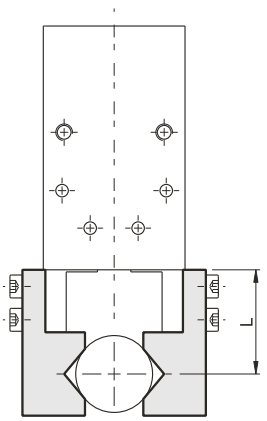

磁性开关安装

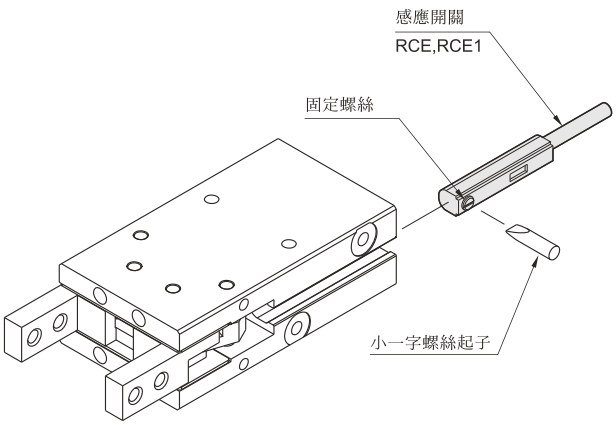

YSC AIR CHUCK(平行开闭型气动手指) YCHB(Ø12~Ø32) Series

内部构造及材质

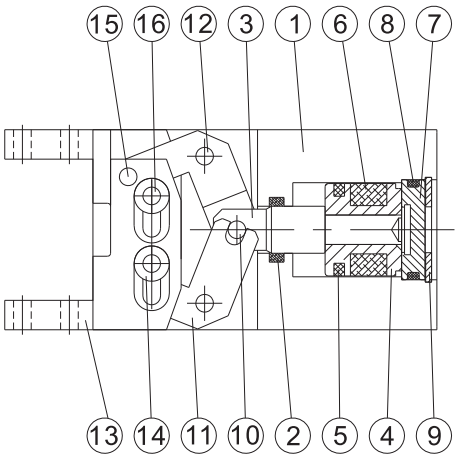

NO.	零件名称	材 质
1	本体	铝合金
2	活塞密封圈	NBR
3	活塞杆	中碳钢
4	活塞	铝合金
5	活塞密封	NBR
6	磁环	磁石材
7	后端盖	铝合金
8	端盖密封	NBR
9	卡环	弹簧钢
10	主轴转轴	轴承钢
11	悬臂	中碳钢
12	悬臂转轴	中碳钢
13	平行夹爪	中碳钢
14	滑动轴承	不锈钢
15	夹爪转轴1	轴承钢
16	夹爪转轴2	中碳钢

Dimensions(mm)(外形尺寸图(毫米))

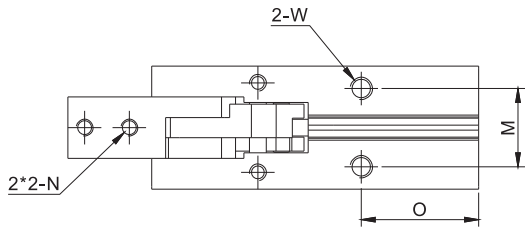

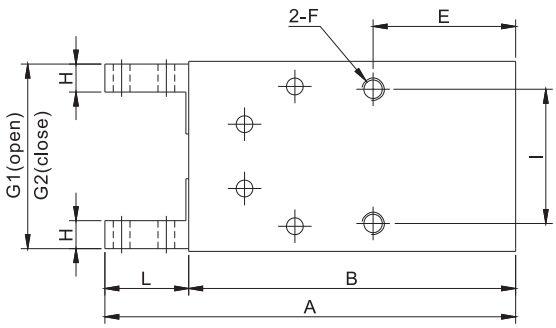

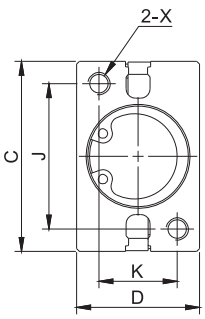

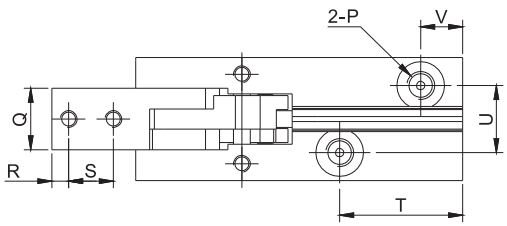

代号 / 内径	A	B	C	D	E	F	G1	G2	H	I	J	K	L	M	N	O	P	Q	R	S	T	U	V	W/X
ø12	63.5	50.5	28	16	20	M3*0.5深5	27	21	4	18	17	10	13	10	M3*0.5	16	M3*0.5深5	7	3	6	23	10.2	7.5	M3*0.5深5
ø16	73.5	58.5	34	22	25.5	M4*0.7深11	33	25	5	24	26	14	15	14	M3*0.5	21	M5*0.8深5	11	3	8	22	12	7.5	M4*0.7深7
ø20	88.5	69.5	45	26	25	M5*0.8 深8	44	32	6	30	35	16	19	16	M4*0.7	19	M5*0.8深5	12	4	10	26	13	8	M5*0.8深8
ø25	102.5	78.5	52	32	28	M6*1.0深10	51	37	8	36	40	20	24	20	M5*0.8	22	M5*0.8深5	14	5	12	29	18	8.5	M6*1深10
ø32	120.5	90.5	60	40	34	M6*1.0深10	59	43	10	44	46	24	30	26	M6*1.0	26	M5*0.8深5	20	7	15	35	24	10.5	M6*1深10

Stopper Cylinder(阻挡气缸)
YSN6000 series

HOW TO ORDER(型号表示方法)

YSN-60 | 4 | 5 -- B -- 50 × 30 --- S -- RAW -- V110 -- LF

- Cylinder 定程杆气缸
- Cylinder Type
  0:Direct Stopper Cylinder
  2:Roller Stopper Cylinder
  4:Damper Stopper Cylinder
  5:Lift Cylinder
  7:Talble Cylinder
  定程杆气缸种类
  0: 扁柱型阻挡气缸
  2: 滚轮杠杆型阻挡气缸
  4: 滚轮杠杆型缓冲阻挡气缸
  5: 升降气缸
  7: 升降手动转角气缸
- Operation
  1: Single Acting
  3: Double Acting
  5: Both Acting
  工作方式
  1: 单动型
  3: 双动型
  5: 单,双动型
- Bracket
  B:Square
  None:Round
  托架
  B: 四角
  无符号: 圆形
- Tube Diameter 缸径
- Stroke 行程
- Shock Absorber
  S:Soft Type
  SD:Standard
  H:Hard Type
  BH:Φ80Hard Type
  缓冲器
  S: 轻量型
  SD: 标准型
  H: 强力型
  BH: Φ80强力型
  ※无符号: 标准型
- Switch
  RAW:Double Switch
  RAH:Upper Single Switch
  RAB:Lower Single Switch
  磁性开关
  RAW: 带2个
  RAH: 上端带1个
  RAB: 下端带1个
- Valve
  V100:Valve(AC110V)
  V200:Valve(AC200V)
  V24:Valve(DC24V)
  电磁阀
  V110: 100V用电磁阀
  V220: 220V用电磁阀
  V24: DC240V用电磁阀
- Option
  M:Micro Switch
  L:Lock Cap
  K:Lever Locker
  S:Silencer
  F:Strainer
  任选
  M: 微动开关
  L: 锁头装置
  K: 水平锁紧
  S: 消声器
  F: 过滤器

REED SWITCH(磁性开关规格)

Model(型号)	Voltage(使用电压)	Max.Current(最大电流)	Lamp(指示灯)	Contact(触点)	Lead Wire Length(引长线长度)
RA	AC,DC5~200V	DC24V 50MA AC100V 24mA Ac200 12.5mA	If power is ON, indicating light will be ON. (On时发光 二管亮)	Yes (有)	1m

APPLICATION (基本性能)

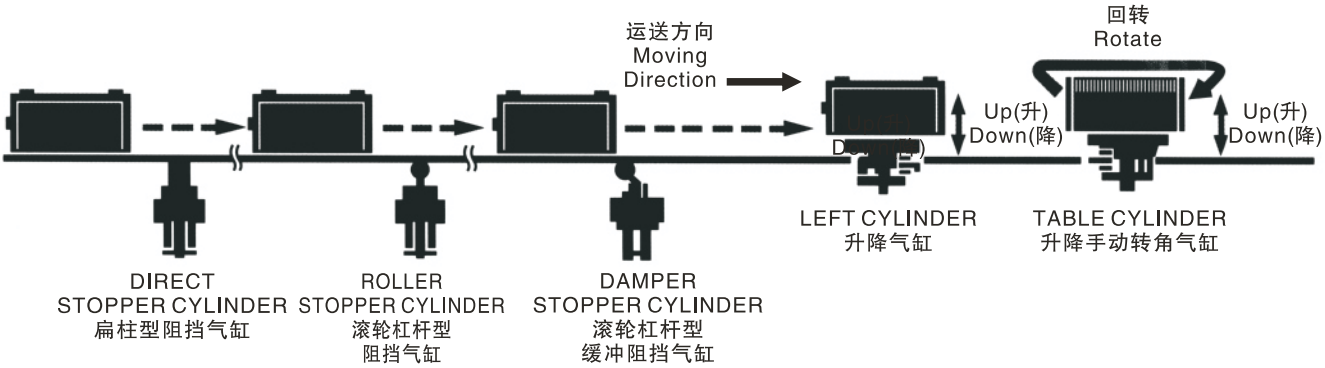

YSN-6045B-30,50

Lateral Load(常用横向载荷表)

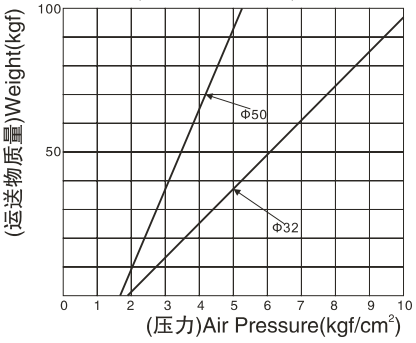

YSN–6045B–32 × 20

Damper Capacity(允许缓冲能力表)

Soft(轻量型)

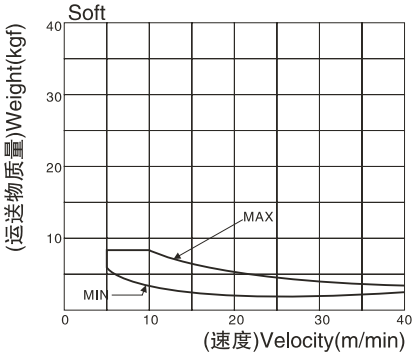

Standard Type(标准型)

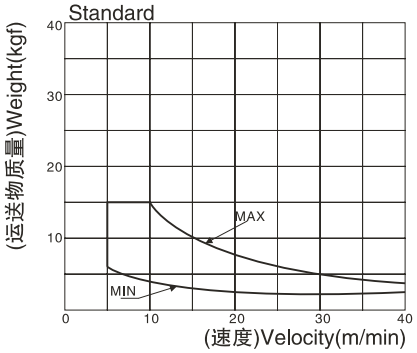

Hard Type(强力型)

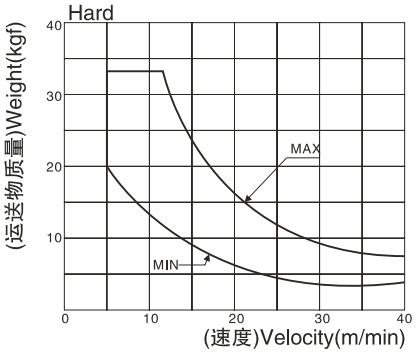

YSN–6045B–50 × 30

Stopper Capacity(允许阻挡能力表)

Soft(轻量型)

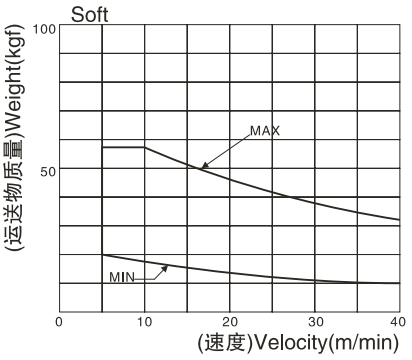

Standard Type(标准型)

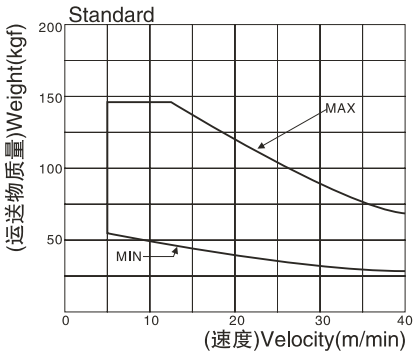

Hard Type(强力型)

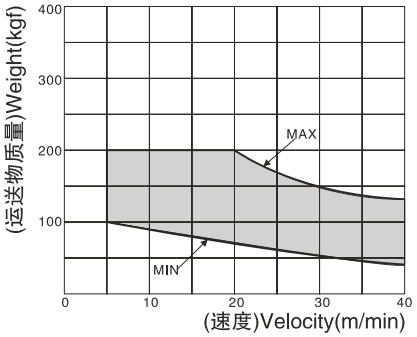

YSN6045B-32×20(Damper Stopper Cylinder)
(滚轮杠杆型缓冲阻挡气缸)

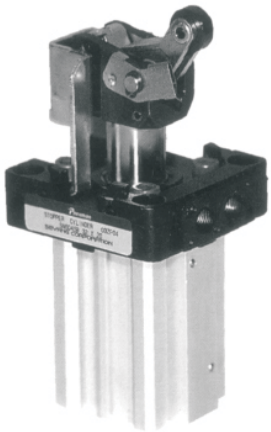

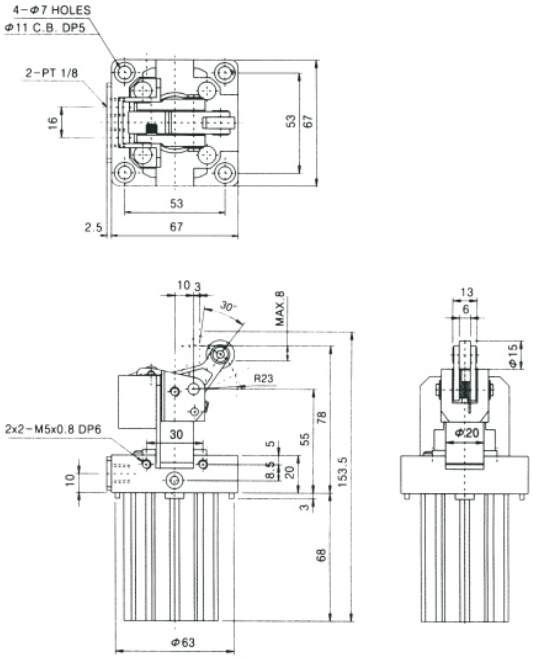

YSN6045B-50×30(Damper Stopper Cylinder)
(滚轮杠杆型缓冲阻挡气缸)

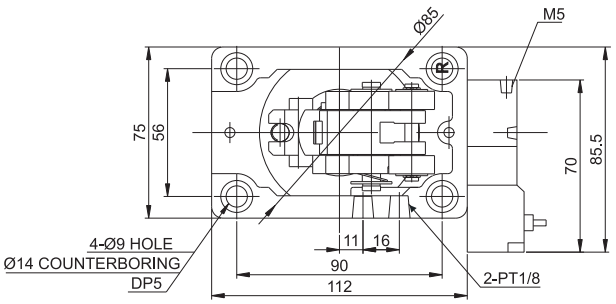

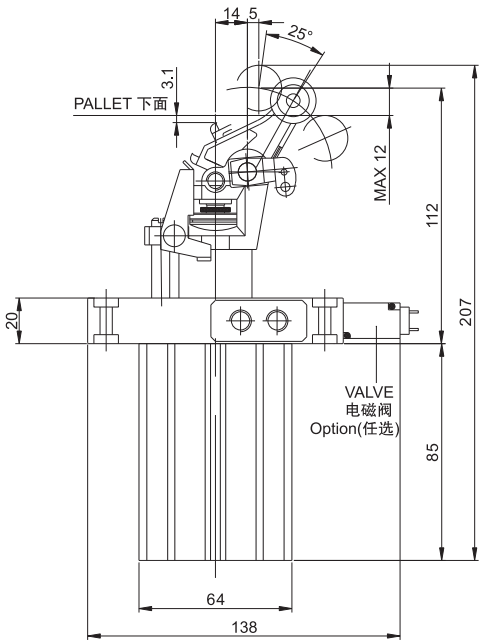

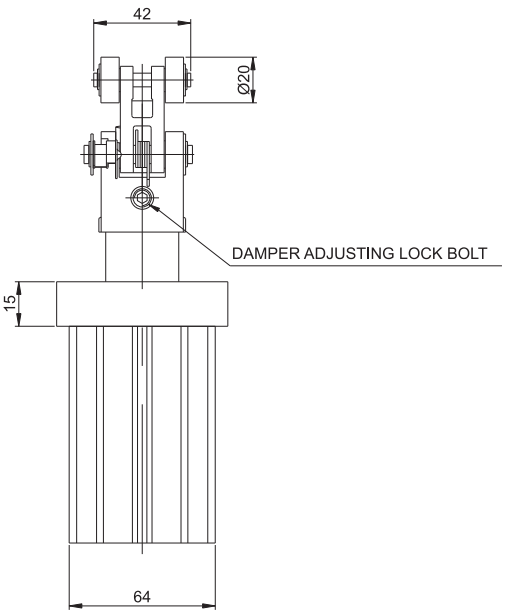

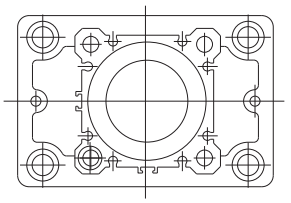

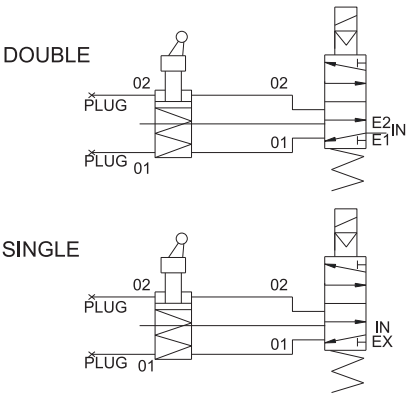

磁耦式无杆气缸(Magnetic Coupling Rodless Cylinder)
YRD(ø16~ø40) series

规格

缸径 (mm)	16	20	25	32	40
使用流体	空气(不给油)				
最高使用压力MPa	0.7				
最低使用压力MPa	0.15				
环境及流体温度	-5~+60°C(未冻结)				
活塞速度mm/s	50~400				
缓冲	橡胶缓冲				
行程公差	$0\sim250^{+1.0}_{0}$,$251\sim1000^{+1.4}_{0}$,$1001\sim^{+1.8}_{0}$				
磁性保持力N	137	231	363	588	922
润滑	不需要				
配管通口	M5×0.8	RC1/8			RC1/4

注:如需要润滑请用透平1号油ISOVG32

型号表示方法

YRD 20 — 300

标准行程

缸径

16	16mm
20	20mm
25	25mm
32	32mm
40	40mm

行程

缸径	标准行程	最大行程
16	50,100,150,200,250,300,350,400	1000
20	100,150,200,250,300,350,400,450	1200
25	500,600,700,800	1500
32	100,150,200,250,300,350,400,450	3000
40	500,600,700,800,900,1000	

外形尺寸图

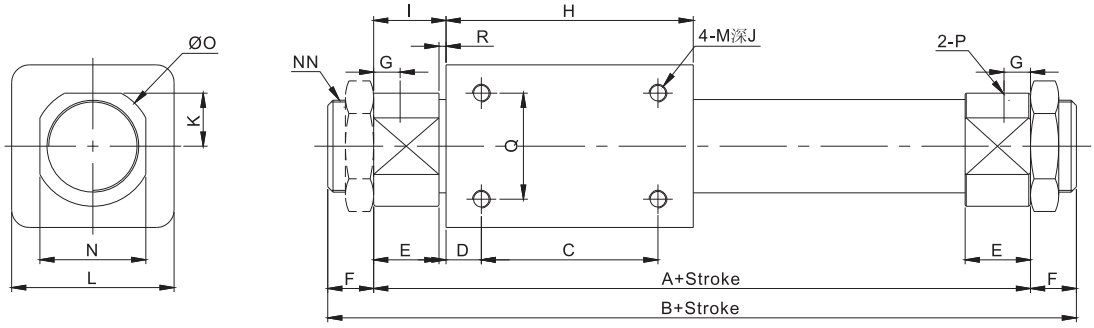

缸径(mm) Bore	A	B	C	D	E	F	G	H	I	J	K	L	M	NN	O	P	Q	R
16	83	103	35	11	11	10	5.5	57	13	6	-	35	M4×0.7	M10×1.0	-	M5×0.8	19	3
20	106	132	50	8	18	13	7.5	66	20	6	12	36	M4×0.7	M20×1.5	28	RC1/8	25	2
25	111	137	50	10	18.5	13	7.5	70	20.5	8	15	46	M5×0.8	M26×1.5	34	RC1/8	30	2
32	124	156	50	15	20	16	8	80	22	8	18	60	M6×1.0	M26×1.5	40	RC1/8	40	2
40	150	182	60	16	26	16	11	92	29	10	23	70	M6×1.0	M32×2.0	50	RC1/4	40	3

安装螺母(2个)

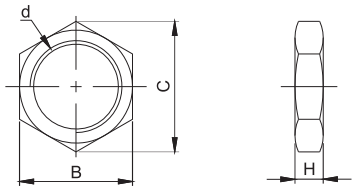

缸径(mm) Bore	d	H	B	C
16	M20×1.5	4	14	16.2
20	M26×1.5	8	26	30
25,32	M26×1.5	8	32	37
40	M32×2.0	10	41	47.3

YSC | Shock Absorber(油压缓冲器)
YRB series

Basic Type(基本型)
Rod End Cap Type(带胶垫)

Model No.(型号)		Specification(规格)						
Base type (基本型)	Max.Weight (最大有效重量) kg(Me)	Max.Absorbing Energy (最大吸收能量) (N.m)	Stroke (吸收行程) (mm)	Max.Impact Speed (最高冲击速度) (m/s)	Absorb.Energy/H (每时吸收能量) NM(Elc)	Spring Force (弹簧力) (N) Extension (伸出)	Spring Force (弹簧力) (N) Compression (压回)	Wt. (质量) (g)
YRB0806	6.0	2	6	2.0	8,800	1.764	4.263	11
YRB1005	7	3	5	3.0	10,800	–	–	14
YRB1008	9	4	8	3.0	15,200	4.7	11	20
YRB1416	150	20	16	3.0	35,000	5.06	8.67	90
YRB2020	700	40	20	3.5	40,000	11.172	28.49	215
YRB2050	1,200	60	50	3.5	60,000	27.93	38.54	300
YRB2525	1,500	80	25	4.0	54,900	15.435	32.41	330
YRB2550	160	98	50	4.0	90,000	–	–	435
YRB3660	2,400	250	60	4.0	120,000	–	–	1030

HOW TO ORDER(型号表示方法)

YRB C 08 06

- YRB: Basic Type
- C: Nill: Non Cap; C: Rod End Cap Type
- 08: M8 × 1.0
- 06: Stroke

Dimensions(mm)(外形尺寸图(毫米))

YRB0806~2525

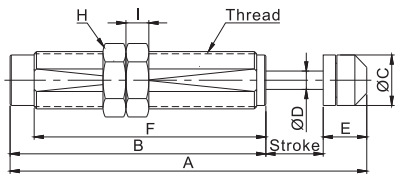

YRB2550

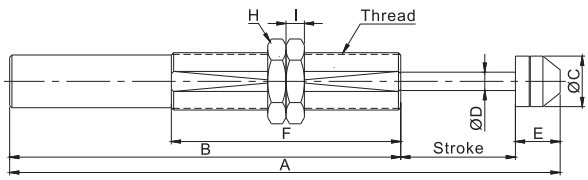

YRB3660

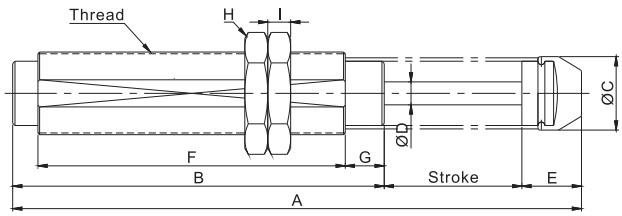

MODEL	Stroke	Thread	A	B	C	D	E	F	G	H	I
YRB0806	6	M8×1.0	50	38	6.6	2.8	6	33	–	11	3
YRB1005	5	M10×1.0	38.7	27.7	8.6	3	6	22.9	–	12.7	3
YRB1008	8	M10×1.0	61	46	8.6	3	6	38	–	12.7	3
YRB1416	16	M14×1.5	125.3	95	12	4	14.3	86	–	19	6
YRB2020	20	M20×1.5	148	110	18	6	18	101	–	26	8
YRB2050	50	M20×1.5	235	167	18	8	18	158	–	26	8
YRB2525	25	M25×1.5	155.5	111	22	8	19.5	101	–	32	10
YRB2550	50	M25×1.5	240	170.5	22	8	19.5	100	–	32	10
YRB3660	60	M36×1.5	248	162	35	10	26	134	17	46	15

YSC | Adjustsble Shock Absorber(Small Type)
(可调压力式油压缓冲器)(小型)
YRB-OEM series

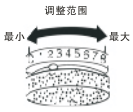

Model No. (型号)	Specification(规格)							
	Effective.Weight (有效重量) kg(Me)	Max.Absorbing Energy (最大吸收能量) (N.m)	Stroke (吸收行程) (mm)	Max.Impact Speed (最高冲击速度) (m/s)	Absorb.Energy/H (每时吸收能量) NM(Elc)	Spring Force (弹簧力) (N) Extension (伸出)	Spring Force (弹簧力) (N) Compression (压回)	Wt. (质量) (g)
YRB-OEM 0.25M	1.2~56	10	12	0.3~3.5	15000	3.2	6.7	72.5
YRB-OEM 0.5M	4.3~280	35	16		34500	6.9	17.2	179
YRB-OEM 1.0MF	13~1273	78	25		62100	11.4	26	345.5
YRB-OEM 1.0M	13~1273	78	25		74500	11.4	26	362.5
YRB-OEM 1.25M×1	20~1800	128	25		93200	25.5	46.1	837
YRB-OEM 1.25M×2	42~2700	256	50		113700	22.7	50.3	1010

※Ambient Temperature(环境温度):Standard:–20℃~80℃/Special:–30℃~100℃.

HOW TO ORDER(型号表示方法)

YRB-OEM | 1.25 | M | B | S | F | ×2

- YRB-OEM: Adjusting Type 可调型
- 1.25: M36 × 1.5 (M14 × 1.5~M115 × 2.0) Screw & Stroke 螺距 (refer to Specification)
- M: Mounting Nut (Built–in Nut) 安装螺母
- B: Nil: Non Cap 无胶垫; B: With Cap 带胶垫
- S: Nil: Non Stop Collor 无定位螺母; S: With Stop Collor 带定位螺母
- F: Nil: Non Flange 无法兰; F: With Flange 带法兰
- ×2

Dimensions(mm)(外形尺寸图(毫米))

YRM–OEM 0.25M/0.5M/1.0MF/1.0M/1.25Mx1/1.25Mx2 Series

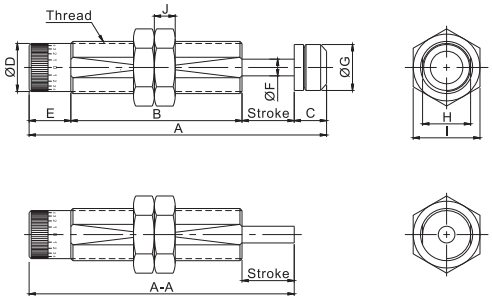

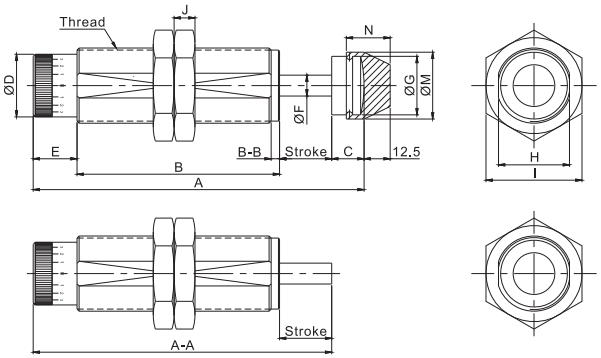

YRM–OEM (安装附件)

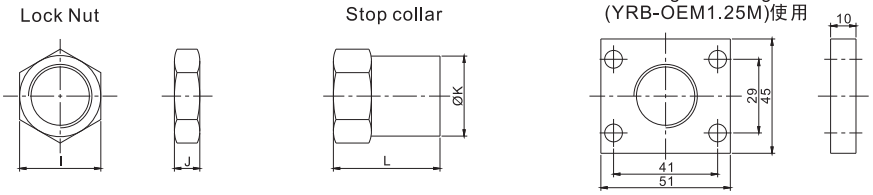

MODEL	Stroke	Thread	A	A-A	B	B-B	C	D	E	F	G	H	Lock Nut I	Lock Nut J	Stop Collar K	Stop Collar L	Urethane cap M	Urethane cap N
YRB-OEM 0.25M	12	M14×1.5	96	84.5	55.5	–	11.5	12.2	17	4	12	12.5	19	6	18	27	–	–
YRB-OEM 0.5M	16	M20×1.5	116.5	101	66	–	15.5	18	19	6	18	18.5	25	8	24	36	–	–
YRB-OEM 1.0MF	25	M25×1.5	142.5	127	82	–	15.5	23	20	8	22	23	32	10	31.5	42	–	–
YRB-OEM 1.0M	25	M27×1.5	142.5	127	82	–	15.5	23	20	8	22	25	32	10	31.5	42	–	–
YRB-OEM 1.25M×1	25	M36×1.5	158.5	143	97	4	15.5	30	21	10	28	34	46	10	45	62	32	21
YRB-OEM 1.25M×2	50	M36×1.5	165	202	131	4	15.5	30	21	10	28	34	46	10	45	62	32	21

YSC | Adjustsble Shock Absorber(Large Type)
(可调压力式油压缓冲器)(大型)
YRB-OEM series

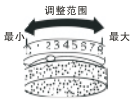

Model No. (型号)	Specification(规格)								
	Max.Absorbing Energy (最大吸收能量) J(kgf · m)	Stroke (吸收行程) (mm)	Max.Impact Speed (最高冲击速度) (m/s)	Max.Absorb.Energy/Hour (每时最大吸收能量) J/hr(kgf · m/hr)	Impact Weight (撞击物体质量) (kg)	Max.Impact Forde (最大冲击力) (N)	Spring Force(弹簧力)(N) Extension(伸出)	Spring Force(弹簧力)(N) Compression(压回)	Wt. (质量) (kg)
YRB-OEM1.5M×1	245{25.0}	25	0.3~3.6	129,000{13,160}	25~3400	12,200	50	84	1.3
YRB-OEM1.5M×2	490{50.0}	50		157,500{16,070}	45~6500		33	76	1.5
YRB-OEM1.5M×3	735{75.0}	75		192,000{19,590}	54~9700		31	99	1.7
YRB-OEM2.0M×2	1250{127.55}	50	0.3~3.6	245,000{25,000}	75~12700	31,200	78	165	3.2
YRB-OEM2.0M×4	2500{255.10}	100		330,000{33,670}	118~18100		75	210	4.1
YRB-OEM2.0M×6	3750{382.65}	150		370,000{37,750}	130~23600		95	360	5.2
YRB-OEM3.0M×2	2200{224.48}	50	0.3~3.6	372,000{37,960}	195~31700	55,000	115	315	6.1
YRB-OEM3.0M×3.5	3900{397.95}	90		656,000{66,940}	215~36000		115	450	9.8
YRB-OEM3.0M×5	5500{561.22}	125		930,000{94,890}	220~51000		80	260	9.3
YRB-OEM3.0M×6.5	7000{714.28}	165		1,170,000{119,380}	300~56700		135	560	11.5
YRB-OEM4.0M×2	3600{367.35}	50	0.3~3.6	1,500,000{153,061}	370~44000	90,000	95	360	15.2
YRB-OEM4.0M×4	7200{734.69}	100		1,750,000{178,571}	370~57000	90,000	115	315	19.0
YRB-OEM4.0M×6	10800{1102.04}	150		2,020,000{206,122}	370~89000	90,000	115	450	23.0
YRB-OEM4.0M×8	14500{1479.59}	200		2,310,000{235,714}	390~11800	90,000	80	260	33.0
YRB-OEM4.0M×10	18000{1836.73}	250		2,610,000{266,326}	440~14500	90,000	135	560	38.0

Dimensions(mm)(外形尺寸图(毫米))

YRB–OEM1.5M~3.0M

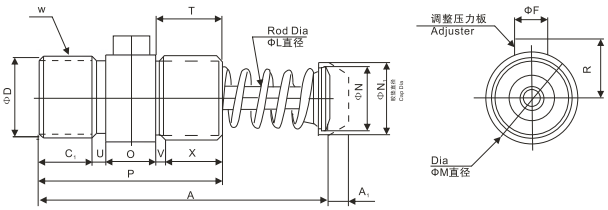

Model No.(型号)	Stroke(行程)	A	P	C1	T	A1	L	M	N	N1	W
YRB-OEM1.5M×1	25	143	95	27	28	17	14	54	36	40	M42×1.5
YRB-OEM1.5M×2	50	193	120	40	40						
YRB-OEM1.5M×3	75	243	145	53	52						
YRB-OEM2.0M×2	50	224	140	50	50	17	20	74	52	60	M64×2
YRB-OEM2.0M×4	100	324	190	75	75						
YRB-OEM2.0M×6	150	456	240	100	100						
YRB-OEM3.0M×2	50	244	140	42	48	20	25	94	72	80	M85×2
YRB-OEM3.0M×3.5	90	324	180	60	70						
YRB-OEM3.0M×5	125	400	216	82	84						
YRB-OEM3.0M×6.5	165	494	256	106	100						
YRB-OEM4.0M×2	150	316	200	75	75	22	35	124	88	102	M115×2
YRB-OEM4.0M×4	100	416	250	100	100						
YRB-OEM4.0M×6	150	516	300	125	125						
YRB-OEM4.0M×8	200	616	350	150	150						
YRB-OEM4.0M×10	250	746	400	180	170						

Option(任选项)

Cap Size(胶垫)

Part No.(胶垫型号)	A	N1
YRB–OEMB1.5M	17	40
YRB–OEMB2.0M	17	57
YRB–OEMB3.0M	20	80
YRB–OEMB4.0M	22	102

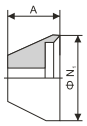

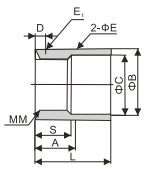

Lock Nut(定位螺母)

Part No.(安装螺母型号)	B	E	H	MM
YRB-OEMJ1.5M	56	5	10	M42×1.5
YRB-OEMJ2.0M	75	5	13	M64×2
YRB-OEMJ3.0M	98	6	16	M85×2
YRB-OEMJ4.0M	128	8	22	M115×2

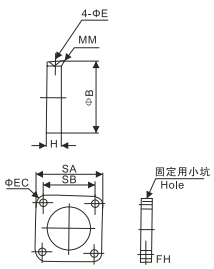

Stop Collar(定位螺母)

Part No.(定位螺母型号)		A	B	C	E	E1	L	MM	S
YRB-OEMS1.5M		25	56	44	8	M5×0.8	40	M42×1.5	20
YRB-OEMS2.0M×2		40	75	66	8	M6×1.0	70	M64×2	35
YRB-OEMS3.0M×6		45	98	66	10	M6×1.0	75	M85×2	40
YRB-OEMS4.0M		45	128	118	10	M8×1.0	80	M115×2	40

Flange(法兰)

Part No.(法兰型号)	FC	FH	SA	SB	Bolt(安装用螺栓)	Wt.(质量)(g)
YRB-OEMF1.5M	9	13	60	41	M8	140
YRB-OEMF2.0M×2	11	16	90.0	70	M10	570
YRB-OEMF3.0M×6	13	19.0	104	76	M12	680
YRB-OEMF4.0M	17	25	140	11	M16	820

Accessories for Shock Absorber
(油压缓冲器附件)

定位停止螺帽

YRB油压缓冲器定位停止螺帽尺寸从M8×1.0到M36×1.5规格，并有固定座F板选用，配合缓冲器带撞击头及无撞击头使用，可微调及有效设定油压缓冲器行程。

定位停止螺帽应用实例

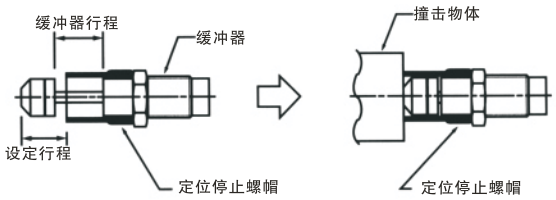

Mounting Nut(安装螺母)

规格	规格	规格
SC 08	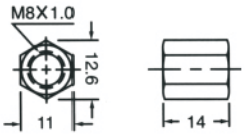	YRB–0806
SC 10	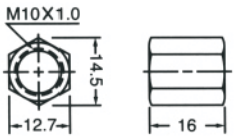	YRB–1005 YRB–1008
SC 12	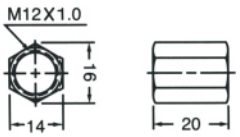	YRB–1210
SC 14	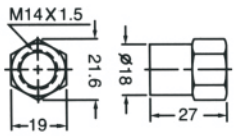	YRB–1416 YRB–OEM0.25

规格	规格	规格
SC 20	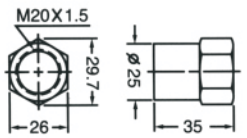	YRB–2020 YRB–2050 YRB–OEM0.5
SC 25	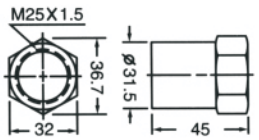	YRB–2525 YRB–OEM1.0
SC 40	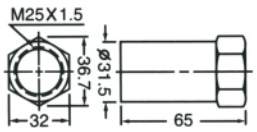	YRB–2540
SC 50	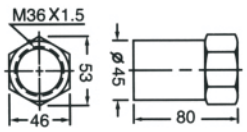	YRB–3660 YRB–OEM1.25

Flange(固定法兰)

规格	F36	F42	F64
规格	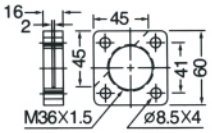	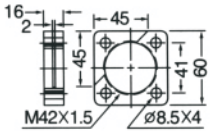	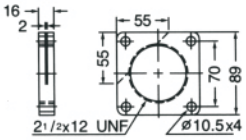
规格	YRB–3660 YRB–OEM1.25	YRB–OEM1.5	YRB–OEM2.0

Metric Size - R/ Rc Thread Fitting

PC 螺纹直通 Straight

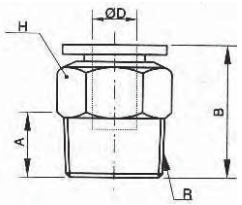

型号 / MODEL	D	R	A	B	H	内六角
PC04-M5	4	M5	4	19.3	10	2.0
PC04-01	4	R1/8	7.5	19.8	10	3.0
PC04-02	4	R1/4	9.5	17.9	14	3.0
PC06-M5	6	M5	4	20.7	12	2.0
PC06-01	6	R1/8	7.5	21	12	4.0
PC06-02	6	R1/4	9.5	22.7	14	4.0
PC06-03	6	R3/8	10.5	20.7	17	4.0
PC06-04	6	R1/2	13.5	24.7	21	4.0
PC08-01	8	R1/8	7.5	25.9	14	5.0
PC08-02	8	R1/4	9.5	24.9	14	5.0
PC08-03	8	R3/8	10.5	21.9	17	6.0
PC08-04	8	R1/2	135	25.9	21	6.0
PC10-01	10	R1/8	7.5	29.5	17	5.0
PC10-02	10	R1/4	9.5	30.8	17	6.0
PC10-03	10	R3/8	10.5	28.8	17	8.0
PC10-04	10	R1/2	13.5	26.6	21	8.0
PC12-01	12	R1/8	7.5	31.6	21	5.0
PC12-02	12	R1/4	9.5	33.6	21	6.0
PC12-03	12	R3/8	10.5	30.6	21	8.0
PC12-04	12	R1/2	13.5	33.6	21	8.0
PC16-03	16	R3/8	10.5	39	24	8.0
PC16-04	16	R1/2	13.5	42	24	10.0

PL L型螺纹二通 Male Elbow

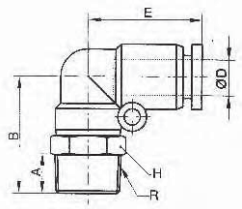

型号 / MODEL	øD	R	A	B	E	H
PL04-M5	4	M5	4	17	17.5	10
PL04-01	4	R1/8	7.5	24	17.5	10
PL04-02	4	R1/4	9.5	27	17.5	14
PL06-M5	6	M5	4	17.5	19	12
PL06-01	6	R1/8	7.5	25.7	19	12
PL06-02	6	R1/4	9.5	28.2	19	14
PL06-03	6	R3/8	10.5	29.7	19	17
PL06-04	6	R1/2	13.5	33.2	19	21
PL08-01	8	R1/8	7.5	29.5	22.8	14
PL08-02	8	R1/4	9.5	31.5	22.8	14
PL08-03	8	R3/8	10.5	33	22.8	17
PL08-04	8	R1/2	13.5	36.5	22.8	21
PL10-01	10	R1/8	7.5	34.3	27.6	17
PL10-02	10	R1/4	9.5	36.3	27.6	17
PL10-03	10	R3/8	10.5	37.3	27.6	17
PL10-04	10	R1/2	13.5	40.8	27.6	21
PL12-02	12	R1/4	9.5	38.5	29.6	21
PL12-03	12	R3/8	10.5	39.5	29.6	21
PL12-04	12	R1/2	13.5	42.5	29.6	21
PL16-03	16	R3/8	10.5	43.5	32.5	24
PL16-04	16	R1/2	15	47.5	32.5	24

PH 外六角接头 Univresal Eblow

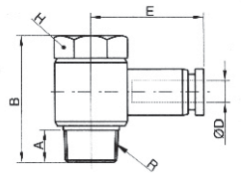

型号 / MODEL	øD	R	A	B	H	E
PH04-M5	4	M5	3.8	17	8	20
PH04-01	4	R1/8	4.5	23.5	10	22.3
PH06-M5	6	M5	3.8	17	8	21.9
PH06-01	6	R1/8	4.5	23.5	10	23.1
PH06-02	6	R1/4	9.5	26.3	14	25.1
PH06-03	6	R3/8	10.5	31.9	19	26.8
PH08-01	8	R1/8	7.5	23.5	10	25.6
PH08-02	8	R1/4	9.5	26.3	14	28.6
PH08-03	8	R3/8	10.5	31.9	19	29.6
PH08-04	8	R1/2	13.5	38.6	24	32.6
PH10-02	10	R1/4	9.5	26.3	14	32.3
PH10-03	10	R3/8	10.5	31.9	14	32.9
PH10-04	10	R1/2	13.5	38.6	19	35.9
PH12-03	12	R3/8	10.5	31.9	14	35.6
PH12-04	12	R1/2	13.5	38.6	19	36.6

YSC 常用接头 Metric Size - R/ Rc Thread Fitting

PLL L型加长螺纹二通 Male Long Elbow

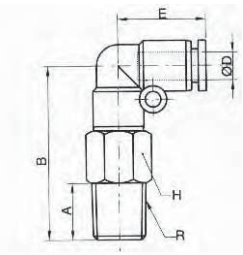

型号 / MODEL	øD	R	A	B	E	H
PLL04-M5	4	M5	4	33.5	17.5	10
PLL04-01	4	R1/8	7.5	36	17.5	10
PLL04-02	4	R1/4	9.5	39	17.5	14
PLL06-M5	6	M5	4	36.7	19	12
PLL06-01	6	R1/8	7.5	39.7	19	12
PLL06-02	6	R1/4	9.5	42.2	19	14
PLL06-03	6	R3/8	10.5	43.7	19	17
PLL06-04	6	R1/2	13.5	47.2	19	21
PLL08-01	8	R1/8	7.5	44.8	22.8	14
PLL08-02	8	R1/4	9.5	46.8	22.8	14
PLL08-03	8	R3/8	10.5	48.4	22.8	17
PLL08-04	8	R1/2	13.5	51.8	22.8	21
PLL10-01	10	R1/8	7.5	54.3	28	17
PLL10-02	10	R1/4	9.5	56.3	28	17
PLL10-03	10	R3/8	10.5	57.3	28	17
PLL10-04	10	R1/2	13.5	60.8	28	21
PLL12-01	12	R1/8	7.5	61	30	21
PLL12-02	12	R1/4	9.5	61.5	29.6	21
PLL12-03	12	R3/8	10.5	62.5	29.6	21
PLL12-04	12	R1/2	13.5	65.5	29.6	21
PLL16-03	16	R3/8	10.5	74	33	24
PLL16-04	16	R1/2	15	78.5	33	24

POC 圆螺纹直通 Hex.Holed Straight

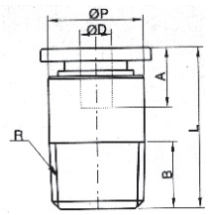

型号 / MODEL	L	A	B	øD	R	øP	内六角
POC04-M5	19.5	14.6	4	4	M5	10	2.0
POC04-01	20	14.6	7.5	4	R1/8	10	3.0
POC04-02	18.1	14.6	9.5	4	R1/4	14	3.0
POC06-M5	20.7	15.2	4	6	M5	12	2.0
POC06-01	20.9	15.2	7.5	6	R1/8	12	4.0
POC06-02	22.7	15.2	9.5	6	R1/4	14	4.0
POC06-03	20.7	15.2	10.5	6	R3/8	17	4.0
POC06-04	24.7	15.2	13.5	6	R1/2	21	4.0
POC08-01	25.1	16.2	7.5	8	R1/8	14	5.0
POC08-02	24.1	16.2	9.5	8	R1/4	14	5.0
POC08-03	21.1	16.2	10.5	8	R3/8	17	6.0
POC08-04	24.1	16.2	13.5	8	R1/2	21	6.0
POC10-01	28	18.7	7.5	10	R1/8	17	5.0
POC10-02	29.3	18.7	9.5	10	R1/4	17	6.0
POC10-03	26.8	18.7	10.5	10	R3/8	17	8.0
POC10-04	25.1	18.7	13.5	10	R1/2	21	8.0
POC12-03	29.6	21.7	10.5	12	R3/8	21	8.0
POC12-04	32.6	21.7	13.5	12	R1/2	21	8.0
POC16-03	28.5	24.5	10.5	16	R3/8	24	8.0
POC16-04	31.5	24.5	13.5	16	R1/2	24	10.0

PCF 内螺纹直通 Female Straight

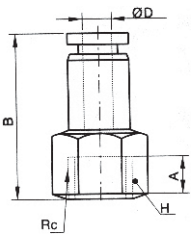

型号 / MODEL	øD	Rc	A	B			
PCF04-01	4	Rc1/8	8	23.3			
PCF04-02	4	Rc1/4	11	26.3			
PCF06-01	6	Rc1/8	8	24.4			
PCF06-02	6	Rc1/4	11	27.4			
PCF06-03	6	Rc3/8	12	28.4			
PCF06-04	6	Rc1/2	14	30.4			
PCF08-01	8	Rc1/8	8	25.9			
PCF08-02	8	Rc1/4	11	28.9			
PCF08-03	8	Rc3/8	12	29.9			
PCF08-04	8	Rc1/2	14	31.9			
PCF10-01	10	Rc1/8	8	29			
PCF10-02	10	Rc1/4	11	32			
PCF10-03	10	Rc3/8	12	33			
PCF10-04	10	Rc1/2	14	35			
PCF12-02	12	Rc1/4	11	33.9			
PCF12-03	12	Rc3/8	12	34.9			
PCF12-04	12	Rc1/2	14	36.9			

PMF 内螺纹隔板直通
Bulkhed Female Straight

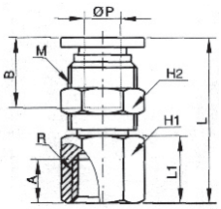

型号 / MODEL	L	A	B	L1	H1	H2	Rc	M	øP
PMF04-01	26.2	9	16	11	14	14	Rc1/8	M12	4
PMF04-02	26.2	12	16	14	17	14	Rc1/4	M12	4
PMF04-03	30.2	13	16	15	21	14	Rc3/8	M12	4
PMF06-01	27.1	9	17	9	17	17	Rc1/8	M14	6
PMF06-02	31.7	12	17	13.5	17	17	Rc1/4	M14	6
PMF06-03	33.2	13	17	15	19	17	Rc3/8	M14	6
PMF08-01	31.5	9	18.5	10	19	19	Rc1/8	M16	8
PMF08-02	35.5	12	18.5	14	19	19	Rc1/4	M16	8
PMF08-03	36.5	13	18.5	15	19	19	Rc3/8	M16	8
PMF08-04	40.5	16	18.5	19	24	19	Rc1/2	M16	8
PMF10-01	31	9	21	11	22	24	Rc1/8	M20	10
PMF10-02	34	12	21	14	24	24	Rc1/4	M20	10
PMF10-03	35	13	21	15	24	24	Rc3/8	M20	10
PMF10-04	39	16	21	19	24	24	Rc1/2	M20	10
PMF12-01	32.5	9	22.5	10	24	26	Rc1/8	M22	12
PMF12-02	35.5	12	22.5	13	24	26	Rc1/4	M22	12
PMF12-03	37.5	13	22.5	15	24	26	Rc3/8	M22	12
PMF12-04	41.5	16	22.5	19	24	26	Rc1/2	M22	12

PW 减径直通插头
Reducer

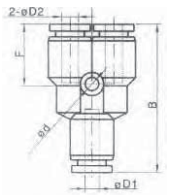

型号 / MODEL	øD1	øD2	ød	B	F		
PW06-4	6	4	3.2	36.8	14.5		
PW08-6	8	6	3.2	39.9	17.7		
PW10-8	10	8	4.2	49.2	20.3		
PW12-10	12	10	4.2	52.9	21.3		
PW16-12	16	12	5.1	62	24.5		

PZA 十字四通
Cross

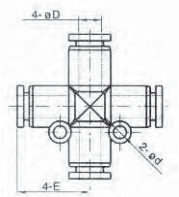

型号 / MODEL	øD	ød	E				
PZA04	4	3.2	17.5				
PZA06	6	3.2	19.3				
PZA08	8	3.2	22.75				
PZA10	10	4.2	28.3				
PZA12	12	4.3	29.6				

PKG 减径五通
Different Diam Union Triple

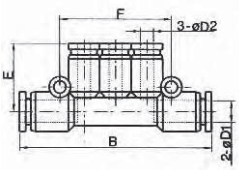

型号 / MODEL	øD1	øD2	E	F	B		
PKG06-4	6	4	19	36	57.6		
PKG08-4	8	4	20	42	62.6		
PKG08-6	8	6	20.3	42	62.6		
PKG10-6	10	6	23.8	48	77.3		
PKG10-8	10	8	24.3	48	77.3		

PST T型分支螺纹三通 Branch Tee

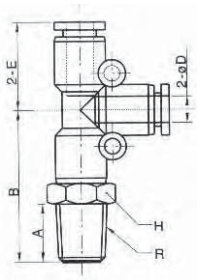

型号 / MODEL	øD	R	A	B	E	H
PST04-M5	4	M5	4	23	18.5	10
PST04-01	4	R1/8	7.5	25	18.5	10
PST04-02	4	R1/4	9.5	28	18.5	14
PST06-M5	6	M5	4	24	19.3	12
PST06-01	6	R1/8	7.5	26	19.3	12
PST06-02	6	R1/4	9.5	28.5	19.3	14
PST06-03	6	R3/8	10.5	30	19.3	17
PST06-04	6	R1/2	13.5	33.5	19.3	21
PST08-01	8	R1/8	7.5	29.45	22.75	14
PST08-02	8	R1/4	9.5	31.45	22.75	14
PST08-03	8	R3/8	10.5	32.95	22.75	17
PST08-04	8	R1/2	13.5	36.45	22.75	21
PST10-01	10	R1/8	7.5	35	28.3	17
PST10-02	10	R1/4	9.5	37	28.3	17
PST10-03	10	R3/8	10.5	38	28.3	17
PST10-04	10	R1/2	13.5	41.5	28.3	21
PST12-02	12	R1/4	9.5	38.5	29.6	21
PST12-03	12	R3/8	10.5	39.5	29.6	21
PST12-04	12	R1/2	13.5	42.5	29.6	21
PST16-03	16	R3/8	10.5	43.5	32.5	24
PST16-04	16	R1/2	13.5	46.5	32.5	24

PWT Y型螺纹三通 Branch Y

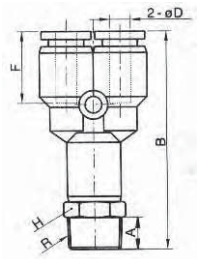

型号 / MODEL	øD	R	A	B	E	H
PWT04-M5	4	M5	4	35.5	14	10
PWT04-01	4	R1/8	7.5	42	14	10
PWT04-02	4	R1/4	9.5	45	14	14
PWT06-M5	6	M5	4	37	14.8	12
PWT06-01	6	R1/8	7.5	43.8	14.8	12
PWT06-02	6	R1/4	9.5	46.3	14.8	14
PWT06-03	6	R3/8	10.5	47.8	14.8	17
PWT06-04	6	R1/2	13.5	51.3	14.8	21
PWT08-01	8	R1/8	7.5	47.7	18.2	14
PWT08-02	8	R1/4	9.5	49.1	18.2	14
PWT08-03	8	R3/8	10.5	50.6	18.2	17
PWT08-04	8	R1/2	13.5	54.1	18.2	21
PWT10-01	10	R1/8	7.5	56.4	20.8	17
PWT10-02	10	R1/4	9.5	58.4	20.8	17
PWT10-03	10	R3/8	10.5	59.4	20.8	17
PWT10-04	10	R1/2	13.5	62.9	20.8	21
PWT12-01	12	R1/8	7.5	57.7	21	21
PWT12-02	12	R1/4	9.5	60.7	21	21
PWT12-03	12	R3/8	10.5	61.7	21	21
PWT12-04	12	R1/2	13.5	65.7	21	24
PWT16-03	16	R3/8	10.5	71.5	24.5	24
PWT16-04	16	R1/2	13.5	75.5	24.5	24

PHF 串联接头 Female Universal Elbow

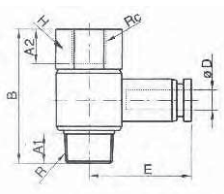

型号 / MODEL	øD	R	Rc	A1	A2	H	B	E
PHF04-M5	4	M5	M5	3.8	5.5	10	19.5	20
PHF04-01	4	R1/8	R1/8	7.5	8	14	29.5	22.3
PHF04-02	4	R1/4	R1/4	9.5	11	17	34.3	24.1
PHF06-M5	6	M5	M5	3.8	5.5	10	19.5	21.9
PHF06-01	6	R1/8	R1/8	7.5	8	14	29.5	23.1
PHF05-02	6	R1/4	R1/4	9.5	11	17	34.3	25.1
PHF06-03	6	R3/8	R3/8	10.5	12	21	40.4	26.8
PHF06-04	6	R1/2	R1/2	13.5	14	24	47.5	29.8
PHF08-01	8	R1/8	R1/8	7.5	8	14	29.5	25.6
PHF08-02	8	R1/4	R1/4	9.5	11	17	31.3	28.6
PHF08-03	8	R3/8	R3/8	10.5	12	21	40.4	29.6
PHF08-04	8	R1/2	R1/2	13.5	14	24	47.5	32.6
PHF10-01	10	R1/8	R1/8	7.5	8	14	29.5	30.1
PHF10-02	10	R1/4	R1/4	9.5	11	17	34.3	32.3
PHF10-03	10	R3/8	R3/8	10.5	12	21	40.4	32.9
PHF10-04	10	R1/2	R1/2	13.5	14	24	47.5	35.9
PHF12-02	12	R1/4	R1/4	9.5	11	17	34.3	33.5
PHF12-03	12	R3/8	R3/8	10.5	12	21	40.4	35.6
PHF12-04	12	R1/2	R1/2	13.5	14	24	47.5	36.6

PT T型螺纹三通 Male Tee

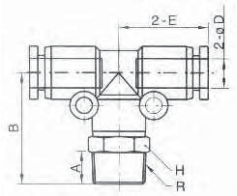

型号 / MODEL	øD	R	A	B	E	H
PT04-M5	4	M5	4	22.5	18.5	10
PT04-01	4	R1/8	7.5	25	18.5	10
PT04-02	4	R1/4	9.5	28	18.5	14
PT06-M5	6	M5	4	23.5	19.3	12
PT06-01	6	R1/8	7.5	26	19.3	12
PT06-02	6	R1/4	9.5	28.5	19.3	14
PT06-03	6	R3/8	10.5	30	19.3	17
PT06-04	6	R1/2	13.5	33.5	19.3	21
PT08-01	8	R1/8	7.5	29.45	22.75	14
PT08-02	8	R1/4	9.5	31.45	22.75	14
PT08-03	8	R3/8	10.5	32.95	22.75	17
PT08-04	8	R1/2	13.5	36.45	22.75	21
PT10-01	10	R1/8	7.5	35	28.3	17
PT10-02	10	R1/4	9.5	37	28.3	17
PT10-03	10	R3/8	10.5	38	28.3	17
PT10-04	10	R1/2	13.5	41.5	28.3	21
PT12-02	12	R1/4	9.5	38.5	29.6	21
PT12-03	12	R3/8	10.5	39.5	29.6	21
PT12-04	12	R1/2	13.5	42.5	29.6	21
PT16-03	16	R3/8	10.5	43.5	32.5	24
PT16-04	16	R1/2	15	47.3	32.5	24

PMM 隔板直通 Bulkhead Union P

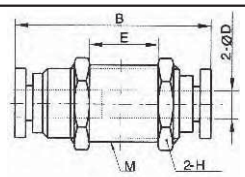

型号 / MODEL	øD	M	E	B	H		
PMM04	4	M12	9.7	30.1	14		
PMM06	6	M14	7.5	31.8	17		
PMM08	8	M16	6.8	35.3	19		
PMM10	10	M20	11.5	41.6	24		
PMM12	12	M22	12.8	45.3	28		
PMM16	16	M24	14	50	30		

PLF L型内螺纹二通 Female Elbow

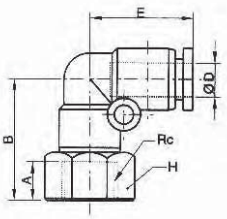

型号 / MODEL	øD	Rc	A	B	E	H			
PLF04-M5	4	M5	5.5	18.5	17.5	10			
PLF04-01	4	Rc1/8	8	23	17.5	14			
PLF04-02	4	Rc1/4	11	26	17.5	17			
PLF06-M5	6	M5	5	19.7	19	12			
PLF06-01	6	Rc1/8	8	39.1	19	14			
PLF06-02	6	Rc1/4	11	27.4	19	17			
PLF06-03	6	Rc3/8	12	28.7	19	21			
PLF06-04	6	Rc1/2	14	30.9	19	24			
PLF08-01	8	Rc1/8	8	27.3	22.8	14			
PLF08-02	8	Rc1/4	11	30.3	22.8	17			
PLF08-03	8	Rc3/8	12	32	22.8	21			
PLF08-04	8	Rc1/2	14	34.3	22.8	24			
PLF10-01	10	Rc1/8	8	28.3	29.9	17			
PLF10-02	10	Rc1/4	11	34.3	29.9	17			
PLF10-03	10	Rc3/8	12	36.3	29.9	21			
PLF10-04	10	Rc1/2	14	38.8	29.9	24			
PLF12-02	12	Rc1/4	11	37	29.6	21			
PLF12-03	12	Rc3/8	123	38	29.6	21			
PLF12-04	12	Rc1/2	14	40.5	29.6	24			
PLF16-03	16	Rc3/8	11	40.5	33	24			
PLF16-04	16	Rc1/2	13	42.5	33	24			

PLJ 插杆直角 Socket Elbow

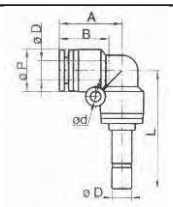

型号 / MODEL	L	A	B	øP	ød	øD	
PLJ04	33	17.7	15.1	11	3.2	4	
PLJ06	36.2	19.3	16	13	3.2	6	
PLJ08	42.5	22.8	18.1	14.8	3.2	8	
PLJ10	50.8	27.6	20.4	18.4	4.2	10	
PLJ12	54.5	29.6	23.2	21	4.2	12	
PLJ16	59.8	33.5	24.8	24	5.1	16	

PYJ Y型插杆三通 Socket Union Y

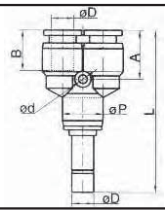

型号 / MODEL	L	A	B	øP	ød	øD	
PYJ04	51.2	14.2	15.1	11	3.2	4	
PYJ06	54.6	15.1	16	13	3.2	6	
PYJ08	60.1	18.2	18.1	14.8	3.2	8	
PYJ10	72.9	20.8	20.4	18.4	4.2	10	
PYJ12	78.1	21.6	23.2	21	4.2	12	

PWJ Y型插杆异径三通 Differ.Diam.Socket Union Y

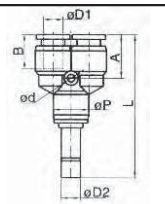

型号 / MODEL	L	A	B	øD1	øD2	ød	øP
PWJ04	53.7	10	15.1	4	6	3.2	13
PWJ06	60.4	10.5	16	6	8	3.2	14.8
PWJ08	72.3	13.4	18.1	8	10	3.2	18.4
PWJ10	77	15.5	20.4	10	12	4.2	21

PGJ 减径直通插头 Reducer

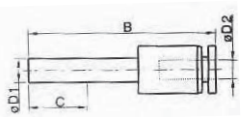

型号 / MODEL	øD1	øD2	B	C			
PGJ06-04	6	4	41	17			
PGJ08-04	8	4	44.5	18			
PGJ08-06	8	6	45	18			
PGJ10-06	10	6	47	20			
PGJ10-08	10	8	47	20			
PGJ12-06	12	6	53.5	23.5			
PGJ12-08	12	8	54	23.5			
PGJ12-10	12	10	54.5	23.5			

PUC 直通 Union Straight

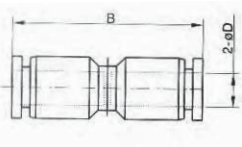

型号 / MODEL	øD	B					
PUC04	4	33					
PUC06	6	35.2					
PUC08	8	37.7					
PUC10	10	47.8					
PUC12	12	48.4					
PUC16	16	51					

PG 减径直通
Diff.Diam Union Straight

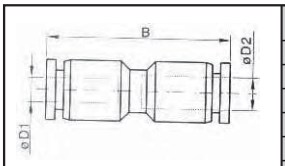

型号 / MODEL	øD1	øD2	B				
PG06-04	6	4	34.9				
PG08-06	8	6	38.6				
PG10-08	10	8	47.3				
PG12-10	12	10	48.9				

PUL L型二通
Union Elbow

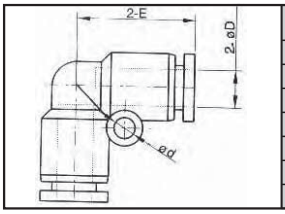

型号 / MODEL	øD	ød	E				
PUL04	4	—	17.5				
PUL06	6	3.2	19				
PUL08	8	3.2	22.8				
PUL10	10	4.2	27.6				
PUL12	12	4.3	29.6				
PUL16	16	5.1	33				

PIJ 等径直通
Tube Spicer

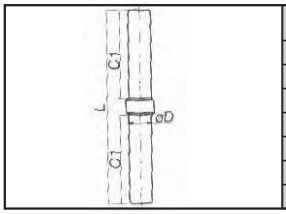

型号 / MODEL	L	C1	øD				
PIJ04	35	16	4				
PIJ06	37	17	6				
PIJ08	40	18.5	8				
PIJ10	46	21	10				
PIJ12	50	22.5	12				
PIJ16	54	24.8	16				

PIG 减径直通
Reducer Tube Spicer

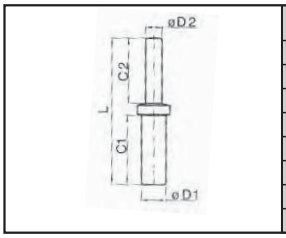

型号 / MODEL	L	C1	C2	øD1	øD2		
PIG06-04	36	17	16	6	4		
PIG08-04	39.5	18.5	18	8	4		
PIG08-06	38.5	18.5	17	8	6		
PIG10-06	44	22	19	10	6		
PIG10-08	42.5	21	18.5	10	8		
PIG12-08	47	24	20	12	8		
PIG12-10	46.5	22	21	12	10		
PIG16-12	54	24.8	22.5	16	12		

PP 管塞
Plug

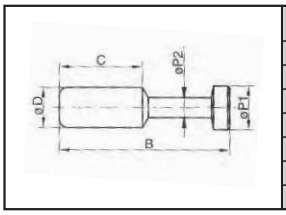

型号 / MODEL	øD	B	øP1	øP2	C		
PP04	4	28	5	3	15		
PP06	6	33	7	3	17		
Pp08	8	37	9	4	18		
PP10	10	42	11	5	20.5		
PP12	12	44	13	6	23		

常用接头
Metric Size - R/ Rc Thread Fitting

Rotary Joint
(高速旋转接头)

N Series


NHRC


NHRL


NHRS


NHRF


NRC


NRL

How to Order(型号选择):

Series (系列) — Tube Outer Dia. (适用连管外径)(øD) — Thread Size Code (连接径呼称)

Ex.(例): NHRC04–01,NHRF01–02

Series (系 列)	Thread Size(连接径)		Tube Outer Dia.(适用软管外径)ød(mm)				
	Size(尺寸)(T)	Code(呼称)	ø4	ø6	ø8	ø10	ø12
NHRC (øD-T)	M5×0.8	M5	○				
	M6×1.0	M6	○				
	1/8"	01	○	○	○		
	1/4"	02		○	○		
	3/8"	03				○	○
	1/2"	04				○	○
NHRL (øD-T)	M5×0.8	M5	○				
	M6×1.0	M6	○				
	1/8"	01	○	○	○		
	1/4"	02		○	○		
	3/8"	03				○	○
	1/2"	04				○	○
NHRS (T1-T2)			NHRS01–01	NHRS02–01	NHRS03–03	NHRS04–03	
			NHRS01–02	NHRS02–02	NHRS03–04	NHRS04–04	
NHRF (T1-T2)			NHRF01–01	NHRF02–01	NHRF03–03	NHRF04–03	
			NHRF01–02	NHRF02–02	NHRF03–04	NHRF04–04	
NRC (øD-T)	M5×0.8	M5	○				
	M6×1.0	M6	○	○			
	1/8"	01	○	○			
	1/4"	02		○	○		
	3/8"	03			○		
	1/2"	04			○	○	○
NRL (øD-T)	M5×0.8	M5	○			○	○
	M6×1.0	M6	○	○			
	1/8"	01	○	○	○		
	1/4"	02		○	○		
	3/8"	03			○	○	○
	1/2"	04				○	○
RPM(回转数)	NHR Series		1500	1200	1200	1000	1000
	NR Series		500	500	400	300	250

※Note: T=Thread Size(外螺纹径).

YSC 单向节流阀 Speed Controllers

NSF 管道型 Union

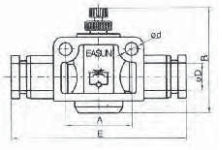

型号 / MODEL	øD	ød	A	B	E		
NSF04	4	3.2	14	25.7	39.5		
NSF06	6	4.3	20	41.9	47.6		
NSF08	8	4.3	22	15.6	52.6		
NSF10	10	4.3	26	42.3	63.1		
NSF12	12	4.3	32	55	74.2		

NSE 直接安装L型 Elbow

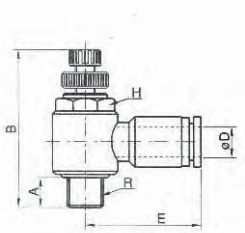

型号 / MODEL		øD	R	A	B	E
限出型/ Contro Out	限入型/ Contro IN					
NSE04-M5	NSE04-M5B	4	M5	3.8	28.2	20
NSE04-01	NSE04-01B	4	R1/8	7.5	38.9	22.3
NSE04-02	NSE04-02B	4	R1/4	11.2	46.8	24.1
NSE06-M5	NSE06-M5B	6	M5	3.8	28.2	21.9
NSE06-01	NSE06-01B	6	R1/8	7.5	38.9	23.1
NSE06-02	NSE06-02B	6	R1/4	11.2	46.8	25.1
NSE06-03	NSE06-03B	6	R3/8	12.3	51.3	26.8
NSE06-04	NSE06-04B	6	R1/2	14	56.8	29.8
NSE08-01	NSE08-01B	8	R1/8	7.5	38.9	25.6
NSE08-02	NSE08-02B	8	R1/4	11.2	46.8	28.6
NSE08-03	NSE08-03B	8	R3/8	12.3	52.3	29.6
NSE08-04	NSE08-04B	8	R1/2	14	56.8	32.6
NSE10-01	NSE10-01B	10	R1/8	7.5	38.9	30.1
NSE10-02	NSE10-02B	10	R1/4	11.2	46.8	32.3
NSE10-03	NSE10-03B	10	R3/8	12.3	52.3	32.9
NSE10-04	NSE10-04B	10	R1/2	14	56.8	35.9
NSE12-02	NSE12-02B	12	R1/4	11.2	46.8	33.5
NSE12-03	NSE12-03B	12	R3/8	12.3	52.3	35.6
NSE12-04	NSE12-04B	12	R1/2	14	56.8	36.6

YAS,YSC 管道型/金属阀身 In-Line Type/Metal Body

YAS500

YAS600

Model No. (型 号)	Screw Size (口 径)	Free Flow(自有流量)		Control Flow(控制流量)		Weight (质量)(g)
		Flow(流量)(l/min)注1)	Eff. Sectional Area(有效断面积)(mm²)	Flow(流量)(l/min)注1)	Eff. Sectional Area(有效断面积)(mm²)	
YAS500–06	3/4”	10100	154	8100	123	0.68
YAS600–10	1”	15100	230	16900	258	1.34

Dimensions(mm)(外形尺寸图(毫米))

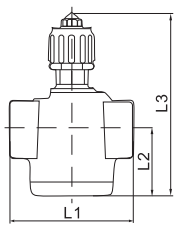

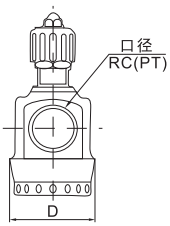

Model No. (型 号)	Pipe Size (口 径)	L1	L2	L3		D
				Max.(最大)	Min.(最小)	
YAS500	Rc(PT)3/4”	74	42	115	115	50
YAS600	Rc(PT)1”	90	56	148	148	62
YSC–20A	Rc(PT)3/4”	74	42	115	115	50
YSC–25A	Rc(PT)1”	90	56	148	148	62

YSC | Speed Controller(In-Line Type/Metal Body)(限流器(管道型/金属阀身))
YAS series

图形符号

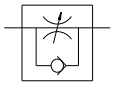

COMMON SPECIFICATIONS(共同规格)

Model(型号)	YAS2000 ~ 4000
Proof Press.(耐压)	1.5MPa{15.3kgf/cm^2}
Max. Press.(最高使用压力)	1.0MPa{10.2kgf/cm^2}
Min. Press.(最低使用压力)	0.05MPa{0.51kgf/cm^2}
Amb. Temp.(环境和流体温度)	5 ~ 60℃
No.of Meedle Rotations(调整流量转数)(转)	8

Model No. (型 号)	Screw Size (口 径)	Free Flow(自由流量)		Control Flow(控制流量)		Wt.(质量) (g)
		Flow(流量)(l/min)注1)	Eff. Sectional Area(有效断面积)(mm^2)	Flow(流量)(l/min)注1)	Eff. Sectional Area(有效断面积)(mm^2)	
YAS2000–01	1/8"	340	5.2	250	3.8	90
YAS2000–02	1/4"	340	5.2	250	3.8	115
YAS4000–02	1/4"	1670	25.5	1670	25.5	205
YAS4000–03	3/8"	1670	25.5	1670	25.5	205
YAS4000–04	1/2"	1670	25.5	1670	25.5	205

Note(注1): Supply Pressure at(供应压力) 0.5MPa & Temp.(流体温度)20℃

Dimensions(mm)(外形尺寸图(毫米))

YAS2000

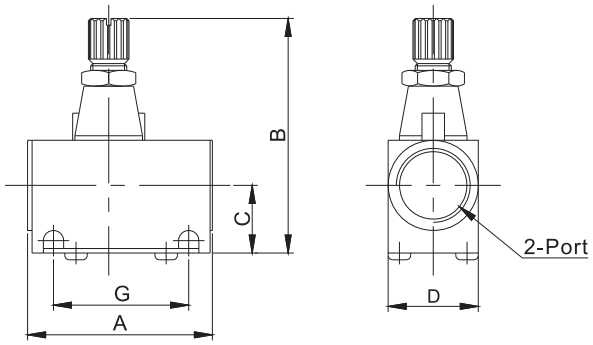

YAS4000

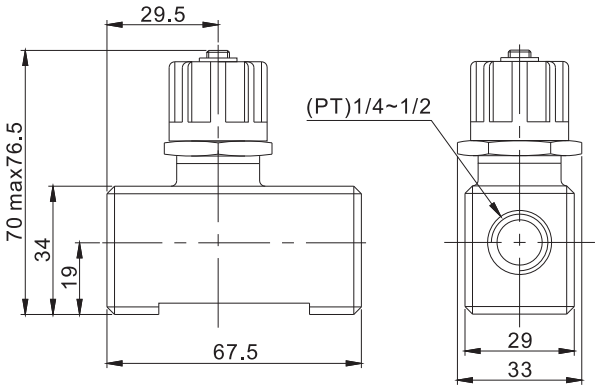

Model No. (型 号)	Pipe Size (接管口径)	A	B	C	D	G	Wt. (质量)(g)
YAS2000–01	1/8"	40	51	15	16	30	90
YAS2000–02	1/4"	40	53	17	20	30	115

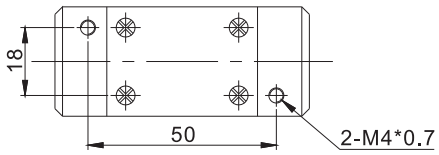

聚氨酯管

PU

特性&应用
- 柔韧性利于排管；
- 耐高压、抗震动、抗腐蚀、耐热、耐化学性和耐油；
- 低吸收率、低物理特性和低数值改变；
- 杰出耐气候性、抗弯曲和抗疲劳；
- 轻巧光滑的管子使得工作性能提高；

型号 MODEL	尺寸 Size (mm)	外径 O/D (mm)	内径 I/D (mm)	厚度 Thickness (mm)	爆破压力 Brust Pressure	最小弯曲半径 Min Radius (mm)	重量 Weight (g/m)	爆破压力at20°C kg/cm²	m/卷	颜色 Clour
U0425	4×2.5	4	2.5	0.75	23	10	9	5	200	白
U0604	6×4	6	4	1.00	23	15	19	5	200	红
U0805	8×5	8	5	1.50	23	23	37	5	100	绿
U1065	10×6.5	10	6.5	1.75	23	30	55	5	100	蓝
U1208	12×8	12	8	2.00	23	35	76	5	100	黑
U1612	16×12	16	12	2.00	23	60	106	5	100	黄

聚氨酯螺旋管

PU

特性&应用
- 重量轻，易于排管，较高的物理特性，耐寒冷和抗冲击；
- 材质：聚氨酯
- 应用：工业机器人、气动工具、集中润滑&空气工具；

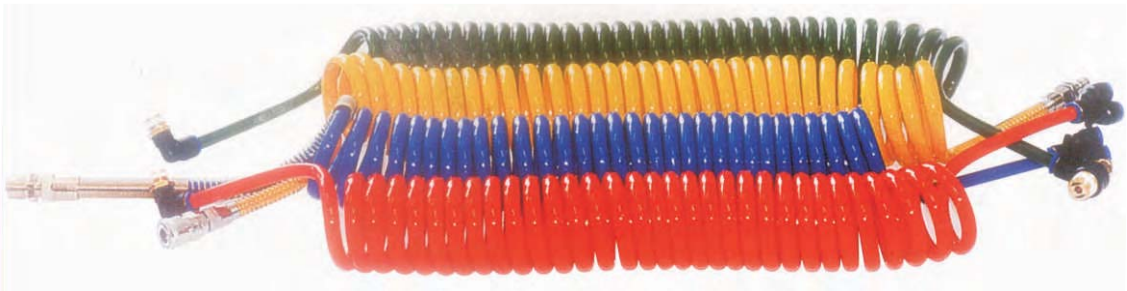

型号 MODEL	尺寸 Size (mm-m)	A (mm)	B (mm)	C (mm)	D (mm)	E (mm)	工作压力 Coomon Press (mm)	耐压力 MAX Press. (mm)	颜色 Clour
UC06045-50	6×4-5	400	70	260	70	25.3	8.2	9.9	蓝 黑
UC08050-50	8×5-5	1,000	500	400	100	34	8.2	9.9	
UC08050-100	8×5-10	1,400	500	800	100	34	8.2	9.9	
UC10065-50	10×6.5-5	1,000	500	400	100	42	8.2	9.9	
UC10065-100	10×6.5-10	1,400	500	800	100	42	8.2	9.9	
UC12080-50	12×8-5	990	500	390	100	60	8.2	9.9	
UC12080-100	12×8-10	1,380	500	780	100	60	8.2	9.9	

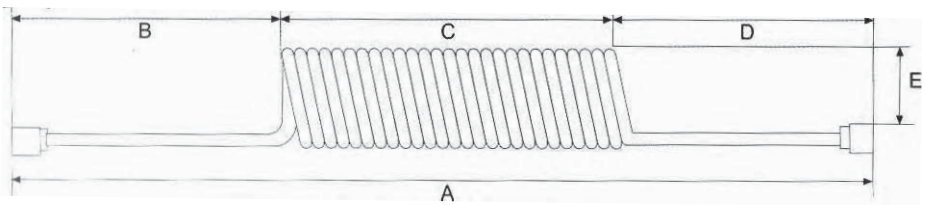

YSC Silencer(消声器) YAN series

图形符号

Sintered Metal Body Type (BC烧结金属体型)

COMMON SPECIFICATIONS(共同规格)

Max. Press.(最高工作压力)	0.99MPa{9.9kgf/cm^2}
Amn. Temp.(环境及流体温度)	5 ~ 150℃

Model No. (型 号)	Screw Size (接管口径)R(PT)	Eff. Sectional Area (有效断面积)(mm^2)	Noise Reduction (消声效果)(dB)(分贝)	Weight.(质量) (g)
YAN120–M3	M3x0.5	1	13	1
YAN120–M5	M5x0.8	5	18	3.3
YAN101–01	1/8"	20	16	9.5
YAN201–02	1/4"	50	26	35
YAN301–03	3/8"	70	38	45
YAN401–04	1/2"	100	55	60
YAN501–06	3/4"	150	80	80
YAN601–10	1"	200	110	100

Construction(内部构造)

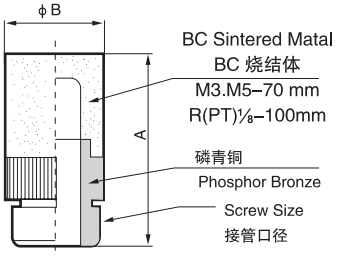

Synthetic Resins Body Type(聚乙醛体型)

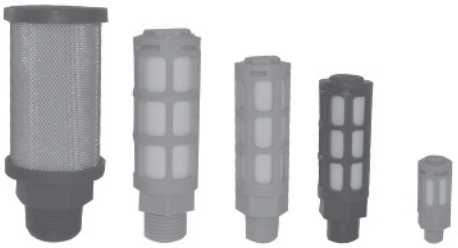

COMMON SPECIFICATIONS(共同规格)

Max. Press.(最高工作压力)	0.99{kgf/cm^2}
Noise Reduction(消声效果(分贝))	30 or More(以上)
Amb. Temp.(环境及流体温度)	5 ~ 60℃

Model No. (型 号)	Screw Size (接管口径)R(PT)	Eff. Orifice (有效断面积)(mm^2)	Wt.(质量) (kg)	Dimensions(mm)(外形尺寸图(毫米))		
				A	B	C
YAN200–02	1/4"	35	17	63	22	19
YAN300–03	3/8"	60	25	84	25	22
YAN400–04	1/2"	90	35	92	30	27
YAN500–06	3/4"	160	165	107	46	36
YAN600–10	1"	270	225	132	50	41
YAN700–12	11/4"	440	490	200	74	55
YAN800–14	11/2"	590	580	233	74	60
YAN900–20	2"	960	820	263	86	70

Construction(内部构造)

YAN200 ~ 400

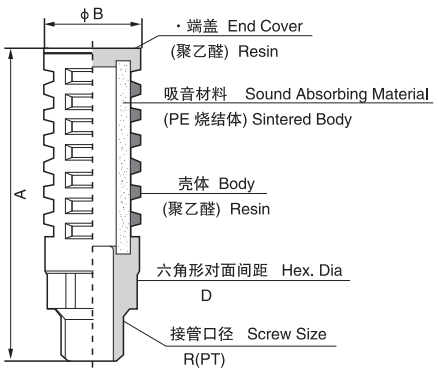

YAN500 ~ 900

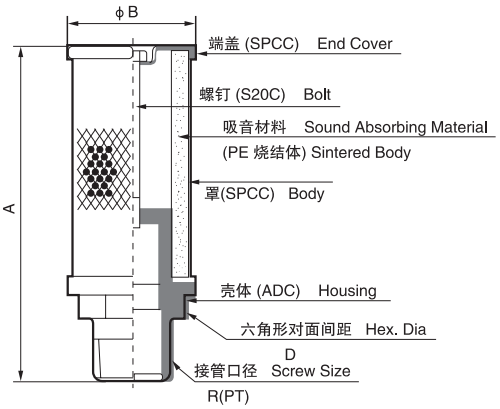

YSC | Vacuun Ejecyor(真空发生器)
YMVF series

Specifications (规格)

型号	YMVF90-20	YMVF90-40
最大真空度(-kPa)	80	80
使用空气压力(bar)	4~5.5	4~5.5
空气消耗量(L/min)	75~94	300~376
最大真空抽吸量(L/min)	142	795
抽吸功率(KW)	0.5	1
密封材质	NBR(标准)/Viton(选择)	
总重量(Kg)	1.1	1.4

产品特点：

YMVF系列真空发生器是完全靠压缩空气驱动的产品，因此其多管发生器比单管发生器效率高。通过控制压缩空气来获得所需的能量，从而获理所需的低真空。多喷管发射器具有非常高的效率并且能获得非常高的真空度，因此其空气消耗和成本都是比较低的。同时这款产品还有无污染、无振动、精致、量轻、易于安装、无发热现象等优点，现已在各行各业得到很好的应用。

不同真空度下的抽吸量(L/min)

型号	真空度(Vacuum Level) -kPa									
	0	10	20	30	40	50	60	70	80	90
YMVF90-20	398	230	149	73	52	40	27	16	7	0
YMVF90-40	795	459	298	146	103	81	54	31	13	0

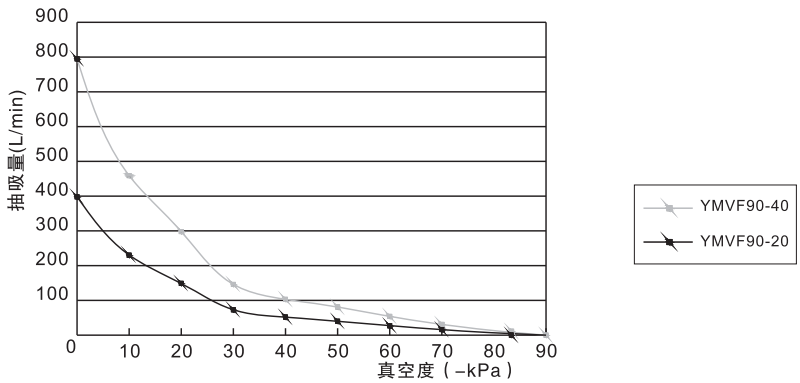

真空度到达时间(Sec/1000L)

型号	真空度(Vacuum Level) -kPa									
	0	10	20	30	40	50	60	70	80	90
YMVF90-20	0	14	36	79	176	307	493	786	1336	3063
YMVF90-40	0	7	18	39	88	154	246	393	668	1531

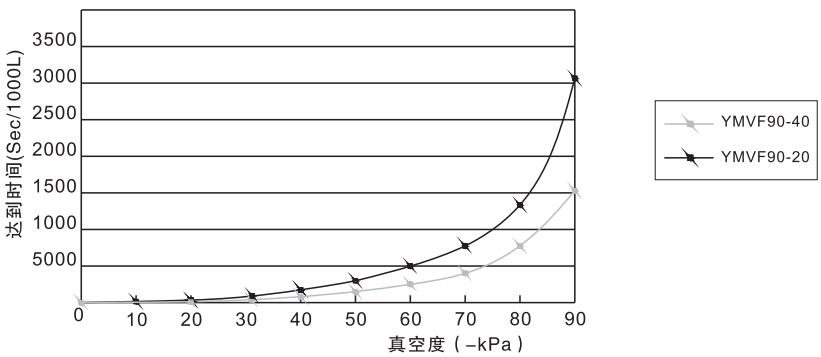

YMVF90-20 Dimension

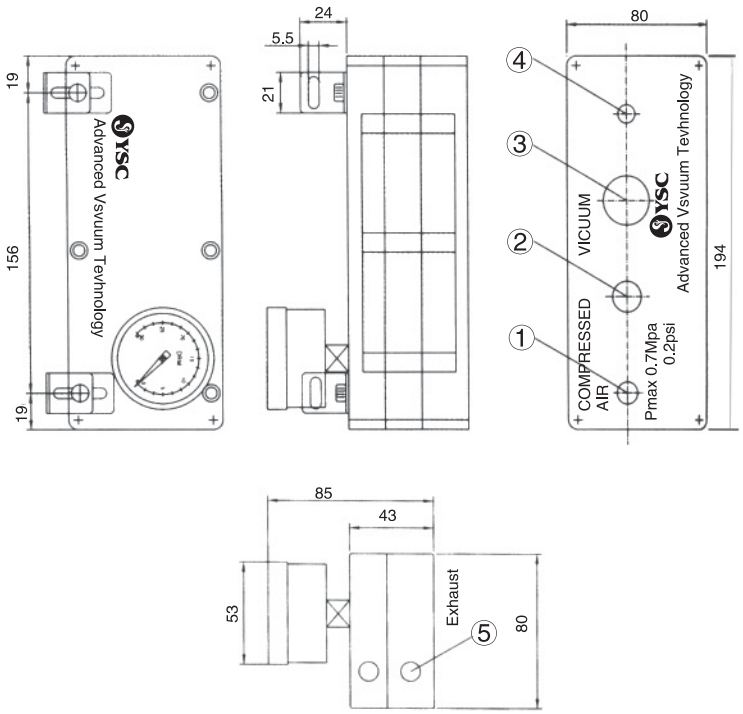

1. Vaccum PF1/8"
2. Vaccum PF3/8"
3. Vaccum PF3/4"
4. Compressed Air PF1/4"
5. Exhaust & Silencer(Built–in)

YMVF90-40 Dimension

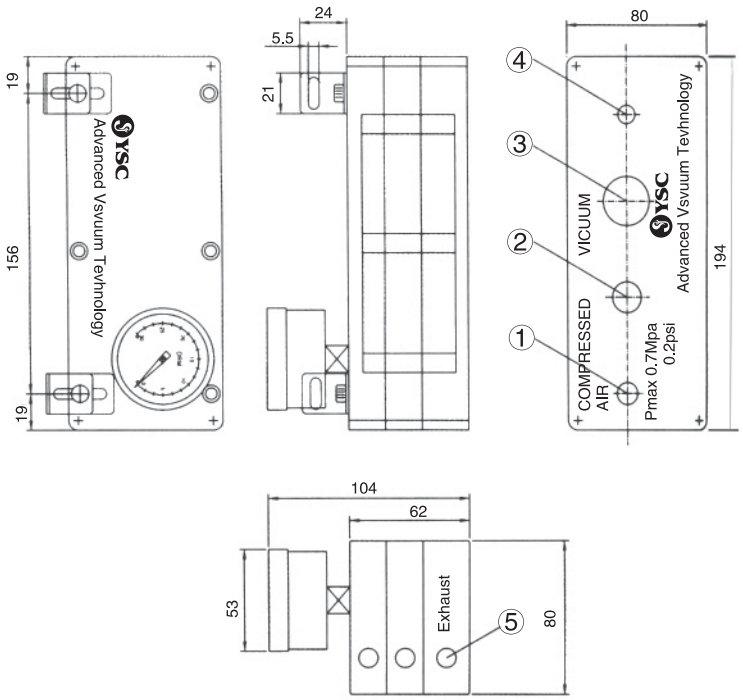

1. Vaccum PF1/8"
2. Vaccum PF3/8"
3. Vaccum PF3/4"
4. Compressed Air PF1/4"
5. Exhaust & Silencer(Built–in)

YSC | Vacuun Ejecyor(真空发生器)
YSV series

HOW TO ORDER(型号表示方法)

YSV - **10HS** - **CK**

- YSV: Model(代号)
- 10HS: Nozzle Dia.(喷嘴型)
- CK: Vacuum Switch(真空开关)
  - Nil: Basic(基本型)
  - C: Fixed Type(固定型)
  - CK: Adjustable Type(可变型)

COMMON SPECIFICATIONS(共同规格)

Fluid(流体)	Clean Air(洁净空气)
Amb.Temp(环境温度)	0~60°C
Lubrication(润滑)	Not Require(不需要)
Press. Range(工作压力范围)	0.1~0.97MPa(1~9.9kgf/cm²)
Vacuum Press.(真空压)	-690mmHg

●Basic Type(基本型)

Model(型号)	A	B	C	D	E	F	G	H	I	J	K	L	M	N	O
YSV-10HS	45	34	16	10	8	13.5	20	5	4.3	PT1/8”	10	PT1/8”	36	16	14
YSV-15HS	63	35	20	11	10	20	25	5	4.3	PT1/4”	15	PT1/4”	36	16	17
YSV-20HS	85	40	30	15	13	28	32	7	6.5	PT3/8”	20	PT1/4”	48	28	24

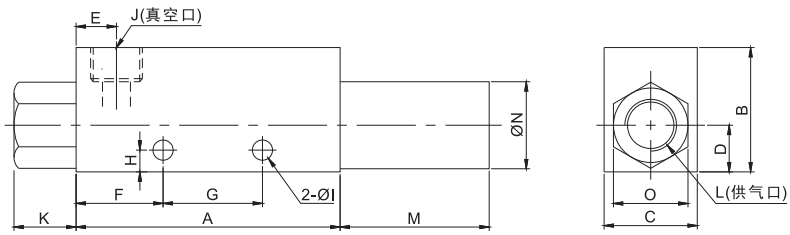

●C Type (With Fixed Vacuum Switch) (带固定型真空开关)

Model(型号)	A	B	C	D	E	F	G	H	I	J	K	L	M	N	O
YSV-10HS-C	45	34	16	10	8	13.5	20	5	4.3	PT1/8”	10	PT1/8”	36	16	14
YSV-15HS-C	63	35	20	11	10	20	25	5	4.3	PT1/4”	15	PT1/4”	36	16	17
YSV-20HS-C	85	40	30	15	13	28	32	7	6.5	PT3/8”	20	PT1/4”	48	28	24

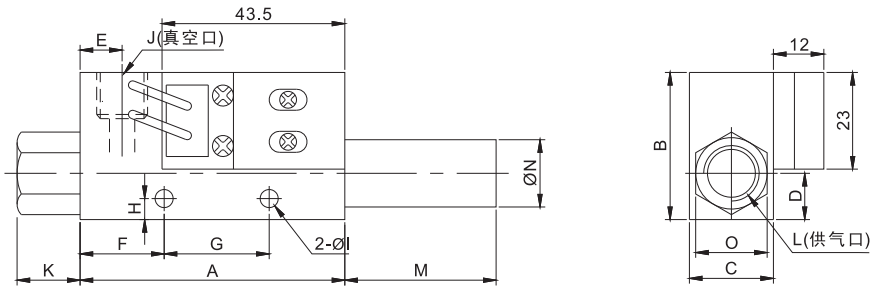

●CK Type (With Fixed Vacuum Switch) (带可变型真空开关)

Model(型号)	A	B	C	D	E	F	G	H	I	J	K	L	M	N	O
YSV-10HS-CK	45	34	16	10	8	13.5	20	5	4.3	PT1/8”	10	PT1/8”	36	16	14
YSV-15HS-CK	63	35	20	11	10	20	25	5	4.3	PT1/4”	15	PT1/4”	36	16	17
YSV-20HS-CK	85	40	30	15	13	28	32	7	6.5	PT3/8”	20	PT1/4”	48	28	24

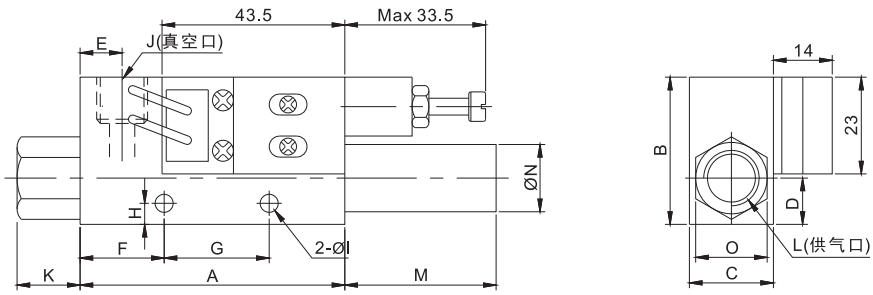

YSC | Vacuun Filter(真空过滤器)
YCF series

HOW TO ORDER(型号表示方法)

YCF - 03

Model(代号)
Pipe Size(接管口径)

Model (型号)	Pipe Size (接管口径)	Filteration (过滤度)	Fluid (使用流体)	Dimmensions(尺寸)								
				A	B	C	D	E	F	G	H	øI
YCF-03	PT 1/8	40μm	Air(空气)	58	32	40	45	16	8	PT1/8	18	4.5
YCF-05	PT 1/4			64	40	40	45	25	15	PT1/4	20	6
YCF-06	PT 3/8			69	46	40	45	30	18	PT3/8	23	6
YCF-600	PT 3/4			225	212	48	30	–	60	PT3/4	–	7
YCF-800	PT 1			225	212	48	30	–	60	Pt1	–	7

YCF-02,05,06

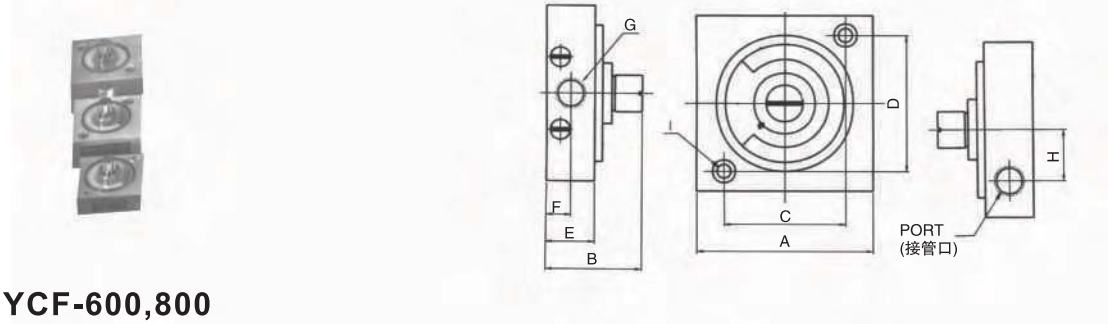

YCF-600,800

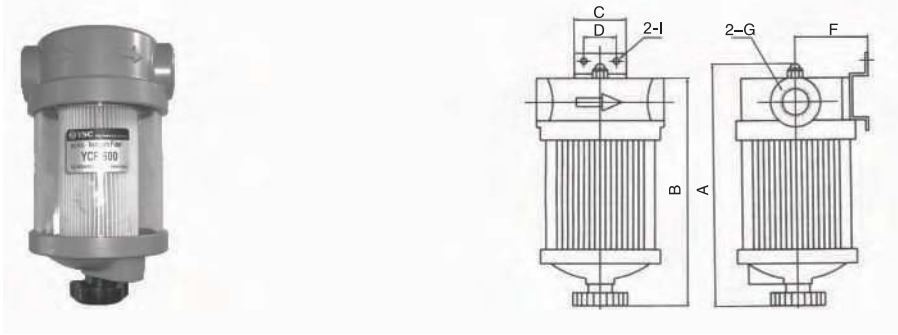

YSC Pressure Switch(压力开关)
YSNS series

YSNS
–C103
–C106
–C110
–C120
–C130

General Description

- For use with fluorinated refrigerants as with air and water(Allowable Fluid Temp:–10 to 120℃)
- Type YSNS for Universal application.
- Micro–switch ensures reliable switching.
- Mounting Bracket supplied as standard.
- With SPDT contact mechanism.

概　要

- 冷冻，冷却装置，冷却水装置。
- 使用在 液压，气压。
（使用流体温度–10~120℃）
- 安装板以标准型供应

ELECTRICAL FUNCTION(电气的功能)

Rated Voltage(V) (额定电压) / Rated Amps. (额定电压)		Power Factor (COS ϕ)	125/250V AC
Non–Inductive Current		1	12
Inductive Current (感应电流)	Full Load	0.75	12
	Locked Roter	0.45	72

■Contact Function(接点形式)

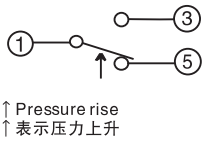

1	Common Terminal(共同点)
2	Close in, Pressure Decrease(压力上升接点)
3	Close on,Pressure Increase(压力下降接点)

■Pressure Connections(接点构造)

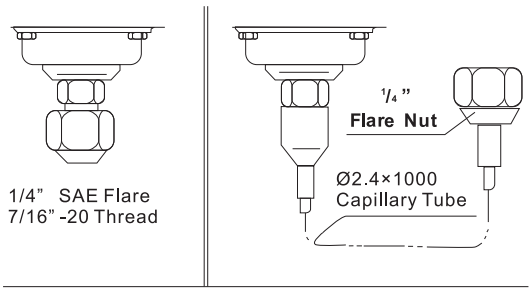

Standard (标准)　　Available upon request (任选)

■Mounting Bracket (标准安装板)

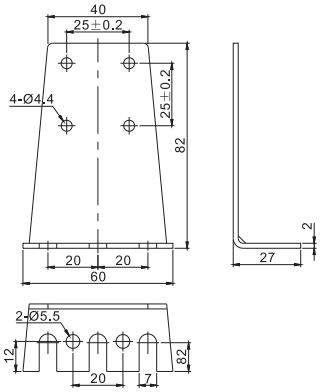

Dimensions(mm)(外形尺寸图(毫米))

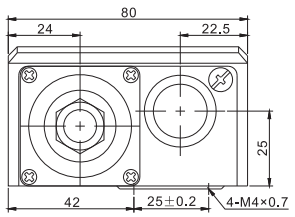

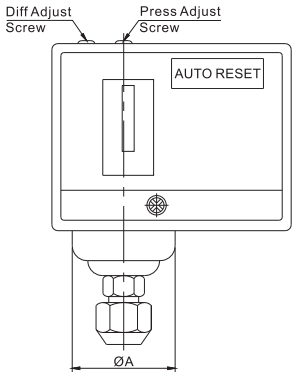

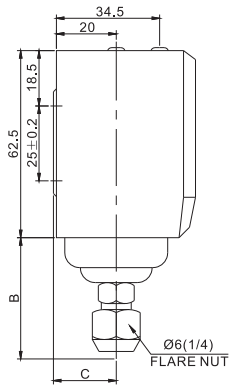

Appearance Drawing

COMMON SPECIFICATIONS(共同规格)

Model No.(型号)		Range(调整范围)(MPa)		Differential(输入压力差)(MPa)		Factory Setting(设定值)(MPa)		Max.Bellows Pressture (最高工作压力) MPa(kgf/cm²)	Wt (质量)	A	B	C
		Min.(最低)	Max.(最高)	Min.(最低)	Max.(最高)	OFF(ON)	ON(OFF)					
YSNS–	C103	–50cmHg	0.3	0.035	0.2	0.05	0.15	1.0(11.0)	0.42kg	38.5	38.9	22.4
	C106	–50cmHg	0.6	0.06	0.4	0.2	0.3	1.65(16.5)		34.4	36	22.4
	C110	0.1	1.0	0.1	0.3	0.4	0.6	1.65(16.5)		34.4	36	22.4
	C120	0.5	2.0	0.3	0.5	1.5	1.2	4.0(40.0)		22	32.7	18.5
	C130	0.5	3.0	0.3	1.0	2.0	1.5	4.0(40.0)				