40071

LINKS SERIES™



USER'S MANUAL

Industrial Battery Charger

Models 28080, 28090, 28100

Important Safety, Installation, Operation, and Maintenance Instructions

Lester ELECTRICAL

MADE IN U. S. A.

www.LesterElectrical.com

CHARGER RATINGS LABEL

The ratings label is located on the back of the charger. The label provides the model (MODEL), serial number (SERIAL), AC input configuration (AC VOLTS, AC AMPS, PHASE and HERTZ) and DC output specifications (CELLS, DC VOLTS, DC AMPS and AMP HRS) of the charger. TYPE indicates the factory-configured battery type.

An example charger ratings label is provided below.

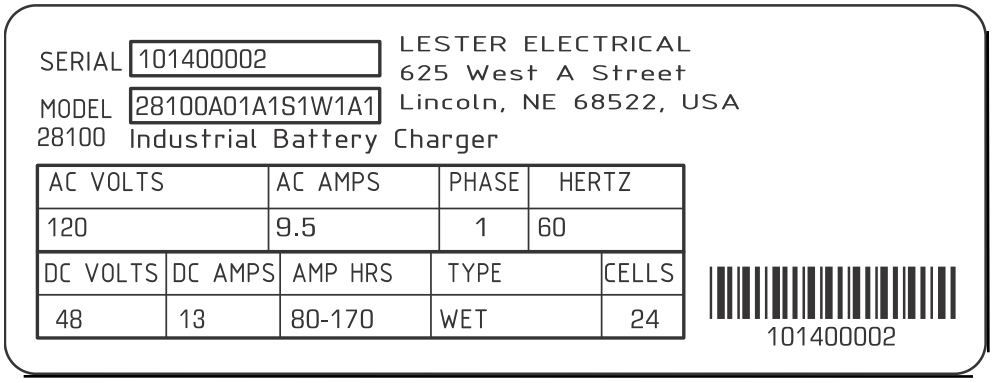

Please fill in the blank label that is provided below with the information from the ratings label on your charger for future reference.

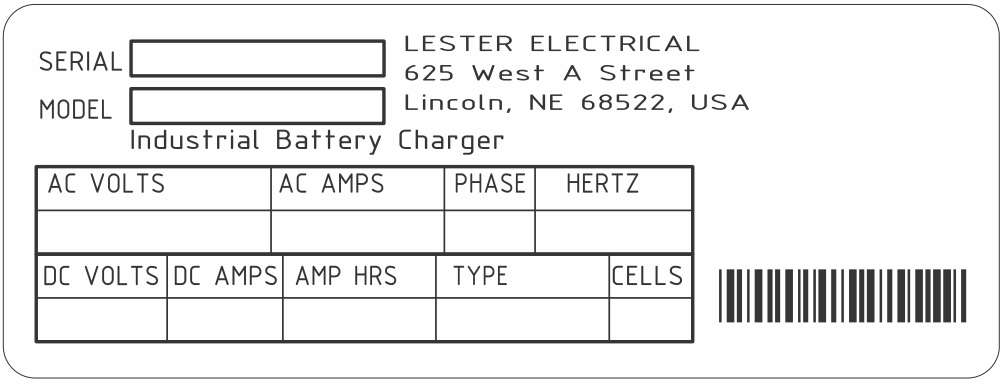

Document any configuration or settings changes that are made by marking the ratings label on your charger or on an additional label or tag attached to your charger.

SAVE THIS MANUAL: Keep it in a location where it is available to anyone who may operate the charger.

TABLE OF CONTENTS

CHARGER RATINGS LABEL 2

TABLE OF CONTENTS 3

IMPORTANT SAFETY INSTRUCTIONS 4

1. INTRODUCTION 6

2. RECEIVING THE CHARGER 6

3. STORAGE 6

4. BATTERY TYPE 6

5. OFF-BOARD (SHELF) CHARGING 7

6. LOCATION AND INSTALLATION 8

7. AC INPUT 8

8. DC OUTPUT 9

    8.1 ROUND MOLDED 3-PIN CLUB CAR PLUG 9

9. PROPER CARE OF DEEP-CYCLE MOTIVE POWER BATTERIES 10

    9.1 Personal Safety Precautions 10

10. CHARGER OPERATION 11

    10.1 Off-Board Charger Operation: 12

    10.2 Storage Mode Operation 12

11. LED INDICATORS 13

12. FAULTS 14

13. MAINTENANCE 15

    13.1 Check Charger Area 15

    13.2 Visual Inspections 15

    13.3 Battery Conditions 15

14. TROUBLESHOOTING AND SERVICE 16

IMPORTANT SAFETY INSTRUCTIONS

1. **SAVE THESE INSTRUCTIONS – This manual contains important safety and operating instructions.**

2. **Before using battery charger, read all instructions and cautionary markings on battery charger, battery, and product using battery.**



LOOK FOR THIS SYMBOL TO POINT OUT SAFETY PRECAUTIONS. IT MEANS: *BE ALERT—YOUR SAFETY IS INVOLVED.* IF YOU DO NOT FOLLOW THESE SAFETY INSTRUCTIONS, INJURY OR PROPERTY DAMAGE CAN OCCUR.

3. **DANGER: TO REDUCE THE RISK OF FIRE OR ELECTRIC SHOCK, CAREFULLY READ AND FOLLOW THESE IMPORTANT SAFETY AND OPERATING INSTRUCTIONS BEFORE INSTALLING OR OPERATING THE CHARGER.**

4. **INSTRUCTIONS IMPORTANTES CONCERNANT LA SECURITÉ.**

5. **WARNING: TO REDUCE THE RISK OF FIRE, INSTALL THIS BATTERY CHARGER ON A SURFACE OF NON-COMBUSTIBLE MATERIAL SUCH AS BRICK, CONCRETE, OR METAL.**

6. **DANGER: RISK OF ELECTRIC SHOCK. DISCONNECT CHARGER FROM BATTERY AND AC POWER BEFORE SERVICING. TURNING OFF THE CHARGER DOES NOT REDUCE THIS RISK.**

7. **DANGER: RISK OF ELECTRIC SHOCK. DO NOT TOUCH UNINSULATED PORTION OF AC OR DC CONNECTORS OR UNINSULATED BATTERY TERMINAL.**

8. **DANGER: RISQUE DE CHOCKS ÉLECTRIQUES. NE PAS TOUCHER LES PARTIES NON ISOLÉES DU CONNECTEUR DE SORTI OU LES BORNES NON ISOLÉES DE L'ACCUMULATEUR.**

9. **CAUTION: CHARGE ONLY LEAD-ACID BATTERIES. OTHER TYPES OF BATTERIES MAY BURST CAUSING PERSONAL INJURY AND DAMAGE. BEFORE CHARGING ANY OTHER TYPE OF RECHARGEABLE BATTERY, CHANGE THE CHARGER SETTINGS AS RECOMMENDED BY THAT BATTERY MANUFACTURER.**

10. **ATTENTION: UTILISER POUR CHARGER UNIQUEMENT LES ACCUMULATEURS AU PLOMB À ELECTROLYTE LIQUIDE. D'AUTRES TYPES D'ACCUMULATEURS POURRAIENT ÉCLATER ET CAUSER DES.**

11. **CAUTION: DO NOT EXPOSE TO RAIN. INDOOR USE ONLY.**

12. **ATTENTION: NE PAS EXPOSER À LA PLUIE.**

13. **DANGER: TO PREVENT ELECTRICAL SHOCK, DO NOT TOUCH EITHER AC OR DC UNINSULATED PARTS. MAKE SURE ALL ELECTRICAL CONNECTORS ARE IN GOOD WORKING CONDITION. DO NOT USE CONNECTORS THAT ARE CRACKED, CORRODED OR DO NOT MAKE ADEQUATE ELECTRICAL CONTACT. USE OF A DAMAGED OR DEFECTIVE CONNECTOR MAY RESULT IN A RISK OF OVERHEATING OR ELECTRIC SHOCK.**

14. **WARNING: HAZARD OF ELECTRIC SHOCK.**

15. **⚠WARNING: LEAD-ACID BATTERIES GENERATE EXPLOSIVE GASES. TO PREVENT ARCING OR BURNING NEAR BATTERIES, DO NOT DISCONNECT DC CHARGING CORD FROM BATTERIES WHEN THE CHARGER IS OPERATING. KEEP SPARKS, FLAME, AND SMOKING MATERIALS AWAY FROM BATTERIES.**

16. **⚠WARNING: ALWAYS SHIELD EYES WHEN WORKING NEAR BATTERIES. DO NOT PUT WRENCHES OR OTHER METAL OBJECTS ACROSS BATTERY TERMINAL OR BATTERY TOP. ARCING OR EXPLOSION OF THE BATTERY CAN RESULT.**

17. **⚠WARNING: BATTERIES PRODUCE HYDROGEN GAS, WHICH CAN EXPLODE IF IGNITED. NEVER SMOKE, USE AN OPEN FLAME, OR CREATE SPARKS NEAR THE BATTERY. VENTILATE THE AREA WHEN THE BATTERY IS CHARGING IN AN ENCLOSED PLACE.**

18. **⚠WARNING: LEAD-ACID BATTERIES CONTAIN SULFURIC ACID, WHICH MAY CAUSE BURNS. DO NOT GET ACID IN EYES, ON SKIN, OR CLOTHING. IF CONTACT WITH THE EYES OCCURS, FLUSH IMMEDIATELY WITH CLEAN WATER FOR 15 MINUTES AND OBTAIN MEDICAL ATTENTION.**

19. **⚠WARNING: ONLY YOUR DEALER'S QUALIFIED SERVICE TECHNICIANS SHOULD PROGRAM OR SERVICE THIS EQUIPMENT.**

20. **⚠CAUTION: DO NOT OPERATE THE CHARGER IF IT HAS RECEIVED A SHARP BLOW, BEEN DROPPED, OR OTHERWISE DAMAGED. HAVE YOUR DEALER'S QUALIFIED SERVICE TECHNICIAN EXAMINE AND REPAIR AS NEEDED.**

21. **⚠WARNING: DO NOT DISASSEMBLE THE CHARGER. HAVE THE CHARGER EXAMINED BY YOUR DEALER'S QUALIFIED SERVICE TECHNICIAN. INCORRECT RE-ASSEMBLY OF THE CHARGER MAY RESULT IN AN EXPLOSION, ELECTRIC SHOCK, OR FIRE.**

22. **⚠CAUTION: MAKE SURE THE BATTERY SYSTEM HAS THE PROPERLY RATED VOLTAGE, AMP-HOURS, AND TYPE ("WET", "AGM", "GEL", ETC.) FOR THIS CHARGING SYSTEM.**

23. **⚠WARNING: NEVER CHARGE A FROZEN BATTERY**

24. **⚠WARNING: CONNECT AND DISCONNECT DC OUTPUT CORD ONLY AFTER REMOVING AC CORD FROM THE ELECTRICAL OUTLET.**

25. **⚠CAUTION: POSITION AC AND DC CORDS TO REDUCE RISK OF DAMAGE BY HOOD, DOOR OR MOVING ENGINE PART.**

26. **⚠DANGER: STAY CLEAR OF FAN BLADES, BELTS, FULLEYS, AND OTHER PARTS THAT CAN CASE INJURY TO PERSONS.**

27. **⚠CAUTION: CHECK POLARITY OF BATTERY POSTS. A POSITIVE (POS, P, +) BATTERY POST USUALLY HAS A LARGER DIMETER THAN NEGATIVE (NEG, N, -) POST.**

SAVE THESE INSTRUCTIONS

1. INTRODUCTION

This Links Series battery charger is an advanced, microprocessor-based, silicon-controlled rectifier (SCR) charger designed to optimize both daily battery capacity and overall battery life. It plugs directly into standard 120V, 15A, 60 Hz AC outlets/receptacles for use in off-board (shelf) applications. The charger is natural convection cooled with no moving parts. It was factory-configured to charge wet/flooded, AGM, or gel deep-cycle lead-acid batteries, and includes a jumper that can be used to select between two battery profiles in the field. This charger features fully-automatic operation and LEDs to monitor charge cycle status.

Figure 1-1 provides specifications for Links Series models 28080, 28090, and 28100.

Model Number	DC Output Volts	DC Output Amps	Amp-Hour Rating, C20 Rate (12 Hrs)	AC Input Amps	Shipping Weight, Approx (Lbs.)
28080	36	21	130 - 225	11.5	37
28090	36	25	150 - 305	13.5	39
28100	48	13	80 - 170	9.5	31

Figure 1-1: Specifications for Links Series Models 28080, 28090, and 28100

2. RECEIVING THE CHARGER

Unpack the charger and examine it for shipping damage. In the event that shipping damage is found, report it as a claim with the freight company.

3. STORAGE

When the charger is stored prior to being installed and powered up, it must be stored indoors in a clean and dry environment where the temperatures will remain within the range of -40 °F to 185 °F (-40 °C to 85 °C). The charger should be stored upright in the shipping carton that it was shipped in. This will help protect the charger from dust and abrasion. It should be stored in an area where it is not likely to be damaged. Do not stack anything on top of the charger.

4. BATTERY TYPE

⚠WARNING: DISCONNECT BOTH AC AND DC POWER FROM THE CHARGER BEFORE OPENING THE CASE. CONTACT WITH LIVE COMPONENTS WITHIN THE CHARGER COULD CAUSE ELECTRICAL SHOCK, SERIOUS INJURY, OR DEATH.

This charger is designed to charge deep-cycle lead-acid batteries of wet/flooded, AGM (absorbed glass mat), or gel design. The charger is factory-configured to charge the type of battery indicated in the TYPE field on the charger ratings label (for example, “Wet”). Additionally, the charger includes a secondary battery profile available via a jumper that is accessible behind the plug on the front panel. The last four (4) characters in the charger part number, available in the MODEL field on the charger ratings label, provide the battery profile codes for both the primary and secondary battery profiles. For example, charger part number 28100A01A1S1W1A1 has a primary battery profile code of “W1” and a secondary battery profile code of “A1”. Figure 4-1 lists standard battery profile codes and their corresponding battery profiles. If a battery profile code for your charger is not listed in Figure 4-1, please contact your dealer regarding which battery profiles are available on your charger.

Part Number Battery Profile Code	Battery Profile
W1	Wet, standard
A1	AGM, standard
G1	Gel, standard

Figure 4-1: Standard Battery Profile Codes and Their Corresponding Battery Profiles

To change the active battery profile on your charger, remove the front panel plug and position the jumper as shown in Figure 4-2. Profile 1 is the primary battery profile and the factory-configured jumper position. Profile 2 is the secondary battery profile. If changed from the factory-configured jumper position, Profile 1, mark the charger ratings label or add an additional label or tag.

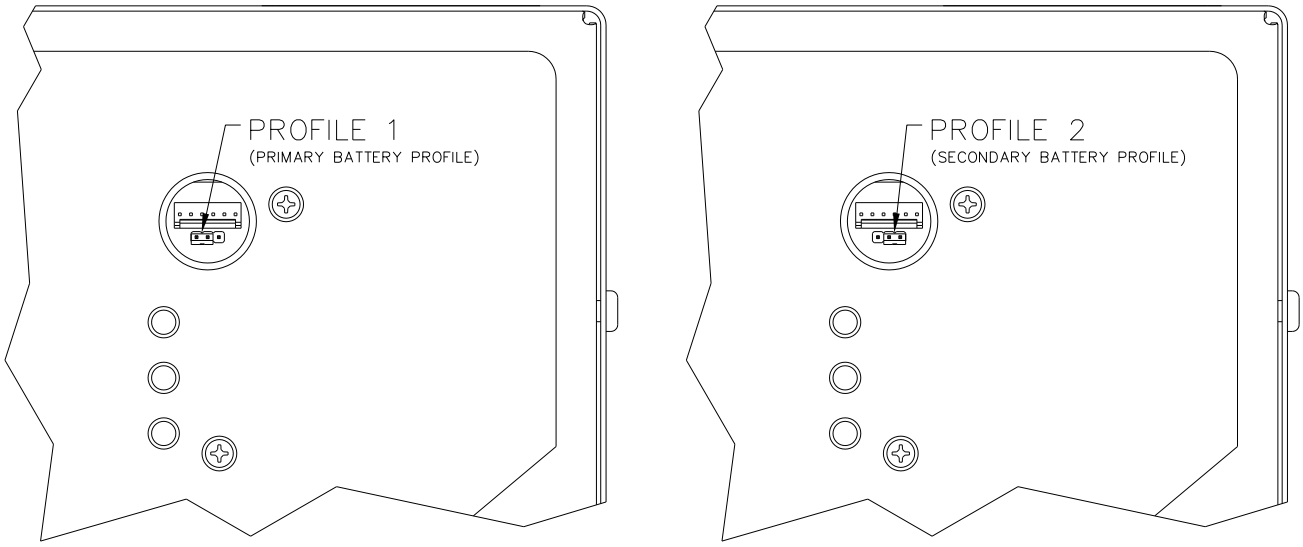

Figure 4-2: Setting the Battery Profile Jumper Determines the Battery Type

⚠CAUTION: THIS CHARGER IS FOR USE ONLY ON RECHARGEABLE DEEP-CYCLE LEAD-ACID BATTERY SYSTEMS OF THE SAME TYPE AS THE SELECTED BATTERY PROFILE. BATTERIES IMPROPERLY MATCHED WITH THE CHARGER MAY BURST CAUSING PERSONAL INJURY AND DAMAGE TO BATTERIES OR CHARGER.

Battery manufacturers frequently use the same battery cases for different battery types. Wet batteries have removable cell caps. Water electrolyzed by discharging and charging the battery is replaced through these openings. Sealed batteries are generally distinguished by non-removable cell caps. The physical appearance of the battery case is frequently the same as a wet battery, though the cell caps are generally not removable. Refer to the battery manufacturer's information panel on the battery case to determine the type battery you have. If the information panel is missing or not legible, do not use the battery.

5. OFF-BOARD (SHELF) CHARGING

This charger is configured for off-board charging. Off-board chargers are designed to be used in shelf or portable applications. They include rubber feet. If the AC input plug is connected to AC power, a new charge cycle automatically starts when the DC output is connected to a battery pack of the proper voltage. Disconnecting and reconnecting AC power while the DC output remains connected to a battery pack WILL NOT automatically start a new charge cycle (unless a storage mode condition has been met). Disconnecting the DC output from the battery pack IS REQUIRED to automatically start a new charge cycle.

6. LOCATION AND INSTALLATION

⚠WARNING: DO NOT INSTALL THE CHARGER ON OR NEAR FLAMMABLE MATERIALS. POSITION THE CHARGER ON A FOUNDATION OF STONE, BRICK, CONCRETE OR GROUNDED METAL.

⚠WARNING: CHARGERS CAN IGNITE FLAMMABLE MATERIALS AND VAPORS. DO NOT USE NEAR FUELS, GRAIN DUST, SOLVENTS, THINNERS, OR OTHER FLAMMABLES.

The charger may have been attached to a plywood board in the factory to protect it during shipping. If so remove the plywood shipping board before installation and operation of the charger.

Proper installation of the charger is important in order to achieve good performance and to prevent damage to the charger and batteries. The charger should be located in a clean, cool, dry, and well ventilated area. To permit free airflow for convection cooling, allow 2 inches (5.08 cm) minimum between the charger ventilation openings and any walls or other objects. Do not obstruct the airflow space around and beneath the charger. Do not allow clothing, blankets, or other materials to cover the charger.

Install the charger in an area where the temperatures will remain within the range of -13 °F to 122 °F (-25 °C to 50 °C) and the relative humidity will remain below 95 percent (%). Exceeding these ranges will reduce the current capacity and possibly the service life of the charger. If the charger will be operated outside of these ranges, contact your dealer to verify if it will withstand these conditions and perform at the needed capacity.
Do not operate the charger with a damaged AC or DC cable or connector. Do not operate the charger if it has received a sharp blow, was dropped, or was otherwise damaged in any manner. Contact your dealer.

⚠WARNING: REPLACE WORN, DAMAGED, OR CUT ELECTRICAL CORDS AND PLUGS IMMEDIATELY.

⚠WARNING: KEEP DRY; DO NOT EXPOSE TO RAIN OR SPRAY. FOR STORAGE, KEEP CHARGER IN A BUILDING. NE PAS EXPOSER A LA PLUIE.

7. AC INPUT

This charger must be connected to a single-phase nominal 120 Vac, 60 Hz AC power source with a voltage of 110 Vac to 132 Vac (charge times increase at lower AC voltages). The frequency must be 57 Hz to 63 Hz. Circuit breaker or fuse protection for the AC outlet to which the charger is connected should allow 15A per charger. Do not overload an electrical outlet.

This charger must be grounded to reduce the risk of electric shock. It is equipped with an AC cable with an equipment-grounding conductor and a grounding-type connector. The connector must be plugged into an appropriate outlet that is properly installed and grounded in accordance with the National Electrical Code and all local codes and ordinances.

⚠DANGER: IMPROPER CONNECTION OF THE GROUNDING CONDUCTOR CAN RESULT IN A RISK OF ELECTRIC SHOCK. DO NOT REMOVE GROUNDING PRONG FROM PLUG.

The conductor with insulation having an outer surface that is green, with or without a yellow stripe(s), is the equipment-grounding conductor. If repair or replacement of the AC cable or connector is necessary, do not connect the equipment-grounding conductor to a live terminal. Contact your dealer. This charger is equipped with a grounding connector as illustrated in Figure 7-1 A, for use on a nominal 120 Vac, 60 Hz circuit. A temporary adapter, as illustrated in Figures 7-1 B and C, may be used to plug this connector into a two-pole receptacle as shown in Figure 7-1 C if a properly grounded outlet is not available (NOTE: use of an adapter as shown in Figures 7-1 B and C is NOT permitted in Canada). The temporary adapter should be used only until a properly grounded outlet can be installed by a qualified electrician. The green-colored rigid ear extending from the adapter must be connected to a permanent ground such as a properly grounded outlet box.

⚠DANGER: BEFORE USING THE ADAPTER AS ILLUSTRATED, BE CERTAIN THAT THE CENTER SCREW OF THE OUTLET PLATE IS GROUNDED.

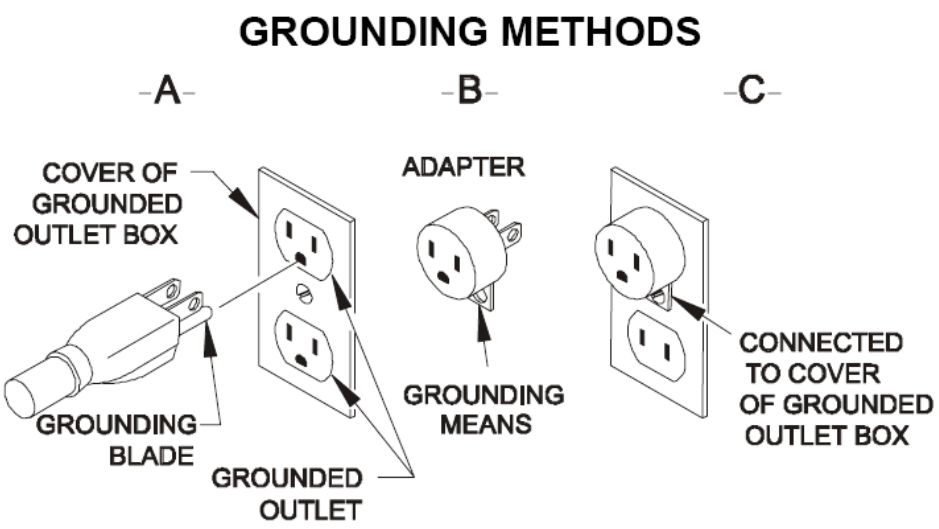

Figure 7-1: Grounding Methods
(NOTE: Use of an adapter as shown in Figures B and C is NOT permitted in Canada)

Use of an extension cord with the charger should be avoided. Use of an improper extension cord could result in a risk of a fire and electrical shock. If an extension cord is needed, use a three-conductor, No. 14 AWG (or larger) cord that is grounded, properly wired, and in good electrical condition, and keep the cord as short as possible. Make sure that the pins on the connector of the extension cord are the same number, size, and shape as those on the AC connector on the charger. Locate all extension cords so that they will not be stepped on, tripped over, or otherwise subjected to damage or stress.

The charger includes an AC input circuit breaker to protect the charger and the system.

8. DC OUTPUT

Only charge battery packs with cell counts (CELLS) and DC voltages (DC VOLTS) equal to those listed on the ratings label on the back of the charger.

The DC output cordset includes a commonly-used connector/plug. The polarity of the charger connector/plug must be the same as the battery connector/receptacle. The "-" marked (BLACK) DC cable must be connected to the battery negative (-), and the "+" marked (WHITE OR RED) DC cable must be connected to the battery positive (+). The charger will not operate if the polarity is reversed.

8.1 ROUND MOLDED 3-PIN CLUB CAR ® PLUG

If the DC cordset includes the round molded 3-pin plug for use with Club Car ® vehicles, it is important to understand that this charger is intended for use with vehicles without an onboard computer (OBC) or with the OBC properly bypassed (disabled), which can be accomplished with OBC bypass kit part number 38836. If the charger is connected to a vehicle with a non-bypassed OBC, the charger will not start a charge cycle.

Club Car ® is a registered trademark of Club Car Inc.

9. PROPER CARE OF DEEP-CYCLE MOTIVE POWER BATTERIES

Motive power battery packs are subjected to severe deep-cycle duty on a daily basis. Although these batteries are designed to withstand such duty, the following precautions must be observed to obtain good performance and maximum cycle life.

⚠CAUTION: ALWAYS WEAR PROTECTIVE EYE SHIELDS AND CLOTHING WHEN WORKING WITH BATTERIES. BATTERIES CONTAIN ACIDS WHICH CAN CAUSE BODILY HARM. DO NOT PUT WRENCHES OR OTHER METAL OBJECTS ACROSS THE BATTERY TERMINAL OR BATTERY TOP. ARCING OR EXPLOSION OF THE BATTERY CAN RESULT.

1. When installing new batteries, be sure the polarity of each battery and the overall battery pack is correct. Otherwise, battery and/or charger damage can result.
2. New batteries should be given a full charge before their first use because it is difficult to know how long the batteries have been stored.
3. New batteries and older batteries that have been in storage are not capable of their rated output until they have been discharged and charged a number of times. Consult the manufacturer of your batteries for more information.
4. DO NOT EXCESSIVELY DISCHARGE THE BATTERIES. Excessive discharge can cause polarity reversal of individual cells resulting in complete failure shortly thereafter.
5. Maintain the proper electrolyte level of wet (flooded) batteries by adding water when necessary. Distilled or deionized water is best for battery life. Never allow the electrolyte level to fall below the top of the battery plates. Electrolyte levels lower during discharge and rise during charge. Therefore, to prevent the overflow of electrolyte when charging, it is mandatory that water be added to cells AFTER they have been fully charged – do not overfill. Old batteries require more frequent additions of water than new batteries.
6. Hard crystalline sulfates form when batteries in storage are not maintained in a charged active state. Internal self discharge can bring about the start of this condition in as little as three days in warm temperatures. Batteries not maintained and allowed to sit in storage will self discharge, sulfate and lose capacity. Repeated charging without using the batteries between charges can recover some of the lost power, range, and life, but some permanent loss should be expected.
7. Cold batteries require more time to fully charge. When the temperature falls below 65°F, the batteries should be placed on charge as soon after use as possible.
8. The tops of batteries and battery hold downs must be kept clean and dry at all times to prevent excessive self discharge and the flow of current between the battery posts and frame. Electrolyte spilled on batteries never dries or evaporates.
9. All connections to batteries must be maintained clean and tight. Due to heating and discharge rates, bolted connections loosen over time. Re-tighten the connections twice yearly to the torques specified by the battery manufacturers.
10. Follow all operating instructions, cautions, and warnings as specified in this manual, on the charger, in the battery manuals, and in the vehicle manuals.

9.1 Personal Safety Precautions

1. Have someone within the range of your voice and close enough to quickly come to your aid when you work near a lead-acid battery.
2. Ensure that ample fresh water and soap are nearby in case battery acid contacts your skin, clothing, or eyes.
3. Wear complete eye and clothing protection. Avoid touching your eyes while working near a battery.
4. If battery acid contacts your skin or clothing, wash immediately with soap and water. If acid enters your eye, immediately flush your eye with running cold water for at least 10 minutes, and get medical attention immediately.
5. NEVER smoke or allow a spark or flame to be in the vicinity of a battery.
6. Be extra cautious to reduce the risk of dropping a metal tool onto a battery. It could spark or short circuit the battery or other electrical components that could cause an explosion.
7. Remove personal metal items such as rings, bracelets, necklaces, and watches when working with a battery. A battery can produce a short-circuit current that is high enough to cause a severe burn.
8. NEVER charge a frozen battery.

10. CHARGER OPERATION

WARNING: TO REDUCE THE RISK OF AN ELECTRIC SHOCK, CONNECT ONLY TO A SINGLE-PHASE, PROPERLY GROUNDED (3-WIRE) OUTLET. REFER TO GROUNDING INSTRUCTIONS.

CAUTION: MAKE SURE THE BATTERY IS A RECHARGEABLE DEEP-CYCLE BATTERY WITH THE PROPER RATED VOLTAGE FOR THIS CHARGER.

DANGER: TO PREVENT ELECTRICAL SHOCK, DO NOT TOUCH UNINSULATED PARTS OF THE CHARGER DC OUTPUT CONNECTOR, BATTERY CONNECTOR, OR BATTERY TERMINALS. MAKE SURE ALL ELECTRICAL CONNECTORS ARE IN GOOD WORKING CONDITION. DO NOT USE CONNECTORS THAT ARE CRACKED, CORRODED, OR DO NOT MAKE ADEQUATE ELECTRICAL CONTACT. USE OF A DAMAGED OR DEFECTIVE CONNECTOR MAY RESULT IN A RISK OF OVERHEATING OR ELECTRIC SHOCK.

WARNING: CHARGER IS NOT TO BE USED WHILE THE BATTERY POWERED EQUIPMENT IS OPERATING.

ATTENTION: Ne pas utiliser le charger pendant que l'equipment est en marche.

WARNING: LEAD-ACID BATTERIES GENERATE GASES WHICH CAN BE EXPLOSIVE. TO PREVENT ARCING OR BURNING NEAR BATTERIES, DO NOT DISCONNECT THE CHARGER DC OUTPUT FROM THE BATTERIES WHEN THE CHARGER IS OPERATING. KEEP SPARKS, FLAME, AND SMOKING MATERIALS AWAY FROM BATTERIES.

WARNING: ALWAYS SHIELD EYES WHEN WORKING NEAR BATTERIES. DO NOT PUT WRENCHES OR OTHER METAL OBJECTS ACROSS BATTERY TERMINALS OR THE BATTERY TOP. ARCING OR EXPLOSION OF THE BATTERY CAN RESULT!

WARNING: DO NOT DISCONNECT THE CHARGER DC OUTPUT PLUG FROM THE BATTERY RECEPTACLE WHILE A CHARGE CYCLE IS IN PROGRESS. THE RESULTING ARCING AND BURNING OF THE PLUG AND RECEPTACLE COULD CAUSE THE BATTERIES TO EXPLODE.

CAUTION: TO AVOID DAMAGE TO THE CHARGER DC CABLE AND CONNECTOR AND BATTERY CONNECTOR, DISCONNECT BY GRASPING THE CHARGER CONNECTOR HANDLE OR BODY AND PULLING IT STRAIGHT OUT OF THE BATTERY CONNECTOR. DO NOT PULL ON THE CHARGER CABLE. DO NOT TWIST, ROCK, OR PULL THE CONNECTOR SIDEWAYS.

The instructions printed on the charger are for daily reference.

10.1 Off-Board Charger Operation:

1. With the charger DC output connector/plug disconnected from the battery connector/receptacle, connect the charger AC power cord to an appropriate AC outlet (if not already connected).

2. Connect the charger DC output connector/plug to the battery connector/receptacle. The charger will start automatically, which is indicated by the Charge Status (yellow) LED beginning to blink slowly.

3. If the charger must be disconnected from the battery while a charge cycle is in progress, first disconnect the AC power cord from the AC outlet. Do not disconnect the charger DC output connector/plug from the battery while a charge cycle is in progress.
4. The charge cycle 80% point is indicated by the Charge Status (yellow) LED beginning to blink quickly.

5. The Finish charge cycle phase is indicated by the solid illumination of the Charge Status (yellow) LED. Not all charge profiles include a Finish phase.

6. An extended Balance/Equalize charge cycle phase is indicated by the Charge Complete (green) LED beginning to blink quickly. Not all charge profiles include a Balance/Equalize phase.

7. The charger automatically terminates the charge cycle when a battery reaches full charge, which is indicated by [1] the solid illumination of the Charge Complete (green) LED or [2] the Charge Complete (green) LED beginning to blink slowly indicating a post-charge phase. The required charge time is affected by numerous factors, including battery amp-hour capacity, depth of discharge, battery temperature, and battery age/usage.

8. Before operating the machine/equipment, disconnect the charger DC output connector/plug from the battery connector/receptacle before operating the machine by firmly grasping both connectors and pulling them straight apart.

10.2 Storage Mode Operation

1. Storage Mode is designed to keep your battery maintained during storage periods that last a few weeks to several months at a time.

2. Depending on the battery type, a storage charge can be a continuous float or a periodic charge mode.

3. Do NOT disconnect the charger from the battery or from the AC power while your machine is not being used Disconnecting and reconnecting the charger from the batteries or AC power may start a charge cycle, but disconnection disrupts the storage mode so optimum battery maintenance is not achieved.

4. After several months of storage your batteries should be serviced and the charger reset by disconnecting the DC for Off-Board or the AC for On-Board applications (disconnect AC for a minimum of 10 minutes) before continuing another storage season.

11. LED INDICATORS

The charger includes three (3) LEDs to indicate charger status and fault information. The functionality of the LEDs is outlined below.

CHARGE STATUS (yellow)
Indicates charge cycle status. See Figure 11-1 for descriptions of the possible states.

CHARGE COMPLETE (green)
Indicates when a charge cycle completes successfully, when an extended Balance/Equalize charge cycle phase is active, or when a post-charge phase is active. See Figure 11-1 for descriptions of the possible states.

FAULT (red)
Indicates when a charger or battery fault has occurred. See the FAULTS section.

Charge Status (Yellow) LED	Charge Complete (Green) LED	Description
Slow Blink	Off	Bulk/Start charge cycle phase (constant power or constant current).
Fast Blink	Off	Absorption/Plateau charge cycle phase (constant voltage). Greater than 80% charged.
Solid On	Off	Finish charge cycle phase (constant current). Not all charge profiles include a Finish phase.
Off	Fast Blink	Balance/Equalize phase. An extended charge cycle is occurring because a trigger condition has been met (cycle count, etc). Not all charge profiles include a Balance/Equalize phase.
Off	Solid On	Charge cycle complete.
Off	Slow Blink	Charge cycle complete. Post Charge phase (constant voltage float, etc). Not all charge profiles include a Post Charge phase.

Figure 11-1: Charger LED States (Non-Fault)

12. FAULTS

(0) = Off
(1) = On Solid
N/A = Not applicable, LED state does not matter

	Fault (Red) LED	Charge Status (Yellow) LED	Charge Complete (Green) LED	Description
Charger	Slow Blink	1	1	DC DISCONNECT – DC disconnect detected via the third-pin, but DC (battery) voltage is still present at the charger output. (Third-pin DC disconnect sensing is an optional feature available with supported DC plug/receptacle systems to minimize charger output inhibit time when a DC disconnect occurs during charging.)
	Slow Blink	0	1	OVER TEMP – Maximum temperature was met. Charge cycle will restart when the temperature decreases.
	Slow Blink	1	0	LOW DC – DC (battery) voltage is too low to start charging (< 10V).
	Slow Blink	0	0	NO AC – AC power was lost during charging. Charge cycle will restart when AC power returns.
	Slow Blink	1	Slow Blink	HARDWARE FAULT – Contact Lester Electrical.
	Slow Blink	Slow Blink	0	HARDWARE FAULT – Contact Lester Electrical.
	Slow Blink	Slow Blink	1	HARDWARE FAULT – Contact Lester Electrical.
	Fast Blink	N/A	N/A	HARDWARE FAULT – Contact Lester Electrical. Unit is still able to charge.
Battery	1	0	0	PHASE – A fault condition (most commonly maximum time) was met during a particular charge cycle phase (start/bulk, plateau/absorption, finish, etc).
	1	0	Slow Blink	MAX VOLTAGE – Maximum voltage was met.
	1	0	1	MIN VOLTAGE – Minimum voltage was NOT met after a specified time from the start of the charge cycle.
	1	Slow Blink	0	MAX AMP-HOURS – Maximum amp-hours for the overall charge cycle was met.
	1	Slow Blink	Slow Blink	MAX TIME – Maximum time for the overall charge cycle was met.

Figure 12-1: Charger LED States (Faults)

Disconnecting the charger from the battery clears a fault. If a fault cannot be cleared after taking appropriate corrective action, contact your dealer for troubleshooting and/or service.

13. MAINTENANCE

⚠WARNING: DISCONNECT BOTH AC AND DC POWER FROM THE CHARGER BEFORE PERFORMING ANY MAINTENANCE. CONTACT WITH LIVE COMPONENTS WITHIN THE CHARGER COULD CAUSE ELECTRICAL SHOCK, SERIOUS INJURY, OR DEATH.

⚠CAUTION: KEEP CHARGER CLEAN AND DRY, INSIDE AND OUT. FAILURE TO DO SO MAY CAUSE DAMAGE OR FAILURE OF CHARGER.

The charger requires minimal maintenance. It should be kept clean. Twice a year, or as often as the cleanliness of the area may dictate, the interior of the charger should be thoroughly blown clean with dry compressed air. The components of the charger are cooled by natural convection. If dust and debris are allowed to build up, they will restrict airflow and could cause components to overheat. Always be careful not to bump wiring or components. This could cause loose connections and failures.

Moisture may cause electrical shorting and/or corrosion. It may also combine with dust and debris making them more difficult to remove. Do not use liquids to clean the charger. Liquids could cause damage. Compressed air should be used to clean dust and debris from the charger and its components.

13.1 Check Charger Area

The area around the charger must remain clean, cool, dry, and well ventilated. Check for obstructions to airflow, clearances, or other violations of the requirements in Section 5.

13.2 Visual Inspections

Check the charger for any physical failures, such as loose contacts or hardware, excess wear, or damage. Darkened or hot terminals should be tightened or replaced.

13.3 Battery Conditions

⚠CAUTION: CHECK THE DC CONNECTIONS FROM THE CHARGER TO THE BATTERY AND MAKE SURE THEY ARE TIGHT AND CLEAN. TIGHTEN AND/OR CLEAN IF NEEDED. FAILURE TO DO SO COULD CAUSE MALFUNCTION, FIRE, OR EXPLOSION.

Batteries must be well maintained for the charging system to operate properly. Follow battery manufacturer instructions for battery maintenance. Check for loose connections or corrosion.

DC connections may become corroded over time. If the connections become corroded, they should be cleaned as recommended by the battery manufacturer. After the connections have been cleaned, a battery connection treatment should be applied to help prevent corrosion from reoccurring. Contact the battery manufacturer for their recommendations.

Periodic cleaning and watering of non-sealed batteries is very important. Logging the water usage of non-sealed batteries is useful. As a battery ages, it will use more water.

14. TROUBLESHOOTING AND SERVICE

⚠CAUTION: DO NOT DISASSEMBLE THE CHARGER. TAKE IT TO A QUALIFIED SERVICE TECHNICIAN WHEN SERVICE OR REPAIR IS REQUIRED. INCORRECT REASSEMBLY MAY RESULT IN A RISK OF ELECTRIC SHOCK OR FIRE.

⚠DANGER: TO REDUCE THE RISK OF ELECTRIC SHOCK, ALWAYS DISCONNECT BOTH THE POWER SUPPLY CORD AND THE OUTPUT CORD BEFORE ATTEMPTING ANY MAINTENANCE OR SERVICE.

⚠WARNING: DO NOT OPERATE THE CHARGER IF IT IS MALFUNCTIONING. PERSONAL INJURY OR PROPERTY DAMAGE COULD RESULT.

The charger was fully tested and calibrated before leaving the factory. It was delivered ready to charge. If properly installed, the charger should require very little attention. If improper charger operation occurs, it will require repair by a qualified service technician.

See the FAULTS section for information regarding the Fault LED.

1. If the charger does not turn on, check for one of the following conditions.
   a. The charger AC power cord is not plugged into a live and/or appropriate AC outlet.
   b. The battery connections are incorrect – battery not connected, reverse polarity, or short circuit.
   c. The battery voltage is too high.
   d. The battery voltage is too low (below 10 volts).

2. If the charger turns off before a battery is fully charged, and a fault condition is not indicated by the Fault LED, this indicates one of the following conditions.
   a. The AC power was interrupted during the charge cycle.
   b. The charger DC output connector was disconnected from the battery during the charge cycle.
   c. The battery has been allowed to sulfate. Charge the battery at least once every three (3) days when the equipment is lightly used. Once sulfation is allowed to take place, it may be partially reduced by returning, temporarily, to daily charging.

3. A decrease in vehicle/equipment range where the battery loses power faster indicates one of the following conditions.
   a. The electrolyte level in a wet lead-acid battery was allowed to drop below the top of the battery plates. If so, add distilled water to just cover the top of the plates immediately upon discovery, and then fill to the proper level with distilled water at the completion of the very next charge cycle.
   b. Use of the vehicle/equipment before the battery has been fully charged and the charger automatically terminates the charge cycle. This shortens battery life and accelerates the onset of reduced daily range.
   c. The normal wear-out pattern for the battery.

4. A charge cycle running longer than anticipated before terminating indicates one of the following conditions.
   a. An overly-discharged battery.
   b. The charger output may have been reduced due to low AC input voltage, high ambient temperature, or obstructions to cooling airflow.
   c. The amp-hour capacity of the battery is greater than the charger can fully charge in the anticipated amount of time.

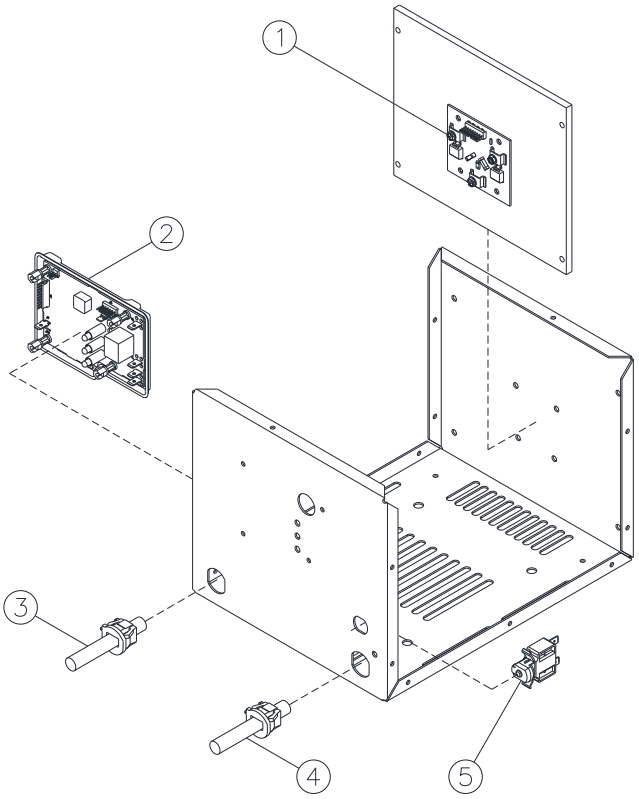

Configuration A

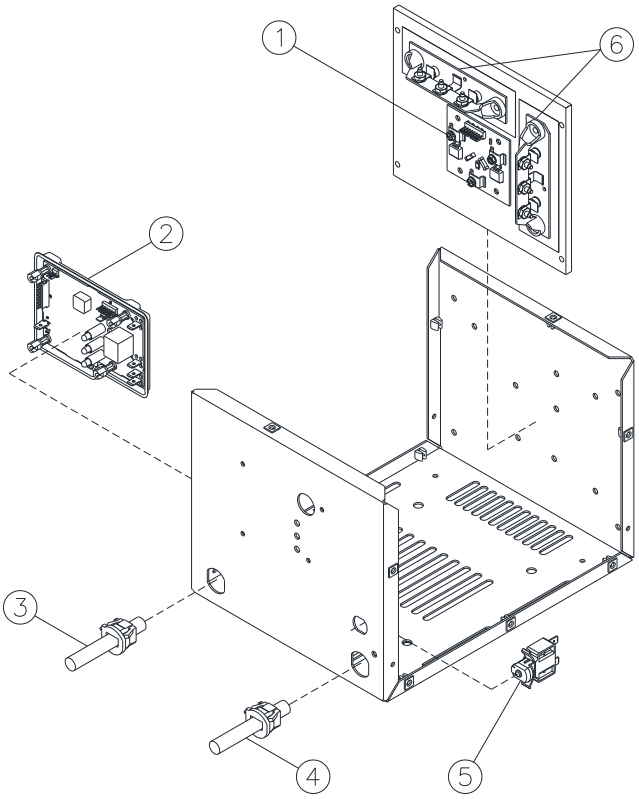

Configuration B

SERVICE PARTS LIST

#	Service Part Description	28080 36V 21A Config. A	28090 36V 25A Config. A	28100 48V 13A Config. B
1	SCR Assembly	40067S	40067S	40068S
2	Control Board Assembly	Contact Your Sales Representative		
3	DC Cordset Kit	Contact Your Sales Representative		
4	AC Cordset Kit	39859-08S	40072-08S	39859-08S
5	AC Circuit Breaker	34882S	34882S	31847S
6	Kit, Diode Assemblies	N/A	N/A	38463S
N/A	Misc Wiring Kit (Control Cables)	40063S	40063S	40064S
N/A	Case Assembly, Painted, Shelf, Links Series	40061-01S	40061-01S	N/A
N/A	Case Assembly, Aluminum, Shelf, Links Series	N/A	N/A	40062-01S

WIRING DIAGRAM

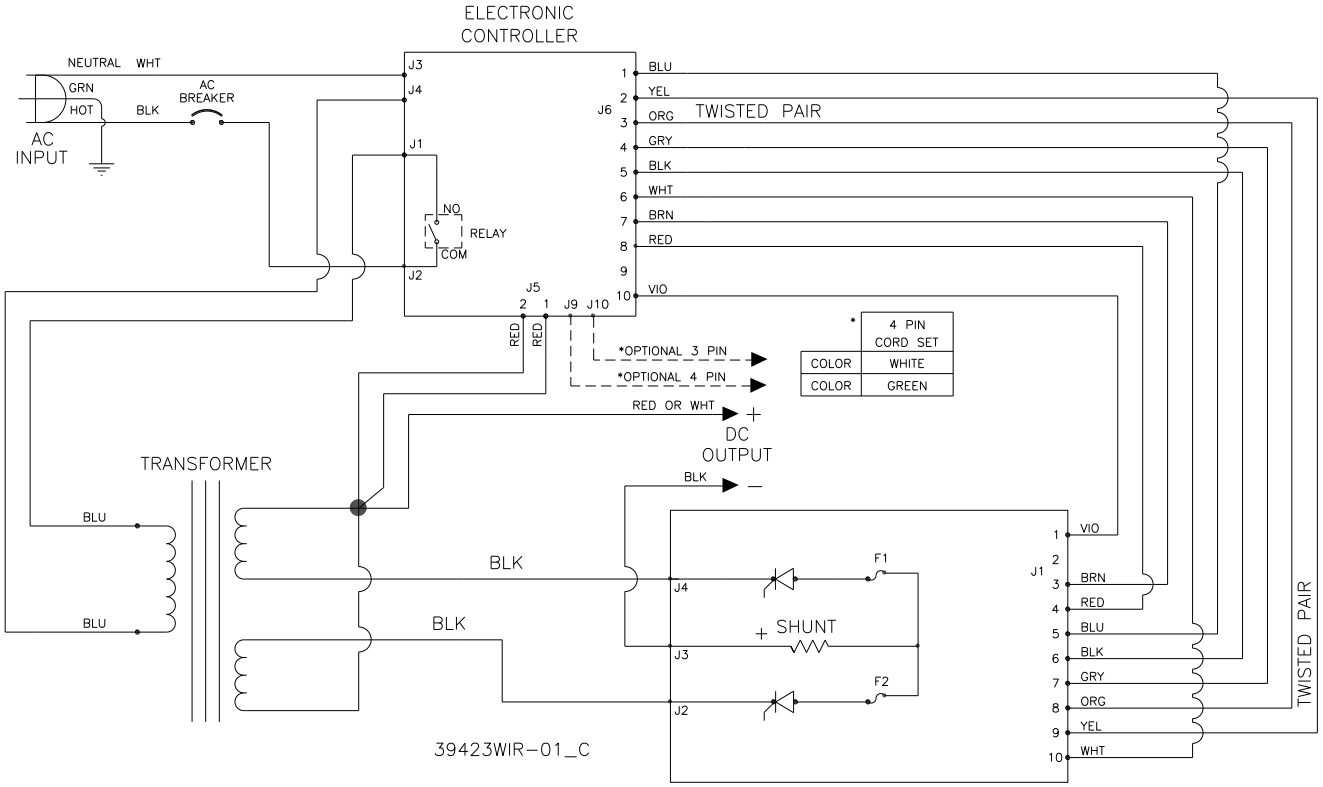

Models 28080 and 28090

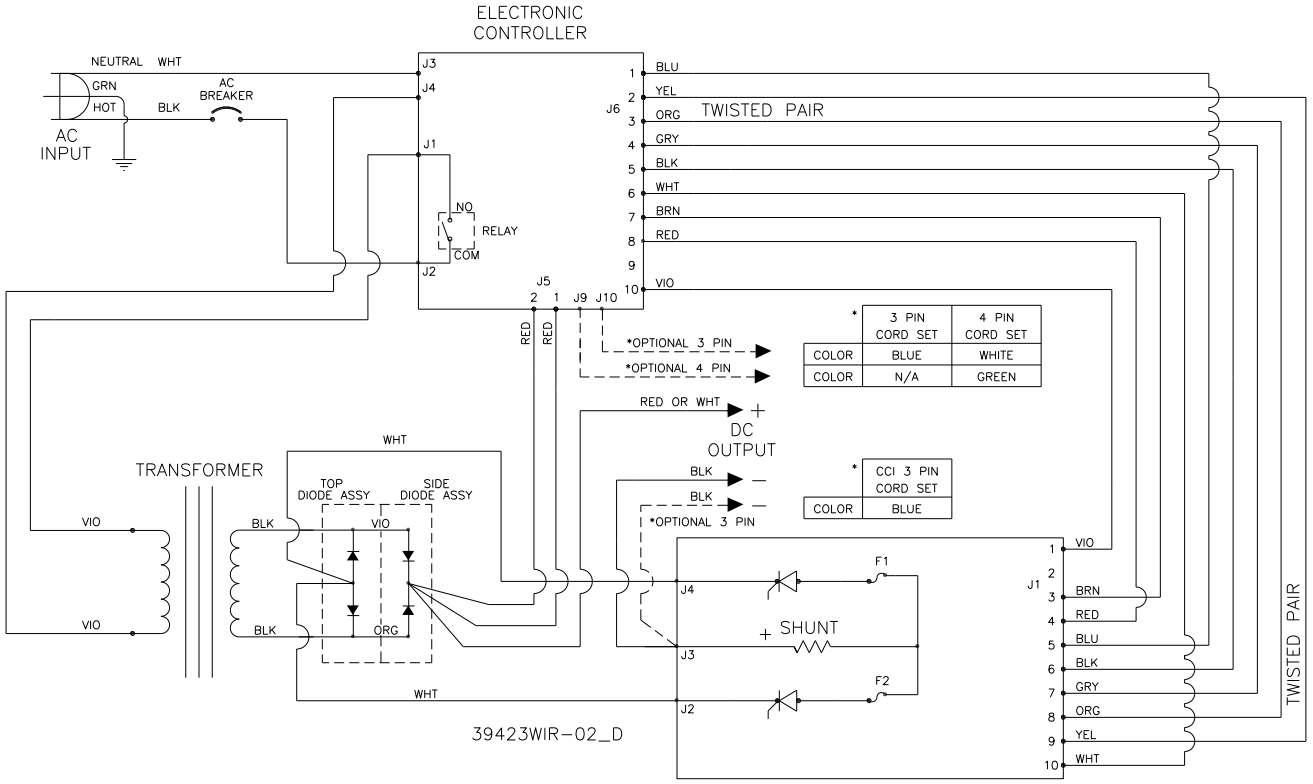

Model 28100

NOTES

Represented By:



MADE IN

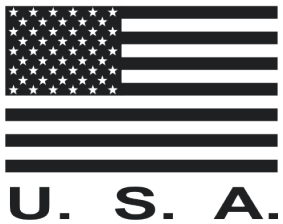

U. S. A.

Lester ELECTRICAL

40071F