蝶阀
BUTTERFLY VALVE



产品编码〔Product Coding〕

■ WJA型 / WJA Type (中线型)

G - PN16 WJA L U E

❶ ❷ ❸ ❹ ❺ ❻

①阀门操作 Operator
无None……手柄 Lever
G……蜗轮 Gear

②压力等级 Class

③阀门类型 Valve Type
WJA型……WJA Type

④连接方式 Connection
无None……对夹式 Wafer
L……凸耳式 Lugged
V……U型法兰式 U-type Flange
F……双法兰式 Double Flange

⑤阀板材料 Disc Material
无None……球墨铸铁 Ductile Iron+ 环氧树脂喷涂 Epoxy Coating
U……304不锈钢 304S.S.
M……316不锈钢 316S.S.
B……铝铜合金 Aluminum Bronze
N……球墨铸铁Ductile Iron+ 尼龙Nylon

⑥阀座材料 Seat Material
无None……丁腈橡胶 NBR
E……三元乙丙橡胶 EPDM

注Note：阀杆 Stem Material　马氏体不锈钢 Martensite Stainless Steel

产品范围〔Product Range〕

类型 Type	压力等级 Class	连接方式 Connection	材料 Materials 阀体 Body	阀板 Disc	阀座 Seat	阀门操作 Operator	尺寸 Size / Fig	mm	40	50	65	80	100	125	150	200	250	300	350	400	450	500	600
								inch	1.1/2	2	2.1/2	3	4	5	6	8	10	12	14	16	18	20	24
WJA (中线型)	PN16	对夹式 Wafer	球墨铸铁 Ductile Iron	球墨铸铁（环氧树脂喷涂）Ductile Iron(Epoxy Coating) / 304不锈钢 304S.S. / 316不锈钢 316S.S. / 铝铜合金 ALBC / 球墨铸铁(尼龙涂覆) Ductile Iron(Nylon Plated)	丁腈橡胶 NBR / 三元乙丙橡胶 EPDM	手柄 Lever	PN16WJA		●	●	●	●	●	●	●	○	○	○	-	-	-	-	-
							PN16WJAE		●	●	●	●	●	●	●	○	○	○	-	-	-	-	-
							PN16WJAU		●	●	●	●	●	●	●	○	○	○	-	-	-	-	-
							PN16WJAUE		●	●	●	●	●	●	●	○	○	○	-	-	-	-	-
							PN16WJAM		●	●	●	●	●	●	●	○	○	○	-	-	-	-	-
							PN16WJAME		●	●	●	●	●	●	●	○	○	○	-	-	-	-	-
							PN16WJAB		●	●	●	●	●	●	●	○	○	○	-	-	-	-	-
							PN16WJABE		●	●	●	●	●	●	●	○	○	○	-	-	-	-	-
							PN16WJAN		●	●	●	●	●	●	●	○	○	○	-	-	-	-	-
							PN16WJANE		●	●	●	●	●	●	●	○	○	○	-	-	-	-	-
						蜗轮 Gear	G-PN16WJA		●	●	●	●	●	●	●	●	●	●	●	●	●	●	●
							G-PN16WJAE		●	●	●	●	●	●	●	●	●	●	●	●	●	●	●
							G-PN16WJAU		●	●	●	●	●	●	●	●	●	●	●	●	●	●	●
							G-PN16WJAUE		●	●	●	●	●	●	●	●	●	●	●	●	●	●	●
							G-PN16WJAM		●	●	●	●	●	●	●	●	●	●	●	●	●	●	●
							G-PN16WJAME		●	●	●	●	●	●	●	●	●	●	●	●	●	●	●
							G-PN16WJAB		●	●	●	●	●	●	●	●	●	●	●	●	●	●	●
							G-PN16WJABE		●	●	●	●	●	●	●	●	●	●	●	●	●	●	●
							G-PN16WJAN		●	●	●	●	●	●	●	●	●	●	●	●	●	●	●
							G-PN16WJANE		●	●	●	●	●	●	●	●	●	●	●	●	●	●	●
		凸耳式 Lugged	球墨铸铁 Ductile Iron	球墨铸铁（环氧树脂喷涂）Ductile Iron(Epoxy Coating) / 304不锈钢 304S.S. / 316不锈钢 316S.S. / 铝铜合金 ALBC / 球墨铸铁(尼龙涂覆) Ductile Iron(Nylon Plated)	丁腈橡胶 NBR / 三元乙丙橡胶 EPDM	手柄 Lever	PN16WJAL		●	●	●	●	●	●	●	○	○	○	-	-	-	-	-
							PN16WJALE		●	●	●	●	●	●	●	○	○	○	-	-	-	-	-
							PN16WJALU		●	●	●	●	●	●	●	○	○	○	-	-	-	-	-
							PN16WJALUE		●	●	●	●	●	●	●	○	○	○	-	-	-	-	-
							PN16WJALM		●	●	●	●	●	●	●	○	○	○	-	-	-	-	-
							PN16WJALME		●	●	●	●	●	●	●	○	○	○	-	-	-	-	-
							PN16WJALB		●	●	●	●	●	●	●	○	○	○	-	-	-	-	-
							PN16WJALBE		●	●	●	●	●	●	●	○	○	○	-	-	-	-	-
							PN16WJALN		●	●	●	●	●	●	●	○	○	○	-	-	-	-	-
							PN16WJALNE		●	●	●	●	●	●	●	○	○	○	-	-	-	-	-
						蜗轮 Gear	G-PN16WJAL		●	●	●	●	●	●	●	●	●	●	●	●	●	●	●
							G-PN16WJALE		●	●	●	●	●	●	●	●	●	●	●	●	●	●	●
							G-PN16WJALU		●	●	●	●	●	●	●	●	●	●	●	●	●	●	●
							G-PN16WJALUE		●	●	●	●	●	●	●	●	●	●	●	●	●	●	●
							G-PN16WJALM		●	●	●	●	●	●	●	●	●	●	●	●	●	●	●
							G-PN16WJALME		●	●	●	●	●	●	●	●	●	●	●	●	●	●	●
							G-PN16WJALB		●	●	●	●	●	●	●	●	●	●	●	●	●	●	●
							G-PN16WJALBE		●	●	●	●	●	●	●	●	●	●	●	●	●	●	●
							G-PN16WJALN		●	●	●	●	●	●	●	●	●	●	●	●	●	●	●
							G-PN16WJALNE		●	●	●	●	●	●	●	●	●	●	●	●	●	●	●
		U型法兰式 U-type Flange	球墨铸铁 Ductile Iron	球墨铸铁（环氧树脂喷涂）Ductile Iron(Epoxy Coating) / 304不锈钢 304S.S. / 316不锈钢 316S.S. / 铝铜合金 ALBC / 球墨铸铁(尼龙涂覆) Ductile Iron(Nylon Plated)	丁腈橡胶 NBR / 三元乙丙橡胶 EPDM	手柄 Lever	PN16WJAV		●	●	●	●	●	●	●	○	○	○	-	-	-	-	-
							PN16WJAVE		●	●	●	●	●	●	●	○	○	○	-	-	-	-	-
							PN16WJAVU		●	●	●	●	●	●	●	○	○	○	-	-	-	-	-
							PN16WJAVUE		●	●	●	●	●	●	●	○	○	○	-	-	-	-	-
							PN16WJAVM		●	●	●	●	●	●	●	○	○	○	-	-	-	-	-
							PN16WJAVME		●	●	●	●	●	●	●	○	○	○	-	-	-	-	-
							PN16WJAVB		●	●	●	●	●	●	●	○	○	○	-	-	-	-	-
							PN16WJAVBE		●	●	●	●	●	●	●	○	○	○	-	-	-	-	-
							PN16WJAVN		●	●	●	●	●	●	●	○	○	○	-	-	-	-	-
							PN16WJAVNE		●	●	●	●	●	●	●	○	○	○	-	-	-	-	-
						蜗轮 Gear	G-PN16WJAV		●	●	●	●	●	●	●	●	●	●	●	●	●	●	●
							G-PN16WJAVE		●	●	●	●	●	●	●	●	●	●	●	●	●	●	●
							G-PN16WJAVU		●	●	●	●	●	●	●	●	●	●	●	●	●	●	●
							G-PN16WJAVUE		●	●	●	●	●	●	●	●	●	●	●	●	●	●	●
							G-PN16WJAVM		●	●	●	●	●	●	●	●	●	●	●	●	●	●	●
							G-PN16WJAVME		●	●	●	●	●	●	●	●	●	●	●	●	●	●	●
							G-PN16WJAVB		●	●	●	●	●	●	●	●	●	●	●	●	●	●	●
							G-PN16WJAVBE		●	●	●	●	●	●	●	●	●	●	●	●	●	●	●
							G-PN16WJAVN		●	●	●	●	●	●	●	●	●	●	●	●	●	●	●
							G-PN16WJAVNE		●	●	●	●	●	●	●	●	●	●	●	●	●	●	●

产品编码〔Product Coding〕

■ WJAD型 / WJAD Type（双偏心）

G - PN16 WJAD F E

❶ ❷ ❸ ❹ ❺

①阀门操作 Operator
G……蜗轮 Gear

②压力等级 Class

③阀门类型 Valve Type
WJAD型……WJAD Type

④连接方式 Connection
F……双法兰式 Double Flange

⑤阀座材料 Seat Material
无None……丁腈橡胶 NBR
E……三元乙丙橡胶 EPDM

注Note：阀杆 Stem Material　马氏体不锈钢 Martensite Stainless Steel

■ WJAR型 / WJAR Type（中线型 阀板包胶）※仅对夹式 Wafer Type Only

G - PN25 WJAR E

❶ ❷ ❸ ❹

①阀门操作 Operator
无None……手柄 Lever
G……蜗轮 Gear

③阀门类型 Valve Type
WJAR型……WJAR Type

④阀板材料 Disc material
无None……球墨铸铁 Ductile Iron+ 丁腈橡胶 NBR
E……球墨铸铁 Ductile Iron+ 三元乙丙橡胶 EPDM

②压力等级 Class

注Note：阀杆 Stem Material　马氏体不锈钢 Martensite Stainless Steel

类型 Type	压力等级 Class	连接方式 Connection	材料 Materials 阀体 Body	阀板 Disc	阀座 Seat	阀门操作 Operator	尺寸 Size / Fig	mm	50	65	80	100	125	150	200	250	300	350	400	450	500	600	700	800	900	1000	1200
								inch	2	2.1/2	3	4	5	6	8	10	12	14	16	18	20	24	28	32	36	40	48
WJA（中线型）	PN16	双法兰式 Double Flange	球墨铸铁 Ductile Iron	球墨铸铁（环氧树脂喷涂）Ductile Iron(Epoxy Coating) 304不锈钢 304S.S. 316不锈钢 316S.S. 铝铜合金 ALBC 球墨铸铁(尼龙涂覆) Ductile Iron(Nylon Plated)	丁腈橡胶 NBR 三元乙丙橡胶 EPDM	手柄 Lever	PN16WJAF		●	●	●	●	●	●	○	○	○	-	-	-	-	-	-	-	-	-	-
							PN16WJAFE		●	●	●	●	●	●	○	○	○	-	-	-	-	-	-	-	-	-	-	-
							PN16WJAFU		●	●	●	●	●	●	○	○	○	-	-	-	-	-	-	-	-	-	-	-
							PN16WJAFUE		●	●	●	●	●	●	○	○	○	-	-	-	-	-	-	-	-	-	-	-
							PN16WJAFM		●	●	●	●	●	●	○	○	○	-	-	-	-	-	-	-	-	-	-	-
							PN16WJAFME		●	●	●	●	●	●	○	○	○	-	-	-	-	-	-	-	-	-	-	-
							PN16WJAFB		●	●	●	●	●	●	○	○	○	-	-	-	-	-	-	-	-	-	-	-
							PN16WJAFBE		●	●	●	●	●	●	○	○	○	-	-	-	-	-	-	-	-	-	-	-
							PN16WJAFN		●	●	●	●	●	●	○	○	○	-	-	-	-	-	-	-	-	-	-	-
							PN16WJAFNE		●	●	●	●	●	●	○	○	○	-	-	-	-	-	-	-	-	-	-	-
						蜗轮 Gear	G-PN16WJAF		●	●	●	●	●	●	●	●	●	●	●	●	●	●	●	●	●	●	●	●
							G-PN16WJAFE		●	●	●	●	●	●	●	●	●	●	●	●	●	●	●	●	●	●	●	●
							G-PN16WJAFU		●	●	●	●	●	●	●	●	●	●	●	●	●	●	●	●	●	●	●	●
							G-PN16WJAFUE		●	●	●	●	●	●	●	●	●	●	●	●	●	●	●	●	●	●	●	●
							G-PN16WJAFM		●	●	●	●	●	●	●	●	●	●	●	●	●	●	●	●	●	●	●	●
							G-PN16WJAFME		●	●	●	●	●	●	●	●	●	●	●	●	●	●	●	●	●	●	●	●
							G-PN16WJAFB		●	●	●	●	●	●	●	●	●	●	●	●	●	●	●	●	●	●	●	●
							G-PN16WJAFBE		●	●	●	●	●	●	●	●	●	●	●	●	●	●	●	●	●	●	●	●
							G-PN16WJAFN		●	●	●	●	●	●	●	●	●	●	●	●	●	●	●	●	●	●	●	●
							G-PN16WJAFNE		●	●	●	●	●	●	●	●	●	●	●	●	●	●	●	●	●	●	●	●
	PN25	双法兰式 Double Flange	球墨铸铁 Ductile Iron	球墨铸铁（环氧树脂喷涂）Ductile Iron(Epoxy Coating) 304不锈钢 304S.S. 316不锈钢 316S.S. 铝铜合金 ALBC 球墨铸铁(尼龙涂覆) Ductile Iron(Nylon Plated)	丁腈橡胶 NBR 三元乙丙橡胶 EPDM	手柄 Lever	PN25WJAF		●	●	●	●	●	●	-	-	-	-	-	-	-	-	-	-	-	-	-	-	-
							PN25WJAFE		●	●	●	●	●	●	-	-	-	-	-	-	-	-	-	-	-	-	-
							PN25WJAFU		●	●	●	●	●	●	-	-	-	-	-	-	-	-	-	-	-	-	-
							PN25WJAFUE		●	●	●	●	●	●	-	-	-	-	-	-	-	-	-	-	-	-	-
							PN25WJAFM		●	●	●	●	●	●	-	-	-	-	-	-	-	-	-	-	-	-	-
							PN25WJAFME		●	●	●	●	●	●	-	-	-	-	-	-	-	-	-	-	-	-	-
							PN25WJAFB		●	●	●	●	●	●	-	-	-	-	-	-	-	-	-	-	-	-	-
							PN25WJAFBE		●	●	●	●	●	●	-	-	-	-	-	-	-	-	-	-	-	-	-
							PN25WJAFN		●	●	●	●	●	●	-	-	-	-	-	-	-	-	-	-	-	-	-
							PN25WJAFNE		●	●	●	●	●	●	-	-	-	-	-	-	-	-	-	-	-	-	-
						蜗轮 Gear	G-PN25WJAF		●	●	●	●	●	●	●	●	●	-	-	-	-	-	-	-	-	-	-	-
							G-PN25WJAFE		●	●	●	●	●	●	●	●	●	-	-	-	-	-	-	-	-	-	-	-
							G-PN25WJAFU		●	●	●	●	●	●	●	●	●	-	-	-	-	-	-	-	-	-	-	-
							G-PN25WJAFUE		●	●	●	●	●	●	●	●	●	-	-	-	-	-	-	-	-	-	-	-
							G-PN25WJAFM		●	●	●	●	●	●	●	●	●	-	-	-	-	-	-	-	-	-	-	-
							G-PN25WJAFME		●	●	●	●	●	●	●	●	●	-	-	-	-	-	-	-	-	-	-	-
							G-PN25WJAFB		●	●	●	●	●	●	●	●	●	-	-	-	-	-	-	-	-	-	-	-
							G-PN25WJAFBE		●	●	●	●	●	●	●	●	●	-	-	-	-	-	-	-	-	-	-	-
							G-PN25WJAFN		●	●	●	●	●	●	●	●	●	-	-	-	-	-	-	-	-	-	-	-
							G-PN25WJAFNE		●	●	●	●	●	●	●	●	●	-	-	-	-	-	-	-	-	-	-	-
WJAD（双偏心）	PN16	双法兰式 Double Flange	球墨铸铁 Ductile Iron	球墨铸铁 Ductile Iron	丁腈橡胶 NBR 三元乙丙橡胶 EPDM	蜗轮 Gear	G-PN16WJADF		-	-	-	●	●	●	●	●	●	●	●	●	●	●	●	●	●	●	●
							G-PN16WJADFE		-	-	-	●	●	●	●	●	●	●	●	●	●	●	●	●	●	●	●
	PN25						G-PN25WJADF		-	-	-	●	●	●	●	●	●	●	●	●	●	●	●	●	●	●	●
							G-PN25WJADFE		-	-	-	●	●	●	●	●	●	●	●	●	●	●	●	●	●	●	●
WJAR（中线型 阀板包胶）	PN25	对夹式 Wafer	球墨铸铁 Ductile Iron	球墨铸铁 Ductile Iron NBR EPDM	–	手柄 Lever	PN25WJAR		●	●	●	●	●	●	-	-	-										
							PN25WJARE		●	●	●	●	●	●	-	-	-										
						蜗轮 Gear	G-PN25WJAR		●	●	●	●	●	●	●	●	●										
							G-PN25WJARE		●	●	●	●	●	●	●	●	●										

注Note：●部分为标准制作范围 。
○部分为非标准制作范围（选择性制作范围）。
※本样本中介绍的尺寸范围，如不能满足客户需求，请联系我司确认！
（部分产品，可以满足更多尺寸需求！）
※更多产品详细信息，请确认产品图纸（图纸索取请联系我司）。

PN16WJA (E)

PN16

对夹式/凸耳式/U型法兰式蝶阀（中线型）

WAFER TYPE/LUGGED TYPE/U-TYPE FLANGE BUTTERFLY VALVE (CONCENTRIC TYPE)

PN16WJAL (E)
PN16WJAV (E)



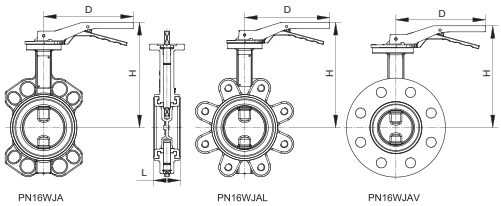

【技术规格 \ Technical Specifications】

■公称压力 \ Nominal Pressure: 1.6MPa（16Bar）

■工作温度 \ Working Temperature: -10℃～100℃ / -10℃～80℃

※EPDM阀座Seat：-10℃～100℃ / NBR阀座Seat：-10℃～80℃

■工作介质 \ Working Medium: 水 \ Water (※non-shock)

■结构长度 \ Face to Face Dimension: EN558 20系列 \ EN558 Basic Series 20

■连接方式 \ End Connection: EN1092-2 PN16

材质〔Materials〕

参考第29页 <Materials: P29 page>

仅为手动操作阀门
Manual Operate Only

尺寸〔Dimensions〕

(mm)

DN	mm	40	50	65	80	100	125	150	200	250	300
	inch	1.1/2	2	2.1/2	3	4	5	6	8	10	12
L		33	43	46	46	52	56	56	60	68	78
H		188	193	203	209	222	243	253	289	330	368
D		180	180	180	180	180	220	220	322	322	322

G-PN16WJA (E)

PN16

对夹式/凸耳式/U型法兰式蝶阀（中线型）

WAFER TYPE/LUGGED TYPE/U-TYPE FLANGE BUTTERFLY VALVE (CONCENTRIC TYPE)

G-PN16WJAL (E)
G-PN16WJAV (E)



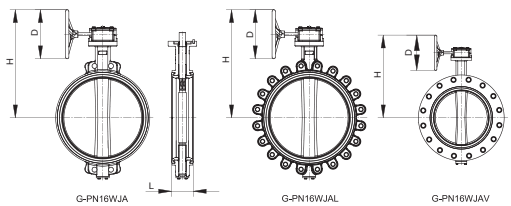

【技术规格 \ Technical Specifications】

■公称压力 \ Nominal Pressure: 1.6MPa（16Bar）

■工作温度 \ Working Temperature: -10℃～100℃ / -10℃～80℃

※EPDM阀座Seat：-10℃～100℃ / NBR阀座Seat：-10℃～80℃

■工作介质 \ Working Medium: 水 \ Water (※non-shock)

■结构长度 \ Face to Face Dimension: EN558 20系列 \ EN558 Basic Series 20

■连接方式 \ End Connection: EN1092-2 PN16

材质〔Materials〕

参考第29页 <Materials: P29 page>

仅为手动操作阀门
Manual Operate Only

尺寸〔Dimensions〕

(mm)

DN	mm	40	50	65	80	100	125	150	200	250	300	350	400	450	500	600
	inch	1.1/2	2	2.1/2	3	4	5	6	8	10	12	14	16	18	20	24
L		33	43	46	46	52	56	56	60	68	78	78	102	114	127	154
H		225	230	240	246	259	280	290	354	395	433	554	669	709	767	849
D		120	120	120	120	120	120	120	200	200	200	295	385	450	450	450

PN16WJAF(E) PN16 双法兰式蝶阀（中线型）

DOUBLE FLANGE TYPE BUTTERFLY VALVE (CONCENTRIC TYPE)



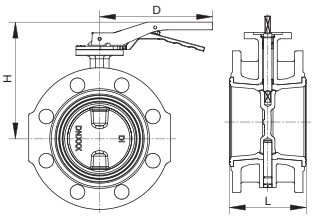

【技术规格 \ Technical Specifications】

■公称压力 \ Nominal Pressure: 1.6MPa（16Bar）

■工作温度 \ Working Temperature: -10℃～100℃ / -10℃～80℃

※EPDM阀座Seat：-10℃～100℃ / NBR阀座Seat：-10℃～80℃

■工作介质 \ Working Medium: 水 \ Water (※non-shock)

■结构长度 \ Face to Face Dimension: EN558 13系列 \ EN558 Basic Series 13

■连接方式 \ End Connection: EN1092-2 PN16

材质〔Materials〕

参考第29-30页 <Materials: P29-P30 page>

仅为手动操作阀门
Manual Operate Only

尺寸〔Dimensions〕

(mm)

DN	mm	50	65	80	100	125	150	200	250	300
	inch	2	2.1/2	3	4	5	6	8	10	12
L		108	112	114	127	140	140	152	165	178
H		173	183	198	208	223	243	270	300	345
D		180	180	180	180	180	220	322	322	322

G-PN16WJAF(E) PN16 双法兰式蝶阀（中线型）

DOUBLE FLANGE TYPE BUTTERFLY VALVE (CONCENTRIC TYPE)



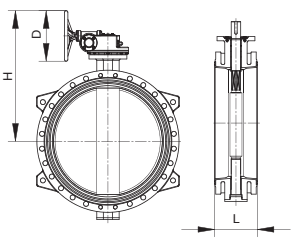

【技术规格 \ Technical Specifications】

■公称压力 \ Nominal Pressure: 1.6MPa（16Bar）

■工作温度 \ Working Temperature: -10℃～100℃ / -10℃～80℃

※EPDM阀座Seat：-10℃～100℃ / NBR阀座Seat：-10℃～80℃

■工作介质 \ Working Medium: 水 \ Water (※non-shock)

■结构长度 \ Face to Face Dimension: EN558 13系列 \ EN558 Basic Series 13

■连接方式 \ End Connection: EN1092-2 PN16

材质〔Materials〕

参考第29-30页 <Materials: P29-P30 page>

仅为手动操作阀门
Manual Operate Only

尺寸〔Dimensions〕

(mm)

DN	mm	50	65	80	100	125	150	200	250	300	350	400	450	500	600	700	800	900	1000	1200
	inch	2	2.1/2	3	4	5	6	8	10	12	14	16	18	20	24	28	32	36	40	48
L		108	112	114	127	140	140	152	165	178	190	216	222	229	267	292	318	330	410	470
H		210	220	235	245	260	280	335	365	410	498	593	670	705	718	848	940	1024	1074	1291
D		120	120	120	120	120	120	200	200	200	295	385	450	450	295	385	450	450	450	500

PN25WJAF(E)

PN25 双法兰式蝶阀（中线型）

DOUBLE FLANGE TYPE BUTTERFLY VALVE (CONCENTRIC TYPE)

G-PN25WJAF(E)

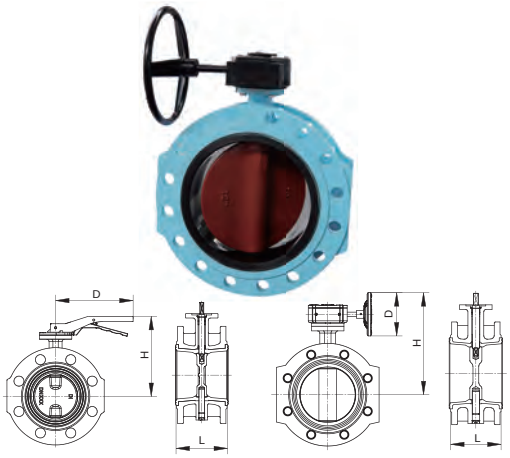

【技术规格 \ Technical Specifications】

■公称压力 \ Nominal Pressure: 2.5MPa（25Bar）

■工作温度 \ Working Temperature: -10℃～100℃ / -10℃～80℃

※EPDM阀座Seat：-10℃～100℃ / NBR阀座Seat：-10℃～80℃

■工作介质 \ Working Medium: 水 \ Water (※non-shock)

■结构长度 \ Face to Face Dimension: EN558 13系列 \ EN558 Basic Series 13

■连接方式 \ End Connection: EN1092-2 PN25

材质〔Materials〕

参考第29-30页 <Materials: P29-P30 page>

仅为手动操作阀门
Manual Operate Only

尺寸〔Dimensions〕

(mm)

DN	mm	50	65	80	100	125	150	200	250	300
	inch	2	2.1/2	3	4	5	6	8	10	12
L		108	112	114	127	140	140	152	165	178
H (手柄 \ Lever)		173	183	198	208	223	243	-	-	-
H (蜗轮 \ Gear)		210	220	235	245	260	280	340	423	513
D (手柄 \ Lever)		220	220	220	322	322	322	-	-	-
D (蜗轮 \ Gear)		120	120	120	120	120	120	200	295	385

G-PN16WJADF(E)

PN16 双偏心蝶阀

DOUBLE OFFSET BUTTERFLY VALVE

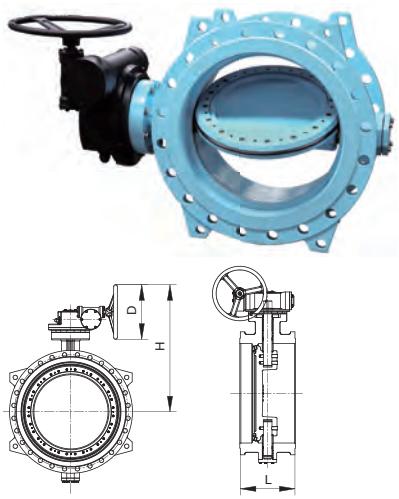

【技术规格 \ Technical Specifications】

■公称压力 \ Nominal Pressure: 1.6MPa（16Bar）

■工作温度 \ Working Temperature: -10℃～100℃ / -10℃～80℃

※EPDM阀座Seat：-10℃～100℃ / NBR阀座Seat：-10℃～80℃

■工作介质 \ Working Medium: 水 \ Water (※non-shock)

■结构长度 \ Face to Face Dimension: EN558 14系列 \ EN558 Basic Series 14

■连接方式 \ End Connection: EN1092-2 PN16

材质〔Materials〕

参考第30页 <Materials: P30 page>

仅为手动操作阀门
Manual Operate Only

尺寸〔Dimensions〕

(mm)

DN	mm	100	125	150	200	250	300	350	400	450	500	600	700	800	900	1000	1200
	inch	4	5	6	8	10	12	14	16	18	20	24	28	32	36	40	48
L		190	200	210	230	250	270	290	310	330	350	390	430	470	510	550	630
H		252	310	333	347	445	486	602	618	682	682	752	929	1060	1172	1249	1486
D		120	200	200	200	295	295	385	385	295	295	295	385	450	500	500	600

G-PN25WJADF(E) PN25 双偏心蝶阀

DOUBLE OFFSET BUTTERFLY VALVE



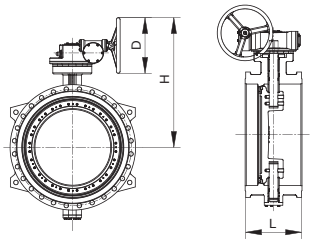

【技术规格 \ Technical Specifications】

■公称压力 \ Nominal Pressure: 2.5MPa（25Bar）

■工作温度 \ Working Temperature: -10℃～100℃ / -10℃～80℃

※EPDM阀座Seat：-10℃～100℃ / NBR阀座Seat：-10℃～80℃

■工作介质 \ Working Medium: 水 \ Water (※non-shock)

■结构长度 \ Face to Face Dimension: EN558 14系列 \ EN558 Basic Series 14

■连接方式 \ End Connection: EN1092-2 PN25

材质〔Materials〕

参考第30页 <Materials: P30 page>

仅为手动操作阀门
Manual Operate Only

尺寸〔Dimensions〕 (mm)

DN	mm	100	125	150	200	250	300	350	400	450	500	600	700	800	900	1000	1200
	inch	4	5	6	8	10	12	14	16	18	20	24	28	32	36	40	48
L		190	200	210	230	250	270	290	310	330	350	390	430	470	510	550	630
H		252	310	333	357	493	556	602	647	682	803	940	1040	1144	1315	1375	1523
D		120	200	200	200	385	385	385	295	295	385	450	450	500	600	600	600

PN25WJAR(E) G-PN25WJAR(E) PN25 对夹式蝶阀（中线型）※阀板包胶

WAFER TYPE BUTTERFLY VALVE(CONCENTRIC TYPE)



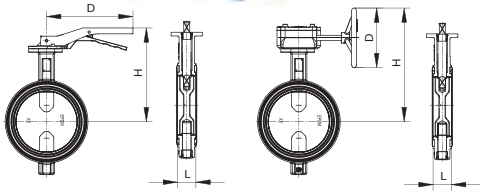

【技术规格 \ Technical Specifications】

■公称压力 \ Nominal Pressure: 2.5MPa（25Bar）

■工作温度 \ Working Temperature: -10℃～100℃ / -10℃～80℃

※EPDM阀座Seat：-10℃～100℃ / NBR阀座Seat：-10℃～80℃

■工作介质 \ Working Medium: 水 \ Water (※non-shock)

■结构长度 \ Face to Face Dimension: KITZ标准 \ KITZ STANDARD

■连接方式 \ End Connection: EN1092-2 PN25

材质〔Materials〕

参考第30页 <Materials: P30 page>

仅为手动操作阀门
Manual Operate Only

尺寸〔Dimensions〕 (mm)

DN	mm	50	65	80	100	125	150	200	250	300
	inch	2	2.1/2	3	4	5	6	8	10	12
L		42	45	46	52	55	56	60	66	78
H (手柄 \ Lever)		193	206	212	231	244	256	-	-	-
H (蜗轮 \ Gear)		230	243	249	268	281	293	368	399	493
D (手柄 \ Lever)		220	220	220	322	322	322	-	-	-
D (蜗轮 \ Gear)		120	120	120	120	120	120	200	200	295

产品编码〔Product coding〕

G - 10 XJ S M E A

❶ ❷ ❸ ❹ ❺ ❻ ❷

①阀门操作 Valve operation
无None……手柄 Lever Handle
G……齿轮 Gear

②压力等级 Class
10_A……10K/ASME Class 150
10……JIS 10K
16……JIS 16K
20……JIS 20K
150……ASME 150 psi
200……ASME 200 psi
PN16……EN1092/BS4504 PN16
PN25……EN1092/BS4504 PN25

③KITZ阀门系列 KITZ Butterfly Valve Serises
XJ……XJ系列 XJ Serises
DJ……DJ系列 DJ Serises

④设计 Design
无None……对夹式 Wafer Type
S……短颈（限定XJ系列）
L……凸耳式 Lug Type
F……法兰式 Flange Type

⑤阀板材质 Disc Material
无None……球墨铸铁 DI
U……SS304
M……SS316
B……铝青铜 Aluminum Bronze

⑥阀座材质 Seat Material
无None……NBR
E……EPDM

P-T等级〔P-T Rating〕

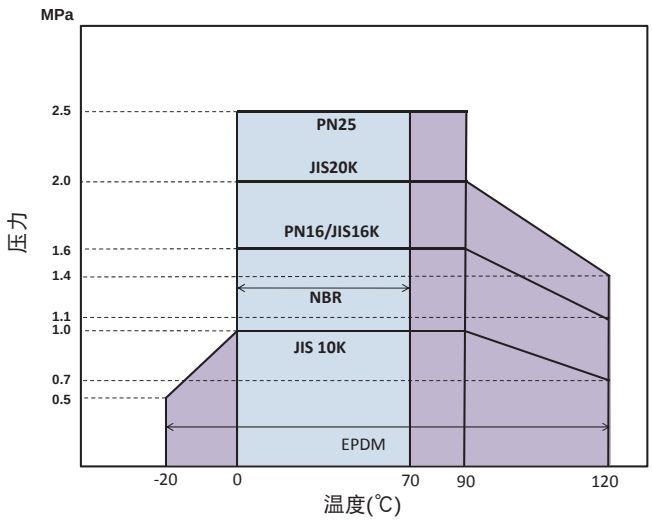

注1：120℃时对液体种类有限制，请向上海开滋（KITZ）咨询以获知详情。
注2：如介质为零下或P-T等级超出上图所示，请向上海开滋（KITZ）咨询以获取技术支持。
Note1. There are some fluid type restrictions for the service at 120℃.
Contact KITZ for the details.
Note2. P-T rating for sub-zero application is optionally available.
Contact KITZ for technical advice when service conditions may exceed the P-T rating limited here.

防结露范围〔Negative Dew Condensation area〕

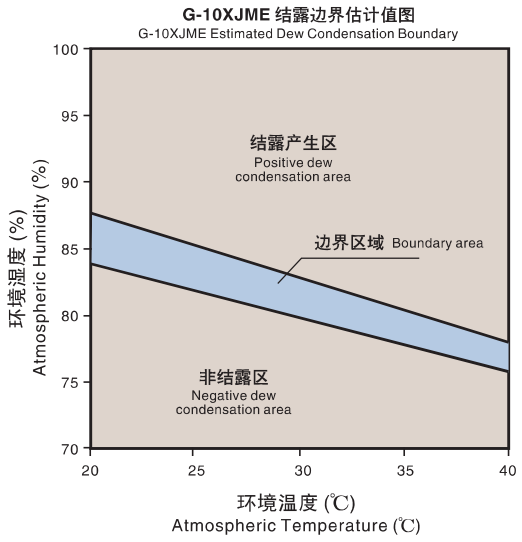

PN16XJME PN16 对夹式铝合金蝶阀

WAFER TYPE ALUMINUM BUTTERFLY VALVES, CENTER DRIVE DISC, LEVER OPERATED



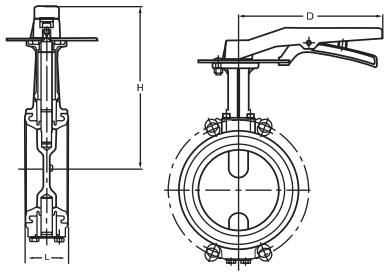

最高工作压力〔Maximum Working Pressure〕

参考第35页 <Maximum Working Pressure: P35 page>

材质〔Materials〕

零件<Parts>	材质<Material>
阀体<Body>	铝合金<Aluminum>
阀杆<Stem>	不锈钢<Stainless Steel>
阀板<Disc>	不锈钢<Stainless Steel>
阀座<Seat>	EPDM

尺寸〔Dimensions〕

(mm)

DN	mm	50	65	80	100	125	150
	inch	2	2.1/2	3	4	5	6
L		43	46	46	52	56	56
H		176	185	193	204	249	261
D		180	180	180	180	230	230

G-PN16XJME PN16 对夹式铝合金蝶阀

WAFER TYPE ALUMINUM BUTTERFLY VALVES, CENTER DRIVE DISC, GEAR OPERATED



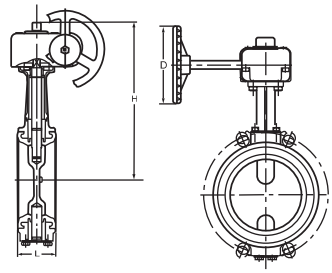

最高工作压力〔Maximum Working Pressure〕

参考第35页 <Maximum Working Pressure: P35 page>

材质〔Materials〕

零件<Parts>	材质<Material>
阀体<Body>	铝合金<Aluminum>
阀杆<Stem>	不锈钢<Stainless Steel>
阀板<Disc>	不锈钢<Stainless Steel>
阀座<Seat>	EPDM

尺寸〔Dimensions〕

(mm)

DN	mm	50	65	80	100	125	150	200
	inch	2	2.1/2	3	4	5	6	8
L		43	46	46	52	56	56	60
H		179	188	212	223	258	270	311
D		80	80	110	110	110	110	170

PN16DJ(E) PN16DJU(E) PN16DJM(E)

PN16

球墨铸铁DJ型蝶阀（手柄式）

DJ SERIES DUCTILE IRON WAFER TYPE BUTTERFLY VALVE (LEVER OPERATED)

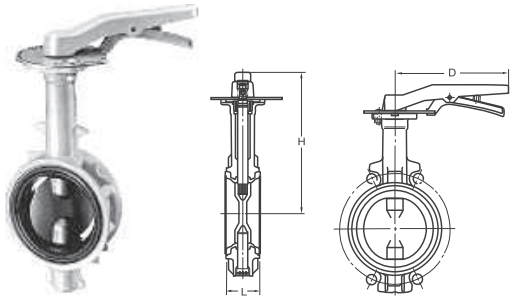

最高工作压力〔Maximum Working Pressure〕

参考第35页 <Maximum Working Pressure: P35 page>

材质〔Materials〕

零件<Parts>	PN16DJ	PN16DJE	PN16DJU	PN16DJUE	PN16DJM	PN16DJME
阀体<Body>	球墨铸铁<Ductile Iron>					
阀杆<Stem>	不锈钢<Stainless Steel>					
阀板<Disc>	球墨铸铁<Ductile Iron>		不锈钢304 <Stainless Steel 304>		不锈钢316 <Stainless Steel 316>	
阀座<Seat>	NBR	EPDM	NBR	EPDM	NBR	EPDM

尺寸〔Dimensions〕

(mm)

DN	mm	50	65	80	100	125	150	200
	inch	2	2.1/2	3	4	5	6	8
L		43	46	46	52	56	56	60
H		191	199	217	227	265	277	287
D		180	180	180	180	230	230	350

G-PN16DJ(E) G-PN16DJU(E) G-PN16DJM(E)

PN16

球墨铸铁DJ型蝶阀（蜗轮式）

DJ SERIES DUCTILE IRON WAFER TYPE BUTTERFLY VALVE (GEAR OPERATED)

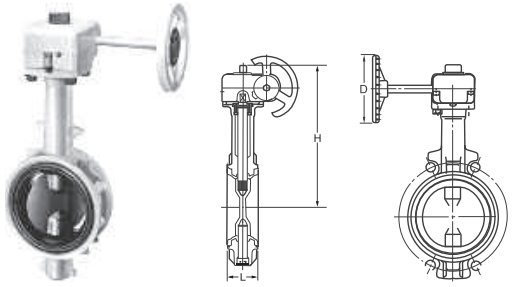

最高工作压力〔Maximum Working Pressure〕

参考第35页 <Maximum Working Pressure: P35 page>

材质〔Materials〕

零件<Parts>	G-PN16DJ	G-PN16DJE	G-PN16DJU	G-PN16DJUE	G-PN16DJM	G-PN16DJME
阀体<Body>	球墨铸铁<Ductile Iron>					
阀杆<Stem>	不锈钢<Stainless Steel>					
阀板<Disc>	球墨铸铁<Ductile Iron>		不锈钢304 <Stainless Steel 304>		不锈钢316 <Stainless Steel 316>	
阀座<Seat>	NBR	EPDM	NBR	EPDM	NBR	EPDM

尺寸〔Dimensions〕

(mm)

DN	mm	50	65	80	100	125	150	200	250	300	350	400	450	500	600
	inch	2	2.1/2	3	4	5	6	8	10	12	14	16	18	20	24
L		43	46	46	52	56	56	60	68	78	78	102	114	127	154
H		210	218	236	246	274	286	325	391	416	462	517	541	623	671
D		110	110	110	110	110	110	170	310	310	360	360	360	500	500

PN16DJL(E) PN16DJLU(E) PN16DJLM(E)

PN16

球墨铸铁DJL型突耳式蝶阀（手柄式）

DJL SERIES DUCTILE IRON LUGGED TYPE BUTTERFLY VALVE (LEVER OPERATED)

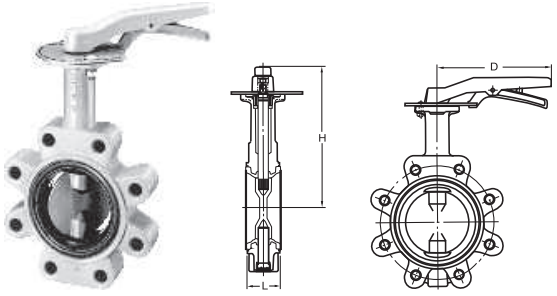

最高工作压力〔Maximum Working Pressure〕

参考第35页 <Maximum Working Pressure: P35 page>

材质〔Materials〕

零件<Parts>	PN16DJL	PN16DJLE	PN16DJLU	PN16DJLUE	PN16DJLM	PN16DJLME
阀体<Body>	球墨铸铁<Ductile Iron>					
阀杆<Stem>	不锈钢<Stainless Steel>					
阀板<Disc>	球墨铸铁<Ductile Iron>		不锈钢304 <Stainless Steel 304>		不锈钢316 <Stainless Steel 316>	
阀座<Seat>	NBR	EPDM	NBR	EPDM	NBR	EPDM

尺寸〔Dimensions〕

(mm)

DN	mm	50	65	80	100	125	150	200
	inch	2	2.1/2	3	4	5	6	8
L		43	46	46	52	56	56	60
H		191	199	217	227	265	277	287
D		180	180	180	180	230	230	350

G-PN16DJL(E) G-PN16DJLU(E) G-PN16DJLM(E)

PN16

球墨铸铁DJL型突耳式蝶阀（蜗轮式）

DJL SERIES DUCTILE IRON LUGGED TYPE BUTTERFLY VALVE (GEAR OPERATED)

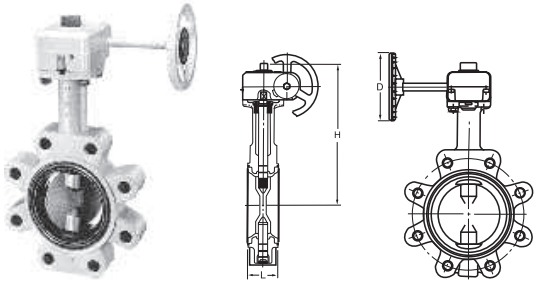

最高工作压力〔Maximum Working Pressure〕

参考第35页 <Maximum Working Pressure: P35 page>

材质〔Materials〕

零件<Parts>	G-PN16DJL	G-PN16DJLE	G-PN16DJLU	G-PN16DJLUE	G-PN16DJLM	G-PN16DJLME
阀体<Body>	球墨铸铁<Ductile Iron>					
阀杆<Stem>	不锈钢<Stainless Steel>					
阀板<Disc>	球墨铸铁<Ductile Iron>		不锈钢304 <Stainless Steel 304>		不锈钢316 <Stainless Steel 316>	
阀座<Seat>	NBR	EPDM	NBR	EPDM	NBR	EPDM

尺寸〔Dimensions〕

(mm)

DN	mm	50	65	80	100	125	150	200	250	300
	inch	2	2.1/2	3	4	5	6	8	10	12
L		43	46	46	52	56	56	60	68	78
H		210	218	236	246	274	286	325	391	416
D		110	110	110	110	110	110	170	310	310

20DJUE JIS 20K 对夹式球墨铸铁蝶阀

WAFER TYPE DUCTILE IRON BUTTERFLY VALVES, CENTER DRIVE DISC, LEVER OPERATED



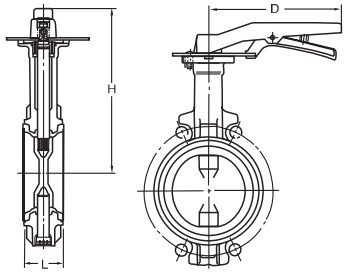

最高工作压力〔Maximum Working Pressure〕

参考第35页 <Maximum Working Pressure: P35 page>

材质〔Materials〕

零件<Parts>	20DJUE
阀体<Body>	球墨铸铁<Ductile Iron>
阀杆<Stem>	不锈钢<Stainless Steel>
阀板<Disc>	不锈钢<Stainless Steel>
阀座<Seat>	EPDM

尺寸〔Dimensions〕

(mm)

DN	mm	50	65	80	100	125	150
	inch	2	2.1/2	3	4	5	6
L		43	46	46	52	56	56
H		191	199	217	227	265	277
D		180	180	180	180	230	230

G-20DJUE JIS 20K 对夹式球墨铸铁蝶阀

WAFER TYPE DUCTILE IRON BUTTERFLY VALVES, CENTER DRIVE DISC, GEAR OPERATED



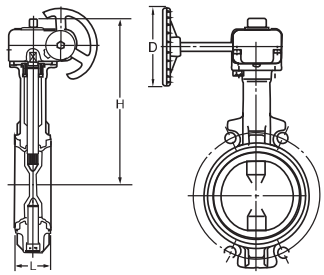

最高工作压力〔Maximum Working Pressure〕

参考第35页 <Maximum Working Pressure: P35 page>

材质〔Materials〕

零件<Parts>	G-20DJUE
阀体<Body>	球墨铸铁<Ductile Iron>
阀杆<Stem>	不锈钢<Stainless Steel>
阀板<Disc>	不锈钢<Stainless Steel>
阀座<Seat>	EPDM

尺寸〔Dimensions〕

(mm)

DN	mm	50	65	80	100	125	150	200	250	300	350	400	450	500	600
	inch	2	2.1/2	3	4	5	6	8	10	12	14	16	18	20	24
L		43	46	46	52	56	56	60	68	78	78	102	114	127	154
H		194	202	236	246	274	286	325	381	406	461	516	540	623	671
D		80	80	110	110	110	110	170	250	250	310	310	360	500	500

PN25DJE PN25 对夹式球墨铸铁蝶阀
PN25DJUE

WAFER TYPE DUCTILE IRON BUTTERFLY VALVES, CENTER DRIVE DISC, LEVER OPERATED

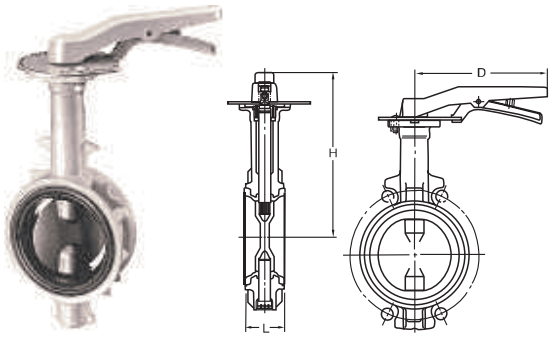

最高工作压力〔Maximum Working Pressure〕

参考第35页 <Maximum Working Pressure: P35 page>

材质〔Materials〕

零件<Parts>	PN25DJE	PN25DJUE
阀体<Body>	球墨铸铁<Ductile Iron>	球墨铸铁<Ductile Iron>
阀杆<Stem>	不锈钢<Stainless Steel>	不锈钢<Stainless Steel>
阀板<Disc>	球墨铸铁<Ductile Iron> + Ni plating	不锈钢<Stainless Steel>
阀座<Seat>	EPDM	EPDM

尺寸〔Dimensions〕 (mm)

DN	mm	50	65	80	100	125	150
	inch	2	2.1/2	3	4	5	6
L		43	46	46	52	56	56
H		191	199	217	227	265	277
D		180	180	180	180	230	230

G-PN25DJE PN25 对夹式球墨铸铁蝶阀
G-PN25DJUE

WAFER TYPE DUCTILE IRON BUTTERFLY VALVES, CENTER DRIVE DISC, GEAR OPERATED

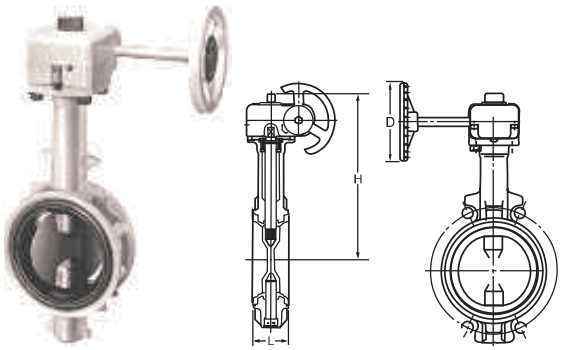

最高工作压力〔Maximum Working Pressure〕

参考第35页 <Maximum Working Pressure: P35 page>

材质〔Materials〕

零件<Parts>	G-PN25DJE	G-PN25DJUE
阀体<Body>	球墨铸铁<Ductile Iron>	球墨铸铁<Ductile Iron>
阀杆<Stem>	不锈钢<Stainless Steel>	不锈钢<Stainless Steel>
阀板<Disc>	球墨铸铁<Ductile Iron> + Ni plating	不锈钢<Stainless Steel>
阀座<Seat>	EPDM	EPDM

尺寸〔Dimensions〕 (mm)

DN	mm	50	65	80	100	125	150	200	250	300
	inch	2	2.1/2	3	4	5	6	8	10	12
L		43	46	46	52	56	56	60	68	78
H		194	202	236	246	274	286	325	381	406
D		80	80	110	110	110	110	250	250	250

PN25DJLE PN25 对夹式球墨铸铁蝶阀
PN25DJLUE

WAFER TYPE DUCTILE IRON BUTTERFLY VALVES, CENTER DRIVE DISC, LEVER OPERATED

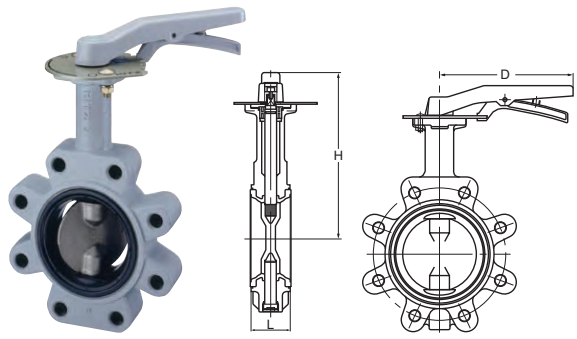

最高工作压力〔Maximum Working Pressure〕

参考第35页 <Maximum Working Pressure: P35 page>

材质〔Materials〕

零件<Parts>	PN25DJLE	PN25DJLUE
阀体<Body>	球墨铸铁<Ductile Iron>	球墨铸铁<Ductile Iron>
阀杆<Stem>	不锈钢<Stainless Steel>	不锈钢<Stainless Steel>
阀板<Disc>	球墨铸铁<Ductile Iron> + Ni plating	不锈钢<Stainless Steel>
阀座<Seat>	EPDM	EPDM

尺寸〔Dimensions〕 (mm)

DN	mm	50	65	80	100	125	150
	inch	2	2.1/2	3	4	5	6
L		43	46	46	52	56	56
H		176	185	193	204	249	261
D		180	180	180	180	230	230

G-PN25DJLE PN25 对夹式球墨铸铁蝶阀
G-PN25DJLUE

WAFER TYPE DUCTILE IRON BUTTERFLY VALVES, CENTER DRIVE DISC, GEAR OPERATED

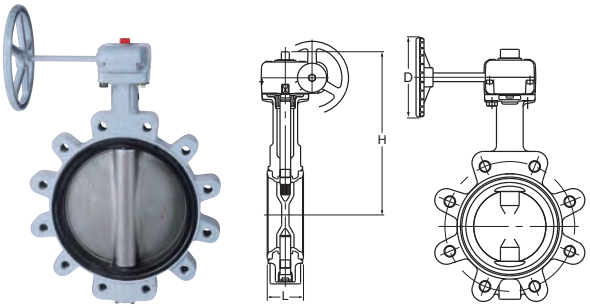

最高工作压力〔Maximum Working Pressure〕

参考第35页 <Maximum Working Pressure: P35 page>

材质〔Materials〕

零件<Parts>	G-PN25DJLE	G-PN25DJLUE
阀体<Body>	球墨铸铁<Ductile Iron>	球墨铸铁<Ductile Iron>
阀杆<Stem>	不锈钢<Stainless Steel>	不锈钢<Stainless Steel>
阀板<Disc>	球墨铸铁<Ductile Iron> + Ni plating	不锈钢<Stainless Steel>
阀座<Seat>	EPDM	EPDM

尺寸〔Dimensions〕 (mm)

DN	mm	50	65	80	100	125	150	200	250	300
	inch	2	2.1/2	3	4	5	6	8	10	12
L		43	46	46	52	56	56	60	68	78
H		194	202	236	246	274	286	325	381	406
D		80	80	110	110	110	110	250	250	250

蝶阀安装注意事项

阀门选型

1. 阀门选型应确保规格符合所需流体的种类和压力及温度状况。
2. 标准品在阀板、橡胶密封圈和PTFE密封圈上涂覆润滑剂用以保护其表面。也可选用禁油处理的非标品。有关详情请与上海开滋(KITZ)国际贸易有限公司和地区经销商联系。
3. 如使用粉状介质，请与上海开滋(KITZ)国际贸易有限公司和地区经销商联系。

储存

必须储存在干燥、清洁、无腐蚀的环境中，避免日光直射，让阀门以10°角半开以避免弹性密封圈产生永久变形。禁止对阀门和执行机构施以重荷，比如堆放或在上面放置其他物品。

管道安装

1. 先将法兰焊接到管道上并且冷却至环境温度后，才可将阀门安装到法兰上。否则焊接产生的高温会影响弹性阀座的性能。
2. 焊接法兰的边缘必须用车床加工到表面平滑为止以避免在阀门安装过程中伤及弹性阀座。法兰表面必须完全不受损坏不发生变形，清除所有污垢粉尘和异物，避免阀门及法兰接口发生液体泄漏。安装KITZ DJ, XJ, WJA系列蝶阀无需安装垫圈。
3. 清洁法兰及管道内腔以彻底清除焊接产生的溅落物、剥落的水垢和其他留下的异物。
4. 在阀门之间安装管道时，精确地对准上下水管道的中心对于无故障操作至关重要。图 1 所示的不精确中心点必须避免。
5. 安装阀门时将管道下方的定位螺栓定在同一高度起到支撑作用，并调节法兰之间的距离直至阀体两侧相距6-10毫米左右。切记此处阀门只能从关闭位置打开到10°的位置。
6. 将两个螺栓插入阀门的下侧导杆中，然后仔细安装，使法兰表面不会损伤弹性阀座。(见 图 2)
7. 然后将另外两个螺栓置入阀门上方的导杆中，确保在管道和阀门之间准确的中心定位。
8. 开启阀门三次以检查阀板和法兰的接触之间是否有不畅。
9. 移去定位螺栓，将所有螺栓放在阀体四周进行交替对角紧固(见图 3 图 4)，直到法兰触到阀体为止。请参考以下表格以获得推荐的扭矩值。
10. 安装执行机构时为阀门提供一个支撑以避免阀门颈的扭曲并减少阀门和管道之间的磨擦。
11. 不要踩踏在阀门颈或阀门手轮上。
12. 不要颠倒安装DN350或更大型号的阀门。
13. 不要在止回阀或泵上直接安装蝶阀，这样在接触阀板时可能会造成损坏。
14. 不要在弯头和渐缩管的下游一侧安装阀门，或在流速变化时校准阀门。发生这种情况，建议在大约10倍于阀门公称直径的距离之外安装阀门。

DJ系列建议螺栓扭矩

部件	N·m (kgf·m)	部件	N·m (kgf·m)
50	63(6)	250	177(18)
65		300	
80		350	265(27)
100		400	
125	111(11)	450	392(39)
150		500	
200		600	539(54)

XJ系列建议螺栓扭矩

部件	N·m (kgf·m)
40	49(5)
50	
65	
80	
100	
125	88(9)
150	
200	
250	118(12)
300	

图 1

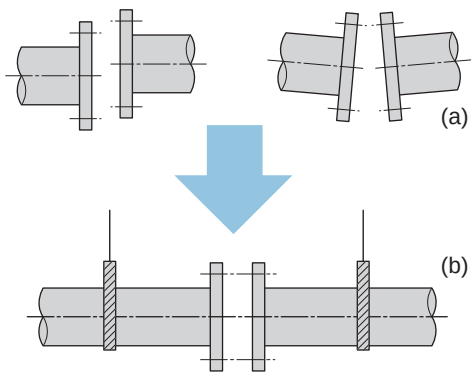

图 2

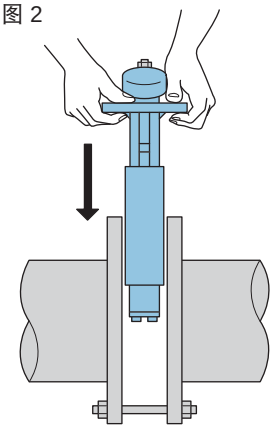

图 3

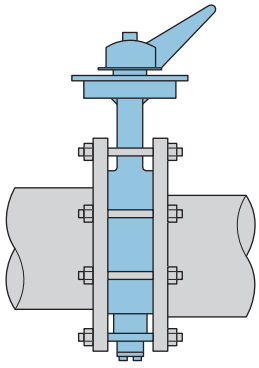

图 4

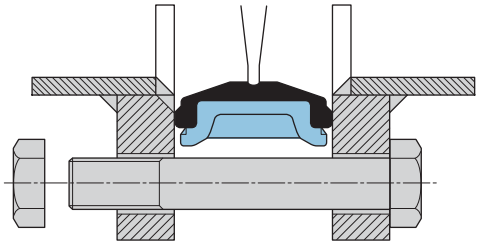

蝶阀安装注意事项

15.安装阀门需要考虑到哪个阀板会在输送液体过程中经受流速和压力的变化。请参阅插图。(图 5)
有关详情请与上海开滋(KITZ)国际贸易有限公司和地区经销商联系。

图 5

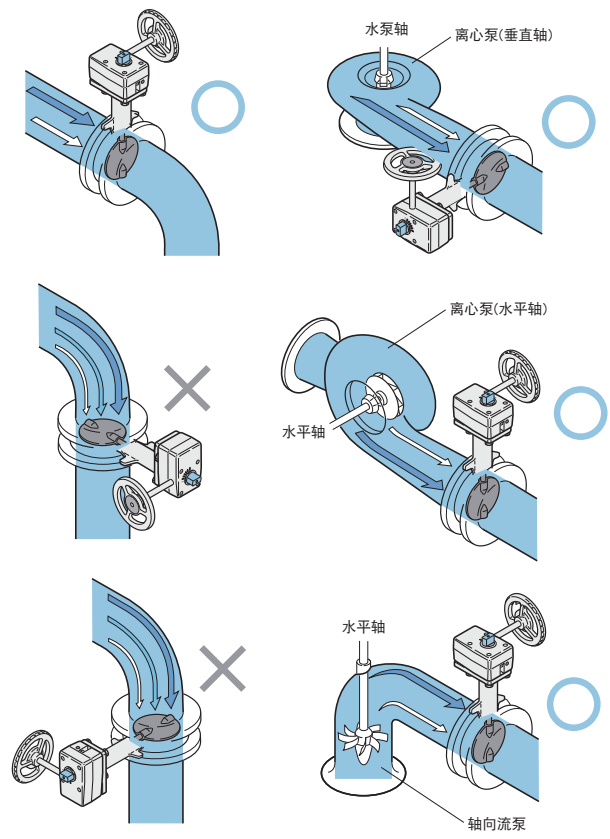

图 6

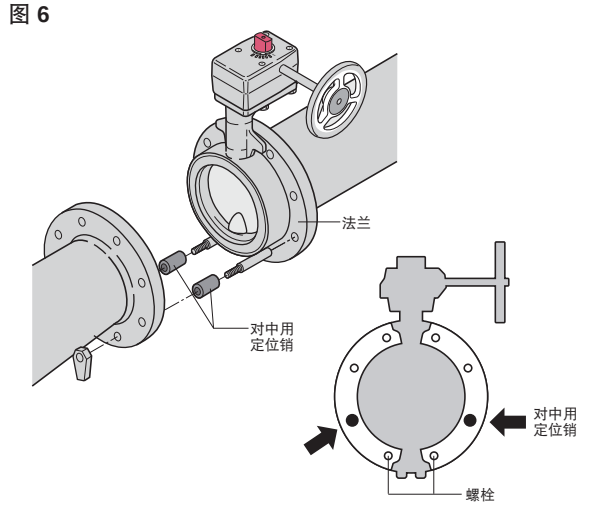

阀门的操作

1. 阀门的手动操作设备诸如手柄、齿轮箱必须用手操作。外力施加过多会导致阀门及其部件设备失灵。
2. 确保在对管线系统做测压试验前完全打开阀门，测试压力高于阀门公称压力时，切勿关闭阀门以代替管线中的盲板。
3. 当需要进行维修保养或出于其他原因从管道系统上拆卸阀门时，应确保先彻底释放所有管道压力。在管道中还存在压力时拧松螺栓是非常危险的。所有残留在管道中的液体必须被完全排空。
4. 阀门如需持续使用在30°角或以下时，用户请联系上海开滋(KITZ)国际贸易有限公司公司和地区经销商以获取技术咨询。
5. 请勿用位置指示器来操作阀门，或对位置指示器加过度负荷，否则指示器会遭到损坏。
6. 在管道尾端安装蝶阀时请确保使用盖板。
7. 当选用自动控制阀门时，标配的执行机构请参阅KITZ阀门执行机构目录，并联系上海开滋(KITZ)国际贸易有限公司或当地经销商以获取服务。
8. 须使用在泵出口或出料口时，请与上海开滋(KITZ)国际贸易有限公司联系。
9. 避免无意接触齿轮控制器和驱动设备制动螺栓。
10. 建议进行以下定期检查：
    - 阀门开启的角度
    - 检查螺栓有否松动，接口有否泄漏
    - 是否有震动或噪音
11. 请参阅指导手册了解其他须知内容，对于自控阀门请另行参阅阀门驱动器目录和驱动器指导手册。

⚠ 警 告

在阀门加压的情况下请勿拆卸阀颈，以防阀杆逸出。也请勿拆卸阀门执行机构，以防阀板转动，造成阀门故障。

Precautions for Trouble-free Operation of KITZ Butterfly Valves

Valve Selection

1. Ensure to select a valve with design specifications which meet the fluid type and the pressure and temperature conditions required.
2. Lubricants are applied to discs, rubber seats and PTFE seats as standard to protect their surfaces.
   Oil-free treated types are available as option. Contact KITZ Corporation or its local distributors for the details.
3. Contact KITZ Corporation or its local distributors for service with pulverulent bodies.

Storage and Handling

Valves must be stored in dry, clean and corrosion-free environment with no direct exposure to the sun, leaving valves open by 10° for prevention of permanent distortion of resilient seats. Refrain from overloading valves and their actuators, such as storing them in piles or placing other objects on them.

Mounting on Pipelines

1. Valves must be mounted on flanges only after flanges have been welded to pipes and cooled down to the atmospherical temperature. Otherwise, welding heat may affect the quality of resilient seats.
2. Edges of welded flanges must be machined for smooth surface finish so that they may not damage resilient seats during valve mounting. Flange faces must be free from damage or deformation, and be cleaned to remove rust or any other foreign objects so that there will be no concern of external leakage through valve and flange connections. Gaskets are not required for mounting KITZ DJ, XJ, WJA series butterfly valves.
3. Clean flanges and pipe bores to thoroughly remove welding spatters, scales and other foreign objects which may have been left inside.
4. Accurate centering of each couple of upstream and downstream pipes is essential for trouble-free operation of valves mounted between them. Incorrect centering shown in **Fig. 1** must be by all means avoided.
5. For valve mounting, set jack bolts under the pipes for flat support at the same height, and adjust the flange-to-flange distance so that some 6 mm to 10 mm room may be allowed beside the both sides of the valve body.
   Remember that valves here must be left open only by 10° from the fully closed position.
6. Set two bolts into the lower mounting guides of a valve and mount it carefully so that flange faces may not damage resilient seats. (**Fig. 2**)
7. Then set another two bolts into the upper mounting guides of a valve, ensuring the correct centering between pipes and the valve.
8. Trially open the valve to check to see if there is no disturbing contact between the valve disc and the flanges.
9. Remove the jack bolts, set all bolts around the valve body and tighten them alternately and diagonally till the flanges contact the valve body (**Fig. 3 and 4**).

Fig.1

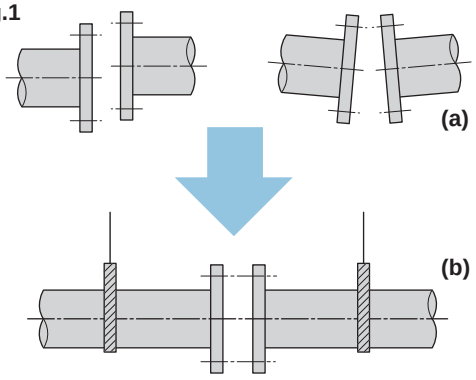

Fig.2

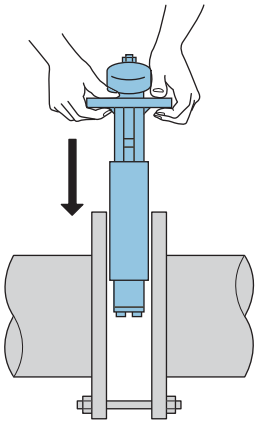

Fig.3

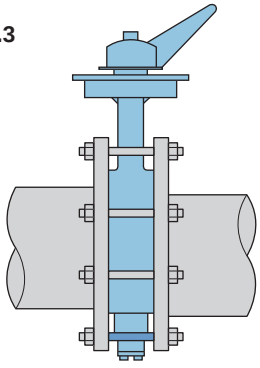

Fig.4

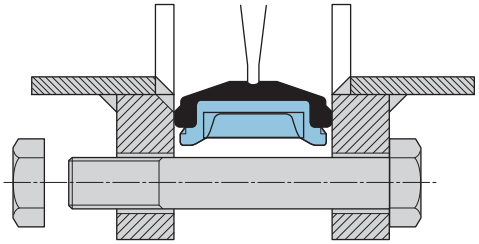

Precautions for Trouble-free Operation of KITZ Butterfly Valves

10. For mounting actuated valves, provide valve supports to prevent bending of valve necks and reduce valve and pipe vibration.
11. Don't step on valve necks or valve handwheels.
12. Don't mount valves of DN350 and larger with their operations upside down.
13. Don't mount butterfly valves directly to check valves or pumps, which may cause damage to them by the disc contacts.
14. Don't mount valves to downstream sides of elbows, reducers or regulating valves where fluid velocity changes. It is recommended to install valves approx-imately 10 times of the valve nominal sizes away from them for such cases.
15. Mount valves taking consideration of the effects which discs are given by fluid velocity or pressure chages in the pipings. Refer to the illustrations. **(Fig.5)**
    Contact KITZ Corporation or its local distributors for the details.

Valve Operation

1. Valves equipped with manual operators such as levers, and handles of gears must be ONLY MANUALLY operated. Application of an excessive external force to operate valves may result in malfunction of valves and their operators.
2. Ensure to fully open valves before a loop test of the piping system is carried out with line pressure higher than the nominal pressure of tested valves. Never use closed valves in place of blind flanges.
3. When valves need to be dismantled from pipes for maintenance or any other cause, ensure to thoroughly releave the line pressure beforehand. Loosening piping bolts under line pressure causes a danger. Any residual fluid left inside the pipeline must be completely drained.
4. Users should contact KITZ Corporation or its local distributors for technical advice, when valves should be continuously pressurized while left open by 30℃or less.
5. Don't use position indicators to operate valves, or overload position indicators. This may cause damage to indicators.
6. Ensure to use blind flanges when butterfly valves are mounted at the end of pipelines.
7. Standard actuators are referenced in this catalog for actuated valve operation. Contact KITZ Corporation or its local distributors for mounting optional actuators.
8. Contact KITZ Corporation for service at hopper or pump outlets.
9. Avoid touching gear operators and actuator stopper bolts accidentally.
10. It is recommended to perform periodical inspection for
    - Making sure of valve opening degree
    - Checking loosened bolts and leakage at each connection
    - Checking vibration and noise
11. Refer to instruction manual for other precautions. Also refer to actuator catalogs and instruction manuals for actuated valves.

Fig.5

● **Mounting to bent pipe**

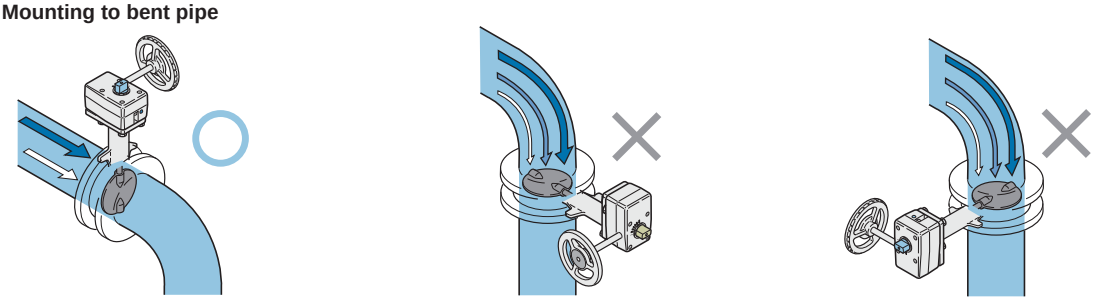

● **Mounting to pump outlet**

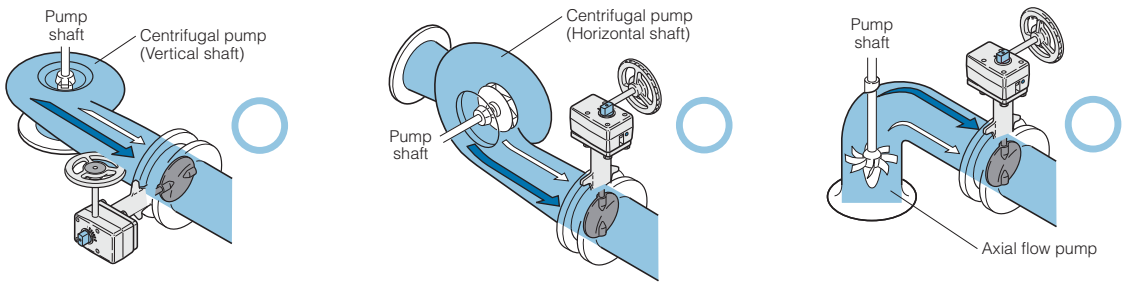

Note:
Centering with "centering sleeves" is required for the valves coupled with them for accurate centering for sizes of 80mm, 125mm and 200mm (XJ series).**(Fig.6)**

Fig.6

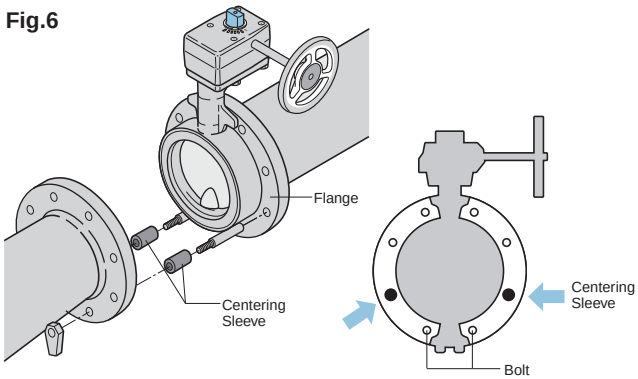

⚠WARNING

Don't disassemble necks while the valve is pressurized to prevent stem blow-out. Also don't dismantle valve operating devices, since it may cause valve discs rotate and result valve malfunction.