USER'S MANUAL
Rev. 01/2007

CD3000 M-3PH
THYRISTOR UNIT

from 15A to 90A

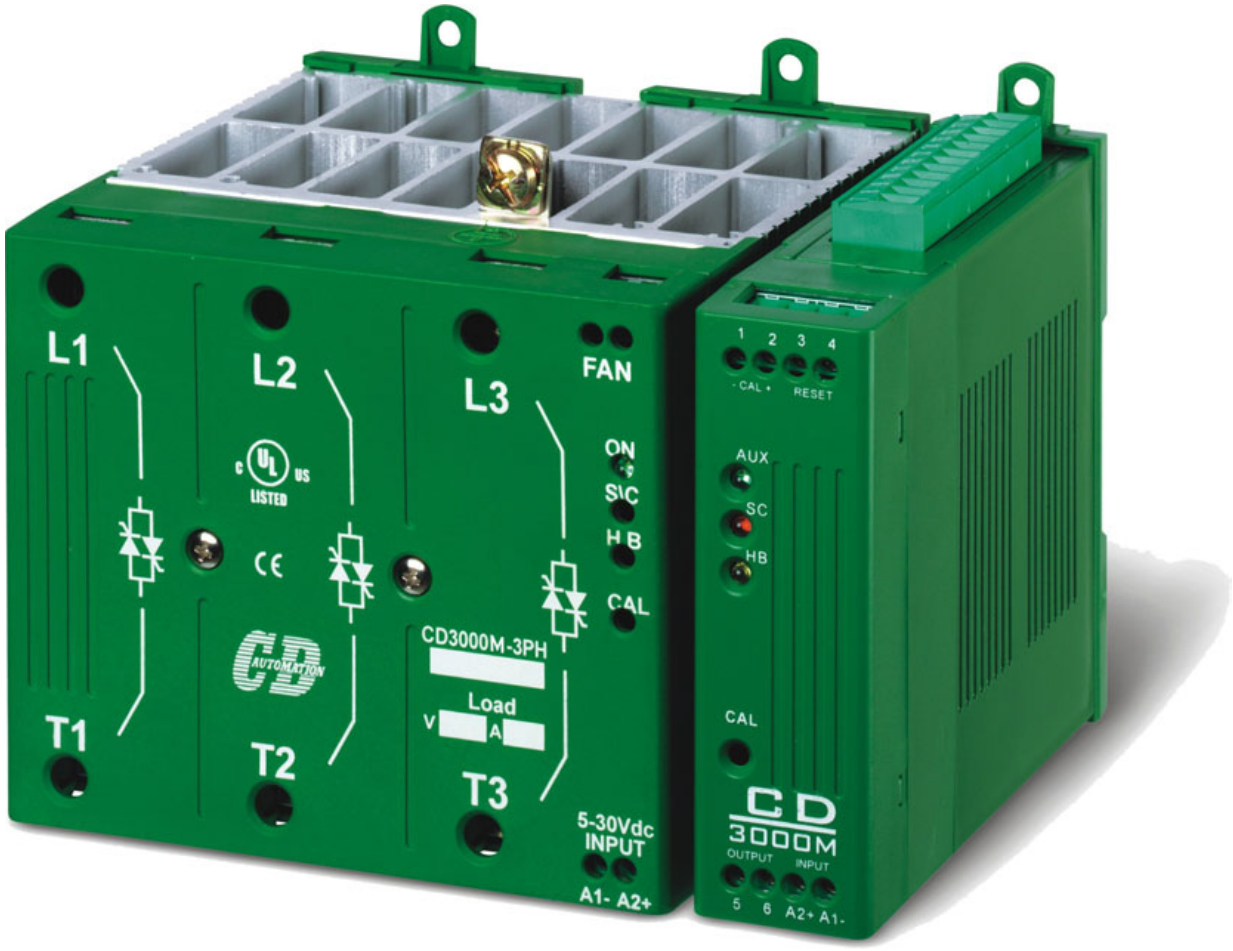

CD Automation S.r.l.
Via Picasso 34/36 - 20025 – Legnano (MI) – ITALY
Tel +39 0331 577479 – Fax +39 0331 579479
E-Mail: info@cdautomation.com - WEB: www.cdautomation.com

SUMMARY

1 Important warnings for safety 5

2 Introduction 7

2.1 Advantages compared with analog thyristor unit 7
2.2 CD-KP 8
2.3 CD-EASY 8
2.4 Software Configurator 9

3 Quick Start 10

4 CD3000M Sizing 10

5 Identification and Order Code 11

5.1 Identification of the unit 11
5.2 Order Code 12

6 Installation 13

6.1 Environmental installation conditions 13
6.2 Dimensions and Weight 14
6.3 CT dimensions (only with the HB option) 14
6.4 Fixing holes 15

7 Wiring instructions 16

7.1 Removing the cover 16
7.2 Wiring details 17
7.3 Power Terminals 18
7.4 Command Terminals 18
7.5 Diagram of control connection from size 15A 19
7.6 Diagram of control connection from size 35A to 100A 20

8 Power output features 21

8.1 Derating curve 21
8.2 Cooling fans 21

9 Led status and Alarms 22

9.1 LED Status Table 22
9.2 Not Critical Alarm 22
9.3 Calibration Procedure 23

10 Firing type 24

10.1 Zero Crossing (ZC) 24
10.2 Burst Firing (BF) 24

11 Connection description 25

11.1 Access to the Electronic boards 25
11.2 Supply the Electronic Board 26
11.3 Analog Inputs 27
11.4 Digital Input 29
11.5 Digital Output 30
11.6 PG Connector 31
11.7 RS485 Serial Port 31
11.8 Address configuration 32

12 MODBUS communication 33

12.1 MODBUS RTU Protocol 33
12.2 Message Format 33
12.3 Read Holding Registers 35
12.4 Preset Multiple Registers 35
12.5 Error and exception responses 36

13 Configuration Parameters 37

14 FuseHolder and Fuses 40

14.1 FuseHolder size 40
14.2 Fuses and Fuse Code for UL 41
14.3 Fuses and Fuse Code for CE 42

15 Maintenance 43

15.1 Trouble Shooting 43
15.2 Fans 44
15.3 Maintenance 44
15.4 Repairing procedure 44
15.5 Warranty condition 44

16 Note 45

1 Important warnings for safety

This chapter contains important information for the safety. The not observance of these instructions may result in serious personal injury or death and can cause serious damages to the Thyristor unit and to the components system included.
The installation should be performed by qualified persons.



The Thyristor unit are integral part of industrial equipments. When it is supply, the Thyristor unit is subject to dangerous tensions.

- Don't remove the protection Cover.
- Don't use these unit in aerospace applications and/ or nuclear.



The nominal current corresponds to use at temperature not superior to 40°C.

- The Thyristor unit must be mounted in vertical position and without obstruction above and below to allow a good flow ventilation.
- The hot air of one thyristor unit must not invest the unit positioned above.
- For side by side placed leave a space of 15mm between the unit.



A suitable device must ensure that the unit can be electrically isolated from the supply, this allows the qualified people to work in safety.



Protection (Protection, Protezione)
The unit have IP20 protection rating as defined by the specific international. Is necessary consider the place of installation.



Earth (Terre, Messa a terra)
For safety, the Thyristor unit with isolated heat-sink must be connected to earth.
Earth impedance should be correspondent to local earth regulation. Periodically the earth efficiency should be inspected.



Electronic supply (Alimentation électronique, Alimentazione elettronica)
The electronic circuit of the Thyristor unit must be supplied by dedicated voltage for all electronic circuits and not in parallel with coil contactors, solenoids and other.
It's recommended to use a shielded transformer.



Electric Shock Hazard (Risque de choque électrique, Rischi di scosse elettriche)
When the Thyristor unit is energized, after the power supply is shut off, wait least a minute for allow the discharge of the internal capacitors where there is a dangerous tension. Before working, make sure that:

- Only authorized personnel must perform maintenance, inspection, and replacement operations.
- The authorized personnel must read this manual before to have access to the unit.
- Unqualified People don't perform jobs on the same unit or in the immediate vicinities.



Important warnings (Attention, Avvertenze importanti)
During the operations with units under tension, local regulations regarding electrical installation should be rigidly observed:

- Respect the internal safety rules.
- Don't bend components to maintain insulation distances.
- Protect the units from high temperature humidity and vibrations.
- Don't touch components to prevent electrostatic discharges on them.
- Verify that the size is in line with real needs.
- To measure voltage current etc. on unit, remove rings and other jewels from fingers and hands.
- Authorized personnel that work on thyristor unit under power supply voltage must be on insulated board

This listing does not represent a complete enumeration of all necessary safety cautions.



Electromagnetic compatibility
(Compatibilità électromagnétique, Compatibilità elettromagnetica)
Our thyristor units have an excellent immunity to electromagnetic interferences if all suggestions contained in this manual are respected. In respect to a good Engineering practice, all inductive loads like solenoids contactor coils should have a filter in parallel.



Emissions (Emission, Emissioni)
All solid-state power controllers emit a certain amount of radio-frequency energy because of the fast switching of the power devices.
The CD Automation's Thyristor unit are in accord with the EMC norms, CE mark.
In most installations, near by electronic systems will experience no difficulty with interference. If very sensitive electronic measuring equipment or low-frequency radio receivers are to be used near the unit, some special precautions may be required. These may include the installation of a line supply filter and the use of screened (shielded) output cable to the load.

Note



Warning: This icon is present in all the operational procedures where the Improper operation may result in serious personal injury or death



Caution: This icon is present in all the operational procedures where the Improper operation can cause damage for the Thyristor unit.

CD Automation reserves the right to modify the own products and this manual without any advise.

c UL US LISTED

CE

2 Introduction

A thyristor unit is semiconductor device which acts as a switch formed by two thyristors in ant parallel. To switch on the alternating current the input signal will be on and the thyristor will switch off at first Zero Crossing voltage with no input signal.
The benefits of thyristor units compared with elettromechanical contactors are numerouses: no moving parts, no maintenance and capacity to switch very fast. Thyristors are the only solution to control transformers and special loads that change resistance with temperature and with age.

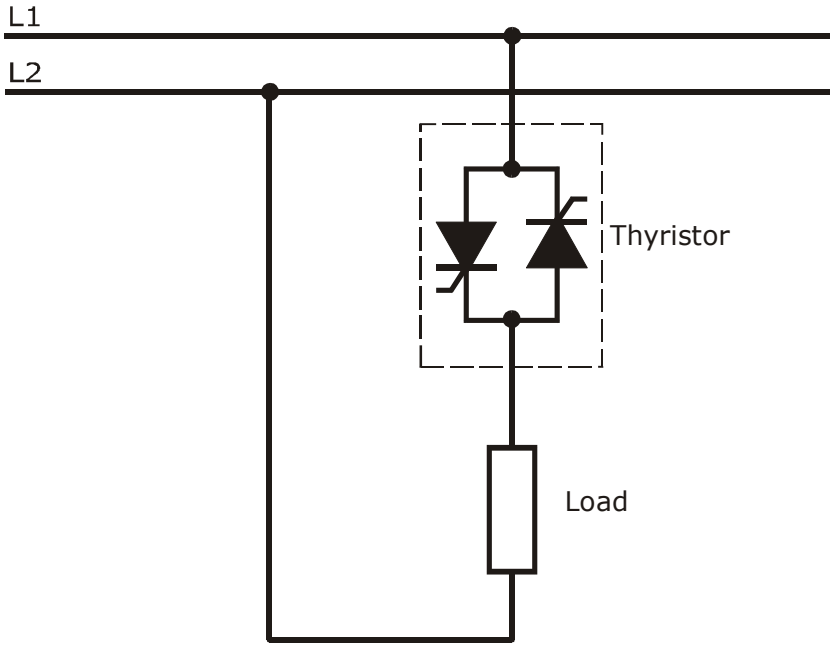

2.1 Advantages compared with analog thyristor unit

Communication RS485 is a standard feature of CD3000M this allows the use of many information like: current, power, load state and all the parameters for diagnostic and configuration. Ulterior advantages of the digital system vs the analogical is the flexibility and the possibility of implement special characteristics without change the hardware. Several strategies can be implemented and selected through the configuration parameters.
With CD-KP, you can have access to the configuration parameters without expose at the dangerous voltage inside the cabinet and without stop the plant.

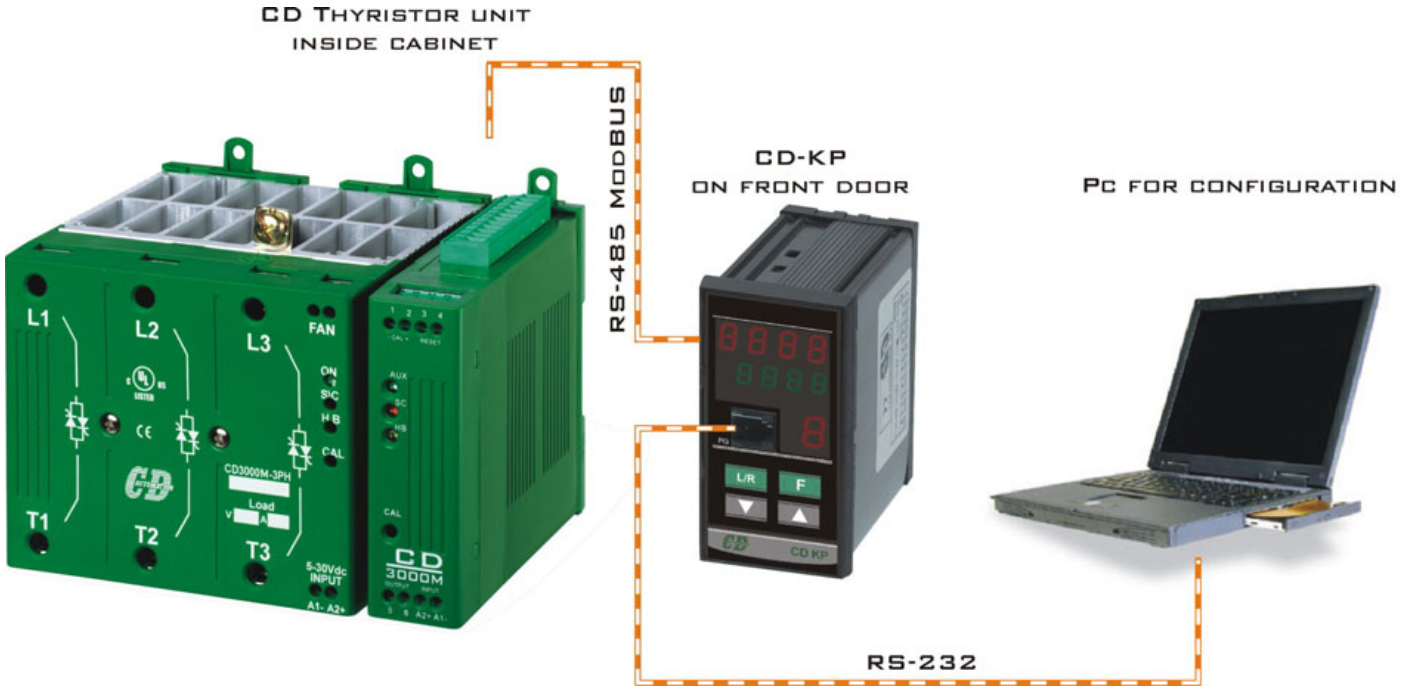

2.2 CD-KP

The CD-KP is designed to be connected with all CD Automation's Thyristor units via RS485 communication. On front unit is possible to read the principal operational parameters of the unit like: power, tension, current, reference, alarms, etc.
One of these variables can be selected and retransmitted via an isolated output (4÷20mA or 0÷10V)
All the menus (except the operator menu) can be protected by password to avoid accidental change of configuration parameters by unauthorised personnel.
On front unit is also available a plug-in connector RS485 for connect a PC with the Thyristor units without open the cabinet and without stop the production process.

Technical Specification:

- Use in Local/Remote
- Set Point Ramp UP - Down
- Scroll selection of:
  - Set point
  - Power output
  - Current
  - Voltage
- Display indication for:
  - Heater Break alarm
  - SCR short circuit
- Password for configuration parameters
- Plug-in connector on front to use software configurator
- Retransmission (4÷20mA or 0÷10Vdc) of one of these parameters: Power PV, Current, Voltage.
- Dimension 48x96x92mm (LxAxP)
- Comply with EMC, CE marked



2.3 CD-EASY

CD-EASY is a Memory of support used for maintenance people that is not confident in personal computer.
With the CD-EASY is possible memorize the configuration of one Thyristor Unit and paste it into another in few seconds.
CD-EASY could be loaded with the personal configuration of the unit and stored together with the system drawings in a convenient place, enabling unit reconfiguration within seconds if require.

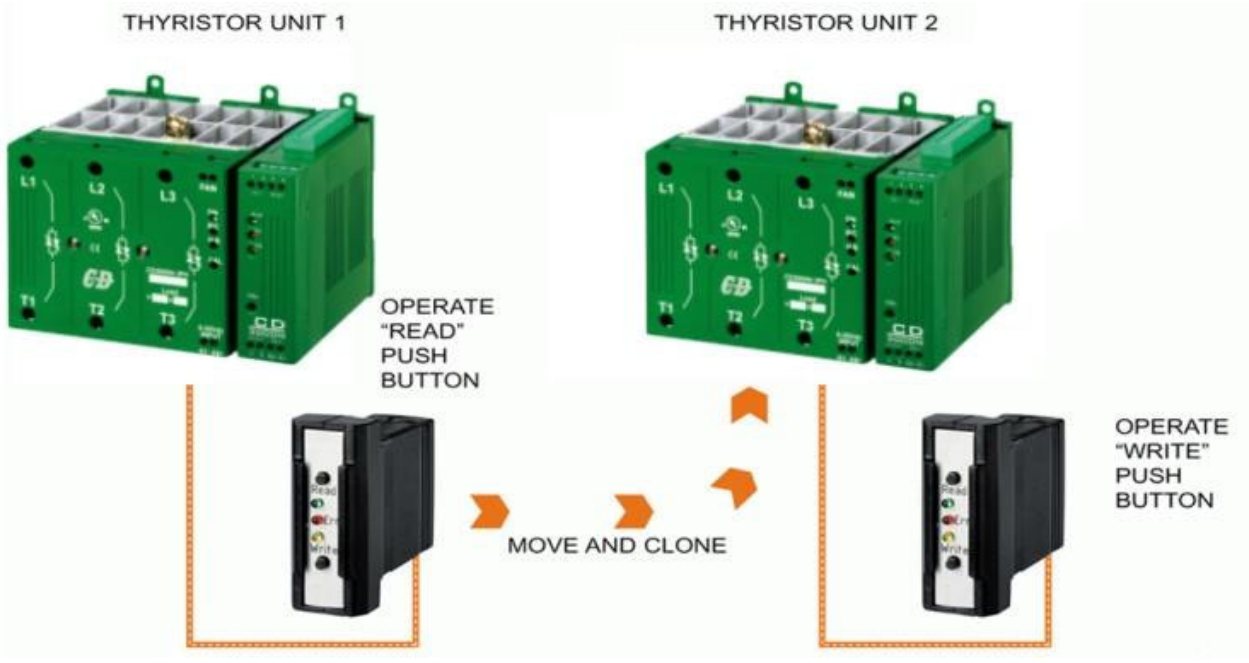

2.4 Software Configurator

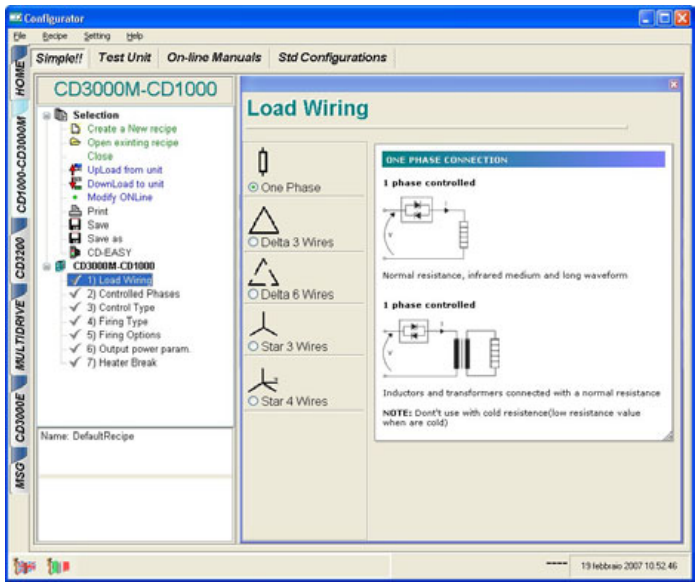

The software configuration is free and is possible download it from our site: www.cdautomation.com

If the Order Code is in line with requirement, then CD3000M has been already configured in Factory and it's ready to use.
You need the software only to modify the ordered configuration. Anyway we suggest to check the unit on the machine with the "Test unit" section.

For install the software, launch the program and follow the instructions on the screen.



To connect the unit at the PC, it's necessary use the programming cable connected between the PG connector (see par. 11.6) and the serial port RS232 of the PC.

The programming cable is not included.



With the CD-RS serial converter is possible configure the Thyristor unit also through the RS485 (see par. 11.7).
For this solution, the programming cable is not necessary.

Run the software configurator and set the serial port of the PC with con baudrate =9600 and the address of Thyristor unit (default=1).

3 Quick Start



Caution: *this procedure must be performed only by qualified persons.*

If the Order Code of the Thyristor unit is in line with what you really need, then CD3000M has been already configured in Factory and you just need to do the following steps:

1. Verify the CD3000M Sizing. Making sure that:
   - The load current is equal or less than the MAX current of CD3000M.
   - The load voltage is equal or less than the MAX voltage of CD3000M.

   (see par. 4)
2. Verify the Order Code
   (see par. 5.2)
3. Verify the Installation
   (see par. 6)
4. Verify the Diagram of control connection:
   - All auxiliary connections must be done in line with wirings on this manual.
   - Verify that there isn't a short circuit on the load.
   - Verify that the Reset Contact on terminal 3 and 4 are closed.
   - With External Enable option give Enable to the unit.

   (see par. 7.5)
5. Supply the Electronic boards
   (see Order Code)
6. Supply the Fan at 230VAC ±15% 50/60Hz (110VAC ±15% 50/60Hz Optional)
   (only for size S6C and S8C)
7. Supply the Power unit
   (see par. 7.3)
8. If you have HB option make the Calibration procedure (see par. 9.3)

The CD3000M Thyristor unit is ready to start.

4 CD3000M Sizing

4.1.1 Star wiring with resistive load

$$I = \frac{P}{1{,}73V}$$

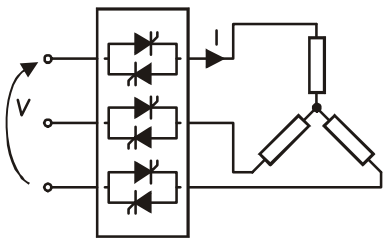

V = Nominal voltage phase to phase
I = Nominal current of the load
P = Nominal power of the load

4.1.2 Delta wiring with resistive load

$$I = \frac{P}{1{,}73V}$$

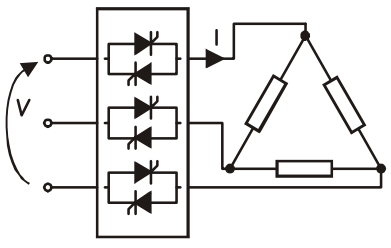

V = Nominal voltage phase to phase
I = Nominal current of the load
P = Nominal power of the load

4.1.3 Open Delta wiring with resistive load

$$I = \frac{P}{3V}$$

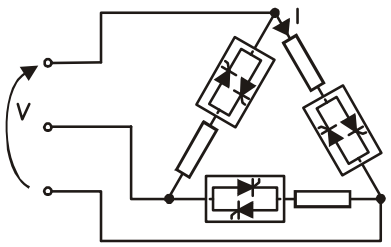

V = Nominal voltage phase to phase
I = Nominal current of the load
P = Nominal power of the load

5 Identification and Order Code

5.1 Identification of the unit

Caution: *Before to install, make sure that the Thyristor unit have not damages. If the product has a fault, please contact the dealer from which you purchased the product.*

The identification's label give all the information regarding the factory settings of the Thyristor unit, this label is on the unit, like represented in figure.
Verify that the product is the same thing as ordered (see par. 5.2).



5.2 Order Code

Model	1	2	3	4	5	6	7
CD3000M-3PH							

1	Max Current of CD3000M											
	15A 30A		45A 60A		75A 90A							
	The Max Current must be equal or more than Load Current											

2	Load Current
	Specify this value to configure the unit in CD Automation

3	Max Voltage of CD3000M	
	480V 600V	
	The Max Voltage must be equal or more than Load Voltage	

4	Auxiliary Voltage (Voltage supply for the Electronic boards)	
	90:130	From 90 to 130Vac; 10VA
	170:265	From 170 to 265Vac; 10VA
	230:345	From 230 to 345Vac; 10VA
	300:530	From 300 to 530Vac; 10VA
	510:690	From 510 to 690Vac; 10VA

5	Input	
	SSR	4÷30Vdc
	0÷10V	0÷10Vdc
	4÷20mA	4÷20mA
	POT	Potentiometer 10KΩ

6	Firing Type	
	ZC	Zero Crossing
	BF___[1]	Burst Firing
	[1] Specify the number of firing cycles at 50% of the input signal (from 1 to 255)	

7	Option	
	EF	External fuses and fuse holders
	NF	No fuses
	HB	Heater Break Alarm
	CD-KP	External Keypad
	110Fan	Fan voltage supply 110VAC ± 15% (std 230VAC ± 15%) 50/60Hz
	EP	External Protection IP20 for size S7C and S8C
	UL	UL Certification

6 Installation

Caution: *Don't install near the hot elements or near the units that could give electromagnetic interferences.*

The CD3000M Thyristor unit must be always mounted in vertical position to improve air cooling on heat-sink. Maintain the minimum distances in vertical and in horizontal as represented.
When more unit has mounted inside the cabinet maintain the air circulation like represented in figure.
Sometimes is necessary installing a fan to have better air circulation.

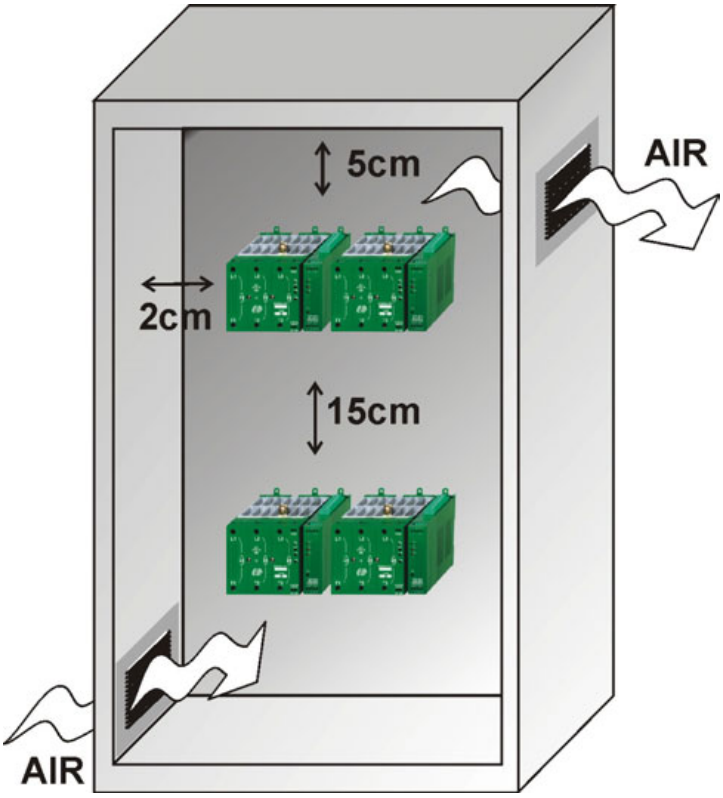

6.1 Environmental installation conditions

Ambient temperature	0-40°C at nominal current. Over 40°C use the derating curve (see par. 8.1)
Storage temperature	-25°C to 70°C
Installation place	Don't install at direct sun light, where there are conductive dust, corrosive gas, vibration or water and also in salty environmental.
Altitude	Up to 1000 meter over sea level. For higher altitude reduce the nominal current of 2% for each 100m over 1000m
Humidity	From 5 to 95% without condense and ice

6.2 Dimensions and Weight

CD3000M 3PH 15A (S2C)	CD3000M 3PH 30A (S4C)	CD3000M 3PH 45A (S6C)	CD3000M 3PH 60A÷90A (S8C)
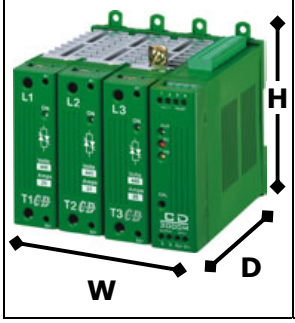	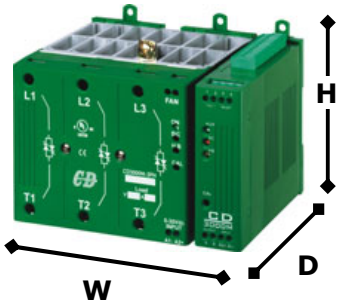	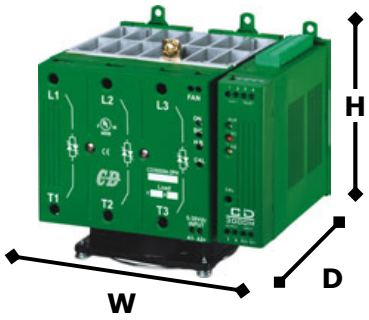	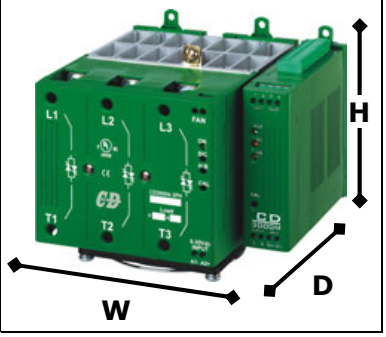

Size	W(mm)	H(mm)	D(mm)	Weight (kg)
15A (S2C)	123	120	120	1,25
30A (S4C)	148	120	123	1,5
45A (S6C)	148	138	123	2
60A (S8C)	148	138	159	2,1
75A (S8C)	148	138	159	2,1
90A (S8C)	148	138	159	2,1

6.3 CT dimensions (only with the HB option)

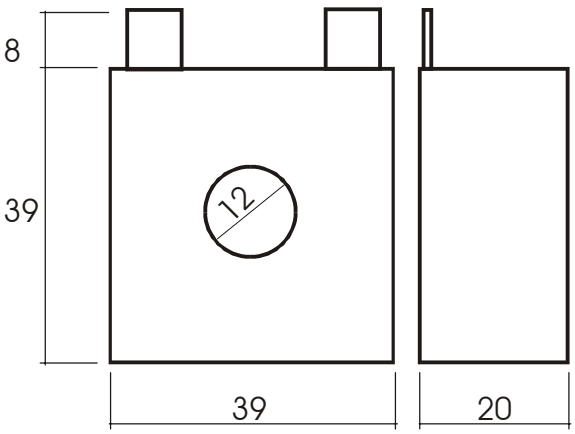

6.4 Fixing holes

CD3000M 3PH 15A (S2C)	CD3000M 3PH 30A (S4C)	CD3000M 3PH 45A (S6C)	CD3000M 3PH 60A÷90A (S8C)
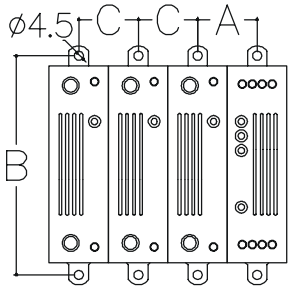	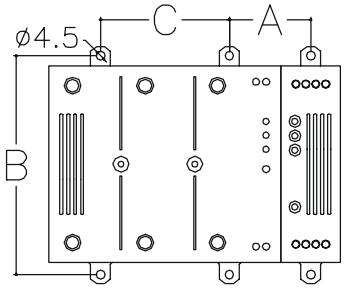	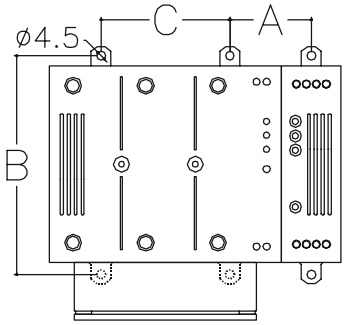	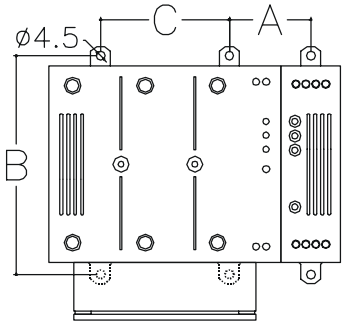

Size	A(mm)	B(mm)	C(mm)
15A (S2C)	30	110	30
30A (S4C)	41	110	65
45A (S6C)	41	110	65
60A (S8C)	41	110	65
75A (S8C)	41	110	65
90A (S8C)	41	110	65

7 Wiring instructions

Caution: *this procedure must be performed only by qualified persons.*

The Thyristor unit could be susceptible to interferences lost by near equipments or by the power supply, for this reason in accord to the fundamental practices rules is opportune take some precautions:

- The electronic circuit of the Thyristor unit must be supplied from a dedicated voltage and not with inductive or capacitive loads. We recommend the use of a screened transformer.
- The coil contactor, the relays and other inductive loads must be equipped with opportune RC filter.
- Use shielded bipolar cables for all the input and output signals.
- The signal cables must not be near and parallel to the power cables.
- Local regulations regarding electrical installation should be rigidly observed.

For safety connect the heat-sink to the earth with his terminal.

7.1 Removing the cover

Remove plastic Cover For all size

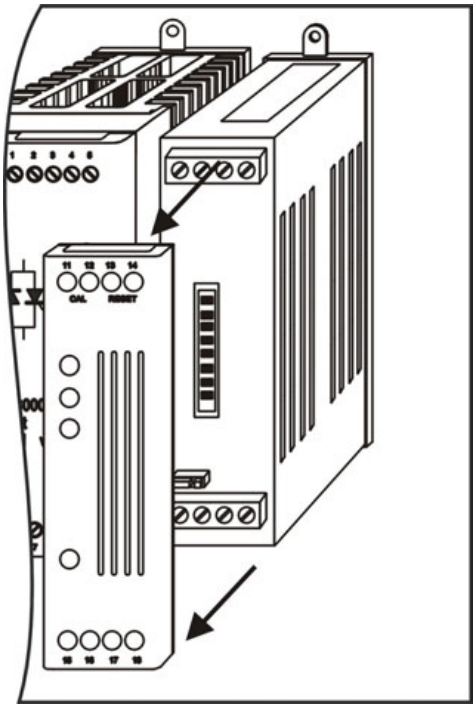

To remove the board Pull the PCB

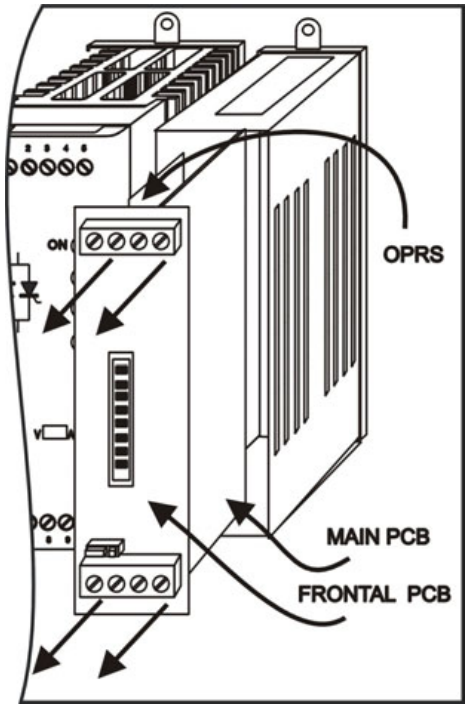

7.2 Wiring details

Use copper cables and wires rated for use at 75°C only.

7.2.1 Power cable torque (suggested)

Current	Connector Type	Torque Lb-in (N-m)	Wire Range AWG / kcmil	Wire Terminal
15A,30A 45A	M5 Screw	26.6 (3.0)	8	UL Listed (ZMVV) Wire Pin
60A,75A 90A	M6 Screw	70.8 (8.0)	1	UL Listed (ZMVV) Fork/Spade Terminal Copper Tube Crimp. Lug

7.2.2 Power cable dimensions (suggested)

Current	Supply			Load		
	Cable		Screw	Cable		Screw
	mm²	AWG	M	mm²	AWG	M
15A (S2C)	4	12	M5	4	12	M5
30A (S4C)	6	10	M5	6	10	M5
45A (S6C)	10	8	M5	10	8	M5
60A (S8C)	16	6	M6	16	6	M6
75A (S8C)	25	4	M6	25	4	M6
90A (S8C)	35	3	M6	35	3	M6

7.2.3 Cable dimensions (suggested) of Earth and of the Command Terminals

Current	Earth			Command Terminals		
	Cable		Screw	Cable		
	mm²	AWG	M	mm²	AWG	
15A (S2C)	4	12	M5	0,50	18	
30A (S4C)	6	10	M5	0,50	18	
45A (S6C)	6	10	M5	0,50	18	
60A (S8C)	6	10	M5	0,50	18	
75A (S8C)	6	10	M5	0,50	18	
90A (S8C)	6	10	M5	0,50	18	

7.3 Power Terminals



Warning: *Before connecting or disconnecting the unit check that power and control cables are isolated from voltage sources.*

Terminal	Description
L1	Line Input Phase 1
L2	Line Input Phase 2
L3	Line Input Phase 3
T1	Load Output Phase 1
T2	Load Output Phase 2
T3	Load Output Phase 3

7.4 Command Terminals



Warning: *Before connecting or disconnecting the unit check that power and control cables are isolated from voltage sources.*

7.4.1 Upper Terminal

Terminal	Description
1	(-) External Calibration 24 Vdc max
2	(+)External Calibration 24 Vdc max
3	Reset
4	Reset
5	(+) CD3000M Output Command signal (Internal Connections)
6	(-) CD3000M Output Command signal (Internal Connections)
A2+	(+) Input command signal SSR, 0÷10V,4÷20mA,POT
A1-	(-) Input command signal SSR, 0÷10V,4÷20mA,POT

(See par. 11.1)

7.4.2 1 Lateral Terminal

Terminal	Description
7	RS485 A
8	RS485 B
9	Output +8Vdc stabilized 1 mA MAX
10	HB relay contact (Max 500mA , 125Vac) Optional
11	HB relay contact (Max 500mA , 125Vac) Optional
12	Current Transformer "CT1" input (only with the HB option)
13	Current Transformer "CT2" input (only with the HB option)
14	Current Transformer "CT3" input (only with the HB option)
15	Not connected
16	Voltage Supply for Electronic Boards (Auxiliary)
17	Earth
18	Voltage Supply for Electronic Boards (Auxiliary)

(See par. 11.1)

7.5 Diagram of control connection from size 15A

Caution: *this procedure must be performed only by qualified persons.*

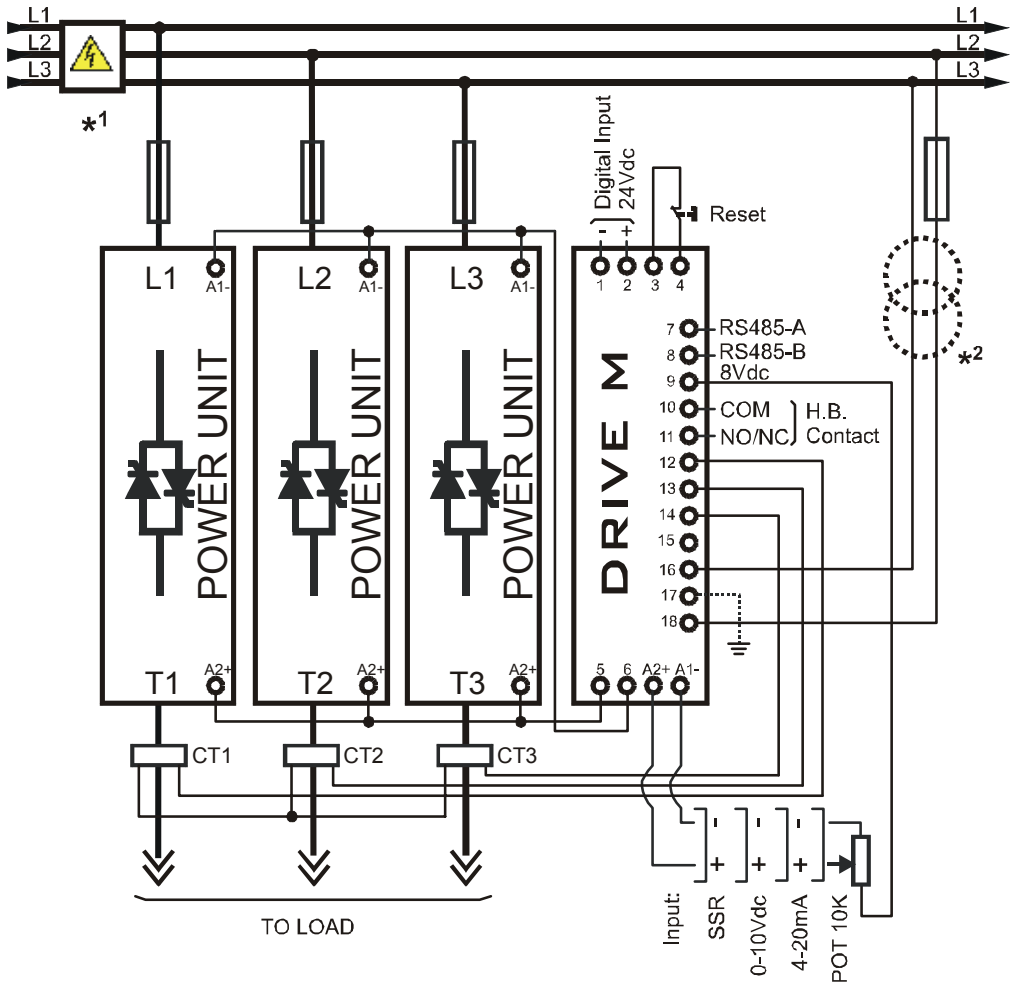

NOTE:

- *¹ *The user installation must be protecting by electromagnetic circuit breaker or by fuse isolator.*
- *² *The auxiliary voltage supply of the CD3000M unit must be synchronized with load voltage power supply. If the Auxiliary Voltage (written on the identification label) is different from Supply Voltage (to the load), use an external transformer as designated.*
- *The Current Transformer (CT1, CT2, CT3) must be mounted only with the HB option.*
- *To work, the Reset Contact on terminal 3 and 4 must be closed.*

Load Type

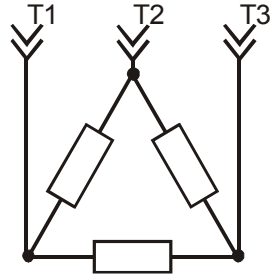	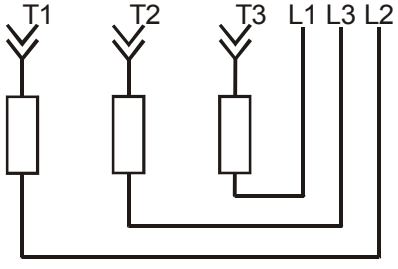	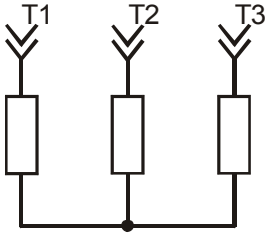	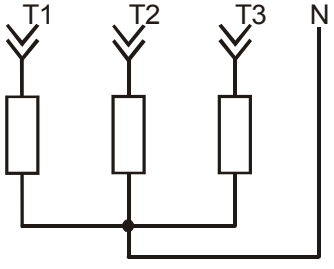
Delta	Open Delta	Star	Star + Neutral

7.6 Diagram of control connection from size 35A to 100A

Caution: *this procedure must be performed only by qualified persons.*

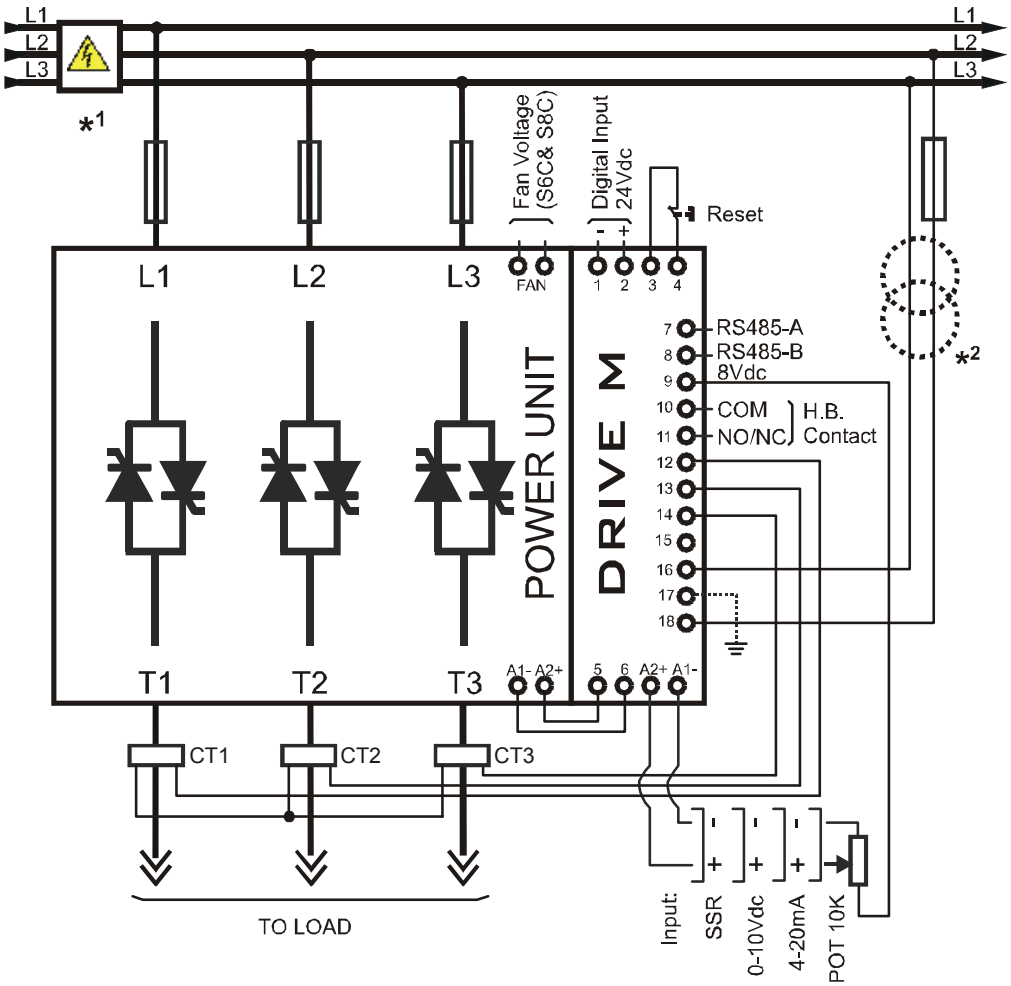

NOTE:

- *¹ *The user installation must be protecting by electromagnetic circuit breaker or by fuse isolator.*
- *² *The auxiliary voltage supply of the CD3000M unit must be synchronized with load voltage power supply. If the Auxiliary Voltage (written on the identification label) is different from Supply Voltage (to the load), use an external transformer as designated.*
- *The Current Transformer (CT1, CT2, CT3) must be mounted only with the HB option.*
- *To work, the Reset Contact on terminal 3 and 4 must be closed.*

Load Type

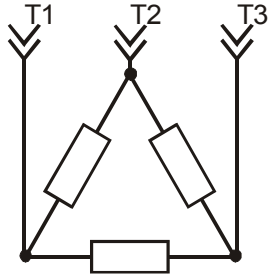	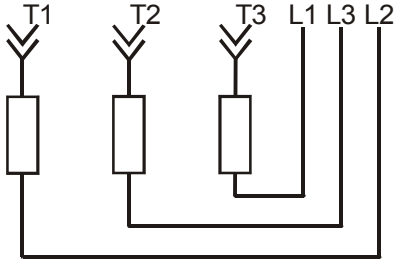	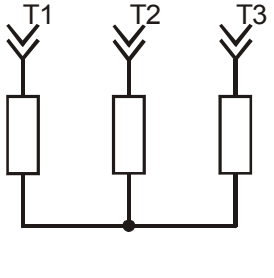	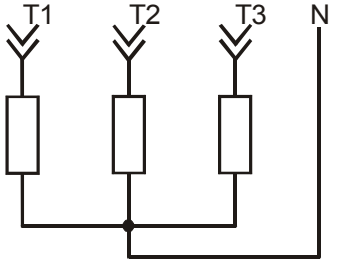
Delta	Open Delta	Star	Star + Neutral

8 Power output features

Current	Voltage range	Repetitive peak reverse voltage		Latching current	Max peak one cycle	Leakage current	I^2T value max	Frequency range	Power loss	Isolation Voltage
(A)	(V)	(480V)	(600V)	(mAeff)	(10msec.) (A)	(mAeff)	tp=10msec	(Hz)	I=Inom (W)	Vac
15A	24÷480	1200	1200	150	230	15	610	47÷70	54	2500
30A	24÷600	1200	1600	250	600	15	1800	47÷70	108	2500
45A	24÷600	1200	1600	250	600	15	1800	47÷70	162	2500
60A	24÷600	1200	1600	450	100	15	4750	47÷70	216	2500
75A	24÷600	1200	1600	450	1540	15	11300	47÷70	270	2500
90A	24÷600	1200	1600	450	2000	15	19100	47÷70	324	2500

8.1 Derating curve

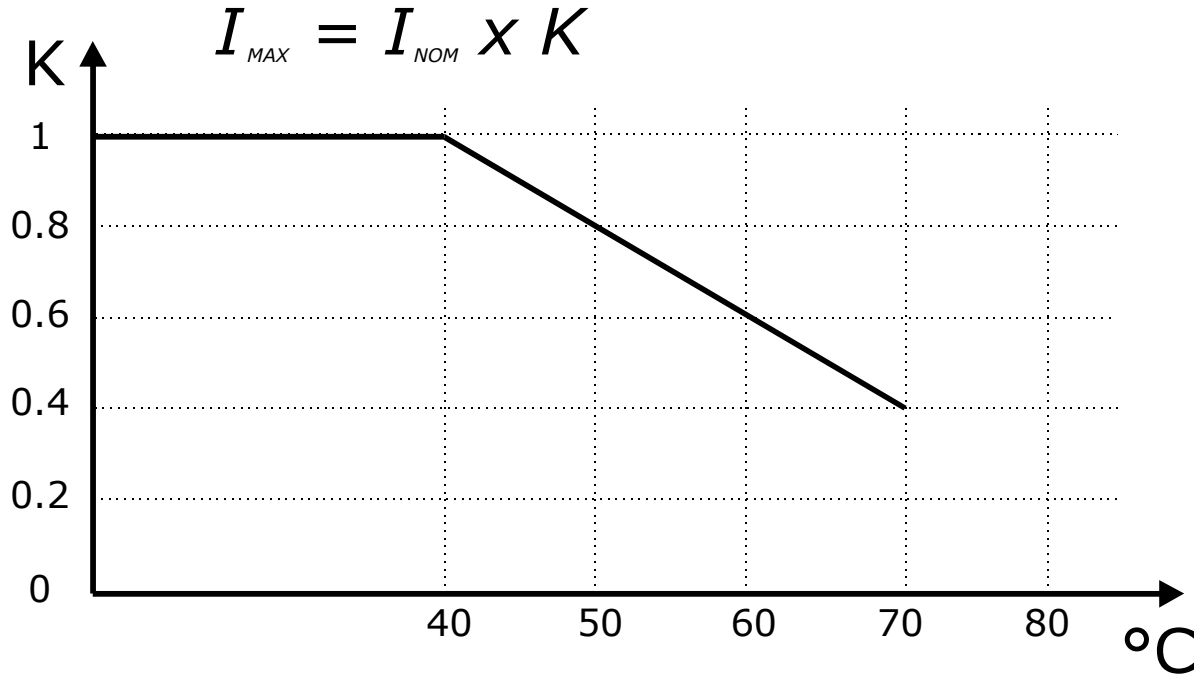

8.2 Cooling fans

The thyristor units size S6C and S8C are equipped with a cooling fan. The supply voltage is standard 230VAC ±15% 50/60Hz or optional 110VAC ±15% 50/60Hz.
The fan's power consumption is below listed:

Size	CE Number of fans	c UL us LISTED Number of fans
45A÷90A (S6C & S8C)	One Fan - 16W	One Fan - 16W

9 Led status and Alarms

9.1 LED Status Table

In front of the thyristor unit there are LED that indicates the state of the Electronic cards:

LED For All size	STATUS	DESCRIPTION
Aux	○	The power supply is not connected or fault on the electronic board
	●	The power supply is not connected and the Electronic board is OK
ON	○	OFF Condition (Load IS NOT Powered)
	●	ON Condition (Load IS Powered)
SC	○	SCR OK
	●	SCR short circuit
	☼	No External Enable (see par. 11.4)
HB	○	Load OK
	●	Load Fault
	○	= OFF
	●	= ON
	☼	= Flashing

9.2 Not Critical Alarm

The Not Critical Alarm, doesn't stop the thyristor unit.
When one of these Not Critical Alarm is active, the HB relay change status (see par. 11.5)

9.2.1 SCR Short Circuit (only with the HB option)

This alarm is active when the thyristor unit read the output current in absence of the input signal. This is possible if there are a short circuit on the thyristor or if there are a wrong wiring of the load.
When the problem is solved is necessary use the digital input: "Reset"
(Terminals 3-4)

9.2.2 Heater Break alarm HB (only with the HB option)

This alarm is active when the load current decrease under the threshold set on the parameter P124H (see par. 13).
The Heater Break alarm could be active also if there are a wrong wiring of the load.
When the problem is solved is necessary use the digital input: "Reset"
(Terminals 3-4).
The Heater Break circuit to work properly must have at least an input of 25% of the nominal current.
H.B. circuit read load current via a current transformer 25-50/0.05 or 100/0.05 depending on thyristor size.
Minimum current is 30% of the current transformer size's. If load current is below this value make two turns or more around current transformer. H.B. circuit also diagnoses fuse failure.



Caution: *In the first start, and each time that the load is replaced, it's necessary make the Calibration procedure.*

9.3 Calibration Procedure

The Calibration procedure is an automatic procedure that save in memory the value of load current.
This procedure is necessary if you use the Heater Break Alarm.
To make the Calibration procedure follow these steps:

- Give the power supply.
- Press the "CAL" button on front unit, or use the configurable digital input (see par. 11.4).
- All LEDS are on, this means that calibration procedure is active.
- The CD3000M gives the maximum voltage output.
- After a minute the values of voltage and current are stored in memory.
- the CD3000M comes back to the initial situation.

The Calibration procedure is done.

10 Firing type

Choose an correct firing type allows to optimize the thyristor unit for the installed load.
The firing type has already configured in line with customer requirements that are defined in the Order Code. The Order Code is written on the identification label.
However, if you wish to change the firing type you can use the software configurator or the parameter on serial link (see par. 13).

Caution: *this procedure must be performed only by qualified persons.*

10.1 Zero Crossing (ZC)

ZC firing mode is used with Logic Output from temperature controllers and the Thyristor operates like a contactor. The Cycle time is performed by temperature controller. ZC minimizes interferences because the Thyristor unit switches ON-OFF at zero voltage.

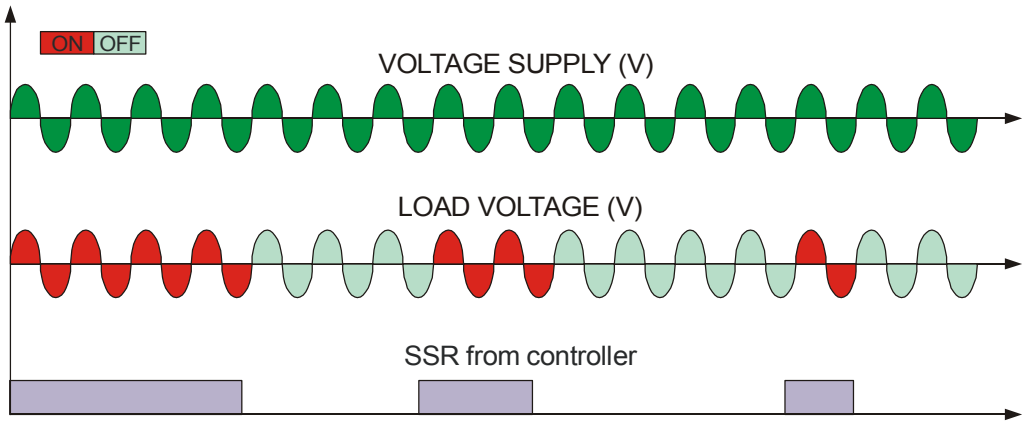

10.2 Burst Firing (BF)

The Burst Firing is a burst of consecutive cycles, the consecutive cycles ON are selectable between 2 and 255, with input signal equal at 50%.
Burst Firing is a method zero crossing that it reduces the electromagnetic interferences because the thyristor switches at zero voltage crossing.
The example show the Burst Firing with Burst cycles: P126L=4

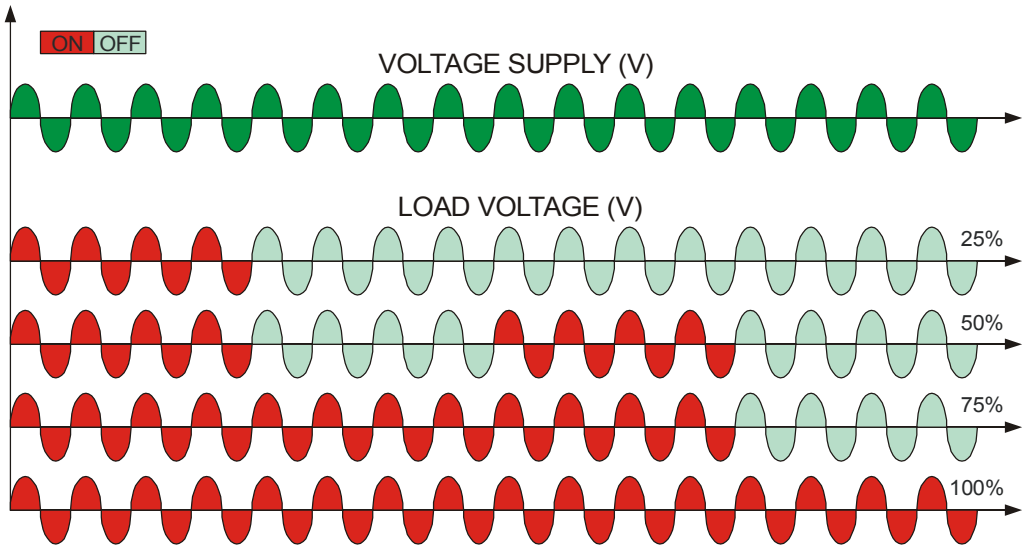

11 Connection description

11.1 Access to the Electronic boards

To have access to the electronic boards the user must removing the unit's cover (see par.7.1)

Warning: *Before operate, be sure that power and control cables are isolated from voltage sources*

Front PCB

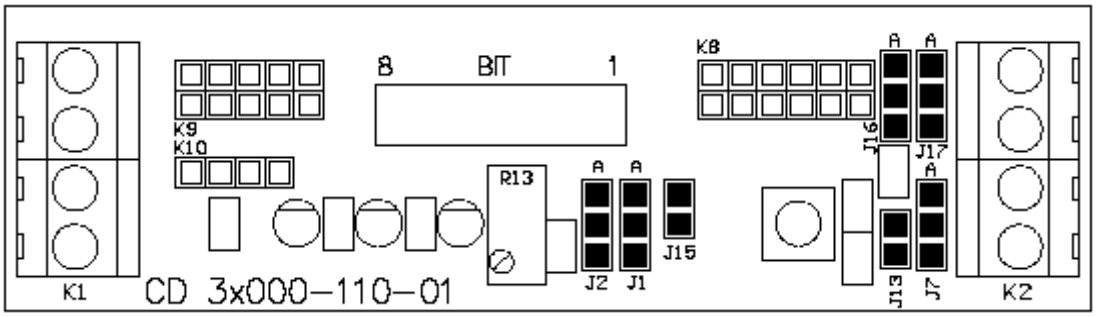

Main PCB

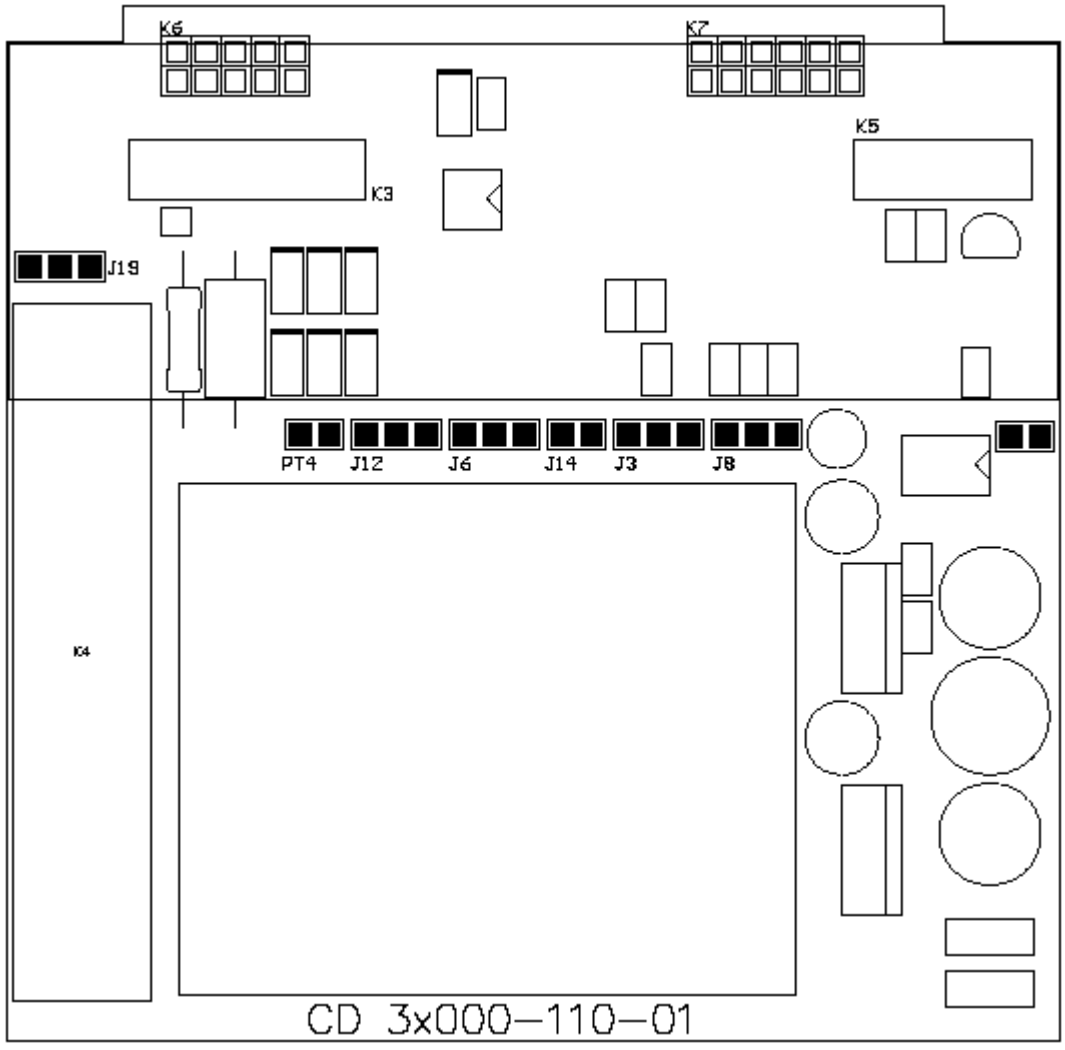

11.2 Supply the Electronic Board

The CD3000M thyristor unit, to work, requires a voltage supply for the electronic boards. The Max consumption is 10VA.
The voltage supply for the electronic boards is configured in line with customer requirements that are defined in the Order Code. The Order Code is written on the identification label.

Warning: *Before connecting or disconnecting the unit check that power and control cables are isolated from voltage sources.*

Terminal	Description
16	Voltage Supply for Electronic Boards (Auxiliary Voltage)
17	Earth
18	Voltage Supply for Electronic Boards (Auxiliary Voltage)

To change auxiliary supply voltage sold the correct link-jumper on main PCB:

Warning: *this procedure can be done just by specialized personnel.*

Main PCB

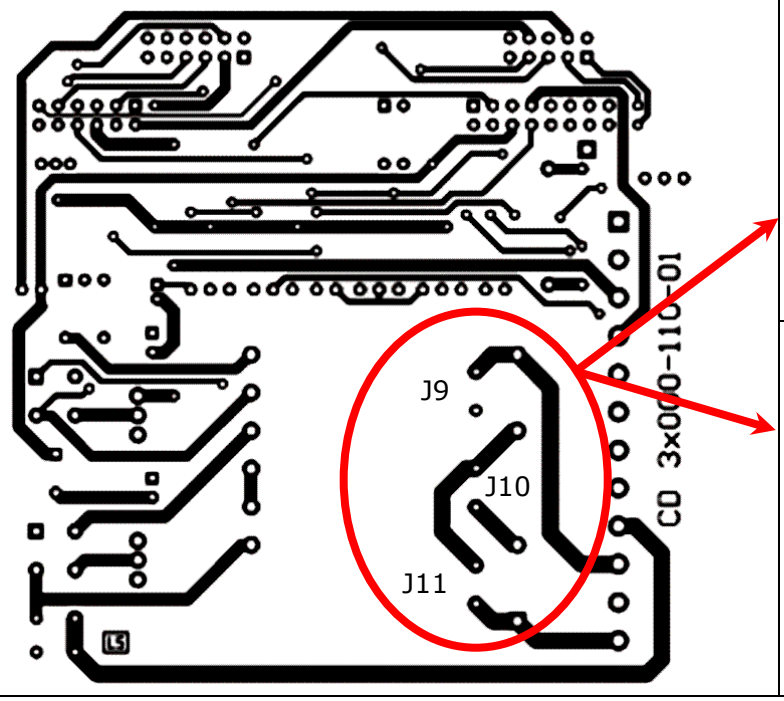

Link-Jumper J9+J11

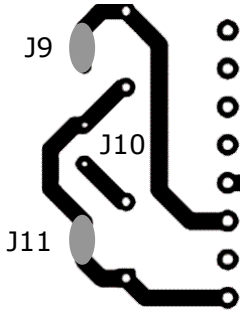

Link-Jumper J9+J11

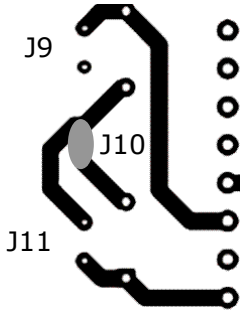

Transformer Type	Link-Jumper J9+J11	Link-Jumper J10
TR-605 120V	90:130V	-
TR-605 230V	170:265V	300:530V
TR-605 300V	230:345V	510:690V

- The type of mounted transformer depends of the chosen Auxiliary Voltage in the order code. (see par. 5.2)
- If the Auxiliary Voltage (written on the identification label) is different from Supply Voltage (to the load), use an external transformer with primary equal to load voltage and secondary equal to the Auxiliary Voltage.

11.3 Analog Inputs

CD3000M thyristor unit have an analogue input to drive the output power.

11.3.1 Input command signal configuration (Terminals A2+ and A1- see par. 7.4)

The Input command signal is already configured in line with customer requirements that are defined in the complete product code. The product code is written on the identification label.
However, if you wish to change the input type (i.e. from 0÷10V to 4÷20mA) proceed as follows:

Warning: *this procedure can be done just by specialized personnel*

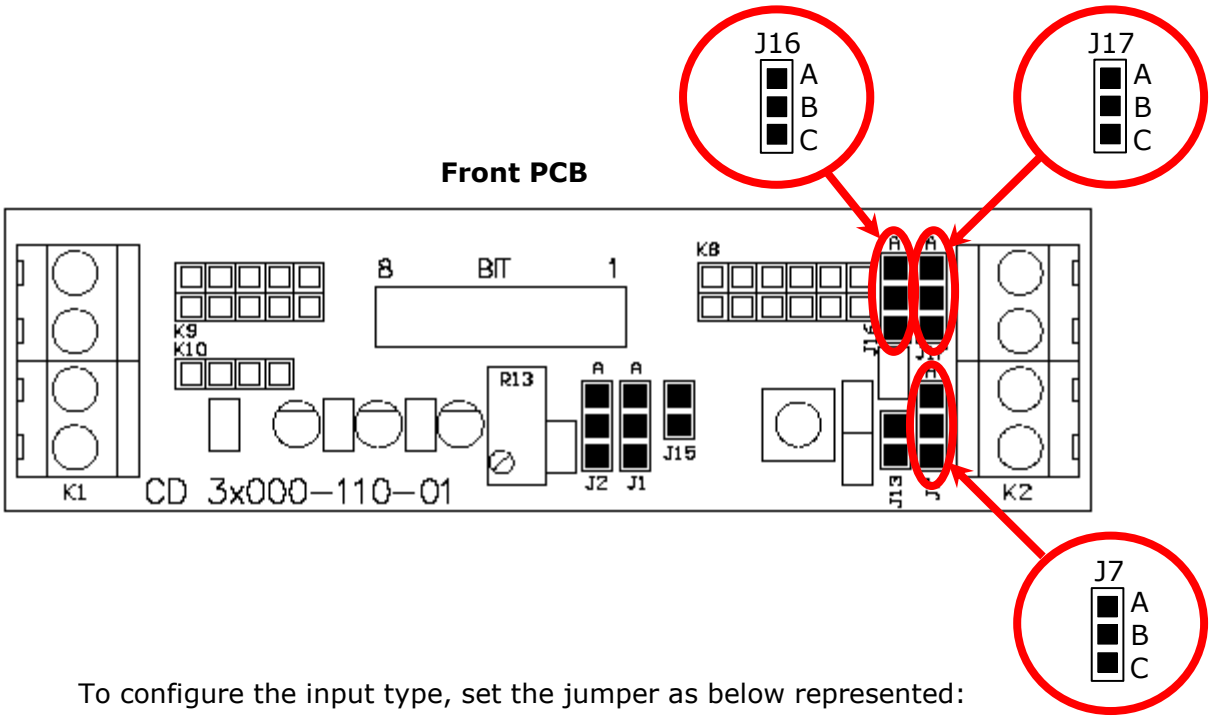

To configure the input type, set the jumper as below represented:

Type	Input features		J7	J16	J17
SSR	Current drain	5mA	C-B	C-B	C-B
	ON	≥ 4Vdc Max 30Vdc			
	OFF	< 1Vdc			
0÷10V	Impedance	10KΩ	C-B	B-A	B-A
POT	Impedance	10KΩ min	C-B	B-A	B-A
4÷20mA	Impedance	100Ω	B-A	B-A	B-A

When operator finishes to configure the hardware setting he must do the input calibration procedure

11.3.2 Input calibration procedure

Warning: *this procedure can be done just by specialized personnel*

This procedure is needed only if you change the input type

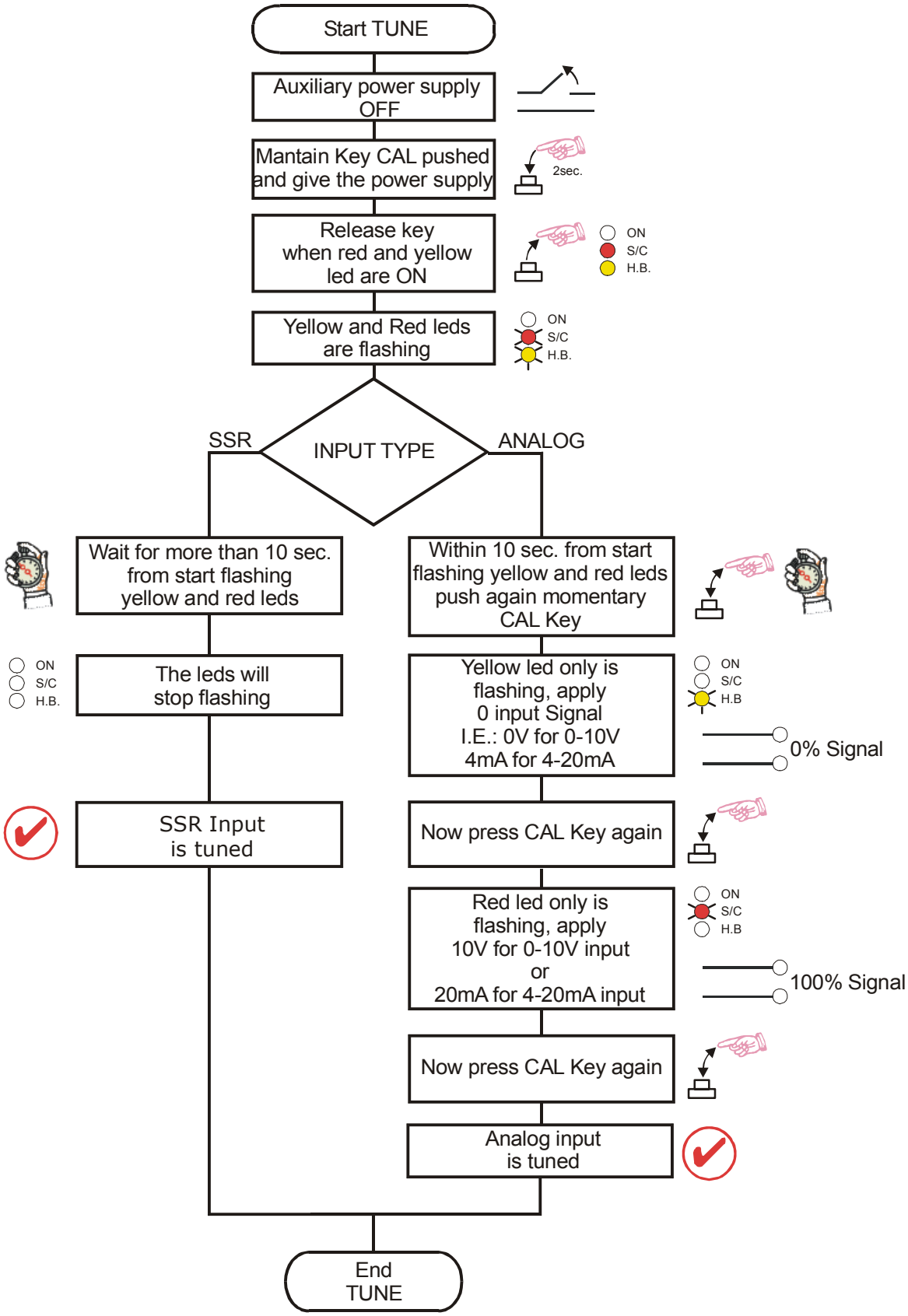

11.4 Digital Input

CD3000M thyristor unit has two digital inputs.

11.4.1 Configurable Input (Terminals 1 and 2 see par. 7.4)

This digital input is configurable and can be:

- External Calibration (Standard):
  The Calibration input activates the Calibration procedure that is necessary if you use the Heater break alarm (see par. 9.3). Supply with 24Vdc terminals 1-2 to start the Heater Break procedure.
- External Enable:
  Without Enable the out is always to zero and red led (SC) flashing, otherwise the out will follow the input signal.

to configure the input type, set the jumper as below represented:

Warning: *this procedure can be done just by specialized personnel*

Main PCB

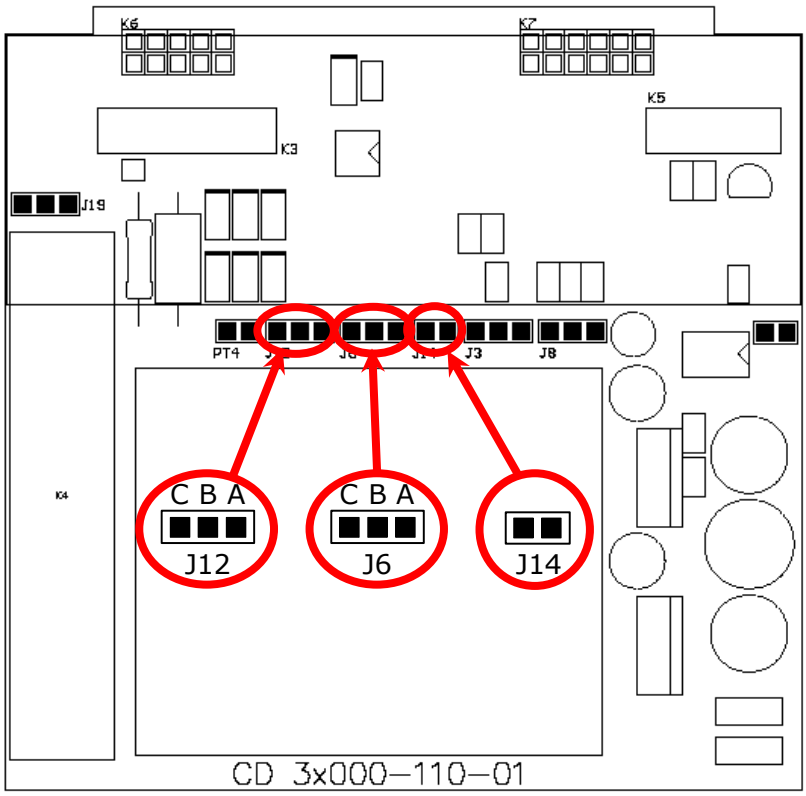

Type	J12	J6	J14
External Calibration	C-B	C-B	Open
External Enable	B-A	Open	Open

If you use the input like External Enable, is not possible use the input for the "Heater Break procedure".

11.4.2 Reset (Terminals 3 and 4 see par. 7.4)

The Reset Alarm is used for restore the unit after an alarm occurs (see par. 9.2).
Open link to terminals 3-4 to stop the CD3000M thyristor unit and reset the alarm.

11.5 Digital Output

CD3000M thyristor unit with HB option has 1 digital output with relay contact (Max 500mA, 125Vac) that gives indications of the alarms state, the contacts can be (NO or NC).

11.5.1 HB alarm contact (Only with HB Option - see par. 9.2)

The standard contact used for this output is normally open (NO):

- In normal conditions (without alarm) and with auxiliary power supply, the contact to the terminals has opened (relay coil energized).
- In alarm condition or without auxiliary power supply the contact to the terminals is closed (relay coil not energized).

if you wish to change the alarm contact put the jumper as shown:



Caution: *this procedure must be performed only by qualified persons*

Main PCB

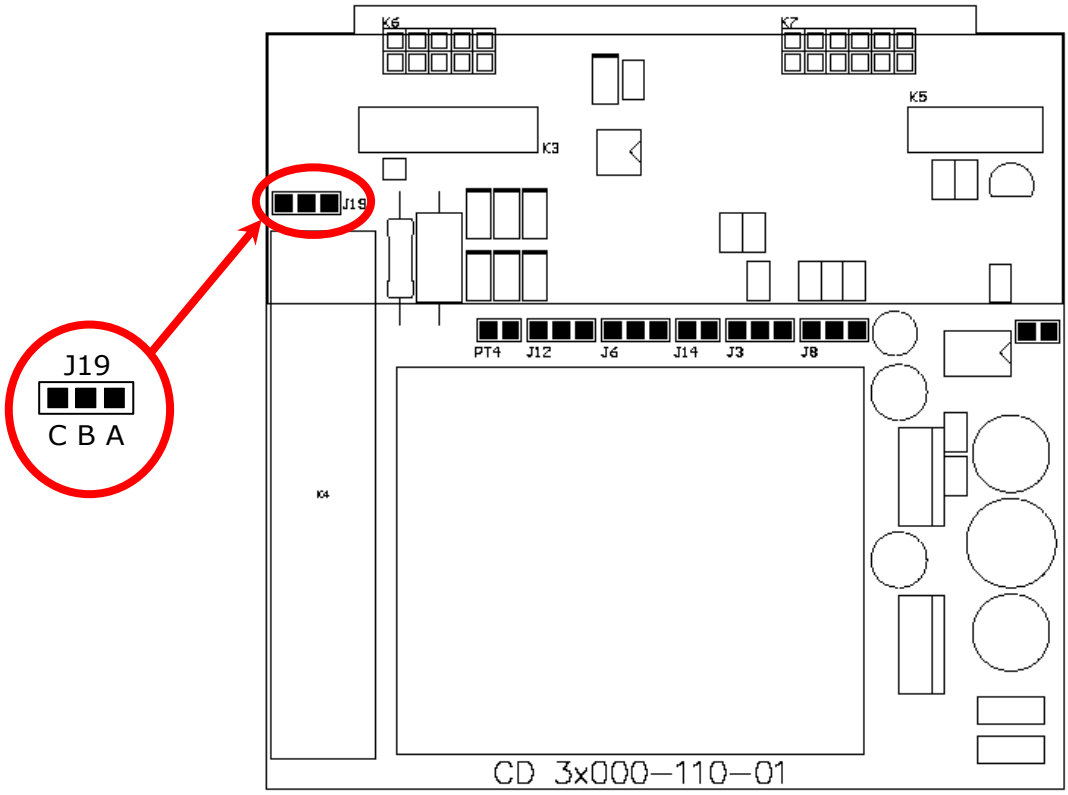

Type	J19
NO (standard)	C-B
NC	B-A

11.6 PG Connector

The PG Connector is used to configure the thyristor unit with the configuration software and with the programming cable.
The programming cable is not included.

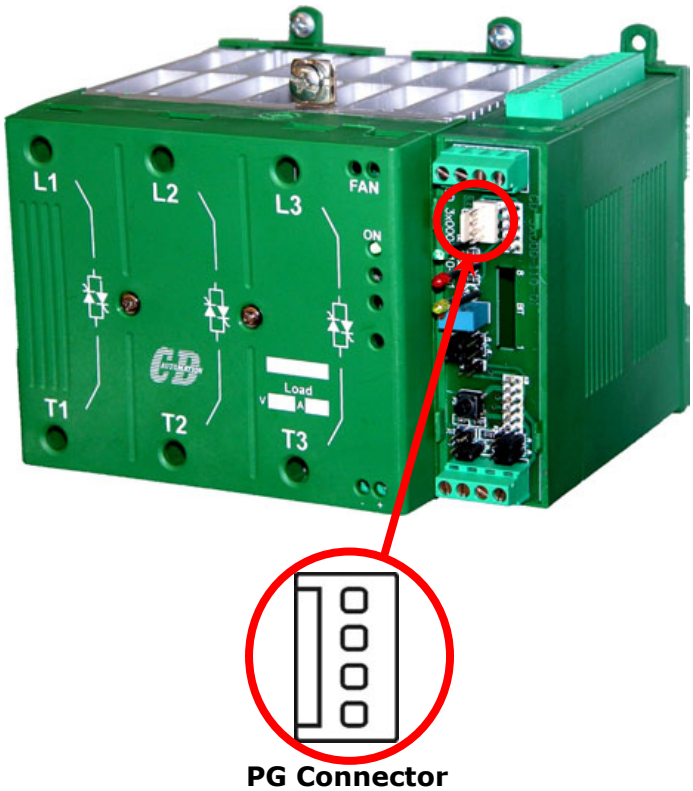

PG Connector

11.7 RS485 Serial Port

The serial communication port is on Terminals 7 and 8.
On this port may be done a network up to 255 CD3000M.

Terminal	Description
7	RS485 A
8	RS485 B

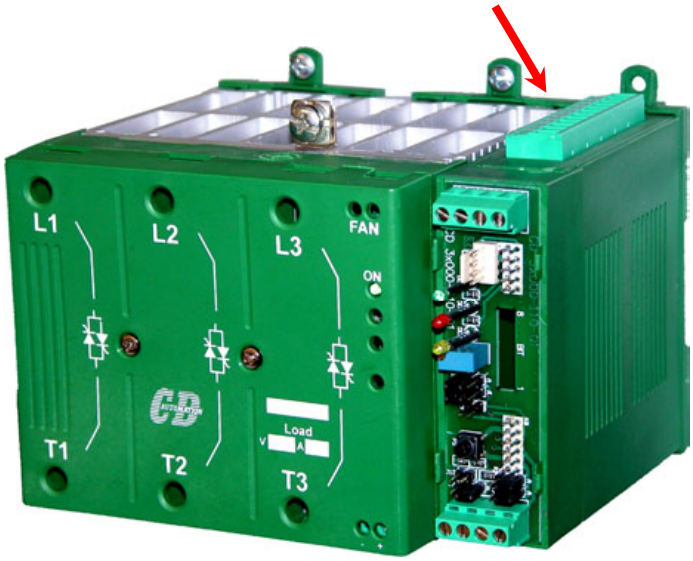

11.8 Address configuration

The thyristor unit is assigned a unique device address by the user in the range 1 (default) to 255. This address is used to recognise the messages queries to her assigned.

The thyristor unit does not respond at the messages queries that don't have the same assigned address. The thyristor unit will also accept global messages (Broadcast) sends at the address 0. No responses are returned for globally addressed queries.
To configure communication address remove cover and set the dip-switch as below specified:

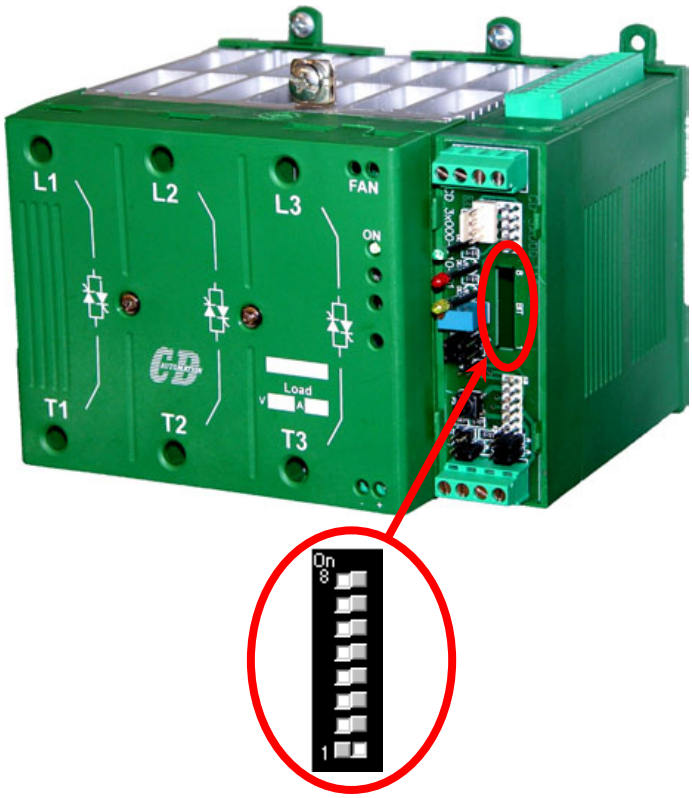

Dip Switch

Convert the Address Number in Binary for Example: 150 Dec = 10010110 Bin
The dip switch number corresponds to the bit number:

Address Number	Dip Switch Number							
	8	**7**	**6**	**5**	**4**	**3**	**2**	**1**
150 Dec -> 10010110 Bin	1 (On)	0 (Off)	0 (Off)	1 (On)	0 (Off)	1 (On)	1 (On)	0 (Off)

For convert the Number in Binary you can use this method:

Dip Switch Number have this value:

	Dip Switch Number							
	8	**7**	**6**	**5**	**4**	**3**	**2**	**1**
Value	128	64	32	16	8	4	2	1

The Address Number Ex. 150 = 128(Dip 8) + 16(Dip 5) + 4(Dip 3) + 2(Dip2)

12 MODBUS communication

The serial communication port of the thyristor unit is two-wire RS485 type.
This port use an half-duplex system.
When a Unit must transmit active the transmission line, and when there are not units in transmission the outputs are fixed to high impedance.
The serial communication port allows to communicate between the thyristor units and a MASTER device (ex. an computer or a terminal). The cable must be rated for use to data transfer.

12.1 MODBUS RTU Protocol

The communication is based on the standard industrial MODBUS RTU with the following restrictions:



- The Baud rate is 9600 Baud.
- The Preset Multiple Registers (Funct. 16) is limited to the writing of a single parameter for message.

The following MODBUS functions are supported:

Function	Description
03	Read Holding Registers
16	Preset Multiple Registers



The unit support the Broadcast messages:
It' possible send a Broadcast messages using the address 0, all the units respond at the message without sending back any reply.

12.2 Message Format

The transmission format is a 1 bit start, 8 date bit, and 1 bit stop with no parity verification.
Each message terminate after a said time of "time out", equal at 3.5 time of a character transmission, where there are not transitions on the transmission line.
The first Byte of each message is always the address of the unit that is a value from 1 to 255 or 0 for the broadcast messages, the second is always the function number, and the rest of the message depends of the function demand.



When a Slave receive an message, the unit send an answer with the same structure but with the information demanded.

Each message is followed by CRC (Cyclic Redundancy Check) with two byte. The CRC identify the incongruity situations of the message, in this case the receiver ignore the message.
The CRC is calculated in accordance with a formula that imply a recursive division of the data by a polynomial.
The polynomial divisor is:
$2^{16} + 2^{15} + 2^2 + 1$(Hex 18005)
but is modified in two ways:

- Since the bits order are reversed, then the binary pattern is also reversed, and the most significant bit (MSB) is the right-most bit.
- Since interest only the remainder, the right-most bit could be discarded.

Therefore, the polynomial divisor has value: Hex A001

Normal bit order:

Most significant bit																Least significant bit
	Most significant Byte								Least significant Byte							

Reversed bit order:

Least significant bit																Most significant bit
	Least significant Byte								Most significant Byte							

N.B.: With the reversed bit order, also the CRC16 returns the with the reversed bit order

The following flow-diagram show how to organize the CRC 16 bit.

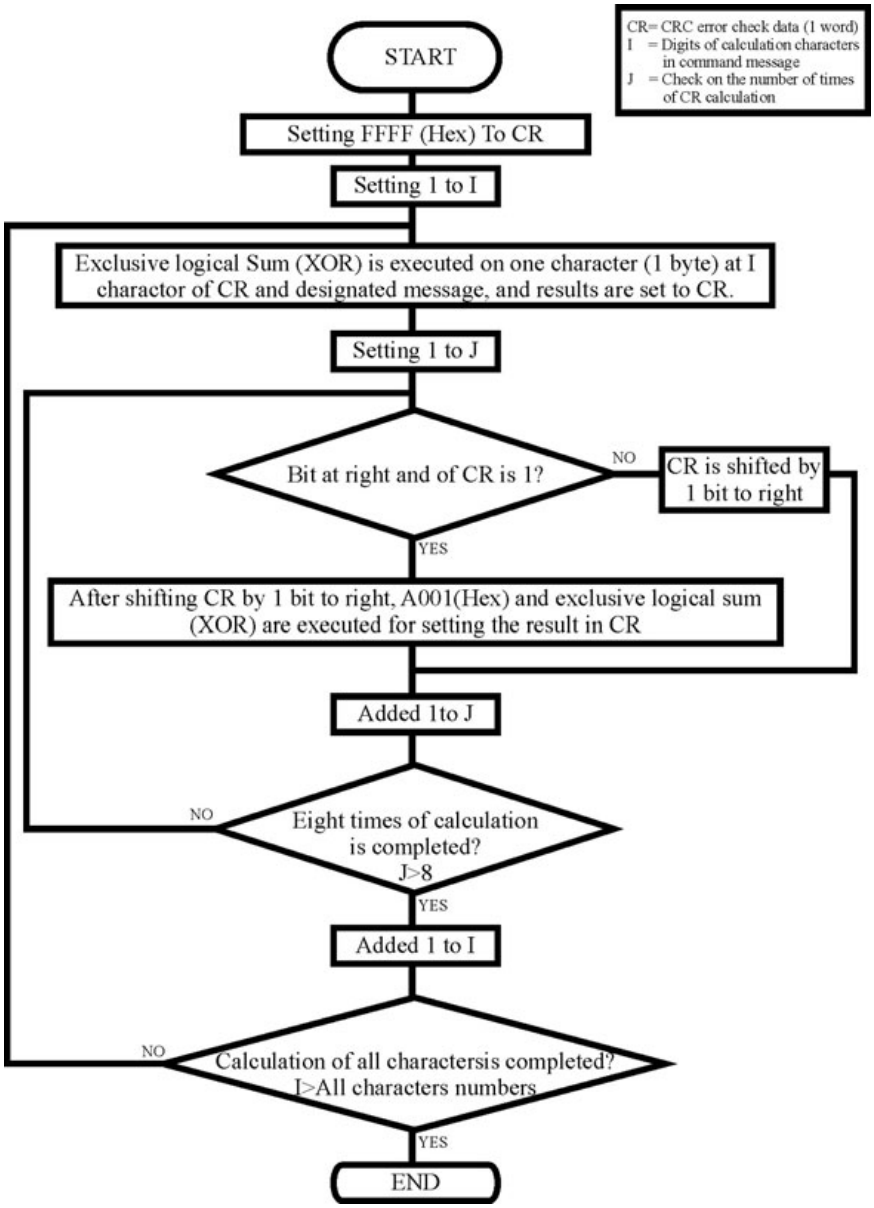

C Language CRC 16 Example

```
static short CRC16 (unsigned char *p_first,unsigned char *p_last)
{
        unsigned int crc=0xffff;
        short j;
        for (;p_first<=p_last;p_first++)
        {
                crc ^= *p_first;
                for(j=8;j>0;j--)
                {
                if(crc & 0x0001)
                        {
                        crc = crc >> 1;
                        crc ^= 0xA001;
                        }
                 else
                        {
                        crc = crc >> 1;
                        }
                }
        }
  return (crc);
}
```

12.3 Read Holding Registers

This function reads the instantaneous value of a specified number of parameters from an address.
The message is composed by 8 Byte: one Byte is for the address, one for the function (03 Hex), two Byte for the first parameter to read, two Byte for the total number of parameters to read and finally two Byte for the CRC:

Address Unit	Function	Address of the First Parameter		N° of the Parameter		CRC 16	
	3 3Hex	HI	LO	HI	LO	LO	HI

The answer is an echo of the first two Byte (address and function), one byte with the number of following byte to exclusion of the CRC, the demanded values and finally two Byte for the CRC:

Address Unit	Function	N° of Byte	First Parameter Value			Last parameter value		CRC 16	
	3 3Hex		HI	LO	…	HI	LO	LO	HI

12.4 Preset Multiple Registers

This function could write only a parameter for each message.
The message is composed by 11 Byte: one Byte for the address, one for the function (10 Hex), two Byte for first parameter to write, two Bytes for the N° of parameters, fixed to 1 (0001 Hex), one Byte with the number of following Bytes, fixed to 2 (02 Hex), two Byte for the CRC:

Address Unit	Function	Address of the First Parameter		N° of the Parameter		N° of Byte	Value to write		CRC 16	
	16 10Hex	HI	LO	0	1	2	HI	LO	LO	HI

The answer is an echo of the first two Byte (address and function), two Byte for first written parameter, two Byte with the N° of parameters, fixed to 1 (0001 Hex), two Byte for the CRC:

Address Unit	Function	Address of the First Parameter		N° of the Parameter		CRC 16	
	16 10Hex	HI	LO	0	1	LO	HI

12.5 Error and exception responses

If a message contains an altered character, if fails the CRC, or if the received message contains a syntax error (for example the number of the byte or of the words is not correct), then the unit will ignore the message.

If the received message is correct but contains a not valid value, the unit will send an answer of exception (5 byte):

Address Unit	Function	Error Code	CRC 16	
			LO	HI

The byte with the function number, represent the function number of the message that has caused the error with the first Bit set to 1 (ex. the function 3 becomes 0x83) The error code could be one of the followings:

Error Code	Name	Cause
1	ILLEGAL FUNCTION	Function not supported.
2	ILLEGAL DATA ADDRESS	Address out of range.
3	ILLEGAL DATA VALUE	Attempt to write invalid or action not carried out.



NOTE: If you write a parameter's value equal at his actual value this is a valid transaction and don't cause an error.

13 Configuration Parameters

The Configuration Parameters are accessible from the software configurator or through the serial communication port RS485.

P001 (H01) **Load Current** **R**

Function: This parameter shows the Current rms value.
Min/Max: 0 ÷ 255 (0 ÷ FF Hex)
Value: Value depends on when turns have current transformer and from his size's.
Example: With one passage on the current transformer (CT) 25/0.05A, the max value corresponds to the max value of the CT:
Read value=255 (FF Hex) -> Load Current= 25A

P002 (H02) **Set-point HB** **R/W**

Function: This parameter is the Set-point of current below which HB alarm occurs.
Min/Max: 0 ÷ 255 (0 ÷ FF Hex)
Value: This value is the load current(P001) minus % value of parameter P124H.

P003 (H03) **Status Table** **R**

Function: It's a tab in bit that represent the "Status" of thyristor unit
Value: Bit 0 = 1 -> Short circuit on SCR
Bit 1 = 1 -> Load Failure (HB Alarm)
Bit 2 = 1 -> Output signal ON
Bit 3 = 1 -> HB Calibration in progress

P004 (H04) **Command Table** **R/W**

Function: It's a tab in bit for remote commands via RS485
Value: Bit 0 = 1 -> Activate HB Calibration procedure
Bit 1 = 1 -> Input Command from RS485 (see P005)
Bit 2 = 1 -> Disable Output signal (Only with Input from RS485)
Bit 3 = 1 -> Reset HB Alarm
Note: When unit is switch off all command parameter are set to 0

P005 (H05) **Input command signal** **R**

Function: This parameter reads the Input command signal (see par. 7.4)
When the P004 Bit1 =1 This parameter could be written and become the Input Command from RS485
Min/Max: 0 ÷ 255 (0 ÷ FF Hex)
Example: Input 4mA -> P005 = 0 (0%)
Input 12mA -> P005 = 128 (50%)
Input 20mA -> P005 = 255 (100%)

P006 (H06) **Power adjust** **R/W**

Function: Its' a scaling factor of the Input command signal
Min/Max: 0 ÷ 255 (0 ÷FF Hex)
Value: from 0 = 0% of Output,
To 255 = 100% of Output.
Note: This parameter limit the Output Power

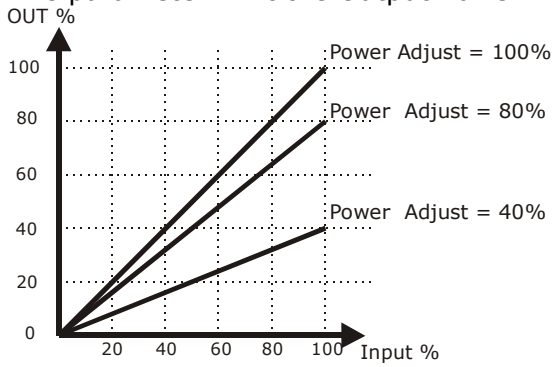

P121 (H79) **CD Unit ID** **R**
Function: This parameter Identify the CD type Family
Value: CD01 Hex = CD1000-CD3000M Family

P122 (H7A) **CD Ver** **R**
Function: This parameter is for internal use

P123 (H7B) **Password** **R/W**
Function: This parameter give the access to configuration
Min/Max: 0 ÷ FFFF Hex
Value: 9357 Hex = Writing parameters activated
any value = Writing parameters disabled
Note: When the CD3000M comes out and then re-lighted, for change the parameters you must re-insert the password.

P124L (H7C) **Byte Lo = Delay trigger (Only for 1PH version)** **R/W**
Function: This parameter is the delay of firing in first half period with respect zero voltage crossing
Min/Max: 0 ÷ 50 (0 ÷32 Hex)
Value: Each step is 0,1msec
Default: 30

P124H (H7C) **Byte Hi = HB sensibility** **R/W**
Function: This parameter is the maximum reduction of Load Current to establish the HB Alarm
Min/Max: 0 ÷ 100 (0 ÷64 Hex)
Value: 0 = 0% of Nominal Current
255 = 100% of Nominal Current
Default: 51
Note: When you change this parameter, HB Calibration procedure is necessary.

P125L (H7D) **Byte Lo = Firing type** **R/W**
Function: This parameter set the Firing Type
Value: 01 Hex = Zero Crossing
02 Hex = Single Cycle (Only for 1PH version)
03 Hex = Burst Firing
13 Hex = Burst Firing+ Soft Start (Only for 1PH version)
23 Hex = Burst Firing+ Delay trigger (Only for 1PH version)
24 Hex = Phase Angle (Only for 1PH version)
Default: 3 (if not specified in the Order Code)

P125H (H7D) **Byte Hi = Soft start time (Only for 1PH version)** **R/W**
Function: The Unit starts in phase angle mode with a ramp starting from zero up to full voltage in a presetted and Adjustable time.
The time is setted by this parameter
Min/Max: 0 ÷ 255 (0 ÷FF Hex)
Value: Each step is 5msec
Default: 4
Note: Value of this parameter must be less than cycle time.
For burst firing this parameter must be less than:
50Hz -> 20msec x Number of cycles (P126L).
60Hz -> 16,6msec x Number of cycles (P126L).

P126L (H7E) **Byte Lo = Number of cycles (Burst)** **R/W**
Function: This parameter defines the number of voltage cycles in ON condition at 50% of power demand
Min/Max: 1 ÷ 255 (0 ÷FF Hex)
Value: Each step is 1 cycle
Default: 8 (if not specified in the Order Code)

P126H (H7E) **Byte Hi = HB Delay time** **R/W**

Function: This parameter set a delay to have HB alarm active
Min/Max: 0 ÷ 255 (0 ÷FF Hex)
Value: Each step is 50msec
Default: 3
Note: If Soft start option is enabled HB Delay time must be greater than Soft start time: P126H x 50msec > P125H x 10msec
When Zero Crossing firing is used must be less than Cycle time:
P126H x 50msec < P127H x 50msec

P127L (H7F) **Byte Lo = Max power for SSR Input** **R/W**

Function: When SSR input is used it represent the value of the power (%) when is in ON status
Min/Max: 0 ÷ 255 (0 ÷ FF Hex)
Value: from 0 = 0% of Output,
to 255 = 100% of Output
Default: 255

P127H (H7F) **Byte Hi = Cycle time** **R/W**

Function: The Cycle Time is the time which the Thyristor modulates to obtain the power demand
Min/Max: 0 ÷ 255 (0 ÷ FF Hex)
Value: Each step is 50msec
Default: 60 (3C Hex) = Zero Crossing
240 (F0 Hex) = Burst Firing
Example: With a Cycle time at 4 sec:
25%-> 1sec 0n+3sec off
50%-> 2sec 0n+2sec off
75%-> 3sec 0n+1sec off

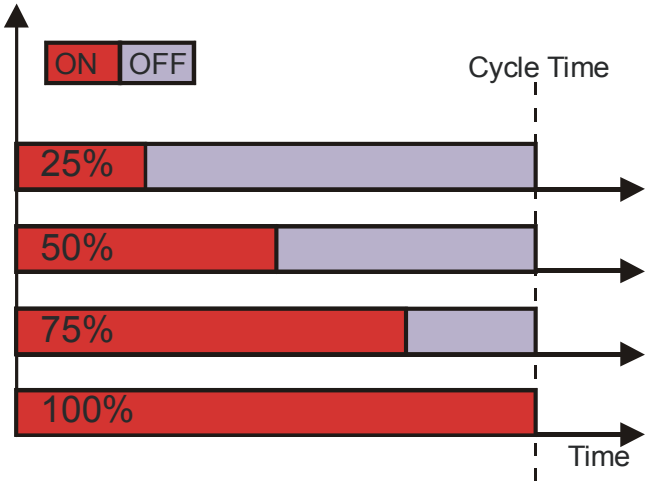

P128L (H80) **Byte Lo = Number of half period (DT firing)** **R/W**

Function: This parameter defines the number of half period in delay of firing.
Min/Max: 1 ÷ 255 (0 ÷FF Hex)
Value: Each step is 1 half period
Note: Must be setted at 1

14 FuseHolder and Fuses

CD3000M unit must be protected by fuses against short circuit selecting the proper I²t that must be lower than the thyristor one (I²t max).

Caution: *USE ONLY EXTRARAPID FUSE WITH APPROPRIATE I²T*

14.1 FuseHolder size

for size 15A - 25A

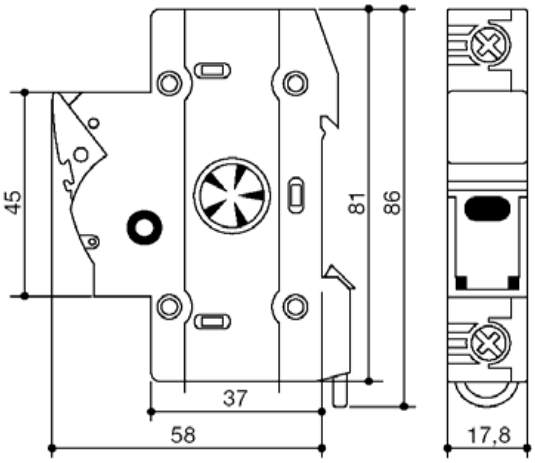

for size 30A - 45A

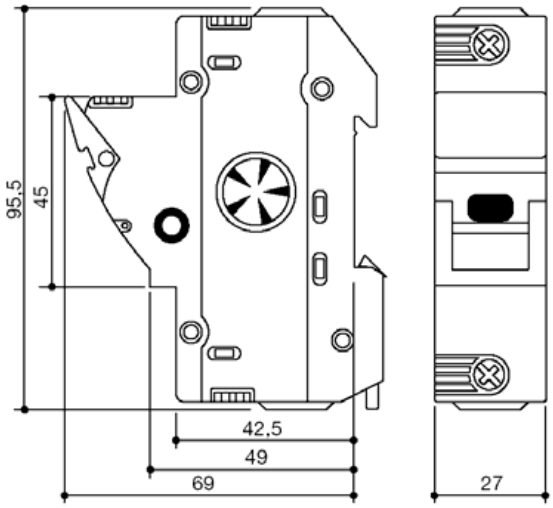

for size 60A - 90A(CE)

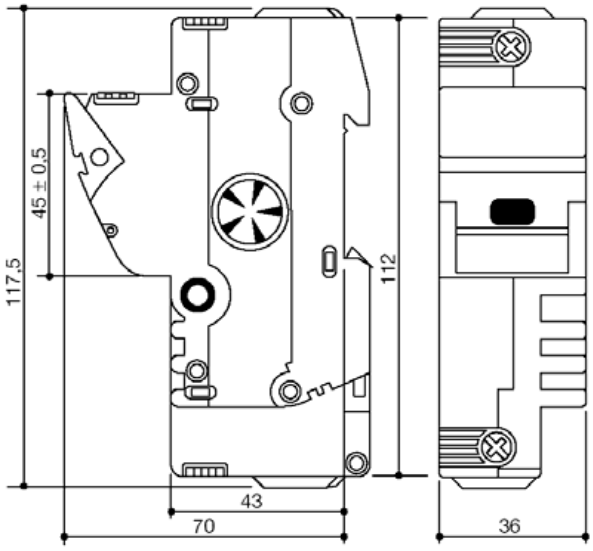

for size 75A(UL) - 90A(UL)

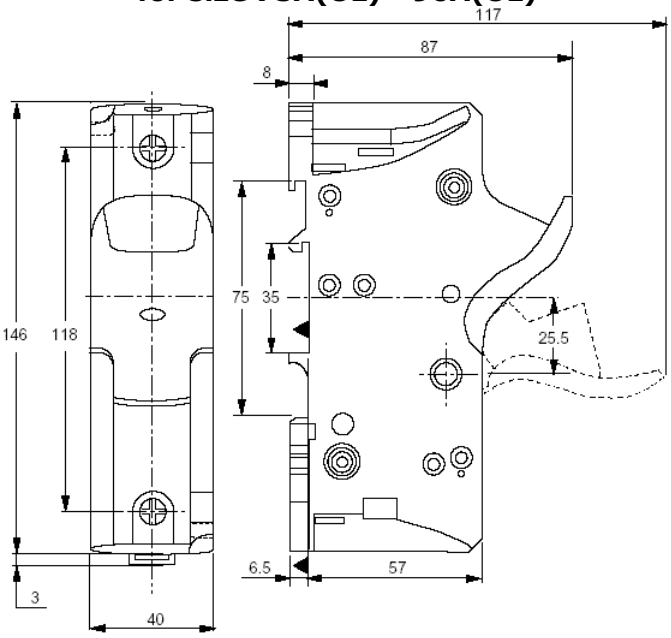

14.2 Fuses and Fuse Code for UL

SIZE	Bussmann Div Cooper (UK) Ltd (200 kARMS Symmetrical A.I.C.)				Ferraz Shawmut SA (200 kARMS Symmetrical A.I.C.)				Qty
	Fuse CODE	Current (ARMS)	I²T (A²sec)	Vac	Fuse CODE	Current (ARMS)	I²T (A²sec)	Vac	
15A	FWC 16A10F	16	150	600	660 Grb 10-16	16	145	660	3
30A	FWP 40A14F	40	750	700	CP URC 14x51/40	40	700	660	3
45A	FWP 50A14F	50	1800	700	CP URC 14x51/50	50	1500	660	3
60A	FWP 80A22F	80	6600	700	CP URD 22x58/80	80	3800	660	3
75A	-	-	-	-	CP URQ 27x60/100	100	3210	660	3
90A	-	-	-	-	CP URQ 27x60/125	125	6970	660	3



Caution: *The Fuses must have I²t 20% less than thyristor's I²t.*



Caution: *High speed fuses are used only for the thyristor protection and can not be used to protect the installation.*



Caution: *The warranty of thyristor is null if no proper fuses are used. See tab.*



Warning: *The user installation must be protected by electromagnetic circuit breaker or by fuse isolator.*

c UL US LISTED

14.3 Fuses and Fuse Code for CE

SIZE	Fuse and Fuse holder CODE	Fuse CODE	Current (ARMS)	I²T (max) (A² sec.)
15A	FFH1038/16A	FU1038/16A	16	150
30A	FFH1451/40A	FU1451/40A	40	1650
45A	FFH1451/50A	FU1451/50A	50	2000
60A	FFH2258/80A	FU2258/80A	80	6550
75A	FFH2258/100A	FU2258/100A	100	13500
90A	FFH2258/125A	FU2258/125A	125	14000



Caution: *The Fuses must have I²t 20% less than thyristor's I²t.*



Caution: *High speed fuses are used only for the thyristor protection and can not be used to protect the installation.*



Caution: *The warranty of thyristor is null if no proper fuses are used. See tab.*



Warning: *The user installation must be protected by electromagnetic circuit breaker or by fuse isolator.*

CE

15 Maintenance

15.1 Trouble Shooting

Small problems sometimes can be solved locally with the help of the below tab of trouble shooting. If you don't succeed, contact us or your nearest distributor.

Symptom	Indication on front unit	Possible reasons of the symptom	Actions
Thyristor unit doesn't go in conduction with input signal	Green LED (Aux) always light off	• No voltage auxiliary power	• Give auxiliary voltage supply (see wiring diagram)
	Green LED (Aux) light on Green LED (ON) light off	• No input signal • Reversed polarities of input signal • Reset contact is open	• Provide to give input signal • Reverse the input signal polarity • Make link on reset terminals (see wiring diagram)
	Green LED (Aux) light on Green LED (ON) light on	• Fuse failure • Load failure • Load connection interruption • Thyristor faulty and always in open circuit With HB option the yellow led (HB) is light on	• Substitute the fuse • Check the load • Check the wiring • Substitute the faulty thyristor
Load current flows also with no input signal	Green LED (ON) always light off.	• Wrong wiring • Short circuit on thyristor If there is HB option the red LED (SC) is light on	• Check the load wiring • Substitute the thyristor
Current flows at nominal value but Yellow LED (HB) is light on	Yellow LED (HB) light on	• HB circuit not tuned • Current transformers not properly wired	• Make HB calibration procedure • Control current transformers wiring
Current flows at nominal value but Red LED (SC) is light on	Red LED (SC) light on	• HB circuit not tuned	• Make HB calibration procedure
Thyristor unit doesn't work properly		• Wrong input signal selection. • Wrong input signal calibration (out of range). • Auxiliary voltage supply out of limits	• Control input signal setting. • Repeat input calibration procedure. • Verify the auxiliary voltage supply

15.2 Fans

The thyristor unit with forced ventilation uses fans that rotate permanently when the unit is supplied. In case of fan failure, the heat-sink can be reach high temperature. In this case to give protection to thyristor there is a thermal switch properly setted. The function of this switch is to open the input signal until the heat-sink temperature falls below the setted value. This means that also with input signal in ON condition the unit is switched OFF and the system can not work at full power. For this reason is important to control periodically the fans status checking that are rotating.

15.3 Maintenance

For maintain a correct cooling, the consumer must clean the heat-sink and the protective grate of the fans. The frequency of these operations depends on the atmospheric local pollution.
Check also that the screw of the power terminals and earth terminals are shut correctly
(see Diagram of control connection).

15.4 Repairing procedure

- Phone to CD Automation.
- Explain to Service Engineer the problem because sometimes it can be solved with a phone call. If this is not possible, ship the unit to CD Automation or to your distributor.
- Write a fault description and give the name of your personnel to which refers.
- Use a rugged packaging to ship the unit.

15.5 Warranty condition

CD Automation gives a 12 months warranty to its products. The warranty is limited to repairing and parts substitution in our factory and does exclude products not properly used and fuses.
Warranty does not include products with serial numbers deleted. The faulty product should be shipped to CD Automation at customer's cost and our Service will evaluate if product is under warranty terms.
Substituted parts remain of CD Automation property.

16 Note