Whirlpool

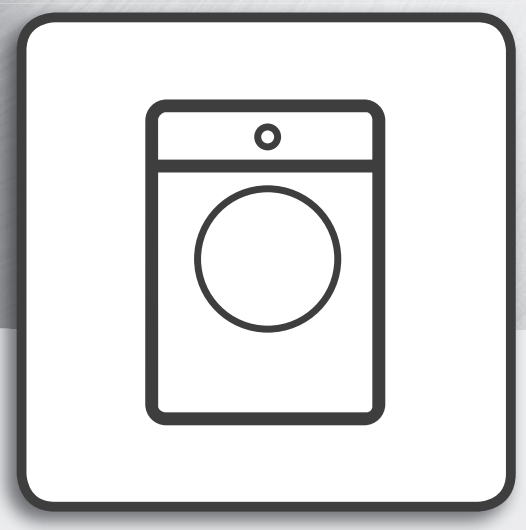

User Manual and Online Warranty Registration Information

產品使用說明及網上登記保養資料

Model : CFCR80211W

產品型號 : CFCR80211W

www.whirlpool.com.sg
www.whirlpool.com.hk

ENGLISH 3

繁體中文 19

Whirlpool

USER MANUAL

THANK YOU FOR BUYING A WHIRLPOOL PRODUCT.

Warranty information are at page 37 of the User Manual.

INDEX

USER MANUAL **3**

HEALTH & SAFETY GUIDE

Safety Instructions **4-5**

Product description 6
Detergent dispenser 6
Technical data for water connection 6
Control panel 7
Programmes 7
Options & Functions 8
Programme chart 9
Door 10
Accessories 10
How to Use the Appliance **10**
First time use 10
Daily use 10-11
Display Indicators 12
Hints and tips 12
Cleaning & Maintenance **13**
Cleaning the outside of the washing machine 13
Checking the water supply hose 13
Cleaning the mesh filters in the water supply hose 14
Cleaning the detergent dispenser 14
Cleaning the water filter / draining residual water 15
Troubleshooting **16**
Transport and handling 17
After-Sales Service **18**

INSTALLATION GUIDE ..... **Appendix.E1 -E2**

Whirlpool

SAFETY INSTRUCTIONS

IMPORTANT TO BE READ AND OBSERVED

Before using the appliance, read these safety instructions. Keep them nearby for future reference. These instructions and the appliance itself provide important safety warnings, to be observed at all times. The manufacturer declines any liability for failure to observe these safety instructions, for inappropriate use of the appliance or incorrect setting of controls.

⚠ Very young children (0-3 years) should be kept away from the appliance. Young children (3-8 years) should be kept away from the appliance unless continuously supervised. Children from 8 years old and above and persons with reduced physical, sensory or mental capabilities or lack of experience and knowledge can use this appliance only if they are supervised or have been given instructions on safe use and understand the hazards involved. Children must not play with the appliance. Cleaning and user maintenance must not be carried out by children without supervision.

Never open the door forcibly or use it as a step.

PERMITTED USE

⚠ CAUTION: The appliance is not intended to be operated by means of an external switching device, such as a timer, or separate remote controlled system.

⚠ This appliance is intended to be used in household and similar applications such as: staff kitchen areas in shops, offices and other working environments; farm houses; by clients in hotels, motels, bed & breakfast and other residential environments.

⚠ Do not load the machine above the maximum capacity (kg of dry cloth) indicated in the programme table.

⚠ This appliance is not for professional use. Do not use the appliance outdoors.

⚠ Do not use any solvents (e.g. turpentine, benzene), detergents containing solvents, scouring powder, glass or general purpose cleaners, or flammable fluids; do not machine wash fabrics that have been treated with solvents or flammable liquids.

INSTALLATION

⚠ The appliance must be handled and installed by two or more persons - risk of injury. Use protective gloves to unpack and install - risk of cuts.

If you want to stack a dryer on top of your washing machine, first contact our After-Sales Service or your specialist dealer to verify whether this is possible. This is only possible if the dryer is attached to the washing machine by means of appropriate stacking kit available through our After- Sales Service or your specialist dealer.

⚠ Move the appliance without lifting it by the worktop or top lid.

⚠ Installation, including water supply (if any) and electrical connections and repairs must be carried out by a qualified technician. Do not repair or replace any part of the appliance unless specifically stated in the user manual. Keep children away from the installation site. After unpacking the appliance, make sure that it has not been damaged during transport. In the event of problems, contact the dealer or your nearest After-sales Service. Once installed, packaging waste (plastic, styrofoam parts etc.) must be stored out of reach of children - risk of suffocation. The appliance must be disconnected from the power supply before any installation operation - risk of electric shock. During installation, make sure the appliance does not damage the power cable - risk of fire or electric shock. Only activate the appliance when the installation has been completed.

⚠ Do not install your appliance where it may be exposed to extreme conditions, such as: poor ventilation, temperatures below 5 °C or above 35 °C.

⚠ When installing the appliance make sure that the four feet are stable and resting on the floor, adjusting them as required, and check that the appliance is perfectly to level using a spirit level.

⚠ If the appliance is being installed on wood or “flooting” floors (certain parquet and laminate materials), secure a 60 x 60 x 3 cm (at least) sheet of plywood to the floor then place the appliance on top of this.

⚠ Connect the water inlet hose(s) to the water supply in accordance with the regulations of your local water company.

⚠ For cold fill only models: do not connect to the hot water supply.

⚠ For models with hot fill: the hot water inlet temperature must not exceed 60 °C.

⚠ The washing machine is fitted with transport bolts to prevent any possible damage to the interior during transport. Before using the machine, it is imperative that the transport bolts are removed. After their removal, cover the openings with the 4 enclosed plastic caps.

⚠ After installation of the device, wait a few hours before starting it so that it acclimates to the environmental conditions of the room.

⚠ Make sure that the ventilation openings in the base of your washing machine (if available on your model) are not obstructed by a carpet or other material.

⚠ Use only new hoses to connect the appliance to the water supply. The old hose-sets should not be reused.

⚠ The supply water pressure must be in the 0.1-1 Mpa range.

ELECTRICAL WARNINGS

⚠ It must be possible to disconnect the appliance from the power supply by unplugging it if plug is accessible, or by a multi-pole switch installed upstream of the socket in accordance with the wiring rules and the appliance must be earthed in conformity with national electrical safety standards.

⚠ Do not use extension leads, multiple sockets or adapters. The electrical components must not be accessible to the user after installation. Do not use the appliance when you are wet or barefoot . Do not operate this appliance if it has a damaged power cable or plug, if it is not working properly, or if it has been damaged or dropped.

⚠ If the supply cord is damaged, it must be replaced with an identical one by the manufacturer, its service agent or similarly qualified persons in order to avoid a hazard - risk of electric shock.

CLEANING AND MAINTENANCE

⚠ WARNING: Ensure that the appliance is switched off and disconnected from the power supply before performing any maintenance operation; never use steam cleaning equipment - risk of electric shock.

DISPOSAL OF PACKAGING MATERIALS

The packaging material is 100% recyclable and is marked with the recycle symbol ♻.

The various parts of the packaging must therefore be disposed of responsibly and in full compliance with local authority regulations governing waste disposal.

DISPOSAL OF HOUSEHOLD APPLIANCES

This appliance is manufactured with recyclable or reusable materials. Dispose of it in accordance with local waste disposal regulations. For further information on the treatment, recovery and recycling of household electrical appliances, contact your local authority, the collection service for household waste or the store where you purchased the appliance. This appliance is marked in compliance with European Directive 2012/19/EU, Waste Electrical and Electronic Equipment (WEEE). By ensuring this product is disposed of correctly, you will help prevent negative consequences for the environment and human health.

The symbol on the product or on the accompanying documentation indicates that it should not be treated as domestic waste but must be taken to an appropriate collection center for the recycling of electrical and electronic equipment.

PRODUCT DESCRIPTION

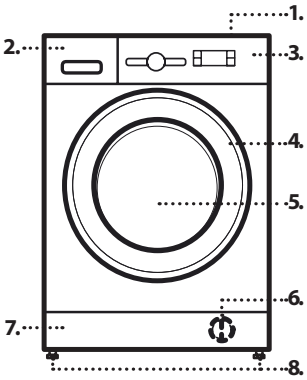

1. Worktop
2. Detergent dispenser
3. Control panel
4. Door handle
5. Door
6. Water filter - behind plinth
7. Plinth (removable)
8. Adjustable feet (4)

DETERGENT DISPENSER

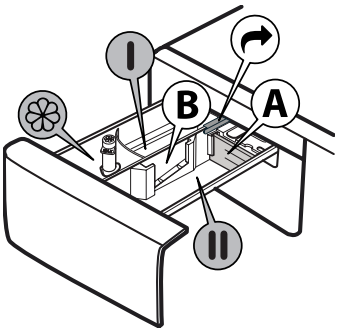

1. Main wash compartment
   - Detergent for the main wash
   - Stain remover
   - Water softener
   - For a liquid detergent it is recommended to use removable plastic partition **A** (supplied) for a proper dosage. If powder detergent is used, place the partition into slot **B**.
2. Prewash compartment
   - Detergent for the prewash
3. Softener compartment
   - Fabric softener
   - Liquid starch

   Pour softener or starch solution only up to the "MAX" mark.
4. Release button
   (press to remove the detergent dispenser for cleaning)

TECHNICAL DATA FOR WATER CONNECTION

Water connection	
Water supply	Cold
Water tap	3/4" threaded hose connector
Minimum water supply pressure	100 kPa (1 bar)
Maximum water supply pressure	1000 kPa (10 bar)

CONTROL PANEL

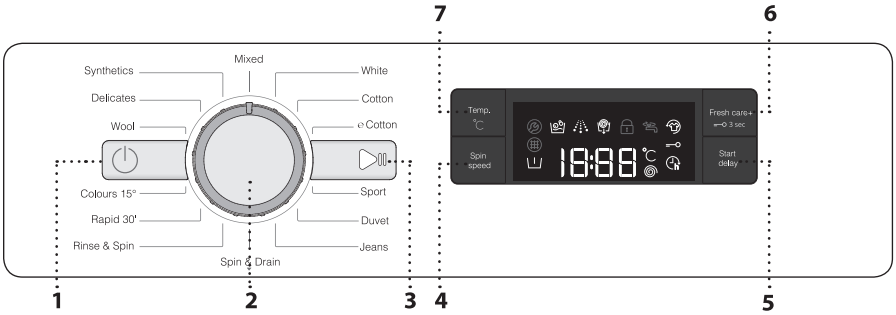

1. "ON/OFF" button ⏻
2. Programme selector
3. "Start/Pause" button ▷II
4. "Spin" button
5. "Start delay" button
6. "FreshCare+" / "Key lock"button
7. "Temperature" button

PROGRAMMES

For choosing the appropriate programme for your kind of laundry, always respect the instructions on the care labels of the laundry. The value given in the tub symbol is the maximum temperature possible for washing the garment.

MIXED
For washing lightly to normally soiled resilient garments in cotton, linen, synthetic fibres and mixed fibres.

WHITE
For washing normally to heavily soiled towels, underwear, table and bed linen, etc in resilient cotton and linen. Only when the temperature is selected at 90°C the cycle is provided with a prewash phase before main washing phase. In this case it is recommended to add detergent both, in the prewash and main wash section.

COTTON
Normally to heavily soiled and robust cottons.

eCOTTON
For washing normally soiled cotton garments. At 40°c and 60°C, this is the standard cotton programme and the most efficient in terms of water and energy consumption.

SPORT
For washing lightly soiled sports clothing (tracksuits, shorts, etc.). For best results, we recommend not exceeding the maximum load indicated in the ,"PROGRAMME CHART". We recommend using liquid detergent, and adding the amount suitable for half-load.

DUVET
Designed for washing eiderdown padded items such as double or single duvets, cushions and anoraks. It is recommended to load such padded items in the drum with the edges folded inwards and not to exceed 3⁄4 of the drum's volume. For optimal washing, we recommend using a liquid detergent.

JEANS
Turn garments inside-out before washing and use a liquid detergent.

SPIN DRAIN
Spins the load then empties the water. For resilient garments. If you exclude the spin cycle, the machine will drain only.

RINSE & SPIN
Rinses and the spins. For resilient garments.

RAPID 30'
For washing lightly soiled garments quickly. This cycle lasts only 30 minutes, saving time and energy.

COLOURS 15°
This cycle helps protect colours by washing in cold water (15°C) and uses less energy to heat the water while still offering satisfactory wash results. Suitable for lightly soiled, unstained garments . This cycle offers wash results comparable to 40°c mixed at just 15°C.

WOOL
All wool garments can be washed using programme, "Wool" even those carryng the "hand-wash only" label. For best results, use special detergents and do not exceed max kg declaration of laundry.

DELICATES
For washing particularly delicate garments. Preferably turn garments inside out before washing.

SYNTHETICS
For washing normally soiled garments made from synthetic fibres (such as polyester, polyacrylic, viscose etc.) or cotton/synthetic blends.

OPTIONS

! If the selected function is incompatible with the set programme, the incompatibility will be signalled by a buzzer (3 beeps).
! If the selected function is incompatible with another previously set function the function will not be enabled.

Start delay

To set the selected programme to start at a later time, press the button to set the desired delay time. The symbol lights on the display when this function is enabled. Upto 24 hours. To cancel the delayed start, press the button again untile the value ,"0" is shown on the display.

FRESHCARE+

This option enhances washing performance by generating steam to inhibit the proliferation of the main bad odour sources inside the machine. After steam phase, the washing machine will perform gentle tumbling through slow rotations of the drum. FreshCare+ option starts after the cycle ends for a maximum duration of 6h and you can interrupt it at any time by pressing any button on control panel or turning the knob. Wait around 5 minutes before door can be opened.

TEMPERATURE

Every programme has a predefined temperature. If you want to change the temperature, press the "temperature" button. The value appears on the display.

SPIN

Every programme has a predefined spin speed. If you want to change the spin speed, press the "Spin" button. The value appears on the display.

FUNCTIONS

ON/OFF

To switch on the washing machine: press the "ON /OFF" button, the "Start/Pause" button light up. To switch off the washing machine during the wash cycle, press and hold the button for approximately 3 seconds. If the button is pressed briefly or accidentally the machine will not switch off.
To switch off the washing machine after programme end: press the "ON/OFF" button until the lights go off.

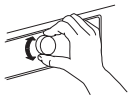

KNOB

To select and confirm programmes. Turn to select.

START/PAUSE

To start the programme, after you have finished your settings. To pause a running programme. To continue a paused programme.

KEY LOCK

To lock the control panel, press and hold the "Key lock" button for approximately 3 seconds. The symbol will light up on the display to indicate that the control panel has been locked (with the exception of the "ON/ OFF" button). This prevents unintentional changes to programmes, especially with children near the machine. To unlock the control panel, press and hold the "Key lock" button for approximately 3 seconds .

BLEACHING

If you wish to bleach the laundry, load the washing machine and set the "Rinse & Spin" programme.
Start the machine and wait for it to complete the first water filling cycle (roughly 2 minutes) . u t the machine in pause mode by pressing the "Start/Pause" button, open the detergent drawer and pour the bleach (observe the recommended doses indicated on the package) into the main wash compartment where the partition was previously mounted . Restart the cycle by pressing the "Start/Pause" button .
If desired, it is possible to add fabric softener into the appropriate compartment of the detergent drawer.

DEMO MODE

This function is only used for sales presentations . By this you can interact with washing machine and see it working without water . To enter Demo mode, switch the washing machine ON and OFF again . Press and hold "Start/Pause" button, then within 5 seconds press also "ON/OFF" button and hold both buttons for 10 seconds.
To deactivate this function, switch the washing machine OFF . Then press and hold "Start/Pause" button, within 5 seconds press also "ON/OFF" button and hold both buttons for 2 seconds.

PROGRAMME CHART

Max load 8 Kg							FreshCare+	Detergents and additives			Recommended detergent	
Programme		Temperatures		Max. spin speed (rpm)	Max load (kg)	Duration (H:MINS)		Prewash	Main wash	Softener	Powder	Liquid
		Default	Range					I	II	❀		
	Mixed	40°C	❄ - 40°C	1000	4.5	1:00	✔	–	●	○	–	✔
	White	60°C	❄ - 90°C	1200	8.0	3:05	✔	● (90°)	●	○	✔	✔
	Cotton	40°C	❄ - 60°C	1200	8.0	3:50	✔	–	●	○	✔	✔
	eCotton	60°C	❄ - 60°C	1200	8.0	3:00	✔	–	●	○	✔	✔
	Sport	40°C	❄ - 40°C	600	4.0	1:30	✔	–	●	○	–	✔
	Duvet	30°C	❄ - 30°C	1000	3.5	1:50	–	–	●	○	–	✔
	Jeans	40°C	❄ - 40°C	800	4.0	1:10	✔	–	●	○	–	✔
	Spin Drain	–	–	1200	8.0	0:10	–	–	–	–	–	–
	Rinse & Spin	–	–	1200	8.0	0:55	–	–	–	○	–	–
	Rapid 30'	30°C	❄ - 30°C	800	4.5	0:30	✔	–	●	○	–	✔
	Colour 15°	15°C	–	1000	4.5	1:30	✔	–	●	○	–	✔
	Wool / Hand	40°C	❄ - 40°C	800	2.0	1:30	–	–	●	○	–	✔
	Delicates	30°C	❄ - 30°C		1.0	1:10	–	–	●	○	–	✔
	Synthetics	40°C	❄ - 60°C	1200	4.5	3:20	✔	–	●	○	✔	✔

● Dosing required ○ Dosing optional

Hong Kong

e Cotton - **Test wash cycles in compliance with regulations EN 60456:**

Set this wash cycles with a temperature of 60°C.

For all test Insitutes

Long wash cycle for cottons: set wash cycle Cotton with a temperature of 40°C.

This data may differ in your home due to changing conditions in inlet water temperature, water pressure etc. Approximate programme duration values refer to the default setting of the programmes, without options.

The washer adapts water, energy and programme duration to your wash load.

Singapore

e **Cotton** ⇦ - Test wash cycles in compliance with regulations 1061/2010

These are the reference programs for the energy label. Set this wash cycles with a temperature of 40°C or 60°C. They are the most efficient programmes in terms of energy and water consumption for washing normally soiled cotton laundry. The actual water temperature may differ from the declared one.

For all Test Institutes

The programme used for the evaluation of (CFCR80211W) under the mandatory Water Efficiency Labelling Scheme (WELS) and the recommended Washing Programme for soiled clothes is as follows : e Cotton 60°C.

Long wash cycle for cottons: set wash cycle **Cotton** with a temperature of 40°C.

Synthetic program along: set wash cycle Synthetics with a temperature of 40°C.

This data may differ in your home due to changing conditions in inlet water temperature, water pressure etc. Approximate programme duration values refer to the default setting of the programmes, without options.

* After programme end and spinning with maximum selectable spin speed, in default programme setting.

** **The duration of the programme is shown on the display.**

6th Sense - the sensor technology adapts water, energy and programme duration to your wash load.

DOOR

To open the door, pull the handle.

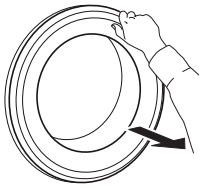

To close the door, hold the handle and push so that you can hear it click shut.

ACCESSORIES

Contact our After-Sales Service to check if the following accessories are available for your washing machine (and dryer) model

STACKING KIT SHELF

By which your dryer can be fixed on top of your washing machine to save space and to facilitate loading and unloading your dryer in the higher position.

HOW TO USE THE APPLIANCE

FIRST TIME USE

Remove any manufacturing debris:

- Select the "Cotton" programme at a temperature of 60°C.
- Pour a small quantity of detergent powder into the main wash compartment ▌▌ of the detergent dispenser(maximum 1/3 of the quantity the detergent manufacturer recommends for lightly soiled laundry).
- Start the programme **without adding any laundry**.
- See section "DAILY USE" for more information on how to select and start a programme.

DAILY USE

PREPARING THE LAUNDRY

Empty pockets

- Coins, paper clips, etc. could damage the load and the washing machine components.
- Tissues will break down during the wash cycle, and the fragments will have to be subsequently removed by hand.

Close all zippers, buttons, and hooks. Tie all ribbons or belts

- Insert the smaller garments (e.g. nylon hosiery, belts, etc.) and garments with hooks into a fabric bag or a pillowcase with a zipper. Remove any rings from curtains, or else place the curtains inside a fabric bag together with the rings.

HOW TO USE THE WASHING MACHINE

1. Load laundry

Open the door and load the laundry. Load the articles one at a time loosely into the drum, without overfilling. Observe the load sizes given in the "PROGRAMME CHART" table. Overloading the machine will result in unsatisfactory washing results and creased laundry.

2. Close door

Make sure that no laundry gets stuck between door glass and rubber seal. Close the door so that you can hear it click shut.

3. Open water tap

Make sure that the washing machine is connected to the water mains. Open the water tap.

Switch on washing machine

Press the "ON/OFF" ⏻, the "Start/Pause" ▷II lamp flashe slowly.

4. Set the desired programme

P

Select the required programme with the "Programme selector" dial. The duration of the wash cycle is shown on the display. The washing machine automatically displays the maximum temperature and spin speed settings possible for the selected programme. Adjust the temperature and/or spin speed settings if needed with the relative buttons.

Fabric type / Symbol on the wash label

- Cottons, mixed fibres, easy care/synthetics, wool, handwash items.
- Colour
  Separate coloured and white items. Wash new coloured articles separately.
- Size
  Wash items of different sizes in the same wash load, to improve washing efficiency and distribution of the articles in the drum.
- Delicates
  Wash delicate items separately; they require gentle treatment.

Change temperature, if needed

- Press the "Temperature"button to progressively lower the temperature setting until cold wash has been set ("- -" will be shown on the display). Pressing the button again sets the highest possible setting.

Change spin speed, if needed

- Press the "Spin Speed" button to progressively decrease the spin speed until the spin cycle is turned off ("0" will be shown on the display). Pressing the button again sets the highest possible setting.

Select options, if needed

- Press the button to select the option; the respective symbol on display illuminates.
- Press the button again to cancel the option; the light extinguishes.

! If the selected option is incompatible with the programme set, the incompatibility will be signalled by a buzzer (3 beeps) and the corresponding indicator light will flash
! If the selected option is incompatible with another previously set option, only the most recent selection will remain active .

5. Add detergent

Pull out the detergent dispenser and add detergent (and additives/softener) into the relative compartments as described in section "DETERGENT DISPENSER". Observe the dosing recommendations on the detergent pack.

Correct dosing of detergent / additives is important, because:

- it optimizes the cleaning result.
- it avoids irritating residues of surplus detergent in your laundry.
- it saves money by avoiding waste of surplus detergent
- it protects the washing machine by avoiding calcification of components.
- it respects the environment by avoiding unnecessary environmental burden.

6. Delaying the start of a programme

- To set a programme to start at a later time, see the section "OPTIONS/ START DELAY".

7. Start programme

- Press the "Start/Pause" ▷II. The relative indicator lamp illuminates, the door locks and the "Door locked" 🔒 indicator lights up.
- To avoid overflow, do not open the detergent dispenser during a running programme anymore.
- The remaining programme duration can vary. Factors like unbalance in the wash load, or foam formation, can have an effect on the programme duration.

8. Change the settings of a running programme, if needed

You can still change the settings while a programme is running. The changes will be applied, provided the respective programme phase has not finished yet.

To change the settings of a running programme:

- Press "Start/Pause" ▷II to put the running programme on pause.
- Change your settings.
- Press "Start/Pause" ▷II again to continue the programme.

If you have changed the programme, do not add detergent for the new programme.

To prevent that a running programme is changed by accident (for instance by children), use the "Key lock" (see section "FUNCTIONS").

Pause a running programme and open the door, if needed

- Press "Start/Pause" ▷II to pause a running programme.
- Provided water level or temperature is not too high, the "Door locked" indicator light turns off. You can open the door, for example to add more laundry, or to remove laundry which was loaded by mistake.
- Press "Start/Pause" ▷II to proceed with the programme.

9. Cancelling a running programme, if needed

- Press and hold the "ON/OFF" ⏻ button until the washing machine stops.
- If the water level and temperature are low enough, the door unlocks and may be opened.
- The door remains locked if there is water in the drum. To unlock the door, switch the washing machine on, select the "Spin & Drain" programme and turn the spin option off by setting the spin speed to "0".
- The water is emptied and the door unlocks at the end of the programme.

10. Switch off the washing machine after programme End

- At the end of the cycle, the message "END" is shown on the display.
- The door can only be opened when the symbol "Door locked" 🔒 light turns off.
- Check that the "Door locked" 🔒 indicator is off, then open the door and take out the laundry.
- Press "ON/OFF" ⏻ to switch the washing machine off.

To save energy, if the washing machine is not switched off manually with the button, it turns off automatically approximately 30 minutes after the end of the programme. Leave the door ajar to let the interior of the washing machine to dry.

DISPLAY INDICATORS

	Door locked	This indicator will light up • after you have started a programme • the porthole door is locked
	FreshCare+	This indicator will light up • after you set the Freshcare+ button
	Start delay	This indicator will light up • after you set the Start delay button
	Key lock	This indicator will light up • after you set the Key lock button
	Washing phase indicator	This indicator shows the current programme phase, running from left to right through wash, rinse and drain. The illuminated indicator light shows which phase is in progress.
	Call Service	**Failure:** Call After-sales service • Refer to Troubleshooting section • If the indicator persist, call After-sales service
	Water filter clogged	**Failure:** Water filter clogged • Water cannot be drained; water fil er might be blocked
	No water	**Failure:** No water • No or not sufficient inlet water.

HINTS AND TIPS

RULES FOR SEPARATING LAUNDRY

- Fabric type / indications on label (cotton, mixed fibres, synthetic, wool, handwash items)
- Colour (separate coloured garments from whites, wash new coloured items separately)
- Size (wash items of different sizes in the same load to improve washing efficiency and weight distribution in the drum)
- Delicates (place small items - such as nylon stockings - and garments with clasps - such as braziers - in a laundry bag or in a pillow case with a zip).

WASH SYMBOLS ON GARMENT LABELS

The value given in the tub symbol is the maximum temperature possible for washing the garment.

Normal mechanical action

Reduced mechanical action

Much reduced mechanical action

Hand wash only

Do not wash

CLEAN THE WATER FILTER REGULARLY

- This is needed to prevent the filter from blocking and preventing the water from draining correctly.

SAVING ENERGY AND PROTECTING THE ENVIRONMENT

- Keeping within the load limits indicated in the "PROGRAMME CHART" will optimise energy, water and detergent consumption and reduce washing times.
- Do not exceed the detergent quantities recommended by the detergent manufacturer.
- Save energy by using a 60 °C instead of a 90 °C wash programme, or by using a 40 °C instead of a 60 °C wash programme. We recommend using the "eCotton" 60 °C programme for cotton garments, which is longer, but uses less energy.
- To save energy and time when washing, select highest spin speed available for the programme to reduce the residual water remaining in the garments at the end of the wash cycle.
- Pretreat any stains with an appropriate stain remover, or else dampen any dried-on stains with water prior to washing, as this will reduce the need to use a high temperature wash programme.
- Use the "Colours 15°" programme for lightly soiled coloured garments; this will reduce the amount of energy used to heat the water.

CLEANING & MAINTENANCE

For any cleaning and maintenance, switch off and unplug the washing machine. Do not use flammable fluids to clean the washing machine.

CLEANING THE OUTSIDE OF THE WASHING MACHINE

Use a soft damp cloth to clean the outer parts of the washing machine.

Do not use glass or general purpose cleaners, scouring powder or similar to clean the control panel - these substances might damage the printing.

CHECKING THE WATER SUPPLY HOSE

Check the inlet hose regularly for brittleness and cracks. If damaged, replace it by a new hose available through our After-Sales Service or your specialist dealer.
Depending on the hose type:

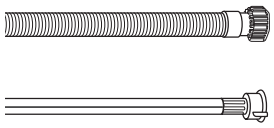

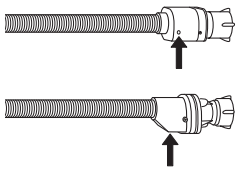

If the inlet hose has a transparent coating, periodically check if the colour intensifies locally. If yes, the hose may have a leak and should be replaced.

For water stop hoses: check the small safety valve inspection window (see arrow). If it is red, the water stop function was triggered, and the hose must be replaced by a new one.
For unscrewing this hose, press the release button (if available) while unscrewing the hose.

CLEANING THE MESH FILTERS IN THE WATER SUPPLY HOSE

1. Close water tap and unscrew the inlet hose.

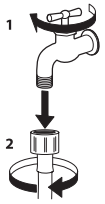

2. Clean the mesh filter at the hose's end carefully with a fine brush.

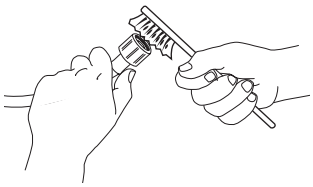

3. Now unscrew the inlet hose on the back of the washing machine by hand. Pull out the mesh filter from the valve on the back of the washing machine with pliers and carefully clean it.

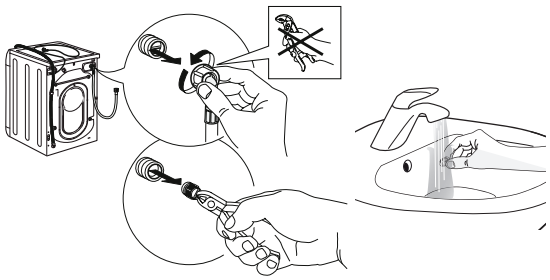

4. Insert the mesh filter again. Connect the inlet hose to water tap and washing machine again. Do not use a tool to connect the inlet hose. Open the water tap and check that all connections are tight.

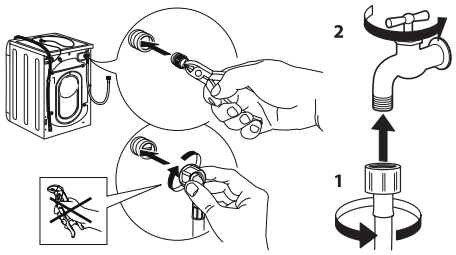

CLEANING THE DETERGENT DISPENSER

1. Remove the detergent dispenser by pressing on the release button and at the same time pulling out the detergent dispenser.

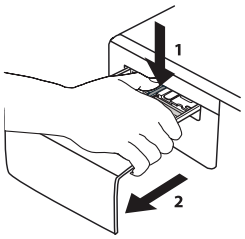

2. Remove the insert from the softener compartment.

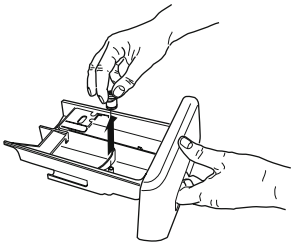

3. Clean all parts under running water, removing all detergent or softener residues .

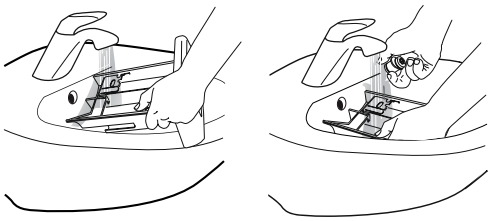

4. Wipe the parts dry with a soft cloth.

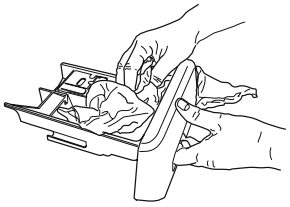

5. Reinstall the detergent dispenser and push it back into the detergent compartment .

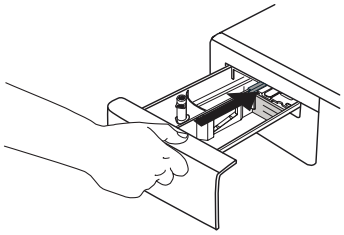

CLEANING THE WATER FILTER / DRAINING RESIDUAL WATER

Switch off and unplug the washing machine before cleaning the water filter or draining residual water. If you used a hot wash programme, wait until the water has cooled down before draining any water.
Clean the water filter regularly, to avoid that the water cannot drain after the wash due to obstruction of the filter.
If the water cannot drain, the display indicates that that the water filter may be clogged.

6. Remove the kick panel: Using a screwdriver, do that which is shown in the following figure.

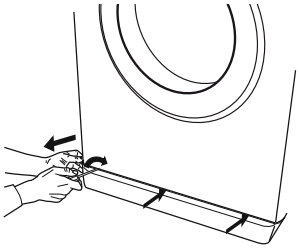

7. Container for the drained water:
Place a low and wide container under the water filter in order to collect the residual water.

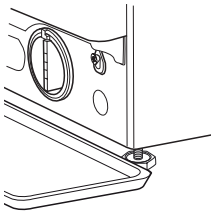

8. Drain the water:
Slowly turn the filter counter-clockwise until all the water has come out. Allow the water to flow out without removing the filter. Once the container is full, close the water filter by turning it clockwise. Empty the container. Repeat the procedure until all the water has been drained.

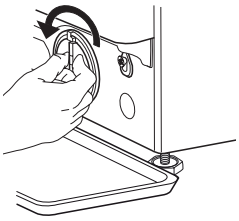

9. Remove filter: Lay a cotton cloth beneath the water filter, which can absorb a small amount of rest water. Then remove the water filter by turning it out anticlockwise.

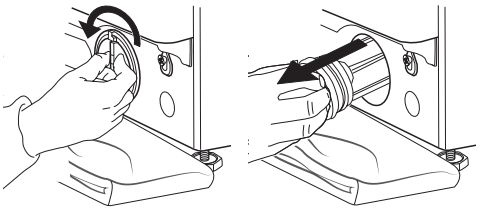

10. Clean the water filter: remove residues in the filter and clean it under running water.

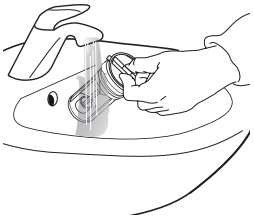

11. Insert the water filter and reinstall the plinth: Reinsert the water filter again by turning it in clockwise direction. Make sure to turn it in as far as it goes; the filter handle must be in vertical position. To test water tightness of the water filter, you can pour about 1 liter of water into the detergent dispenser. Then reinstall the plinth.

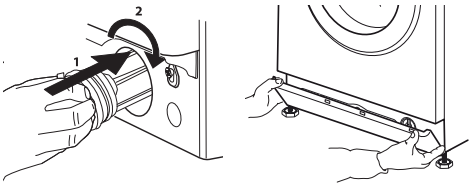

TROUBLESHOOTING

Your washing machine is equipped with various automatic safety and feedback functions. They enable failures and needed maintenance to be detected and indicated accordingly.

These failures are frequently so minor that they can be removed within a few minutes.

Anomalies:	Possible causes / Solution:
The washing machine does not turn on.	• The plug is not inserted into the electrical outlet, or not enough to make contact. • There has been a power failure.
The wash cycle does not start.	• The door is not fully closed. • The "ON/OFF" button has not been pressed . • The "Start/Pause" button has not been pressed. • The water tap is not open. • A "Start delay" has been set.
The washing machine does not fill with water (the message "h2o" is shown on the display). "Beep" sound every 5 seconds.	• The water intake hose is not connected to the tap. • The hose is bent. • The water tap is not open. • The mains water supply has been shut off. • There is not enough pressure. • The "Start/Pause" button has not been pressed.
The washing machine loads and drains water continuously.	• The drain hose has not been installed at 65 to 100 cm from the ground. • The end of the drain hose is immersed in water. • The drain connector on the wall does not have an air vent. • If the problem persists after having performed these checks, close the water tap, shut off the washing machine, and call the After-sales service. If the dwelling is located on one of the uppermost floors of a building, a siphon effect can sometimes occur, thus causing the washing machine to load and drain water continuously. Special anti-siphon valves are available on the market to prevent these types of problems.
The washing machine does not drain or does not spin.	• The programme does not include the draining function: with certain programmes it must be activated manually. • The drain hose is bent. • The drain line is obstructed.
The washing machine vibrates excessively during the spin cycle.	• At the time of installation, the drum was not properly unblocked. • The washing machine is not level. • The washing machine is squeezed between furniture and the wall.
The washing machine leaks water.	• The water intake hose has not been tightened properly. • The detergent dispenser is clogged. • The drain hose has not been properly fastened.
The machine is locked and the display flashe , indicating an error code (e .g . F-01, F- . .).	• Shut off the machine, disconnect the plug from the outlet, and wait about 1 minute before turning it back on. • If the problem persists, call the After-sales service.
Too much foam is formed.	• The detergent is not compatible with the washing machine (it must bear the wording "for washing machines", "for hand washing and washing machines", or something similar). • The dosage was excessive.
Door is locked, with or without failure indication, and the programme does not run.	• Door is locked in case of power breakdown. Programme will continue automatically as soon as the mains is available again. • Washing machine is in a standstill. Programme will continue automatically after the origin of the standstill does not persist anymore.

TRANSPORT AND HANDLING

Never lift the washing machine by holding it at the worktop.

1. Pull out the mains plug, and close the water tap.
2. Make sure that door and detergent dispenser are properly closed.
3. Disconnect the inlet hose from the water tap, and remove the drain hose from your draining point. Remove all rest water from the hoses, and fix them so that they cannot get damaged during transport.
4. Refit the transport bolts. Follow the instructions for removing the transport bolts in the “Installation Guide” in reverse order.

Important: Do not transport the washing machine without having fixed the transport bolts .

AFTER-SALES SERVICE

BEFORE CALLING THE AFTER-SALES SERVICE

1. See if you can solve the problem by yourself with the help of the suggestions given in the **TROUBLESHOOTING**.
2. Switch the appliance off and back on again to see if the fault persists.

IF AFTER THE ABOVE CHECKS THE FAULT STILL OCCURS, GET IN TOUCH WITH THE NEAREST AFTER-SALES SERVICE

To receive assistance, call the number shown on the warranty booklet or follow the instructions on the website
www.whirlpool.com.sg / www.whirlpool.com.hk

When contacting our Client After-sales service, always specify:
- a brief description of the fault;
- the type and exact model of the appliance;

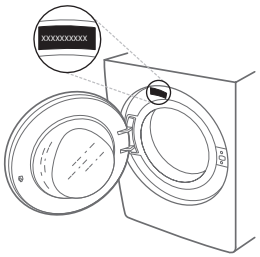

- the service number (number after the word Service on the rating plate).

- your full address;
- your telephone number.

If any repairs are required, please contact an authorised after-sales service (to guarantee that original spare parts will be used and repairs carried out correctly) .

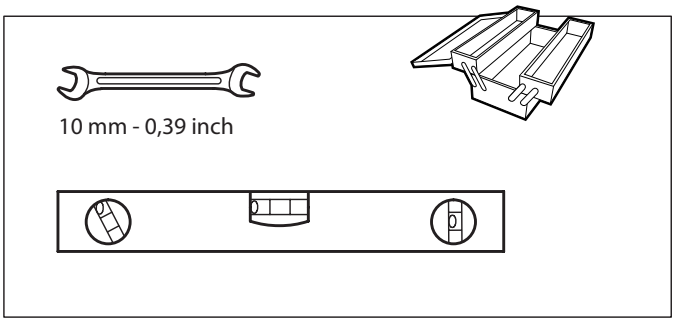

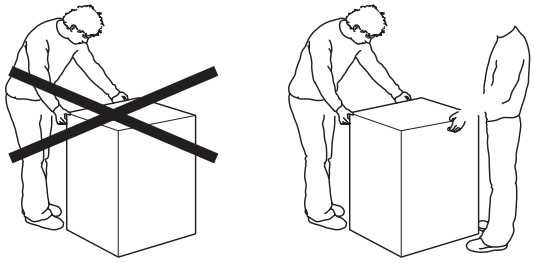

1.

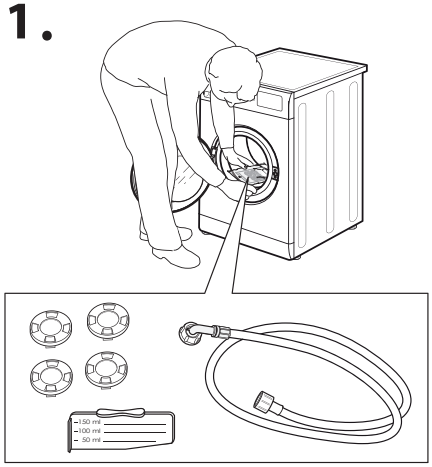

2.

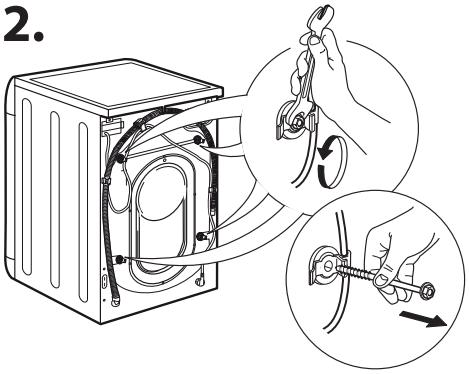

3.

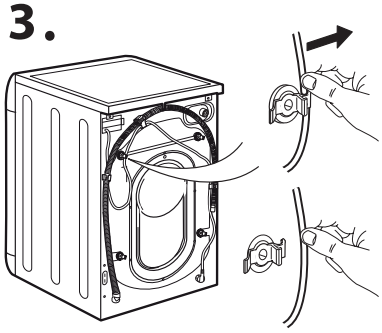

4.

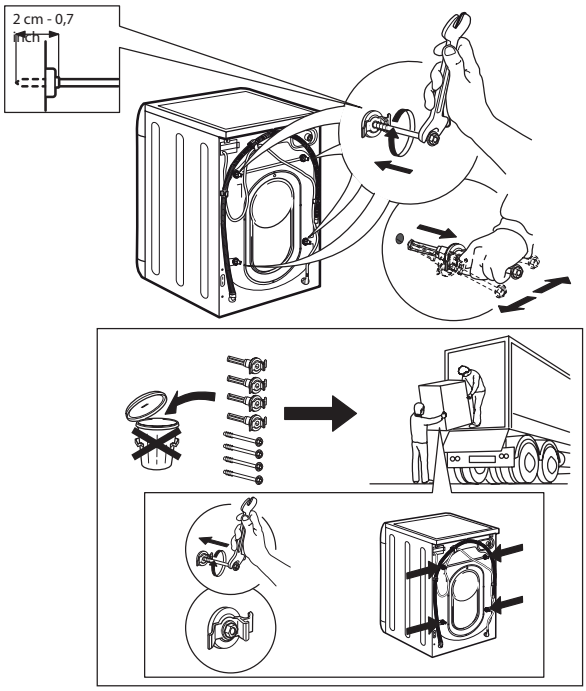

5.

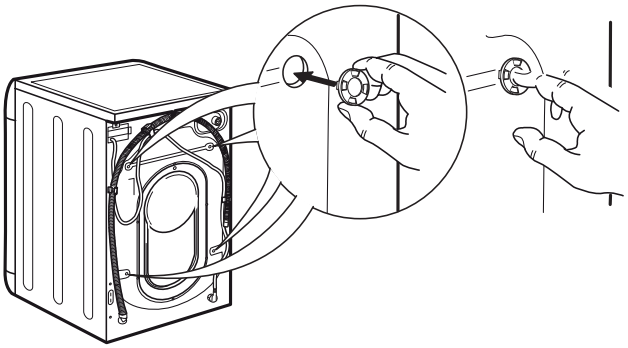

6.

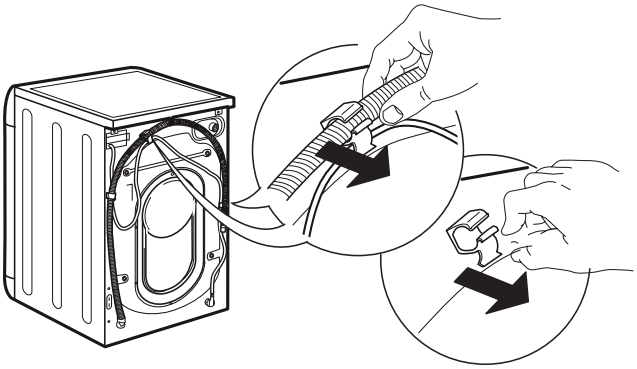

7.

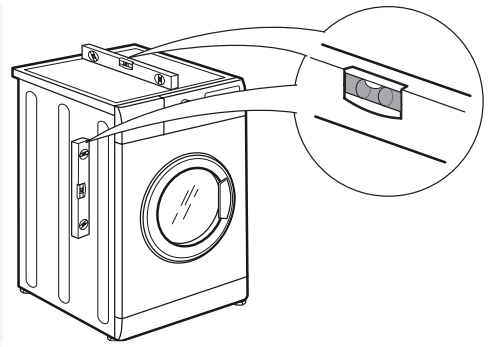

8.

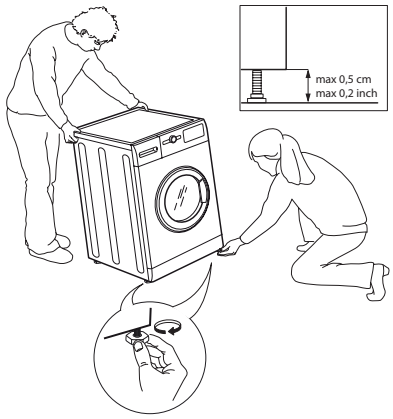

9.

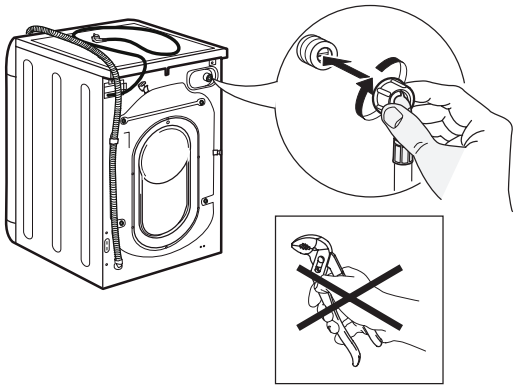

10.

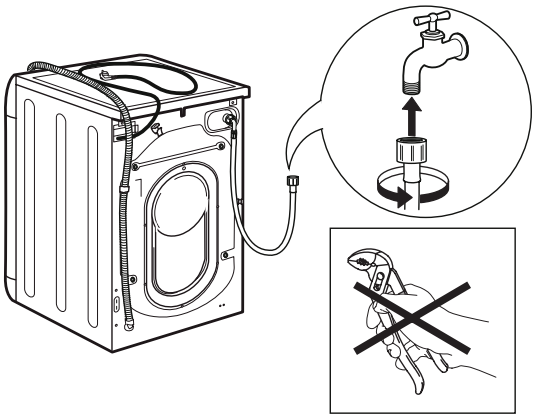

11.

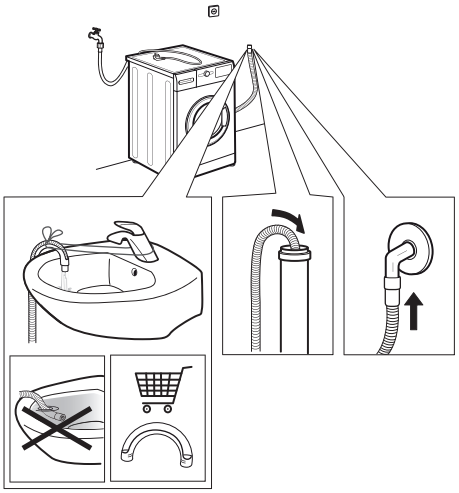

12.

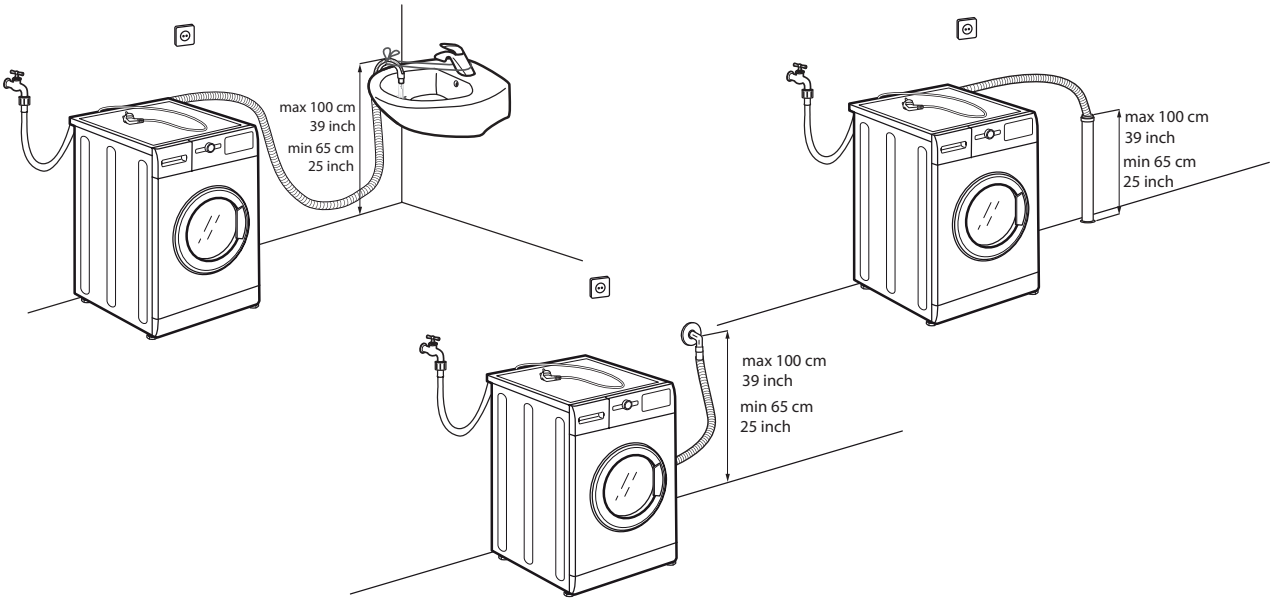

13.

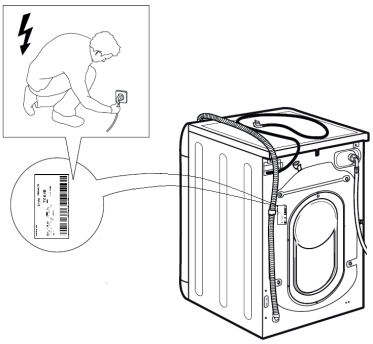

14.

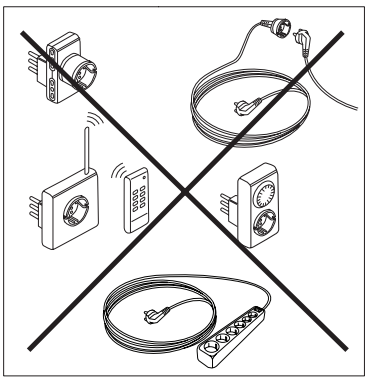

使用說明書

感謝您購買惠而浦產品
為了獲得更完善的服務
有關保養資訊請參考第37頁

索引

使用說明書 **19**

產品安全指引

安全指引 **20-21**
產品介紹 22
洗衣劑盒 22
供水及水管連接資料表 22
控制面板 23
程序 23
選項及功能 24
程序表 25
機門 26
配件 26

如何使用洗衣機 **26**
首次使用 26
日常使用 26-27
顯示屏指示燈 28
提示及應用 28

清潔及保養 **29**
清潔洗衣機的外部 29
檢查進水喉 29
清潔進水喉的濾網 30
清潔洗衣劑盒 30
清潔濾網/排走積水 31

故障排除 **32**
搬運和處理 33

售後服務 **34**

安裝指南 **35-36**

Whirlpool

安全指引

重要事項：請閱讀並遵循

使用洗衣機前請先細閱產品安全指引。請妥善保存此產品安全指引及使用說明作將來參考。本手冊和洗衣機本身提供重要的安全警告，請按需要隨時讀取及查察。不當的使用及不當的操作可能會導致的風險，製造商將不負任何責任。

⚠ 除非得到持續監視，否則幼兒(0-3歲)和兒童(3-8歲)應遠離洗衣機。洗衣機可由8歲以上之兒童及身體，感官或精神障礙或經驗知識不足的人士操作，前提是此等人士已接受洗衣機的安全指導及指引，且瞭解使用洗衣機的相關危險。

兒童不可胡亂玩弄洗衣機。未經指導，兒童不可進行洗衣機的清潔及保養工作。

切勿強行打開機門或以它作為踏板使用。

允許使用

⚠ 注意：此洗衣機不能透過外部控制器或遙控裝置進行操作。

⚠ 此洗衣機設計只適用於家居或下列之類似環境：如一般商店、辦公室及其他工作環境的職員專用廚房；農莊；供入住酒店、汽車旅館及其他住宅式旅店之顧客使用；提供簡單住宿及早餐服務之旅舍。

⚠ 請確保負載不超過最大洗衣量。(請參閱“程序表”中的指示)。

⚠ 洗衣機禁止作為商業用途。洗衣機不適合戶外使用。

⚠ 切勿使用任何溶劑(如鬆節油、汽油等)、含有溶劑，去污粉，玻璃或通用清潔劑，易燃液體洗滌劑；請勿以洗衣機清洗經溶劑或易燃液體處理過的衣物。

安裝

⚠ 此洗衣機建議由兩個或更多的人進行安裝處理，避免受傷風險。使用防護手套來執行所有拆封和安裝操作，避免割傷風險。

如果要在洗衣機頂部放置乾衣機，請首先聯繫我們的售後服務中心或您的經銷商，以確認是否可行。只允許使用我們的售後服務中心或您的經銷商提供的專業疊裝工具將乾衣機固定在洗衣機上。

⚠ 請勿提拉頂板來移動洗衣機。

⚠ 安裝，包括供水（如有任何接駁電線)，必須由合資格的技術人員按照製造商的說明和本地標準安全法規進行維修。除非在用戶手冊特別聲明，切勿維修或更換任何洗衣機的部件。兒童應遠離洗衣機安裝地點。拆開洗衣機後，確認它沒有在運輸過程中損壞。在出現問題時，請聯絡經銷商或售後服務中心。當完成安裝後，包裝棄掉的材料(如塑膠，發泡膠件等)，應置於幼童無法取得的地方，避免意外的風險。此洗衣機進行安裝前，必先斷開它的電源連接避免觸電危險。進行安裝時，確保洗衣機電源線沒有損壞，避免火災或觸電危險。只有當安裝步驟完成後才可啟動洗衣機。

⚠ 不要在極端的情況下安裝洗衣機，如：通風不良，溫度低於5˚C或高於35˚C。

⚠ 確保洗衣機的四隻腳穩固坐落在地面上，如需，可作調整，並檢查洗衣機是否完全處於水平位置(利用水平尺量度)。

⚠ 如果是木地板或所謂的「浮隔地板」，(例如某些鑲木或層壓地板)，請將機器放在至少寬/深為60x60厘米以及厚度至少3厘米的一塊夾板上。

⚠ 根據本地供水公司的法規將進水喉管連接到水龍頭上。

⚠ 設計只能使用冷水的型號：切勿連接有熱水供應的水龍頭上。

⚠ 對於帶有熱水供水的型號：熱水進水的溫度絕對不能超過60˚C。

⚠ 本洗衣機用運輸螺栓作固定，以防止運輸途中對其內部造成任何損壞。使用機器前必須拆除運輸螺栓。然後，請使用4個附帶的塑膠蓋把開口蓋。

⚠ 安裝完成後等待數小時使其恢復適合室內的環境，才可開始使用。

⚠ 確保地毯或其他材料不會阻塞洗衣機底部的通風孔(如您的型號適用)。

⚠ 必須使用新水喉將洗衣機連接到水源。用過的水喉絕對不能重新使用。

⚠ 水壓必須於0.1 -1 MPa內。

電器警告

⚠ 插座必須能夠拔掉，以切斷電源，或安裝設有開關鍵的插座及按照本地的電器安全標準法連接地線。

⚠ 請勿使用接駁電線或多頭插座，安裝後電線部份不可被使用者易於接觸。手濕或赤腳接觸到水時請勿使用本產品。若本產品的電源線或插頭有損壞，不能正常運作，或受損，請勿操作。

⚠ 如果電源線損壞，必須根據相同產品更換電源線。電源線只能由符合製造商指導和現行的安全法規合格的技術人員更換以避免觸電的危險。

清潔和保養

⚠ 注意：執行任何維修或清潔操作之前，請先關閉及拔下電源插頭。切勿使用蒸氣清洗本產品。

處理包裝物料

包裝材料完全可回收，並設有可回收標誌 ♻:

包裝的各個部分必須根據當前本地廢品處理法規進行處理。

廢棄家用電器

必須根據當前本地廢品處理法規進行處理。有關處理、修復和回收本產品的詳細資訊，請聯繫售後服務中心、家庭廢品處理服務中心或您購買本產品的商店。

本洗衣機依照有關廢棄電器和電子設備(WEEE)的歐盟標準2012/19/EU標示。確保以正確的方式廢棄本產品，可避免因不當的廢棄處理方式而對環境和人體健康造成潛在的負面影響。

這符號 🗑 表示此機器不能作為家庭廢品處理。
應將它交給回收電器和電子設備的適用收集點。

產品介紹

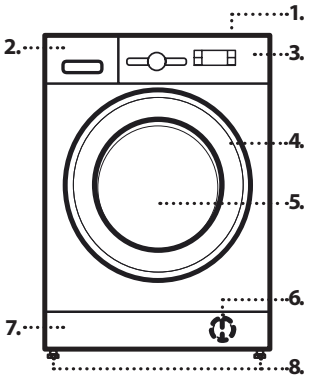

1. 頂板
2. 洗衣劑盒
3. 控制面板
4. 機門門把
5. 機門
6. 底座後面的過濾器
7. 底座 (可拆式)
8. 可調機腳(4)

洗衣劑盒

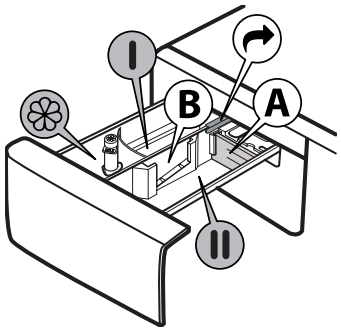

1. 主洗格 ❚❚
   - 主洗用洗衣劑
   - 去污劑
   - 軟水劑
   - 使用洗衣液時，建議把分隔器放置於**A**格，並確保使用正確的洗衣劑劑量。(分隔器放置於〈使用說明書〉的袋內。)當使用洗衣粉時，請把分隔器放置於**B**格。
2. 預洗格 ❚
   - 預洗用洗衣劑
3. 柔順劑格 ❀
   - 衣物柔順劑
   - 衣漿

   添加劑只能添加到“MAX”標誌。
4. 鬆開洗衣劑盒按鍵 ➦
   按下來鬆開洗衣劑盒，將其抽出並清洗。

供水及水管連接資料表

水管連接	
水供應類型	冷水
水龍頭	3/4” 螺紋軟管接頭
最低的水壓	100 kPa (1 bar)
最高的水壓	1000 kPa (10 bar)

控制面板

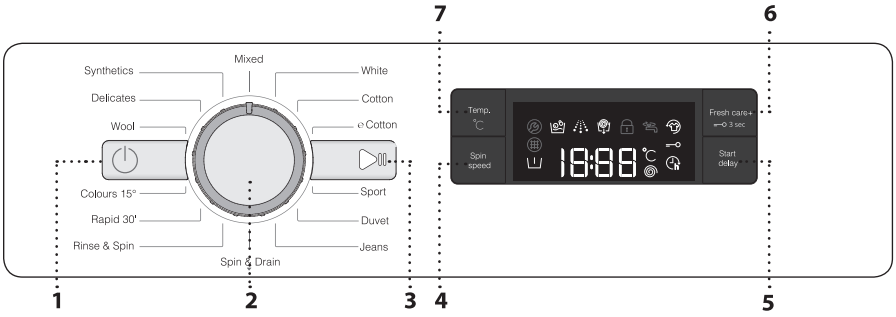

1. 電源「開/關」鍵 ⏻
2. 「程序」鍵
3. 「啟動/暫停」鍵 ▷II
4. 「脱水轉速」鍵
5. 「預校開機時間」鍵
6. 「蒸氣抗菌+」鍵 / 「兒童安全鎖」功能 ⊸
7. 「溫度」鍵

程序

請根據衣物上的護理標籤指示及合適的洗衣溫度，選擇合適的程序於您的衣物種類。

60分鐘混合洗
適用於由棉、麻、人造纖維及其混合織物製成的輕微或一般骯髒的彈性衣物。

白色衣物
通常對於洗滌非常骯髒的毛巾、內衣褲、棉麻桌布及床單等。如彈性的棉、麻布料。只有當選擇在溫度為90°C的程序下，預洗過程會被提供在主洗程序前。在這種情況下，建議一併添加洗滌劑，在預洗和主洗部分。

棉質
適用於一般或非常骯髒的毛巾、內衣褲、棉麻桌布。

棉質節能洗
適用於一般骯髒的棉質衣物。
40°C 及 60°C 水溫下清洗棉質衣物的最佳耗水和耗電 程序。屬能源標籤的參考程序。

運動衣物
用於洗滌輕度污染運動服裝(運動服，短褲，等)。為了獲得最佳的洗衣效果，建議載入不超過“程序表”中所示的最大負載量。建議使用洗衣液。

大型物件
專門為洗滌羽絨類的衣物而設。如雙或單羽絨被，墊子和防寒短上衣或防風雨衣，建議負載的衣物不得超過洗衣桶內¾的容量。為了獲得最佳的洗衣效果，建議使用洗衣液。

牛仔布
請在進行洗衣前，把衣物內部反出來，並使用洗衣液。

脱水及排水
脱水及排水程序。適合彈性的衣物。如「脱水轉速」設為“0”時，洗衣機只會進行排水功能。

過水及脱水
過水及脱水程序。適合彈性的衣物。

30分鐘速洗
適用於快速清洗較少污漬的衣物，30分鐘的快洗程序，可節省時間及能源。

護色15°
此程序將衣物使用冷水(15°C)洗衣，幫助保留衣 服的顏色，也可以節省用把水加熱的大部分電量，同時保持良好的洗淨效果。適用於有輕微骯髒的未染色的衣物。此程序可提供的效果作對比，只需15°C水溫，便可達40°C的潔淨效能。

羊毛/手洗
所有羊毛衣物都可以使用“羊毛”程序進行清洗，甚至印有“只可手洗”標籤的衣物，亦可使用此程序。為了獲得最佳的洗衣效果，請使用專用的洗衣劑，**不得超過最大的負載洗衣量。**

纖細衣物
適用於質料纖細的衣物。建議把衣物內部反出來。

合成纖維
適用於一般骯髒的人造衣物纖維，例如(滌綸、 綸、黏膠纖維等)或混棉織物。

Whirlpool

選項

! 如選項不適用於所選擇的程序，會發出錯誤提示音，由蜂鳴器發出(3次哔的響聲)。
! 如選項與另一個所選擇的程序相互不可兼容，此選項不能被選擇。

預校開機時間
按此選項鍵可讓您將程序延遲開始，此 指示燈亮起表示此功能已啟用。最高長達24小時。如取消此功能，再次按此選項鍵直至顯示屏上出現“0”。

蒸氣抗菌+
此功能可加強洗淨效能，透過產生蒸氣來抑制機內不良氣味清新衣物，完成蒸氣過程後，洗衣機會溫和地將衣物翻滾。

蒸氣抗菌+功能會在程序結束後開始進行，這翻滾時間可最長達約6小時，並且您可以在任何時段透過按下控制面板上的任何按鍵或旋鈕中斷程序。並需要等待大約5分鐘，機門才能打開。

溫度
每個程序都有一個預定的溫度。如您想改變溫度，按「溫度」鍵，溫度會顯示在顯示屏上。

脱水轉速
每個程序都有一個預定的轉速。如您想改變轉速，按「脱水轉速」鍵，轉速會顯示在顯示屏上。

功能

開/關
啟動洗衣機：按電源「開 / 關」 鍵，「啟動 / 暫停」 鍵亮起。在運轉期間，如需要關閉洗衣機，按下電源「開 / 關」 鍵，大約3秒鐘。如只是輕按此按鍵或是不小心按下，機器是不會被關閉。

在程序結束後，關閉洗衣機：按電源「開/關」 鍵，直至指示燈熄滅。

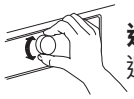

選擇程序
選擇及確認所需程序，轉動旋鈕以選擇程序。

啟動/暫停
設定所需的程序後，程序將會啟動。要暫停正在運行的程序或要繼續運行暫停的程序，均需要按「啟動/暫停」 鍵。

兒童安全鎖
按下「兒童安全鎖」 鍵，鎖定控制面板，大約3秒鐘，按鍵符號指示燈 亮起，於顯示屏上表示即被鎖定(只有電源「開 / 關」 鍵可如常運作)。尤其是當孩子接近洗衣機時，此可防止非故意的程序改動。解除鎖定控制面板，按下「兒童安全鎖」 鍵大約3秒鐘。

漂洗衣物
如您想漂洗衣物，加入衣物在洗衣機內及設定”過水及脱水程序。

啟動洗衣機和等待它完成第一次的入水過程 (需時大約2分鐘)，按下「啟動 / 暫停」 鍵，把洗衣機待在暫停模式，打開洗衣劑盒和倒入漂白劑(請參照洗衣劑包裝上的建議劑量)添加於洗衣劑盒的主洗格內，按下「啟動/暫停」 鍵，以重新啟動過程。

如有需要，亦可添加衣物柔順劑於柔順劑格內。

示範模式
此功能只限作為示範用途。透過此模式，用家可以在沒有進水的情況下，了解洗衣機的運作。
如要展示「示範模式」，按下「啟動/暫停」 鍵, 以啟動運作，並且維持約5秒鐘的時間，然後再同步
按下電源「開/關」 鍵,再一並維持約10秒鐘的時間。

如要取消「示範模式」功能.按下電源「啟動/暫停」 鍵，以暫停運作，並且維持約5秒鐘的時間，然後再同步按下電源「開/關」 鍵, 再一並維持約2秒鐘的的時間。

程序表

最大負載量8公斤							蒸氣抗菌+	洗衣劑和添加劑			建議洗衣劑類別	
程序		溫度		最高脫水轉速(轉/分鐘)	最大洗衣量(公斤)	程序時間(小時:分鐘)		預洗	主洗	柔順劑	洗衣粉	洗衣液
		預設	溫度範圍					I	II	❀		
	混合洗	40°C	❄ - 40°C	1000	4.5	1:00	✔	–	●	○	–	✔
	白色衣物	60°C	❄ - 90°C	1200	8.0	3:05	✔	● (90°)	●	○	✔	✔
	棉質	40°C	❄ - 60°C	1200	8.0	3:50	✔	–	●	○	✔	✔
	e棉質節能洗	60°C	❄ - 60°C	1200	8.0	3:00	✔	–	●	○	✔	✔
	運動衣物	40°C	❄ - 40°C	600	4.0	1:30	✔	–	●	○	–	✔
	大型物件	30°C	❄ - 30°C	1000	3.5	1:50	–	–	●	○	–	✔
	牛仔布	40°C	❄ - 40°C	800	4.0	1:10	✔	–	●	○	–	✔
	脫水及排水	–	–	1200	8.0	0:10	–	–	–	–	–	–
	過水及脫水	–	–	1200	8.0	0:55	–	–	–	○	–	–
	30分鐘速洗	30℃	❄ - 30°C	800	4.5	0:30	✔	–	●	○	–	✔
	護色15°	15°C	–	1000	4.5	1:30	✔	–	●	○	–	✔
	羊毛 / 手洗	40°C	❄ - 40°C	800	2.0	1:30	–	–	●	○	–	✔
	纖細衣物	30°C	❄ - 30°C	–	1.0	1:10	–	–	●	○	–	✔
	合成纖維	40°C	❄ - 60°C	1200	4.5	3:20	✔	–	●	○	✔	✔

● 需要使用洗衣劑　○ 選擇性使用洗衣劑

香港

棉質節能洗 -洗衣周期是根據EN 60456標準所規定的正常條件下而測得。
設定這些洗衣程序的溫度為60°C。

能源標籤測試程序

時間較長的棉質程序：
設定棉質的洗衣 程序 溫度為40°C

由於不同的條件因素(如：入水溫度，供水壓力等)，各家庭的數據值可能會有不同。而大約的程序時間值是根據預設的程序而設置，而功能選項並不計算在內。

洗衣機可通過水流，節能和負載量而調節程序時間。

新加坡

棉質節能洗 -洗衣周期是根據1061/2010標準測試。能源標籤測試是根據洗衣程序的溫度40°C 或 60°C， 洗滌通常弄髒的棉布衣物的消耗量是最有效的節能能源和水。實際水溫可能與聲明的水溫不同。

對於所有測試機構根據強制性水效率標籤計劃（WELS）和建議的髒衣服洗滌程序，用於評估（CFCR80211W）的程序如下：棉質60°C。棉花的洗滌週期較長：設定洗滌週期的溫度為40°。

综合程序：設定洗滌週期溫度為40°C的合成物。由於進水溫度，水壓等條件的變化，各家庭的數據可能會有所不同。近似的程序持續時間值是指程序的默認設置，沒有功能選項。
*程序結束後，以默認的程序設置以最大可選的旋轉速度旋轉。
**節目的持續時間顯示在顯示屏上。
6th Sense-傳感器技術可根據家庭的洗滌負荷調整水量，能量和程序持續時間。

機門

- 打開機門，拉動把手。

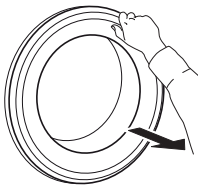

- 關上機門，握住手柄並推動，這時，您可以聽到喀噠一聲。

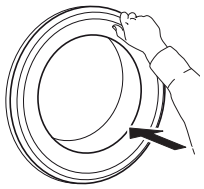

配件

請聯絡售後服務中心以檢查以下配件是否適用於您的洗衣機 (和乾衣機) 型號

固定架

可將您的乾衣機固定在洗衣機的頂部，以節省空間及便於裝載及卸載您的乾衣機於較高的位置。

如何使用洗衣機

首次使用

請按以下步驟移除產品製造過程中所衍生的任何殘留物：

- 選擇“棉質”程序及60°C的水溫。
- 倒入少量的強效洗衣劑於洗衣劑盒的主洗格 II 內(洗衣劑製造商建議最多使用1/3的洗衣劑份量於輕度污染衣物)
- 啟動程序，請勿再添加任何衣物
- 請參閱〈日常使用參考指引〉以得悉如何選擇和啟動程序。

日常使用

準備衣物

清空衣物口袋

- 錢幣，別針等會損毀洗衣桶加載衣物和洗衣機零件。
- 在洗衣的過程中，紙巾會被損壞及分離成小塊或碎塊，這些隨後必須用手去除。

釦緊所有拉鍊，鈕扣和掛鉤。捆紮所有絲帶，緞帶或皮帶，腰帶。

- 放入小件衣物(如：尼龍絲襪，皮帶，腰帶等)和有鉤扣的衣物加入布袋或有拉鍊的枕套中。除去窗簾上的環套，或把窗簾與環套一併放進布袋內

如何使用洗衣機

1. 放入衣物

打開機門，放入衣物。一次性鬆散開衣物並放入滾筒中，不要過量。請查閱程序表中所指出的最大建議洗衣量。負載過重會導致不佳的洗衣效果和引起衣物皺摺。

2. 關閉機門

確保衣物沒有被卡住於機門玻璃和橡膠密封圈之間。關上機門，您可以聽到喀噠一聲。

3. 開啟水龍頭

確保該洗衣機已連接到水龍頭。並開啟水龍頭。

開啟洗衣機電源

按下電源「開 / 關」⏻ 鍵，「啟動/暫停」▷II 鍵的指示燈會慢慢閃爍及亮起。

4 . 選擇程序

P 轉動程序按鈕，以選擇所需程序。洗衣程序的持續時間會顯示在顯示屏上。洗衣機會自動顯示所選程序可能的最高溫度和轉速設定。如有需要，可透過相關的按鍵來調整溫度及轉速。

衣料類型 / 護理標籤符號

- 棉，混合纖維，合成纖維，羊毛，手洗項目
- 顏色
  請將白色衣物與顏色衣物分開，並將簇新的顏色衣物分開清洗。
- 大小
  不同大小的衣物放在一起清洗時，可改善洗衣及脫水的效率，並可使衣物在洗衣桶內的分佈更為均勻。
- 纖細衣物
  此類衣物需要分開清洗；及需要以溫和方式護理。

變更正在運行的程序 (如有需要)

- 按下「溫度」鍵以逐步減低溫度，直至設定 為“冷水洗” (“- -” 會顯示在顯示屏上)，再次按下「溫度」鍵，設置最高可能的溫度設定。

調整脱水轉速 (如有需要)

- 按下 「脱水轉速」鍵，以逐步降低脱水轉速，直至轉速停止。(“0”，會顯示在顯示屏上)。 再次按下「脱水轉速」鍵，設置最高可能的溫度設定。

選擇選項 (如有需要)

- 按下按鍵，選擇有關的選項；相關符號的指示燈會在顯示屏亮起。
- 再次按下按鍵，取消有關的選項相關符號的指示燈會在顯示屏熄滅。

! 如選項不適用於所選擇的程序，會發出錯誤提示音，由蜂鳴器發出 (3次咇的響聲)。

! 如選項與另一個所選擇的程序相互不可兼容，只有最近選擇的選項才能被啟動。

5. 加入洗衣劑

拉出洗衣劑盒和加入洗衣劑(及添加劑/柔順劑)在相關的容器隔間內，請參閱〈洗衣劑盒〉篇章，請遵守洗衣劑包裝上的建議劑量。

正確的洗衣劑 / 添加劑是很重要，因為：

- 可優化了潔淨效果。
- 可避免有多餘而帶刺激性的洗衣劑殘留在您的衣物上。
- 可避免使用多餘的洗滌劑而造成浪費，可節省金錢。
- 可保護洗衣機及避免零件鈣化。
- 可保護環境，避免造成不必要的環境負擔。

6. 預校開機時間

- 按「預校開機時間」鍵以設定開始程序的時間。詳情請參閱〈功能或預校開機時間〉篇章。

7. 啟動程序

- 按下「啟動/暫停」▷II 鍵，相關的指示燈會亮起。機門鎖上及機門門鎖 指示燈會亮起。
- 在程序運行期間，切勿打開洗衣劑盒以避免溢出。
- 剩餘程序的程序時間各有不同，因素如：負載衣物不平均或泡沫形成都能影響程序的持續時間。

8. 變更正在運行的程序 (如有需要)

您仍可在程序運行時更改設定。當相應的程序階段尚未結束，變更程序將被應用。

如要變更正在運行的程序設定：

- 按下「啟動/暫停」鍵 ▷II，暫停程序。
- 變更所需設定。
- 再次按「啟動/暫停」▷II 鍵，繼續運行程序。

如您已經進行變更程序，請不要添加洗滌劑在新的程序上。為預防變更正在運行的程序(如兒童非故意的變更)，請使用“兒童安全鎖”═O 鍵，詳情請參閱〈功能〉篇章。

暫停正在運行的程序及打開機門 (如有需要)

- 按下「啟動/暫停」▷II 鍵，暫停程序。
- 只要水位和 溫度不太高，機門指示燈 🔒便會熄滅。
  您可以打開機門，例如添加或取走誤放入的衣物。
- 按下「啟動/暫停」▷II 鍵，續運行程序。

9. 取消正在運行的程序 (如有需要)

- 按住電源「開/關」⏻ 鍵，直至洗衣機暫停。
- 如果水位和溫度處於低的狀態，機門門鎖打開啟，並可以打開。
- 如洗衣桶內仍有水未被排走，機門會保持鎖定狀態。為解開機門門鎖，先啟動洗衣機，選擇“脱水及排水”程序及將脱水選項設定轉速的速度為“0”，進行排水。
- 水會被清空，於程序結束後機門會被解鎖。

10. 程序結束後關閉洗衣機

- 程序完成時，顯示器上顯示“END”以表示程序結束。
- 當“開門指示燈”🔒 已熄滅，機門可以打開。
- 檢查“開門指示燈”🔒 是否已熄滅，您可以打開機門及拿出機內衣物。
- 按下“啟動/暫停”⏻ 鍵，以關閉洗衣機。

為節省能源，如果不將其關閉，洗衣機將在程序結束的30分鐘後自動關閉。

請讓機門半開，使洗衣機的內部可以風乾。

顯示屏指示燈

	鎖上機門	該指示燈將會亮起： • 當啟動程序後 • 當機門被鎖上
	蒸氣抗菌+	該指示燈將會亮起： • 當按下「蒸氣抗菌+」鍵
	預校開機時間	該指示燈將會亮起： • 當按下「預校開機時間」鍵
	兒童安全鎖	該指示燈將會亮起： • 當按下「兒童安全鎖」功能
	洗衣階段指示	該指示顯示當前的洗衣階段，洗衣階段運行從左到右，洗衣，過水，排水。該階段指示燈會亮起，顯示哪個階段正在進行中。
	聯絡服務中心	**故障指示：**聯絡售後服務中心 • 請參照「故障排除」篇章。 • 如果指示仍然存在，請聯絡我們的售後服務中心。
	過濾器堵塞	**故障指示：**過濾器堵塞 • 水無法被排走；過濾器可能被阻塞
	停水故障	**故障指示：**無法進水 • 沒有或沒有足夠的進水。

提示及應用

請根據以下建議分類衣物：

- 衣料類型/護理標籤符號
  (棉，混合纖維，合成纖維，羊毛，手洗項目)
- 顏色
  請將白色衣物與顏色衣物分開，並將簇新的顏色衣物分開清洗。
- 大小
  不同大小的衣物放在一起清洗時，可改善洗衣及脫水的效率，並可使衣物在洗衣桶內的分佈更為均勻。
- 纖細衣物
  (清洗小件衣物，如尼龍絲襪；有鉤扣的衣物，如胸罩及有拉鍊的布袋或枕套。)

衣物護理標籤

在標籤中洗衣缸符號內的溫度，表示用於清洗該衣物的最高溫度。

一般機洗
減少機洗
避免機洗
只可手洗
不可濕洗

定期清潔濾網

- 有助避免堵塞或無法正常排水。

節能及環境保護

- 運行程序時加載最大的建議洗衣量，使所耗用的能源、水、洗衣劑及時間均達最佳效益。
- 洗衣劑用量不要超過製造商指示中標識的用量。
- 使用60°C洗衣程序，而非90°C以節約能源。或使用40°C，而非60°C的洗衣程序。棉質衣料建議使用"棉質節能洗"60°C。這可能是更長的時間，但使用更少的能源。
- 在使用滾桶式乾衣機之前，通過選擇高旋轉速度，以減少在衣物中的水含量，從而節約能源和時間。
- 預先用適當的去污劑去除污漬，在此之前，應用清水來抑制任何乾性的污漬，這可減少使用高溫的洗衣程序。
- 使用“護色15°”洗滌程序，適用於有輕微骯髒的深色或彩色衣物；可以節省用於把水加熱的大部分電量。

清潔和保養

執行任何清潔和保養之前，請先拔下電源插頭。請勿使用易燃液體來清潔洗衣機。

清潔洗衣機的外部

用柔軟濕布清洗。用軟布抹乾洗衣機的外部。

不要使用玻璃或通用的清潔劑，如去污粉或類似的清潔劑來清潔控制面板 - 這些物質可能會損壞印刷效果。

檢查進水喉

定期檢查進水喉是否變脆和爆裂。如進水軟管損壞，應聯絡售後服務中心或您的經銷商處購買同類型新水喉進行更換。

根據軟管類型：

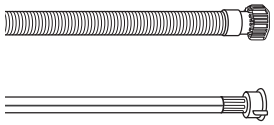

如您的進水喉帶有一層透明管道覆蓋層，應定期檢查透明覆蓋層的顏色；如透明管局部顏色變暗，這就意味著水喉可能有滲漏並應該予以更換。

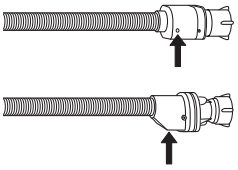

保險入水喉：應定期檢查安全閥檢視窗（見箭咀）：如呈紅色，說明安全閥已經啟用，此時就必須更換水喉。

按下釋放按鈕(如有)，而擰開軟管。

清潔進水喉內的濾網

1. 關掉水龍頭並從水龍頭上鬆開進水喉。

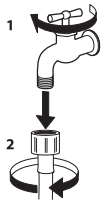

2. 用刷子仔細清潔在水喉端的濾網。

3. 拆下洗衣機後方的進水喉。用通用鉗子將濾網從洗衣機接頭上拆下並清潔。

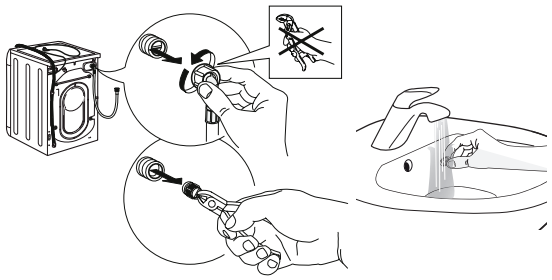

4. 裝回濾網並將進水喉擰回機上。不要使用工具來連接進水喉。打開水龍頭並確認各連接位均完全不漏水。

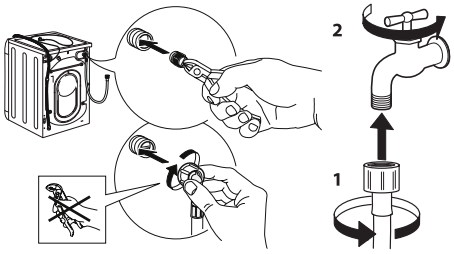

清潔洗衣劑盒

1. 拉出洗衣劑盒鬆開按鈕並同時將其全部抽出。

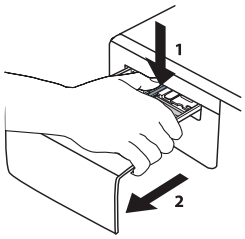

2. 抽出洗衣劑盒的嵌件。

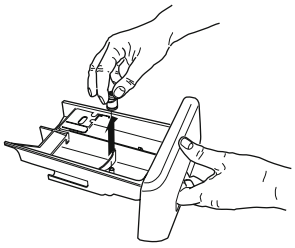

3. 用水沖洗所有部件，清除所有洗衣劑或柔順劑漬。

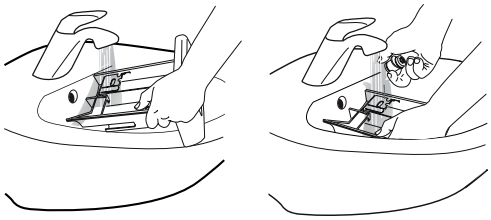

4. 用軟布清潔盒格。

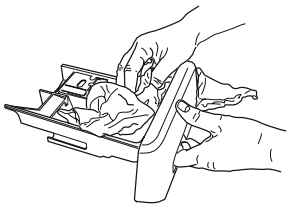

5. 重新裝入洗衣劑盒並推回洗衣劑盒格內。

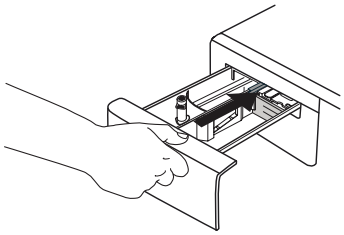

清潔濾網 / 排走積水

清潔濾網或排走積水前先讓洗衣機停止運轉並拔除洗衣機電源插頭。如果您使用過熱洗程序，排走洗衣機內的水前應等待水已冷卻下來。
請對過濾器進行定期檢查並清潔，以避免由於阻塞過濾器導致水不能排出。如果水不能排出，顯示屏會顯示過濾器可能被堵塞。

6. 鬆開底座：使用螺絲批，將底座取下如下圖所示：

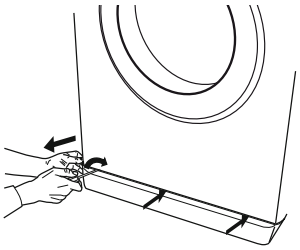

7. 放置一個容器：
將寬闊且扁平的容器放在濾網下方收集排水。

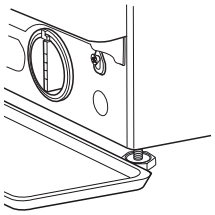

8. 排走積水：
逆時針轉動濾網，而不用拆開濾網，並緩慢打開直至排走全部水。當該容器是滿水，將濾網按順時針方向轉緊。清空容器，重複這個步驟，直到水全部流出。

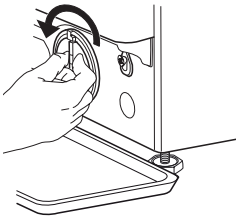

9. 抽出濾網；把棉布放在濾網下方以吸收餘下的少量積水，然後按逆時針方向打開，抽出濾網。

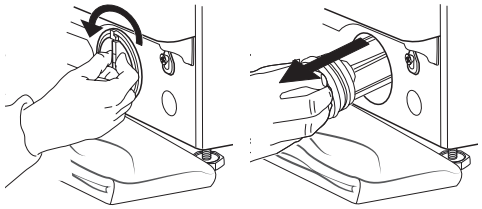

10. 清洗濾網：用水沖洗並除去濾網殘渣。

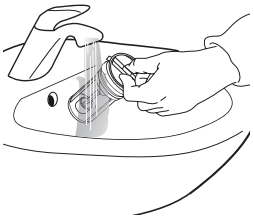

11. 插入濾網塞並裝回底座：
將濾網塞回原位，然後按順時針方向轉緊到最深位置。
濾網手柄必須處於垂直位置。可以倒入約1升的水於洗滌盒測試濾網是否已轉緊。
然後裝回底座。

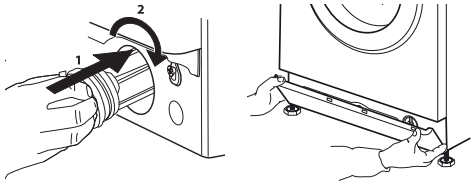

故障排除

本洗衣機配有多個自動安全和反饋功能。可以偵測錯誤及相應地對維修需要作出指示。

這些錯誤通常屬於小問題，可在數分鐘內予以排除。

異常問題	原因 / 解決方法
洗衣機沒有指示燈亮起	• 插頭沒有正確插在插座內。 • 電源故障。
洗衣程序無法正常啟動	• 機門未完全關閉。 • 沒有正確按下電源「開/關」鍵 ⏻。 • 沒有正確按下「啟動/暫停」鍵 ▷II。 • 水龍頭可能被關閉。 • 正設定於「預校開機時間」程序。
洗衣機無法進水。 「信息“H2O”」顯示在顯示屏上。 每隔5秒，會發出“咇” 聲	• 入水喉無法連接水龍頭。 • 軟管可能扭曲。 • 水龍頭關閉。 • 無水供應或供應不足。 • 供水壓力過低。 • 沒有正確按下「啟動/暫停」鍵 ▷II。
洗衣機不斷加載和排水	• 排水軟管沒有正確安裝在離地面65至100厘米的地方。 • 排水軟管的末端位置浸入水中。 • 牆上的排水連接器沒有通風口。 • 如果問題仍然存在，關掉洗衣機，關閉水龍頭，聯絡我們的售後服務中心。如果該住宅位於建築物的最上層的樓層之一，可能有時會發生虹吸效應，從而導致洗衣機加載和連續排水的問題。而特殊防虹吸閥可在一般市面上找到，以防止這些類型的問題。
洗衣機無法進行排水及脫水	• 程序可能不包括排水功能，如需要進行某些程序，必須手動啟用。 • 排水軟管可能扭曲。 • 排水管不通。
脫水時機身過分震動	• 在安裝時，洗衣桶未正確解鎖。 • 洗衣機不在水平位置。 • 洗衣機被擠壓在家具和牆壁之間。
洗衣機漏水	• 進水喉沒有被正確擰緊。 • 洗衣劑盒被堵塞。 • 排水喉沒有被正確地固定。
洗衣機已鎖定，顯示屏正在閃爍，並顯示故障指示信息 (例如: F-01, F-..)	• 關掉洗衣機，然後拔掉電源插座，等待1分鐘，然後重新開啟洗衣機。 • 如果問題仍然存在，聯絡我們的售後服務中心。
過多的泡沫形成	• 洗衣劑不適用於洗衣機(參考洗衣劑的註明，「只適用於洗衣機」，或者類似的註解。 • 過多的洗衣劑劑量。
機門已鎖定，不論有或沒有故障指示，而程序不運行。	• 在電源故障時門會鎖著，當重啟電源程序會自動繼續操作。 • 洗衣機處於靜止狀態，當洗衣機不再維持靜止狀態後程序會自動繼續操作。

搬運和處理

搬運時，切勿提拉洗衣機的頂板。

1. 拔除洗衣機電源插頭。
2. 檢查並確定機門和洗衣劑盒都已正確關閉。
3. 拆除水龍頭與入水喉和排水管與排水喉的連接位，排出軟管內的所有積水，此整理以使它們不怕在運輸過程中損壞。
4. 重新安裝搬運螺栓：按照安裝指南並以反方向的形式安裝搬運螺栓。

重要：未有固定搬運螺栓時請勿搬運洗衣機。

售後服務

致電售後服務中心前：

1. 嘗試自行解決問題請參閱「**故障排除**」。
2. 重新啟動洗衣機，檢查洗衣機是否仍舊無法正常運作。

若洗衣機仍舊無法正常運作，請致電售後服務中心。

如需要協助，請致電保用證上顯示的號碼，或按照以下網址上的指引

www.whirlpool.com.sg / www.whirlpool.com.hk

當聯絡我們的客戶售後服務中心，請說明：

- 簡單的故障說明；
- 洗衣機的類型及型號(請參閱機門內的銘牌)

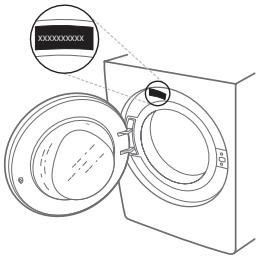

- 服務碼(機門內「維修」字樣後的號碼)。

- 您的完整地址
- 電話號碼

對於任何維修，使用我們授權的售後服務中心，以確保適當的維修和使用原廠零配件。

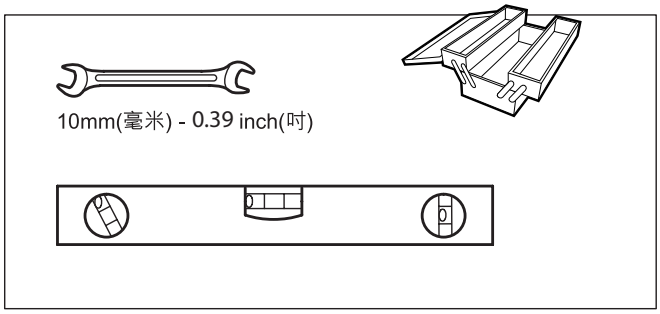

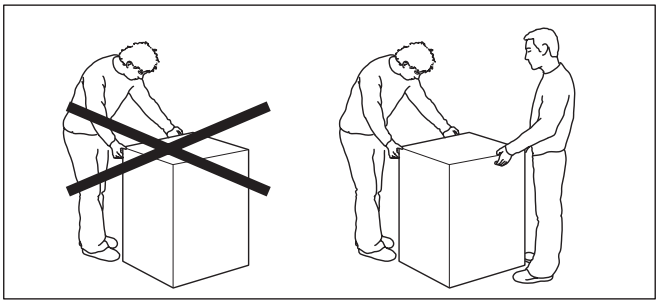

1.

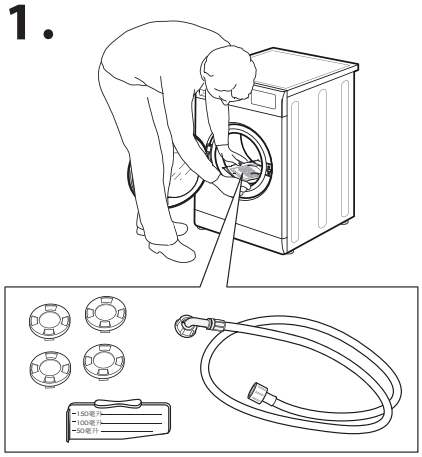

2.

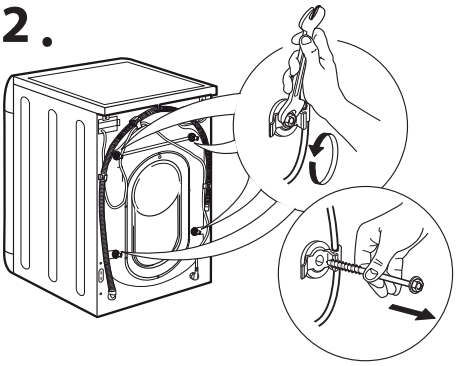

3.

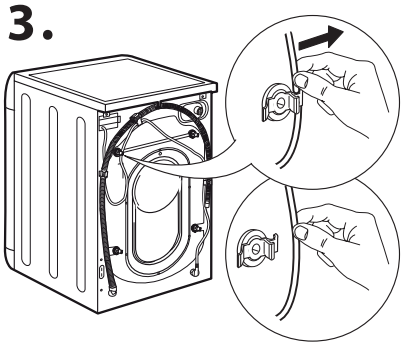

4.

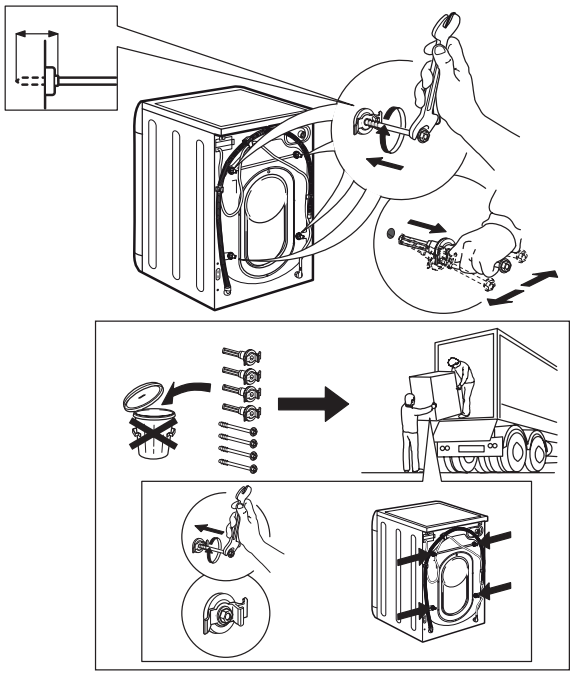

5.

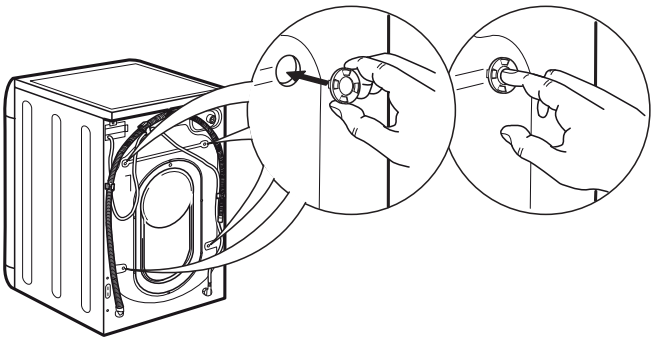

6.

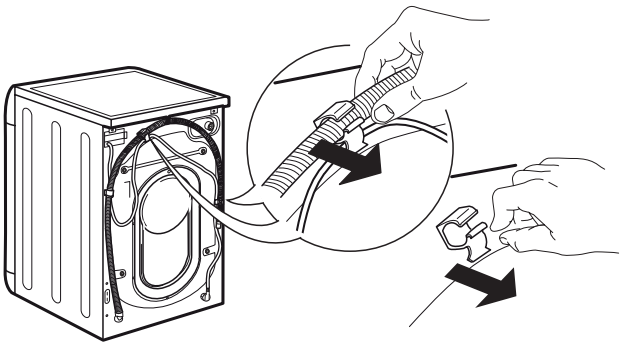

7.

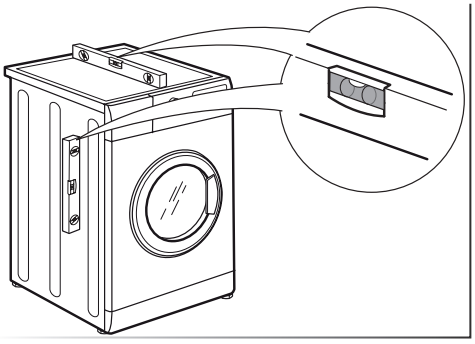

8.

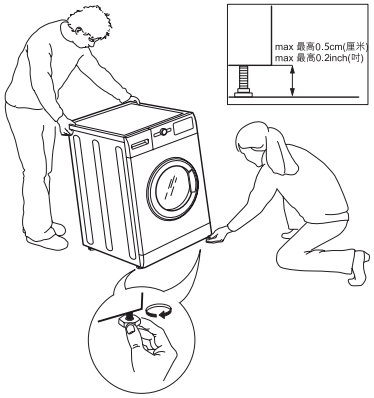

9 .

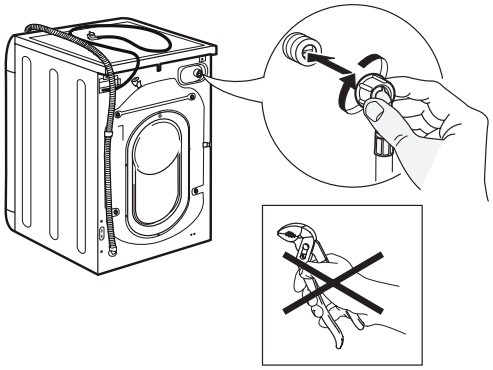

10.

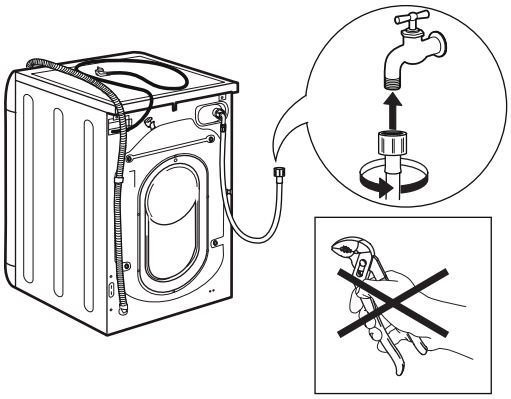

11 .

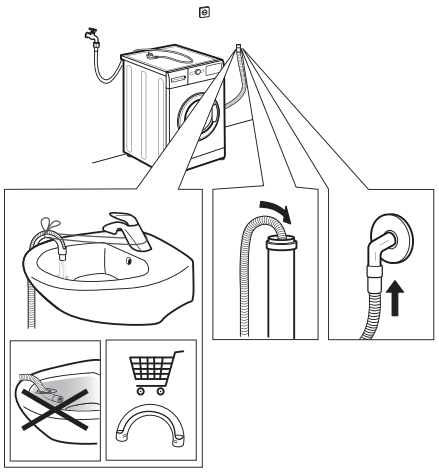

12.

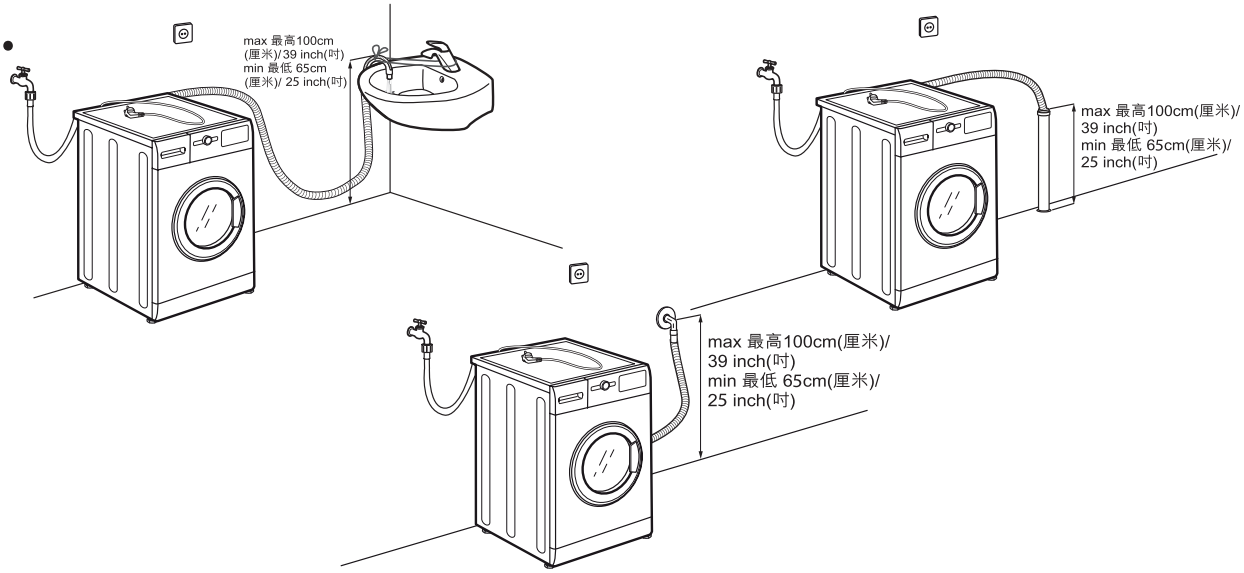

13.

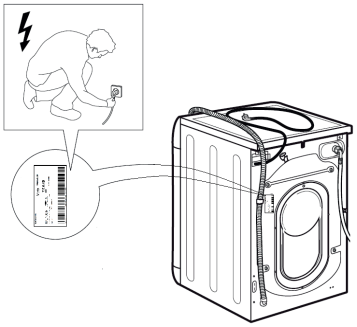

14 .

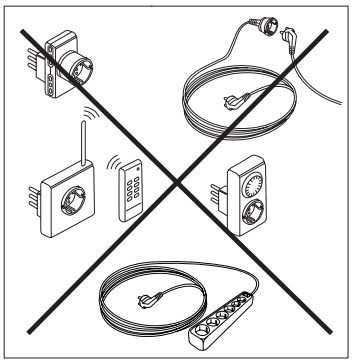

Register your product online
網上登記新產品保養

For Singapore Warranty, please scan QR code or visit below website:

https://www.whirlpool.com.sg/

For Hong Kong Warranty 香港地區保養

Save the planet and register your product warranty online!
Enjoy extra 1-month free warranty upon online registration.

「惠」環保出力，減少用紙！於網上登記產品更可獲額外多一個月保養。

https://rebrand.ly/WPwarranty

Whirlpool® Registered trademark/TM Trademark of Whirlpool group of companies
All rights reserved - http://www.whirlpool.com.hk

註冊商標/惠而浦集團的TM商標
版權所有 翻印必究 - http://www.whirlpool.com.hk

EN CH

Whirlpool

EN CH

400011535109

Whirlpool® Registered trademark/TM Trademark of Whirlpool group of companies
All rights reserved - http://www.whirlpool.com.hk

Whirlpool® 註冊商標/惠而浦集團的TM商標
版權所有 翻印必究 - http://www.whirlpool.com.hk

Whirlpool