Haier SERVICE MANUAL

Wall Mounted Type

DC Inverter

Model No. AS25THMHRA-C

⚠WARNING

This service information is designed for experienced repair technicians only and is not designed for use by the general public.
It does not contain warnings or cautions to advise non-technical individuals of potential dangers in attempting to service a product.
Products powered by electricity should be serviced or repaired only by experienced professional technicians. Any attempt to service or Repair the product or products dealt with in this service information by anyone else could result in serious injury or death

2020 (Qingdao Haier Air Conditioner General corp., Ltd)
All rights reserved. Unauthorized copying and distribution is a violation of law

Haier Group **Version: V1** **Date: 2020-10-28**

Contents

1. Introduction..... 1
2. Features 7
3. Specifications 8
4. Sensors list..... 9
5. Piping diagrams.....10
6. Printed circuit board connector wiring diagram.....11
7. Functions and control 14
8. Dimensional drawings 26
9. Center of gravity 26
10. Service Diagnosis 27
11. Circuit diagrams ..... .44

1. Introduction

1.1 Model name explanation

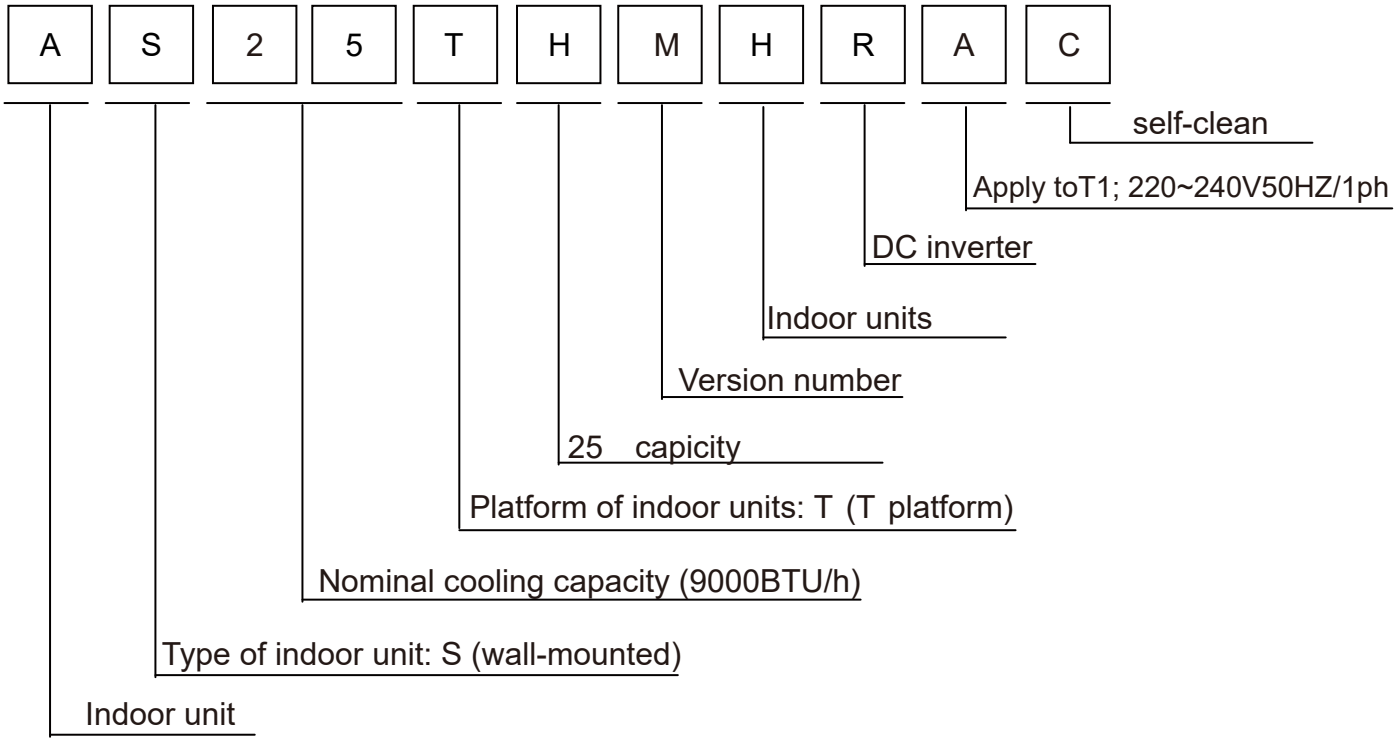

1.2 Safety Cautions

Be sure to read the following safety cautions before conducting repair work.

The caution items are classified into “Warning” and “Caution”. The “Warning” items are especially important since they can lead to death or serious injury if they are not followed closely. The “Caution” items can also lead to serious accidents under some conditions if they are not followed. Therefore, be sure to observe all the safety caution items described below.

About the pictograms

△ This symbol indicates an item for which caution must be exercised.
The pictogram shows the item to which attention must be paid.

○ This symbol indicates a prohibited action.
The prohibited item or action is shown inside or near the symbol.

● This symbol indicates an action that must be taken, or an instruction.
The instruction is shown inside or near the symbol.

After the repair work is complete, be sure to conduct a test operation to ensure that the equipment operates Normally, and explain the cautions for operating the product to the customer.

1.2.1 Caution in Repair

Warning	
Be sure to disconnect the power cable plug from the plug socket before disassembling the equipment for a repair. Working on the equipment that is connected to a power supply can cause an electrical shook. If it is necessary to supply power to the equipment to conduct the repair or inspecting the circuits, do not touch any electrically charged sections of the equipment.	
If the refrigerant gas discharges during the repair work, do not touch the discharging refrigerant gas .The refrigerant gas can cause frostbite.	
When disconnecting the suction or discharge pipe of the compressor at the welded section, release the refrigerant gas completely at a well-ventilated place first. If there is a gas remaining inside the compressor , the refrigerant gas or refrigerating machine oil discharges when the pipe is disconnected, and it can cause injury.	
If the refrigerant gas leaks during the repair work, ventilate the area. The refrigerant gas can generate toxic gases when it contacts flames.	
The step-up capacitor supplies high-voltage electricity to the electrical components of the outdoor unit. Be sure to discharge the capacitor completely before conducting repair work . A charged capacitor can cause an electrical shock.	
Do not start or stop the air conditioner operation by plugging or unplugging the power cable plug. Plugging or unplugging the power cable plug to operate the equipment can cause an electrical shock or fire.	

Warning	
Do not repair the electrical components with wet hands . Working on the equipment with wet hands can cause an electrical shock	
Do not clean the air conditioner by splashing water. Washing the unit with water can cause an electrical shock.	
Be sure to provide the grounding when repairing the equipment in a humid or wet place, to avoid electrical shock.	
Be sure to turn off the power switch and unplug the power cable when cleaning the equipment. The internal fan rotates at a high speed, and cause injury.	
Do not tilt the unit when removing it. The water inside the unit can spill and wet the furniture and floor.	
Be sure to check that the refrigerating cycle section has cooled down sufficiently before conducting repair work. Working on the unit when the refrigerating cycle section is hot can cause burns.	
Use the welder in a well-ventilated place. Using the welder in an enclosed room can cause oxygen deficiency.	

1.2.2 Cautions Regarding Products after Repair

Warning	
Be sure to use parts listed in the service parts list of the applicable model and appropriate tools to conduct repair work. Never attempt to modify the equipment. The use of inappropriate parts or tools can cause an electrical shock, excessive heat generation or fire.	
When relocating the equipment, make sure that the new installation site has sufficient strength to withstand the weight of the equipment. If the installation site does not have sufficient strength and if the installation work is not conducted securely, the equipment can fall and cause injury.	
Be sure to install the product correctly by using the provided standard installation frame. Incorrect use of the installation frame and improper installation can cause the equipment to fall, resulting in injury.	For integral units only
Be sure to install the product securely in the installation frame mounted on a window frame. If the unit is not securely mounted, it can fall and cause injury.	For integral units only

Warning	
Be sure to use an exclusive power circuit for the equipment, and follow the technical standards related to the electrical equipment, the internal wiring regulations and the instruction manual for installation when conducting electrical work. Insufficient power circuit capacity and improper electrical work can cause an electrical shock or fire.	
Be sure to use the specified cable to connect between the indoor and outdoor units. Make the connections securely and route the cable properly so that there is no force pulling the cable at the connection terminals. Improper connections can cause excessive heat generation or fire.	
When connecting the cable between the indoor and outdoor units, make sure that the terminal cover does not lift off or dismount because of the cable. If the cover is not mounted properly, the terminal connection section can cause an electrical shock, excessive heat generation or fire.	
Do not damage or modify the power cable. Damaged or modified power cable can cause an electrical shock or fire. Placing heavy items on the power cable, and heating or pulling the power cable can damage the cable.	
Do not mix air or gas other than the specified refrigerant (R-410A / R22) in the refrigerant system. If air enters the refrigerating system, an excessively high pressure results, causing equipment damage and injury.	
If the refrigerant gas leaks, be sure to locate the leak and repair it before charging the refrigerant. After charging refrigerant, make sure that there is no refrigerant leak. If the leak cannot be located and the repair work must be stopped, be sure to perform pump-down and close the service valve, to prevent the refrigerant gas from leaking into the room. The refrigerant gas itself is harmless, but it can generate toxic gases when it contacts flames, such as fan and other heaters, stoves and ranges.	.
When replacing the coin battery in the remote controller, be sure to disposed of the old battery to prevent children from swallowing it. If a child swallows the coin battery, see a doctor immediately.	

Caution	
Installation of a leakage breaker is necessary in some cases depending on the conditions of the installation site, to prevent electrical shocks.	
Do not install the equipment in a place where there is a possibility of combustible gas leaks. If a combustible gas leaks and remains around the unit, it can cause a fire.	
Be sure to install the packing and seal on the installation frame properly. If the packing and seal are not installed properly, water can enter the room and wet the furniture and floor.	

1.2.3 Inspection after Repair

Warning	
Check to make sure that the power cable plug is not dirty or loose, then insert the plug into a power outlet all the way. If the plug has dust or loose connection, it can cause an electrical shock or fire.	
If the power cable and lead wires have scratches or deteriorated, be sure to replace them. Damaged cable and wires can cause an electrical shock, excessive heat generation or fire.	

Warning	
Do not use a joined power cable or extension cable, or share the same power outlet with other electrical appliances since it can cause an electrical shock, excessive heat generation or fire.	

Caution	
Check to see if the parts and wires are mounted and connected properly, and if the connections at the soldered or crimped terminals are secure. Improper installation and connections can cause excessive heat generation, fire or an electrical shock.	
If the installation platform or frame has corroded, replace it. Corroded installation platform or frame can cause the unit to fall, resulting in injury.	
Check the grounding, and repair it if the equipment is not properly grounded. Improper grounding can cause an electrical shock.	
Be sure to measure the insulation resistance after the repair, and make sure that the resistance is 1 M ohm or higher. Faulty insulation can cause an electrical shock.	
Be sure to check the drainage of the indoor unit after the repair. Faulty drainage can cause the water to enter the room and wet the furniture and floor.	

1.2.4 Using Icons

Icons are used to attract the attention of the reader to specific information. The meaning of each icon is described in the table below:

1.2.5 Using Icons List

Icon	Type of Information	Description
Note	Note	A “note” provides information that is not indispensable, but may nevertheless be valuable to the reader, such as tips and tricks.
Caution	Caution	A “caution” is used when there is danger that the reader, through incorrect manipulation, may damage equipment, loose data, get an unexpected result or has to restart (part of) a procedure.
Warning	Warning	A “warning” is used when there is danger of personal injury.
	Reference	A “reference” guides the reader to other places in this binder or in this manual, where he/she will find additional information on a specific topic.

2.Features

Self-Clean：Freezes the evaporator with moisture in the air, and then removes away dirt in melting, ensuring clean air out of the air conditioner.

Wi-Fi Control：Download the Haier hOn App to an Apple or Android smart device, and link the equipment to the smart device for system control from whenever and wherever you want.

A-PAM Control：Automatically adjusts DC bus voltage in accordance with the compressor load to increase operation voltage range.

PID Control：Maximizes the working frequency before reaching the desired temperature, and, after that, constantly makes real-time adjustments to match room air temperature with the desired temperature.

Turbo Cooling:The special control program allows the motor to work at a higher frequency. It enables users to enioy a cool room within a much shorter time.micro-particles including dust, virus and bacteria to provide healthier environment.

Strong Airflow:With improved fan and air duct, the air conditioner supplies up to 25% more air volume than the conventional.

Warm Start:Blows no cold air when the unit is starting to work at heating mode, or change from cooling mode to heating mode.

-15°C Heating:Provides powerful heating performance in cold winter with rotary compressor, etc.

Auto Restart:Returns operation to previous air conditioner settings after a sudden power break.

88 Display:Shows clearly the real-time room temperature or desired temperature on the panel.

Auto Mode:Helps air conditioner choose cooling or heating automatically based on desired temperature and ambient temperature.

Low Watt Standby:Lowers stand-by power consumption from 8W to about 1W by optimizing control programme.

Intelligent Air:Directs the airflow upwards at cooling mode, and downwards at heatina mode to provide better air conditioning performance.

Sleep Mode:Provides maximum comfort and energy saving during your good night's sleep.

3.Specifications

NOMINAL DISTRIBUTION SYSTEM VOLTAGE		
Phase	/	1
Frequency	Hz	50
Voltage	V	220-240

NOMINAL CAPACITY and NOMINAL INPUT			
		Cooling	heating
Capacity rated	KW	2.6	2.8
	Btu/h	8870	9555
Power Consumption(Rated)	KW	0.8	0.75
EER/COP	W/W	3.23	3.71
Annual energy consumption	KWh	/	/
Moisture Removal	m^3/h	$1 \quad *10^{-3}$	

TECHNICAL SPECIFICATIONS			
Dimensions	H*W*D	mm	820×195×280
Packaged Dimensions	H*W*D	mm	909×279×355
Weight	/	KG	8.2
Gross weight	/	KG	10.5
Color	/	/	White
Sound level	Sound pressure(high/medium/low)	dB	37/33/29
	Sound power	dB	54

TECHNICAL SPECIFICATIONS-PARTS				
			cooling	heating
Fan	Type		Cross flow fan	
	Motor output	W	25	25
	Air flow rate(high)	m³/h	500	450
	Speed(super/high/low)	rpm	1150/1000/850	1050/ 900/750
Heat exchanger	Type		ML fin-φ 5HI-HX tube	
	Segment *stage*fitch		3*15*1.3	
Air direction control			Horizontal,Downward	
Air filter			Removable/Washable/Mildew Proof	
Temperature control			Microcomputer Control	
Remote controller model			0010401715DG	

Note: the data are based on the conditions shown in the table below

cooling	heating	Piping length
Indoor: 27℃DB/19℃WB Outdoor: 35℃DB/24℃WB	Indoor:20℃DB Outdoor: 7℃DB/6℃WB	5m

Conversation formulae
Kcal/h= KW×860 Btu/h= KW×3414 cfm=m³/min×35.3

4.Sensors list

type	Description	Qty
Room and pipe sensor	Its used for detecting room and evaporator temperature	1

5. Piping diagrams

Cooling mode

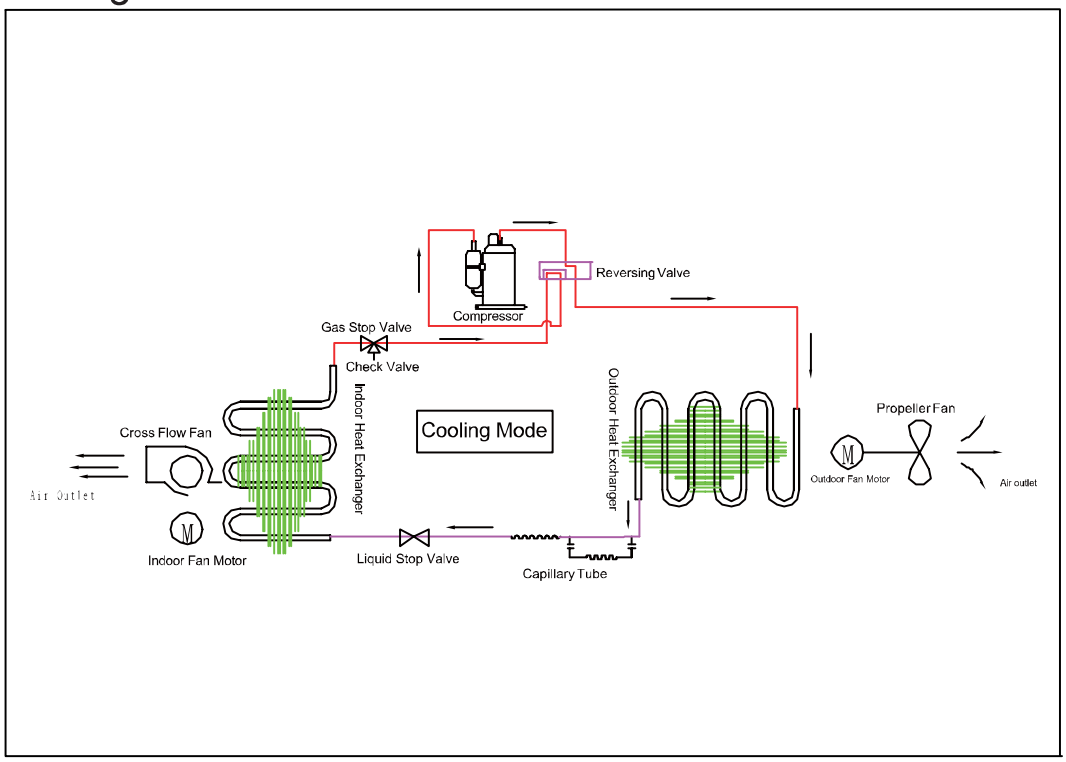

Heating mode

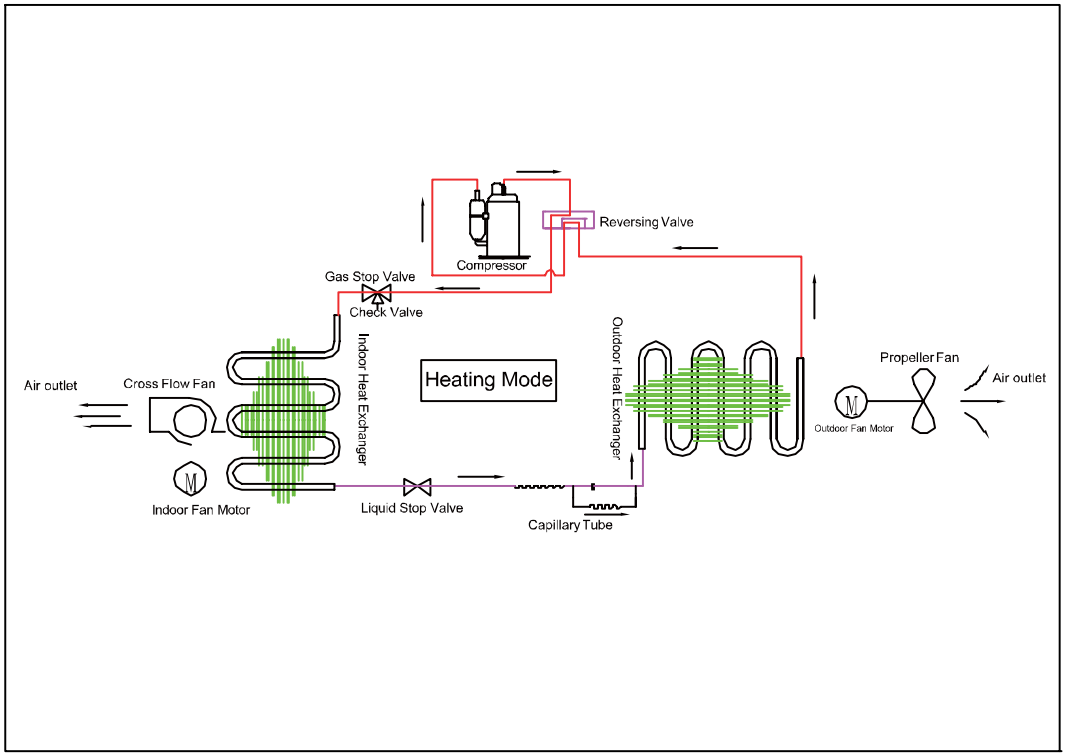

6.Printed circuit board connector wiring diagram

Connectors

PCB(1) (Control PCB) For AS25THMHRA-C

1) CN9&CN8 Connector for AC fan motor
2) CN6 Connector for heat exchanger thermistor and Room temperature thermistor
3) CN5' Connector for UP&DOWN STEP motor
4) CN17 Connector for indoor terminal L
5) CN21 Connector for indoor terminal N
6) CN7 Connector for display board
7) CN23 (red line) Connector for communicate between the indoor board and the outdoor board
8) CN34 Connector for wifi Module
9) CN51 Connector for room card
10) CN36 Connector for Remote control
11) CN2 Connector for Wired Controller

Note: Other designations
PCB(1) (Indoor Control PCB)
1) SWI Connector for Forced operation ON / OFF switch
2) FUSE1 Fuse 3.15A/250VAC

	OFF	ON		
1	A	B		
2	N_RC	RC		
3	ON	ON	OFF	OFF
4	ON	OFF	ON	OFF
PCB	35	33	26	23

UNIT MODEL	PCB MODEL
AS25THMHRA-C	0011800807(23)

J1	OFF	OFF	ON	ON
J2	OFF	ON	OFF	ON
DISPLAY SERIES	3 2 5 /7 9 8/498	324	387/1045	317

UNIT MODEL	DISPLAY MODEL
AS25THMHRA-C	0011801045

PCB(1)

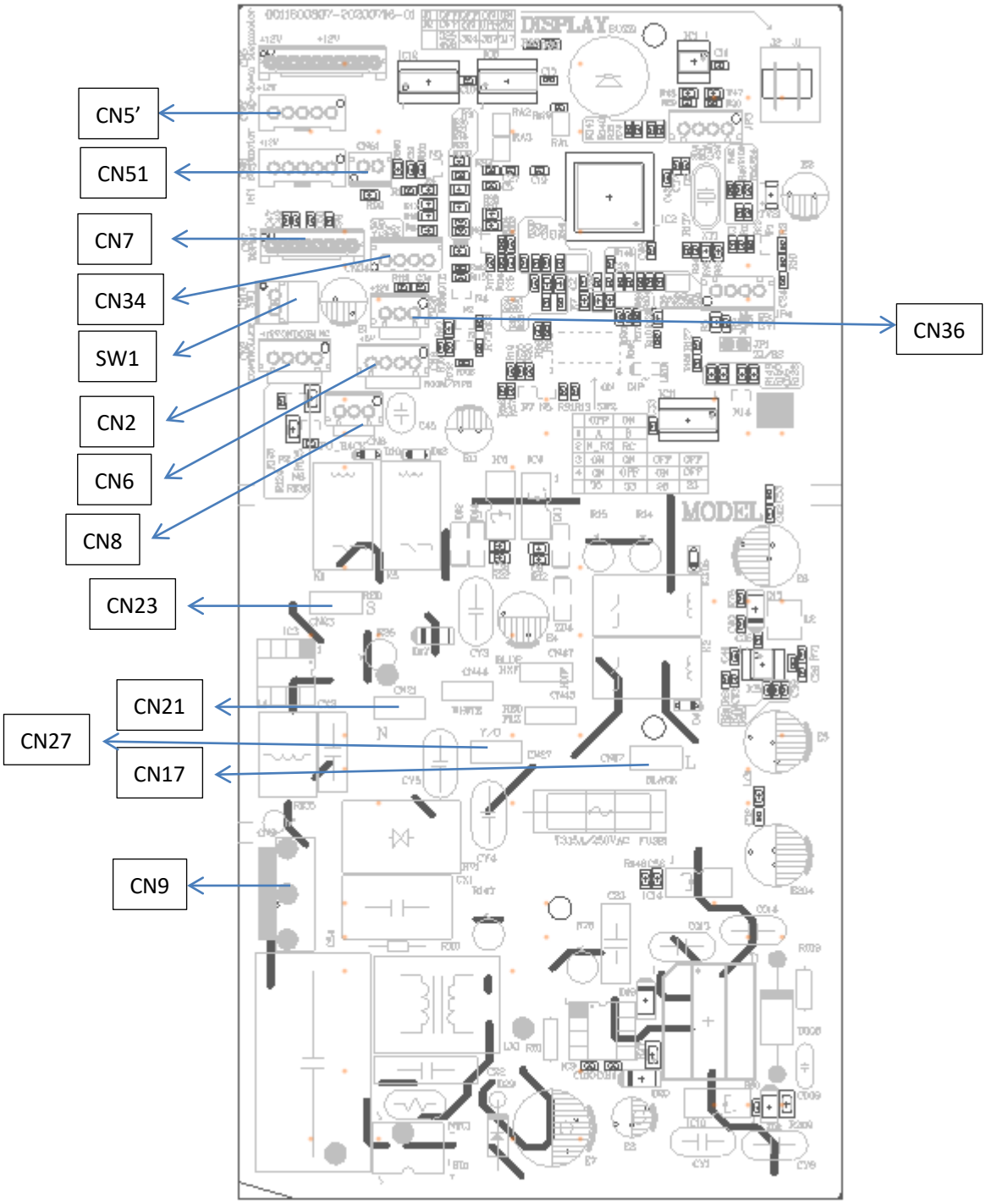
CN5'
CN51
CN7
CN34
SW1
CN2
CN6
CN8
CN23
CN21
CN27
CN17
CN9
CN36
DISPLAY
MODEL

Wiring diagrams

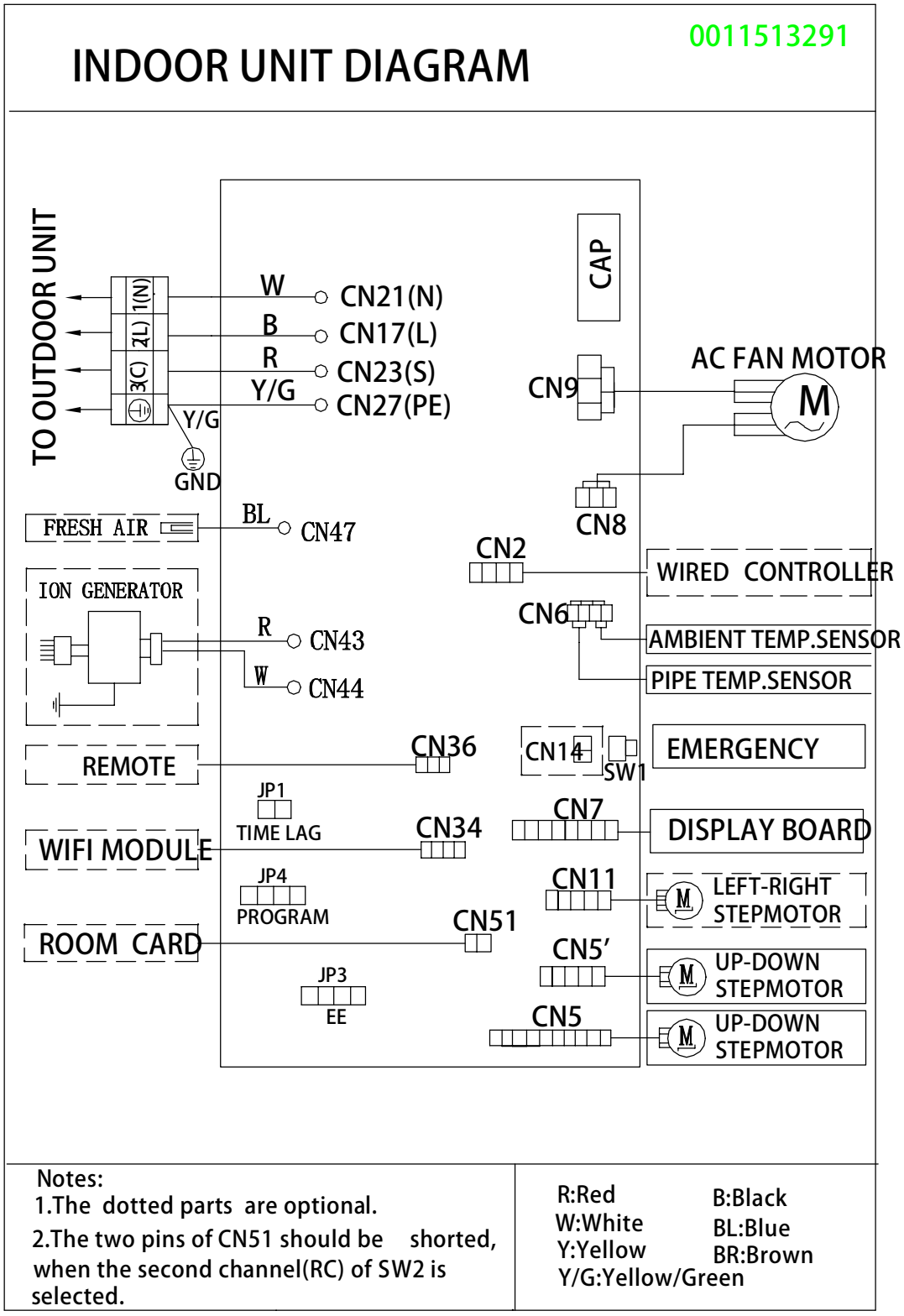

Notes:
1.The dotted parts are optional.
2.The two pins of CN51 should be shorted, when the second channel(RC) of SW2 is selected.

R:Red
W:White
Y:Yellow
Y/G:Yellow/Green
B:Black
BL:Blue
BR:Brown

7.Funcitions and control

7.1 Main functions and control specification

7.1.1 Automatic operation

When the running mode is turned to automation after starting the system, the system will first determine the running mode according to the current room temperature and then will run according to the determined mode. Tr in the following selection conditions means room temperature, Ts means setting temperature, Tp means temperature of indoor coil pipe

Tr≥Ts-3℃ Choose Cooling Mode

Tr＜Ts-3℃ Choose Heating Mode

After turning to the automation mode, the running mode can be switched between cooling mode, fan mode and heating mode according to the change of the indoor ambient temperature. But the automatic conversion between cooling mode and heating mode must be conducted after 15 minutes.

7.1.2 Cooling operation mode

Temperature control range: 16℃---30℃

Temperature difference: ±1℃

* Control features: When Tr（input airflow）>Ts（set temperature）+ temperature Backlash A, the compressor will be opened, the indoor fan will operate at the set speed and the mode signal will be sent to the outdoor system. When Tr（input airflow）＜Ts（set temperature）－temperature Backlash B, the compressor will be shutted, the indoor fan will operate at the set speed and the mode signal will be sent to the outdoor system. The system will keep the original status if Tr= Ts.

Airflow speed control: (temperature difference 1℃)

Automatic: When Tr≤Ts+3℃, high speed.

When Ts+1℃≤Tr<Ts+3℃, medium speed

When Tr<Ts+1℃, low speed

When the sensor is off, low speed

When the airflow speed has no delay from the high to low switching, the speed should be delayed for 3 minutes (remain at high speed for 3 minutes.) before the next switch.

Manus: When the system is operating, you can set the high, medium or low speed manually. (When the sensor is on or off, the system will change the speed 2 seconds after receiving the signal.)

*Airgate location control: the location for the airgate can be set according to your needs.

*Defrosting function: preventing the frosting on the indoor heat exchanger (when cooling or dehumidifying). When the compressor works continuously for 6 minutes and the temperature of the indoor coils has been below one centigrade for 10 seconds, the compressor will be stopped and the malfunction will be recorded in the malfunction list. The indoor system will continue to run. When the temperature of the indoor coil is raised to 9℃, the compressor will be restarted again (the requirement of 3 minutes' delay should be satisfied.)

* timing system on/off function.

* Dormant control function.

7.1.3 Dehumidifying mode.

* temperature control range: 16---30℃
* temperature difference: ±1℃

Control feature: send the dehumidifying signal to the outdoor system.

When Tr>Ts+3℃, the compressor will be turned on, the indoor fan will operate at the set speed.

When Tr is between the Ts and Ts+3℃, the outdoor system will operate at the high dehumidifying frequency for 10 minutes and then at the low dehumidifying mode for six minutes. The indoor fan will operate at low speed.

When Tr< Ts-1.5℃, the compress will be stopped, the indoor fan will be stopped after running for 50s at previous speed.

All the frequency converses have a ±1℃ difference.

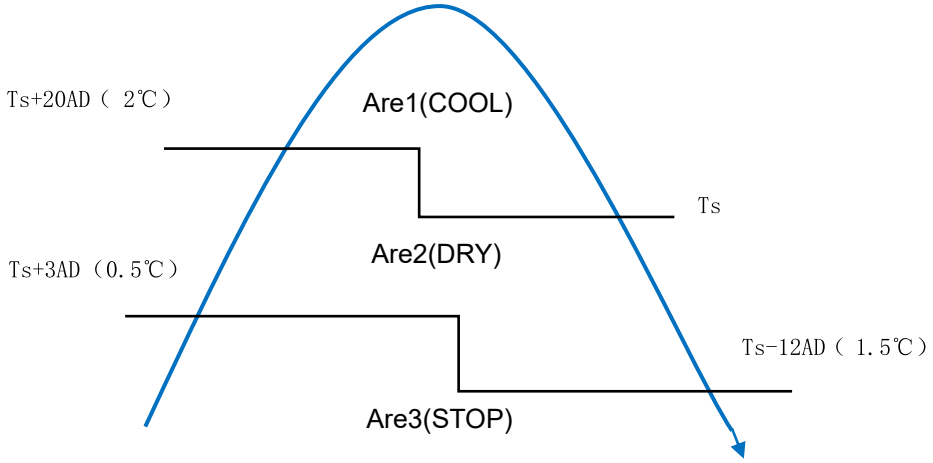

* Wind speed control: Automatic:

When Tr≥ Ts+ 5℃, high speed.

When Ts+3℃≤Tr< Ts+5℃, medium speed.

When Ts+2℃≤Tr< Ts+3℃, low speed.

When Tr<Ts+3℃, light speed.

If the outdoor fan stopped, the indoor fan will be paused for 3 minutes.

If the outdoor fan stopped for more than 3 minutes and the outdoor system still operates, the system will be changed into light speed mode.

When the airflow speed has no delay from the high to low switching, the speed should be delayed for 3 minutes (remain at high speed for 3 minutes.) before the next switch.

Manual: When the sensor is off or Tr< Ts+3℃, the manual operation can not be made. (obligatory automatic operation.)

*Airgate location control: the location for the airgate can be set according to your needs.

*Defrosting function: preventing the frosting on the indoor heat exchanger (when cooling or dehumidifying). When the compressor works continuously for 6 minutes and the temperature of the indoor coils has been below 1℃ for 10 seconds, the compressor will be stopped and the malfunction will be recorded in the malfunction list. The indoor system will continue to run. When the temperature of the indoor coil is raised to 9℃, the compressor will be restarted again (the requirement of 3 minutes' delay should be satisfied.)

* Coil protection (synchronic overheating protection) are installed for the four directions latch

malfunctions when dehumidifying.

* Timing system on/off function.

* Dormant control function.

7.1.4 Heating operation mode.

* temperature control range: 16---30℃

* temperature difference: ±1℃

* control feature: the temperature compensation is automatically added and the system will send the heating signals to the outdoor system.

If Tr+0.5℃≤Ts, the outdoor compressor is turned on, the indoor fan will be at the cold air proof mode.

If Tr>Ts+1.5℃, the outdoor system is turned off, the indoor fan will be at the heat residue sending mode.

*Indoor fan control

manual control: You can choose high, medium, low and automatic speed control.

Automatic: When Tr<Ts, high speed.

When Ts≤Tr≤Ts+2℃, medium speed.

When Tr> Ts+2℃, low speed.

When the airflow speed has no delay from the high to low switching, the speed should be delayed for 3 minutes (remain at high speed for 3 minutes.) before the next switch.

*Airgate location control: the location for the airgate can be set according to your needs.

Coldair proof operation

1. The fan control functions as below:

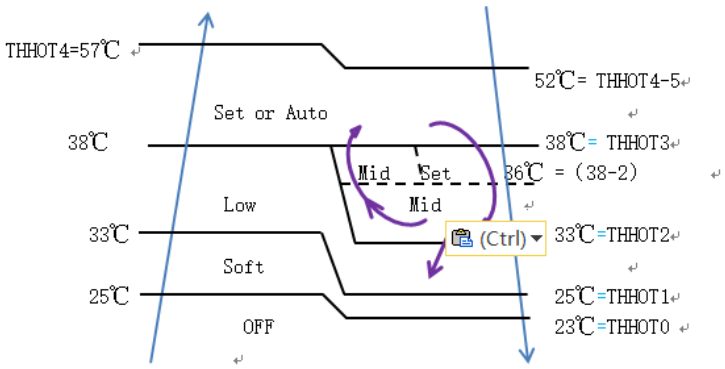

* Residue heat sending. The indoor fan will send the residue heat at a low speed for 20 seconds.

If other conditions are satisfied, when the compressor stops, the indoor system will operate at a light speed. The indoor fan will stop when the coil temperature is below the THHOT0.

* Defrosting. When the system receives the defrosting signal from outdoors, the indoor fan will stop and the indoor temperature display won't change. At the time, any indoor coil malfunctions will be neglected. When the outdoor defrosting finishes, the coil malfunction will still be neglected until the compressor has been started up for 30 seconds. The indoor temperature display will not change and the system operates at the cold air proof mode.

* Automatic heating temperature compensation: when the system enters the heating mode, the

temperature compensation (4℃) will be added. When the status is switched off, the compensation will be erased.

7.1.5 Strength operation

The system enters the mode after receiving the 'strength signal'.
Send strength operation signal to the outdoor system.
The mode change finishes the strength operation.
Entering 'mute', you can have normal operation or signal control such as timing to finish the strength operation.
When the system is at the automatic option with the strength/ mute function, if the system enters the cooling mode, the cooling strength/ mute function will be offered; if the system enters the heating mode, then the heating strength/ mute function will be offered; if the system enters the airflow mode, there will be no strength/ mute function.

7.1.6 Mute operation

The system enters the mode after receiving the 'mute signal'.
a. Mute heating: the airflow speed is slight, the system sends the mute signal to the outdoor system.
b. mute cooling: the airflow speed is slight, the system sends the mute signal to the outdoor system.
When the compressor operates, the airflow speed is mute speed. EEPROM is adaptable.
Mute operation can not work under the dehumidifying and airflow-sending operation.

7.1.7 Air refreshing（This model does not choose）

After receiving the signal from the remote control, (HV series: the background light of the 'health' logo is green. HS series: the 'health' indicator will be lighted). If the fan operates, the Nano-Aqua operates to realize the ions sending function.
If the indoor fan stops, the Nano-Aqua is turned off.
When the Nano-Aqua is turned off, if the air refreshing system is turned on, the Nano-Aqua will be turned on when the fan operates.

7.1.8 Timing

You can set 24 hours' on/off timing accordingly. After the setting, the timing indicator will be lightened. Also, the light will be turning off after the timing is finished. The followings are several timing methods.
1.system /on timing: The timing indicator will be lightened and the indoor system is under the waiting mode. The light will be turned off when the timing is finished and the rest of the system will operate under a normal condition. The timing starts since the last reception of the timing signal.
2.system /off timing: When the system is turned on, the timing indicator is lightened, the rest of the system will operated under a normal condition. When set time comes, the indicator light will be turned off and the system will be turned off. If you have set the dormant functions, the order of your settings will be operated according to the timing settings.
3 .system /on and off timing: The settings will be completed according to the orders..

7.1.9 Dormant operation

The dormant timing is an eight hours unadaptable one. The timing signs are shown on the V series board. (RC series show the dormant signal, the timing light is lighted on the 6 lights board).

2.1 Under the cooling/ dehumidifying operation, after the setting of the dormant operation, the set temperature will be raised for 1 centigrade after 1 hour's operation and will be raised for 1 centigrade 1 hour later. The system will keep this status for 6 hours and then close.

2.2 Under the heating mode, after the setting of the dormant operation, the setting temperature will fall 2 centigrade after 1 hour's operation and will fall 2 centigrade 1 hour later. 3 hours after the preceding operations, the set temperature will be raised for 1 centigrade and the system will keep this status for 3 hours and then close down.

2.3 During the dormant time, except the change of the system mode or a new press on the dormant setting keys, the timing of the 8 hours dormancy will take the first timing as the start time, any presses on other keys will not affect the original timing.

2.4 Indoor fan control under the dormant operation.

If the indoor fan is at the high speed before the dormant operation setting, the speed will be turned to medium after the setting. If the fan is at the medium speed before the dormant setting, the speed will be turned to low after the setting. If the fan is at the low speed before the dormant setting, the speed will not change.

7.1.10 Urgent on/off input

Press the urgency button the buzzer will ring. The system will enter the automatic mode if you don't press the button for more than 5 seconds.

Under the system off mode, if you press the urgency key for 5 to 10 seconds, the system will start the test operation.

Under the system off mode, if you press the urgency key for 10 to 15 seconds, the display screen will show the resume of the last malfunction.

If the system is under operation, the press on the urgency key will stop it.

Under the system off mode, the display screen will show automatic running sign.

Under the system off mode, the system will not receive the remote control signal if the press on the urgency key doesn't last for 15 seconds or if the key is loosened.

Urgency operation: If you press the urgency key for less than 5 seconds, the buzzer will ring when you press the on/off key. The system will enter the urgency operation when the urgency key is loosened. The urgency operation is fully automatic.

Test operation.

The inlet temperature sensor doesn't work, the indoor fan and the indoor air direction board motor works synchronically. High speed airflow, cooling, outdoor system on, etc, will send the ambient temperature 30 centigrade and coil temperature 16 centigrade information to the outdoor system.

Test operation

The defrost protection of the evaporator doesn't work.

The temperature control doesn't work.

The test operation will be finished in 30 minutes.

The test operation can be stopped by the relative commands from the remote control.

7.1.11 Low load protection control

In order to prevent the frosting of the indoor heat interaction device, the outdoor system will be stopped if the indoor heat interaction temperature is below 1℃ centigrade for 5 minutes, but the fan will continue to operate. The outdoor system will be started again when the heat interaction temperature is above 9 centigrade and the system has been stopped for 3 minutes. The malfunction will be stored in the malfunction resume and will not be revealed

7.1.12 High load protection control

The outdoor system will be stopped if the coil temperature is above 63℃ for 2 minutes. The indoor fan will be controlled by the thermostat. The outdoor system can be restarted when the coil temperature is below 45℃ and the system has been stopped for 3 minutes. The malfunction will be stored in the malfunction resume and will not be revealed.

7.1.13 Abnormal operation of indoor system

When the outdoor system operates, if the indoor system operation differs from the outdoor system, the abnormal operation malfunction will be reported. 10s after the report, the indoor system will be closed.

Outdoor system mode	Indoor system mode	conflicts
cooling	heating	yes
cooling	cooling	no
cooling	airflow	no
heating	heating	no
heating	airflow	yes
heating	cooling	yes

7.1.14 Malfunction list resume.

Nothing is presented if there is no code list.

The malfunction display will automatically finish in 10 seconds.

The remote control only receives the signals for stop. According to the signals, the malfunction resume presentation finishes.

The resume restores after the power supply restores.

7.1.15 Abnormality confirmation approaches

1. indoor temperature sensor abnormality:

Under the operation, the normal temperature ranges from 120 degree to -30 degree. When the temperature goes beyond this range, the abnormality can be confirmed. If the temperature goes back into the range, the system will automatically resume.

2 .indoor heat interaction sensor abnormality:

Under the operation, the normal temperature ranges from 120 degree to -30 degree. When the

temperature goes beyond this range, the abnormality can be confirmed. If the temperature goes back into the range, the system will automatically resume.

3 .indoor malfunction:

Out door malfunction: When the indoor system receives the outdoor malfunction codes, it will store the code into E2 for the malfunction list resume. The indoor system will continue to operate according to the original status, the malfunction code will not be revealed or processed.

4. transmission abnormality:

If the indoor system can't receive the outdoor system for 8 minutes, the communication abnormality can be confirmed and reported and the outdoor system will be stopped.

7.1.16 Single indoor system operation

* Enter condition: First, set the high speed airflow and 30 centigrade set temperature, then press the dormant keys for 6 times within 7 seconds, the system will feedback with 6 rings.

* After the system enters the separate indoor system operation mode, the indoor system will operate according to the set mode and neglect the communication signals of the outdoor system. However, it has to send signals to the outdoor system.

* Quitting condition: This mode can be quitted after receiving the quitting signal from the remote control or urgency system. The indoor system thus can quit the single operation mode.

7.1.17 Power cut compensation

* Entering condition: Press dormant button 10 times within 7 second, the buzzer will ring 4 times and the present system status will be stored into the EEPROM of the indoor system.

* After entering the power cut compensation mode, the processing of the indoor system should be as the followings:

Remote control urgency signal: operate according to the remote control and the urgent conditions, the present status will be stored into the EEPROM of the indoor system.

* Quitting conditions: Press dormant button 10 times within 7 seconds and the buzzer will ring twice.

7.1.18 Test program

First, connect the test program terminal on the mainboard. Then connect the system to the power circuit. The test program will operate as follows.

HV series display: The buzzer rings for one time—the signal will be sent to outdoor system for 0.5 second— the violet is sent for 0.5-- the background light turns to white—the back ground light turns to white—the background light turns to white—the background light is fully lighted for 0.5 second—LED screen lights for 0.5 second— the step-in motor fully output for 0.5 second—then the motor doesn't output for 0.5 second—the motor fully output again for 0.5 second. The test program finishes.

7.1.19 Time cutting function:

Connect the test program terminal on the mainboard after connecting the system to the power circuit. The CPU of the main control will be 60 times faster.

7.2 Value of thermistor

Room sensor and Pipe Sensor

R25℃=10KΩ ±2%

B25℃/50℃=3700K±2%

Temp.((℃))	Max.(KΩ)	Normal(KΩ)	Min.(KΩ)	Tolerance(℃)	
-30	165.2170	147.9497	132.3678	-1.94	1.75
-29	155.5754	139.5600	125.0806	-1.93	1.74
-28	146.5609	131.7022	118.2434	-1.91	1.73
-27	138.1285	124.3392	111.8256	-1.89	1.71
-26	130.2371	117.4366	105.7989	-1.87	1.70
-25	122.8484	110.9627	100.1367	-1.85	1.69
-24	115.9272	104.8882	94.8149	-1.83	1.67
-23	109.4410	99.1858	89.8106	-1.81	1.66
-22	103.3598	93.8305	85.1031	-1.80	1.64
-21	97.6556	88.7989	80.6728	-1.78	1.63
-20	92.3028	84.0695	76.5017	-1.76	1.62
-19	87.2775	79.6222	72.5729	-1.74	1.60
-18	82.5577	75.4384	68.8710	-1.72	1.59
-17	78.1230	71.5010	65.3815	-1.70	1.57
-16	73.9543	67.7939	62.0907	-1.68	1.55
-15	70.0342	64.3023	58.9863	-1.66	1.54
-14	66.3463	61.0123	56.0565	-1.64	1.52
-13	62.8755	57.9110	53.2905	-1.62	1.51
-12	59.6076	54.9866	50.6781	-1.60	1.49
-11	56.5296	52.2278	48.2099	-1.58	1.47
-10	53.6294	49.6244	45.8771	-1.56	1.46
-9	50.8956	47.1666	43.6714	-1.54	1.44
-8	48.3178	44.8454	41.5851	-1.51	1.42
-7	45.8860	42.6525	39.6112	-1.49	1.40
-6	43.5912	40.5800	37.7429	-1.47	1.39
-5	41.4249	38.6207	35.9739	-1.45	1.37
-4	39.3792	36.7676	34.2983	-1.43	1.35
-3	37.4465	35.0144	32.7108	-1.41	1.33
-2	35.6202	33.3552	31.2062	-1.38	1.31
-1	33.8936	31.7844	29.7796	-1.36	1.29
0	32.2608	30.2968	28.4267	-1.34	1.28
1	30.7162	28.8875	27.1431	-1.32	1.26
2	29.2545	27.5519	25.9250	-1.29	1.24
3	27.8708	26.2858	24.7686	-1.27	1.22
4	26.5605	25.0851	23.6704	-1.25	1.20
5	25.3193	23.9462	22.6273	-1.23	1.18
6	24.1432	22.8656	21.6361	-1.20	1.16

7	23.0284	21.8398	20.6939	-1.18	1.14
8	21.9714	20.8659	19.7982	-1.15	1.12
9	20.9688	19.9409	18.9463	-1.13	1.09
10	20.0176	19.0621	18.1358	-1.11	1.07
11	19.1149	18.2270	17.3646	-1.08	1.05
12	18.2580	17.4331	16.6305	-1.06	1.03
13	17.4442	16.6782	15.9315	-1.03	1.01
14	16.6711	15.9601	15.2657	-1.01	0.99
15	15.9366	15.2770	14.6315	-0.98	0.96
16	15.2385	14.6268	14.0271	-0.96	0.94
17	14.5748	14.0079	13.4510	-0.93	0.92
18	13.9436	13.4185	12.9017	-0.91	0.90
19	13.3431	12.8572	12.3778	-0.88	0.87
20	12.7718	12.3223	11.8780	-0.86	0.85
21	12.2280	11.8126	11.4011	-0.83	0.83
22	11.7102	11.3267	10.9459	-0.81	0.80
23	11.2172	10.8634	10.5114	-0.78	0.78
24	10.7475	10.4216	10.0964	-0.75	0.75
25	10.3000	10.0000	9.7000	-0.75	0.75
26	9.8975	9.5974	9.2980	-0.76	0.76
27	9.5129	9.2132	8.9148	-0.80	0.80
28	9.1454	8.8465	8.5496	-0.84	0.83
29	8.7942	8.4964	8.2013	-0.87	0.86
30	8.4583	8.1621	7.8691	-0.91	0.90
31	8.1371	7.8428	7.5522	-0.95	0.93
32	7.8299	7.5377	7.2498	-0.98	0.97
33	7.5359	7.2461	6.9611	-1.02	1.00
34	7.2546	6.9673	6.6854	-1.06	1.04
35	6.9852	6.7008	6.4222	-1.10	1.07
36	6.7273	6.4459	6.1707	-1.13	1.11
37	6.4803	6.2021	5.9304	-1.17	1.14
38	6.2437	5.9687	5.7007	-1.21	1.18
39	6.0170	5.7454	5.4812	-1.25	1.22
40	5.7997	5.5316	5.2712	-1.29	1.25
41	5.5914	5.3269	5.0704	-1.33	1.29
42	5.3916	5.1308	4.8783	-1.37	1.33
43	5.2001	4.9430	4.6944	-1.41	1.36
44	5.0163	4.7630	4.5185	-1.45	1.40
45	4.8400	4.5905	4.3500	-1.49	1.44
46	4.6708	4.4252	4.1887	-1.53	1.47
47	4.5083	4.2666	4.0342	-1.57	1.51
48	4.3524	4.1145	3.8862	-1.61	1.55
49	4.2026	3.9686	3.7443	-1.65	1.59

50	4.0588	3.8287	3.6084	-1.70	1.62
51	3.9206	3.6943	3.4780	-1.74	1.66
52	3.7878	3.5654	3.3531	-1.78	1.70
53	3.6601	3.4416	3.2332	-1.82	1.74
54	3.5374	3.3227	3.1183	-1.87	1.78
55	3.4195	3.2085	3.0079	-1.91	1.82
56	3.3060	3.0989	2.9021	-1.95	1.85
57	3.1969	2.9935	2.8005	-2.00	1.89
58	3.0919	2.8922	2.7029	-2.04	1.93
59	2.9909	2.7948	2.6092	-2.08	1.97
60	2.8936	2.7012	2.5193	-2.13	2.01
61	2.8000	2.6112	2.4328	-2.17	2.05
62	2.7099	2.5246	2.3498	-2.22	2.09
63	2.6232	2.4413	2.2700	-2.26	2.13
64	2.5396	2.3611	2.1932	-2.31	2.17
65	2.4591	2.2840	2.1195	-2.36	2.21
66	2.3815	2.2098	2.0486	-2.40	2.25
67	2.3068	2.1383	1.9803	-2.45	2.29
68	2.2347	2.0695	1.9147	-2.49	2.34
69	2.1652	2.0032	1.8516	-2.54	2.38
70	2.0983	1.9393	1.7908	-2.59	2.42
71	2.0337	1.8778	1.7324	-2.63	2.46
72	1.9714	1.8186	1.6761	-2.68	2.50
73	1.9113	1.7614	1.6219	-2.73	2.54
74	1.8533	1.7064	1.5697	-2.78	2.58
75	1.7974	1.6533	1.5194	-2.83	2.63
76	1.7434	1.6021	1.4710	-2.88	2.67
77	1.6913	1.5528	1.4243	-2.92	2.71
78	1.6409	1.5051	1.3794	-2.97	2.75
79	1.5923	1.4592	1.3360	-3.02	2.80
80	1.5454	1.4149	1.2942	-3.07	2.84
81	1.5000	1.3721	1.2540	-3.12	2.88
82	1.4562	1.3308	1.2151	-3.17	2.93
83	1.4139	1.2910	1.1776	-3.22	2.97
84	1.3730	1.2525	1.1415	-3.27	3.01
85	1.3335	1.2153	1.1066	-3.32	3.06
86	1.2953	1.1794	1.0730	-3.38	3.10
87	1.2583	1.1448	1.0405	-3.43	3.15
88	1.2226	1.1113	1.0092	-3.48	3.19
89	1.1880	1.0789	0.9789	-3.53	3.24
90	1.1546	1.0476	0.9497	-3.58	3.28
91	1.1223	1.0174	0.9215	-3.64	3.33
92	1.0910	0.9882	0.8942	-3.69	3.37

93	1.0607	0.9599	0.8679	-3.74	3.42
94	1.0314	0.9326	0.8424	-3.80	3.46
95	1.0030	0.9061	0.8179	-3.85	3.51
96	0.9756	0.8806	0.7941	-3.90	3.55
97	0.9490	0.8558	0.7711	-3.96	3.60
98	0.9232	0.8319	0.7489	-4.01	3.64
99	0.8983	0.8088	0.7275	-4.07	3.69
100	0.8741	0.7863	0.7067	-4.12	3.74
101	0.8507	0.7646	0.6867	-4.18	3.78
102	0.8281	0.7436	0.6672	-4.23	3.83
103	0.8061	0.7233	0.6484	-4.29	3.88
104	0.7848	0.7036	0.6303	-4.34	3.92
105	0.7641	0.6845	0.6127	-4.40	3.97
106	0.7441	0.6661	0.5957	-4.46	4.02
107	0.7247	0.6482	0.5792	-4.51	4.07
108	0.7059	0.6308	0.5632	-4.57	4.12
109	0.6877	0.6140	0.5478	-4.63	4.16
110	0.6700	0.5977	0.5328	-4.69	4.21
111	0.6528	0.5820	0.5183	-4.74	4.26
112	0.6361	0.5667	0.5043	-4.80	4.31
113	0.6200	0.5518	0.4907	-4.86	4.36
114	0.6043	0.5374	0.4775	-4.92	4.41
115	0.5891	0.5235	0.4648	-4.98	4.45
116	0.5743	0.5100	0.4524	-5.04	4.50
117	0.5600	0.4968	0.4404	-5.10	4.55
118	0.5460	0.4841	0.4288	-5.16	4.60
119	0.5325	0.4717	0.4175	-5.22	4.65
120	0.5194	0.4597	0.4066	-5.28	4.70

8.Dimensional drawings

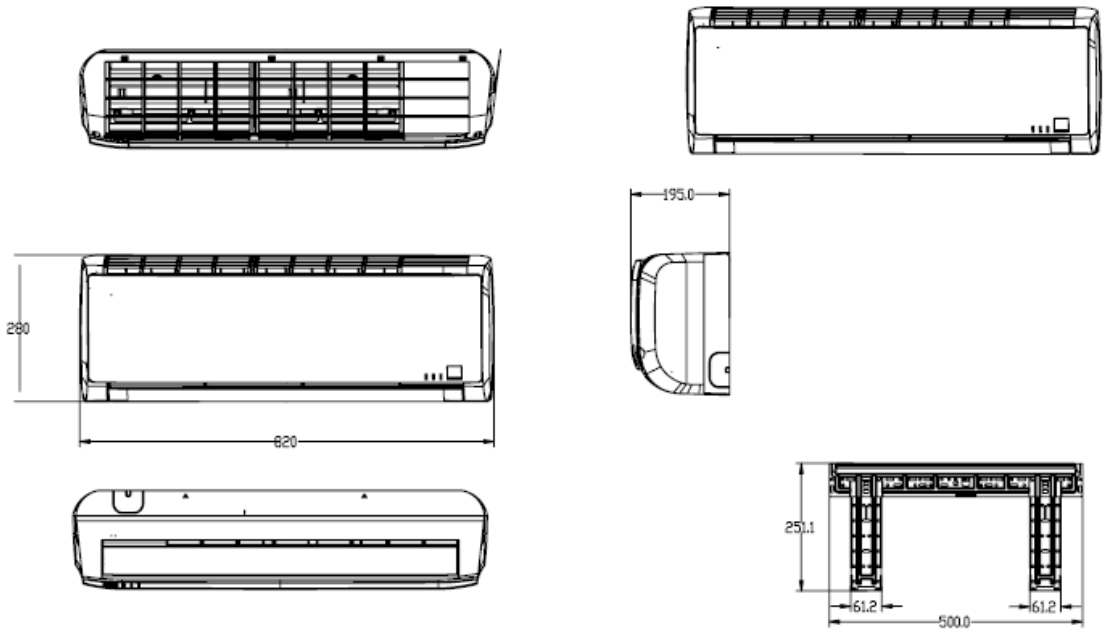

9.Center of gravity

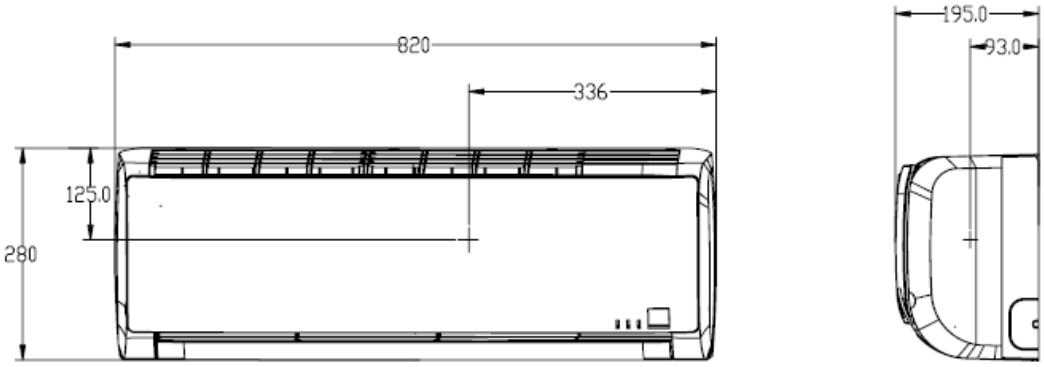

10. Service Diagnosis

10.1 Caution for Diagnosis

The operation lamp flashes when any of the following errors is detected.

1. When a protection device of the indoor or outdoor unit is activated or when the thermistor malfunctions, disabling equipment operation.
2. When a signal transmission error occurs between the indoor and outdoor units. In either case, conduct the diagnostic procedure described in the following pages.

Parameter of primary electronic appliance

NO	Name	Parameter	Picture
1	Fan motor	Rated voltage: AC 220-230 V Rated current:0.22A Rated frequency:50/60Hz	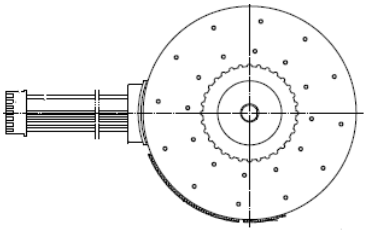

10.2 Problem Symptoms and Measures

Symptom	Check Item	Details of Measure
None of the units operates	Check the power supply.	Check to make sure that the rated voltage is supplied.
	Check the indoor PCB	Check to make sure that the indoor PCB is broken
Operation sometimes stops.	Check the power supply.	A power failure of 2 to 10 cycles can stop air conditioner operation.
Equipment operates but does not cool, or does not heat (only for heat pump)	Check for faulty operation of the electronic expansion valve.	Set the units to cooling operation, and compare the temperatures of the liquid side connection pipes of the connection section among rooms to check the opening and closing operation of the electronic expansion valves of the individual units.
	Diagnosis by service port pressure and operating current.	Check for insufficient gas.
Large operating noise and vibrations	Check the installation condition.	Check to make sure that the required spaces for installation (specified in the Technical Guide, etc.) are provided.

10.3 Error Codes and Description indoor display

	Code indication				fault description	Reference Page
	Indoor displaying panel code indication			Outdoor (LED1 flash times)		
	Other display		Only For 498 and 498A display (Red/Green Time Run □On★Flash■Off)			
Indoor and Outdoor	E7	Directly display	■ ■ ★	15	Communication fault between indoor and outdoor units	Page.42
Indoor Malfunction	E1	Directly display	★ ■ ■	/	Indoor temperature sensor failure	Page.32
	E2	Directly display	★ □ □	/	Indoor coil sensor failure	Page.32
	E4	Directly display	★ □ ★	/	Indoor eeprom failure	Page.33
	E14	Directly display	■ □ ★	/	Indoor fan failure	Page.34
Outdoor Malfunction	E5	Trouble record	□ ■ ★	22	Internal unit antifreeze protection	Page.
	E9	Trouble record	□ ■ ★	21	Internal unit overload	Page.45
	F12	Directly display	■ ★ ■	1	Eeprom failure	Page.33
	F1	Directly display	□ ★ ★	2	IPM failure	Page.37
	F22	Directly display	★ ★ ■	3	AC current overcurrent protection	Page.38
	F3	Directly display	■ ★ ■	4	Communication error between module board and main PCB board.	Page.39
	F20	Trouble record	■ ★ □	5	High pressure protection	Page.45
	F19	Trouble record	■ ★ □	6	Power over/under voltage protection	Page.40
	F27	Directly display	■ ★ ■	7	Compressor stall / press instantaneous stop	Page.40
	F4	Directly display	■ ★ ■	8	Compressor discarging temperature protection	Page.41
	F8	Trouble record	■ ★ □	9	Abnormal of DC motor	Page.36
	F21	Directly display	□ □ ★	10	Abnormal of piping sensor	Page.32
	F6	Directly display	□ ★ ■	12	Abnormal of outdoor ambient sensor	Page.32
	F25	Directly display	★ □ ■	13	Abnormal of compressor discharge sensor	Page.32
	F13	Trouble record	■ ★ □	16	Lack of refrigerant	Page.
	F14	Trouble record	■ ★ □	17	4-way valve reverse failure	Page.
	F11	Directly display	■ ★ ■	18	Compressor jam (only for spdu)	Page.44
	F28	Directly display	■ ★ ■	19	Module PWM select circuit error	Page.44
	F2	Trouble record	■ ★ □	24	Instantaneous over-current protection of the compressor	Page.38
	F23	Trouble record	■ ★ □	25	Compressor U-phase overcurrent Compressor V-phase overcurrent Compressor W-phase overcurrent	Page.38
	F24	Trouble record	★ ■ ★	27	CT disconnection	Page.
	F34	Trouble record	/	37	Outdoor coil protection	Page.
	F35	Trouble record	■ ★ □	38	Compressor driver board failure	Page.
	F43	/	■ ★ ■	46	Model matching abnormality	Page.

10.3.1 Thermistor or Related Abnormality

Indoor Display	★ ■ ■/ E1: Room temperature sensor failure ★ □ □/ E2: Heat-exchange sensor failure
Outdoor display	LED1 flash 10 times：Defrost temperature sensor failure LED1 flash 11 times：Suction temperature sensor failure LED1 flash 12 times：Ambient temperature sensor failure LED1 flash 13 times：Discharge temperature sensor failure
Method of Malfunction Detection	The temperatures detected by the thermistors are used to determine thermistor errors
Malfunction Decision Conditions	When the thermistor input is more than 4.92V or less than 0.08V during compressor operation. ● Note: The values vary slightly in some models
Supposed Causes	■ Faulty connector connection ■ Faulty thermistor ■ Faulty PCB
Troubleshooting	* Caution Be sure to turn off power switch before connect or disconnect connector, or else parts damage may be occurred.

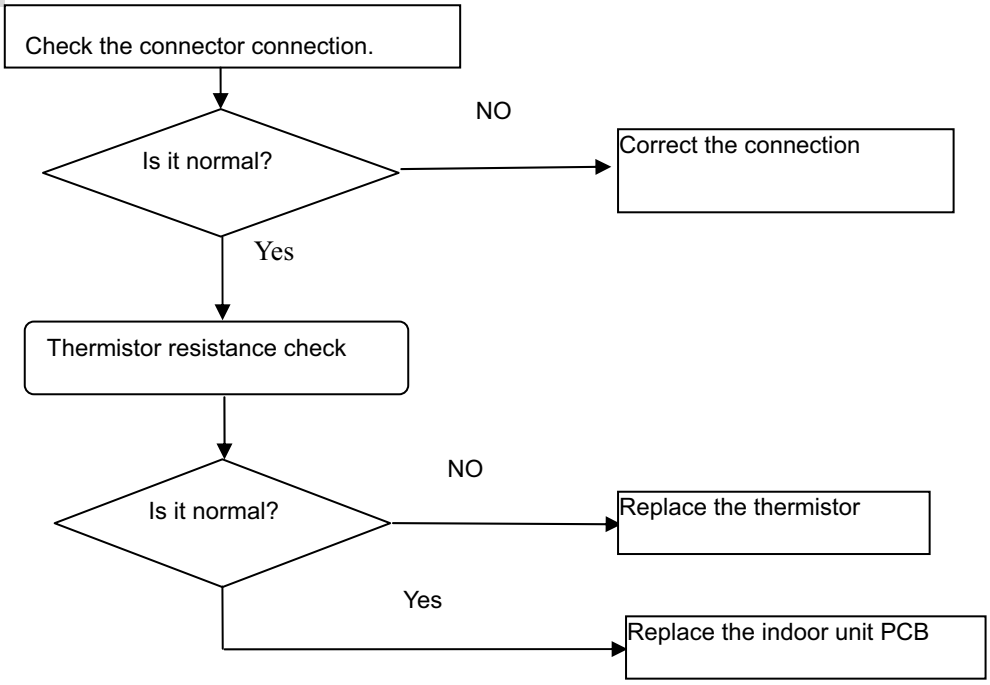

Thermistor resistance check method:
Remove the connector of the thermistor on the PCB, and measure the resistance of thermistor using tester.The relationship between normal temperature and resistance is shown in the value of indoor thermistor.

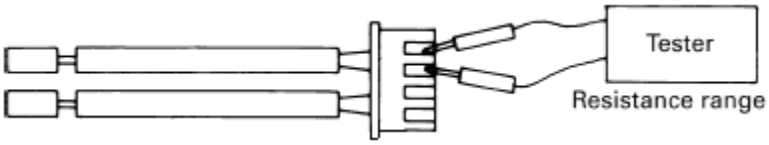

10.3.2 EEPROM abnormal

Indoor Display	★ □ ★/ E4: Indoor EEPROM error
Indoor display	■ ★ ■/ F12: Outdoor EEPROM error; Outdoor LED1 flash 1 times
Method of Malfunction Detection	The Data detected by the EEPROM are used to determine MCU
Malfunction Decision Conditions	When the data of EEPROM is error or the EEPROM is damaged
Supposed Causes	■ Faulty EEPROM data ■ Faulty EEPROM ■ Faulty PCB
Troubleshooting	* Caution Be sure to turn off power switch before connect or disconnect connector, or parts damage may be occurred.

Replace the indoor or outdoor mainboard.

10.3.3 Indoor DC fan motor malfunction

Indoor Display	■ □ ★ / E14
Method of Malfunction Detection	The rotation speed detected by the Hall IC during fan motor operation is used to determine abnormal fan motor operation
Malfunction Decision Conditions	when the detected rotation feedback signal don't received in 2 minutes
Supposed Causes	■ Operation halt due to breaking of wire inside the fan motor. ■ Operation halt due to breaking of the fan motor lead wires ■ Detection error due to faulty indoor unit PCB
Troubleshooting	* Caution Be sure to turn off power switch before connect or disconnect connector, or else parts damage may be occurred.

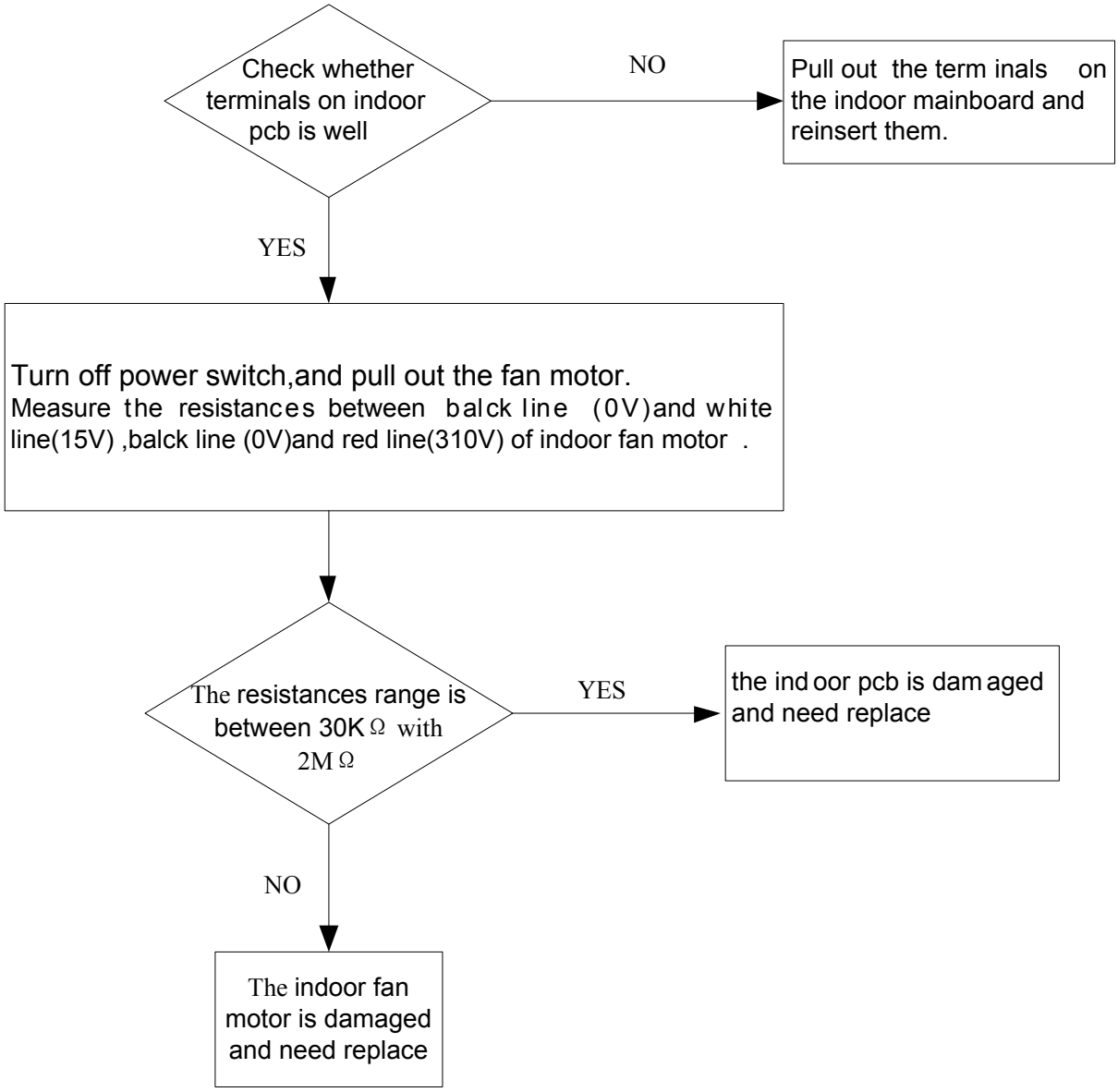

10.3.4 Outdoor DC fan motor fault

Outdoor display	■ ★ □/ F8 LED1 flash 9 times
Method of Malfunction Detection	DC fan motor is detected by checking the fan running condition and so on
Malfunction Decision Conditions	when the data of EEPROM is error or the EEPROM is damaged
Supposed Causes	■ DC fan motor protection dues to the DC fan motor faulty ■ DC fan motor protection dues to faulty PCB
Troubleshooting	* Caution Be sure to turn off power switch before connect or disconnect connector, or parts damage may be occurred.

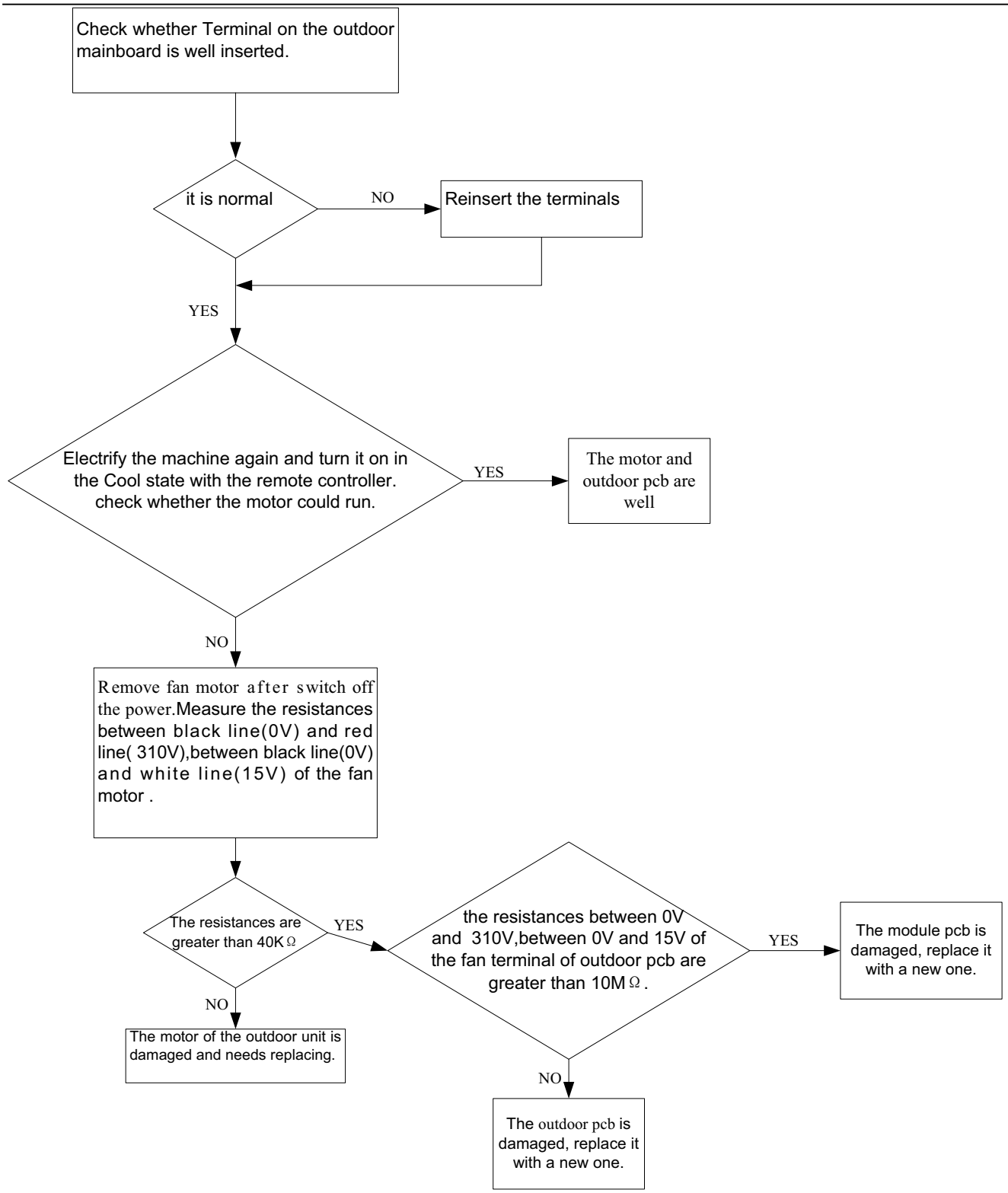
Check whether Terminal on the outdoor mainboard is well inserted.
it is normal
NO
Reinsert the terminals
YES
Electrify the machine again and turn it on in the Cool state with the remote controller. check whether the motor could run.
YES
The motor and outdoor pcb are well
NO
Remove fan motor after switch off the power.Measure the resistances between black line(0V) and red line(310V),between black line(0V) and white line(15V) of the fan motor .
The resistances are greater than 40KΩ
YES
the resistances between 0V and 310V,between 0V and 15V of the fan terminal of outdoor pcb are greater than 10MΩ .
YES
The module pcb is damaged, replace it with a new one.
NO
The motor of the outdoor unit is damaged and needs replacing.
NO
The outdoor pcb is damaged, replace it with a new one.

10.3.5 IPM protection

Outdoor display:	□ ★ ★/ F1 LED1 flash 2 times
Method of Malfunction Detection	IPM protection is detected by checking the compressor running condition and so on
Malfunction Decision Conditions	■ The system leads to IPM protection due to over current ■ The compressor faulty leads to IPM protection ■ circuit component of IPM is broken and led to IPM protection
Supposed Causes	■ IPM protection dues to the compressor faulty ■ IPM protection dues to faulty PCB of IPM module ■ Compressor wiring disconnected
Troubleshooting	* Caution Be sure to turn off power switch before connect or disconnect connector, or else parts damage may be occurred.

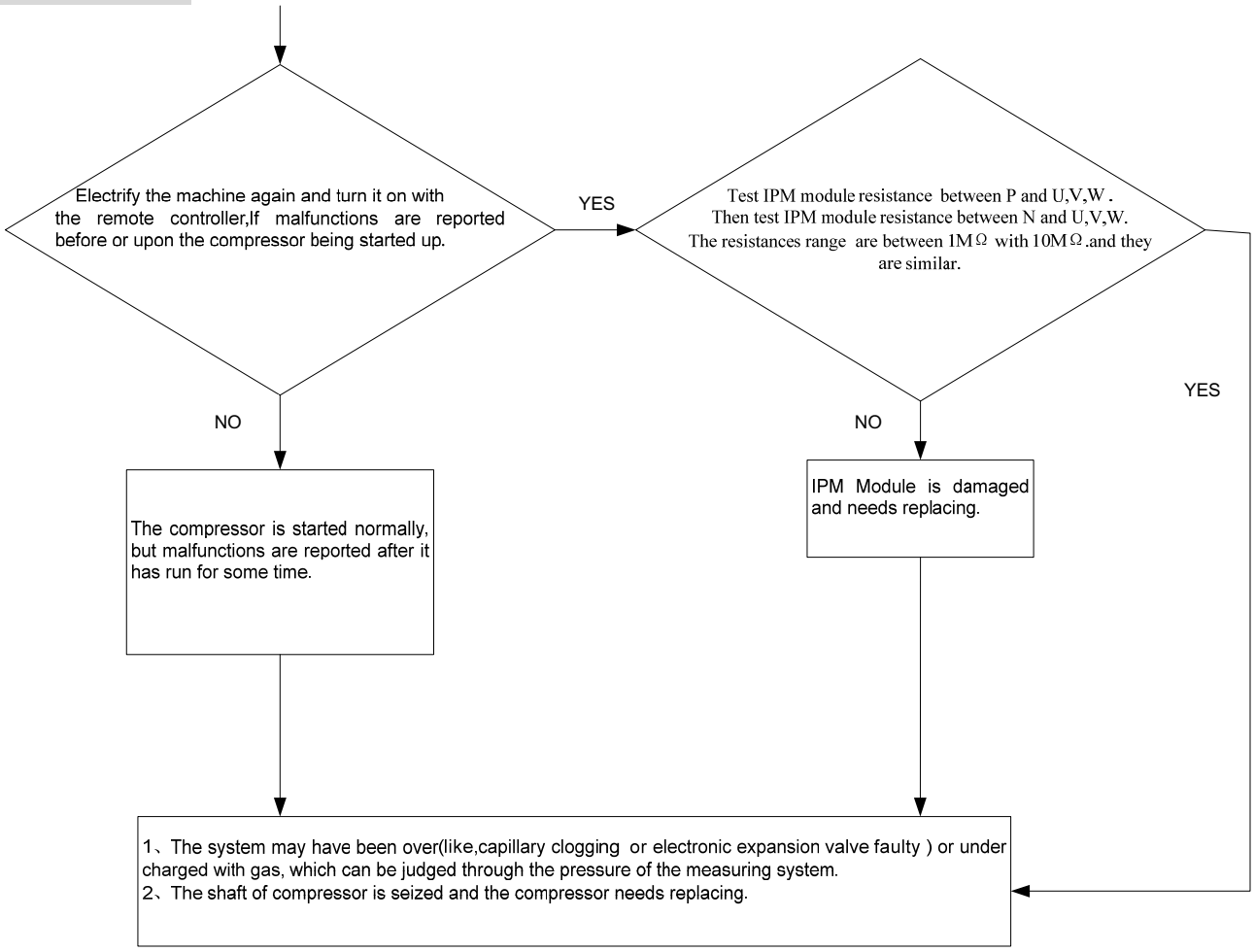

10.3.6 Over-current of the compressor

Outdoor Display:

■ ★ □/ F2 LED1 flash 3 or 24 or 25 times

Method of Malfunction Detection	The current of the compressor is too high
Malfunction Decision Conditions	when the IPM Module is damaged or the compressor is damaged. power supply voltage is too low or too high
Supposed Causes	■ Faulty IPM Module ■ Faulty compressor ■ Faulty power supply
Troubleshooting	* Caution Be sure to turn off power switch before connect or disconnect connector, or parts damage may be occurred.

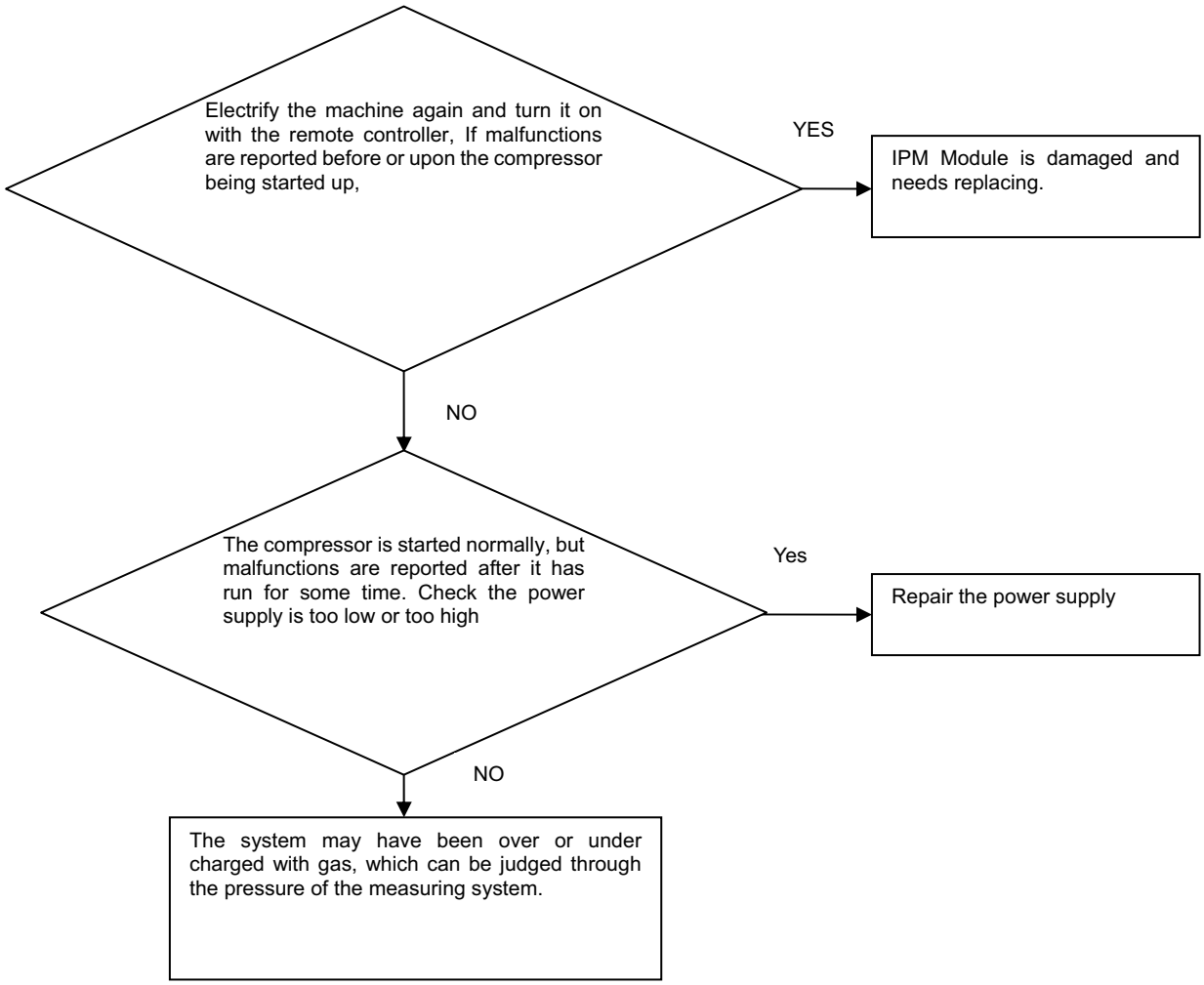

10.3.7 The communication fault between IPM and outdoor PCB

Outdoor display:	■ ★ ■/ F3 LED1 flash 4 times
Method of Malfunction Detection	Communication is detected by checking the IPM module and the outdoor PCB
Malfunction Decision Conditions	■ The outdoor PCB broken leads to communication fault ■ The IPM module broken leads to communication fault
Supposed Causes	■ The outdoor PCB is broken ■ The IPM module is broken ■ Communication wiring disconnected
Troubleshooting	* Caution Be sure to turn off power switch before connect or disconnect connector, or else parts damage may be occurred.

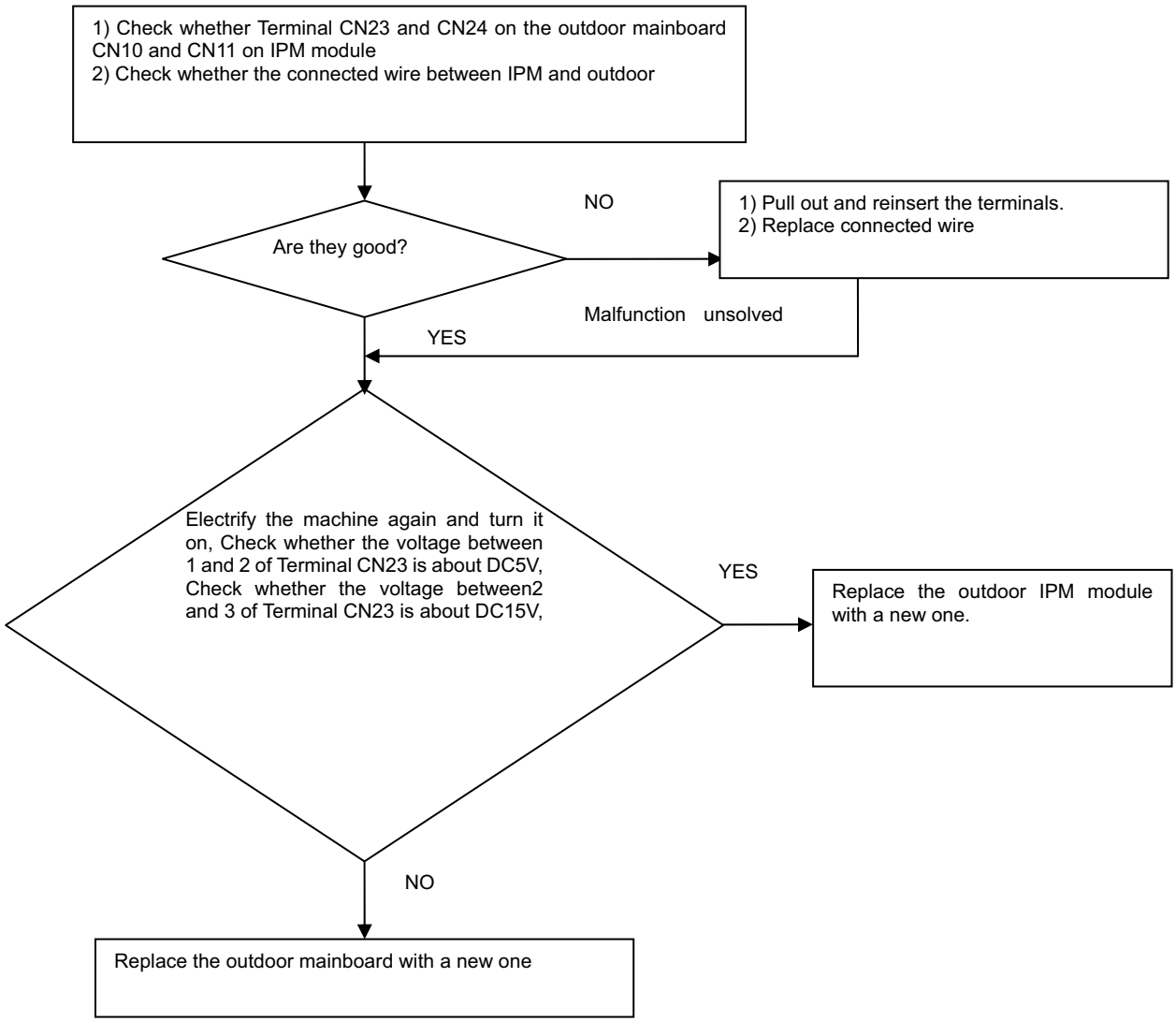

10.3.8 Power Supply Over or under voltage fault

Outdoor display: ■ ★ □/ F19 LED1 flash 6 times The power supply is over voltage

Method of Malfunction Detection	An abnormal voltage rise or fall is detected by checking the specified voltage detection circuit.
Malfunction Decision Conditions	An voltage signal is fed from the voltage detection circuit to the microcomputer
Supposed Causes	■ Supply voltage not as specified ■ the IPM module is broken ■ the outdoor PCB is broken
Troubleshooting	* Caution Be sure to turn off power switch before connect or disconnect connector, or else parts damage may be occurred.

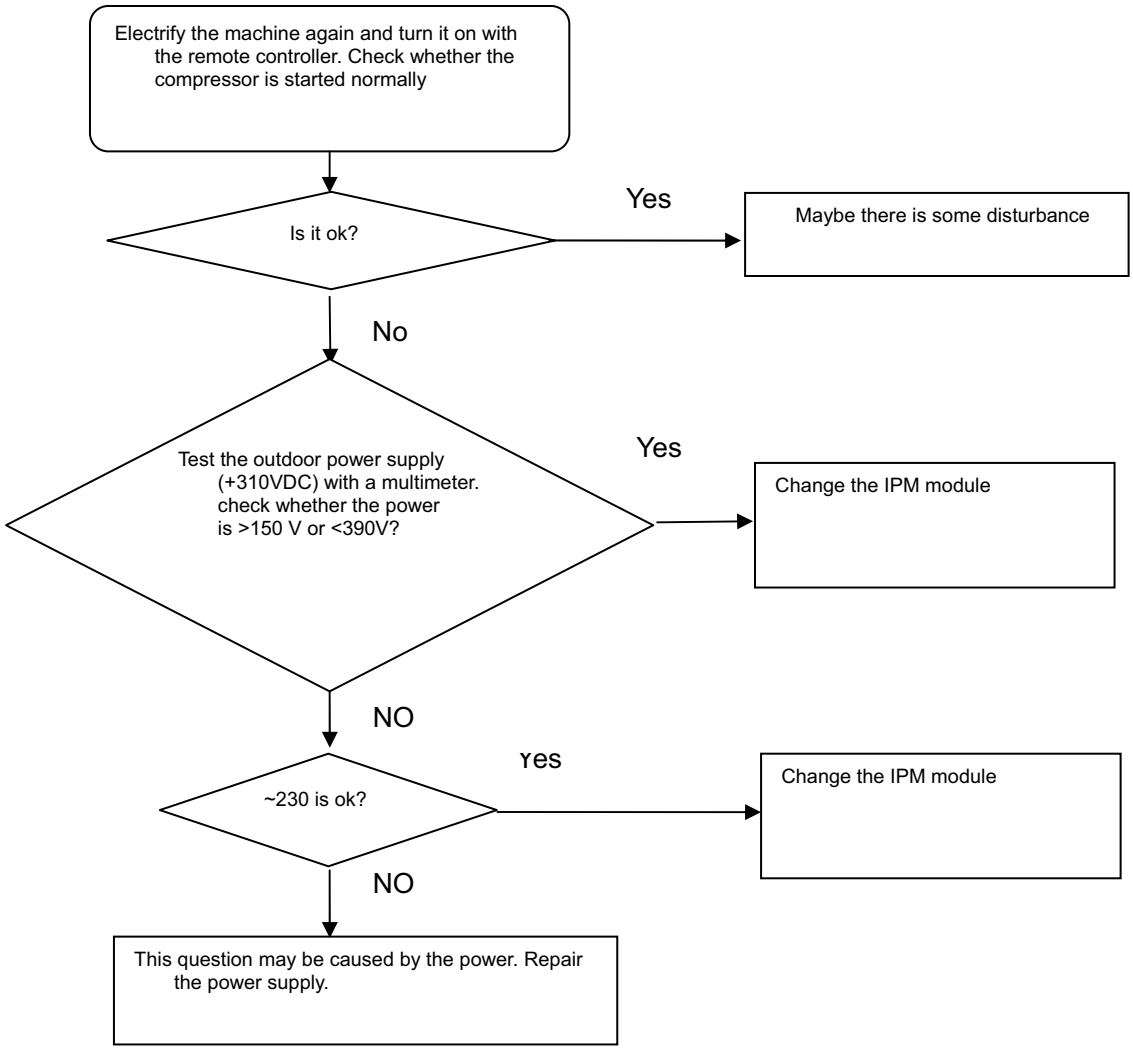

10.3.9 Overheat Protection For Discharge Temperature

Outdoor display: ■ ★ ■ / F4 LED1 flash 8 times

Method of Malfunction Detection	The Discharge temperature control is checked with the temperature being detected by the Discharge pipe thermistor
Malfunction Decision Conditions	when the compressor discharge temperature is above 110℃
Supposed Causes	■ Electronic expansion valve defective ■ Faulty thermistor ■ Faulty PCB
Troubleshooting	* Caution Be sure to turn off power switch before connect or disconnect connector, or else parts damage may be occurred.

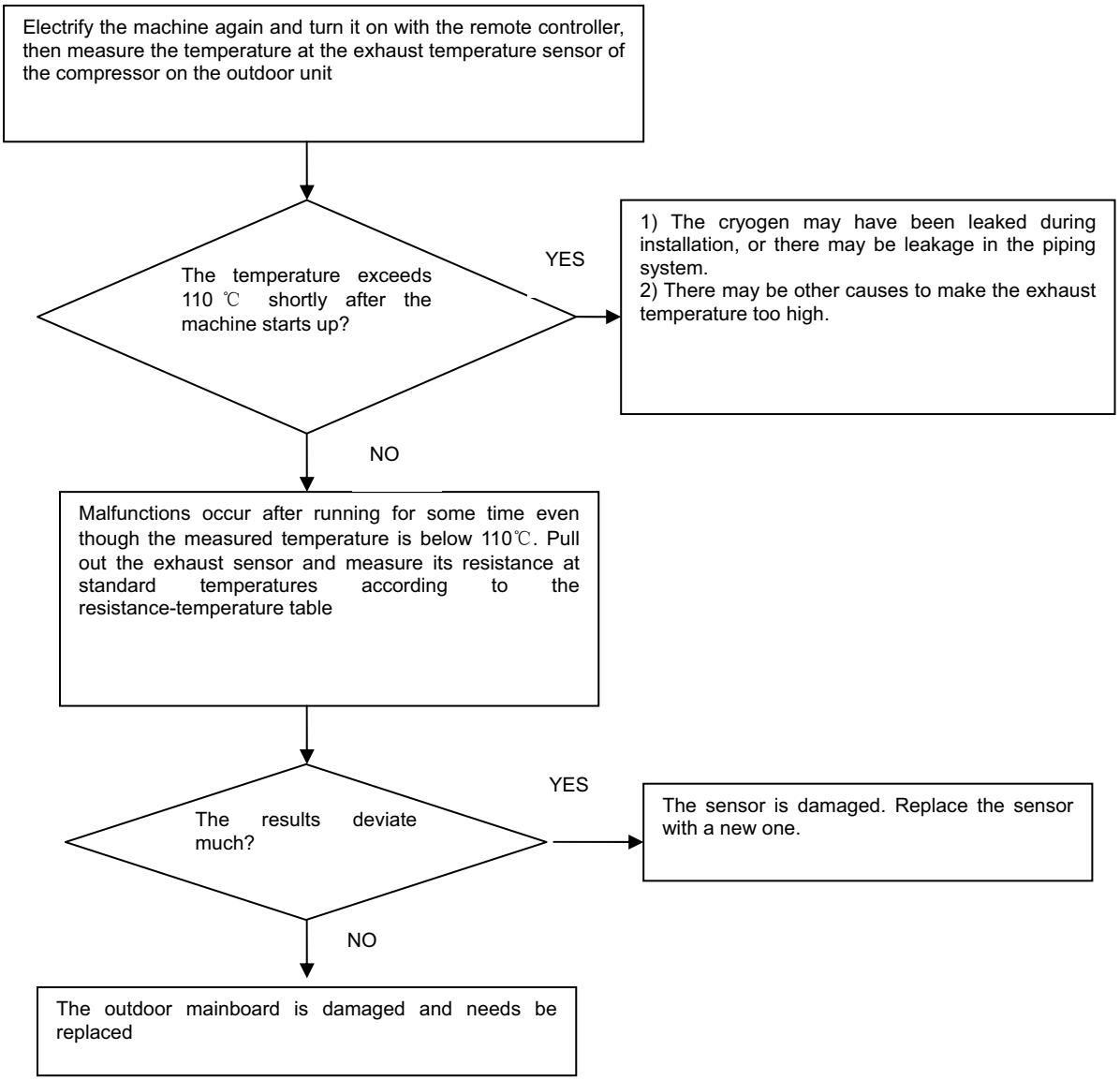

10.3.10 The communication fault between indoor and outdoor

Indoor display outdoor display	■ ■ ★/ E7 LED1 flash 15 times
Method of Malfunction Detection	Communication is detected by checking the indoor PCB and the outdoor PCB.
Malfunction Decision Conditions	■ The outdoor PCB broken leads to communication fault. ■ The indoor PCB broken leads to communication fault.
Supposed Causes	■ Communication wiring disconnected. ■ The indoor PCB is broken. ■ The outdoor PCB is broken. ■ The Module PCB is broken.
Troubleshooting	* Caution Be sure to turn off power switch before connect or disconnect connector, or else parts damage may be occurred.

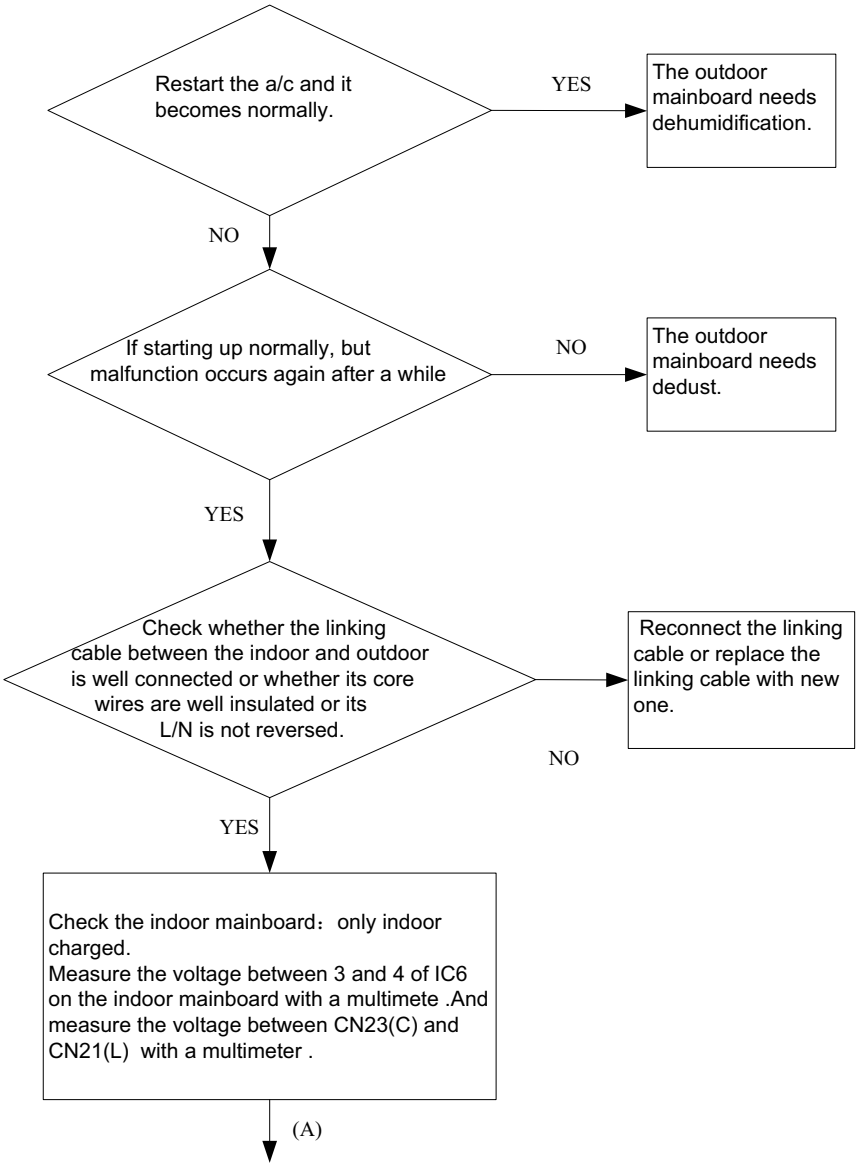

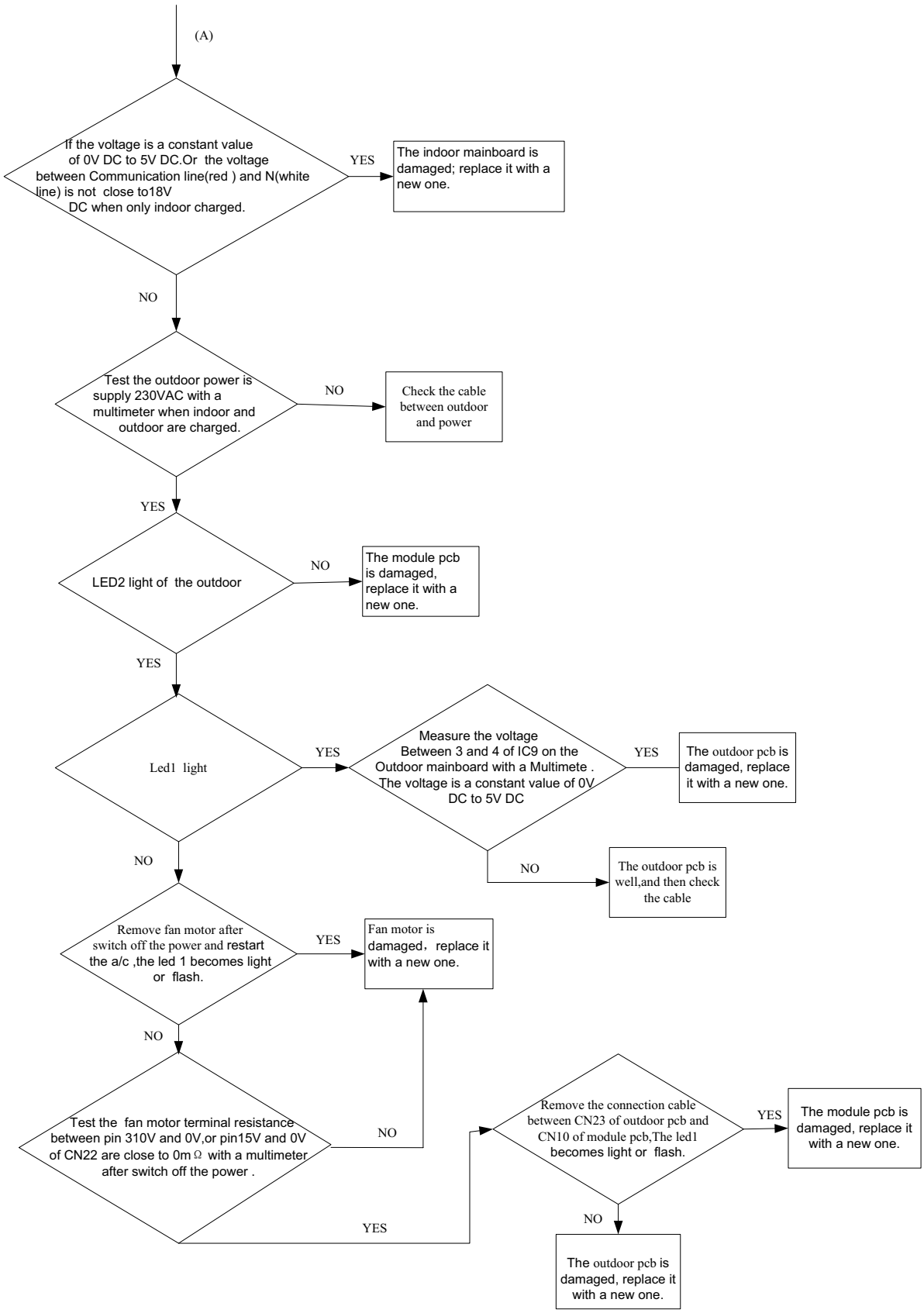
(A)
If the voltage is a constant value of 0V DC to 5V DC.Or the voltage between Communication line(red) and N(white line) is not close to18V DC when only indoor charged.
YES
The indoor mainboard is damaged; replace it with a new one.
NO
Test the outdoor power is supply 230VAC with a multimeter when indoor and outdoor are charged.
NO
Check the cable between outdoor and power
YES
LED2 light of the outdoor
NO
The module pcb is damaged, replace it with a new one.
YES
Led1 light
YES
Measure the voltage Between 3 and 4 of IC9 on the Outdoor mainboard with a Multimete . The voltage is a constant value of 0V DC to 5V DC
YES
The outdoor pcb is damaged, replace it with a new one.
NO
The outdoor pcb is well,and then check the cable
NO
Remove fan motor after switch off the power and restart the a/c ,the led 1 becomes light or flash.
YES
Fan motor is damaged，replace it with a new one.
NO
Test the fan motor terminal resistance between pin 310V and 0V,or pin15V and 0V of CN22 are close to 0mΩ with a multimeter after switch off the power .
NO
YES
Remove the connection cable between CN23 of outdoor pcb and CN10 of module pcb,The led1 becomes light or flash.
YES
The module pcb is damaged, replace it with a new one.
NO
The outdoor pcb is damaged, replace it with a new one.

10.3.11 Loss of synchronism detection

Inverter side current detection is abnormal

Outdoor Display	■ ★ ■\ F11 LED1 flash 18 times ■ ★ ■\F28 LED1 flash 19 times
Method of Malfunction Detection	The position of the compressor rotor can not detected normally
Malfunction Decision Conditions	when the wiring of compressor is wrong or the connection is poor; or the compressor is damaged
Supposed Causes	■ Faulty The wiring of compressor ■ Faulty compressor ■ Faulty PCB
Troubleshooting	* Caution Be sure to turn off power switch before connect or disconnect connector, or parts damage may be occurred.

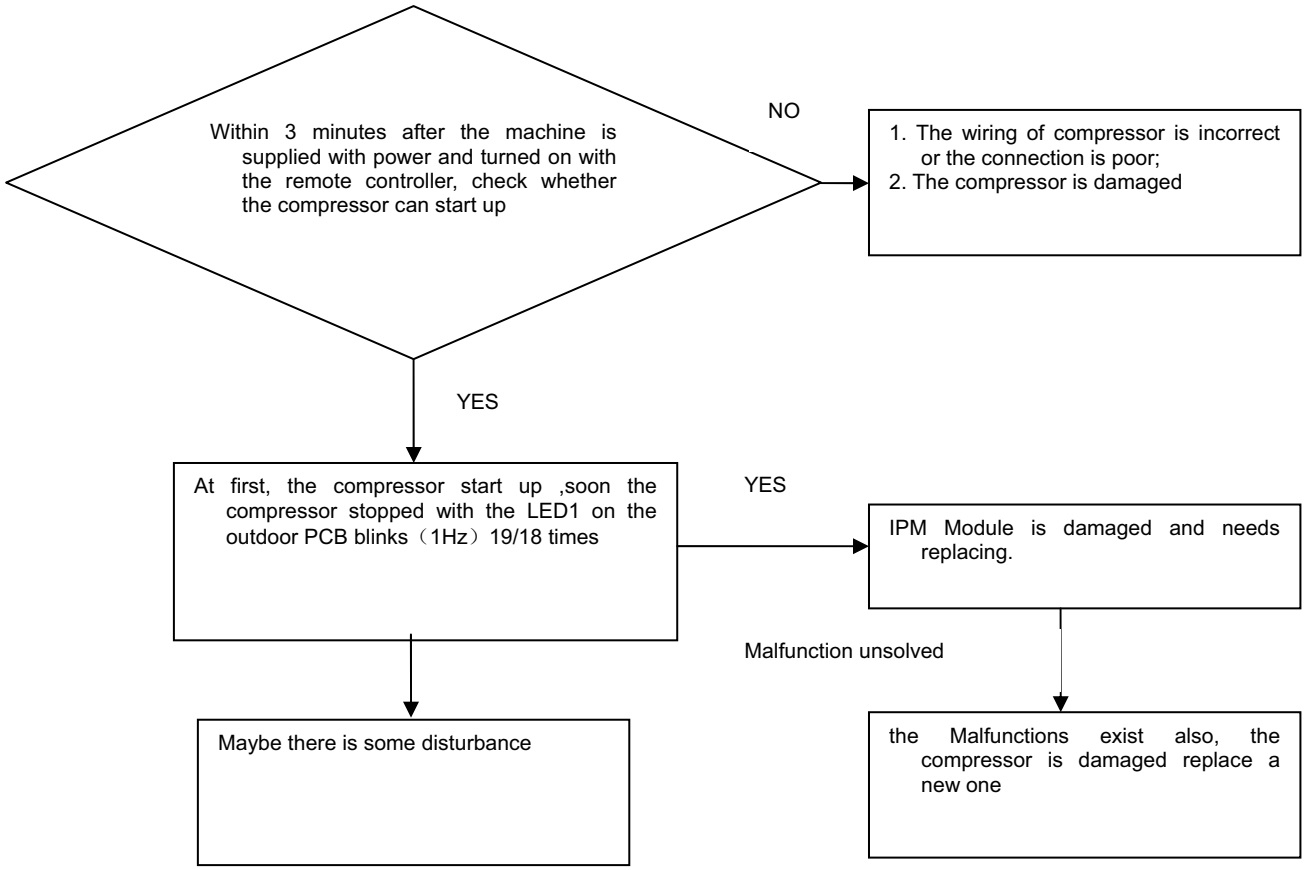

10.3.12 High work-intense protection

Outdoor display	★ ★ ★\E9 LED1 flash 21 times
Method of Malfunction Detection	High work-intense control is activated in the heating mode if the temperature being sensed by the heat exchanger thermistor exceeds the limit.
Malfunction Decision Conditions	Activated when the temperature being sensed by the heat exchanger rises above 65℃ twices in 30 minutes.
Supposed Causes	■ Faulty electronic expansion valve ■ Dirty heat exchanger ■ Faulty heat-exchange sensor ■ Insufficient gas
Troubleshooting	* Caution Be sure to turn off power switch before connect or disconnect connector, or else parts damage may be occurred.

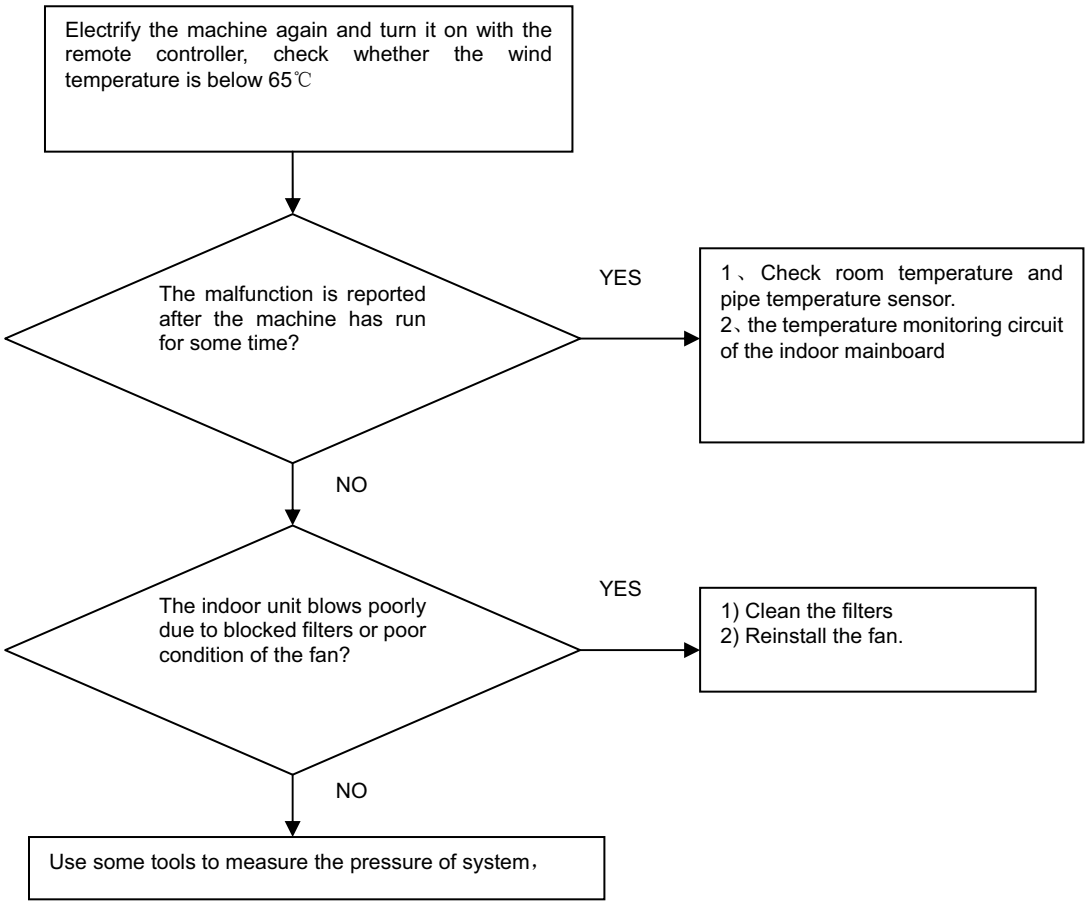

11. Circuit Diagrams

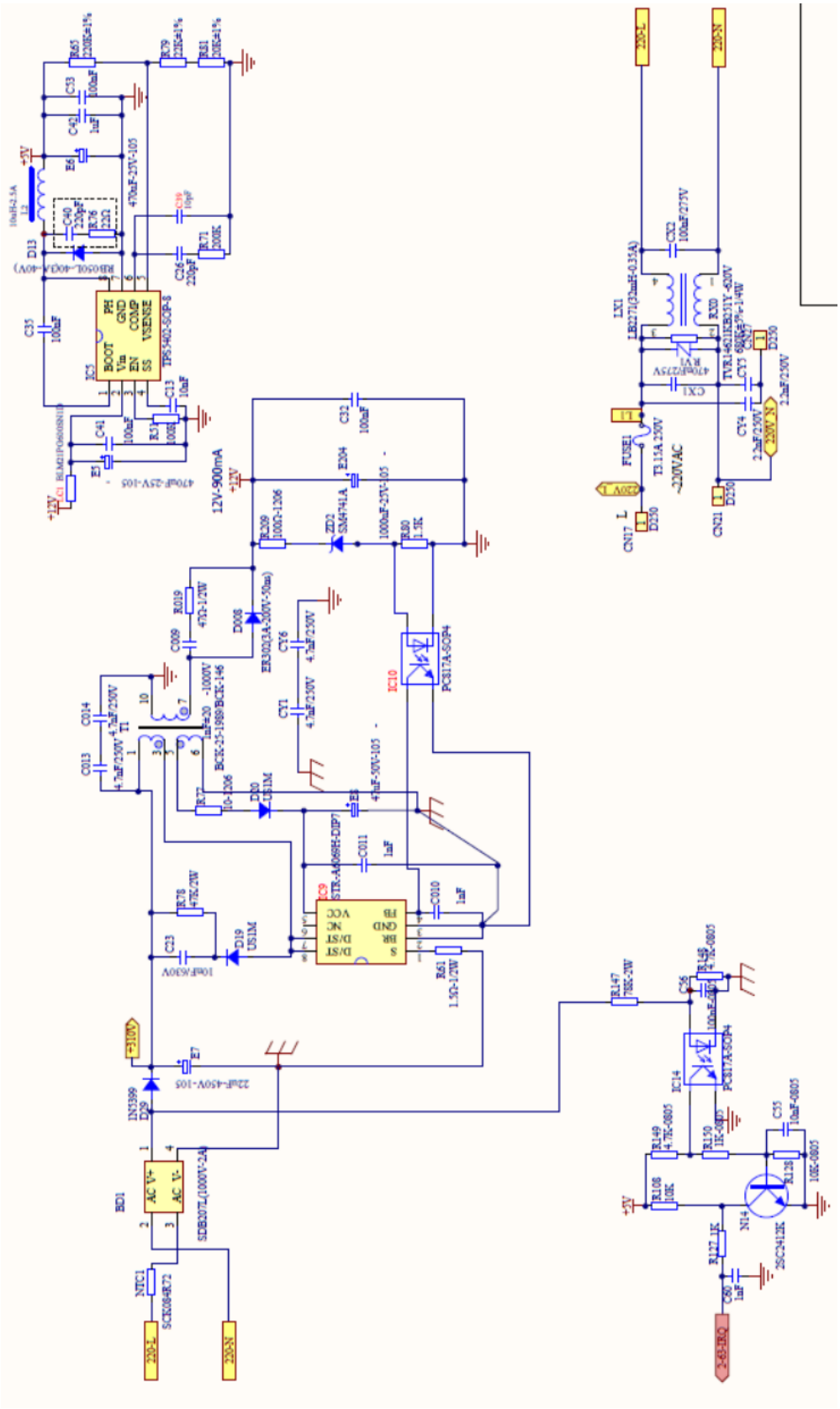

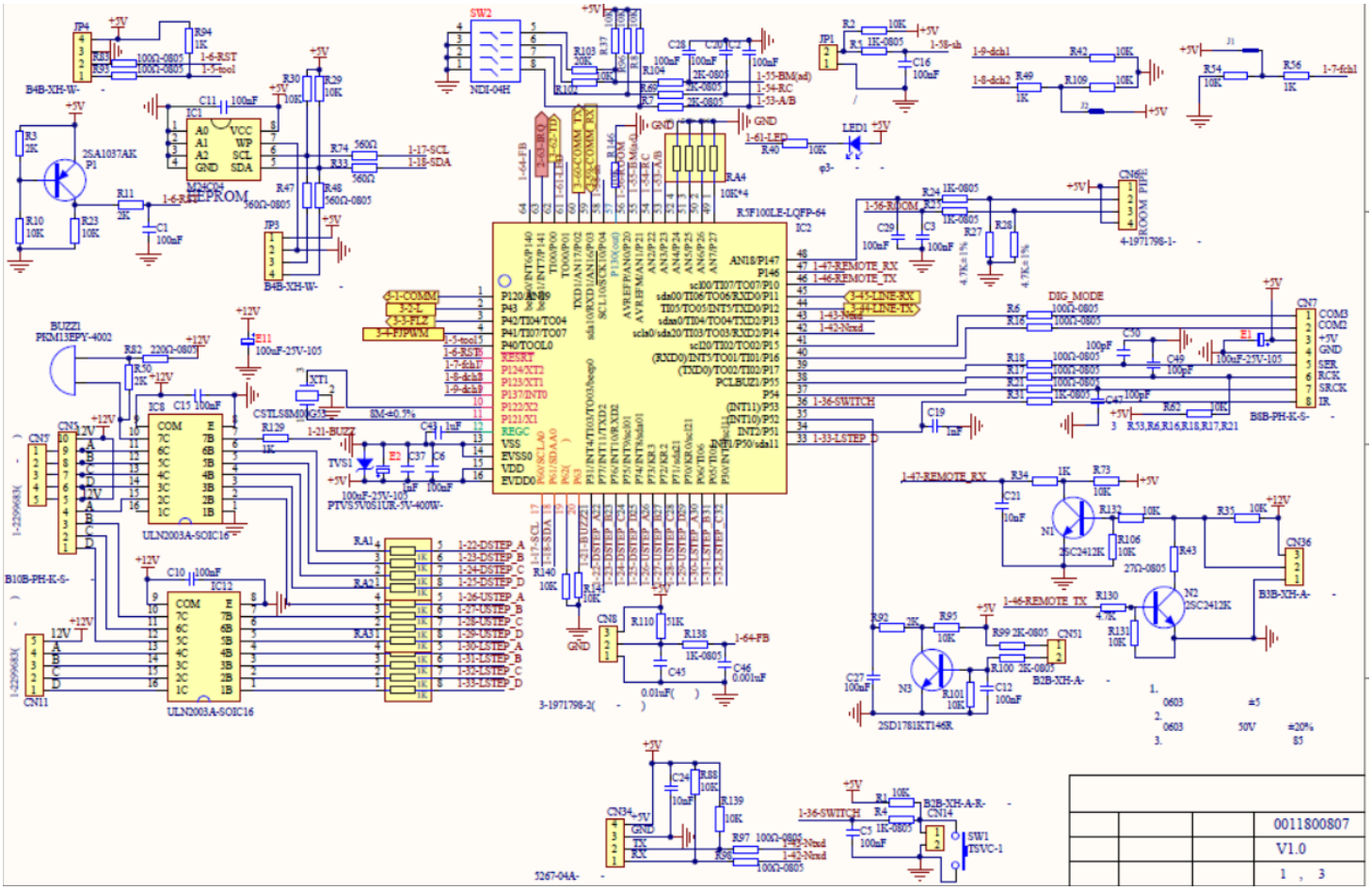
0011800807
V1.0
1 , 3

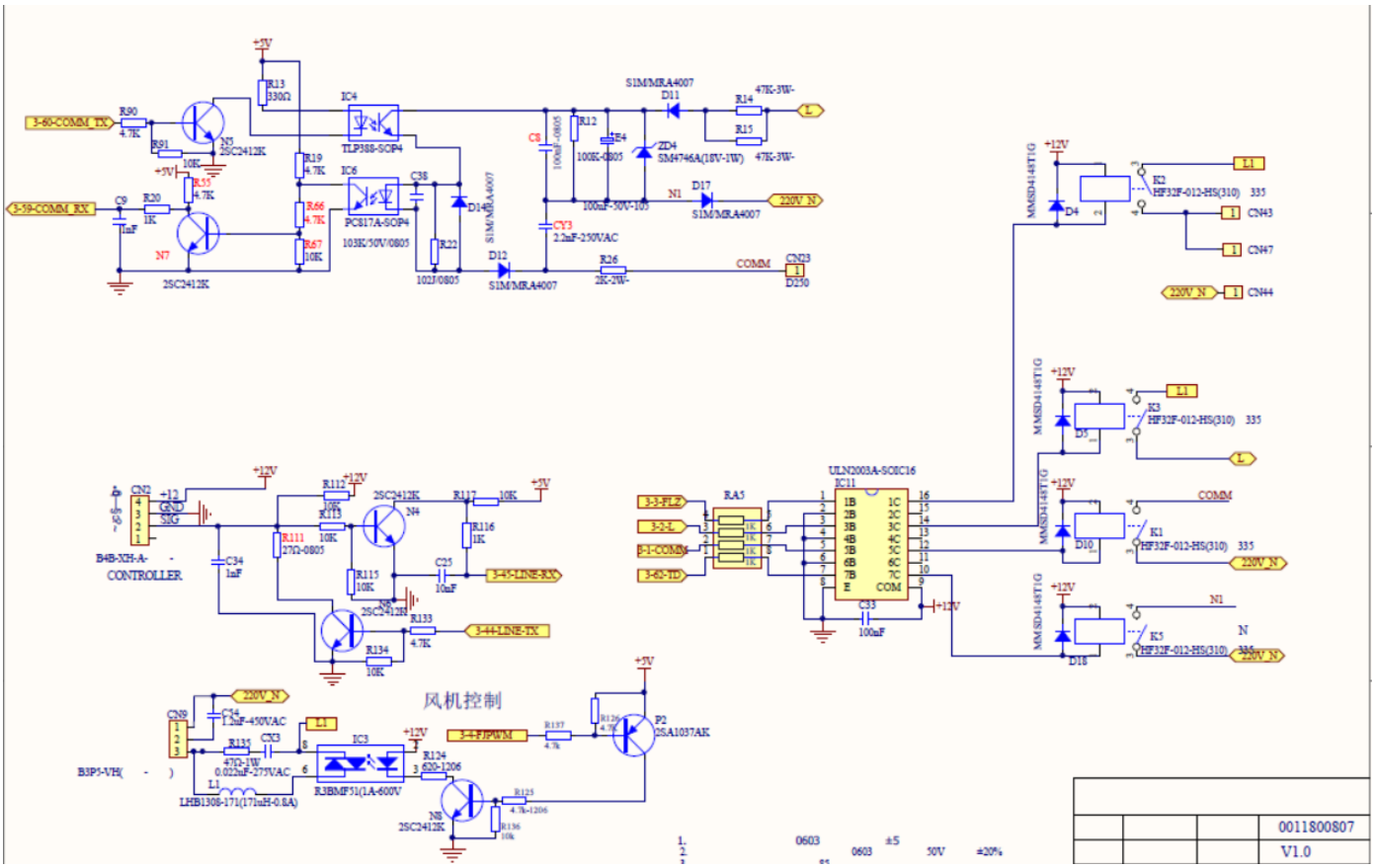
风机控制
0011800807
V1.0

Sincere Forever

Haier Group

Haier Industrial Park, No.1, Haier Road

266101, Qingdao, China_

Http：//www.haier.com

Edited by : Jing yanqin

Wang wanli

Signed by : Yang Wenjun

Approved by: Wu Hongjin

Haier REMOVAL PROCEDURE

Wall Mounted Type

DC Inverter P-Series

SERIES:25T

⚠WARNING

This service information is designed for experienced repair technicians only and is not designed for use by the general public.
It does not contain warnings or cautions to advise non-technical individuals of potential dangers in attempting to service a product.
Products powered by electricity should be serviced or repaired only by experienced professional technicians. Any attempt to service or Repair the product or products dealt with in this service information by anyone else could result in serious injury or death

2015 (Qingdao Haier Air Conditioner General corp. , Ltd)
All rights reserved. Unauthorized copying and distribution is a violation of law

Haier Group **Version：V1** **Date：2020-10-30**

Removal of front panel

Indoor unit

Procedure

Warning Be sure to wait 10 minutes or more after turning off all power supplies before disassembling work.

Step		Procedure	Points
1. Features		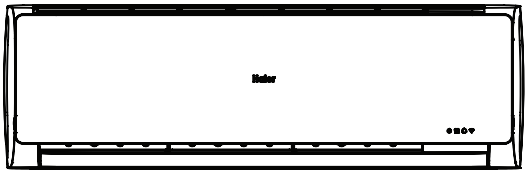	
2. Remove the front panel			
1	Loosen the hook and the service Cover	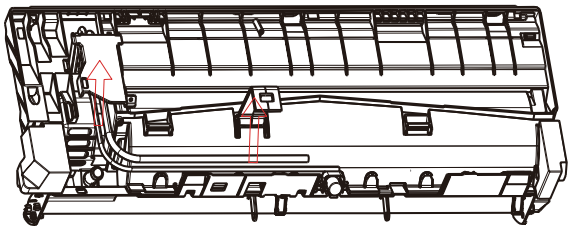	
2	Hold the front panel by the tabs on the both sides and lift it until it stops with a click. Loosen the screw	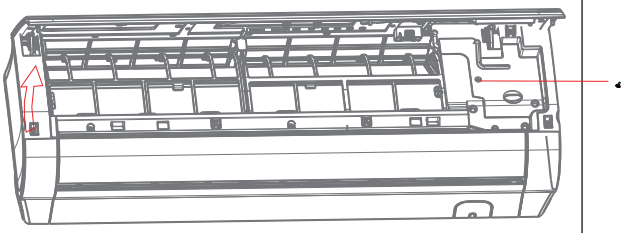	

Procedure

Warning Be sure to wait 10 minutes or more after turning off all power supplies before disassembling work.

Step	Procedure		Points
3	Lift up the control box cover	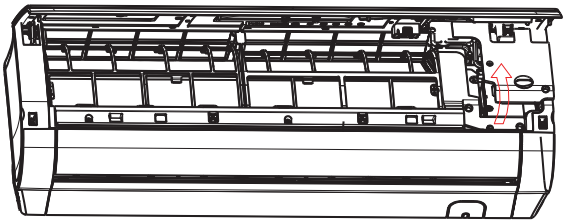	
4	Loosen the screw	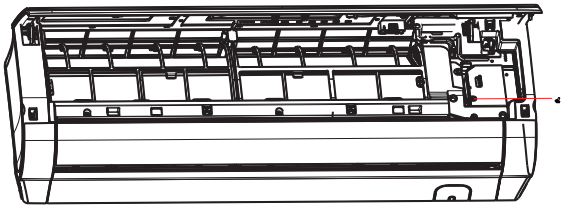	
5	Lift up the control box cover	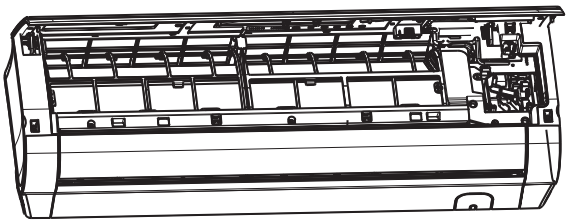	

Removal of front panel

Procedure

Warning Be sure to wait 10 minutes or more after turning off all power supplies before disassembling work.

Step	Procedure		Points
6	Pull the wires out of the control box and then release the pivots on both sides of the unit to remove the front panel.	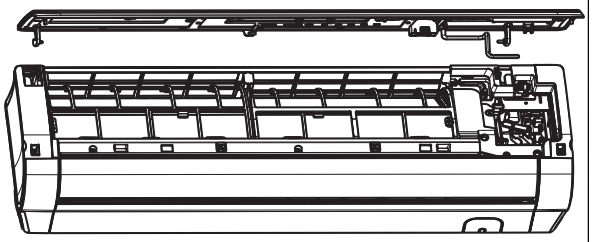	
Remove the air filters			
1	Lift an air filter upwards slightly and then pull it out downwards.	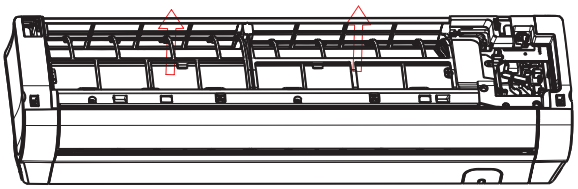	

Remove the casing

Step	Procedure		Points
1	Loosen the marked 6 screws	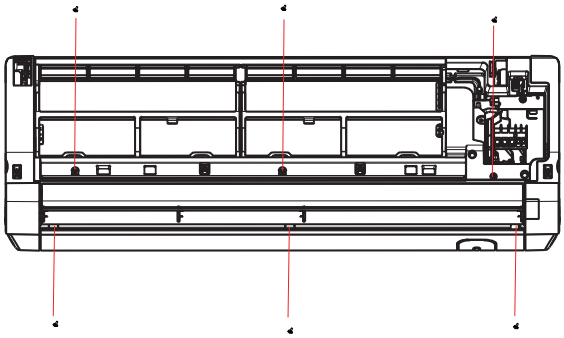	
2	Release the marked three hooks.	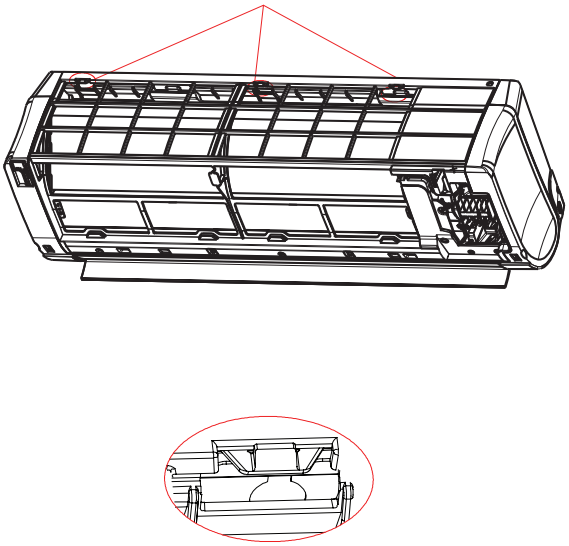	
3	Pull the front grille out horizontally and remove it.	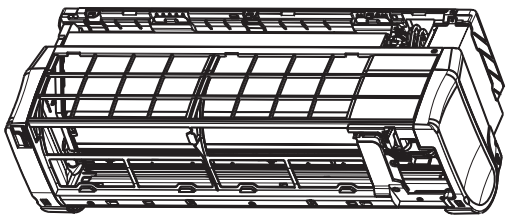	■ When assembling, install the front grille horizontally so as not to stuff the flap inside. ■ When assembling, make sure the three hooks are caught properly.

Removal of horizontal flap and the stepper motor

Procedure

Warning Be sure to wait 10 minutes or more after turning off all power supplies before disassembling work.

Step	Procedure		Points
1	Release the center pivot. Bend the horizontal blade slightly and remove it.	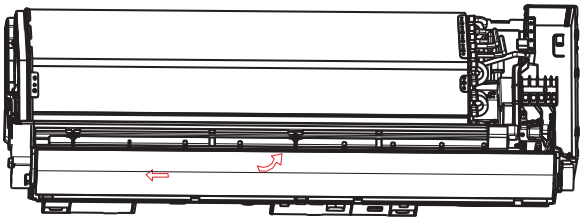	■ The horizontal flap is single.
2	Loosen the screws and remove the stepper motor	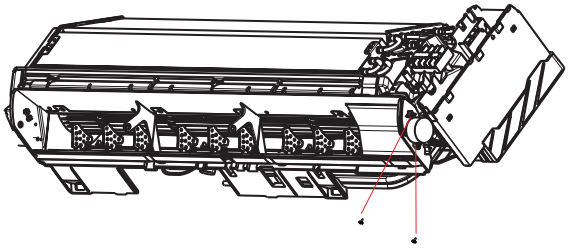 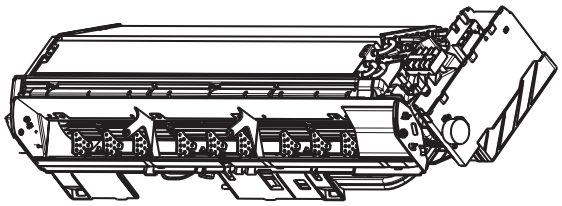	

Removal of horizontal louver and control box

Procedure

Warning Be sure to wait 10 minutes or more after turning off all power supplies before disassembling work.

Step	Procedure		Points
1.	Every blade go round and round,then move it	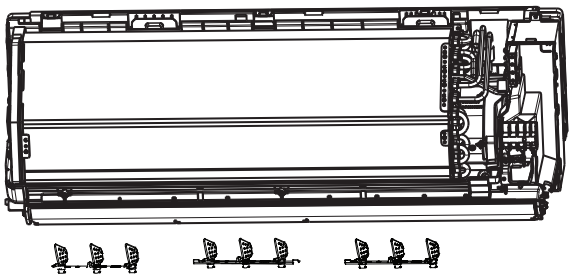	
2.	Loosen the screws	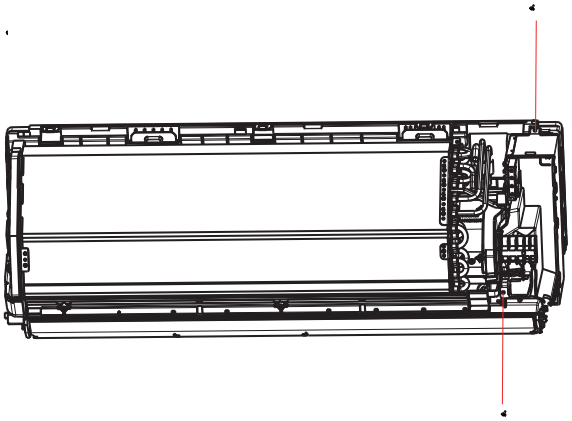 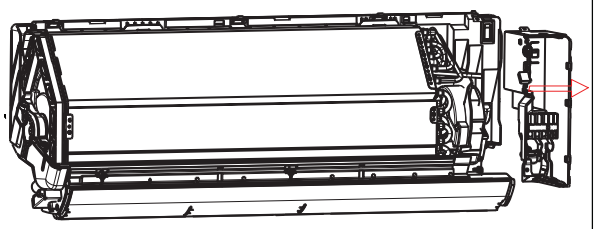	

Removal of Heat Exchanger

Step	Procedure		Points
		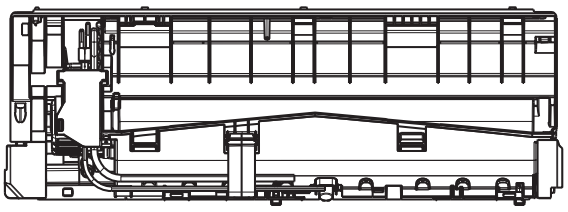	
1	Loosen the screw	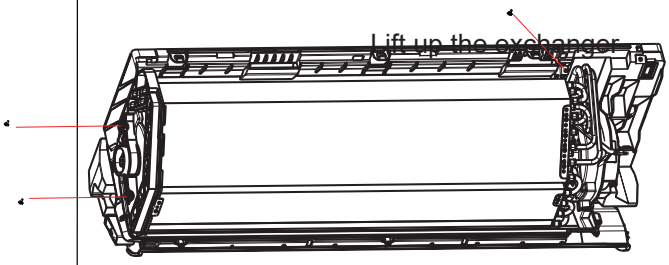	
2	Lift up the exchanger and remove it	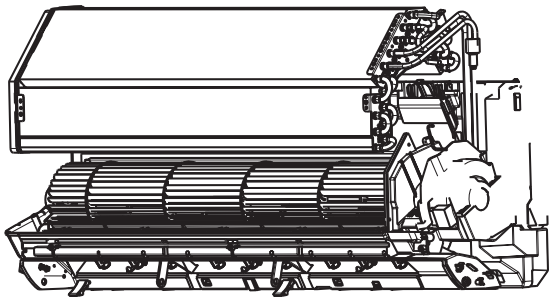	

Removal of Fan Rotor and Fan Motor

Procedure

Warning Be sure to wait 10 minutes or more after turning off all power supplies before disassembling work.

Step	Procedure		Points
1	Loosen the screws.	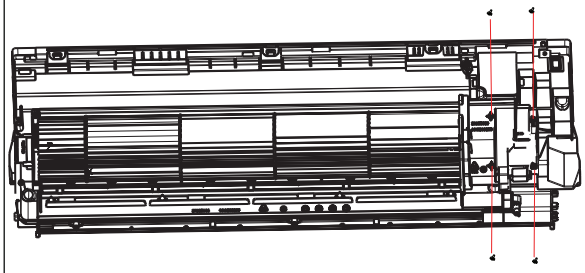	
2	Remove the motor cover	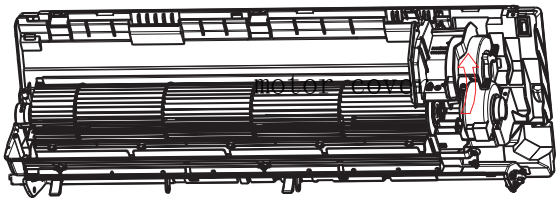 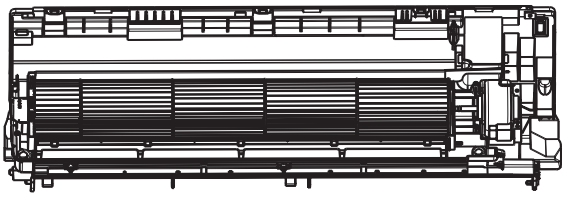	

Step	Procedure		Points
1	Loosen the marked screw.	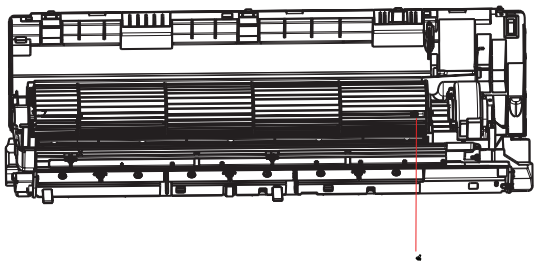	
2	Lift up the right part of the fan motor and slide it to the rightward to remove.	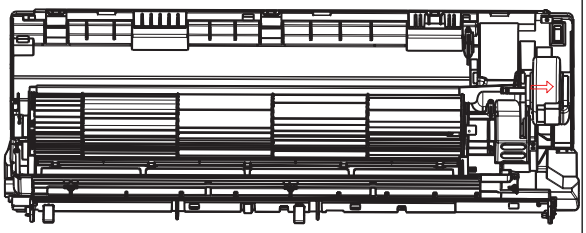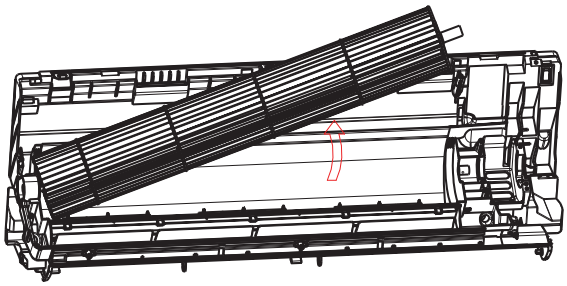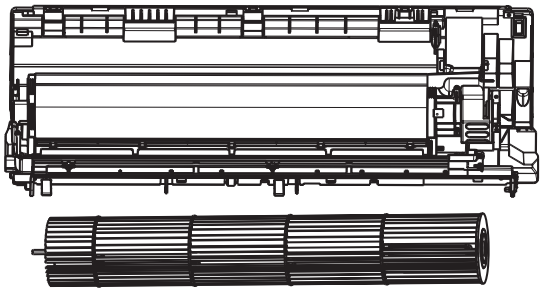	
3	Lift up the right part of the fan and remove it