Installation Manual for Outdoor Unit

AU08NFKERA

AU10NFKERA

AU12NFKERA

No. 0150543934

- Please read this manual carefully before using.
- Keep this operation manual for future reference.

Original instructions

User Manual

MRV S adopts "simultaneous control" type, all indoors should be heating or cooling simultaneously.

To protect compressor, before startup, the unit should be electrified for over 12 hours. If the unit is not used for a long time, please cut off the power to save energy, or the unit will consume the power.

Contents

Safety 1

Installation instruction 3

Installation procedure 6

Electric wiring and the application 21

Failure code 25

Trial operation and the performance 30

Move and scrap the air conditioning 32

Warning

- If the supply cord is damaged, it must be replaced by the manufacturer, its service agent or similarly qualified persons in order to avoid a hazard.
- This appliance is not intended for use by persons (including children) with reduced physical, sensory or mental capabilities, or lack of experience and knowledge, unless they have been given supervision or instruction concerning use of the appliance by a person responsible for their safety.
- Children should be supervised to ensure that they do not play with the appliance.
- This appliance can be used by children aged from 8 years and above and persons with reduced physical, sensory or mental capabilities or lack of experience and knowledge if they have been given supervision or instruction concerning use of the appliance in a safe way and understand the hazards involved. Children shall not play with the appliance. Cleaning and user maintenance shall not be made by children without supervision.
- The appliances are not intended to be operated by means of an external timer or separate remote-control system.
- Keep the appliance and its cord out of reach of children less than 8 years.

Operation condition:
To use the air conditioner normally, please perform as to the below conditions.

Operating Range of Air Conditioner

Cooling dry	Indoor	Max.	DB: 32°C	WB: 23°C
		Min.	DB: 18°C	WB: 14°C
	Outdoor	Max.	DB: 48°C	WB: 26°C
		Min.	DB: -5°C	
Heating	Indoor	Max.	DB: 27°C	
		Min.	DB: 15°C	
	Outdoor	Max.	DB: 27°C	WB: 15.5°C
		Min.	DB: -20°C	

Safety

- This manual should always be accessible and close to this air condition equipment.
- There are two types of indications, "⚠WARNING" and "⚠CAUTION". The indication preventing from death or heavy injury is listed as "⚠WARNING". Even the indication listed as "⚠CAUTION" may also cause serious accident. Both of them are related to safety, and should be strictly followed.
- After installation and start-up commissioning, please handover the manual to the user. The manual should be well kept in safe place and close to the unit.

⚠WARNING

- The installation or the maintenance should be performed by an authorized agency. The wrong operation of this air condition equipment may cause water leakage, electric shock or fire.
- Please install the unit on the top of a solid foundation or structure which is strong enough to support the unit.
- The installation of this air condition equipment should follow local construction codes.
- Use the right cable size, secure the terminal firmly, organize the cables well and make sure no tension is added on cables. Cable insulation should not be damaged. The incorrect installation may lead to overheat or fire.
- When installing or moving the unit, the refrigerant system should be vacuumed and recharged with R-410A refrigerant. If any other gas enters the system, it may lead to abnormal high pressure which may cause damage or injury.
- Please use the proper manifolds or branches during the system installation. The wrong parts may cause refrigerant leakage.
- Keep the drain pipe away from toxic gas vents to prevent possible pollution of indoor environment.
- During or after the installation, please check whether there is refrigerant leakage. If any leakage, please take any measures for ventilation. The refrigerant may be toxic at some concentration levels.
- The unit is not explosion-proof. Please keep it away from flammable gases.
- The drain pipe should be installed per this manual to ensure proper drainage. The pipe should be well insulated to avoid condensation. Wrong installation may lead to water leakage.
- Both liquid pipe and the gas pipe should be also well insulated. Not enough insulation may lead to system performance deterioration or humidity formation.
- This air condition equipment is not intended to be operated by persons with lack of experience and training, unless they have supervision or instruction concerning use of this air condition equipment.
- Please keep children away from this air condition equipment.

Safety

⚠CAUTION

- Grounding wire should be connected with the grounding bar. The grounding wire can not be connected to the gas pipe, water pipe, lightening rod or the telephone grounding wire. Improper grounding may cause electric shock.
- Units installed on roof should have appropriate access and handrail.
- Use the wrench to fasten the nut and flare at proper torque. Excessive torque may cause flared section to broke leading to refrigerant leakage.
- After refrigerant pipe installation, please take nitrogen leakage test to avoid refrigerant leakage.
- R-410A is the only permitted refrigerant.
- To avoid mischarging wrong refrigerant, the check valve diameter is changed for R-410A. To strengthen the pipe, the flared pipe dimension is also changed. Please use R-410A specified tools as shown below.

	R-410A specified tools	Remarks
1	Gauge manifold	Range:HP > 4.5MPa, LP > 2MPa
2	Charge hose	Pressure:HP:5.3MPa,LP:3.5MPa
3	Electronic weight for charging R410A	No other means permitted
4	Torque wrench	
5	Flare tool	
6	Copper pipe gauge for adjusting projecting margin	
7	Vacuum pump fitting	Vacuum pump must be equipped with check valve
8	Leakage detector	Only Helium detector permitted

- When charging refrigerant, the refrigerant must be in liquid state from the tank.
- To prevent EMC interference on other appliances, please keep indoor unit, outdoor unit, power cable and connecting wire at least 1m away from those appliances .
- Fluorescent lamp (reverse phase or rapid start type) may interfere the remote controller's signal. Please install indoor unit away from fluorescent lamp. The farther the better.

Installation instruction

For installation, please review the items below:

- Is the connected units quantity and the total capacity in the allowable range?
- Is the refrigerant pipe length in the limited range?
- Is the pipe size proper? And if the pipe installed horizontally?
- Is the branch pipe installed horizontally or vertically?
- Is the additional refrigerant counted correctly and weighed by the standard balance?
- Is there refrigerant leakage?
- Is all the indoor power supplies can be on/off simultaneously?
- Is the power voltage in compliance with the data marked on the rating label?
- Is the address of indoors has been set?

(1) Before installation

1) Before installation, check if the model, power supply, pipe, wires and parts purchased respectively are correct.
2) Check if the indoors and outdoors can be combined as the following.

Outdoor	Indoor	
Capacity(X 100W)	Indoor Qty	Total indoor capacity(X 100W)
AU08NFKERA	13	113~293
AU10NFKERA	16	140~364
AU12NFKERA	19	158~410

Installation instruction

(2) Installation place selection

Air-conditioner can't be installed in the place with inflammable gas. Or it will cause fire hazard.

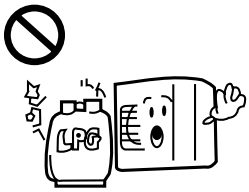

The unit should be installed at the place where the cold/hot air or noise will not interfere the neighbours.

The unit should be installed at the place with good ventilation. No obstacle at the air inlet/outlet. And no strong wind blows the unit.

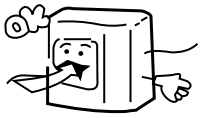

The installation space refers to the latter info.

- The place where the water can flow fluently.
- The place where no other heat source will affect the unit.
- Pay attention to the snow against clogging the outdoor.
- In installation, install the anti-vibration rubber between the unit and the bracket.

The unit should be installed at the strong enough place. Or it will cause vibration and noise.

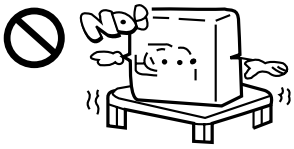

- The unit is better not be installed at the below places, or it will cause damage.
- The place where there is corrosive gas (spa area etc).
- The place blowing salty air (seaside etc).
- Exsits the strong coal smoke.
- The place with high humidity.
- The place where there is device emitting Hertzian waves.
- The place where voltage changes greatly.

Installation instruction

(3) Transportation and hoisting

Hoisting

- Please remove the outdoor unit to the installation location as far as possible near place befor open the packaging.
- Forbid on the equipments to place anything, need to use 2 ropes while promoting outdoor.
- Please according to following way hoisting outdoor:
  Ensure that the outdoor unit when hosting the level to rise slowly.
  Do not remove the packaging.
  When hoisting do not have to tie up the elevator to the unit hits on the packaging and the outside wrapping.
  When hoisting exterior must use the suitable protection.

Handling

Before the installation,outdoor do not deposit any material,otherwise likely has the fire or the accident.
When handling unit,please operate as shown in the following figure and note the following points
1.Forbids to demolish the wooden foundation.
2.Prevent the outdoor to incline.
3.Should be handling more than two.

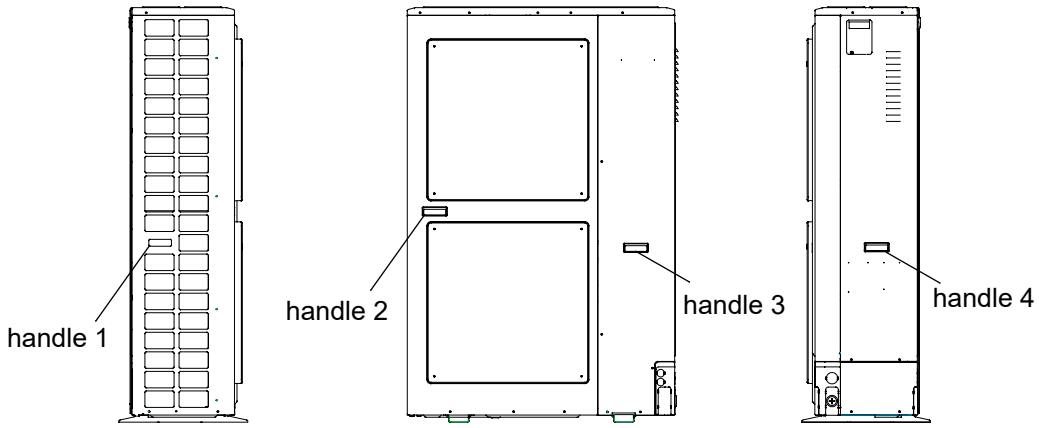

Installation procedure

Outdoor Installation

Installation location

- Outdoor unit should be placed in well ventilated and dry place.
- Outdoor noise and exhaust should not affect neighbors and around the ventilation.
- Ensure the ground steadily reliable.
- Do not install the outdoor unit on high oil,salt spray or harmful gases.
- Don't being installed to electromagnetic wave can directly radiate an electricity box and keep off electromagnetic wave radiation possibly, at least more than 3 meters.
- When ice snow overlay area installs outdoor unit, please add to defend snow cover.
- Outdoor unit installed in the shade,avoiding direct sunlight or high temperature heat sources of radiation.
- Do not install in dusty or polluted place to prevent outdoor unit heat exchanger jam.
- The outdoor unit should install in the public unapproachable place.

Installation and maintenance space

As shown below, install the outdoor unit should allow sufficient space for handing and maintenance.

Case 1: stumbling block on the inlet ,also upside opens.

Single installation around the opening

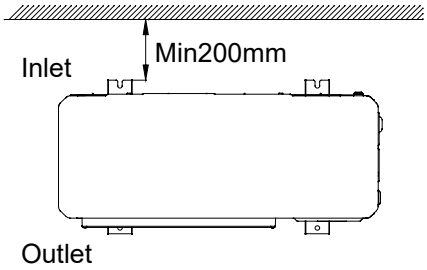

Single installation around the closed

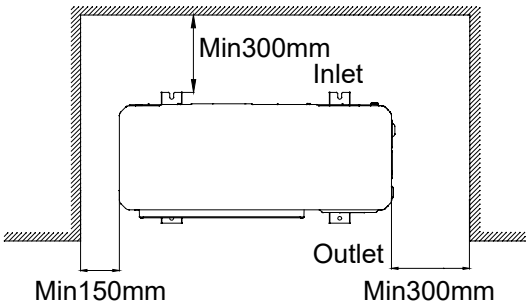

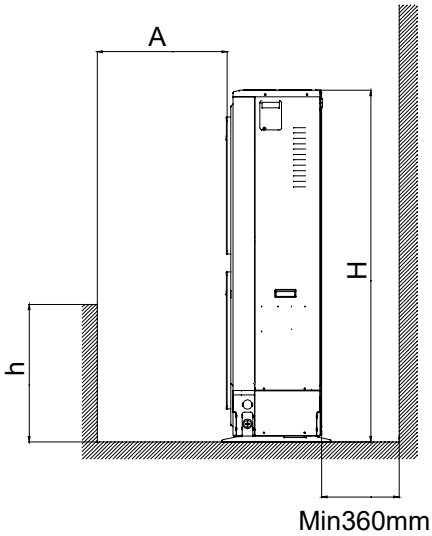

Installation procedure

Multi Outdoor

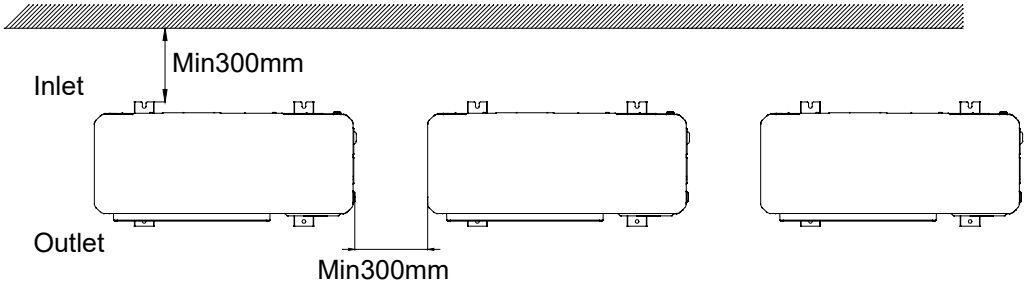

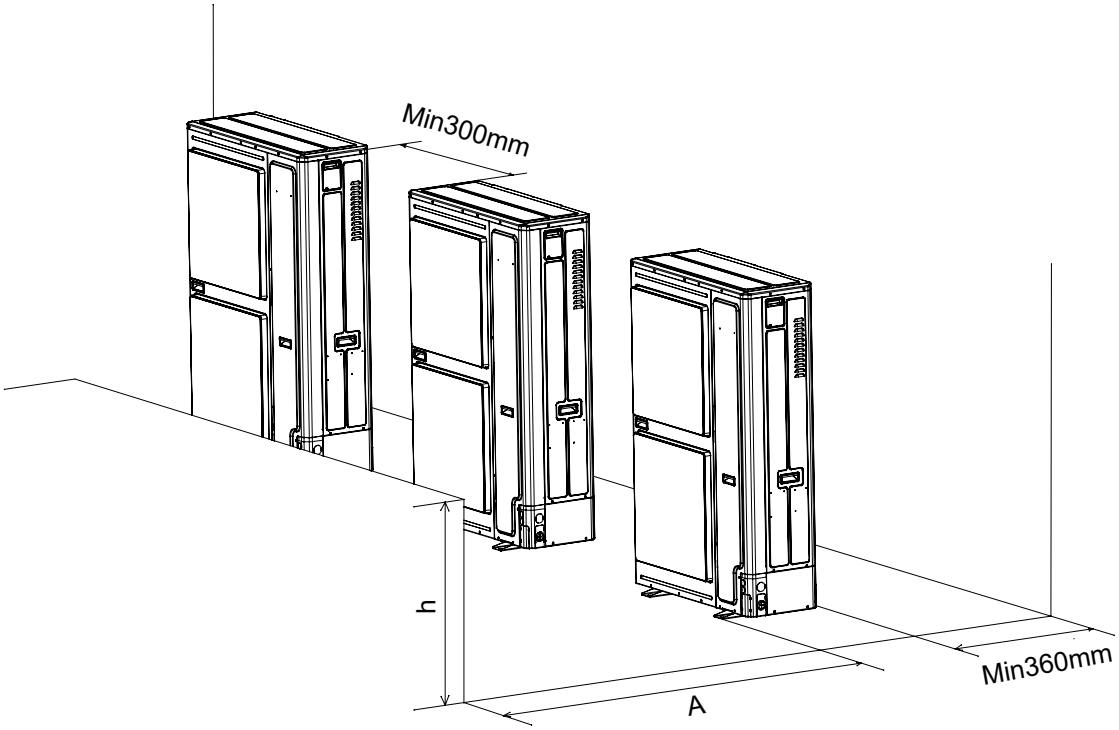

Installation procedure

Case 2: stumbling block on the inlet and top side

Single Outdoor

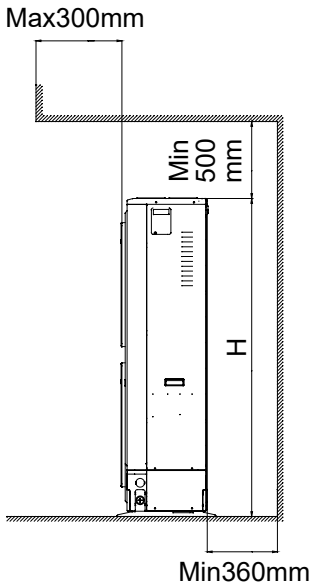

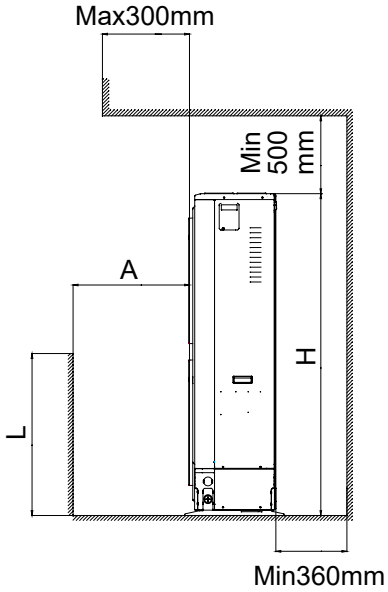

Multi Outdoor

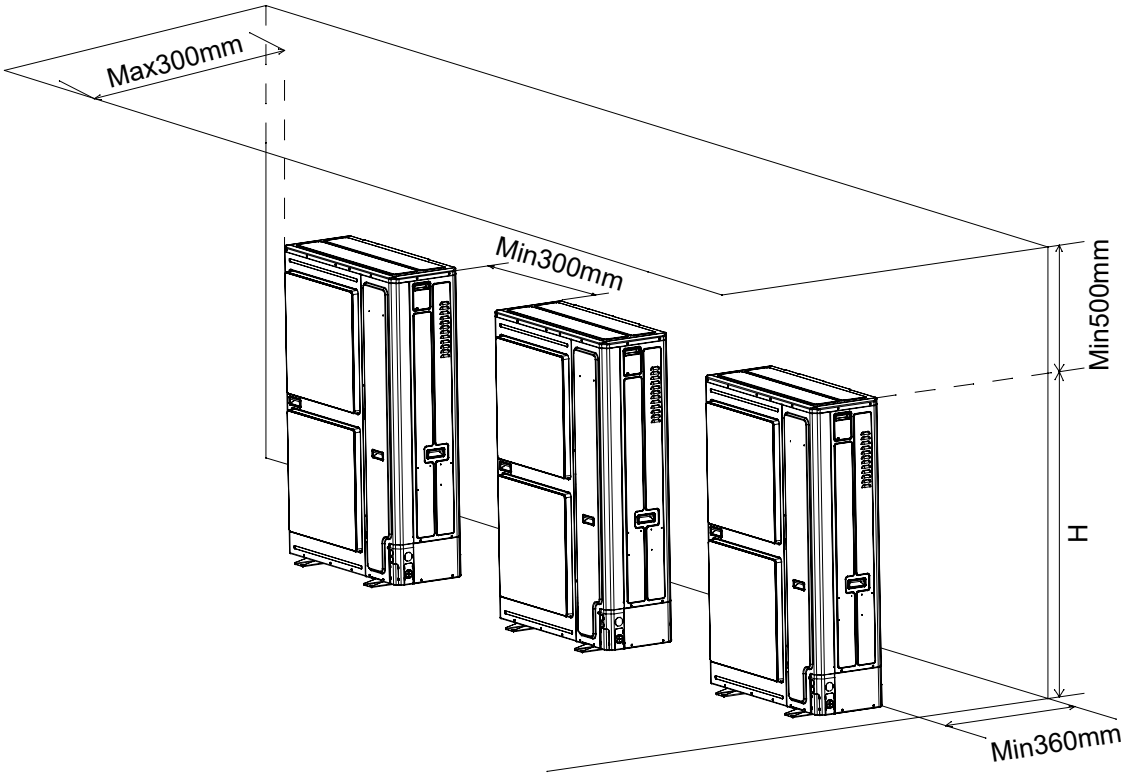

Installation procedure

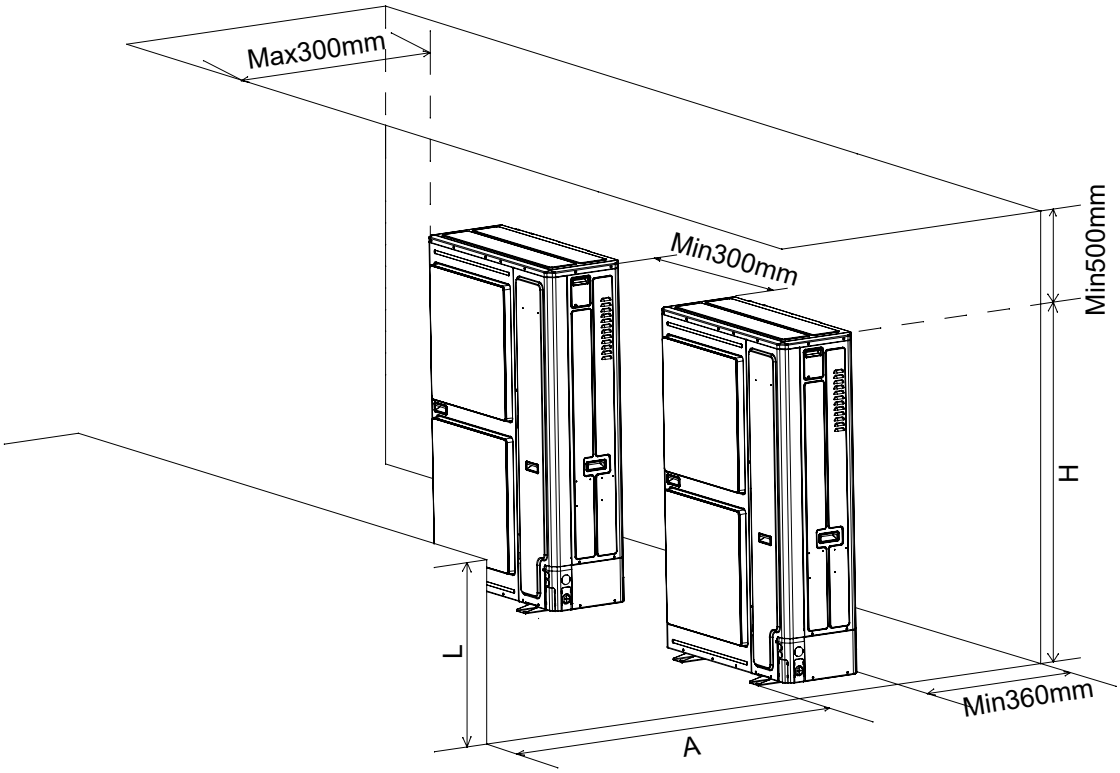

Case 3:stumbling block on the outlet, both right and left side

Single Outdoor

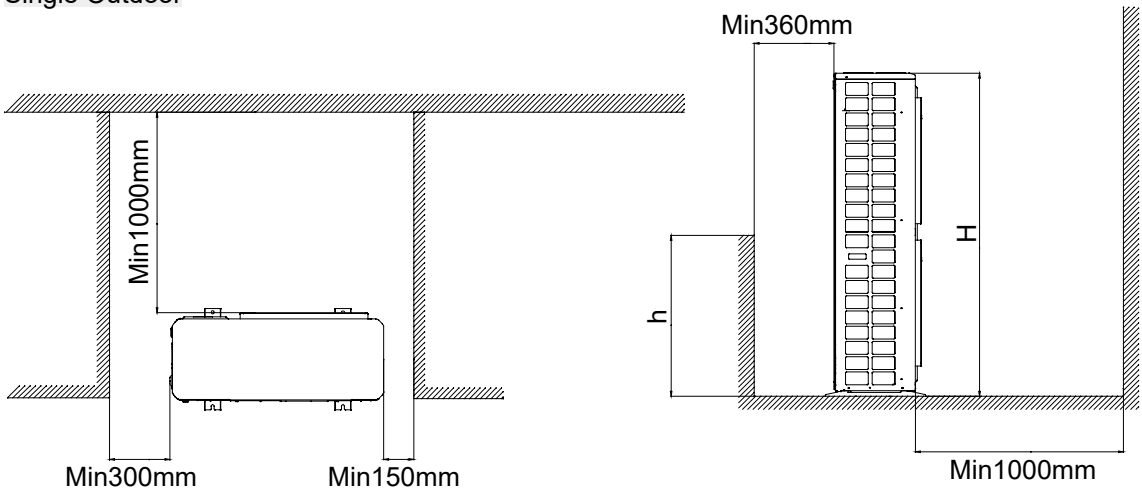

Installation procedure

Multi Outdoor

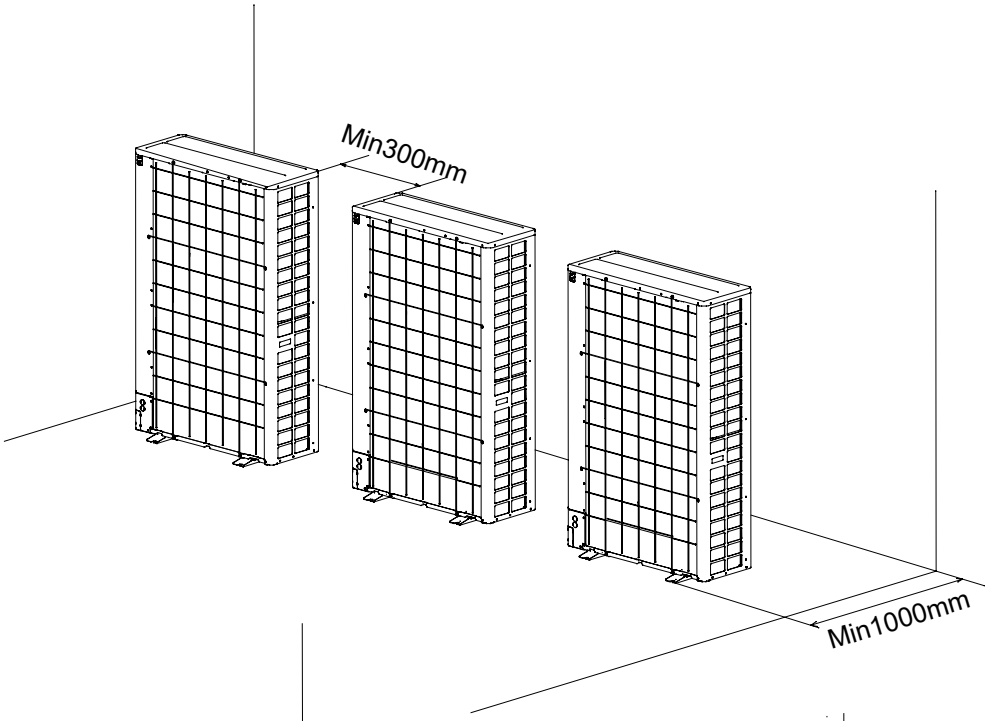

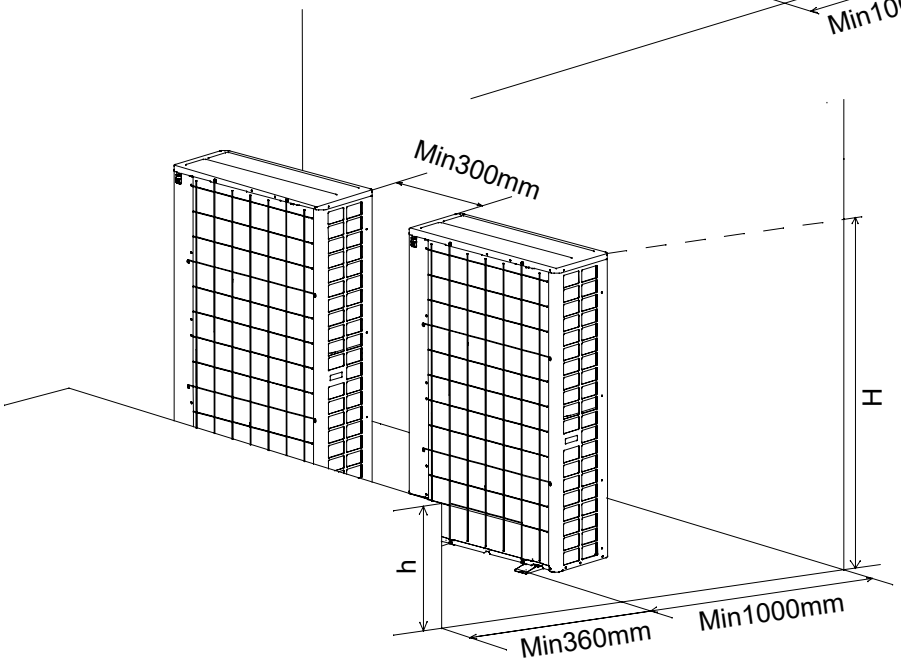

If h>H, please set the outdoor on the foundation to make sure H≥h.
H=The height of outdoor and foundation

h	A
0<h≤1/2H	Over 600
1/2H<h≤H	Over 1400

Note: Avoid making air short cycle in any case.

Installation procedure

Multi Row Outdoor

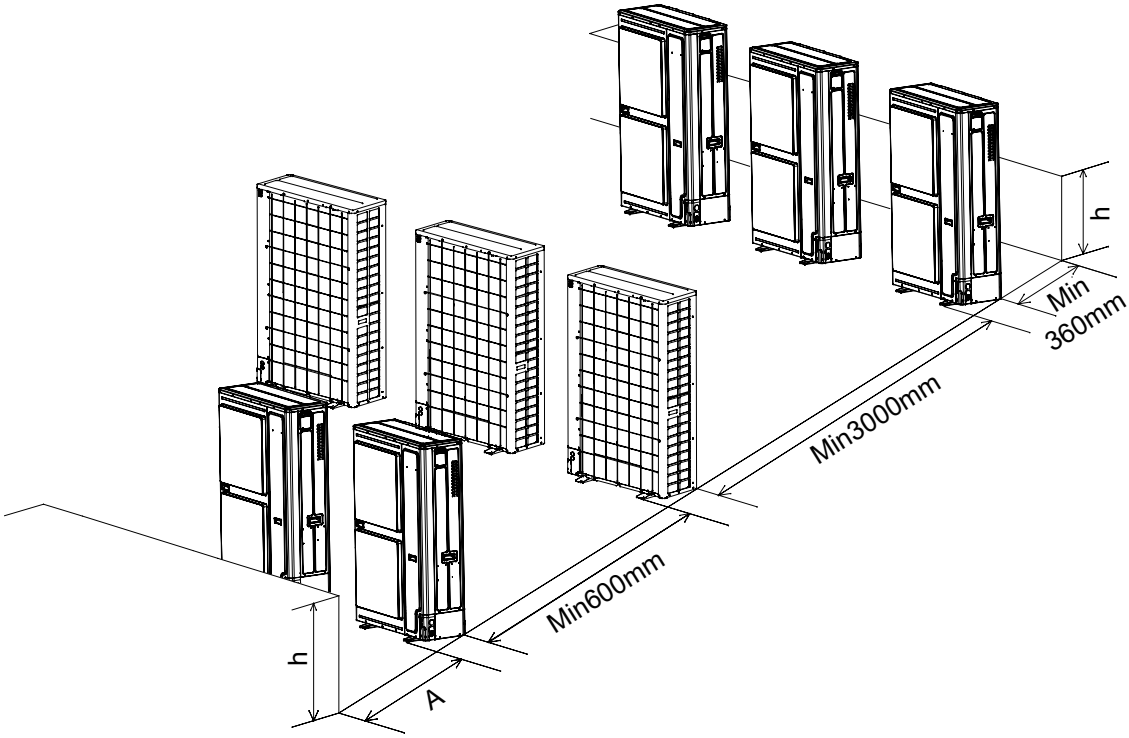

Note:
Make sure the distance at least 300mm between two neighbor units and no stumbling block.

h	A
0<h≤1/2H	Over 600
1/2H<h≤H	Over 1400

Installation procedure

A. Refrigerant pipe connection

Pipe connection method:

- To ensure the efficiency, the pipe should be as short as possible.
- Daub the refrigerant oil on the connector and the flare nut.
- When bending the pipe, the bending semi-diameter should be as large as possible against the pipe being broken or bent.
- When connecting the pipe, aim at the center to thread the nut by hand and tighten it with the double spanners.
- Fastening torque please refers to "pipe specs and fastening torque" on page 15.
- Don't let the impurity such as sand, water etc into the pipe. Antifouling measures refer to page 13.

When fastening and loosing the nut, operate with double spanners, because only one spanner cannot execute firmly.

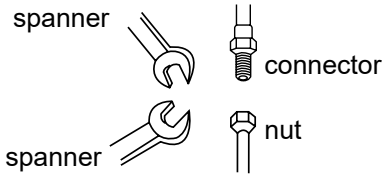

If threading the nut as not aiming at the center, the screw thread will be damaged, further it will cause leakage.

Cautions in piping installation:

1. When welding the pipe with hard solder, charge nitrogen into the pipe against oxidation. The pressure gauge should be set at 0.02MPa.Perform the procedure with nitrogen circulation. Otherwise, the oxide film in the pipe may clog the capillary and expansion valve resulting in accident.
2. The refrigerant pipe should be clean. If the water and the other impurity enter the pipe, charge the nitrogen to clean the pipe. The nitrogen should flow under the pressure of about 0.5Mpa and when charging the nitrogen, stop up the end of the pipe by hand to enhance the pressure in the pipe, then loose the hand (meanwhile stop up the other end).
3. The piping installation should be executed after the stop valves are closed.
4. When welding the valve and the pipe, cool down the valve with wet towel.
5. When the connection pipe and the branch pipe need to be cut down, please use the special shears and cannot use the saw.
6. When welding copper pipe, use the phosphor copper welding rod without any welding flux. (welding flux will damage the piping system. The welding flux containing chlorine will corrode pipe, especially, the welding flux with fluorin will damage refrigeration oil.)

Pipe material and specs selection

1. Please select the refrigerant pipe of the below material.
   Material: the phosphoric oxidize seamless copper pipe, model: C1220T-1/2H (diameter is over 19.05); C1220T-0(diameter is below 15.88).
2. Thickness and specs:
   Confirm the pipe thickness and specs according to the pipe selection method(the unit is with R410A, if the pipe over 19.05 is 0-type, the pressure preservation will be bad, thus it must be 1/2H type and over the min. thickness.
3. The branch pipe and the gather pipe must be from Haier.
4. When installing the stop valve, refer to the relative operation instruction.
5. The pipe installation should be in the allowable range.
6. The installation of branch pipe and gather pipe should be performed according to the relative manual.

Installation procedure

Anti-fouling measures

First, clean the pipe.

Position	Installation period	Measures
Outdoor	More than 1 month	Flat the pipe end
	Less than 1 month	Flat the pipe end or seal with adhesive tape
Indoor	Nothing to do with period	

Pipe specification:

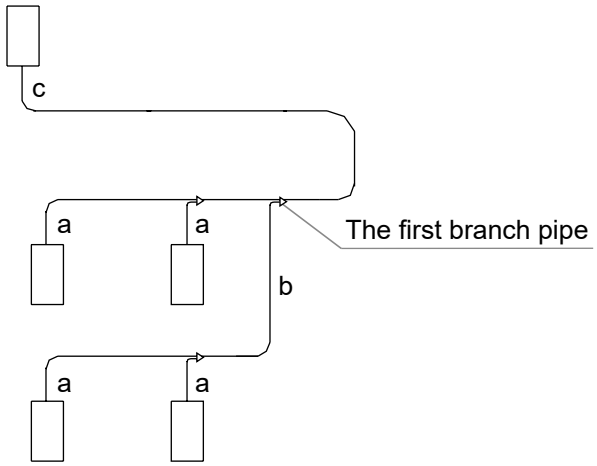

1. Pipe "a" diameter (between indoor and branch pipe) depends on indoor pipe, the diameter of the gas and liquid pipe of the indoor units shall be according to the installation manual for indoor units.

2. Pipe "b" diameter (between branch pipes)

Total indoor capacity after the branch pipe (kW)	Gas pipe (mm)	Liquid pipe (mm)
<16.8kW	Ø15.88	Ø9.52
16.8kW≤X<22.4kW	Ø19.05	Ø9.52
22.4kW≤X<33.0kW	Ø22.22	Ø9.52
33.0kW≤X<47.0kW	Ø28.58	Ø12.7

Note:
Adjust the diameter on field (changing pipe is needed)
When the latter indoor total capacity is less than 14.0kw, pipe b will use the specs as the pipe a.

Installation procedure

3. Pipe "c" diameter (main pipe, between outdoor gather pipe and the first branch pipe)

Model	Main pipe		Enlarged main pipe	
	Gas pipe (mm)	Liquid pipe (mm)	Gas pipe (mm)	Liquid pipe (mm)
AU08NFKERA	Ø19.05	Ø9.52	Ø22.22	Ø12.7
AU10NFKERA	Ø22.22	Ø9.52	Ø25.4	Ø12.7
AU12NFKERA	Ø25.4	Ø12.7	Ø28.58	Ø15.88

Note:
When the distance from outdoor unit to the longest indoor unit is over 90m, the diameter of main pipe should be enlarged.

Copper pipe selection:

Material	O type pipe: Soft pipe			
Pipe diameter (mm)	Ø6.35	Ø9.52	Ø12.7	Ø15.88
Thickness(mm)	0.8	0.8	1.0	1.0

Material	Hard pipe				
Pipe diameter (mm)	Ø19.05	Ø22.22	Ø25.4	Ø28.58	Ø31.8
Thickness(mm)	1.0	1.0	1.0	1.0	1.1

Long pipe and high drop

1. Applicable range

Item \ Model		Outdoor
Single way total pipe length		300m
Single way pipe length		Max.: 150m (Equal Length 175m)
Main pipe beween outdoor to 1st branch		Max.: 110m (Equal Length 135m)
Pipe length between outdoors		Less than 10m to 1st branch pipe
Height difference between indoor and outdoor	Outdoor is upper	Max. 50m
	Outdoor is lower	Max. 40m
Height difference between outdoors (in the same system)		Within 5m (better be horizontal)
Height difference between indoors		Max. 15m

Unit pipe spec and connection method (unit: mm)

A. Outdoor unit

Model	Gas pipe side		Liquid pipe side	
	Diameter (mm)	Connecting method	Diameter (mm)	Connecting method
AU08NFKERA	Ø19.05	Flared joint	Ø9.52	Flared joint and Brazing
AU10NFKERA	Ø22.22	Flared joint and Brazing	Ø9.52	
AU12NFKERA	Ø25.4		Ø12.7	Flared joint

Installation procedure

B. Indoor unit

Model Capacity	Gas pipe side		Liquid pipe side	
	Diameter (mm)	Connecting method	Diameter (mm)	Connecting method
07	Ø9.52	Braze	Ø6.35	Flared
09	Ø9.52		Ø6.35	
12	Ø12.7		Ø6.35	
16	Ø12.7		Ø6.35	
18	Ø12.7		Ø6.35	
24	Ø15.88		Ø9.52	
28	Ø15.88		Ø9.52	
30	Ø15.88		Ø9.52	
38	Ø15.88		Ø9.52	
48	Ø15.88		Ø9.52	
72	Ø25.4		Ø9.52	
96	Ø25.4		Ø9.52	

C. Pipe spec and the torque

Diameter (mm)	Torque(N·m)
Ø6.35	14~18
Ø9.52	34~42
Ø12.7	49~61
Ø15.88	68~82
Ø19.05	84~98

Branch pipe

Branch pipe selection:

Total indoor capacity(100W)	model(optional)
Less than 335	FQG-B335A
More than 335, less than 506	FQG-B506A

Outdoor unit type
The master unit will choose the closest one to the 1st branch pipe.

Note:
1. When connecting the outdoor branch pipe and the outdoor, please pay attention to the outdoor pipe dimension.
2. When adjusting the diameter among outdoor branch pipe and among the units, please must execute at the branch pipe side.
3. Please install the outdoor branch pipe (gas/liquid side) in horizontal or vertical direction.
4. When welding with hard solder, please must blow nitrogen. If not, a number of oxide will be produced and cause heavy damage.Besides,to prevent water and dust into the pipe, please make the brim as outer roll.

Installation procedure

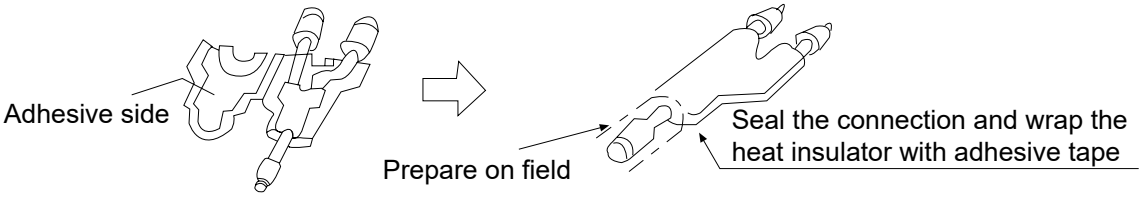

Cut off pipe with the cutter

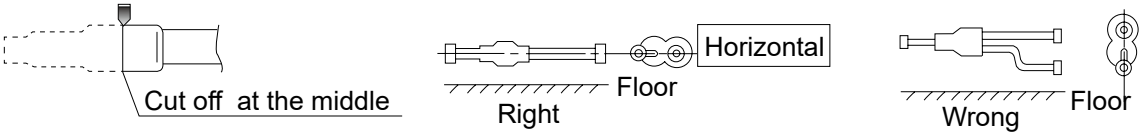

Pipe installation

When doing the piping connection, please do the following:

- Please don't let the pipe and the parts in the unit collide each other.
- When connecting the pipes, close the valves fully.
- Protect the pipe end against the water, impurity into the pipes (welding after being flat, or being sealed with adhesive tape).
- Bend the pipe as large semi-diameter as possible(over 4 times of the pipe diameter).
- The connection between outdoor liquid pipe and the distributing pipe is flared type. Please expand the pipe with the special tool for R410A after installing the expanding nut. But if the projecting pipe length has been adjusted with the copper pipe gauge, you can use the original tool to expand the pipe.
- Since the unit is with R410A, the expanding oil is ester oil, not the mineral oil.
- When doing the flare connection, please do the following: When connecting the expanding pipe, fasten the pipes with double-spanner. The torque refers to the former info.

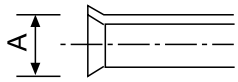

Expanding pipe:A(mm)

Pipe outer diameter (mm)	A $^{0}_{-0.4}$
Ø6.35	9.1
Ø9.52	13.2
Ø12.7	16.6
Ø15.88	19.7

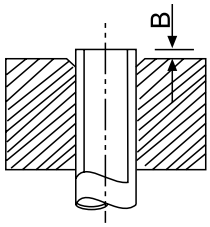

Projecting length of pipe to be expanded:B(mm)

Pipe outer diameter (mm)	When it is hard pipe	
	Special tool for R410A	The former tool
Ø6.35	0-0.5	1.0-1.5
Ø9.52		
Ø12.7		
Ø15.88		

- The outdoor gas pipe and the refrigerant distributing pipe, as well the refrigerant distributing pipe and the branch pipe should be welded with hard solder.
- When doing the braze connection, please do the following: Brazing the pipe at the same time charge the nitrogen. Or it will cause a number of impurity (a film of oxidation) to clog the capillary and the expansion valve, further cause the deadly failure.

Installation procedure

Operation procedure

- Brazing the pipe at the same time charge the nitrogen. Or it will cause a number of impurity (a film of oxidation) to clog the capillary and the expansion valve, further cause the deadly failure.

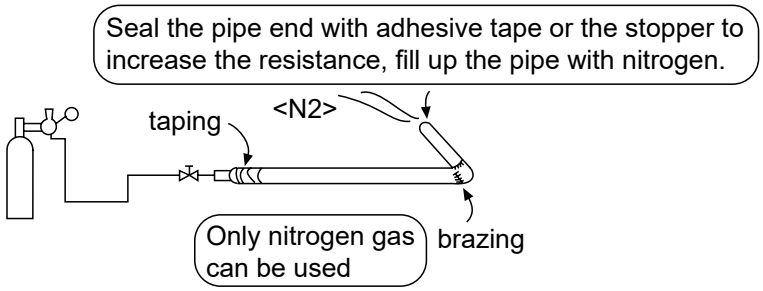

- Protect the pipe end against the water, impurity into the pipes (welding after being flat, or being sealed with adhesive tape).

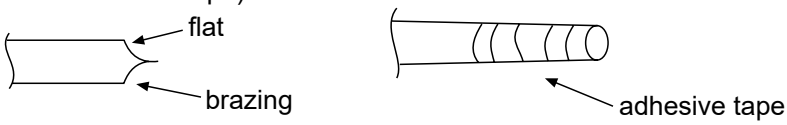

- The refrigerant pipe should be clean. The nitrogen should flow under the pressure of about 0.5Mpa and when charging the nitrogen, stop up the end of the pipe by hand to enhance the pressure in the pipe, then loose the hand (meanwhile stop up the other end).

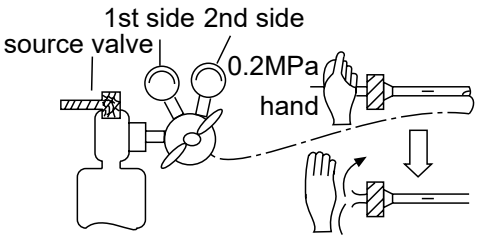

- When connecting the pipes, close the valves fully.
- When welding the valve and the pipes, use the wet cloth to cool down the valve and the pipes.

B. Leakage test

1. The outdoor unit has been executed the leakage test in the factory. The pipe should be executed leakage test individually and forbidden to test after connecting with stop valve.
2. Refer to the below figure to charge the nitrogen into the unit to take a test. Never use the chlorin, oxygen, flammable gas in the leakage test. Apply pressure both on the gas pipe and the liquid pipe.
3. Apply the pressure step by step to the target pressure.
   a. Apply the pressure to 0.5MPa for more than 5 minutes, confirm if pressure goes down.
   b. Apply the pressure to 1.5MPa for more than 5 minutes, confirm if pressure goes down.
   c. Apply the pressure to the target pressure (4.15MPa), record the temp. and the pressure.
   d. Leave it at 4.15MPa for over 1 day, if pressure does not go down, the test is passed. Meanwhile, when the temp. changes for 1degree, pressure will change 0.01MPa as well. Correct the pressure.
   e. After confirmation of a~d, if pressure goes down, there is leakage. Check the brazing position, flared position by laying on the soap. modify the leakage point and take another leakage test.
4. After leakage test, must execute the evacuation.

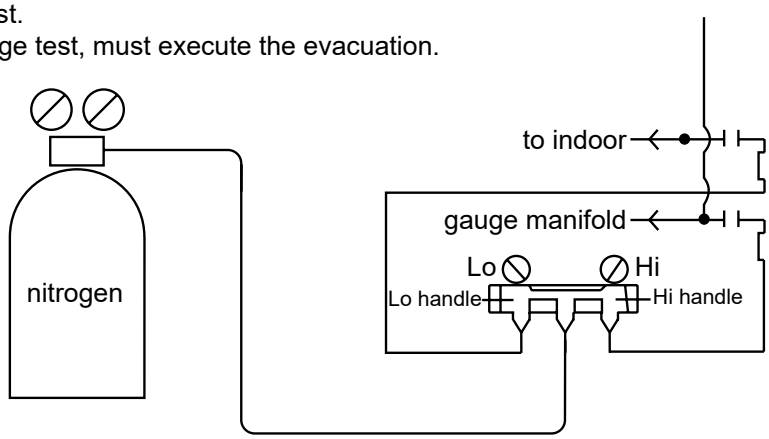

C. Evacuation

Evacute at the check valve of liquid stop valve and both sides of the gas stop valve. The oil equalization pipe also must be vacuum (executed at the oil equalization pipe check valve respectively).

Operation procedure:

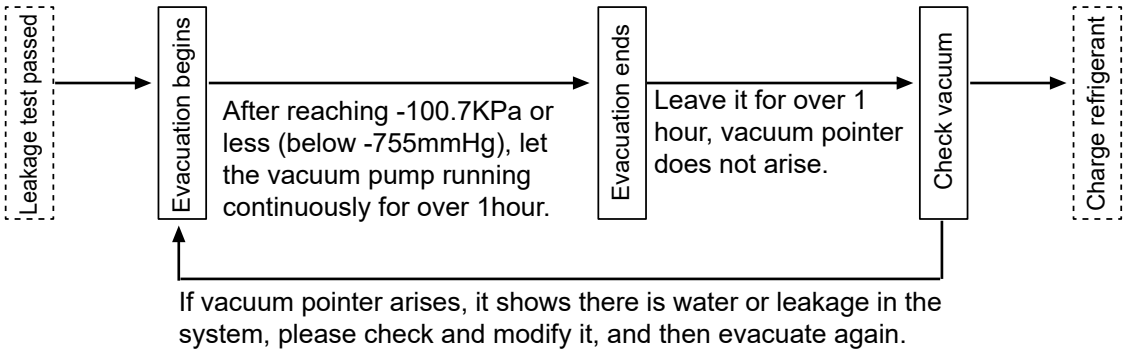

Installation procedure

Because the unit is with refrigerant R410A, the below issues should be paid attention:

- To prevent the different oil into the pipe, please use the special tool for R410A, especially for gauge manifold and charging hose.
- To prevent the compressor oil into the refrigerant cycle, please use the anti-counter-flow adapter.

D. Check valve operation

Open/close method:

- Take down the valve cap, gas pipe turns to "open" state as right figure.
- Turn the liquid pipe with hexangular spanner until it stops. If opening the valve strongly, the valve will be damaged.
- Tighten the valve cap.

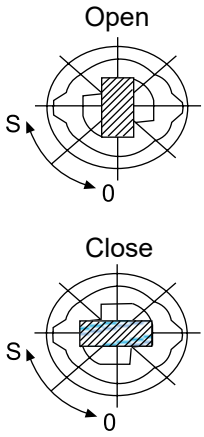

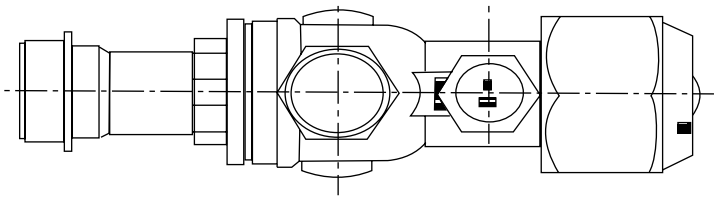

Tighten torque as the table below:

Tighten torque N·m			
	Shaft (valve body)	Cap (cover)	T-shape nut (check joint)
For gas pipe	8~9	22~27	8~10
For liquid pipe	5~6	13~16	8~10

E. Additional refrigerant and oil charging

Charge the additional refrigerant as liquid state with the gauge.
If the additional refrigerant can not be charged totally when the outdoor stops, charge it at the trial mode.
If the unit runs for a long period in the state of lack of refrigerant, compressor will occur failure.
(the charging must be finished within 30 minutes especially when the unit is running, meanwhile charging the refrigerant).

The unit is charged only part of the refrigerant at the factory, also need additional refrigerant at the installation site.
W1: Refrigerant charging volume to outdoor unit at factory.
W2: Refrigerant charging volume to outdoor unit on site.
W3: Refrigerant charging volume to liquid pipe base on different piping length calculation.
W3=actual length of liquid pipe×additional amount per meter liquid pipe=
L1×0.35+L2×0.25+L3×0.17+L4×0.11+L5×0.054+L6×0.022

Installation procedure

L1: Total length of 22.22 liquid pipe; L2: Total length of 19.05 liquid pipe;
L3: Total length of 15.88 liquid pipe; L4: Total length of 12.7 liquid pipe;
L5: Total length of 9.52 liquid pipe; L6: Total length of 6.35 liquid pipe;
Total refrigerant volume charging on site during installation=W2+W3
W: Total refrigerant volume charging on site for maintenance.

Refrigerant record form						
Model	W1: Refrigerant charging volume to outdoor unit at factory	W2: Refrigerant charging volume to outdoor unit on site	W3: Refrigerant charging volume to liquid pipe base on different piping length calculation		Total refrigerant volume charging on site during installation	W: Total refrigerant volume charging on site for maintenance
			Liquid pipe diameter (mm)	Additional refrigerant amount (kg)		
AU08NFKERA	Refer to label	0kg	Ø6.35	0.022kg/m×__m=__kg	W2+W3= ___kg	W1+W2+ W3=___kg
AU10NFKERA		0kg	Ø9.52	0.054kg/m×__m=__kg		
AU12NFKERA		0kg	Ø12.7	0.11kg/m×__m=__kg		
			Ø15.88	0.17kg/m×__m=__kg		
			Ø19.05	0.25kg/m×__m=__kg		
			Ø22.22	0.35kg/m×__m=__kg		
			W3=___kg			

Note:
- To prevent the different oil into the pipe, please use the special tool for R410A, especially for gauge manifold and charging hose.
- Mark the refrigerant type in different colour on the tank. R410A is pink.
- Must not use the charging cylinder, because the R410A will change when transferring to the cylinder.
- When charging refrigerant, the refrigerant should be taken out from the tank as liquid state.
- Mark the counted refrigerant volume due to the distributing pipe length on the label.

GWP: 2088
The product contains fluorinated greenhouse gases and its functioning relies upon such gases.

Heat insulation

- Gas pipe and liquid pipe should be heat insulated separately.
- The material for gas pipe should endure the high temperature over 120℃.
- That for liquid pipe should be over 70℃.
- The material thickness should be over 10mm, when ambient temp. is 30℃, and the relative humidity is over 80%, the material thickness should be over 20mm.
- The material should cling the pipe closely without gap, then be wrapped with adhesive tape. The connection wire can not be put together with the heat insulation material and should be far at least 20cm.

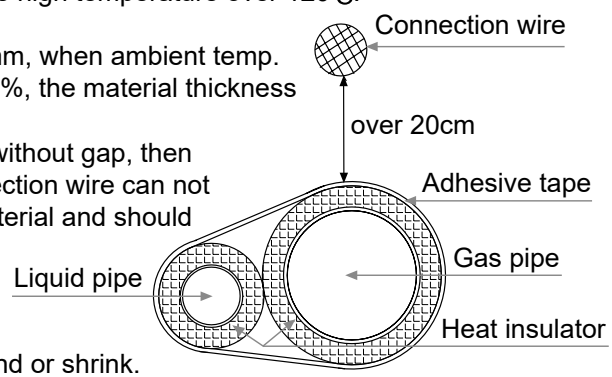

Fix the refrigerant pipe

- In operation, the pipe will vibrate and expand or shrink.
  If not being fixed, the refrigerant will focus on one part to cause the broken pipe.
- To prevent the central stress, fix the pipe for every 2-3m.

Electric wiring and the application

Communication wiring figure

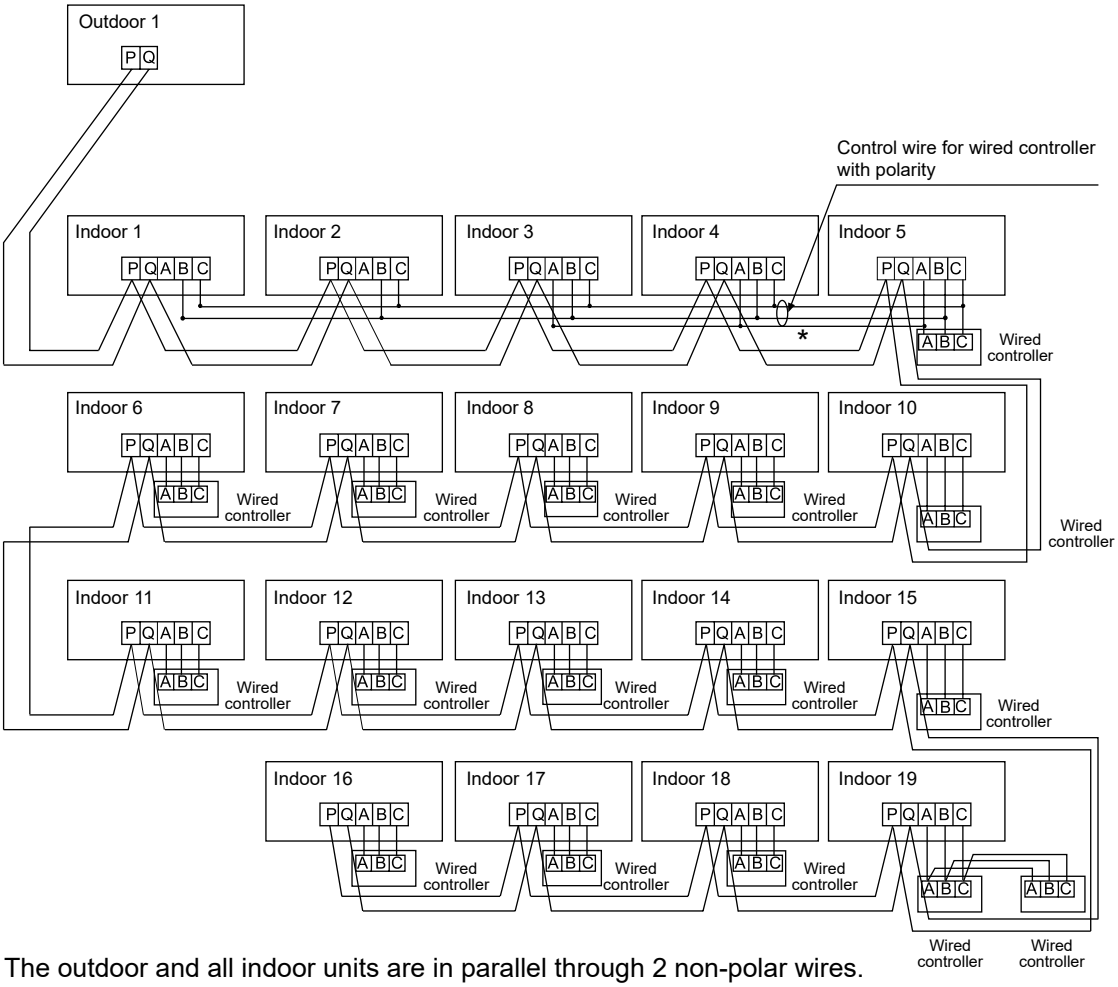

The outdoor and all indoor units are in parallel through 2 non-polar wires.
Three wiring methods between wired controller and indoor unit:
A. 1 to multi (group control): one wired controller can control 2~19 indoors. As shown in above figure, indoor 1~indoor 5: indoor 5 is wired control master unit, the others are wired control slave units. Wired controller and the master indoor (directly connected to wired controller) is connected by 3 polar wires; the other indoors and the master indoors are connected by 2 or 3 polar wires, AC indoors wired "B" "C" polar wires, DC indoors wired "A" "B" "C" polar wires*.
B. 1 to 1 (one wired controller controls one indoor): as shown in above figure, indoor 6~ indoor 18, indoor and wired controller are connected by 3 polar wires.
C. 2 to 1 (two wired controller controls one indoor): as shown in above figure, indoor 19. Either of wired controllers can be set as master wired controller, and the other is slave wired controller. Master/slave wired controller, and master/indoor are connected by 3 polar wires.
When indoor is controlled by remote controller, refer to the "wired control master unit/wired control slave unit/remote control unit table".A, B, C on signal terminal block need not wires and not connect the wired controller.

Electric wiring and the application

Power wiring figure

Please make sure that when the unit is running, the input voltage is no less than 380V;
if it is lower than 380V,the unit may run abnormal.

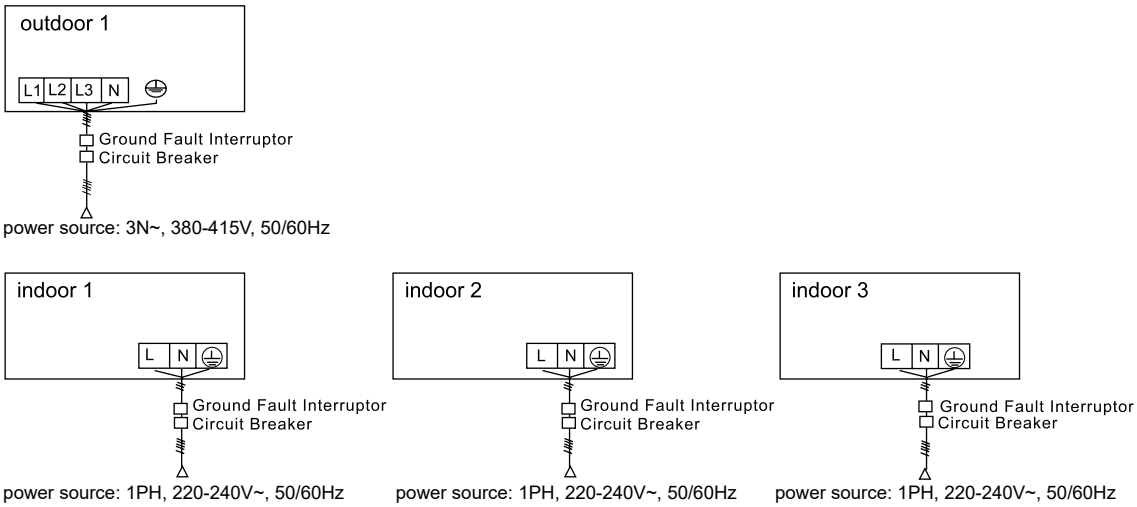

- Indoor and outdoor use their individual power source.
- All indoors use one power source.
- Must install the leakage breaker and the over current breaker, or electric shock will occur.

Outdoor power source and power cable

Item / Model		Power source	Power cable section (mm^2)	Wire length (m)	Circuit breaker (A)	Rated current of residual circuit breaker(A) Ground fault interruptor(mA) response time(S)	Ground wire	
							Section (mm^2)	Screw
Individual power	AU08NFKERA	3N~, 380-415V, 50/60 Hz	6	20	40	40A 30mA below 0.1S	6	M5
	AU10NFKERA		10	20	40	40A 30mA below 0.1S	10	M5
	AU12NFKERA		10	20	40	40A 30mA below 0.1S	10	M5

- Power cable must be fixed firmly.
- Each outdoor must be earthed well.
- When power cable exceeds the range, thicken it appropriately.

Electric wiring and the application

Indoor power source and communication wiring

Item Indoor total current (A)	Power cable section (mm^2)	Wire length (m)	Rated current of overcurrent breaker (A)	Rated current of residual circuit breaker(A) Ground fault interruptor(mA) response time(S)	Communication wire section	
					Outdoor/ indoor (mm^2)	Indoor/ indoor (mm^2)
<10	2	20	20	20A, 30mA, below 0.1s	2-core × (0.75-2.0mm^2) shielded wire	
≥10 and <15	3.5	25	30	30A, 30mA, below 0.1s		
≥15 and <22	5.5	30	40	40A, 30mA, below 0.1s		
≥22 and <27	10	40	50	50A, 30mA, below 0.1s		

- Power cable and communication wire must be fixed firmly.
- Each indoor must be grounded well.
- When power cable exceeds the range, increase the gauge appropriately.
- Shielded layer of communication wires must be connected together and be earthed at single point.
- Communication wire total length cannot exceed 1000m.

Communication wire for wired controller

Length of Signal Line (m)	Wiring Dimensions
≤250	0.75mm^2 × 3 core shielding line

- The shielding lay of the signal line must be grounded at one end.
- The total length of the signal line shall not be more than 250m.

Search indoor units

In the following table, 1 is ON, 0 is OFF.

BM1_1	Indoor searching after startup	0	Begin to search indoor
		1	Stop searching indoor and lock the quantity

Note:
The number of indoor units must be locked by the BM1_1(OFF to ON) before running the outdoor.

Failure code

Failure code

The outdoor unit failure code table

Failure code display on the outdoor digital display board	Failure code definition	Failure code definition	Remarks
20-0	Defrosting temp. sensor (Te) failure	Continuous disconnect for 60 seconds or short circuit, failure alarm	Resumable
21	Ambient temp. sensor (Ta) failure	Continuous disconnect for 60 seconds or short circuit, failure alarm	Resumable
22	Suction temp. sensor (Ts) failure	Continuous disconnect for 60 seconds or short circuit, failure alarm	Resumable
23	Discharge temp. sensor (Td) failure	Continuous disconnect for 60 seconds or short circuit, failure alarm	Resumable
26-0	Communication failure with indoor units	No indoor units connection can be detected for continuous 200 cycles.	Resumable
26-1		It was detected that the number of indoor units was less than the set number for 300 seconds.	Resumable
26-2		It was detected that the number of indoor units was more than the set number for 300 seconds.	Resumable
28	Discharge pressure sensor (Pd) failure	Continuous disconnect for 60 seconds or short circuit, failure alarm.	Resumable
29	Suction pressure sensor (Ps) failure	Continuous disconnect for 60 seconds or short circuit, failure alarm.	Resumable
30	High pressure switch (HPS) failure	When the high pressure switch is disconnected, failure alarm. When the high pressure switch is closed, failure removed. Failure is locked if it occurs 3 times in one hour.	Once failure locked, un-resumable.
33	EEPROM failure	Oudoor unit EEPROM failure	Un-resumable
34	Discharge temp. too high (Td)	Td≥[115]°C,failure alarm; Td≤[85]°C,failure removed. Failure is locked if it occurs 3 times in one hour.	Once failure locked, un-resumable
35	4-way valve revering failure	After the compressor starts, it runs continuously for 10 minutes, if the four-way valve does not reverse failure alarm. The failure will be removed after 3 minutes. Failure is locked if it occurs 3 times in one hour.	Once failure locked, un-resumable

Failure code

Failure code display on the outdoor digital display board	Failure code definition	Failure code definition	Remarks
39-0	Suction pressure (Ps) too low	（1）Cooling: Ps≤0.05 MPa or Ps≤0.1MPa for 5 consecutive minutes, failure alarm. Ps≥0.25MPa, failure removed. （2）Heating: Ps≤0.03Mpa or Ps≤0.05MPa for 5 consecutive minutes, failure alarm. Ps≥0.2MPa, failure removed. Failure is locked if it occurs 3 times in one hour.	Once failure locked, un-resumable.
39-1	Compression ratio (ε)too high	Compression ratio (ε) ≥12.0 for 5 consecutive minutes, failure alarm. The failure will be removed after 3 minutes. Failure is locked if it occurs 4 times in 2 hours.	Once failure locked, un-resumable.
40	Discharge pressure (Pd) too high	Pd≥4.15MPa or Pd≥3.9MPa for 5 consecutive minutes, failure alarm. Pd ≤3.3MPa, failure removed. Failure is locked if it occurs 3 times in one hour.	Once failure locked, un-resumable.
43	Discharge temp. too low protection(Td)	TdSH ≤ 10℃ for 5 consecutive minutes, failure alarm. After the oil temperature is satisfied, the failure will be removed. Failure is locked if it occurs 3 times in one hour.	Once failure locked, un-resumable.
46	Communication failure with inverter module	No module board signal is received within 30 seconds or data error.It will be automatically restored after receiving correctly.	Resumable
51-0	LEVa over current	LEV driver chip detection	Resumable
51-2	LEVb over current	LEV driver chip detection	Resumable
52-0	LEVa circuit open failure	LEV driver chip detection	Resumable
52-2	LEVb circuit open failure	LEV driver chip detection	Resumable
53	CT current too low or current sensor failure	1. When the compressor runs continuously for 1 minute, the compressor frequency ≥50 Hz for 5 minutes. If the current sensor sampling value is less than 10, failure alarm. The failure will be removed after 3 minutes. 2. When the compressor stops, the failure will alarm if CT > 6A lasts for 3min. The failure will be removed after 3 minutes.	Resumable
58	Tsco temp. sensor failure	Continuous disconnect for 60 seconds or short circuit, failure alarm.	Resumable

Failure code

Failure code display on the outdoor digital display board	Failure code definition	Failure code definition	Remarks
59	Tliqsc temp. sensor failure	Continuous disconnect for 60 seconds or short circuit, failure alarm.	Resumable
64	CT value too high	When the CT current exceeds the specified value for 5 consecutive seconds, failure alarm. The failure will be removed after 3 minutes. Failure is locked if it occurs 3 times in one hour.	Once failure locked, un-resumable.
71-0	DC Fan1 failure	The failure will alarm when it runs below 20 rpm for 40 seconds or below 20% of the target value for 2 minutes. The failure will be removed after 3 minutes. Failure is locked if it occurs 3 times in one hour.	Once failure locked, un-resumable.
71-1	DC Fan2 failure		
78	Lack of refrigerant	1.Cooling: Ps≤0.2MPa for 30 consecutive minutes, failure alarm. Ps≥0.3MPa for 30 consecutive minutes, failure removed. 2.Heating:Both LEVa equals to 470pls and Ts-Ps≥20℃ for 60 consecutive minutes, failure alarm. Ps≥0.2MPa for 30 consecutive minutes, failure removed.	Resumable
81	Inverter temp. too high	Inverter temp.≥90℃ , failure alarm. Inverter temp. ≤70℃ , failure removed. Failure is locked if it occurs 3 times in one hour.	Once failure locked, un-resumable.
82	Compressor current protection	When the compressor current exceeds the specified value for 5 consecutive seconds, failure alarm. The failure will be removed after 3 minutes. Failure is locked if it occurs 3 times in one hour.	Once failure locked, un-resumable.
83	Model setting error	Model setting does not match the outdoor unit.	Once failure locked, un-resumable.
110	The inverter module over current (hardware)	Module hardware over current. Failure is locked if it occurs 3 times in one hour.	Once failure locked, un-resumable.
		Instantaneous over current of hardware at rectifier side of inverter module. Failure is locked if it occurs 3 times in one hour.	

Failure code

Failure code display on the outdoor digital display board	Failure code definition	Failure code definition	Remarks
111	Compressor out of control	During start-up or operation, the rotor position cannot be detected for 6 consecutive times, failure alarm. The inverter PCB will be automatic recovery after compressor stops for 5 seconds.	Resumable
112	The temp. of the module fin is too high	The temp. of the module fin≥94℃ , failure alarm. The temp. of the module fin ＜ 94℃ , the inverter PCB will be automatic recovery.	
114	The inverter input power voltage is abnormal	The voltage ＜ DC420V, failure alarm. The voltage ＞ DC420V, the inverter PCB will be automatic recovery.	
		The voltage ＞ DC642V, failure alarm. The voltage ＜ DC642V, the inverter PCB will be automatic recovery.	
		The power supply of inverter is interrupted instantaneously.	
116	Abnormal communication between the inverter PCB and the control PCB	If no communication signal is detected for 30 seconds, , failure alarm.After detection, inverter PCB will recover immediately.	
117	The inverter module over current (software)	Module rectifier side software instantaneous overcurrent	
		Module overload	
		Module software over current	
118	Compressor startup failed	The compressor failed to start continuously for 5 times.	
119	Current detection circuit failure	The module rectifier side current detection circuit is abnormal.	
		The sensor used for current detection of inverter controller is abnormal, disconnected or connected incorrectly.	
121	Power supply of inverter module board is abnormal	Power supply of inverter board is broken down instantly.	
122	The temp. sensor of inverter is abnormal.	The resistance of inverter temperature sensor is abnormal or not connected.	

Failure code

In case of no failure, if the starting conditions of the system are not met, the digital tube of the outdoor unit will display the standby code of the air conditioner:

555.0	Standby state of capacity over-matched	The ratio of indoor capacity to out-door capacity is over 130%.	Resumable
555.1	Heating at high ambient temp.	Ta>27°C, the indoor units standby when they are running in heatling mode.	
555.3	Cooling at ambient temp. too high or too low	Ta>54°C or Ta<-10°C, the indoor units standby when they are running in cooling mode.	
555.4	Oil temp. preheating	The oil temperature does not meet the starting conditions of the system.	
555.b	The running mode of outdoor unit does not match with the indoor units.	The outdoor unit maybe setted to cooling only or heating only.	

Trial operation and the performance

5-minute delay function

- If starting up the unit after being powered off, the compressor will run about 5 minutes later against being damaged.

Cooling/heating operation

- Indoor units can be controlled individually, but cannot run in cool and heat mode at the same time. If the cool mode and the heat mode are existing simultaneously, the unit set latter will be standby, and the unit set earlier will run normally.
- If the A/C manager sets the unit at cooling or heating mode fixedly, the unit can not run at the other modes.

Heating mode characteristic

- In operation if outdoor temp. arises, indoor fan motor will turn to low speed or stop.

Defrosting in heating mode

- In heating mode, outdoor defrosting will affect the heating efficiency. The unit will defrost for about 2~10 minutes automatically, at this time, the condensate will flow from outdoor, also in defrosting, the vapour will appear at outdoor, which is normal. Indoor motor will run at low speed or stop, and outdoor motor will stop.

The unit operation condition

- To use the unit properly, please operate the unit under the allowed condition range.
  If operating beyond the range, the protection device will act.
- The relative humidity should be lower than 80%. If the unit runs at the humidity over 80% for a long period, the dew on the unit will drop down and the vapour will be blowed from air outlet.

Protection device (such as high pressure switch)

- High pressure switch is the device which can stop the unit automatically when the unit runs abnormally.
  When the high pressure switch acts, the cooling/heating mode will stop but the running LED on wired controller will be light still. The wired controller will display failure code.
- When the following cases occur, the protection device will act:
  In cooling mode, air outlet and air inlet of outdoor are clogged.
  In heating mode, indoor filter is sticked with duct; indoor air outlet is clogged.
  When protection device acts, please cut off the power source and re-start up after eliminating the trouble.

When power failure

- When power is failure in running, all the operations will stop.
- After being electrified again, if with re-satrt up function, the unit can resume to the state before power off automatically; if without re-satrt up function, the unit needs to be switched on again.
- When abnormal occurs in running because of the thunder, the lightning, the interference of car or radio, etc, please cut off the power source, after eliminating the failure, press "ON/OFF" button to start up the unit.

Trial operation and the performance

Heating capacity

- The heating mode adopts the heat pump type that absorbs outdoor heat energy and releases into indoor. So if outdoor temperature goes down, the heating capacity will decrease.

Trial operation

- Before trial operation:
  Before being energized, measure the resistor between power terminal block (live wire and neutral wire) and the grounded point with a multimeter, and check if it is over 1M * . If not, the unit can not operate.
  To protect compressor, energize the outdoor unit for at least 12 hours before the unit runs.If the crankcase heater is not energized for 6 hours, the compressor will not work.
  Confirm the compressor bottom getting hot.
  Except for the condition that there is only one master unit connected (no slave unit), under the other conditions, open fully the outdoor operating valves (gas side, liquid side, oil equalization pipe). If operating the unit without opening the valves, compressor failure will occur.
  Confirm all indoor units being electrified. If not, water leakage will occur.
  Measure the system pressure with pressure gauge, at the same time, operate the unit.
- Trial operation
  In trial operation, refer to the information of performance section.
  When the unit can not start up at the room temperature, make trial operation for outdoor.

Move and scrap the air conditioning

- When moving, to disassemble and re-install the air conditioning, please contact your dealer for technical support.
- In the composition material of air conditioning, the content of lead, mercury, hexavalent chromium, polybrominated biphenyls and polybrominated diphenyl ethers are not more than 0.1% (mass fraction) and cadmium is not more than 0.01% (mass fraction).
- Please recycle the refrigerant before scrapping, moving, setting and repairing the air conditioning; for the air conditioning scrapping, should be dealt with by the qualified enterprises.

Qingdao Haier Air Conditioner Electric Co.,Ltd.

Haier Industrial Park,Qianwangang Road,Eco-Tech Development Zone,
Qingdao 266555,Shandong,P.R.C.