IDEAL INDUSTRIES, INC.
TECHNICAL MANUAL
MODEL: 61-920

The Service Information provides the following information:

- Precautions and safety information
- Specifications
- Performance test procedure
- Calibration and calibration adjustment procedure
- Basic maintenance (Disassembly, Troubleshooting, Spare Parts list)

Form number: TM61920
Revision: 2. Date: Nov 2005

TABLE OF CONTENTS

Title	Page
Introduction	1
Precautions and Symbol Information	1
Safety Information	2
Specifications	3
General Specification	3
Ground Resistance Specifications	4
Ground & Leakage Current Specifications	4
Performance Verification	5
Calibration	6
Preparation	6
Procedure	7-9
Disassembly and Component Layout	9
Troubleshooting	10-12
Spare Parts List	12

Introduction

⚠ Warning

To avoid shock or injury, do not perform the verification tests or calibration procedures described in this manual unless you are qualified to do so.
The information provided in this document is for the use of qualified personnel only.

⚠ Caution

The 61-920 Ground Clamp contains parts that can be damaged by static discharge.
Follow the standard practices for handling static sensitive devices.

For additional information about IDEAL INDUSTRIES, INC. and its products, and services, visit IDEAL INDUSTRIES, INC. web site at:
www.idealindustries.com

Precautions and Safety Information

Use the meter only as described in the *Users Manual*. If you do not do so; the protection provided by the meter may be impaired.
Read the "Safety Information" page before servicing this product.
In this manual, a **Warning** identifies conditions and actions that pose hazard(s) to the user; a **Caution** identifies conditions and actions that may damage the meter or the test instruments.

The Symbols

The symbols used on the meter and in this manual are explained in Table A.

Table A Symbols

Meter Safety Symbol	Description
BAT	Battery
⚠	Cautionary or important information in manual
⚠	Danger - Risk of electrical shock
⧈	Double Insulation- Protection Class II
CAT III	IEC Over-voltage Category III

SAFETY

Review the following safety precautions to avoid injury and prevent damage to this product or any products connected to it. To avoid potential hazards, use the product only as specified.

⚠ CAUTION.
These statements identify conditions or practices that could result in damage to the equipment or other property.

⚠ WARNING.
These statements identify conditions or practices that could result in personal injury or loss of life.

Specific precautions

Use proper Fuse. To avoid fire hazard, use only the fuse type and rating specified for this product.

Do not operate without covers. To avoid personal injury, do not apply any voltage or current to the product without the covers in place.

Electric overload. Never apply a voltage to a connector on the product that is outside the range specified for that connector.

Avoid electric shock. To avoid injury or loss of life, do not connect or disconnect probes or test leads while they are connected to a voltage source.

Do not operate in wet/damp conditions. To avoid electric shock, do not operate this product in wet or damp conditions.

Use of rubber gloves: is a good safety practice even if the equipment is properly operated and grounded

Use of Clamp jaws: do not attempt to use the ground tester to twist or pry the ground electrode or ground wire away from equipment or other obstructions. Non-repairable damage may occur.

General specifications

Characteristics	**Description**
Display	LCD with a maximum count of 2099
Conductor Size	Approximately 1.25” in diameter max.
Overrange Indication	“OL”
Sampling Rate	Approx once per second
Operating Environment: Relative Humidity	14°F to 104°F 85% Relative Humidity
Storage Environment:	-4°F to 122°F at <75% relative humidity
Power source:	4 “AA” batteries
Measurement time:	Approx 24 hrs with alkaline batteries
Low Battery Indicator:	Symbol indicates low battery voltage
Auto power off	Turns power off after 10 minutes of non-use
Power Consumption	50mA
Operating system	Earth Resistance Function: Constant voltage injection, Current detection (Frequency appr. 2400Hz) dual integration AC current function: Successive approximation (TRMS)
Response Time	Earth Resistance function: Approx. 7 seconds Current Function: Approx. 2 Seconds
Location for use	Altitude 2000m or less indoor/outdoor use
IP protection degree	IP40
Electrostatic discharge immunity	Performance criteria B
Withstand Voltage	AC5320 Vrms/5 seconds Between the transformer jaws fitted parts and case enclosure (except for jaws)
Insulation Resistance	50Megohm or more at 1000v Between the transformer jaws fitted parts and case enclosure (except for jaws)
Applicable standards	IEC61010-1:2001(CAT IV 300V pollution degree2) IEC61010-2-032:2002 IEC61326:2000 (EMC standard)
Dimensions	9.7” H x 4.7” W x 2.1” D
Weight:	Approximately 1.7 lbs. including battery

RANGES and ACCURACY SPECIFICATION
Measurement Characteristics
(All at 75°F ± 5°C, < 85% R.H.)

Ground Resistance

Range	Measuring Range	Resolution	Accuracy
20Ω	0.00Ω - 20.99Ω	0.01 Ω	± 1.5% ± 0.05Ω
200Ω	16.0Ω - 99.9Ω	0.1Ω	± 2% ± 0.5Ω
	100.0Ω - 209.9Ω	0.1Ω	± 3% ± 2Ω
1200Ω	160Ω - 399Ω	1Ω	± 5.0% ± 5Ω
	400Ω - 599Ω	1Ω	± 10.0% ± 10Ω
	600Ω - 1260Ω	10Ω	Unspecified

Continuity Measurement: Beep if resistance < 10.00 Ω (approximately)

Ground/Leakage Current

Range	Measuring Range	Resolution	Accuracy
100mA	0.0 - 104.9mA	.1mA	± 2.0% ± 0.7mA
1000mA	80 - 1049mA	1mA	± 2.0%
10A	0.80 - 10.49A	.01A	± 2.0%
30A	8.0 - 31.5A	.1A	± 2.0%

*Crest factor ≤ 2.5 accuracy at sine wave +1% (50Hz/60Hz, peak value shall not exceed 60A)
*In the following case, ZERO will be displayed on the LCD
At 20 Ω range if Earth resistance measured is ≤ 0.04 Ω
*Auto ranging shifts to upper range when the input exceeds 105% of the selected range, and shifts to the lower range when the input falls under 80% of the lower range.

PERFORMANCE VERIFICATIONS

Perform the following analysis, if the meter conforms to the limits listed in Table 1 the meter is functioning correctly. If the meter does not conform to any of the listed limits the calibration procedure must be performed.

Performance Verification Preparation

- Turn on the calibrator, allow calibrator to warm up. Temperature stabilization should be reached after 30 minutes.
- Remove battery cover and use a calibrated meter to ensure the battery measures a minimum of 4.8V DC. If the battery measures under 4.8V DC, replace the battery before beginning the performance test.
- To test the performance of the 61-920 you will need to construct a loop using general resistors with an accuracy of 0.5% or better of fixed values 0.1Ω, 10Ω, 20Ω 200Ω 1000Ω)

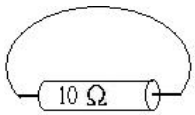

Construct the loop using low resistive wire. Minimize connectivity resistance.

- Note: Error for the general resistors are not included in the test data of Table 1
- If the display reading falls outside of the range shown in the Table 1, steps 1 - 6, the meter does not meet specification.
- Clamp jaws in the center of the test loop.

Table 1: Resistance Performance Verification

Steps	**Range**	**Input**	**Low Limit**	**High Limit**
1	20	00.10Ω	00.05	00.15
2	20	10.00Ω	9.80	10.20
3	200	20.00Ω	19.1	20.9
4	200	100.0Ω	96.8	103.2
5	1200	200.0Ω	185	215
6	1200	500.0Ω	440	560

- Connect the meter to a single wire loop on the calibrator and place the clamp around the center of the wire.
- Apply the current listed in Table 2, steps 1 - 3.
- If the display reading falls outside of the range shown in the Table 2, steps 1 - 4, the meter does not meet specification.

Table 2: mA, A Performance Verification

Steps	**Range**	**Input**	**Low Limit**	**High Limit**
1	100mA	0.1mA @ 60Hz	00.8	00.9
2	1000mA	1000mA @ 60Hz	980	1020
3	10A	10.0A @ 60Hz	9.80	10.20
4	30A	30.0A @ 60HA	29.4	30.60

CALIBRATION

(1) Calibration Preparation

(1.1) This procedure consists of the following sections.
(1) Calibration Preparation
(2-6) Adjustments
(7) Disassembly and Component Layout
(8) Trouble-shooting
(9) List of spare parts

(1.2) Adjustment procedure will require the following tools and fixed standards
Prepare following items for adjustment.
Oscilloscope, 20 MHz or better. ***See Figure 1***
General resistors @ .5% or better (0.1Ω/10Ω/20Ω/200Ω/1000Ω),
Wire of fixture to form a loop circuit with each of the resistors as part of the loop. ***See Figure 2***
Calibrated current source .1mA to 30A, with an accuracy of 0.5% or better.

Figure 1: Oscilloscope to check waveforms

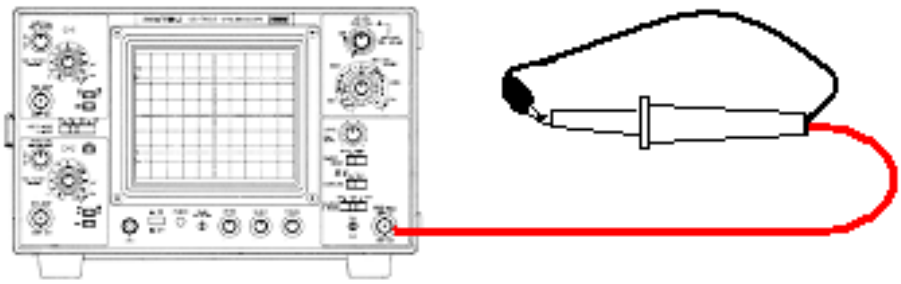

(1.3) Connect the probe and alligator clip of the oscilloscope as shown in figure one to form a circle (Short the input to common or ground of the scope).

(1.4) Connect a wire and each general resistor (0.1Ω/10Ω/20Ω/200Ω/1000Ω) like a circle respectively.

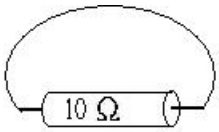

Construct the loop using low resistive wire. Minimize connectivity resistance

Figure 2

(1.5) Open and close the jaws of 61-920 several times, and confirm that the jaws close by themselves.

(1.6) Use care in removing front panel decal. The adjustment locations shown in ***Figure 3*** are located underneath the decal. ***Note:*** *plastic switch extensions will be loose with the decal removed.*

(2) Calibration Procedure

It is recommended that all IDEAL meters undergo the following calibration procedure on an annual basis.

(2.1) Press the POWER button, without clamping anything, while the CAL button is being pressed down. Then release the POWER button.
Version information (3-digit) about this instrument is displayed in a short minute.
Then the instrument goes into Ω adjustment mode.

(2.2) Adjust VR for Hi range
Press the A/Ω button until the mark is displayed at the upper position of the LCD for a moment and "Hi" is displayed at the left of the mark. Turn VR401 to adjust the flickering reading to be within 165.0 ~ 175.0.

(2.3) Waveform check at Hi range ***(Figure 4)***
Clamp onto the ring formed by the probe of the oscilloscope The waveform should be a sine wave. Remove the jaws from the ring when the sine wave is observed.

(2.4) VR adjustment at Lo range.
The message "Lo" is displayed at the upper of the LCD when MEM/MODE button is pressed. Turn VR402 to adjust the flickering reading to be 800 or close value. Then fine adjust the value using VR402 to fall within 800 ~ 0.

(2.5) Waveform check in Lo range ***(Figure 4)***
Clamp onto the ring formed by the probe of the oscilloscope. The waveform should be a sine wave. Remove the jaws from the ring when the sine wave is observed.

(2.6) Resistance range Adjustment (2) (Adjustment for Hi range)
Press the A/Ω button twice. The mark "F.S" is displayed at the upper position of the LCD.
(This status is same as when Hi range is selected.)

(3) Full scale adjustment
Wait for a while without clamping anything.
Press the CAL button when MEM mark appears.
Later, "OL" or some value is displayed on the LCD.

(3.1) 1000Ω
Use 1000Ω resistor.
Press the MEM/WRITE button when MEM mark appears on the LCD and the reading becomes stable.

(3.2) 200Ω
Press the ▼ button once. Then 200 is displayed at the upper position on the LCD. Use 200Ω resistor.
Press the MEM/WRITE button when MEM mark appears on the LCD and the reading becomes stable.

(3.4) 20Ω
Press the ▼ button once. Then 20 is displayed at the upper position on the LCD. Use 20Ω resistor.
Press the MEM/WRITE button when MEM mark appears on the LCD and the reading becomes stable.

Fig. 3 Button layout

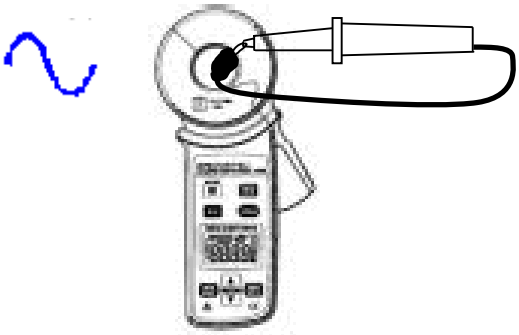

Fig. 4 Check of waveform

(3.5) Repeatability check with 1000Ω and re-adjustment

Press the ▲ button twice. Then "F.S" is displayed at the upper position of the LCD. Use 1000Ω resistor. Open and close the jaws, and check the readings on the LCD. Repeat this kind of work five times. Each time the reading should be within 900 ~ 1100.
If the reading is within above range, proceed to the next process.
If one of the readings is out of above range, repeat the adjustment from 2.-(4) Full scale adjustment (Hi range).

(4) Resistance range Adjustment(3) (Adjustment for Lo range)

(4.1) 20.0Ω

Press the MEM MODE button once. Then 20.0 is displayed at the upper position of the LCD. Use 20Ω resistor.
Press the MEM/WRITE button when MEM mark appears on the LCD and the reading becomes stable.

(4.2) 10.0Ω

Press the ▼ button once. Then 10.0 is displayed at the upper position of the LCD. Use 10 Ω resistor.
Press the MEM/WRITE button when MEM mark appears on the LCD and the reading becomes stable.

(4.3) 0.1Ω

Press the ▼ button once. Then 0.1 is displayed at the upper position of the LCD. Use 0.1Ω resistor.
Press the MEM/WRITE button when MEM mark appears on the LCD and the reading becomes stable.

(4.4) Disconnect the 61-920 from the test wires, and press the POWER button to power off the instrument.

(5) Current range adjustment

Prepare following items for adjustment.
Current generator, coil for current adjustment (0.1A/ 1A/ 10A/ 30A/ 50Hz or 60Hz)
Press the POWER button without clamping anything while the CAL button is being pressed down. Then release the POWER button.
Version information about this instrument (3-digit) is displayed for a moment. Then the instrument goes into Ω adjustment mode.

(5.1) Press the A/Ω button once and the instrument goes into "A mode".

(5.2) Clamp the coil for current adjustment with 61-920.

(5.3) Adjust the current range.

(a). 0.1A adjustment

Generation current: 0.1A@50Hz
Press the MEM/WRITE button after the reading becomes stable.
(saving the adjustment value)

(b). 1.0A adjustment

Press the MEM/MODE button once.
Generation current: 1A@50Hz
Press the MEM/WRITE button after the reading becomes stable.
(saving the adjustment value)

(c) 10.0A adjustment

Press the MEM/MODE button once.
Generation current: 10A@50Hz
Press the MEM/WRITE button after the reading becomes stable.
(saving the adjustment value)

(5.3) Adjust the current range (cont'd.)

(d). 30.0A adjustment

Press the MEM/MODE button once.

Generation current: 30A@50Hz

Press the MEM/WRITE button after the reading becomes stable.

(saving the adjustment value)

(6) Press the POWER button to power off the unit and replace the front decal, making sure the plastic switch extensions are in place.

(7) Disassembly

Removal of battery cover

Loosen one battery cover-fixing screw, and remove the battery cover.

(7.1) Removal of Front panel

Loosen three front panel-fixing screws.

Remove the front panel from the bottom case.

Note: Care should be taken not to lose the snap band and button spacer.

(7.2) Removal of PCB

Loosen three PCB-fixing screws.

Remove the wires for jaw and battery contact.

Remove the finished PCB from the bottom case.

(7.3) Removal of jaw

Loosen two jaw-fixing screws.

Remove the finished jaw from the bottom case.

(7.4) Component Layout ***(Figure 5)***

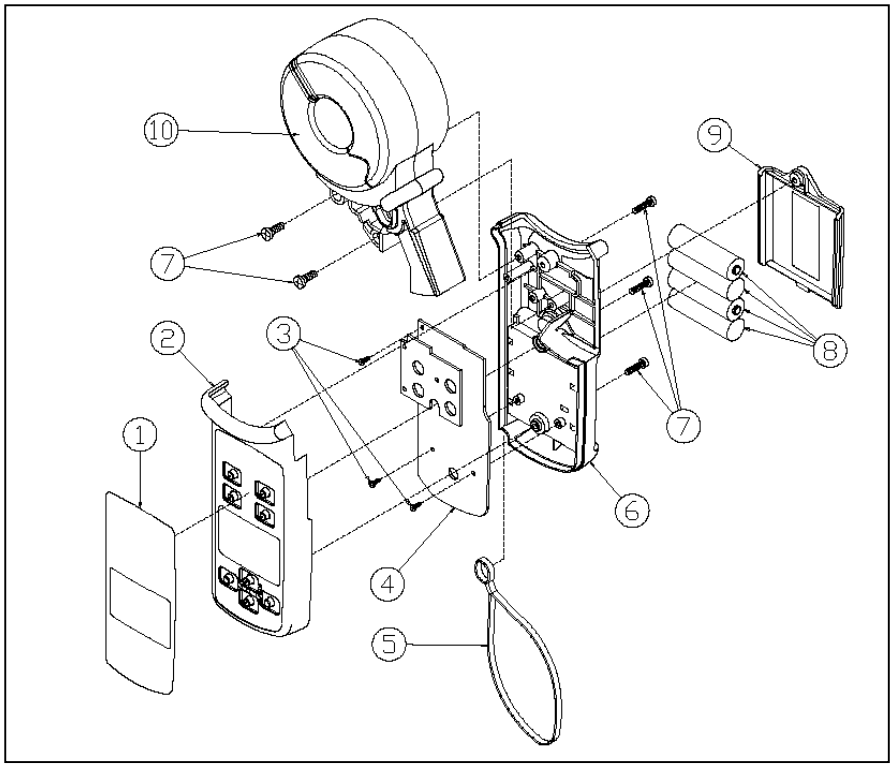

Figure 5 - Component layout

(8). Trouble shooting

Symptoms	Possible Causes	Remedies
The instrument cannot be buttoned on.	No batteries.	Set the batteries.
	Faulty battery polarity	Install batteries in correct polarity.
	Insufficient capacity of battery	Replace the batteries.
	Poor contact of battery contacts	Replace the battery contacts.
	A break in a battery harness	Make a continuity test of test lead. If there is no continuity, replace the battery harness.
	Defect of circuit component	Defect of PCB; when current consumption is about 100mA or more at 6V of battery voltage. Replace the PCB.
Indication error (chip of segment, arithmetic point, unit and so on)	Insufficient capacity of battery	Replace the battery if the indication is faint or “BATT” mark is displayed on the LCD.
	Poor contact of rubber contactor.	Clean the tracks on PCB and LCD where rubber contactor contacts with.
	Defect of circuit component	Check above points first. If there is no problem, replace the PCB and do re-adjustment.
Incapable measurement of resistance	Insufficient capacity of battery	Replace the battery when “BATT” mark is displayed on the LCD.
	Data hold function is being run.	Data hold function is being activated if “H” mark is displayed on the LCD. Press the “DATA HOLD” button and release it.
	F.SW is in the wrong position.	In case that “Ω” isn’t displayed on the LCD as a unit, press A/Ω button several times and select the Ohm measurement function.
	A break in jaw wiring	Make a continuity test of jaw wiring. If there is no continuity, replace the jaw and do re-adjustment.
	Defect of circuit component	Check above points first. If there is no problem, replace the PCB, and do re-adjustment.
Incapable measurement of current	Insufficient capacity of battery	Replace the battery if “BATT” mark is displayed on the LCD.
	Data hold function is being run.	Data hold function is being activated if “H” mark is displayed on the LCD. Press the “DATA HOLD” button and release it.
	Wrong function is selected.	In case that “mA A” isn’t displayed on the LCD as a unit, press A/Ω button several times and select the ACA measurement function.
	A break in jaw wiring	Make a continuity test of jaw wiring. If there is no continuity, replace the jaw and do re-adjustment.
	Defect of circuit component	Check above points first. If there is no problem, replace the PCB, and do re-adjustment.

(8). Trouble shooting (cont'd.)

Symptoms	Possible Causes	Remedies
When measuring resistance, error of measurement is notable.	Insufficient capacity of battery	Replace the battery if "BATT" mark is displayed on the LCD.
	Bad fit of Jaw.	Make sure that the Jaw is completely closed. Replace the jaw if it cannot be completely closed and do re-adjustment.
	Re-adjustment of PCB	Check above points first. If there is no problem, PCB needs to be re-adjusted.
	Defect of circuit component	Check above points first. If there is no problem, replace the PCB, and do re-adjustment.
When measuring AC current, error of measurement is notable.	Insufficient capacity of battery	Replace the battery if "BATT" mark is displayed on the LCD.
	Bad fit of jaw.	Make sure that the jaw is completely closed. Replace the jaw if it cannot be completely closed and do re-adjustment.
	Re-adjustment of PCB	Check above points first. If there is no problem, PCB needs to be re-adjusted.
	Defect of circuit component	Check above points first. If there is no problem, replace the PCB, and do re-adjustment.
Any button doesn't work.	Button spacer is missing.	Put the button spacer at the specific location.
	Defect of circuit component	Check above points first. If there is no problem, replace the PCB, and do re-adjustment.
Buzzer doesn't sound. (when a button is operated or in Buzzer mode)	Poor contact of buzzer	Soldered point at buzzer should be checked.
	Defect of circuit component	Check above points first. If there is no problem, replace the PCB, and do re-adjustment.
"OPEN" mark doesn't appear while jaws are opend.	Wrong function is selected.	In case that "Ω" isn't displayed on the LCD as a unit, press A/Ω button several times and select the resistance measurement function.
	Defect of circuit component	Check above points first. If there is no problem, replace the PCB, and do re-adjustment.
"OPEN" mark doesn't go off after closing the jaws.	A break in jaw wiring	Make a continuity test of jaw wiring. If there is no continuity, replace the jaw and do re-adjustment.
	Defect of circuit component	Check above points first. If there is no problem, replace the PCB, and do re-adjustment.
"NOISE" mark doesn't go off	Measuring the current flowing line.	Turn off the device, which is generating the current, to minimize the current.
	Two or more 61-920 are clamping onto one same line	Use only one 61-920 per line.
	Defect of circuit component	Check above points first. If there is no problem, replace the PCB, and do re-adjustment.

(8). Trouble shooting (cont'd.)

Incapable of saving data.	Switch spacer for MEM WRITE button is missing.	Put the Button spacer at the specific location.
	Defect of circuit component	Check above points first. If there is no problem, replace the PCB, and do re-adjustment.
Backlight doesn't light up.	Switch spacer for backlight is missing.	Put the button spacer at the specific location.
	Poor contact of backlight	Soldered point at backlight should be checked.
	Defect of circuit component	Check above points first. If there is no problem, replace the PCB, and do re-adjustment.

(9). List of Spare parts

No.	Description	Parts No.	Qty.	Note
10	4200 Finished jaw	142000100A	1	
4	4200 Finished PCB	142000200A	1	
1	Nameplate 4200	9000012900	1	
2	Panel 4200	9000012947	1	
6	4200 Finished Case	142000401A	1	
9	4200 Finished Battery cover	142000402A	1	
3	TAP +N2.3 x 8 (P-TITE)	9000009425	3	
7	P-TITE +N 3x 14 (black)	9000010949	5	
8	Battery SUM-3	9000001934	4	
5	Snap band 2412	9000006138	1	
Others				
	Finished Hard case	1912800000	1	
	8304	083040000A	1	
	Instruction manual 4200 (English)	9000013434	1	

Fig. 3 Button layout