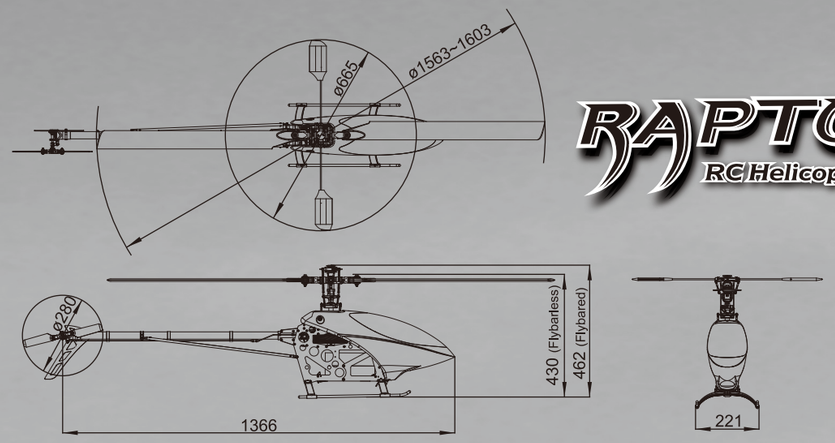

RAPTOR C4 RC Helicopter SERIES

SPECIFICATION / 規格表

Product Name / 產品名稱		Raptor E720 FL	Raptor E720	Raptor 90 G4 FL	Raptor 90 G4
Item No. / 產品料號		4791-K1	4790-K10	4894-K10	4893-K10
Power / 動力		Electric Motor		Nitro Engine	
Rotor Head / 主旋翼頭型式		Flybarless	Flybared	Flybarless	Flybared
Length / 總長		1,366mm (53.8")			
Width / 總寬		221mm (8.7")			
Height / 總高		430mm (16.9")	462mm (18.2")	430mm (16.9")	462mm (18.2")
Main Rotor 主旋翼	Length / 長度	690~720mm / (27.2~28.3")			
	Diameter / 迴轉直徑	1,563~ 1,603mm (61.5~63.1")			
Tail Rotor 尾旋翼	Length / 長度	105mm (4.1")			
	Diameter / 迴轉直徑	280mm (11.0") as standard			
Main Gear / Pinion 主齒盤 / 驅動齒數		111T / 11T (standard), 12 or 13T (option)		111T / 14T	
Gear Ratio (E:M:T) / 齒輪比		1:10.09:4.67 (standard)		1:7.92: 4.67 (fixed ratio)	
Full Equipped Weight w/o Fuel or Batt. 全配重量不含電池/燃油		3,650-gram (8.05lbs)	3,750-gram (8.27lbs)	4,300-gram (9.48lbs)	4,400-gram (9.70lbs)
Max. Fuel on Board 電池/燃油最大承載量		215 x52 x 105 mm (8.5 x 2.0 x 4.1")		Main Tank: 650cc (22. 97oz) Header Tank: 60cc (2.03oz)	
Recommended Power Configuration 動力搭配建議		Battery: 12S (6S x 2) 5.0~6.0Ah Battery C-rate: Above 25C ESC 80~120A		Engine Displacement: 0.91~1.2cu.in Pinion: 14T (Fixed) Fuel: 30% nitro fuel for RC Helicopter Est. Rotor rpm: 2,000~ 2,100	
	Motor:	520~560KV	470~520KV	450~470KV	
	Pinion:	11T	12T	13T	
	Est. Rotor rpm:	2,100~2,250			

FEATURES / 特色

UNIQUE FEATURES for ELECTRIC VERSION

1. Top mounted motor for better center of gravity
2. Bottom mounted ESC on the tail bracket for efficient heat dissipation and easy maintenance
3. Quick-release barrery tray (Patent Pending)
4. Adjustable motor mount and pinion bearing block

UNIQUE FEATURES for NITRO VERSION

1. Lightweight, vented clutch bell, main and tail gear set design
2. Efficient metal fan and large shrouded fan case for heat dissipation

MUTUAL FEATURES

1. Easy and fast conversion between flybared or flybarless rotor system
2. Easy conversion between nitro and electric power
3. Innovative Quick-calibration system
4. Lightweight and vented, heavy-duty 17 mm helical main gear
5. Hardened 15 mm steel main shaft
6. Rigid 2 mm carbon main frame
7. Lightweight, high-quality hardware
8. Aerodynamic carbon paddles
9. Adjustable Bell-Hiller mixing ratio can be set for F3C or 3D
10. Lightweight and rugged landing skid for low center of gravity
11. Collective pitch range +/-15 degrees
12. All metal servo horns and control arms assembly eliminate the need for upgrades
13. Heavy-duty helical bevel tail gears
14. Lightweight, one-piece machined metal tail case
15. 3D carbon vertical fin and carbon tail boom support
16. All metal, high-precision & heavy-duty tail rotor system
17. Easy to install tail rotor rod guide
18. Lightweight one-piece metal tail boom bracket
19. High-quality, color shifting preprinted FRP canopy
20. Optional carbon horizontal fin available

電動版專屬特點

1. 上置式馬達設計使機體重心更為集中
2. 速控器可選擇裝附於尾管座下方，散熱效果更佳且維修方便
3. 原創電池快拆機構設計
4. 可調式馬達固定座及馬達驅齒輪支撐座

引擎版專屬特點

1. 輕量化鏤空離合器罩、主齒盤及熄火降落尾驅動齒盤
2. 原廠配備高效率金屬風扇組及高效能大型包覆式散熱風扇罩

共通特點

1. 平衡翼及無平衡翼旋翼頭組件高度共用設計，可快速於兩者間進行轉換
2. 原創引擎/電動動力雙生機構設計，可容易於兩者間進行轉換改裝
3. 原創中立點快速校正系統
4. 高負載輕量化17 mm厚度螺旋主齒盤
5. 15 mm熱處理強化主軸
6. 高強度 2 mm碳纖維側板
7. 輕量化高品質側板螺絲組（星形螺絲）
8. 低擾流輕量化（23 g）碳纖維平衡翼
9. 可調式混控率旋翼頭組，可設定為3D或F3C飛行特性
10. 高強度輕量化低重心腳架組
11. 主旋翼攻角最大可達+-15度
12. 原廠配備金屬伺服機舵片及控制臂組，無需額外進行升級改裝
13. 高負載尾螺旋傘齒設計
14. 一體成型輕量化金屬尾座
15. 高剛性2 mm碳纖維垂直安定面及碳纖尾管支撐架
16. 高精度全金屬尾旋翼系統
17. 全新設計快拆式尾舵拉桿導環
18. 一體成型輕量化尾管支撐架
19. 原廠塗裝完成變色龍玻纖機頭罩
20. 可加裝F3C碳纖維水平安定面(選配)

RAPTOR C4 RC Helicopter SERIES

Designed by
Shigetada Taya
FAI World Champion

INSTRUCTION MANUAL
組 裝 說 明 書

This radio control model is not a toy! Before beginning assembly, please read this manual thoroughly.
The contents are subject to change without prior notice due to product improvements and specification changes.

本產品為高性能模型非一般玩具，組裝與操作前請詳閱本產品說明書。
本套件所附之零件可能跟圖示有所差異。因產品後續之設計研發或功能不斷改善之原因，我們將保留產品規格變更權力，不再另行通知使用者。

manufactured by **THUNDER TIGER**
http://www.thundertiger.com

JK0244

THUNDER TIGER

E720 HELI 90 3D F3C 135°/140° CCPM TORQUE TUBE KIT

THUNDER TIGER

RAPTOR C4 RC Helicopter SERIES

CONTENTS

INTRODUCTION

THUNDER TIGER

INTRODUCTION / 簡介

Thank you for purchasing the Thunder Tiger RAPTOR G4 R/C helicopter. This new helicopter is the latest innovation by Thunder Tiger. It has the perfect combination of flying stability and the agility for 3D flying. This helicopter is an excellent choice for flying enthusiasts like you. For convenient assembly and safe operation of the helicopter, please read the instructions carefully. Retain the user manual in case you need it for any information or reference.
感謝您購買雷虎科技RAPTOR G4直昇機產品，本項產品為雷虎科技全新開發機種，兼具高度穩定性與3D飛行特性，是熱衷引擎直昇機的您不可錯過的選擇。請於使用本產品前詳盡閱讀使用手冊，以利於組裝工作順暢進行與安全操控本產品。請妥善保存使用說明書，以利後續調整與維修參考用途。

CAUTION / 警告

1. R/C models are not toys. This product is a high-precision flying machine. Possibilities of unexpected crashes may occur due to electronic interference, incorrect operation, or poor mechanical maintenance. Although it is a R/C model helicopter, the rotor blades rotate at high speeds, which may cause serious damage, injury, or death if the model hits people or property. Therefore, extreme caution must be exercised during operation.
2. Thunder Tiger ensures parts packaged in this product is of the highest quality. However, after assembly and usage, parts damaged due to wear or misuse will not be replaced under any circumstances. If you have any questions regarding its operation and repair, Thunder Tigers service agents are able to provide free technical guidance.
3. This product is only recommended for users ages 16 and up. Because flying a R/C helicopter is difficult, beginners must receive guidance and supervision from experienced pilots to minimize unexpected danger. Practice in spacious areas, far away from obstacles such as buildings, trees, electrical towers, or crowds.
4. To decrease the cost of repair and maintenance for beginners, it is recommended to fly the helicopter with a practice rack and to learn basic flying skills with a computer R/C flying simulator. (Crashes in simulators are free to repair!)

1. 本項遙控直昇機產品並不是玩具，是一項結構精密、高專業度模型產品，如果未經正確組裝與操控，將可能對操控者或其他人造成身體傷害。使用者必須了解，若未確實進行飛行前安全檢查或操控不當，而造成人員受傷或物體損壞，使用者必須負起法律責任。
2. 本產品由高品質零組件組成，雷虎科技對於安裝過程、使用過後..等人為因素造成損壞事件不負損壞賠償之責。如您需要本產品相關組裝、調整或其他協助，可與雷虎科技全省經銷商聯繫。
3. 本項產品禁止十六歲以下青少年與孩童使用。強烈建議初學者應取得技術支援後再進行飛行，以避免危險發生。請於空曠地區操控本產品，並避免於建築物、樹木、電塔..等障礙物區域飛行。
4. 建議初學者可安裝練習架或透過電腦模擬軟體練習，可達到實際練習效果與符合經濟效益。

AMA INFORMATION / 特別注意事項

Operating a model helicopter requires a high degree of responsibility and skill. If you are a newcomer to the hobby, it is best to seek help and guidance from accomplished model helicopter pilots. This will greatly speed up the learning process and have you flying successfully in a reasonable amount of time. We also would strongly urge you to join the Academy of Model Aeronautics. The AMA is a non-profit organization that provides its members with a liability insurance plan as well as monthly magazine entitled Model Aviation. All AMA charter aircraft clubs require all pilots to hold a current AMA sporting license prior to operation of their models at club fields. For further information, contact the AMA at:
Academy of Model Aeronautics
5151 East Memorial Drive
Muncie, IN 47302
(317) 287-1256

操控遙控直昇機對於飛行安全要求極高，需要高度的負責任態度配合，以及較高的操控技巧。如果您是一位初學者，建議您必須向當地專業模型經銷商，或是遙控直昇機相關組織以及經驗豐富的玩家尋求相關協助，以獲得您所需要的訊息以及專業知識。如此可有效協助您縮短學習的時間，更容易學會遙控直昇機的組裝、設定與操控技巧。

FLIGHT SAFETY CHECKLIST / 飛行前安全確認工作項目

1. Make sure that the transmitter battery is fully charged before flying.
2. Make sure all control surfaces are operated properly before flying.
3. Do a range check of the radio before the first flight. The electronic equipment must operate properly at a range of at least 5 meters (18 ft) even with the transmitter antenna collapsed.
4. Make sure there are no other pilots using the same radio frequency with yours and that there are no other radio interference on your frequency.
5. Be sure to turn on the transmitter first with the throttle stick in the idle position. Plug the battery into the ESC last.
6. The main rotor and the tail rotor spin at very high RPM. Make sure nothing can come in contact with the rotor blades during flight.
7. Always maintain a safe distance from the helicopter during flight.
8. Never fly the helicopter in the rain or in excessive wind conditions.
9. Always operate and fly the helicopter in a safe and responsible manner.
10. Never fly the helicopter over other pilots, spectators, cars or anything that could result in injury or property damage.

1. 確認接收機與發射機電池，均已確實充電完成。
2. 確認所有操控介面運作順暢。
3. 確認無其他無線電波干擾，且不與其他同好同時使用相同頻率。
4. 確實將油門搖桿放置於低速，再將發射機電源開啟，然後再將電池接上。
5. 確認遙控器發射器與接收機工作正常，將機體放至於距離5公尺外，確認遙控器是否正常，機體控制動作是否正確。
6. 主旋翼與尾旋翼轉速相當高，運轉時須避免任何障礙物與旋翼接觸。
7. 飛行時，需與遙控直升機保持安全距離。
8. 勿於下雨天或是強風的狀態下操控遙控直升機。
9. 請以安全為第一考量，並以高度負責任的態度參與遙控直升機活動。
10. 禁止於人群、車輛..或任何其他障礙物上方飛行遙控直升機，避免意外發生。

POST FLIGHT INSPECTION / 飛行結束安全檢查事項

1. Inspect the model thoroughly to insure no parts have come loose or become damaged during the flight and landing. Replace damaged parts and tighten loose screws before flying again.
2. Clean the helicopter body.
3. Lubricate all moving parts to ensure smooth operation for the next flying.
4. Replace any worn ball links and damaged bearings.
5. Store the model in a cool, dry place. Avoid putting it under direct sunlight or near a source of heat.

Following these simple rules will allow you to enjoy the thrill of model helicopter flying for many years.

1. 飛行結束後確認機體所有的零件與螺絲是否有損壞或鬆動，更換損壞零件與確實固定鬆動的螺絲。
2. 機體清潔乾淨。
3. 檢查所有活動零組件是否運作順暢，以利下次飛行。
4. 更換所有鬆動的連桿、接頭，以及損壞的軸承。
5. 將機體存放於陰涼通風處，避免機體放置於陽光直射處或接近熱源。

確實執行上述幾項簡單的步驟，將可確保您的愛機維持數年的壽命！

CAUTION / 注意事項

When the model has crashed, inspect the flybar, rotor shaft and the blade spindle to make sure they are not bent. If any item is damaged, it must be replaced with a new part to ensure safe operation. Do not glue any broken or damaged plastic parts. Do not repair broken rotor blades. It is very important to inspect the motor, speed control and the battery.

Always inspect the following items:

Gears, Ball links, Link rods, Bearings, Main shaft, Flybar, Spindle, Tail boom and support, Fins, Tail rotor shaft, Belt, Main blades, Tail blades, the Motor, the Speed control and the Battery.

機體一旦發生墜落事件，請確實檢查平衡桿、主軸、橫軸是否有彎曲變形，如果有任何的損壞，請立即更換原廠新的零組件，確認機體操作安全！切勿使用任何接著劑嘗試黏合塑膠零件；請勿使用修復過的主旋翼。馬達、速控器、電池的安全檢查工作亦相當重要。

發生機體墜落事件後，請確實檢查下列項目：

齒輪組、球頭連桿、連桿頭、軸承、主軸、橫軸、尾軸、平衡桿、平衡片、尾管、尾管支撐架、垂直與水平尾翼、尾驅動輪、皮帶、主旋翼、尾旋翼、馬達、速控器、電池。

OTHER ITEMS REQUIRED / 需自行準備的配件

RADIO SET / 遙控系統

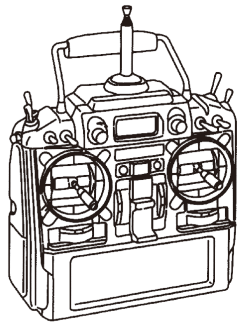

Transmitter (helicopter type only, 6 or more channels)
發射機（需具備直昇機控制功能的6動以上遙控器）

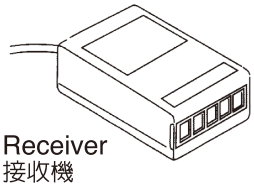

Receiver
接收機

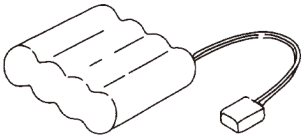

Rx Battery
接收機電池

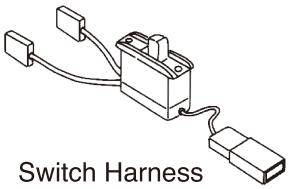

Switch Harness
具備充電線的開關組

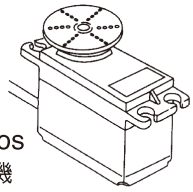

Servos
伺服機

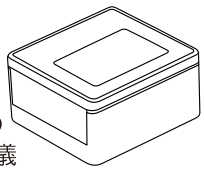

Gyro
陀螺儀

POWER SYSTEM / 動力系統

NITRO VERSION

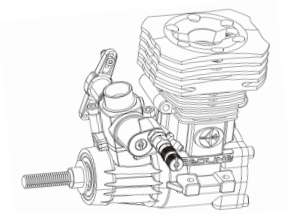

RC Hilecopter engine
直昇機專用引擎

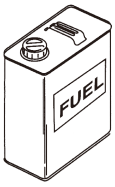

Glow Fuel(15%-30%)
直昇機專用燃油

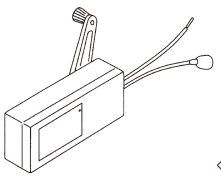

Fuel Pump
加油泵

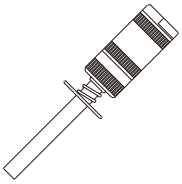

1.5V Glow Starter
(1.2V~1.5V)
1.5V快速電夾

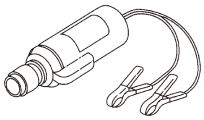

12V Electric Starter
啓動馬達

Glow Plug
專用火星塞

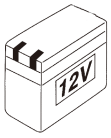

12V Battery
電瓶

Remote Glow
Plug Extension
火星塞外接線

Extended 6mm Hex
Starting Tool
啓動棒

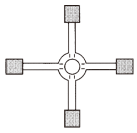

Glow Plug Wrench
可卸火星塞的十字套筒板手

ELECTRIC VERSION

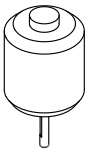

Electric Brushless Motor
無刷馬達

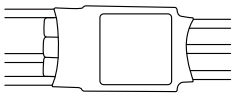

Electronic Speed Controller
速控器

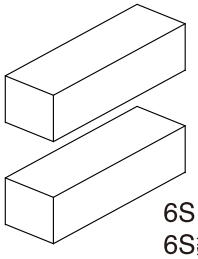

6S Li-Po Battery x 2
6S鋰電池x2

TOOLS REQUIRED FOR ASSEMBLY / 需要準備的工具

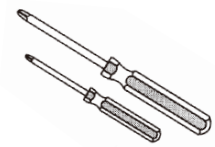

Screw Driver
各種規格的螺絲起子

Needle Nose Pliers
尖嘴鉗

Nipper
斜口鉗

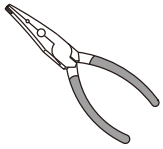

Ball Link Pliers
拆連桿頭的專用鉗子

Scissors
剪刀

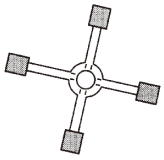

Metric 4-way Wrench
十字套筒板手

Hobby Knife
美工刀

C.A Glue
瞬間膠

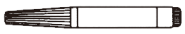

Threadlocker
螺絲防鬆膠

Grease
潤滑油

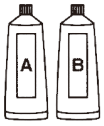

Epoxy
環氧樹酯

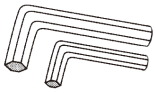

Hex Wrench
六角板手

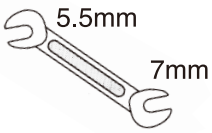

Wrench
開口板手

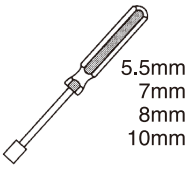

Socket Drivers
套筒螺絲起子

MANUAL FORMAT / 說明書使用方式

How to read the instruction manual?
說明書導讀

A: Indicates the assembly step number and the parts bags that are to be assembled.
B: Displays actual size drawings, and part quantities used.
C: All parts, except screws, are identified by its order numbers. When purchasing spare parts, identify the part required and cross reference this to the spare parts list in the end of this maunal, which shows the purchasable spare parts and the corresponding order numbers.
D: This instruction manual uses several symbols. Pay careful attention to them during construction. Details are given at the bottom of each page.
E: If a label marked here indicates the page is the exclusive assembly steps for a particular model type; please follow the exclusive instructions according to the model type you purchased.
A: 顯示組立步驟及需組立之零件包順序。
B: 零件實際對照尺寸及使用數量。
C: 請比對零件形狀以及後附零件料號對照圖示找出需求零件料號。
D: 操作說明符號可更有效協助組裝者使用此說明書，請依說明書符號指示進行組裝步驟。
E: 出現此標籤表示本頁為特定模型版本之專屬組裝說明，請依您所購買之版本依說明進行組裝步驟。

Example 說明範例

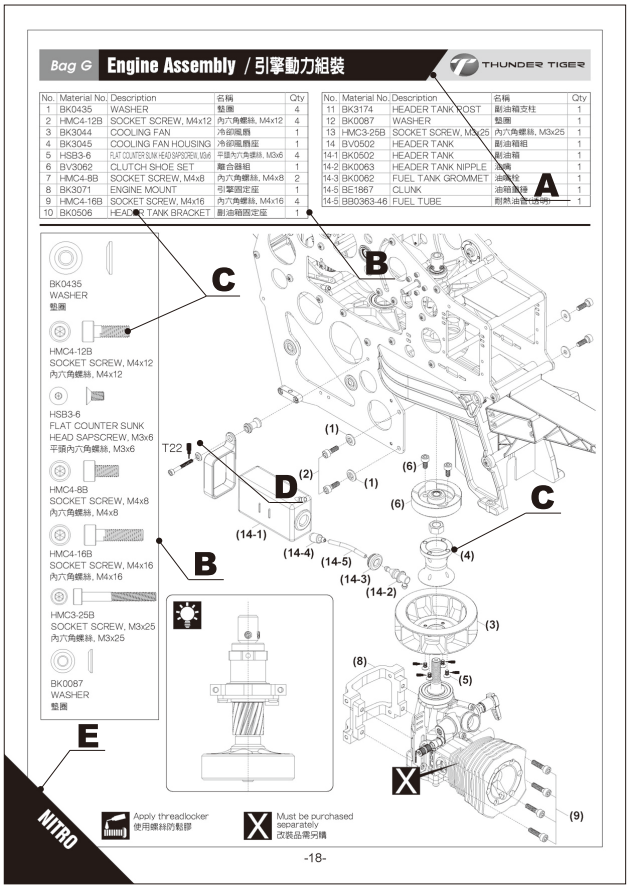

SYMBOLS USED THROUGHOUT THE MANUAL / 符號說明

The parts in the KIT are packed according to each major assembly steps. The part number and quantity are always shown in the square box on each page. As good practice, only open up the bag that you need for the paticular assembly.
零件均依照組裝步驟包裝，請依照組裝程序，逐一開啟零件包，避免零件遺失。

Note / 注意
Assembly drawings will contain icons that indicate use of Threadlocker or CA glue as needed.
Examples of the icons are as right shown:
請依組裝步驟圖示，使用防鬆膠或接著劑。
圖示範例如右：

T22(#262) → THREADLOCKER / 螺絲防鬆膠

CA → CA GLUE / 快乾膠

- Apply C.A Glue 使用快乾膠黏合
- Apply threadlocker 使用螺絲防鬆膠
- Assemble as many times as specified 依指示組裝所需數量
- Assemble left and right side the same way 左右側組件相同
- Assemble in right order 依標示順序組裝
- Cut off shaded portion 依標示部分裁切
- Ensure smooth, non-binding movement when assembling 確認組件靈活度
- Drill holes with the specified diameter 依標示尺寸鑽孔
- Must be purchased separately 改裝品需另購
- Cut off excess 裁剪多餘部分
- Apply grease 使用潤滑油膏(黃油)
- Pay close attention here 注意組裝步驟
- Hint 組裝提示

Bag A Main Rotor System / 主旋翼機構組裝

THUNDER TIGER

No.	Material No.	Description	名稱	Qty
1	BK3072	HEAD BUTTON	煞車盤	1
2	HMC25-5B	SOCKET SCREW, M2.5x5	內六角螺絲, M2.5x5	2
3	BV3001	MAIN ROTOR HUB SET	金屬主旋翼固定座組	1
4	BV3005	SEESAW HUB SET	穩定桿固定軸組	1
5	BK3010	COLLAR	軸環	2

No.	Material No.	Description	名稱	Qty
6	HMC3-10B	SOCKET SCREW, M3x10	內六角螺絲, M3x10	2
7	BV3008	METAL MIXING LEVER SET	金屬混控搖臂組	2
8	BK0649-1	LINKAGE BALL(A)	內六角連接頭螺絲(A)	4
9	BK3009	COLLAR	軸套	2
10	HMC3-18B	SOCKET SCREW, M3x18	內六角螺絲, M3x18	2

BK3010
COLLAR
軸環

HMC25-5B
SOCKET SCREW, M2.5x5
內六角螺絲, M2.5x5

HMC3-10B
SOCKET SCREW, M3x10
內六角螺絲, M3x10

BK0649-1
LINKAGE BALL(A)
內六角連接頭螺絲(A)

BK3009
COLLAR
軸套

HMC3-18B
SOCKET SCREW, M3x18
內六角螺絲, M3x18

Secure all screws shown on this page with a drop of threadlocker.
本頁顯示之螺絲請使用適量防鬆膠鎖固。

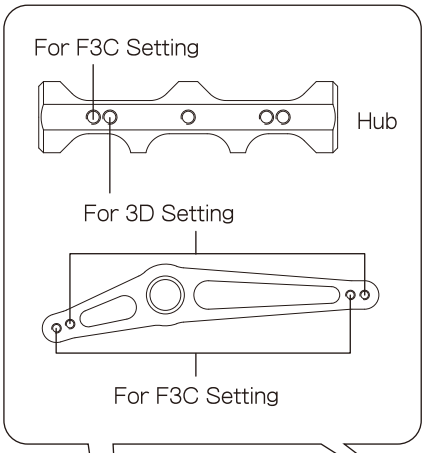

Ensure all parts are assembled properly as drawings, and the Seesaw Hub Set and Mixing Lever Sets run effortlessly and smoothly.
請依圖示正確組裝各零件，並確認穩定翼固定軸組及混控搖臂組皆作動順暢。

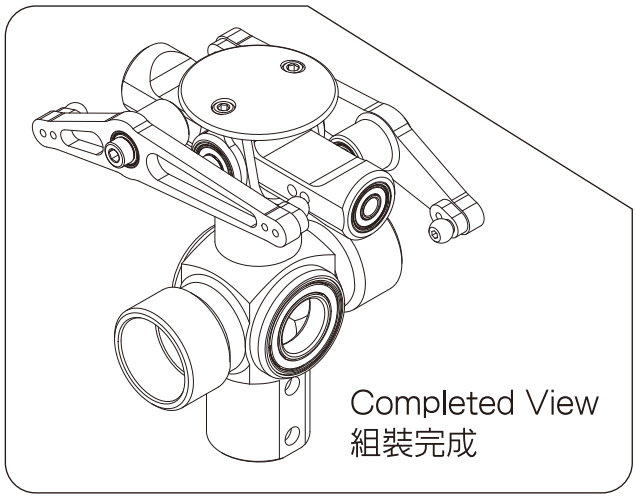

Apply threadlocker
使用螺絲防鬆膠

Assemble left and right side the same way
左右側組件相同

Ensure smooth, non-binding movement when assembling
確認組件靈活度

Bag B Main Rotor System / 主旋翼機構組裝

THUNDER TIGER

No.	Material No.	Description	名稱	Qty
1	BK3006	FLYBAR CONTROL ARM	穩定翼控制臂	2
2	BK3007	FLYBAR CONTROL ARM POST	穩定翼控制臂柱	2
3	BK0649-1	LINKAGE BALL(A)	內六角連接頭螺絲(A)	2
4	BK0087	WASHER	墊圈	2
5	HMC3-12B	SOCKET SCREW, M3x12	內六角螺絲, M3x12	2

No.	Material No.	Description	名稱	Qty
6	HME4-4B	SET SCREW, M4x4	無頭內六角螺絲, M4x4	2
7	BK3013	SUS FLYBAR ROD	SUS 平衡桿	1
8	BV6043	CARBON FLYBAR PADDLE	碳纖穩定翼	1
9	HME3-6B	SET SCREW, M3x6	無頭內六角螺絲, M3x6	2

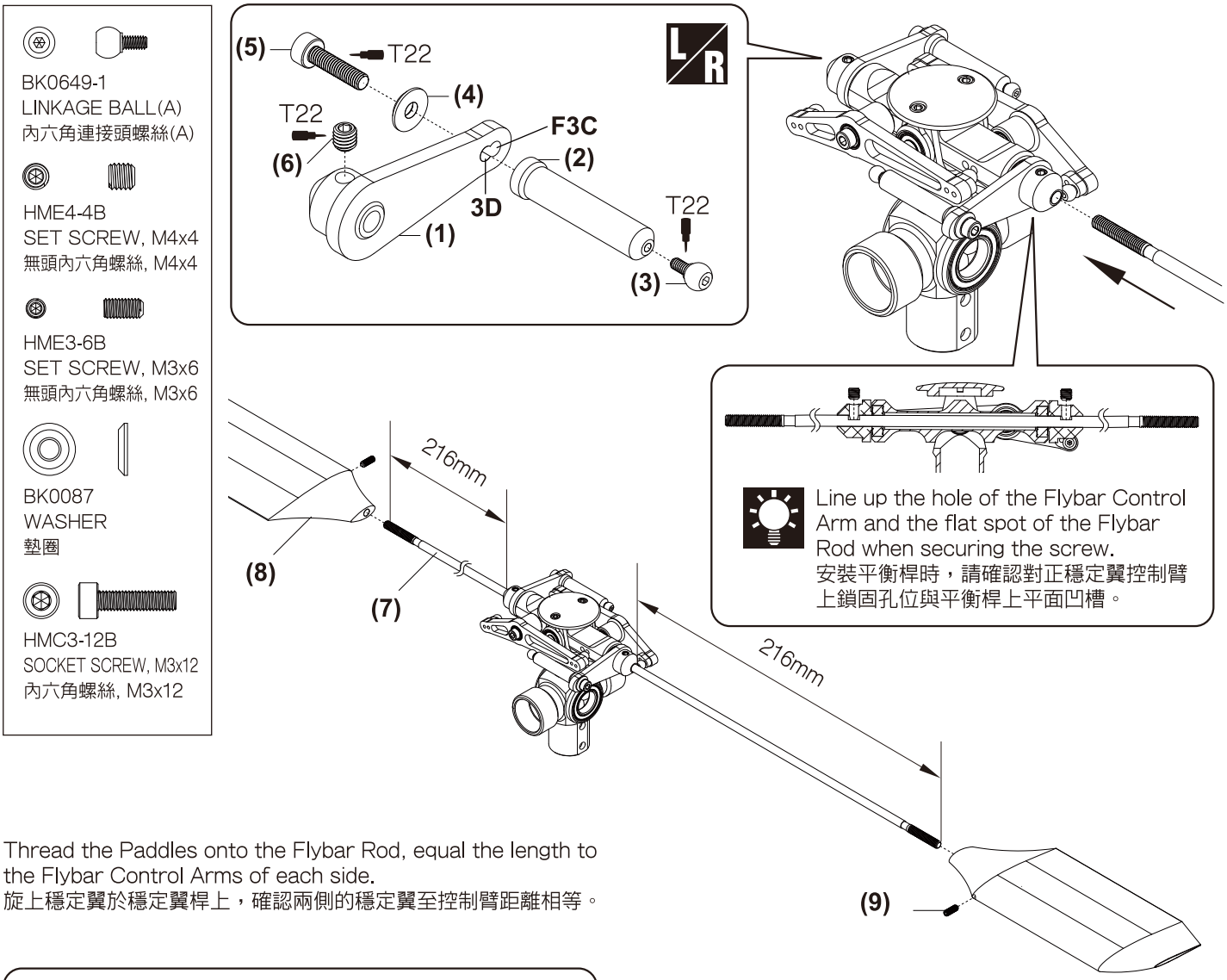

Line up the hole of the Flybar Control Arm and the flat spot of the Flybar Rod when securing the screw.
安裝平衡桿時，請確認對正穩定翼控制臂上鎖固孔位與平衡桿上平面凹槽。

Thread the Paddles onto the Flybar Rod, equal the length to the Flybar Control Arms of each side.
旋上穩定翼於穩定翼桿上，確認兩側的穩定翼至控制臂距離相等。

Line up the Paddles with the Flybar Control Arms.
對正穩定翼與穩定翼控制臂呈水平狀態。

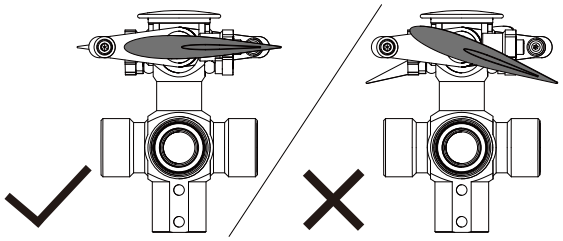

Ensure the leading edges of the Paddles are toward the same side to the Metal Flybar Control Posts.
確認穩定翼前緣與穩定翼控制轉臂方向相同。

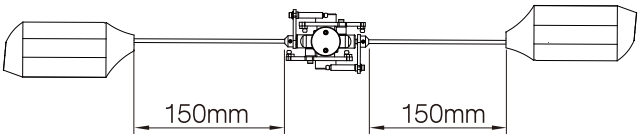

Apply threadlocker
使用螺絲防鬆膠

Assemble left and right side the same way
左右側組件相同

Bag B Main Rotor System / 主旋翼機構組裝

THUNDER TIGER

No.	Material No.	Description	名稱	Qty
1	BV3002	METAL ROTOR GRIP SET	金屬主旋翼轉座組	2
1-1	HMV1680ZZY	BEARING	滾珠軸承	2
1-2	HMX0816	THRUST BEARING	止推軸承	1
1-3	BK3151	THRUST COLLAR, 0.5mm	止推軸環, 0.5mm	1
2*	BK3003	METAL ROTOR GRIP LEVER	金屬旋翼轉座搖臂	2
	BK3028	FBL ROTOR GRIP LEVER	無平衡翼金屬旋翼轉座搖臂	

No.	Material No.	Description	名稱	Qty
3	HMC3-6B	SOCKET SCREW, M3x6	內六角螺絲, M3x6	4
4	BK3004	MAIN ROTOR GRIP POST	金屬主旋翼轉座支柱	2
5	BK0649-1	LINKAGE BALL(A)	內六角連接頭螺絲(A)	2
6	BK0087	WASHER	墊圈	2
7	HMC3-12B	SOCKET SCREW, M3x12	內六角螺絲, M3x12	2

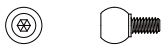

BK0649-1
LINKAGE BALL(A)
內六角連接頭螺絲(A)

HMC3-6B
SOCKET SCREW, M3x6
內六角螺絲, M3x6

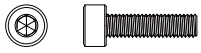

HMC3-12B
SOCKET SCREW, M3x12
內六角螺絲, M3x12

BK0087
WASHER
墊圈

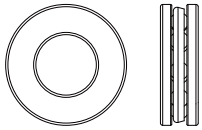

HMX0816
THRUST BEARING
止推軸承

BK3151
THRUST COLLAR, 0.5mm
止推軸環, 0.5mm

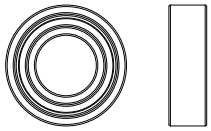

HMV1680ZZY
BEARING
滾珠軸承

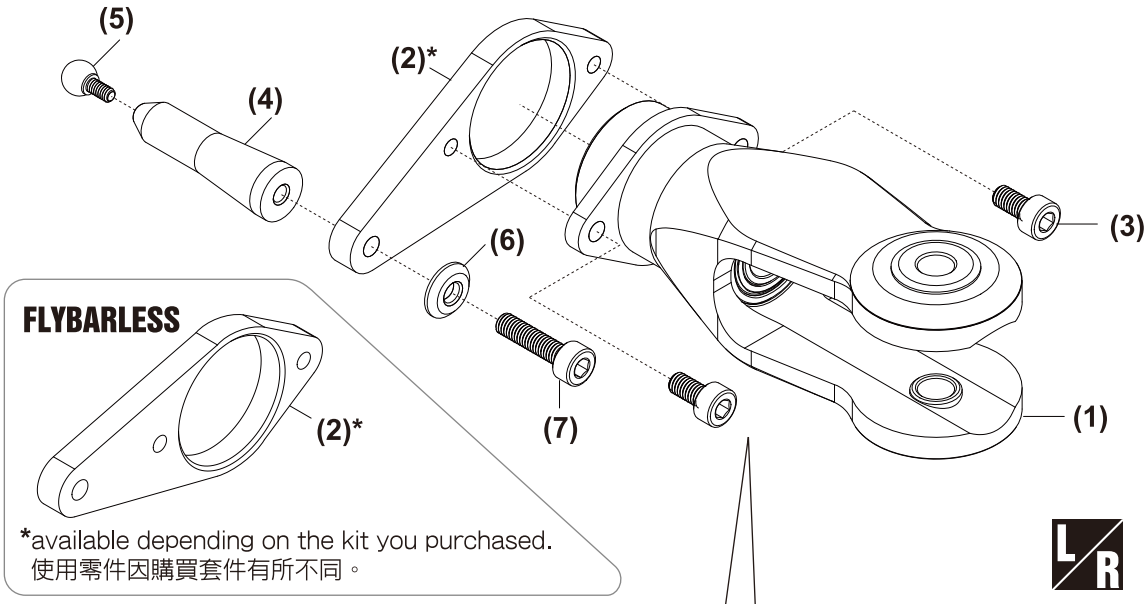

*available depending on the kit you purchased.
使用零件因購買套件有所不同。

L/R

Assemble the main rotor pitch housing as drawing
主旋翼轉座組裝圖

The bearings (5-1) come with the grips which had been assembled by Factory.
主旋翼夾座內軸承 (5-1) 已由原廠壓配完成。

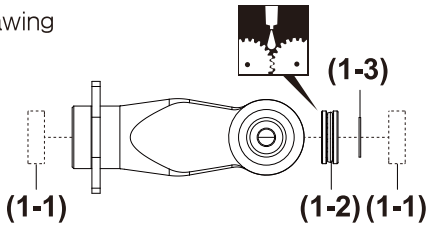

Diagram for Thrust Bearing Assembly
止推軸承安裝示意圖

Large Internal Diameter always goes toward the Main Rotor Hub
內徑較大的一側，面向主旋翼固定座組（內側）。

Small Internal Diameter always goes toward the Blade
內徑較小的一側，面向主旋翼組（外側）。

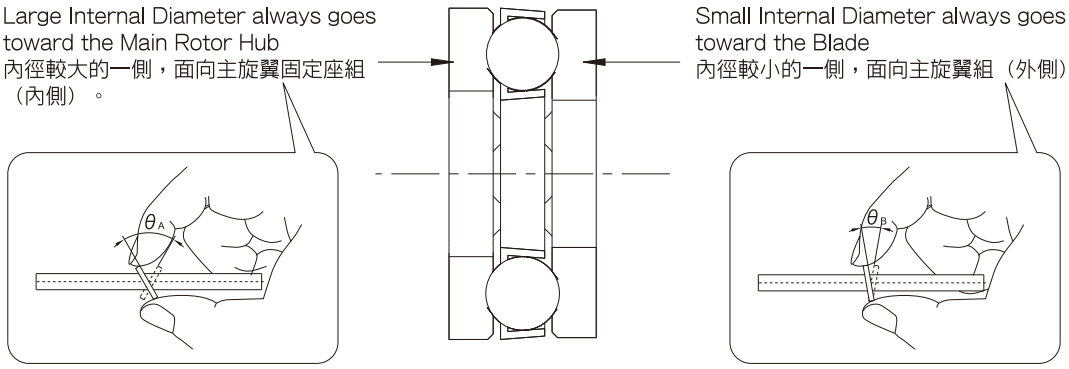

Checking Tips: $\theta_A > \theta_B$
轉動角度：$\theta_A > \theta_B$（轉動角度大者，內孔大；轉動角度小者，內孔小）

Apply threadlocker
使用螺絲防鬆膠

L/R Assemble left and right side the same way
左右側組件相同

Apply grease
使用潤滑油膏(黃油)

Bag B Main Rotor System / 主旋翼機構組裝

THUNDER TIGER

No.	Material No.	Description	名稱	Qty
1	BV3016	PHASE RING	滑座導引環組	1
2	HMC3-8B	SOCKET SCREW, M3x8	內六角螺絲, M3x8	1
3	BK3014	HARDENED MAIN SHAFT(15mm)	強化主軸(15mm)	1
4	HMC4-6B	SOCKET SCREW, M4x6	內六角螺絲, M4x6	4
5	BK3018	WASHOUT BASE	控制臂座	1
6	BV3033	FLYBAR CONTROL LEVER SET	穩定翼控制搖臂組	2
7	BK3169	COLLAR	軸套	2
8	HMC3-12B	SOCKET SCREW, M3x12	內六角螺絲, M3x12	2
9	BK0088	WASHER	墊片	2
10	BK0649-1	LINKAGE BALL(A)	內六角連接頭螺絲(A)	2
11	BK3104	WASHOUT LINKAGE	連接座	2
12	HMY2-15	PIN	軸承滾針	2
13	HME3-4B	SET SCREW, M3x4	無頭內六角螺絲, M3x4	2

No.	Material No.	Description	名稱	Qty
14	BV3020A	METAL SWASHPLATE	十字盤組	2
15	BK0435	WASHER, d4xD11xW1.7	華司	2
16	BK3151-1	THRUST COLLAR, 1mm	止推軸環, 1mm	2
17	BK3151	THRUST COLLAR, 0.5mm	止推軸環, 0.5mm	2
18	BK3151-2	THRUST COLLAR, 0.2mm	止推軸環, 0.2mm	2
19	BK3151-3	THRUST COLLAR, 0.1mm	止推軸環, 0.1mm	2
20	BK3101	FLYBAR CONTROL ROD	穩定翼操控環	2
21	HMC4-10B	SOCKET SCREW, M4x10	內六角螺絲, M4x10	2
22	BK0326-1	SPINDLE	固定軸	1
23	BK3012	MAIN ROTOR HUB PIN	擺動固定銷	1
24	BK0875	OUTER DAMPER	外避震墊圈	2
25	BK0874	INNER DAMPER	內避震墊圈	2

Secure all screws shown on this page with a drop of threadlocker.
本頁顯示之螺絲請使用適量防鬆膠鎖固。

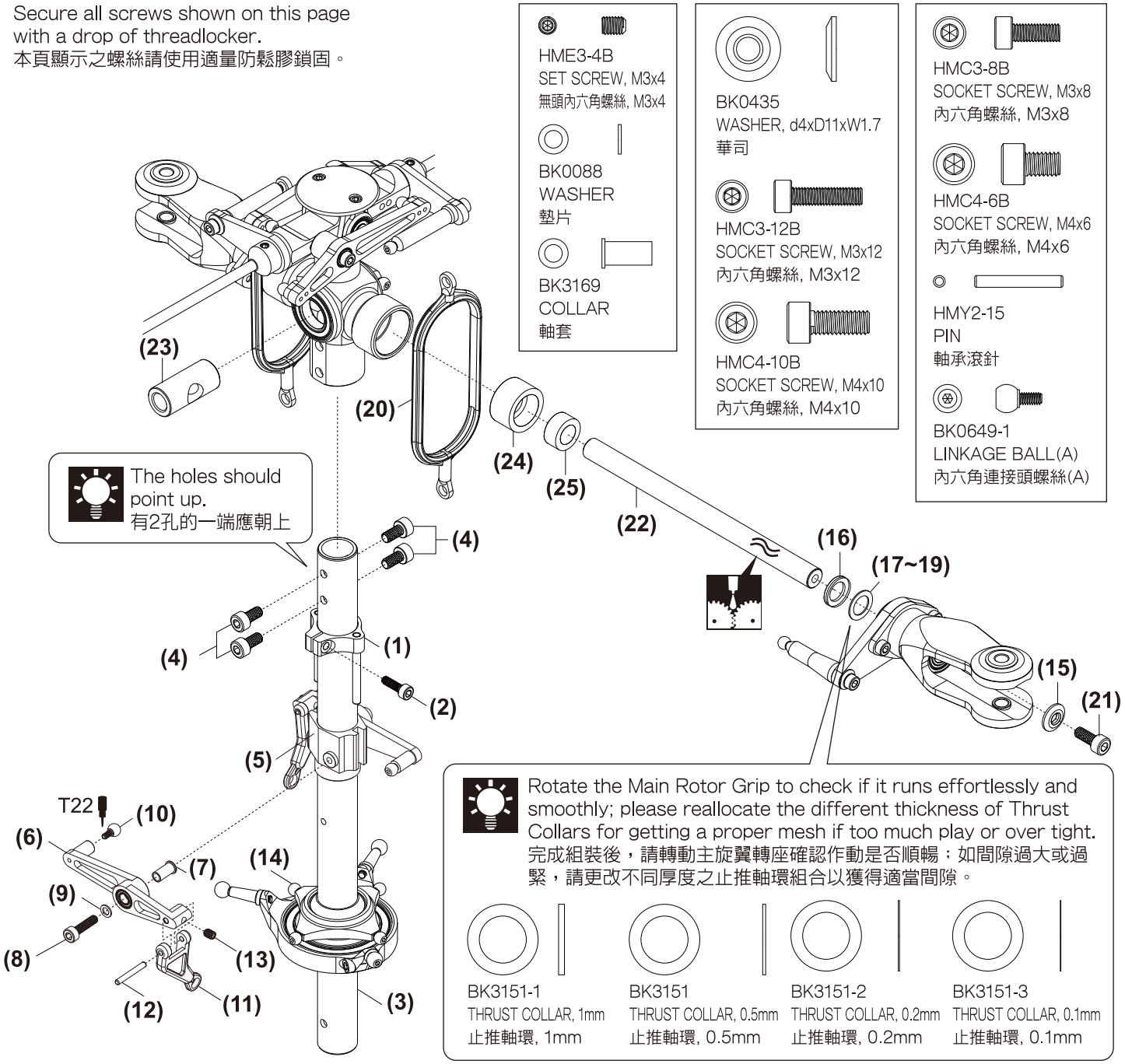

Apply threadlocker
使用螺絲防鬆膠

Apply grease
使用潤滑油膏(黃油)

Bag B Main Rotor System - Flybarless / 主旋翼機構組裝-無平衡翼

THUNDER TIGER

No.	Material No.	Description	名稱	Qty
1	BK3014	HARDENED MAIN SHAFT(15mm)	強化主軸(15mm)	1
2	HMC4-6B	SOCKET SCREW, M4x6	內六角螺絲, M4x6	4
3	BV3020A	METAL SWASHPLATE	十字盤組	1
4	HMC3-10B	SOCKET SCREW	內六角螺絲	1
5	BK3041	FBL WASHOUT BASE	無平衡翼控制臂座	1
6	BK3042	FBL CONTROL LEVER	無平衡翼控制搖臂	2
7	HMV840ZZY	BEARING	滾珠軸承	4
8	BK3169	COLLAR	軸套	2
9	HMC3-14B	SOCKET SCREW, M3x14	內六角螺絲, M3x14	2
10	HME3-4B	SET SCREW, M3x4	無頭內六角螺絲, M3x4	2
11	HMY2-19	PIN	軸承滾針	2
12	BK3110	FBL WASHOUT LINKAGE	無平衡翼連接座	2
13	BK0649-1	LINKAGE BALL(A)	內六角連接頭螺絲(A)	2

No.	Material No.	Description	名稱	Qty
14	BK3151	THRUST COLLAR, 0.5mm	止推軸環, 0.5mm	2
15	BK3151-1	THRUST COLLAR, 1mm	止推軸環, 1mm	2
16	BK3151-2	THRUST COLLAR, 0.2mm	止推軸環, 0.2mm	2
17	BK3151-3	THRUST COLLAR, 0.1mm	止推軸環, 0.1mm	2
18	BK0326-1	SPINDLE	固定軸	1
19	BK0875	OUTER DAMPER	外避震墊圈	2
20	BK0874	INNER DAMPER	內避震墊圈	2
21	BK0435	WASHER, d4xD11xW1.7	華司, d4xD11xW1.7	2
22	HMC4-10B	SOCKET SCREW, M4x10	內六角螺絲, M4x10	2
23	BK3029	FBL MAIN ROTOR HUB	無平衡翼金屬主旋翼固定座	1
24	BK3030	FBL HEAD BUTTON	無平衡翼煞車盤	1
25	HMC25-10B	SOCKET SCREW, M2.5x10	內六角螺絲, M2.5x10	4

Secure all screws shown on this page with a drop of threadlocker.
本頁顯示之螺絲請使用適量防鬆膠鎖固。

HMY2-19
PIN
軸承滾針

BK3169
COLLAR
軸套

HMV840ZZY
BEARING
滾珠軸承

HME3-4B
SET SCREW, M3x4
無頭內六角螺絲, M3x4

HMC4-10B
SOCKET SCREW, M4x10
內六角螺絲, M4x10

HMC25-10B
SOCKET SCREW, M2.5x10
內六角螺絲, M2.5x10

BK0435
WASHER, d4xD11xW1.7
華司, d4xD11xW1.7

HMC3-10B
SOCKET SCREW, M3x10
內六角螺絲, M3x10

HMC4-6B
SOCKET SCREW, M4x6
內六角螺絲, M4x6

HMC3-14B
SOCKET SCREW, M3x14
內六角螺絲, M3x14

BK0649-1
LINKAGE BALL(A)
內六角連接頭螺絲(A)

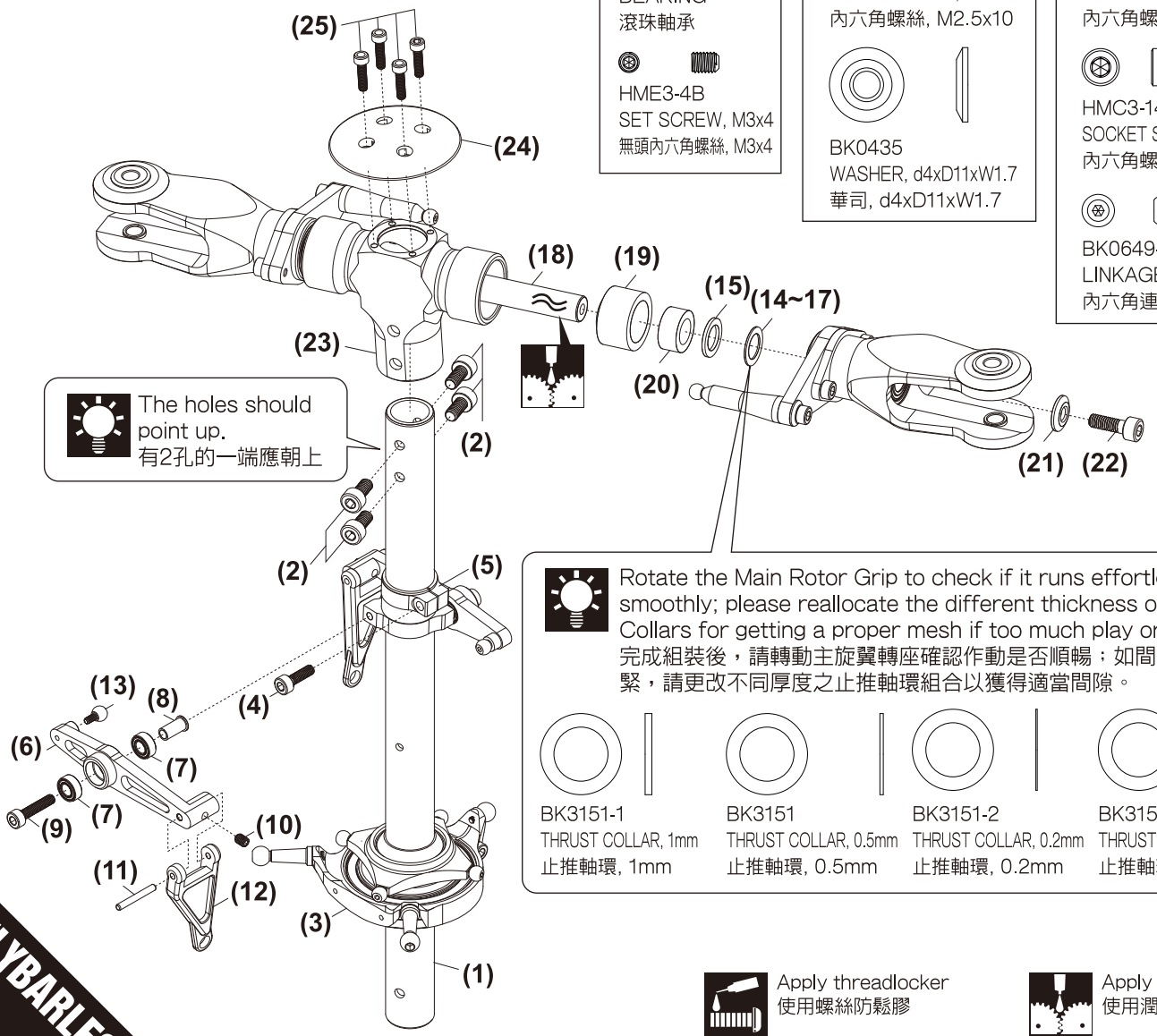

The holes should point up.
有2孔的一端應朝上

Rotate the Main Rotor Grip to check if it runs effortlessly and smoothly; please reallocate the different thickness of Thrust Collars for getting a proper mesh if too much play or over tight.
完成組裝後，請轉動主旋翼轉座確認作動是否順暢；如間隙過大或過緊，請更改不同厚度之止推軸環組合以獲得適當間隙。

BK3151-1
THRUST COLLAR, 1mm
止推軸環, 1mm

BK3151
THRUST COLLAR, 0.5mm
止推軸環, 0.5mm

BK3151-2
THRUST COLLAR, 0.2mm
止推軸環, 0.2mm

BK3151-3
THRUST COLLAR, 0.1mm
止推軸環, 0.1mm

Apply threadlocker
使用螺絲防鬆膠

Apply grease
使用潤滑油膏(黃油)

FLYBARLESS

Bag B Main Rotor Head Linkage Rod Installation / 主旋翼頭連桿組裝

THUNDER TIGER

FLYBARLESS

No.	Material No.	Description	名稱	Qty
1	BV0092-48	LINKAGE ROD SET(48.4mm)	連接桿組(48.4mm)	2
1-1	BK0092-1	LINGAGE ROD(N)	連接桿(鍍鎳)	1

No.	Material No.	Description	名稱	Qty
1-2	BK0086	BALL LINK	單頭連接桿	2

FLYBAR

No.	Material No.	Description	名稱	Qty
1	BV0292	LINKAGE ROD SET (41.2mm)	連接桿組	2
1-1	BK0292	LINKAGE ROD	連接桿	1
1-2	BK0086	BALL LINK	單頭連接桿	2

No.	Material No.	Description	名稱	Qty
2	BV3152	LINKAGE ROD SET (124mm)	連接桿組	2
2-1	BK3152	LINKAGE ROD	連接桿	1
2-2	BK0086	BALL LINK	單頭連接桿	2

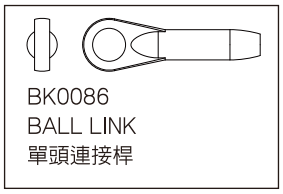

Scale=1:1 (unit:mm)

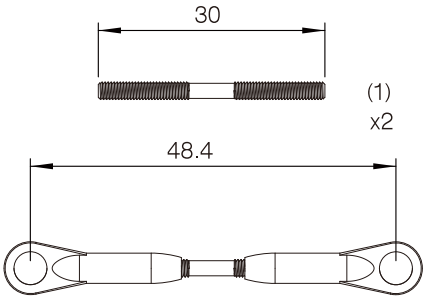

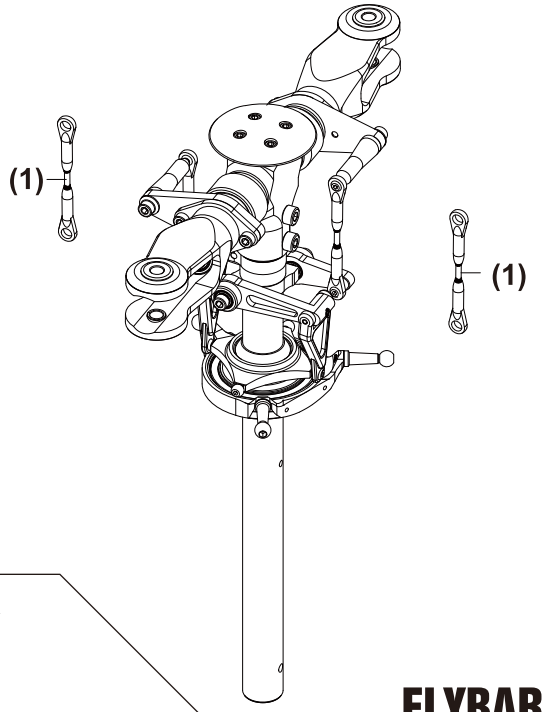

FLYBARLESS

FLYBAR

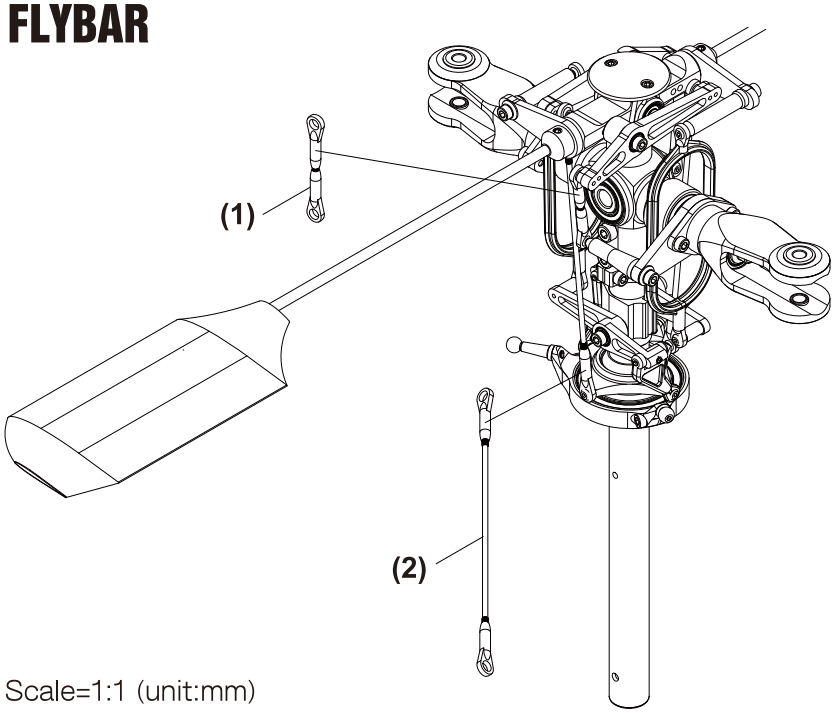

Scale=1:1 (unit:mm)

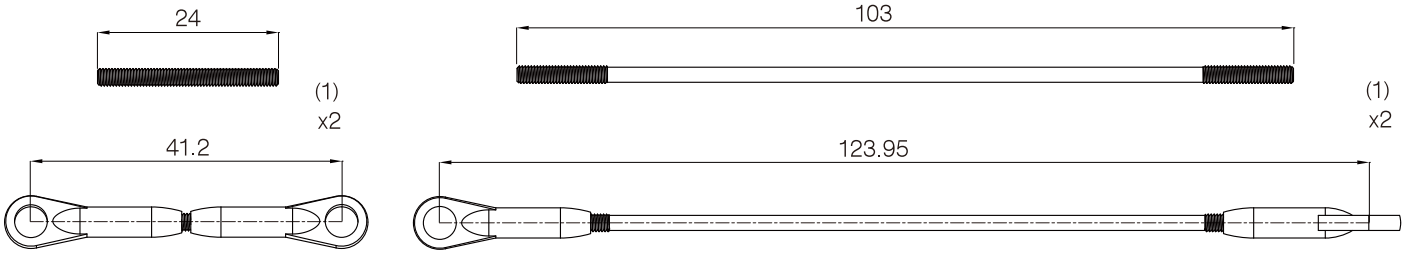

Bag C Tail Boom Bracket Assembly / 尾管固定座組裝

THUNDER TIGER

No.	Material No.	Description	名稱	Qty
1	BK3117	TAIL BOOM BRACKET-R	機身尾管固定座(右)	1
2	BK3116	TAIL BOOM BRACKET-L	機身尾管固定座(左)	1
3	BK0363	TAIL DRIVE BEVEL GEAR-B	尾驅動傘齒B(24T)	1
4	HMV6701ZZY	BEARING	滾珠軸承	2
5	BK3184	BEVEL COLLAR	傘齒軸環	1
6	BK3070	TAIL DRIVE GEAR SHAFT	尾驅動齒輪軸	1
7	BK3138	TAIL DRIVE GEAR-26T	尾驅動齒輪26T	1
8	BK3128	TAIL DRIVE BEVEL GEAR-A	尾驅動傘齒A(27T)	1

No.	Material No.	Description	名稱	Qty
9	BK0414	PIN φ2x12	固定銷	2
10	HMV1350ZZY	BEARING	滾珠軸承	2
11	HME3-4B	SET SCREW, M3x4	無頭內六角螺絲, M3x4	2
12	HSE2616B	SELF-TAPPING SCREW, M2.6x16	扁圓自攻螺絲(粗)	2
13	BK3081	FRAME SPACER	側板支柱	4
14	HMC3-25B	SOCKET SCREW, M3x25	內六角螺絲, M3x25	4
15	HMM3B	NYLON NUT, M3	止鬆螺帽, M3	5
16	HMC3-14B	SOCKET SCREW, M3x14	內六角螺絲, M3x14	1

HSE2616B
SELF-TAPPING SCREW, M2.6x16
扁圓自攻螺絲(粗)

HMC3-25B
SOCKET SCREW, M3x25
內六角螺絲, M3x25

HMM3B
NYLON NUT, M3
止鬆螺帽, M3

BK0414
PIN φ2x12
固定銷

HMV1350ZZY
BEARING
滾珠軸承

HME3-4B
SET SCREW, M3x4
無頭內六角螺絲, M3x4

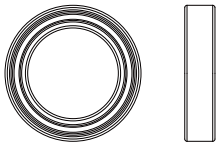

HMV6701ZZY
BEARING
滾珠軸承

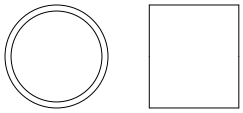

BK3184
BEVEL COLLAR
傘齒軸環

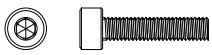

HMC3-14B
SOCKET SCREW, M3x14
內六角螺絲, M3x14

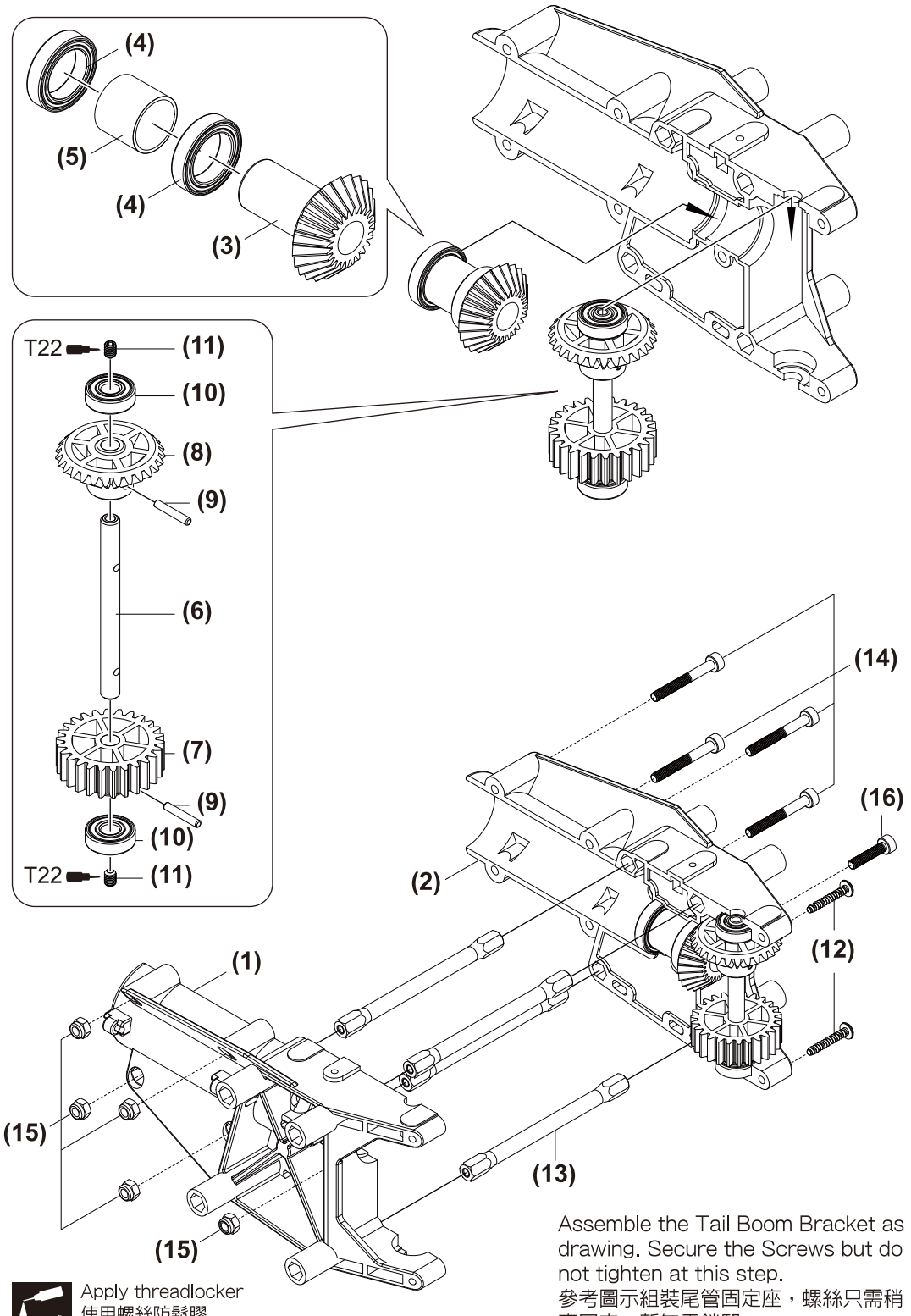

Apply threadlocker
使用螺絲防鬆膠

Assemble the Tail Boom Bracket as drawing. Secure the Screws but do not tighten at this step.
參考圖示組裝尾管固定座，螺絲只需稍事固定，暫無需鎖緊。

Bag D+E Main Frame / 本體組裝

THUNDER TIGER

No.	Material No.	Description	名稱	Qty
1	BK3080-1	SIDE FRAME-L	碳纖側板-左	1
2	BK3080-2	SIDE FRAME-R	碳纖側板-右	1
3	BK3065	CANOPY RETAINING POST	機身固定柱	2
4	HSV3-8B	TORX SCREW, M3x8	星型螺絲, M3x8	21
5	BV2416	ELEVATOR WASHER MOUNT SET	控制臂軸承座	2
6	BK2417	NUT	軸承座螺帽	2
7	BK3035	CONTROL LEVER BASE	控制臂固定座	2
8	HMC25-5B	SOCKET SCREW, M2.5x5	內六角螺絲, M2.5x5	8
9	BK3037	CONTROL LEVER	控制臂軸	2
10	BK3082	SHAFT	腳架固定座	2

No.	Material No.	Description	名稱	Qty
11	HMC3-8B	SOCKET SCREW, M3x8	內六角螺絲, M3x8	2
12	HMM3B	NYLON NUT, M3	止鬆螺帽, M3	2
13	BK3081	FRAME SPACER	側板支柱	7
14	BK3181	SERVO TRAY	伺服機座	1
15	BK3040	SERVO MOUNT	伺服機固定座	1
16	BK3185	SERVO MOUNT	伺服機固定座	1
17	HMC25-8N	SOCKET SCREW(N), M2.5x8	內六角螺絲(鎳色), M2.5x8	2
18	BK3124	GYRO TRAY	陀螺儀座	1
19	HMC3-10B	SOCKET SCREW, M3x10	內六角螺絲, M3x10	1
20	BV3023	MAIN SHAFT BRG BLOCK SET	主軸軸承座	2

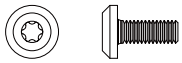

HSV3-8B
TORX SCREW, M3x8
星型螺絲

HMC25-5B
SOCKET SCREW, M2.5x5
內六角螺絲, M2.5x5

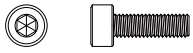

HMC3-10B
SOCKET SRCEW, M3x10
內六角螺絲, M3x10

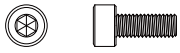

HMC3-8B
SOCKET SCREW, M3x8
內六角螺絲, M3x8

HMC25-8N
SOCKET SRCEW, M2.5x8
內六角螺絲, M2.5x8

HMM3B
NYLON NUT, M3
止鬆螺帽, M3

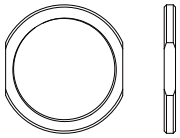

BK2417
NUT
軸承座螺帽

BK3037
CONTROL LEVER
控制臂軸

Secure all screws & Washer Mount shown on this page with a drop of threadlocker.
本頁顯示之螺絲及控制臂軸承座請使用適量防鬆膠鎖固。

Left Frame
左側板

Right Frame
右側板

The larger hole always goes toward the inner side.
請注意螺絲鎖固孔徑較大者朝內。

Upper
The flat surface of the Block always goes toward the inner side (Main Gear).
軸承座上平面一側朝內（朝向主齒盤）。
Lower

Apply threadlocker
使用螺絲防鬆膠

Bag D+E Main Frame / 本體組裝

THUNDER TIGER

No.	Material No.	Description	名稱	Qty
1	BK3123	RADIO TRAY	油門伺服機固定架	1
2	HSV3-8B	TORX SCREW, M3x8	星型螺絲, M3x8	10
3	BK3081	FRAME SPACER	側板支柱	3
4	HSB3-10	FLAT HEAD SOCKET SCREW, M3x10	平頭內六角螺絲, M3x10	4
5	BK0087	WASHER	墊圈	4
6	HMM3B	NYLON NUT, M3	止鬆螺帽, M3	4

No.	Material No.	Description	名稱	Qty
7	BK3083	BATTELY PIN	電池盒軸襯	2
8	BK3157	SPACER	墊圈	1
9	BK3087	LOWER SIDE FRAME	碳纖下側板	2
10	BK3086	BATTELY POST	電池盒支柱	1
11	BK3118	SKID BKT	支撐架固定座	2

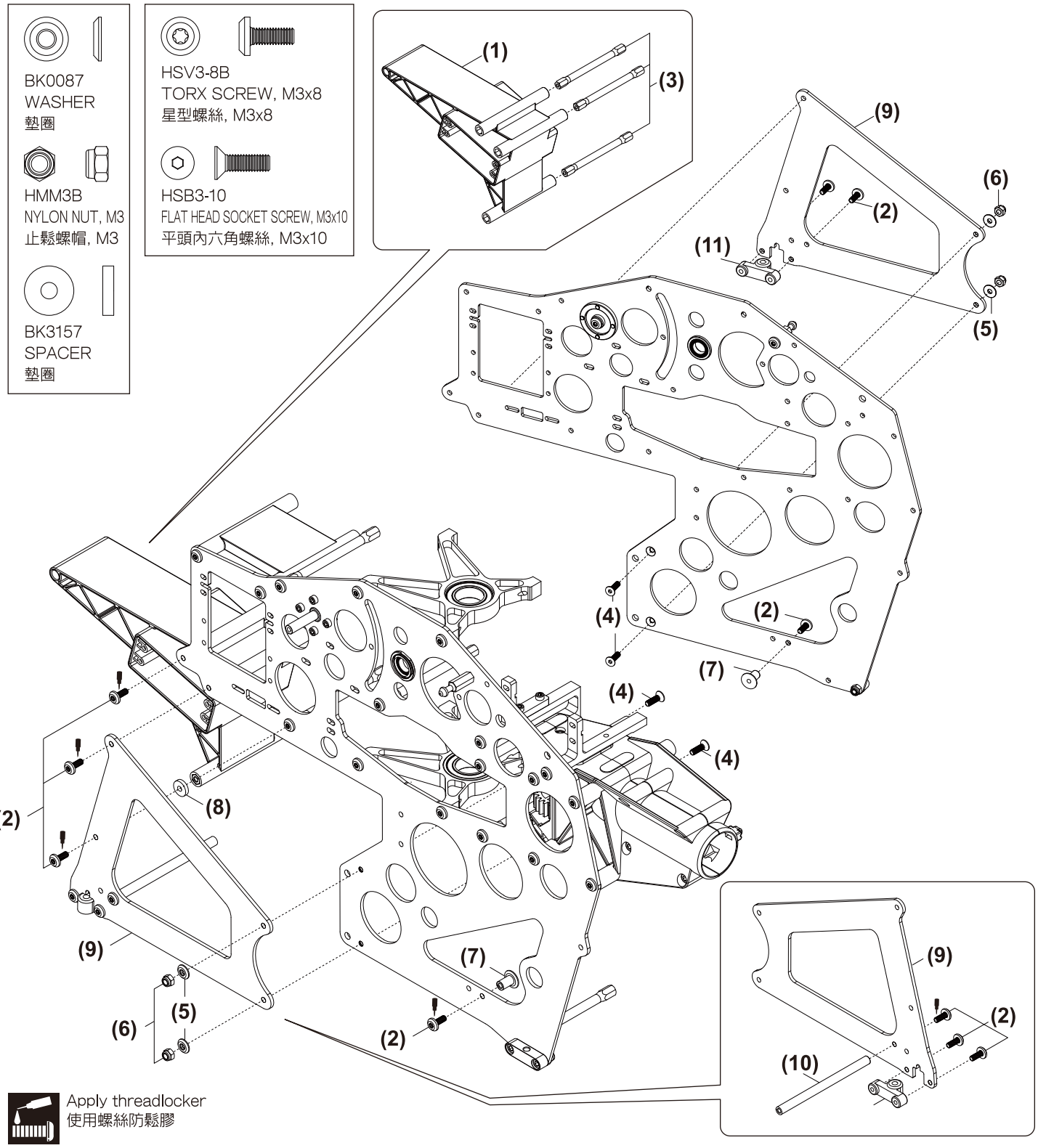

Bag E Main Frame / 本體組裝

THUNDER TIGER

No.	Material No.	Description	名稱	Qty
1	HSV3-8B	TORX SRCEW, M3x8	星型螺絲, M3x8	27
2	HMC3-10B	SOCKET SRCEW, M3x10	內六角螺絲, M3x10	1
3	HSE2612N	BUTTON PHILLIPS TAPPING SCREW, M2.6x12	扁圓自攻螺絲(粗), M2.6x12	1
4	BV3060	MOTOR PINION BLOCK	馬達齒輪固定座	1
5	BK3157	SPACER	墊圈	1
6	BV3133	METAL ELEVATOR CONTROL ARM	升降舵控制臂組	1
7	BK0649-1	LINKAGE BALL(A)	內六角連接頭螺絲(A)	2
8	BK3108	ELEVATOR CONTROL ARM LINK	升降舵連接座	1

No.	Material No.	Description	名稱	Qty
9	HMV725ZZY	BEARING, d2.5xD7xW3.5	滾珠軸承, d2.5xD7xW3.5	2
10	HMC25-8N	SOCKET SRCEW, M2.5x8	內六角螺絲, M2.5x8	2
11	BK3183	MOTOR PINION-11T	馬達齒輪(11T)	1
12	HME4-4B	SET SCREW, M4x4	無頭內六角螺絲, M4x4	2
13	BK3078	MOTOR MOUNT	馬達固定座	1
14	BK3109	ROD GUIDE PLATE	推拉桿導板	1
15	HMC25-5B	SOCKET SRCEW, M2.5x5	內六角螺絲, M2.5x5	2

HSV3-8B
TORX SRCEW, M3x8
星型螺絲, M3x8

HMC3-10B
SOCKET SRCEW, M3x10
內六角螺絲, M3x10

HSE2612N
BUTTON PHILLIPSTAPPING SCREW, M2.6x12
扁圓自攻螺絲(粗), M2.6x12

BK0649-1
LINKAGE BALL(A)
內六角連接頭螺絲(A)

HMV725ZZY
BEARING, d2.5xD7xW3.5
滾珠軸承, d2.5xD7xW3.5

HMC25-8N
SOCKET SRCEW, M2.5x8
內六角螺絲, M2.5x8

HME4-4B
SET SCREW, M4x4
無頭內六角螺絲, M4x4

BK3157
SPACER
墊圈

HMC25-5B
SOCKET SRCEW, M2.5x5
內六角螺絲, M2.5x5

Secure all screws(except screw #3) shown on this page with a drop of threadlocker.
本頁顯示之螺絲(螺絲#3除外)請使用適量防鬆膠鎖固。

Applicable to a M4x30mm, M4x25mm, or M3x25mm motors with 4 setting screws installation. A 6.0mm/0.236" diameter motor shaft as standard and 38mm/1.496" long shaft is recommended.
可適用M4x30mm, M4x25mm或M3x25mm鎖固孔位馬達。
原廠馬達齒及馬達齒輪固定座可裝配6.0mm/0.236" 軸心馬達，建議馬達軸心長度為38mm/1.496"。

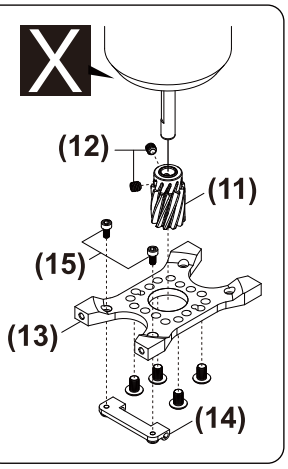

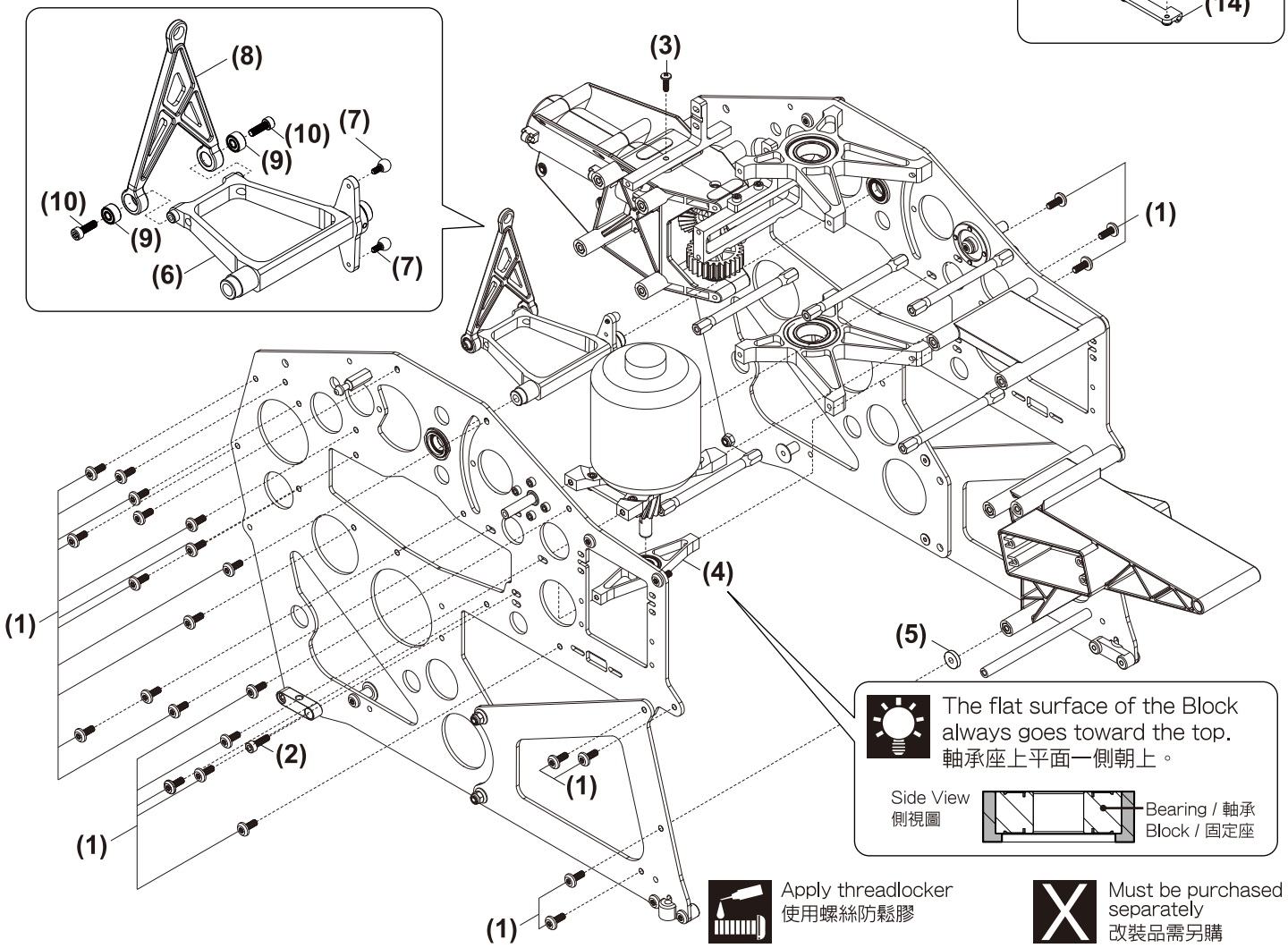

The flat surface of the Block always goes toward the top.
軸承座上平面一側朝上。

Side View
側視圖

Bearing / 軸承
Block / 固定座

Apply threadlocker
使用螺絲防鬆膠

Must be purchased separately
改裝品需另購

Bag E Main Frame - Nitro Version / 本體組裝-引擎版本

THUNDER TIGER

No.	Material No.	Description	名稱	Qty
1	BK2466	STARTER COUPLING	啟動接頭	1
2	HME4-4B	SET SCREW, M4x4	無頭內六角螺絲, M4x4	2
3	BV3058	DRIVE PINION SET-14T	驅動齒輪組(14T)	1
4	BK3068	CLUTCH BRACKET UPPER	上離合器固定座	1
5	BK3069	CLUTCH BRACKER LOWER	下離合器固定座	1
6	BK3109	ROD GUIDE PLATE	推拉桿導板	1
7	HMC25-5B	SOCKET SCREW, M2.5x5	內六角螺絲, M2.5x5	2
8	BV3063	CLUTCH BELL SET	離合器罩組	1

No.	Material No.	Description	名稱	Qty
9	BK3066	STARTER SHAFT	啟動軸	1
10	HMS5	E-CLIP	E型扣環	1
11	BK0274	RUBBER GROMMETS	橡膠墊圈	2
12	BK3123	RADIO TRAY	油門伺服機固定架	1
13	BK3114	COOLING FAN CASING-L	風扇罩(左)	1
14	BK3115	COOLING FAN CASING-R	風扇罩(右)	1
15	BK3081	FRAME SPACER	側板支柱	5
16	HSV3-8B	TORX SCREW, M3x8	星型螺絲, M3x8	8

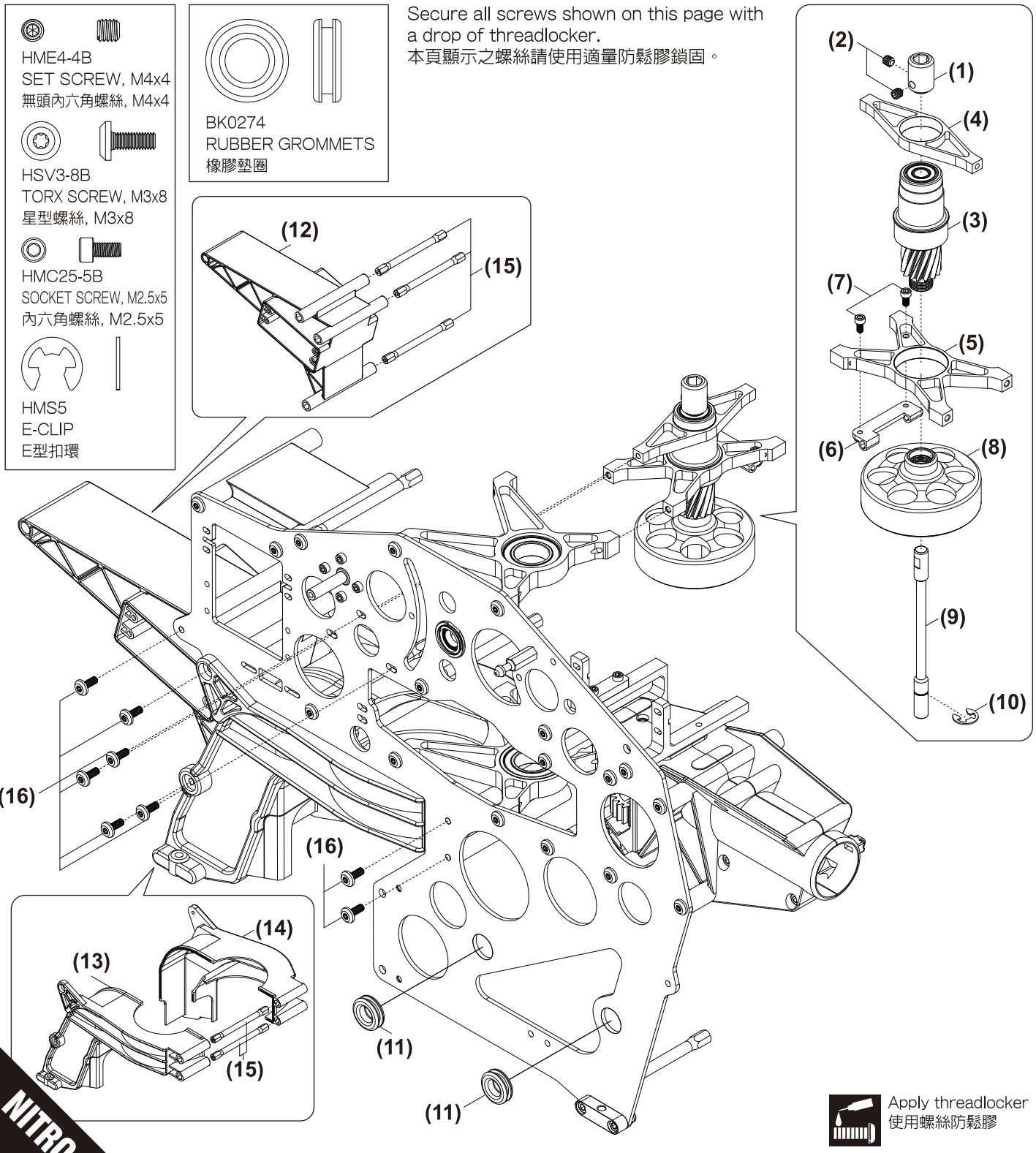

NITRO

Bag E Main Frame - Nitro Version / 本體組裝-引擎版本

THUNDER TIGER

No.	Material No.	Description	名稱	Qty
1	BV3089	FUEL TANK SET (650CC)	油箱組(650CC)	1
1-1	BK3089	FUEL TANK(650CC)	油箱(650CC)	1
1-2	BK0062	FUEL TANK GROMMET	油嘴栓	1
1-3	BK0063	FUEL TANK NIPPLE	油嘴	1
1-4	BE1867	CLUNK	油箱重錘	1
1-5	BB0374	FUEL TUBE	耐熱油管(小)	1
2	HSV3-8B	TORX SCREW, M3x8	星型螺絲, M3x8	24
3	BK0274	RUBBER GROMMETS	橡膠墊圈	2

No.	Material No.	Description	名稱	Qty
4	HMC3-10B	SOCKET SRCEW, M3x10	內六角螺絲, M3x10	1
5	HSE2612N	BUTTON PHILLIPS TAPPING SCREW	扁圓自攻螺絲(粗)	1
6	BV3133	METAL ELEVATOR CONTROL ARM	升降舵控制臂組	1
7	BK0649-1	LINKAGE BALL(A)	內六角連接頭螺絲(A)	2
8	BK3108	ELEVATOR CONTROL ARM LINK	升降舵連接座	1
9	HMV725ZZY	BEARING	滾珠軸承	2
10	HMC25-8N	SOCKET SRCEW, M2.5x8	內六角螺絲, M2.5x8	2

Secure all screws (except screw #5) shown on this page with a drop of threadlocker.
本頁顯示之螺絲(螺絲#5除外)請使用適量防鬆膠鎖固。

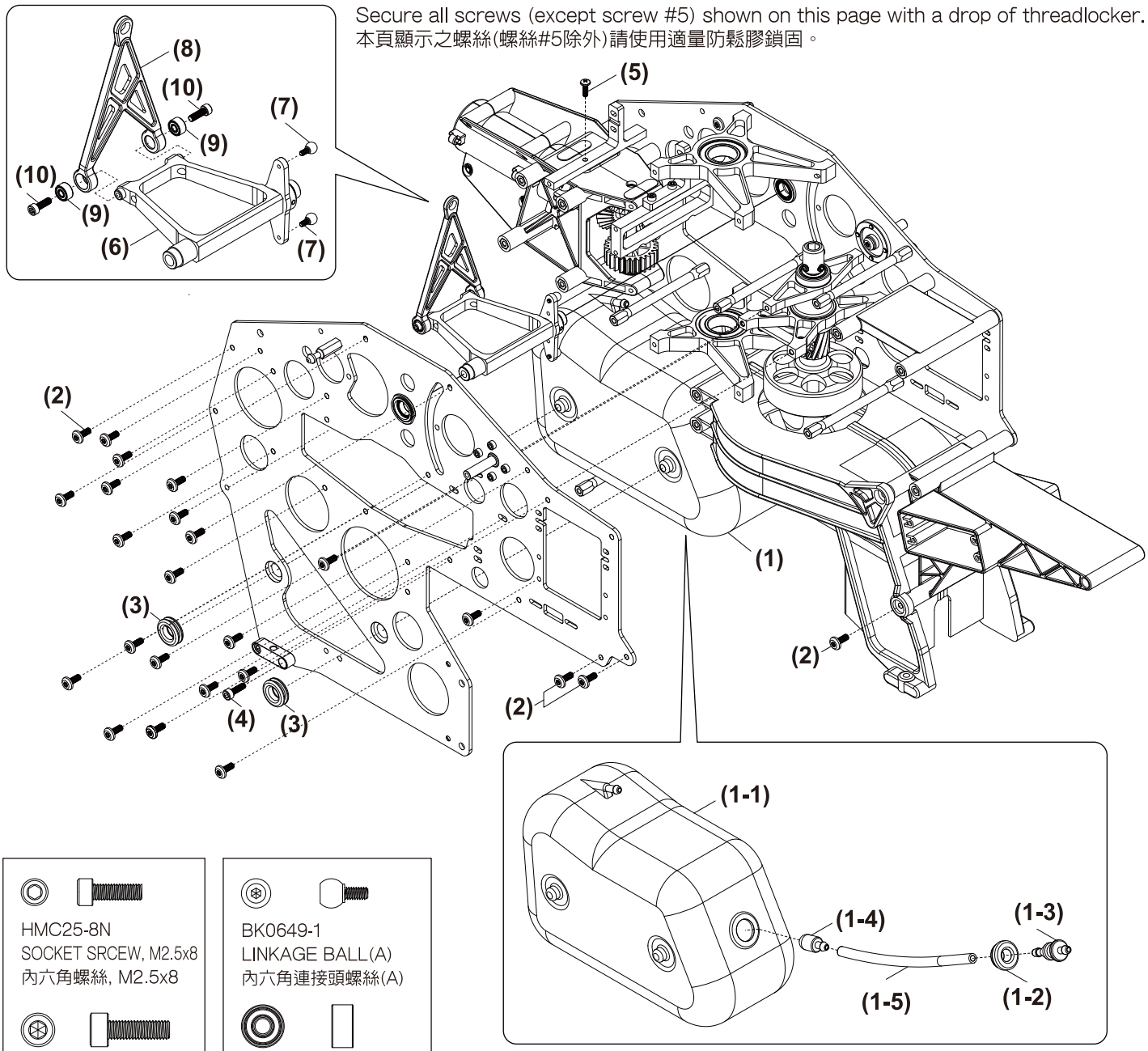

HMC25-8N
SOCKET SRCEW, M2.5x8
內六角螺絲, M2.5x8

HMC3-10B
SOCKET SRCEW, M3x10
內六角螺絲, M3x10

HSE2612N
BUTTON PHILLIPS TAPPING SCREW, M2.6x12
扁圓自攻螺絲(粗), M2.6x12

BK0649-1
LINKAGE BALL(A)
內六角連接頭螺絲(A)

HMV725ZZY
BEARING
滾珠軸承

HSV3-8B
TORX SCREW, M3x8
星型低頭螺絲, M3x8

BK0274
RUBBER GROMMETS
橡膠墊圈

Apply threadlocker
使用螺絲防鬆膠

NITRO

Bag E Engine Unit - Nitro Version / 動力系統組裝-引擎版本

THUNDER TIGER

No.	Material No.	Description	名稱	Qty
1	BK0435	WASHER	墊圈	4
2	HMC4-12B	SOCKET SCREW, M4x12	內六角螺絲, M4x12	4
3	BK3044	COOLING FAN	冷卻風扇	1
4	BK3045	COOLING FAN HOUSING	冷卻風扇座	1
5	HSB3-6	FLAT COUNTER SUNK HEAD SAPSCREW, M3x6	平頭內六角螺絲, M3x6	4
6	BV3062	CLUTCH SHOE SET	離合器組	1
7	HMC4-8B	SOCKET SCREW, M4x8	內六角螺絲, M4x8	2
8	BK3071	ENGINE MOUNT	引擎固定座	1
9	HMC4-16B	SOCKET SCREW, M4x16	內六角螺絲, M4x16	4
10	BK0506	HEADER TANK BRACKET	副油箱固定座	1

No.	Material No.	Description	名稱	Qty
11	BK3174	HEADER TANK POST	副油箱支柱	1
12	BK0087	WASHER	墊圈	1
13	HMC3-25B	SOCKET SCREW, M3x25	內六角螺絲, M3x25	1
14	BV0502	HEADER TANK	副油箱組	1
14-1	BK0502	HEADER TANK	副油箱	1
14-2	BK0063	HEADER TANK NIPPLE	油嘴	1
14-3	BK0062	FUEL TANK GROMMET	油嘴栓	1
14-4	BE1867	CLUNK	油箱重錘	1
14-5	BB0363-46	FUEL TUBE	耐熱油管(透明)	1

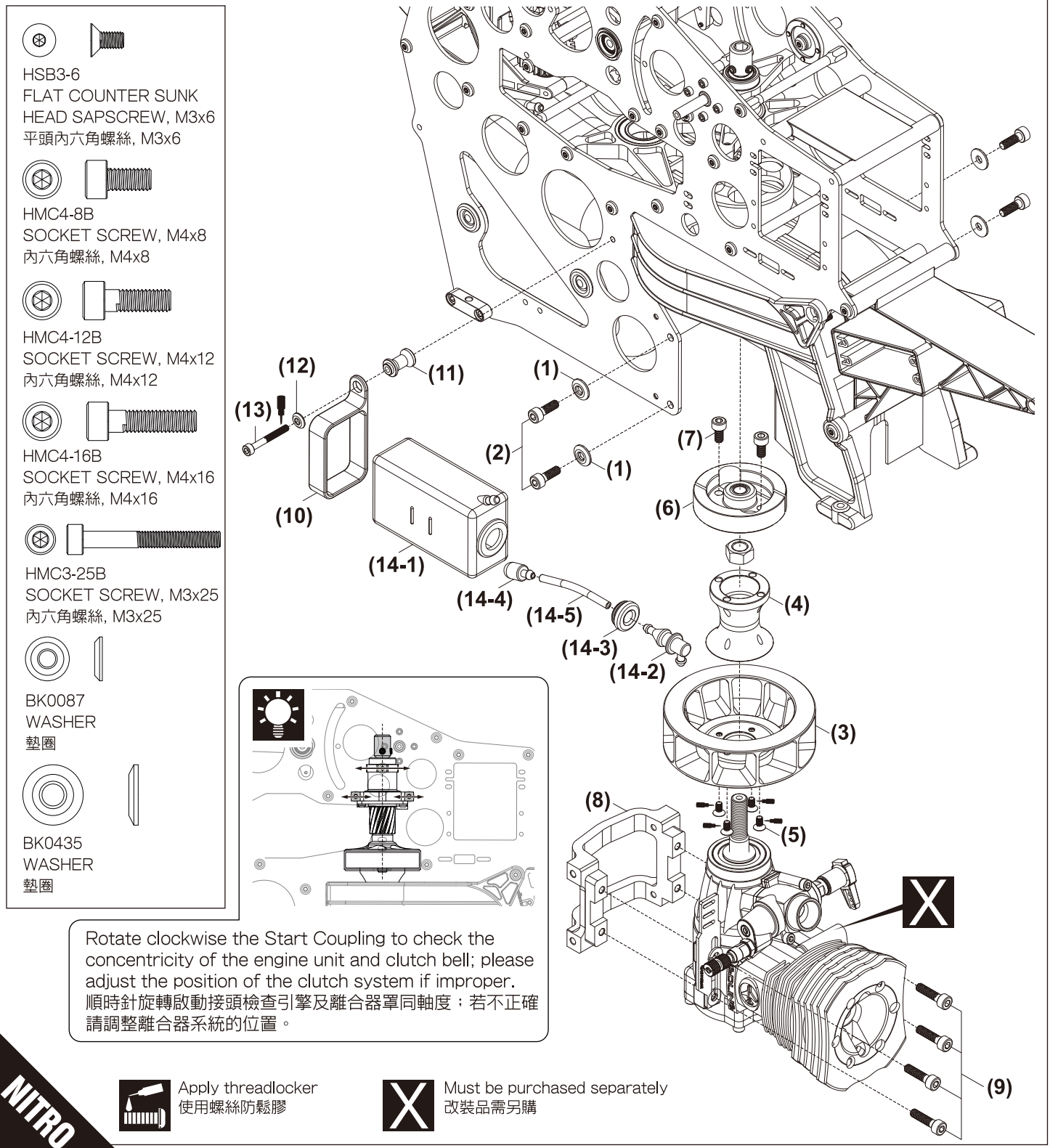

Rotate clockwise the Start Coupling to check the concentricity of the engine unit and clutch bell; please adjust the position of the clutch system if improper.
順時針旋轉啟動接頭檢查引擎及離合器罩同軸度；若不正確請調整離合器系統的位置。

Apply threadlocker
使用螺絲防鬆膠

X Must be purchased separately
改裝品需另購

NITRO

Bag F Main Gear Set / 主齒輪組組裝

THUNDER TIGER

No.	Material No.	Description	名稱	Qty
1	BV3142	MAIN GEAR SET	主齒輪組	1
1-1	BK3141	MAIN GEAR,111T	主齒輪(111T)	1
1-2	BK3137	TAIL DRIVE PULLEY,108T	尾驅動輪108T	1
1-3	BK3057	ONE WAY BEARING SHAFT	單向離合器軸	1
1-4	HMQ18	C-CLIP	C型扣環	1

No.	Material No.	Description	名稱	Qty
1-5	HMC3-6B	SOCKET SCREW, M3x6	內六角螺絲, M3x6	10
1-6	BV3056	ONE WAY CLUTCH HOUSING	單向離合器座	1
2	HMC4-8B	SOCKET SCREW, M4x8	內六角螺絲, M4x8	2
3	BK3015	MAIN SHAFT STOPPER	止擋環	1

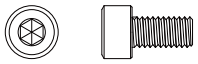

HMC4-8B
SOCKET SCREW, M4x8
內六角螺絲, M4x8

HMC3-6B
SOCKET SCREW, M3x6
內六角螺絲, M3x6

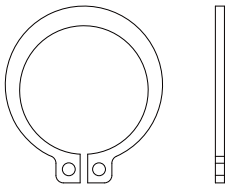

HMQ18
C-CLIP
C型扣環

Secure all screws shown on this page with a drop of threadlocker.
本頁顯示之螺絲請使用適量防鬆膠鎖固。

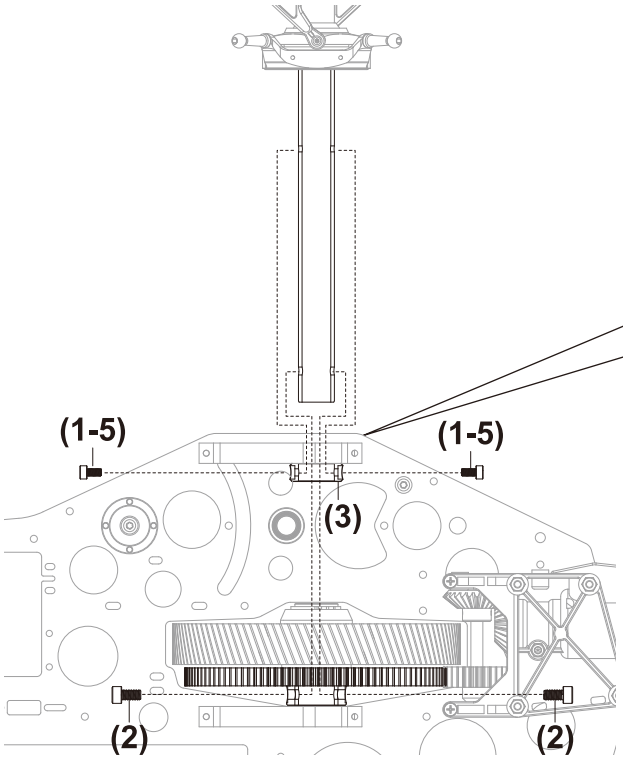

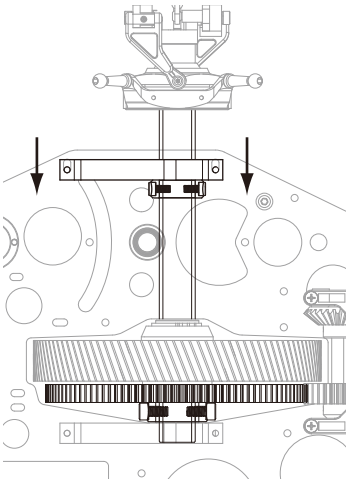

Lower the Upper Main Shaft Bearing Block to eliminate the play after securing all screws.
鎖固定位螺絲後，將上主軸軸承座下壓以消除間隙。

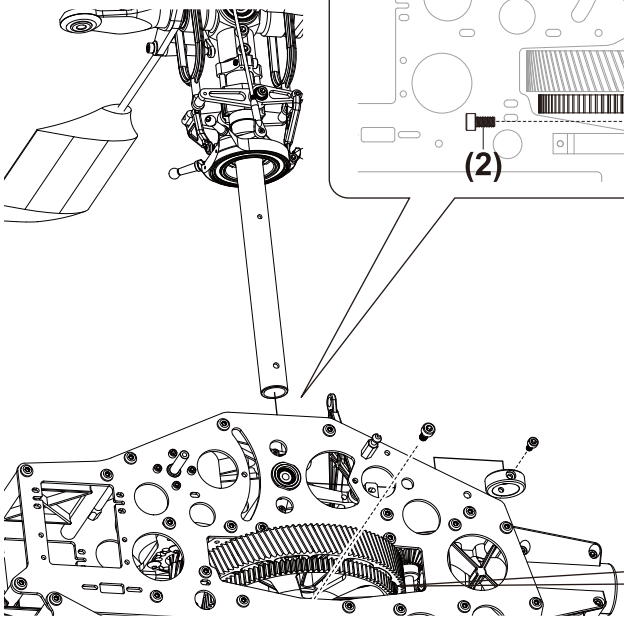

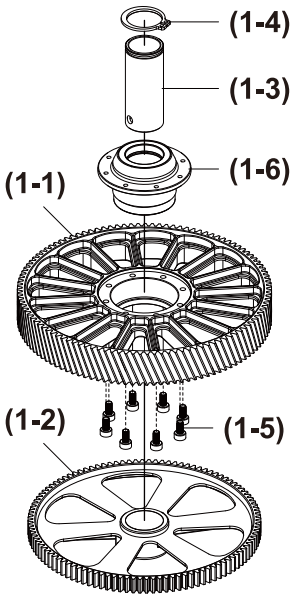

Line up the holes of the Autorotation Tail Drive Gear, One Way Bearing Shaft & Main Shaft, and then insert the Socket Screw to fix. Add a drop of threadlocker when securing, but do not over tighten.
對正尾驅動齒、單向軸套及主軸上孔位後，鎖入內六角螺絲，並使用適量防鬆劑固定。
注意! 請勿過度緊迫螺絲。

Apply threadlocker
使用螺絲防鬆膠

Bag G Landing Skid / 腳架組組裝

THUNDER TIGER

No.	Material No.	Description	名稱	Qty
1	BK3121	LANDING SKID	腳架	2
2	BK3090	SKID PIPE	底座圓管	2
3	BK0065	SKID PIPE END CAP	圓管塞	4

No.	Material No.	Description	名稱	Qty
4	HME4-4B	SET SCREW, M4x4	無頭內六角螺絲, M4x4	4
5	HMC4-14B	SOCKET SCREW, M4x14	內六角螺絲, M4x14	4

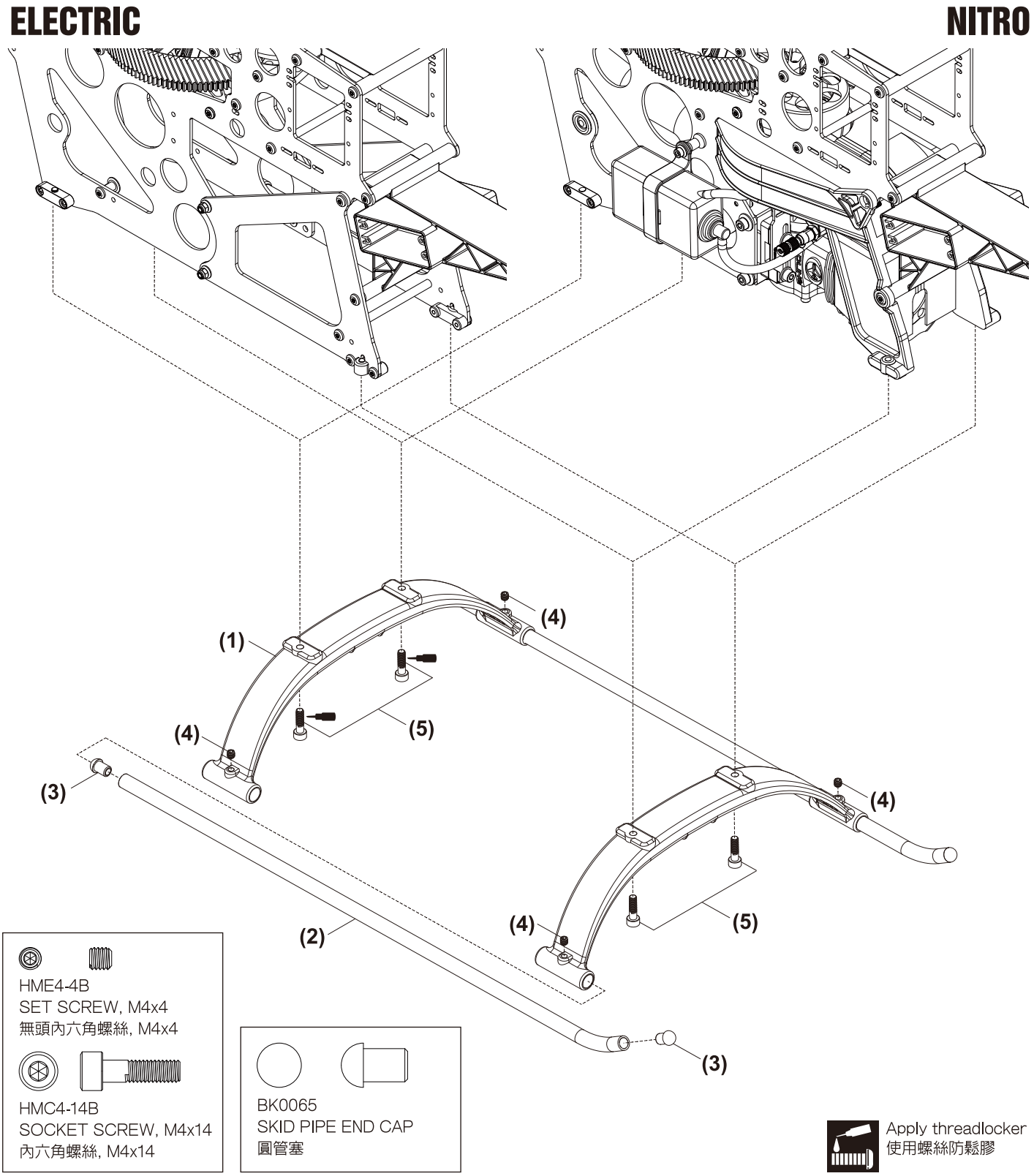

Bag G Control Arm Set / 控制臂組組裝

THUNDER TIGER

No.	Material No.	Description	名稱	Qty
1	BV3135	CONTROL ARM SET-L	金屬副翼控制臂組-左	1
1-1	BK3135	CONTROL ARM-L	金屬副翼控制臂A-左	1
1-2	BK3092	LINK BALL	連結球座	2
1-3	HMC2-8B	SOCKET SCREW, M2x8	內六角螺絲, M2x8	2
1-4	BK3026	CONTROL LEVER	金屬側轉控制臂B	2
1-5	HMV1050ZZY	BEARING	滾珠軸承	4
1-6	BK0649-1	LINKAGE BALL(A)	內六角連接頭螺絲(A)	4

No.	Material No.	Description	名稱	Qty
1-7	HMY2-4	ROLLER PINS	軸承滾針	4
1-8	HMC3-8B	SOCKET SCREW, M3x8	內六角螺絲, M3x8	2
2	HSV3-8B	TORX SCREW, M3x8	星型螺絲, M3x8	2
3	BV3136	CONTROL ARM SET-R	金屬副翼控制臂組-右	1
3-1	BK3136	CONTROL ARM-R	金屬副翼控制臂A-右	1
4	BV3122	LINKAGE ROD SET(67.5mm)	連接桿(67.5mm)	2

BK3092
LINK BALL
連結球座

HMC2-8B
SOCKET SCREW, M2x8
內六角螺絲, M2x8

HMV1050ZZY
BEARING
滾珠軸承

BK0649-1
LINKAGE BALL(A)
內六角連接頭螺絲(A)

HMY2-4
ROLLER PINS
軸承滾針

HMC3-8B
SOCKET SCREW, M3x8
內六角螺絲, M3x8

HSV3-8B
TORX SCREW, M3x8
星型螺絲, M3x8

Secure all screws shown on this page with a drop of threadlocker.
本頁顯示之螺絲請使用適量防鬆膠鎖固。

Attach the Control Arm onto the Main Frames as drawing, and note the difference of Left & Right Control Arms.
參考圖示將控制臂裝上側板上，請注意左、右邊方向性。

The length of the Linkage Rod Set is fixed (67.5mm) and to adjust is unnecessary.
此處連桿長度固定為67.5mm，長度無需進行調整。

Scale=1:1 (unit:mm)

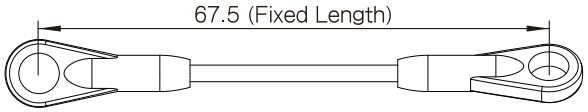

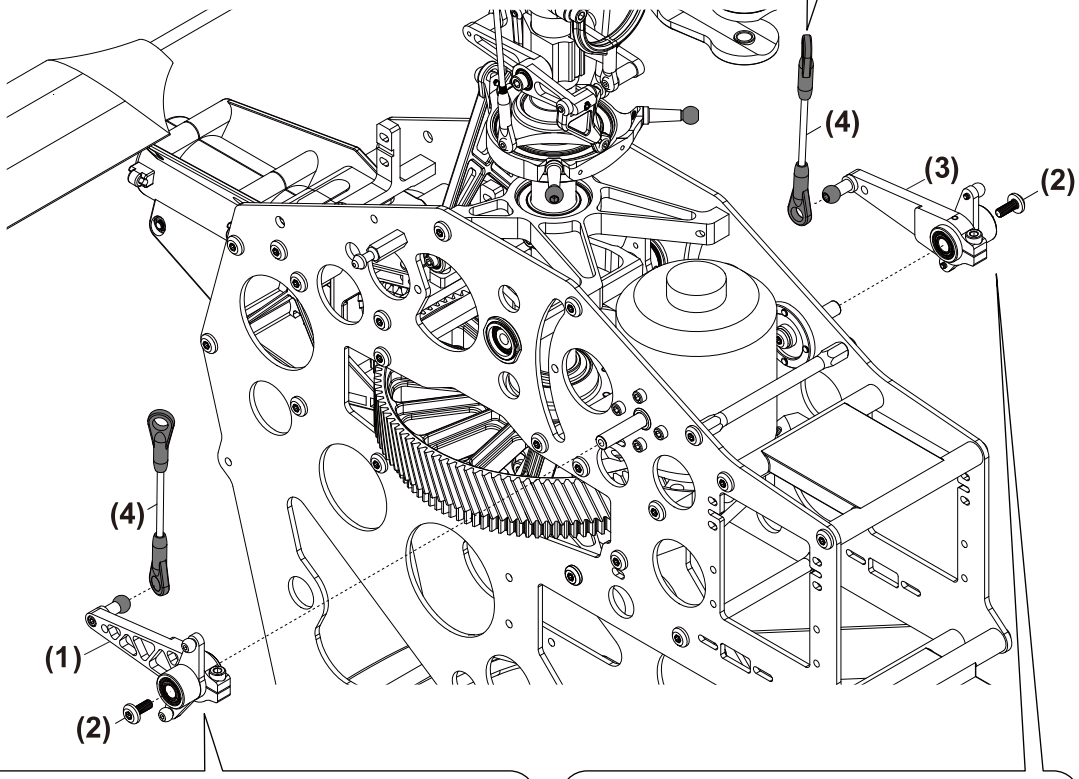

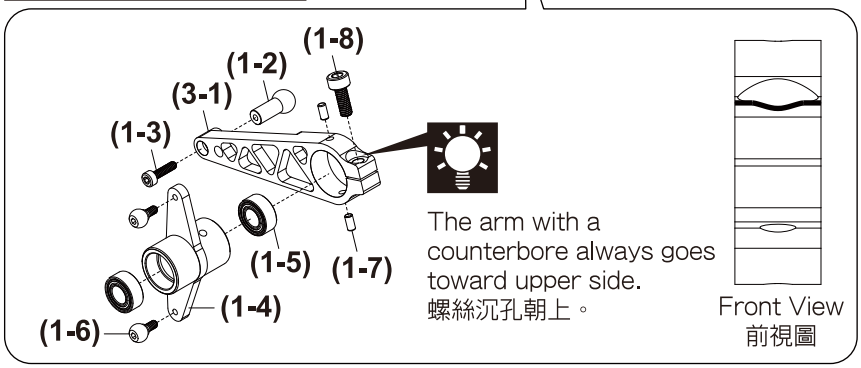

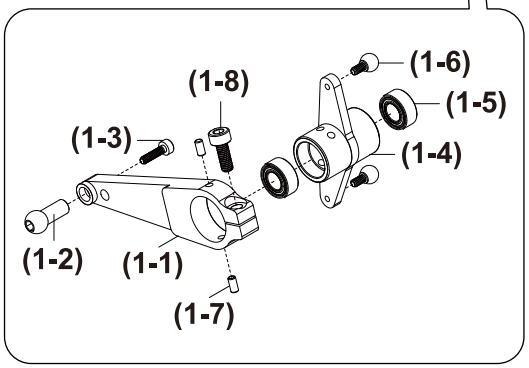

Apply threadlocker
使用螺絲防鬆膠

Bag H Tail Rotor System / 尾旋翼機構組裝

THUNDER TIGER

No.	Material No.	Description	名稱	Qty
1	BK3075	METAL TAIL GRIP	金屬尾旋翼轉座	2
2	BK3159	WASHER	止推軸環	2
3	BK3160	WASHER	止推軸環	2
4	HMX0510Y	THRUST BEARING	止推軸承	2
5	HMV1050ZZY	BEARING	滾珠軸承	4
6	BK3076	TAIL ROTOR HUB	尾旋翼座	1
7	HME3-3B	SET SCREW, M3x3	無頭內六角螺絲, M3x3	2
8	BK3161	WASHER	墊圈	2
9	HSV3-8B	TORX SCREW, M3x8	星型螺絲, M3x8	2
10	BK0026	TAIL PITCH CONTROL LINK	尾旋翼連接頭	2

No.	Material No.	Description	名稱	Qty
11	HMC2-8B	SOCKET SCREW, M2x8	內六角螺絲, M2x8	2
12	BK0082	COLLAR	軸環	2
13	BK3077	PIN	固定銷	2
14	HMS15	E-CLIP	E型扣環	2
15	BK3061	TAIL ROTOR SHAFT	尾旋翼軸	1
16	BK3100	TAIL PITCH CONTROL FORK	尾旋翼控制座	1
17	BK0806-1	METAL TAIL PITCH SLIDER	金屬尾旋翼滑座	1
18	HMV1060ZZY	BEARING	滾珠軸承	2
19	BK0345	TAIL PITCH CONTROL SLIDER BUSHING	尾旋翼控制軸套	1
20	BK0649-1	LINKAGE BALL(A)	內六角連接頭螺絲(A)	1

Secure all screws shown on this page with a drop of threadlocker.
本頁顯示之螺絲請使用適量防鬆膠鎖固。

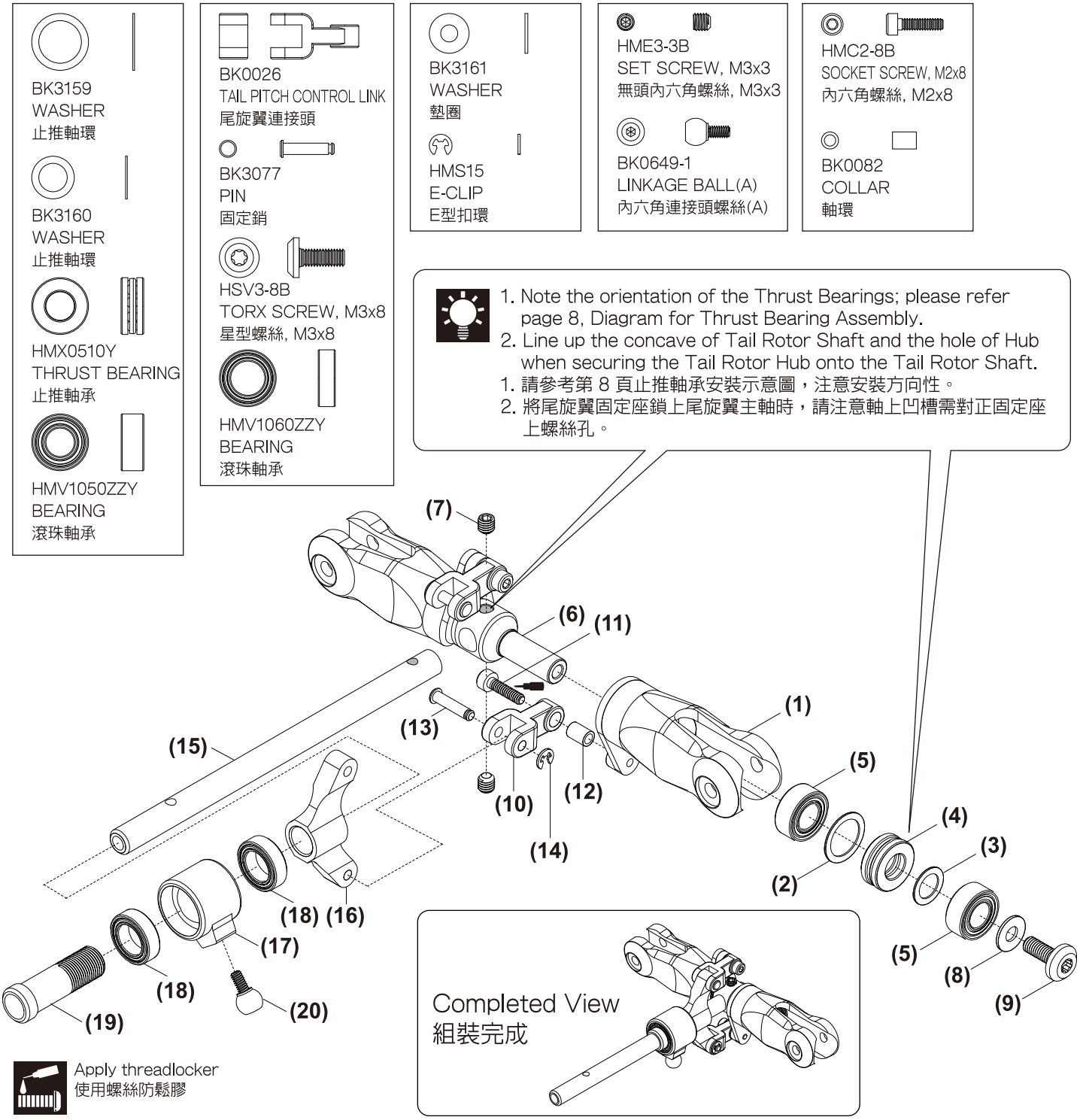

Bag I+J Tail Rotor System / 尾旋翼機構組裝

THUNDER TIGER

No.	Material No.	Description	名稱	Qty
1	BK3074	METAL TAIL UNIT HOUSING	金屬尾座	1
2	HMV6701ZZY	BEARING	滾珠軸承	2
3	BK3059	COLLAR	尾座軸承間隔環	1
4	BK3182	COLLAR	尾傘齒軸環	1
5	BK3143	TAIL INPUT BEVEL	尾螺旋傘齒輪A(24T)	1
6	HSH1350ZZY	FLANGE BEARING, d5xD13xW4	凸緣軸承,d5xD13xW4	2
7	BK3144	TAIL OUTPUT BEVEL	尾螺旋傘齒輪B(24T)	1
8	HMY2-12	PIN, d2x12	軸承滾針	1
9	HME3-4B	SET SCREW, M3x4	無頭內六角螺絲, M3x4	1
10	BK3073	TAIL LEVER BKT	金屬尾控制臂座	1
11	HMC25-8N	SOCKET SCREW, M2.5x8	內六角螺絲, M2.5x8	2

No.	Material No.	Description	名稱	Qty
12	BK3129	TAIL PITCH CONTROL LEVER	尾旋翼控制桿	1
13	HMV740ZZY	BEARING	滾珠軸承	2
14	BK0088	WASHER	墊片	1
15	BK0076	COLLAR	軸環	1
16	HMC3-16B	SOCKET SCREW, M3x16	內六角螺絲, M3x16	1
17	BK0649-2	LINKAGE BALL(B)	內六角連接頭自攻螺絲(B)	1
18	BV6036	CARBON TAIL BLADE	碳纖尾旋翼	1
19	HMM3B	NYLON NUT, M3	止鬆螺帽, M3	2
20	BK2509-1	WASHER, d12xD14.5x0.1	墊圈, d12xD14.5x0.1	1
21	HMC3-18B	SOCKET SCREW, M3x18	內六角螺絲, M3x18	2

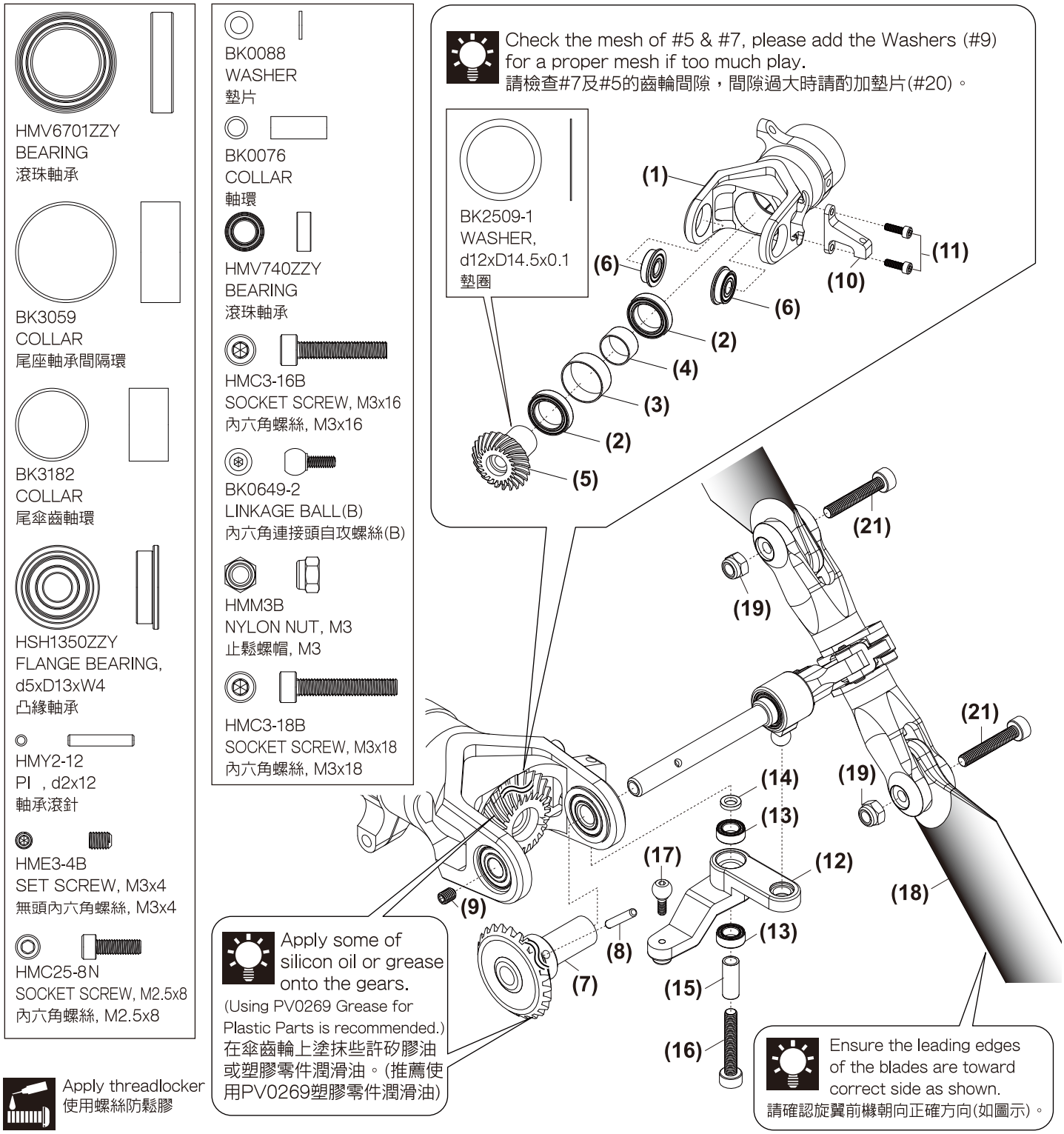

Bag J+K Tail Unit / 尾部總成組裝

THUNDER TIGER

No.	Material No.	Description	名稱	Qty
1	BK3095	TAIL DRIVE SHAFT	尾驅動軸	1
2	BV0423	TAIL DRIVE SHAFT BRG	尾驅動軸軸套組	2
3	HMM25Z	NYLON NUT, M2.5	止鬆螺帽, M2.5	2
4	BK0367	TAIL DRIVE SHAFT LINKER	尾驅動連接棒	2
5	HMC2512B	SOCKET SCREW, M2.5x12	內六角螺絲, M2.5x12	2
6	BK3096-1	TAIL BOOM	尾管	1
7	BK0087	WASHER	墊圈	2
8	HMC3-8B	SOCKET SCREW, M3x8	內六角螺絲, M3x8	2
9	HMC3-12B	SOCKET SCREW, M3x12	內六角螺絲, M3x12	5
10	BK3099	CARBON VERTICAL FIN	碳纖垂直安定面	1
11	HSB3-6	FLAT HEAD SOCKET SCREW(N), M3x6	平頭內六角螺絲, M3x6	1

No.	Material No.	Description	名稱	Qty
12	HSA3-5	BUTTON HEAD SOCKET SCREW, M3x5	半圓頭內六角螺絲, M3x5	1
13	BK3113	TAIL STOPPER	尾座止檔環	1
14	BK3097	TAIL SUPPORT BRACKET	尾管固定座	1
15	HMJ2-8B	SELF TAPPING SCREW, M2x8	自攻螺絲(粗), M2x8	3
16	BK3112	ROD GUIDE	推拉桿固定環	3
17	BK0447	TAIL SUPPORT ROD END	尾管支撐架接頭	4
18	BK3081	FRAME SPACER	側板支柱	1
19	HML2-NB	NYLON NUT, M2	六角螺帽, M2	4
20	HMC2-10B	SOCKET SCREW, M2x10	內六角螺絲, M2x10	4
21	BK3163	CARBON TAIL SUPPORT ROD	碳纖尾管支撐架	2

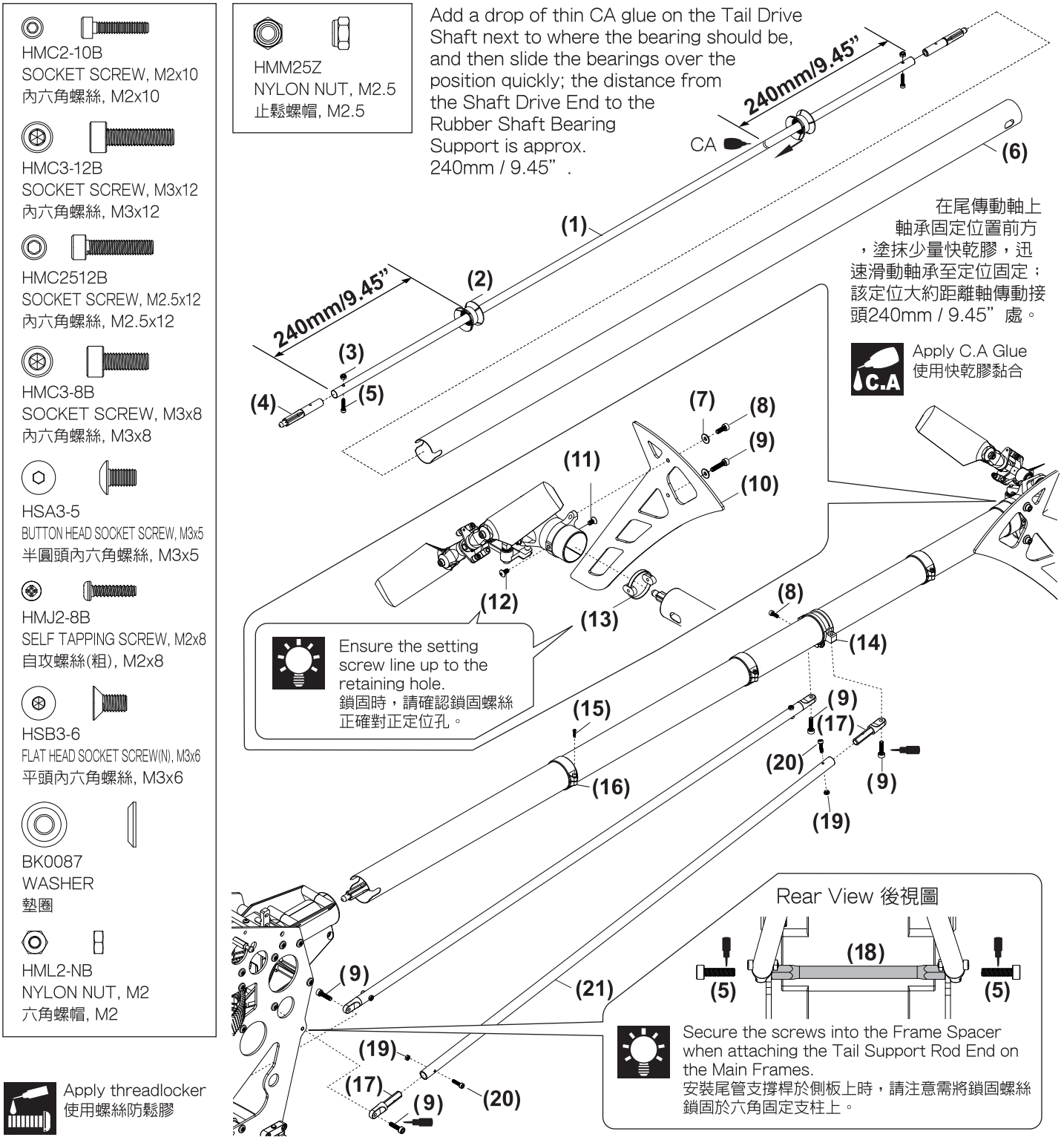

Bag KP1 Servo Installation / 伺服機裝配

THUNDER TIGER

No.	Material No.	Description	名稱	Qty
1	BK3034	SERVO HORN COLLAR	伺服機擺臂軸套	4
2	BK3038	SERVO HORN	伺服機擺臂	3
3	BK3039	RUDDER SERVO HORN	尾舵伺服機擺臂	1
4	BK3094	LINK BALL	連接球座	7
5	BK3103	SERVO MOUNTING	伺服機墊片	6
6	BK3132	SERVO NUT	伺服機螺帽	6

No.	Material No.	Description	名稱	Qty
7	HSE2612N	BUTTON PHILLIPS TAPPING SCREW, M2.6x12	扁圓自攻螺絲(粗), M2.6x12	4
8	HSA3-5	BUTTON HEAD SOCKET SCREW, M3x5	半圓頭內六角螺絲, M3x5	4
9	HMC25-6B	SOCKET SCREW, M2.5x6	內六角螺絲, M2.5x6	4
10	HME3-3B	SET SCREW, M3x3	無頭內六角螺絲, M3x3	4
11	BK0104	SERVO MOUNTING	伺服機固定片	4
12	BK3125	RUDER SERVO BED	伺服機固定座	1

Do not tighten the screw #9 & #10 at this step for preforming servo of calibations later.
螺絲#9&#10暫勿鎖緊以便後續中立點調整。

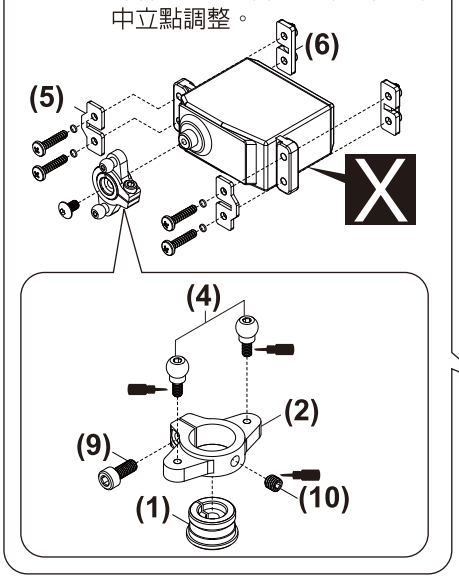

Screws should be separately fastened diagonally to ensure the servos mounted evenly.
鎖固時須依對角依序平均鎖上，以使伺服機平整安裝於側板上。

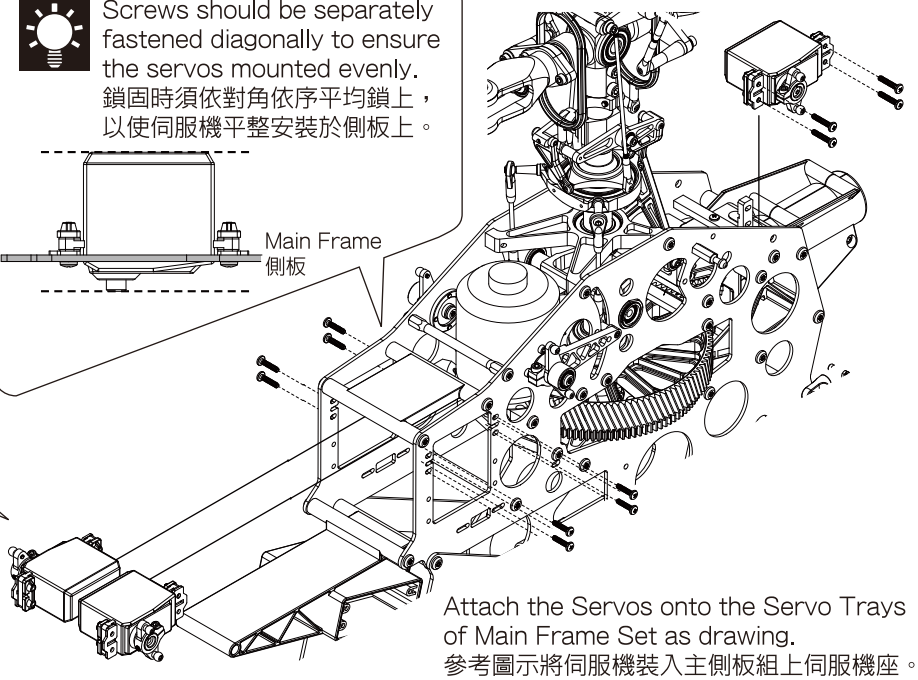

Attach the Servos onto the Servo Trays of Main Frame Set as drawing.
參考圖示將伺服機裝入主側板組上伺服機座。

BK3094
LINK BALL
連接球座

HSE2612N
BUTTON PHILLIPS TAPPING SCREW, M2.6x12
扁圓自攻螺絲(粗), M2.6x12

HMC25-6B
SOCKET SCREW, M2.5x6
內六角螺絲, M2.5x6

HSA3-5
BUTTON HEAD SOCKET SCREW, M3x5
半圓頭內六角螺絲, M3x5

HME3-3B
SET SCREW, M3x3
無頭內六角螺絲, M3x3

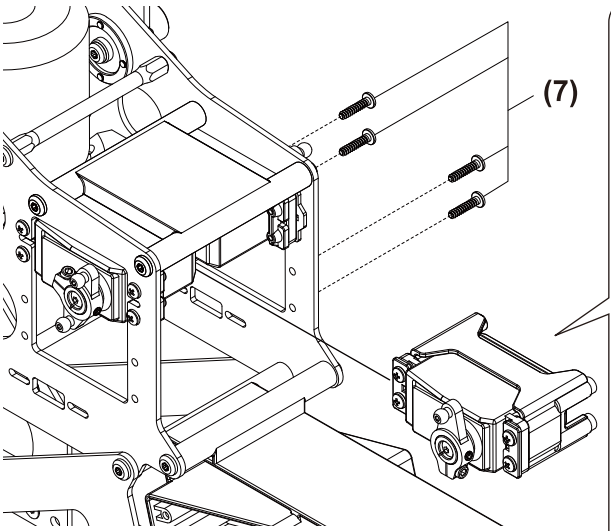

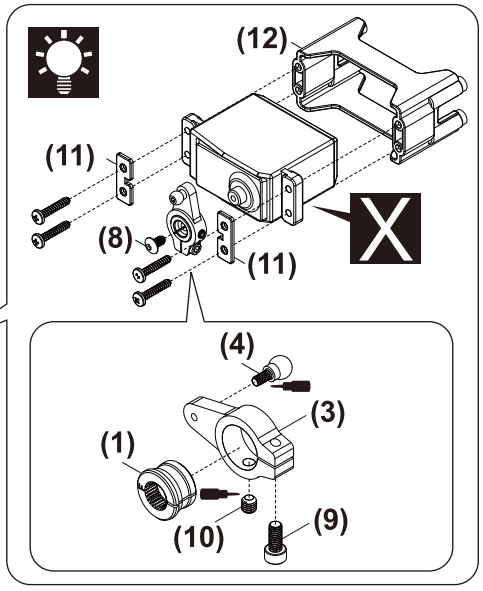

The adaptors come with the kit are applicable to ACR RC / Futaba servos as standard parts.
The option adaptors for JR or Hitec are also available separately:
套件內附標準之伺服機擺臂軸套適用於ACE RC及Futaba品牌伺服機。
JR或Hitec伺服機使用之軸套可另外購買：
Item No. PV1623-J Servo Horn Adaptor for JR 伺服機擺臂軸套, JR
Item No. PV1623-H Servo Horn Adaptor for Hitec 伺服機擺臂軸套, Hitec

Apply threadlocker
使用螺絲防鬆膠

Must be purchased separately
改裝品需另購

Bag J+K+KP2 Linkage Rod & Main Rotor Blade / 連桿及主旋翼組裝

THUNDER TIGER

No.	Material No.	Description	名稱	Qty
1	BK3167	LINKAGE ROD-B	推拉桿B	1
2	BK3168	LINKAGE ROD-A	推拉桿A	1
3	BK0105-1	TAIL CONTROL ROD JOINT	尾控制桿軸環	1
4	HME4-3B	SET SCREW, M4x3	無頭內六角螺絲, M4x3	2
5	BV3164	LINKAGE ROD	連接桿	6

No.	Material No.	Description	名稱	Qty
6	BK0086	BALL LINK	單頭連接桿	2
7	BK3111	ROTOR SPACER	主旋翼墊片	2
8	BK0446	SOCKET SCREW, M5x35	內六角螺絲, M5x35	2
9	HMM5Z	NYLON NUT, M5	止鬆螺帽, M5	2

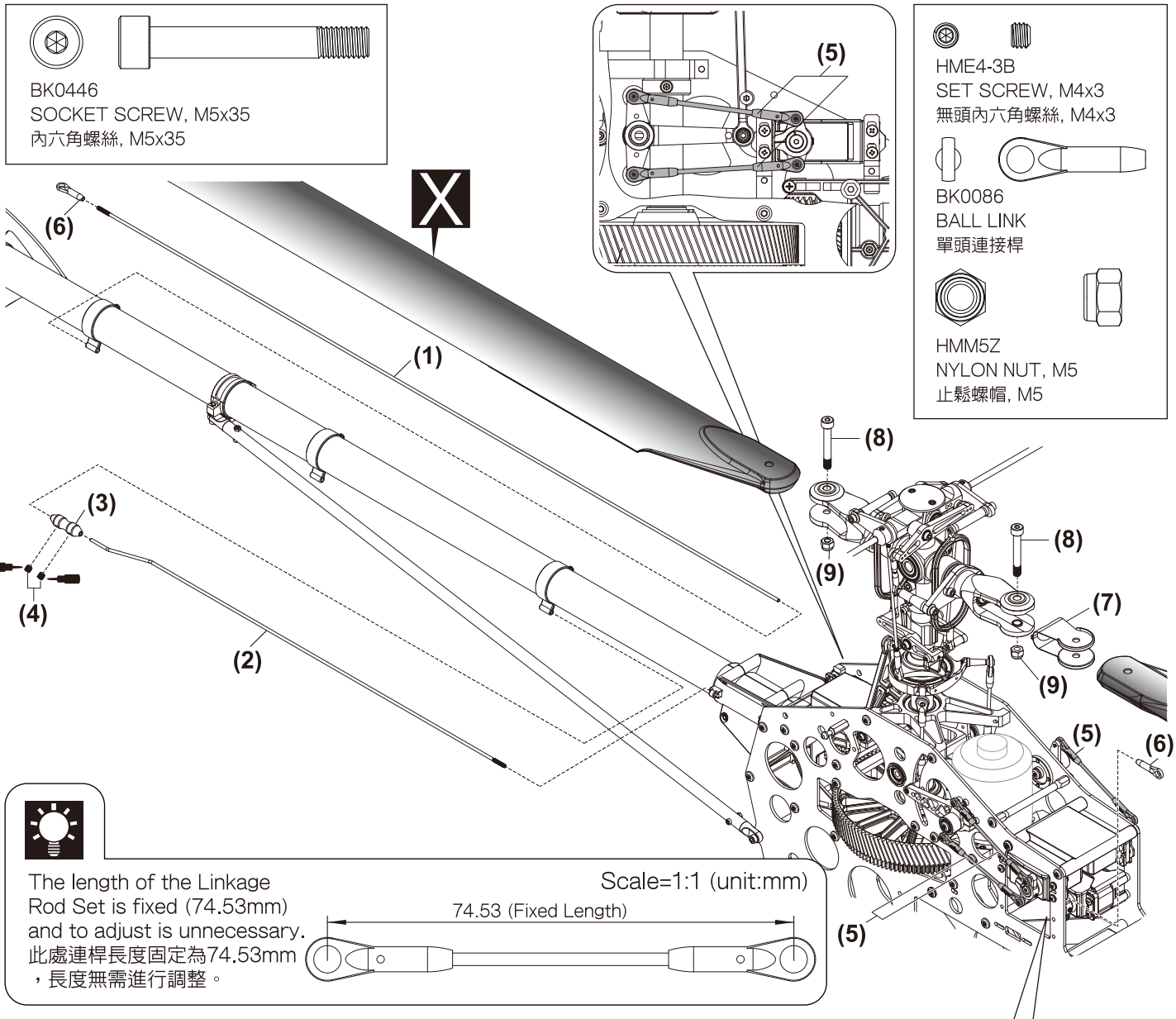

1. You may need to adjust the linkage to ensure the blade tracking. Please refer page 33, "Blade Tracking Adjustment."
2. Install the main blades with the Socket Screw (M5x35). Do not over tighten and ensure the blades run effortlessly.
3. For safety the rpm of using carbon blades should not exceed 2,200.

1. 您可能必需調整相關的連桿來確保旋翼旋轉軌跡正常。請參閱第33頁〝主旋翼軌跡調整〞說明。
2. 以內六角螺絲安裝上主旋翼。請勿過度鎖緊。
3. 安全起見，碳纖維主旋翼轉速請勿超過2,200rpm。

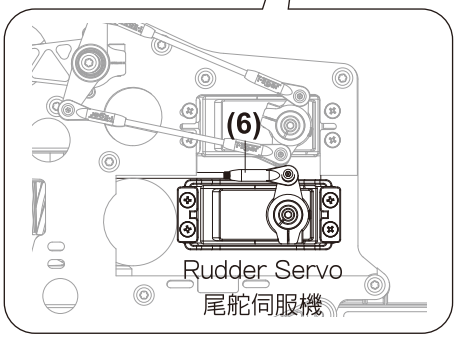

Apply threadlocker
使用螺絲防鬆膠

Must be purchased separately
改裝品需另購

Bag L Electronic Device & Linkage Rod / 電子設備及油門連桿組裝

THUNDER TIGER

No.	Material No.	Description	名稱	Qty
1	BK3119	BATTELY TRAY	電池座	1
2	BK3120	BATTELY TRAY CATCH	電池座夾扣	1
3	BK3166	COLLAR	軸套	2
4	BK3158	FLAT SCREW	扁平頭螺絲	2
5	BK3165	SPRING	拉伸彈簧	2
6	BB0362-460	FUEL TUBE(D5.5mmx460mm)	耐熱油管	1

No.	Material No.	Description	名稱	Qty
7	BK0104	SERVO MOUNTING	伺服機固定片	4
8	BK0649-1	LINKAGE BALL(A)	內六角連接頭螺絲(A)	2
9	HML2-NB	NYLON NUT, M2	六角螺帽M2	2
10	BV3172	LINKAGE ROD SET(88.3mm)	連接桿組(88.3mm)	1
11	BK3172	LINKAGE ROD	連接桿	1
12	BK0086	BALL LINK	單頭連接桿	2

ELECTRIC

BK3166
COLLAR
軸套

BK3158
FLAT SCREW
扁平頭螺絲

BK0649-1
LINKAGE BALL(A)
內六角連接頭螺絲(A)

HML2-NB
NYLON NUT, M2
六角螺帽, M2

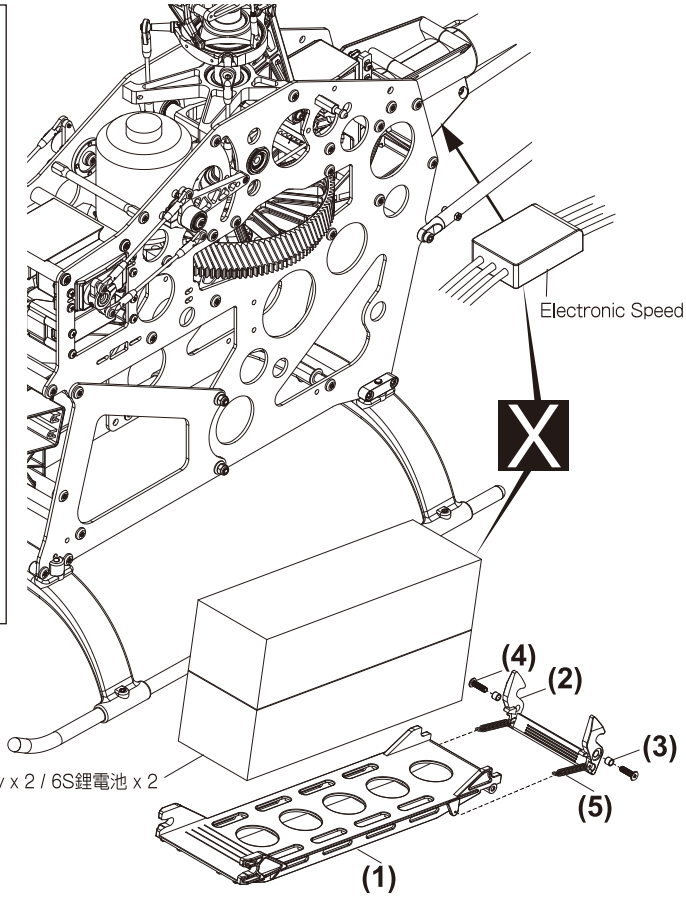

Secure the speed controller and battery(option) with straps to prevent them from being ejected in flight.
使用適當束帶固定速控器及電池組(選購)，以防止飛行中脫落。

Foam/泡棉膠 Strap/束帶

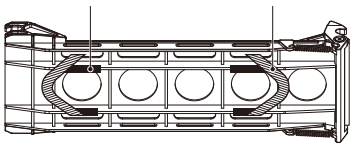

Stick a foam tape onto the position where the strap ties through the battery tray to prevent the strap from being worn and broken in hard flight.
將泡棉膠貼在束帶穿過電池座的位置上，可防止束帶於激烈飛行中磨損及斷裂。

NITRO

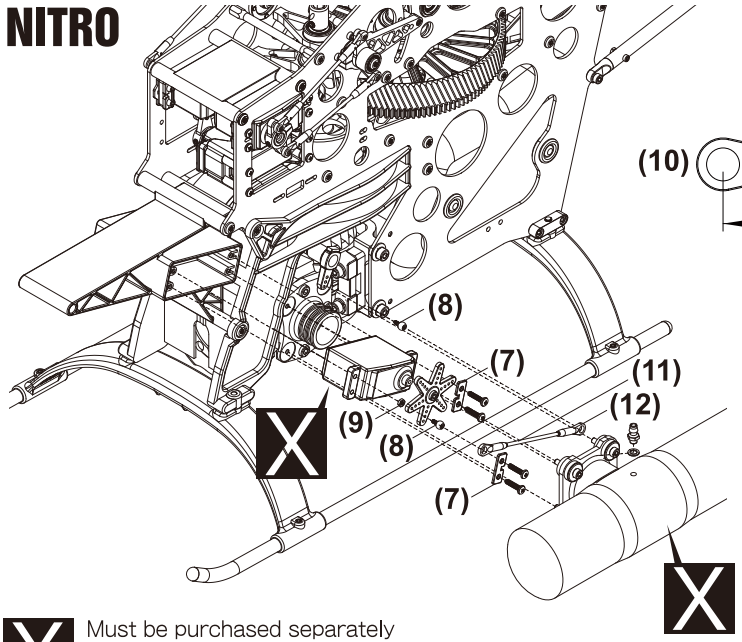

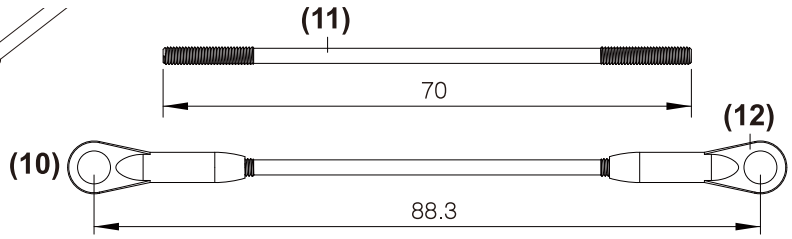

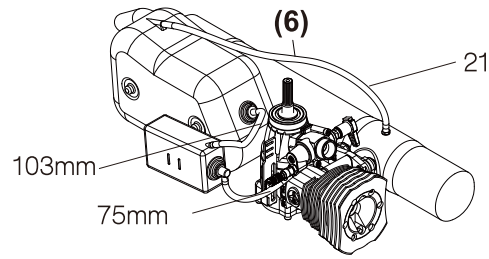

Assemble the fuel tube as drawing
油管組裝示意圖

X Must be purchased separately
改裝品需另購

Bag M Electronic Device & Canopy / 電子設備及機殼罩

THUNDER TIGER

No.	Material No.	Description	名稱	Qty
1	BK3127-R	FRP CANOPY SET, RED	玻纖機殼(紅)	1
	BK3127-Y	FRP CANOPY SET, YELLOW	玻纖機殼(黃)	
2	BK0102	RUBBER GROMMET	機身固定墊圈	2
3	HSE3-12B	BUTTON PHILLIPS TAPPING SCREW, M3x12	扁圓自攻螺絲(粗), M3x12	2
4	BK0099	BODY CLIP B	機身夾扣B	1

No.	Material No.	Description	名稱	Qty
5	BK3126	CANOPY BRACKET	機身固定扣A	1
6	BK3175	CANOPY SPACER	機殼支撐柱	1
7	BK0474	GROMMET	橡膠帽	2
8	HNLR6	R CLIP	R型插銷	2
9	HSV3-8B	TORX SCREW, M3x8	星型螺絲, M3x8	2

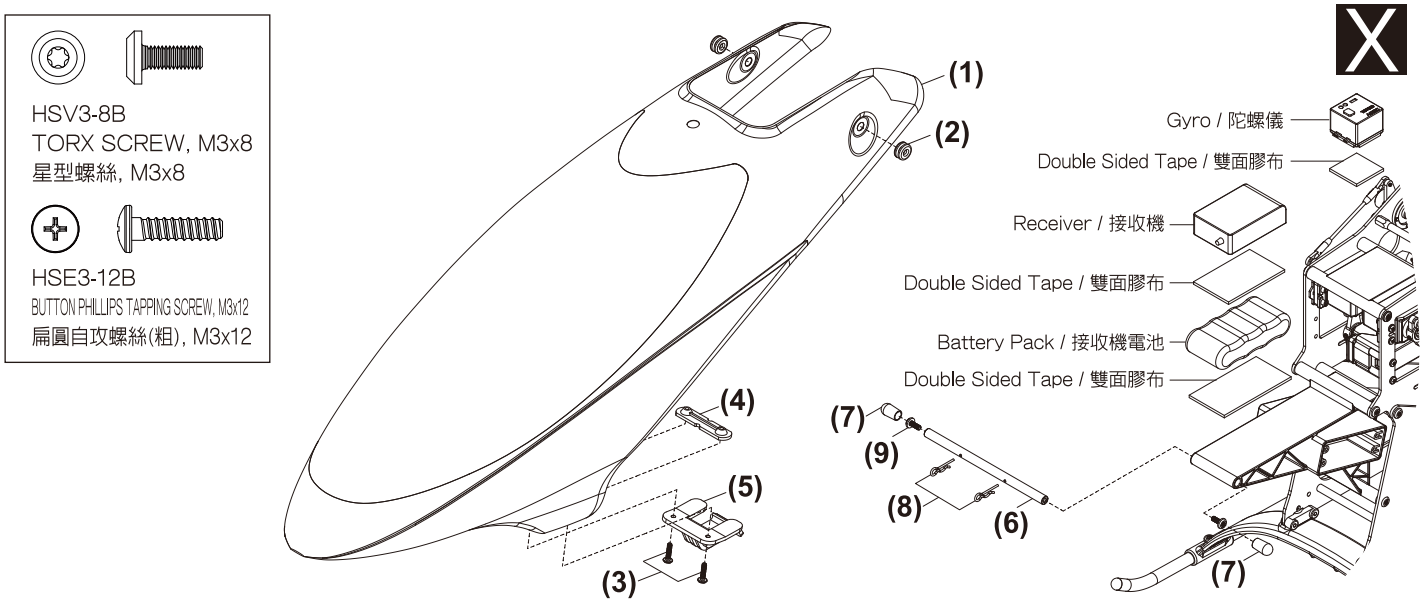

Completed View
組裝完成

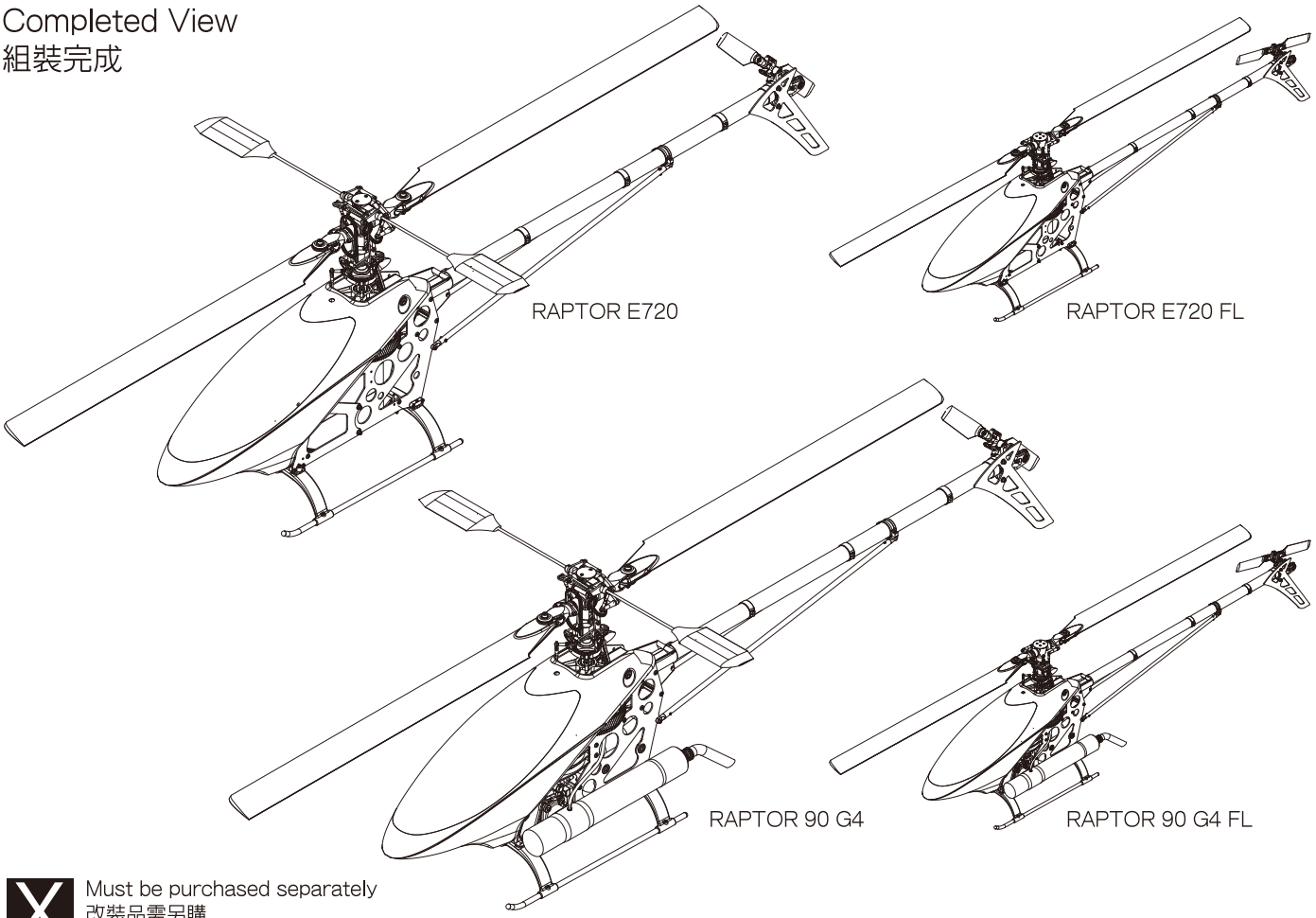

X Must be purchased separately
改裝品需另購

Radio System Setup / 遙控系統設定

THUNDER TIGER

⚠ Warning! (Electric Version Only) / 警告！（電動版注意事項）

For safety, please ensure the motor has been deactivated and will not drive the main rotor head before performing following setting processes. You may just unplug 2 of the wires from the motor and the ESC or move the motor with pinion away from the main gear to avoid a rotating rotor head.
安全起見，執行下列設定程序時，請確認馬達不會驅動主旋翼頭。您可拔除馬達與速控器間任兩條連接線，或將馬達驅動齒與主齒盤脫離。

Swashplate Type Setting / 十字盤模式設定

Choose and activate the swashplate mixing for a 135° CCPM program in your transmitter is the best recommended. Please refer your transmitter manual to find a proper swashplate setting.
A 140° CCPM program is also applicable to the helicopter if your transmitter does not feature a 135° CCPM program.
最佳設定為選用135度十字盤混控程式。請參考您的發射機說明書進行設定。
如您的發射機未具備135度十字盤混控程式，選用140度模式亦可正常操作本產品。

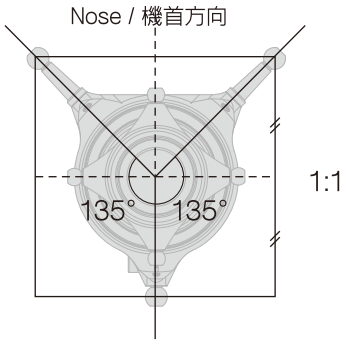

Electric Device Connection / 電子設備連接說明

E-CCPM system requires 3 channel for aileron, elevator and an AUX(for pitch). They are operated together to carry out the rolling, flipping and collective controlling. As a result, the following connecting manner is recommended.
The following chart is the E-CCPM connecting for your reference. Please also consult your radio instruction manual.
E-CCPM系統需要使用三個通路予副翼、升降舵、與螺距（使用AUX通道）。在混控模式下，必須藉由三顆伺服機同時完成動作，因此建議依照下列說明完成伺服機與接收機連結。下列圖示為安裝範例，實際接線方式，請參照您的遙控器使用說明書。

JR Radio Sysym

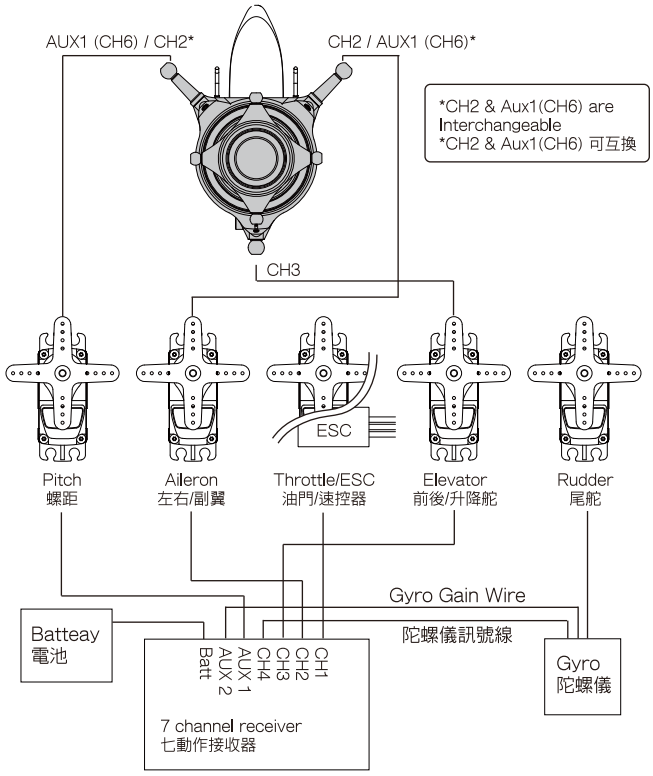

ACE RC / FUTABA / HITEC Radio Sysym

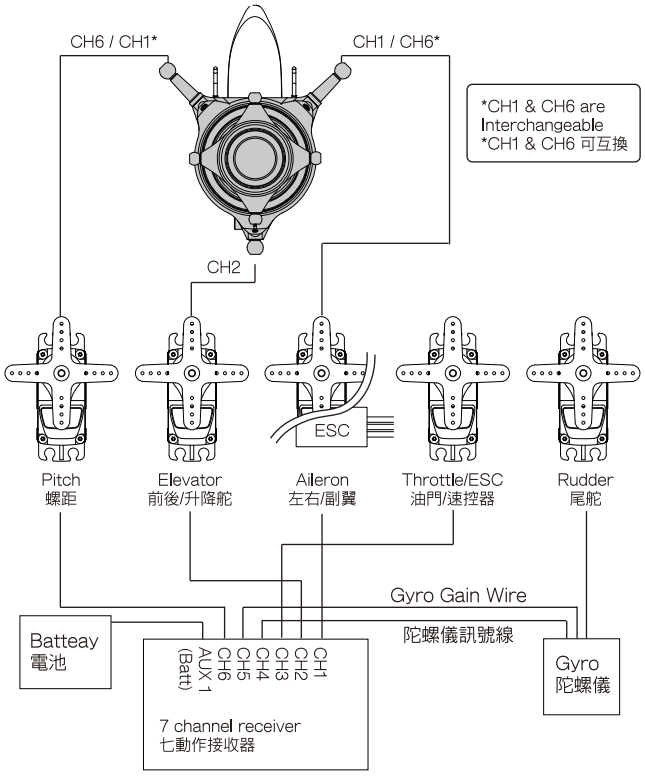

Mechanism Neutral Position Setting / 中立點設定

THUNDER TIGER

The innovative Quick-calibration System helps you to get a mechanism neutral position of the cyclic & rudder servo easier and fast. Please perform the procedure of the calibration as following illustrations step by step.
翼手龍G4系列獨特創新的快速中立點校正系統，能幫助您快速完成觜舵面及尾舵伺服機的機構中立點校正；請依以下說明執行。

1. Loose the setting screws of the horns or just unhook the horn from the horn adaptor.
1. 鬆開擺臂上迫緊螺絲螺絲，或直接將擺臂自擺臂內襯上拆下。

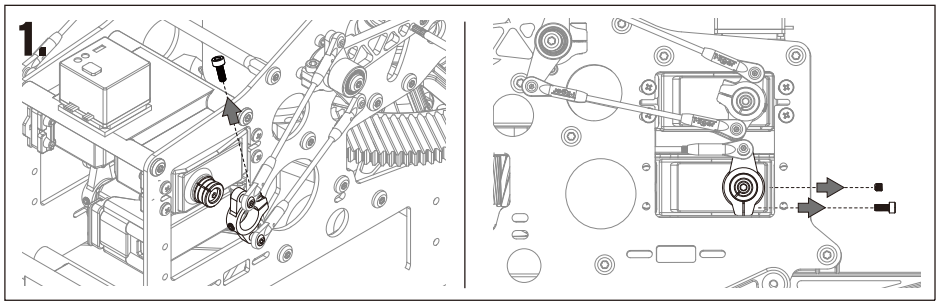

2. Refer your radio system manual to check and ensure that all of the trims & sub-trims are set at their neutral positions (the setting value should be 0), and switch to a non-heading lock mode for your gyro.
3. For calibration of the cyclic servos： please use a 3.0mm handle driver to pin the control arm.And then adjust the pitch curve as a negative 45° straight line (from 0 to highest 100% and pass through the mid-point 50%), therefore, all cyclic servos now are at the neutral position.
2. 請參考您的遙控系統說明書，將遙控器內微調設定全部設定為中立點位置，並將陀螺儀設定為非鎖定模式。
3. 執行舵面伺服機中立點校正：請使用3.0mm手工具固定控制臂；接著，將螺距曲線設定為負斜率之對角線（由0經過50至100%之直線），此時所有伺服機皆位於中立點位置。

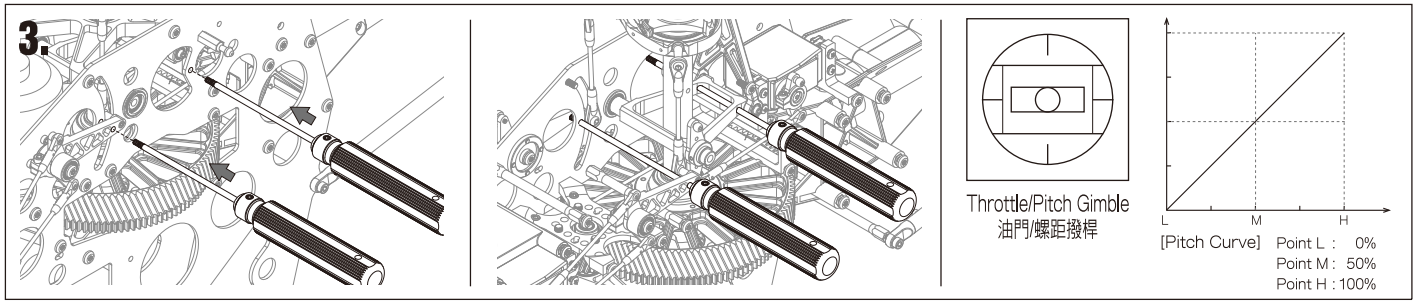

4. For calibration of the rudder servo： check the servo horn is vertical to the servo; moreover, the tail pitch control lever is also vertical to the tail boom while the tail control stick and trim are centered. Tread the ball linkage to shorten/ lengthen the tail rotor linkage if non-vertical.
4. 執行尾舵伺服機中立點校正：確認當尾舵撥桿及微調均位於中立點時，尾舵擺臂垂直於伺服機，同時尾舵螺距控制臂也垂直於尾管。若尾舵推拉桿太短或過長，請調整球頭連桿鎖入拉桿距離。

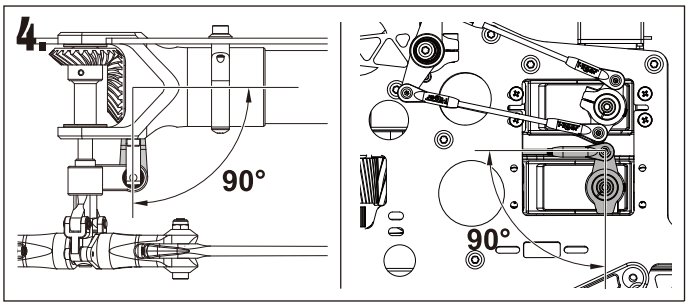

5. Mount all of the servo horns onto the adaptors and then tighten the setting screws, DONE! The collective pitch now is 0° at the neutral position of the cyclic servos, and the tail rotor is at 0° or a little off set to the right.
5. 將所有伺服機擺臂套入內襯並鎖固迫緊螺絲，完成! 此時舵面伺服機應位於中立點位置，主旋翼攻角為0度，同時，尾旋翼旋翼攻角為0度，或稍偏向右。

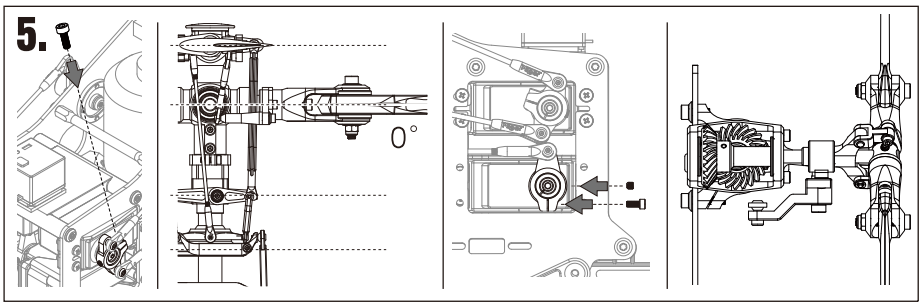

⚠ Warning! / 警告!

Remember to turn the receiver power off and extract the handle drivers from the helicopter before performing the next procedure.
執行下一設定步驟前，請記得關閉接收機電源，並自機體上移除手工具。

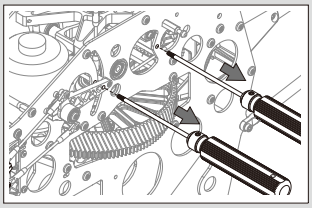

Swashplate & Servo Direction Setting / 十字盤及伺服機方向設定

Ensure there is none of the control bind at full travel before going through following setting procedures. Next, refer the illustrations below to check the direction of servo & swashplate with a given transmitter input. Adjust the servo reversing function in your transmitter if incorrect.
繼續設定前，請確認伺服機及連桿作動順暢且可達最大作動量。接著，請參考以下圖示，確認伺服機動作及十字盤混控設定可正確對應撥桿動作。若作動方向不正確，請調整您發射機上的伺服機逆轉功能。

	Model 1	Model 2	Servo Horn movement 伺服機擺臂動作	Check Point 機構動作確認
Aileron 副翼			Right Side/右側 / Left Side/左側	Front View / 前視圖
Elevator 升降舵			Left Side/左側	Left View / 左視圖
Pitch 螺距			Right Side/右側 / Right Side/右側 / Left Side/左側	Front View / 前視圖
Rudder 尾舵			Right Side/右側	

Nitro Version Only / 引擎版本專用

Throttle 油門			Left Side/左側	

Engine Throttle Control Linkage / 引擎的飛行前調整

Mount the steel linkage ball to the outer hole on the plastic throttle arm. At full throttle stick, the carburetor hole should open completely. At low throttle and with the throttle trim all the way down, the carburetor hole should close completely. Adjust the ATV function in your transmitter to achieve the above requirement. Listen to the servo, it should not make any binding noise. Try to keep the throttle ATV between 90% and 110%. If your radio does not have ATV, then adjust the location of the steel link ball on the throttle servo arm to get the correct throttle travel.
當您裝置引擎時，建議您先在化油器的節氣閥先以油性簽字筆作關閉、中速、高速位置的記號，化油器控制搖臂裝置在機身時，必須調整至與油門伺服機控制搖臂平行的位置，通常我們建議以引擎中速位置與伺服機中速位置來作相互對照的調整依據，如此各個調整點才不會因為控制與被控制機構間的不同步，發生調整上的差異。
基本上由前面所要求的各項裝置數據均能滿足使用上的需求，當發生伺服機行程上的差異時，可以選擇使用遙控器上的ATV功能調整，但是我們建議調整的範圍雙邊（高、低速）不要有總合20%以上的調整差距，並儘可能的維持在90%到110%的範圍內。

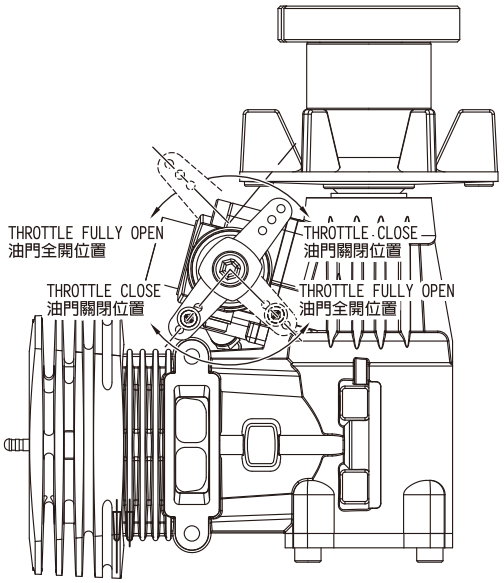

Tail Control & Gyro Setup / 尾舵控制及陀螺儀控制

It is recommended to use a Heading Lock Gyro. With a Heading Lock Gyro, you may not use the trim and the revolution mixing function of tail control. Mount the servo arm for the moment and check the movement of the tail servo:
1. While giving the right rudder control, the servo arm should move toward the nose of helicopter.
2. Rotate the helicopter with your hand counterclockwise, the servo arm should move toward the nose of helicopter.
建議搭配鎖定式陀螺儀，可使您無需額外設定微調及混控功能來控制尾舵 。暫將伺服機擺臂固定後進行尾舵伺服機作動確認：
1. 當執行右舵時，伺服機擺臂應朝機頭方向作動。
2. 將整台直昇機逆時針旋轉時，伺服機擺臂應朝機頭方向作動。

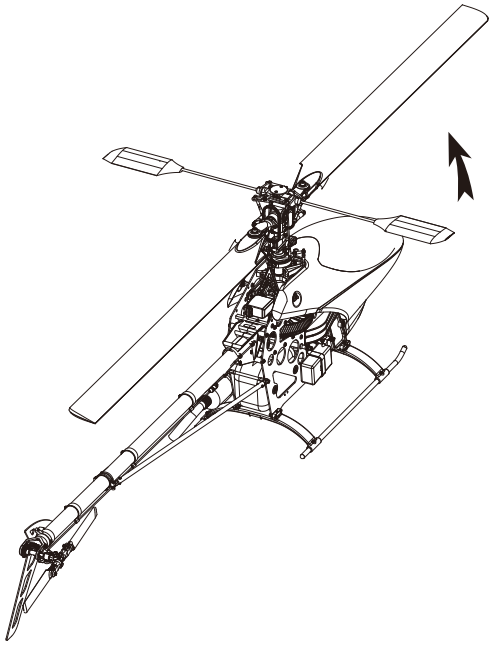

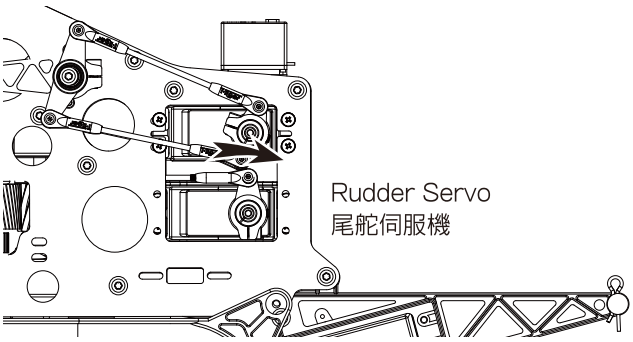

After ensuring the moving direction of tail servo, you have to mount the servo arm in the correct position. Please reset the receiver power and do not move the helicopter. While the tail control stick and trim are centered, mount the servo arm vertically. Next, two points may be your concern:
1. The traveling limit of the rudder servo may not go beyond the mechanical movement.
2. The rudder servo arm should be vertical while the tail rotor is at 0 pitch or with a little offset to the right.
(Referring to the photo below)
確認尾舵伺服機動作正確後，即可將伺服機擺臂確實安裝固定；請勿移動直昇機並重新啟動接收機電源。
當尾舵撥桿與微調置中時，將伺服機擺臂垂直伺服機安裝固定。接著，請特別注意下列兩者：
1. 尾舵伺服機最大行程量切勿大於機械行程量。
2. 當尾旋翼螺距為0或稍偏向右時，尾舵伺服機擺臂應在垂直位置。（請對照下圖）

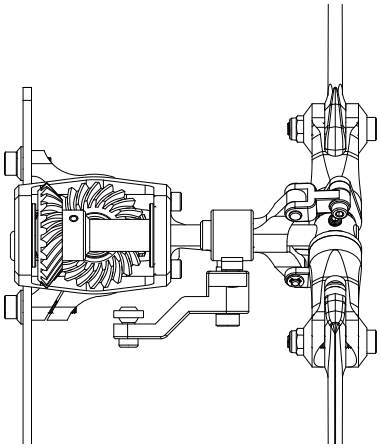

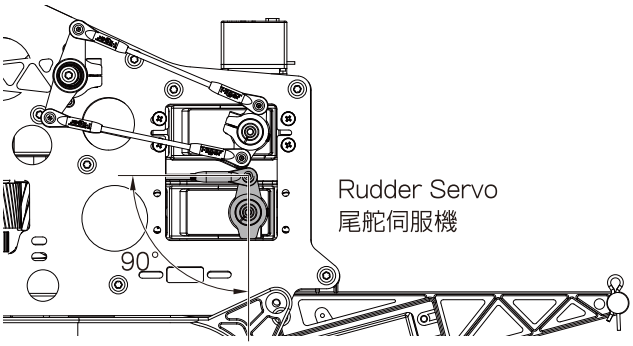

Note1: To find the traveling limit, you have to adjust the Gyro referring to its manual.
Note2: To adjust the pirouetting speed of the helicopter, please use the "Travel Adjustment" or the "D/R & EXP" function of your transmitter.
說明1：請參考陀螺儀說明書調整陀螺儀以確認伺服機最大行程量。
說明2：調整尾舵自旋速度，請設定發射機上“行程設定（Travel Adjustment ）”或“大小動（D/R）、指數值（EXP）”功能。

Throttle & Pitch Curve Setting / 油門及螺距曲線設定

The following is the setting up data of pitch curve and throttle curve for your reference only. Please ask an experienced pilot to help if you have never done this before.
下列參數設定僅供參考，請依實際狀況進行調整，或詢求有經驗的玩家協助。

■ Novice / 初學者設定

Throttle Curve 油門曲線		Pitch Curve 螺距曲線
Nitro Version 引擎版本	Electric Version 電動版本	
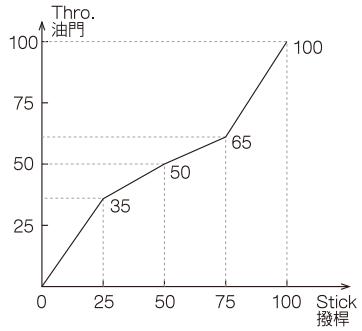	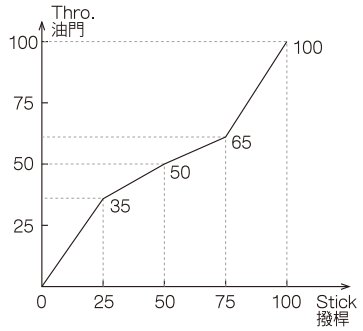	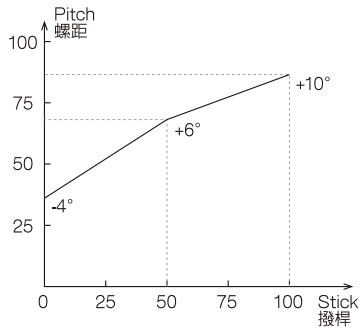

■ 3D Flight / 進階玩家設定

Throttle Curve 油門曲線		Pitch Curve 螺距曲線
Nitro Version 引擎版本	Electric Version 電動版本	
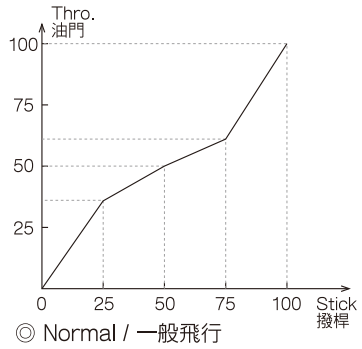	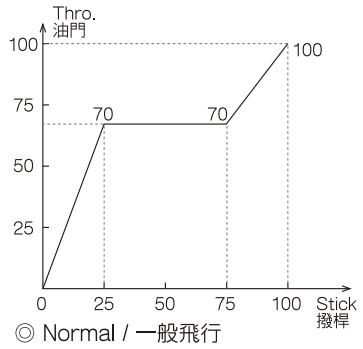	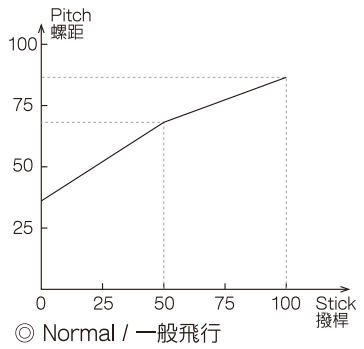
◎ Normal / 一般飛行	◎ Normal / 一般飛行	◎ Normal / 一般飛行
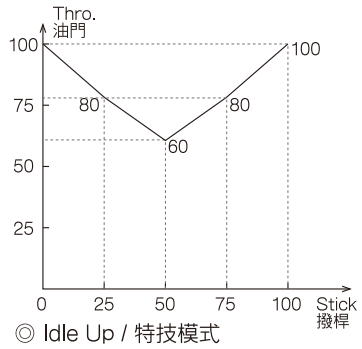	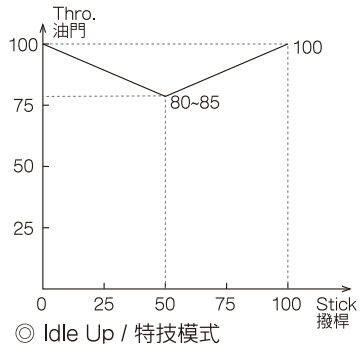	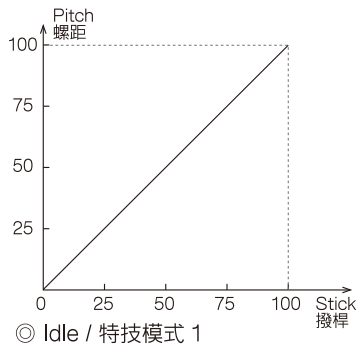
◎ Idle Up / 特技模式	◎ Idle Up / 特技模式	◎ Idle / 特技模式 1

⚠ WARNING 警告

1. Too much collective pitch will bring about too much loading to the power and drive system.
2. Too much headspeed will lead to blades (grips) explosion.
3. It's very dangerous for setting the headspeed over the blades (grips) limit.
4. Please do not set the collective pitch to exceed the maximam (±15°).

1.過大的聚合螺距設定會使引擎及傳動系統超載。
2.過快的主旋翼轉速會造成主旋翼轉座崩裂或射槳。
3.將旋翼轉速設定超過槳片負載極限極端危險!
4.請勿將聚合螺距設定超過最大值（±15度角）。

Blade Tracking Adjustment / 主旋翼軌跡調整

⚠ CAUTION / 警告

For safety, ensure to keep a safe distance from the helicopter at least 10 meter (30 feet) while making tracking adjustment.

安全起見，進行主旋翼軌跡調整時，請至少與直昇機保持10米（30呎）的安全距離。

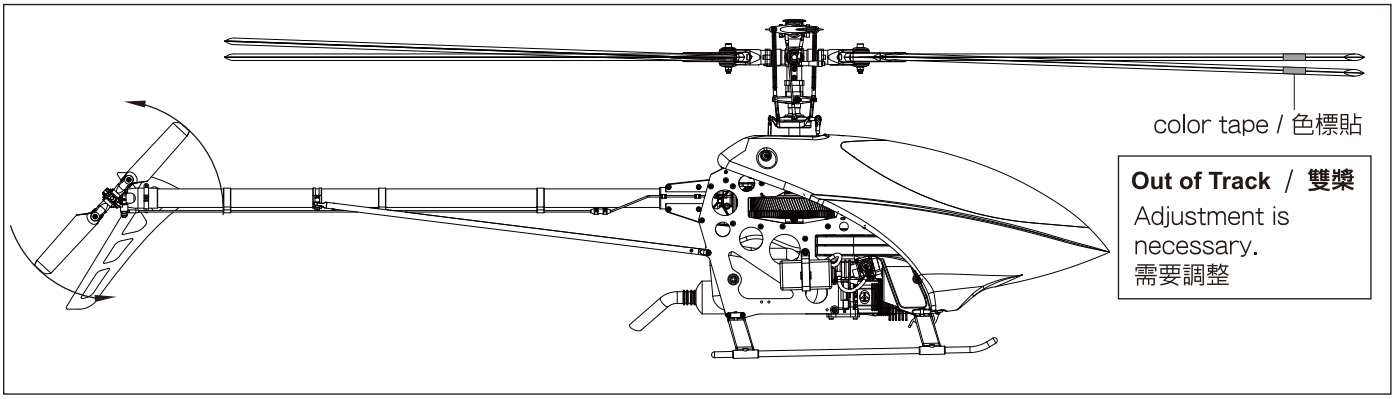

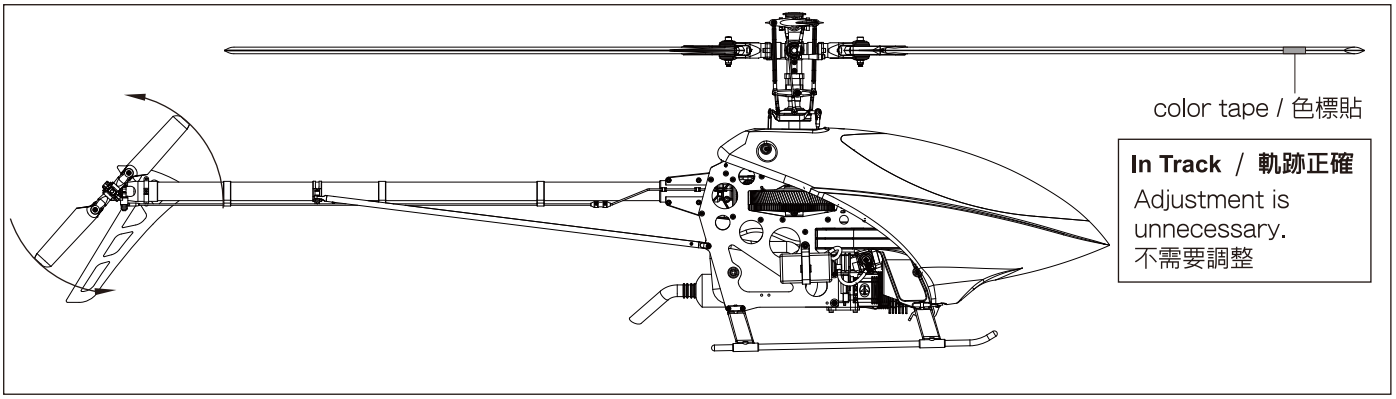

1. Use a color tape at the tip of main blades for tracking identification easily.
2. Increase the main blade speed to just before the helicopter lifts-off.
3. Observe which blade appears to be lower than the other, and increase the pitch of the lower blade one turn of the Linkage Rod (refer Page 11) at a time until each blade runs in track. If both main blades rotate in the same path, it doesn't need to be adjusted.

1. 在主旋翼前端貼上色標可方便辨識軌跡。
2. 提高主旋翼轉速使機體稍懸浮於地面。
3. 觀察兩支旋翼軌跡是否有落差 (雙槳) ，調整軌跡較低旋翼上之連桿 (參閱第11頁) 長度，一次調整一圈，直至兩支旋翼軌跡一致。若軌跡一致則無需調整。

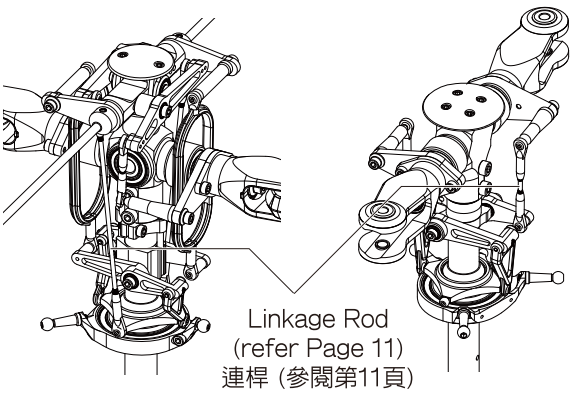

⚠ CAUTION / 警告

Out of track causes vibration, instability and a loss of power due to additional drag. Please adjust the tracking repeatedly until the blades are in track properly.

旋翼軌跡落差（雙槳）會造成直昇機震動、不平衡及損失動力。請務必進行調整以使旋翼軌跡精準正確。

Index of Linkage Length / 連桿長度索引

THUNDER TIGER

FLYBARLESS

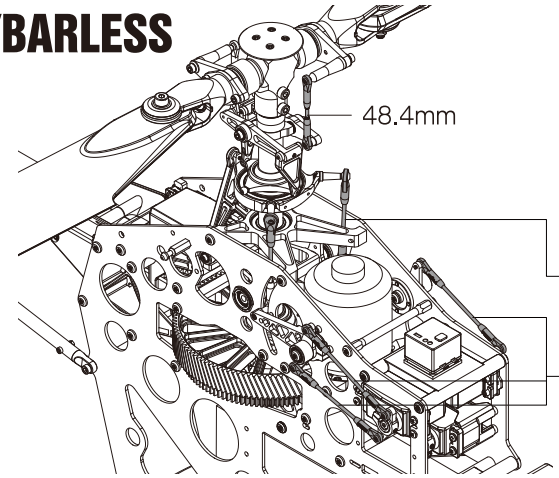

FLYBAR

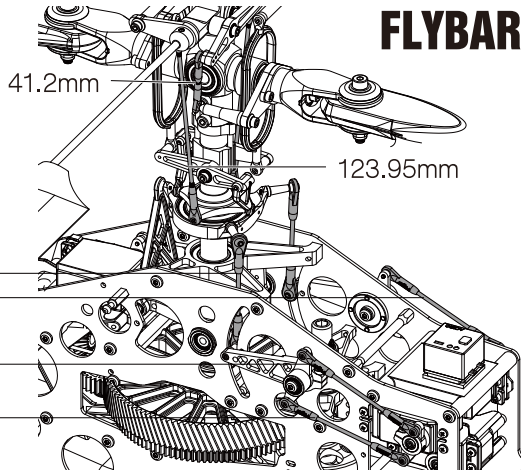

67.51mm
Fixed Length / 固定長度

74.53mm
Fixed Length / 固定長度

Nitro Version Only

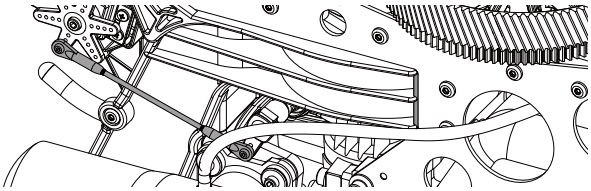

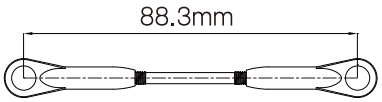

Length measured from ball link center to ball link center
由此連桿頭中心測量至另一頭連桿頭中心

After Flight Checklist / 飛行後的檢查項目

(1) Check every screw and bolt to make sure none has loosened due to vibration.
(2) Check every rotating and movable part to ensure they still move smoothly and normally.
(3) Clean off the exhaust residue from the muffler, engine, and helicopter.
(4) Check all movable parts, such as gears, ball links, belt, etc. for unusual wear.
(1) 每次飛行後必須詳細的檢查機體的各部位螺絲有無鬆動情形，若發生鬆動必須確實鎖緊再進行下飛行。
(2) 每次飛行後檢查每一個轉動部位（含單頭連接桿）均能順暢的運作。
(3) 排氣管、引擎、直昇機本體必須確實的清潔。
(4) 檢查每一個動作部位，齒輪、球頭、皮帶等是否有不正常磨損。

Regular Maintenance / 定期保養事項

Warning! / 警告!

Lack for regular maintenance or apply a wrong type of grease/oil onto the parts may cause damage and model crash, which may cause series injury or death if the model hits people or property.

疏於定期保養，或塗抹不正確類型的潤滑油皆可能損壞零件造成摔機，因而導致人員受傷或財產損失。

For safety, to check and maintain the parts every 5~10 flights is strongly recommended. Please re-apply the proper grease or oil onto the bevel bears and bearings as the illustrations.
強烈建議您每飛行5~10趟需執行下列定期保養事項。 請依圖示說明重新在傘齒及軸承上塗抹潤滑油。

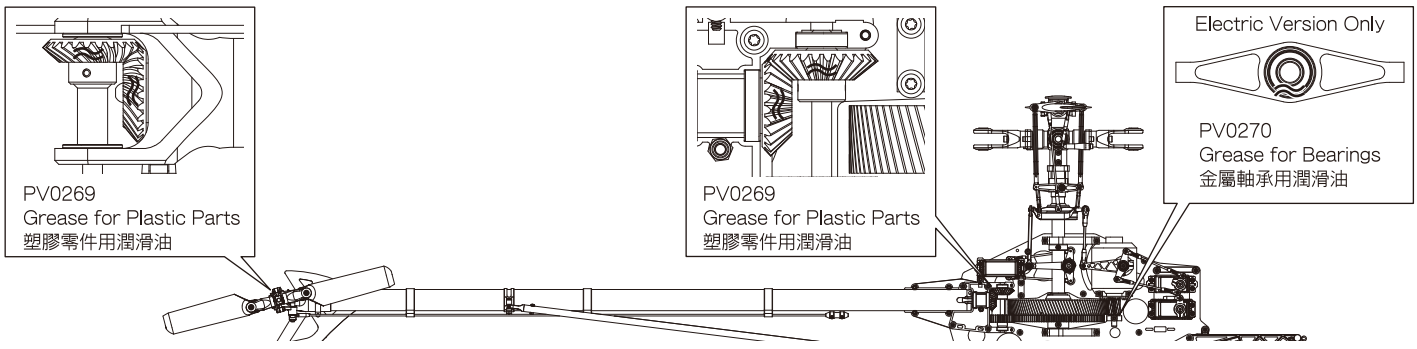

SPARE PARTS / 零件包

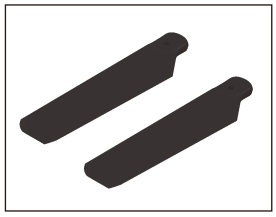

3892
CARBON TAIL BLADE 105mm
105碳纖尾旋翼

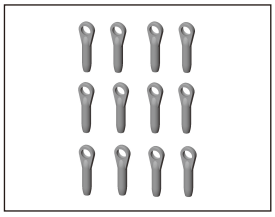

PV0041
BALL LINK
單頭連接桿

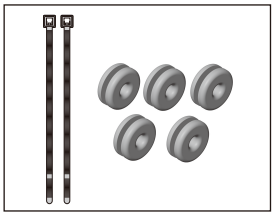

PV0062
RUBBER GROMMETS (WHITE)
機身固定墊圈組

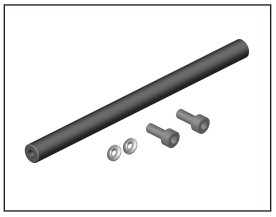

PV0126
SPINDLE
固定軸

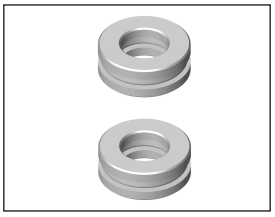

PV0172
THRUST BEARING, d8xD16xW5
止推軸承組, d8xD16xW5

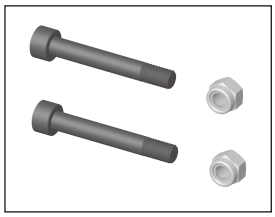

PV0177
ROTOR BOLT
主旋翼螺絲組

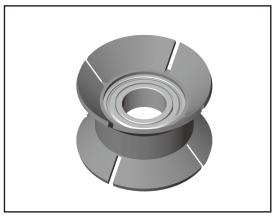

PV0195
TAIL DRIVE SHAFT BEARING SET
尾驅動軸軸套組

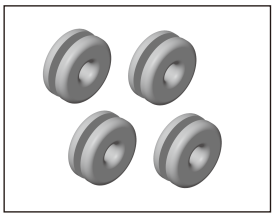

PV0208
FUEL TANK RUBBER
油箱固定墊圈

PV0268
LOCTITE #262
高強度防鬆劑（紅）

PV0270
THRUST BEARING GREASE
止推軸承潤滑脂

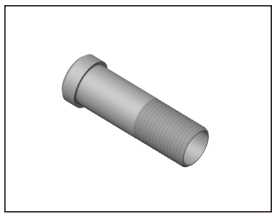

PV0425
TAIL PITCH CONTROL SLIDE BUSHING
尾旋翼控制軸套

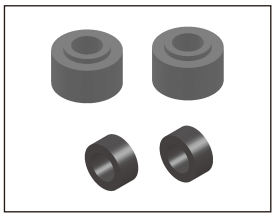

PV0619
3D DAMPER SET
3D避震墊圈組

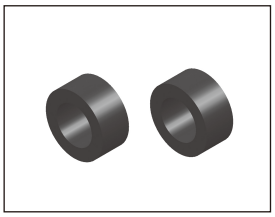

PV0620
3D INNER DAMPER
3D內避震墊圈

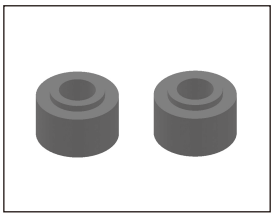

PV0621
3D OUTER DAMPER
3D外避震墊圈

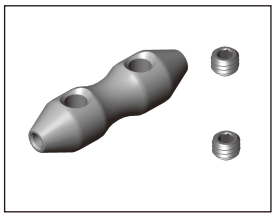

PV1338
TAIL CONTROL ROD JOINT
尾控制桿軸環

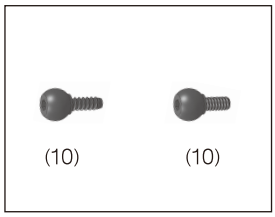

PV1379
LINKAGE BALL SCREW SET
球頭螺絲組

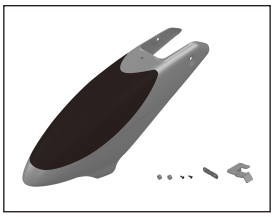

PV1501-R
R90 G4 FRP CANOPY(RED)
R90 G4 玻纖機殼(紅)

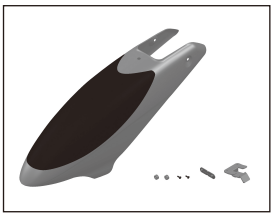

PV1501-Y
R90 G4 FRP CANOPY(YELLOW)
R90 G4 玻纖機殼(黃)

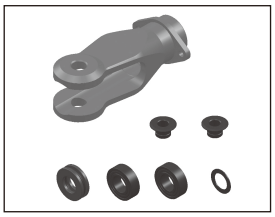

PV1516
METAL ROTOR GRIP (BODY)
金屬主旋翼轉座(本體)

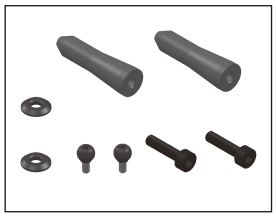

PV1519
METAL MAIN ROTOR GRIP POST
金屬主旋翼轉座支柱

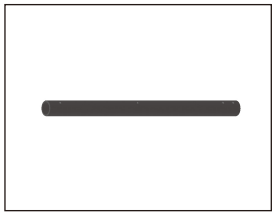

PV1521
HARDENED MAIN SHAFT
強化主軸

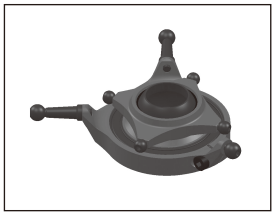

PV1530
METAL SWASHPLATE
金屬十字盤組

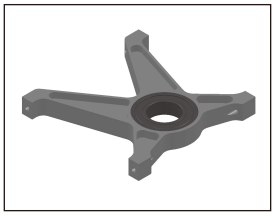

PV1531
METAL MAIN SHAFT BRG BLOCK SET
金屬主軸軸承座組

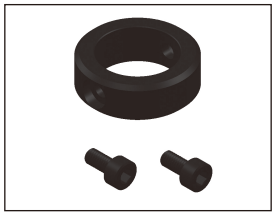

PV1532
MAIN SHAFT LOCK RING
主軸止檔

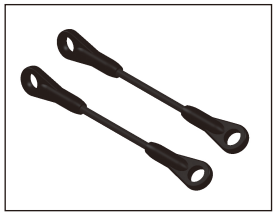

PV1534
INSERT MOULDING LINKAGE, 67.5mm
一體式連接桿

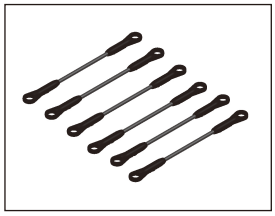

PV1535
INSERT MOULDING LINKAGE, 74.5mm
一體式連接桿組

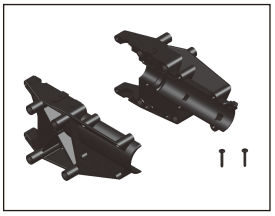

PV1536
TAIL BOOM BRACKET
機身尾管固定座

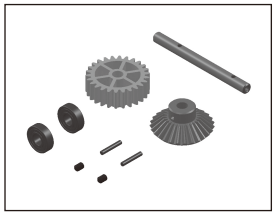

PV1537
TAIL DRIVE GEAR SET
尾驅動齒輪組

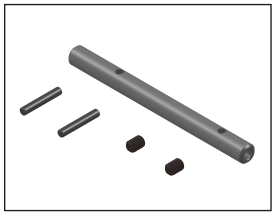

PV1538
TAIL DRIVE GEAR SHAFT
尾驅動齒輪軸

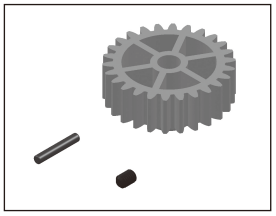

PV1539
TAIL DRIVE GEAR-26T
尾驅動齒輪26T

SPARE PARTS / 零件包

THUNDER TIGER

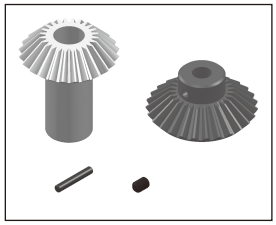

PV1540
FRONT BEVEL TAIL GEAR SET
傘齒輪組

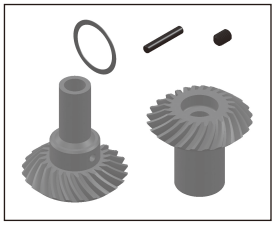

PV1541
REAR TAIL HELICAL BEVEL GEAR SET
尾傘齒輪組

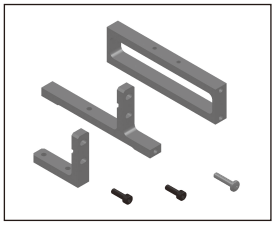

PV1542
METAL SERVO MOUNT
金屬伺服機固定座

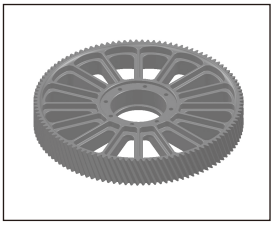

PV1543
MAIN GEAR,111T
主齒輪(111T)

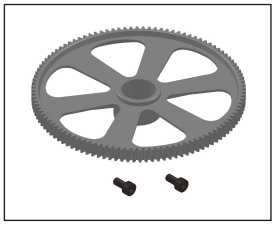

PV1544
AUTOROTATION TAIL DRIVE PULLEY,108T
尾驅動輪108T

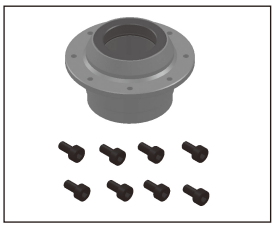

PV1545
ONE WAY CLUTCH HOUSING
單向離合器座

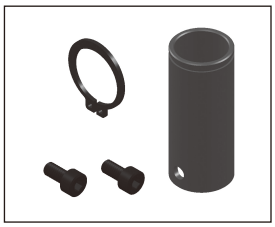

PV1546
ONE WAY BEARING SHAFT
單向離合器軸

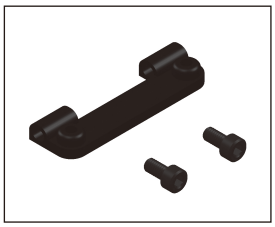

PV1550
ROD GUIDE PLATE
推拉桿導板

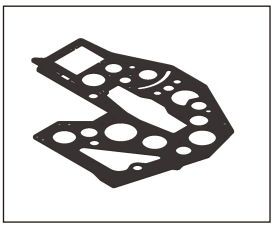

PV1561
SIDE FRAME-L(1)
碳纖側板-左(單片)

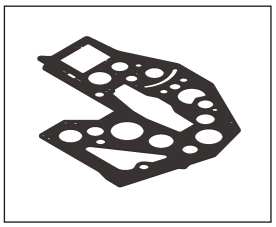

PV1562
SIDE FRAME-R(1)
碳纖側板-右(單片)

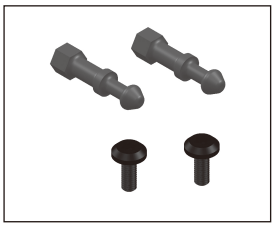

PV1563
CANOPY RETAINING POST
機身固定柱

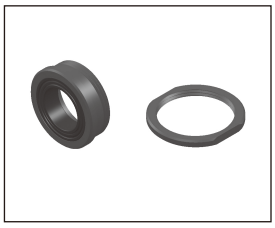

PV1564
METAL ELEVATOR WASHER MOUNT SET
金屬控制臂軸承座

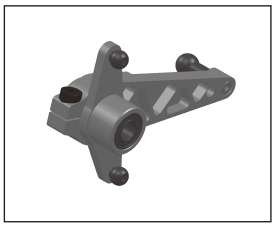

PV1565
METAL AILERON CONTROL ARM SET-LEFT
金屬副翼控制臂組-左

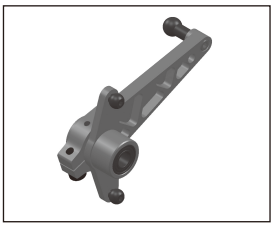

PV1566
METAL AILERON CONTROL ARM SET-RIGHT
金屬副翼控制臂組-右

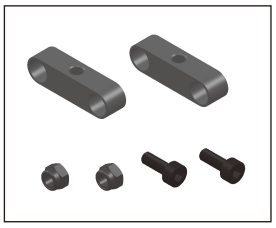

PV1567
METAL SKID BRACKET
金屬腳架固定座

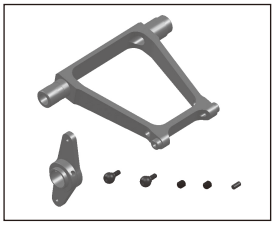

PV1570
METAL ELEVATOR CONTROL ARM SET
金屬升降舵控制臂組

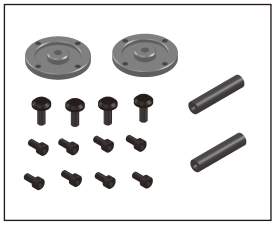

PV1571
CONTROL LEVER BASE
控制臂固定座

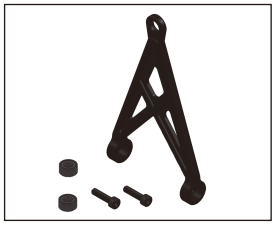

PV1572
ELEVATOR CONTROL ARM LINK
升降舵連接座

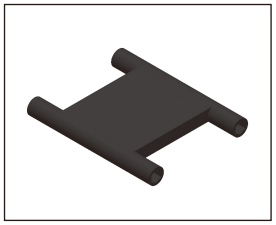

PV1573
GYRO TRAY
陀螺儀座

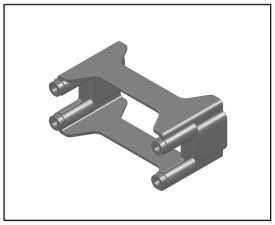

PV1574
RUDDER SERVO MOUNT
尾舵伺服機固定座

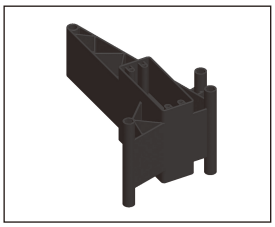

PV1575
RADIO TRAY
油門伺服機固定架

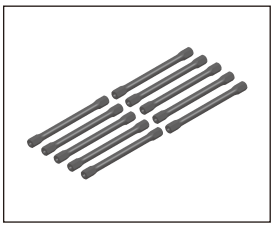

PV1576
METAL FRAME SPACER
金屬側板支柱

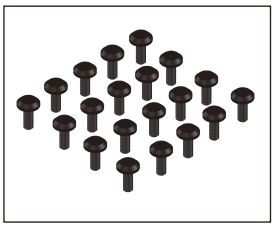

PV1577
TORX SCREW, M3x8
星型低頭螺絲

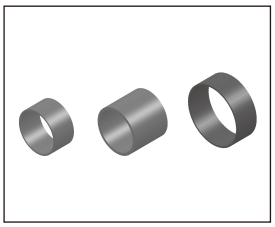

PV1581
COLLAR SET
軸環組

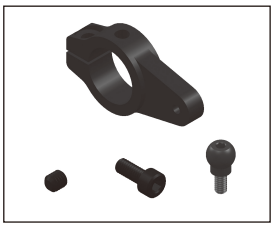

PV1582
METAL RUDDER SERVO HORN
金屬尾舵伺服機擺臂

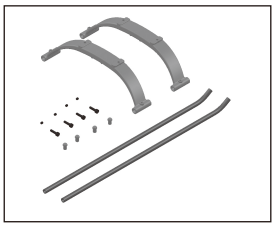

PV1583
LANDING SKID SET
腳架組

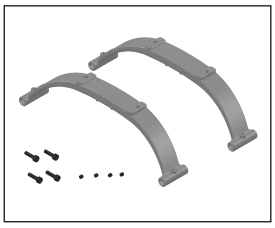

PV1584
LANDING SKID
腳架

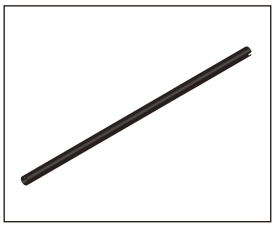

PV1585
CARBON TAIL BOOM
碳纖尾管

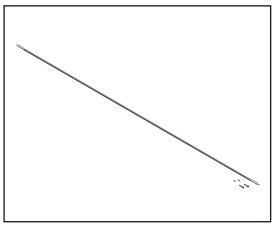

PV1586
METAL TAIL DRIVE SHAFT SET
金屬尾驅動軸組

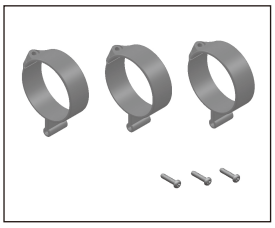

PV1587
ROD GUIDE SET
推拉桿固定環組

SPARE PARTS / 零件包

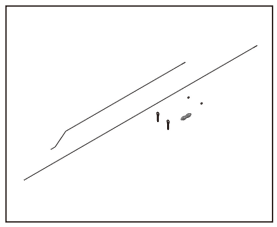

PV1588
TAIL CONTROL ROD SET
尾推拉桿組

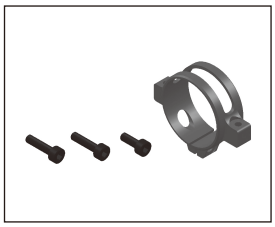

PV1589
METAL TAIL SUPPORT BRACKET
金屬尾管固定座

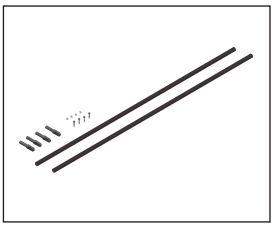

PV1590
CARBON TAIL SUPPORT ROD SET
碳纖尾管支撐架組

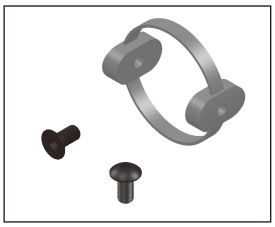

PV1591
TAIL CASE INNER RING
尾座內襯

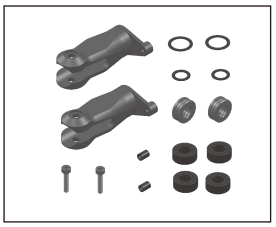

PV1592
METAL TAIL GRIP SET
金屬尾旋翼轉座組

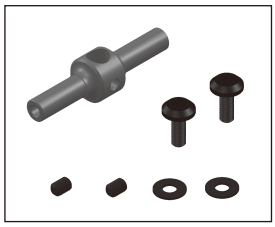

PV1593
METAL TAIL ROTOR HUB
金屬尾旋翼座

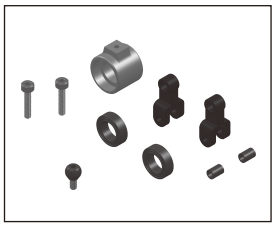

PV1594
METAL TAIL PITCH SLIDER
金屬尾旋翼滑座

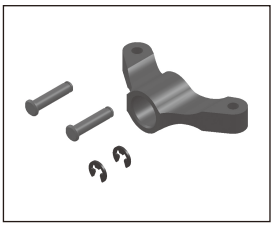

PV1595
METAL TAIL PITCH CONTROL FORK
金屬尾旋翼控制座

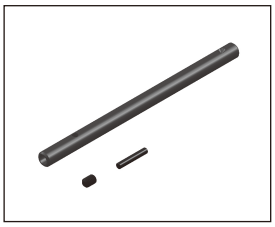

PV1596
TAIL OUTPUT SHAFT
尾旋翼軸

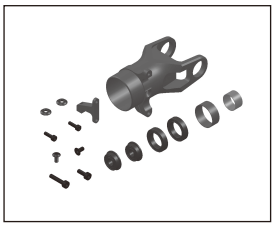

PV1597
METAL TAIL CASE SET
金屬尾座組

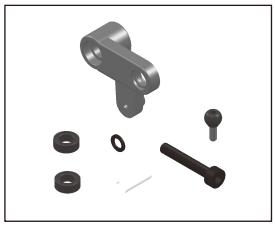

PV1598
TAIL PITCH CONTROL LEVER
尾旋翼控制桿

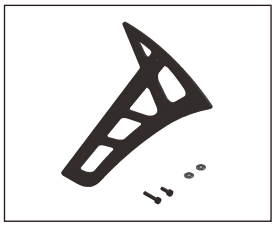

PV1600
CARBON VERTICAL FIN
碳纖垂直安定面

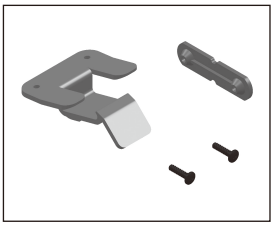

PV1601
CANOPY BRACKET
機身固定扣

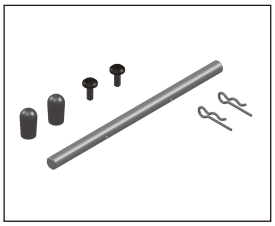

PV1602
CANOPY SPACER
機殼支撐柱

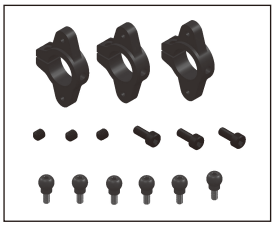

PV1603
METAL CYCLIC SERVO HORN SET
金屬舵面伺服機擺臂組

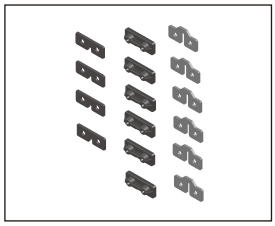

PV1604
SERVO MOUNTING SET
伺服機墊片組

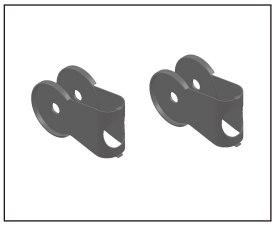

PV1605
ROTOR SPACER
主旋翼墊片

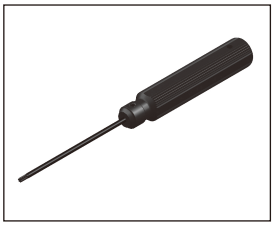

PV1607
TORX DRIVER SET
星型工具組

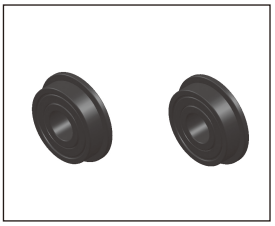

PV1611
FLANGE BEARING,d5xD13xW4
凸緣軸承組,d5xD13xW4

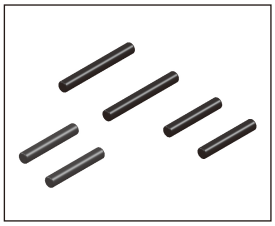

PV1612
PIN SET
固定銷組

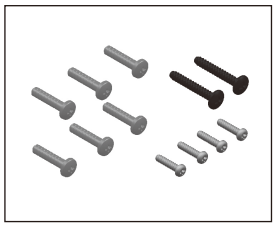

PV1613
SELF TAPPING SCREW SET
扁圓自攻螺絲組

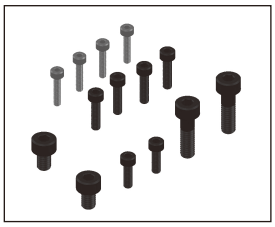

PV1614
SOCKET SCREW SET
內六角螺絲組

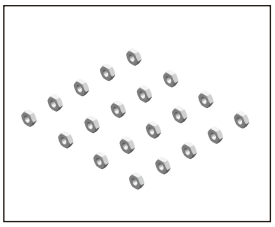

PV1615
NUT(BLACK), M2
六角螺帽(電黑鎳), M2

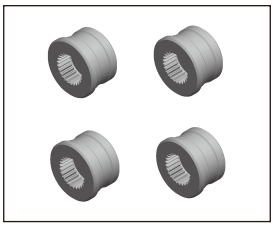

PV1623-F
SERVO HORN COLLAR(FUTABA)
伺服機擺臂軸套(FUTABA)

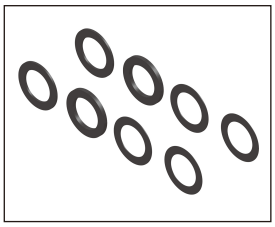

PV1627
THRUST COLLAR SET
止推軸環組

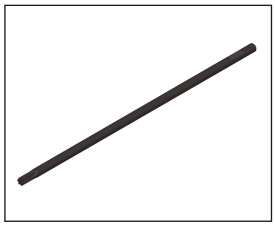

PV1629
TORX DRIVER TIP
星型工具前端圓棒

SPARE PARTS / 零件包

THUNDER TIGER

	No.	Description	中文名稱
	PV0777	SOCKET SCREW, M2x8 (20)	內六角螺絲, M2x8
	PY91159	SOCKET SCREW, M2.5x5 (20)	內六角螺絲, M2.5x5
	PD7293	SOCKET SCREW, M2.5x6 (20)	內六角螺絲, M2.5x6
	PY89222	SOCKET SCREW, M2.5x8 (20)	內六角螺絲, M2.5x8
	PV0637	SOCKET SCREW, M2.5x12 (20)	內六角螺絲, M2.5x12
	PV0256	SOCKET SCREW, M3x6 (20)	內六角螺絲, M3x6
	PV0218	SOCKET SCREW, M3x8 (20)	內六角螺絲, M3x8
	PV0212	SOCKET SCREW, M3x10 (20)	內六角螺絲, M3x10
	PV0213	SOCKET SCREW, M3x12 (20)	內六角螺絲, M3x12
	PV0214	SOCKET SCREW, M3x14 (20)	內六角螺絲, M3x14
	PV0215	SOCKET SCREW, M3x18 (20)	內六角螺絲, M3x18
	PV0216	SOCKET SCREW, M3x25 (20)	內六角螺絲, M3x25
	PV0223	SOCKET SCREW, M4x8 (20)	內六角螺絲, M4x8
	PV0220	SOCKET SCREW, M4x12 (20)	內六角螺絲, M4x12
	PV0235	LOCK NUT, M2.5 (20)	止鬆螺帽, M2.5
	PD1244	LOCK NUT, M3 (10)	止鬆螺帽, M3

	No.	Description	中文名稱
	PV0176	BALL BEARING, d4xD7xW2.5	軸承組, d4xD7xW2.5
	PV0048	BALL BEARING, d4xD8xW3	軸承組, d4xD8xW3
	PV0174	BALL BEARING, d4xD11xW4	軸承組, d4xD11xW4
	PV0200	BALL BEARING, d5xD10xW4	軸承組, d5xD10xW4
	PV0050	BALL BEARING, d5xD13xW4	軸承組, d5xD13xW4
	PV0203	BALL BEARING, d6xD15xW5	軸承組, d6xD15xW5
	PV0046	BALL BEARING, d8xD12xW3.5	軸承組, d8xD12xW3.5
	PV0175	BALL BEARING, d8xD16xW5	軸承組, d8xD16xW5
	PV0197	BALL BEARING, d12xD18xW4	軸承組, d12xD18xW4
	PV1608	BALL BEARING, d12xD21xW5	軸承組, d12xD21xW5
	PV1609	BALL BEARING, d15xD28xW7	軸承組, d15xD28xW7
	PV1610	BALL BEARING, d2.5xD7xW3.5	軸承組, d2.5xD7xW3.5
	PV0271	WASHER, d3xD5xt0.5	墊圈, d3xD5xt0.5
	PV0210	WASHER, d3xD8xt1.4	墊圈, d3xD8xt1.4
	PV0209	WASHER, d4xD11xt1.7	墊圈, d4xD11xt1.7
	PV0497	WASHER, d8xD12xt1.8	墊圈, d8xD12xt1.8
	PV1628	WASHER, d12xD14.5xW0.1	墊圈, d12xD14.5xW0.1
	PV0780	SET SCREW, M3x3 (20)	無頭內六角螺絲, M3x3
	PV0225	SET SCREW, M3x4 (20)	無頭內六角螺絲, M3x4
	PY4670	SET SCREW, M3x8 (20)	無頭內六角螺絲, M3x8
	PV0226	SET SCREW, M4x3 (20)	無頭內六角螺絲, M4x3
	PD1598	SET SCREW, M4x4 (20)	無頭內六角螺絲, M4x4

EXCLUSIVE SPARE PARTS - ELECTRIC VERSION / 電動版專用零件包

THUNDER TIGER

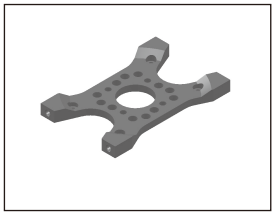

PV1547
METAL MOTOR MOUNT
金屬馬達固定座

PV1549
METAL MOTOR PINION BLOCK, 6mm
金屬馬達齒輪固定座, 6mm

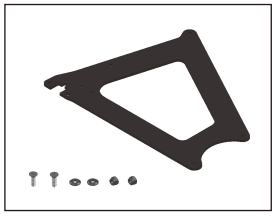

PV1568
CARBON LOWER SIDE FRAME, 1
碳纖下側板, 單片

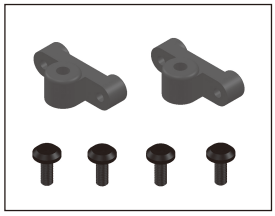

PV1569
SKID BRACKTE, ELECTRIC
支撐架固定座, 電動版

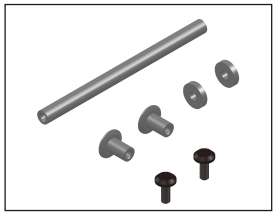

PV1578
BATTELY TRAY BLOCK SET
電池座固定組

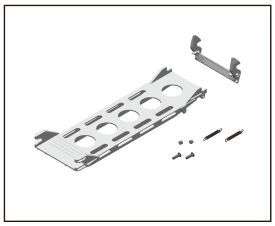

PV1579
BATTELY TRAY SET
電池座組

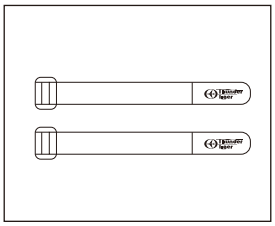

PV1606
VELCRO STRAPE
固定束帶

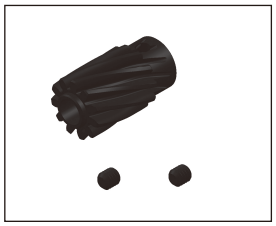

PV1617
MOTOR PINION, 11T
馬達齒輪, 11T

EXCLUSIVE SPARE PARTS - NITRO VERSION / 引擎版專用零件包

THUNDER TIGER

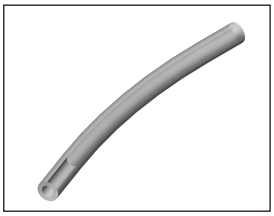

1179
SILCONE FUEL LINE, 2ft
透明耐熱油管, 2ft

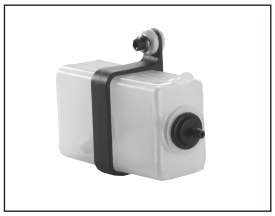

PV0311
HEADER TANK, 60CC
副油箱零件包, 60CC

PV0312
HEADER TANK SUPPORT
副油箱固定座

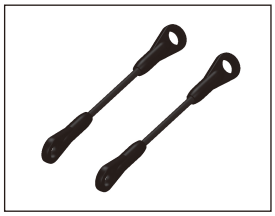

PV1533-2
THROTTLE LINKAGE ROD SET
油門連接桿組

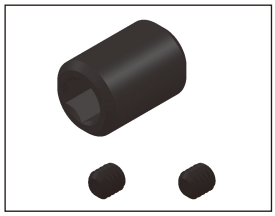

PV1551
STARTER COUPLING
啟動接頭

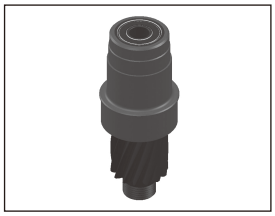

PV1552
DRIVE PINION SET, 14T
驅動齒輪組, 14T

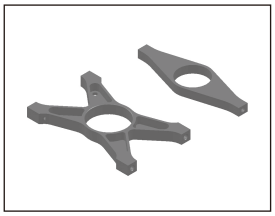

PV1553
METAL CLUTCH BRACKET
金屬離合器固定座

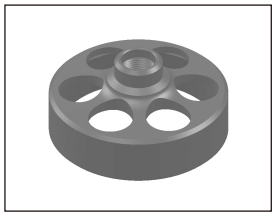

PV1554
CLUTCH BELL SET
離合器罩組

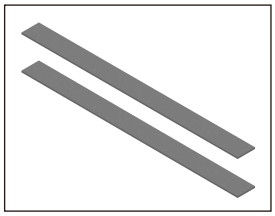

PV1555
CLUTCH LINING
離合器片

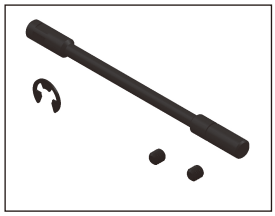

PV1556
STARTER SHAFT
啟動軸

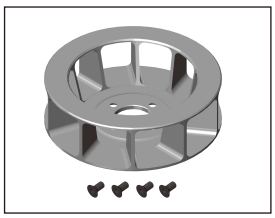

PV1557
METAL COOLING FAN SET
金屬冷卻風扇組

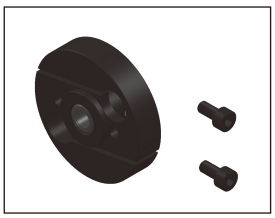

PV1558
CLUTCH SHOE SET
離合器組

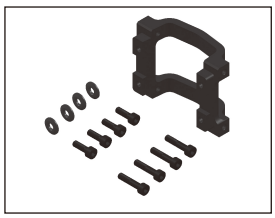

PV1559
ENGINE MOUNT
引擎固定座

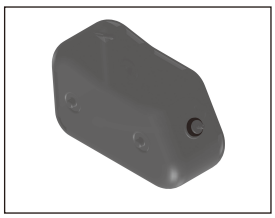

PV1560
FUEL TANK SET, 650CC
油箱組, 650CC

PV1580
COOLING FAN CASING
風扇罩

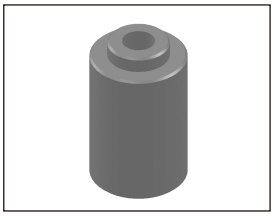

PV1624
HEADER TANK POST
副油箱支柱

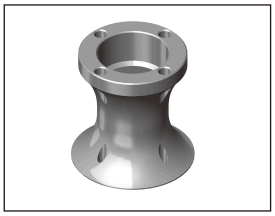

PV1625
METAL COOLING FAN HOUSING, OS/TT
金屬冷卻風扇座, OS/TT

EXCLUSIVE SPARE PARTS - FLYBAR VERSION / 平衡翼版專用零件包

THUNDER TIGER

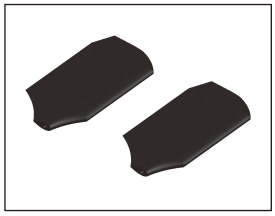

3911
CARBON PADDLE SET, 23G
90碳纖穩定翼

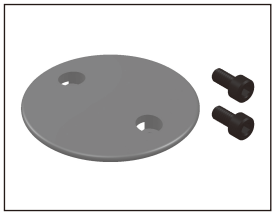

PV1502
METAL FLYBAR HEAD BUTTON
金屬煞車盤

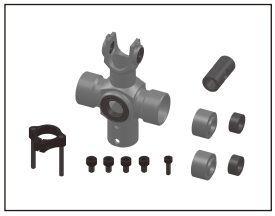

PV1504
METAL FLYBAR MAIN ROTOR HUB SET
金屬主旋翼固定座組

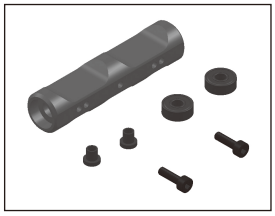

PV1506
METAL FLYBAR SEESAW HUB SET
金屬穩定桿固定軸組

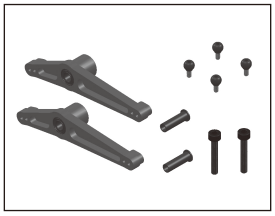

PV1507
METAL FLYBAR MIXING LEVER SET
金屬混控搖臂組

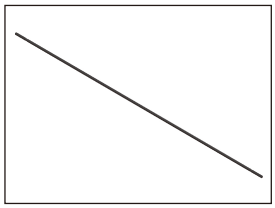

PV1508
SUS FLYBAR ROD
SUS平衡桿

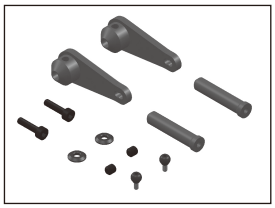

PV1509
METAL FLYBAR CONTROL ARM SET
金屬穩定翼控制臂組

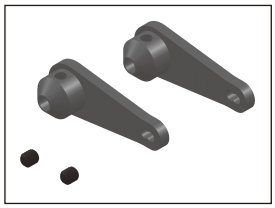

PV1510
METAL FLYBAR CONTROL ARM
金屬穩定翼控制臂

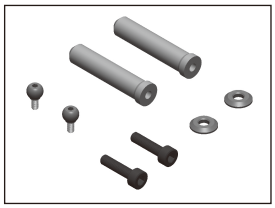

PV1511
METAL FLYBAR CONTROL ARM POST
金屬穩定翼控制臂柱

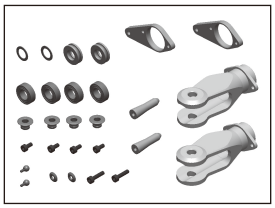

PV1514
METAL FLYBAR ROTOR GRIP SET
金屬主旋翼轉座組

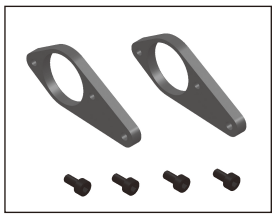

PV1517
METAL FLYBAR ROTOR GRIP LEVER
金屬旋翼轉座搖臂

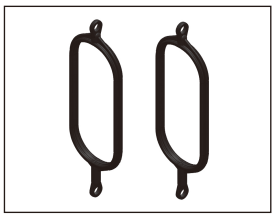

PV1520
FLYBAR CONTROL ROD
穩定翼操控環

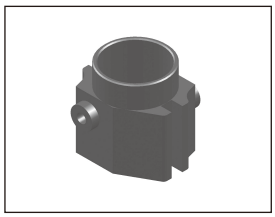

PV1522
METAL FLYBAR WASHOUT BASE
金屬控制臂座

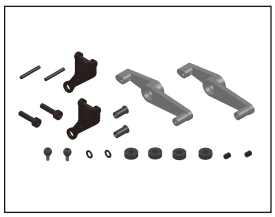

PV1524
METAL FLYBAR CONTROL LEVER SET
金屬穩定翼控制搖臂組

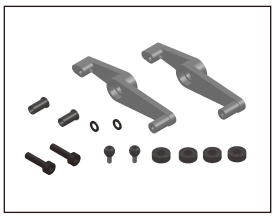

PV1526
METAL FLYBAR CONTROL LEVER
金屬穩定翼控制搖臂

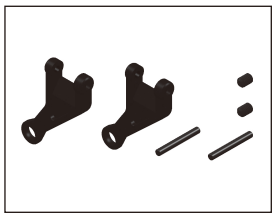

PV1528
FLYBAR WASHOUT LINKAGE
連接座

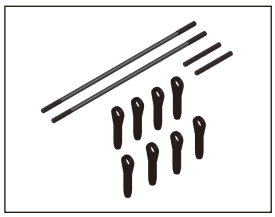

PV1533
FLYBAR LINKAGE ROD SET
標準連接桿組

EXCLUSIVE SPARE PARTS - FLYBARLESS VERSION / 無平衡翼版專用零件包

THUNDER TIGER

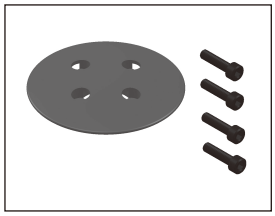

PV1503
METAL FLYBARLESS HEAD BUTTON
金屬無平衡翼煞車盤

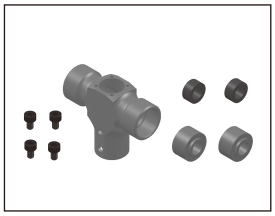

PV1505
METAL FLYBARLESS MAIN ROTOR HUB
金屬無平衡翼主旋翼固定座

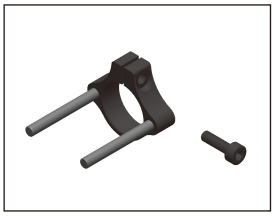

PV1513
PHASE RING SET
滑座導引環組

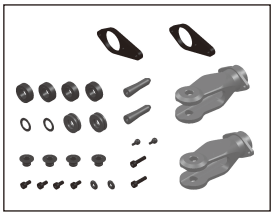

PV1515
METAL FLYBARLESS ROTOR GRIP SET
金屬無平衡翼主旋翼轉座組

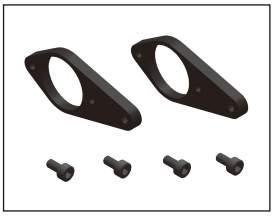

PV1518
METAL FLYBARLESS ROTOR GRIP LEVER
無平衡翼金屬旋翼轉座搖臂

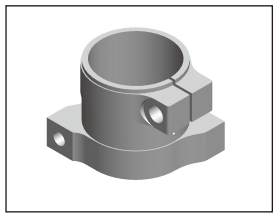

PV1523
METAL FLYBARLESS WASHOUT BASE
無平衡翼金屬控制臂座

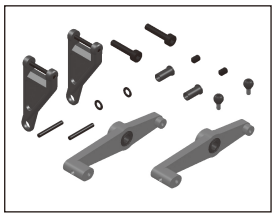

PV1525
METAL FLYBARLESS CONTROL LEVER SET
無平衡翼金屬控制搖臂組

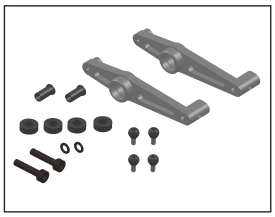

PV1527
METAL FLYBARLESS CONTROL LEVER
金屬無平衡翼控制搖臂

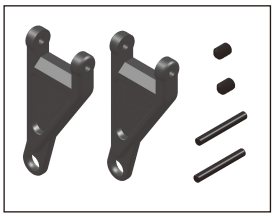

PV1529
FLYBARLESS WASHOUT LINKAGE
無平衡翼連接座

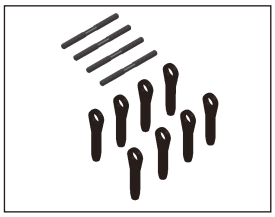

PV1533-1
FLYBARLESS LINKAGE ROD SET
無平衡翼連接桿組

SPARE PARTS LIST / 維修零件包表格

THUNDER TIGER

No.	Description	中文名稱	Part No.	Description	中文名稱	Qty	Index Page
1179	SILCONE FUEL LINE, 2ft	耐熱油管(透明),2ft	CB0362	d2.5xt1.5xφ5.5mm	耐熱油管(乳白)	-	27
3892	CFK TAIL BLADE 105mm	105碳纖尾旋翼	BV6036	CFK Tail Blade 105mm	碳纖主旋翼105mm	1	23
3911	90 FLY PADDLE	90碳纖穩定翼	BV6043	Carbon Flybar Paddle	碳纖穩定翼90mm	1	7
PD1244	LOCK NUT	止鬆螺帽	HMM3B	Locknut, M3	止鬆螺帽, M3	10	12,13,14,23
PD1598	SET SCREWS, M4x4	無頭內六角螺絲, M4x4	HME4-4B	Set Screw, M4x4	無頭內六角螺絲, M4x4	20	7,15,16,20
PD7293	SHCS SCREW, M2.5x6	內六角螺絲, M2.5x6	HMC25-6B	Socket Screw, M2.5x6	內六角螺絲, M2.5x6	20	25
PV0041	BALL LINK	單頭連接桿	BK0086	Ball Linkφ4.8x20	單頭連接桿 φ4.8x20	12	11,26,27
PV0046	BEARING, d8xD12x3	軸承組, d8xD12xW3.5	HMV1280ZZY	Bearing, d8xD12x3	滾珠軸承, d8xD12x3	2	
PV0048	BEARING, d4xD8x3	軸承組, d4xD8xW3	HMV840ZZY	Bearing, d4xD8x3	滾珠軸承, d4xD8x3	2	9,10
PV0050	BEARING, d5xD13x4	軸承組, d5xD13xW4	HMV1350	Bearing, d5xD13x4	滾珠軸承, d5xD13x4	2	12,23
PV0062	RUBBER GROMMENTS	機身固定墊圈組	BK0102	Rubber Grommet	機身固定墊圈	5	28
PV0126	SPINDLE	固定軸	BK0326	Spindle	固定軸	1	9,10
			BK0477	Washer	主旋翼固定軸墊片	2	
			HMC4-10B	Socket Screw, M4x10	內六角螺絲, M4x10	2	9,10
PV0172	THRUST BEARING	止推軸承, d8xD16xW5	HMX0816	Thrust Bearing, d8xD16x5	止推軸承, d8xD16x5	2	8
PV0174	FLYBAR SEESAW BEARING	軸承組, d4xD11xW4	HMV694ZZ	Bearing, d4xD11x4	滾珠軸承, d4xD11x4	2	6
PV0175	FEATHERING BEARING	軸承組, d8xD16xW5	HMV1680	Bearing, d8xD16x5	滾珠軸承, d8xD16x5	2	8
PV0176	TAIL PITCH CONTROL LEVER BEARING SET	軸承組, d4xD7xW2.5	HMV740ZZ	Bearing, d4xD7x2.5	滾珠軸承, d4xD7x2.5	2	23
PV0177	ROTOR BOLT	主旋翼螺絲組	BK0446	Rotor Bolt	內六角螺絲	2	26
			HMM5Z	Locknut, M5	止鬆螺帽, M5	2	26
PV0195	TAIL DRIVE SHAFT BEARING SET	尾驅動軸軸套組	BV0423	Tail Drive Shaft Bearing	尾驅動軸軸套組	1	24
PV0197	BALL BEARING, d12xD18xW4	軸承組, d12xD18xW4	HMV6701Z	Bearing, d12xD18x4	滾珠軸承, d12xD18x4	2	12,23
PV0200	BALL BEARING, d5xD10xW4	軸承組, d5xD10xW4	HMV1050	Bearing, d5xD10x4	滾珠軸承, d5xD10x4	2	21,22
PV0203	BALL BEARING, d6xD15xW5	軸承組, d6xD15xW5	HMV696Z	Bearing, d6xD15x5	滾珠軸承, d6xD15x5	2	
PV0208	FUEL TANK RUBBER	油箱固定墊圈	BK0274	Tank Rubber Grommet	油箱固定墊圈	4	16,17
PV0209	WASHER, d4xD11xt1.7	墊圈, d4xD11xt1.7	BK0435	Washer, d4xD11x1.7	墊圈, d4xD11x1.7	4	9,10,18
PV0210	WASHER, d3xD8xt1.4	墊圈, d3xD8xt1.4	BK0087	Washer, d3xD8x1.4	墊圈, d3xD8x1.4	16	7,8,14,24
PV0212	SOCKET SCREW, M3x10	內六角螺絲, M3x10	HMC3-10B	Socket Screw, M3x10	內六角螺絲, M3x10	20	6,10,13,15,17
PV0213	SOCKET SCREW, M3x12	內六角螺絲, M3x12	HMC3-12B	Socket Screw, M3x12	內六角螺絲, M3x12	20	7,8,9,24,28
PV0214	SOCKET SCREW, M3x14	內六角螺絲, M3x14	HMC3-14B	Socket Screw, M3x14	內六角螺絲, M3x14	20	10,12
PV0215	SOCKET SCREW, M3x18	內六角螺絲, M3x18	HMC3-18B	Socket Screw, M3x18	內六角螺絲, M3x18	20	6,23
PV0216	SOCKET SCREW, M3x25	內六角螺絲, M3x25	HMC3-25B	Socket Screw, M3x25	內六角螺絲, M3x25	20	12,18
PV0218	SOCKET SCREW, M3x8	內六角螺絲, M3x8	HMC3-8B	Socket Screw, M3x8	內六角螺絲, M3x8	20	9,13,21,24
PV0220	SOCKET SCREW, M4x12	內六角螺絲, M4x12	HMC4-12B	Scket Screw, M4x12	內六角螺絲, M4x12	20	18
PV0223	SOCKET SCREW, M4x8	內六角螺絲, M4x8	HMC4-8B	Scket Screw, M4x8	內六角螺絲, M4x8	20	18,19
PV0225	SET SCREW, M3x4	無頭內六角螺絲, M3x4	HME3-4B	Set Screw, M3x4	無頭內六角螺絲, M3x4	20	9,10,12,23
PV0226	SET SCREW, M4x3	無頭內六角螺絲, M4x3	HME4-3B	Set Screw, M4x3	無頭內六角螺絲, M4x3	20	26
PV0235	LOCK NUT, M2.5	止鬆螺帽, M2.5	HMM25Z	Locknut, M2.5	止鬆螺帽, M2.5	20	24
PV0256	SOCKET SCREW, M3x6	內六角螺絲, M3x6	HMC3-6B	Scket Screw, M3x6	內六角螺絲, M3x6	20	8,19
PV0268	LOCTITE #262	螺絲防鬆劑(紅), #262	BV0450	Loctite #262	高強度防鬆劑(紅色) #262	1	-
PV0270	THRUST BEARING GREASE	止推軸承潤滑脂	BV0452	Thrust Bearing Grease	止推軸承潤滑脂(黑色)	1	-
PV0271	WASHER, d3xD5xt0.5	墊片, d3xD5xt0.5	BK0088	Washer, d3xD5xt0.5	墊片, d3xD5xt0.5	20	9,23
PV0311	HEADER TANK, 60CC	副油箱組,60cc	BK0087	Washer, d3xD8xW1.4	墊片, d3xD8xW1.4	1	18
			BK0102	Rubber Grommet	機身固定墊圈	1	18
			BK0506	Tank Mount	副油箱固定座	1	18
			BV0502	Header Tank	副油箱組	1	18
			HMC3-14B	Socket Screw, M3x14	內六角螺絲, M3x14	1	18
PV0312	HEADER TANK SUPPORT	副油箱固定座	BK0087	Washer, d3xD8xW1.4	墊片, d3xD8xW1.4	1	18
			BK0102	Rubber Grommet	機身固定墊圈	1	18
			BK0506	Tank Mount	副油箱固定座	1	18

SPARE PARTS LIST / 維修零件包表格

THUNDER TIGER

No.	Description	中文名稱	Part No.	Description	中文名稱	Qty	Index Page
			HMC3-14B	Socket Screw, M3x14	內六角螺絲, M3x14	1	18
PV0425	TAIL PITCH CONTROL SLIDE BUSHING	尾旋翼控制軸套	BK0345	Tail Pitch Control Slide Bushing	尾旋翼控制軸套	1	22
PV0619	3D DAMPER SET	3D避震墊圈組	BK0874	Inner Damper	內避震墊圈, R90	2	9,10
			BK0875	Outer Flap Damper	外避震墊圈, R90	2	9,10
PV0620	3D INNER DAMPER	3D內避震墊圈	BK0874	Inner Damper	內避震墊圈, R90	2	9,10
PV0621	3D OUTER DAMPER	3D外避震墊圈	BK0875	Outer Flap Damper	外避震墊圈, R90	2	9,10
PV0637	SOCKET SCREW, M2.5x12	內六角螺絲, M2.5x12	HMC2512B	Socket Screw, M2.5x12	內六角螺絲, M2.5x12	20	24
PV0777	SOCKET SCREW, M2x8	內六角螺絲, M2x8	HMC2-8B	Socket Screw, M2x8	內六角螺絲, M2x8	20	21,22
PV0780	SET SCREW, M3x3	無頭內六角螺絲, M3x3	HME3-3B	Set Screw, M3x3	無頭內六角螺絲, M3x3	20	22,25
PV1338	TAIL CONTROL ROD JOINT	尾控制桿軸環	BK0105-1	Tail Control Rod Joint	尾控制桿軸環	1	26
			HME4-3B	Set Screw, M4x3	無頭內六角螺絲, M4x3	2	26
PV1379	LINKAGE BALL SCREW SET	球頭螺絲組	BK0649-1	Linkage Ball (A)	內六角連接頭螺絲(A)	10	6,7,8,9,10 15,17,21,27
			BK0649-2	Linkage Ball (B)	內六角連接頭螺絲(B)	10	-
PV1501-R	G4 FRP CANOPY (RED)	G4 玻纖機殼(紅)	BK3127-R	FRP Canopy (R)	玻纖機殼(紅)	1	28
			BK0102	Rubber Grommet	機身固定墊圈	2	28
			HSE3-12B	Self-tapping Screw, M3x12	扁圓自攻螺絲(粗), M3x12	2	28
			BK0099	Body Clip B	機身夾扣B	1	28
			BK3126	Canopy Bracket	機身固定扣A	1	28
PV1501-Y	G4 FRP CANOPY (YELLOW)	G4 玻纖機殼(黃)	BK3127-Y	FRP Canopy(Y)	玻纖機殼(黃)	1	28
			BK0102	Rubber Grommet	機身固定墊圈	2	28
			HSE3-12B	Self-tapping Screw, M3x12	扁圓自攻螺絲(粗), M3x12	2	28
			BK0099	Body Clip B	機身夾扣B	1	28
			BK3126	Canopy Bracket	機身固定扣A	1	28
PV1502	METAL FLYBAR HEAD BUTTON	金屬煞車盤	BK3072	Head Button	煞車盤	1	6
			HMC25-5B	Socket Screw, M2.5x5	內六角螺絲, M2.5x5	2	6
PV1503	METAL FLYBARLESS HEAD BUTTON	金屬無平衡翼煞車盤	BK3030	FBL Head Button	無平衡翼煞車盤	1	10
			HMC2510B	Socket Screw, M2.5x10	內六角螺絲, M2.5x10	4	10
PV1504	METAL FLYBAR MAIN ROTOR HUB SET	金屬主旋翼固定座組	BV3001	Main Rotor Hub Set	金屬主旋翼固定座組	1	6
			BV3016	Phase Ring Set	滑座導引環組	1	9
			HMC3-8B	Socket Screw, M3x8	內六角螺絲, M3x8	1	9
			BK3012	Main Rotor Hub Pin	擺動固定銷	1	
			BK0875	Outer Flap Damper, R90	外避震墊圈	2	9
			BK0874	Inner Damper, R90	內避震墊圈	2	9
			HMC4-6B	Socket Screw, M4x6	內六角螺絲, M4x6	4	9
PV1505	METAL FLYBARLESS MAIN ROTOR HUB SET	金屬無平衡翼主旋翼固定座	BK3029	FBL Main Rotor Hub	無平衡翼金屬主旋翼固定座	1	10
			BK0875	Outer Flap Damper, R90	外避震墊圈	2	10
			BK0874	Inner Damper, R90	內避震墊圈	2	10
			HMC4-6B	Socket Screw, M4x6	內六角螺絲, M4x6	4	10
PV1506	METAL FLYBAR SEESAW HUB SET	金屬穩定桿固定軸組	BV3005	Seesaw Hub Set	穩定桿固定軸組	1	6
			BK3010	Collar	軸環	2	6
			HMC3-10B	Socket Screw, M3x10	內六角螺絲, M3x10	2	6
PV1507	METAL FLYBAR MIXING LEVER SET	金屬混控搖臂組	BV3008	Metal Mixing Lever Set	金屬混控搖臂組	2	6
			BK0649-1	Linkage Ball (A)	內六角連接頭螺絲(A)	4	6
			BK3009	Collar	軸套	2	6
			HMC3-18B	Socket Screw, M3x18	內六角螺絲, M3x18	2	6
PV1508	SUS FLYBAR ROD	SUS平衡桿	BK3013	Sus Flybar Rod	SUS 平衡桿	1	7
PV1509	METAL FLYBAR CONTROL ARM SET	金屬穩定翼控制臂組	BK3006	Flybar Control Arm	穩定翼控制臂	2	7
			BK3007	Flybar Control Arm Post	穩定翼控制臂柱	2	7
			BK0649-1	Linkage Ball(A)	內六角連接頭螺絲(A)	2	7
			BK0087	Washer, d3xD8xW1.4	墊圈, d3xD8xW1.4	2	7

No.	Description	中文名稱	Part No.	Description	中文名稱	Qty	Index Page
			HMC3-12B	Socket Screw, M3x12	內六角螺絲, M3x12	2	7
			HME4-4B	Set Screw, M4x4	無頭內六角螺絲, M4x4	2	7
PV1510	METAL FLYBAR CONTROL ARM	金屬穩定翼控制臂	BK3006	Flybar Control Arm	穩定翼控制臂	2	7
			HME4-4B	Set Screw, M4x4	無頭內六角螺絲, M4x4	2	7
PV1511	METAL FLYBAR CONTROL ARM POST	金屬穩定翼控制臂柱	BK3007	Flybar Control Arm Post	穩定翼控制臂柱	2	7
			BK0649-1	Linkage Ball(A)	內六角連接頭螺絲(A)	2	7
			BK0087	Washer, d3xD8xW1.4	墊圈, d3xD8xW1.4	2	7
			HMC3-12B	Socket Screw, M3x12	內六角螺絲, M3x12	2	7
PV1513	PHASE RING SET	滑座導引環組	BV3016	Phase Ring Set	滑座導引環組	1	9
			HMC3-8B	Socket Screw, M3x8	內六角螺絲, M3x8	1	9
PV1514	METAL FLYBAR ROTOR GRIP SET	金屬主旋翼轉座組	BV3002	Metal Rotor Grip Set	金屬主旋翼轉座組	2	8
			BK3003	Metal Rotor Grip Lever	金屬旋翼轉座搖臂	2	8
			HMC3-6B	Socket Screw, M3x6	內六角螺絲, M3x6	4	8
			BK3004	Main Rotor Grip Post	金屬主旋翼轉座支柱	2	8
			BK0649-1	Linkage Ball(A)	內六角連接頭螺絲(A)	2	8
			BK0087	Washer, d3xD8xW1.4	墊圈, d3xD8xW1.4	2	8
			HMC3-12B	Socket Screw, M3x12	內六角螺絲, M3x12	2	8
PV1515	METAL FLYBARLESS ROTOR GRIP SET	金屬無平衡翼主旋翼轉座組	BV3002	Metal Rotor Grip Set	金屬主旋翼轉座組	2	8
			BK3028	FBL Rotor Grip Lever	無平衡翼金屬旋翼轉座搖臂	2	8
			HMC3-6B	Socket Screw, M3x6	內六角螺絲, M3x6	4	8
			BK3004	Main Rotor Grip Post	金屬主旋翼轉座支柱	2	8
			BK0649-1	Linkage Ball(A)	內六角連接頭螺絲(A)	2	8
			BK0087	Washer, d3xD8xW1.4	墊圈, d3xD8xW1.4	2	8
			HMC3-12B	Socket Screw, M3x12	內六角螺絲, M3x12	2	8
PV1516	METAL ROTOR GRIP(BODY)	金屬主旋翼轉座(本體)	BV3002	Metal Rotor Grip Set	金屬主旋翼轉座組	1	8
PV1517	METAL FLYBAR ROTOR GRIP LEVER	金屬旋翼轉座搖臂	BK3003	Metal Rotor Grip Lever	金屬旋翼轉座搖臂	2	8
			HMC3-6B	Socket Screw, M3x6	內六角螺絲, M3x6	4	8
PV1518	METAL FLYBARLESS ROTOR GRIP LEVER	無平衡翼金屬旋翼轉座搖臂	BK3028	FBL Rotor Grip Lever	無平衡翼金屬旋翼轉座搖臂	2	8
			HMC3-6B	Socket Screw, M3x6	內六角螺絲, M3x6	4	8
PV1519	METAL MAIN ROTOR GRIP POST	金屬主旋翼轉座支柱	BK3004	Main Rotor Grip Post	金屬主旋翼轉座支柱	2	8
			BK0649-1	Linkage Ball(A)	內六角連接頭螺絲(A)	2	8
			BK0087	Washer, d3xD8xW1.4	墊圈, d3xD8xW1.4	2	8
			HMC3-12B	Socket Screw, M3x12	內六角螺絲, M3x12	2	8
PV1520	FLYBAR CONTROL ROD	穩定翼操控環	BK3101	Flybar Control Rod	穩定翼操控環	2	9
PV1521	HARDENED MAIN SHAFT, 15 mm	強化主軸, 15 mm	BK3014	Hardened Main Shaft (15 mm)	強化主軸(15 mm)	1	9,10
PV1522	METAL FLYBAR WASHOUT BASE	金屬控制臂座	BK3018	Washout Base	控制臂座	1	9
PV1523	METAL FLYBARLESS WASHOUT BASE	無平衡翼金屬控制臂座	BK3041	FBL Washout Base	無平衡翼控制臂座	1	10
			HMC3-10B	Socket Screw, M3x10	內六角螺絲, M3x10	1	10
PV1524	METAL FLYBAR CONTROL LEVER SET	金屬穩定翼控制搖臂組	BV3033	Flybar Control Lever Set	穩定翼控制搖臂組	2	9
			BK3169	Collar	軸套	2	9
			HMC3-12B	Socket Screw, M3x12	內六角螺絲, M3x12	2	9
			BK0088	Washer, d3xD5xW0.5	墊片, d3xD5xW0.5	2	9
			BK0649-1	Linkage Ball(A)	內六角連接頭螺絲(A)	2	9
			BK3104	Washout Linkage	連接座	2	9
			HMY2-15	Pin, d2x15	軸承滾針	2	9
			HME3-4B	Set Screw, M3x4	無頭內六角螺絲, M3x4	2	9
PV1525	METAL FLYBARLESS CONTROL LEVER SET	無平衡翼金屬控制搖臂組	BV3042	FBL Control Lever Set	無平衡翼控制搖臂組	2	10
			BK3169	Collar	軸套	2	10
			HMC3-14B	Socket Screw, M3x14	內六角螺絲, M3x14	2	10
			BK0088	Washer, d3xD5xW0.5	墊片, d3xD5xW0.5	2	10

No.	Description	中文名稱	Part No.	Description	中文名稱	Qty	Index Page
			BK0649-1	Linkage Ball(A)	內六角連接頭螺絲(A)	2	10
			BK3110	FBL Washout Linkage	無平衡翼連接座	2	10
			HMY2-19	Pin, d2x15	軸承滾針	2	10
			HME3-4B	Set Screw, M3x4	無頭內六角螺絲, M3x4	2	10
PV1526	METAL FLYBAR CONTROL LEVER	金屬穩定翼控制搖臂	BV3033	Flybar Control Lever Set	穩定翼控制搖臂組	2	9
			BK3169	Collar	軸套	2	9
			HMC3-12B	Socket Screw, M3x12	內六角螺絲, M3x12	2	9
			BK0088	Washer, d3xD5xW0.5	墊片, d3xD5xW0.5	2	9
			BK0649-1	Linkage Ball(A)	內六角連接頭螺絲(A)	2	9
PV1527	METAL FLYBARLESS CONTROL LEVER	金屬無平衡翼控制搖臂	BV3042	FBL Control Lever Set	無平衡翼控制搖臂組	2	10
			BK3169	Collar	軸套	2	10
			HMC3-14B	Socket Screw, M3x14	內六角螺絲, M3x14	2	10
			BK0088	Washer, d3xD5xW0.5	墊片, d3xD5xW0.5	2	10
			BK0649-1	Linkage Ball(A)	內六角連接頭螺絲(A)	2	10
PV1528	FLYBAR WASHOUT LINKAGE	連接座	BK3104	Washout Linkage	連接座	2	9
			HMY2-15	Pin, d2x15	軸承滾針	2	9
			HME3-4B	Set Screw, M3x4	無頭內六角螺絲, M3x4	2	9
PV1529	FLYBARLESS WASHOUT LINKAGE	無平衡翼連接座	BK3110	FBL Washout Linkage	無平衡翼連接座	2	10
			HMY2-19	Pin, d2x19	軸承滾針	2	10
			HME3-4B	Set Screw, M3x4	無頭內六角螺絲, M3x4	2	10
PV1530	METAL SWASHPLATE SET	金屬十字盤組	BV3020A	Metal Swashplate	十字盤組	1	9,10
PV1531	METAL MAIN SHAFT BRG BLOCK SET	金屬主軸軸承座組	BV3023	Main Shaft Brg Block Set	主軸軸承座組	1	13
PV1532	MAIN SHAFT LOCK RING	主軸止檔	BK3015	Main Shaft Lock Ring	主軸止檔	1	19
			HMC3-6B	Socket Screw, M3x6	內六角螺絲, M3x6	2	19
PV1533	FLYBAR LINKAGE ROD SET	標準連接桿組	BK0292	Linkage Rod	連接桿	2	11
			BK3152	Linkage Rod	連接桿	2	11
			BK0086	Ball Link	單頭連接桿	8	11
PV1533-1	FLYBARLESS LINKAGE ROD SET	無平衡翼連接桿組	BK0092-1	Lingage Rod (N)	連接桿(鍍鎳)	4	11
			BK0086	Ball Link	單頭連接桿	8	11
PV1533-2	THROTTLE LINKAGE ROD SET	油門連接桿組	BK3172	Linkage Rod	連接桿	2	27
			BK0086	Ball Link	單頭連接桿	4	27
PV1534	INSERT MOULDING LINKAGE-67.5mm	一體式連接桿-67.5mm	BV3122	Linkage Rod Set(67.5mm)-Insert	連接桿組(67.5mm)-埋入射出	2	21
PV1535	INSERT MOULDING LINKAGE-74.5mm	一體式連接桿組-74.5mm	BV3164	Linkage Rod(74.5mm)-Insert	連接桿(74.5mm)-埋入射出	6	26
PV1536	TAIL BOOM BRACKET	機身尾管固定座	BK3117	Tail Boom Bracket-R	機身尾管固定座(右)	1	12
			BK3116	Tail Boom Bracket-L	機身尾管固定座(左)	1	12
			HSE2616B	Self-tapping Screw, M2.6x16	扁圓自攻螺絲(粗), M2.6x16	2	12
PV1537	TAIL DRIVE GEAR SET	尾驅動齒輪組	BV3070	Tail Drive Gear Set	尾驅動齒輪組	1	12
PV1538	TAIL DRIVE GEAR SHAFT	尾驅動齒輪軸	BK3070	Tail Drive Gear Shaft	尾驅動齒輪軸	1	12
			BK0414	Pin φ2x12	固定銷	2	12
			HME3-4B	Set Screw, M3x4	無頭內六角螺絲, M3x4	2	12
PV1539	TAIL DRIVE GEAR-26T	尾驅動齒輪, 26T	BK3138	Tail Drive Gear-26T	尾驅動齒輪26T	1	12
			BK0414	Pin φ2x12	固定銷	1	12
			HME3-4B	Set Screw, M3x4	無頭內六角螺絲, M3x4	1	12
PV1540	FRONT TAIL BEVEL GEAR SET	前尾傘齒輪組	BK0363	Tail Drive Bevel Gear-B	尾驅動傘齒B (24T)	1	12
			BK3128	Tail Drive Bevel Gear-A	尾驅動傘齒A (27T)	1	12
			BK0414	Pin φ2x12	固定銷	1	12
			HME3-4B	Set Screw, M3x4	無頭內六角螺絲, M3x4	1	12
PV1541	REAR TAIL HELICAL BEVEL GEAR SET	後尾螺旋傘齒輪組	BK3143	Tail Input Bevel	尾螺旋傘齒輪A (24T)	1	23
			BK3144	Tail Output Bevel	尾螺旋傘齒輪B(24T)	1	23
			HMY2-12	Pin φ2x12	軸承滾針	1	23

SPARE PARTS LIST / 維修零件包表格

THUNDER TIGER

No.	Description	中文名稱	Part No.	Description	中文名稱	Qty	Index Page
			HME3-4B	Set Screw, M3x4	無頭內六角螺絲, M3x4	1	23
			BK2509-1	Washer, d12xD14.5xW0.1	墊片, d12xD14.5xW0.1	1	23
PV1542	METAL SERVO MOUNT	金屬伺服機固定座	BK3040	Servo Mount	伺服機固定座	1	13
			BK3181	Servo Tray	伺服機座	1	13
			BK3185	Servo Mount	T型伺服機固定座	1	13
			HMC25-8N	Socket Screw(N), M2.5x8	內六角螺絲(鎳色), M2.5x8	2	13
			HSE2612N	Self-tapping Screw, M2.6x12	扁圓自攻螺絲(粗), M2.6x12	1	13
PV1543	MAIN GEAR, 111T	主齒輪, 111T	BK3141	Main Gear, 111T	主齒輪, 111T	1	19
PV1544	AUTOROTATION TAIL DRIVE PULLEY, 108T	尾驅動主齒輪, 108T	BK3137	Tail Drive Pulley, 108T	尾驅動輪, 108T	1	19
			HMC4-8B	Socket Screw(N), M4x8	內六角螺絲, M4x8	2	19
PV1545	ONE WAY CLUTCH HOUSING	單向離合器座	BV3056	One Way Clutch Housing	單向離合器座	1	19
			HMC3-6B	Socket Screw(N), M3x6	內六角螺絲, M3x6	8	19
PV1546	ONE WAY BEARING SHAFT	單向離合器軸	BK3057	One Way Bearing Shaft	單向離合器軸	1	19
			HMQ18	C Clip	C型扣環	1	19
			HMC4-8B	Socket Screw(N), M4x8	內六角螺絲, M4x8	2	19
PV1547	METAL MOTOR MOUNT	金屬馬達固定座	BK3078	Motor Mount	馬達固定座	1	15
PV1617	MOTOR PINION, 11T	馬達齒輪, 11T	BK3183	Motor Pinion, 11T	馬達齒輪, 11T	1	15
			HME4-4B	Set Screw, M4x4	無頭內六角螺絲, M4x4	2	15
PV1549	METAL MOTOR PINION BLOCK, 6mm	金屬馬達齒輪固定座, 6mm	BV3060	Motor Gear Mount, 6mm	馬達齒輪固定座, 6mm	1	15
PV1550	ROD GUIDE PLATE	推拉桿導板	BK3109	Rod Guide PLATE	推拉桿導板	1	15
			HMC25-5B	Socket Screw(N), M2.5x5	內六角螺絲, M2.5x5	2	15
PV1551	STARTER COUPLING	啟動接頭	BK2466	Starter Coupling	啟動接頭	1	16
			HME4-4B	Set Screw, M4x4	無頭內六角螺絲, M4x4	2	16
PV1552	DRIVE PINION SET, 14T	驅動齒輪組, 14T	BV3058	Drive Pinion SET, 14T	驅動齒輪組, 14T	1	16
PV1553	METAL CLUTCH BRACKET SET	金屬離合器固定座組	BK3068	Clutch Bracket Upper	上離合器固定座	1	16
			BK3069	Clutch Bracker Lower	下離合器固定座	1	16
PV1554	CLUTCH BELL SET	離合器罩組	BV3063	Clutch Bell Set	離合器罩組	1	16
PV1555	CLUTCH LINING	離合器片	BK3064	Clutch Lining	離合器片	2	16
PV1556	STARTER SHAFT	啟動軸	BK3066	Starter Shaft	啟動軸	1	16
			HMS5	E Clip	E型扣環	1	16
			HME4-4B	Set Screw, M4x4	無頭內六角螺絲, M4x4	2	16
PV1557	METAL COOLING FAN	金屬冷卻風扇	BK3044	Cooling Fan	冷卻風扇	1	18
			HSB3-6	Flat Head Socket Screw(N), M3x6	平頭內六角螺絲, M3x6	4	18
PV1558	CLUTCH SHOE SET	離合器組	BV3062	Clutch Shoe Set	離合器組	1	18
			HMC4-8B	Socket Screw(N), M4x8	內六角螺絲, M4x8	2	18
PV1559	ENGINE MOUNT	引擎固定座	BK3071	Engine Mount	引擎固定座	1	18
			BK0435	Washer, d4xD11xW1.7	墊圈, d4xD11xW1.7	4	18
			HMC4-12B	Socket Screw(N), M4x12	內六角螺絲, M4x12	4	18
			HMC4-16B	Socket Screw(N), M4x16	內六角螺絲, M4x16	4	18
PV1560	FUEL TANK SET, 650CC	油箱組, 650CC	BV3089	Fuel Tank Set, 650CC	油箱組, 650CC	1	17
PV1561	SIDE FRAME-LEFT (1)	碳纖側板-左(單片)	BK3080-1	Side Frame-Left	碳纖側板-左	1	13
PV1562	SIDE FRAME-RIGHT (1)	碳纖側板-右(單片)	BK3080-2	Side Frame-Right	碳纖側板-右	1	13
PV1563	CANOPY RETAINING POST	機身固定柱	BK3065	Canopy Retaining Post	機身固定柱	2	13
			HSV3-8B	Torx Screw, M3x8	星型螺絲, M3x8	2	13
PV1564	METAL ELEVATOR WASHER MOUNT SET	金屬控制臂軸承座	BV2416	Elevator Washer Mount Set	控制臂軸承座	1	13
			BK2417	Nut	軸承座螺帽	1	13
PV1565	METAL AILERON CONTROL ARM SET-LEFT	金屬副翼控制臂組-左	BV3135	Control Arm Set-Left	金屬控制臂組-左	1	21
PV1566	METAL AILERON CONTROL ARM SET-RIGHT	金屬副翼控制臂組-右	BV3136	Control Arm Set-Right	金屬控制臂組-右	1	21
PV1567	METAL SKID BRACKET	金屬腳架固定座	BK3082	Skid Bkt	腳架固定座	2	13
			HMC3-8B	Socket Screw(N), M3x8	內六角螺絲, M3x8	2	13

SPARE PARTS LIST / 維修零件包表格

THUNDER TIGER

No.	Description	中文名稱	Part No.	Description	中文名稱	Qty	Index Page
			HMM3B	Lock Nut, M3	止鬆螺帽, M3	2	13
PV1568	CARBON LOWER SIDE FRAME (1)	碳纖下側板(單片)	BK3087	Lower Side Frame	碳纖下側板	1	14
			HMM3B	Lock Nut, M3	止鬆螺帽, M3	2	14
			HSB3-10	Flat Head Socket Screw(N), M3x10	平頭內六角螺絲, M3x10	2	14
			BK0087	Washer, d3xD8xW1.4	墊圈, d3xD8xW1.4	2	14
PV1569	SKID BRACKET (ELECTRIC)	支撐架固定座(電動版)	BK3118	Skid Bracket	支撐架固定座	2	14
			HSV3-8B	Torx Screw, M3x8	星型螺絲, M3x8	4	14
PV1570	METAL ELEVATOR CONTROL ARM SET	金屬升降舵控制臂組	BV3133	Elevator Control Arm	升降舵控制臂組	1	15,17
			BK0649-1	Linkage Ball(A)	內六角連接頭螺絲(A)	2	15,17
PV1571	CONTROL LEVER BASE	控制臂固定座	BK3035	Control Lever Base	控制臂固定座	2	13
			HMC25-5B	Socket Screw(N), M2.5x5	內六角螺絲, M2.5x5	8	13
			BK3037	Control Lever Shaft	控制臂軸	2	13
			HSV3-8B	Torx Screw, M3x8	星型螺絲, M3x8	4	13
PV1572	ELEVATOR CONTROL ARM LINK	升降舵連接座	BK3108	Elevator Control Arm Link	升降舵連接座	1	15,17
			HMV725ZZY	Ball Bearing, d2.5xD7xW3.5	滾珠軸承, d2.5xD7xW3.5	2	15,17
			HMC25-8N	Socket Screw(N), M2.5x8	內六角螺絲(鎳色), M2.5x8	2	15,17
PV1573	GYRO TRAY	陀螺儀座	BK3124	Gyro Tray	陀螺儀座	1	13
PV1574	RUDDER SERVO MOUNT	尾舵伺服機固定座	BK3125	Rudder Servo Mount	尾舵伺服機固定座	1	25
PV1575	RADIO TRAY THROTTLE SERVO / RX TRAY	油門伺服機接收機固定架	BK3123	Radio Tray Throttle Servo / Rx Tray	油門伺服機接收機固定架	1	14,16
PV1576	METAL FRAME SPACER	金屬側板支柱	BK3081	Frame Spacer	側板支柱	10	12,13
PV1577	TORX SCREW, M3x8	星型低頭螺絲	HSV3-8B	Torx Screw, M3x8	星型螺絲, M3x8	20	13,14,15,16 17,21,22,28
PV1578	BATTELY TRAY BLOCK SET	電池座固定組	BK3086	Battely Post	電池盒支柱	1	14
			BK3083	Battely Pin	電池盒軸襯	2	14
			BK3157	Spacer	墊圈	2	14
			HSV3-8B	Torx Screw, M3x8	星型螺絲, M3x8	6	14
PV1579	BATTELY TRAY SET	電池座組	BV3119	Battely Tray Set	電池座組	1	27
PV1580	COOLING FAN CASING	風扇罩	BK3114	Cooling Fan Casing-L	風扇罩(左)	1	16
			BK3115	Cooling Fan Casing-R	風扇罩(右)	1	16
PV1581	COLLAR SET	軸環組	BK3059	Collar	尾座軸承間隔環	1	23
			BK3182	Collar	尾傘齒軸環	1	23
			BK3184	Bevel Collar	傘齒軸環	1	12
PV1582	METAL RUDDER SERVO HORN	金屬尾舵伺服機擺臂	HMC25-6B	Socket Screw, M2.5x6	內六角螺絲, M2.5x6	1	25
			BK3094	Link Ball	連接球座	1	25
			HME3-3B	Set Screw, M3x3	無頭內六角螺絲, M3x3	1	25
			BK3039	Rudder Servo Horn	尾舵伺服機擺臂	1	25
PV1583	LANDING SKID SET	腳架組	BK3121	Landing Skid	腳架	2	20
			BK3090	Skid Pipe	底座圓管	2	20
			BK0065	Skid Pipe End Cap	圓管塞	4	20
			HME4-4B	Set Screw, M4x4	無頭內六角螺絲, M4x4	4	20
			HMC4-14B	Socket Screw, M4x14	內六角螺絲, M4x14	4	20
PV1584	LANDING SKID	腳架	BK3121	Landing Skid	腳架	2	20
			HME4-4B	Set Screw, M4x4	無頭內六角螺絲, M4x4	4	20
			HMC4-14B	Socket Screw, M4x14	內六角螺絲, M4x14	4	20
PV1585	CARBON TAIL BOOM	尾管	BK3096-1	Tail Boom	尾管	1	24
PV1586	METAL TAIL DRIVE SHAFT SET	金屬尾驅動軸組	BV3095	Tail Drive Shaft Set	尾驅動軸組	1	24
			HMC2512B	Socket Screw, M2.5x12	內六角螺絲, M2.5x12	2	24
			HMM25Z	Lock Nut, M2.5	止鬆螺帽, M2.5	2	24
PV1587	ROD GUIDE SET	推拉桿固定環組	BK3112	Rod Guide	推拉桿固定環	3	24
			HMJ2-8B	Self Tapping Screw, M2x8	自攻螺絲(粗)	3	24
PV1588	TAIL CONTROL ROD SET	尾推拉桿組	BK3167	Linkage Rod-B	推拉桿B	1	26

No.	Description	中文名稱	Part No.	Description	中文名稱	Qty	Index Page
			BK3168	Linkage Rod-A	推拉桿A	1	26
			BK0086	Ball Link	單頭連接桿	2	26
			BK0105-1	Tail Control Rod Joint	尾控制桿軸環	1	26
			HME4-3B	Set Screw, M4x3	無頭內六角螺絲	2	26
PV1589	METAL TAIL SUPPORT BRACKET	金屬尾管固定座	BK3097	Tail Support Bracket	尾管固定座	1	24
			HMC3-8B	Socket Screw, M3x8	內六角螺絲	1	24
			HMC3-12B	Socket Screw, M3x12	內六角螺絲	2	24
PV1590	CARBON TAIL SUPPORT ROD SET	碳纖尾管支撐架組	BK3163	Carbon Tail Support Rod	碳纖尾管支撐架	2	24
			BK0447	Tail Support Rod End	尾管支撐架接頭	4	24
			HMC2-10B	Socket Screw, M2x10	內六角螺絲	4	24
			HML2-NB	Hex Nut, M2	六角螺帽(電黑鎳)M2	4	24
PV1591	TAIL CASE INNER RING	尾座內襯	BK3113	Tail Stopper	尾座止檔環	1	24
			HSB3-6	Flat Head Socket Screw(N), M3x6	平頭內六角螺絲	1	24
			HSA3-5	Button Head Socket Screw(N), M3x5	半圓頭內六角螺絲	1	24
PV1592	METAL TAIL GRIP SET	金屬尾旋翼轉座組	BV3075	Metal Tail Grip Set	尾旋翼轉座組	2	22
			HMC2-8B	Socket Screw, M2x8	內六角螺絲	2	22
			BK0082	Collar, d2xD3xW4.2	軸環	2	22
PV1593	METAL TAIL ROTOR HUB	金屬尾旋翼座	BK3076	Tail Rotor Hub	尾旋翼座	1	22
			HME3-3B	Set Screw, M3x3	無頭內六角螺絲	2	22
			BK3161	Washer	墊圈	2	22
			HSV3-8B	Torx Screw, M3x8	星型螺絲, M3x8	2	22
PV1594	METAL TAIL PITCH SLIDER	金屬尾旋翼滑座	BK0026	Tail Pitch Control Link	尾旋翼連接頭	2	22
			BK0806-1	Tail Pitch Slider	金屬尾旋翼滑座	1	22
			HMV1060ZZY	Ball Bearing, d6xD10xW3	滾珠軸承	2	22
			BK0649-1	Linkage Ball (A)	內六角連接頭螺絲(A)	1	22
			HMC2-8B	Socket Screw, M2x8	內六角螺絲	2	22
			BK0082	Collar, d2xD3xW4.2	軸環	2	22
PV1595	METAL TAIL PITCH CONTROL FORK	金屬尾旋翼控制座	BK3100	Tail Pitch Control Fork	尾旋翼控制座	1	22
			BK3077	Pin	固定銷	2	22
			HMS15	E Clip 1.5	E型扣環	2	22
PV1596	TAIL OUTPUT SHAFT	尾旋翼軸	BK3061	Tail Rotor Shaft	尾旋翼軸	1	22
			HMY2-12	Pin, d2x12	軸承滾針	1	22
			HME3-4B	Set Screw, M3x4	無頭內六角螺絲	1	22
PV1597	METAL TAIL CASE SET	金屬尾座組	BK3074	Metal Tail Unit Housing	金屬尾座	1	23
			HMV6701ZZY	Ball Bearing, d12xD18xW4	滾珠軸承	2	23
			HSH1350ZZY	Flange Bearing, d5xD13xW4	凸緣軸承, d5xD13xW4	2	23
			BK3059	Collar	尾座軸承間隔環	1	23
			BK3182	Collar	尾傘齒軸環	1	23
			BK3073	Tail Lever Bracket	金屬尾控制臂座	1	23
			HMC25-8N	Socket Screw(N), M2.5x8	內六角螺絲	2	23
			HSB3-6	Flat Head Socket Screw(N), M3x6	平頭內六角螺絲	1	23
			HSA3-6	Button Head Socket Screw(N), M3x6	半圓頭內六角螺絲	1	23
			BK0087	Washer d3xD8xW1.4	墊圈	2	23
			HMC3-8B	Socket Screw, M3x8	內六角螺絲	1	23
			HMC3-14B	Socket Screw, M3x14	內六角螺絲	1	23
PV1598	TAIL PITCH CONTROL LEVER	尾旋翼控制桿	BK3129	Tail Pitch Control Lever	尾旋翼控制桿	1	23
			HMV740ZZY	Ball Bearing, d4xD7xW2.5	滾珠軸承, d4xD7xW2.5	2	23
			BK0088	Washer, d3xD5xW0.5	墊片, d3xD5xW0.5	1	23
			BK0076	Collar	軸環	1	23
			HMC3-16B	Socket Screw, M3x16	內六角螺絲, M3x16	1	23

SPARE PARTS LIST / 維修零件包表格

THUNDER TIGER

No.	Description	中文名稱	Part No.	Description	中文名稱	Qty	Index Page
			BK0649-2	Linkage Ball (B)	內六角連接頭自攻螺絲(B)	1	23
PV1600	CARBON VERTICAL FIN	碳纖垂直安定面	BK3099	Carbon Vertical Fin	碳纖垂直安定面	1	24
			BK0087	Washer, d3xD8xW1.4	墊圈, d3xD8xW1.4	2	24
			HMC3-8B	Socket Screw, M3x8	內六角螺絲, M3x8	1	24
			HMC3-12B	Socket Screw, M3x12	內六角螺絲, M3x12	1	24
PV1601	CANOPY BRACKET	機身固定扣	HSE3-12B	Self-tapping Screw, M3x12	扁圓自攻螺絲(粗), M3x12	2	28
			BK0099	Body Clip B	機身夾扣B	1	28
			BK3126	Canopy Bracket	機身固定扣A	1	28
PV1602	CANOPY SPACER	機殼支撐柱	BK3175	Canopy Spacer	機殼支撐柱	1	28
			BK0474	Grommet	橡膠帽	2	28
			HNLR6	R Clip, #6	R型插銷	2	28
			HSV3-8B	Torx Screw, M3x8	星型螺絲, M3x8	2	28
PV1603	METAL CYCLIC SERVO HORN SET	金屬舵面伺服機擺臂組	BK3038	Servo Horn	伺服機擺臂	3	25
			HMC25-6B	Socket Screw, M2.5x6	內六角螺絲, M2.5x6	3	25
			BK3094	Link Ball	連接球座	6	25
			HME3-3B	Set Screw, M3x3	無頭內六角螺絲, M3x3	3	25
PV1604	SERVO MOUNTING SET	伺服機墊片組	BK3103	Servo Mounting	伺服機墊片	6	25
			BK3132	Servo Nut	伺服機螺帽	6	25
			BK0104	Servo Mounting	伺服機固定片	4	25,27
PV1605	ROTOR SPACER	主旋翼墊片	BK3111	Rotor Spacer	主旋翼墊片	2	26
PV1606	VELCRO STRAPE	固定束帶	BK3179	Velcro Strape	電池固定束帶	2	27
PV1607	TORX DRIVER SET	星型工具組	BV3178	Torx Driver Set	星型工具組	1	-
			BK3178	Torx Driver	星型圓棒T10	1	-
			BD8269-1	Handle	起子手柄	1	-
			HME4-6B	Set Screw, M4x6	無頭內六角螺絲, M4x6	1	
PV1608	BALL BEARING, d12xD21xW5	軸承組, d12xD21xW5	HMV6801ZZY	Ball Bearing, d12xD21xW5	滾珠軸承, d12xD21xW5	2	
PV1609	BALL BEARING, d15xD28xW7	軸承組, d15xD28xW7	HMV6902ZZ	Ball Bearing, d15xD28xW7	滾珠軸承, d15xD28xW7	2	
PV1610	BALL BEARING, d2.5xD7xW3.5	軸承組, d2.5xD7xW3.5	HMV725ZZY	Ball Bearing, d2.5xD7xW3.5	滾珠軸承, d2.5xD7xW3.5	2	15,17
PV1611	FLANGE BEARING, d5xD13xW4	凸緣軸承組, d5xD13xW4	HSH1350ZZY	Flange Bearing, d5xD13xW4	凸緣軸承, d5xD13xW4	2	23
PV1612	PIN SET	固定銷組	HMY2-12	Pin, d2x12	軸承滾針	2	23
			HMY2-15	Pin, d2x15	軸承滾針	2	9
			HMY2-19	Pin, d2x19	軸承滾針	2	10
			BK0414	Pin, d2x12	固定銷	2	12
PV1613	SELF TAPPING SCREW SET	扁圓自攻螺絲組	HSE2612N	Self-tapping Screw, M2.6x12	扁圓自攻螺絲(粗), M2.6x12	6	15,17,25
			HSE2616B	Self-tapping Screw, M2.6x16	扁圓自攻螺絲(粗), M2.6x16	2	12
			HMJ2-8B	Self-tapping Screw, M2x8	自攻螺絲(粗), M2x8	4	24
PV1614	SOCKET SCREW SET	內六角螺絲組	HMC2-10B	Socket Screw, M2x10	內六角螺絲, M2x10	4	24
			HMC2510B	Socket Screw, M2.5x10	內六角螺絲, M2.5x10	4	15
			HMC25-8N	Socket Screw(N), M2.5x8	內六角螺絲(鎳色), M2.5x8	2	13,17
			HMC3-16B	Socket Screw(N), M3x16	內六角螺絲, M3x16	1	23
			HMC4-14B	Socket Screw(N), M4x14	內六角螺絲, M4x14	2	20
			HMC4-6B	Socket Screw(N), M4x6	內六角螺絲, M4x6	2	9,10
PV1615	NUT (BLACK), M2	六角螺帽(電黑鎳), M2	HML2-NB	Hex Nut, M2	六角螺帽(電黑鎳), M2	20	24,27
PV1623-F	METAL SERVO HORN ADAPTOR, FUTABA	伺服機擺臂軸套, FUTABA	BK3034	Servo Horn Collar	伺服機擺臂軸套	4	25
			HMC25-5B	Socket Screw, M2.5x5	內六角螺絲, M2.5x6	4	25
PV1624	HEADER TANK POST	副油箱支柱	BK3174	Header Tank Post	副油箱支柱	1	18
PV1625	METAL COOLING FAN HOUSING, OS/TT	金屬冷卻風扇座, OS/TT	BK3045	Cooling Fan Housing	冷卻風扇座	1	18
PV1627	THRUST COLLAR SET	止推軸環組	BK3151	Thrust Collar	止推軸環	2	8,9,10
			BK3151-1	Thrust Collar, 1mm	止推軸環, 1mm	2	9,10
			BK3151-2	Thrust Collar, 0.2mm	止推軸環, 0.2mm	2	9,10
			BK3151-3	Thrust Collar, 0.1mm	止推軸環, 0.1mm	2	9,10
PV1628	WASHER	墊片	BK2509-1	Washer, d12xD14.5xW0.1	墊片, d12xD14.5xW0.1	4	23
PV1629	TORX DRIVER TIP	星型工具前端圓棒	BK3178	Torx Driver Tip	星型工具前端圓棒	1	-

OPTIONAL PARTS / 改裝零件表

THUNDER TIGER

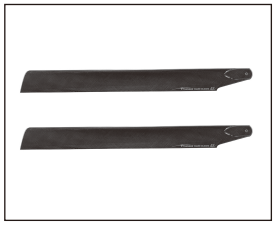

3912
CARBON BLADE, 690mm
碳纖主旋翼, 690mm

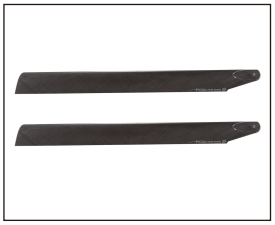

3913
CARBON BLADE, 710mm
碳纖主旋翼, 710mm

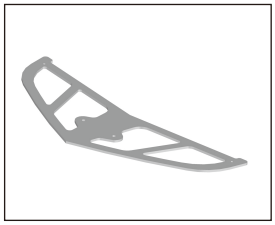

PV0299
CARBON HORIZONTAL FIN
碳纖水平安定面

PV0760
LOCTITE #648
金屬防鬆劑(綠), #648

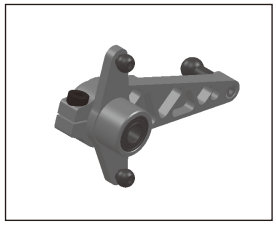

PV1619
METAL AILERON CONTROL ARM SET(R)-LEFT
金屬側轉控制臂組(紅)-左

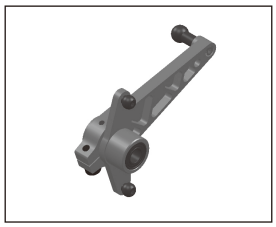

PV1620
METAL AILERON CONTROL ARM SET(R)-RIGHT
金屬側轉控制臂組(紅)-右

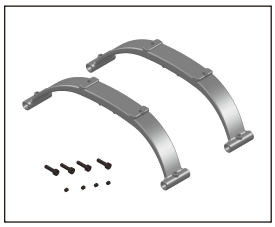

PV1621
LANDING SKID SET, BLACK
腳架組, 黑

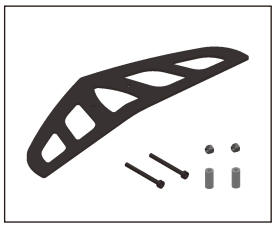

PV1622
CARBON HORIZONTAL FIN
碳纖水平安定面

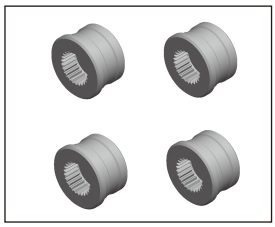

PV1623-H
METAL SERVO HORN COLLAR, HITEC
伺服機擺臂軸套, HITEC

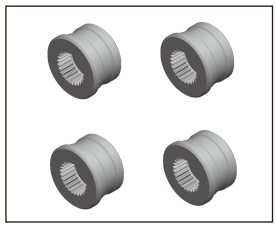

PV1623-J
METAL SERVO HORN COLLAR, JR
伺服機擺臂軸套, JR

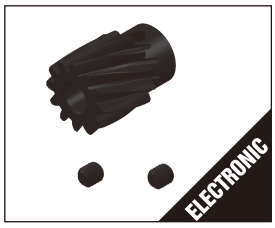

PV1548
MOTOR PINION, 12T
馬達齒輪, 12T

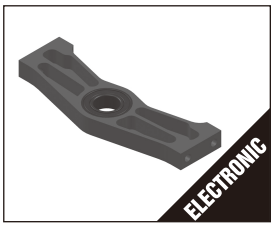

PV1616
REINFORCED METAL MOTOR PINION BLOCK, 8mm
強化金屬馬達齒輪固定座, 8mm

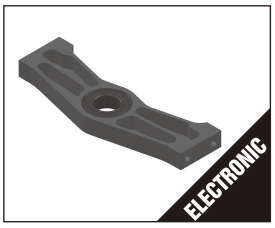

PV1630
REINFORCED METAL MOTOR PINION BLOCK, 6mm
強化金屬馬達齒輪固定座, 6mm

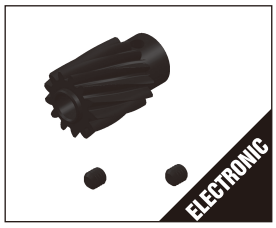

PV1618
MOTOR PINION, 13T
馬達齒輪, 13T

PV1626
METAL COOLING FAN HOUSING, YS
金屬冷卻風扇座, YS

ELECTRONIC DEVICE & ACCESSORY / 電子設備及配件

THUNDER TIGER

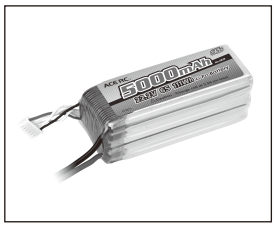

2839
Li-Po Battery, 22.2V 35C 5.0Ah
鋰電池, 22.2V 35C 5.0Ah

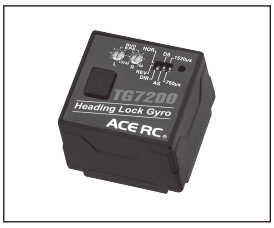

8079
TG-7200 RUDDER GYRO
TG-7200, 尾舵陀螺儀

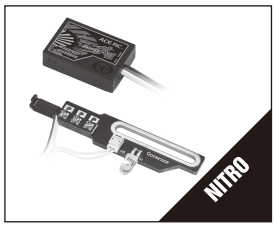

8083
ZERO α II GOVERNOR
定速器

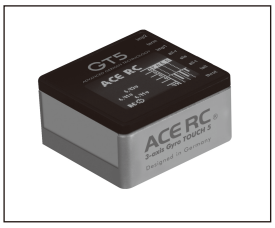

8085
GT5, 3-AXIS GYRO
GT5, 3軸陀螺儀

8086
POWER MONITOR
即時電量計

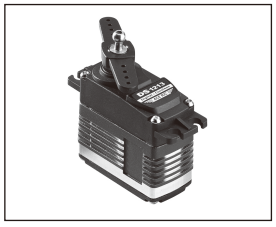

8126
DS1213 DIGITAL SERVO
DS1213, 數位伺服機

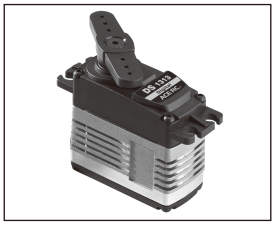

8128
DS1313 DIGITAL SERVO
DS1313, 數位伺服機

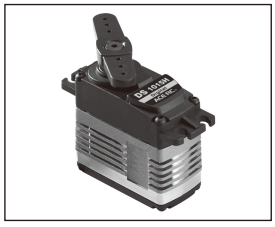

8167
DS1015H DIGITAL SERVO
DS1015H, 數位伺服機

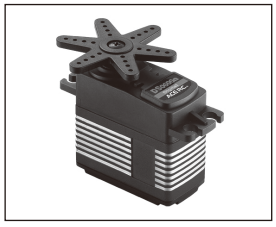

8163
DS0606n DIGITAL RUDDER SERVO
(NARROW BAND)
DS0606n, 尾舵數位伺服機(窄頻)

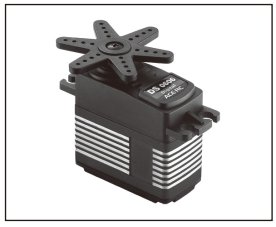

8166
DS0606 DIGITAL RUDDER SERVO
DS0606尾舵數位伺服機

MAIN ROTOR HEAD

FLYBAR

3911
PV1502
PV1507
PV1510
PV1506
PV1511
PV1509
PV1533
PV0175
PV1506
PV1514
PV0619
PV1520
PV1504
PV1519
PV0126
PV0620
PV0621
PV1513
PV1517
PV1516
PV0172

FLYBARLESS

PV1503
PV0175
PV1505
PV1519
PV1518
PV1516
PV1627
PV0619
PV0620
PV1515
PV0621
PV1627
PV0126
PV0172

MAIN GEAR SET

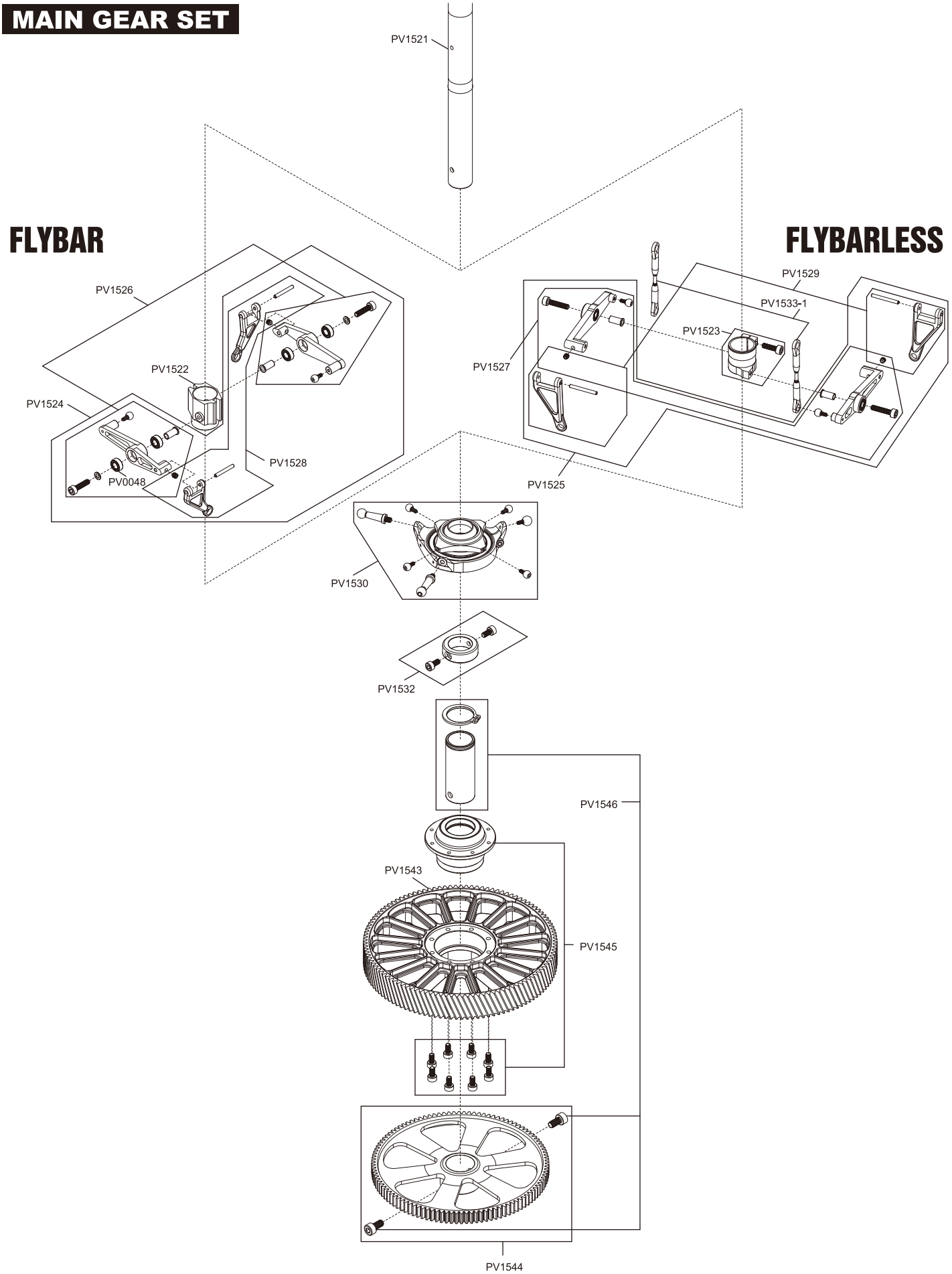

POWER SYSTEM

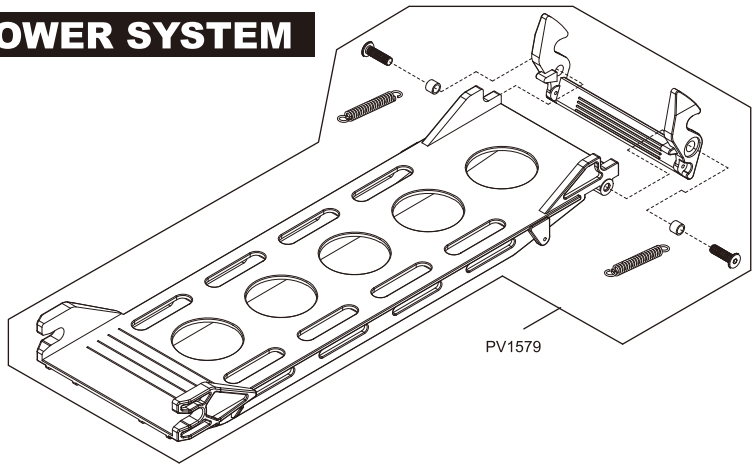

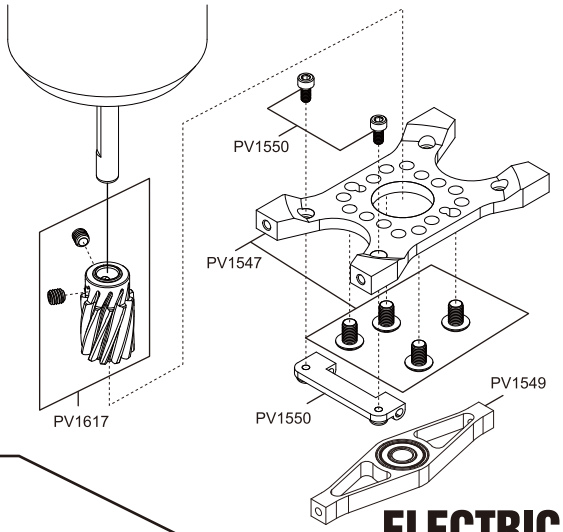

NITRO

ELECTRIC

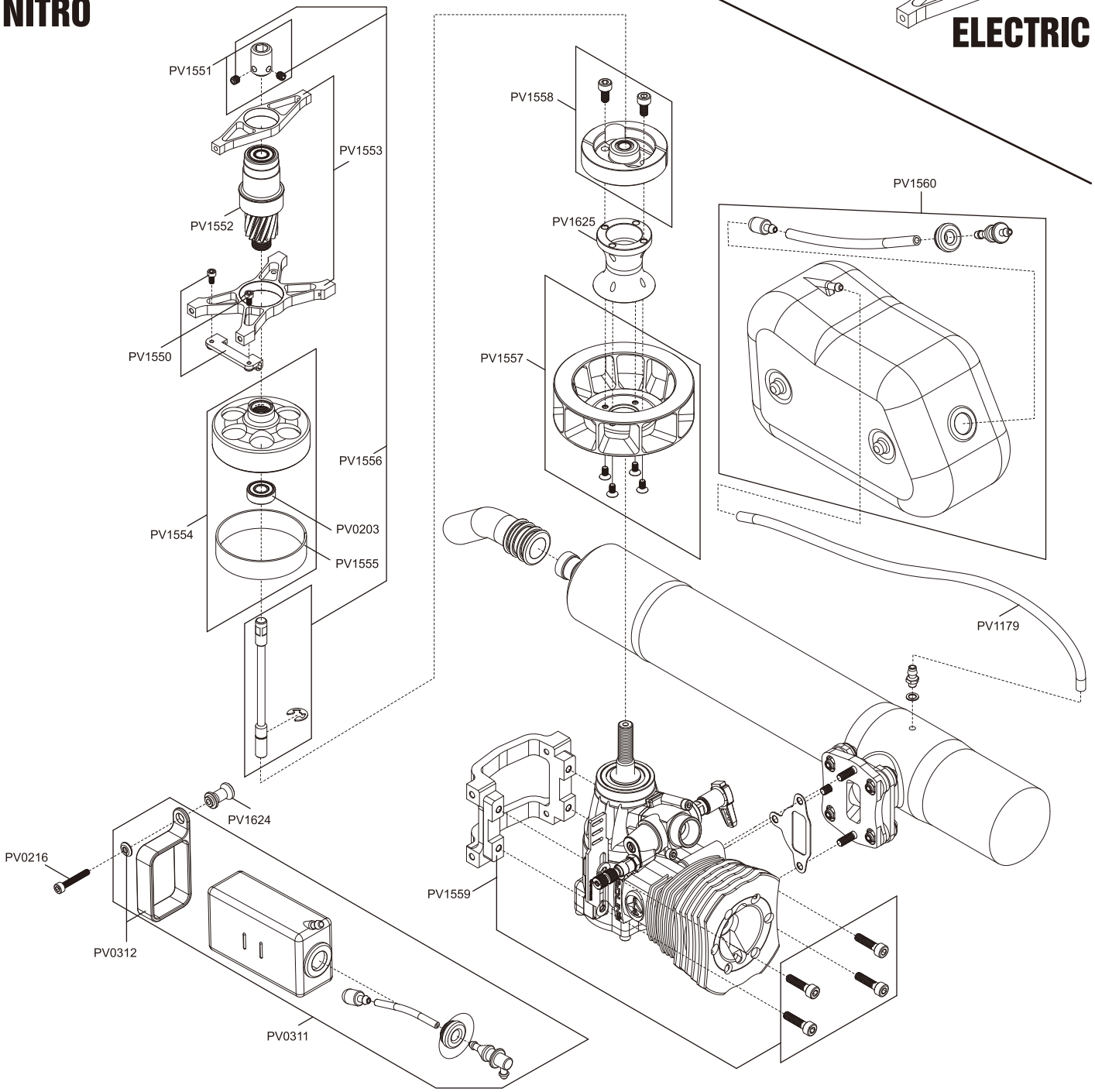

MAIN FRAME

ELECTRIC

PV1563
PV1562
PV1564
PV1572
PV1571
PV1570
PV1564
PV1610
PV1542
PV1568
PV1567
PV1609
PV1578
PV1576
PV1568
PV1568
PV1568
PV1561
PV1563
PV1531
PV1578
PV1577
PV1564
PV1609
PV1569
PV1563
PV1573
PV1571
PV1576
PV1575
PV1564
PV1578
PV1576
PV1568
PV1567
PV1578
PV1602
PV1577
PV1572
PV1571
PV1570
PV1610
PV1578
PV1568
PV1571
PV1568
PV1569
PV1542
PV1577
PV1531
PV1561
PV1531
PV1564
PV1573
PV1577
PV1531
PV1571
PV1571
PV1576
PV1575
PV0208
PV1567
PV1562
PV1602
PV1580

NITRO

ARMS & SKID

PV0216
PV1536
PV0214
PV1244
PV1576
PV0050
PV0197
PV1581
PV1540
PV1538
PV1539
PV1537
PV1612
PV1613
PV1535
PV1534
PV1565
PV1577
PD7293
PV1623-F
PV1604
PV1603
PV1535
PV1603
NITRO ONLY
PV1533-2
PV1613
PV1379
PV1534
PV1615
PV1615
PV1604
PV1604
PV1566
PV1535
PV1577
PV1604
PV1623-F
PV1603
PV1574
PV1604
PV1623-F
PV1582
PV1614
PV1598
PV1584
PV1583

TAIL UNIT

PV1586
PV0195
PV0041
PV1585
PV1591
PV1338
PV0041
PV1588
PV1590
PV1593
PV0215
PV1587
PV1589
PV1592
PV1244
PV1593
PV0197
PV1595
PV1597
PV1594
PV1581
PV1593
PV0200
PV0425
3892
PV1596
PV1541
PV1600
PV1598
PV1611